TRANSMISSION SECTION

CONTROL SYSTEMS	CS
CONTINUOUSLY VARIABLE TRANSMISSION	CVT
CONTINUOUSLY VARIABLE TRANSMISSION (DIAGNOSTICS)	CVT(diag)
AUTOMATIC TRANSMISSION	5AT
AUTOMATIC TRANSMISSION (DIAGNOSTICS)	5AT(diag)
MANUAL TRANSMISSION AND DIFFERENTIAL	6MT
CLUTCH SYSTEM	CL

This service manual has been prepared to provide SUBARU service personnel with the necessary information and data for the correct maintenance and repair of SUBARU vehicles.
This manual includes the procedures for maintenance, disassembling, reassembling, inspection and adjustment of components and diagnostics for guidance of experienced mechanics.
Please peruse and utilize this manual fully to ensure complete repair work for satisfying our customers by keeping their vehicle in optimum condition. When replacement of parts during repair work is needed, be sure to use SUBARU genuine parts.

All information, illustration and specifications contained in this manual are based on the latest product information available at the time of publication approval.

FUJI HEAVY INDUSTRIES LTD.

G2480BE5

GETtheMANUALS.org

CONTROL SYSTEMS

CS

		Page
1.	General Description	2
2.	AT Shift Lock Control System	8
3.	Select Lever	22
4.	Select Cable	42
5.	AT Shift Lock Solenoid and “P” Range Switch	53
6.	Body Integrated Unit	56
7.	MT Gear Shift Lever	57
8.	MT Gear Shift Cable	64
9.	MT Gear Select Cable	73
10.	General Diagnostic Table	100

GETtheMANUALS.org

1. General Description

A: COMPONENT

1. AT SELECT LEVER

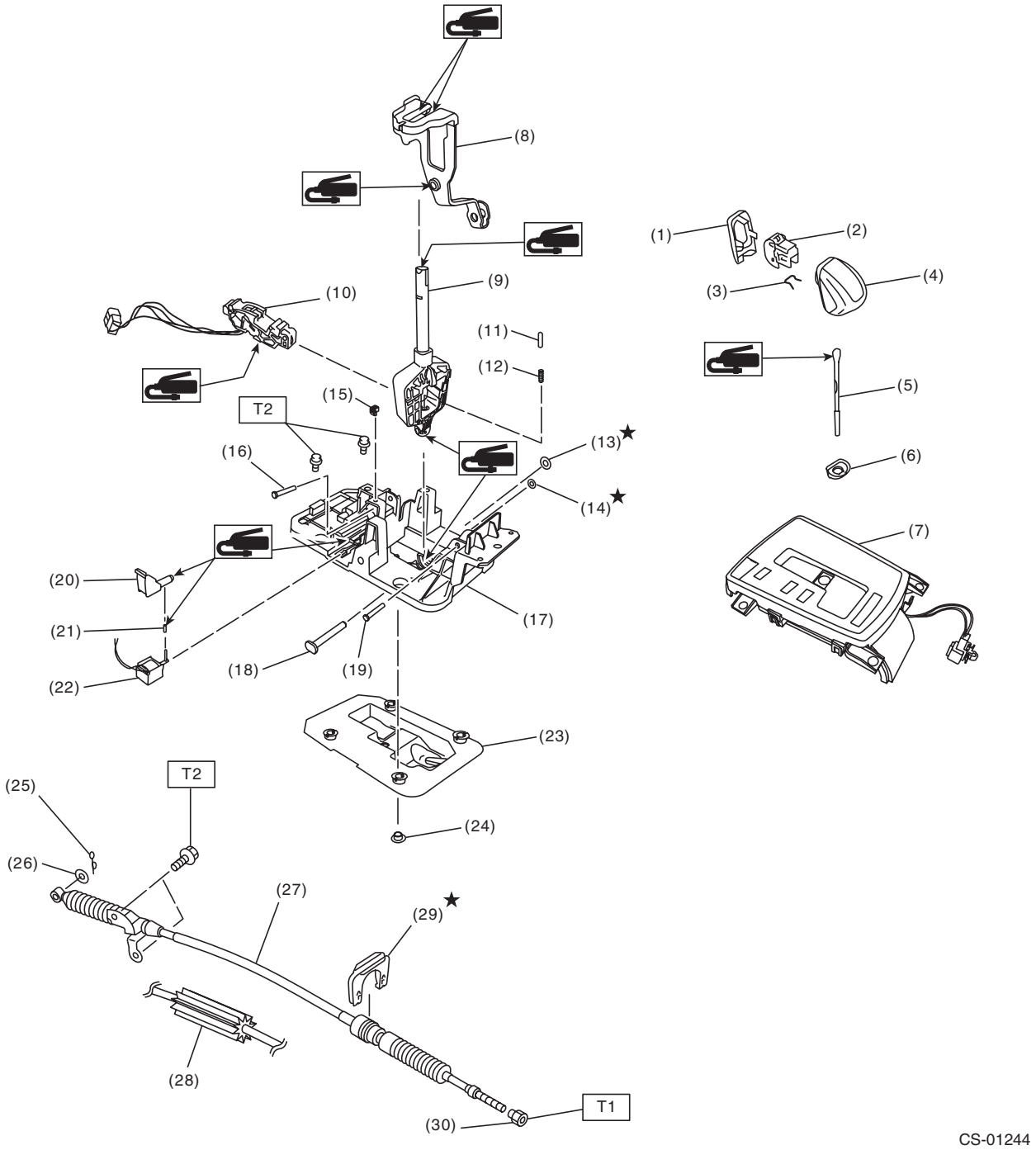

GETtheMANUALS.org

(1) Cover grip AT
(2) Button ASSY-AT
(3) Clamp grip pin
(4) Grip ASSY sub
(5) Rod COMPL
(6) Cover grip AT
(7) Indicator ASSY
(8) Arm ASSY
(9) Selector lever COMPL
(10) Plate guide
(11) Rod detent
(12) Detent spring
(13) Clamp push nut
(14) Clamp push nut
(15) Clamp pin
(16) Spacer pin guide
(17) Plate COMPL
(18) Shaft control
(19) Spacer pin guide
(20) Rod shift lock
(21) Cushion solenoid
(22) Solenoid unit
(23) Gasket
(24) Spacer plate
(25) Snap pin
(26) Washer
(27) Select cable (AT model)
(28) Select cable (CVT model)
(29) Clamp
(30) Nut

Tightening torque:N·m (kgf-m, ft-lb)

T1: 7.5 (0.8, 5.5)

T2: 18 (1.8, 13.3)

GETtheMANUALS.org

2. 6MT GEAR SHIFT LEVER

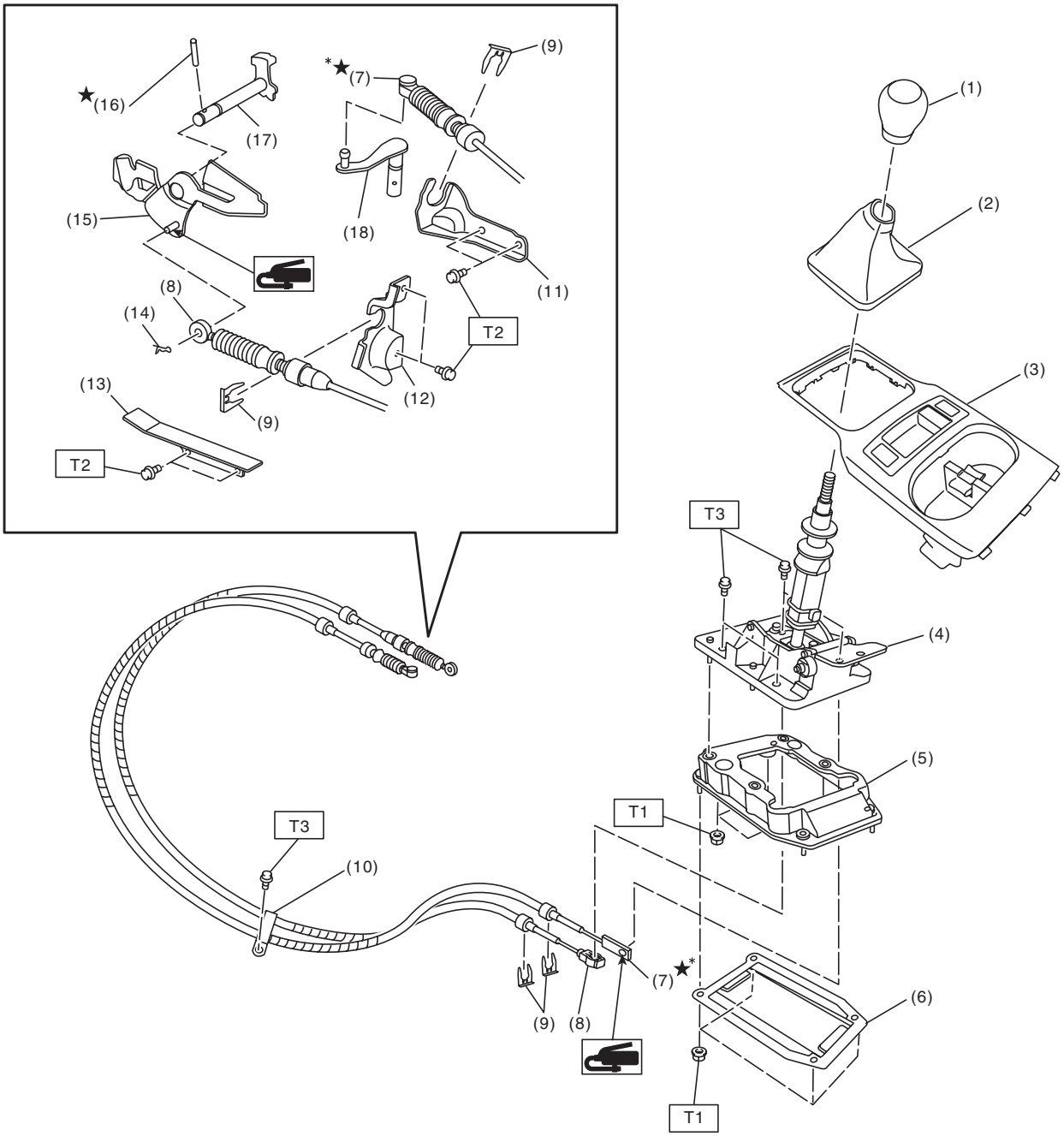

CS-01354

GETtheMANUALS.org

(1) Shift knob
(2) Shift boot
(3) Console front cover ASSY
(4) Gear shift lever ASSY
(5) Cover cable ASSY
(6) Plate cable ASSY
(7) MT gear select cable (identification tape color: green)
(8) MT gear shift cable (identification tape color: yellow)
(9) Clamp
(10) Clamp cable
(11) Select bracket
(12) Shift bracket
(13) Dust cover
(14) Snap pin
(15) Shift lever COMPL
(16) Spring pin
(17) Shifter arm No. 2
(18) Selector lever

Tightening torque:N·m (kgf-m, ft-lb)
T1: 7.5 (0.8, 5.5)
T2: 15 (1.5, 11.1)
T3: 18 (1.8, 13.3)

*: Always use new MT gear select cable if the cable is removed from select lever COMPL of transmission side.

B: CAUTION

- Wear appropriate work clothing, including a cap, protective goggles and protective shoes when performing any work.
- Remove contamination including dirt and corrosion before removal, installation or disassembly.
- Keep the disassembled parts in order and protect them from dust and dirt.
- Before removal, installation or disassembly, be sure to clarify the failure. Avoid unnecessary removal, installation, disassembly and replacement.
- Use SUBARU genuine fluid, grease or equivalent. Do not mix fluid and grease of different grades or manufacturers.
- Be sure to tighten fasteners including bolts and nuts to the specified torque.
- Place shop jacks or rigid racks at the specified points.
- Apply grease onto sliding or revolving surfaces before installation.
- Before installing the O-ring or snap ring, apply a sufficient amount of fluid to avoid damage and deformation.
- Before securing a part in a vise, place cushioning material such as wood blocks, aluminum plate or cloth between the part and the vise.
- Before disconnecting electrical connectors, be sure to disconnect the negative terminal from battery.

GETtheMANUALS.org

C: PREPARATION TOOL

1. SPECIAL TOOL

ILLUSTRATION	TOOL NUMBER	DESCRIPTION	REMARKS
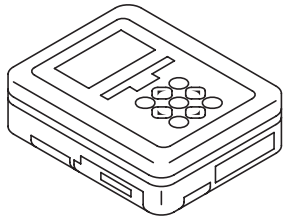 ST1B022XU0	1B022XU0	SUBARU SELECT MONITOR III KIT	Used for troubleshooting the electrical system.
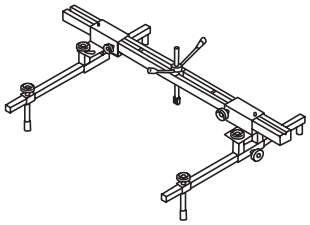 ST99099AJ000	99099AJ000	ENGINE HANGER	• Used for holding and balancing the engine unit when removing and installing the MT gear select cable. • Used together with CHAIN BALANCER (99099AJ010).
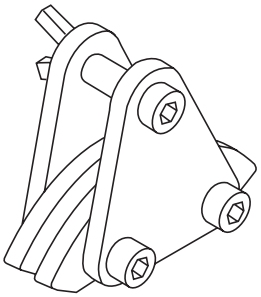 ST99099AJ010	99099AJ010	CHAIN BALANCER	• Used for holding and balancing the engine unit when removing and installing the MT gear select cable. • Used together with ENGINE HANGER (99099AJ000).
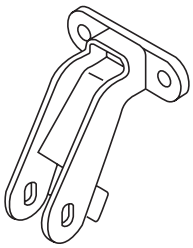 ST41099AJ000	41099AJ000	SPECIAL TOOL H4	Used for holding and balancing the engine unit when removing and installing the MT gear select cable.

GETtheMANUALS.org

ILLUSTRATION	TOOL NUMBER	DESCRIPTION	REMARKS
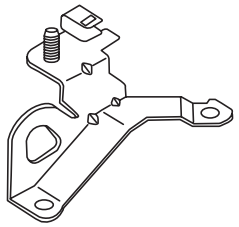 ST10004AA180	10004AA180 (SUBARU genuine part)	ENGINE HANGER REAR	• Used for holding and balancing the engine unit when removing and installing the MT gear select cable. (ENGINE HANGER REAR for turbo model) • For 2.5 L non-turbo model.

2. GENERAL TOOL

TOOL NAME	REMARKS
Chain sling	Used for holding and balancing the engine unit when removing and installing the MT gear select cable. • Length: 0.8 — 1 m (2.6 — 3.3 ft) • Load capacity: 1.2 t (2646 lb) or more • Diameter: 6 mm (0.24 in) or 6.3 mm (0.25 in) • Chain external width: 23.5 mm (0.93 in) or less • Chain internal width: 8.5 mm (0.33 in) or more
Screw shackle	Used for holding and balancing the engine unit when removing and installing the MT gear select cable. • Load capacity: 250 kg (551 lb) or more • Use two pieces.
Circuit tester	Used for measuring resistance and voltage.

GETtheMANUALS.org

2. AT Shift Lock Control System

A: LOCATION

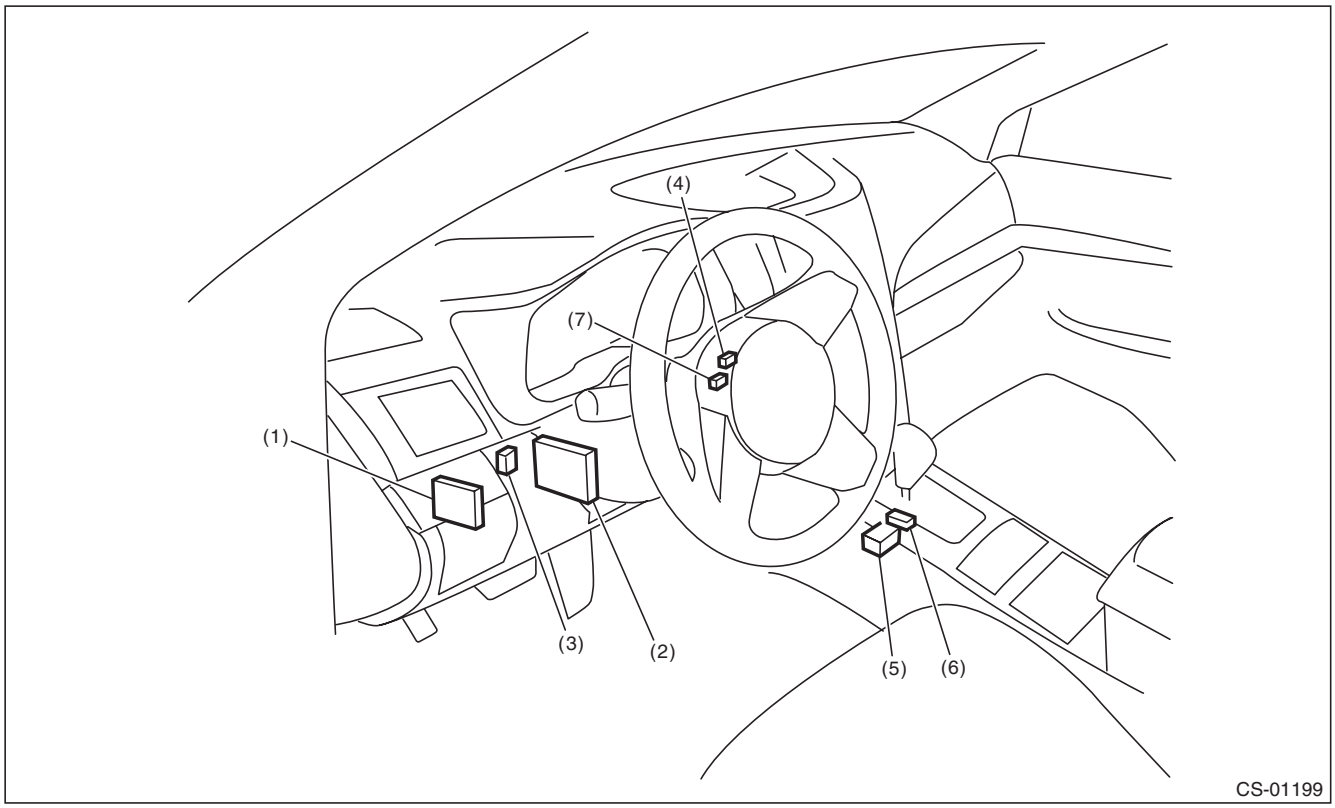

(1)	TCM (“P” range)	(4)	Key cylinder (with built-in key warning switch)	(6)	“P” range switch
(2)	Body integrated unit	(5)	Solenoid unit	(7)	Key lock solenoid
(3)	Stop light switch				

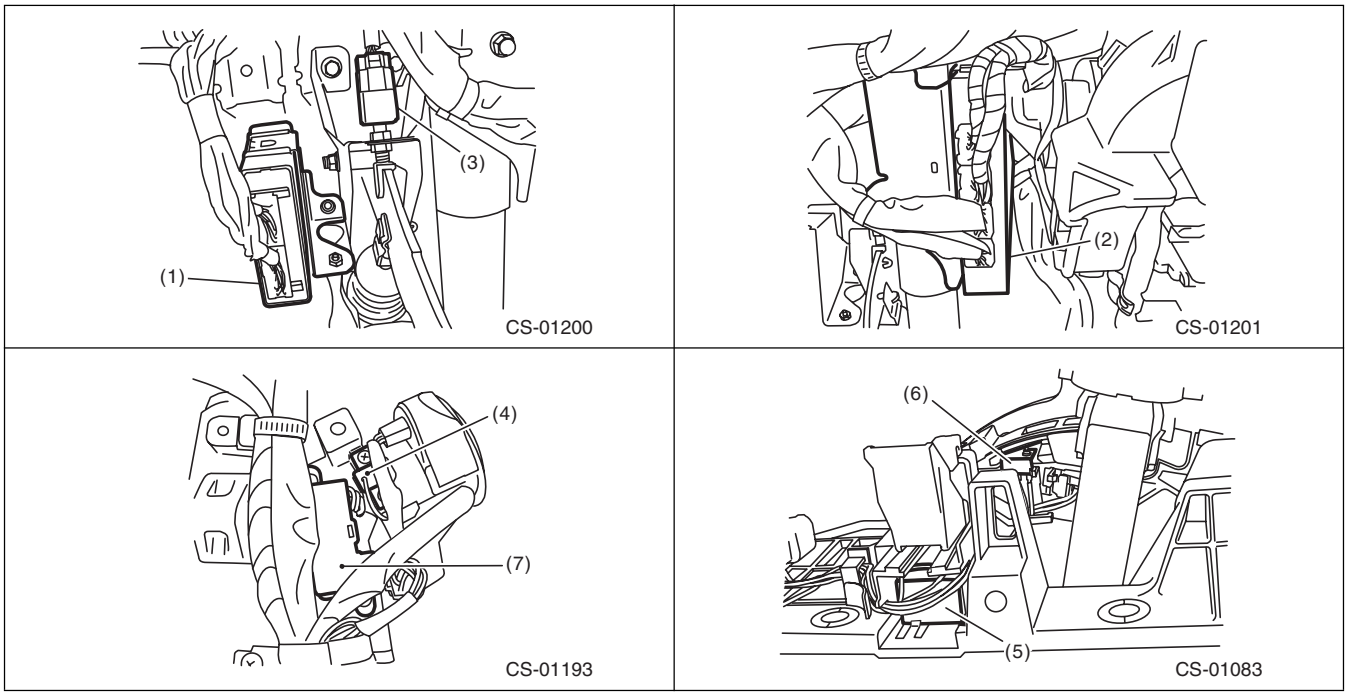

GETtheMANUALS.org

B: ELECTRICAL SPECIFICATION

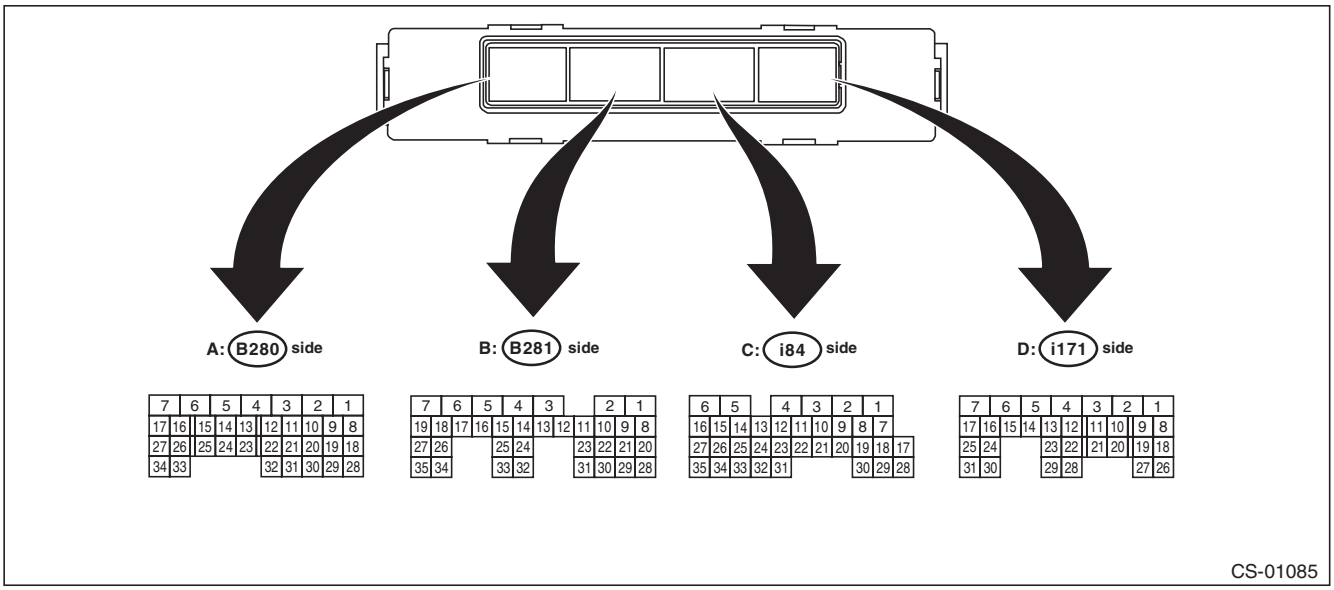

Item	Connector No.	Terminal No.	Input/Output signal Measured value and measuring conditions
Battery power supply	B281	6	9 — 16 V
	i84	6	
Ignition power supply	i171	17	9 — 16 V when ignition switch is at ON or START.
		25	9 — 16 V when ignition switch is at ACC.
TCM (“P” range)	B281	20	Pulse signal
		28	
Stop light switch	B280	10	9 — 16 V when stop light switch is ON. Less than 1.5 V when stop light switch is OFF.
“P” range switch	B281	21	Less than 1.5 V when select lever is in “P” range. 9 — 16 V when select lever is in other positions than “P” range.
Solenoid unit output	B281	5	8.5 — 16 V when shift lock is released. Less than 1.5 V when shift lock is operating.
Key warning switch signal	B280	4	9 — 16 V when key is inserted. Less than 1.5 V when key is removed.
Key lock solenoid output	B281	3	7 — 14 V (unlock) *1
		4	7 — 14 V (lock) *1
Ground	B280	1	—
	B281	31	
	i84	1	
	i171	29	

*1: Measuring condition

Key warning switch	“P” range switch	Ignition switch	Output
OFF	—	—	Unlock (Key can be removed)
ON	OFF	—	Lock (Key cannot be removed)
ON	ON	OFF	Unlock
ON	ON	ON	Lock

GETtheMANUALS.org

Output signal for key lock solenoid (unlock)

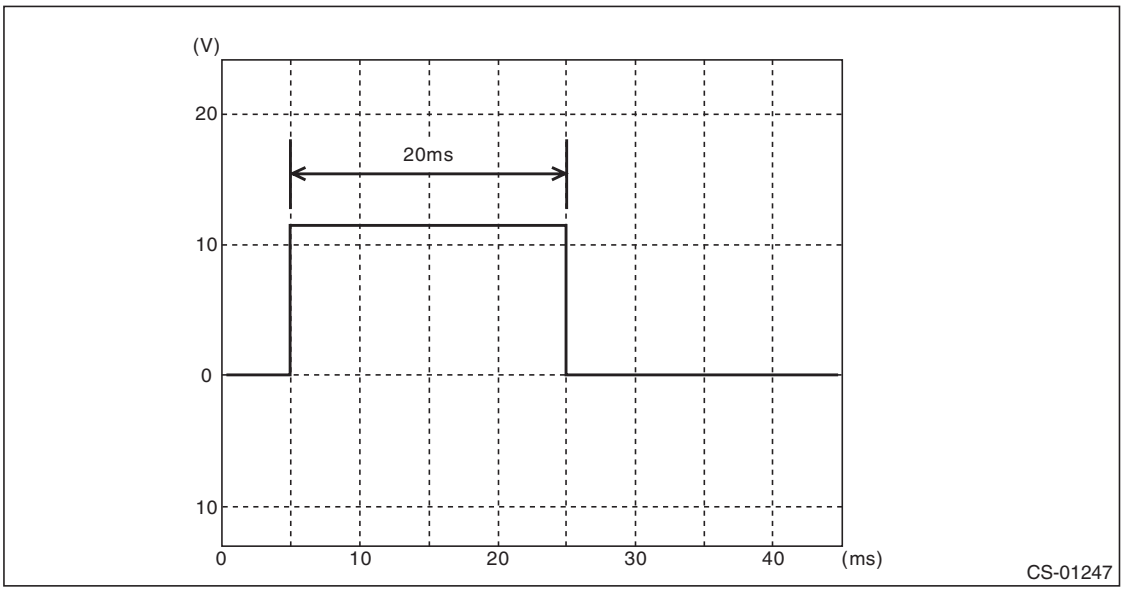

Output signal for key lock solenoid (lock)

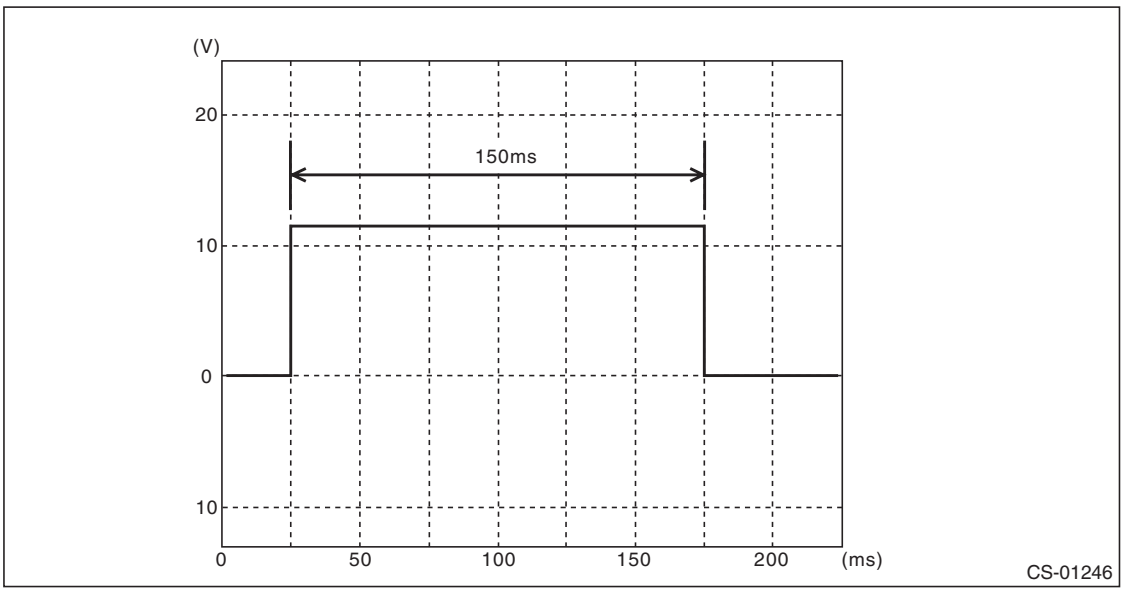

GETtheMANUALS.org

C: WIRING DIAGRAM

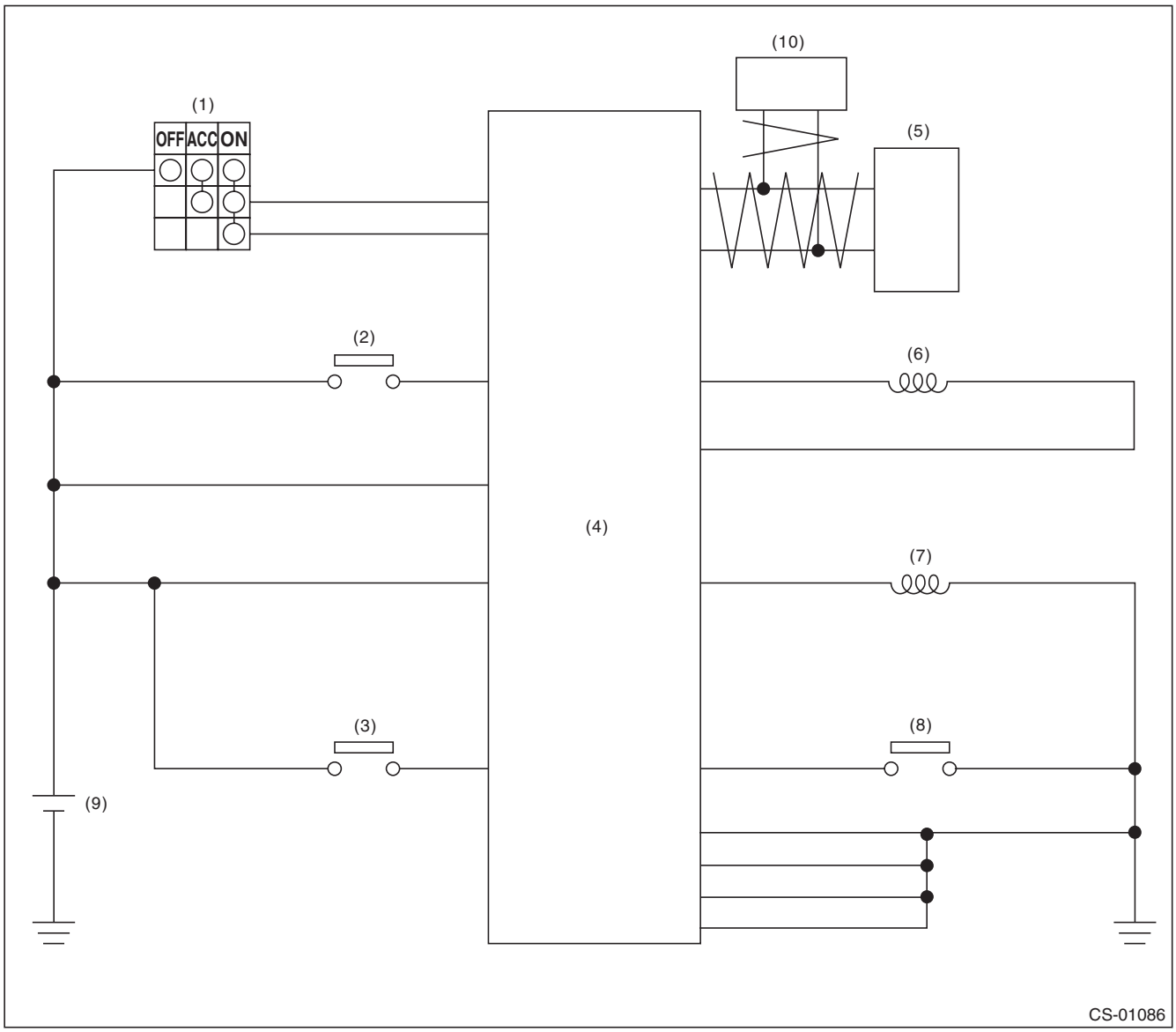

(1) Ignition switch
(2) Stop light switch
(3) Key warning switch
(4) Body integrated unit
(5) TCM (shift range information)
(6) Key lock solenoid
(7) Solenoid unit
(8) “P” range switch
(9) Battery
(10) VDC (vehicle speed information)

GETtheMANUALS.org

D: INSPECTION

1. SHIFT LOCK OPERATION

Step		Check	Yes	No
1	**CHECK COMMUNICATION OF SUBARU SELECT MONITOR.** 1) Turn the ignition switch to ON. 2) Using the Subaru Select Monitor, check whether communication to all systems can be executed normally.	Is the system name displayed?	Go to step **2**.	For diagnostic procedures, refer to the LAN section.
2	**CHECK SHIFT LOCK.** 1) Turn the ignition switch to ON. 2) Shift the select lever to “P” range.	While brake pedal is not depressed, is it possible to move the select lever from the “P” range to other ranges?	Perform the inspection of “SELECT LEVER CANNOT BE LOCKED OR RELEASED”. <Ref. to CS-16, SELECT LEVER CANNOT BE LOCKED OR RELEASED, INSPECTION, AT Shift Lock Control System.>	Go to step **3**.
3	**CHECK SHIFT LOCK.**	While brake pedal is depressed, is it possible to move the select lever from the “P” range to other ranges?	Go to step **4**.	Perform the inspection of “SELECT LEVER CANNOT BE LOCKED OR RELEASED”. <Ref. to CS-16, SELECT LEVER CANNOT BE LOCKED OR RELEASED, INSPECTION, AT Shift Lock Control System.>
4	**CHECK SHIFT LOCK.** Shift the select lever to “N” range.	Is it possible to move the select lever from the “N” range to the “P” range?	Go to step **5**.	Perform the inspection of “SELECT LEVER CANNOT BE LOCKED OR RELEASED”. <Ref. to CS-16, SELECT LEVER CANNOT BE LOCKED OR RELEASED, INSPECTION, AT Shift Lock Control System.>

GETtheMANUALS.org

Step		Check	Yes	No
5	**CHECK SHIFT LOCK.** 1) Shift the select lever to “N” range. 2) Turn the ignition switch to ACC.	While brake pedal is depressed, is it possible to move the select lever from the “N” range to the “P” range?	Go to step **6**.	Perform the inspection of “SELECT LEVER CANNOT BE LOCKED OR RELEASED”. <Ref. to CS-16, SELECT LEVER CANNOT BE LOCKED OR RELEASED, INSPECTION, AT Shift Lock Control System.>
6	**CHECK KEY INTERLOCK.** 1) Shift the select lever to other than “P” range. 2) Turn the ignition switch to OFF.	Can the ignition key be removed?	Perform the inspection of “KEY INTERLOCK CANNOT BE LOCKED OR RELEASED”. <Ref. to CS-19, KEY INTERLOCK DOES NOT LOCK OR RELEASE, INSPECTION, AT Shift Lock Control System.>	Go to step **7**.
7	**CHECK KEY INTERLOCK.** Shift the select lever to “P” range.	Can the ignition key be removed?	AT shift lock system is normal.	Perform the inspection of “KEY INTERLOCK CANNOT BE LOCKED OR RELEASED”. <Ref. to CS-19, KEY INTERLOCK DOES NOT LOCK OR RELEASE, INSPECTION, AT Shift Lock Control System.>

GETtheMANUALS.org

2. BODY INTEGRATED UNIT POWER SUPPLY AND GROUND CIRCUIT

NOTE:
For the DC power supply circuit, refer to “WIRING DIAGRAMS”. <Ref. to WI-15, Power Supply Circuit.>

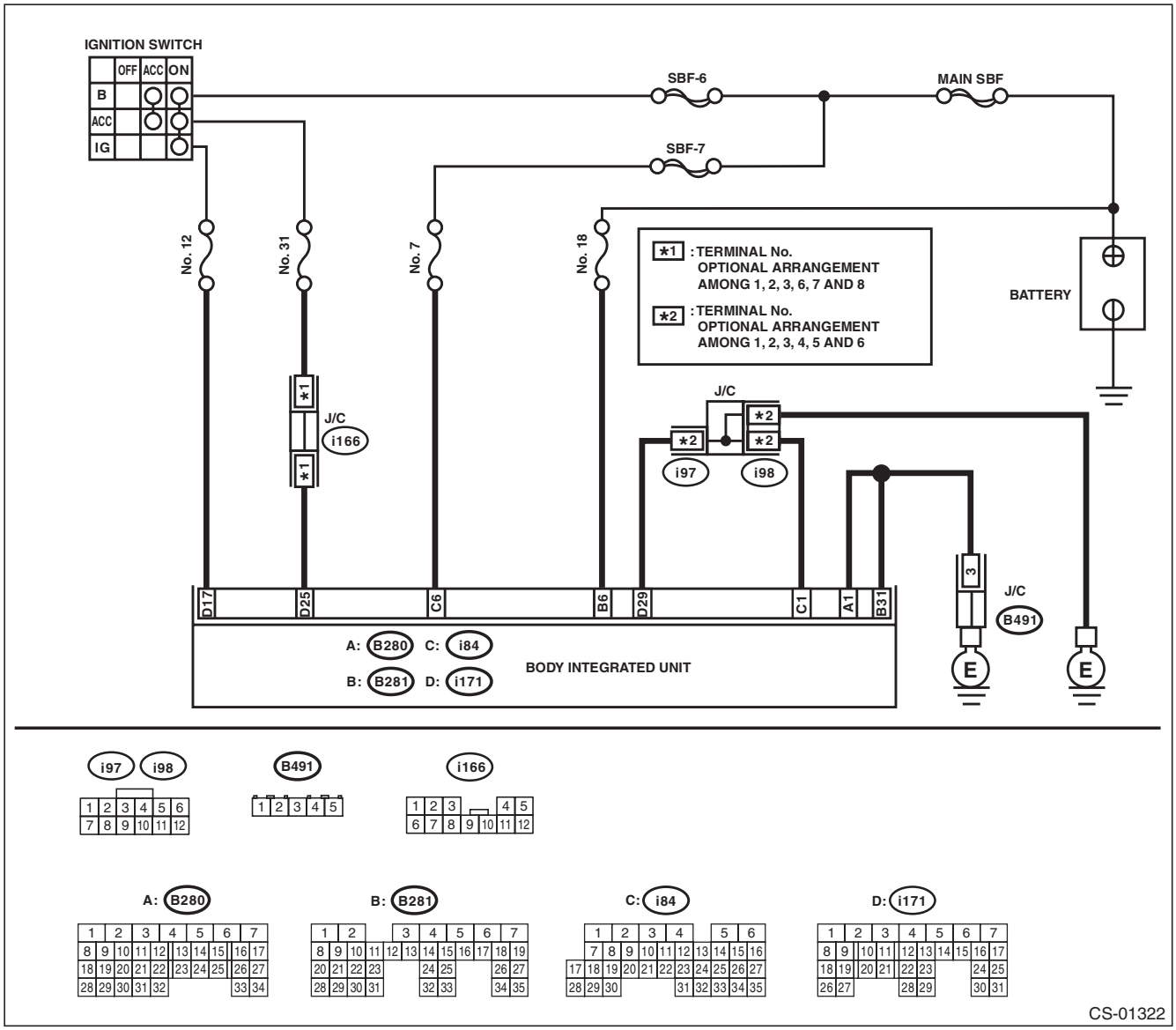

Step		Check	Yes	No
1	**CHECK DTC OF BODY INTEGRATED UNIT.** Check DTC of body integrated unit.	Is the DTC of power line displayed on body integrated unit?	Repair or replace it according to the DTC.	Go to step **2**.
2	**CHECK HARNESS BETWEEN BODY INTEGRATED UNIT AND BATTERY.** 1) Turn the ignition switch to ON. 2) Measure the voltage between body integrated unit and chassis ground. ***Connector & terminal*** ***(i84) No. 6 (+) — Chassis ground (–):*** ***(i171) No. 17 (+) — Chassis ground (–):*** ***(i171) No. 25 (+) — Chassis ground (–):*** ***(B281) No. 6 (+) — Chassis ground (–):***	Is the voltage 9 — 16 V?	Go to step **3**.	Check harness for open circuit between the body integrated unit and the battery or a blown fuse.

GETtheMANUALS.org

Step		Check	Yes	No
3	**CHECK HARNESS BETWEEN BODY INTEGRATED UNIT AND CHASSIS GROUND.** 1) Turn the ignition switch to OFF. 2) Measure the harness resistance between the body integrated unit and chassis ground. ***Connector & terminal*** ***(B280) No. 1 — Chassis ground:*** ***(B281) No. 31 — Chassis ground:*** ***(i84) No. 1 — Chassis ground:*** ***(i171) No. 29 — Chassis ground:***	Is the resistance less than 1 Ω?	Go to step **4**.	Repair the open circuit of harness between the body integrated unit and chassis ground.
4	**CHECK FOR POOR CONTACT.**	Is there poor contact of connector?	Repair the poor contact.	End.

GETtheMANUALS.org

3. SELECT LEVER CANNOT BE LOCKED OR RELEASED

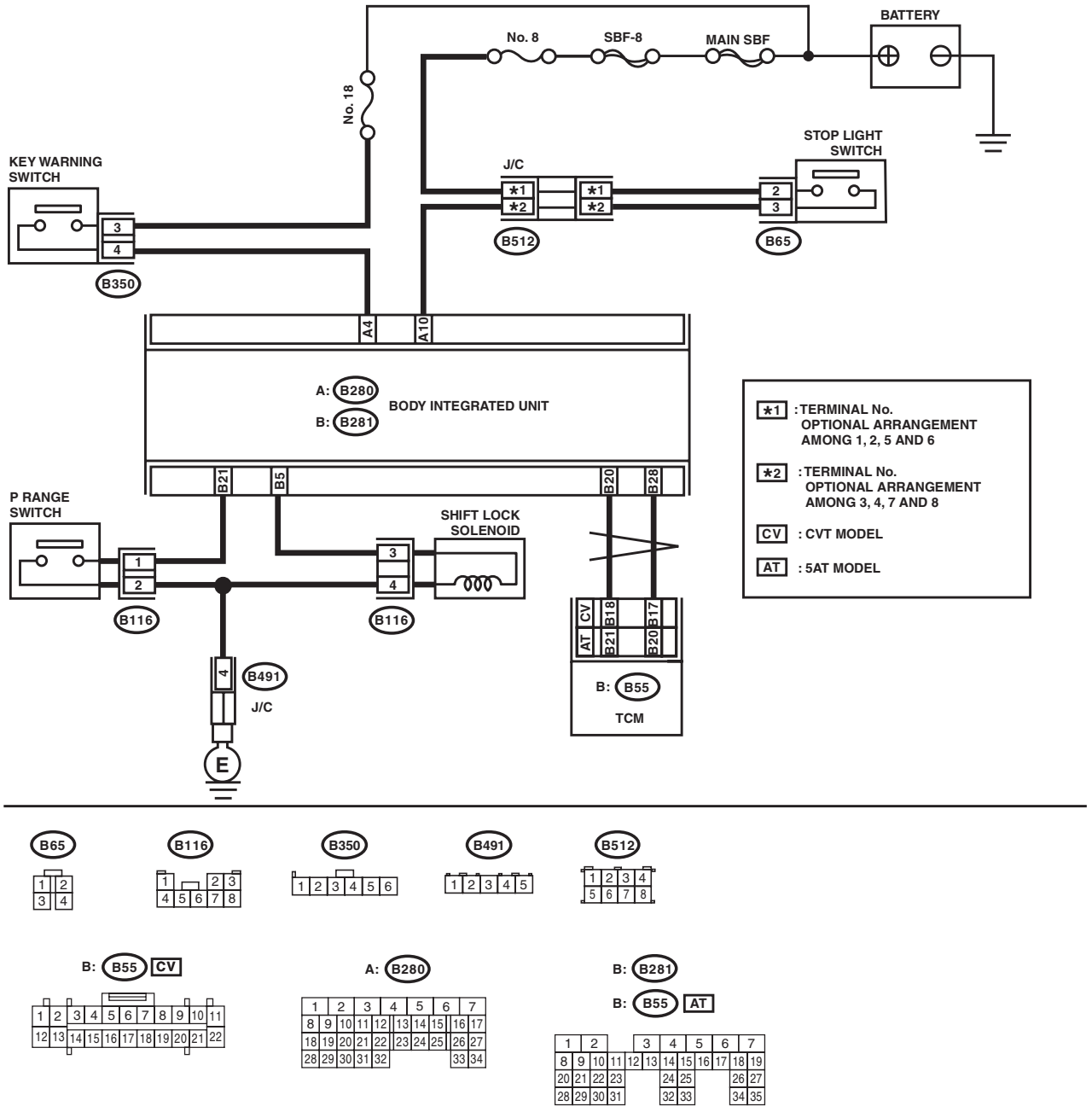

CS-01323

GETtheMANUALS.org

	Step	Check	Yes	No
1	**CHECK BODY INTEGRATED UNIT POWER SUPPLY AND GROUND CIRCUIT.** <Ref. to CS-14, BODY INTEGRATED UNIT POWER SUPPLY AND GROUND CIRCUIT, INSPECTION, AT Shift Lock Control System.>	Is there any fault?	Follow the procedures to perform inspection and repair.	Go to step **2**.
2	**CHECK CURRENT DATA.** 1) Connect the Subaru Select Monitor. 2) Shift the select lever to “P” range. 3) Turn the ignition switch to ON. 4) Select the current data display and display «P SW».	Is the display “ON” in the P range and “OFF” in ranges other than P?	Go to step **3**.	Go to step **8**.
3	**CHECK CURRENT DATA.** Select the current data display and display «Stop Light Switch».	Is “ON” displayed when the brake pedal is depressed and “OFF” displayed when the brake pedal is released?	Go to step **4**.	Go to step **11**.
4	**CHECK BODY INTEGRATED UNIT DTC.** Check the DTC of the body integrated unit when the brake pedal is pressed and when it is released. (Hold each condition for 5 seconds or more.)	Is there a DTC of a current malfunction?	Follow the DTC to perform inspection and repair.	Go to step **5**.
5	**CHECK CURRENT DATA.** Select the current data display and display «Shift Lock Solenoid».	Is “ON” displayed when the brake pedal is depressed and “OFF” displayed when the brake pedal is released?	Go to step **6**.	Replace the body integrated unit. <Ref. to SL-71, Body Integrated Unit.>
6	**CHECK CURRENT DATA.** Select the current data display and display «Shift Position».	Is the display “7” in the “P” range and other than “7” in ranges other than “P”?	Go to step **7**.	Check the following items. • Inhibitor switch • Harness between inhibitor switch and TCM • TCM input signal • TCM CAN communication • Body integrated unit CAN receive
7	**CHECK CURRENT DATA.** 1) Select the current data display and display «Front Wheel Speed». 2) Start the engine. 3) Raise vehicle speed gradually up to approximately 20 km/h.	Is a figure equivalent to the speedometer being indicated?	Go to step **12**.	Check the following items. • Vehicle speed sensor • VDC/ABS CAN communication • Body integrated unit CAN receive Replace the vehicle speed sensor, VDC/ABS or body integrated unit, or both.

GETtheMANUALS.org

Step		Check	Yes	No
8	**CHECK HARNESS BETWEEN BODY INTEGRATED UNIT AND "P" RANGE SWITCH.** 1) Disconnect the connector from body integrated unit. 2) Disconnect the connector of "P" range switch. 3) Check for open circuit of harness, short circuit to battery or short circuit to ground between the body integrated unit and "P" range switch. ***Connector & terminal*** ***(B281) No. 21 — (B116) No. 1:***	Is the harness normal?	Repair or replace the harness between the body integrated unit and the "P" range switch.	Go to step **9**.
9	**CHECK HARNESS BETWEEN "P" RANGE SWITCH AND CHASSIS GROUND.** Measure the resistance of harness between "P" range switch and chassis ground. ***Connector & terminal*** ***(B116) No. 2 — Chassis ground:***	Is it less than 10 Ω?	Go to step **10**.	Repair the harness between the "P" range switch and chassis ground.
10	**CHECK "P" RANGE SWITCH.** Measure the resistance between "P" range switch connector terminals. ***Terminals*** ***No. 2 — No. 1:***	Is it less than 10 Ω in the "P" range, and 1 MΩ or more in ranges other than "P"?	Replace the body integrated unit. <Ref. to SL-71, Body Integrated Unit.>	Replace the "P" range switch. <Ref. to CS-53, AT Shift Lock Solenoid and "P" Range Switch.>
11	**CHECK STOP LIGHT SWITCH INPUT SIGNAL.** 1) Disconnect the connector from body integrated unit. 2) Measure the voltage between the body integrated unit connector terminal and chassis ground. ***Connector & terminal*** ***(B280) No. 10 (+) — Chassis ground (–):***	Is the voltage 9 — 16 V when the brake pedal is depressed, and less than 1.5 V when not pressed?	Replace the body integrated unit. <Ref. to SL-71, Body Integrated Unit.>	Check the stop light system.
12	**CHECK SOLENOID UNIT OPERATION.** Connect the battery to the solenoid unit connector terminal, and operate the solenoid unit. ***Terminals*** ***No. 3 (+) — No. 4 (–):***	Does the solenoid unit operate normally?	Check the lock mechanism of the select lever body.	Replace the solenoid unit. <Ref. to CS-53, AT Shift Lock Solenoid and "P" Range Switch.>

GETtheMANUALS.org

4. KEY INTERLOCK DOES NOT LOCK OR RELEASE

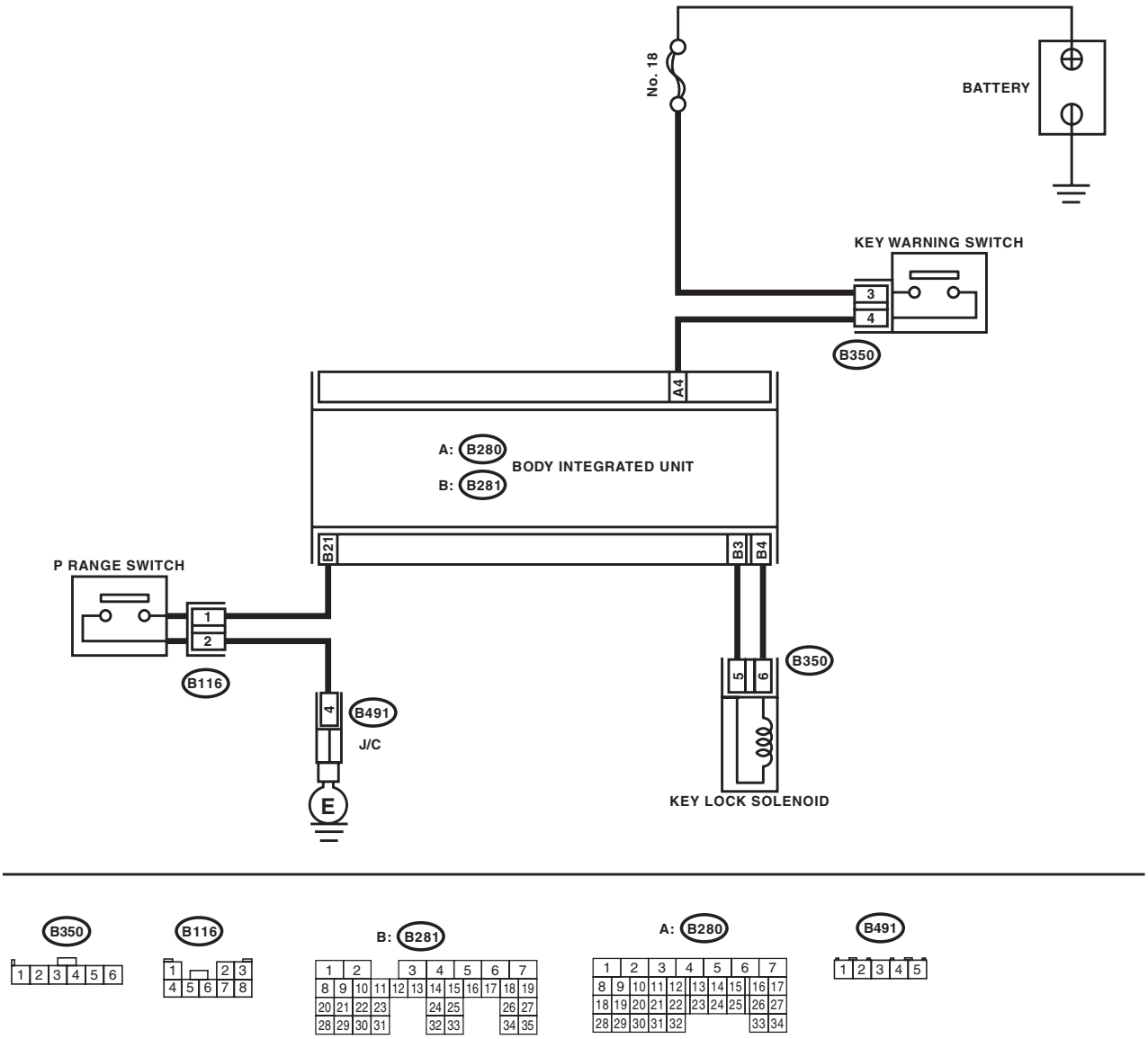

CS-01241

GETtheMANUALS.org

	Step	Check	Yes	No
1	**CHECK BODY INTEGRATED UNIT POWER SUPPLY AND GROUND CIRCUIT.** <Ref. to CS-14, BODY INTEGRATED UNIT POWER SUPPLY AND GROUND CIRCUIT, INSPECTION, AT Shift Lock Control System.>	Is there any fault?	Follow the procedures to inspect and repair.	Go to step **2**.
2	**CHECK CURRENT DATA.** 1) Connect the Subaru Select Monitor. 2) Shift the select lever to "P" range. 3) Turn the ignition switch to ON. 4) Select the current data display and display «P SW».	Is the display "ON" in the P range and "OFF" in ranges other than P?	Go to step **3**.	Go to step **5**.
3	**CHECK CURRENT DATA.** 1) Select the current data display and display the «key-lock warning SW». 2) Turn the ignition switch to OFF.	Does the display change from "ON" ←→ "OFF" when the key is inserted and removed?	Go to step **4**.	Go to step **8**.
4	**CHECK CURRENT DATA.** 1) Turn the ignition switch to OFF. 2) Select the current data display and display «Key locking output».	Is the display "Unlock" in the "P" range and "Lock" in ranges other than "P"?	Go to step **9**.	Go to step **5**.
5	**CHECK HARNESS BETWEEN BODY INTEGRATED UNIT AND "P" RANGE SWITCH.** 1) Disconnect the connector from body integrated unit. 2) Disconnect the connector of "P" range switch. 3) Check for open circuit of harness, short circuit to battery or short circuit to ground between the body integrated unit and "P" range switch. ***Connector & terminal*** ***(B281) No. 21 — (B116) No. 1:***	Is the harness normal?	Repair or replace the harness between the body integrated unit and the "P" range switch.	Go to step **6**.
6	**CHECK HARNESS BETWEEN "P" RANGE SWITCH AND CHASSIS GROUND.** Measure the resistance of harness between "P" range switch and chassis ground. ***Connector & terminal*** ***(B116) No. 2 — Chassis ground:***	Is it less than 10 Ω?	Go to step **7**.	Repair the harness between the "P" range switch and chassis ground.
7	**CHECK "P" RANGE SWITCH.** Measure the resistance between "P" range switch connector terminals. ***Terminals*** ***No. 2 — No. 1:***	Is it less than 10 Ω in the "P" range, and 1 MΩ or more in ranges other than "P"?	Replace the body integrated unit. <Ref. to SL-71, Body Integrated Unit.>	Replace the "P" range switch. <Ref. to CS-53, AT Shift Lock Solenoid and "P" Range Switch.>
8	**CHECK HARNESS BETWEEN BATTERY AND KEY WARNING SWITCH AND BODY INTEGRATED UNIT.** 1) Disconnect the connector from body integrated unit. 2) Measure the voltage between body integrated unit and chassis ground. ***Connector & terminal*** ***(B280) No. 4 (+) — Chassis ground (–):***	Is the display 9 — 16 V when the key is inserted, and less than 1.5 V with the key removed?	Replace the body integrated unit. <Ref. to SL-71, Body Integrated Unit.>	Check the following items. • Key warning switch • Harness/fuse • Ignition circuit

GETtheMANUALS.org

Step		Check	Yes	No
9	**CHECK HARNESS BETWEEN BODY INTEGRATED UNIT AND KEY LOCK SOLENOID.** 1) Disconnect the connector from body integrated unit. 2) Disconnect the connector of key lock solenoid. 3) Check for open circuit of harness, short circuit to battery or short circuit to ground between the body integrated unit and key lock solenoid. ***Connector & terminal*** ***(B281) No. 3 — (B350) No. 5:*** ***(B281) No. 4 — (B350) No. 6:***	Is the harness normal?	Repair or replace the harness between the body integrated unit and the key lock solenoid.	Go to step **10**.
10	**CHECK KEY LOCK SOLENOID OPERATION.** Connect the battery to the key lock solenoid connector terminal, and operate the solenoid.	Does the key lock solenoid operate normally?	Go to step **11**.	Replace the key lock solenoid.
11	**CHECK OUTPUT OF BODY INTEGRATED UNIT.** 1) Connect all connectors. 2) Insert the key. 3) Shift the select lever to “P” range. 4) Turn the ignition switch to OFF. 5) Using an oscilloscope, measure the voltage between body integrated unit and chassis ground. ***Connector & terminal*** ***Lock*** ***(B281) No. 4 (+) — Chassis ground (–):*** ***Unlock*** ***(B281) No. 3 (+) — Chassis ground (–):***	Is the lock output voltage 7 — 14 V when the grip button of select lever is pressed? Is the unlock output voltage 7 — 14 V when the grip button of select lever is released? <Ref. to CS-9, ELECTRICAL SPECIFICATION, AT Shift Lock Control System.>	Check the lock mechanism of the steering lock body.	Replace the body integrated unit. <Ref. to SL-71, Body Integrated Unit.>

GETtheMANUALS.org

3. Select Lever

A: REMOVAL

1) Shift the select lever to “N” range.
2) Disconnect the ground cable from battery.
3) Lift up the vehicle.
4) Remove the rear exhaust pipe.
- 2.5 L non-turbo model

<Ref. to EX(H4SO)-9, REMOVAL, Rear Exhaust Pipe.>
- 3.6 L model

<Ref. to EX(H6DO)-8, REMOVAL, Rear Exhaust Pipe.>
5) Remove the heat shield cover.

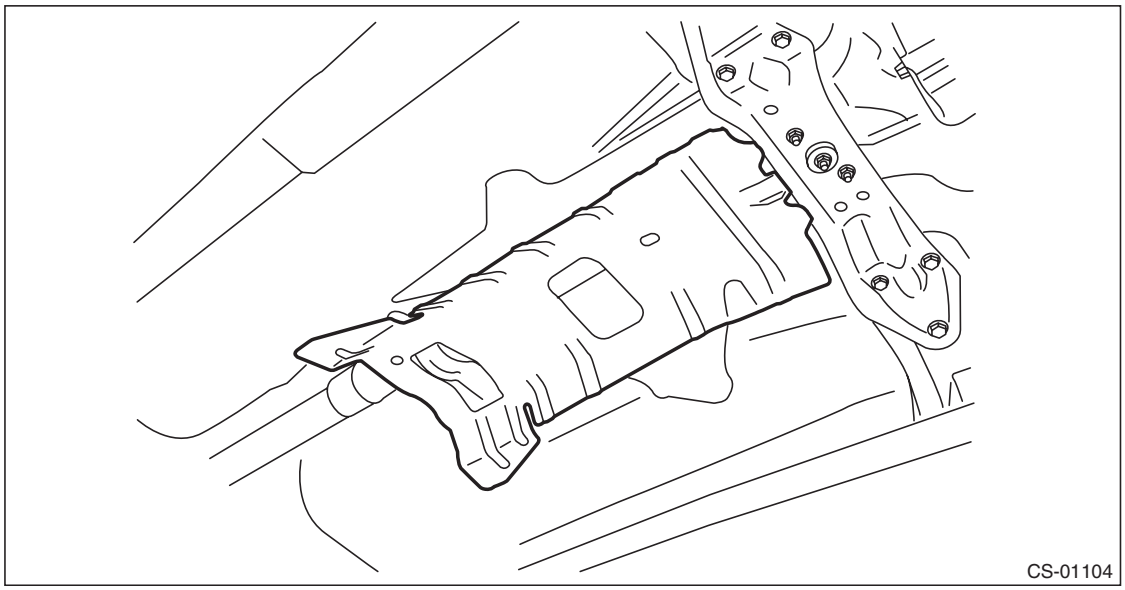

6) Remove the cable from arm assembly.

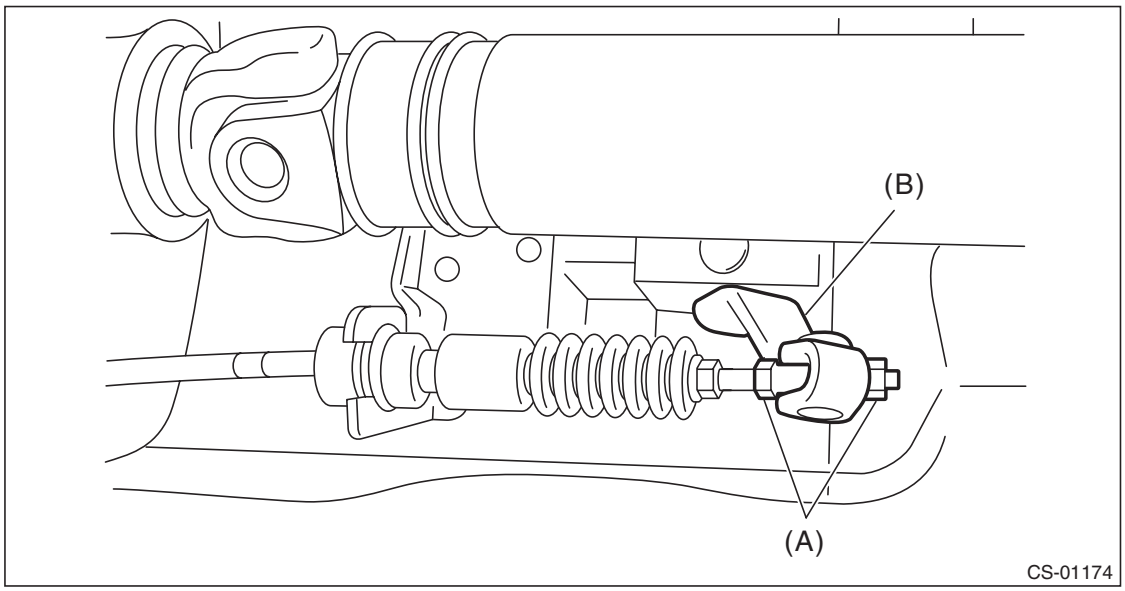

(A) Nut
(B) Arm ASSY

GETtheMANUALS.org

7) Raise the claw of clamp and remove the cable.

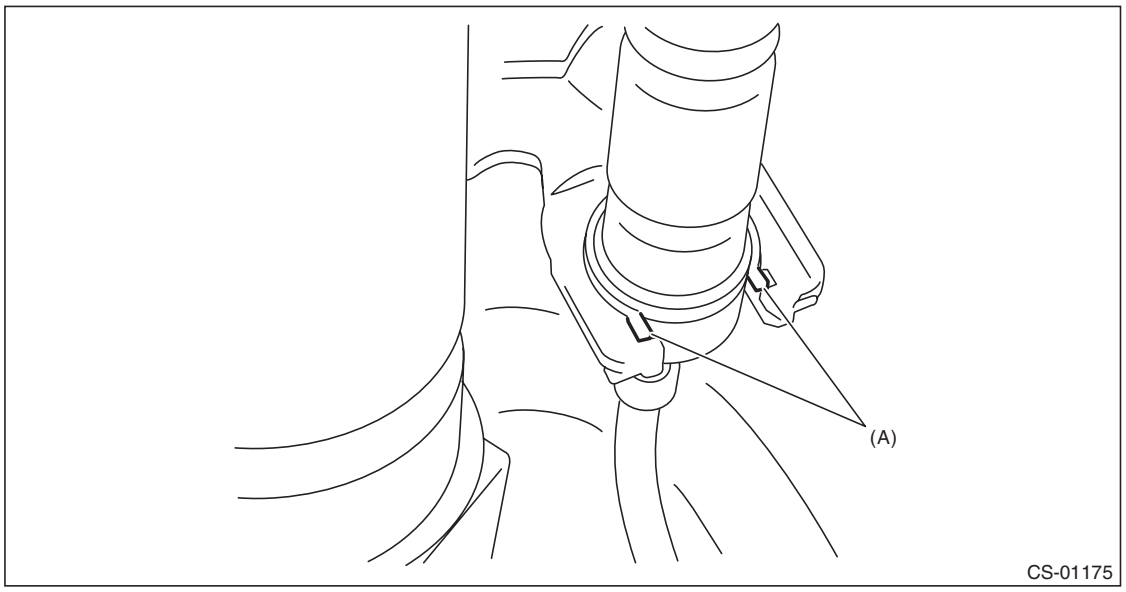

(A) Claw

8) Lower the vehicle.
9) Lower the cover grip AT vertically toward the lever.

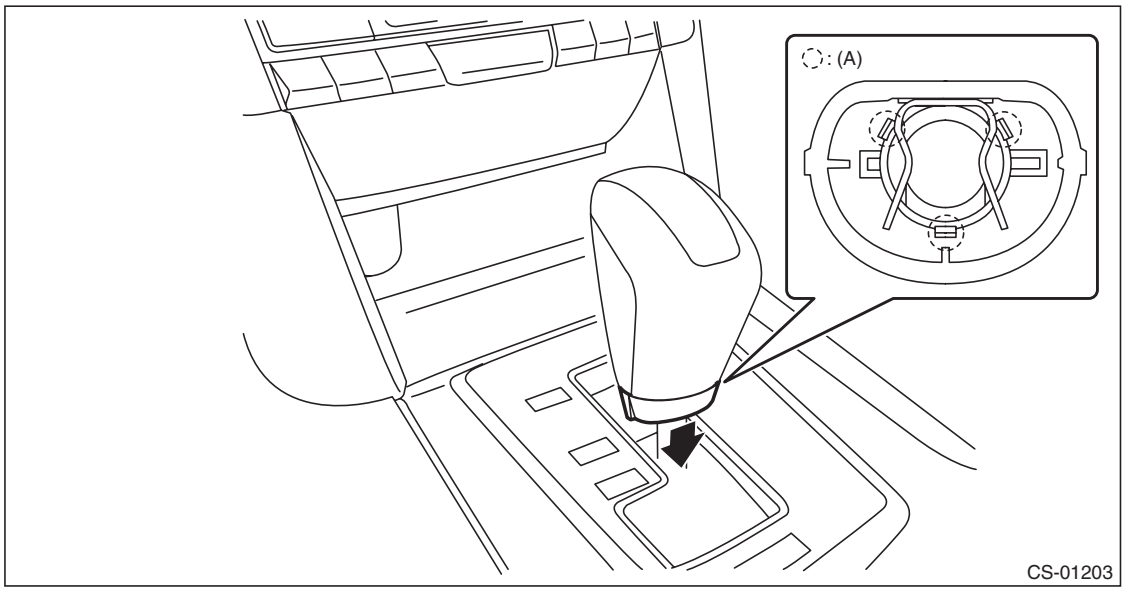

(A) Claws (3 places)

GETtheMANUALS.org

10) Remove the clamp grip pin.

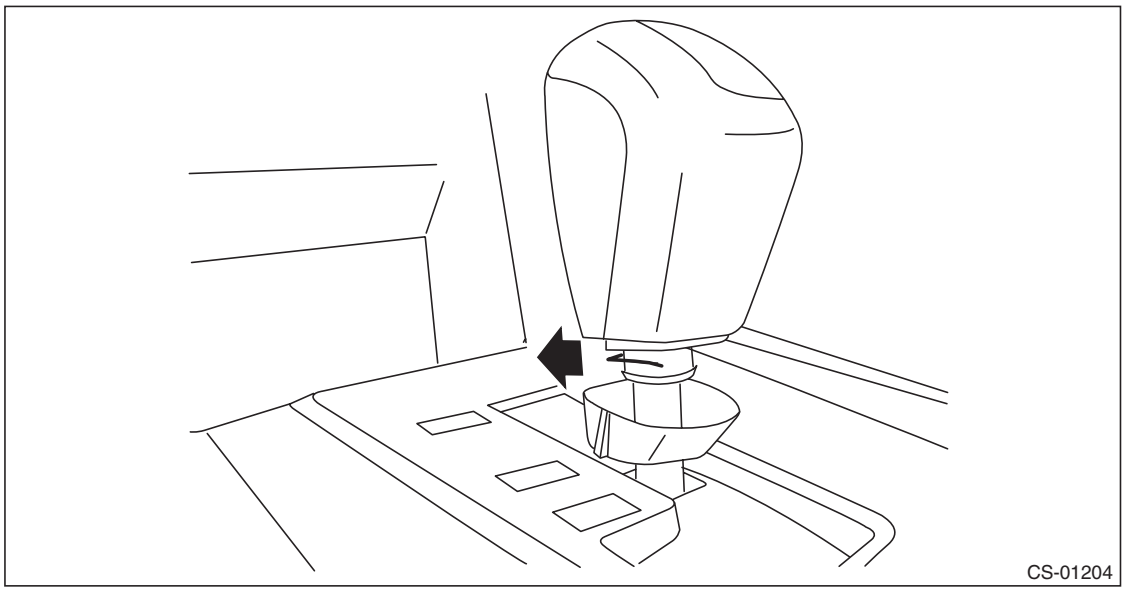

11) Remove the grip assembly.

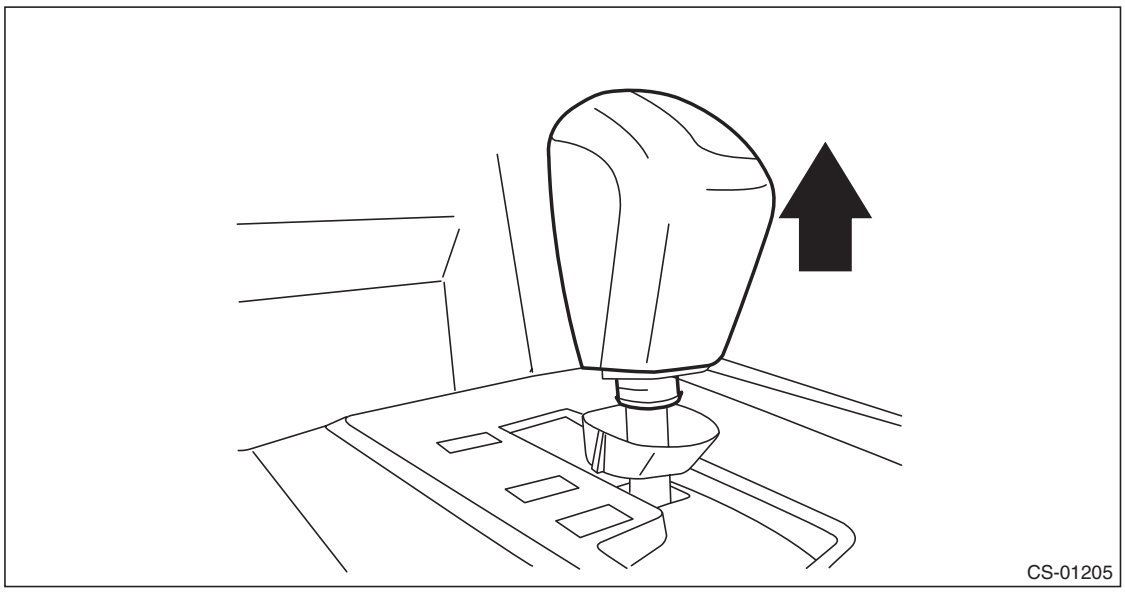

GETtheMANUALS.org

12) Turn over the rubber and remove the console front cover assembly.

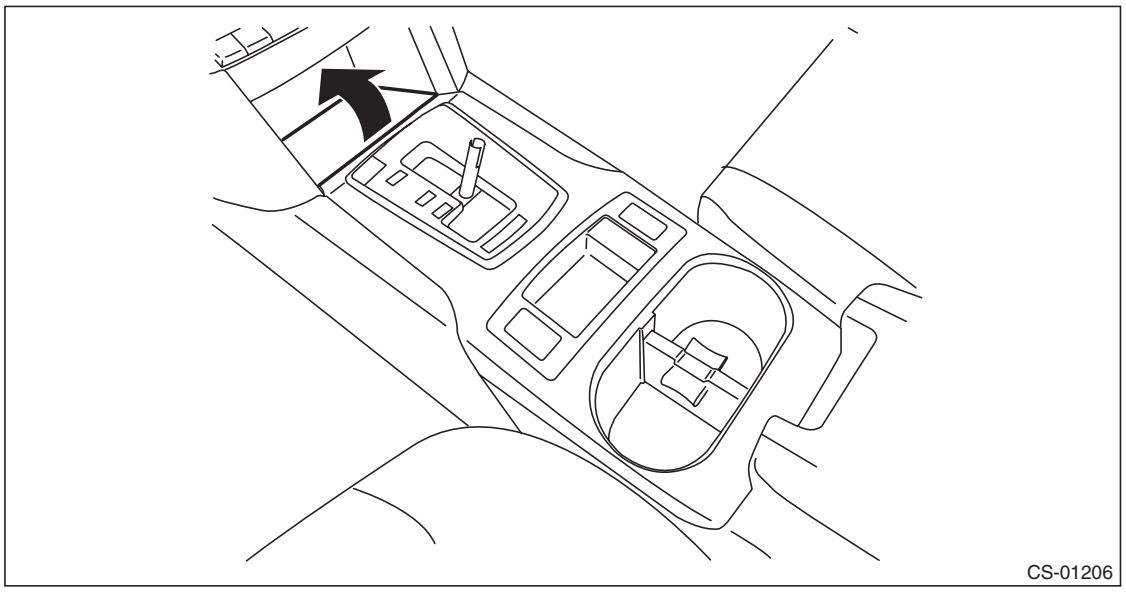

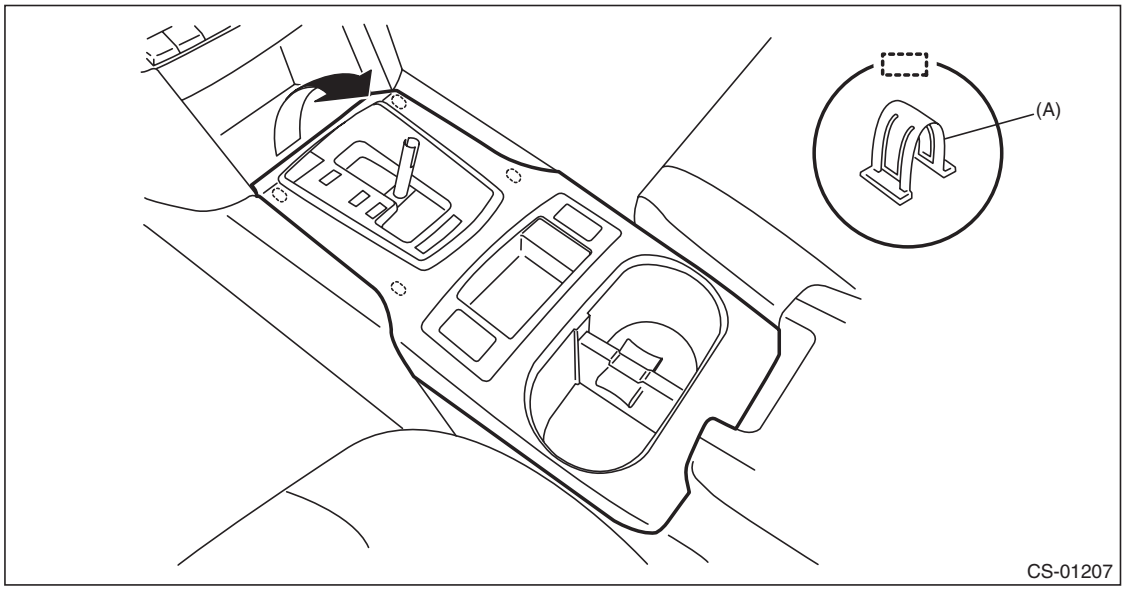

(A) Hooks (4 places)

13) Remove the console box. <Ref. to EI-73, REMOVAL, Console Box.>

GETtheMANUALS.org

14) Remove the harness clip from the select lever.

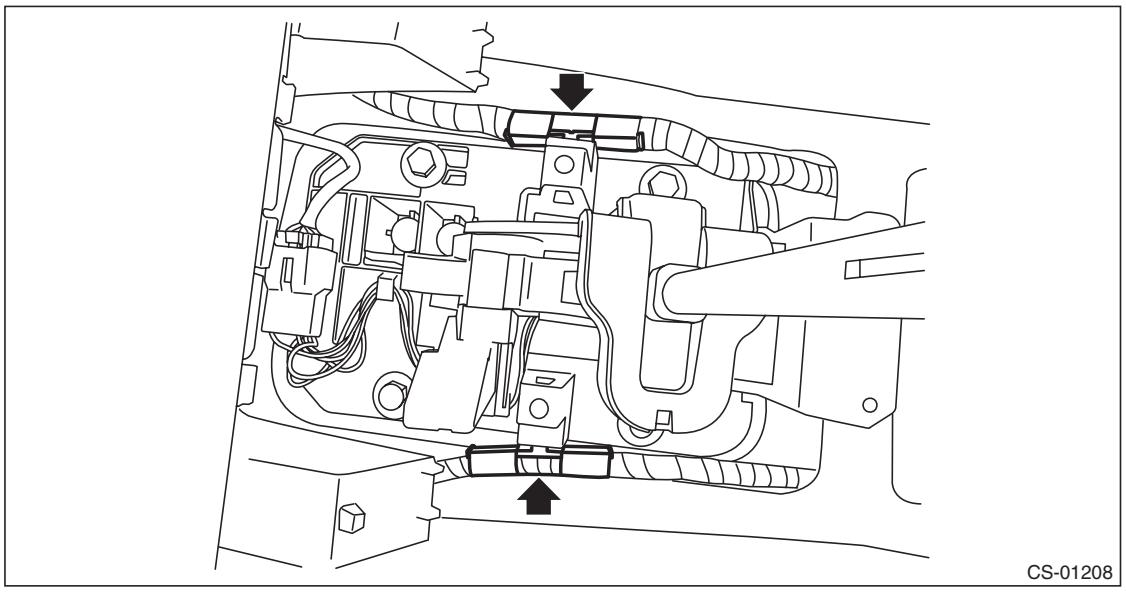

15) Disconnect the harness connector.

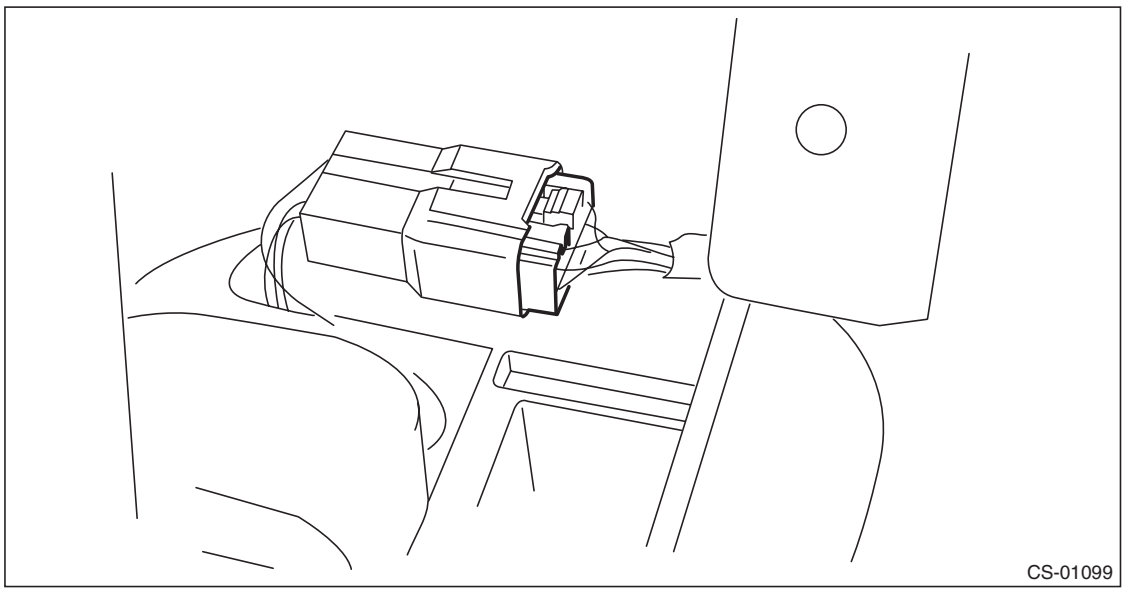

GETtheMANUALS.org

16) Remove the four bolts to remove the select lever assembly.

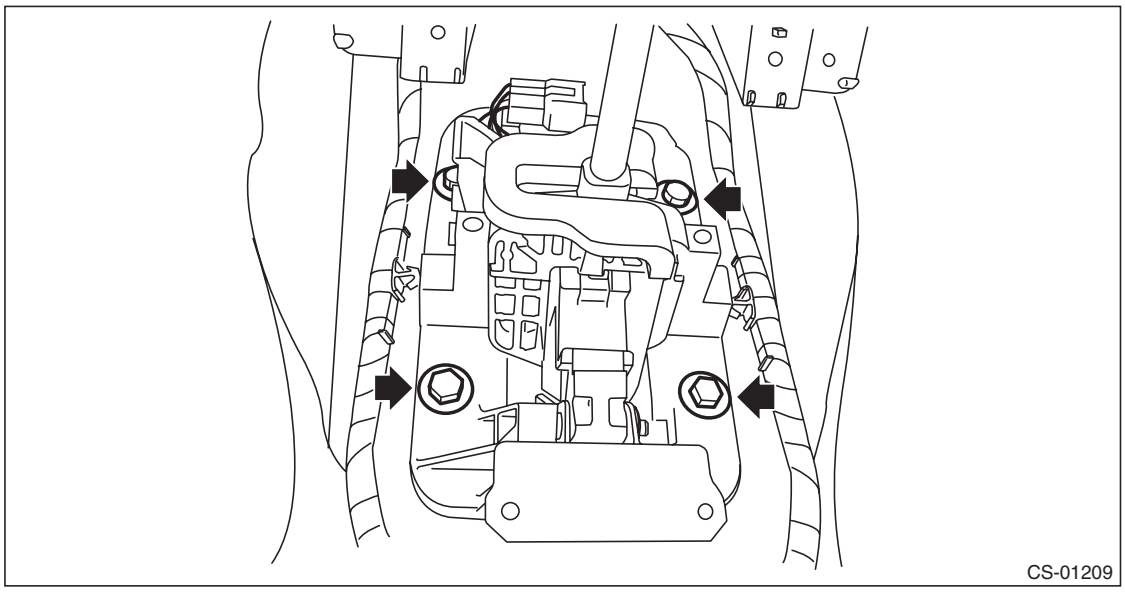

B: INSTALLATION

1) Set the select lever assembly to the vehicle body.
2) Tighten the four mounting bolts to attach the select lever assembly to the vehicle body.

Tightening torque:
18 N·m (1.8 kgf-m, 13.3 ft-lb)

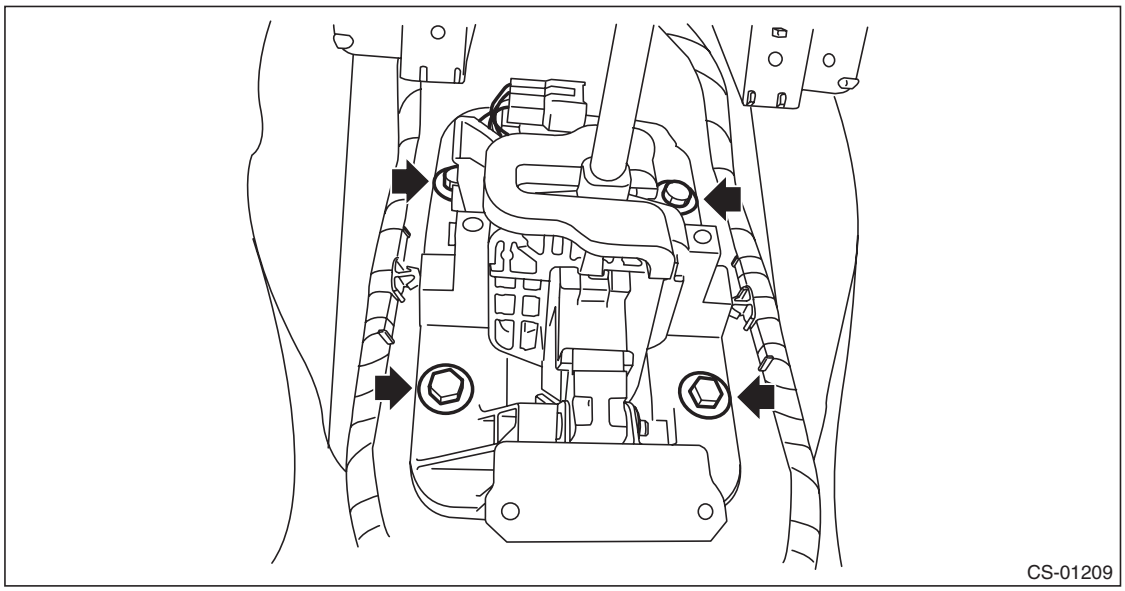

GETtheMANUALS.org

3) Connect the harness connector.

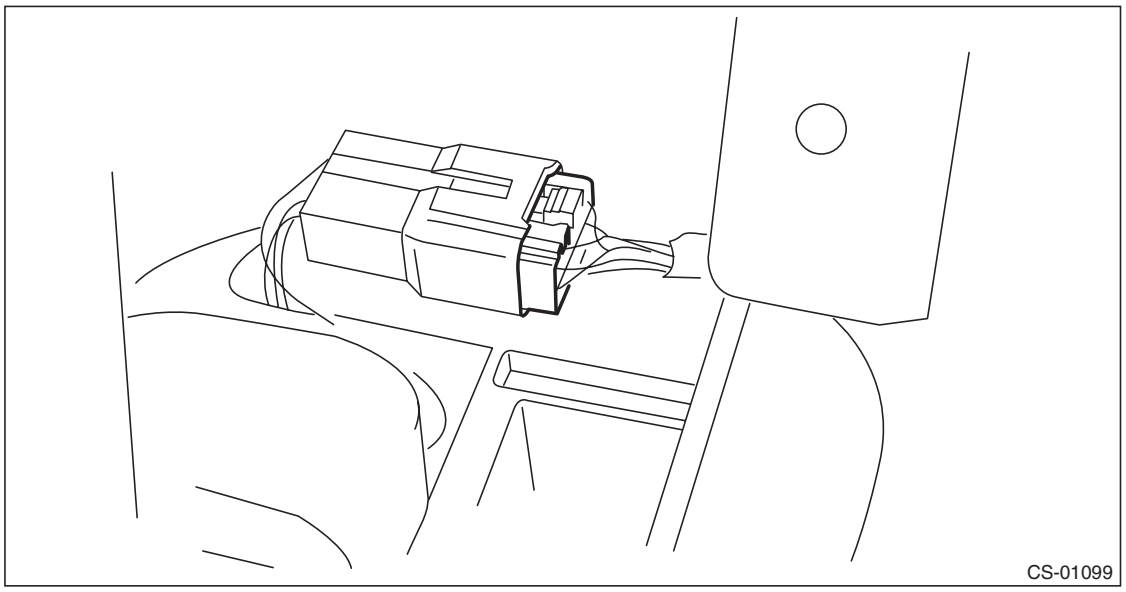

4) Install the harness clip to the select lever assembly.

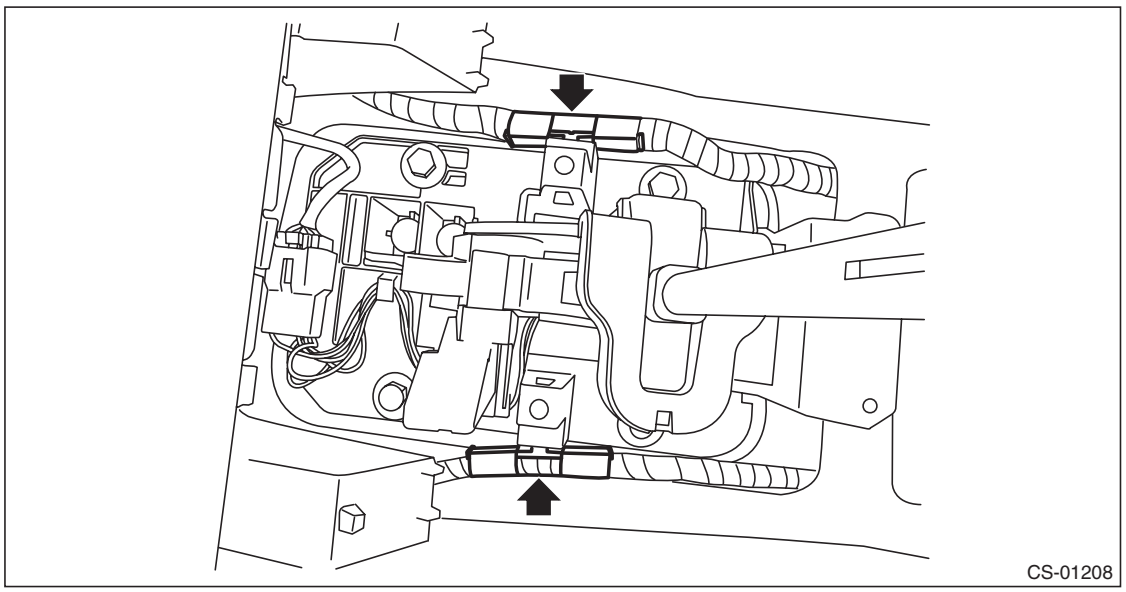

5) Shift the select lever to “N” range.
6) Install the console box and the console front cover assembly. <Ref. to EI-75, INSTALLATION, Console Box.>

GETtheMANUALS.org

7) Accessing from the button side of the grip, attach the clamp grip pin.

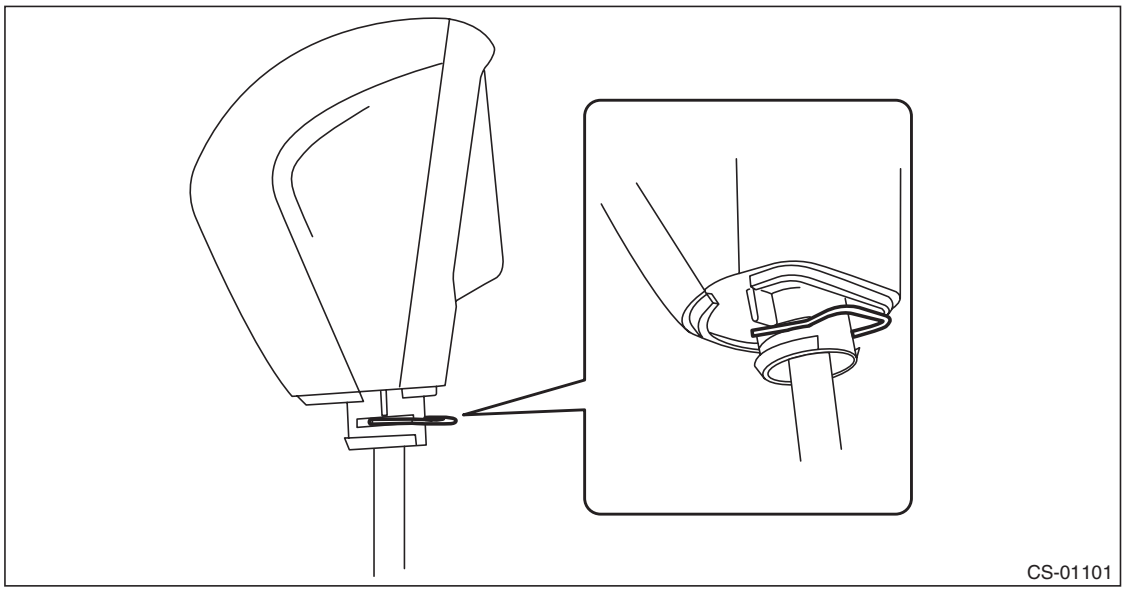

8) Install the cover grip AT securely.

NOTE:
After installation, check that the cover grip AT cannot be detached.

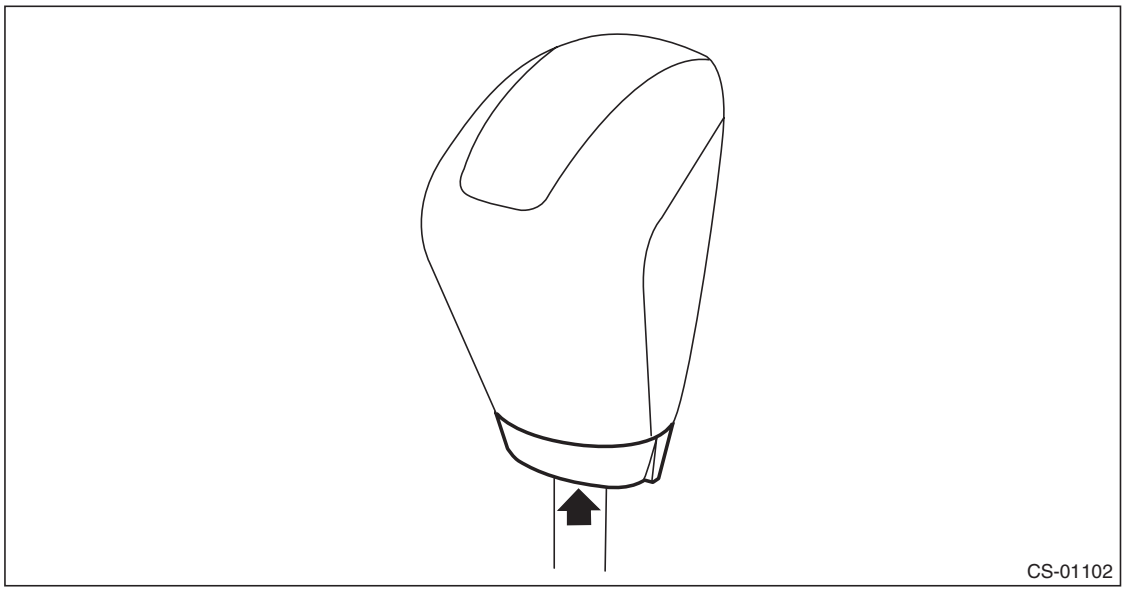

GETtheMANUALS.org

9) Insert the grip assembly to the select lever and press it down until a click is heard.

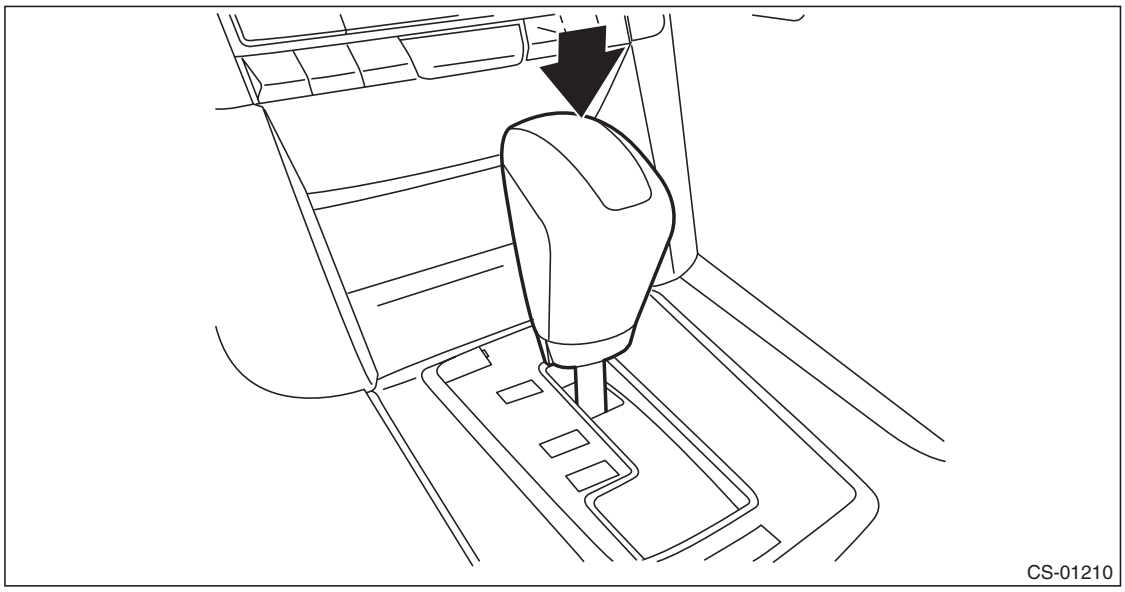

10) After installation of grip, check the following points.
- The grip will not come off.
- The button on the grip operates normally.

11) Lift up the vehicle.
12) Shift the range select lever to “N” range.
13) Secure the cable to the bracket. <Ref. to CS-46, INSTALLATION, Select Cable.>
14) Adjust the select cable position. <Ref. to CS-50, ADJUSTMENT, Select Cable.>
15) After adjustment, confirm that the select lever operates properly at all range positions using the shift lock release button.
16) Install the heat shield cover.

Tightening torque:
18 N·m (1.8 kgf-m, 13.3 ft-lb)

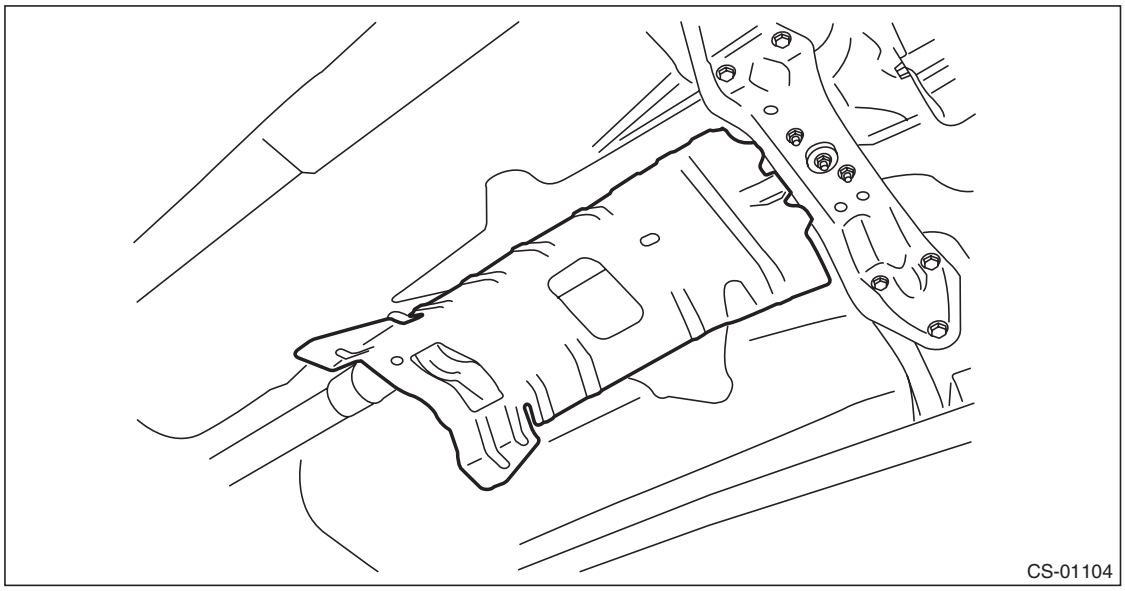

17) Install the rear exhaust pipe.
- 2.5 L non-turbo model

<Ref. to EX(H4SO)-9, INSTALLATION, Rear Exhaust Pipe.>
- 3.6 L model

<Ref. to EX(H6DO)-8, INSTALLATION, Rear Exhaust Pipe.>

GETtheMANUALS.org

18) Inspect the following items. If a malfunction is found in the inspection, adjust the select cable or inhibitor switch (CVT model).
(1) The shift lock operates normally. <Ref. to CS-12, SHIFT LOCK OPERATION, INSPECTION, AT Shift Lock Control System.>
(2) Engine starts when the select lever is in “P” or “N” range, but not in other ranges.
(3) Back-up light illuminates when the select lever is in the “R” range, but not in other ranges.
(4) Select lever and indicator positions are matched.

C: DISASSEMBLY

1. GRIP ASSY

1) Remove the cover grip AT.

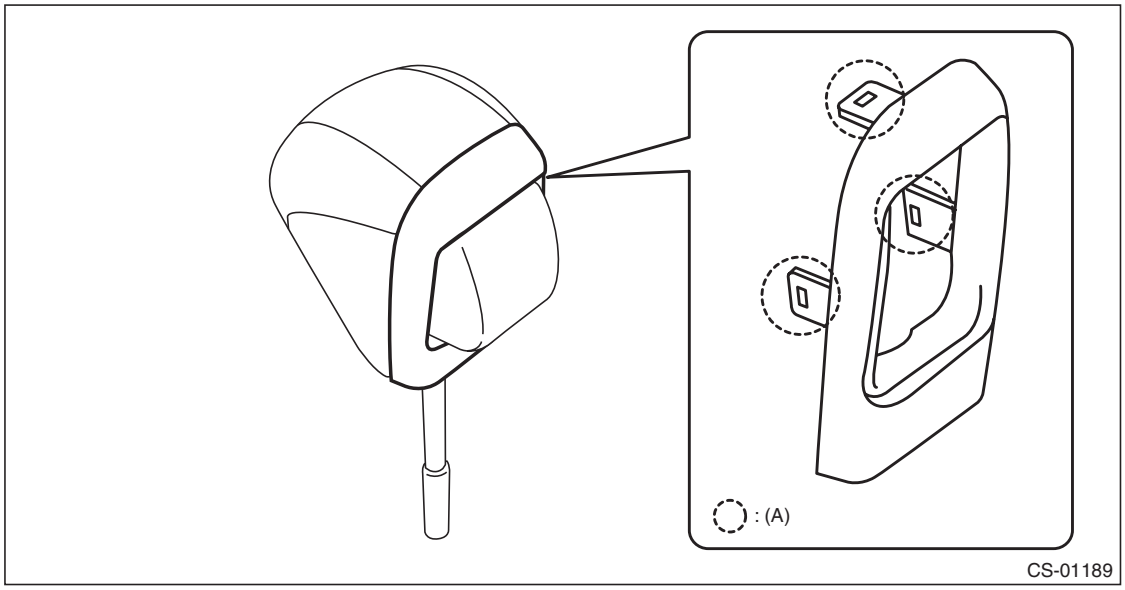

(A) Claws (3 places)

2) Remove the button assembly-AT.

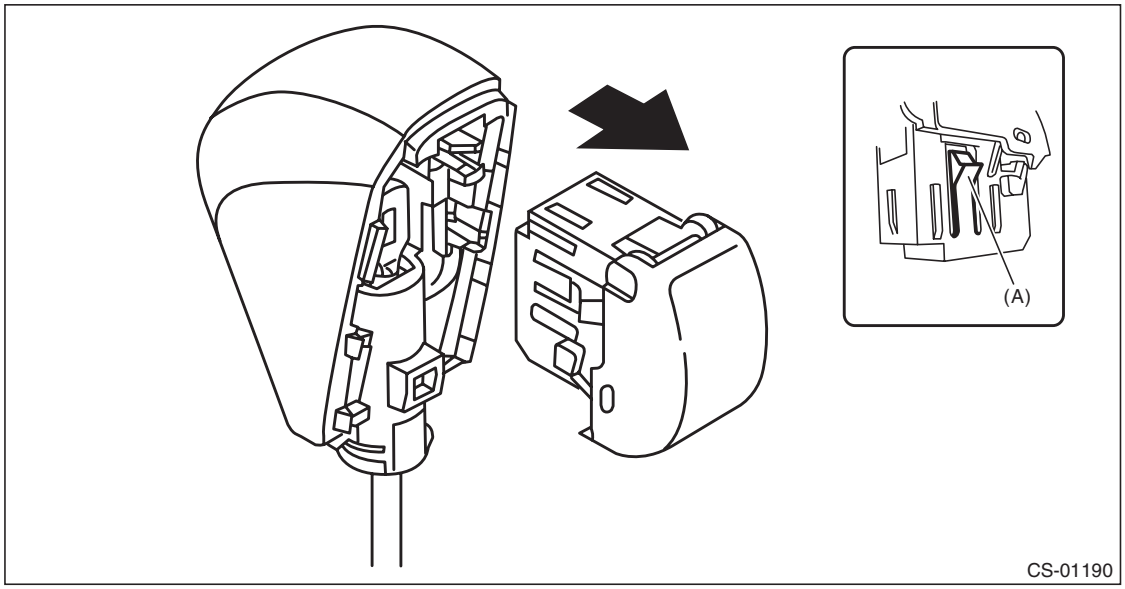

(A) Claw

3) Remove the rod COMPL.

GETtheMANUALS.org

2. AT SELECT LEVER ASSEMBLY

1) Remove the spacer plate.

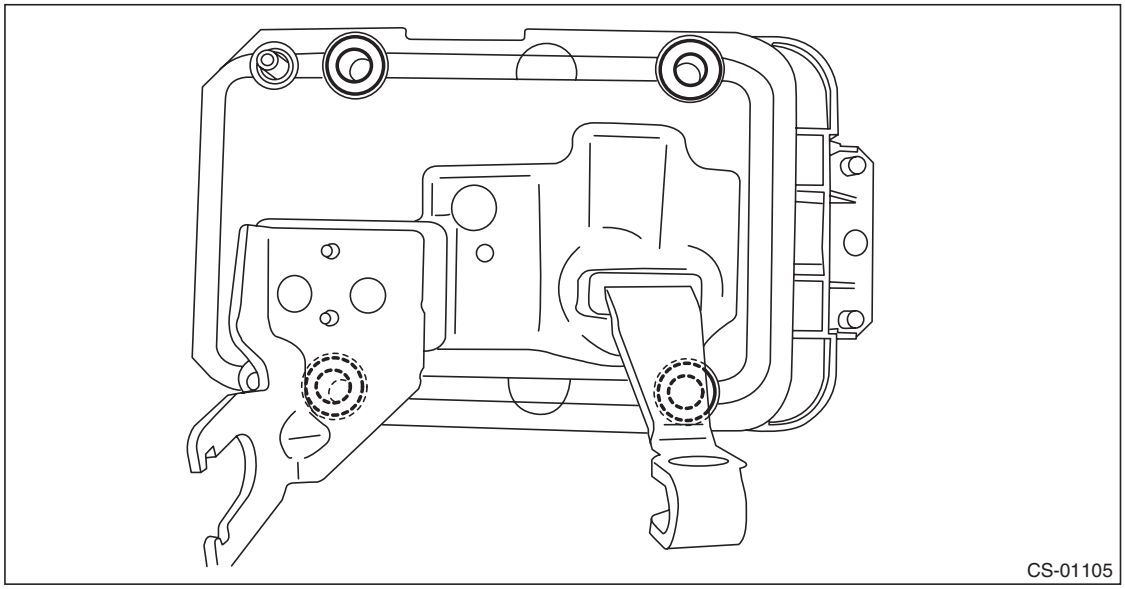

2) Remove the gasket.

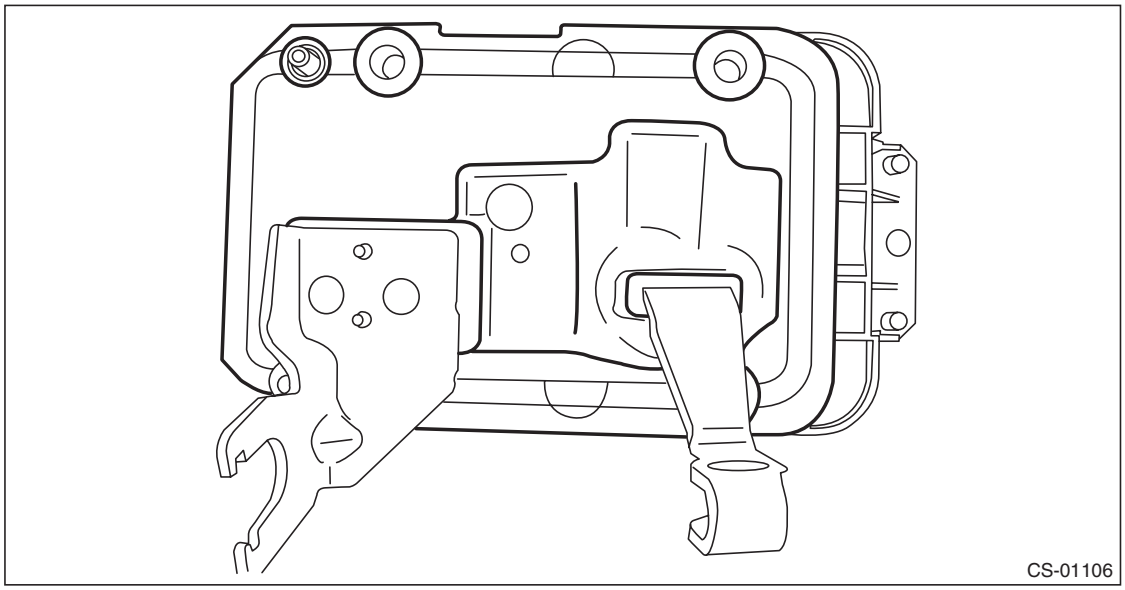

GETtheMANUALS.org

3) Insert a flat tip screwdriver with a thin tip under the connector and disconnect the harness connector from the plate COMPL.

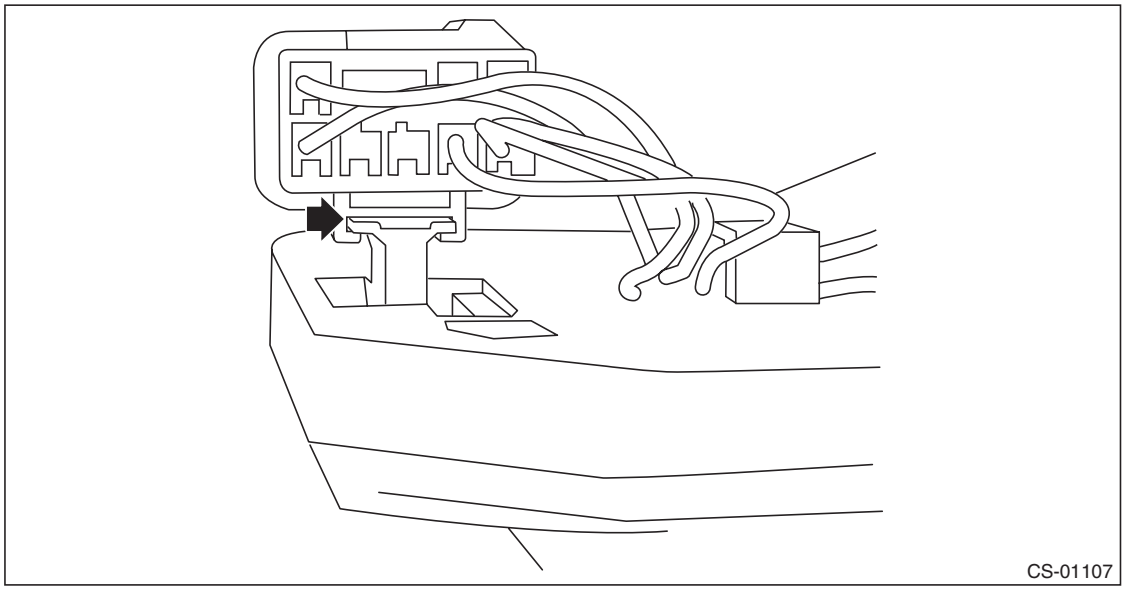

4) Remove the harness from the plate COMPL.

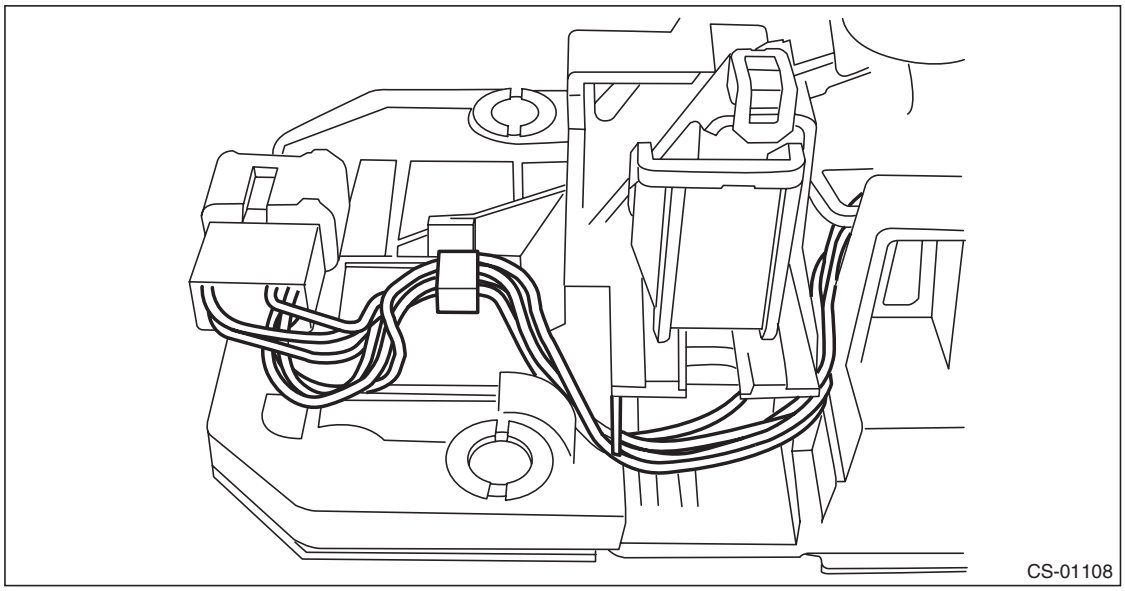

GETtheMANUALS.org

5) Raise the claw with a flat tip screwdriver with a thin tip and remove the solenoid unit.

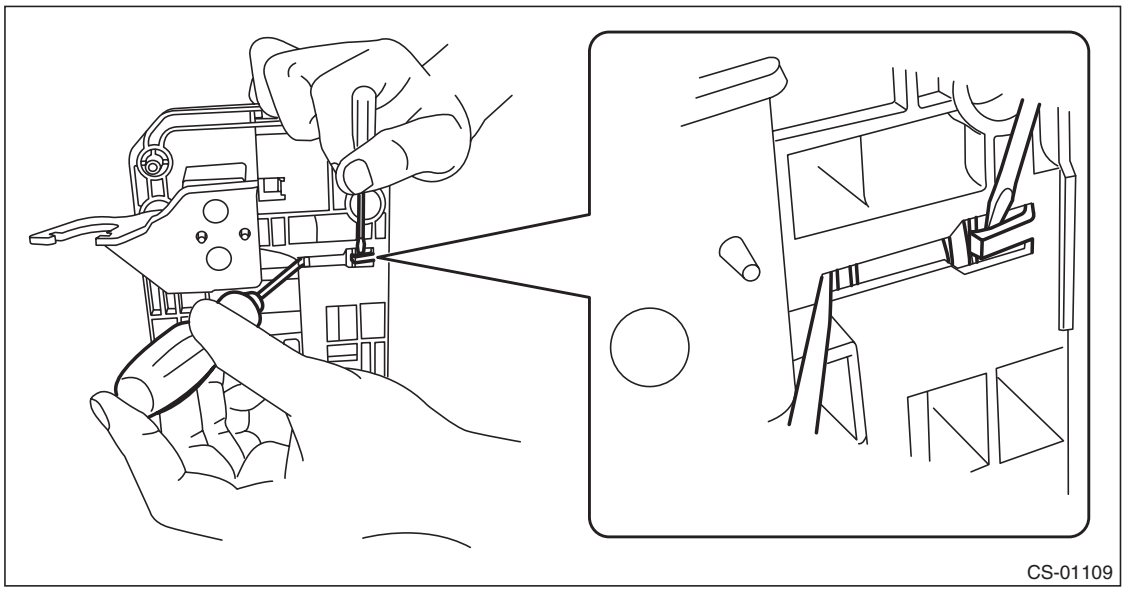

6) Using a flat tip screwdriver with a thin tip, remove the solenoid unit terminals from the connector.

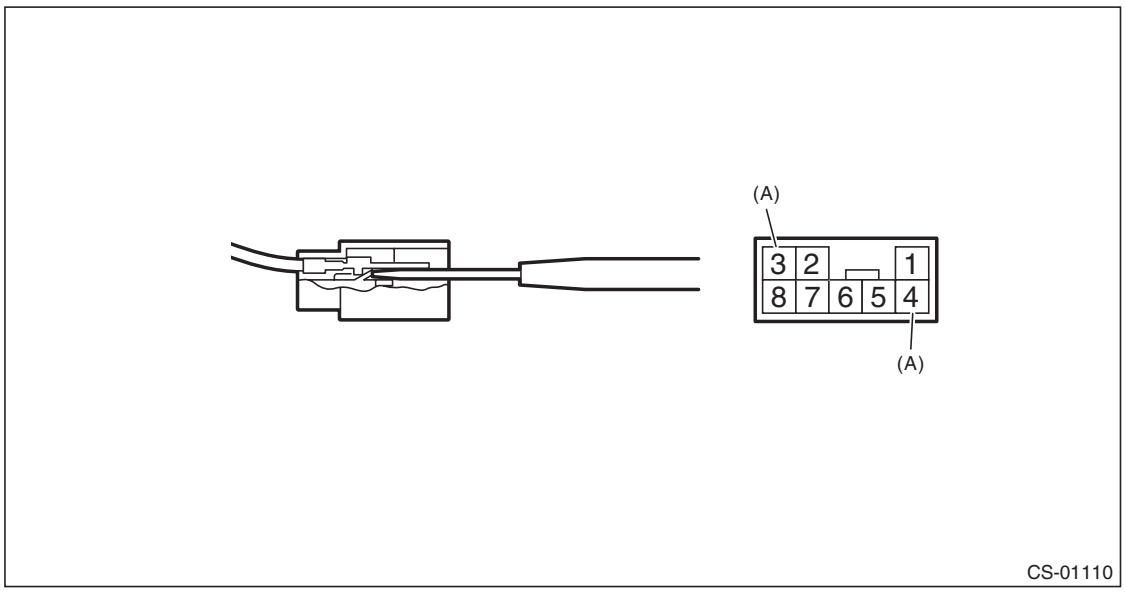

(A) Solenoid unit terminals

GETtheMANUALS.org

7) Remove the clamp push nut.

NOTE:
Replace the clamp push nut with a new part.

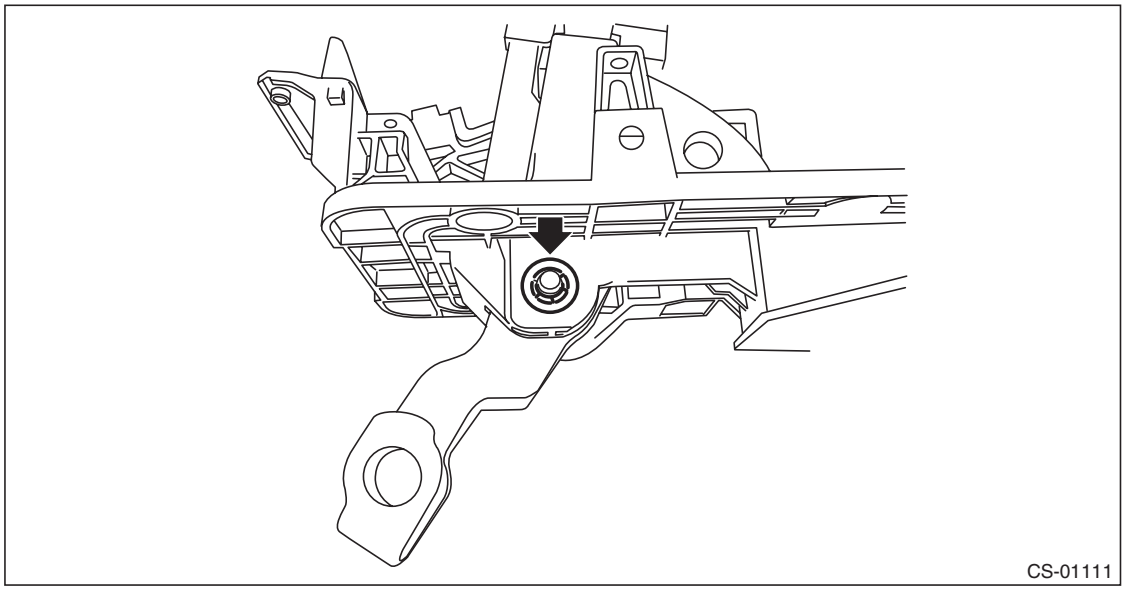

8) Pull out shaft control.

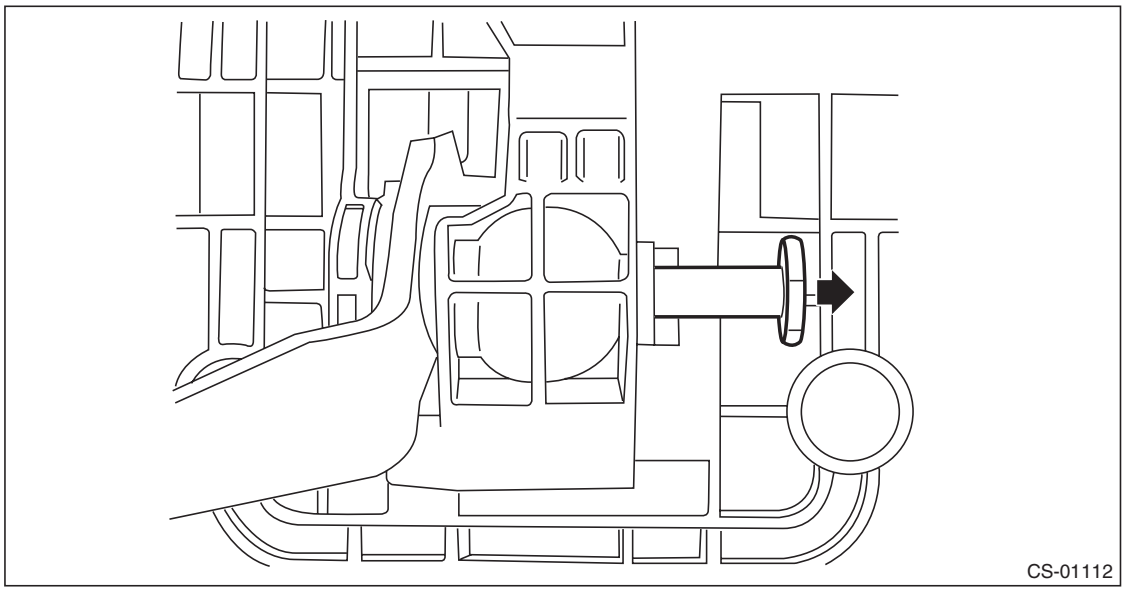

GETtheMANUALS.org

9) Remove the clamp push nut.

NOTE:
Replace the clamp push nut with a new part.

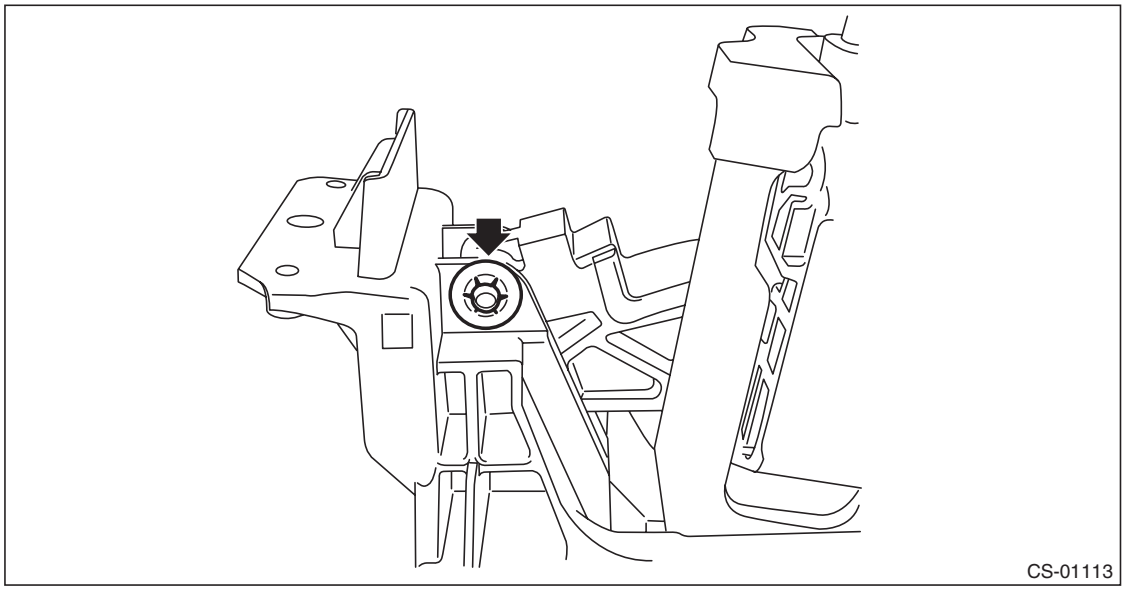

10) Pull out spacer pin guide.

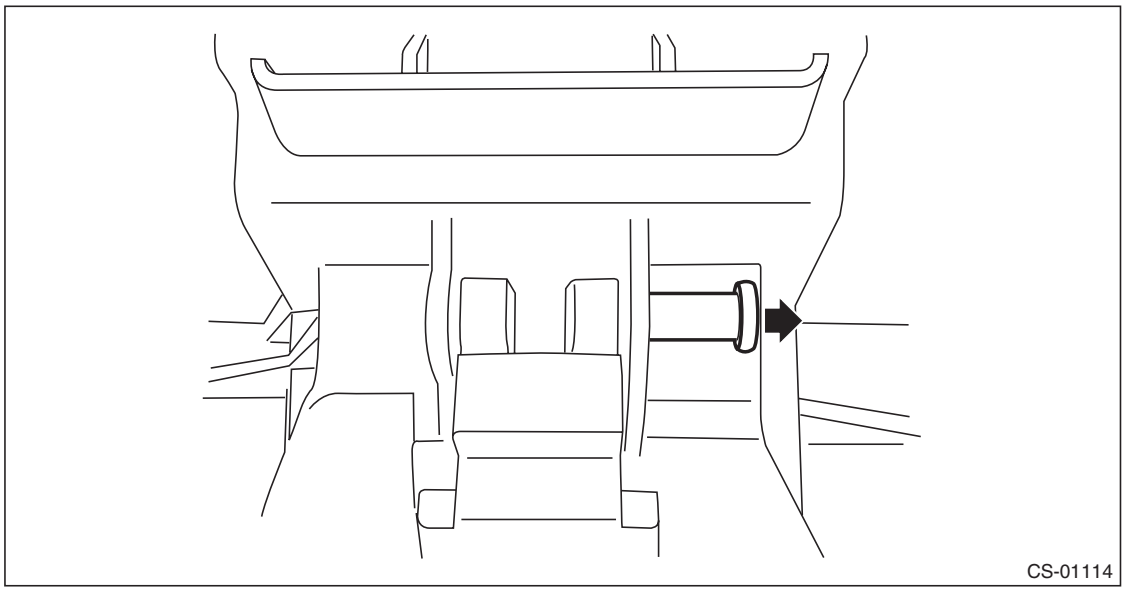

GETtheMANUALS.org

11) Remove the clamp pin.

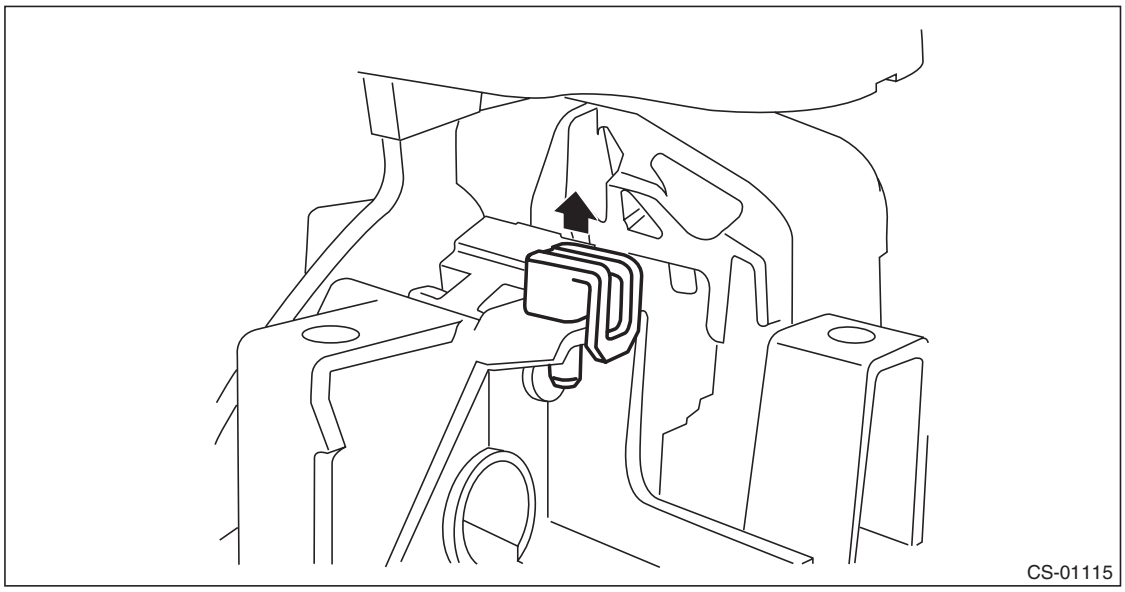

12) Remove the spacer pin guide.

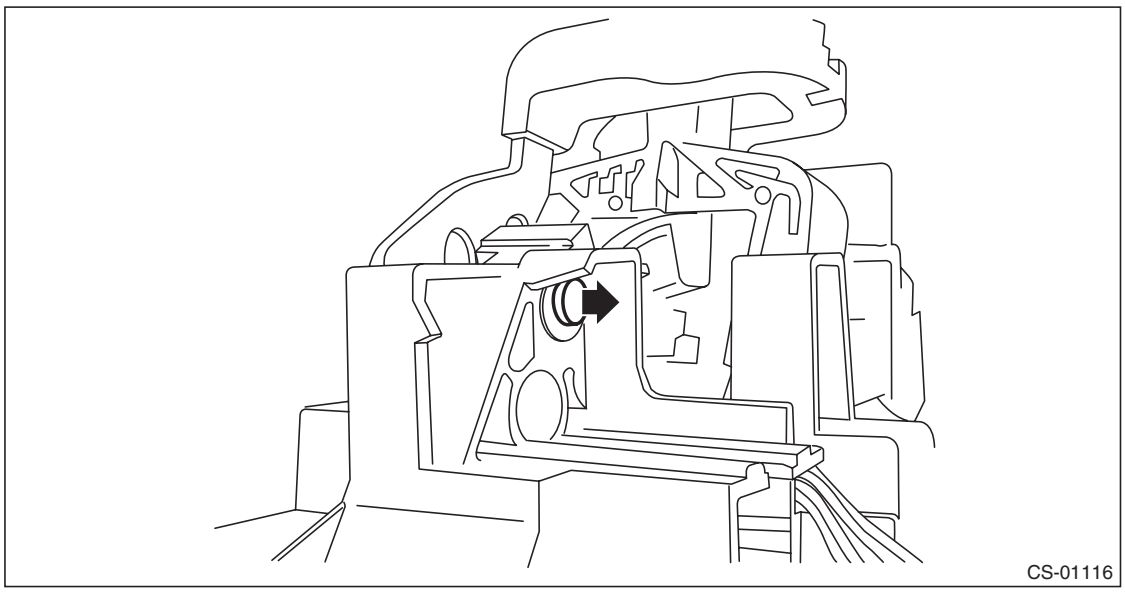

GETtheMANUALS.org

13) Remove the select lever COMPL from the plate COMPL.

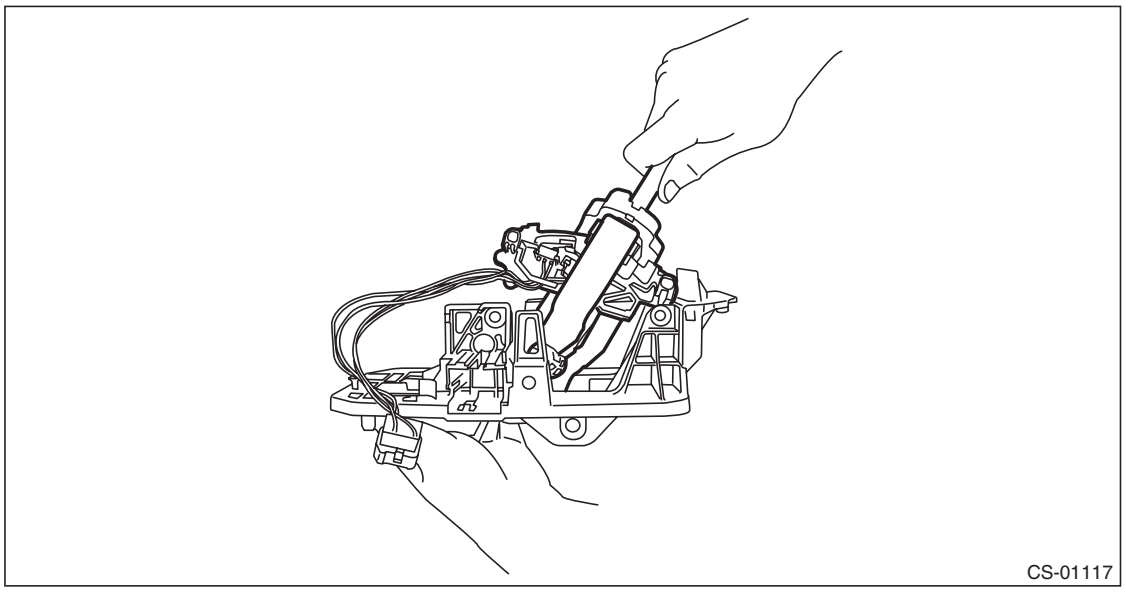

14) Remove the arm assembly.

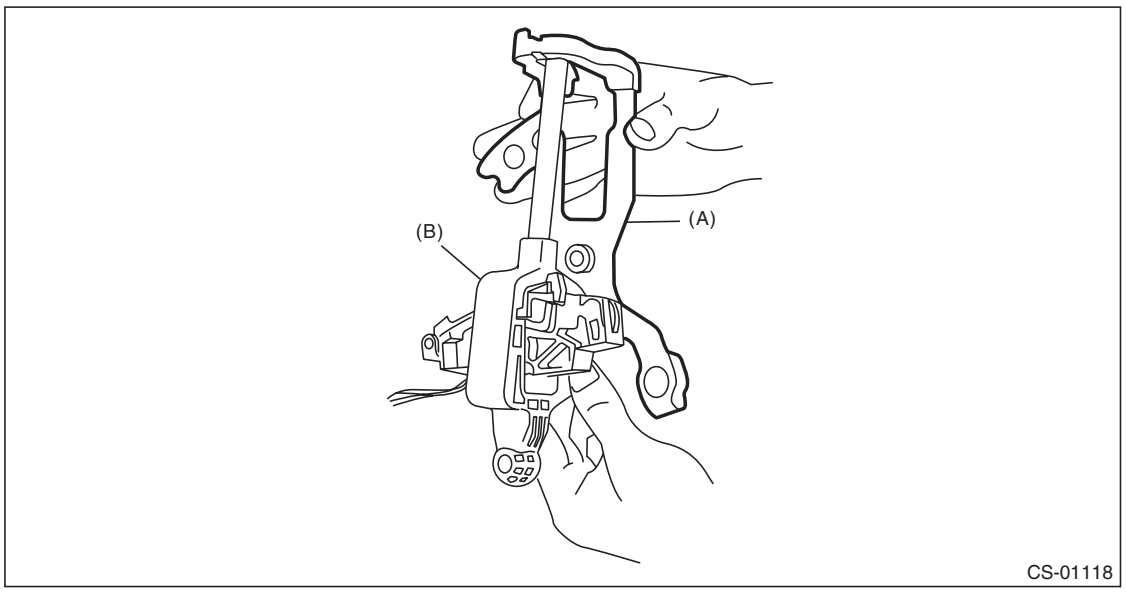

(A) Arm ASSY
(B) Selector lever COMPL

GETtheMANUALS.org

15) Remove the plate guide from the select lever COMPL.

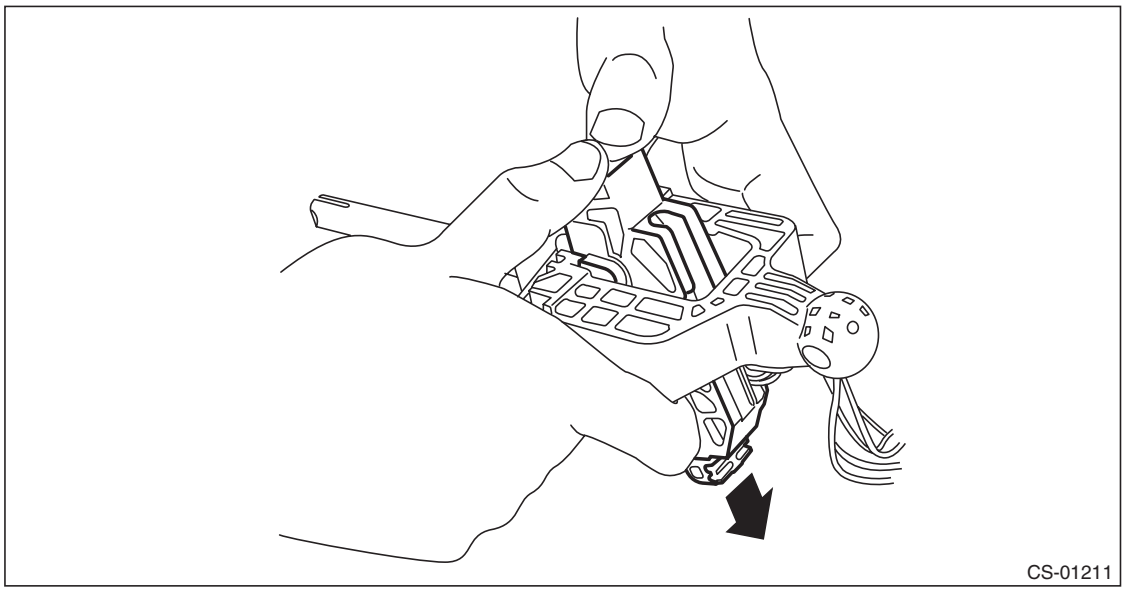

16) Remove the rod detent and detent spring from the select lever COMPL.

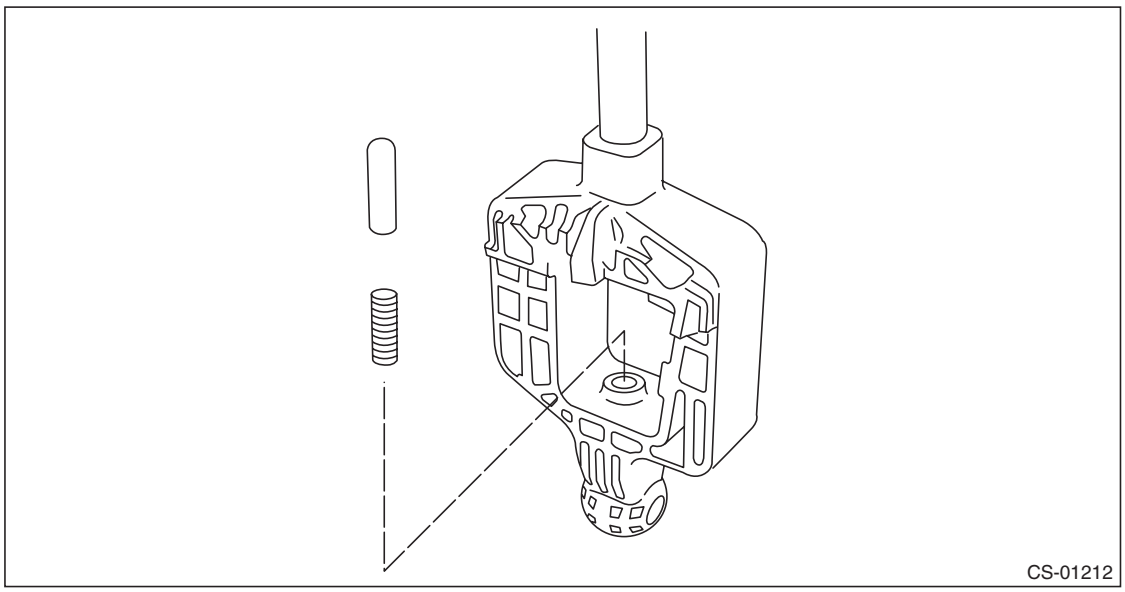

GETtheMANUALS.org

3. INDICATOR ASSY

1) Disconnect the harness connector from the console front cover assembly.

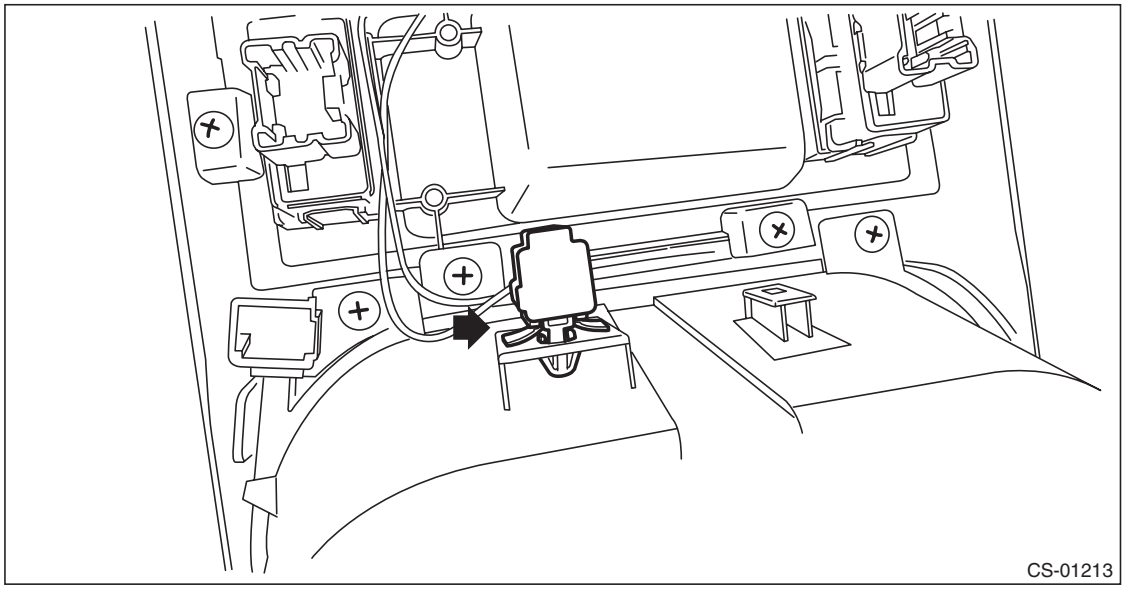

2) Remove the four screws and remove the indicator assembly from the console front cover assembly.

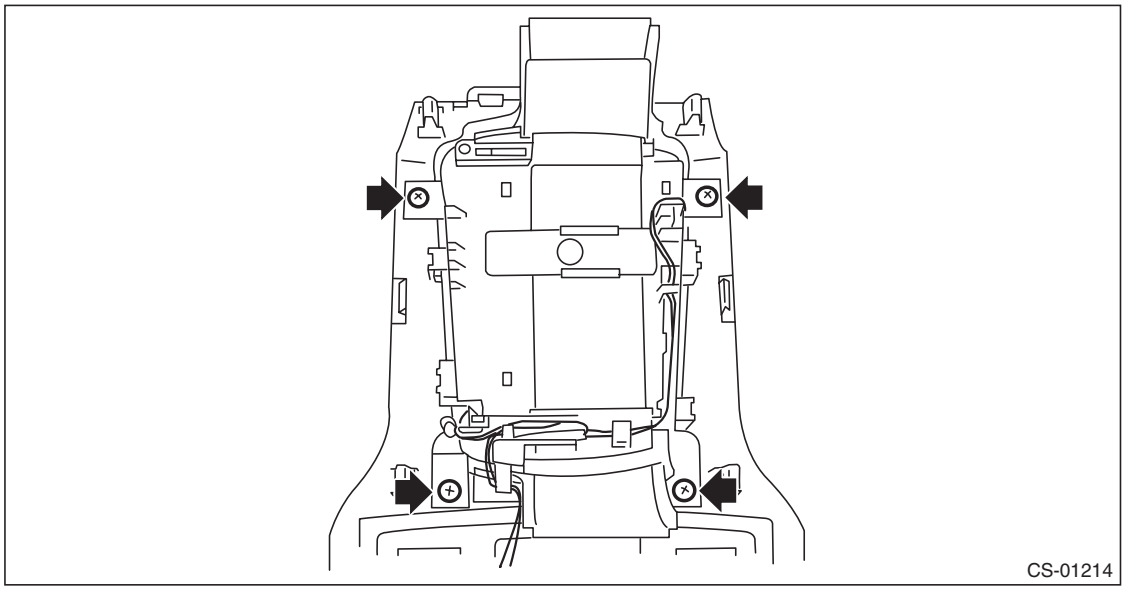

GETtheMANUALS.org

D: ASSEMBLY

1) Clean all the parts before assembly.
2) Apply Multemp D or equivalent to the sliding portion of each part.
3) Assemble in the reverse order of disassembly.

NOTE:
Insert the solenoid unit terminals to the harness connector.

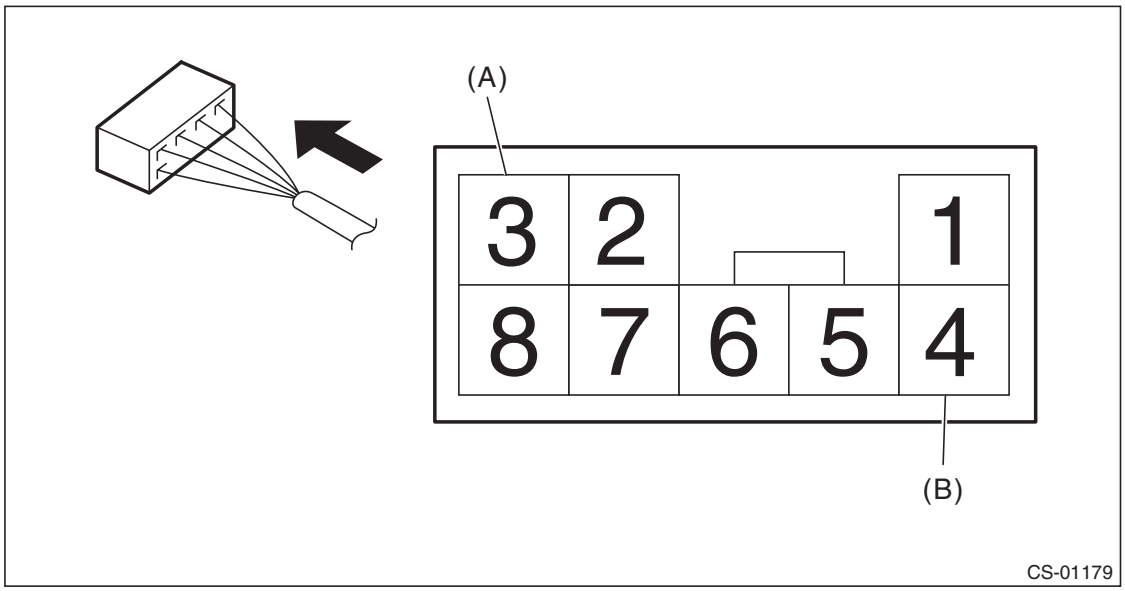

(A) Solenoid unit (color code: blue)
(B) Solenoid unit (color code: black)

4) After installation, check the following points.
- The select indicator matches the select lever position when the select lever is changed from “P” range to “D” range.
- The select lever position and the position mark match each other.
- Operating force to move the select lever from “P” to “D” range.

E: INSPECTION

1) Inspect the removed parts by comparing with new ones for deformation, damage and wear. Repair or replace if defective.
2) Inspect the select lever assembly operating condition before assembly. Normal if it operates smoothly.

GETtheMANUALS.org

4. Select Cable

A: REMOVAL

1) Shift the select lever to “N” range.
2) Disconnect the ground cable from battery.
3) Lift up the vehicle.
4) Remove the front exhaust pipe and rear exhaust pipe.
• 2.5 L model
<Ref. to EX(H4SO)-5, REMOVAL, Front Exhaust Pipe.> <Ref. to EX(H4SO)-9, REMOVAL, Rear Exhaust Pipe.>
• 3.6 L model
<Ref. to EX(H6DO)-5, REMOVAL, Front Exhaust Pipe.> <Ref. to EX(H6DO)-8, REMOVAL, Rear Exhaust Pipe.>
5) Remove the heat shield cover.

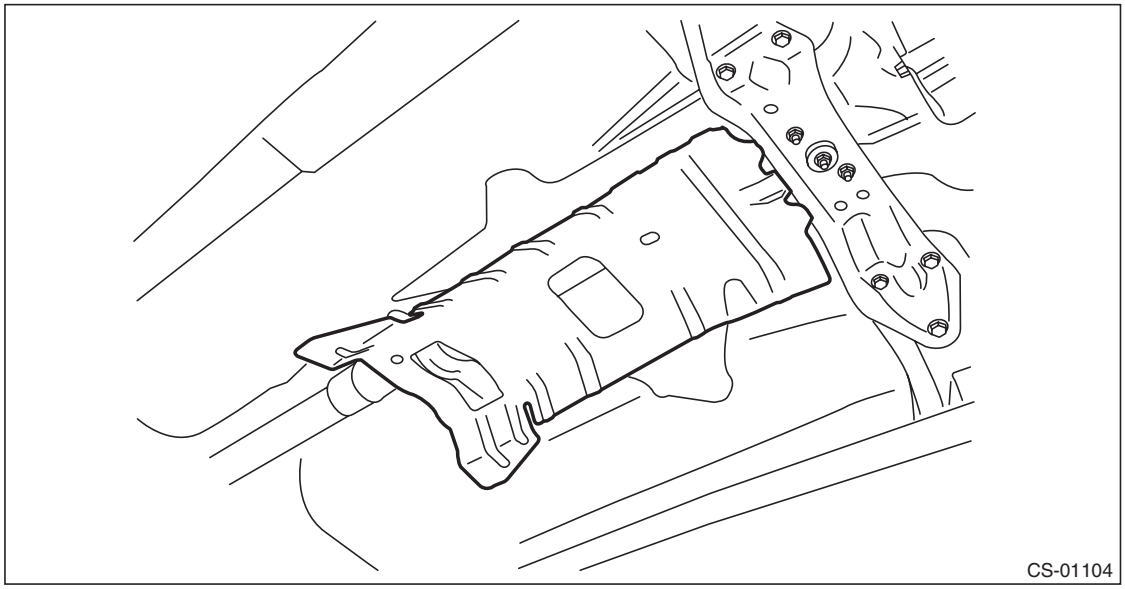

GETtheMANUALS.org

6) Remove the snap pin and washer from the shifter arm and remove the select cable from the shifter arm.

- CVT model

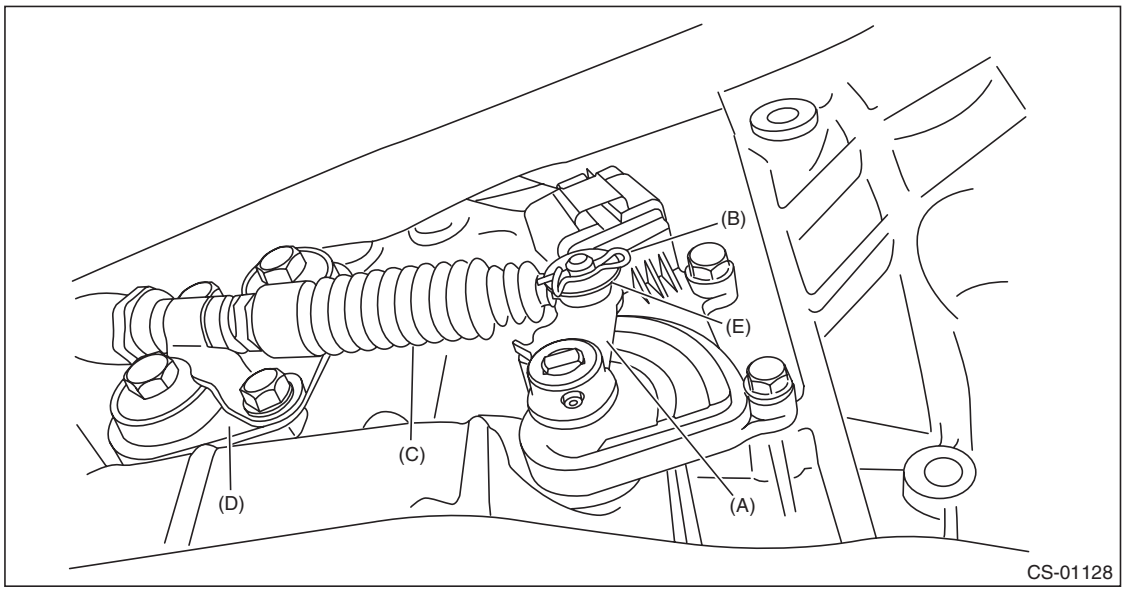

(A) Shifter arm
(B) Snap pin
(C) Select cable
(D) Plate ASSY
(E) Washer

- AT model

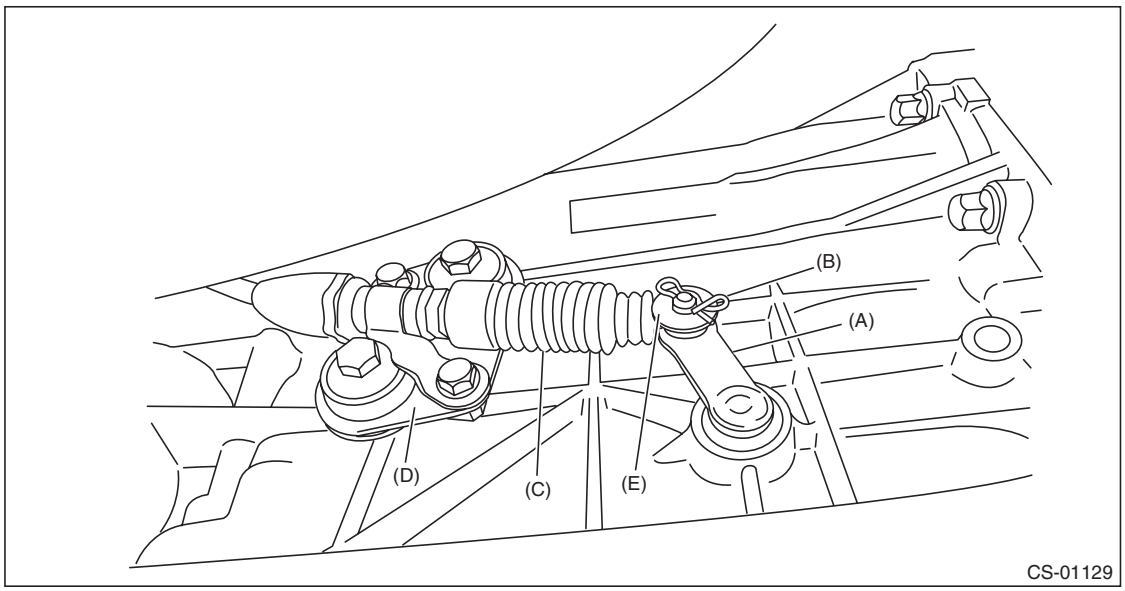

(A) Shifter arm
(B) Snap pin
(C) Select cable
(D) Plate ASSY
(E) Washer

GETtheMANUALS.org

7) Remove the plate assembly from the transmission case.

- CVT model

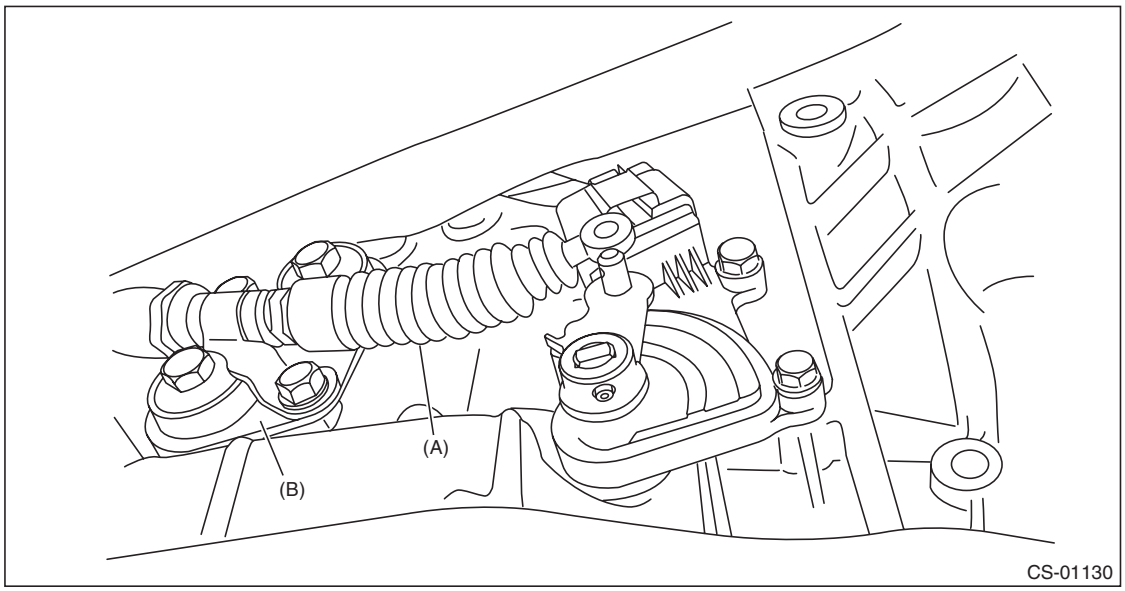

(A) Select cable
(B) Plate ASSY

- AT model

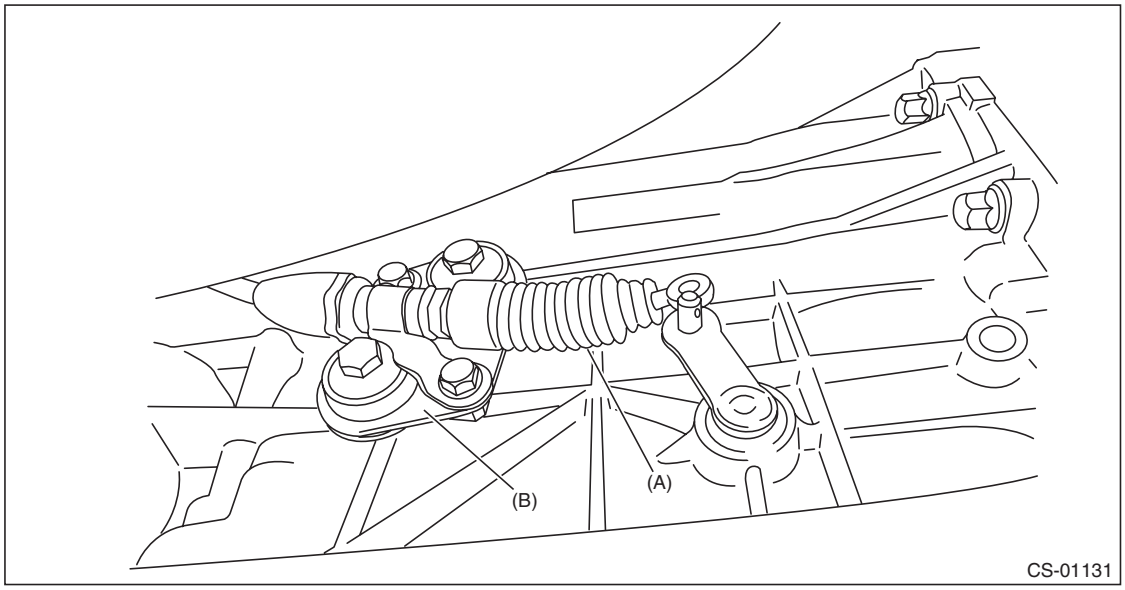

(A) Select cable
(B) Plate ASSY

GETtheMANUALS.org

8) Disconnect the cable from arm assembly.

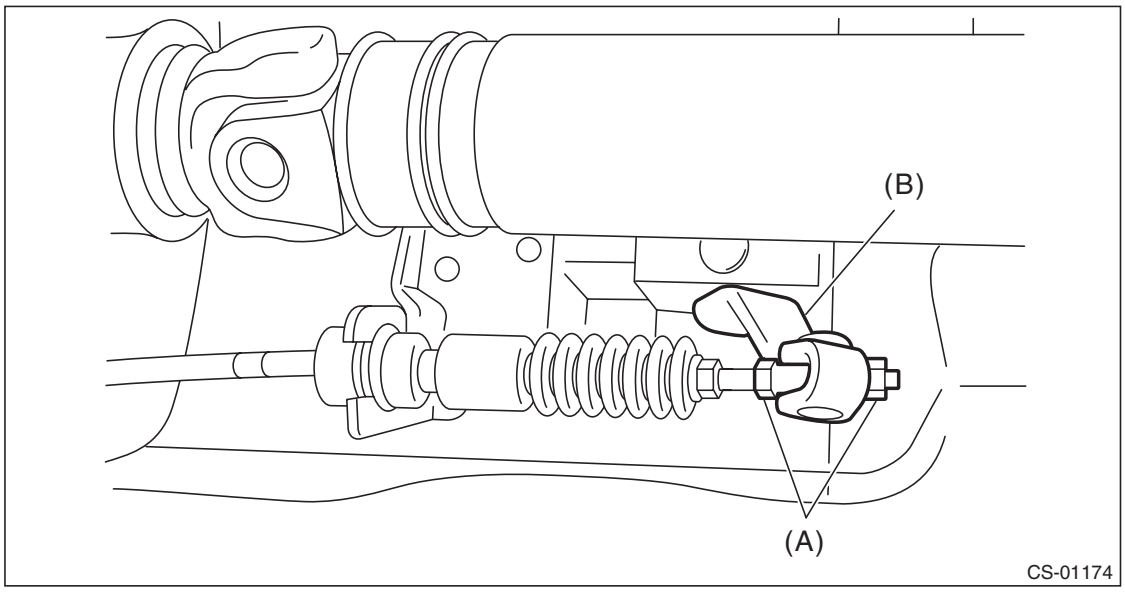

(A) Nut
(B) Arm ASSY

9) Raise the claw of clamp to remove the cable from bracket.

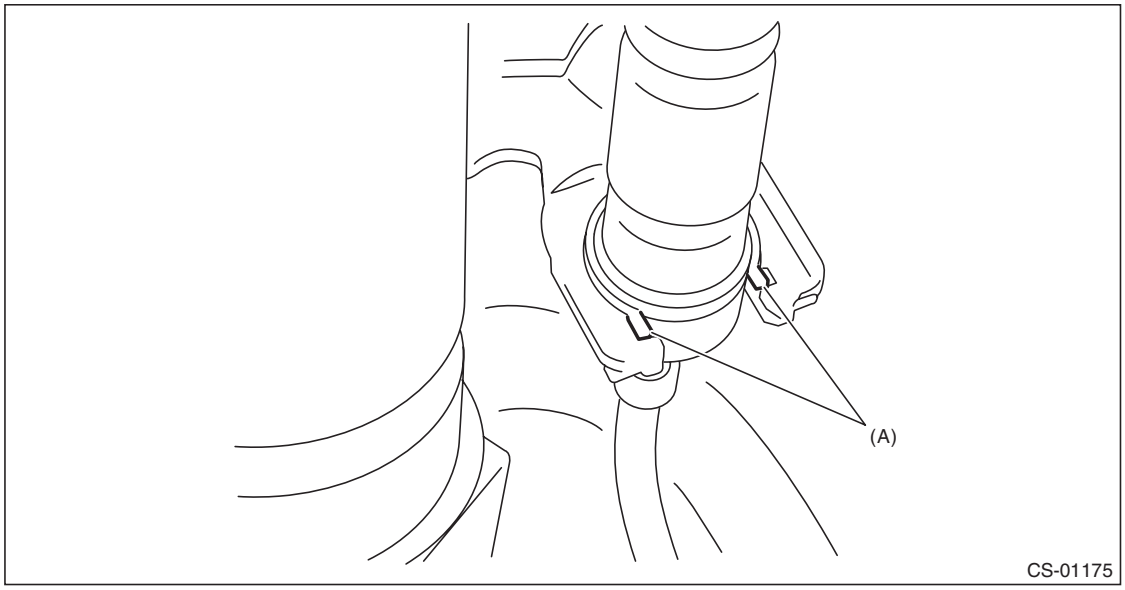

(A) Claw

10) Remove the select cable from plate assembly.

GETtheMANUALS.org

B: INSTALLATION

1) Install the select cable to plate assembly.

Tightening torque:
18 N·m (1.8 kgf-m, 13.3 ft-lb)

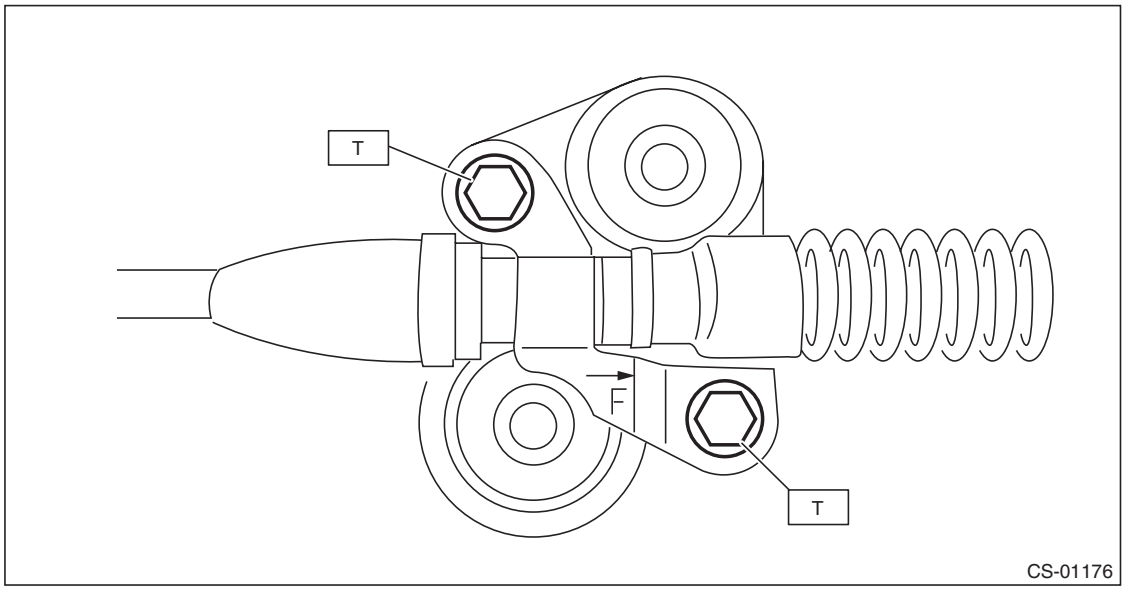

2) Install the select cable to range select lever.
3) Install the plate assembly to transmission.

Tightening torque:
T: 25 N·m (2.5 kgf-m, 18.4 ft-lb)

- CVT model

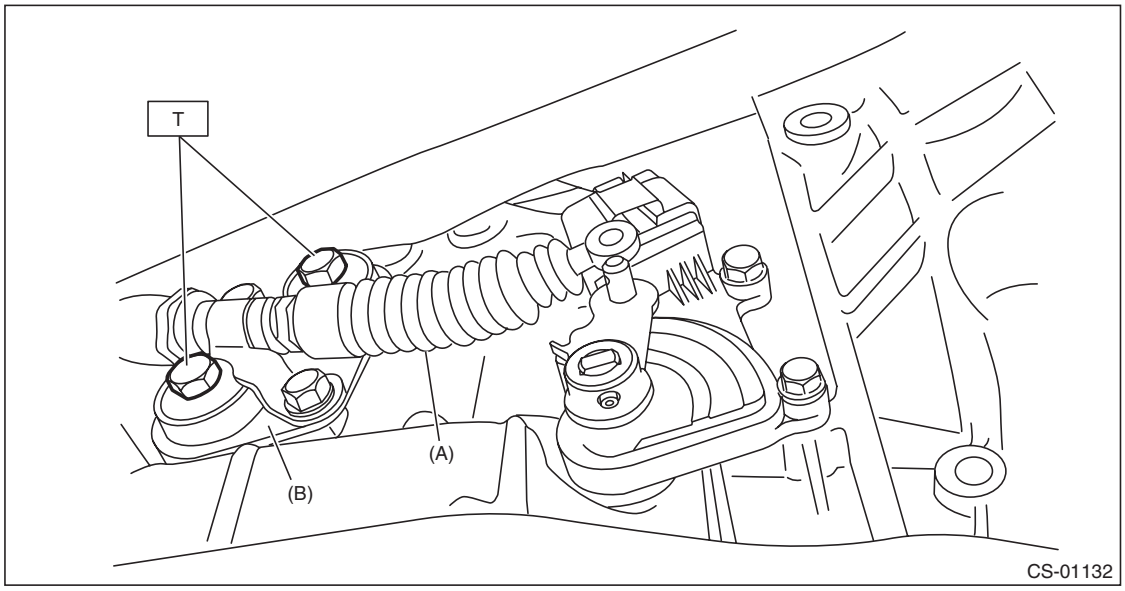

(A) Select cable
(B) Plate ASSY

GETtheMANUALS.org

- AT model

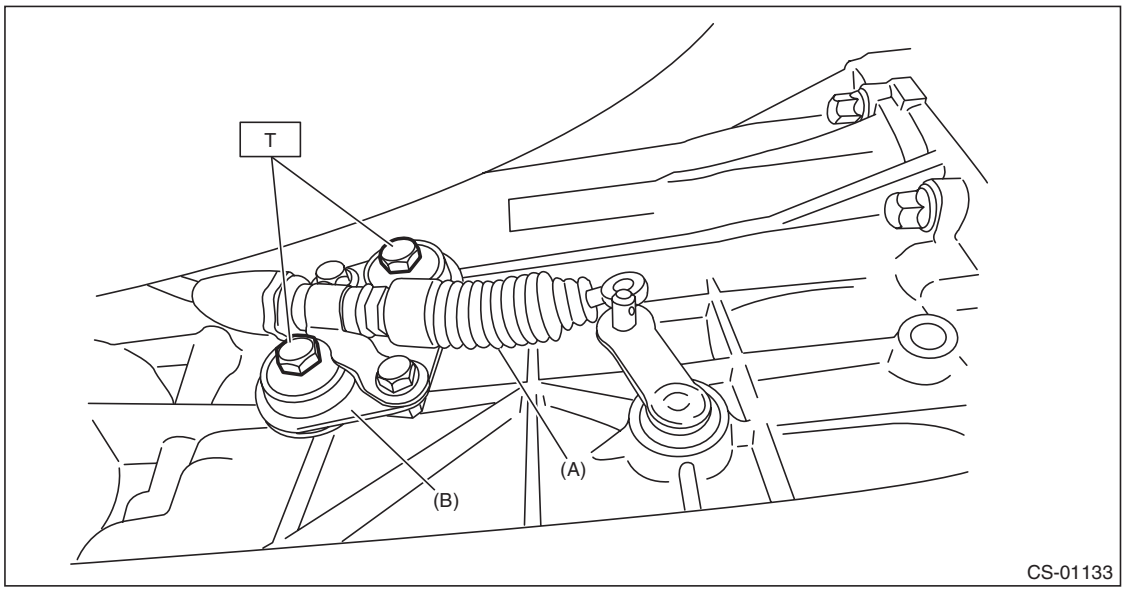

(A) Select cable
(B) Plate ASSY

4) Install the washer and snap pin to the shifter arm.
- CVT model

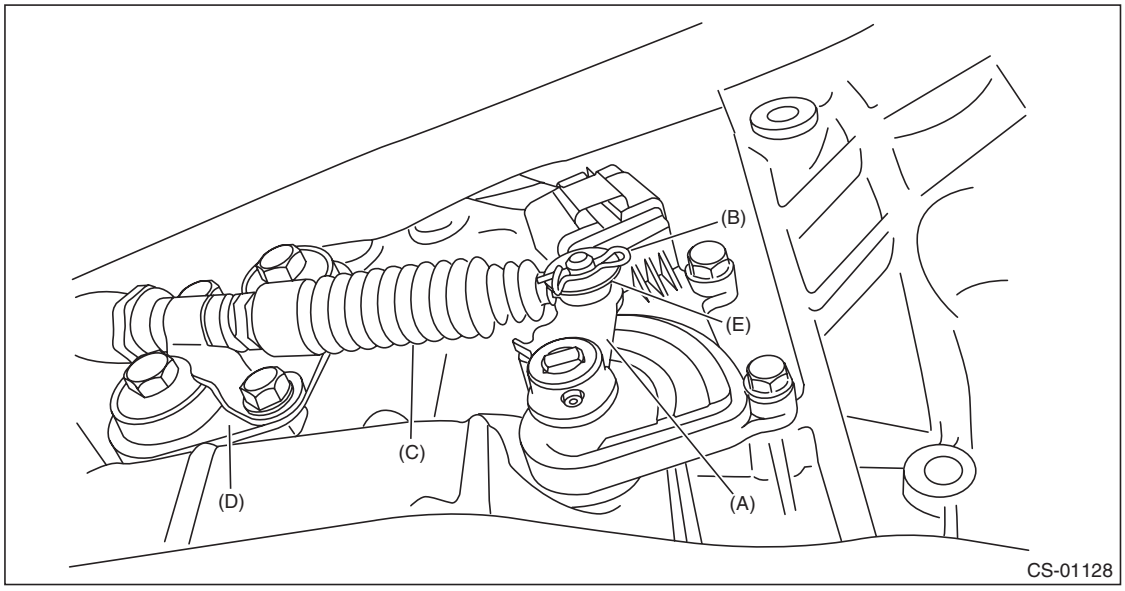

(A) Shifter arm
(B) Snap pin
(C) Select cable
(D) Plate ASSY
(E) Washer

GETtheMANUALS.org

- AT model

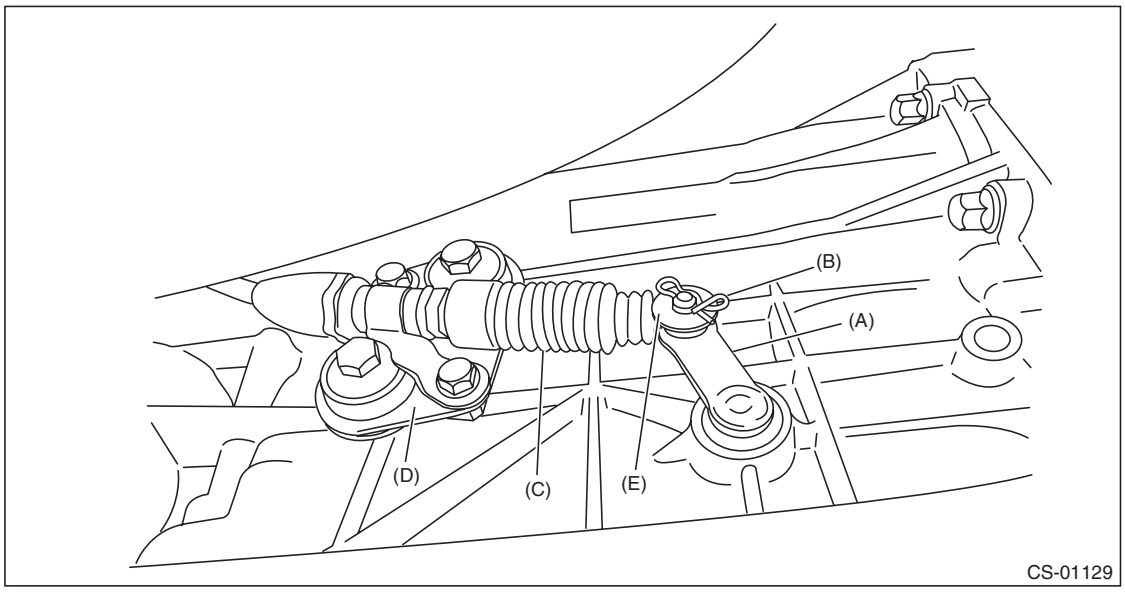

(A) Shifter arm
(B) Snap pin
(C) Select cable
(D) Plate ASSY
(E) Washer

5) Install new clamp paying attention to the installing direction.

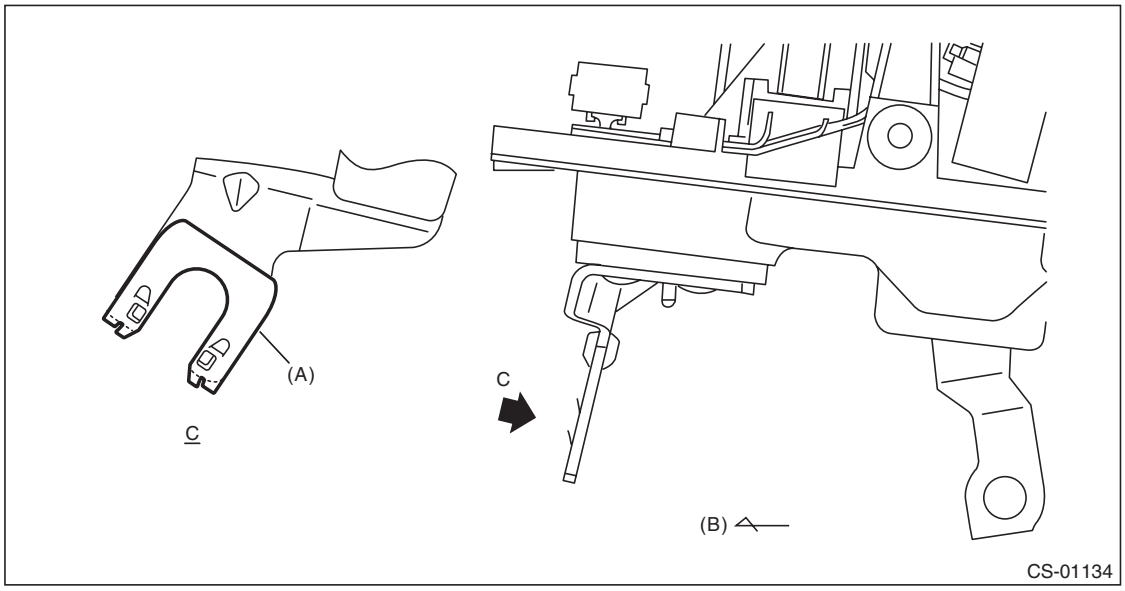

(A) Clamp
(B) Forward

GETtheMANUALS.org

6) Insert the tip of inner cable into connector hole of select lever, and fix the cable to bracket.

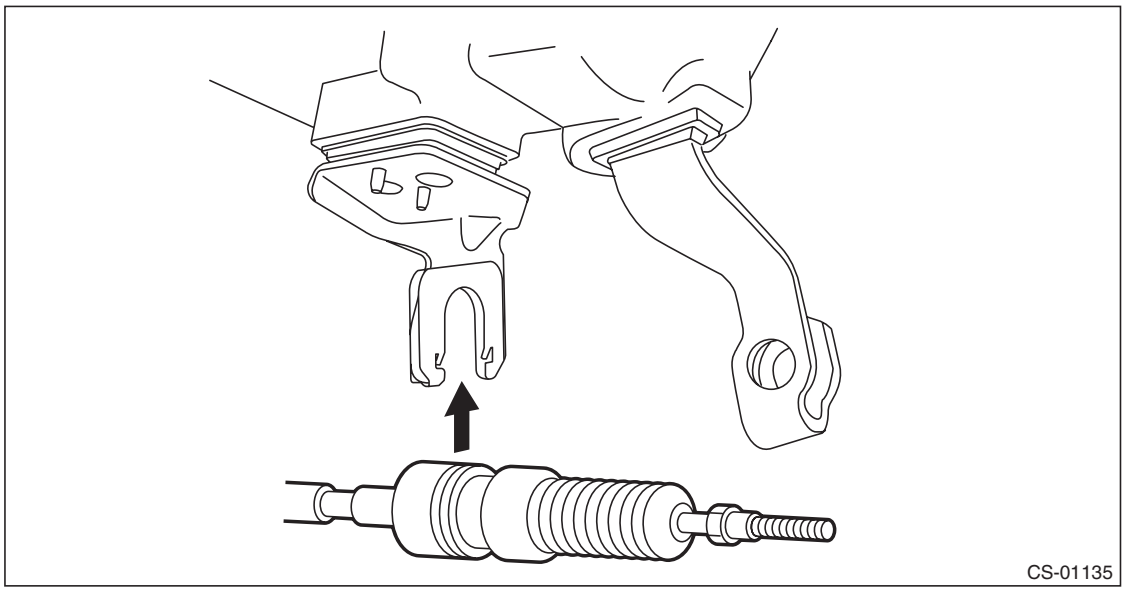

7) Shift the select lever to the “N” range, and then adjust the select cable position. <Ref. to CS-50, ADJUSTMENT, Select Cable.>
8) Install the heat shield cover.

Tightening torque:
18 N·m (1.8 kgf-m, 13.3 ft-lb)

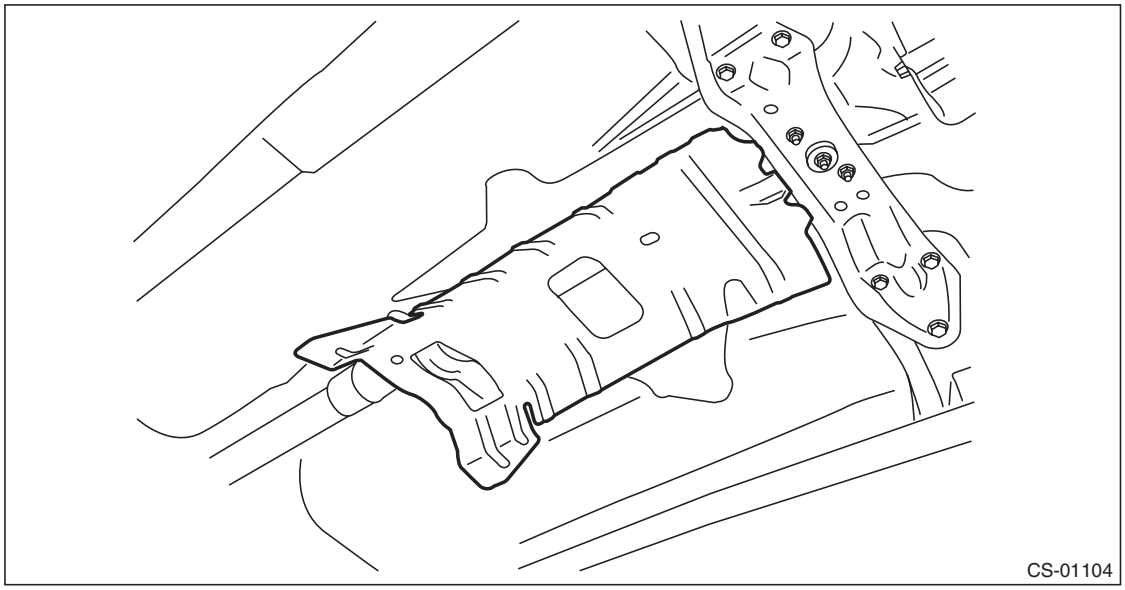

9) Install the front exhaust pipe and rear exhaust pipe.
- 2.5 L model

<Ref. to EX(H4SO)-6, INSTALLATION, Front Exhaust Pipe.> <Ref. to EX(H4SO)-9, INSTALLATION, Rear Exhaust Pipe.>
- 3.6 L model

<Ref. to EX(H6DO)-6, INSTALLATION, Front Exhaust Pipe.> <Ref. to EX(H6DO)-8, INSTALLATION, Rear Exhaust Pipe.>

GETtheMANUALS.org

C: INSPECTION

Check the removed cable and replace or adjust if damaged, rusty or malfunctioning.
1) Check that the inner cable moves smoothly without drag.
2) Check the inner cable for damage and rust.
3) Check the outer cable for damage, bends and cracks.
4) Check the boot for damage, cracks and deterioration.
5) Shift the select lever from “P” range to “D” range. Check the existence of feel to contact the detents in each range. If the detents cannot be felt or the position pointer is improperly aligned, adjust the cable.
6) Check that the starter motor rotates when the select lever is set to “P” or “N” range.
7) Check the back-up light illumination when the select lever is in “R” range.
8) Check the shift lock operation when the select lever is in “P” range.

D: ADJUSTMENT

1) Shift the select lever to “N” range.
2) Lift up the vehicle.
3) Remove the front exhaust pipe and rear exhaust pipe.
- 2.5 L non-turbo model

<Ref. to EX(H4SO)-5, REMOVAL, Front Exhaust Pipe.> <Ref. to EX(H4SO)-9, REMOVAL, Rear Exhaust Pipe.>
- 3.6 L model

<Ref. to EX(H6DO)-5, REMOVAL, Front Exhaust Pipe.> <Ref. to EX(H6DO)-8, REMOVAL, Rear Exhaust Pipe.>
4) Remove the heat shield cover.

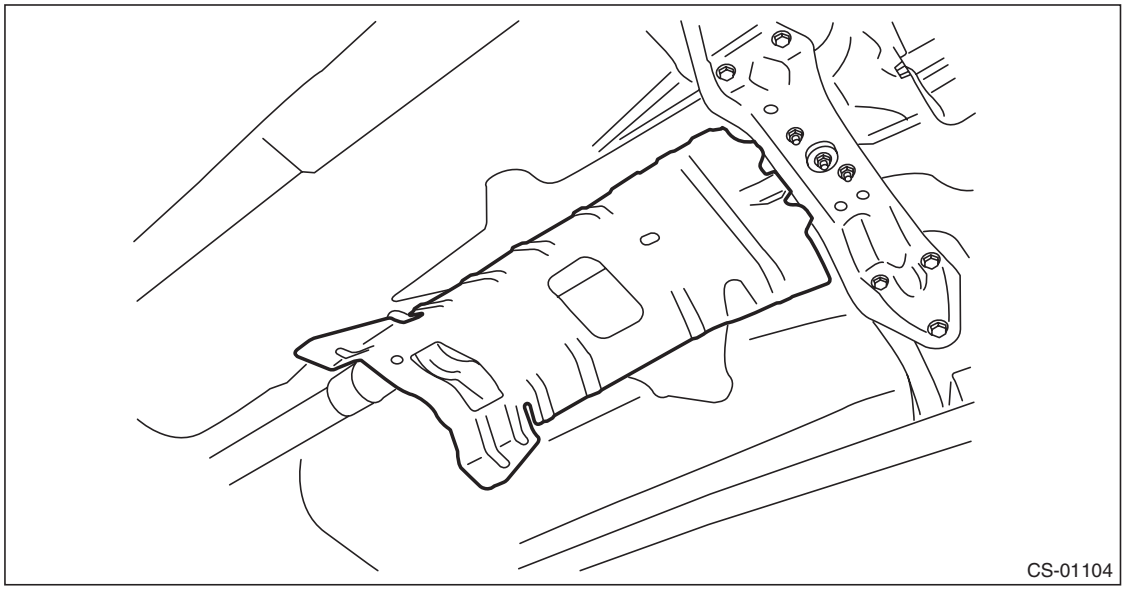

GETtheMANUALS.org

5) Loosen the nuts on both sides.

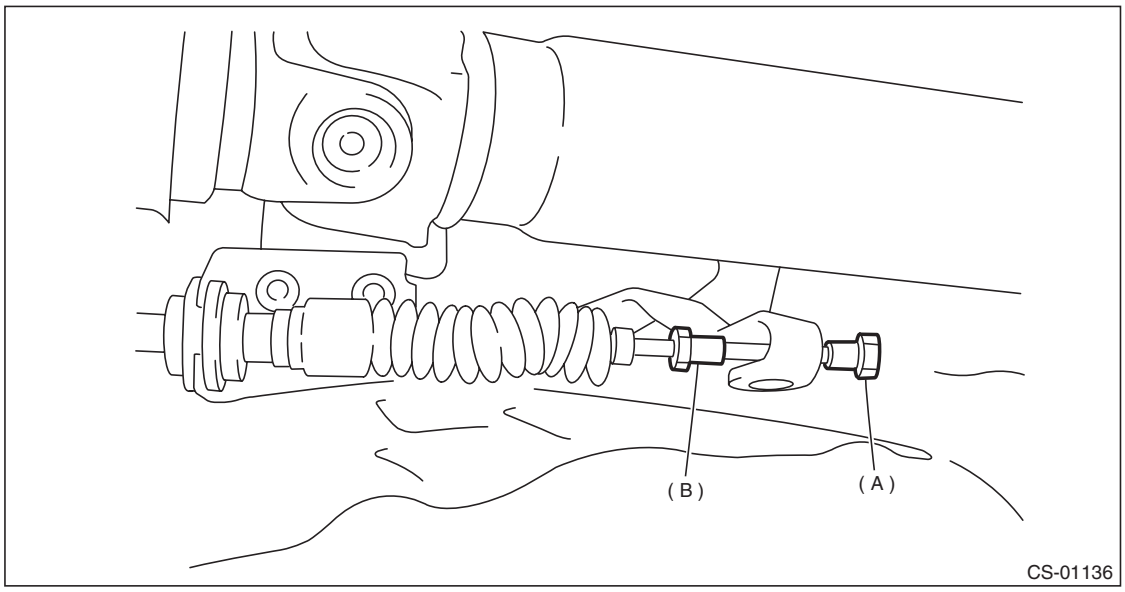

(A) Nut A
(B) Nut B

6) Turn the nut B until it lightly touches the connector.

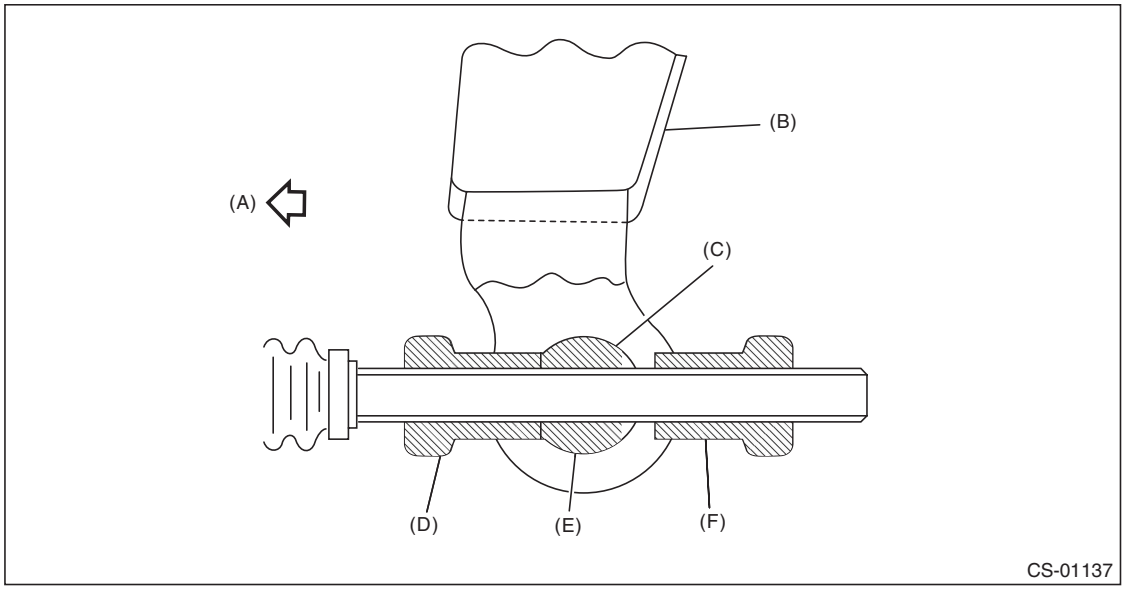

(A) Forward side
(B) Select lever
(C) Connector
(D) Nut B
(E) Contact point
(F) Nut A

GETtheMANUALS.org

7) Set a spanner wrench to the nut B so that it does not rotate, and then tighten the nut A.

Tightening torque:
7.5 N·m (0.8 kgf-m, 5.5 ft-lb)

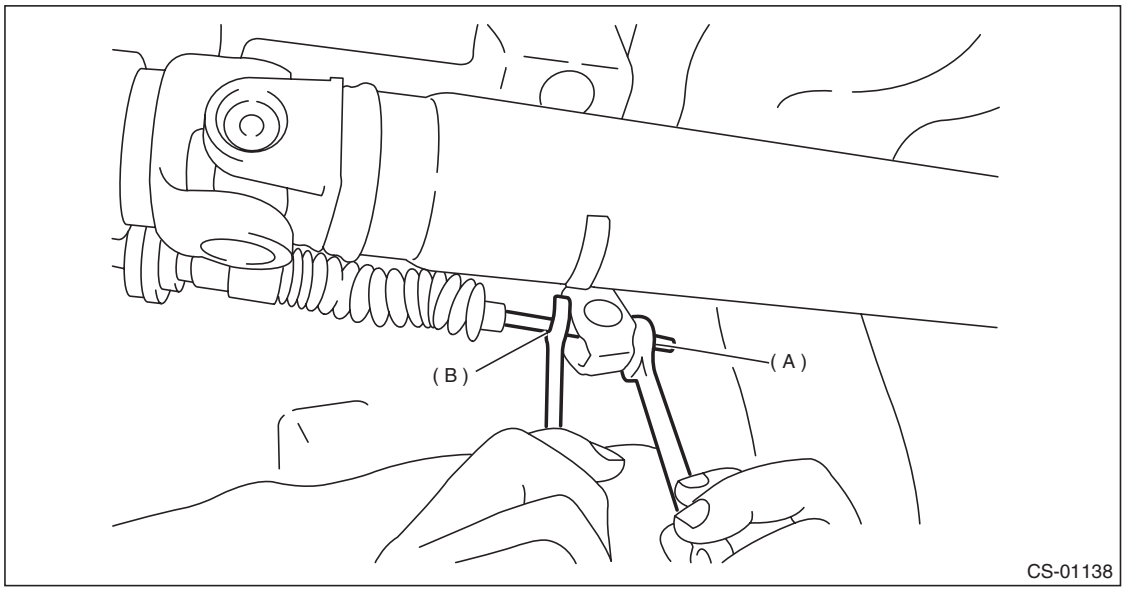

(A) Nut A
(B) Nut B

8) After the completion of adjustment, confirm that the select lever operates normally at all ranges.
9) Install in the reverse order of removal.

GETtheMANUALS.org

5. AT Shift Lock Solenoid and “P” Range Switch

A: REMOVAL

1. SOLENOID UNIT

1) Remove the AT select lever. <Ref. to CS-22, REMOVAL, Select Lever.>
2) Remove the spacer and gasket. <Ref. to CS-31, DISASSEMBLY, Select Lever.>
3) Using a flat tip screwdriver with a thin tip, remove the harness connector from the plate COMPL.

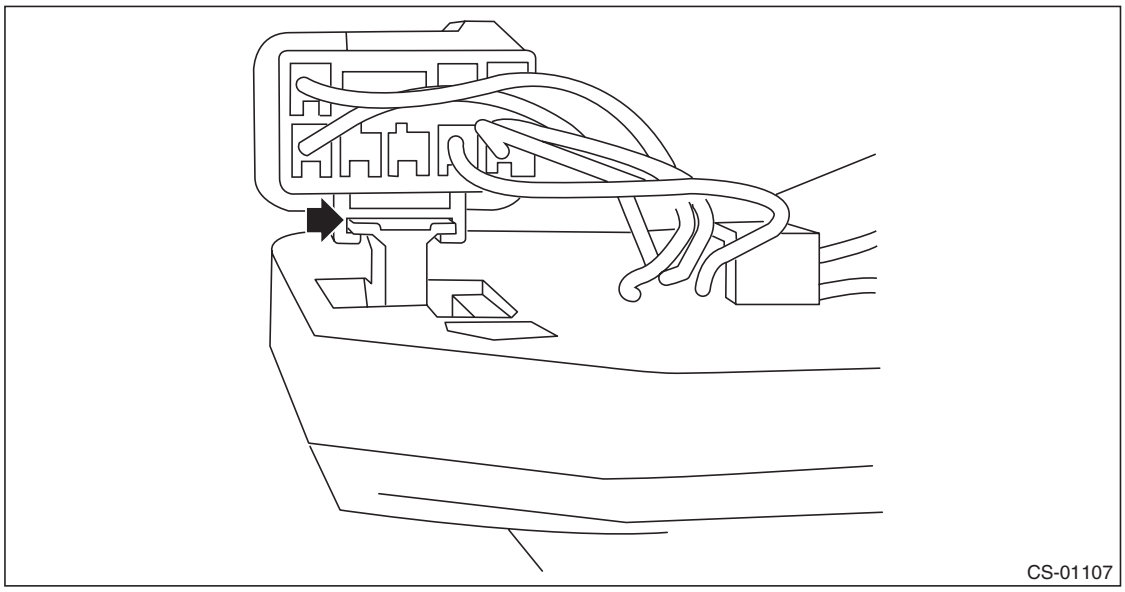

4) Raise the claw using a flat tip screwdriver with a thin tip, and remove the solenoid unit from the plate COMPL.

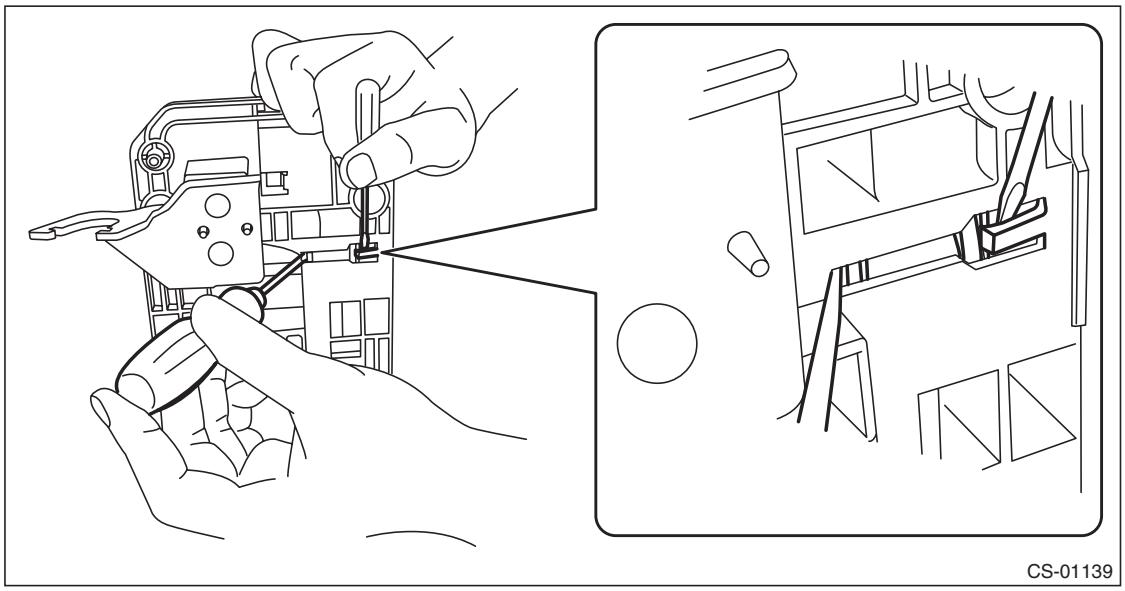

GETtheMANUALS.org

5) Using a flat tip screwdriver with a thin tip, remove the solenoid unit terminals from the harness connector.

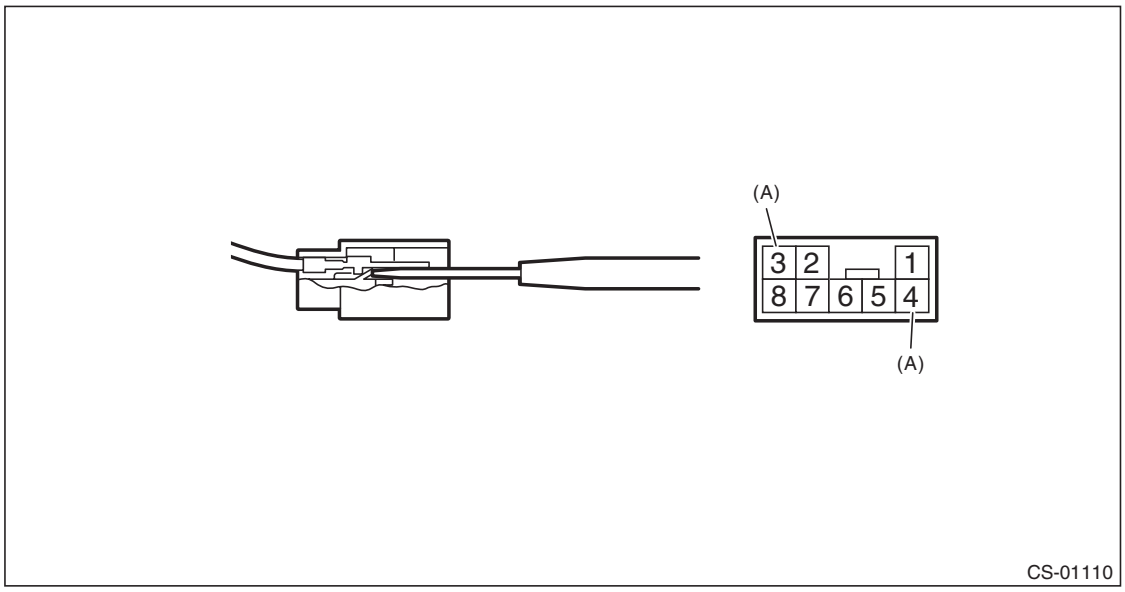

(A) Solenoid unit terminals

2. “P” RANGE SWITCH

For the removal of “P” range switch, refer to the procedure for AT select lever. <Ref. to CS-31, DISASSEMBLY, Select Lever.>
<Ref. to CS-32, AT SELECT LEVER ASSEMBLY, DISASSEMBLY, Select Lever.>

B: INSTALLATION

Install in the reverse order of removal.

NOTE:
Insert the solenoid unit terminals to the harness connector.

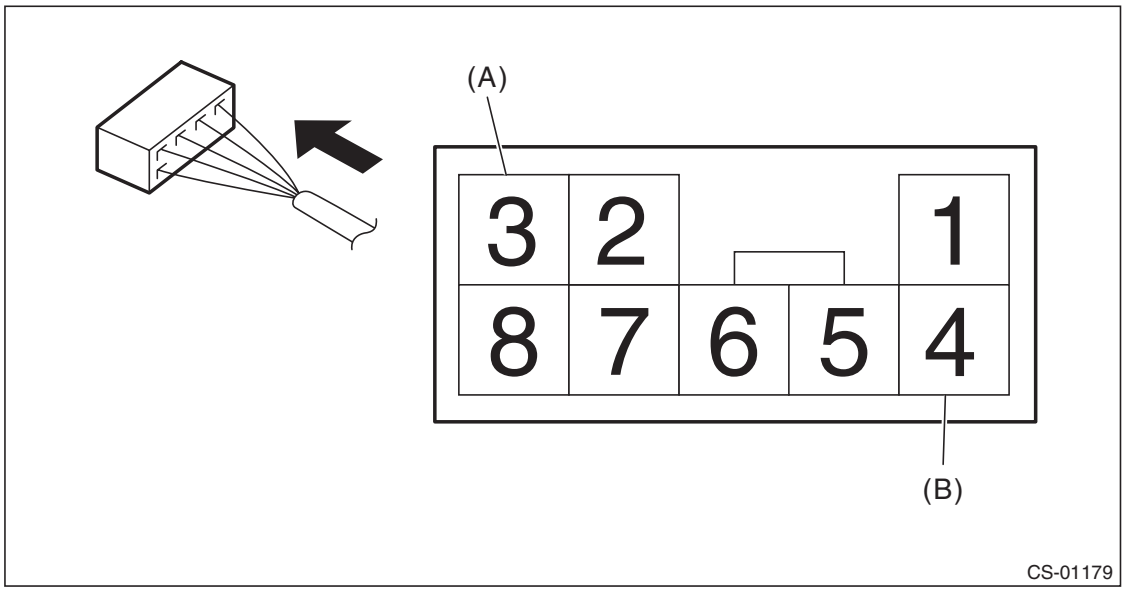

(A) Solenoid unit (color code: blue)
(B) Solenoid unit (color code: black)

GETtheMANUALS.org

C: INSPECTION

Step		Check	Yes	No
1	**CHECK SOLENOID UNIT.** Measure the resistance of solenoid unit connector terminals. ***Terminals*** ***No. 4 — No. 3:***	Is the resistance 27.6 — 30.5 Ω?	Go to step **2**.	Replace the solenoid unit. <Ref. to CS-53, AT Shift Lock Solenoid and “P” Range Switch.>
2	**CHECK SOLENOID UNIT.** Connect the battery to the solenoid unit connector terminals, and then operate the solenoid. ***Terminals*** ***No. 3 (+) — No. 4 (–):***	Does the solenoid unit operate normally?	Go to step **3**.	Replace the solenoid unit. <Ref. to CS-53, AT Shift Lock Solenoid and “P” Range Switch.>
3	**CHECK “P” RANGE SWITCH.** 1) Shift the select lever to “P” range. 2) Measure the resistance between “P” range switch connector terminals. ***Terminals*** ***No. 1 — No. 2:***	Is the resistance less than 1 Ω?	Go to step **4**.	Replace the “P” range switch. <Ref. to CS-53, AT Shift Lock Solenoid and “P” Range Switch.>
4	**CHECK “P” RANGE SWITCH.** 1) Shift the select lever to other than “P” range. 2) Measure the resistance between “P” range switch connector terminals. ***Terminals*** ***No. 1 — No. 2:***	Is the resistance 1 MΩ or more?	Normal operation.	Replace the “P” range switch. <Ref. to CS-53, AT Shift Lock Solenoid and “P” Range Switch.>

GETtheMANUALS.org

6. Body Integrated Unit

A: NOTE

Refer to “Body Integrated Unit” for removal and installation procedure. <Ref. to SL-71, Body Integrated Unit.>

GETtheMANUALS.org

7. MT Gear Shift Lever

A: REMOVAL

1) Disconnect the ground cable from battery.
2) Lift up the vehicle.
3) Remove the center exhaust pipe and rear exhaust pipe. (non-turbo model) <Ref. to EX(H4SO)-8, REMOVAL, Center Exhaust Pipe.> <Ref. to EX(H4SO)-9, REMOVAL, Rear Exhaust Pipe.>
4) Remove the center exhaust pipe (rear) and rear exhaust pipe. (turbo model) <Ref. to EX(H4DOTC)-12, REMOVAL, Center Exhaust Pipe.> <Ref. to EX(H4DOTC)-15, REMOVAL, Rear Exhaust Pipe.>
5) Remove the heat shield cover.

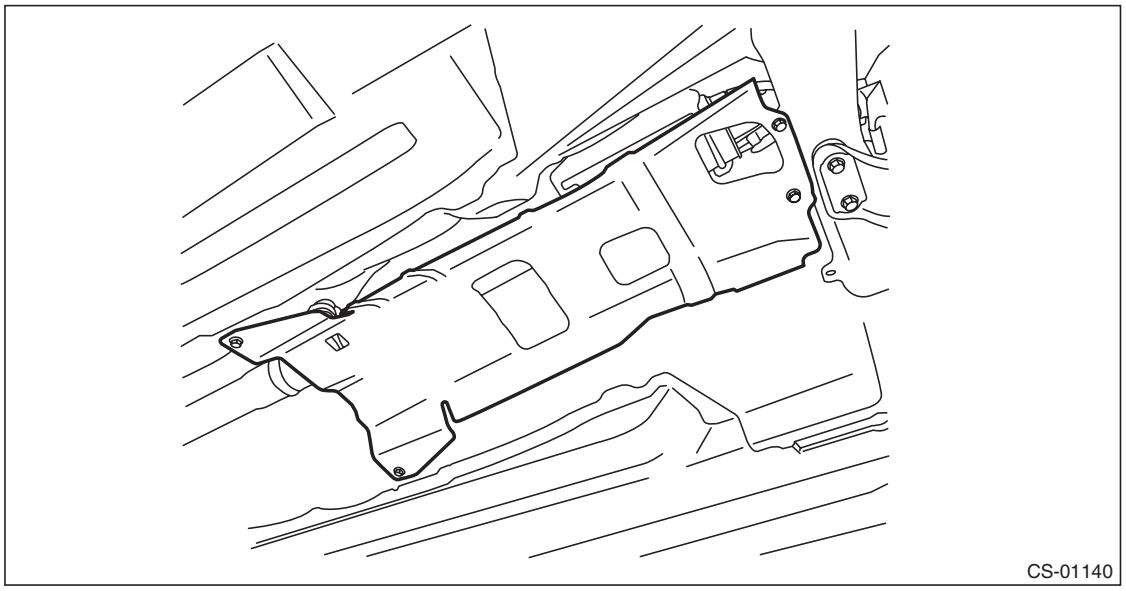

6) Remove the plate cable assembly.

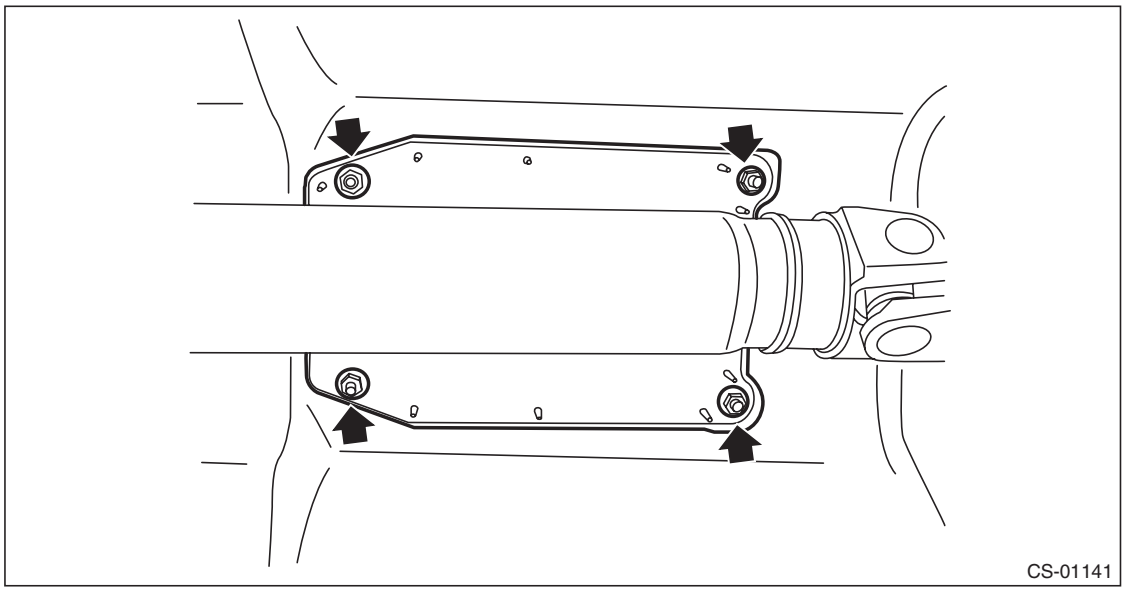

GETtheMANUALS.org

7) Remove the spring at the MT gear shift cable by expanding it and pulling down, and remove the MT gear shift cable from the gear shift lever assembly.

CAUTION:
Be careful not to deform the cable inner.

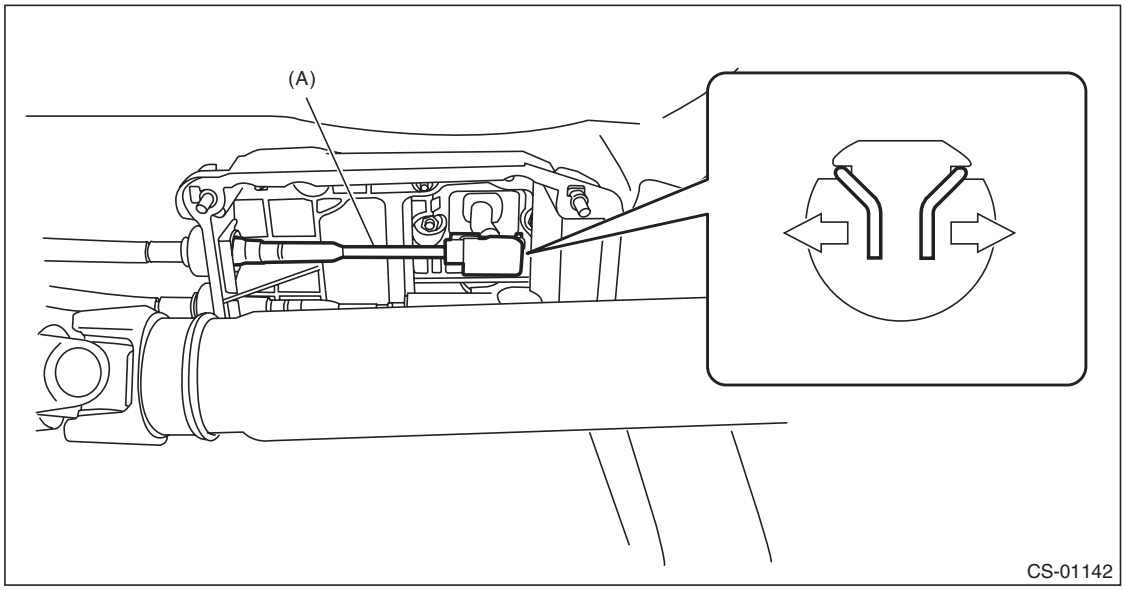

(A) MT gear shift cable

8) Remove the MT gear select cable from the gear shift lever assembly by pulling it in the direction of arrow in the figure.

CAUTION:
Be careful not to deform the cable inner.

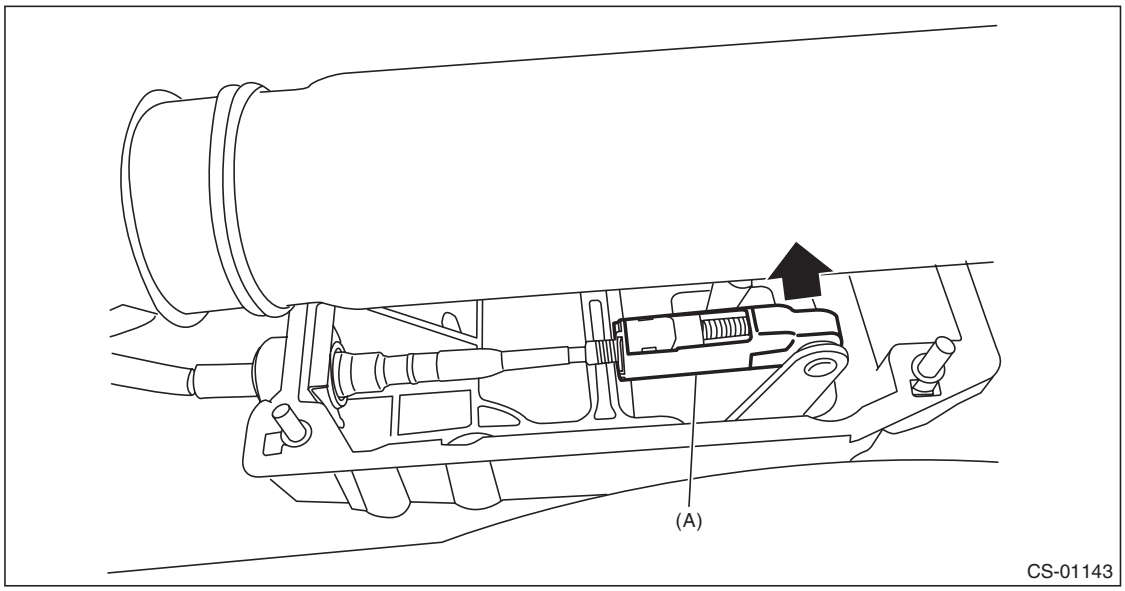

(A) MT gear select cable

GETtheMANUALS.org

9) Remove the cover cable assembly.

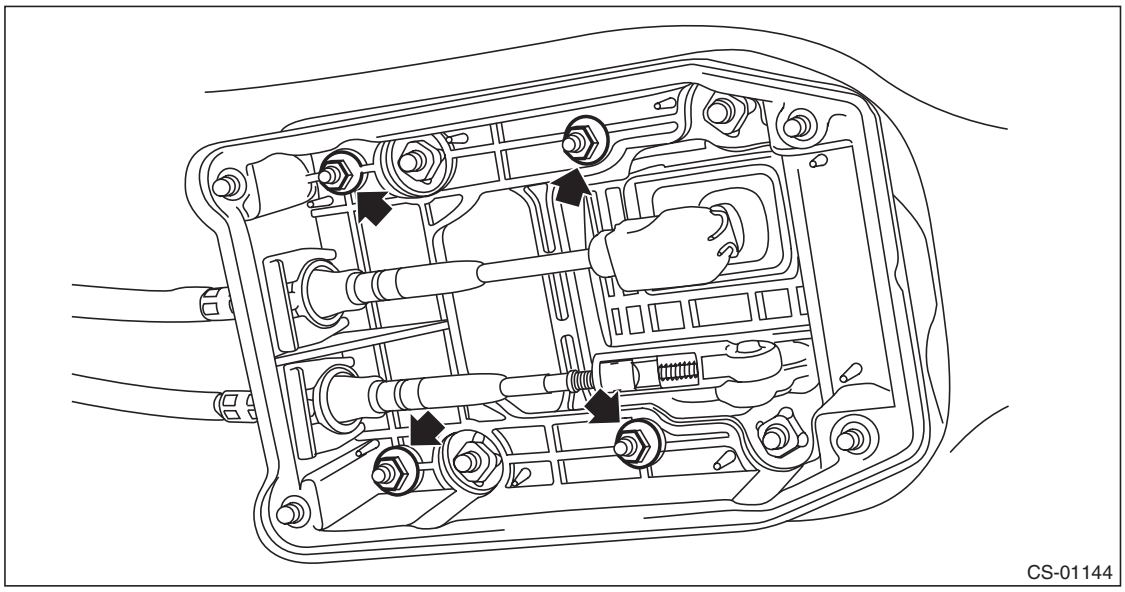

10) Lower the vehicle.
11) Remove the gear shift knob.
12) Remove the console front cover assembly and console box. <Ref. to EI-73, REMOVAL, Console Box.>
13) Remove the bolts, and then remove the gear shift lever assembly from the vehicle.

NOTE:
The MT gear shift lever cannot be disassembled.

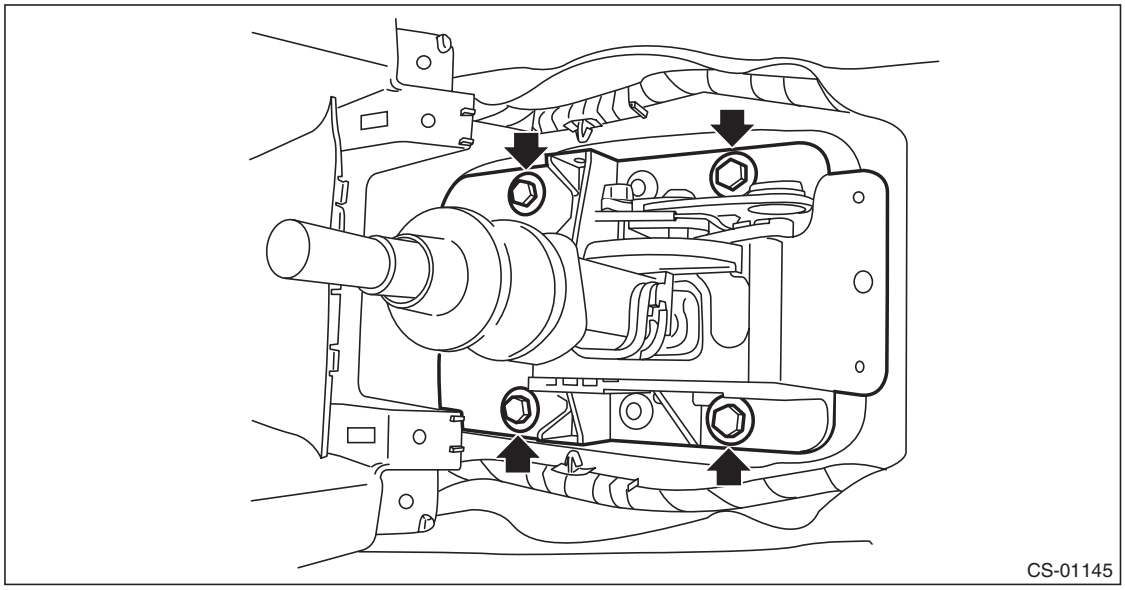

GETtheMANUALS.org

B: INSTALLATION

1) Install the gear shift lever assembly.

Tightening torque:
18 N·m (1.8 kgf-m, 13.3 ft-lb)

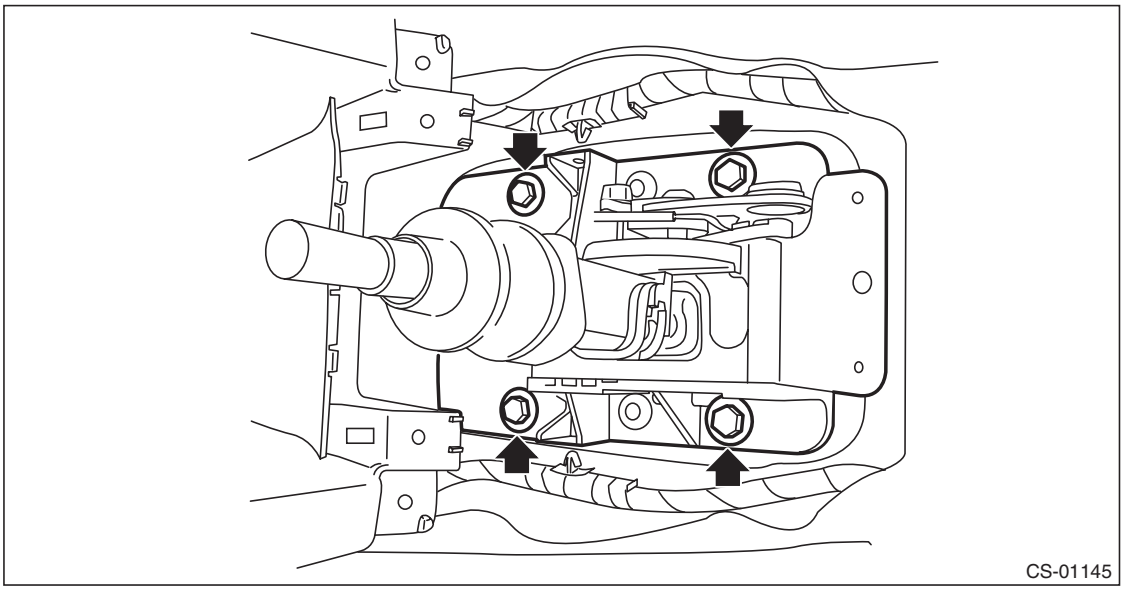

2) Lift up the vehicle.
3) Install the cover cable assembly.

Tightening torque:
7.5 N·m (0.8 kgf-m, 5.5 ft-lb)

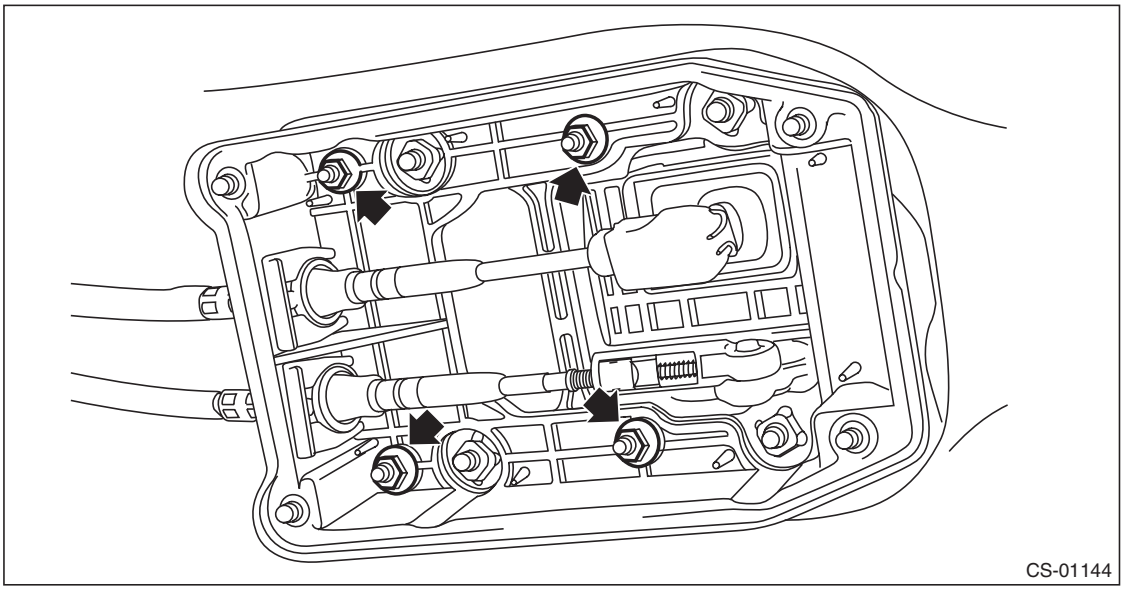

GETtheMANUALS.org

4) Connect the MT gear shift cable and MT gear select cable.

CAUTION:
- **Be careful not to deform the cable inner.**
- **Do not twist the cable inner excessively.**

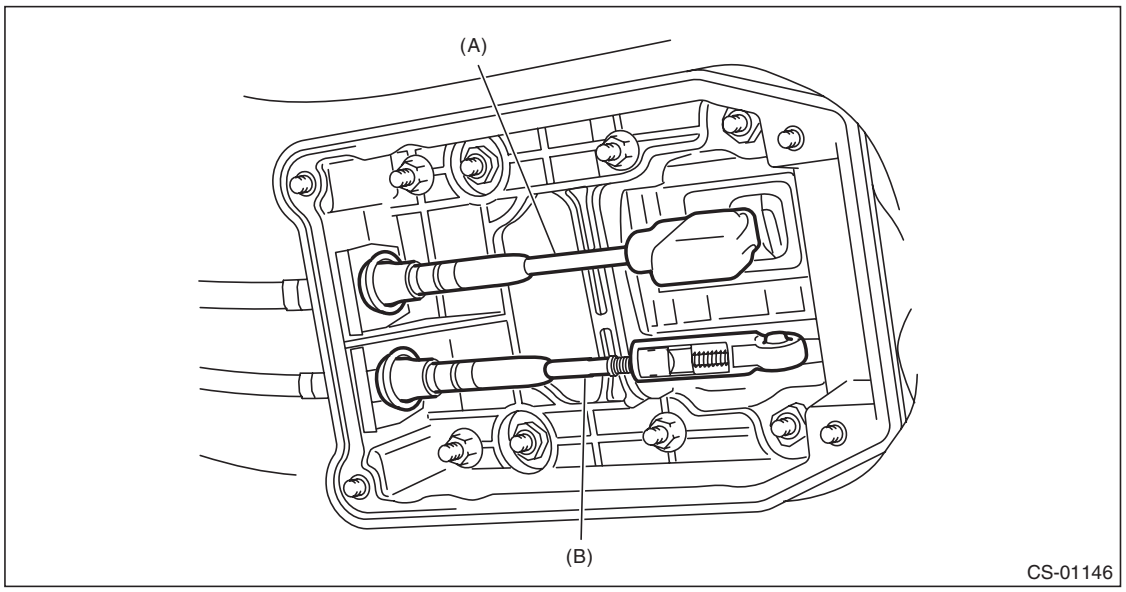

(A) MT gear shift cable
(B) MT gear select cable

5) Install the plate cable assembly.

Tightening torque:
7.5 N·m (0.8 kgf-m, 5.5 ft-lb)

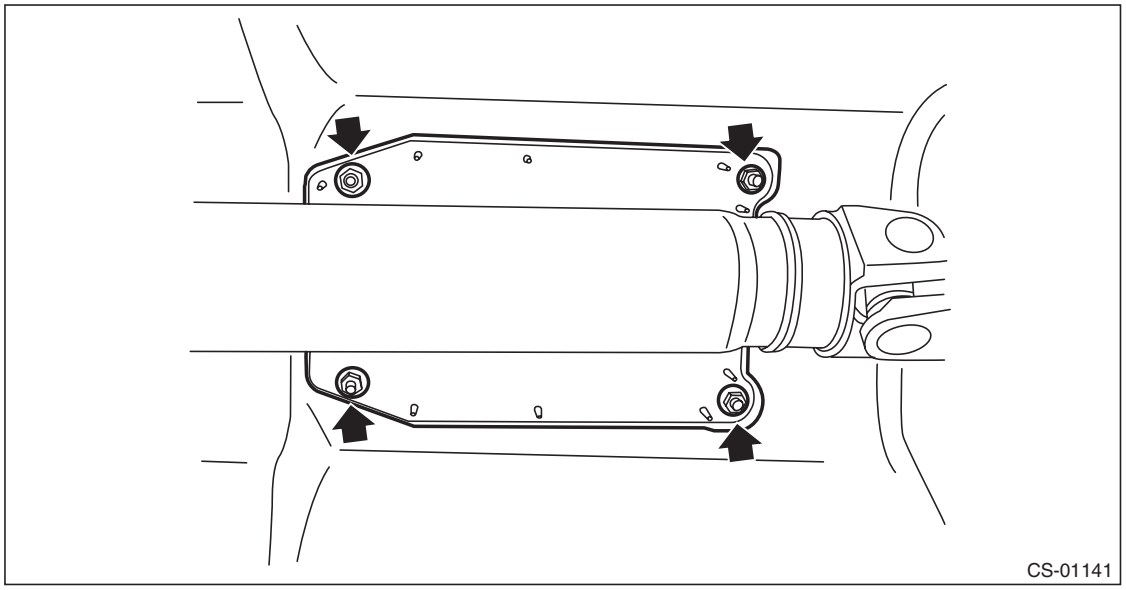

GETtheMANUALS.org

6) Install the heat shield cover.

Tightening torque:
18 N·m (1.8 kgf-m, 13.3 ft-lb)

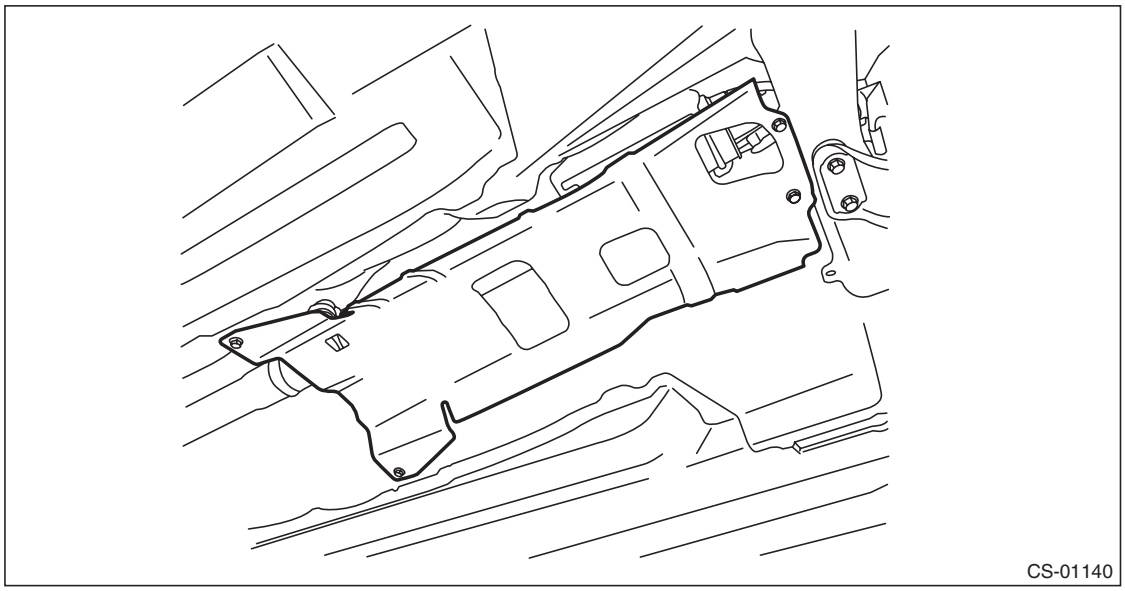

7) Install the center exhaust pipe and rear exhaust pipe. (non-turbo model) <Ref. to EX(H4SO)-8, INSTALLATION, Center Exhaust Pipe.> <Ref. to EX(H4SO)-9, INSTALLATION, Rear Exhaust Pipe.>
8) Install the center exhaust pipe (rear) and rear exhaust pipe. (turbo model) <Ref. to EX(H4DOTC)-13, INSTALLATION, Center Exhaust Pipe.> <Ref. to EX(H4DOTC)-15, INSTALLATION, Rear Exhaust Pipe.>
9) Lower the vehicle.
10) Install the console front cover assembly and the console box. <Ref. to EI-75, INSTALLATION, Console Box.>
11) Install the gear shift knob.
12) Make sure the gears can be shifted accurately into each gear. Adjust the MT gear select cable, if the gears cannot be shifted correctly. <Ref. to CS-95, ADJUSTMENT, MT Gear Select Cable.>

GETtheMANUALS.org

C: INSPECTION

1) Check for any deformed, damaged or worn part. Repair or replace as necessary compare the removed parts with new parts to check if there are damages or not.
2) Check that the lever cannot be moved to the reverse position unless the slider is pulled up.
3) Check that the lever can be moved to the reverse position when the slider is pulled up to maximum.
4) Check that the shift lever returns to the initial position when it is moved to “N” from the condition in 3).

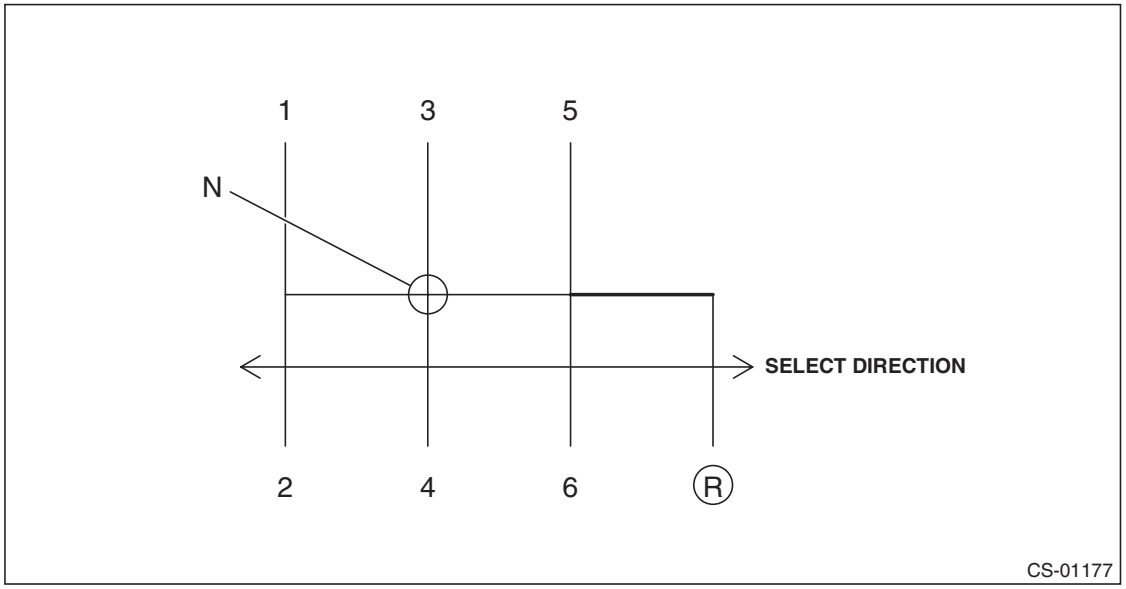

GETtheMANUALS.org

8. MT Gear Shift Cable

A: REMOVAL

1) Disconnect the ground cable from battery.
2) Lift up the vehicle.
3) Remove the center exhaust pipe and rear exhaust pipe. (non-turbo model) <Ref. to EX(H4SO)-8, REMOVAL, Center Exhaust Pipe.> <Ref. to EX(H4SO)-9, REMOVAL, Rear Exhaust Pipe.>
4) Remove the center exhaust pipe (rear) and rear exhaust pipe. (turbo model) <Ref. to EX(H4DOTC)-12, REMOVAL, Center Exhaust Pipe.> <Ref. to EX(H4DOTC)-15, REMOVAL, Rear Exhaust Pipe.>
5) Remove the heat shield cover.

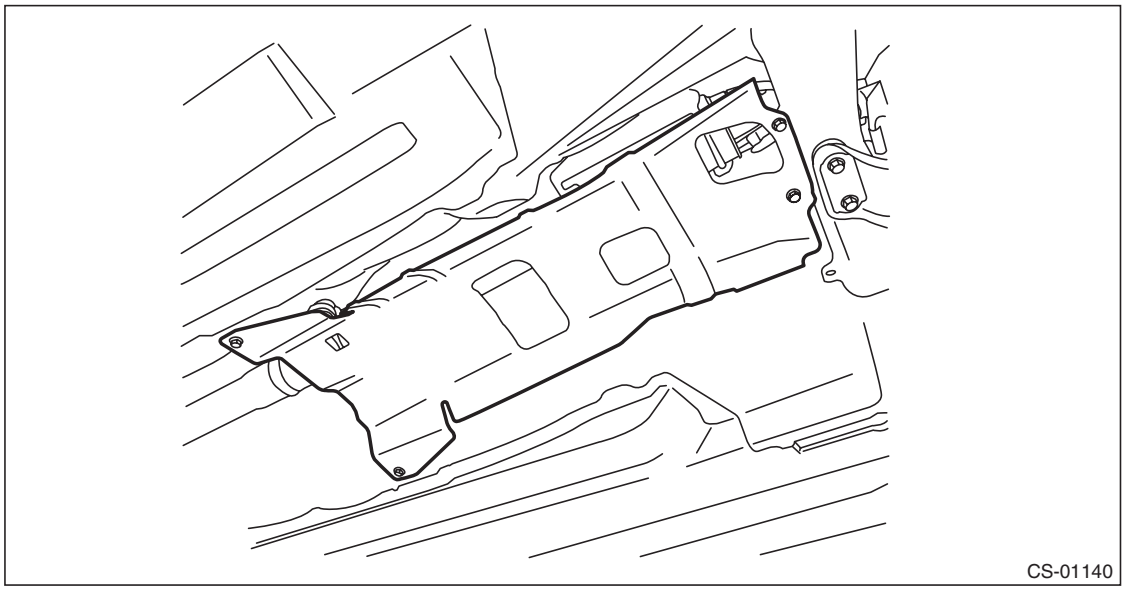

6) Remove the clamp cable and take out the MT gear shift cable from the clamp.

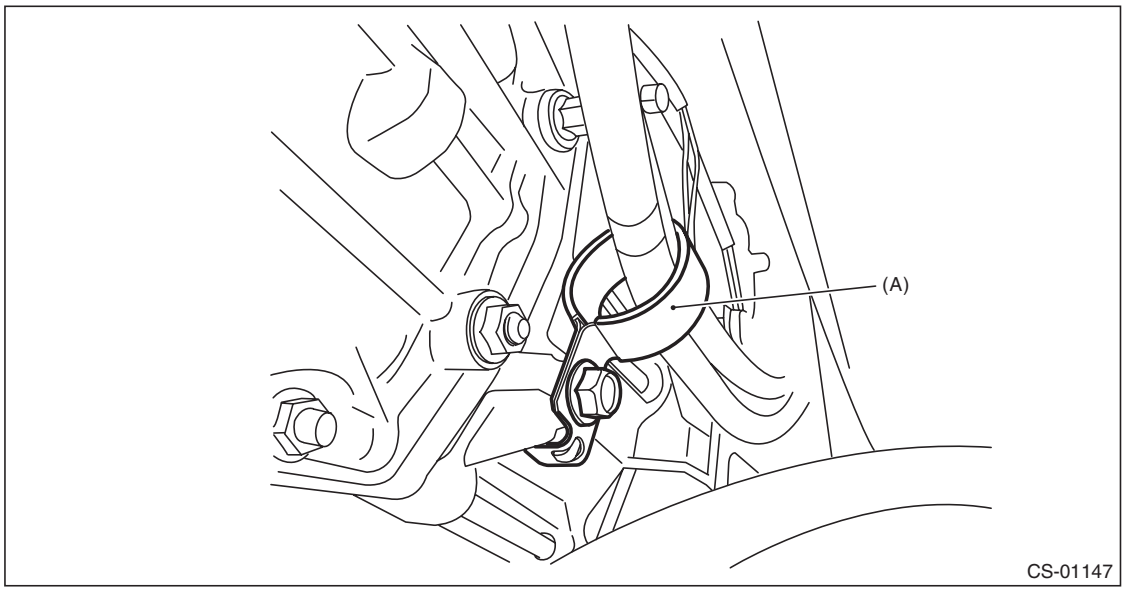

(A) Clamp cable

GETtheMANUALS.org

7) Remove the dust cover from transmission body. (OUTBACK model)

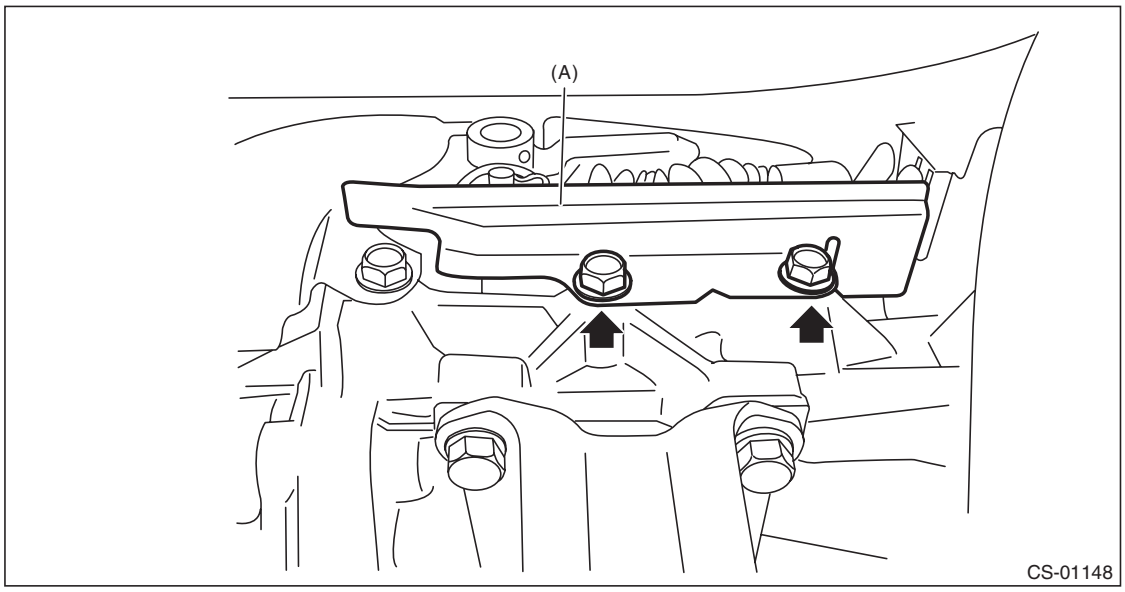

(A) Dust cover

8) Apply a mark on the top end of the MT gear shift cable.
9) Remove the snap pin from the shift lever COMPL.

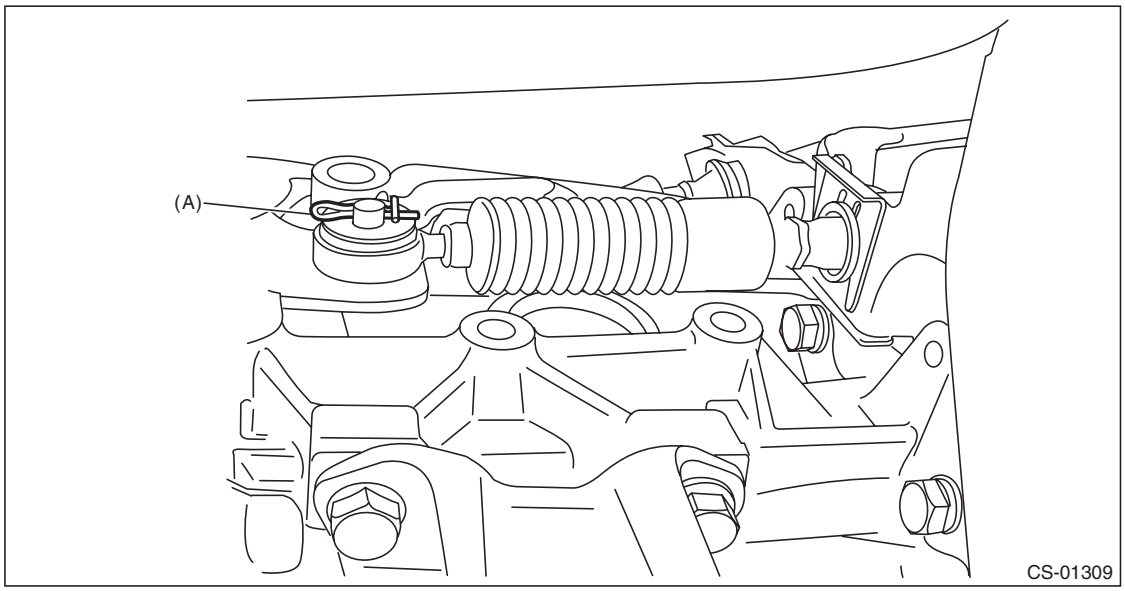

(A) Snap pin

GETtheMANUALS.org

10) Remove the shift bracket and MT gear shift cable as a single unit from the transmission body.

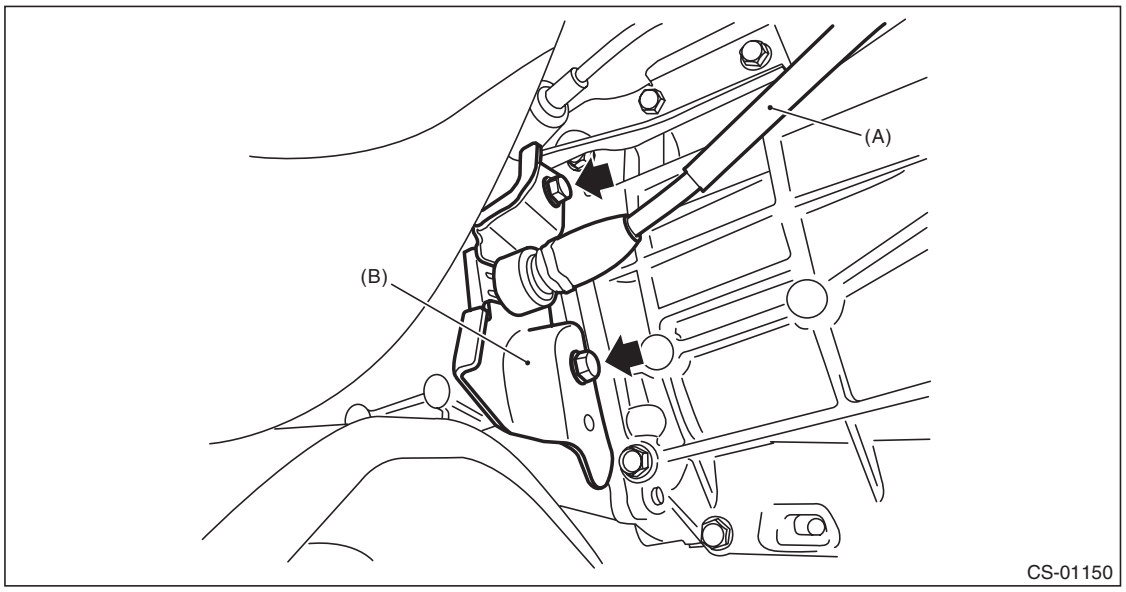

(A) MT gear shift cable
(B) Shift bracket

11) Remove the plate cable assembly.

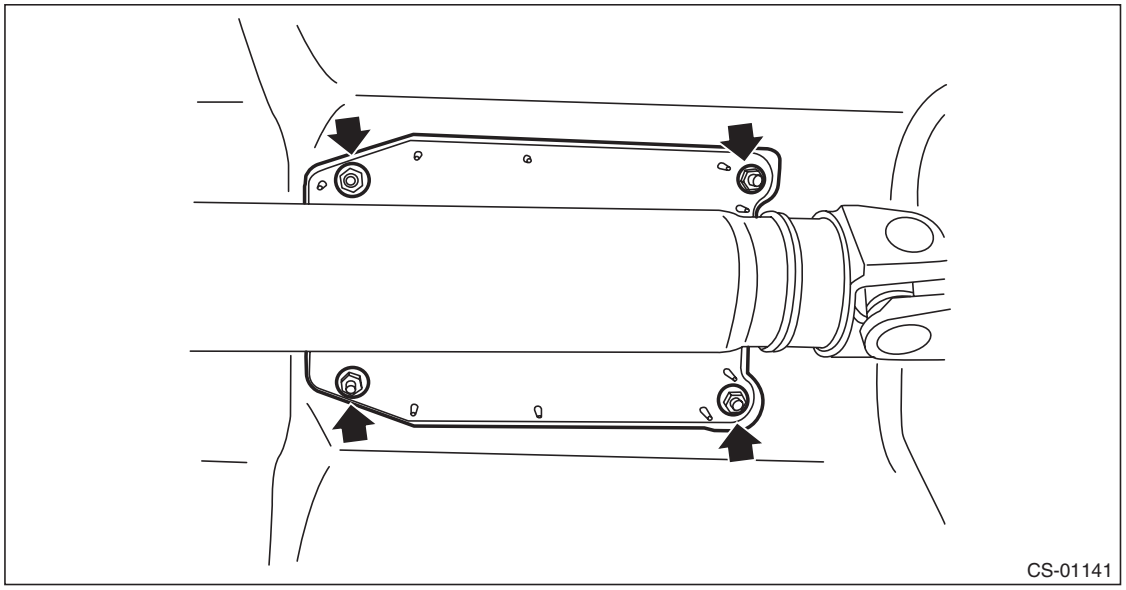

GETtheMANUALS.org

12) Remove the spring at the MT gear shift cable by expanding it and pulling down, and remove the MT gear shift cable from the gear shift lever assembly.

CAUTION:
Be careful not to deform the cable inner.

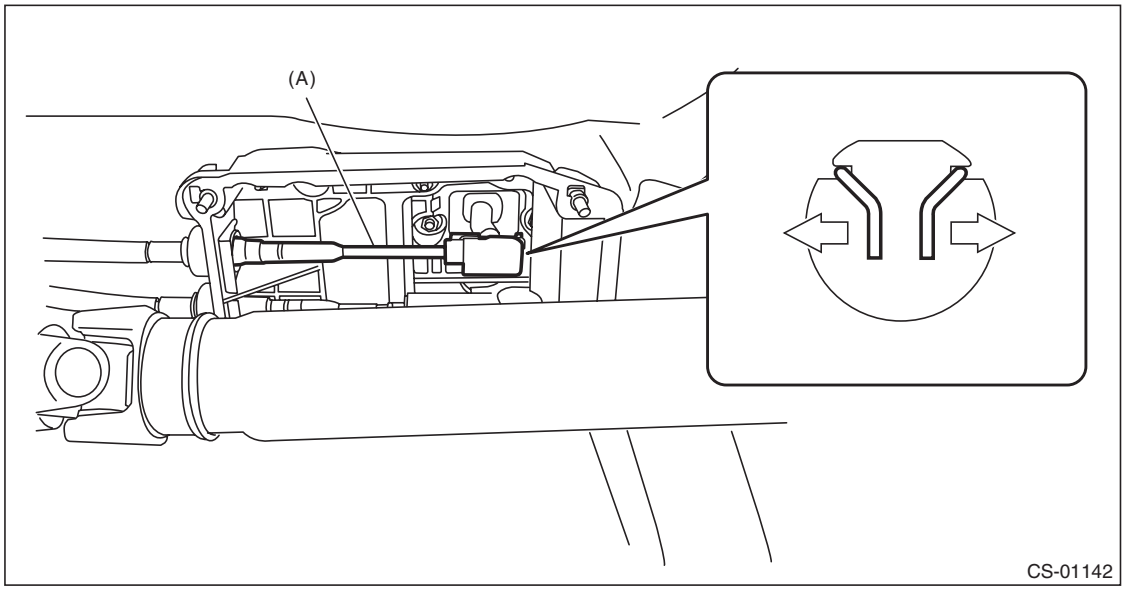

(A) MT gear shift cable

13) Remove the clamp which holds the MT gear shift cable.

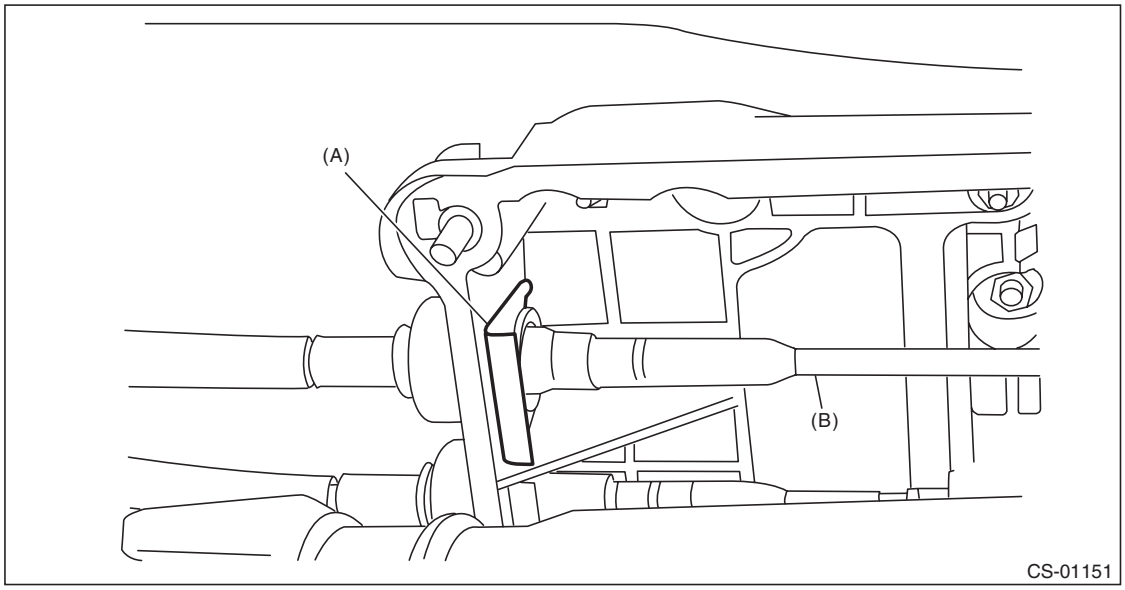

(A) Clamp
(B) MT gear shift cable

14) Pull out the MT gear shift cable from cover cable assembly.

GETtheMANUALS.org

B: INSTALLATION

1) When replacing the new MT gear shift cable, secure it to shift bracket with the clamps, be careful not to mistake the installing direction.

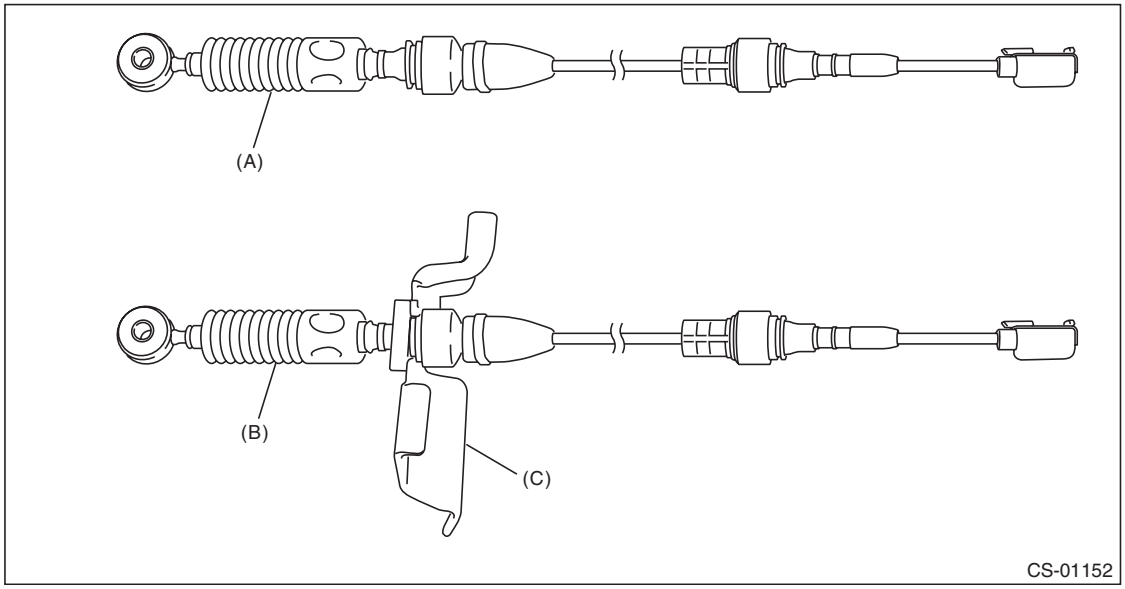

(A) Old MT gear shift cable
(B) New MT gear shift cable
(C) Shift bracket

2) Install the MT gear shift cable and shift bracket as a single unit onto transmission.

CAUTION:
- **Do not bend MT gear shift cable at a sharp angle.**
- **Do not twist the cable inner excessively.**

NOTE:
When installing the MT gear shift cable, make sure that the mark or blue mark on the cable faces up.

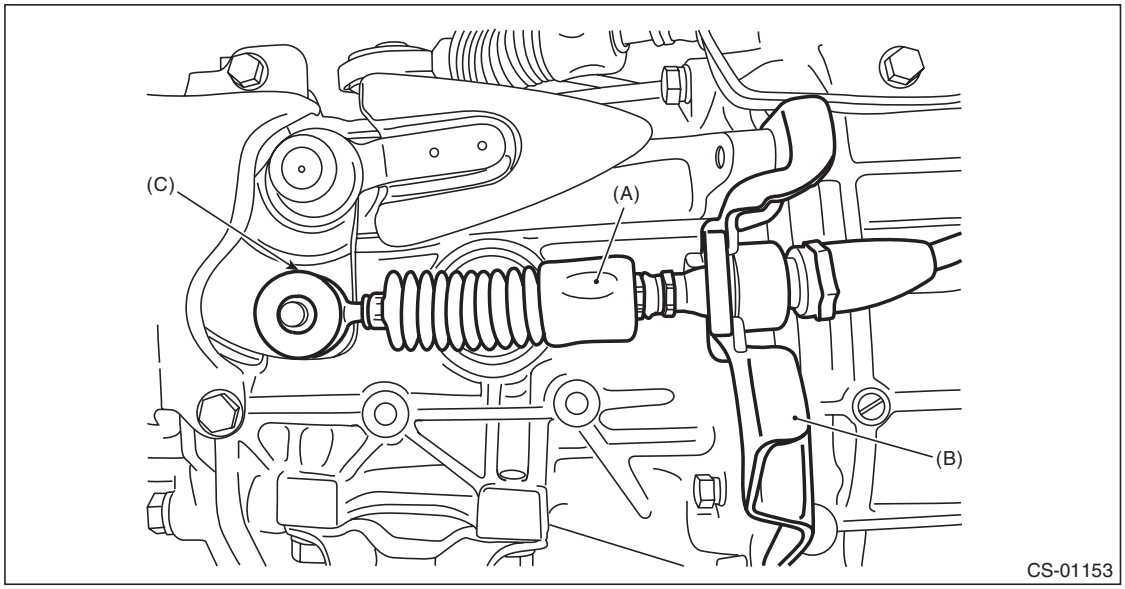

(A) MT gear shift cable
(B) Shift bracket
(C) Mark

GETtheMANUALS.org

3) Tighten the shift bracket with specified torque.

Tightening torque:
18 N·m (1.8 kgf-m, 13.3 ft-lb)

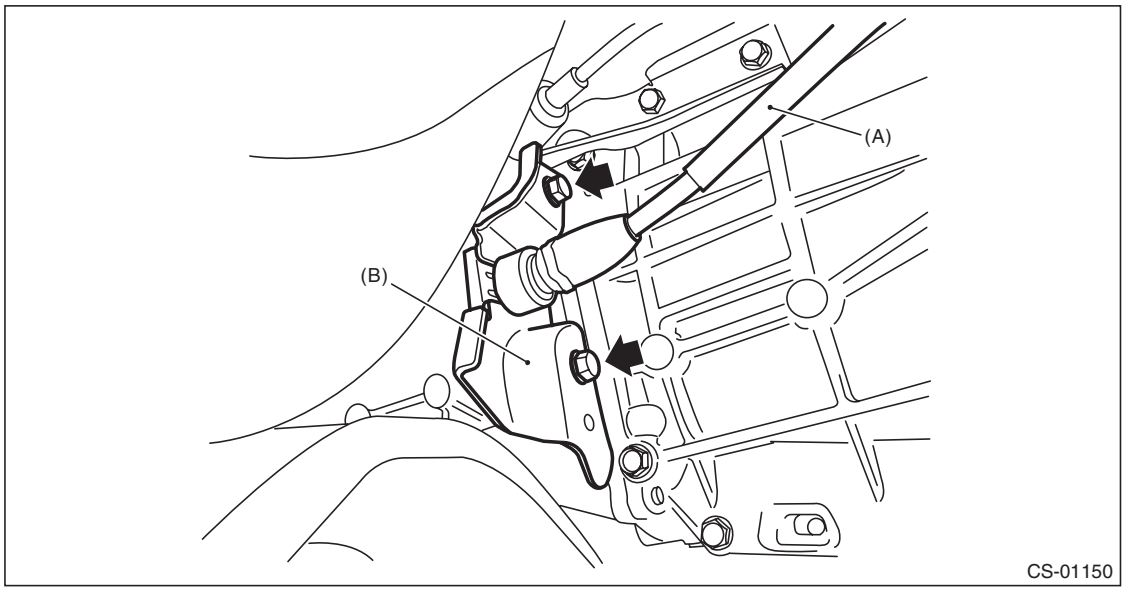

(A) MT gear shift cable
(B) Shift bracket

4) Install the snap pin.

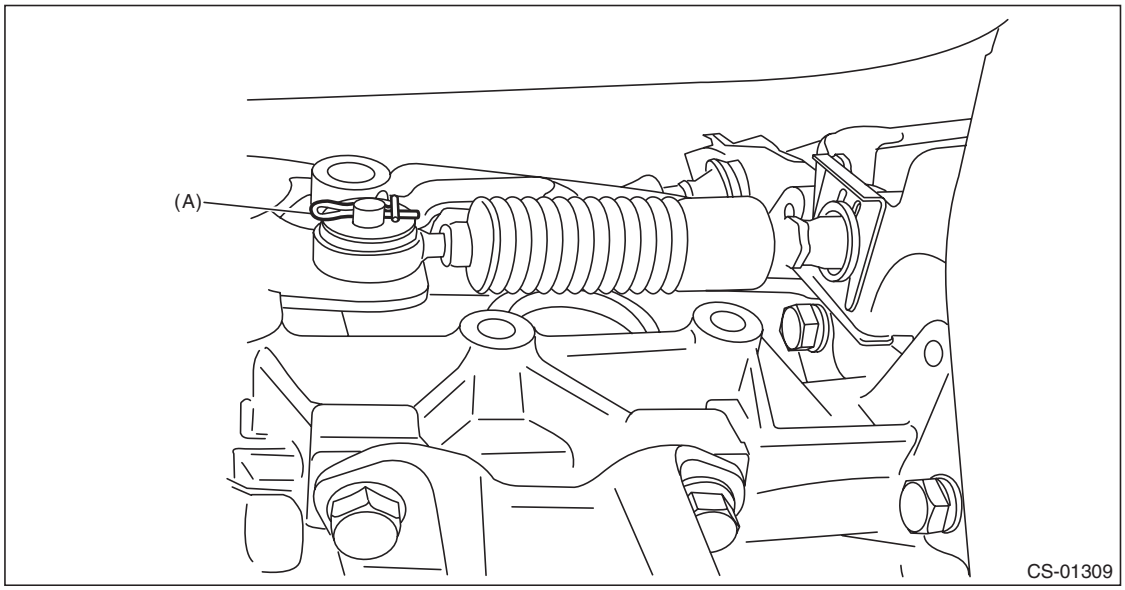

(A) Snap pin

GETtheMANUALS.org

5) Install the dust cover to the transmission body. (OUTBACK model)

Tightening torque:
15 N·m (1.5 kgf-m, 11.1 ft-lb)

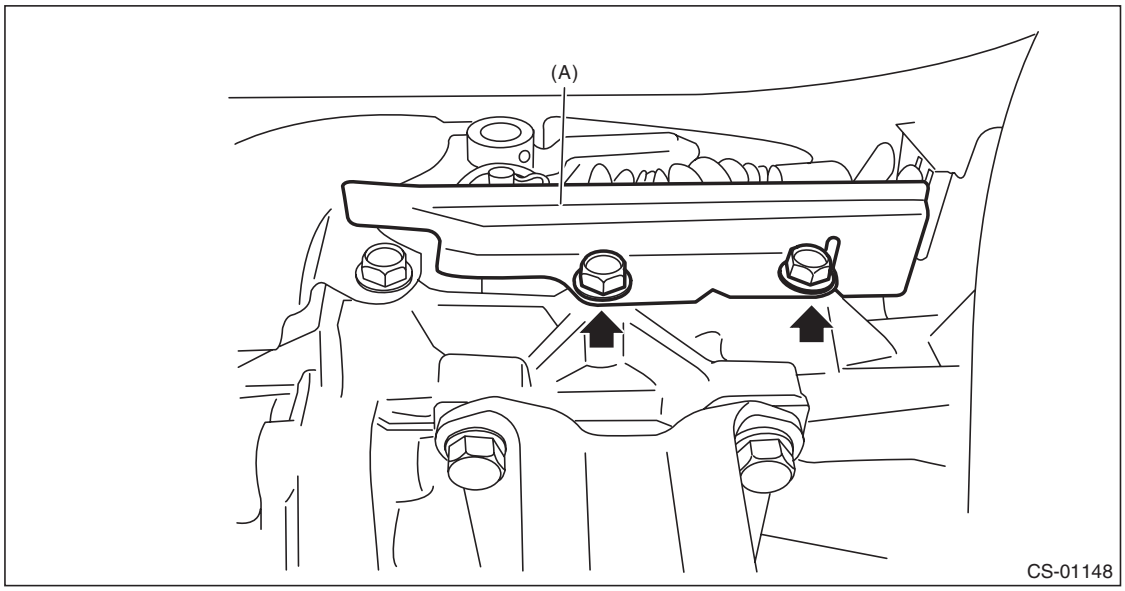

(A) Dust cover

6) Insert the MT gear shift cable into the cover cable assembly, and secure it with the clamp.

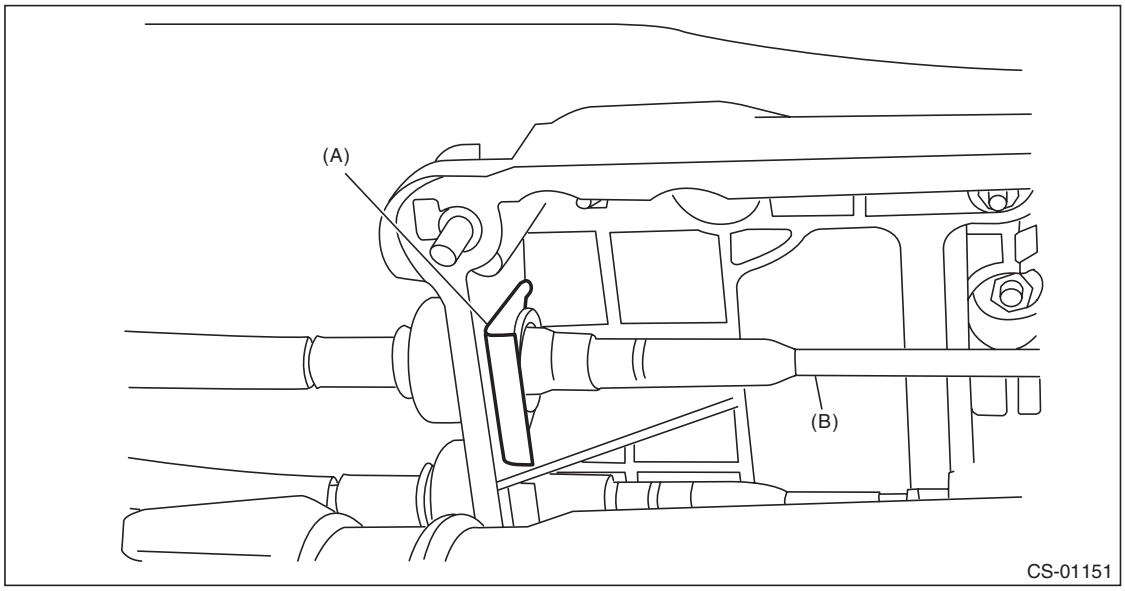

(A) Clamp
(B) MT gear shift cable

7) Connect the MT gear shift cable.

GETtheMANUALS.org

8) Install the plate cable assembly.

Tightening torque:
7.5 N·m (0.8 kgf-m, 5.5 ft-lb)

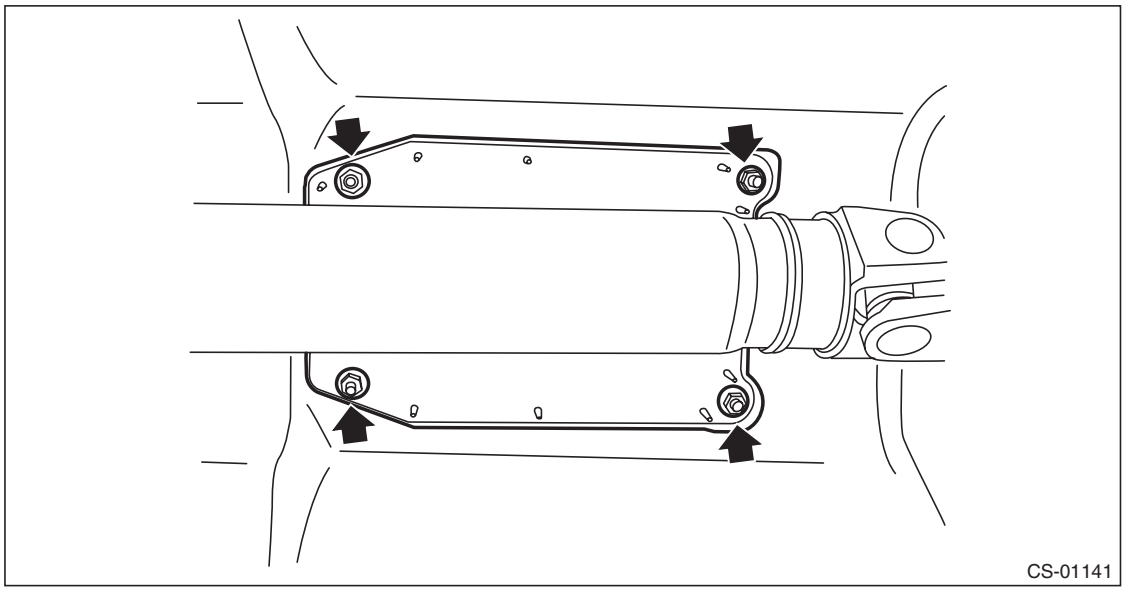

9) Insert the MT gear shift cable into clamp cable, and install to the transmission.

Tightening torque:
18 N·m (1.8 kgf-m, 13.3 ft-lb)

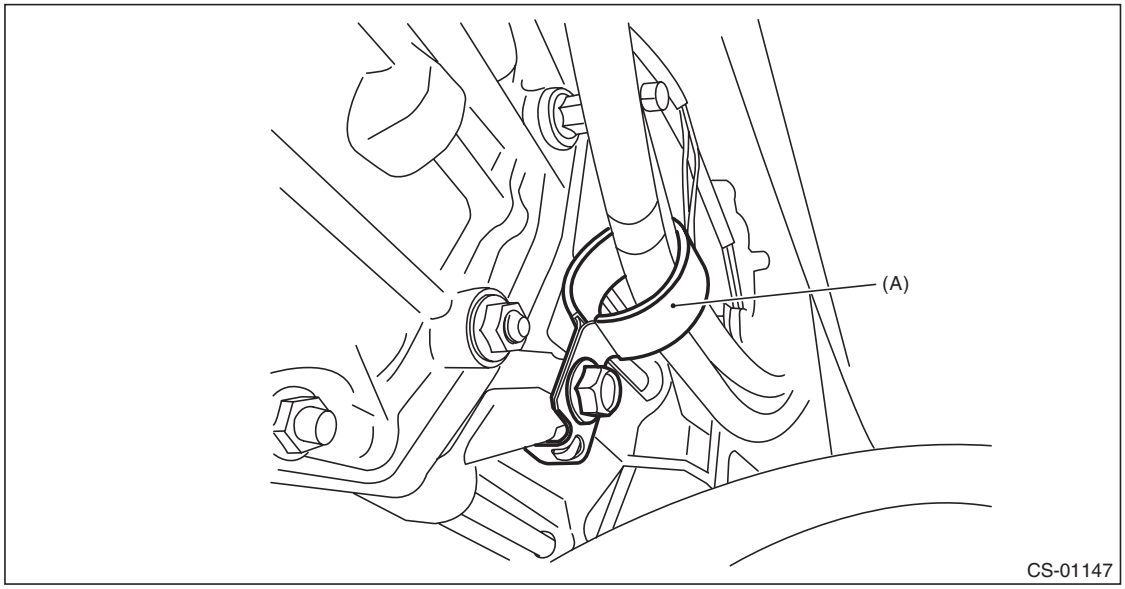

(A) Clamp cable

GETtheMANUALS.org

10) Install the heat shield cover.

Tightening torque:
18 N·m (1.8 kgf-m, 13.3 ft-lb)

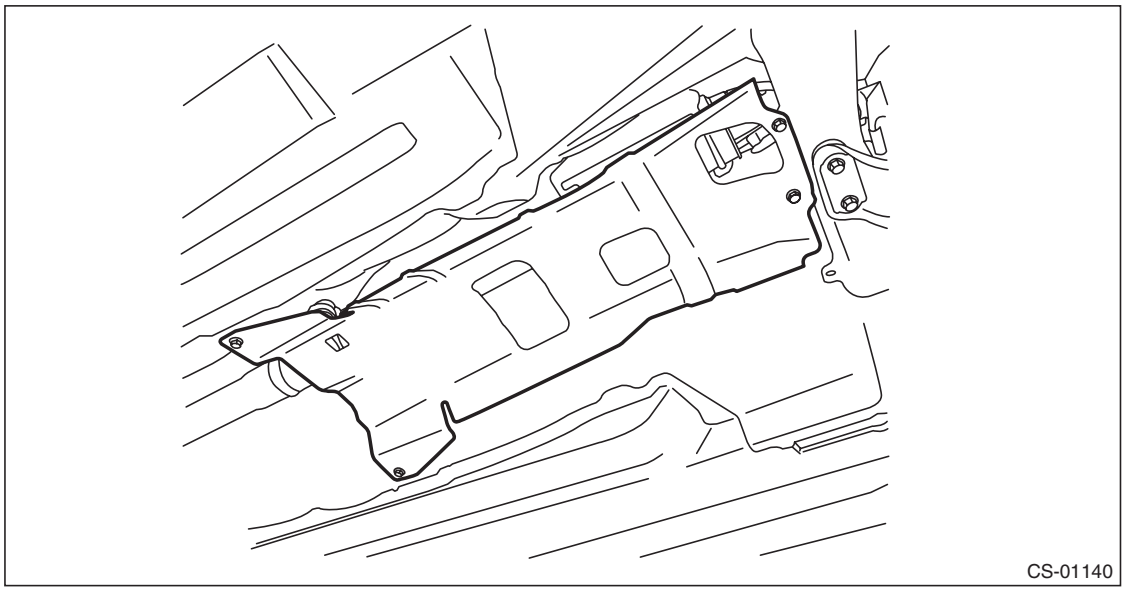

11) Install the center exhaust pipe and rear exhaust pipe. (non-turbo model) <Ref. to EX(H4SO)-8, INSTALLATION, Center Exhaust Pipe.> <Ref. to EX(H4SO)-9, INSTALLATION, Rear Exhaust Pipe.>
12) Install the center exhaust pipe (rear) and rear exhaust pipe. (turbo model) <Ref. to EX(H4DOTC)-13, INSTALLATION, Center Exhaust Pipe.> <Ref. to EX(H4DOTC)-15, INSTALLATION, Rear Exhaust Pipe.>
13) Lower the vehicle.
14) Make sure the gears can be shifted accurately into each gear.

GETtheMANUALS.org

9. MT Gear Select Cable

A: REMOVAL

CAUTION:
Always use new MT gear select cable if the cable is removed from selector lever COMPL of transmission side.

1) Disconnect the ground cable from battery.
2) Remove the ten clips and remove the grille bracket.

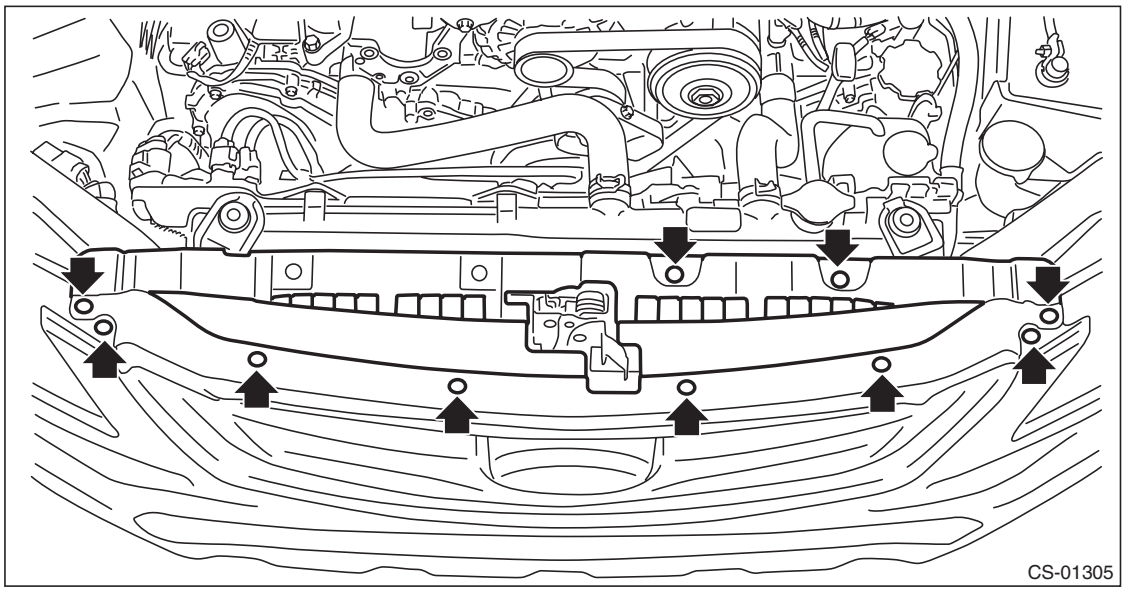

3) Remove the air intake duct.
- Non-turbo model

<Ref. to IN(H4SO)-9, REMOVAL, Air Intake Duct.>
- Turbo model

<Ref. to IN(H4DOTC)-12, REMOVAL, Air Intake Duct.>
4) Remove the intercooler and the intercooler stay. (turbo model) <Ref. to IN(H4DOTC)-17, REMOVAL, Intercooler.>
5) Remove the air intake boot assembly. (non-turbo model) <Ref. to IN(H4SO)-8, REMOVAL, Air Intake Boot.>
6) Remove the throttle body. (non-turbo model) <Ref. to FU(H4SO)-15, REMOVAL, Throttle Body.>

GETtheMANUALS.org

7) Remove the bolt and disconnect the engine harness connector. (non-turbo model)

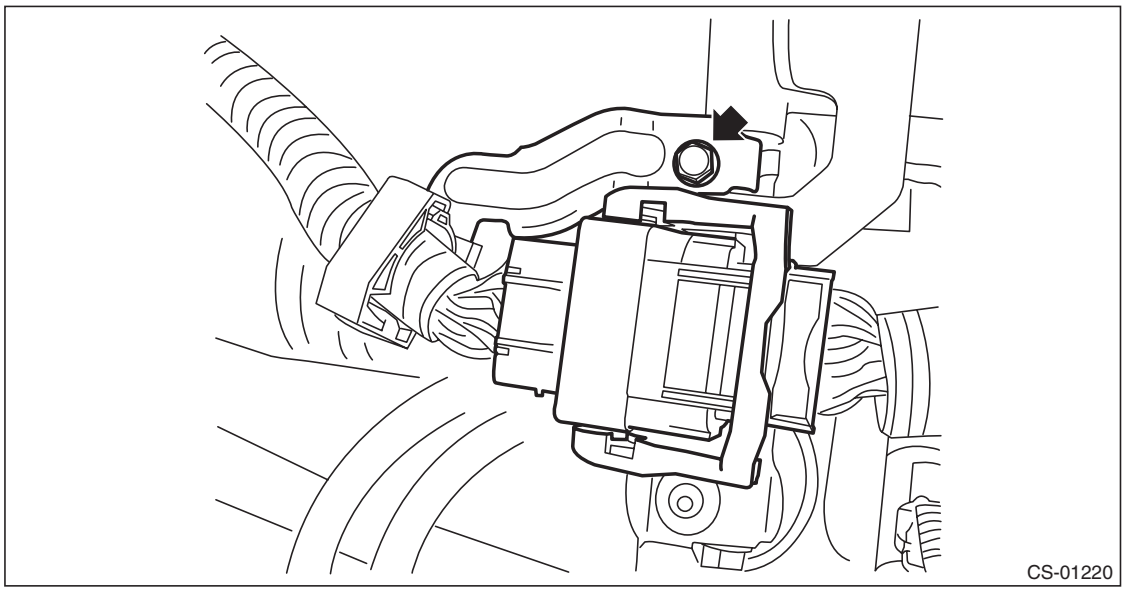

8) Remove the engine harness connector from the engine hanger rear. (non-turbo model)

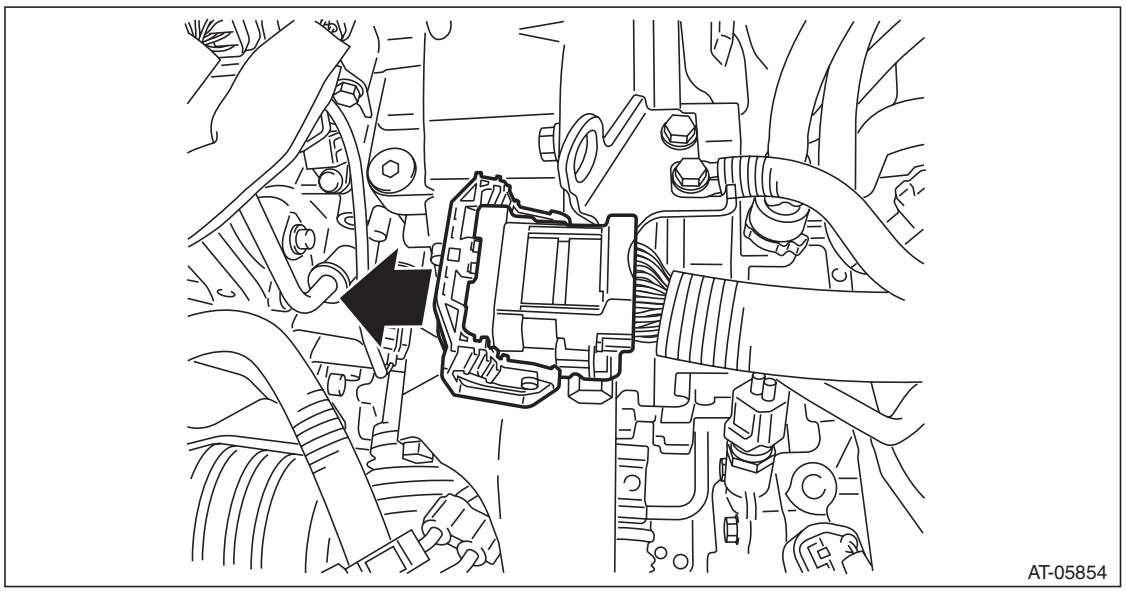

GETtheMANUALS.org

9) Remove the engine hanger rear. (non-turbo model)

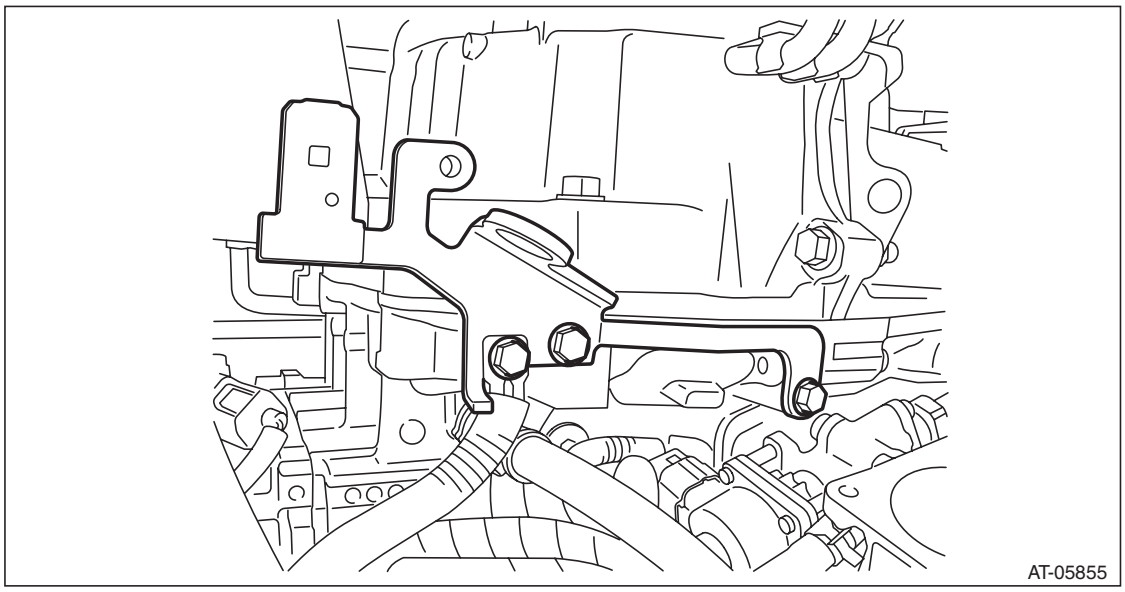

10) Install the engine hanger rear for turbo model. (non-turbo model)
Part No. 10004AA180 Engine hanger rear

Tightening torque:
16 N·m (1.6 kgf-m, 11.8 ft-lb)

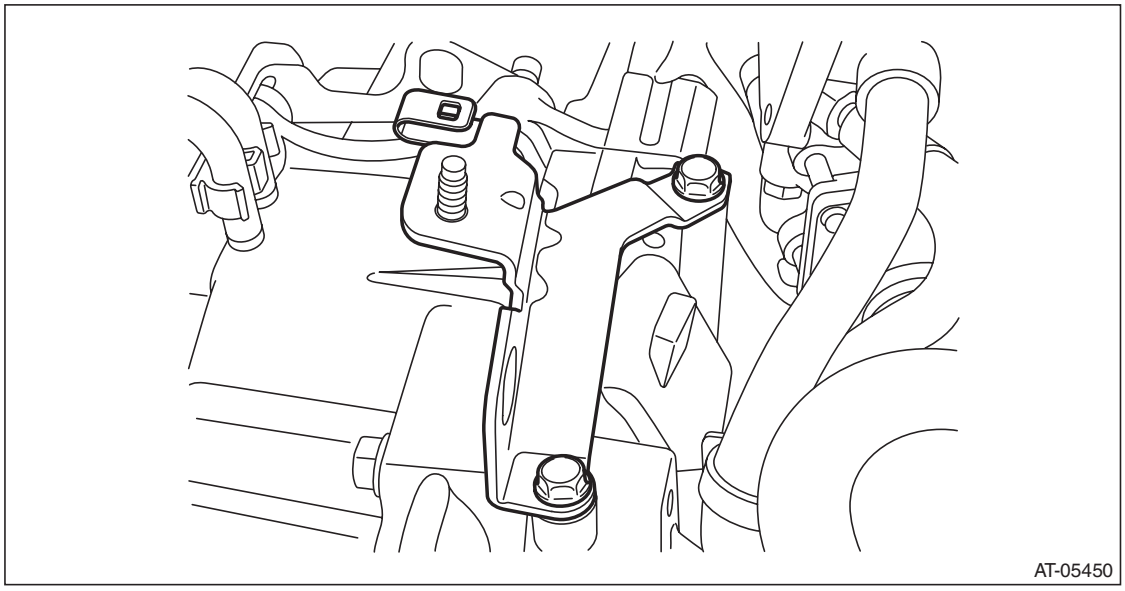

11) Lift up the vehicle.
12) Remove the center exhaust pipe and rear exhaust pipe. (non-turbo model) <Ref. to EX(H4SO)-8, REMOVAL, Center Exhaust Pipe.> <Ref. to EX(H4SO)-9, REMOVAL, Rear Exhaust Pipe.>
13) Remove the center exhaust pipe (rear) and rear exhaust pipe. (turbo model) <Ref. to EX(H4DOTC)-12, REMOVAL, Center Exhaust Pipe.> <Ref. to EX(H4DOTC)-15, REMOVAL, Rear Exhaust Pipe.>

GETtheMANUALS.org

14) Remove the heat shield cover.

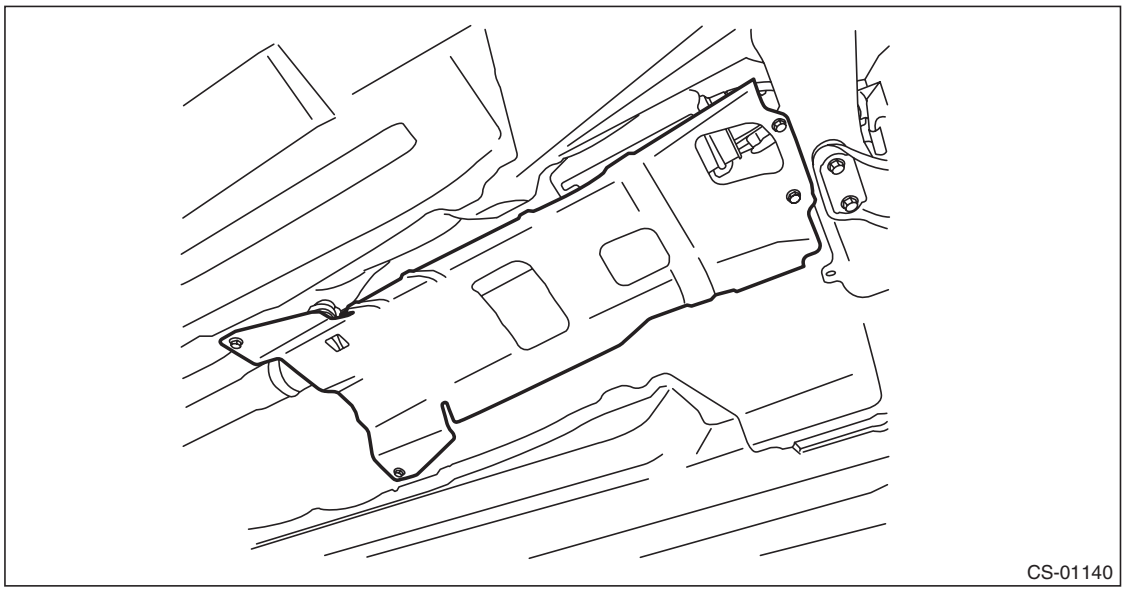

15) Lower the vehicle.
16) Remove the nuts from left and right transmission mounting brackets.

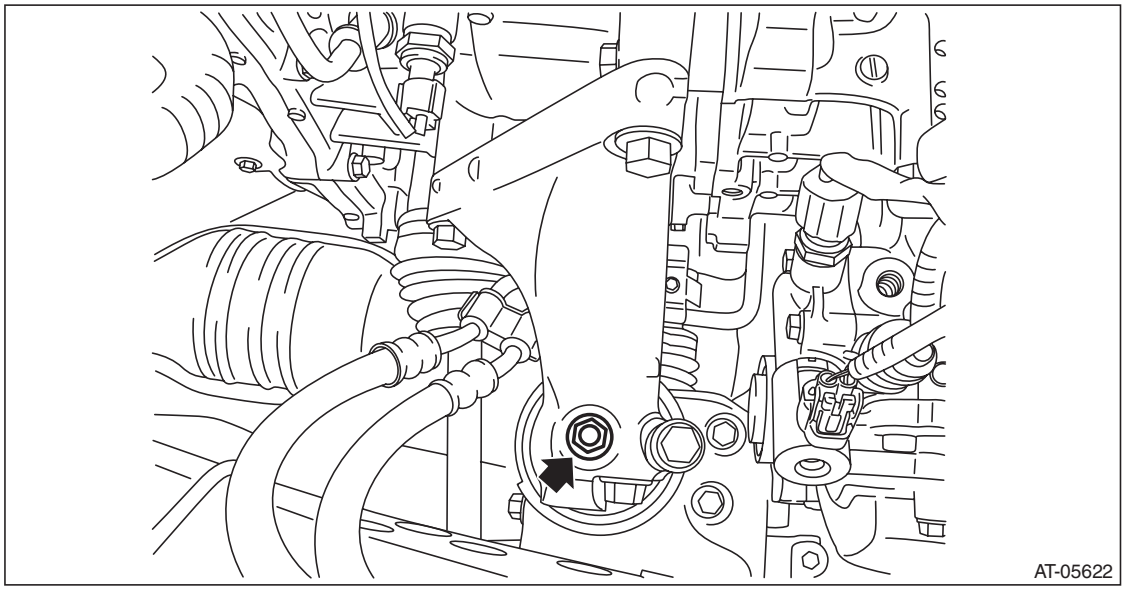

GETtheMANUALS.org

17) Set the ST1 and ST2 to vehicle.
ST1 99099AJ000 ENGINE HANGER
ST2 99099AJ010 CHAIN BALANCER

CAUTION:
- **Set so that the chain sling does not hit the engine parts.**
- **Set the arms of ST (ENGINE HANGER) at the locations shown in the figure.**

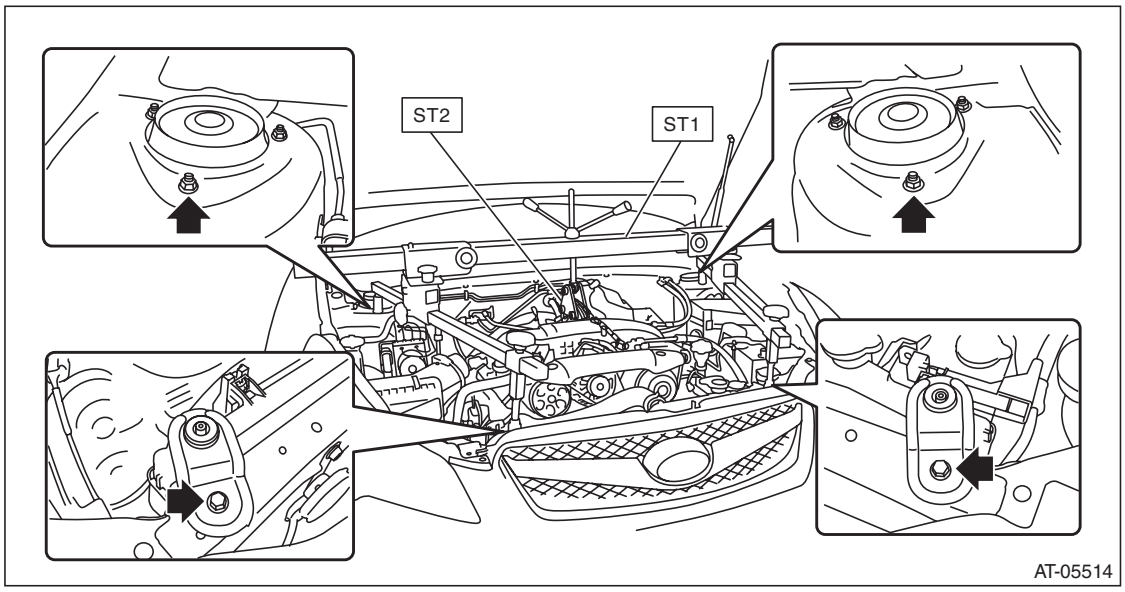

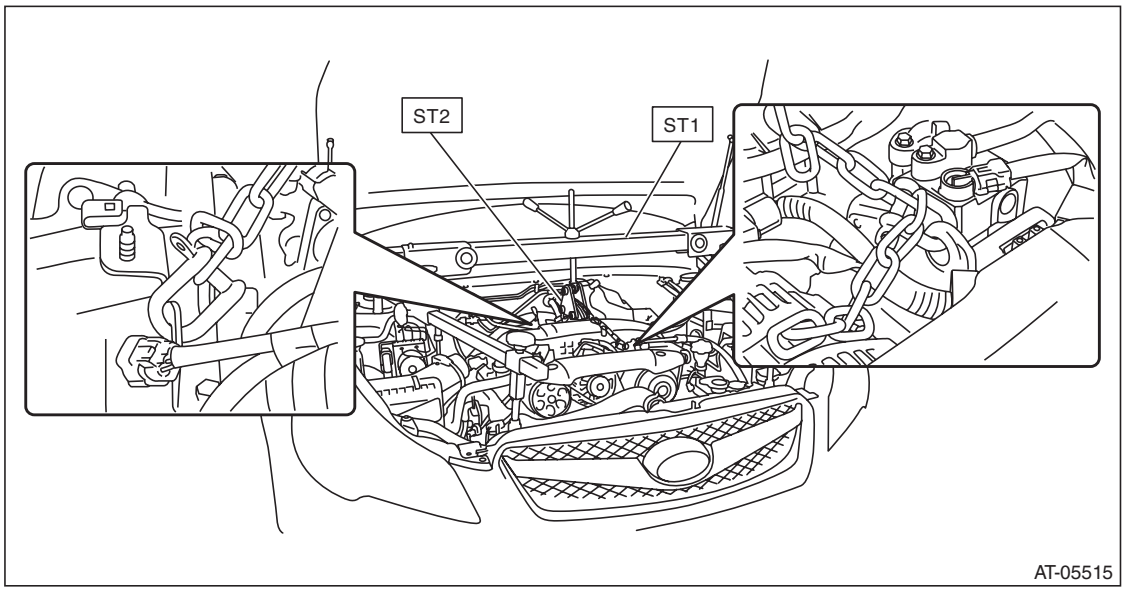

GETtheMANUALS.org

18) Remove the stopper rod.

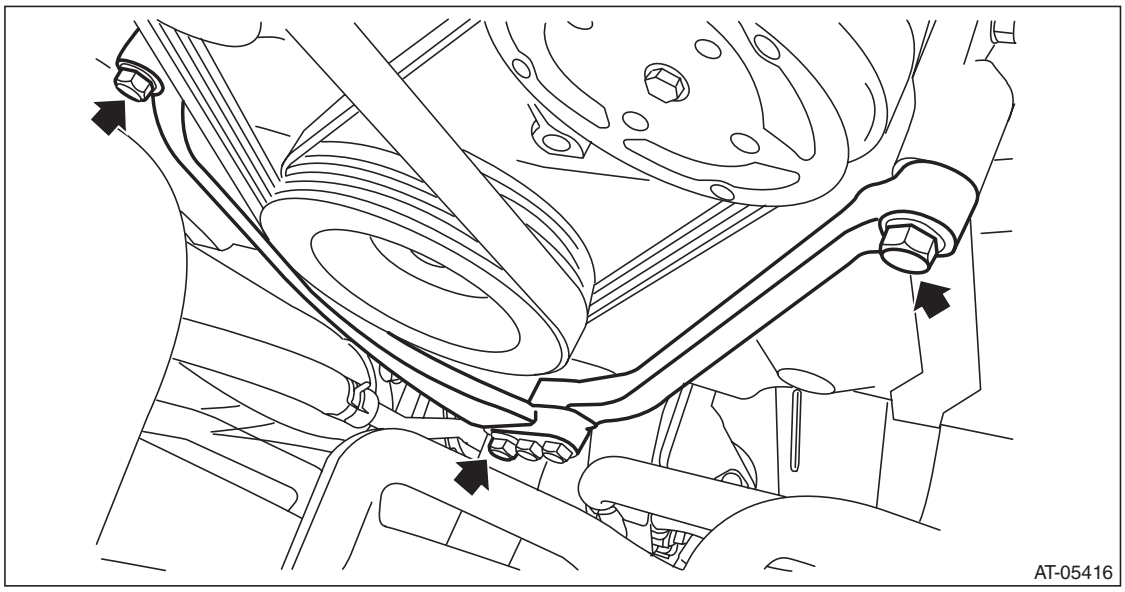

19) Lift the engine slightly and remove the engine mounting bolts.

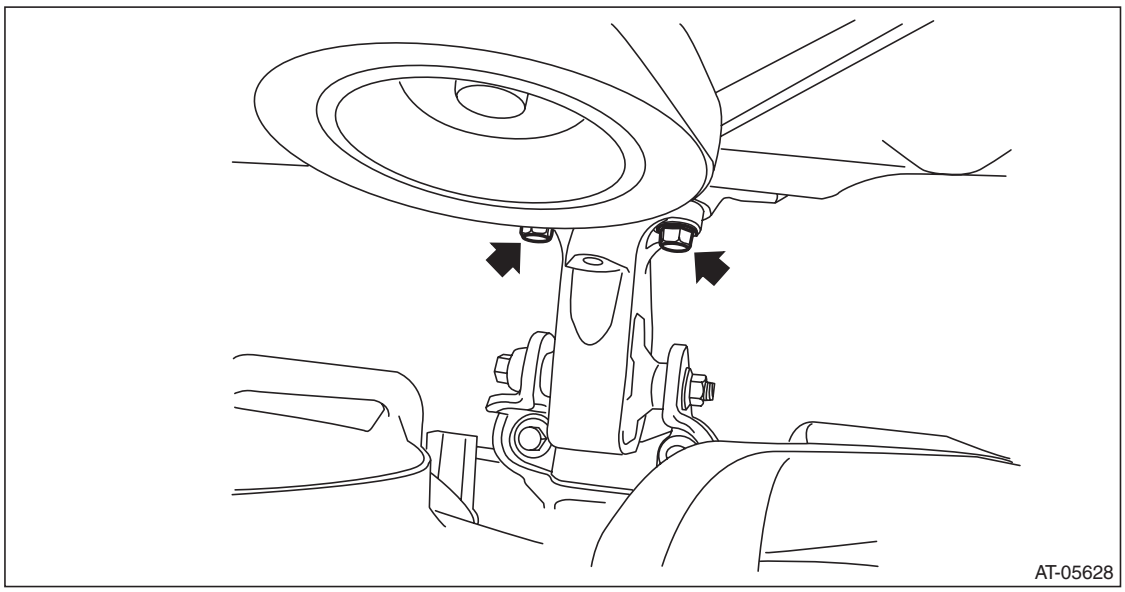

GETtheMANUALS.org

20) Remove the engine mounting nut and bolt to remove the engine mounting.

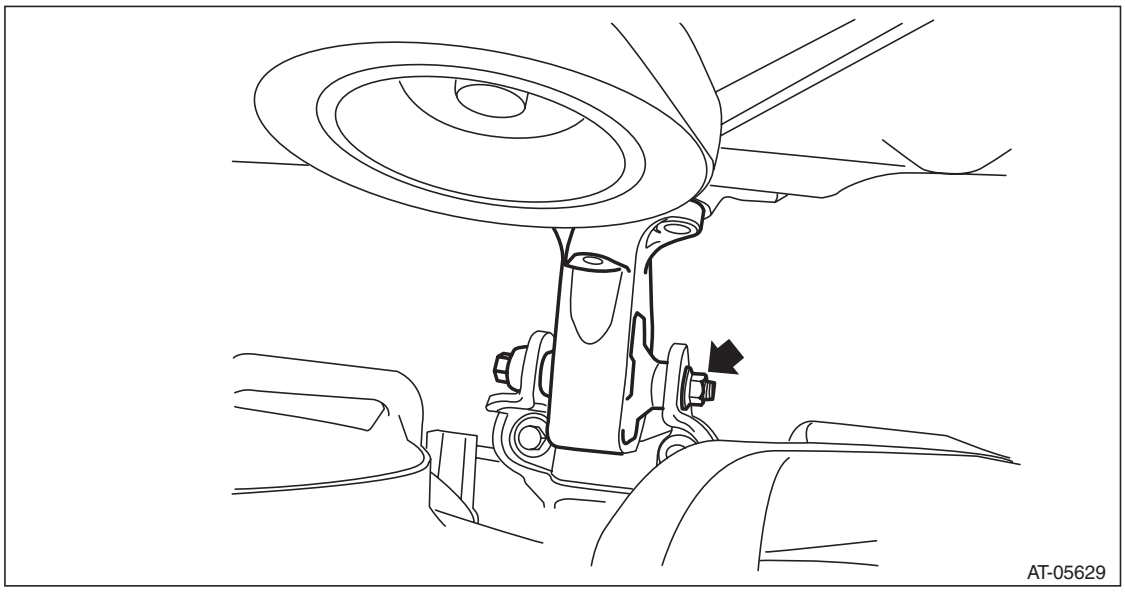

21) Temporarily attach ST by using two bolts.
ST 41099AJ000 SPECIAL TOOL H4

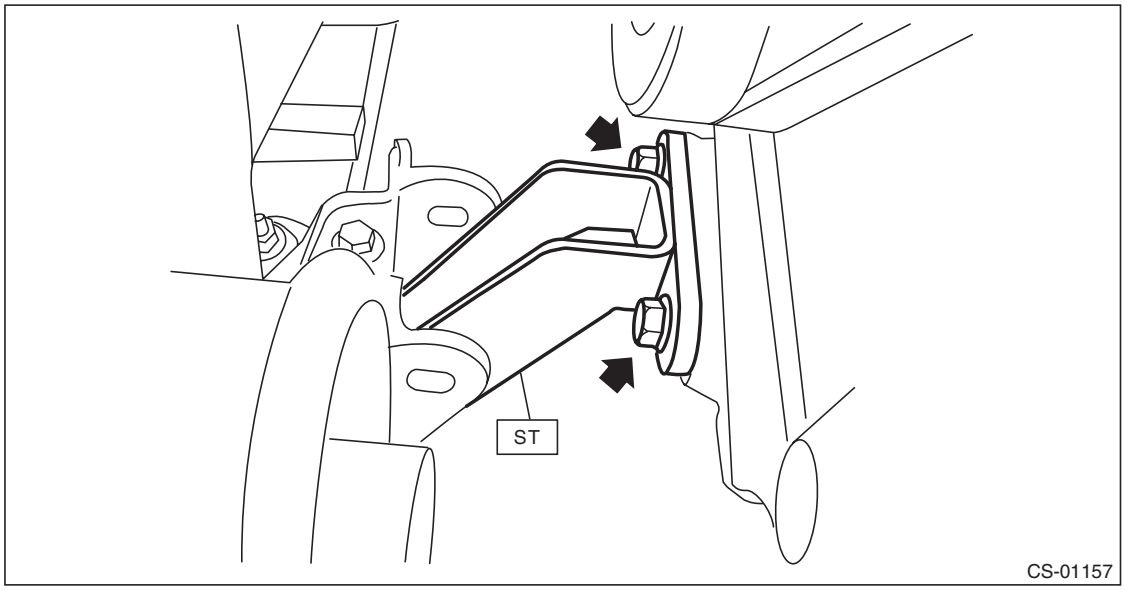

GETtheMANUALS.org

22) Lift up the engine unit high enough to install the bolt and nut to vehicle.

CAUTION:
Do not lift up higher than enough level to install the ST to avoid damage to the hoses and pipes inside the engine room.

NOTE:
• If it is difficult to pull out the stud bolt from transmission mounting bracket, slightly shake the engine unit while lifting up.

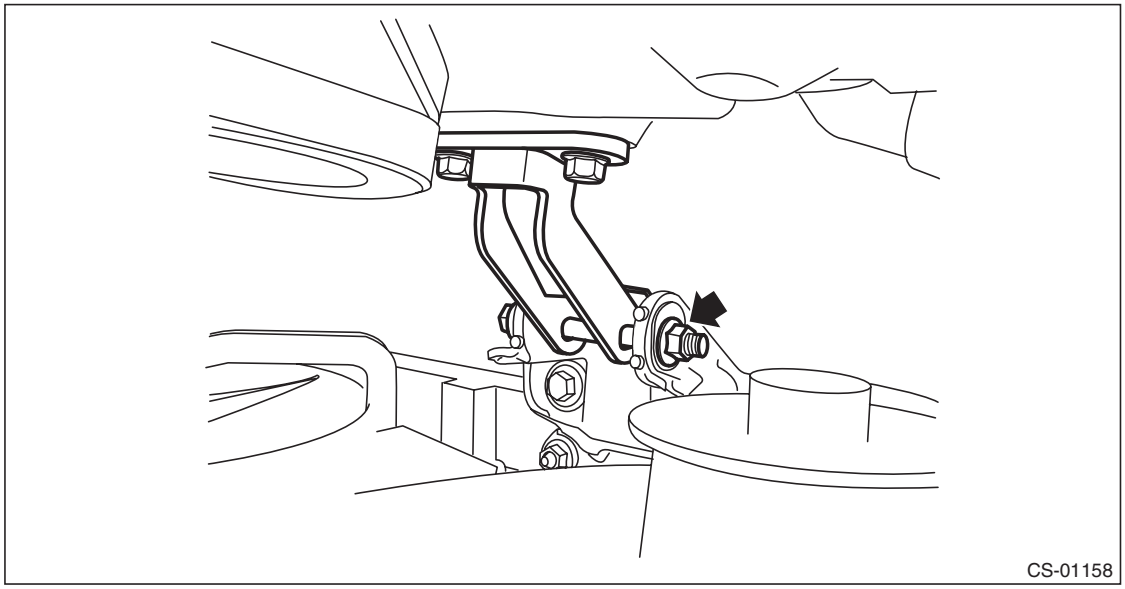

23) Tighten the mounting bolts on the engine side.

Tightening torque:
25 N·m (2.5 kgf-m, 18.4 ft-lb)

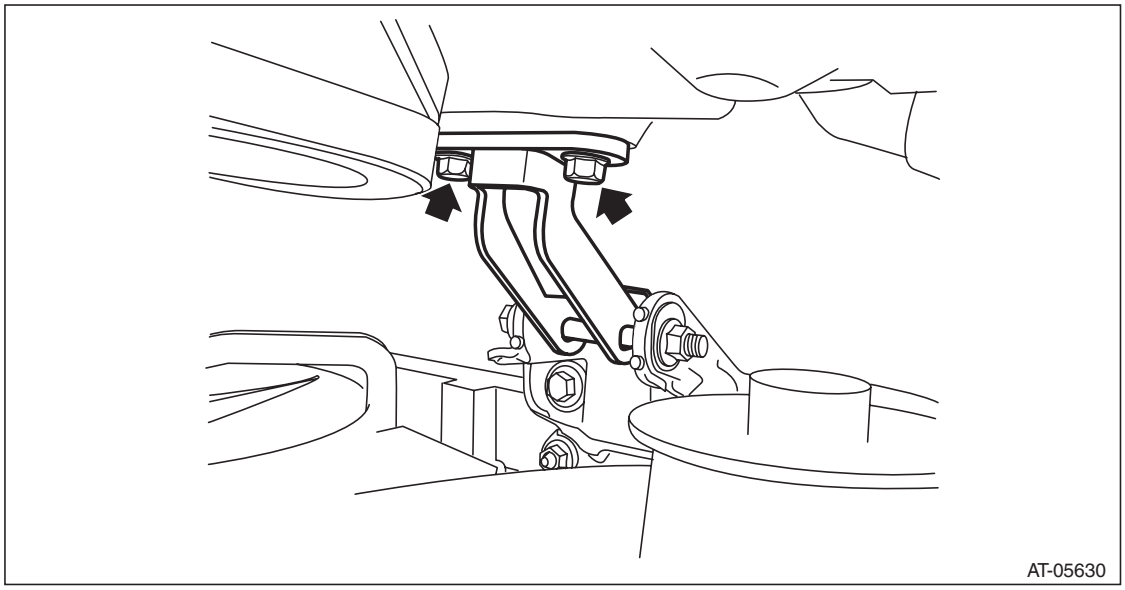

24) Rotate the handle of the ST (ENGINE HANGER) to loosen the sling chain.
25) Lift up the vehicle.
26) Set the transmission jack to the transmission.

GETtheMANUALS.org

27) Remove the clamp cable and take out the MT gear select cable from the clamp.

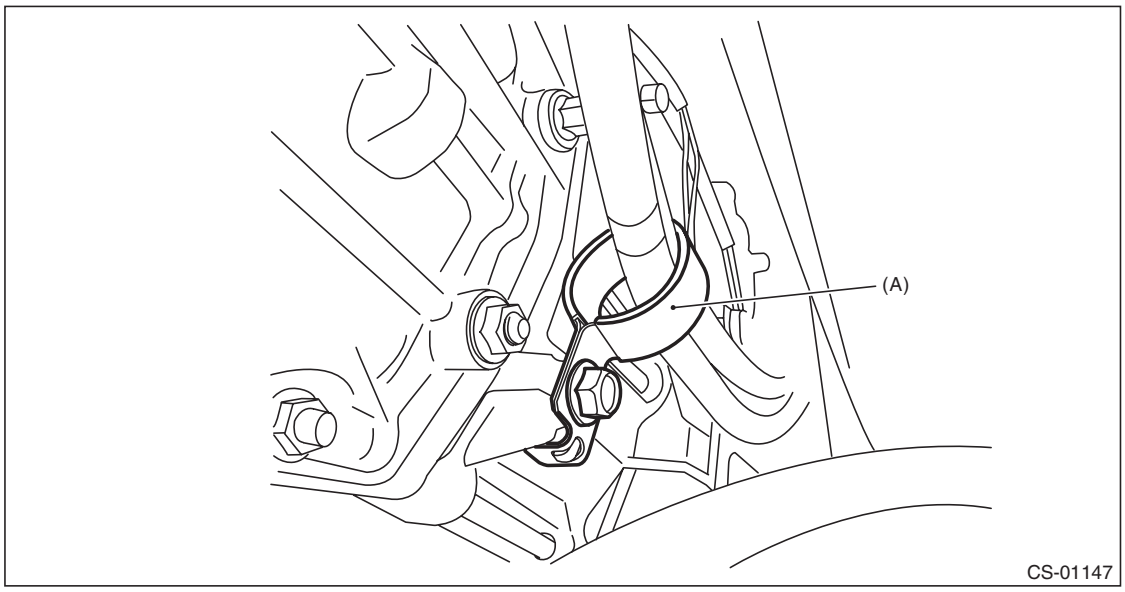

(A) Clamp cable

28) Remove the mounting bolts from the front crossmember and rear crossmember, and lower the transmission.

CAUTION:
When lowering the transmission, make sure that the transmission jack does not come off from the transmission.

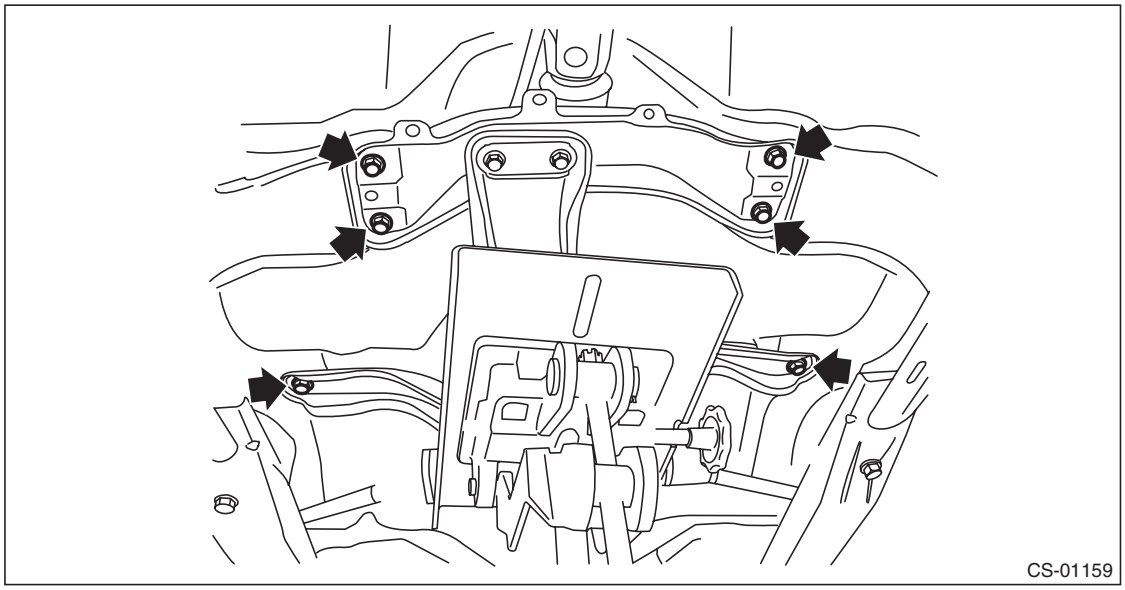

GETtheMANUALS.org

29) Insert a spanner between the selector lever COMPL and the MT gear select cable and remove the MT gear select cable by raising the handle.

NOTE:
- Use a spanner with 11 to 13 in size.
- The thickness of the spanner must not exceed 6 mm (0.2 in).

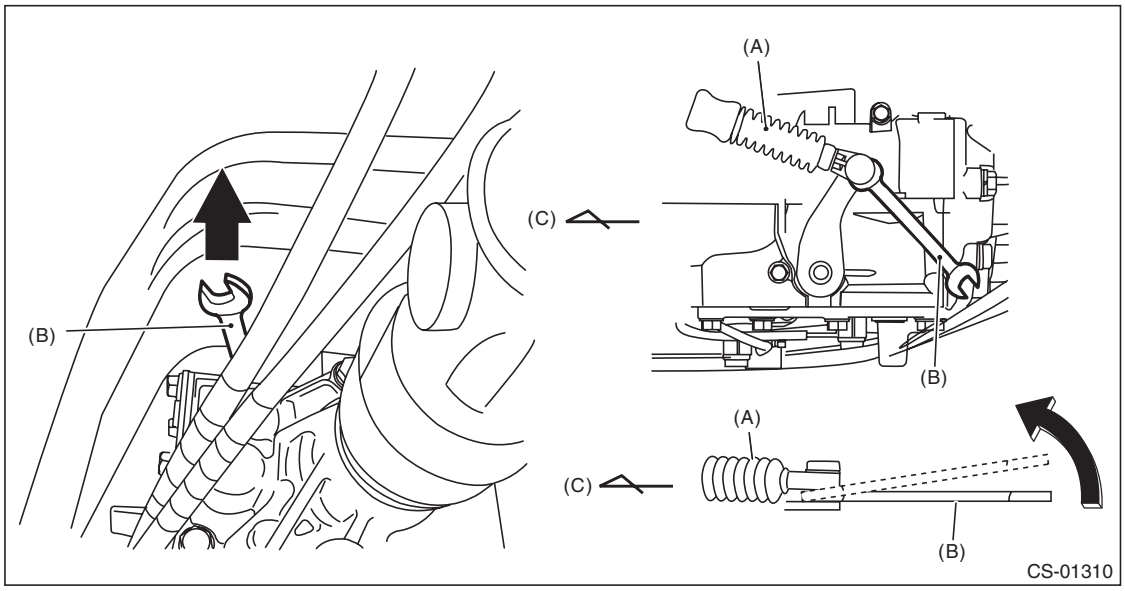

(A) MT gear select cable
(B) Spanner
(C) Forward

30) Remove the MT gear select cable and select bracket as a single unit from the transmission body.

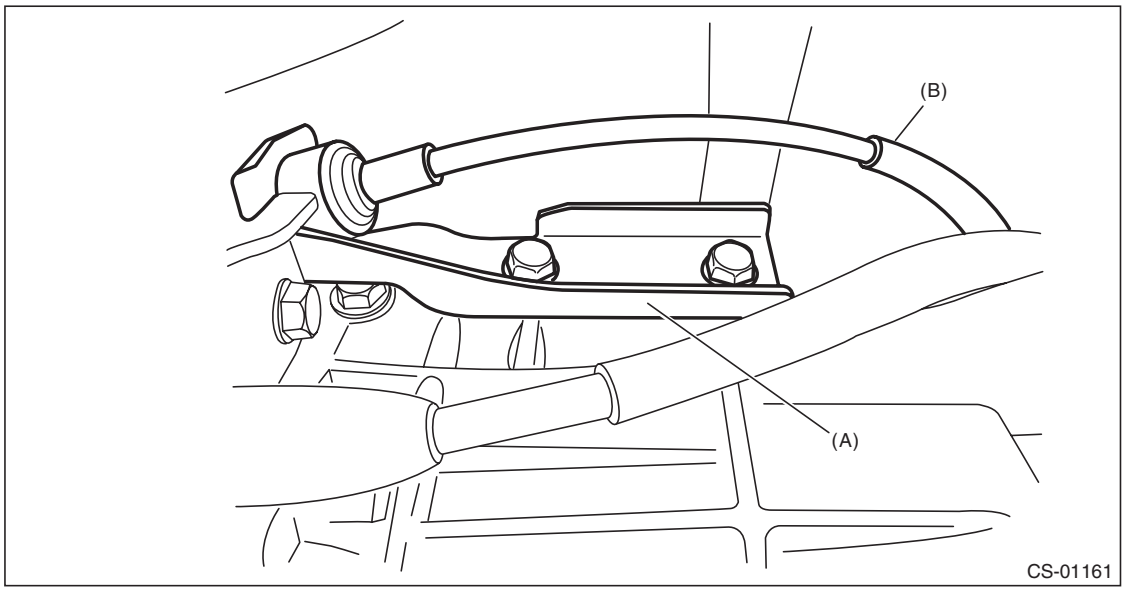

(A) Select bracket
(B) MT gear select cable

GETtheMANUALS.org

31) Remove the plate cable assembly.

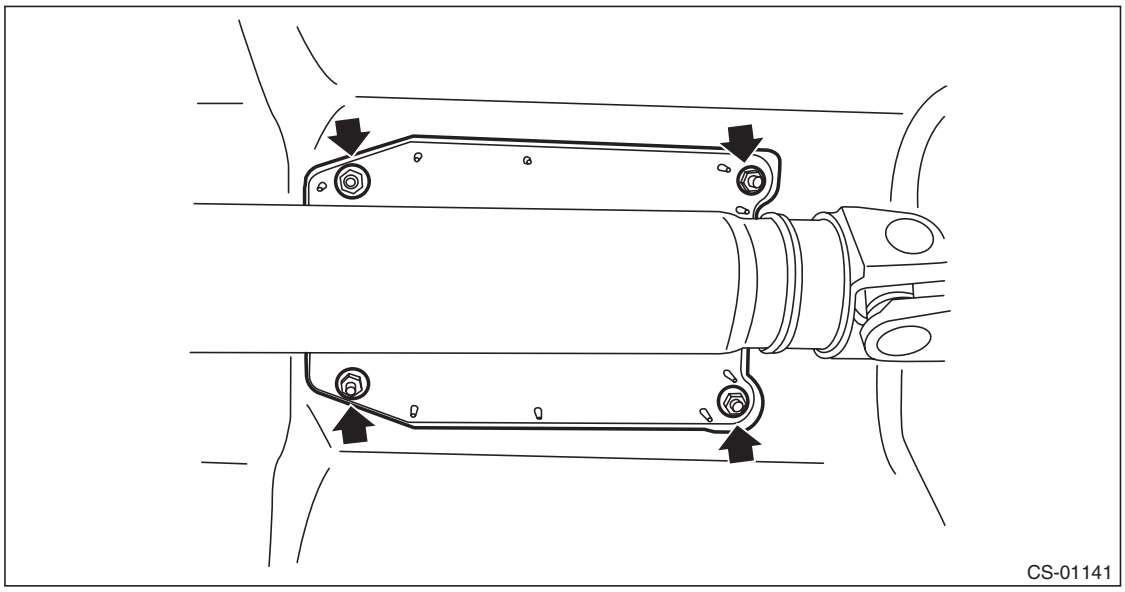

32) Disconnect the MT gear select cable.

CAUTION:
Be careful not to deform the cable inner.

NOTE:
Push the MT gear select cable in the direction of arrow, and remove it.

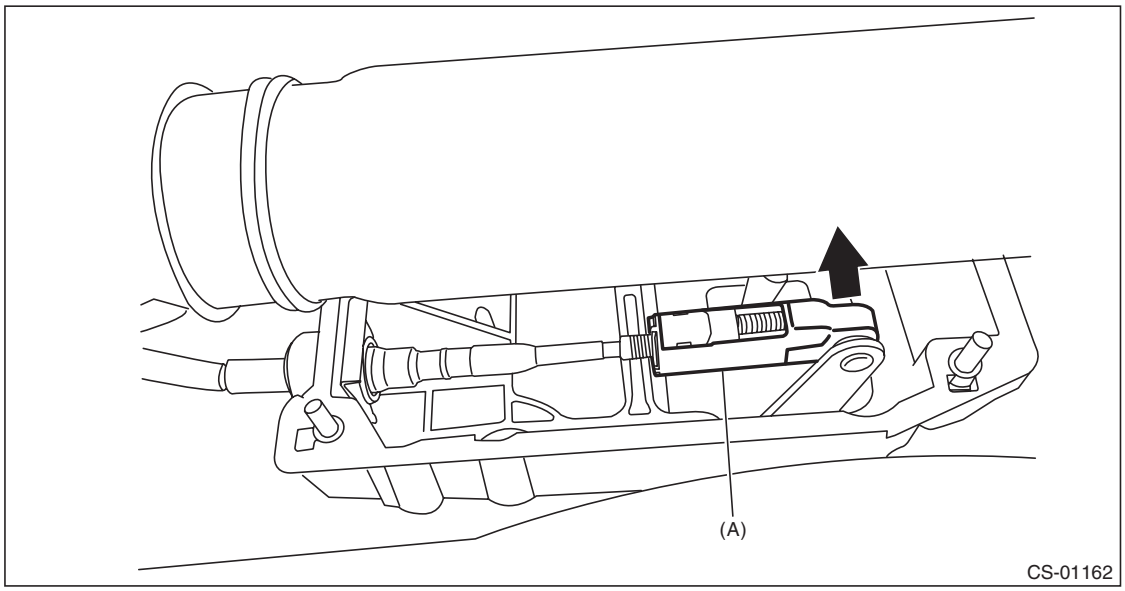

(A) MT gear select cable

GETtheMANUALS.org

33) Remove the clamp which holds the MT gear select cable.

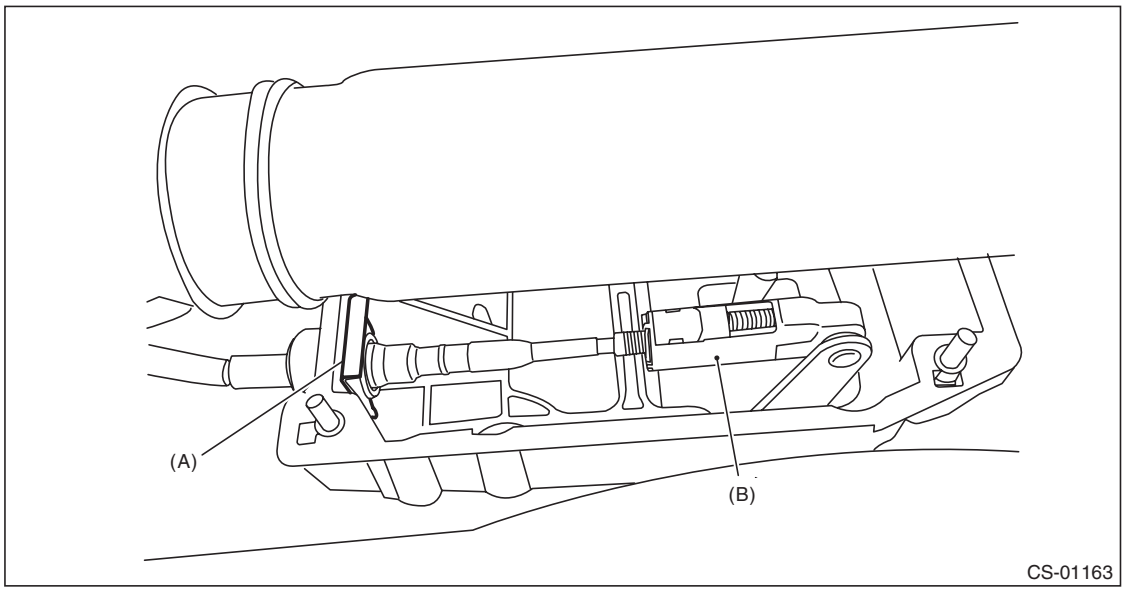

(A) Clamp
(B) MT gear select cable

34) Pull out the MT gear select cable from the cover cable assembly.

CAUTION:
Do not bend the MT gear select cable sharply.

GETtheMANUALS.org

B: INSTALLATION

CAUTION:
- **Always use new MT gear select cable if the cable is removed from selector lever COMPL of transmission side.**
- **Do not bend the MT gear select cable sharply.**
- **Do not twist the inner cable excessively.**

1) Remove the MT gear select cable from the select bracket.

CAUTION:
Check for assembling position before removing the MT gear select cable from the select bracket.

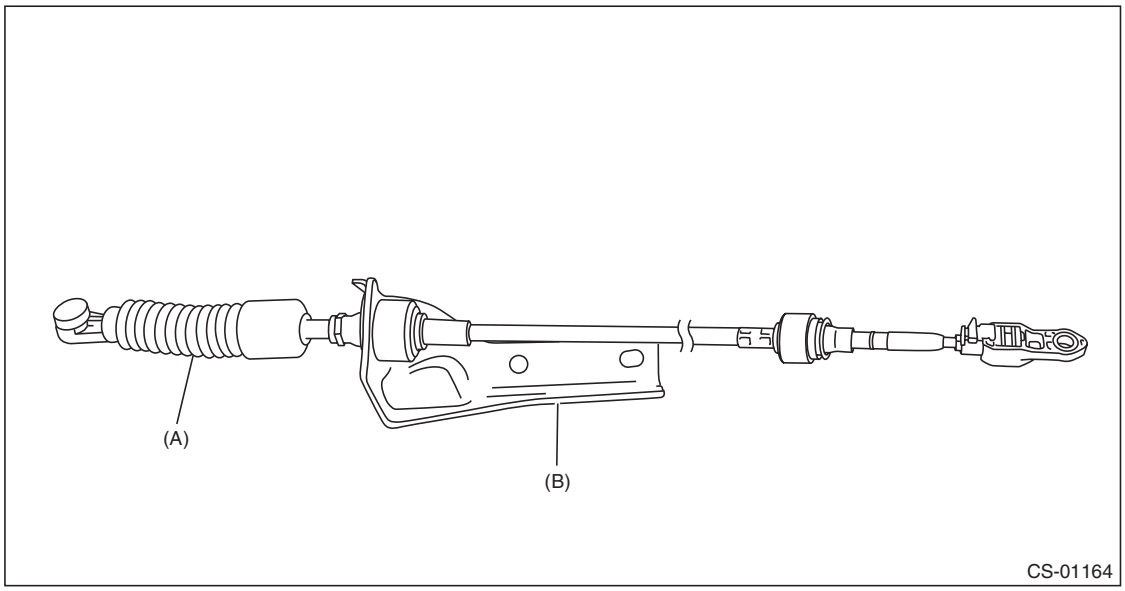

(A) MT gear select cable
(B) Select bracket

GETtheMANUALS.org

2) Set to the new MT gear select cable to the select bracket and secure it with the clamp.

CAUTION:
Be careful not to mistake the MT gear select cable installing direction.

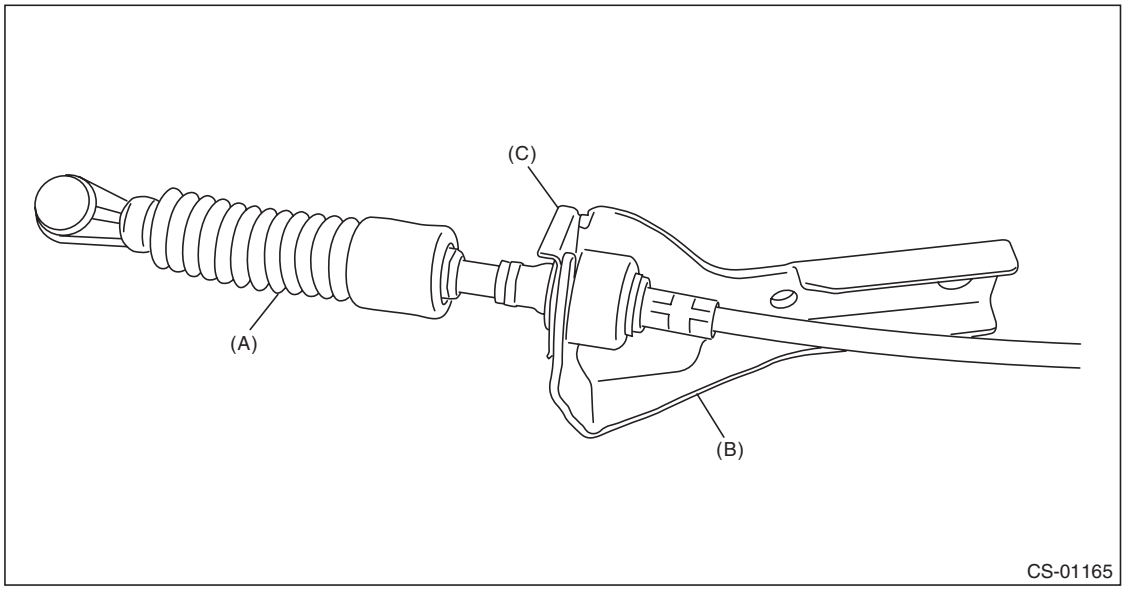

(A) MT gear select cable
(B) Select bracket
(C) Clamp

3) Install the MT gear select cable and select bracket as a single unit to the transmission body.

Tightening torque:
18 N·m (1.8 kgf-m, 13.3 ft-lb)

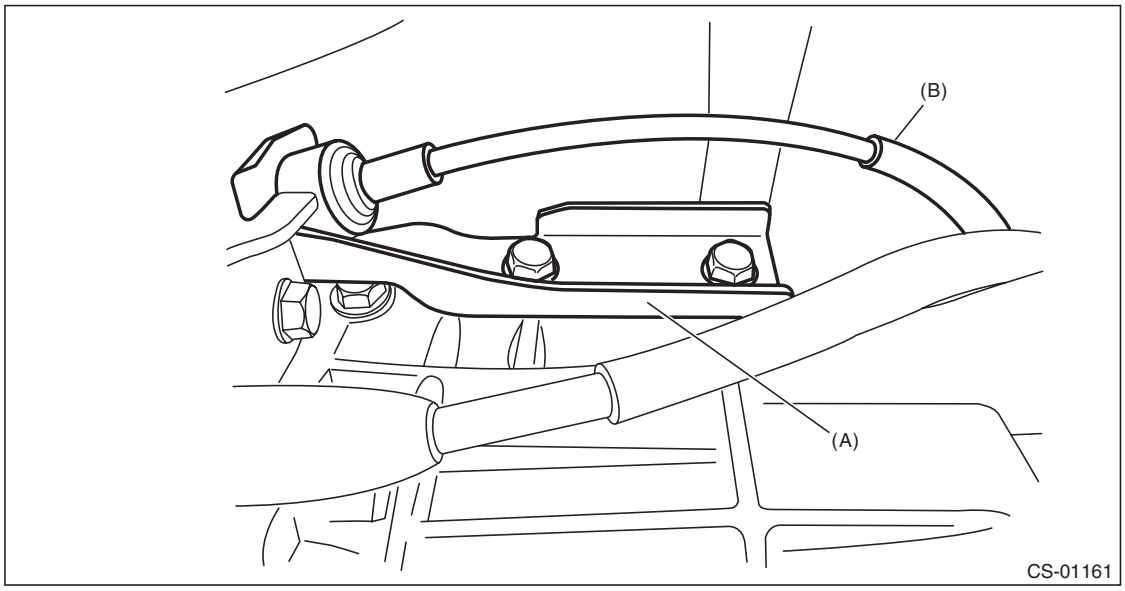

(A) Select bracket
(B) MT gear select cable

GETtheMANUALS.org

4) Install the MT gear select cable to the select lever COMPL.

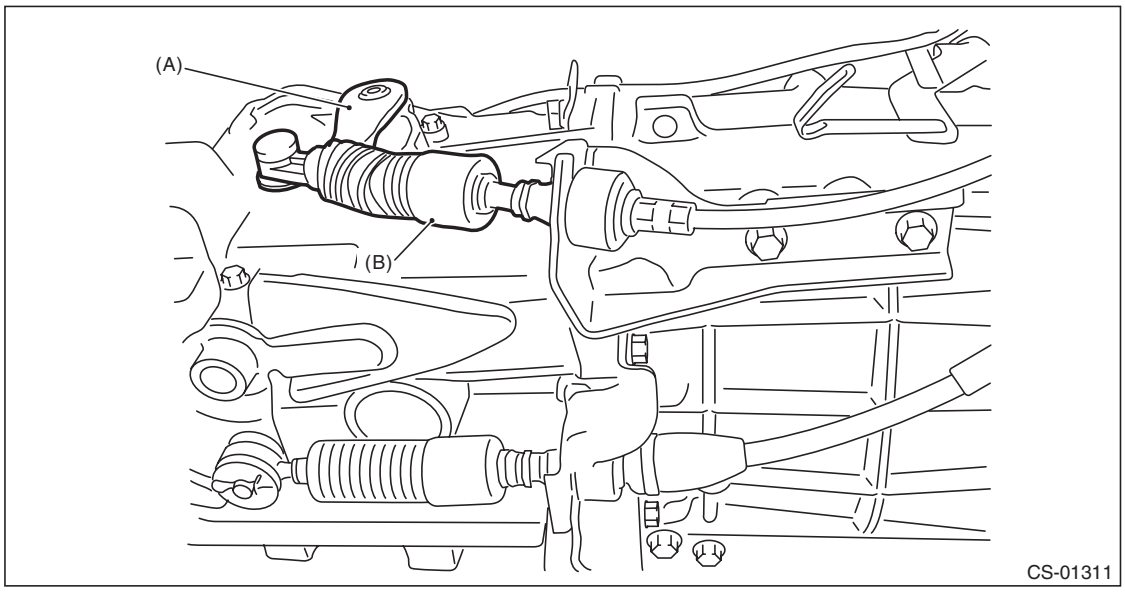

(A) Selector lever COMPL
(B) MT gear select cable

5) Measure the exposed length (a) of MT gear select cable. If out of specification, adjust the MT gear select cable. <Ref. to CS-95, ADJUSTMENT, MT Gear Select Cable.>

Exposed length (a) of MT gear select cable:
Specification: 11 mm (0.4 in)

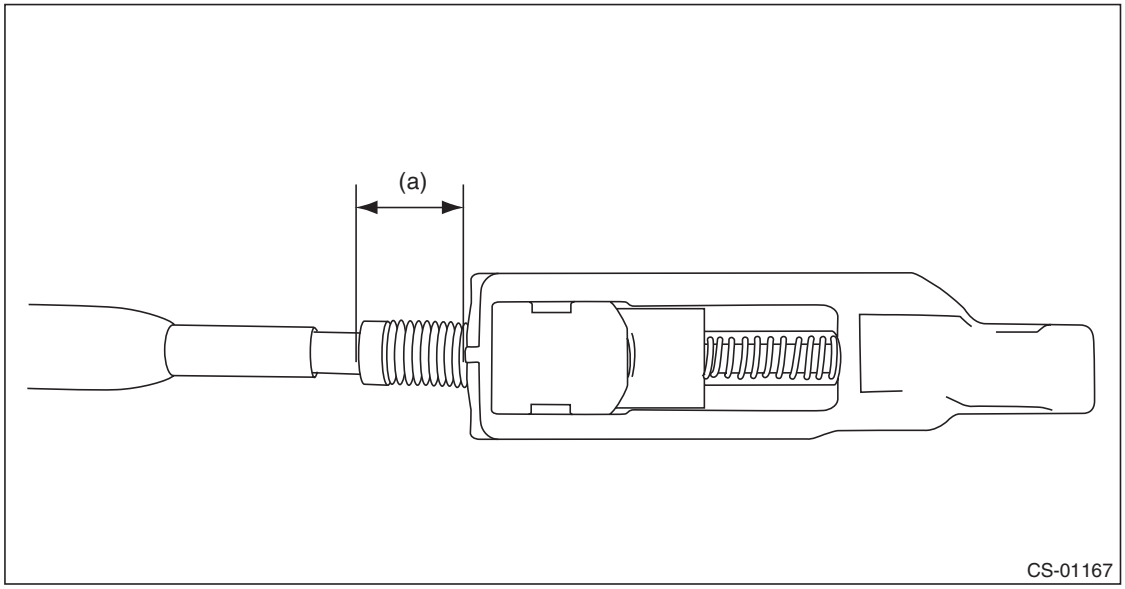

6) Connect the MT gear select cable.

GETtheMANUALS.org

7) Install the plate cable assembly.

Tightening torque:
7.5 N·m (0.8 kgf-m, 5.5 ft-lb)

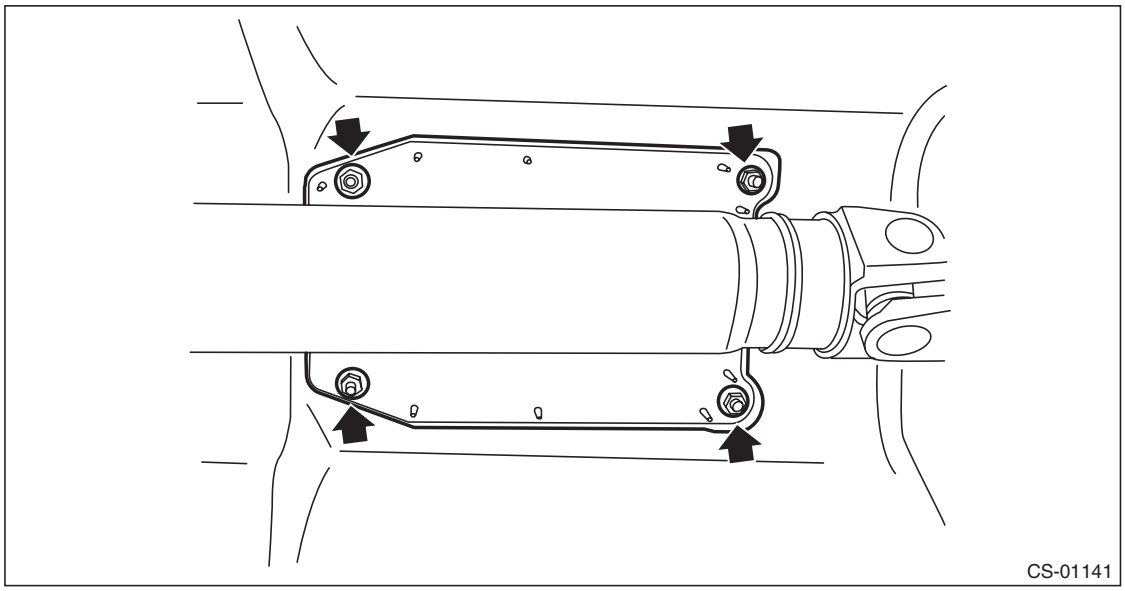

8) Insert the MT gear select cable into clamp cable, and install to the transmission.

Tightening torque:
18 N·m (1.8 kgf-m, 13.3 ft-lb)

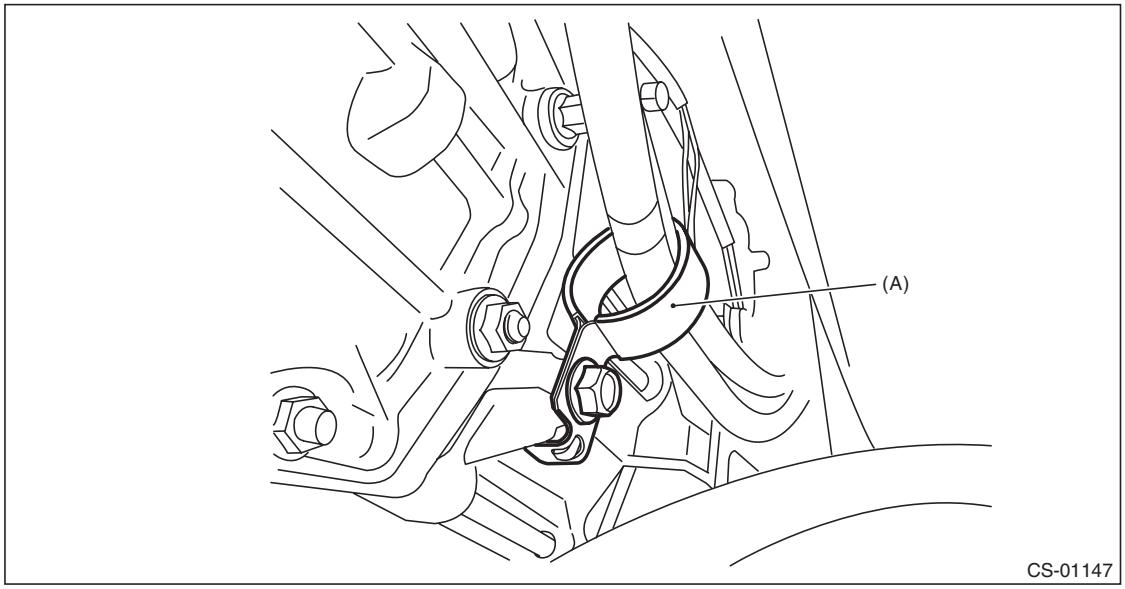

(A) Clamp cable

GETtheMANUALS.org

9) Raise the transmission jack, install the front crossmember and rear crossmember.

Tightening torque:
T1: 75 N·m (7.6 kgf-m, 55.3 ft-lb)
T2: 140 N·m (14.3 kgf-m, 103.3 ft-lb)

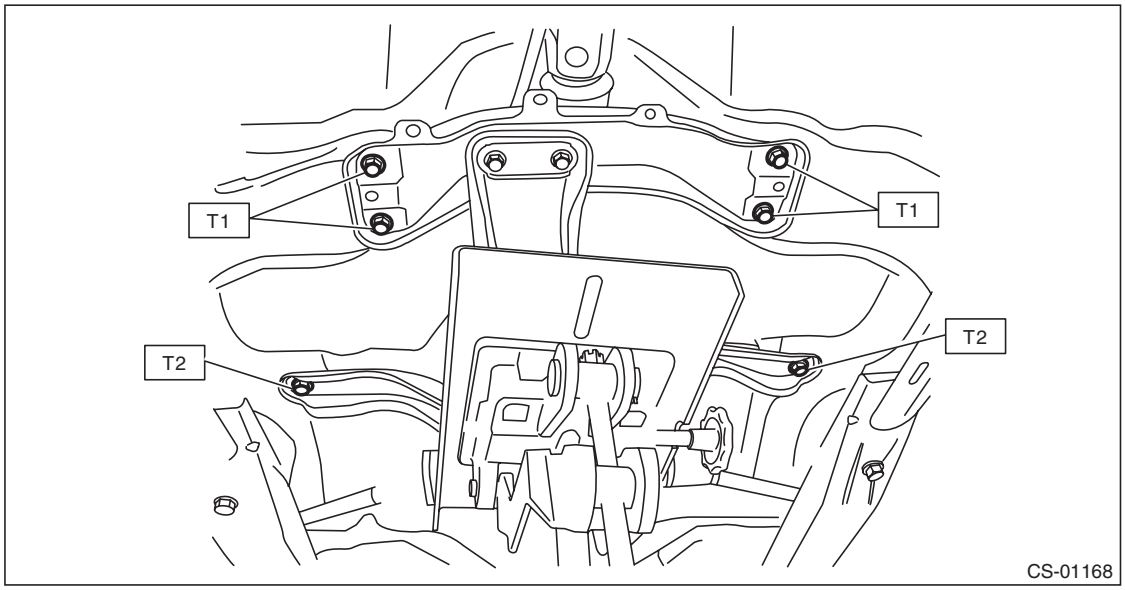

10) Rotate the handle of ST (ENGINE HANGER) to apply tension to the sling chain.
11) Take out the transmission jack.
12) Install the heat shield cover.

Tightening torque:
18 N·m (1.8 kgf-m, 13.3 ft-lb)

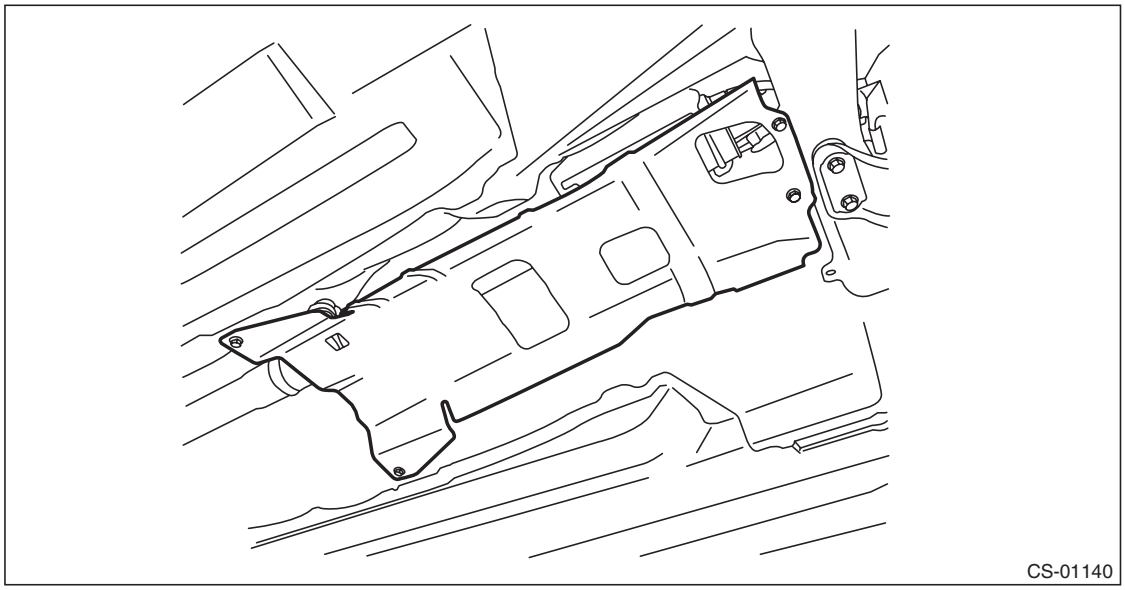

13) Install the center exhaust pipe and rear exhaust pipe. (non-turbo model) <Ref. to EX(H4SO)-8, INSTALLATION, Center Exhaust Pipe.> <Ref. to EX(H4SO)-9, INSTALLATION, Rear Exhaust Pipe.>
14) Install the center exhaust pipe (rear) and rear exhaust pipe. (turbo model) <Ref. to EX(H4DOTC)-13, INSTALLATION, Center Exhaust Pipe.> <Ref. to EX(H4DOTC)-15, INSTALLATION, Rear Exhaust Pipe.>
15) Lower the vehicle.
16) Rotate the handle of ST (ENGINE HANGER) to lift up the engine slightly.

GETtheMANUALS.org

17) Remove the bolts from ST (SPECIAL TOOL H4).

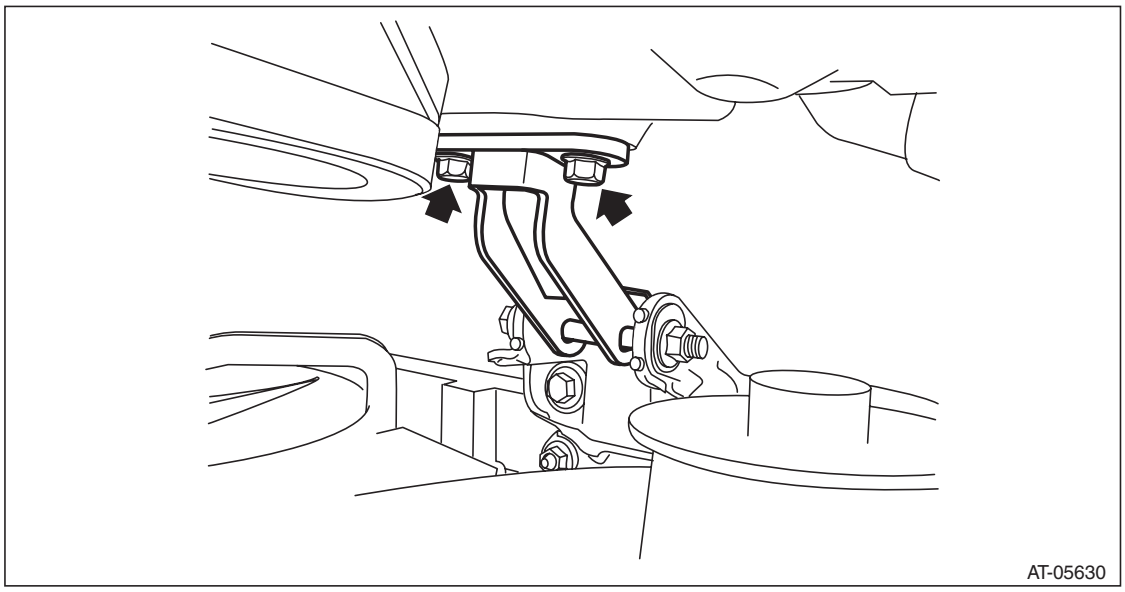

18) Remove the bolt and nut to remove ST (SPECIAL TOOL H4).

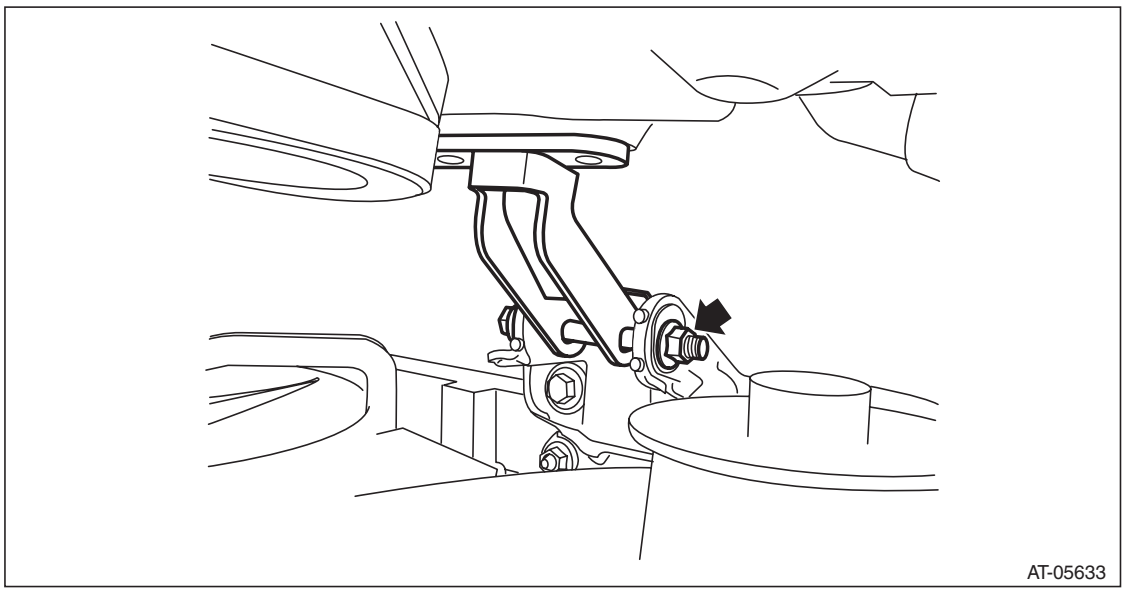

GETtheMANUALS.org

19) Temporarily attach the front engine mounting with bolts.

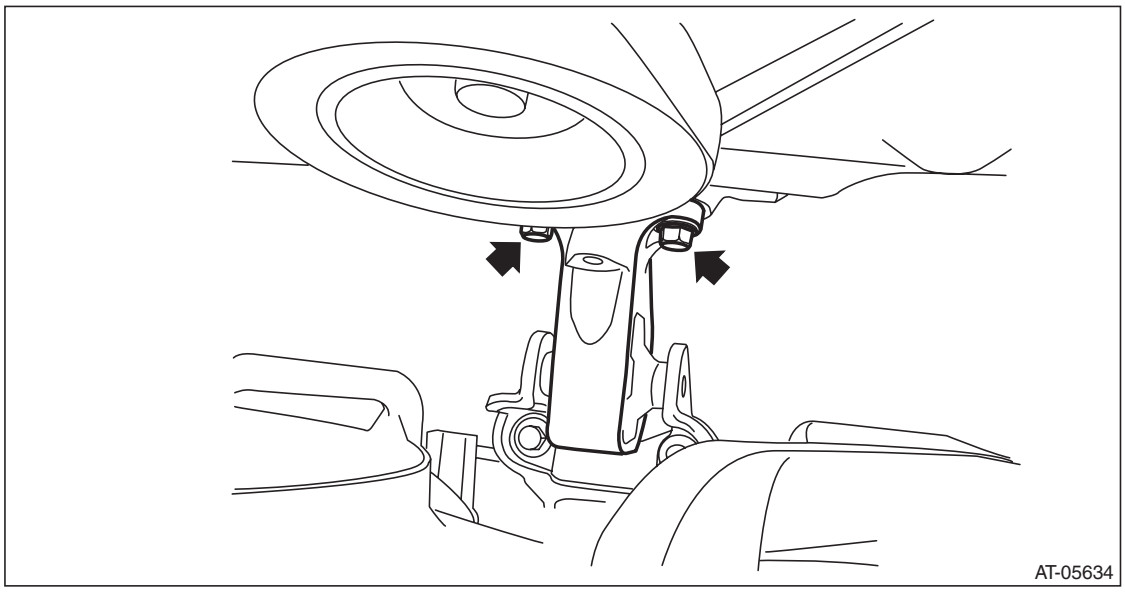

20) Install the bolt and nut to the front engine mounting.

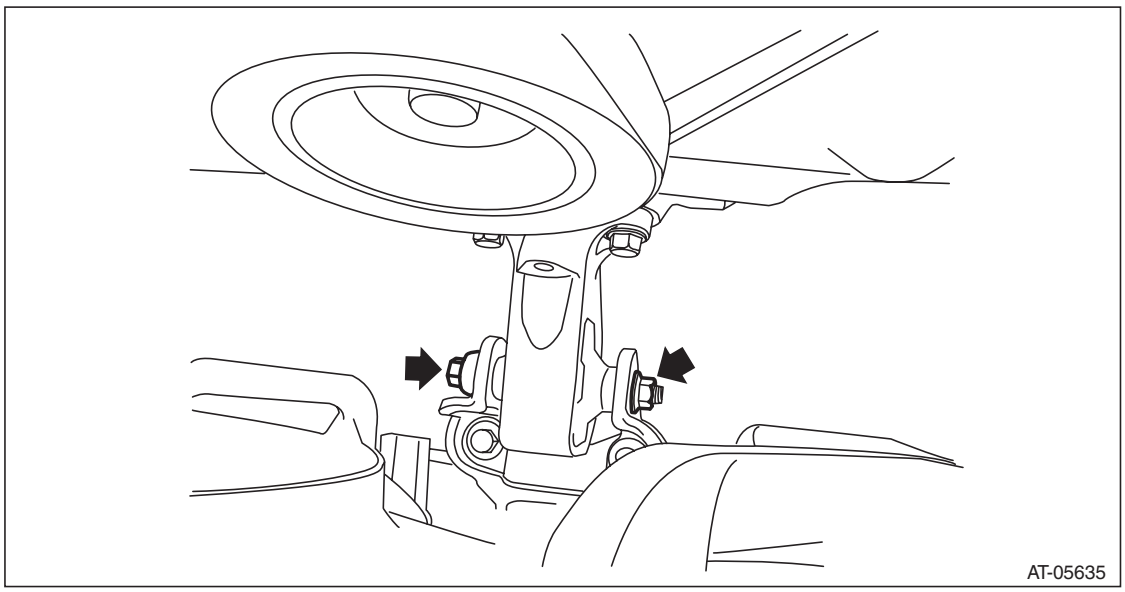

GETtheMANUALS.org

21) Tighten the bolts and nuts of front engine mounting.

Tightening torque:
T1: 25 N·m (2.5 kgf-m, 18.4 ft-lb)
T2: 45 N·m (4.6 kgf-m, 33.2 ft-lb)

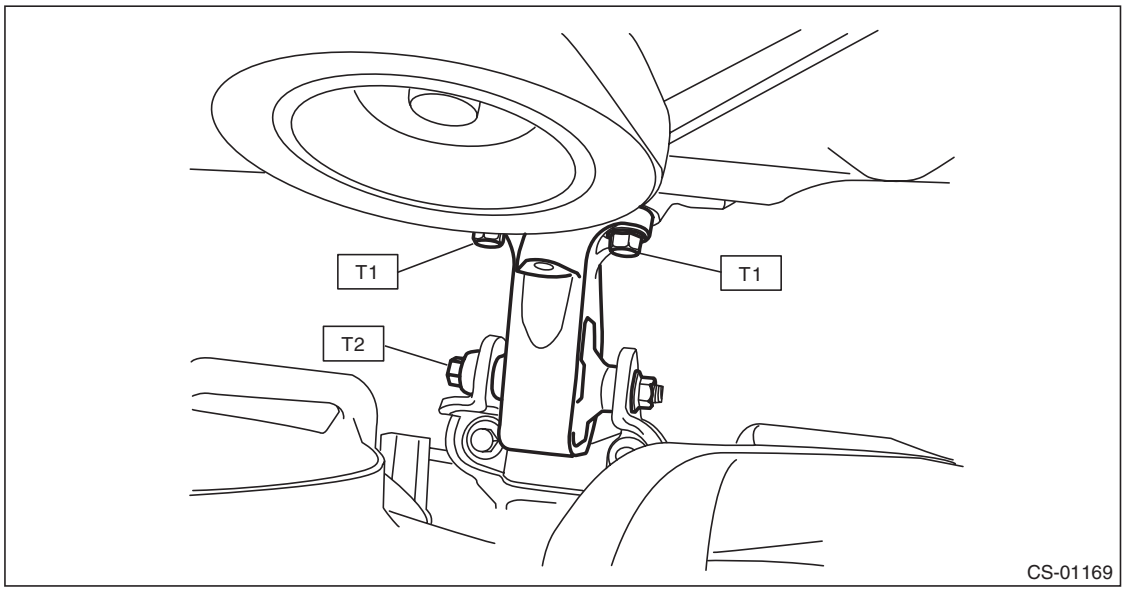

22) Install the stopper rod.

Tightening torque:
36 N·m (3.7 kgf-m, 26.6 ft-lb)

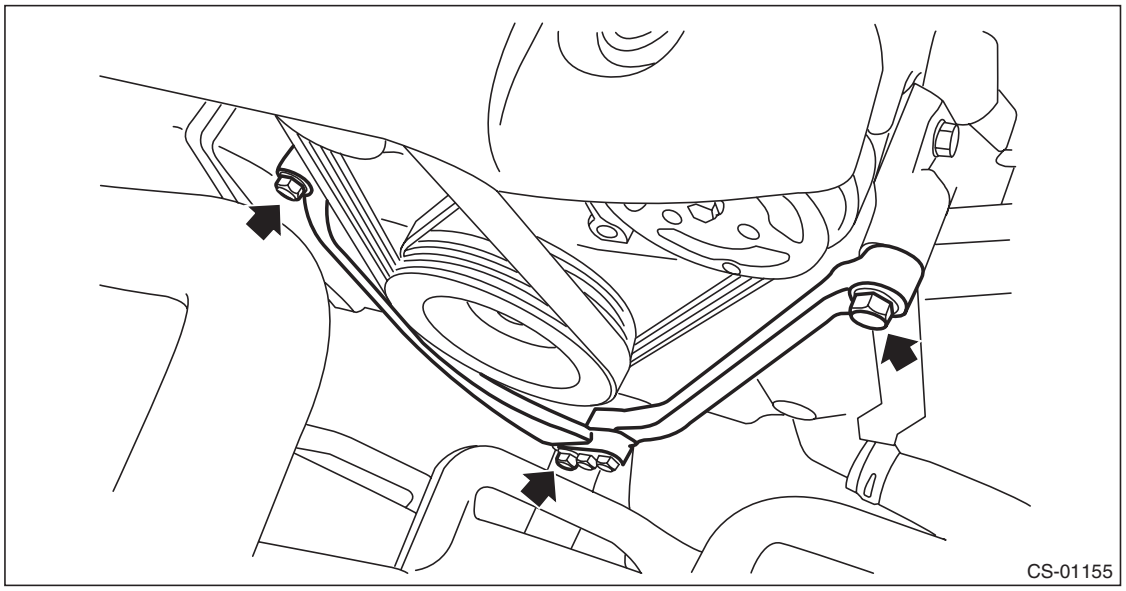

GETtheMANUALS.org

23) Attach the nuts to the left and right transmission mounting brackets.

Tightening torque:
45 N·m (4.6 kgf-m, 33.2 ft-lb)

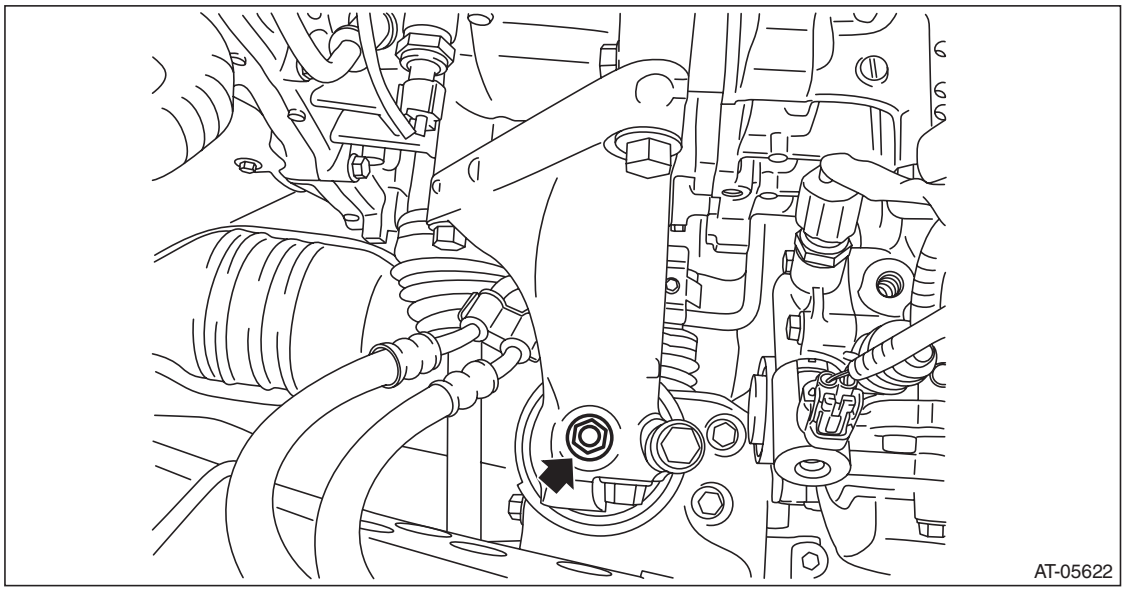

24) Remove the engine hanger rear for turbo model and install the engine hanger rear for non-turbo model. (non-turbo model)

Tightening torque:
T1: 16 N·m (1.6 kgf-m, 11.8 ft-lb)
T2: 19 N·m (1.9 kgf-m, 14.0 ft-lb)

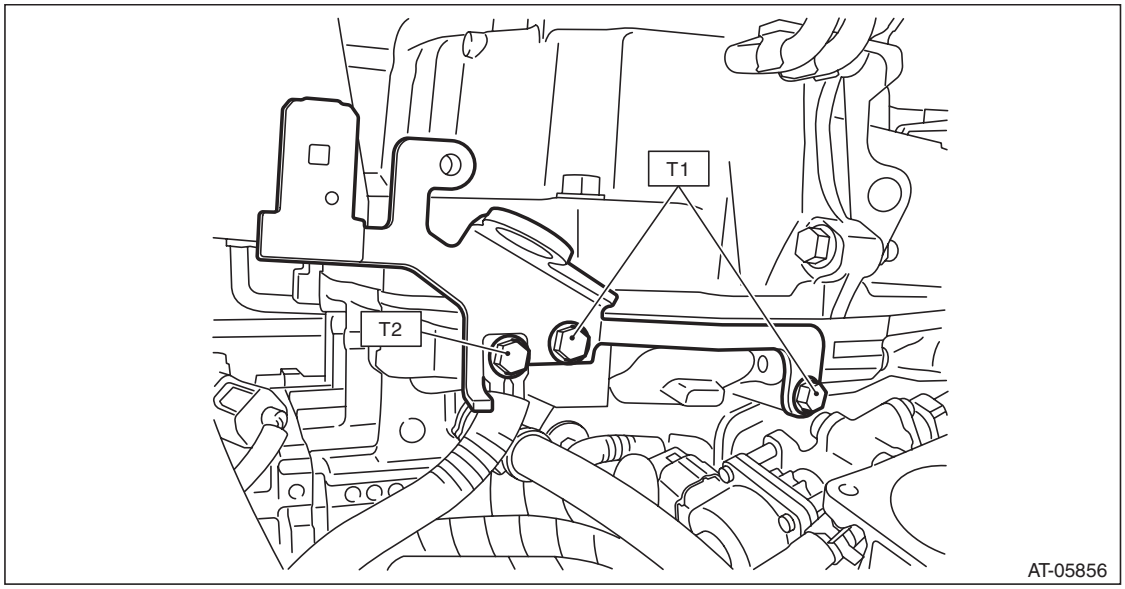

25) Install the throttle body. (non-turbo model) <Ref. to FU(H4SO)-15, INSTALLATION, Throttle Body.>
26) Install the engine harness connectors to the engine hanger rear. (non-turbo model)

GETtheMANUALS.org

27) Connect the engine harness connectors, and install harness bracket to the engine hanger rear. (non-turbo model)

Tightening torque:
7.5 N·m (0.8 kgf-m, 5.5 ft-lb)

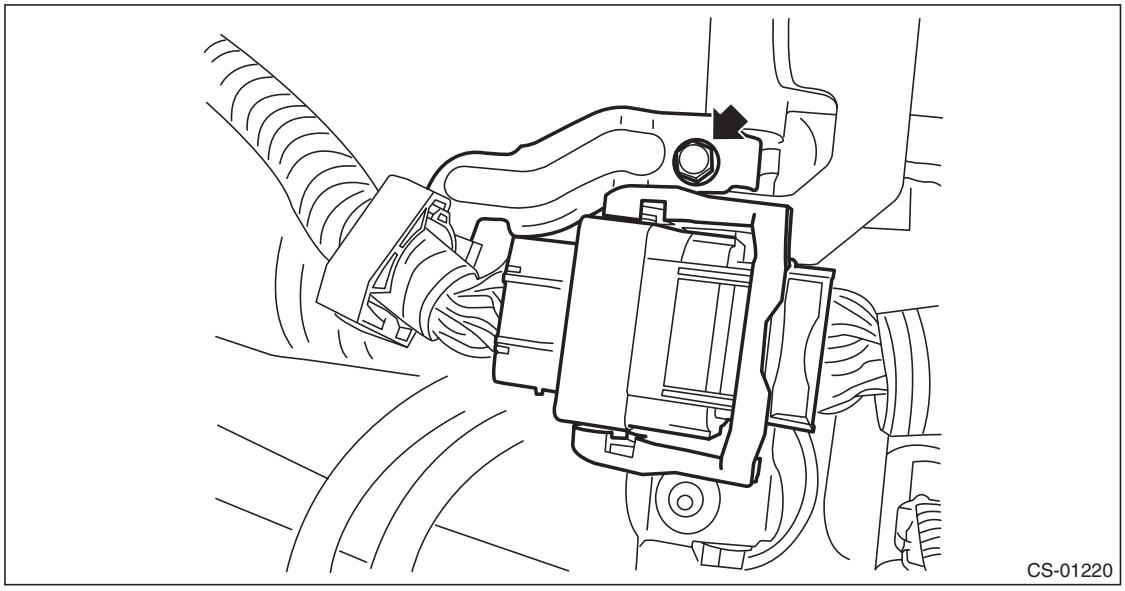

28) Install the air intake boot assembly. (non-turbo model) <Ref. to IN(H4SO)-8, INSTALLATION, Air Intake Boot.>
29) Install the intercooler stay and the intercooler. (turbo model) <Ref. to IN(H4DOTC)-18, INSTALLATION, Intercooler.>
30) Attach the grille bracket.

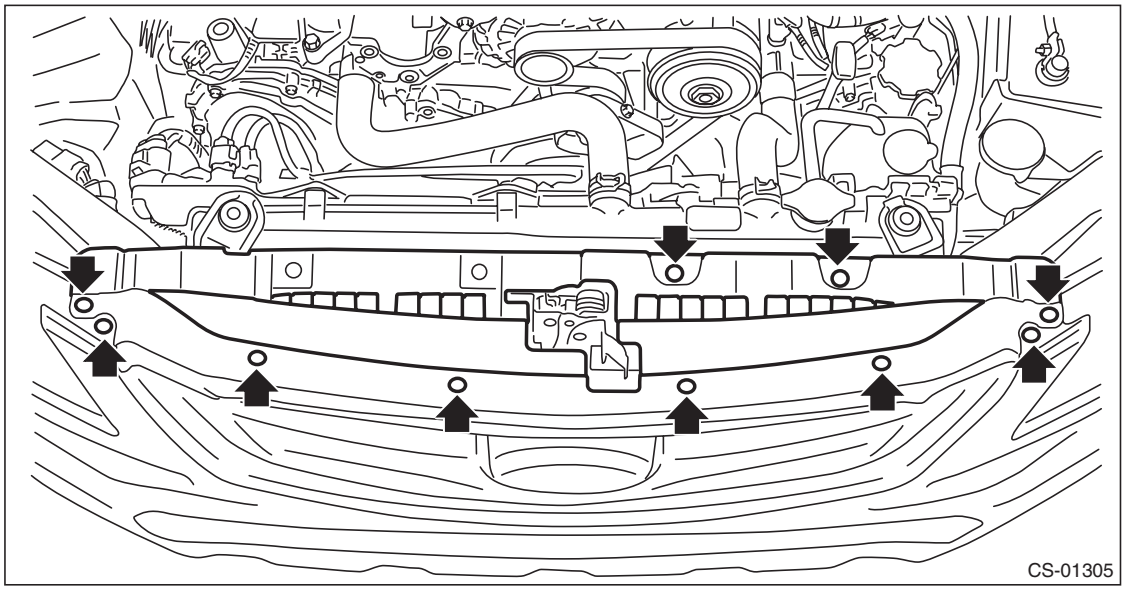

31) Install the air intake duct.
- Non-turbo model

<Ref. to IN(H4SO)-9, INSTALLATION, Air Intake Duct.>
- Turbo model

<Ref. to IN(H4DOTC)-12, INSTALLATION, Air Intake Duct.>
32) Install the collector cover. (turbo model)
33) Connect the battery ground terminal.
34) Make sure the gears can be shifted accurately into each gear.

GETtheMANUALS.org

C: INSPECTION

1) Check that exposed length (a) of MT gear select cable is within specification.

Exposed length (a) of MT gear select cable:
Specification: 11 mm (0.4 in)

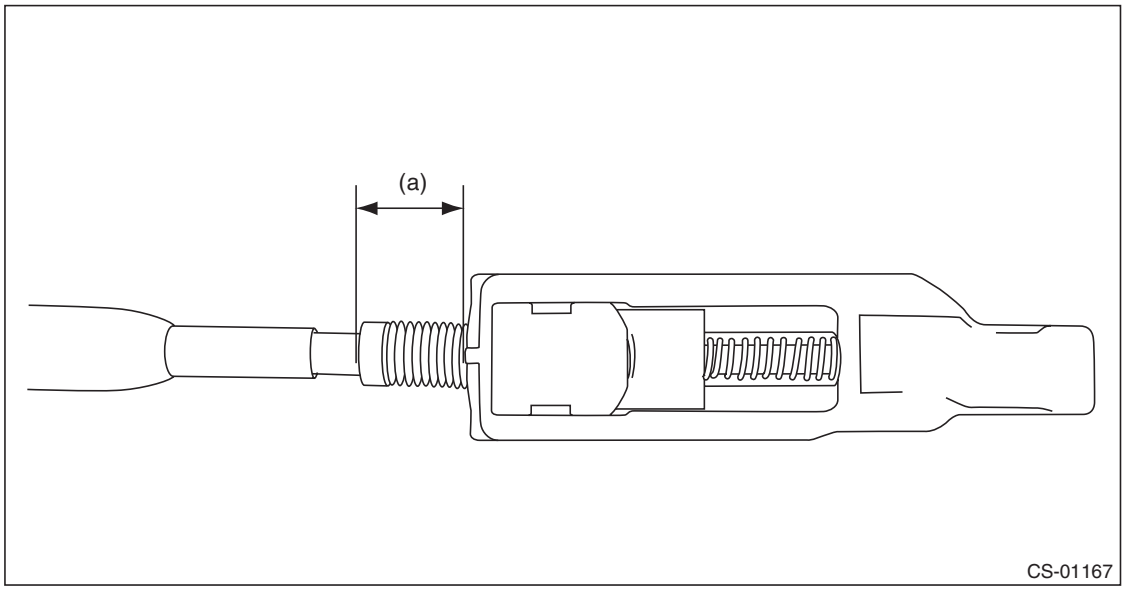

2) If it is not within the specification, perform the adjustment. <Ref. to CS-95, ADJUSTMENT, MT Gear Select Cable.>

D: ADJUSTMENT

NOTE:
Two person are required to perform the MT gear select cable adjustment. (Only the step 7) requires two workers.)
1) Shift the select lever to the 6th.
2) Remove the plate cable assembly.

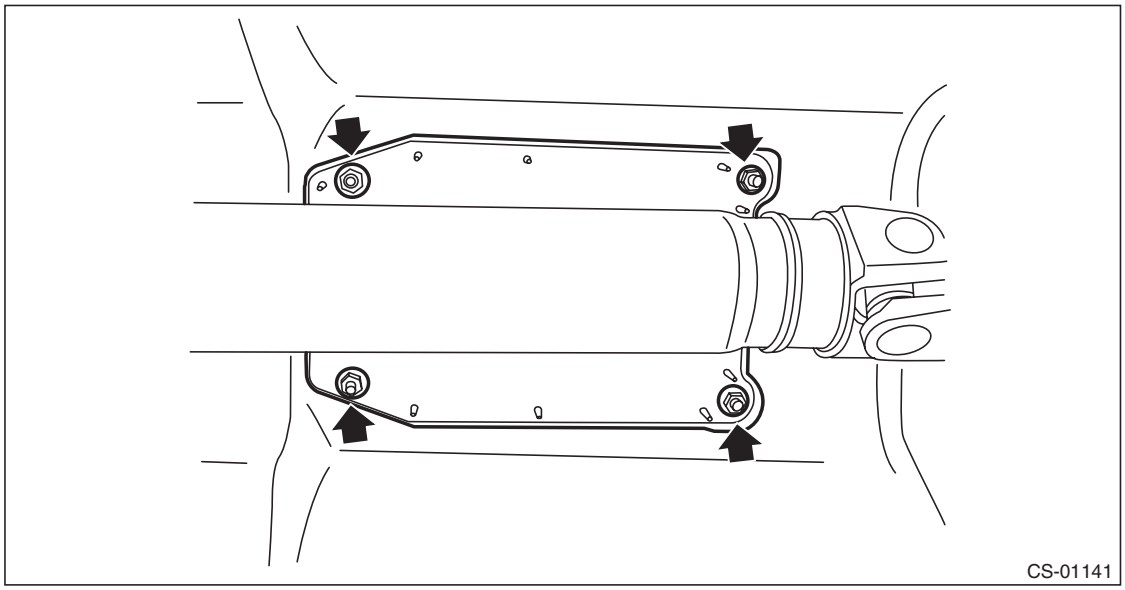

GETtheMANUALS.org

3) Disconnect the MT gear select cable.

NOTE:
Push the MT gear select cable in the direction of arrow, and remove it.

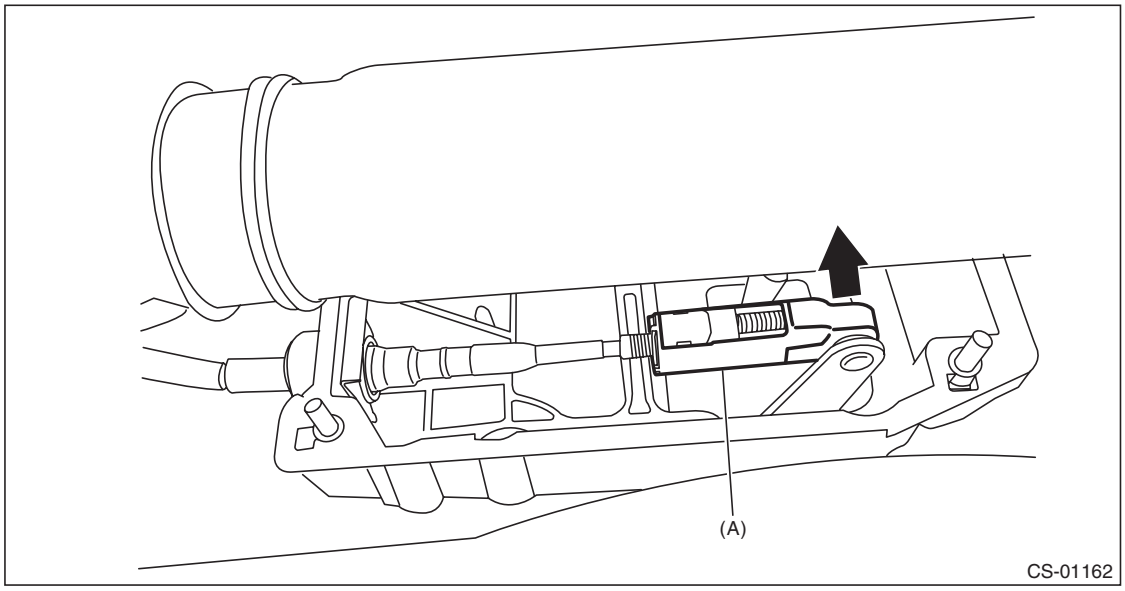

(A) MT gear select cable

4) Measure the exposed length (a) of MT gear select cable.

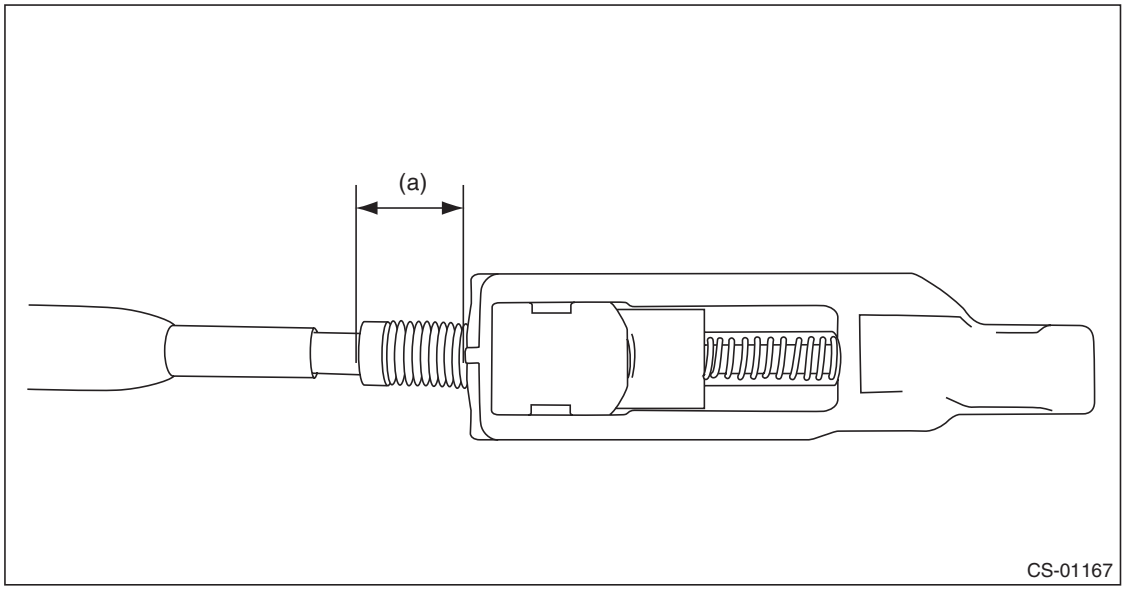

GETtheMANUALS.org

5) With the slider (green) moved in the direction of arrow, release the lock piece (pink) using a flat tip screwdriver or equivalent tool.

CAUTION:
Lock piece is easily damaged for the resin. If the lock piece is damaged, replace the MT gear select cable with a new one.

NOTE:
Rotate the MT gear select cable to 180 degrees, slide the slider in the direction of the arrow and push the claw of lock piece.

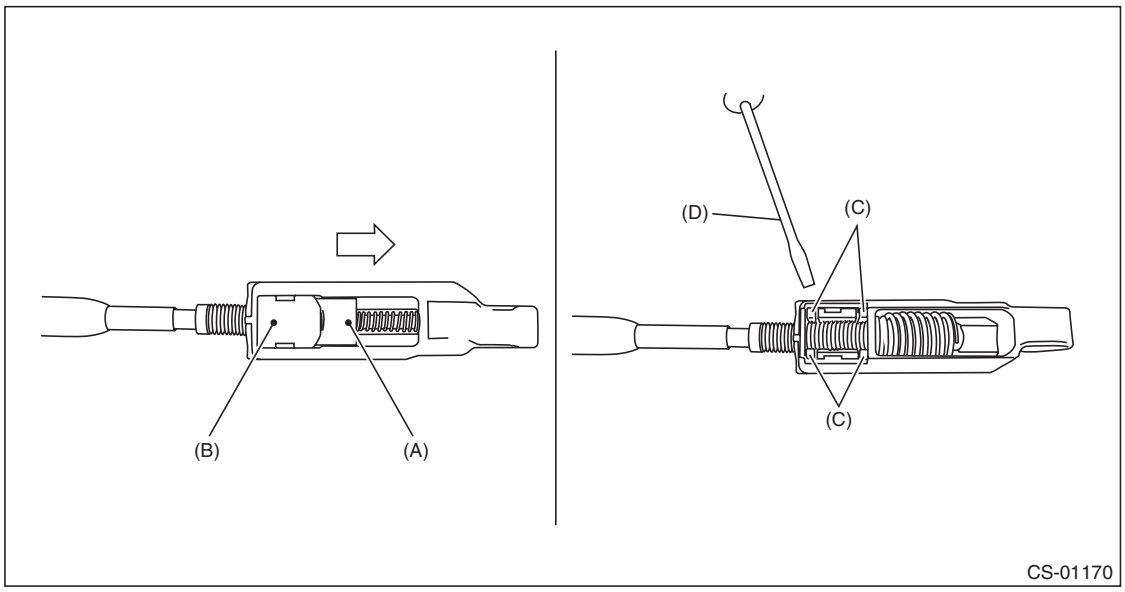

(A) Slider
(B) Lock piece
(C) Claw
(D) Flat tip screwdriver

GETtheMANUALS.org

6) Connect the MT gear select cable to the select lever, with the lock piece released.

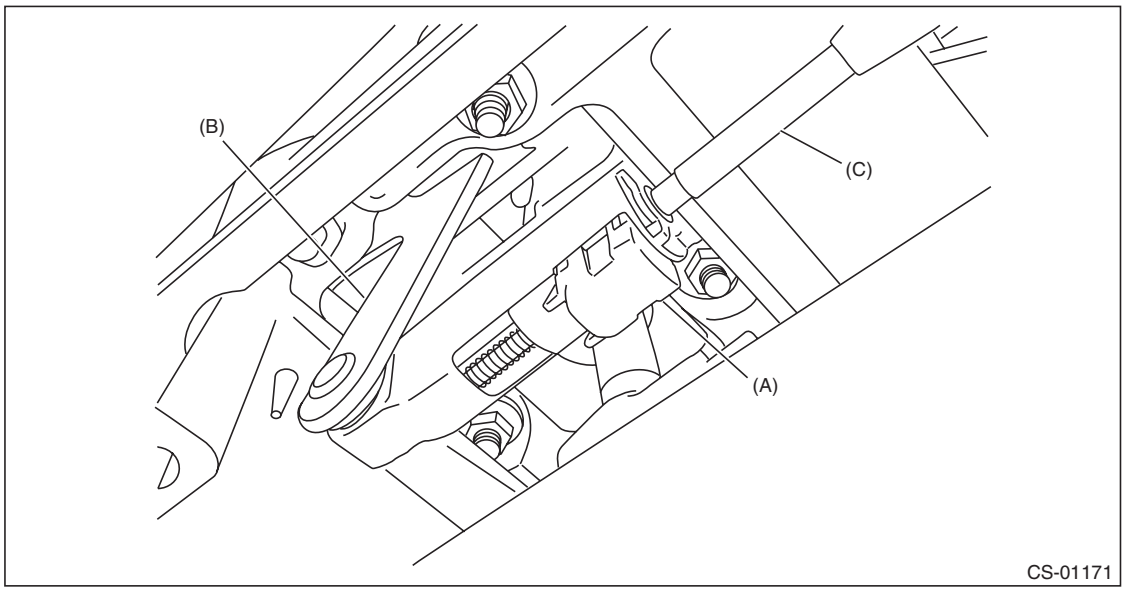

(A) Lock piece
(B) Select lever
(C) MT gear select cable

7) Move the select lever to the Rev side, hold the exposed length (a) of MT gear select cable 11 mm (0.4 in) and then push the lock piece.

NOTE:
While pulling up the gear shift lever assembly slider, operate the lever to the Rev side.

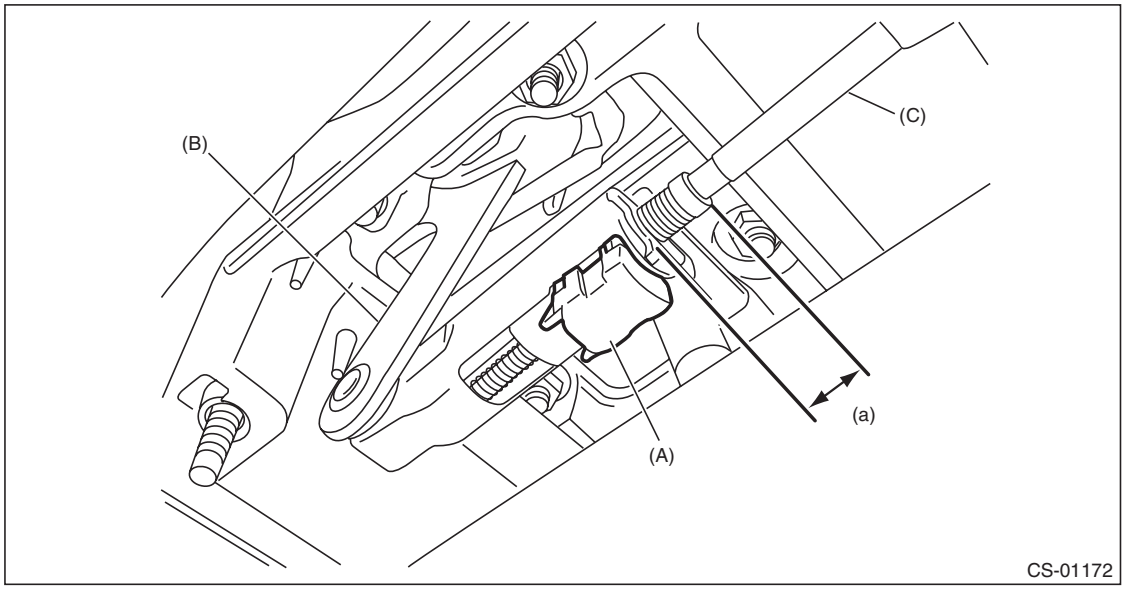

(a) Exposed length 11 mm (0.4 in)
(A) Lock piece
(B) Select lever
(C) MT gear select cable

8) Shift the 5th ←→ 6th and Rev, check whether it is caught.
9) If no fault is found in the shift and select operation, restore the vehicle.

GETtheMANUALS.org

10) If the shift operation is not smooth, readjust the exposed length (a) of the MT gear select cable referring to the figure below.

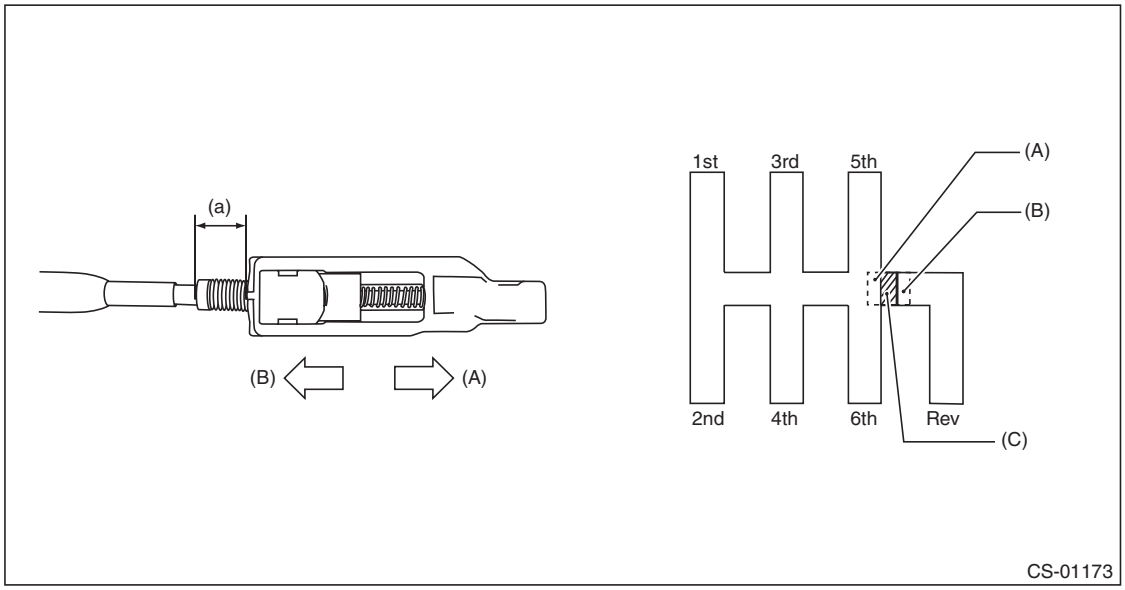

(a) Exposed length of MT gear select cable
(A) Extend direction of exposed length of MT gear select cable
(B) Shorten direction of exposed length of MT gear select cable
(C) Specification of exposed length (a)

- If 5th or 6th gear cannot be selected when cable is pressed to reverse lock bracket:
→ Extend the exposed length (a) of MT gear select cable.
- If select lever does not move along the cranking line when it is operated from 4th to 5th gear:
→ Shorten the exposed length (a) of MT gear select cable.

NOTE:
If it cannot adjust, replace the MT gear select cable.

GETtheMANUALS.org

10. General Diagnostic Table

A: INSPECTION

Symptoms	Possible cause	Corrective action
AT select lever	Starter does not run.	Adjust the select cable and inhibitor switch, or inspect the circuit.
	Back-up light does not illuminate.	Adjust the select cable and inhibitor switch, or inspect the circuit.
	AT shift lock system does not operate normally.	Adjust the select cable and inhibitor switch, or inspect the circuit.
	Manual mode can not be set.	Inspect the mode switch and select lever, or inspect the circuit.
	Up-shift is not engaged at manual mode.	Check the shift-up switch and circuit.
	Down-shift is not engaged at manual mode.	Check the shift-down switch and circuit.
MT gear shift lever (6MT)	Cannot shift into reverse.	Adjust the MT gear select cable.
	Shifted to 6th though it shifted to reverse.	Adjust or replace the MT gear select cable.
	Can shift into reverse when the slider is not pulled up.	Adjust or replace the MT gear select cable.
	Slider cannot be pulled up or sticks in the pulled-up position.	• Check the shift link system of the transmission. • Replace the MT gear select lever.

GETtheMANUALS.org

CONTINUOUSLY VARIABLE TRANSMISSION

CVT

		Page
1.	General Description	3
2.	CVTF	37
3.	Differential Gear Oil	41
4.	Variator Chain Break-in	44
5.	AWD ON/OFF Switching Mode	45
6.	Road Test	46
7.	Stall Test	47
8.	Time Lag Test	49
9.	Secondary Pressure (Line Pressure) Test	50
10.	Transfer Clutch Pressure Test	53
11.	Automatic Transmission Assembly	55
12.	Transmission Mounting System	86
13.	Extension Case Oil Seal	89
14.	Differential Side Retainer Oil Seal	91
15.	Inhibitor Switch	95
16.	Secondary Speed Sensor	102
17.	Primary Speed Sensor	105
18.	Front Wheel Speed Sensor	107
19.	Secondary Pressure Sensor	109
20.	Control Valve Body	111
21.	Transmission Harness	121
22.	Transmission Control Module (TCM)	124
23.	CVTF Cooler Pipe and Hose	126
24.	Air Breather Hose	132
25.	Drive Plate	133
26.	Preparation for Overhaul	135
27.	Torque Converter Assembly	136
28.	Extension Case	138
29.	Rear Drive Shaft	141
30.	Transfer Clutch	146
31.	Transfer Reduction Driven Gear	158
32.	Parking Pawl	163
33.	Intermediate Case	165
34.	CVTF Filter	170
35.	Reverse Brake Assembly	171
36.	Forward Clutch Assembly	180
37.	Reduction Driven Gear	200
38.	Transmission Control Device	207
39.	Transmission Case	211
40.	Primary Pulley and Secondary Pulley	226
41.	Variator Chain	241
42.	Drive Pinion Shaft Assembly	242
43.	Front Differential Assembly	263

GETtheMANUALS.org

44. Oil Pump 281
45. Oil Pump Chain 282
46. Converter Case Cover 289
47. Front Reduction Drive Gear 297
48. Front Reduction Driven Gear 304
49. Converter Case 314
50. Diagnostics with Phenomenon 317

GETtheMANUALS.org

1. General Description

A: SPECIFICATION

1. TORQUE CONVERTER

Model	2.5 L SOHC non-turbo
Type	Symmetric, 3-element, single stage, 2-phase torque converter
Stall torque ratio	2.07
Nominal mm (in)	236 (9.29)
Stall speed (at sea level)	2,400 — 3,100
One-way clutch	Sprague type one-way clutch

2. OIL PUMP

Type		Internal gear pump
Driving method		Driven by chain
Number of teeth	Inner rotor	8
	Outer rotor	9

3. TRANSMISSION CONTROL ELEMENT

Type	Forward continuously variable speed change, 1 reverse, planetary gear
Multi-plate clutch	1 sets
Multi-plate brake	1 sets

4. TRANSMISSION GEAR RATIO

Forward	3.525 — 0.558
Rev	2.358

5. PLATE

Number of input clutch drive plates	5
Number of forward clutch drive plates	6
Number of reverse brake drive plates	5

GETtheMANUALS.org

6. SELECTOR POSITION

P (Park)	Transmission neutral, output shaft locked, engine start enabled
R (Reverse)	Rev
N (Neutral)	Transmission neutral, engine start enabled
D (Drive)	Forward continuously variable speed change
M (manual mode) (paddle shift + side)	Manual gear change 1st → 2nd → 3rd → 4th → 5th → 6th
M (manual mode) (paddle shift — side)	Manual gear change 1st ← 2nd ← 3rd ← 4th ← 5th ← 6th

7. HYDRAULIC CONTROL AND LUBRICATION

Type	Electronic hydraulic control (speed changed by signals of vehicle speed and accelerator opening angle)
Fluid	SUBARU CVT OIL FOR LINEARTRONIC (specified fluid) or equivalent **CAUTION:** **Always use specified CVTF or equivalent. Using other fluid except for specified or equivalent will cause malfunction.**
Fluid capacity ℓ (US qt, Imp qt)	12.0 — 12.5 (12.7 — 13.2, 10.6 — 11.0)
Lubrication system	Forced feed lubrication with oil pump

8. COOLING AND HARNESS

Cooling system	Liquid-cooler incorporated in radiator
Inhibitor switch harness	12 poles
Transmission harness	20 poles

9. TRANSFER

Transfer type	Multi-plate transfer (MP-T)
Number of transfer clutch drives & driven plates	5
Control method	Electronic hydraulic type
Reduction gear ratio	1.000 (37/37)

10. REDUCTION GEAR RATIO

Model	Except for OUTBACK	OUTBACK
Front final reduction gear ratio	3.700	3.900

GETtheMANUALS.org

11.RECOMMENDED GEAR OIL

Lubrication oil	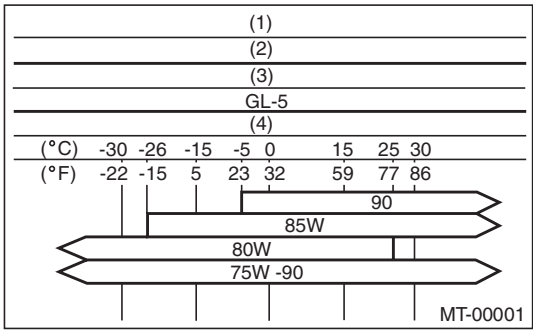 (1) Item (2) Front differential gear oil (3) API standard (4) SAE viscosity No. and applicable temperature
Front differential oil capacity ℓ (US qt, Imp qt)	1.3 — 1.5 (1.4 — 1.6, 1.1 — 1.3)

GETtheMANUALS.org

B: COMPONENT

1. TORQUE CONVERTER ASSEMBLY AND CONVERTER CASE

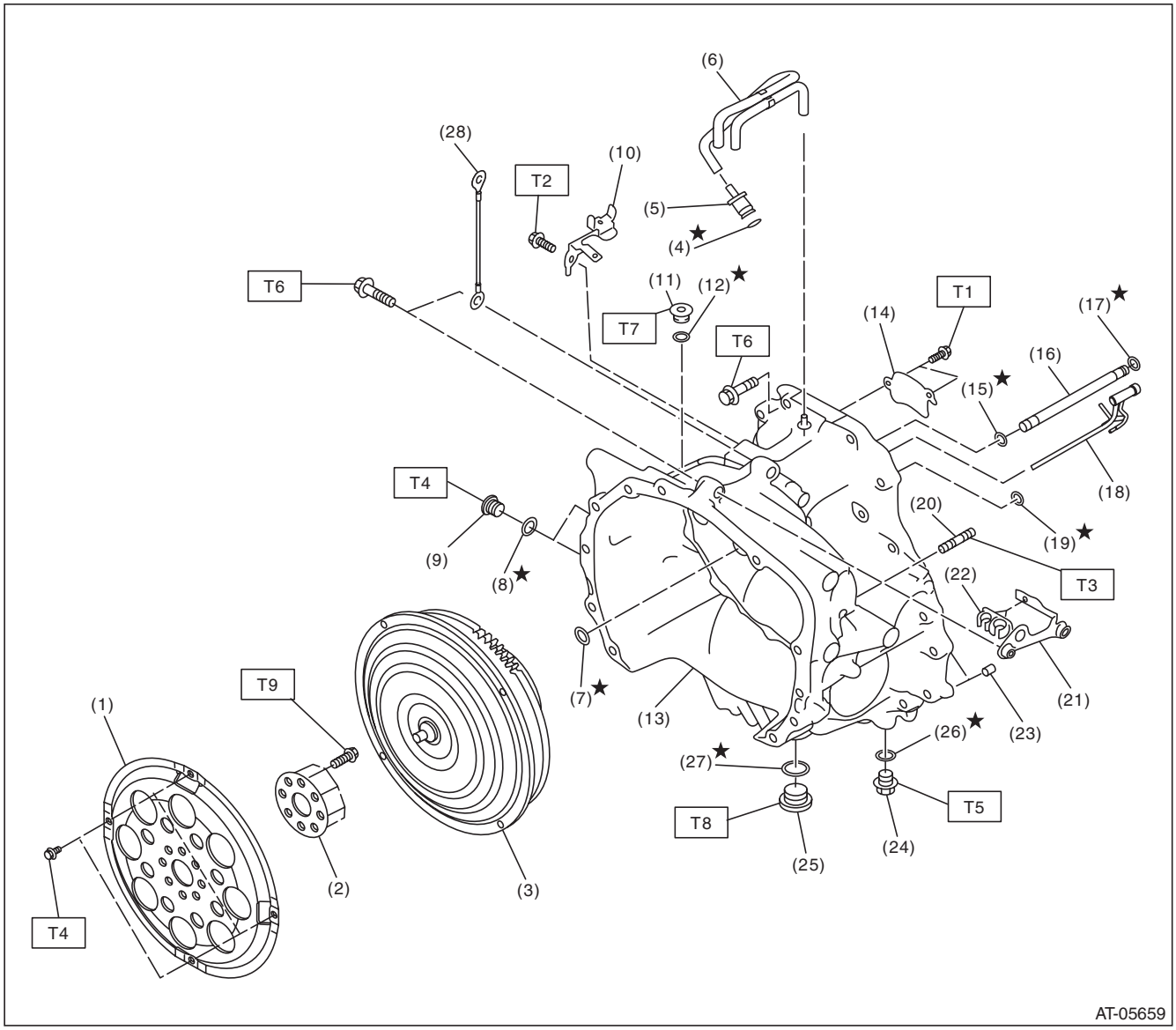

GETtheMANUALS.org

(1) Drive plate
(2) Reinforcement drive plate
(3) Torque converter ASSY
(4) O-ring
(5) Oil charge pipe cap
(6) Air breather hose ASSY
(7) O-ring
(8) O-ring
(9) Plug
(10) Transmission harness stay
(11) Plug
(12) O-ring
(13) Converter case
(14) Oil stopper plate
(15) O-ring
(16) Lubrication pipe
(17) O-ring
(18) Lubrication pipe
(19) O-ring
(20) Stud bolt
(21) Transmission hanger
(22) Clip
(23) Straight pin
(24) Overflow drain plug
(25) Front differential gear oil drain plug
(26) Gasket
(27) Gasket
(28) Transmission radio ground cord

Tightening torque:N·m (kgf-m, ft-lb)	
T1:	***9 (0.9, 6.6)***
T2:	***16 (1.6, 11.8)***
T3:	***18 (1.8, 13.3)***
T4:	***25 (2.5, 18.4)***
T5:	***35 (3.6, 25.8)***
T6:	***41 (4.2, 30.2)***
T7:	***50 (5.1, 36.9)***
T8:	***70 (7.1, 51.6)***
T9:	***<Ref. to CVT-133, INSTALLATION, Drive Plate.>***

GETtheMANUALS.org

2. OIL PUMP ASSY

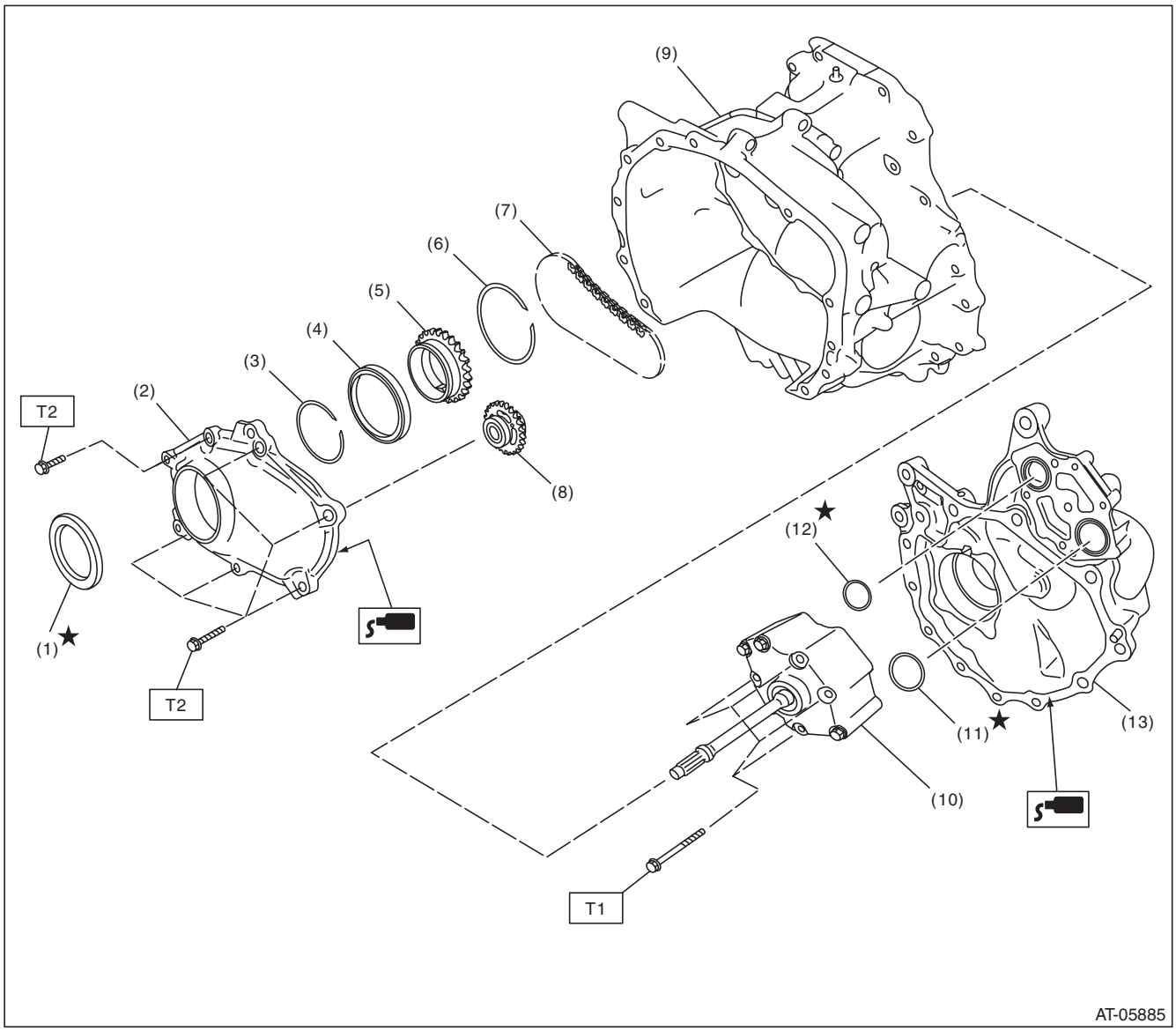

(1)	Oil seal	(7)	Oil pump chain	(13)	Drive pinion retainer
(2)	Oil pump chain cover	(8)	Driven sprocket		
(3)	Snap ring	(9)	Converter case		
(4)	Ball bearing	(10)	Oil pump ASSY		
(5)	Drive sprocket	(11)	O-ring (large)		
(6)	Snap ring	(12)	O-ring (small)		

Tightening torque:N·m (kgf-m, ft-lb)
T1: 8.5 (0.9, 6.3)
T2: 24 (2.4, 17.7)

GETtheMANUALS.org

3. TRANSMISSION CASE

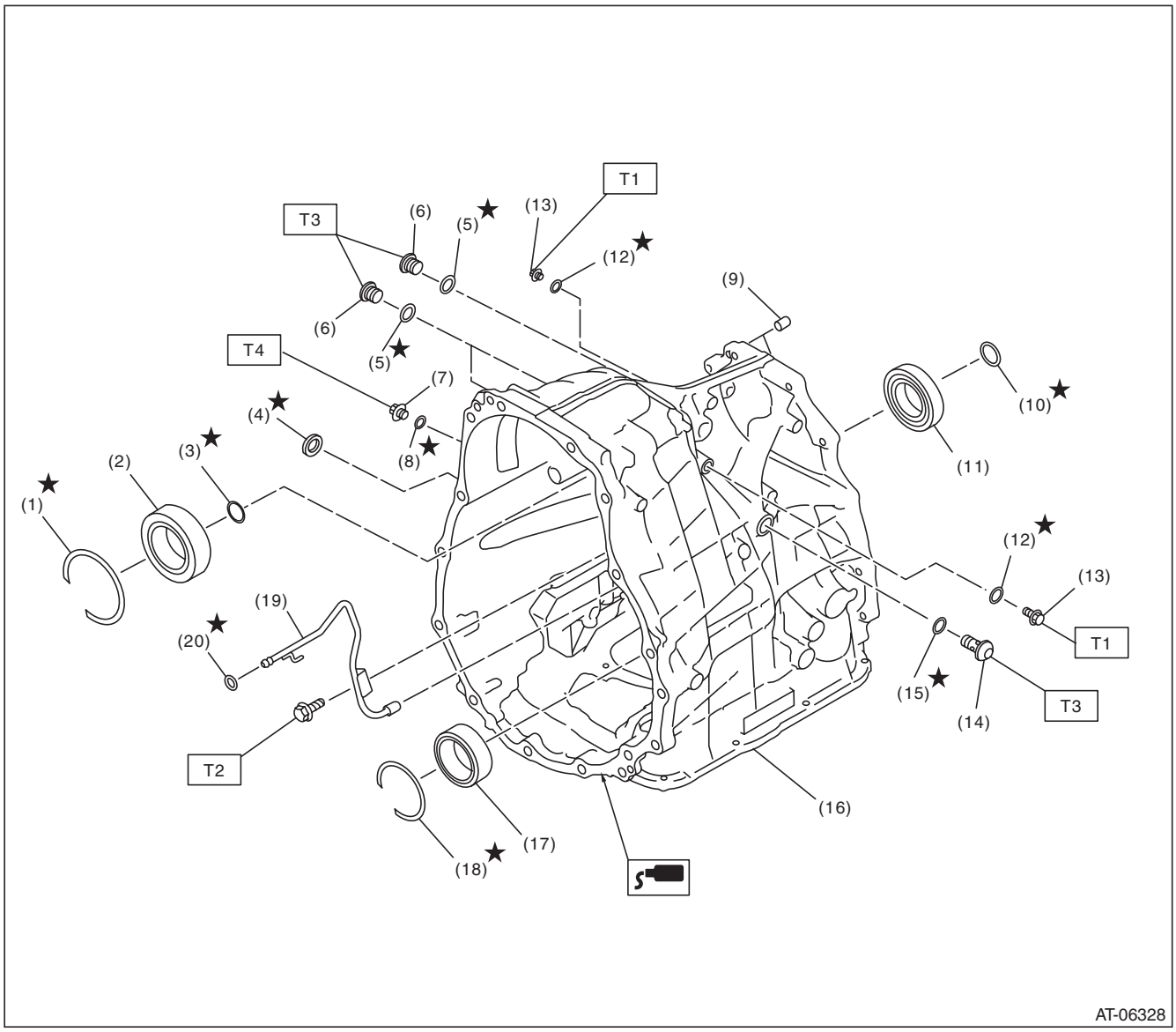

(1)	Snap ring	(10)	Seal ring	(19)	Lubrication pipe
(2)	Roller bearing	(11)	Ball bearing	(20)	O-ring
(3)	Seal ring	(12)	O-ring		
(4)	Oil seal	(13)	Plug		
(5)	O-ring	(14)	Plug		
(6)	Plug	(15)	O-ring		
(7)	Plug	(16)	Transmission case		
(8)	Gasket	(17)	Roller bearing		
(9)	Straight pin	(18)	Snap ring		

Tightening torque:N·m (kgf-m, ft-lb)

T1: 13 (1.3, 9.6)
T2: 16 (1.6, 11.8)
T3: 25 (2.5, 18.4)
T4: 35 (3.6, 25.8)

GETtheMANUALS.org

4. CONTROL VALVE BODY

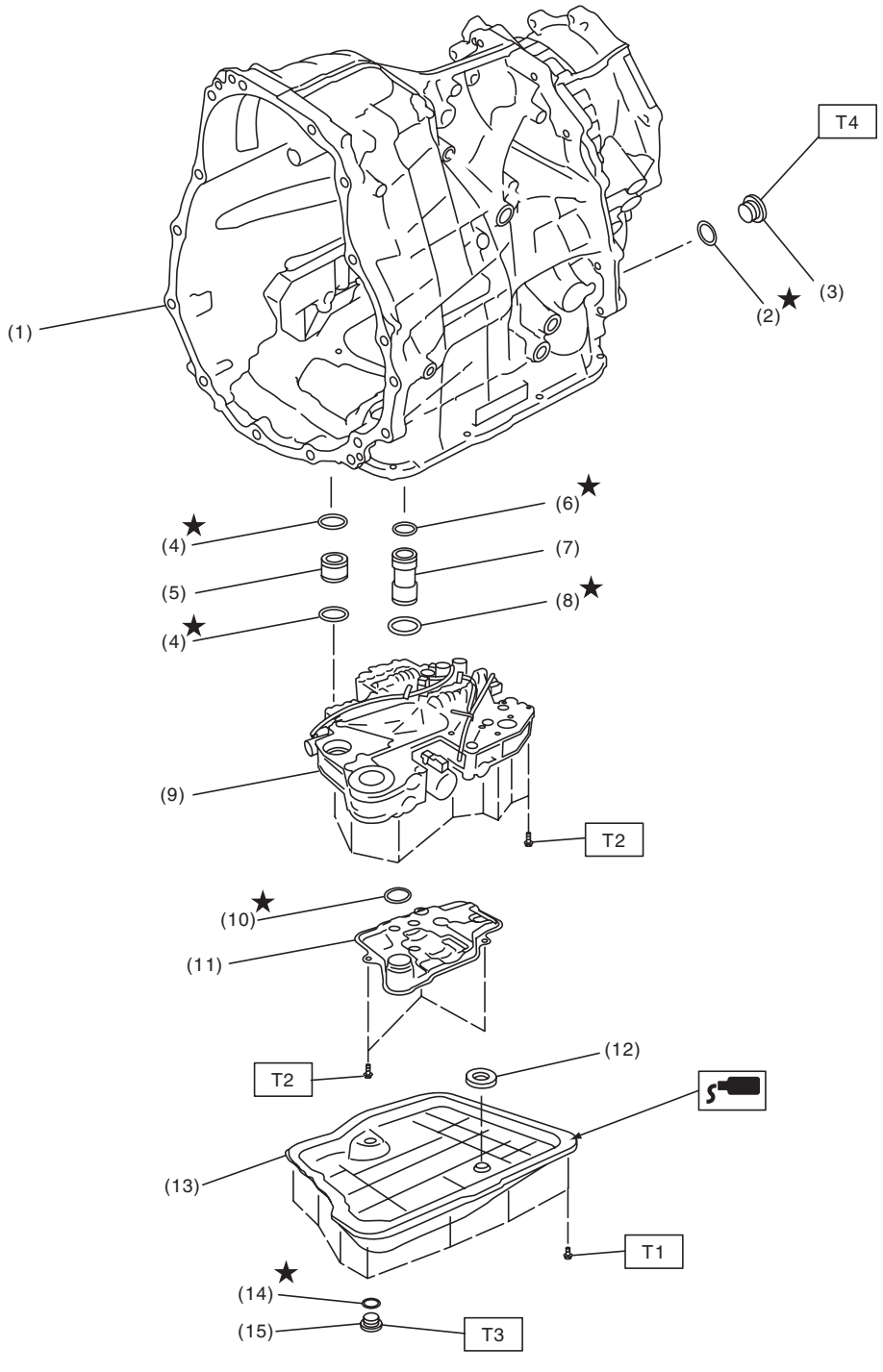

(1)	Transmission case	(8)	O-ring (large)	(15)	CVTF drain plug
(2)	Gasket	(9)	Control valve body		
(3)	Filler plug	(10)	O-ring	***Tightening torque:N·m (kgf-m, ft-lb)***	
(4)	O-ring	(11)	Oil strainer	***T1:***	***5 (0.5, 3.7)***
(5)	Pressure pipe	(12)	Magnet	***T2:***	***9 (0.9, 6.6)***
(6)	O-ring (small)	(13)	Oil pan	***T3:***	***20 (2.0, 14.8)***
(7)	CVTF pipe	(14)	Gasket	***T4:***	***50 (5.1, 36.9)***

GETtheMANUALS.org

5. REVERSE BRAKE ASSEMBLY AND INTERMEDIATE CASE

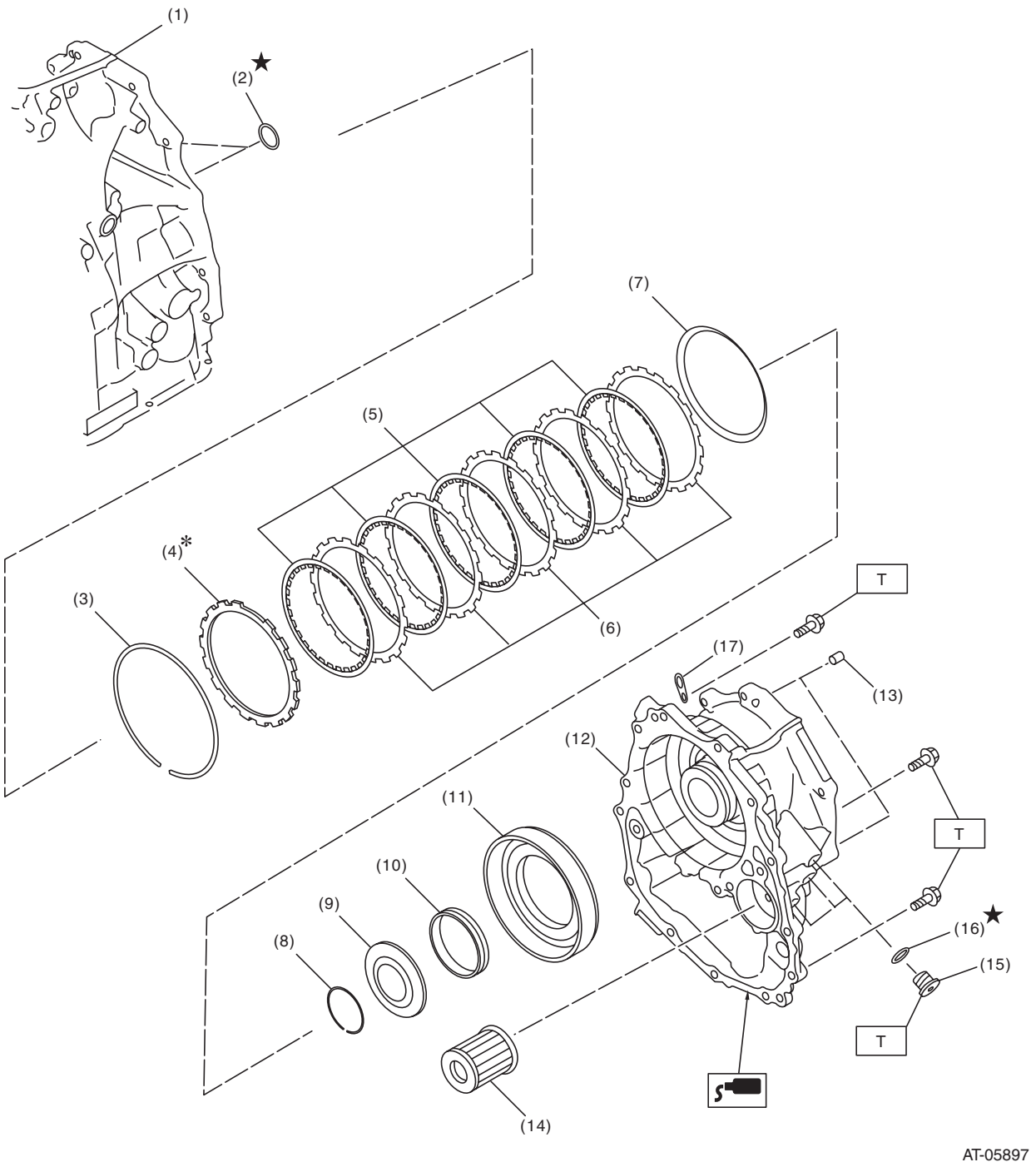

(1)	Transmission case	(8)	Snap ring	(15)	Plug
(2)	O-ring	(9)	Spring retainer	(16)	O-ring
(3)	Snap ring	(10)	Return spring	(17)	Transmission hanger
(4)	Retaining plate	(11)	Reverse brake piston		
(5)	Drive plate	(12)	Intermediate case		
(6)	Driven plate	(13)	Straight pin		
(7)	Dish plate	(14)	CVTF filter		

Tightening torque:N·m (kgf-m, ft-lb)
T: 25 (2.5, 18.4)

GETtheMANUALS.org

6. FORWARD CLUTCH ASSEMBLY AND REDUCTION DRIVEN GEAR

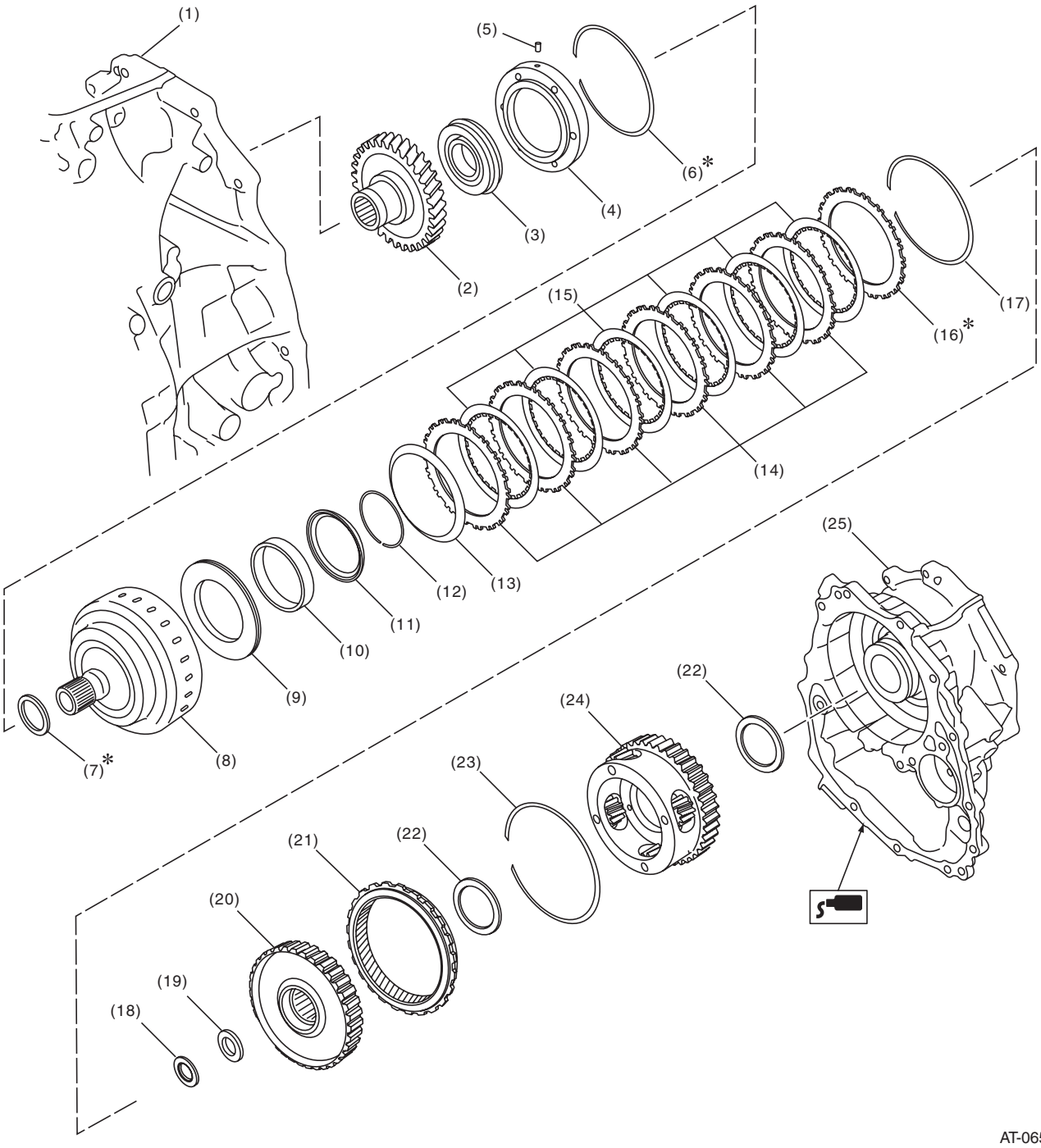

GETtheMANUALS.org

(1) Transmission case
(2) Reduction driven gear
(3) Ball bearing
(4) Reduction driven gear retainer
(5) Straight pin
(6) Snap ring
(7) Washer
(8) Forward clutch drum
(9) Forward clutch piston
(10) Return spring
(11) Forward clutch piston retainer
(12) Snap ring
(13) Dish plate
(14) Driven plate
(15) Drive plate
(16) Retaining plate
(17) Snap ring
(18) Thrust needle bearing
(19) Washer
(20) Sun gear ASSY
(21) Internal gear
(22) Thrust needle bearing
(23) Snap ring
(24) Planetary carrier ASSY
(25) Intermediate case

GETtheMANUALS.org

7. FRONT REDUCTION DRIVE GEAR AND FRONT REDUCTION DRIVEN GEAR

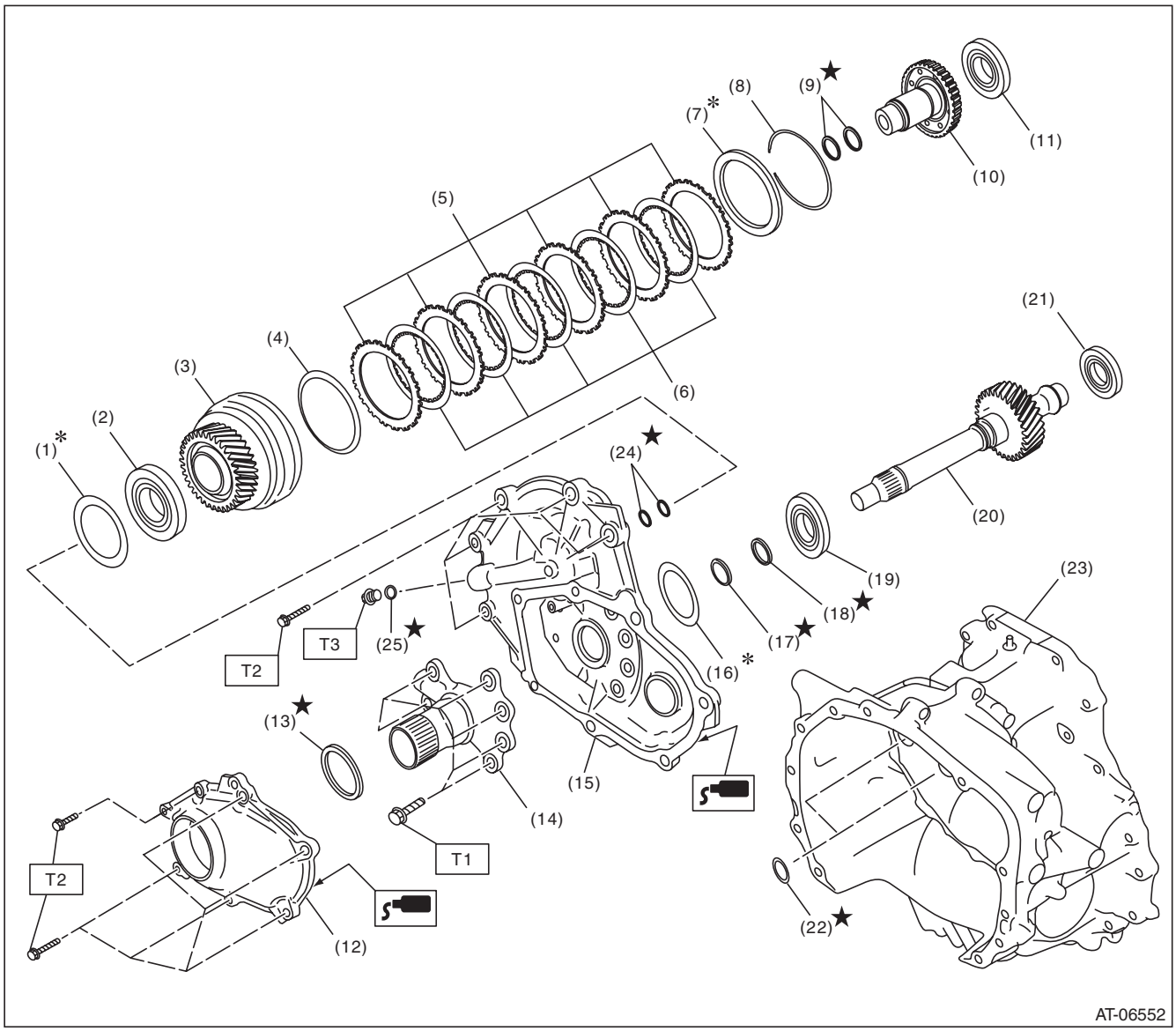

AT-06552

(1)	Shim	(11)	Ball bearing	(21)	Ball bearing
(2)	Ball bearing	(12)	Oil pump chain cover	(22)	O-ring
(3)	Front reduction driven gear	(13)	Seal ring	(23)	Converter case
(4)	Dish plate	(14)	Center support COMPL	(24)	Seal ring
(5)	Driven plate	(15)	Converter case cover	(25)	O-ring
(6)	Drive plate	(16)	Shim		
(7)	Retaining plate	(17)	O-ring		
(8)	Snap ring	(18)	Seal ring		
(9)	Seal ring	(19)	Ball bearing		
(10)	Front reduction driven shaft	(20)	Front reduction drive gear		

Tightening torque:N·m (kgf-m, ft-lb)

T1: 21.5 (2.2, 15.9)
T2: 24 (2.4, 17.7)
T3: 25 (2.5, 18.4)

GETtheMANUALS.org

8. TRANSMISSION CONTROL DEVICE

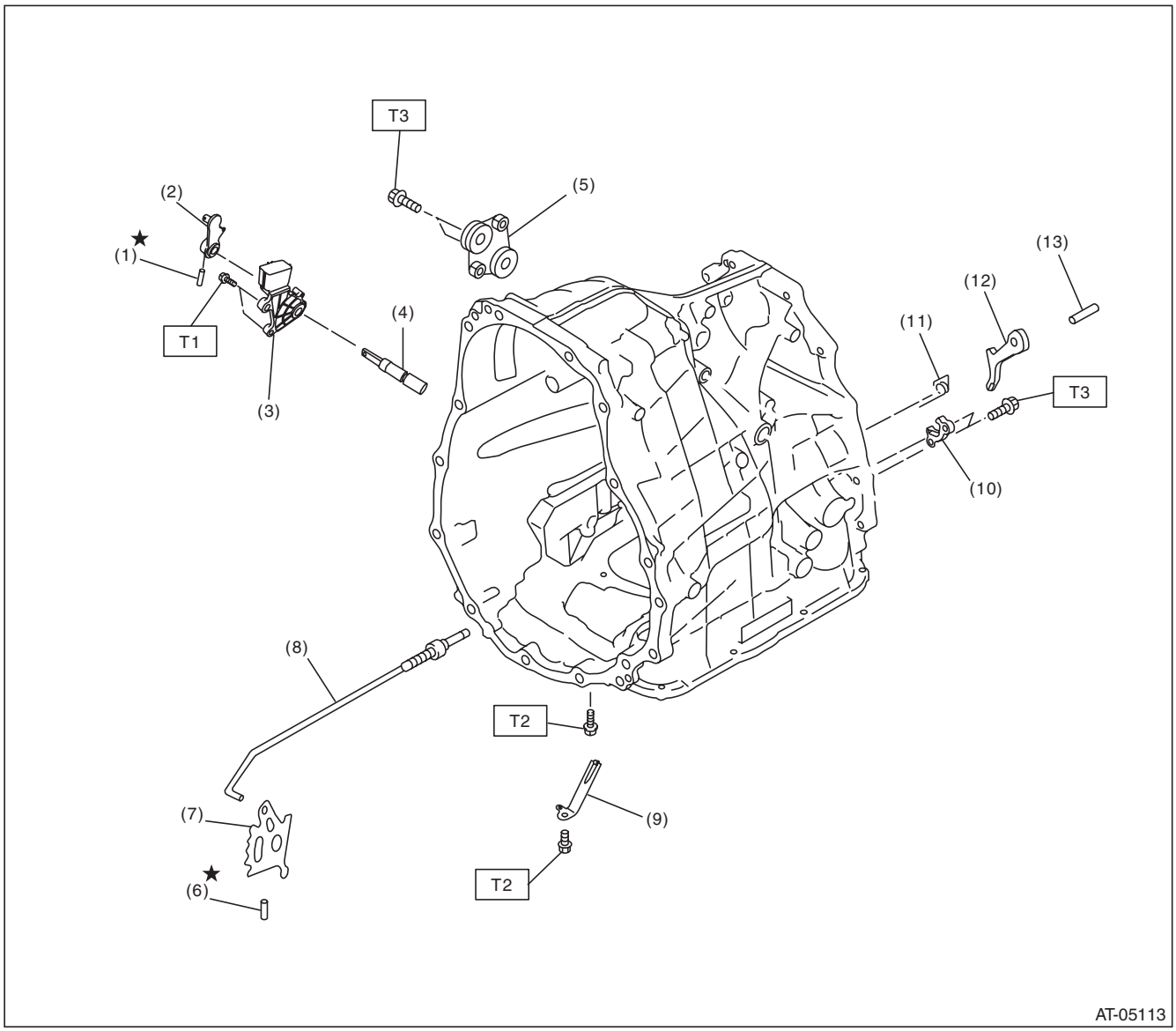

(1)	Spring pin	(8)	Parking rod	***Tightening torque:N·m (kgf-m, ft-lb)***
(2)	Shifter arm	(9)	Detent spring	***T1: 5 (0.5, 3.7)***
(3)	Inhibitor switch	(10)	Parking support	***T2: 7 (0.7, 5.2)***
(4)	Shifter arm shaft	(11)	Return spring	***T3: 25 (2.5, 18.4)***
(5)	Plate ASSY	(12)	Parking pawl	
(6)	Spring pin	(13)	Shaft	
(7)	Manual plate			

GETtheMANUALS.org

9. PRIMARY PULLEY, SECONDARY PULLEY AND VARIATOR CHAIN

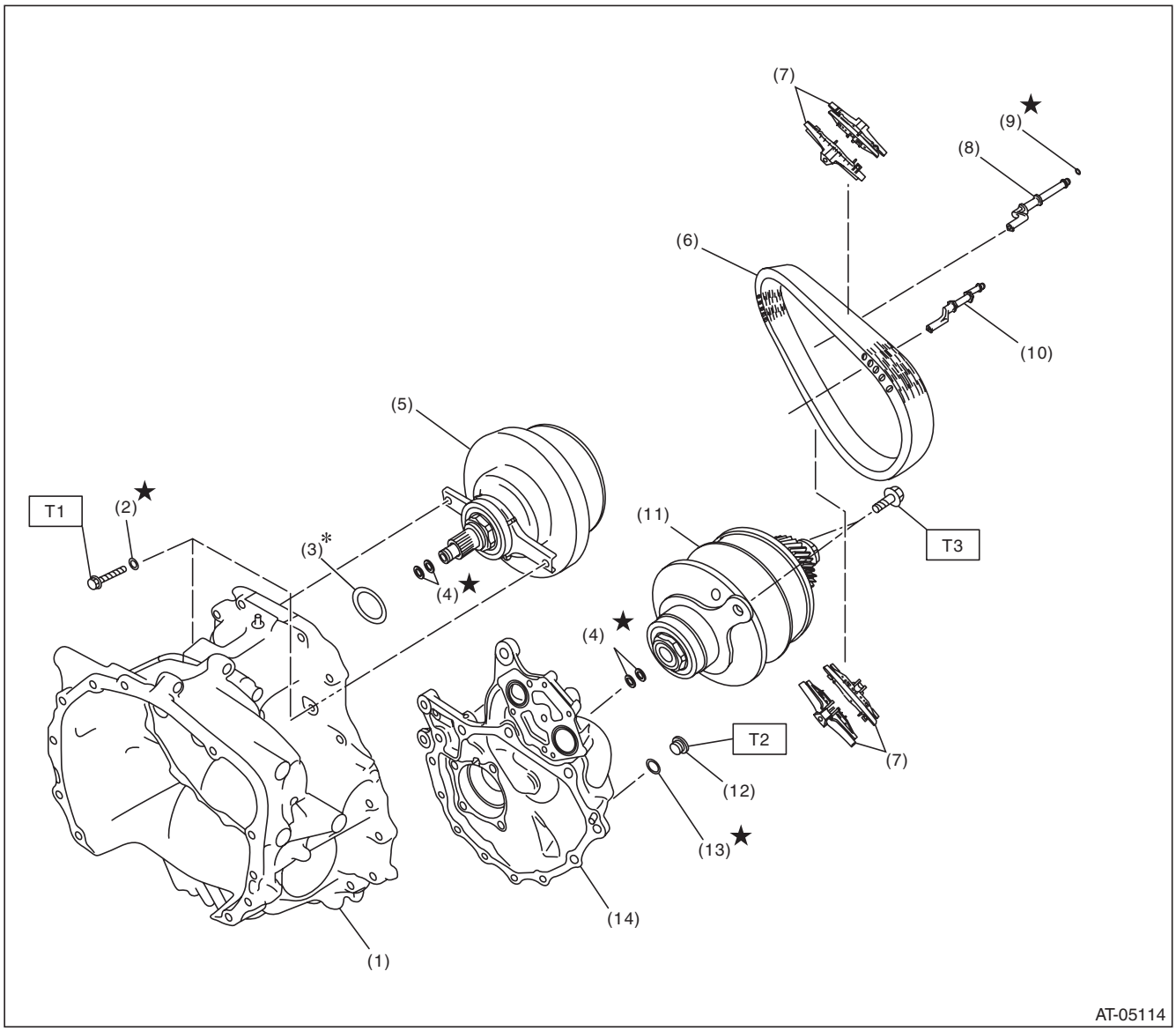

(1)	Converter case	(8)	Lubrication pipe
(2)	Seal washer	(9)	O-ring
(3)	Shim	(10)	Support rod
(4)	Seal ring	(11)	Secondary pulley ASSY
(5)	Primary pulley ASSY	(12)	Plug
(6)	Variator chain	(13)	O-ring
(7)	Chain guide	(14)	Drive pinion retainer

Tightening torque:N·m (kgf-m, ft-lb)

T1: 21 (2.1, 15.5)
T2: 25 (2.5, 18.4)
T3: 33 (3.4, 24.3)

GETtheMANUALS.org

10.FRONT DIFFERENTIAL GEAR

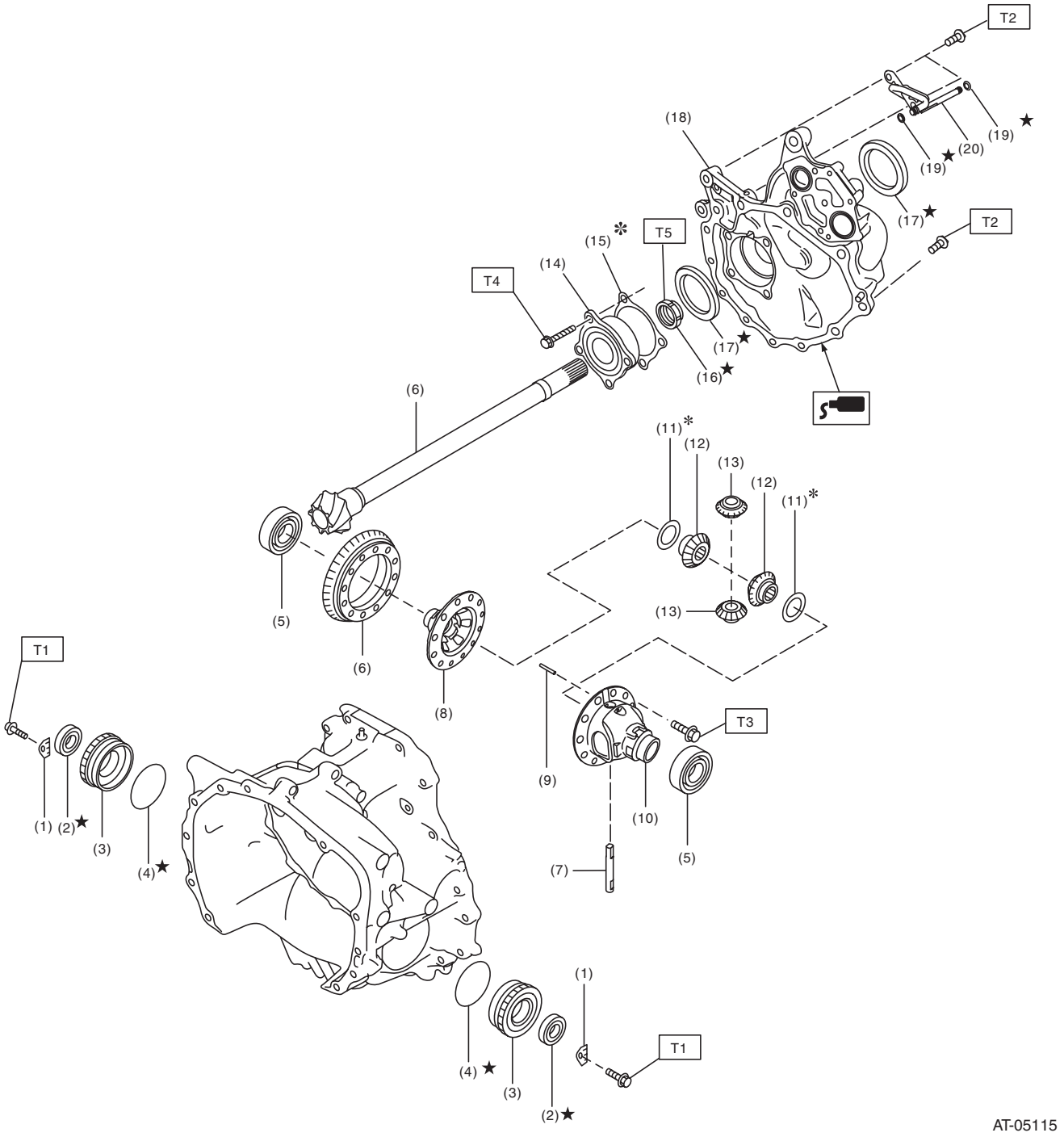

GETtheMANUALS.org

(1) Lock plate
(2) Oil seal
(3) Differential side retainer
(4) O-ring
(5) Taper roller bearing
(6) Drive pinion gear set
(7) Pinion shaft
(8) Differential case RH
(9) Straight pin
(10) Differential case LH
(11) Washer
(12) Differential bevel gear
(13) Differential bevel pinion
(14) Taper roller bearing
(15) Shim
(16) Lock nut
(17) Oil seal
(18) Drive pinion retainer
(19) O-ring
(20) Lubrication pipe

Tightening torque:N·m (kgf-m, ft-lb)	
T1:	***25 (2.5, 18.4)***
T2:	***43 (4.4, 31.7)***
T3:	***<Ref. to CVT-271, DIFFERENTIAL CASE ASSY, ASSEMBLY, Front Differential Assembly.>***
T4:	***70 (7.1, 51.6)***
T5:	***130 (13.3, 95.9)***

GETtheMANUALS.org

11.TRANSFER AND EXTENSION CASE

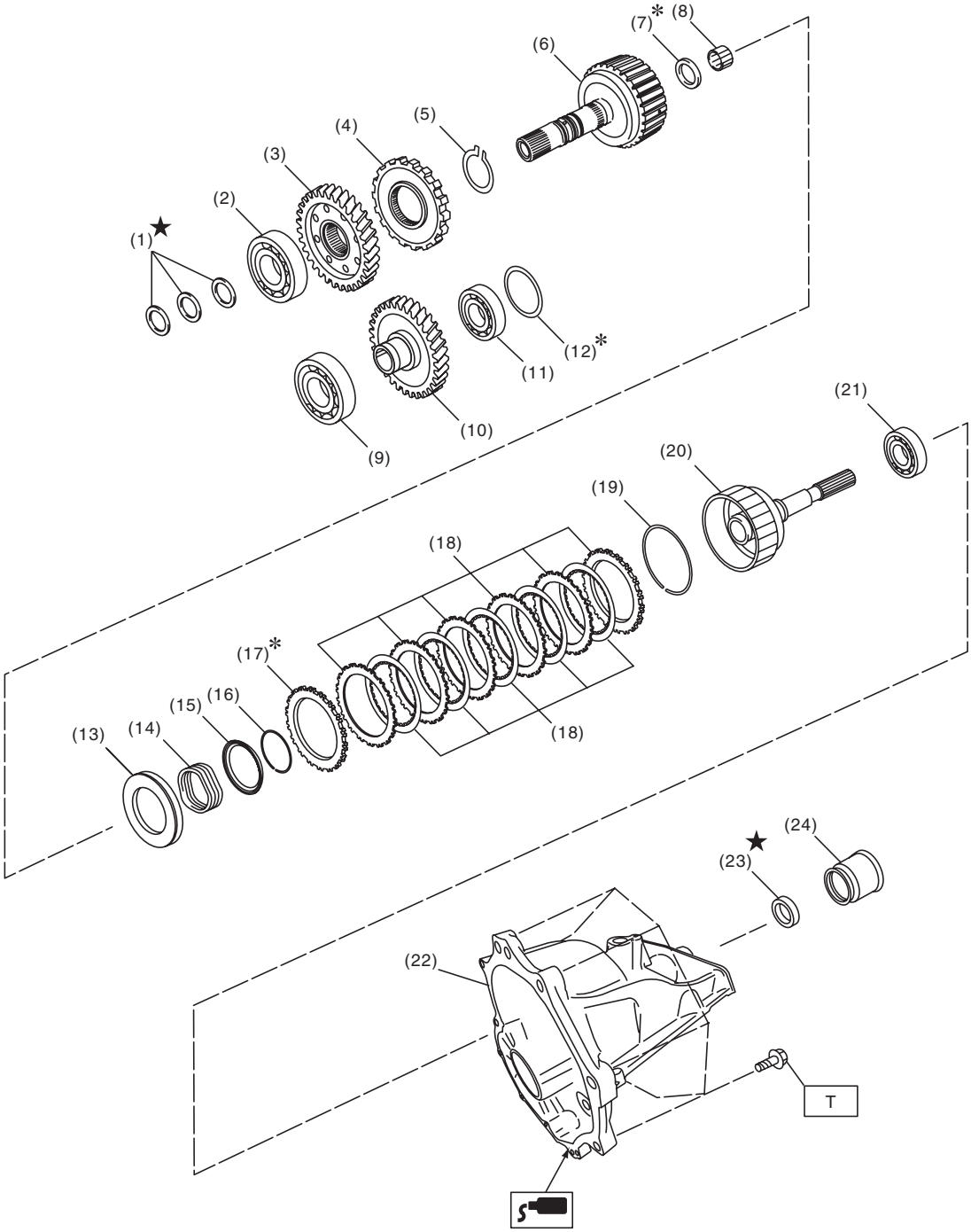

AT-06119

GETtheMANUALS.org

(1) Seal ring
(2) Ball bearing
(3) Transfer drive gear
(4) Parking gear
(5) Snap ring
(6) Reduction drive gear shaft
(7) Thrust needle bearing
(8) Needle bearing
(9) Ball bearing
(10) Transfer reduction driven gear
(11) Ball bearing
(12) Shim
(13) Transfer piston
(14) Return spring
(15) Transfer piston seal
(16) Snap ring
(17) Pressure plate
(18) Transfer clutch plate set
(19) Snap ring
(20) Rear drive shaft
(21) Ball bearing
(22) Extension case
(23) Oil seal
(24) Dust cover

Tightening torque:N·m (kgf-m, ft-lb)
T: 25 (2.5, 18.4)

GETtheMANUALS.org

12.TRANSMISSION HARNESS AND SENSOR

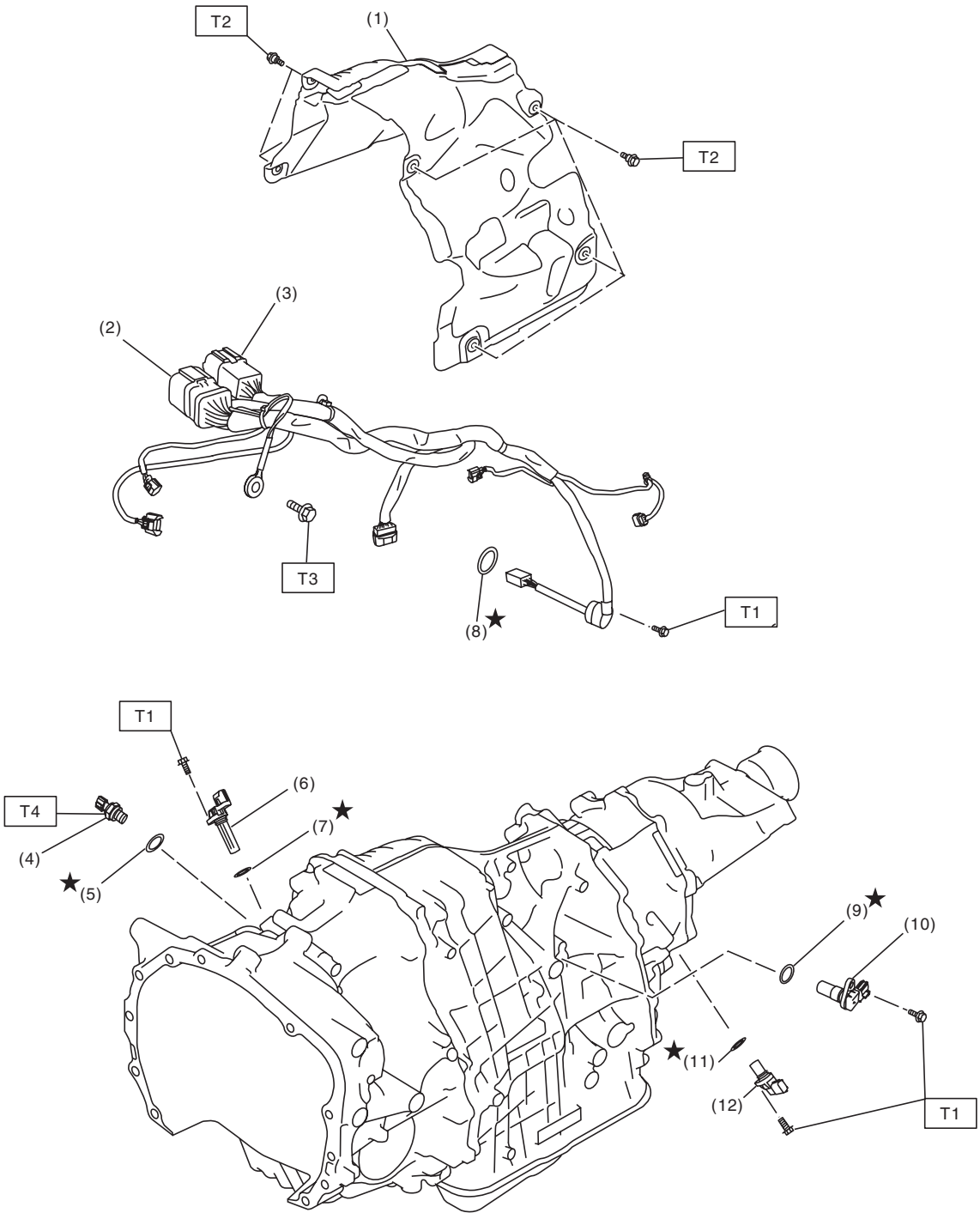

(1)	Transmission cover	(7)	O-ring
(2)	Transmission harness	(8)	O-ring
(3)	Inhibitor harness	(9)	O-ring
(4)	Secondary pressure sensor	(10)	Secondary speed sensor
(5)	O-ring	(11)	O-ring
(6)	Primary speed sensor	(12)	Front wheel speed sensor

Tightening torque:N·m (kgf-m, ft-lb)

T1: 5 (0.5, 3.7)
T2: 8 (0.8, 5.9)
T3: 16 (1.6, 11.8)
T4: 39 (4.0, 28.8)

GETtheMANUALS.org

13.CVTF COOLER PIPE AND HOSE

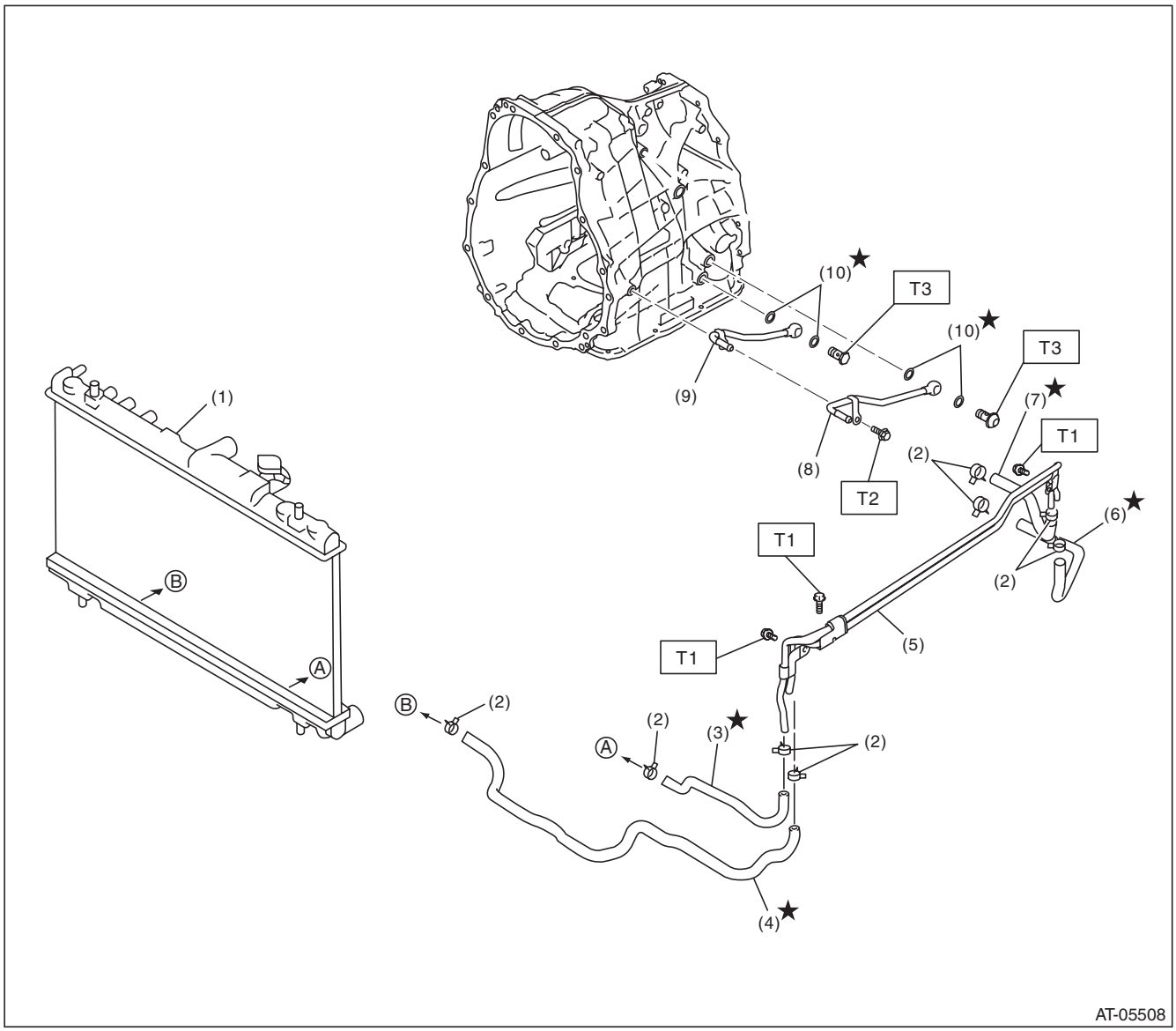

(1)	Radiator	(6)	CVTF CVT inlet hose
(2)	Clip	(7)	CVTF CVT outlet hose
(3)	CVTF radiator outlet hose	(8)	CVTF outlet pipe
(4)	CVTF radiator inlet hose	(9)	CVTF inlet pipe
(5)	CVTF cooler pipe ASSY	(10)	Gasket

Tightening torque:N·m (kgf-m, ft-lb)

T1: 7.5 (0.76, 5.5)
T2: 16 (1.6, 11.8)
T3: 40 (4.1, 29.5)

GETtheMANUALS.org

14.TRANSMISSION CONTROL MODULE

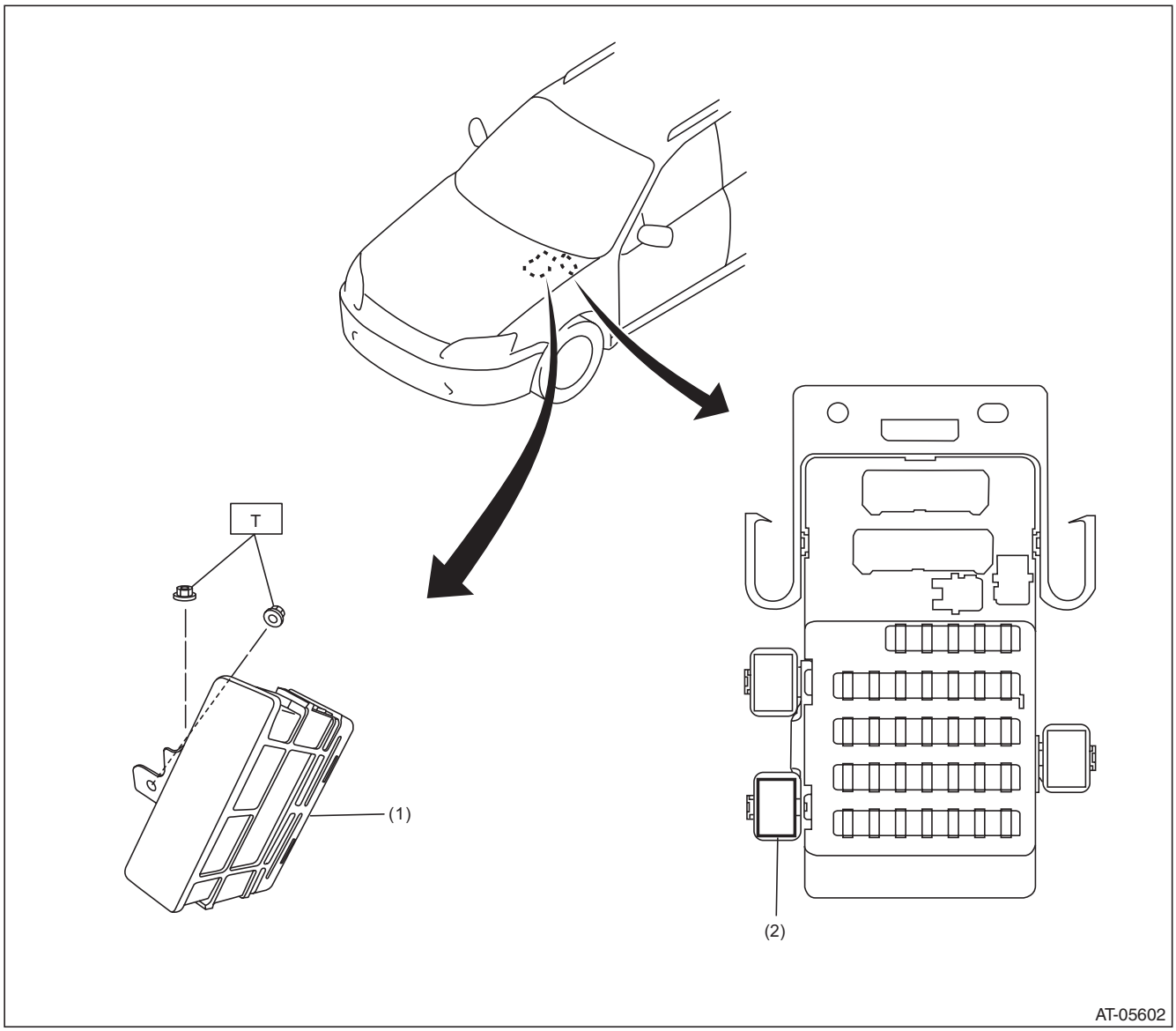

(1) Transmission control module (TCM)

(2) Relay

Tightening torque:N·m (kgf-m, ft-lb)

T: 7.5 (0.75, 5.5)

GETtheMANUALS.org

15.TRANSMISSION MOUNTING

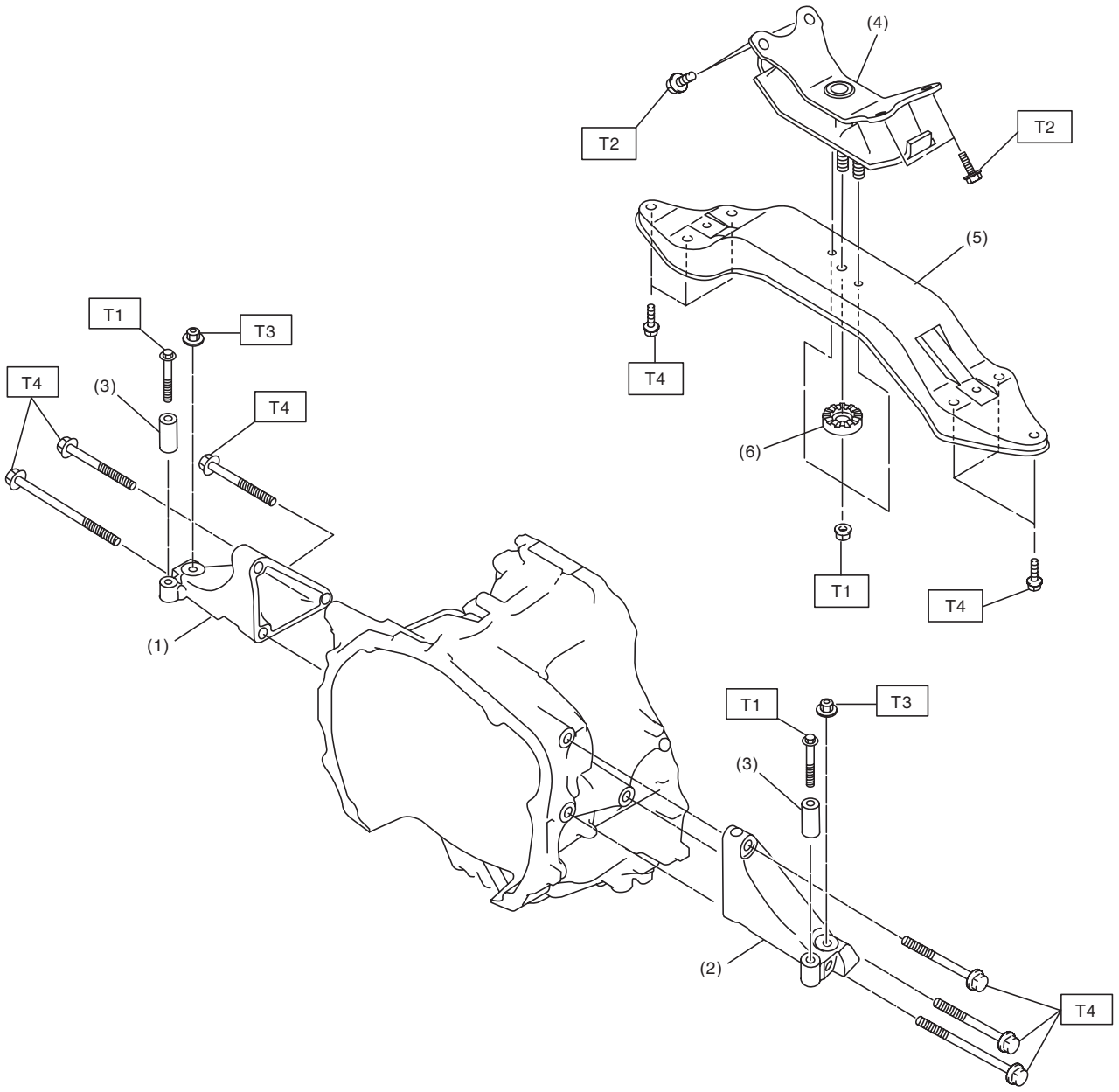

AT-05603

(1)	Transmission mounting bracket (RH)	(4)	Rear cushion rubber	***Tightening torque:N·m (kgf-m, ft-lb)***
(2)	Transmission mounting bracket (LH)	(5)	Transmission rear crossmember	***T1: 35 (3.6, 25.8)***
(3)	Collar	(6)	Stopper	***T2: 40 (4.1, 29.5)***
				T3: 45 (4.6, 33.2)
				T4: 75 (7.6, 55.3)

GETtheMANUALS.org

C: CAUTION

- Wear appropriate work clothing, including a cap, protective goggles and protective shoes when performing any work.
- Remove contamination including dirt and corrosion before removal, installation or disassembly.
- Keep the disassembled parts in order and protect them from dust and dirt.
- Do not place the oil pan with its inner side facing up until it is installed, to prevent intrusion of foreign matter into the control valve body.
- Before removal, installation or disassembly, be sure to clarify the failure. Avoid unnecessary removal, installation, disassembly and replacement.
- When disassembling the case and other light alloy parts, use a plastic hammer to force it apart. Do not pry apart with screwdrivers or other tools.
- Vehicle components are extremely hot after driving. Be wary of receiving burns from heated parts.
- Use SUBARU genuine CVTF and recommended grease. Do not mix CVTF, grease etc. of different grades or manufacturers.
- Be sure to tighten bolts and nuts to the specified torque.
- Place lifts, shop jacks or rigid racks at specified locations.
- Apply CVTF onto sliding or revolving surfaces before installation.
- Replace deformed or damaged snap rings with new parts.
- Before installing O-rings or oil seals, apply sufficient amount of CVTF to avoid damage and deformation.
- Be careful not to incorrectly install or fail to install O-rings, snap rings and other such parts.
- Before securing a part on a vise, place cushioning material such as wood blocks, aluminum plate, or cloth between the part and the vise.
- Avoid damaging the mating surface of the case.
- Before applying liquid gasket, completely remove the old liquid gasket.
- After removing the sensors, breather hose and plugs, plug the holes to avoid foreign materials intruding as necessary.
- During disassembly or assembly, be sure to use nylon gloves or paper towels. Do not use cloth gloves or waste cloth.

D: PREPARATION TOOL

1. SPECIAL TOOL

ILLUSTRATION	TOOL NUMBER	DESCRIPTION	REMARKS
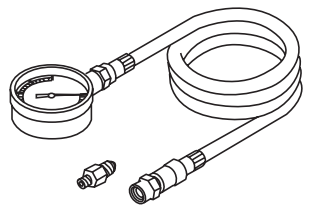 ST18801AA000	18801AA000	OIL PRESSURE GAUGE ASSY	Used for measuring the secondary hydraulic pressure (line pressure).
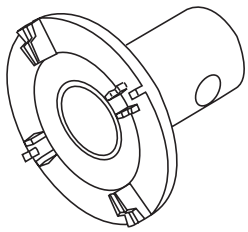 ST18658AA020	18658AA020	WRENCH COMPL RETAINER	Used for removing and installing the differential side retainer.

GETtheMANUALS.org

ILLUSTRATION	TOOL NUMBER	DESCRIPTION	REMARKS
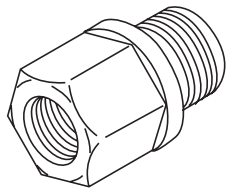 ST18681AA000	18681AA000	PRESSURE GAUGE ADAPTER	Used for measuring oil pressure. NOTE: Used together with the genuine O-ring (part No. 806911080).
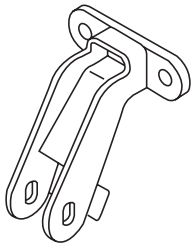 ST41099AJ000	41099AJ000	SPECIAL TOOL H4	Used for holding and balancing the engine unit.
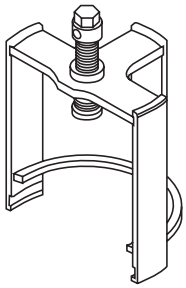 ST18769AA000	18769AA000	EXPANDER PUL-LEY	Used for removing and installing the secondary pulley assembly.
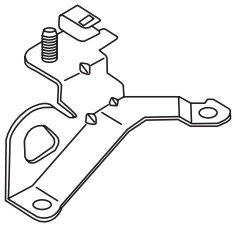 ST10004AA180	10004AA180 (SUBARU genuine part)	ENGINE HANGER REAR	Used for removing and installing the automatic transmission assembly. (ENGINE HANGER REAR for turbo model)
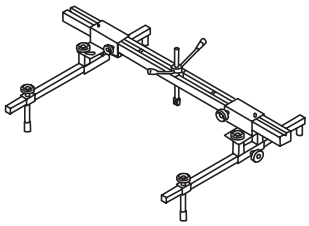 ST99099AJ000	99099AJ000	ENGINE HANGER	• Used for removing and installing the automatic transmission assembly. • Used together with CHAIN BALANCER (99099AJ010).

GETtheMANUALS.org

ILLUSTRATION	TOOL NUMBER	DESCRIPTION	REMARKS
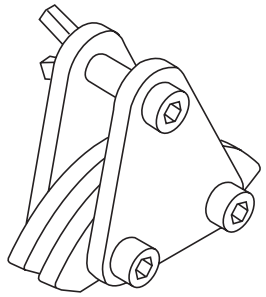 ST99099AJ010	99099AJ010	CHAIN BALANCER	• Used for removing and installing the automatic transmission assembly. • Used together with ENGINE HANGER (99099AJ000).
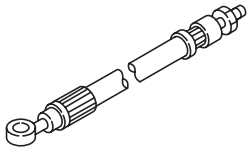 ST-498897700	498897700	OIL PRESSURE ADAPTER SET	Used for measuring the secondary pressure (line pressure) and transfer clutch hydraulic pressure.
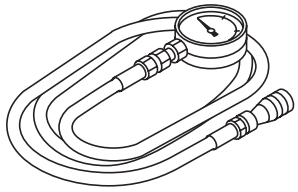 ST-498575400	498575400	OIL PRESSURE GAUGE ASSY	Used for measuring the transfer clutch hydraulic pressure.
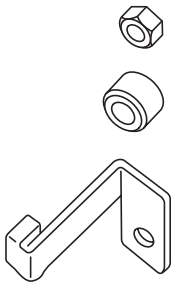 ST-498277200	498277200	STOPPER SET	• Used for removing and installing automatic transmission assembly to engine. • Used for preventing the torque converter from dropping off.
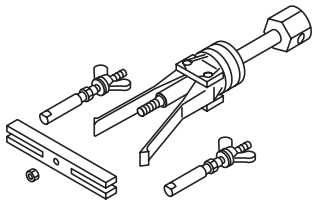 ST-398527700	398527700	PULLER ASSY	• Used for removing the extension case oil seal. • Used for removing the roller bearing of the primary pulley and secondary pulley. • Used for removing the bearing of reduction driven gear. • Used for removing the differential side retainer bearing outer race.

GETtheMANUALS.org

ILLUSTRATION	TOOL NUMBER	DESCRIPTION	REMARKS
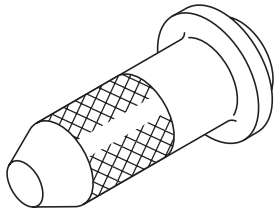 ST-498057300	498057300	INSTALLER	Used for installing the extension case oil seal.
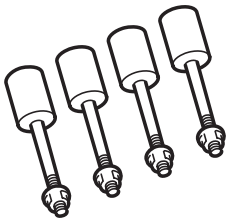 ST18632AA000	18632AA000	TRANSMISSION STAND	Used for disassembling and assembling the transmission.
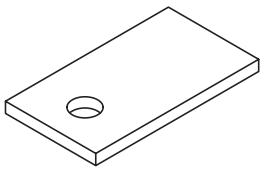 ST-498255400	498255400	PLATE	Used for measuring the backlash of hypoid gear.
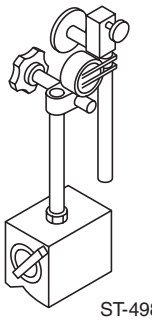 ST-498247001	498247001	MAGNET BASE	• Used for measuring the backlash of differential bevel pinion gear. • Used for measuring the backlash of hypoid gear. • Used together with DIAL GAUGE (498247100).
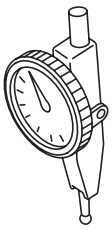 ST-498247100	498247100	DIAL GAUGE	• Used for measuring the backlash of differential bevel pinion gear. • Used for measuring the backlash of hypoid gear. • Used together with MAGNET BASE (498247001).

GETtheMANUALS.org

ILLUSTRATION	TOOL NUMBER	DESCRIPTION	REMARKS
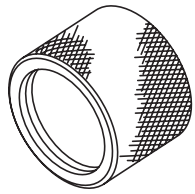 ST18675AA000	18675AA000	DIFFERENTIAL SIDE OIL SEAL INSTALLER	Used for installing the differential side retainer oil seal.
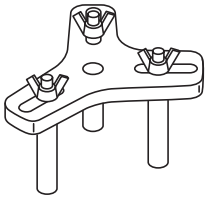 ST18762AA000	18762AA000	COMPRESSOR SPECIAL TOOL	Used for disassembling and installing the multi-plate clutch piston for shifting.
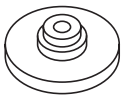 ST18765AA000	18765AA000	COMPRESSOR SUPPORT	Used for disassembling and installing the multi-plate clutch piston for shifting.
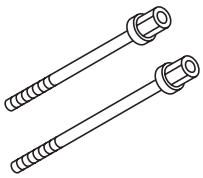 ST18763AA000	18763AA000	COMPRESSOR SHAFT	Used for disassembling and installing the multi-plate clutch piston for shifting.
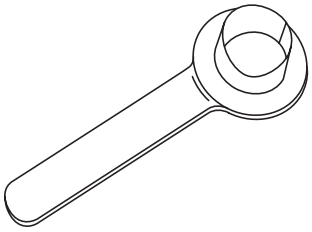 ST28399SA010	28399SA010	OIL SEAL PROTEC-TOR	Used for protecting oil seal when installing front drive shaft.

GETtheMANUALS.org

ILLUSTRATION	TOOL NUMBER	DESCRIPTION	REMARKS
ST18667AA010	18667AA010	HOLDER	• Used for removing and installing the drive pinion lock nut. • Used as a holder to rotate gear when checking tooth contact.
ST18270KA010	18270KA010	SOCKET (E16)	Used for removing and installing the center support COMPL.
ST18270KA020	18270KA020	SOCKET (E20)	• Used for removing and installing the hypoid driven gear. • Used for removing and installing the drive pinion shaft retainer.
ST-398497701	398497701	SEAT	Used for removing and installing the ball bearing.
ST-398177700	398177700	INSTALLER	• Used for removing and installing the ball bearing and tapered roller bearing. • Used for installing the parking gear.

GETtheMANUALS.org

ILLUSTRATION	TOOL NUMBER	DESCRIPTION	REMARKS
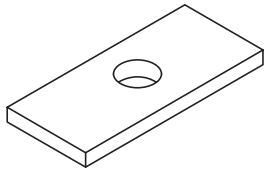 ST-398643600	398643600	GAUGE	Used for measuring the total end play, extension end play and drive pinion height.
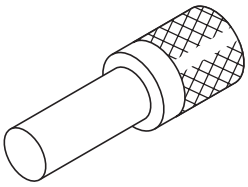 ST-899864100	899864100	REMOVER	Used for removing and installing the ball bearing.
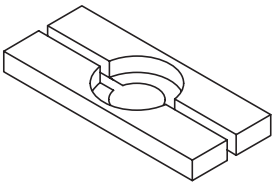 ST-498077000	498077000	REMOVER	• Used for removing ball bearing of front reduction drive gear. • Used for removing the taper roller bearing front side inner race of the drive pinion shaft. • Used for removing the differential taper roller bearing.
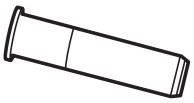 ST18657AA010	18657AA010	INSTALLER	Used for installing the oil seal of inhibitor switch.
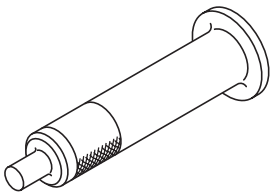 ST18657AA020	18657AA020	OIL SEAL INSTALLER	Used for installing the oil seal.

GETtheMANUALS.org

ILLUSTRATION	TOOL NUMBER	DESCRIPTION	REMARKS
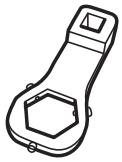 ST18621AA000	18621AA000	ADAPTER WRENCH	Used for removing and installing the drive pinion shaft lock nut.
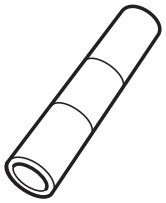 ST18651AA000	18651AA000	INSTALLER	Used for installing the bearing of front reduction drive gear.
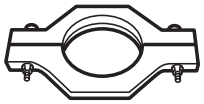 ST18720AA000	18720AA000	REMOVER	Used for removing ball bearing of reduction driven gear.
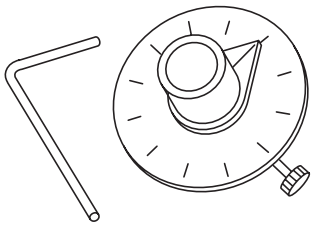 ST18854AA000	18854AA000	ANGLE GAUGE	• Used for installing the drive plate. • Used for installing the hypoid driven gear.
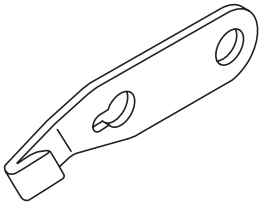 ST-498497100	498497100	CRANKSHAFT STOPPER	Used for stopping the drive plate rotation when removing and installing the drive plate.

GETtheMANUALS.org

ILLUSTRATION	TOOL NUMBER	DESCRIPTION	REMARKS
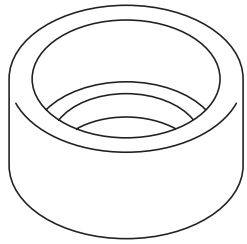 ST20299AG010	20299AG010	PRESS SNAP RING	Used for installing the bearing on primary pulley side.
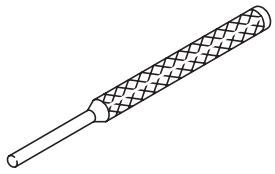 ST-398791600	398791600	REMOVER	Used for removing and installing the shifter arm spring pin.
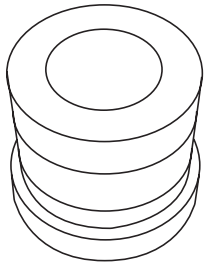 ST-399513600	399513600	INSTALLER	• Used for removing the ball bearing of the rear drive shaft. • Used for removing the bearing of the oil pump chain sprocket.
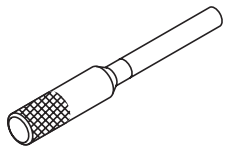 ST-499267300	499267300	STOPPER PIN	Used for adjusting the inhibitor switch.
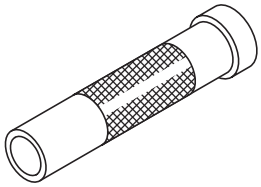 ST-499277100	499277100	BUSHING 1-2 INSTALLER	• Used for installing the front differential taper roller bearing. • Used for removing and installing the transfer reduction drive gear. • Used for installing the ball bearing of the transfer reduction drive gear. • Used for installing the oil seal. • Used for installing the ball bearing of the transfer reduction driven gear.

GETtheMANUALS.org

ILLUSTRATION	TOOL NUMBER	DESCRIPTION	REMARKS
ST-499277200	499277200	INSTALLER	• Used for installing the taper roller bearing inner race of drive pinion shaft. • Used for installing the reduction driven gear.
ST-499575400	499575400	GAUGE	Used for measuring height of end play.
ST-499737100	499737100	PULLER SET	• Used for measuring the transfer end play. • Use the rack only.
ST-499575600	499575600	GAUGE	Used for measuring height of end play.
ST-499787700	499787700	WRENCH	Used for measuring the differential pinion shaft backlash.

GETtheMANUALS.org

ILLUSTRATION	TOOL NUMBER	DESCRIPTION	REMARKS
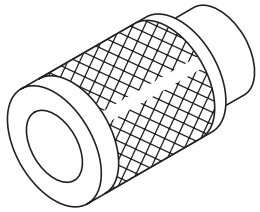 ST-499757002	499757002	INSTALLER	Used for removing the transfer reduction driven gear.
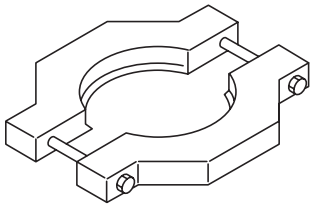 ST18767AA000	18767AA000	BEARING REMOVER	• Used for removing the transfer reduction drive gear. • Used for removing the reduction driven gear bearing retainer. • Used for removing the front reduction driven shaft.
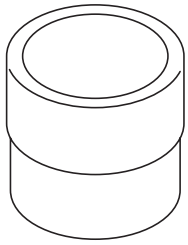 ST-499755602	499755602	PRESS SNAP RING	• Used for installing the oil seal. • Used for installing the ball bearing and roller bearing.
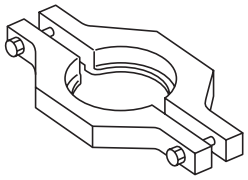 ST-498077600	498077600	REMOVER	• Used for removing the ball bearing of the rear drive shaft. • Used for removing the ball bearing of transfer reduction driven gear. • Used for removing ball bearing of reduction driven gear. • Used for removing the ball bearing of drive sprocket.
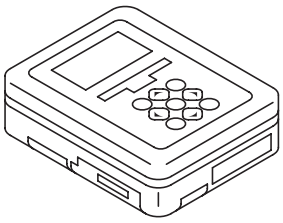 ST1B022XU0	1B022XU0	SUBARU SELECT MONITOR III KIT	Used for troubleshooting the electrical system.

GETtheMANUALS.org

2. GENERAL TOOL

TOOL NAME	REMARKS
Circuit tester	Used for measuring resistance and voltage.
Thickness gauge	Used for the clearance in reverse brake, forward clutch, transfer clutch and input clutch.
Caliper	Used for measuring the clearance at the parts.
Spring scale	Used for measuring the starting torque of the drive pinion.
TORX® bit T70	Used for removing and installing differential gear oil drain plug.
TORX® bit E16	Used for removing and installing the center support COMPL.
Straight pin remover	Used for removing and installing transmission gear oil drain plug.
Deep socket	Used for removing and installing the secondary pressure sensor. NOTE: Use Ko-ken 3/8 12-point 27 mm (manufacturer product No. 3305M-27).
Push/pull gauge	Used for measuring clutch clearance.
Chain sling	Used for removing and installing transmission. • Length: 0.8 — 1 m (2.6 — 3.3 ft) • Load capacity: 1.2 t (2646 lb) or more • Diameter: 6 mm (0.24 in) or 6.3 mm (0.25 in) • Chain external width: 23.5 mm (0.93 in) or less • Chain internal width: 8.5 mm (0.33 in) or more
Screw shackle	Used for removing and installing transmission. • Load capacity: 250 kg (551 lb) or more • Use two pieces.

GETtheMANUALS.org

2. CVTF

A: INSPECTION

Check for leakage of CVTF from transmission.

B: ADJUSTMENT

CAUTION:
- **CVTF level changes along with CVTF temperature. When inspecting CVTF level, observe the specified CVTF temperature.**
- **Always use specified CVTF or equivalent. Using other fluid than specified or equivalent will cause malfunction.**

1) Idle the engine to raise CVTF temperature to 35 — 45°C (95 — 113°F) on Subaru Select Monitor.
2) Operate the select lever in P → R → N → D and D → N → R → P to circulate CVTF with the engine idling.
3) With the engine running, lift up the vehicle and remove the filler plug.

CAUTION:
Pay special attention to the following operations as the engine is at idle.

NOTE:
CVTF is at the specified level when it is up to the filler plug hole lower section.

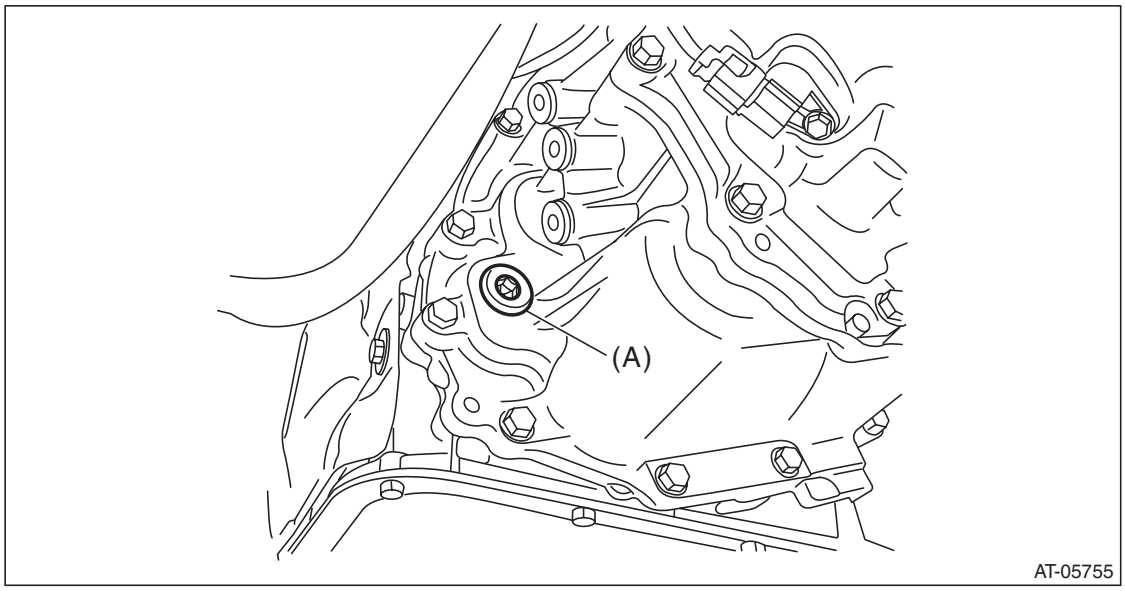

(A) Filler plug

GETtheMANUALS.org

4) When there is no CVTF leakage from the transmission, add the specified fluid or equivalent up to the filler plug hole lower section.

CVT fluid:
<Ref. to CVT-4, HYDRAULIC CONTROL AND LUBRICATION, SPECIFICATION, General Description.>

CAUTION:
Note that when CVTF is added up to the lower section of filler plug while the transmission is in cold condition, overfilling of CVTF occurs, causing the oil to spill out.

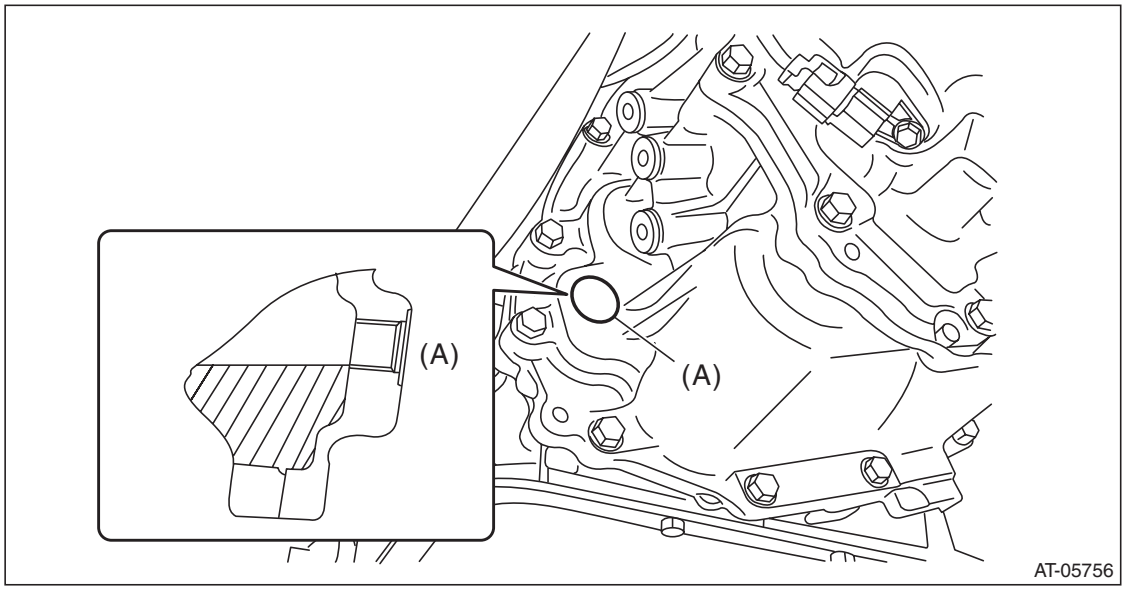

(A) Filler plug hole

5) Install the filler plug.

NOTE:
Use a new gasket.

Tightening torque:
50 N·m (5.1 kgf-m, 36.9 ft-lb)

C: REPLACEMENT

CAUTION:
- **Directly after the vehicle has been running or the engine has been long idle running, the CVTF is hot. Be careful not to burn yourself.**
- **Be careful not to spill the CVTF on exhaust pipe to prevent it from emitting smoke or causing fires. If CVTF adheres, wipe it off completely.**
- **Always use specified CVTF or equivalent. Using other fluid than specified or equivalent will cause malfunction.**

GETtheMANUALS.org

1) Lift up the vehicle, and remove the CVTF drain plug.

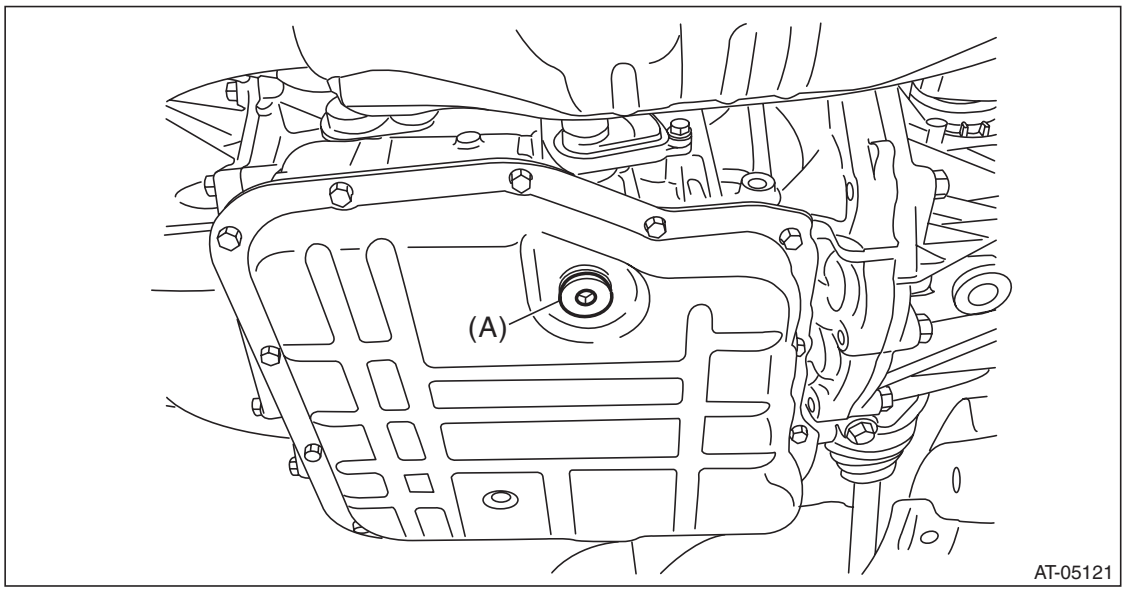

(A) CVTF drain plug

2) Check the CVTF condition. <Ref. to CVT-40, CONDITION CHECK, CVTF.>
3) Install the CVTF drain plug and gasket.

NOTE:
- Use a new gasket.

Tightening torque:
20 N·m (2.0 kgf-m, 14.8 ft-lb)

4) Remove the filler plug.

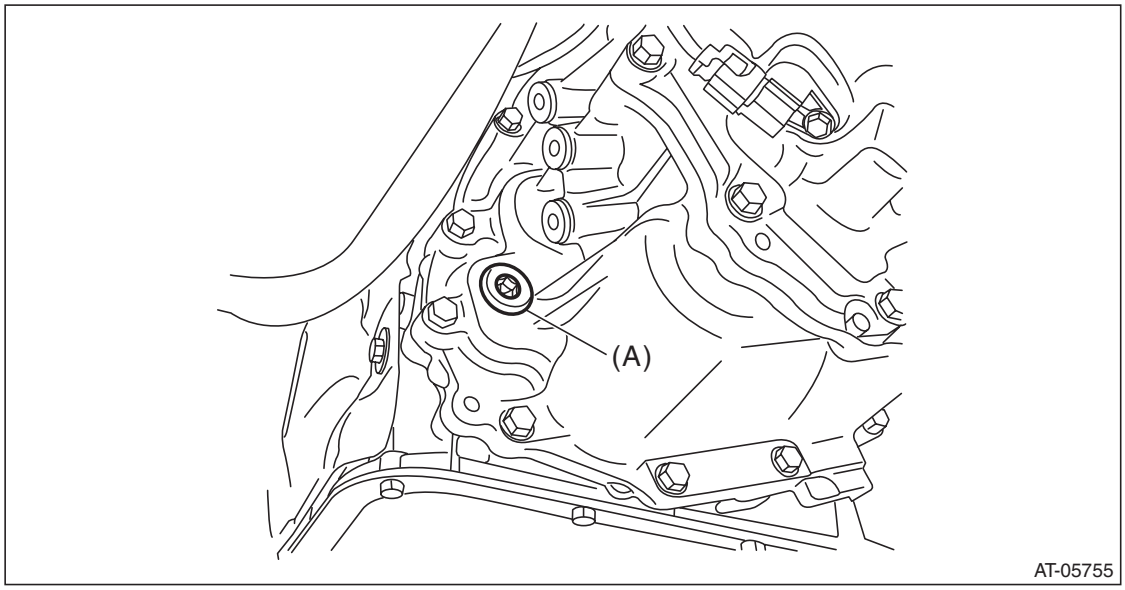

(A) Filler plug

GETtheMANUALS.org

5) Fill in the specified fluid or equivalent through the filler plug.

CVT fluid:
<Ref. to CVT-4, HYDRAULIC CONTROL AND LUBRICATION, SPECIFICATION, General Description.>

Capacity:
Fill with the same amount of CVTF as drained.

6) Temporarily tighten the filler plug.
7) Idle the engine to raise CVTF temperature to 35 — 45°C (95 — 113°F) on Subaru Select Monitor.
8) Operate the select lever in P → R → N → D and D → N → R → P to circulate CVTF with the engine idling.

CAUTION:
Pay special attention to the following operations as the engine is at idle.

9) Place the select lever in "P" range. Then lift up the vehicle with the engine at idle to adjust the CVTF level and check for leakage. <Ref. to CVT-37, ADJUSTMENT, CVTF.>
10) Replace with a new gasket, and attach the filler plug.

Tightening torque:
50 N·m (5.1 kgf-m, 36.9 ft-lb)

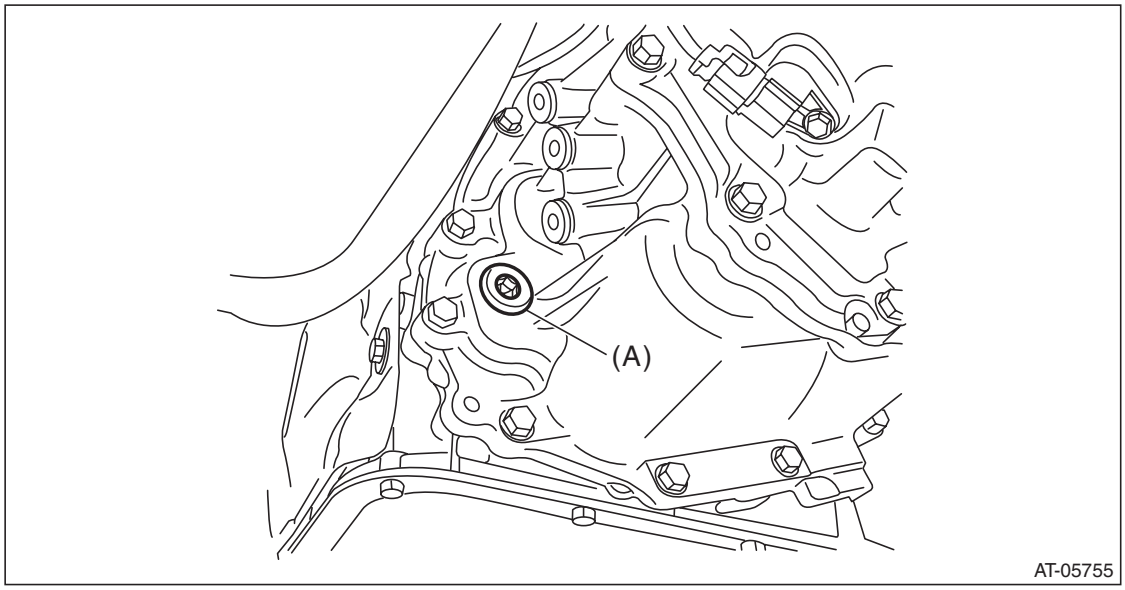

(A) Filler plug

D: CONDITION CHECK

NOTE:
When replacing CVTF, determine the condition inside the transmission body by inspecting the drained CVTF.

Fluid condition	Trouble and possible cause	Corrective action
Metal particles.	Excessive wear of the internal of the transmission body.	Replace CVTF and check if CVT operates correctly.
Thick and varnish-form fluid.	Burnt clutches	Replace CVTF and check the CVT body or vehicle for faulty.
Clouded CVTF or bubbles.	Water mixed in fluid.	Replace CVTF and check the water entering point.

GETtheMANUALS.org

3. Differential Gear Oil

A: INSPECTION

Check that there is no leakage of differential gear oil from the converter case.

B: ADJUSTMENT

NOTE:
Immediately after removing the overflow drain plug, remaining gear oil (approx. 8 cc) may come out of the overflow pipe. This is not included in the specified amount. When removing the overflow drain plug, make sure the gear oil flows out of the overflow drain plug hole by filling with gear oil.

1) Remove the air breather cap.

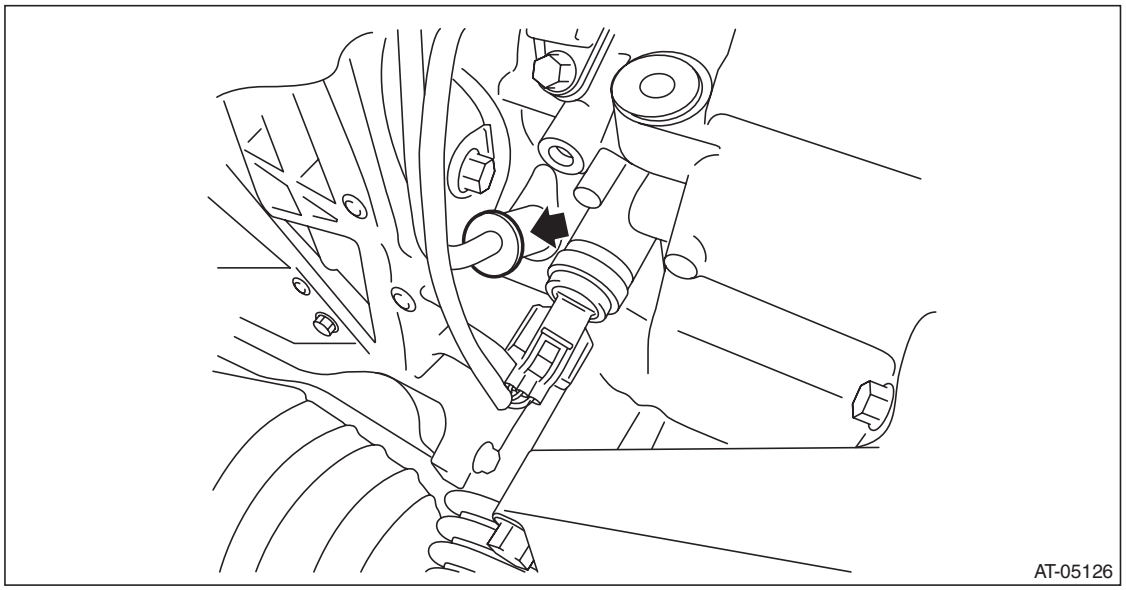

2) Lift up the vehicle.
3) Remove the overflow drain plug.

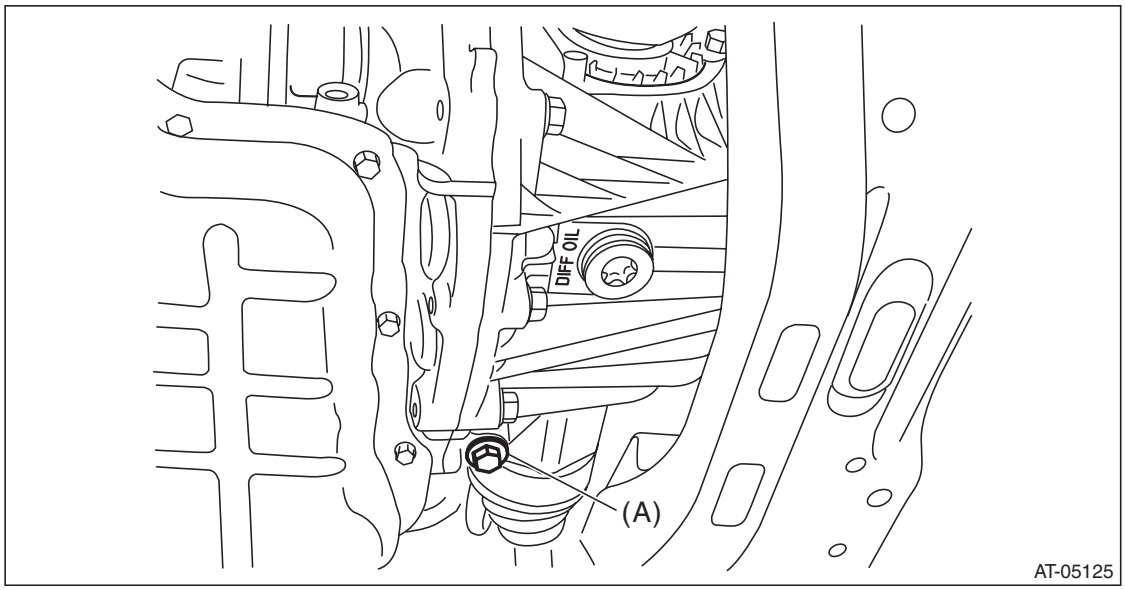

(A) Overflow drain plug

GETtheMANUALS.org

4) Fill in the differential gear oil through the charge pipe up to where the oil flows out of the overflow drain plug.

Recommended gear oil:
<Ref. to CVT-5, RECOMMENDED GEAR OIL, SPECIFICATION, General Description.>

5) When the flow of the differential gear oil turns into a narrow stream, install the overflow drain plug.

NOTE:
Use a new gasket.

Tightening torque:
35 N·m (3.6 kgf-m, 25.8 ft-lb)

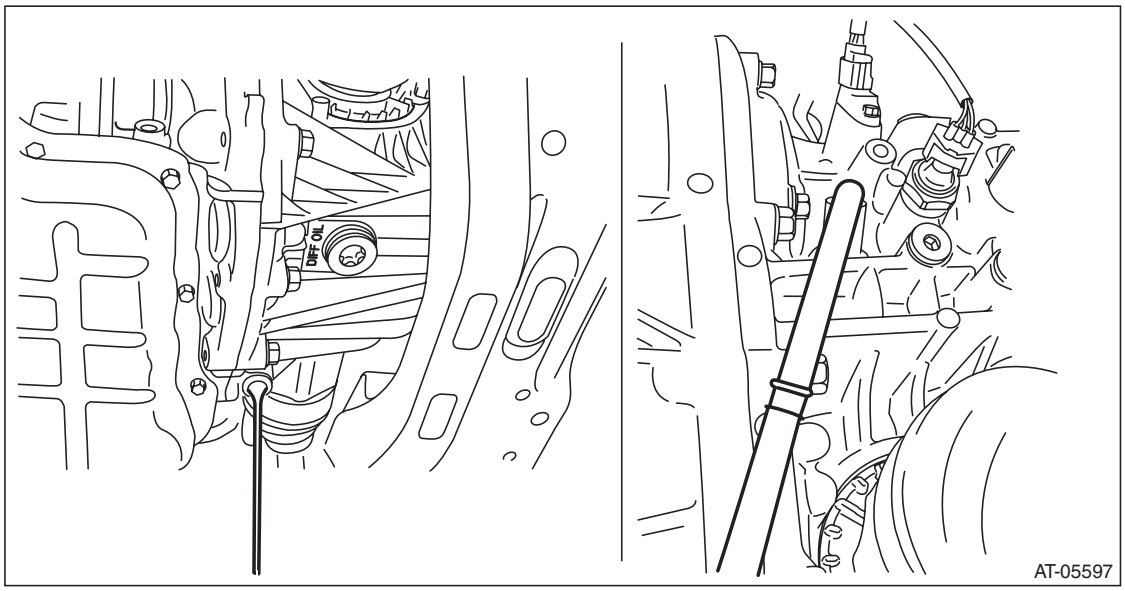

6) Install the air breather cap.

C: REPLACEMENT

CAUTION:
- **Immediately after the vehicle has been running or after idling for a long time, the differential gear oil will be hot. Be careful not to burn yourself.**
- **Be careful not to spill differential gear oil on the exhaust pipe to prevent it from emitting smoke or causing a fire. If gear oil adheres, wipe it off completely.**

1) Lift up the vehicle.
2) Remove the differential gear oil drain plug using TORX® bit T70. Drain differential gear oil.
3) Install the differential gear oil drain plug using TORX® bit T70.

NOTE:
Use a new gasket.

GETtheMANUALS.org

Tightening torque:
70 N·m (7.1 kgf-m, 51.6 ft-lb)

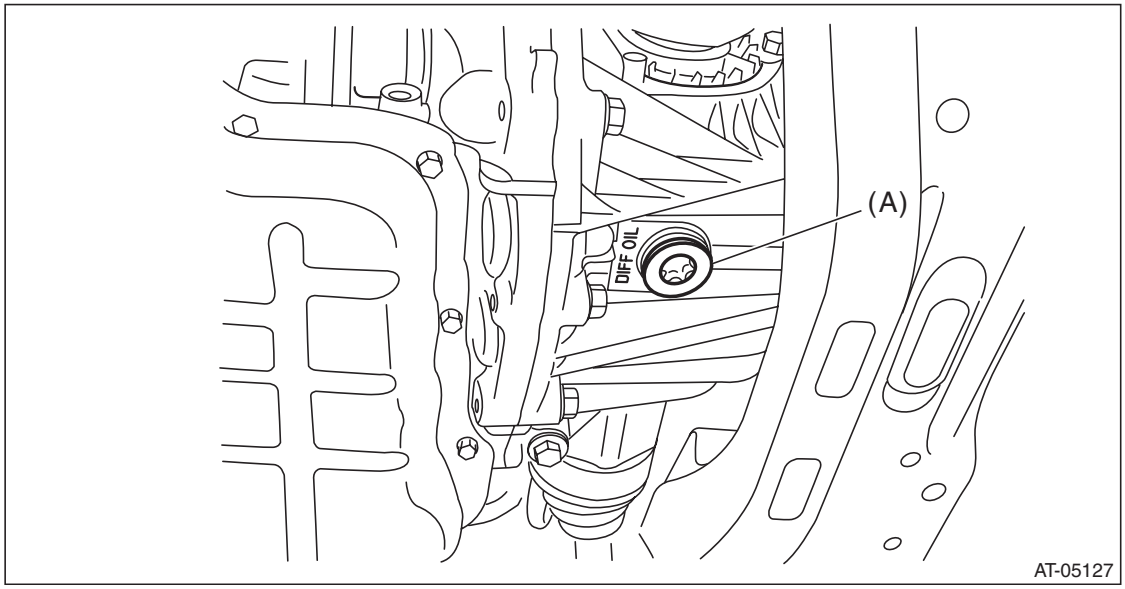

(A) Differential gear oil drain plug

4) Pour gear oil from the charge pipe.

Recommended gear oil:
<Ref. to CVT-5, RECOMMENDED GEAR OIL, SPECIFICATION, General Description.>

Gear oil capacity:
<Ref. to CVT-5, RECOMMENDED GEAR OIL, SPECIFICATION, General Description.>

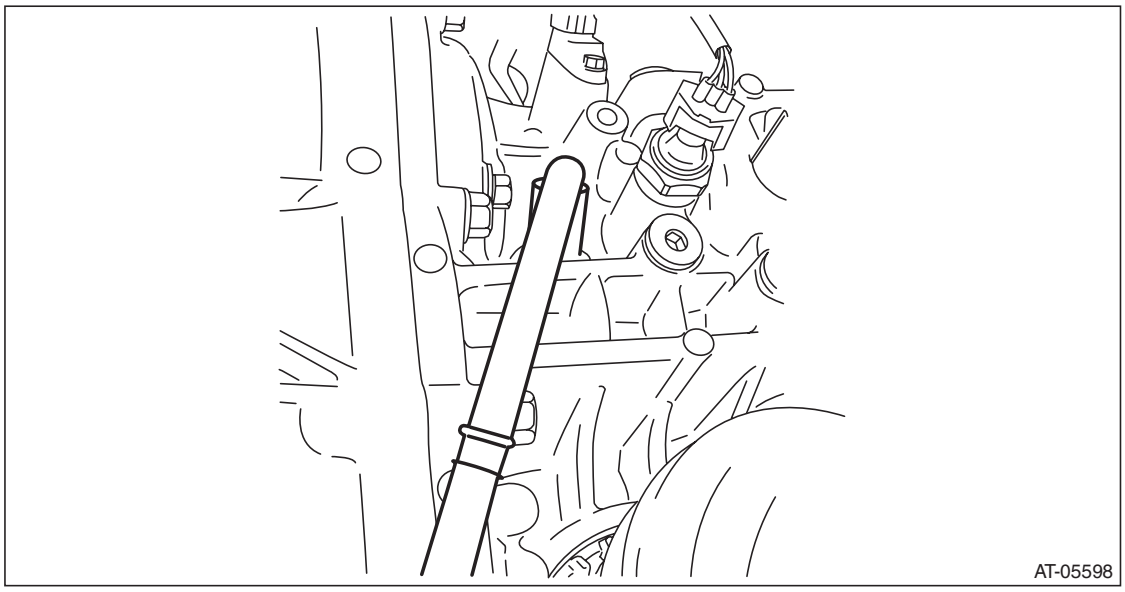

5) Adjust the level of differential gear oil. <Ref. to CVT-41, ADJUSTMENT, Differential Gear Oil.>

GETtheMANUALS.org

4. Variator Chain Break-in

A: GENERAL DESCRIPTION

Perform Variator Chain Break-in when the following work has been performed.
- Variator chain replacement
- Primary pulley and secondary pulley replacement

B: PROCEDURE

NOTE:
- During variator chain break-in, VDC warning light and EPB warning light illuminate because of the difference between the vehicle speed value and G sensor value. This is not the malfunction. If the warning light illuminates, clear the VDC and EPB memory after the variator chain break-in is finished. <Ref. to VDC(diag)-25, Clear Memory Mode.> <Ref. to PB(diag)-25, Clear Memory Mode.>
- During variator chain break-in, if the above malfunction code is detected, fail mode is entered. If this happens, symptom such as engine speed rapid increase occurs, even when the accelerator pedal is depressed gradually.

1) Lift up the vehicle.

CAUTION:
Lift up the vehicle until the tire bottom is 0.3 m (0.98 ft) or more above the ground.

2) Shift the select lever to “P” or “N” range.
3) Apply the electronic parking brake.
4) Connect the Subaru Select Monitor to data link connector.
5) Idle the engine to raise the CVTF temperature to 40 — 50°C (104 — 122°F) displayed on the Subaru Select Monitor.

NOTE:
When CVTF temperature does not rise easily or if you want to rise CVTF temperature faster, maintain the engine speed within 2,000 — 2,500 rpm at “P” or “N” range to raise the CVTF temperature.

6) With the select lever in “P” or “N” range, increase the engine speed to 3,000 — 3,500 rpm from the idling condition, and maintain the speed for approximately five seconds, then release the accelerator pedal.
7) Depress the accelerator pedal gradually again from idling condition to increase the engine speed to 3,000 — 3,500 rpm, maintain the speed for approximately five seconds, then release the accelerator pedal.
8) Release the electronic parking brake.
9) Shift the select lever into manual mode and set to 1st.
10) Depress the accelerator pedal gradually, and increase the engine speed to 5,300 rpm from engine idling condition.

NOTE:
Increase the engine speed while taking care that the engine speed does not become too high.

11) Release the accelerator pedal to fully closed position to lower the engine speed to 4,000 rpm.
12) Depress the accelerator pedal gradually again, and increase the engine speed to 5,300 rpm.
13) Repeat the step 11) and 12) for 40 times.
14) Release the accelerator pedal to return the engine speed to idling.
15) Shift the select lever to “P” range, and then turn the engine to OFF.

GETtheMANUALS.org

5. AWD ON/OFF Switching Mode

A: GENERAL DESCRIPTION

- Follow the messages displayed on the Subaru Select Monitor when working.
- Perform as necessary in FWD mode.
- When switched to FWD, AWD light illuminates.

B: PROCEDURE

CAUTION:

- **Do not turn the power of the Subaru Select Monitor OFF during work, and do not disconnect the data link connector.**
- **On completing the work in FWD, switch back in AWD.**

1) Shift the select lever to “P” range.
2) Connect the Subaru Select Monitor to data link connector.
3) Turn the ignition switch to ON. (In the case of a push button start, press the push button ignition switch twice without stepping on the brake)
4) Turn off all switches causing an electrical load, such as headlights, A/C, seat heater and rear defogger.
5) Select {AT related learning & inspecting mode} in the «Transmission Diagnosis» screen of the Subaru Select Monitor.
6) Select {AWD ON/OFF switching mode} in the «Learning and inspection mode related to AT» display screen of the Subaru Select Monitor.
7) Follow the messages displayed on the Subaru Select Monitor screen when working.

Switching completes successfully if any of the following messages is displayed.

- When switching from AWD to FWD: {Switched to FF. To return to AWD, perform basic mode again.}
- When switching from FWD to AWD: {Switched to AWD. To return to FF, perform basic mode again.}

NOTE:

- If communication error occurs during switching mode, start in the “AWD ON/OFF switching mode” again.
- If operation is interrupted before the successful end message is displayed, perform the {AWD ON/OFF switching mode} from the beginning until confirming the operation is successfully ended. If this mode fails to complete successfully, the cause is as follows.
  - Select lever is not in “P” range.
  - Engine is running.
- For details concerning the operation procedure, refer to “PC application help for Subaru Select Monitor”.

GETtheMANUALS.org

6. Road Test

A: INSPECTION

1. GENERAL PRECAUTION

Road tests should be conducted to properly diagnose the condition of CVT.

CAUTION:
Always observe the local traffic laws when performing the test.

2. D RANGE SHIFT FUNCTION

Make sure the engine speed is 1,100 — 1,300 rpm while driving on the level road at 50 km/h (31 MPH) after accelerating from halting to 1/4 of accelerator opening angle. Then stop the vehicle. Check normal gear change has occurred while the vehicle speed changes from a constant speed to zero.

3. KICK-DOWN FUNCTION

Check if engine speed will rise by operating the accelerator opening angle to the full from a constant speed of 50 km/h (31 MPH) or more.

4. ENGINE BRAKE OPERATION

- Drive in “6th speed of manual mode” [70 — 80 km/h (43 — 50 MPH)], and shift down from 6th to 5th. Check if the indicator of combination meter switches “6” → “5”. At the same time, check the engine brake in 5th gear.
- Drive in “5th speed of manual mode” [60 — 70 km/h (37 — 43 MPH)], and shift down from 5th to 4th. Check if the indicator of combination meter switches “5” → “4”. At the same time, check the engine brake in 4th gear.
- Drive in “4th speed of manual mode” [50 — 60 km/h (31 — 37 MPH)], and shift down from 4th to 3rd. Check if the indicator of combination meter switches “4” → “3”. At the same time, check the engine brake in 3rd gear.
- Drive in “3rd speed of manual mode” [40 — 50 km/h (25 — 31 MPH)], and shift down from 3rd to 2nd. Check if the indicator of combination meter switches “3” → “2”. At the same time, check the engine brake in 2nd gear.
- Drive in “2nd speed of manual mode” [20 — 30 km/h (12 — 19 MPH)], and shift down from 2nd to 1st. Check if the indicator of combination meter switches “2” → “1”. At the same time, check the engine brake in 1st gear.

5. LOCK-UP FUNCTION

When the accelerator is lightly depressed while driving on a flat road in “D” range, check that rpm does not change abruptly.

6. P RANGE OPERATION

Stop the vehicle on an uphill grade of 5% or more and shift to the “P” range and apply the parking brake. Check that the vehicle does not move when the parking brake is released.

7. NOISE AND VIBRATION

Check for noise and vibration during a constant driving, accelerating, decelerating and manual shift operation.

8. OIL LEAKAGE

After the driving test, inspect for leakage of CVTF and differential gear oil from the transmission body.

GETtheMANUALS.org

7. Stall Test

A: INSPECTION

CAUTION:
Make sure no other person is around the vehicle during stall test measurement.

NOTE:
Stall test is extremely important in diagnosing the condition of CVT and engine. The test is necessary to measure the engine stall speeds in “R” and “D” range.
Purposes of the stall test:
- Operational check of forward clutch and reverse brake
- Operational check of the torque converter assembly
- Engine performance check

1) Place wheel chocks at the front and rear of all wheels and engage the electronic parking brake.
2) Turn the A/C OFF.
3) Using the Subaru Select Monitor, check if the throttle valve operates when you depress the accelerator pedal. <Ref. to EN(H4SO)(diag)-33, READ CURRENT DATA FOR ENGINE (NORMAL MODE), OPERATION, Subaru Select Monitor.>
4) Check the engine oil level.
5) Check the coolant level.
6) Adjust the CVTF level. <Ref. to CVT-37, ADJUSTMENT, CVTF.>
7) Increase the CVT temperature to 60 to 80°C (140 to 176°F) by idling the engine (with select lever set to “N” or “P” range).
8) Shift the select lever to “D” range.
9) Depress the accelerator pedal to the full while fully depressing the foot brake pedal with your left foot.
10) When the engine speed stabilizes, quickly record the engine speed and release accelerator pedal. Shift the select lever to “N” range. Let the engine idle for one minute or more to cool it down.
11) Shift to “R” range and perform the same stall test.

NOTE:
- Do not perform a stall test for over 5 seconds at a time. (from closed throttle, fully open throttle to stall speed reading.) Failure to follow this instruction will cause the engine oil and CVTF to deteriorate and the clutch and brake to be adversely affected.
- Be sure to cool down the engine for at least one minute after each stall test with the select lever set in the “P” or “N” range and with the idle speed of 1,200 rpm or less.
- If the stall speed is higher than the specified range, attempt to finish the stall test in as short a time as possible, in order to prevent the CVT from sustaining damage.

Stall speed standard:
2,400 — 3,100 rpm

GETtheMANUALS.org

Stall test judgment

Range	Range	Probable cause
Lower than standard value	D, R	• Throttle valve is not fully open. • Insufficient engine output • Torque converter malfunction
Higher than standard value	D	• Forward clutch slippage • Secondary pressure (line pressure) is low. • Variator chain malfunction • Input clutch slippage
	R	• Reverse brake slippage • Secondary pressure (line pressure) is low. • Variator chain malfunction • Input clutch slippage
	D, R	• Torque converter malfunction • Control valve body malfunction • TCM malfunction • Damaged harness and harness connector

GETtheMANUALS.org

8. Time Lag Test

A: INSPECTION

NOTE:
When the select lever is shifted while the engine is idling, there will be a certain time elapse or lag before shock is felt. This symptom helps to check the condition of forward clutch and reverse brake.

- Perform the test at normal operation CVTF temperature of 60 — 80°C (140 — 176°F).
- Be sure to allow one minute or more interval between tests.
- Make three measurements and take the average value.

1) Apply the electronic parking brake.
2) Start the engine. Check the idle speed. (A/C OFF)
3) Shift the select lever from “N” to “D” range. Using a stop watch, measure the time elapsed from shifting the lever until the shock is felt.

Time lag standard:
1.2 seconds or less

If “N” → “D” time lag is longer than specified:

- Secondary pressure (line pressure) is too low.
- Forward clutch worn
- Piston malfunction
- Control valve body malfunction
- Learning incomplete

4) In the same manner, measure the time lag when shifting from “N” range to “R” range.

Time lag standard:
1.5 seconds or less

If “N” → “R” time lag is longer than specified:

- Secondary pressure (line pressure) is too low.
- Reverse brake worn
- Piston malfunction
- Control valve body malfunction
- Learning incomplete

GETtheMANUALS.org

9. Secondary Pressure (Line Pressure) Test

A: INSPECTION

CAUTION:
Make sure no other person is around the vehicle during secondary pressure (line pressure) test measurement.

NOTE:
- If the pulley and variator chain, clutch or brake show signs of slipping or shift feel is not correct, check the secondary pressure (line pressure).
- Connect Subaru Select Monitor to vehicle so as to measure the engine speed and actual secondary pressure (secondary pressure (line pressure)).
- In many cases, slippage or inability to operate the vehicle may be due to insufficient oil pressure for the operation of clutch, brake or control valve.

1) Remove the front wheel RH. <Ref. to WT-4, REMOVAL, Tire and Wheel.>
2) Lift up the vehicle.
3) Remove the test plug for secondary pressure (line pressure).

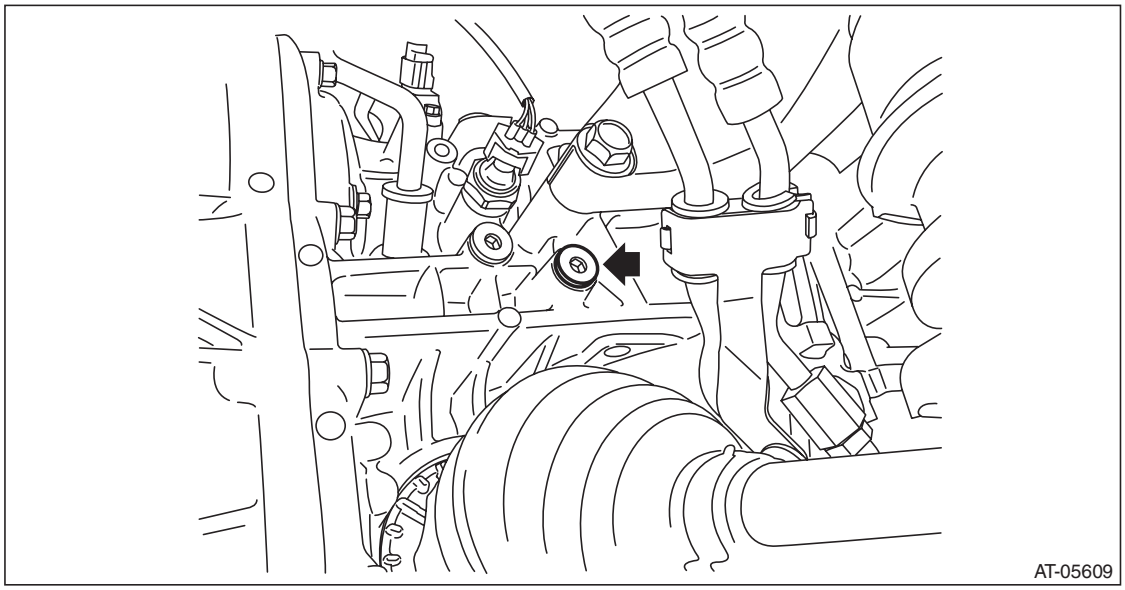

GETtheMANUALS.org

4) Attach ST1, ST2 and ST3 to transmission.

ST1	18801AA000	OIL PRESSURE GAUGE ASSY
ST2	18681AA000	PRESSURE GAUGE ADAPTER
ST3	498897700	OIL PRESSURE ADAPTER SET

NOTE:
Used together with genuine O-ring (part No. 806911080) attached to ST2 PRESSURE GAUGE ADAPTER.

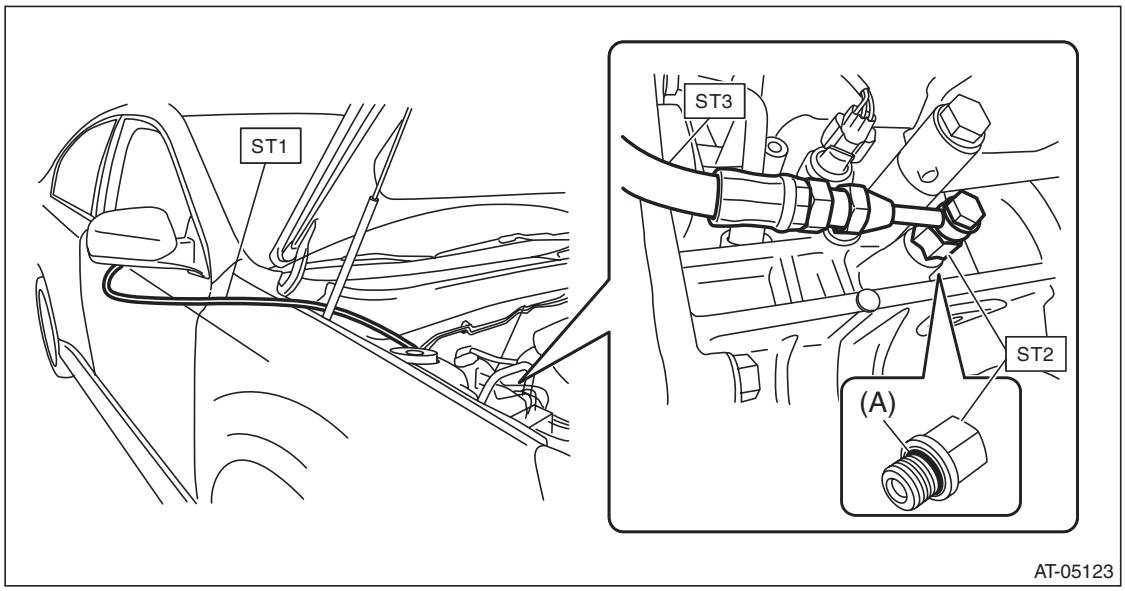

(A) O-ring (genuine part)

5) Set the gauge so that it can be seen from the driver's seat.
6) Install the front wheel RH. <Ref. to WT-4, INSTALLATION, Tire and Wheel.>
7) Using the Subaru Select Monitor, check if the throttle valve operates when you depress the accelerator pedal. <Ref. to EN(H4SO)(diag)-33, READ CURRENT DATA FOR ENGINE (NORMAL MODE), OPERATION, Subaru Select Monitor.>
8) Check the engine oil level. <Ref. to LU(H4SO)-13, Engine Oil.>
9) Check the coolant level. <Ref. to CO(H4SO)-14, Engine Coolant.>
10) Adjust the CVTF level. <Ref. to CVT-37, ADJUSTMENT, CVTF.>
11) Increase the CVTF temperature to 60 — 80°C (140 — 176°F) by idling the engine with the select lever shifted to "N" or "P" range.
12) Shift the select lever to "D" range.
13) Depress the accelerator pedal to the full while fully depressing the foot brake pedal with your left foot.
14) Immediately after the engine speed becomes steady, record the reading of the secondary pressure (line pressure), engine speed and actual secondary pressure on Subaru Select Monitor. And then release the accelerator pedal. Shift the select lever to "N" range. Let the engine idle for one minute or more to cool it down.

NOTE:
- Do not continue the stall test for 5 seconds or more at a time (from fully closed throttle, fully open throttle to secondary pressure (line pressure) reading). Failure to follow this instruction will cause the engine oil and CVTF to deteriorate and the clutch and brake to be adversely affected.
- After performing the secondary pressure (line pressure) test, be sure to cool down the engine for at least one minute with the select lever set in "P" or "N" range and with the idle speed at 1,200 rpm or less.
- Under each condition, check that the measured pressure matches almost totally with actual secondary pressure.
- When both measured pressure and actual secondary pressure are out of specification, judge as control valve malfunction.
- The value at stall is for reference because the pressure changes under different conditions or circumstances.

GETtheMANUALS.org

- The value at idling is steady because it is not affected by any condition or circumstance.

Secondary pressure (line pressure) standard				
	Range	Throttle	Brake	Secondary pressure (line pressure) (MPa (kgf/cm^2, psi))
Stall	D, R	Full open	ON	4.5 — 6 (45.9 — 61.2, 652 — 870)
Idling	P, N	Full closed	OFF	0.5 — 1.5 (5.1 — 15.3, 72 — 218)

15) Remove the ST and install the plug after measurement.

NOTE:
Use new O-rings.

Tightening torque:
25 N·m (2.5 kgf-m, 18.4 ft-lb)

GETtheMANUALS.org

10. Transfer Clutch Pressure Test

A: INSPECTION

1) Lift up the vehicle.
2) Remove the test plug.

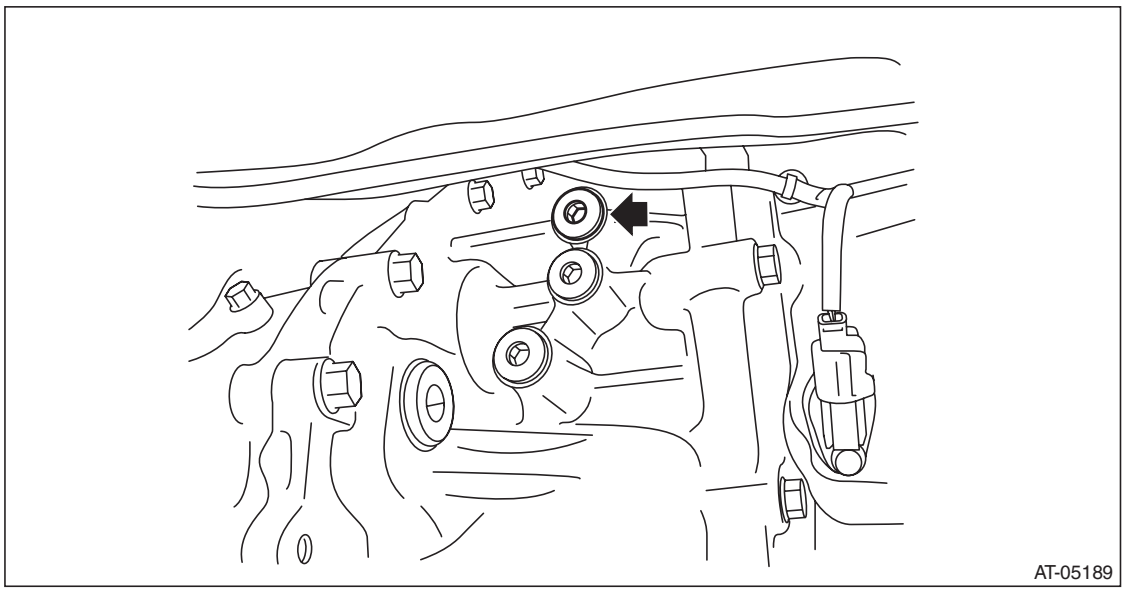

3) Set the ST1, ST2 and ST3 to transmission.

ST1	498575400	OIL PRESSURE GAUGE ASSY
ST2	498897700	OIL PRESSURE ADAPTER SET
ST3	18681AA000	PRESSURE GAUGE ADAPTER

NOTE:
Used together with genuine O-ring (part No. 806911080) attached to ST3 PRESSURE GAUGE ADAPTER.

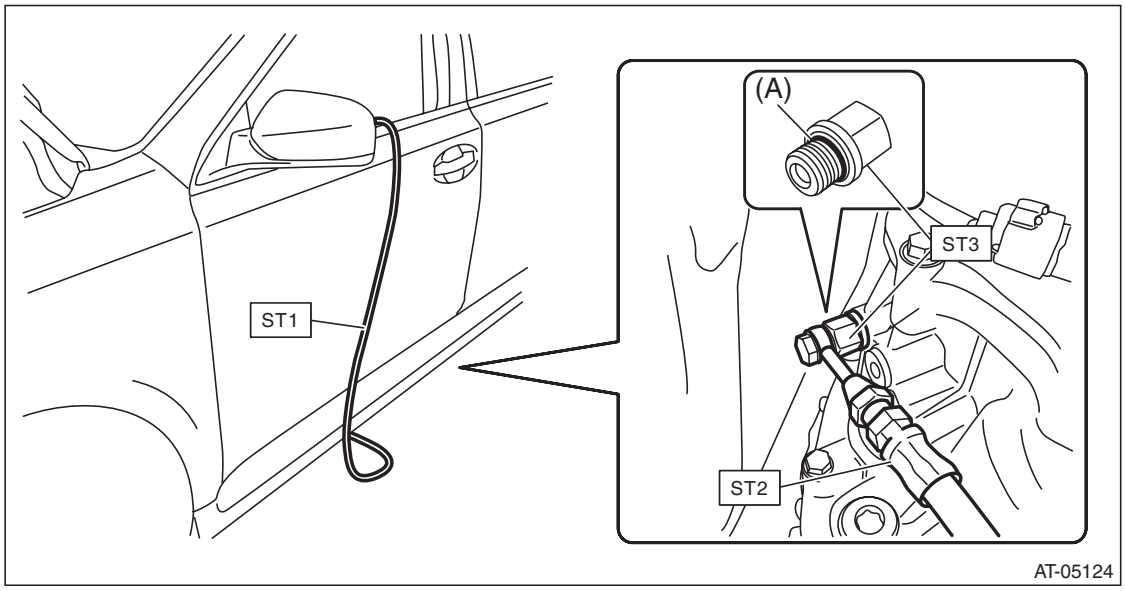

(A) O-ring (genuine part)

4) Lower the vehicle.
5) Connect the Subaru Select Monitor to the data link connector and read the current data.

GETtheMANUALS.org

6) Check the transfer clutch pressure as in secondary pressure (line pressure) test. <Ref. to CVT-50, Secondary Pressure (Line Pressure) Test.>

NOTE:
- Use Subaru Select Monitor for switching to FWD mode. <Ref. to CVT-45, AWD ON/OFF Switching Mode.>
- If no oil pressure is produced, if it does not change in AWD mode or if oil pressure is produced in FWD mode, there may be a problem in the control valve body.

Range position	ON Duty ratio (%)	Accelerator pedal opening angle (%)	Standard transfer clutch pressure kPa (kgf/cm^2, psi)	
			AWD mode	FWD mode
Manual mode (2nd)	95 — 100	Fully opened (100)	1,000 — 1,200 (10.2 — 12.2, 145 — 174)	—
	60	Adjust ON Duty ratio to 60%.	400 — 700 (4.1 — 7.1, 58 — 102)	—
	0	Fully closed (0)	—	0 (0, 0)
N or P	0	Fully closed (0)	0	—

7) Remove the ST and install the plug after measurement.

NOTE:
Use new O-rings.

Tightening torque:
25 N·m (2.5 kgf-m, 18.4 ft-lb)

GETtheMANUALS.org

11. Automatic Transmission Assembly

A: REMOVAL

1) Remove the front wheels.
2) Disconnect the ground cable from battery.
3) Remove the air intake duct. <Ref. to IN(H4SO)-9, REMOVAL, Air Intake Duct.>
4) Remove the air intake boot assembly. <Ref. to IN(H4SO)-8, REMOVAL, Air Intake Boot.>
5) Remove the ten clips and remove the grille bracket.

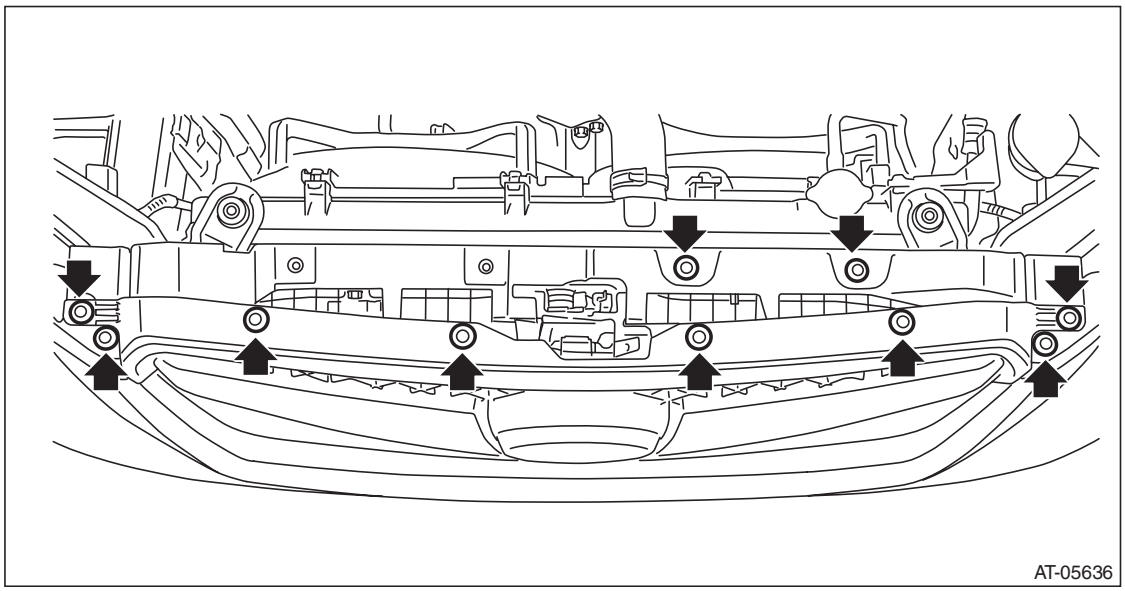

6) Disconnect the following connectors.
- Transmission harness connectors
- Transmission radio ground terminal
- Inhibitor harness connector

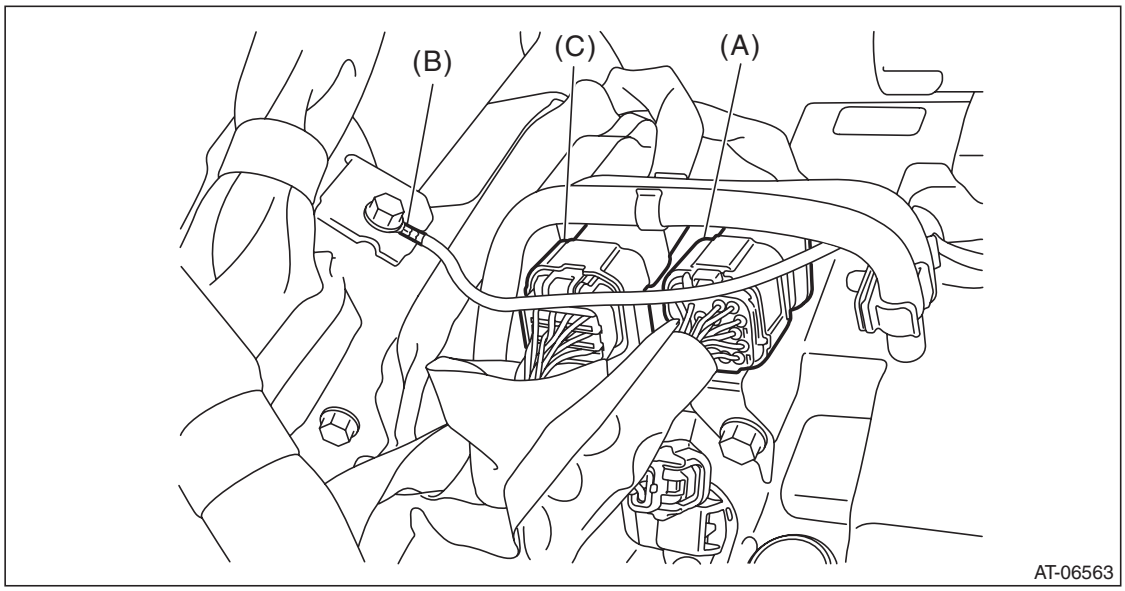

(A) Transmission harness connectors
(B) Transmission radio ground terminal
(C) Inhibitor harness connector

GETtheMANUALS.org

7) Separate the battery cable clip to remove the bracket.

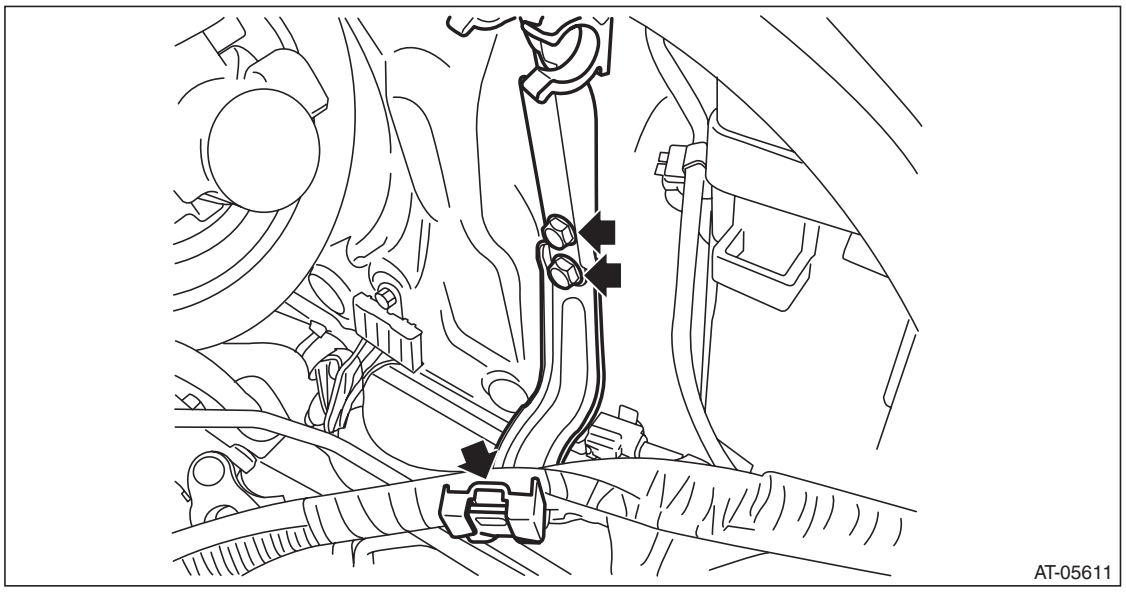

8) Remove the starter. <Ref. to SC(H4SO)-9, REMOVAL, Starter.>
9) Remove the throttle body. <Ref. to FU(H4SO)-15, REMOVAL, Throttle Body.>
10) Remove the manifold absolute pressure sensor. <Ref. to FU(H4SO)-33, REMOVAL, Manifold Absolute Pressure Sensor.>
11) Remove the bolt and disconnect the engine harness connector.

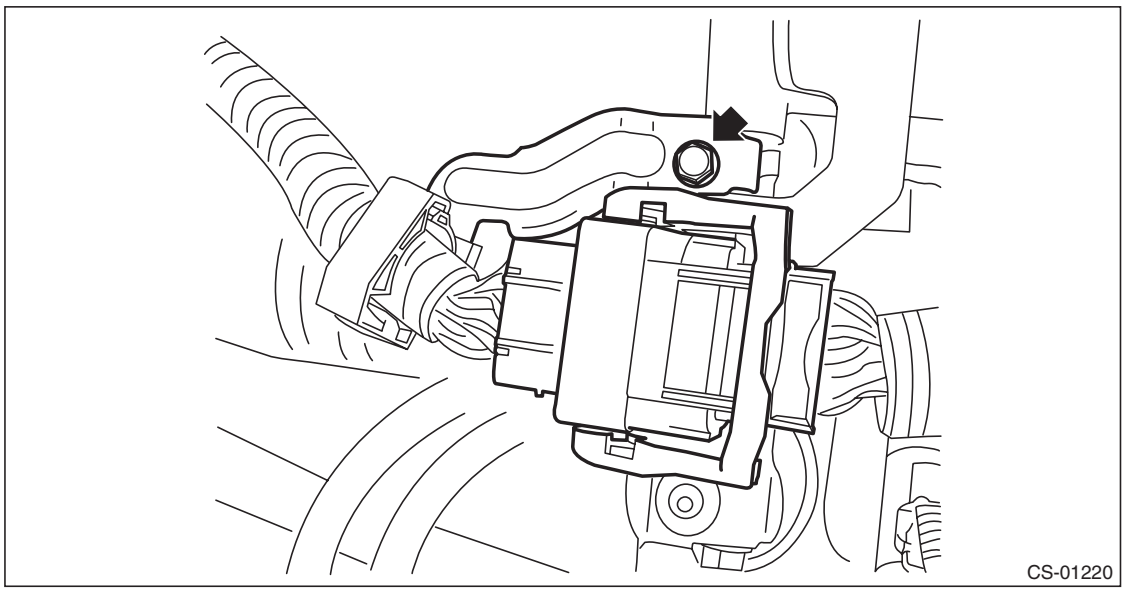

GETtheMANUALS.org

12) Remove the engine harness connector from the engine hanger rear.

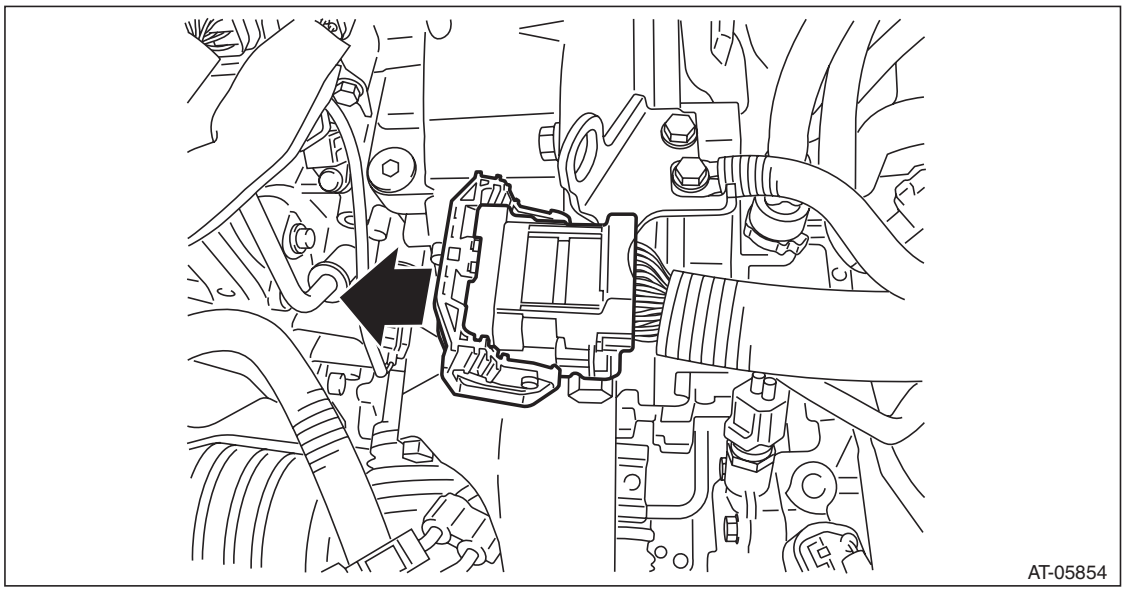

13) Remove the engine hanger rear.

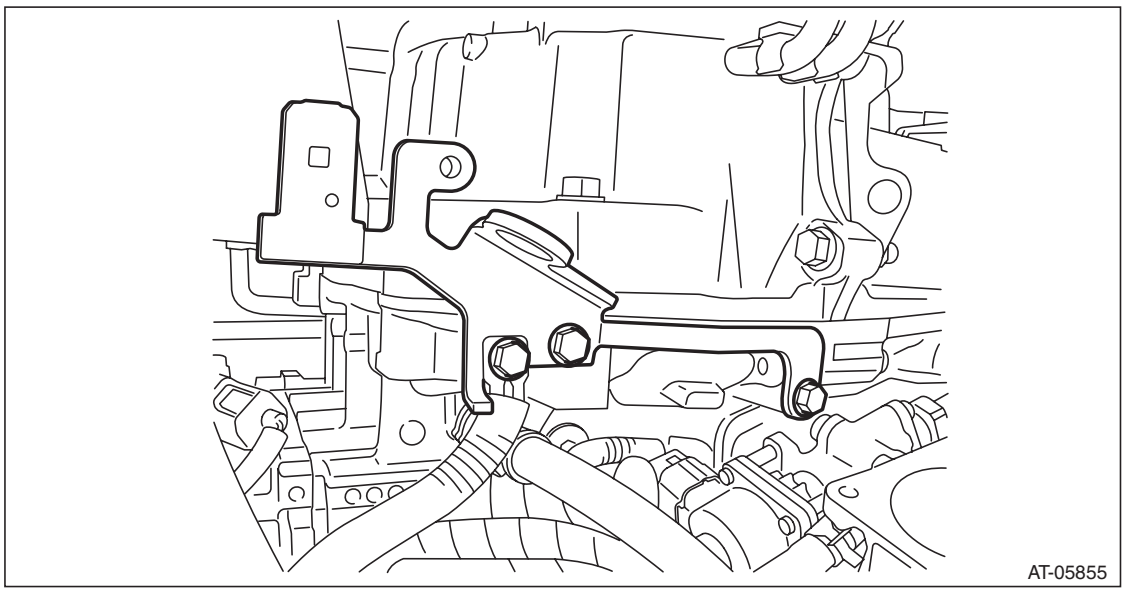

GETtheMANUALS.org

14) Remove the service hole plug.

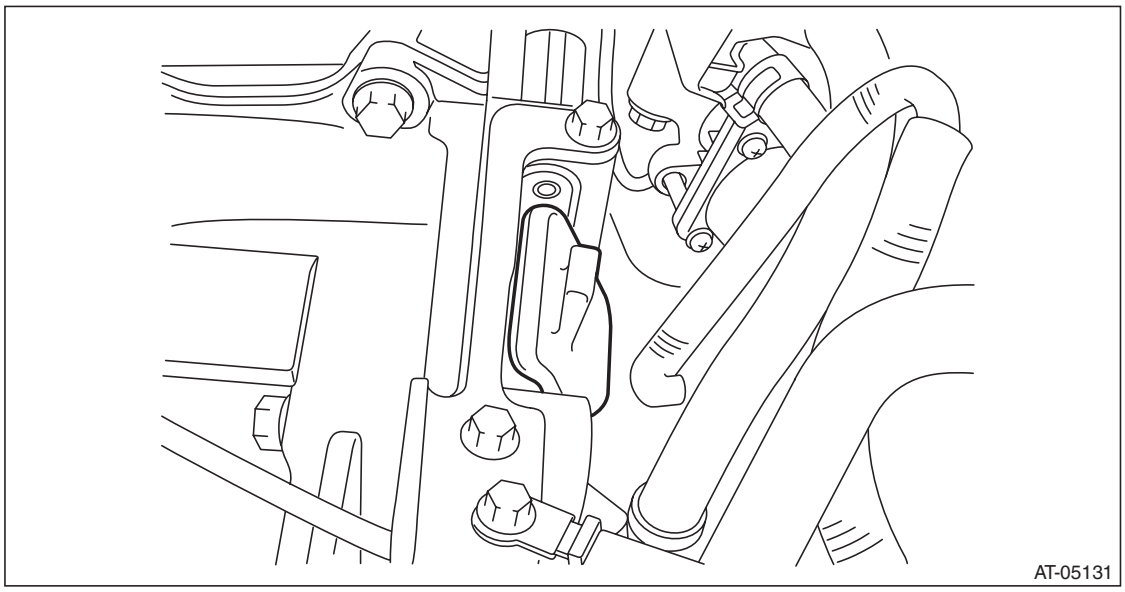

15) Install the engine hanger rear for turbo model.
Part No. 10004AA180 Engine hanger rear

Tightening torque:
16 N·m (1.6 kgf-m, 11.8 ft-lb)

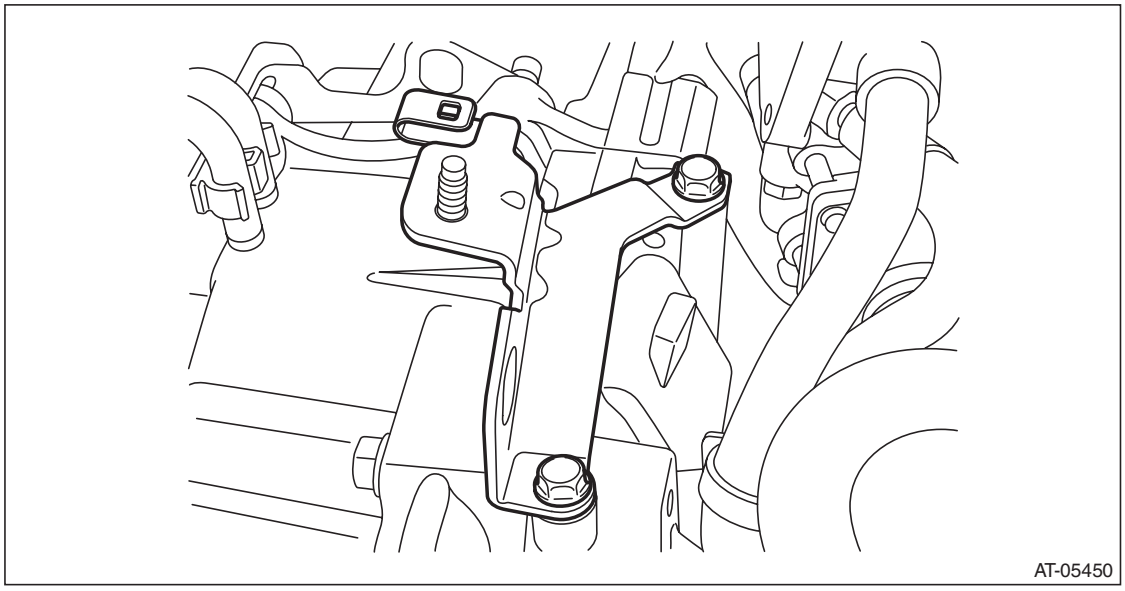

GETtheMANUALS.org

16) Remove the four bolts combining the torque converter and drive plate while rotating the crank pulley a little at a time in the same direction as engine revolution.

CAUTION:
- **Be careful not to drop bolts into converter housing.**
- **Be careful not to damage the mounting bolts.**

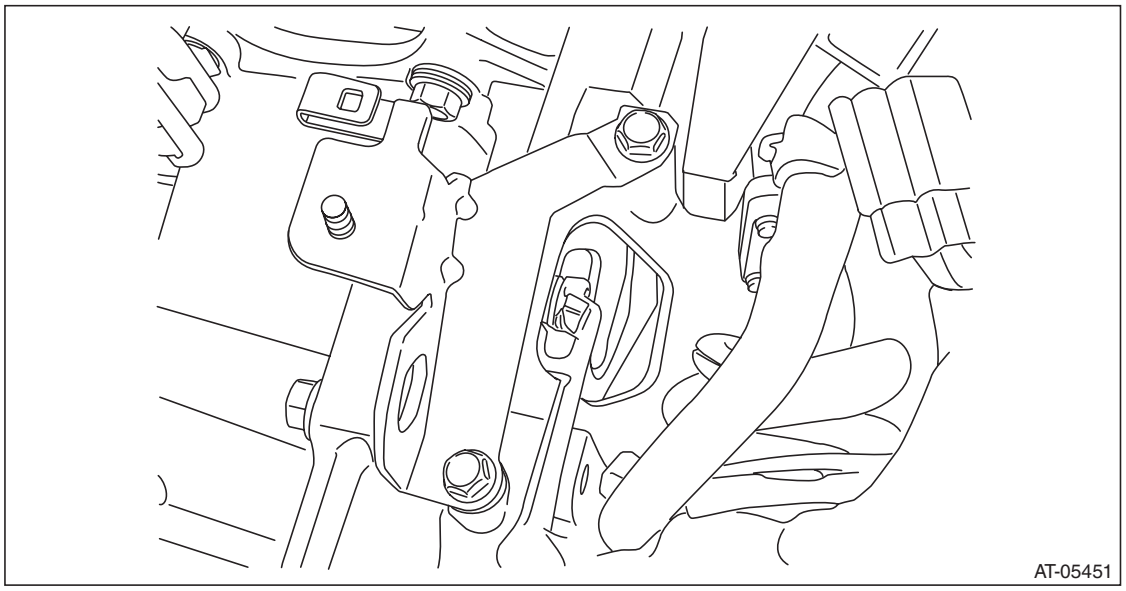

17) Make sure the torque converter moves freely by rotating with finger through the starter installation hole.
18) Attach the ST to the converter case.
ST 498277200 STOPPER SET

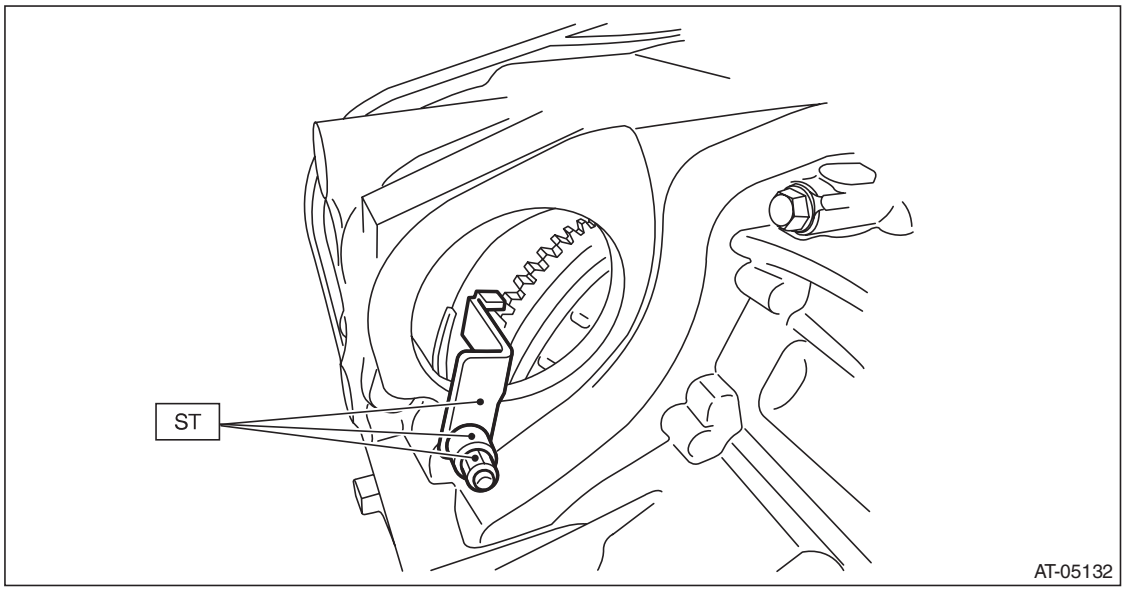

GETtheMANUALS.org

19) After pulling off the cotter pin and removing the castle nut, use a puller to remove the tie-rod end from the knuckle arm.

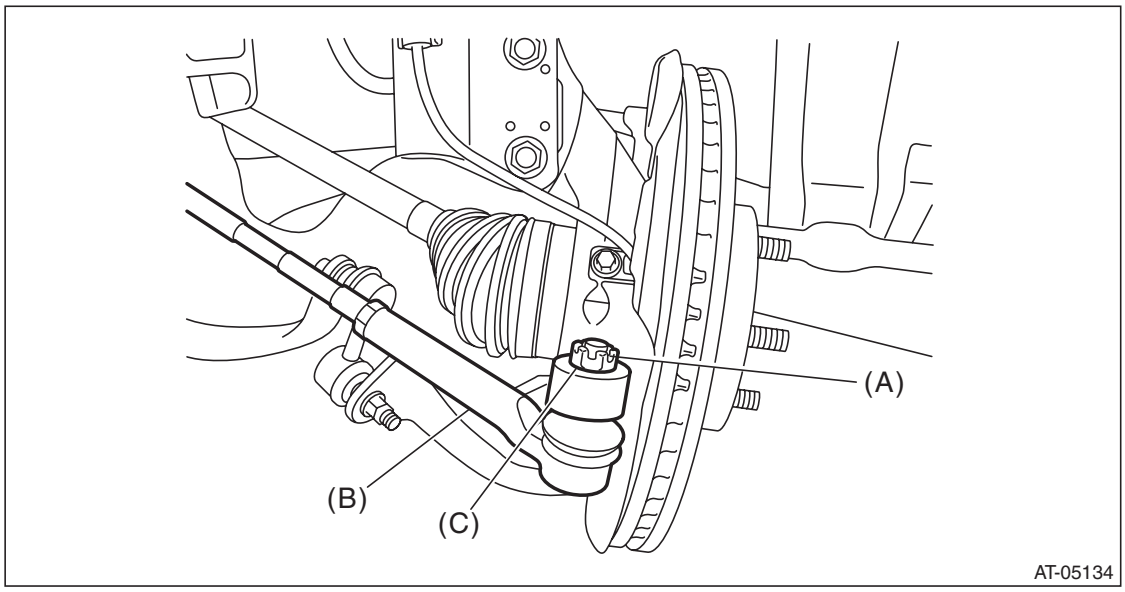

(A) Cotter pin
(B) Tie-rod end
(C) Castle nut

20) Lift up the vehicle.
21) Remove the under cover.
22) Remove the center exhaust pipe. <Ref. to EX(H4SO)-8, REMOVAL, Center Exhaust Pipe.>
23) Remove the CVTF drain plug to drain CVTF. <Ref. to CVT-38, REPLACEMENT, CVTF.>
24) Remove the heat shield cover.

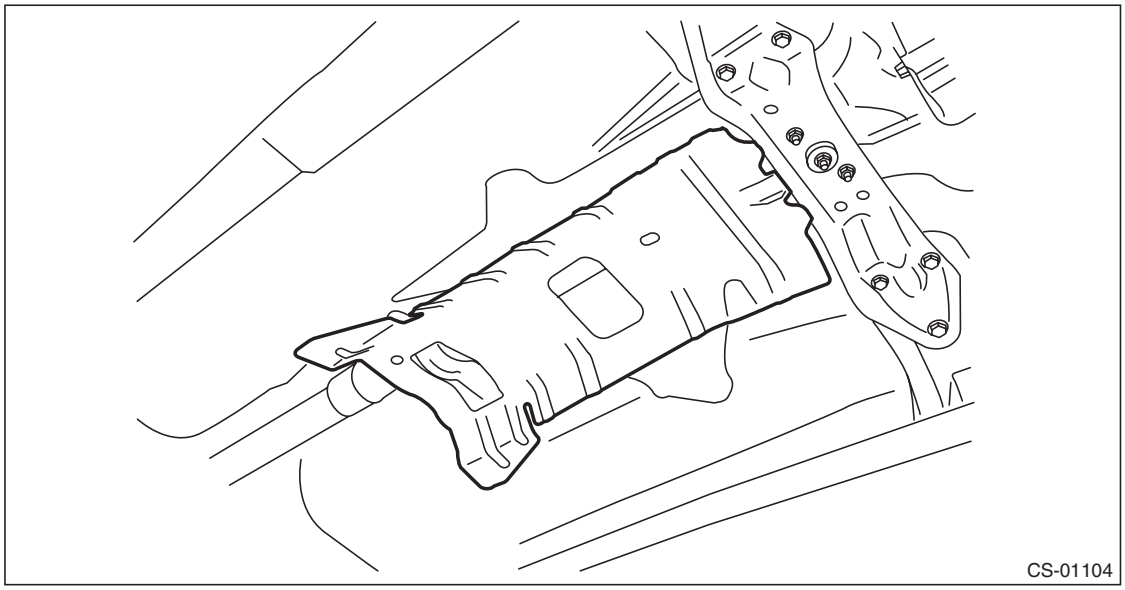

GETtheMANUALS.org

25) Remove the snap pin and washer from shifter arm and remove the select cable from shifter arm.

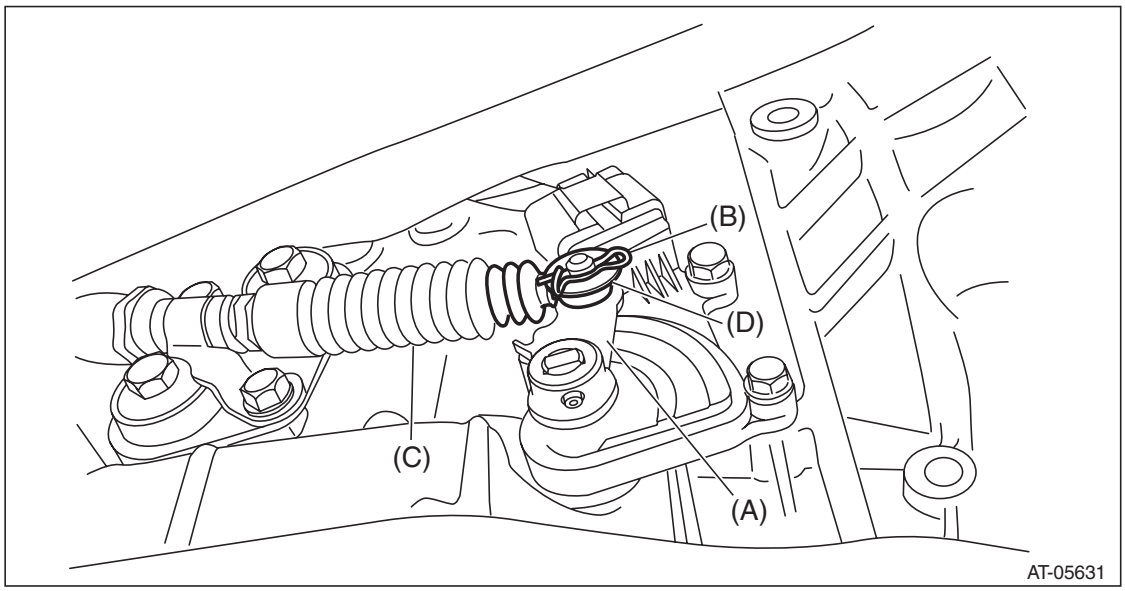

(A) Shifter arm
(B) Snap pin
(C) Select cable
(D) Washer

26) Remove the plate assembly from the transmission case.

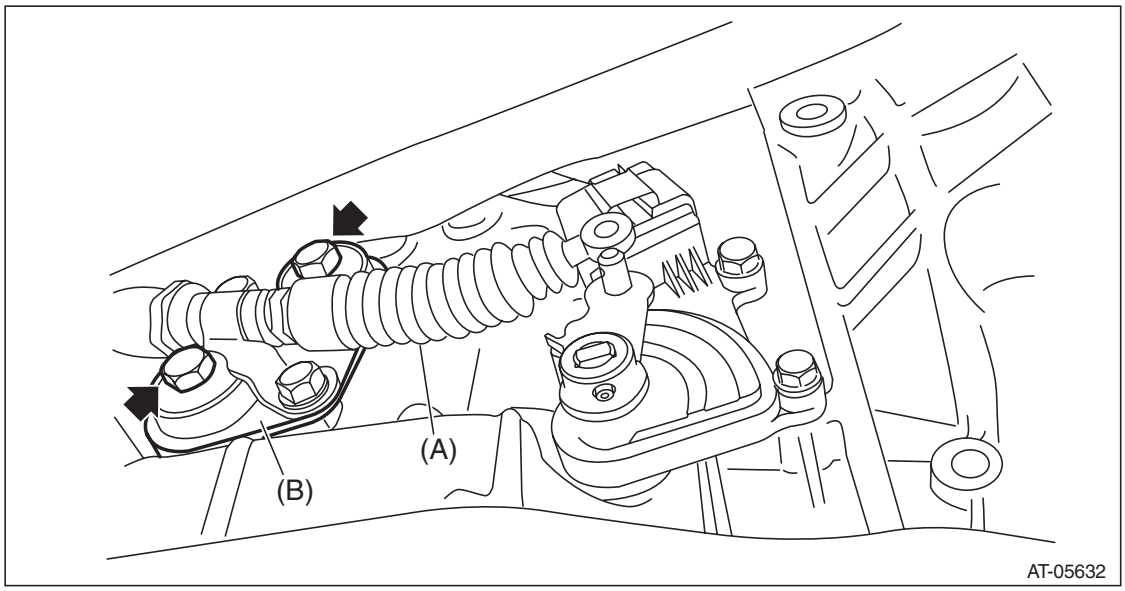

(A) Select cable
(B) Plate ASSY

27) Drain differential gear oil. <Ref. to CVT-42, REPLACEMENT, Differential Gear Oil.>

GETtheMANUALS.org

28) Remove the CVTF CVT inlet hose and CVTF CVT outlet hose.

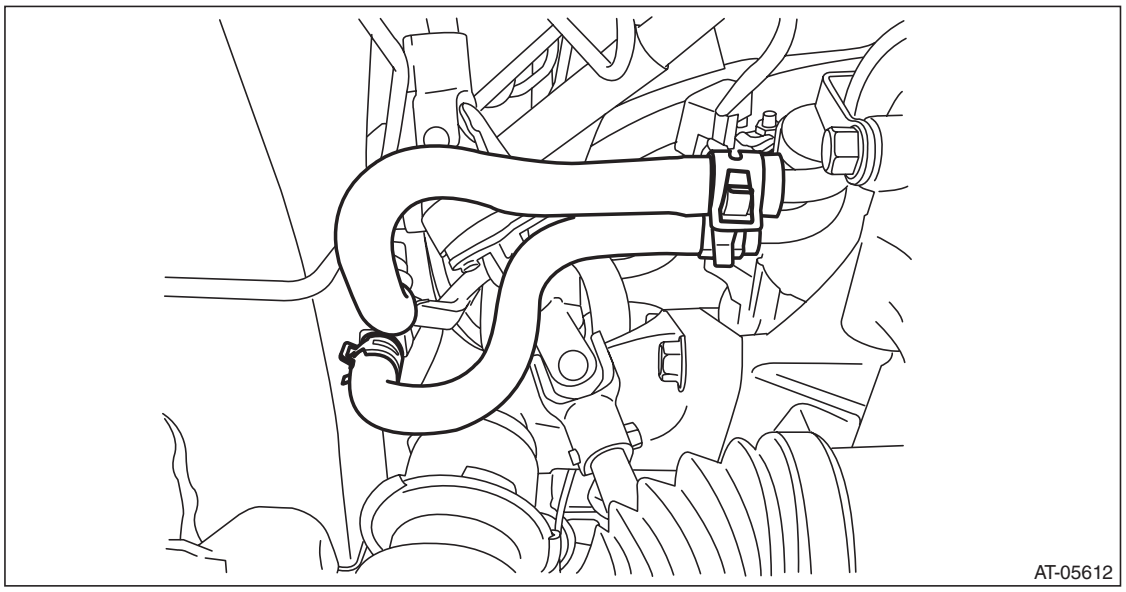

29) Remove the universal joint. <Ref. to PS-21, REMOVAL, Universal Joint.>
30) Remove the propeller shaft. <Ref. to DS-10, REMOVAL, Propeller Shaft.>
31) Remove the stabilizer link.
32) Disconnect the lower arm ball joint and housing.
33) Pull out the front drive shaft from transmission using a crowbar.
34) Holding the joint of front drive shaft from transmission side, pull out the drive shaft from transmission with care not to stretch the boot.
35) Lower the vehicle.
36) Remove the nuts from left and right transmission mounting brackets.

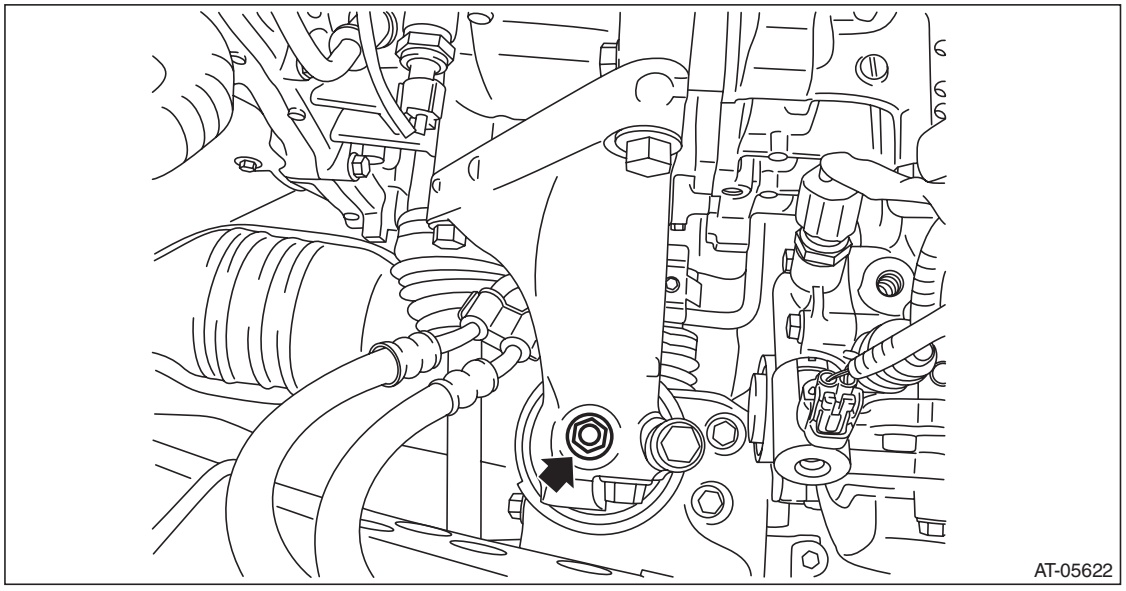

GETtheMANUALS.org

37) Set the ST1 and ST2 to vehicle.
ST1 99099AJ000 ENGINE HANGER
ST2 99099AJ010 CHAIN BALANCER

CAUTION:
- **Set so that the chain sling does not contact the engine parts.**
- **Set the arms of ST (ENGINE HANGER) at the locations shown in the figure.**

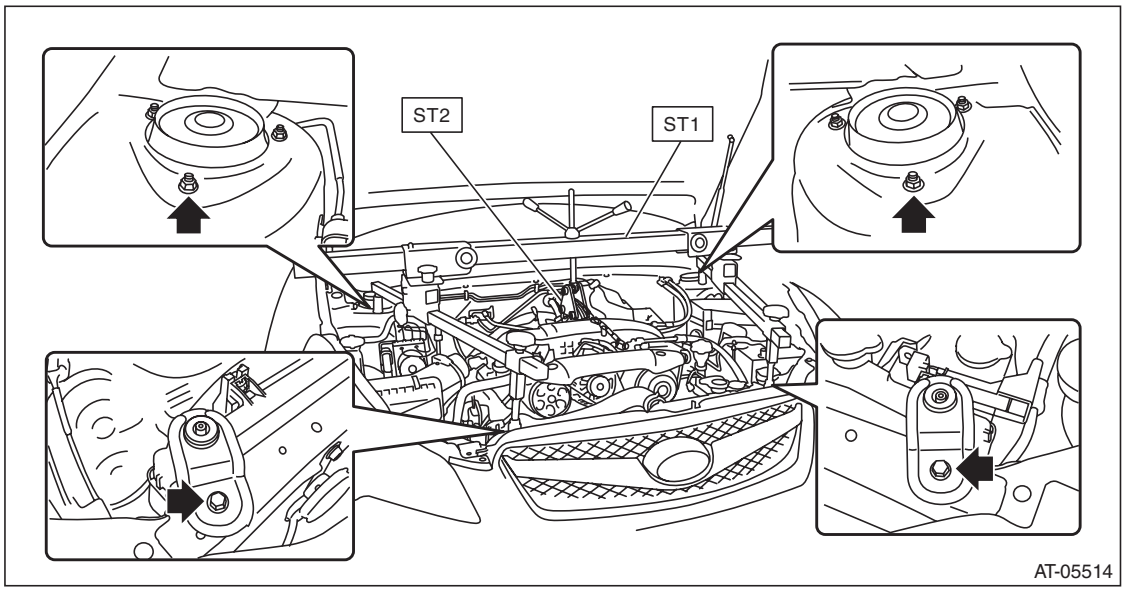

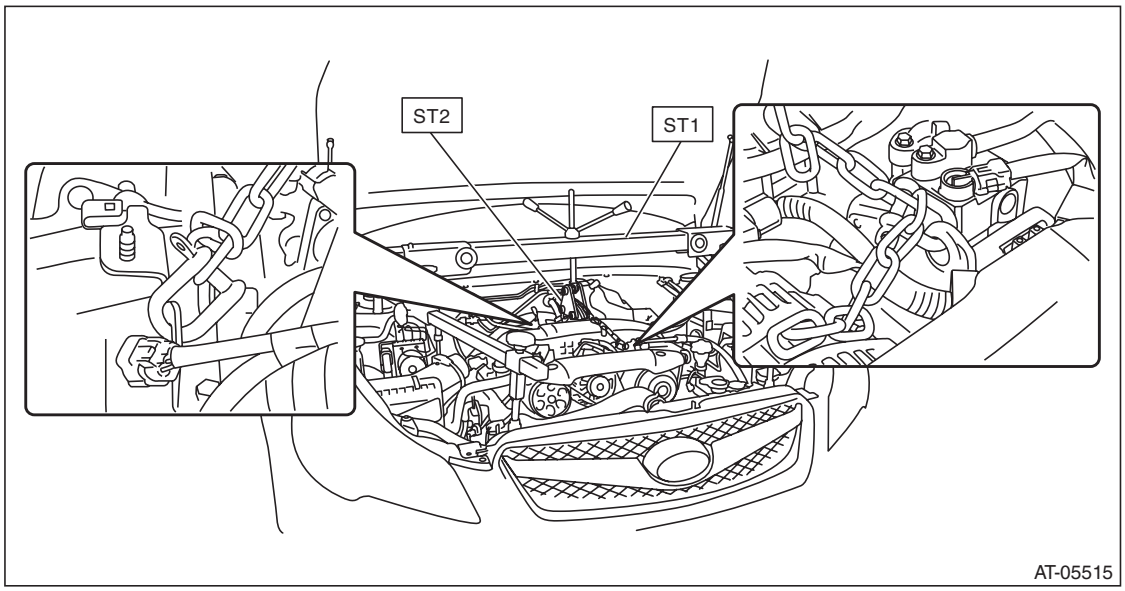

GETtheMANUALS.org

38) Remove the stopper rod.

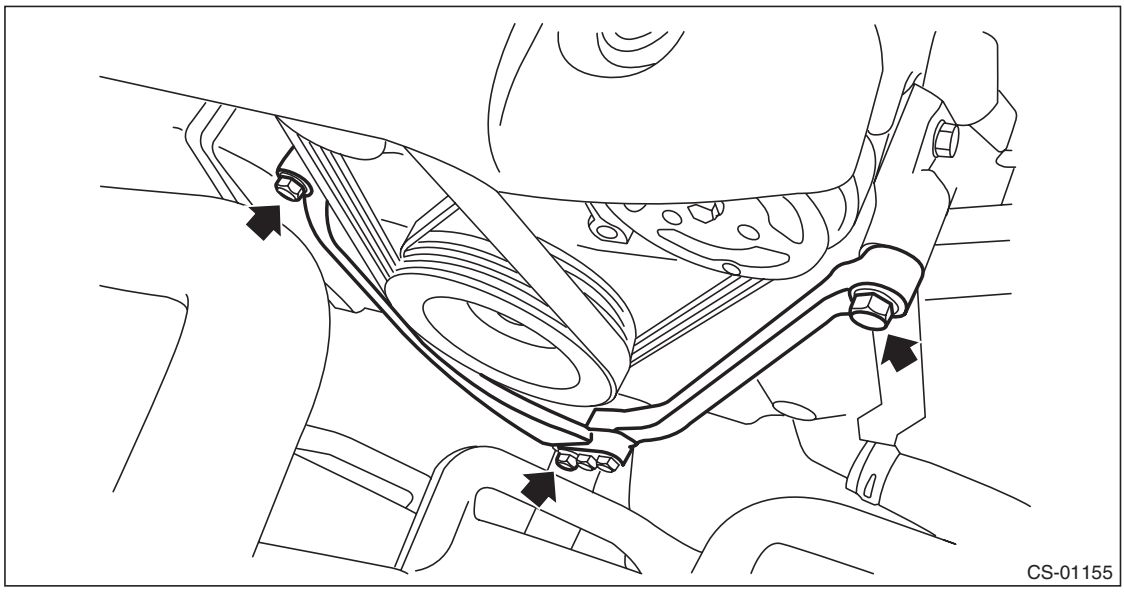

39) Lift the engine slightly and remove the engine mounting bolts.

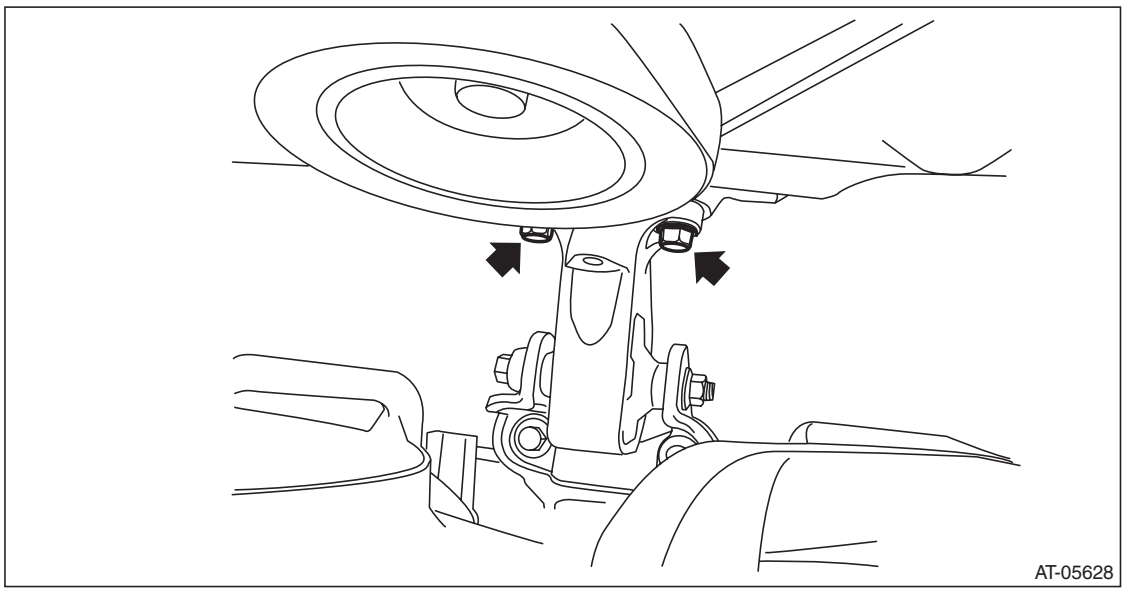

GETtheMANUALS.org

40) Remove the engine mounting nut and bolt to remove the front cushion rubber.

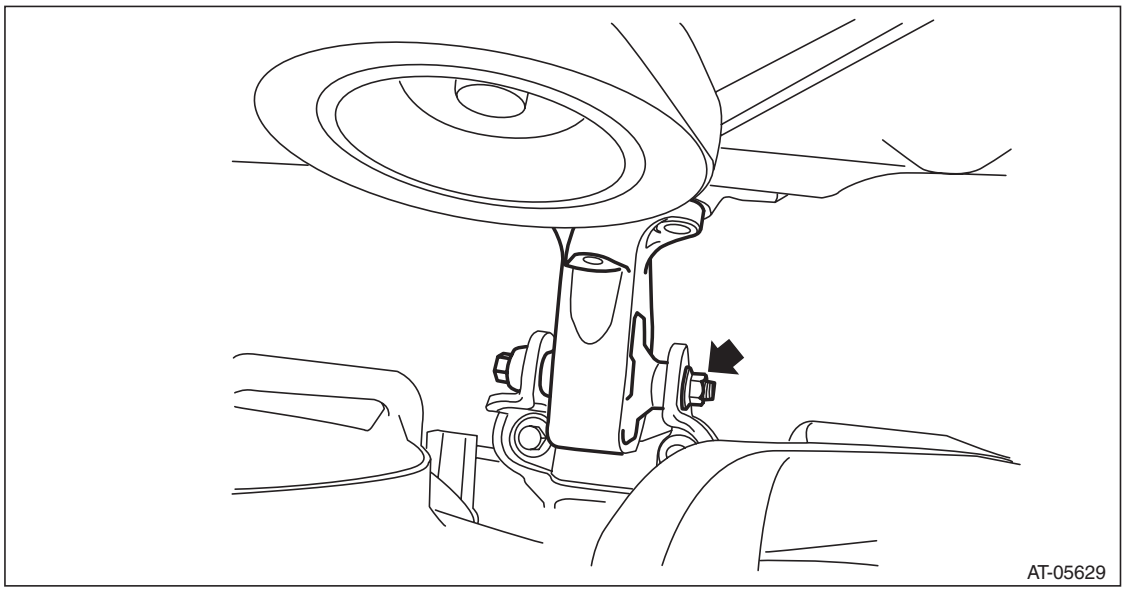

41) Temporarily attach ST by using two bolts.
ST 41099AJ000 SPECIAL TOOL H4

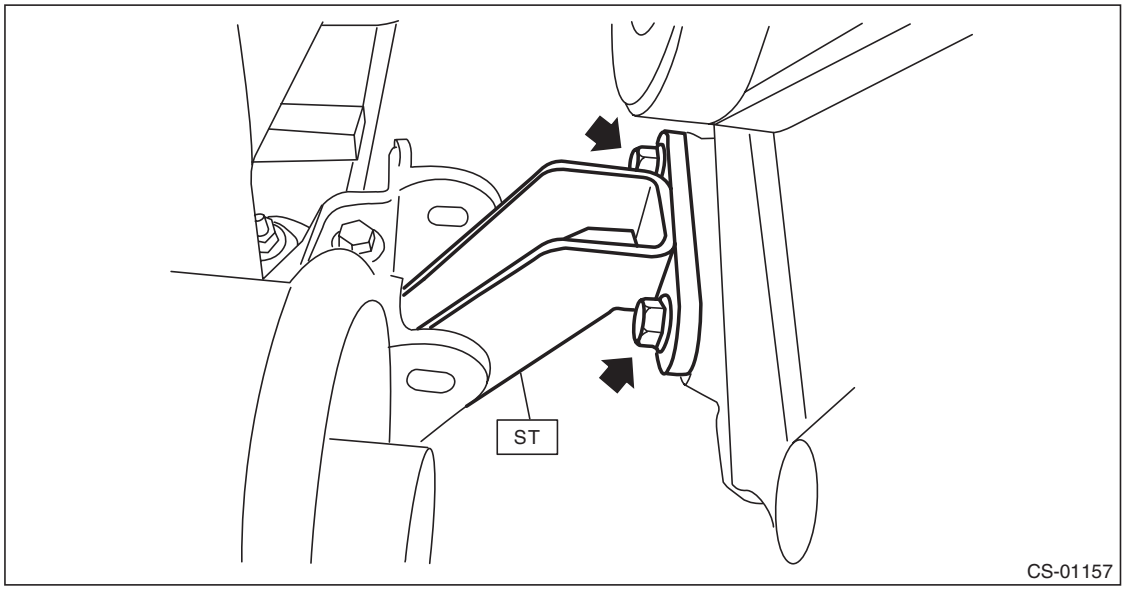

GETtheMANUALS.org

42) Lift up the engine unit high enough to install the bolt and nut to vehicle.

CAUTION:
Do not lift up higher than enough level to install the ST to avoid damage to the hoses and pipes inside the engine room.

NOTE:
- If it is difficult to pull out the stud bolt from transmission mounting bracket, shake the engine unit slightly while lifting up.

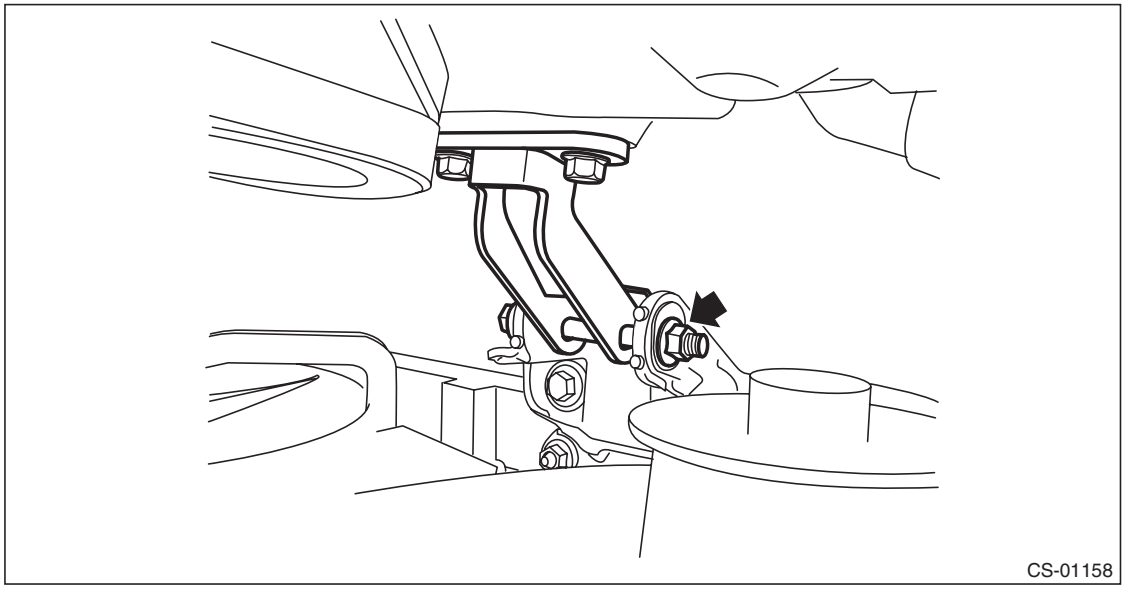

43) Tighten the mounting bolts on the engine side.

Tightening torque:
25 N·m (2.5 kgf-m, 18.4 ft-lb)

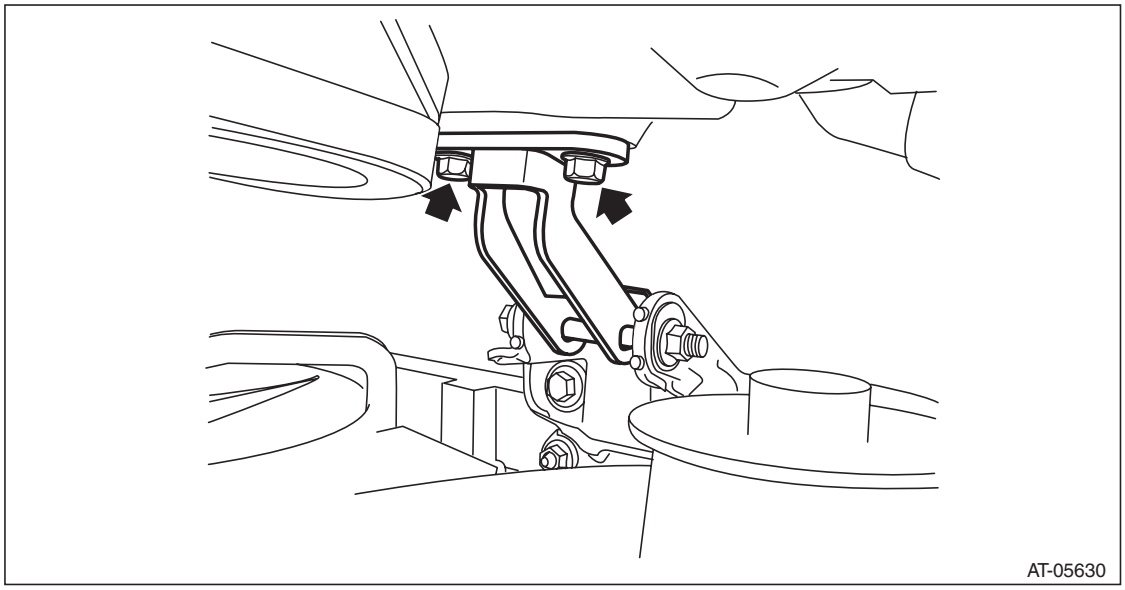

44) Remove the ST (ENGINE HANGER).

GETtheMANUALS.org

45) Remove the left and right transmission mounting brackets.

NOTE:
First, remove the transmission mounting bracket on the right side of vehicle, and then tilt the engine unit to remove the left transmission mounting bracket.

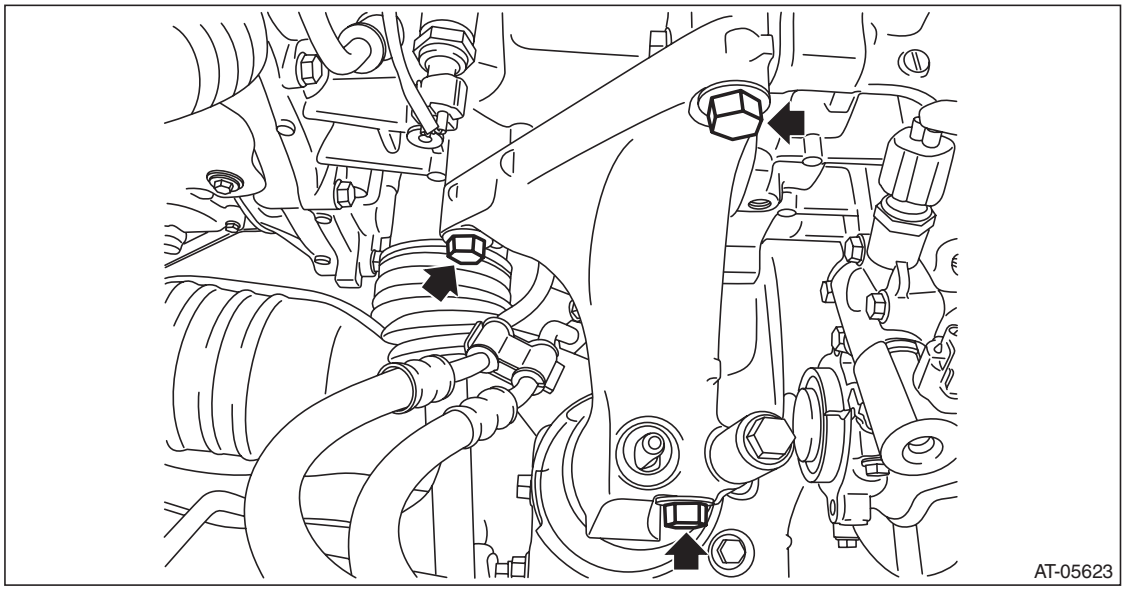

46) Remove the four transmission connecting bolts.

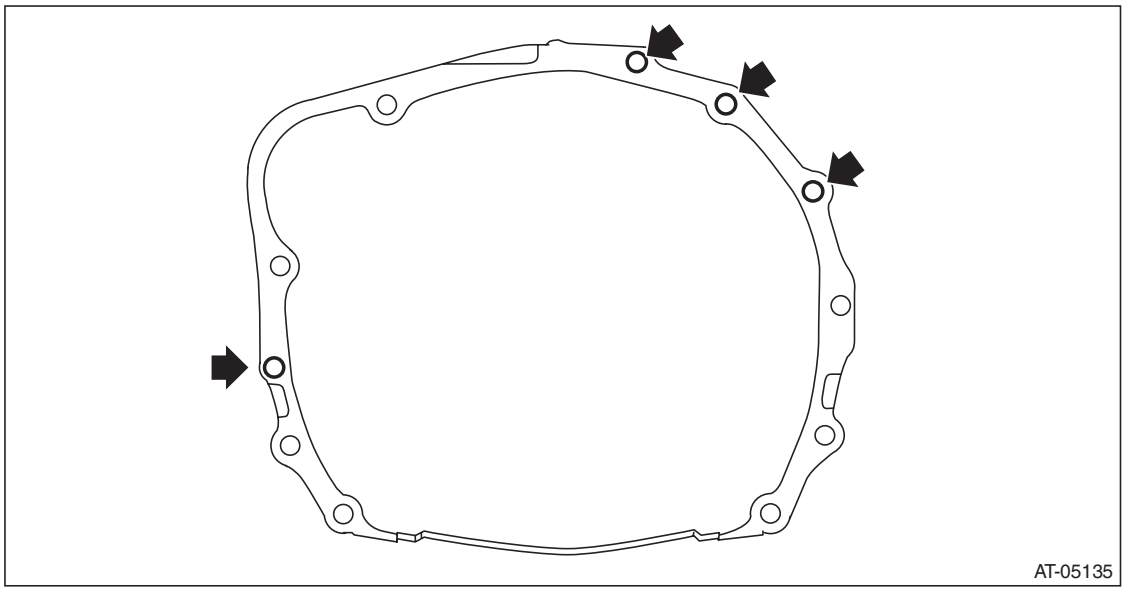

47) Set the ST (ENGINE HANGER) again to loosen the chain sling.
48) Lift up the vehicle.
49) Set the transmission jack under the transmission.

GETtheMANUALS.org

50) Remove the rear crossmember.

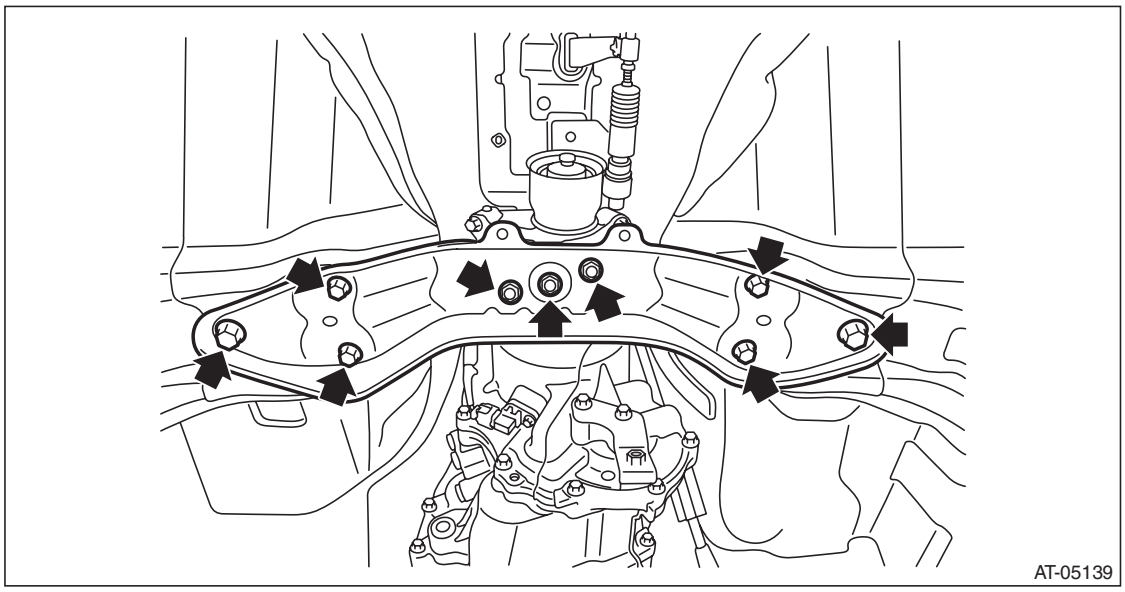

51) Lower the transmission rear end (dust cover rear end).

CAUTION:
When lowering the transmission rear end, be careful not to let the converter case and steering mechanical parts contact each other.

NOTE:
Lower the transmission rear end by approx. 80 mm (3.1 in) (reference).

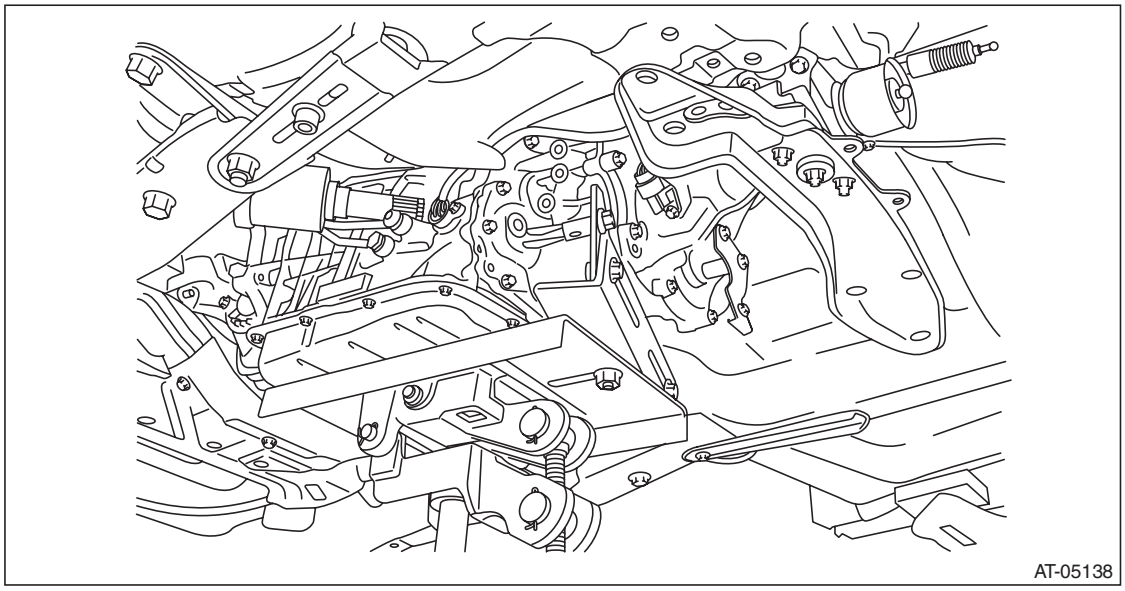

52) Rotate the handle of ST (ENGINE HANGER) to apply tension to the chain sling.

GETtheMANUALS.org

53) Remove the two transmission connecting bolts and two nuts (lower side).

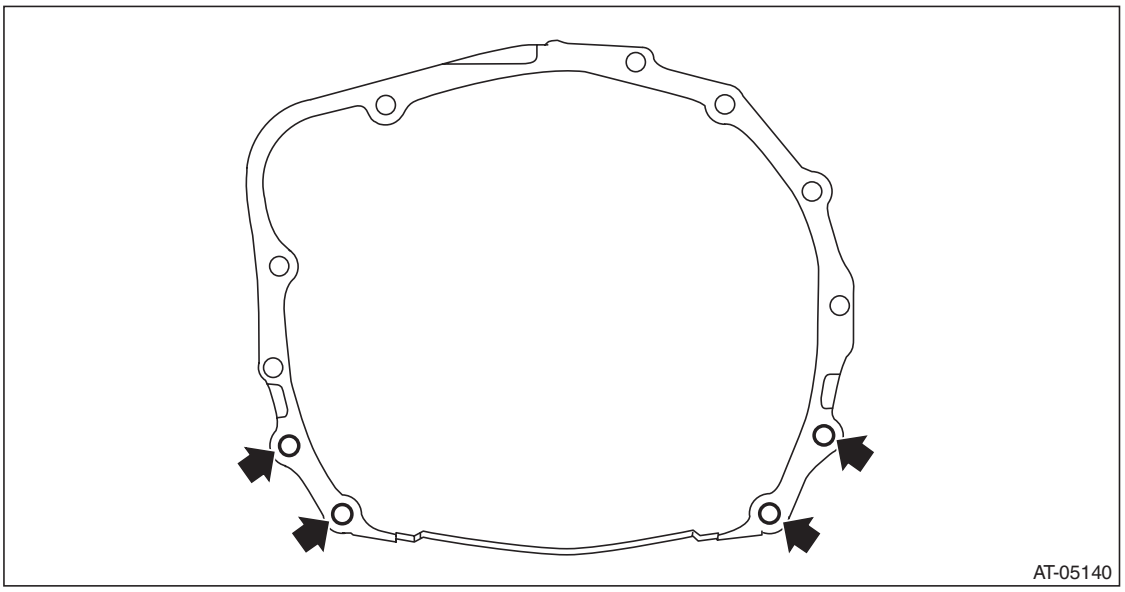

54) Remove the transmission assembly.

NOTE:
Remove it while moving the transmission jack up and down so that the engine and transmission remain directly aligned.

55) Remove the cushion rubber.

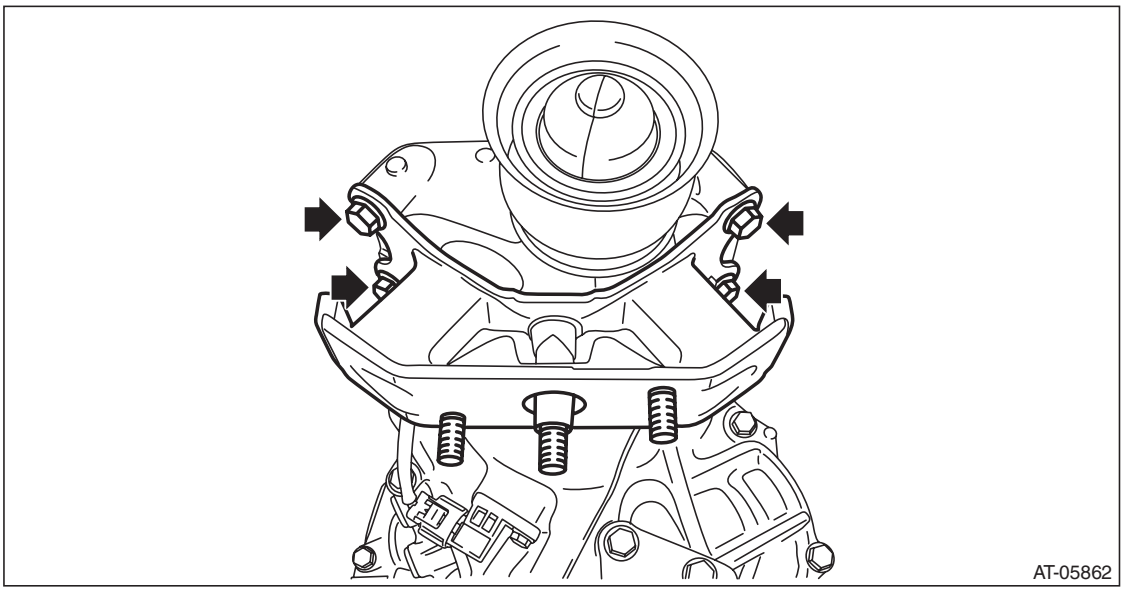

GETtheMANUALS.org

B: INSTALLATION

1) Attach the ST to converter case.
ST 498277200 STOPPER SET

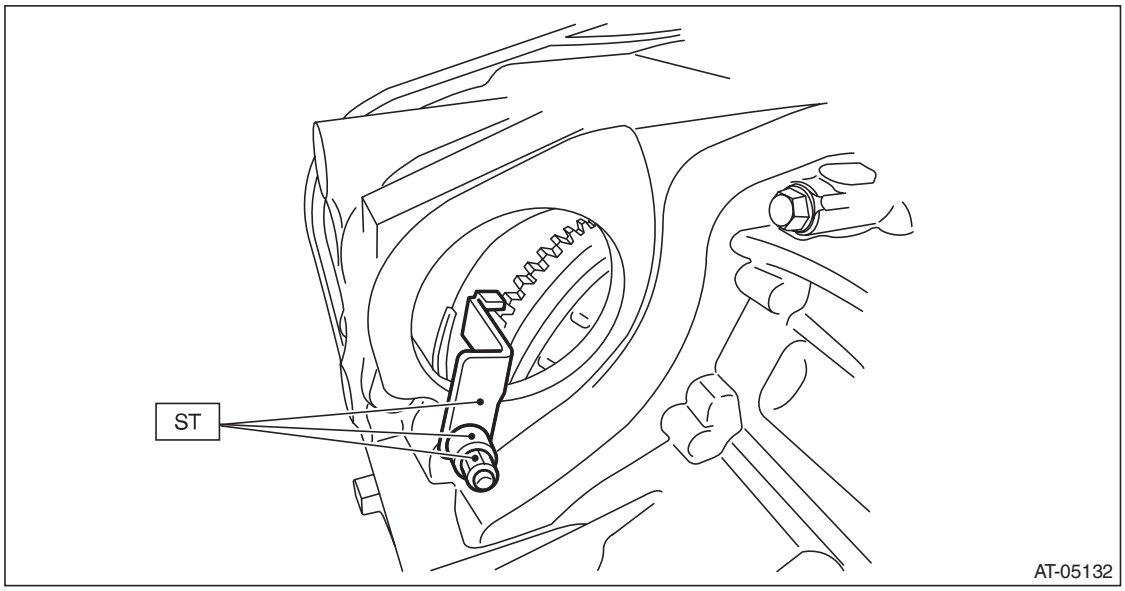

2) When completely overhauling the transmission, refill approx. 10 ℓ (2.6 US qt, 8.8 Imp qt) of CVTF through the transmission right side plug, and install the plug.

CAUTION:
Always use specified CVTF or equivalent. Using other fluid than specified or equivalent will cause malfunction. <Ref. to CVT-4, HYDRAULIC CONTROL AND LUBRICATION, SPECIFICATION, General Description.>

NOTE:
Use a new gasket.

Tightening torque:
35 N·m (3.6 kgf-m, 25.8 ft-lb)

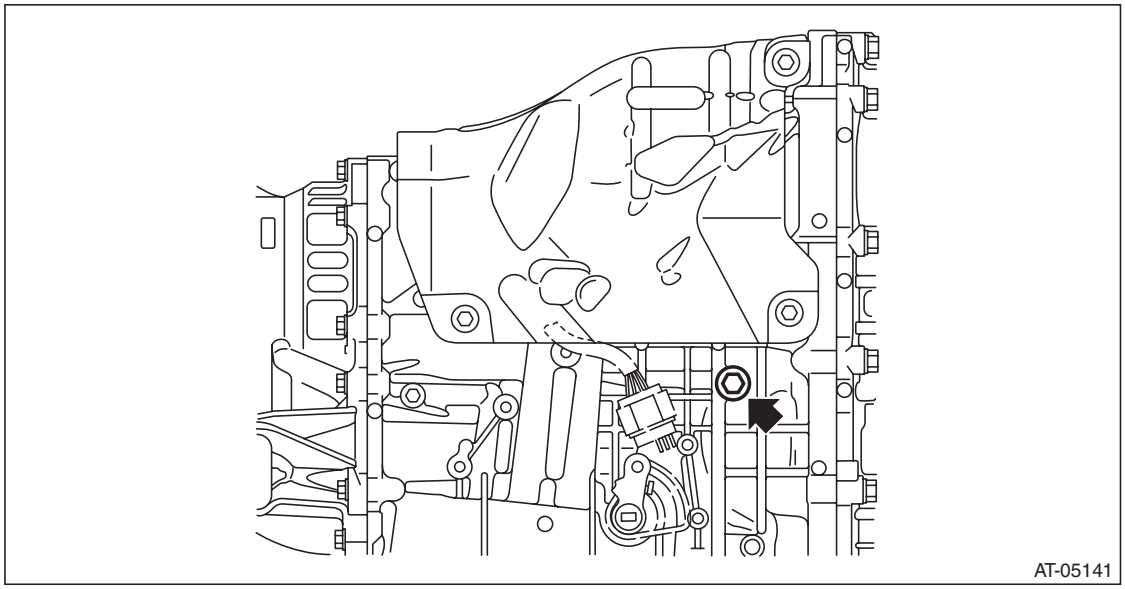

GETtheMANUALS.org

3) Replace the front differential side retainer oil seal. <Ref. to CVT-91, REPLACEMENT, Differential Side Retainer Oil Seal.>

NOTE:
- Be sure to replace the differential side retainer oil seal with a new part whenever the front drive shaft is removed from the transmission.
- When a new differential side retainer oil seal has been installed, replacement is not required.

4) Install the cushion rubber on the transmission.

Tightening torque:
40 N·m (4.1 kgf-m, 29.5 ft-lb)

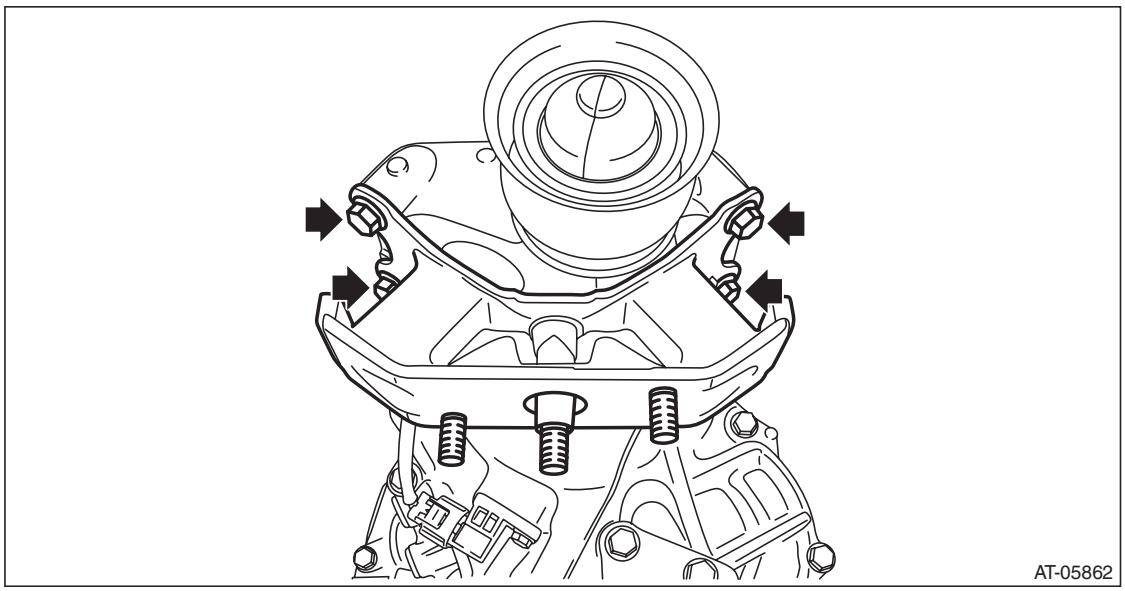

5) Mount the transmission onto the transmission jack.
6) Strike and bend the transmission hanger of transmission rear with a soft rubber hammer etc. so that it gets in contact with the transmission case.

CAUTION:
Do not apply extra overload or impact to the transmission case.

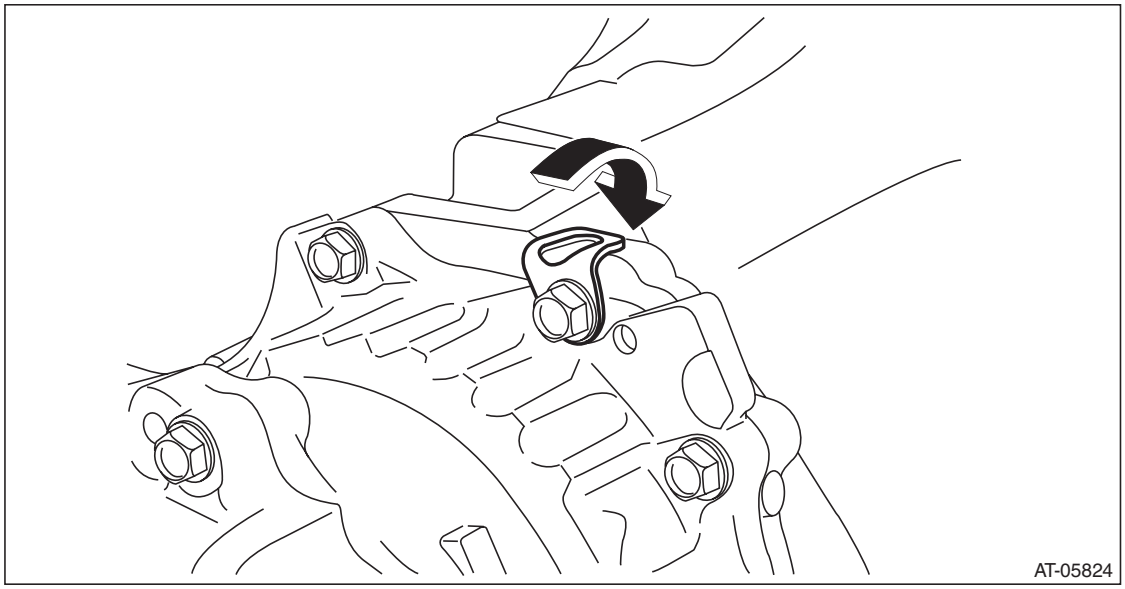

GETtheMANUALS.org

7) While lifting up the transmission gradually, install the transmission to the engine.

CAUTION:
This operation requires at least two persons.

NOTE:
Keep the engine level.
8) Install the two engine connecting bolts and two nuts (lower side).

Tightening torque:
50 N·m (5.1 kgf-m, 36.9 ft-lb)

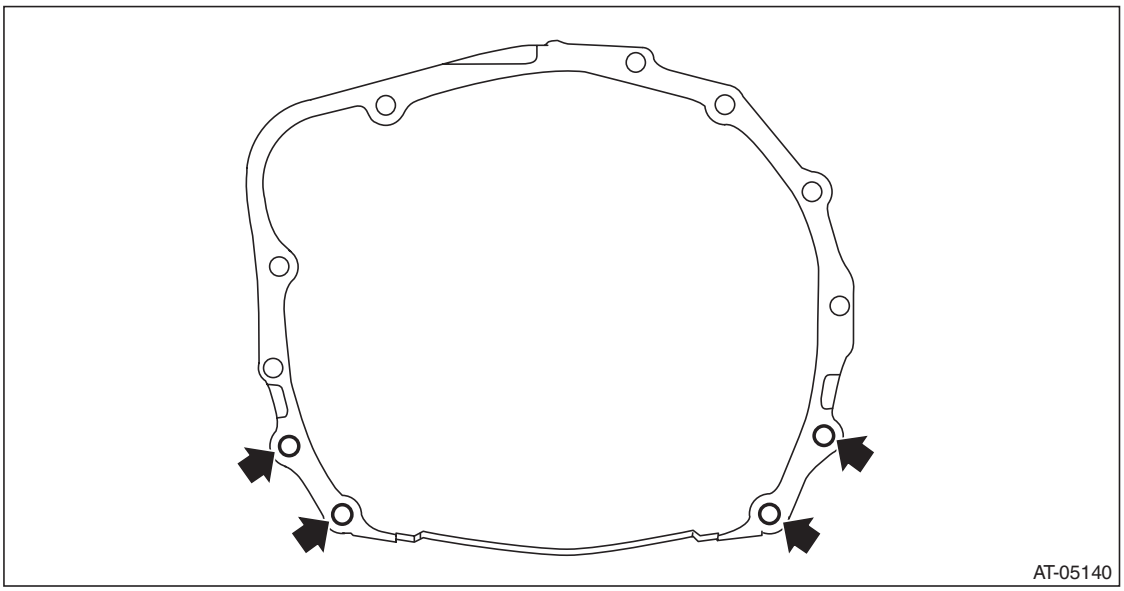

9) Secure the transmission rear crossmember to the vehicle body.

Tightening torque:
T1: 35 N·m (3.6 kgf-m, 25.8 ft-lb)
T2: 75 N·m (7.6 kgf-m, 55.3 ft-lb)

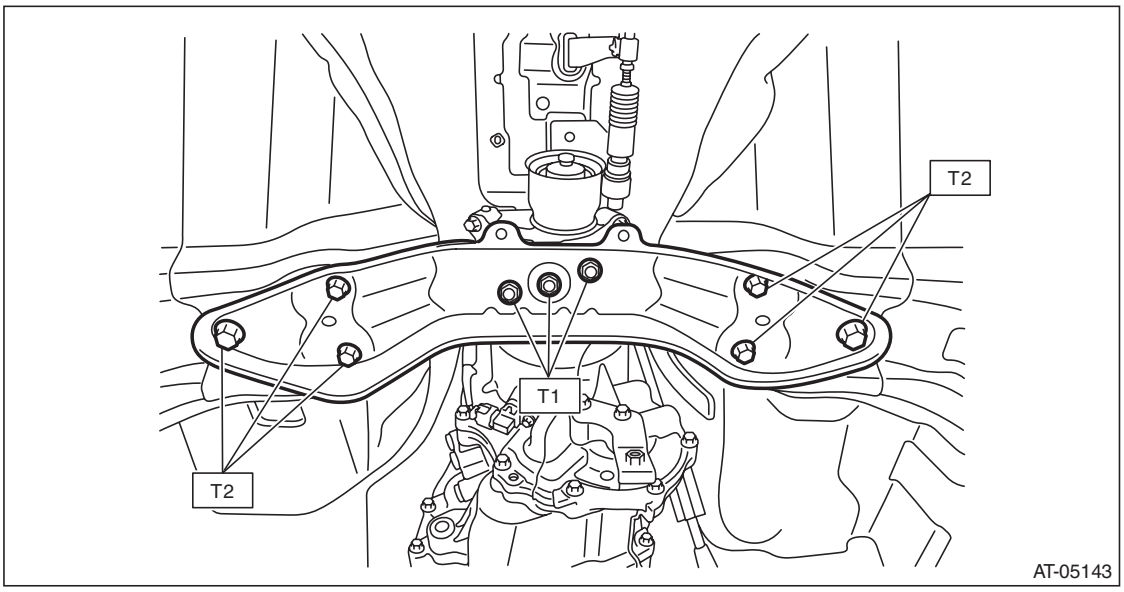

10) Remove the transmission jack.
11) Lower the vehicle.
12) Remove the ST (ENGINE HANGER).

GETtheMANUALS.org

13) Install the four engine mounting bolts (upper side).

Tightening torque:
50 N·m (5.1 kgf-m, 36.9 ft-lb)

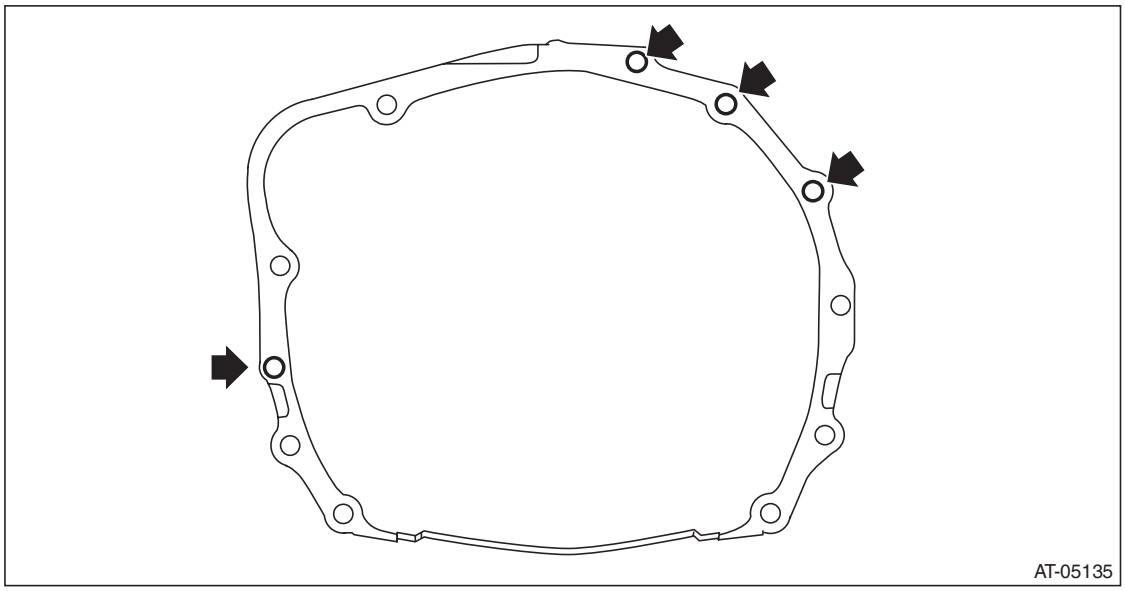

14) Install the left and right transmission mounting brackets.

NOTE:
- Install to the left side of vehicle first because the engine inclines to the left.
- Temporarily tighten the bolt arrowed in the figure.

Tightening torque:
75 N·m (7.6 kgf-m, 55.3 ft-lb)

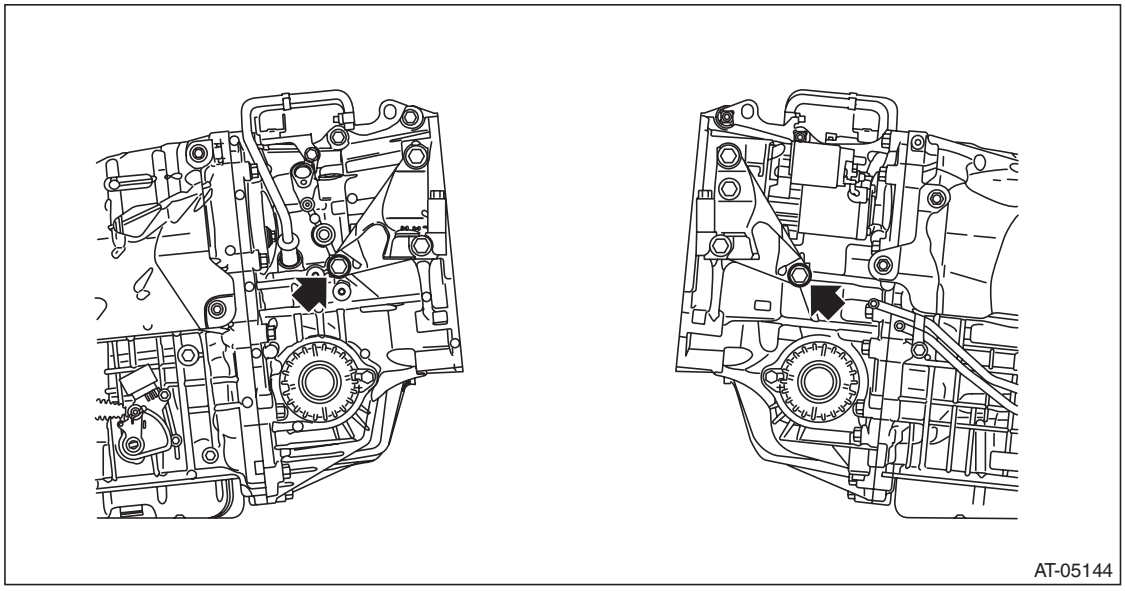

GETtheMANUALS.org

15) Set the ST1 to vehicle body and lift up the engine unit slightly.
ST1 99099AJ000 ENGINE HANGER
ST2 99099AJ010 CHAIN BALANCER

CAUTION:
- **Set so that the chain sling does not contact the engine parts.**
- **Set the arms of ST (ENGINE HANGER) at the locations shown in the figure.**

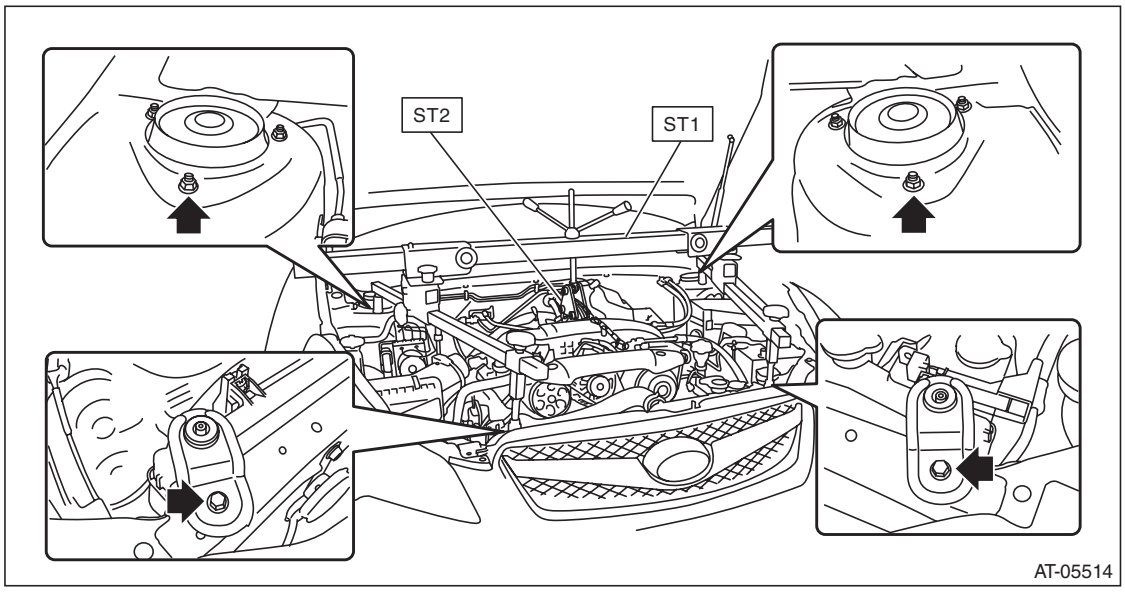

16) Remove the bolts from ST (SPECIAL TOOL H4).

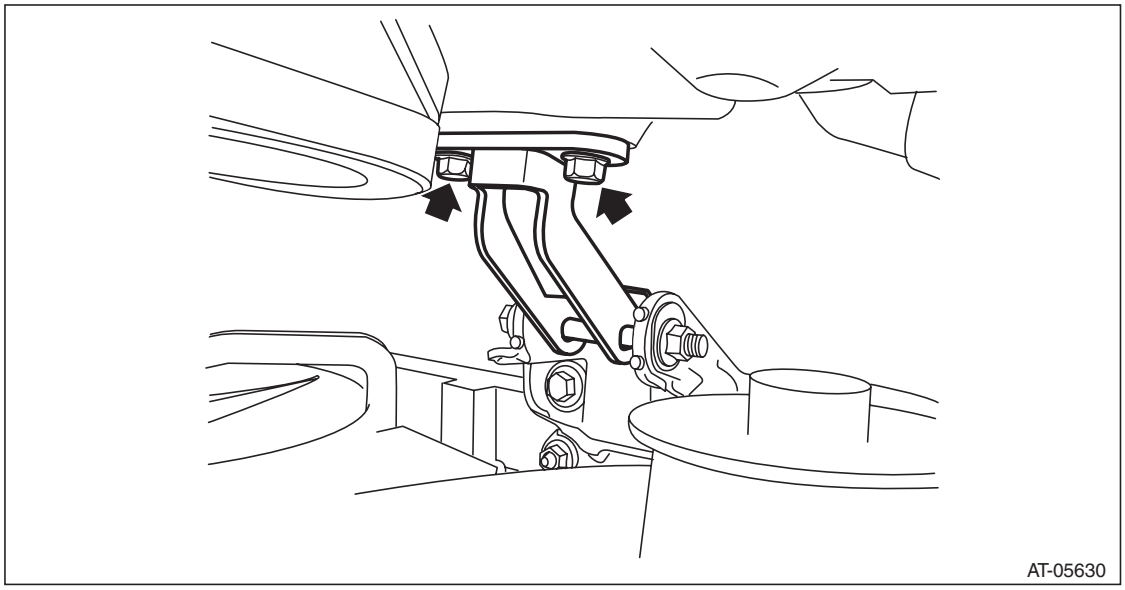

GETtheMANUALS.org

17) Remove the bolt and nut to remove ST (SPECIAL TOOL H4).

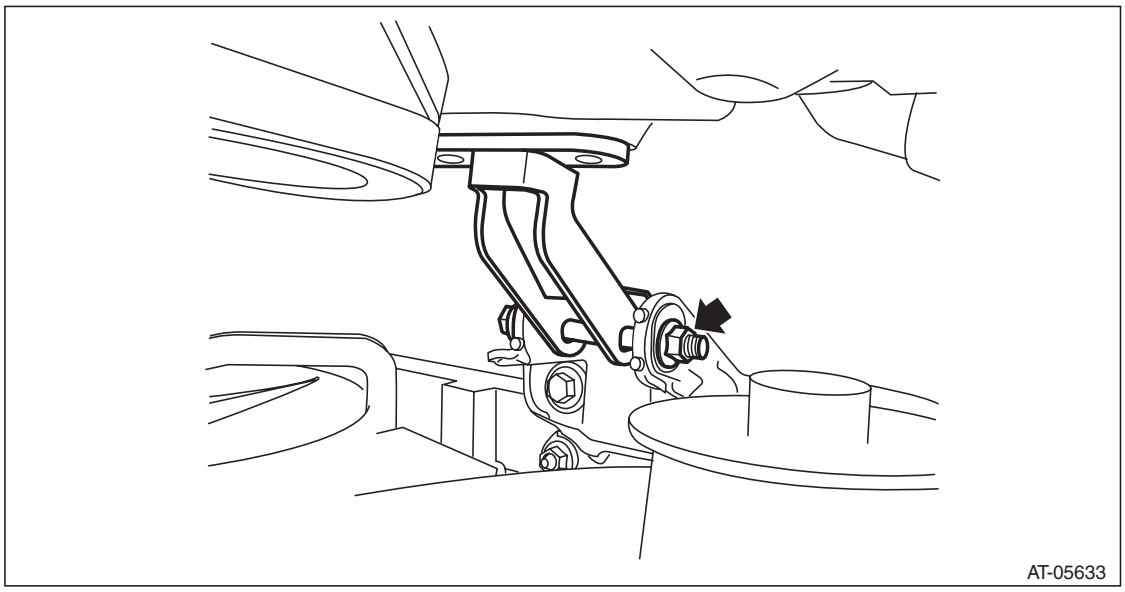

18) Temporarily attach the front cushion rubber with bolts.

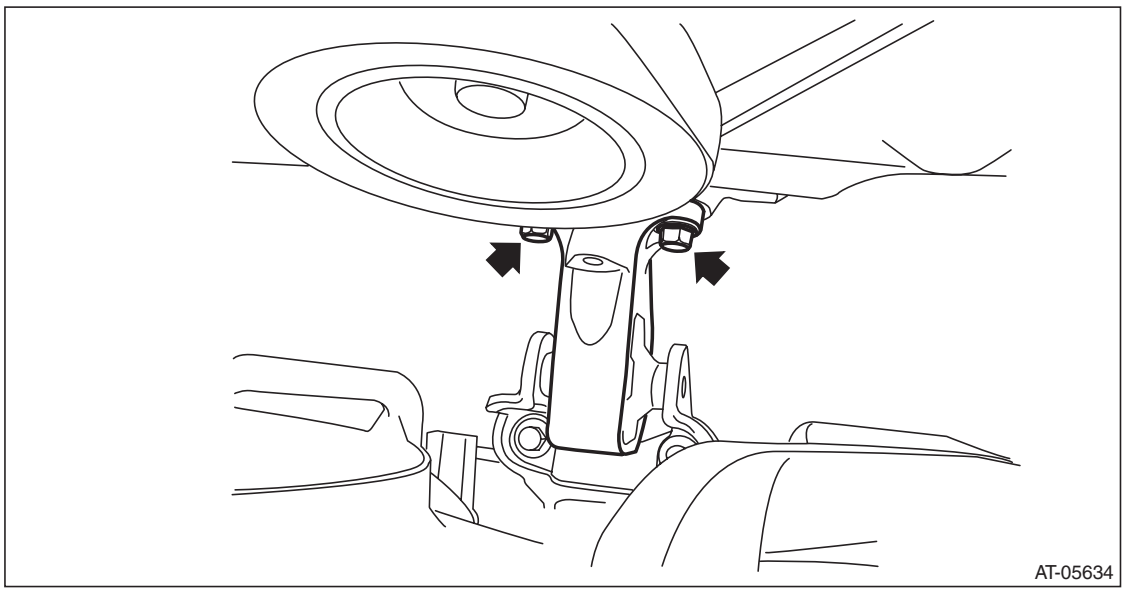

GETtheMANUALS.org

19) Install the bolt and nut to the front cushion rubber.

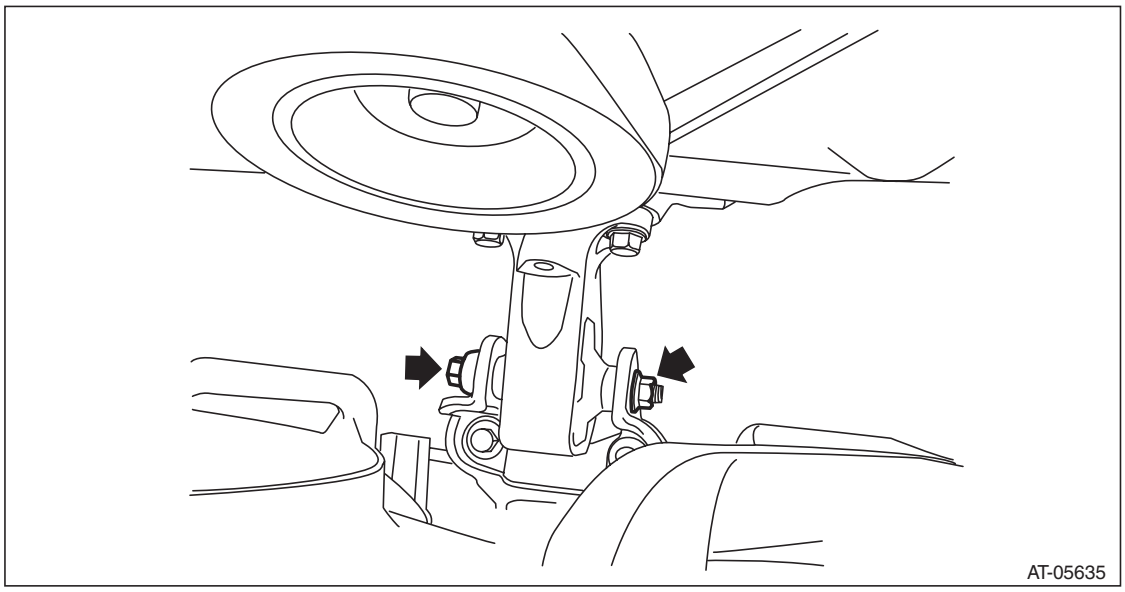

20) Tighten the bolts and nuts of front cushion rubber.

NOTE:
Always start tightening from the bolts on the engine side.

Tightening torque:
T1: 25 N·m (2.5 kgf-m, 18.4 ft-lb)
T2: 45 N·m (4.6 kgf-m, 33.2 ft-lb)

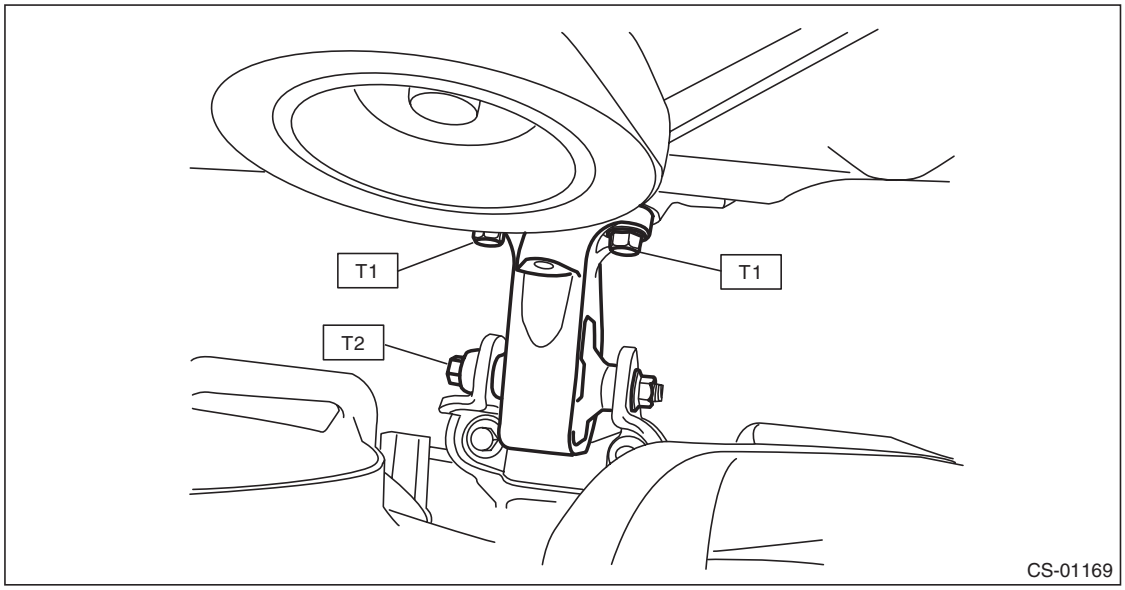

21) Remove the ST (ENGINE HANGER and CHAIN SLING).

GETtheMANUALS.org

22) Install the stopper rod.

Tightening torque:
36 N·m (3.7 kgf-m, 26.6 ft-lb)

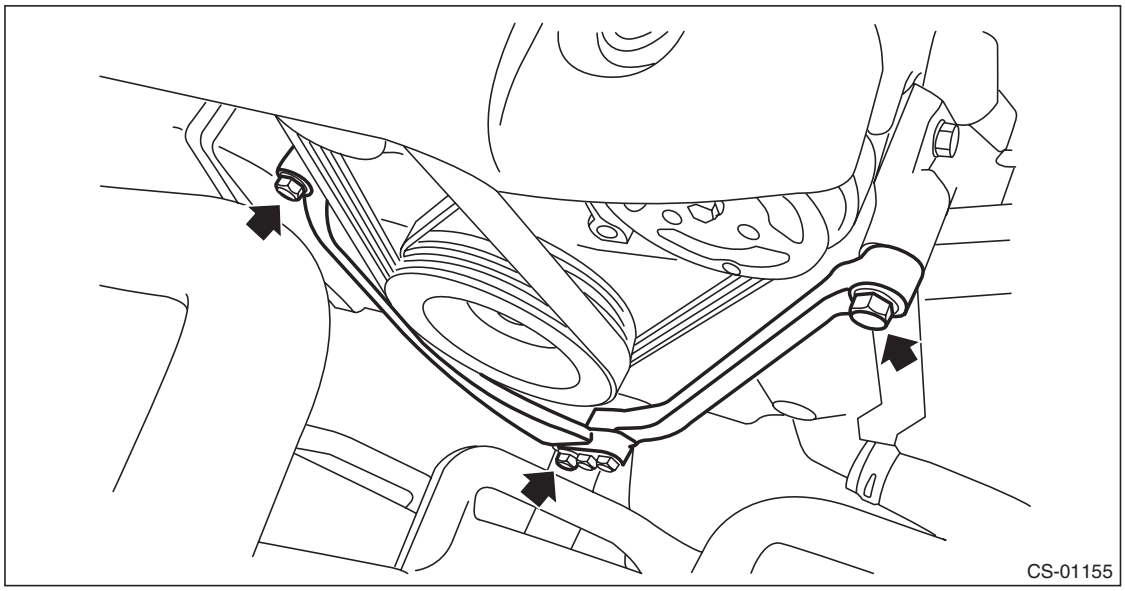

23) Install the nut to the transmission mounting bracket.

Tightening torque:
45 N·m (4.6 kgf-m, 33.2 ft-lb)

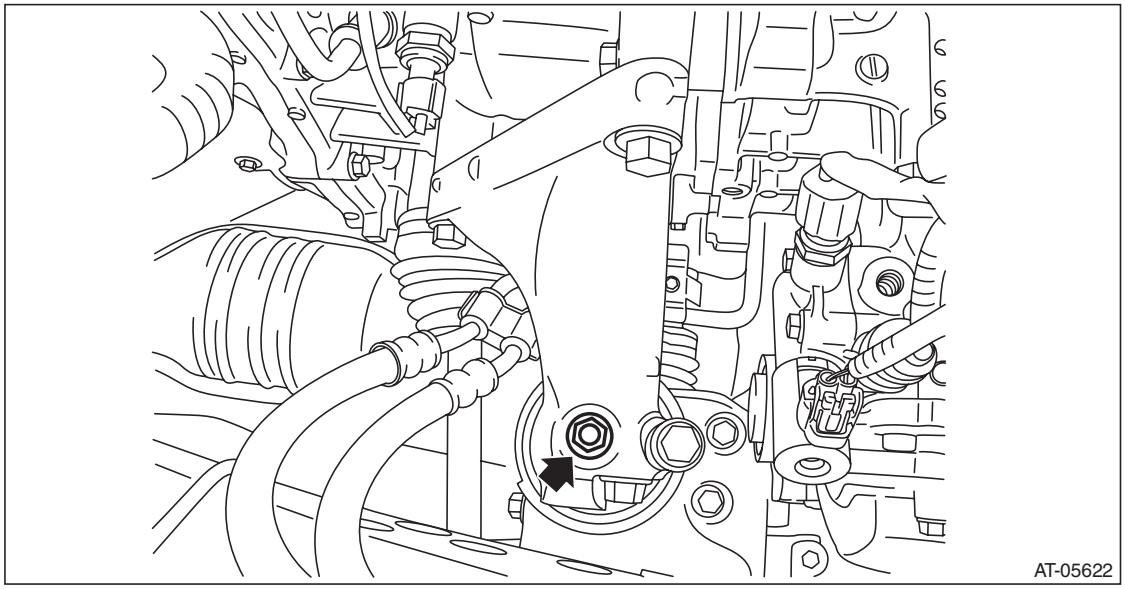

24) Remove the ST (STOPPER SET) from converter case.
25) Match the torque converter screw hole with drive plate hole to install the bolt.

CAUTION:
- **Do not drop the mounting bolt in the converter housing.**
- **Do not damage the mounting bolt.**

Tightening torque:
25 N·m (2.5 kgf-m, 18.4 ft-lb)

GETtheMANUALS.org

26) Install the remaining three bolts by rotating the crank pulley a little at a time in the same direction as engine revolution.

Tightening torque:
25 N·m (2.5 kgf-m, 18.4 ft-lb)

27) Install the service hole plug.

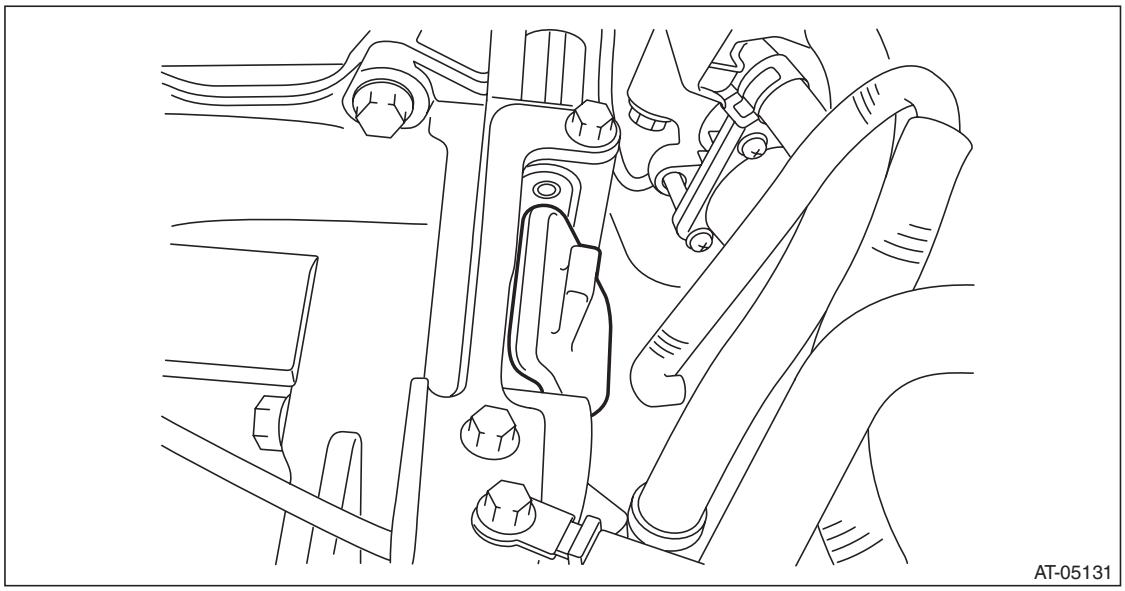

28) Install the starter. <Ref. to SC(H4SO)-10, INSTALLATION, Starter.>
29) Lift up the vehicle.
30) Tighten the single mounting bolt of transmission mounting bracket.

Tightening torque:
75 N·m (7.6 kgf-m, 55.3 ft-lb)

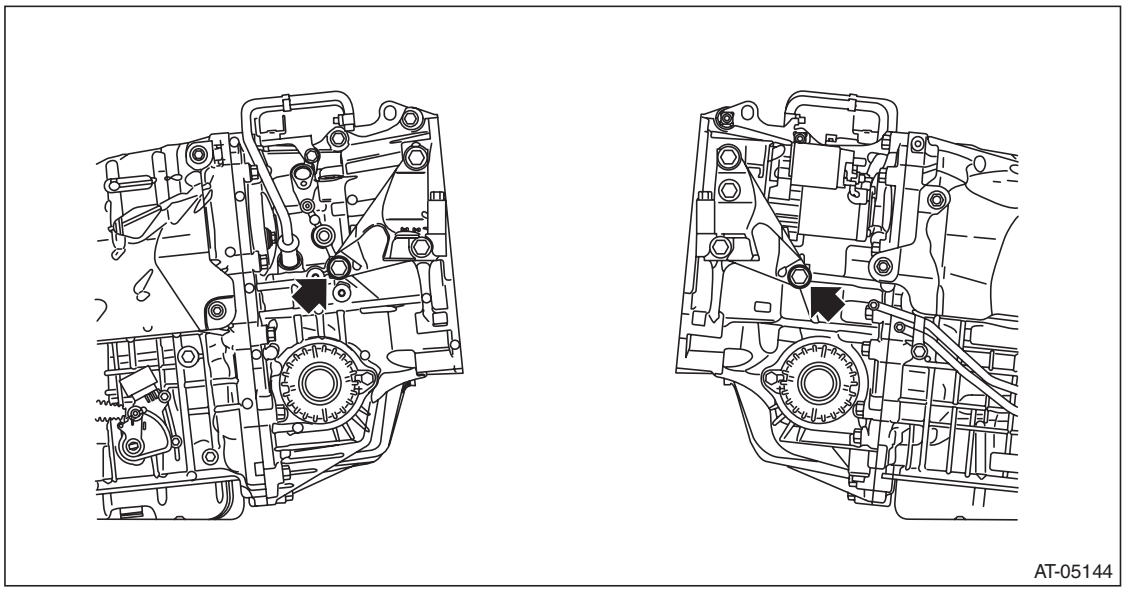

GETtheMANUALS.org

31) Set the ST to side retainer.
ST 28399SA010 OIL SEAL PROTECTOR

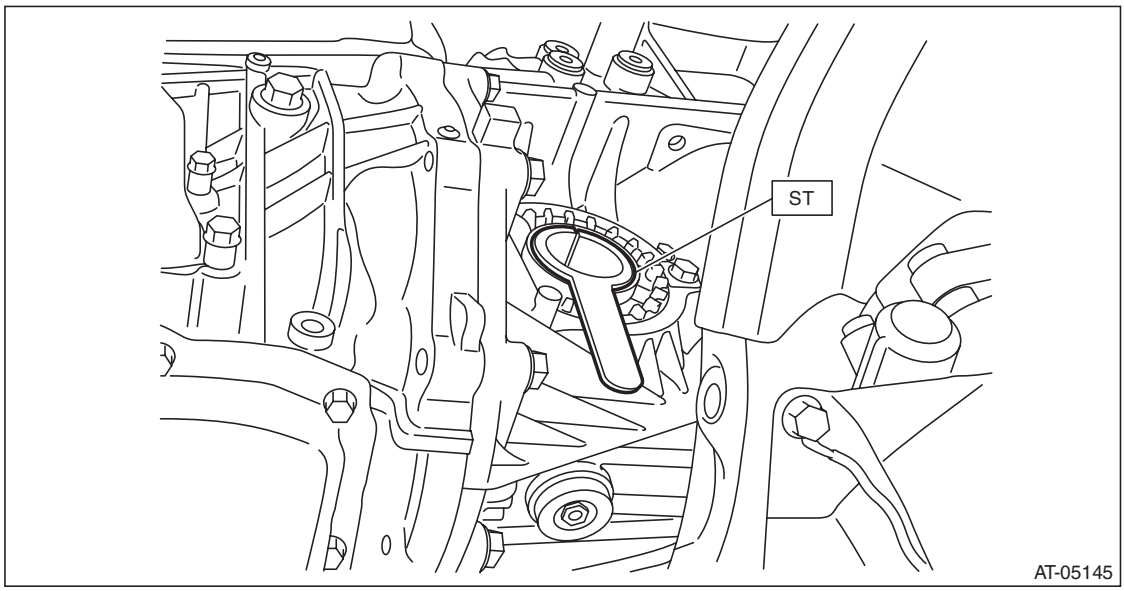

32) Replace the circlip of the drive shaft with a new part.
33) Insert the front drive shaft spline section into transmission and remove the ST (OIL SEAL PROTECTOR).
34) Insert the drive shaft into the transmission securely by pressing the housing from outside of the vehicle.
35) Install the CVTF CVT inlet hose and CVTF CVT outlet hose.

NOTE:
Use new CVTF CVT inlet hose and CVTF CVT outlet hose.

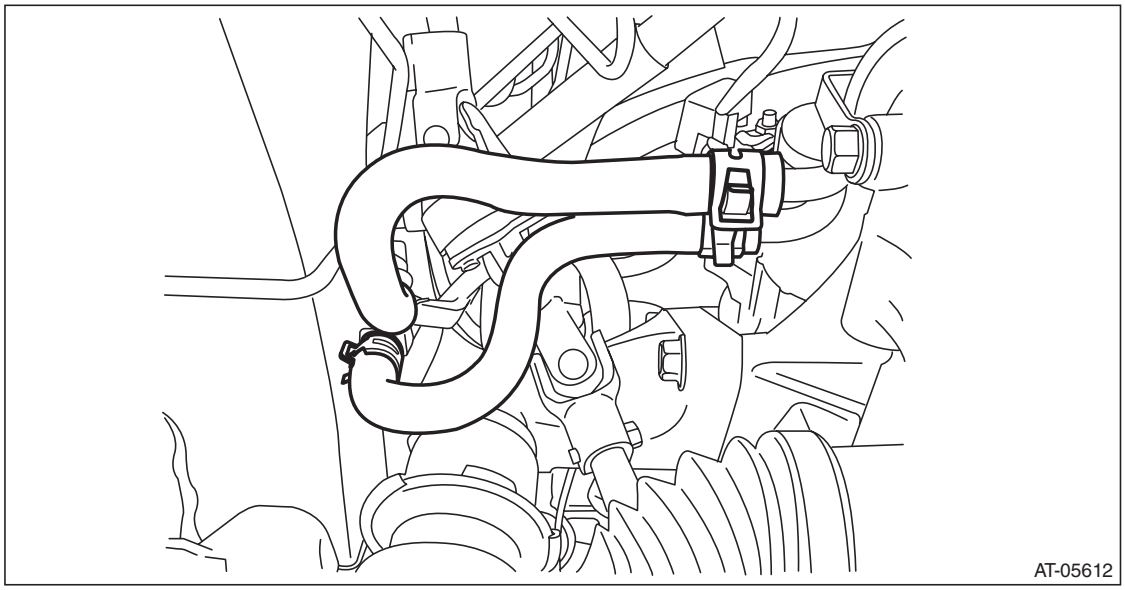

36) Insert the ball joint into housing and secure with bolt.

Tightening torque:
50 N·m (5.1 kgf-m, 36.9 ft-lb)

CAUTION:
- **Do not apply grease to the tapered portion of ball stud.**
- **Before tightening, make sure the lower side of housing and stepped section of ball joint are in contact.**

GETtheMANUALS.org

37) Install the stabilizer link.

Tightening torque:
60 N·m (6.1 kgf-m, 44.3 ft-lb)

38) Connect the tie-rod end and knuckle arm, and attach the castle nut.

Tightening torque:
27 N·m (2.75 kgf-m, 19.9 ft-lb)

CAUTION:
When connecting, do not hit the cap at the bottom of tie-rod end with hammer.

39) After tightening the castle nut to the specified tightening torque, tighten it further within 60° until the cotter pin hole is aligned with slot in the nut. Fit the cotter pin into the nut, and then bend the pin to lock.

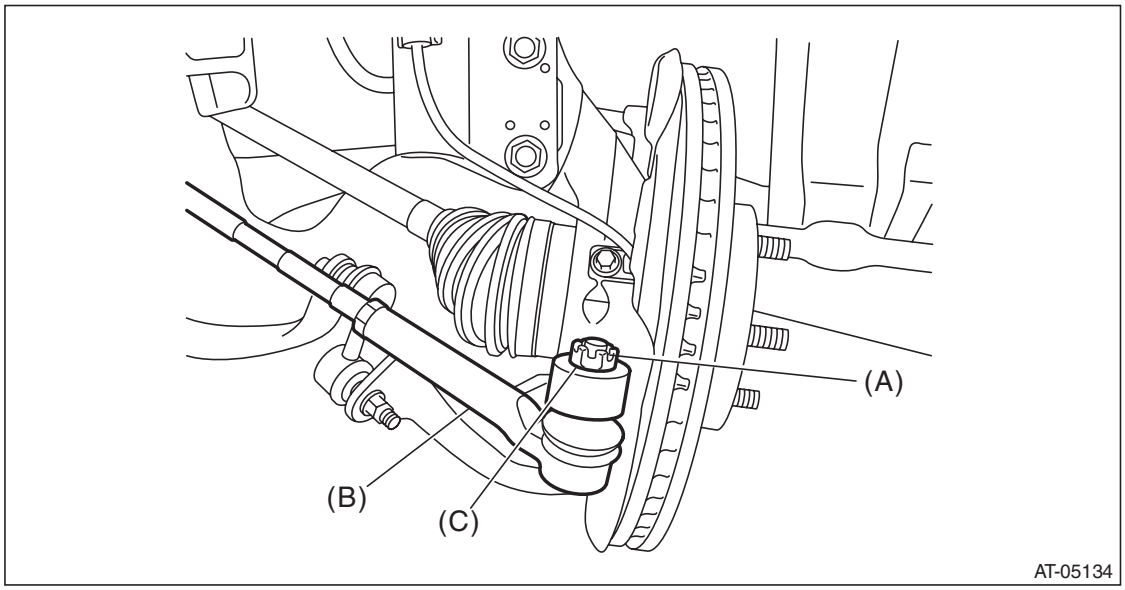

(A) Cotter pin
(B) Tie-rod end
(C) Castle nut

40) Install the propeller shaft. <Ref. to DS-11, INSTALLATION, Propeller Shaft.>
41) Install the universal joint. <Ref. to PS-22, INSTALLATION, Universal Joint.>

GETtheMANUALS.org

42) Install the plate assembly to transmission.

Tightening torque:
T: 25 N·m (2.5 kgf-m, 18.4 ft-lb)

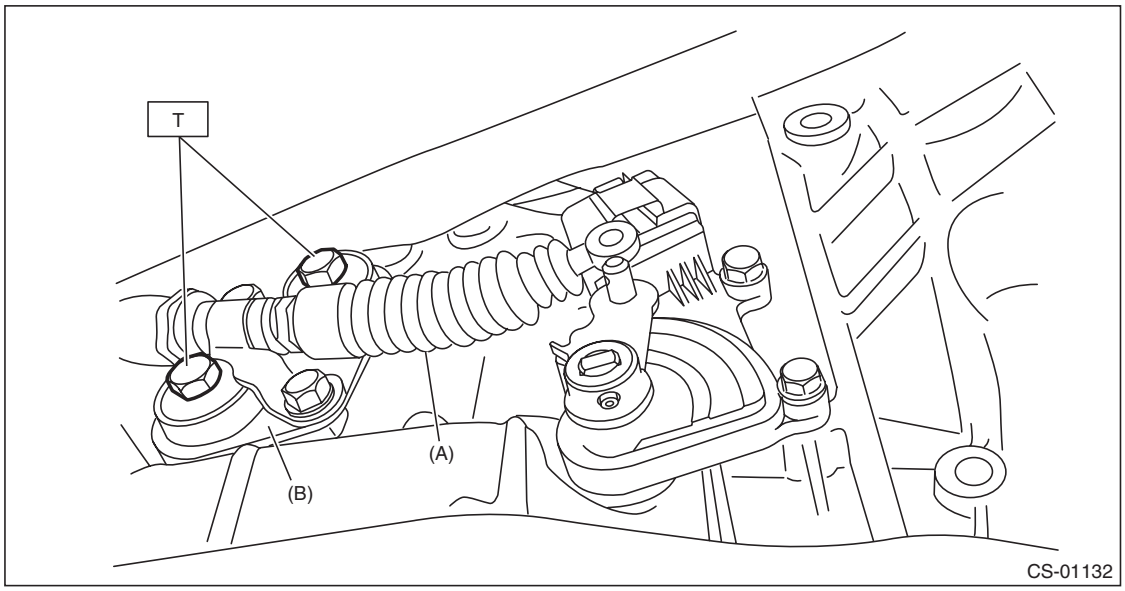

(A) Select cable
(B) Plate ASSY

43) Install the washer and snap pin to the shifter arm.

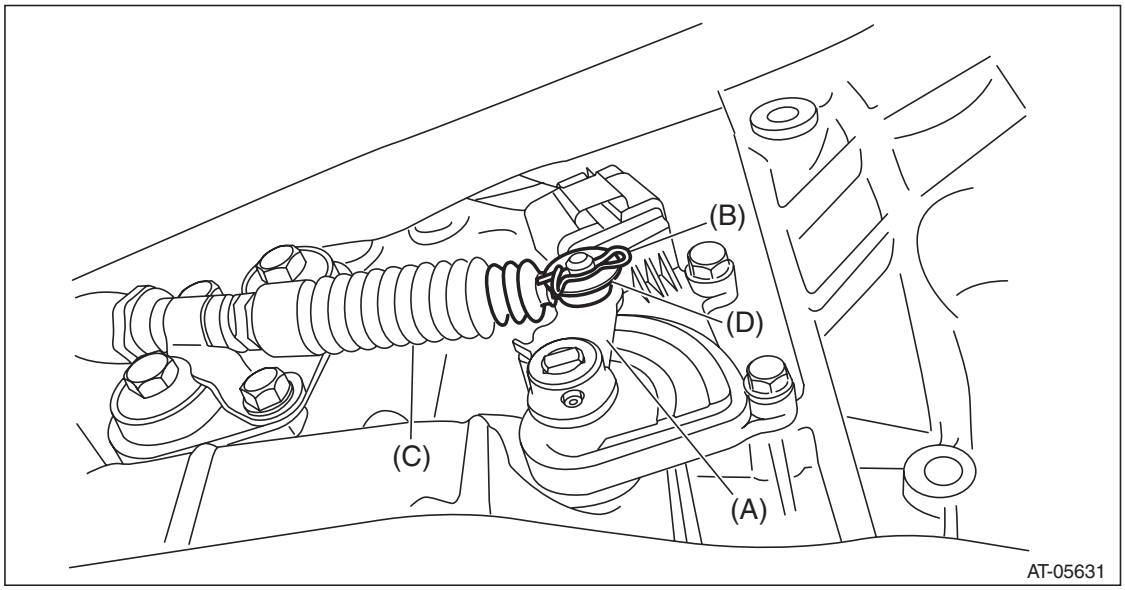

(A) Shifter arm
(B) Snap pin
(C) Select cable
(D) Washer

GETtheMANUALS.org

44) Install the heat shield cover.

Tightening torque:
18 N·m (1.8 kgf-m, 13.3 ft-lb)

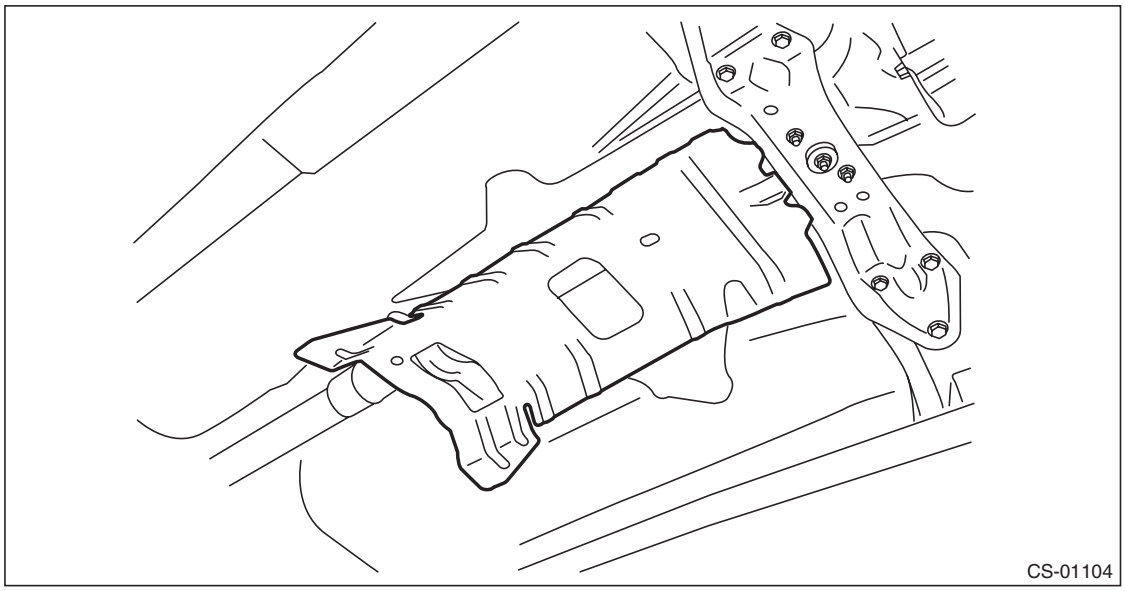

45) Install the center exhaust pipe. <Ref. to EX(H4SO)-8, INSTALLATION, Center Exhaust Pipe.>
46) Install the under cover.
47) Lower the vehicle.
48) Remove the engine hanger rear for turbo model and install the engine hanger rear for non-turbo model.

Tightening torque:
16 N·m (1.6 kgf-m, 11.8 ft-lb)

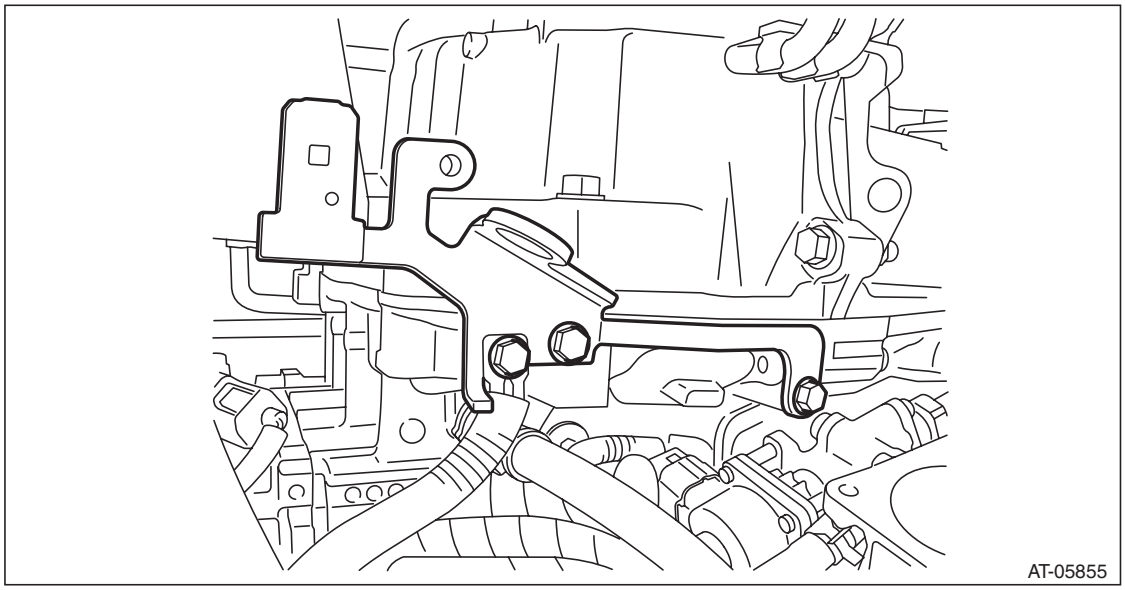

GETtheMANUALS.org

49) Install the engine harness connector to the engine hanger rear, connect the harness connector, and install the harness connector bracket.

Tightening torque:
7.5 N·m (0.76 kgf-m, 5.5 ft-lb)

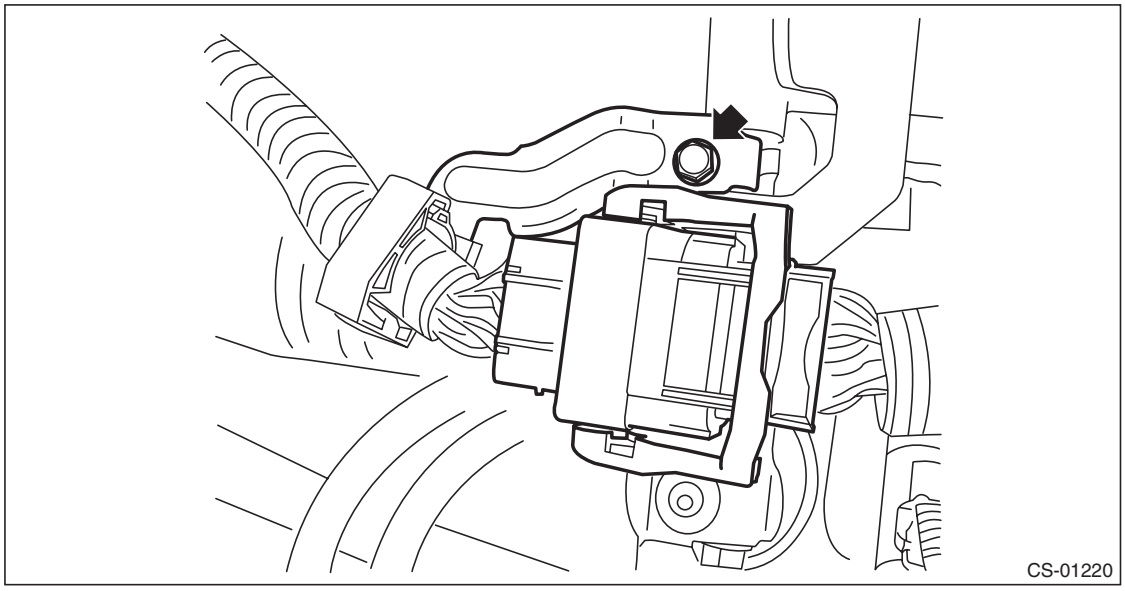

50) Install the throttle body. <Ref. to FU(H4SO)-15, INSTALLATION, Throttle Body.>
51) Install the manifold absolute pressure sensor. <Ref. to FU(H4SO)-34, INSTALLATION, Manifold Absolute Pressure Sensor.>
52) Connect the following harness connectors.
- Transmission harness connectors
- Transmission radio ground terminal
- Inhibitor harness connector

Tightening torque:
13 N·m (1.3 kgf-m, 9.6 ft-lb)

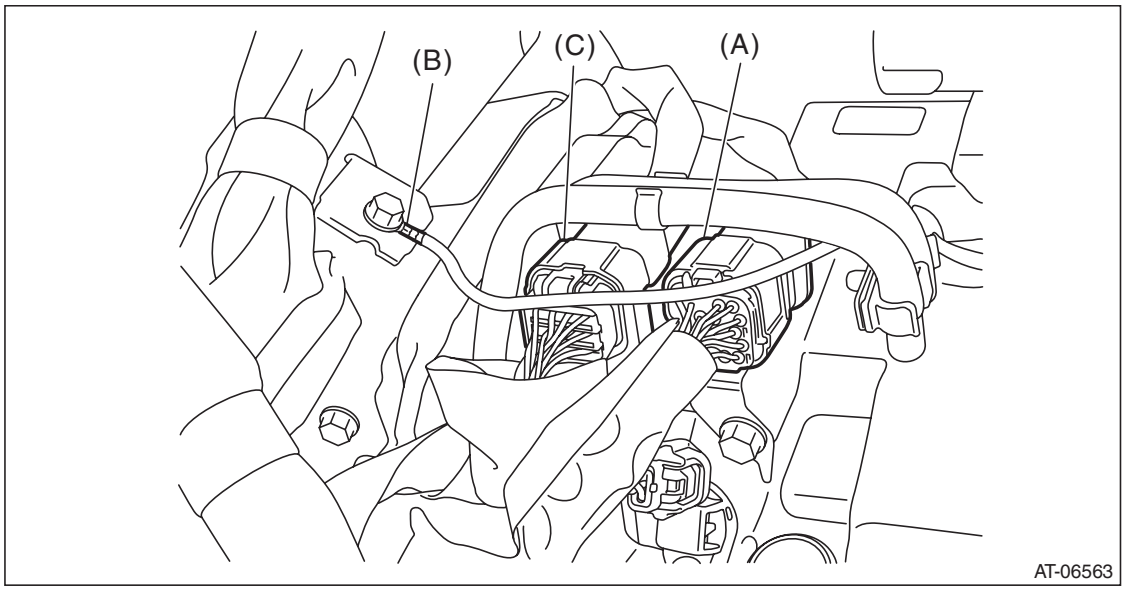

(A) Transmission harness connectors
(B) Transmission radio ground terminal
(C) Inhibitor harness connector

GETtheMANUALS.org

53) Install the battery cable bracket, and install the battery cable clip to the bracket.

Tightening torque:
7.5 N·m (0.76 kgf-m, 5.5 ft-lb)

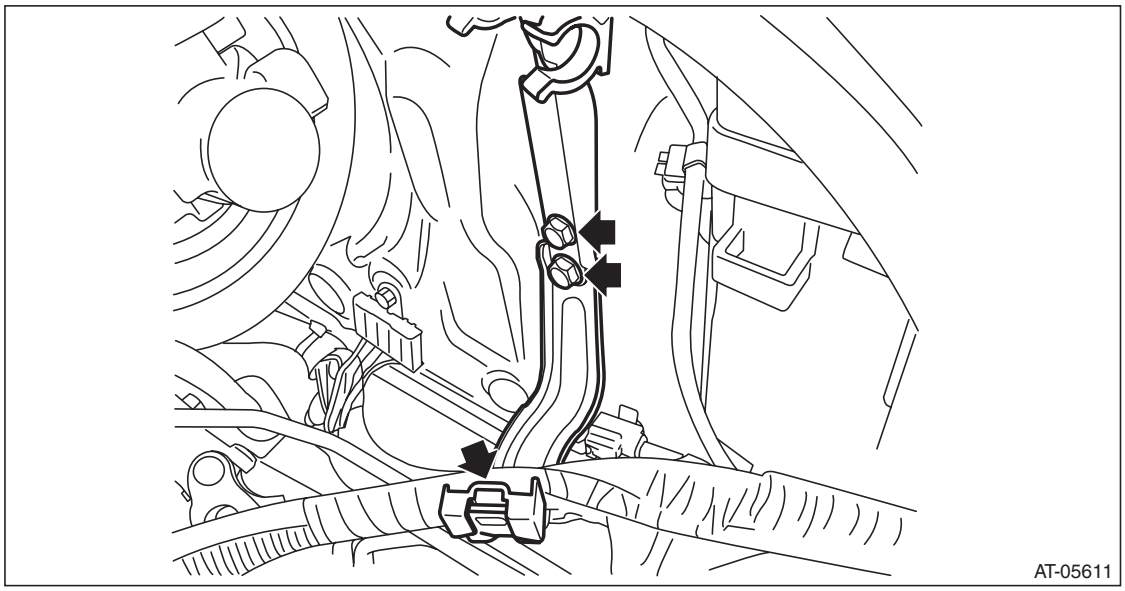

54) Attach the grille bracket.

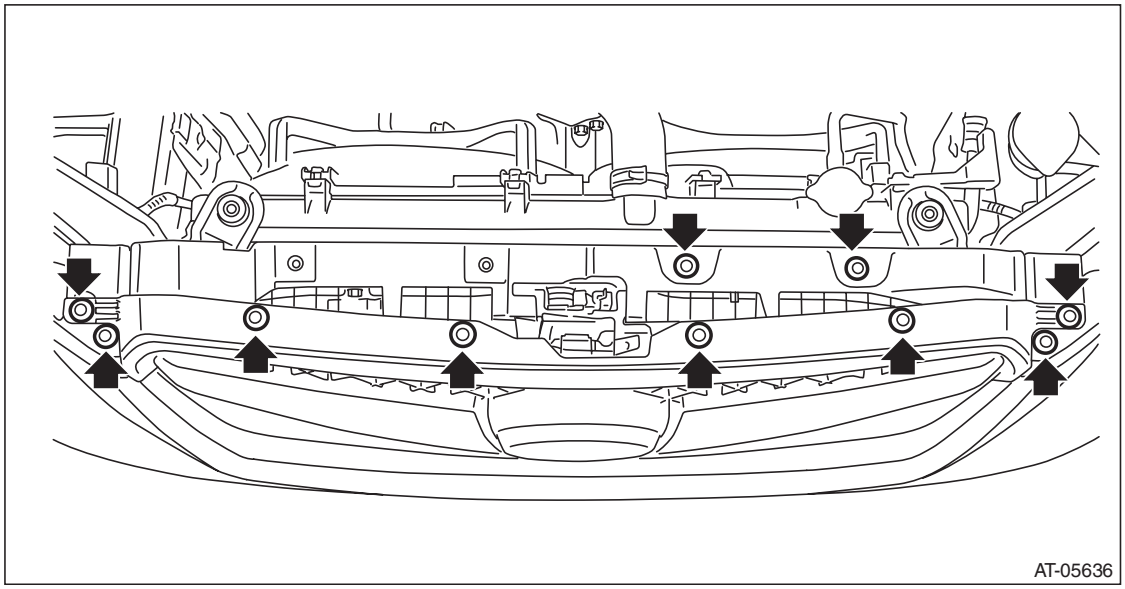

55) Install the air intake boot assembly. <Ref. to IN(H4SO)-8, INSTALLATION, Air Intake Boot.>
56) Install the air intake duct. <Ref. to IN(H4SO)-9, INSTALLATION, Air Intake Duct.>
57) Install the front wheels.
58) Connect the battery ground terminal.
59) Refill differential gear oil to adjust the differential gear oil amount. <Ref. to CVT-41, Differential Gear Oil.>
60) Refill CVTF to adjust the CVTF amount. <Ref. to CVT-37, CVTF.>
61) Perform the variator chain break-in. <Ref. to CVT-44, Variator Chain Break-in.>

CAUTION:
Always execute the variator chain break-in after the replacement of the following.
- **Variator chain replacement**
- **Primary pulley and secondary pulley replacement**

62) Perform Clear Memory 2 operation. <Ref. to CVT(diag)-18, Clear Memory Mode.>
63) Perform learning control promotion. <Ref. to CVT(diag)-20, Learning Control.>

GETtheMANUALS.org

64) Execute the rear differential inspection mode. <Ref. to DI-84, Rear Differential Inspection Mode.>

CAUTION:
Always execute the rear differential inspection mode at the replacement of the following.
- **Replacement of transmission assembly**
- **Replacement of front differential hypoid gear set**

65) Perform the road test to make sure there is no fault. <Ref. to CVT-46, INSPECTION, Road Test.>

GETtheMANUALS.org

12. Transmission Mounting System

A: REMOVAL

1) Disconnect the ground cable from battery.
2) Lift up the vehicle.
3) Remove the center exhaust pipe. <Ref. to EX(H4SO)-8, REMOVAL, Center Exhaust Pipe.>
4) Remove the heat shield cover.

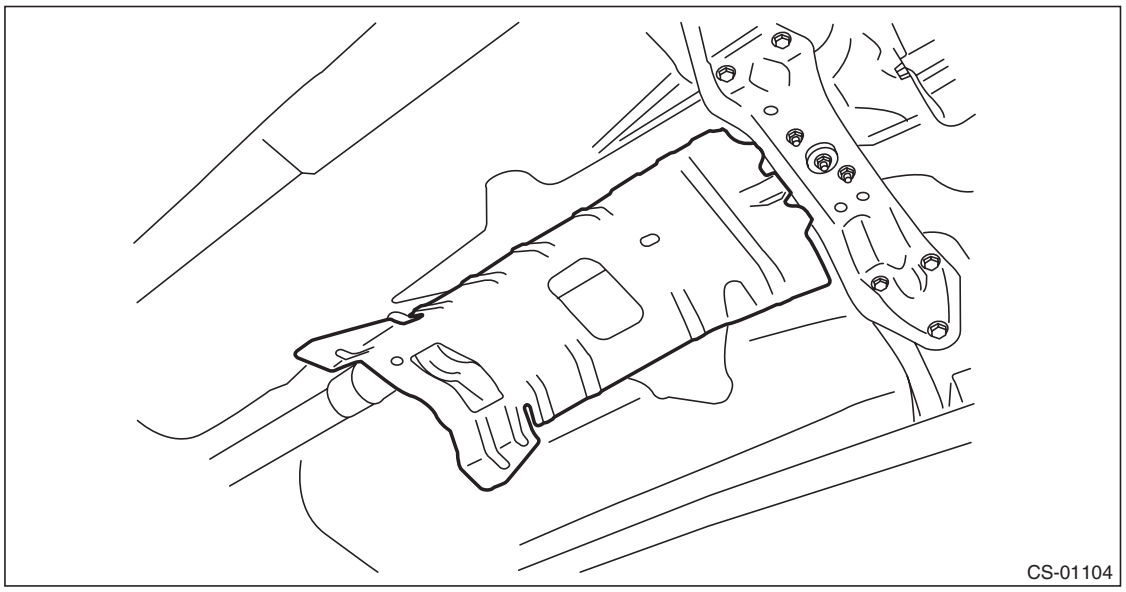

5) Set the transmission jack under the transmission. Make sure that the support plate of transmission jack does not touch the oil pan.
6) Remove the transmission rear crossmember.

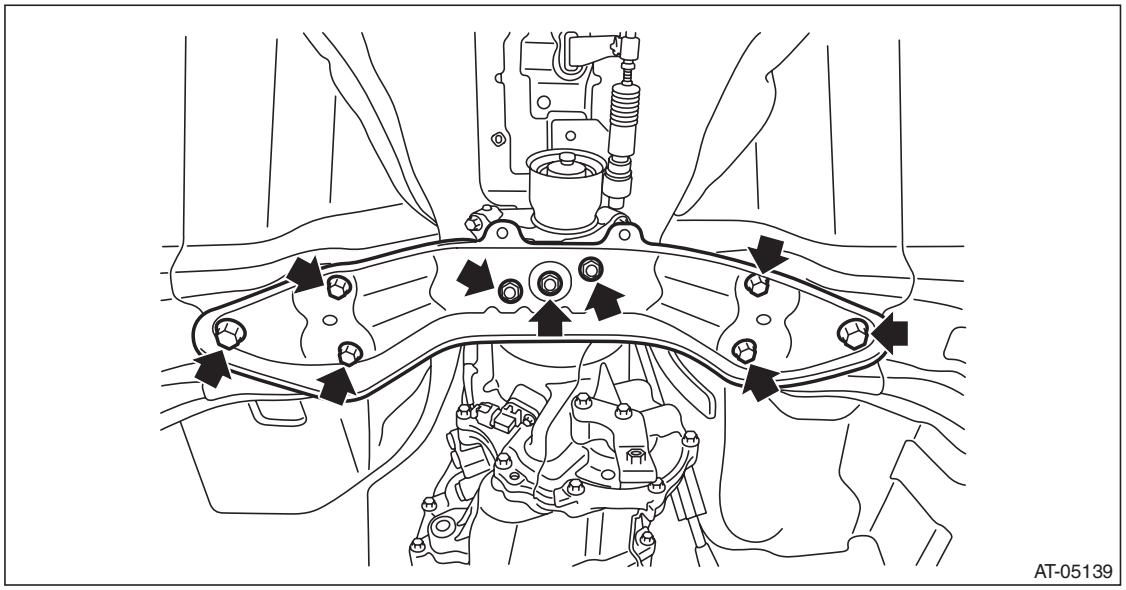

GETtheMANUALS.org

7) Remove the rear cushion rubber.

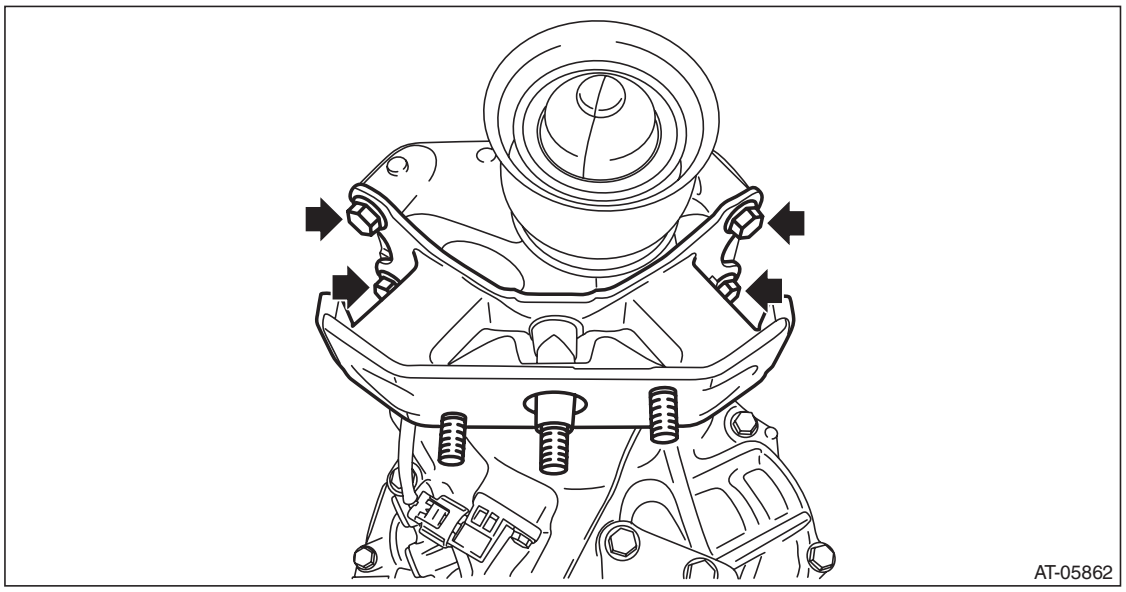

B: INSTALLATION

1) Attach the rear cushion rubber to the transmission.

Tightening torque:
40 N·m (4.1 kgf-m, 29.5 ft-lb)

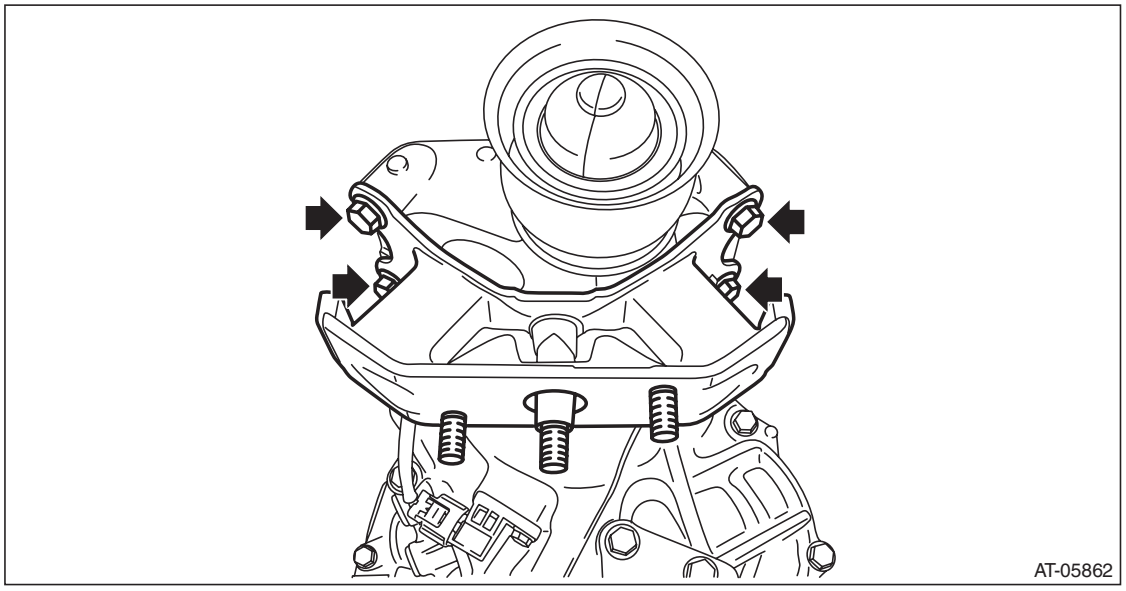

GETtheMANUALS.org

2) Install the crossmember.

Tightening torque:
T1: 35 N·m (3.6 kgf-m, 25.8 ft-lb)
T2: 75 N·m (7.6 kgf-m, 55.3 ft-lb)

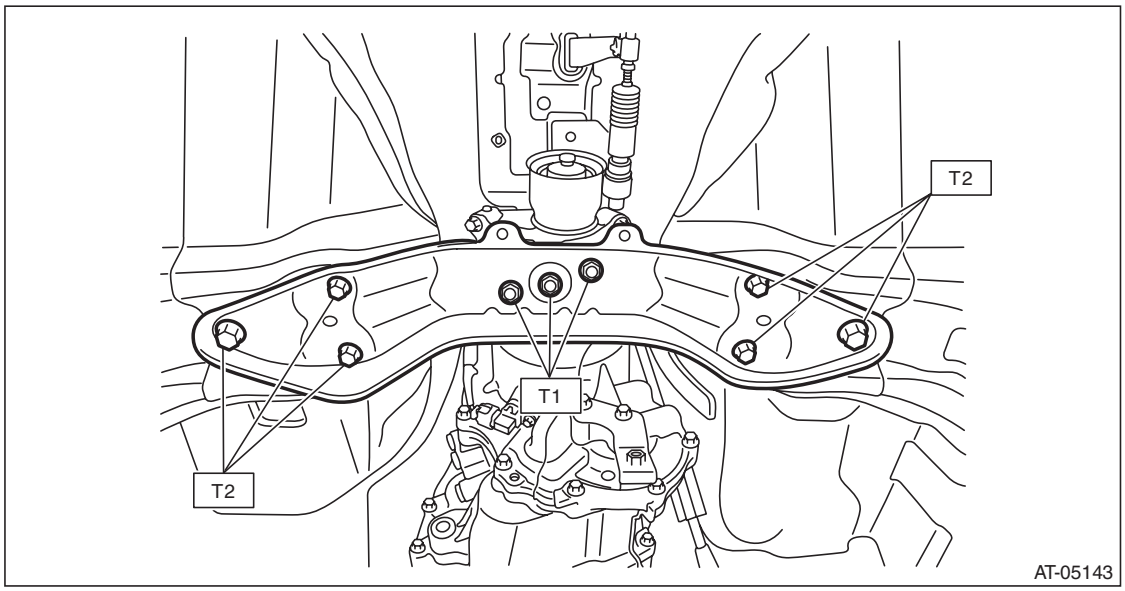

3) Remove the transmission jack.
4) Install the heat shield cover.

Tightening torque:
18 N·m (1.8 kgf-m, 13.3 ft-lb)

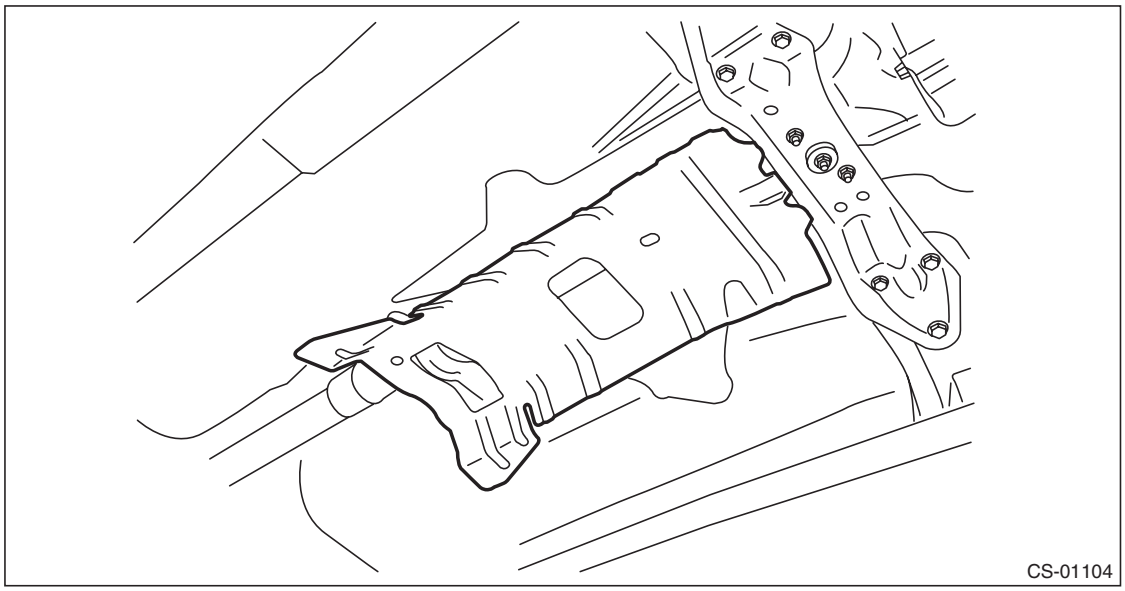

5) Install the center exhaust pipe. <Ref. to EX(H4SO)-8, INSTALLATION, Center Exhaust Pipe.>
6) Connect the battery ground terminal.

C: INSPECTION

- Check the crossmember for bends or damage.
- Check that the cushion rubber is not stiff, cracked or otherwise damaged.

GETtheMANUALS.org

13. Extension Case Oil Seal

A: INSPECTION

Check for leakage of CVTF from the joint section of transmission and propeller shaft. If a leak is found, inspect the propeller shaft and replace the oil seal.

B: REPLACEMENT

CAUTION:
Immediately after the vehicle has been running or after idling for a long time, the differential gear oil will be hot. Be careful not to burn yourself.

1) Lift up the vehicle.
2) Clean the transmission exterior.
3) Remove the center exhaust pipe. <Ref. to EX(H4SO)-8, REMOVAL, Center Exhaust Pipe.>
4) Remove the heat shield cover.

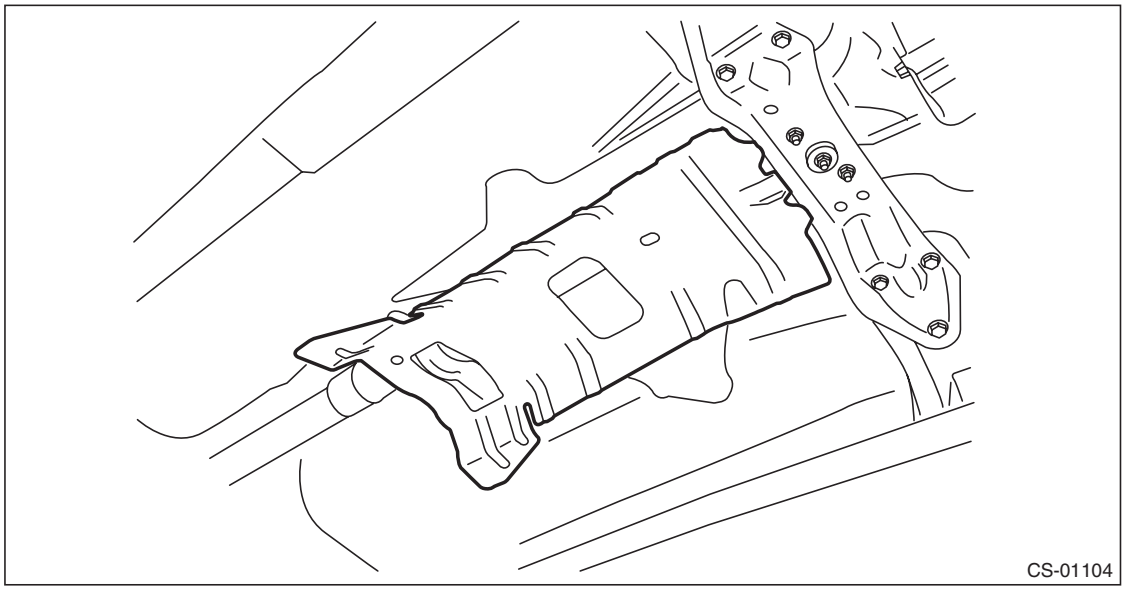

5) Remove the propeller shaft. <Ref. to DS-10, REMOVAL, Propeller Shaft.>
6) Using a screwdriver or ST, remove the oil seal trying not to damage the extension case.
ST 398527700 PULLER ASSY
7) Using the ST, install the oil seal.

NOTE:
Use a new oil seal.
ST 498057300 OIL SEAL DRIFT
8) Install the propeller shaft. <Ref. to DS-11, INSTALLATION, Propeller Shaft.>

GETtheMANUALS.org

9) Install the heat shield cover.

Tightening torque:
18 N·m (1.8 kgf-m, 13.3 ft-lb)

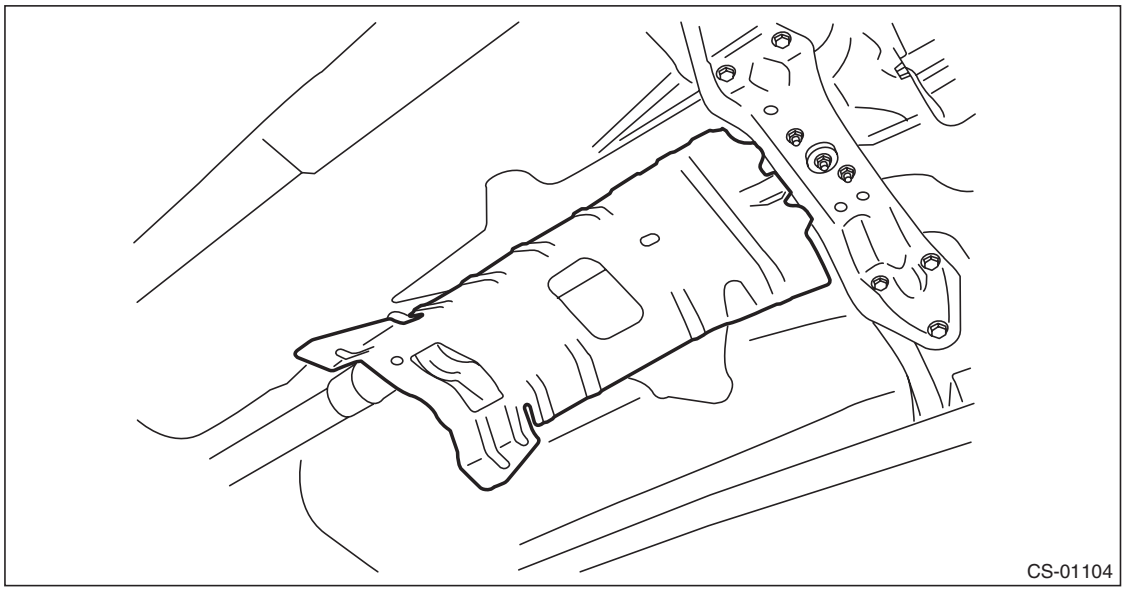

10) Install the center exhaust pipe. <Ref. to EX(H4SO)-8, INSTALLATION, Center Exhaust Pipe.>
11) Adjust the CVTF level and check there is no leakage. <Ref. to CVT-37, ADJUSTMENT, CVTF.>

GETtheMANUALS.org

14. Differential Side Retainer Oil Seal

A: INSPECTION

Check for leakage of gear oil from differential side retainer oil seal part. If there is an oil leak, inspect the front drive shaft and replace the oil seal.

B: REPLACEMENT

CAUTION:
- **Immediately after the vehicle has been running or after idling for a long time, the differential gear oil will be hot. Be careful not to burn yourself.**
- **Be careful not to spill the differential gear oil on exhaust pipe to prevent it from emitting smoke or fire. If differential gear oil is spilled on the exhaust pipe, wipe it off completely.**

1) Lift up the vehicle, and remove the front wheels.
2) After pulling off the cotter pin and removing the castle nut, use a puller to remove the tie-rod end from the knuckle arm.

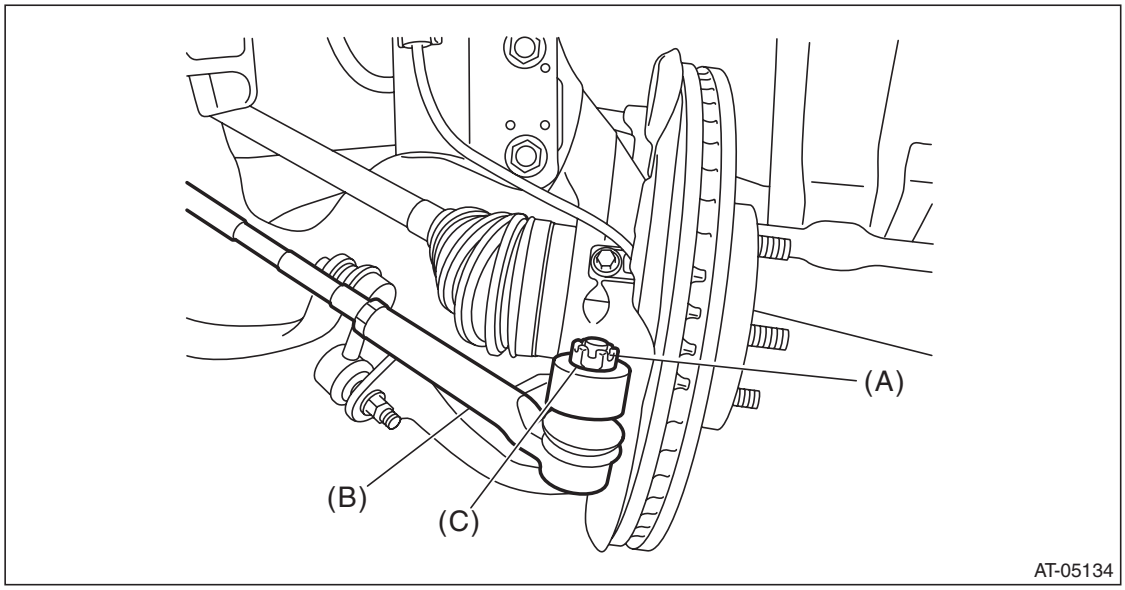

(A) Cotter pin
(B) Tie-rod end
(C) Castle nut

3) Lift up the vehicle.
4) Remove the center exhaust pipe. <Ref. to EX(H4SO)-8, REMOVAL, Center Exhaust Pipe.>

GETtheMANUALS.org

5) Remove the differential gear oil drain plug using TORX® bit T70, and then drain differential gear oil.

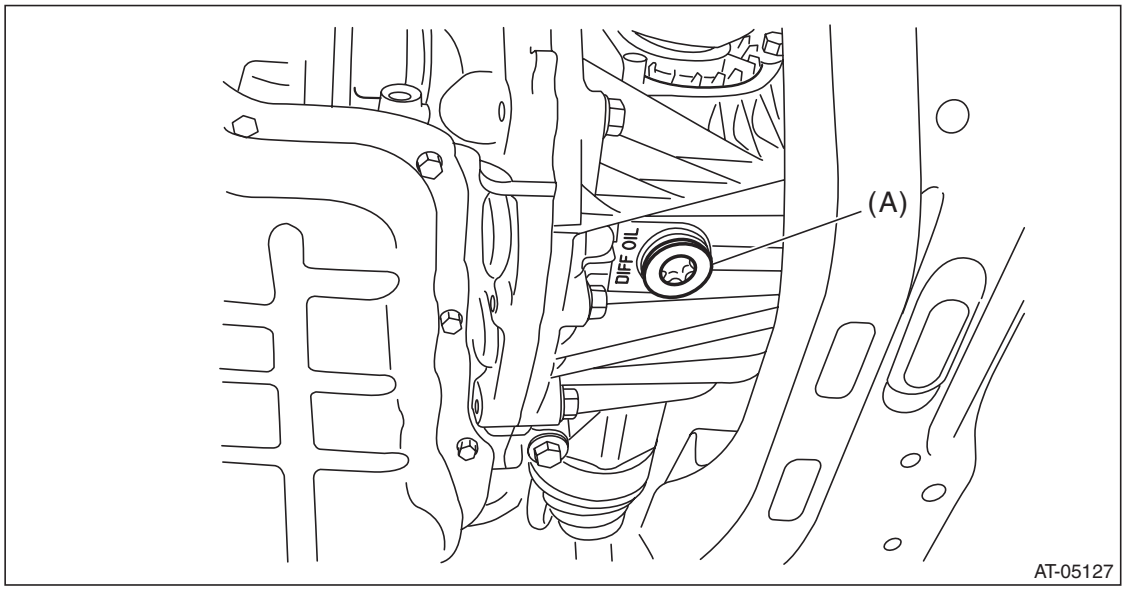

(A) Differential gear oil drain plug

6) Tighten the differential gear oil drain plug.

NOTE:
Use a new gasket.

Tightening torque:
70 N·m (7.1 kgf-m, 51.6 ft-lb)

7) Remove the stabilizer link. <Ref. to FS-29, REMOVAL, Front Stabilizer.>
8) Disconnect the ball joint and housing.
9) Holding the joint of front drive shaft from transmission side, pull out the drive shaft from transmission with care not to stretch the boot.
10) Remove the differential side retainer oil seal using driver wrapped with vinyl tape etc.

GETtheMANUALS.org

11) Using the ST, install the differential side retainer oil seal by lightly tapping with a hammer.
ST 18675AA000 DIFFERENTIAL SIDE OIL SEAL INSTALLER

NOTE:
- Apply differential gear oil to the oil seal lips.
- Oil seal has an identification mark (R, L). When installing oil seals, do not confuse the left and right.

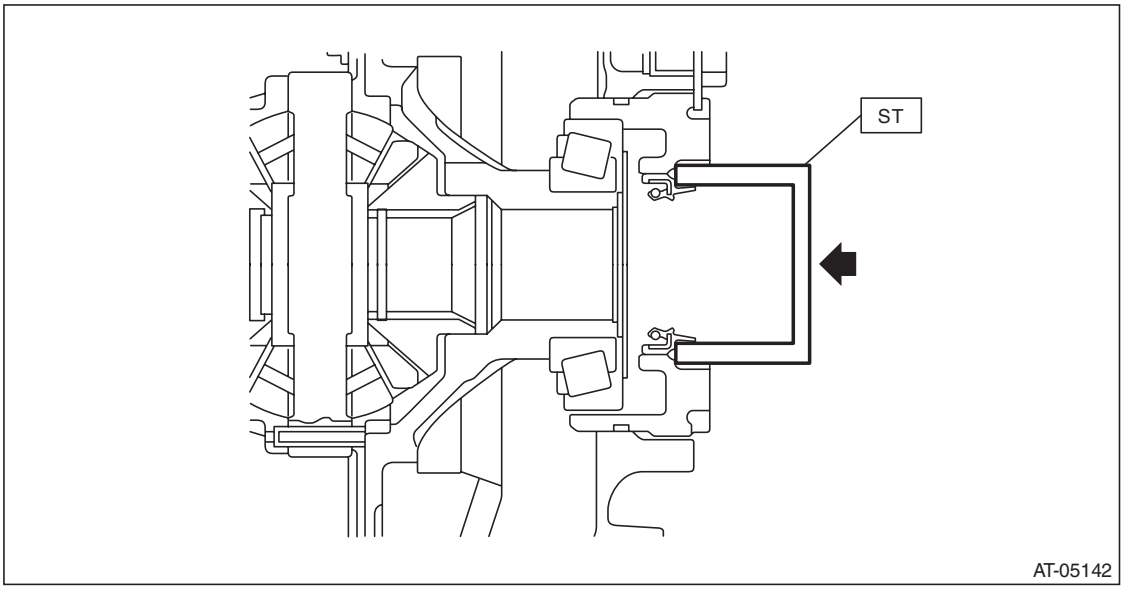

12) Set the ST to side retainer.
ST 28399SA010 OIL SEAL PROTECTOR

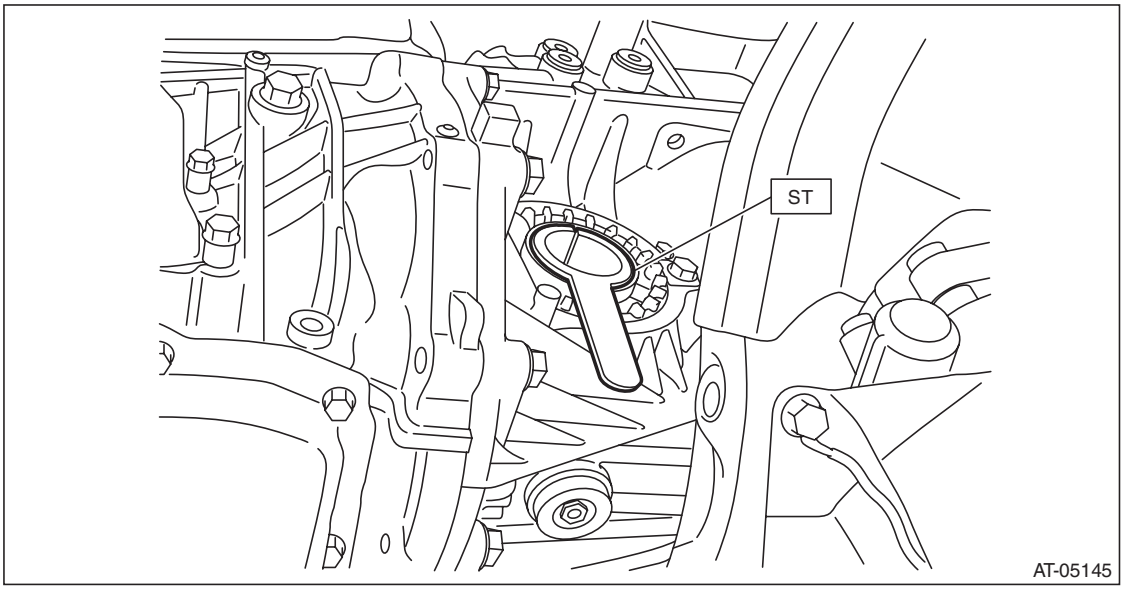

13) Replace the circlip of the drive shaft with a new part.
14) Insert the front drive shaft spline section into transmission and remove the ST (DIFFERENTIAL SIDE OIL SEAL INSTALLER).
15) Insert the drive shaft into the transmission securely by pressing the housing from outside of the vehicle.

GETtheMANUALS.org

16) Insert the ball joint into housing and secure with bolt.

Tightening torque:
50 N·m (5.1 kgf-m, 36.9 ft-lb)

CAUTION:
- **Do not apply grease to the tapered portion of ball stud.**
- **Before tightening, make sure the lower side of housing and stepped section of ball joint are in contact.**

17) Install the stabilizer link.

Tightening torque:
60 N·m (6.1 kgf-m, 44.3 ft-lb)

18) Install the center exhaust pipe. <Ref. to EX(H4SO)-8, INSTALLATION, Center Exhaust Pipe.>
19) Lower the vehicle.
20) Connect the tie-rod end and knuckle arm, and attach the castle nut.

Tightening torque:
27 N·m (2.75 kgf-m, 19.9 ft-lb)

CAUTION:
When connecting, do not hit the cap at the bottom of tie-rod end with hammer.

21) After tightening the castle nut to the specified tightening torque, tighten it further within 60° until the cotter pin hole is aligned with slot in the nut. Fit the cotter pin into the nut, and then bend the pin to lock.

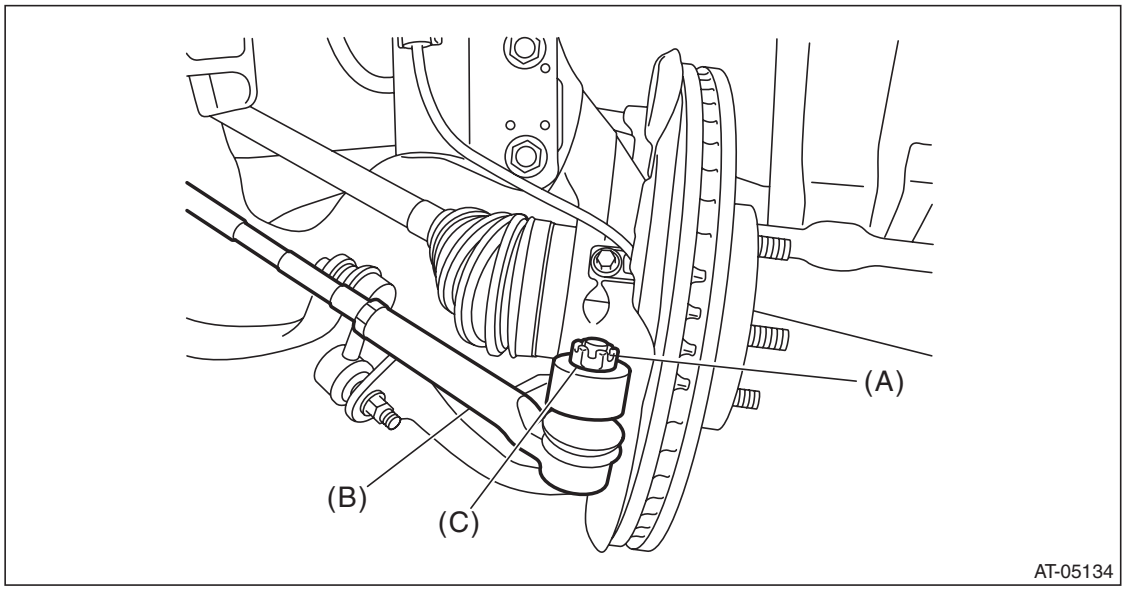

(A) Cotter pin
(B) Tie-rod end
(C) Castle nut

22) Refill differential gear oil from the charge pipe. <Ref. to CVT-41, Differential Gear Oil.>
23) Adjust the level of differential gear oil. <Ref. to CVT-41, ADJUSTMENT, Differential Gear Oil.>
24) Install the front wheels.

GETtheMANUALS.org

15.Inhibitor Switch

A: INSPECTION

When the driving condition or starter motor operation is improper, first check the shift linkage for improper operation. If the shift linkage is functioning properly, check the inhibitor switch.

1) Remove the air intake boot assembly. <Ref. to IN(H4SO)-8, REMOVAL, Air Intake Boot.>
2) Disconnect the inhibitor harness connector.

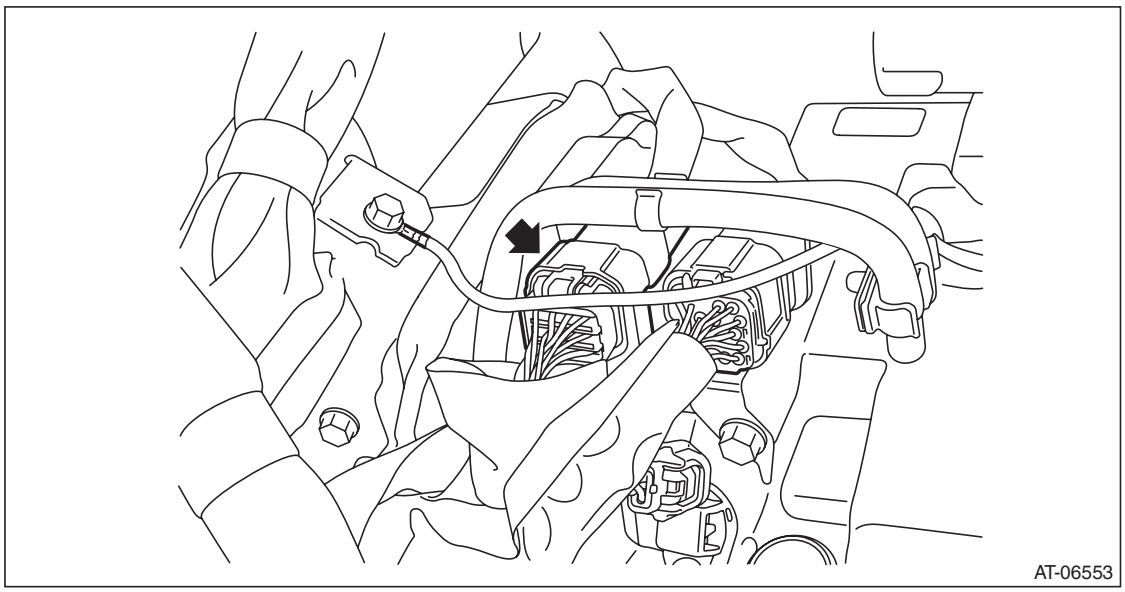

GETtheMANUALS.org

3) Check for continuity in inhibitor switch circuit by shifting the select lever in “P”, “R”, “N” and “D” respectively.

NOTE:
- Check that there is no continuity in the ignition circuit when the select lever is in the “R” and “D” ranges.
- When inhibitor switch is normal, check there is no poor contact in vehicle side connector and no open circuit in harness.

	Range	Terminal No.
Signal sent to TCM	P	4 — 3
	R	4 — 2
	N	4 — 1
	D	4 — 8
Starter circuit	P/N	12 — 11
Back-up light circuit	R	10 — 9

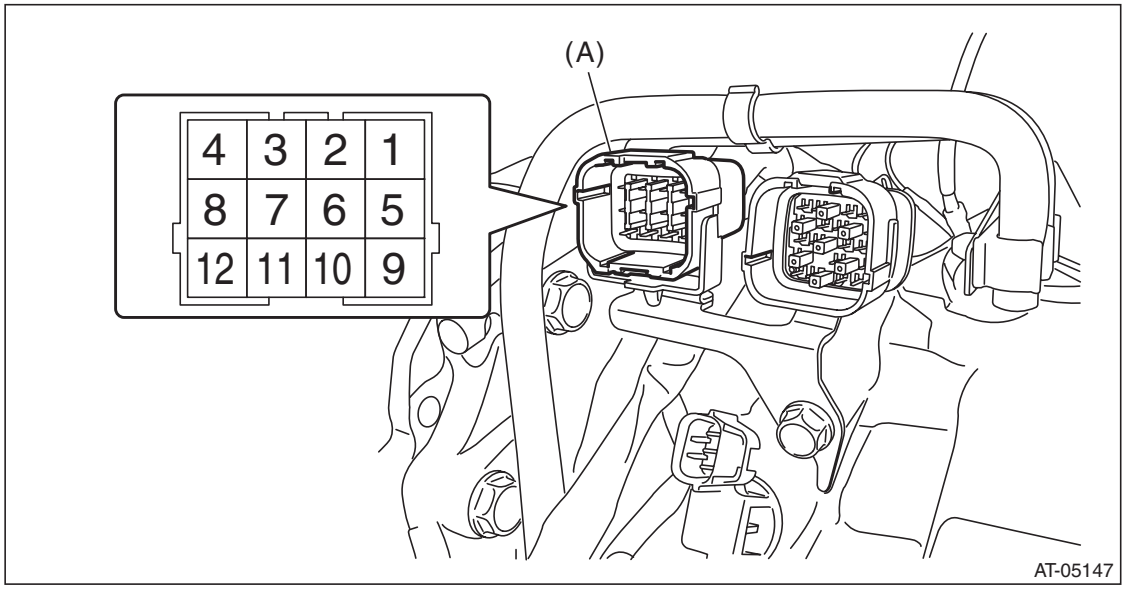

(A) Inhibitor harness connector

GETtheMANUALS.org

4) Check that there is continuity at equal points when the select lever is moved 1.5° in both directions from the “N” range.
If there is continuity in only one direction or in other points, adjust the inhibitor switch. <Ref. to CVT-97, ADJUSTMENT, Inhibitor Switch.>

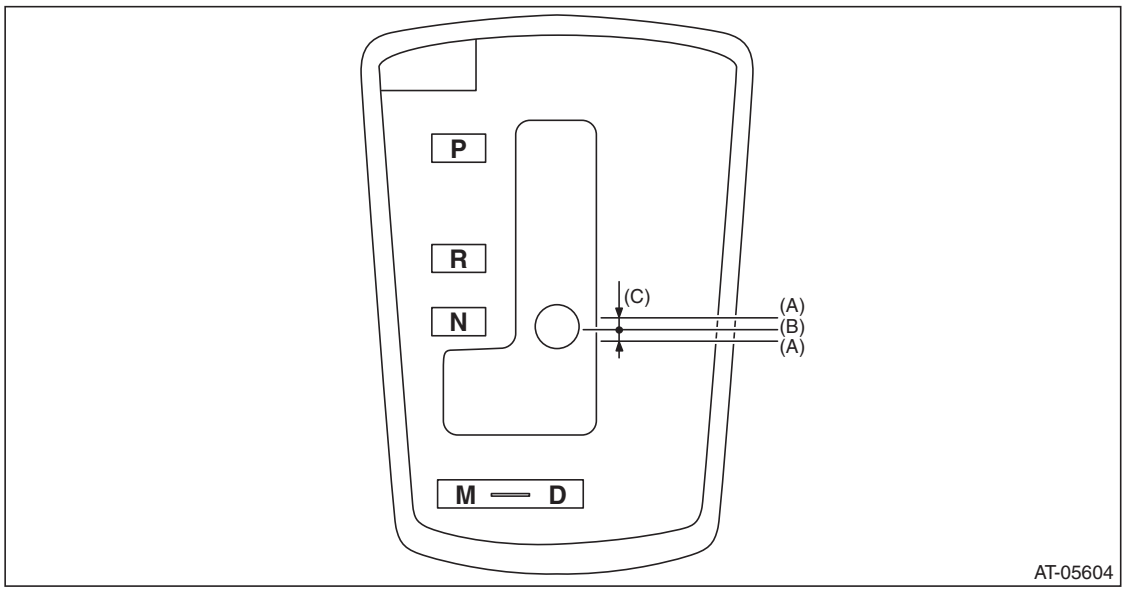

(A) Continuity does not exist.
(B) Continuity exists.
(C) 1.5°

5) Repeat the above inspection in other gear ranges. If there is fault, adjust the inhibitor switch and select cable. <Ref. to CVT-97, ADJUSTMENT, Inhibitor Switch.> <Ref. to CS-50, ADJUSTMENT, Select Cable.>

B: ADJUSTMENT

1) Shift the select lever to “N” range.
2) Loosen the two bolts holding the inhibitor switch.
3) Insert the ST vertically into the holes of the shifter arm and switch body.
ST 499267300 STOPPER PIN

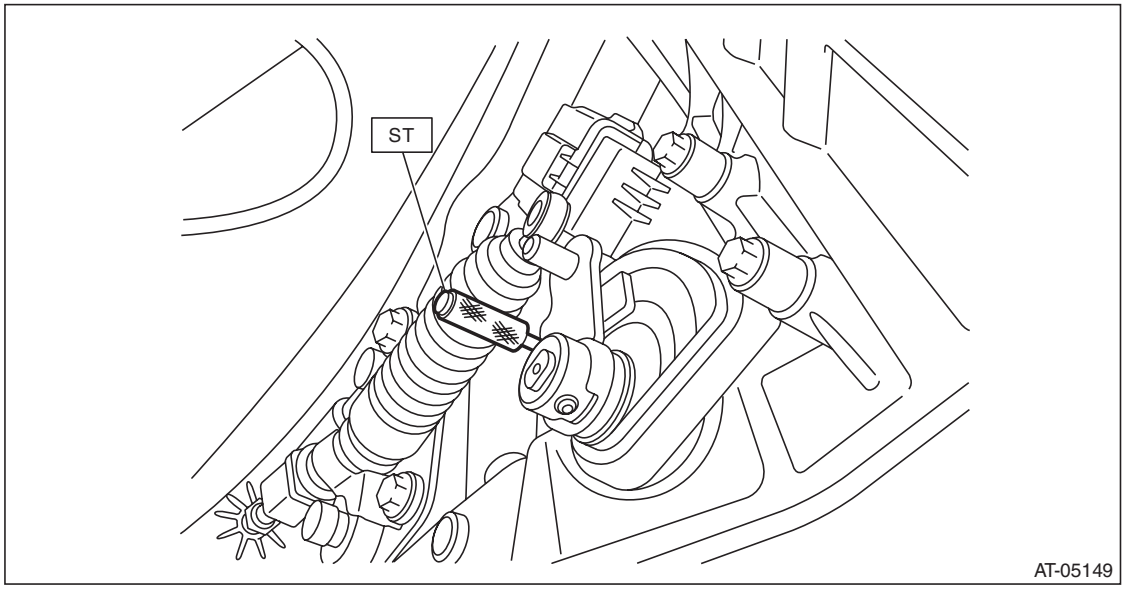

GETtheMANUALS.org

4) Tighten the two bolts holding the inhibitor switch.

Tightening torque:
5 N·m (0.5 kgf-m, 3.7 ft-lb)

5) Repeat the inspection of the inhibitor switch. If the inhibitor switch is determined to be “faulty”, replace it.

C: REMOVAL

1) Shift the select lever to “N” range.
2) Disconnect the ground cable from battery.
3) Lift up the vehicle.
4) Remove the center exhaust pipe. <Ref. to EX(H4SO)-8, REMOVAL, Center Exhaust Pipe.>
5) Remove the snap pin and washer from the shifter arm.

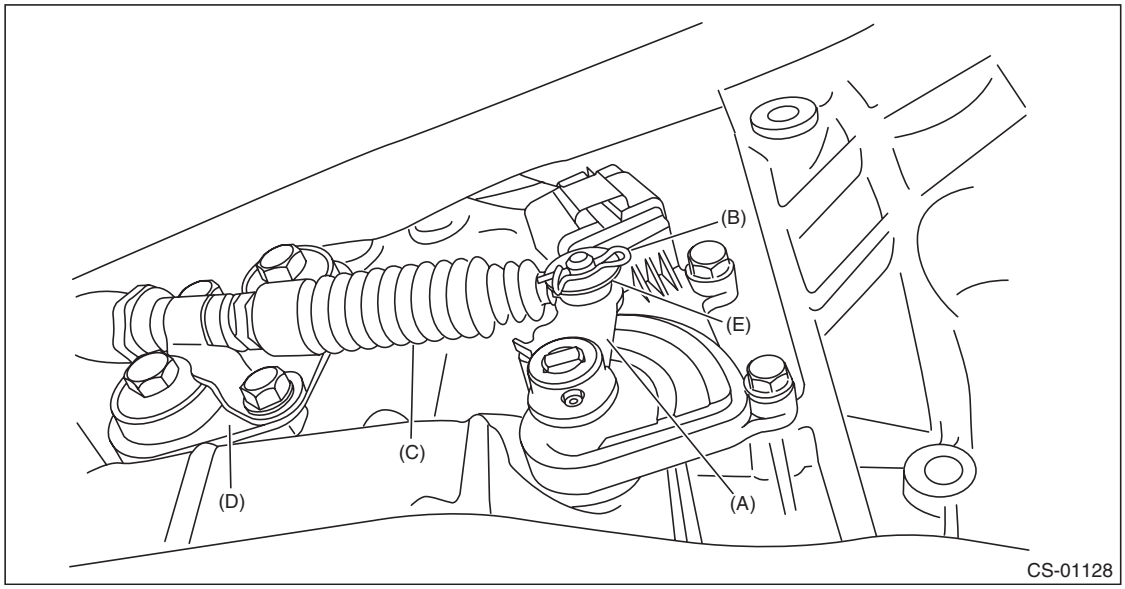

(A) Shifter arm
(B) Snap pin
(C) Select cable
(D) Plate ASSY
(E) Washer

GETtheMANUALS.org

6) Using the ST, remove the spring pin and shifter arm.
ST 398791600 REMOVER

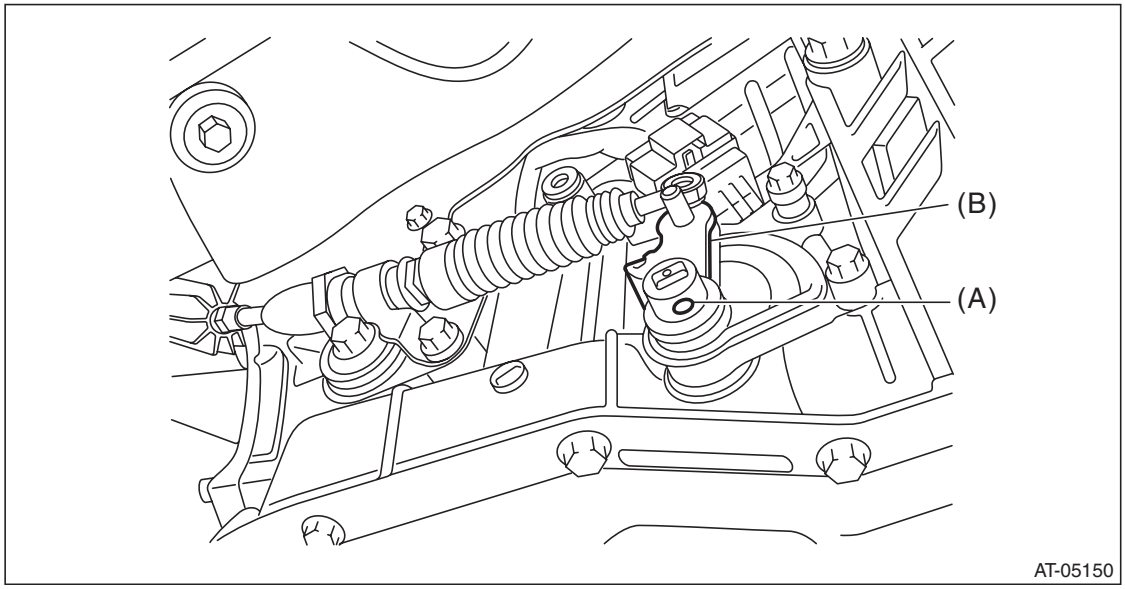

(A) Spring pin
(B) Shifter arm

7) Remove the inhibitor harness connector from inhibitor switch.
8) Remove the two inhibitor switch securing bolts.

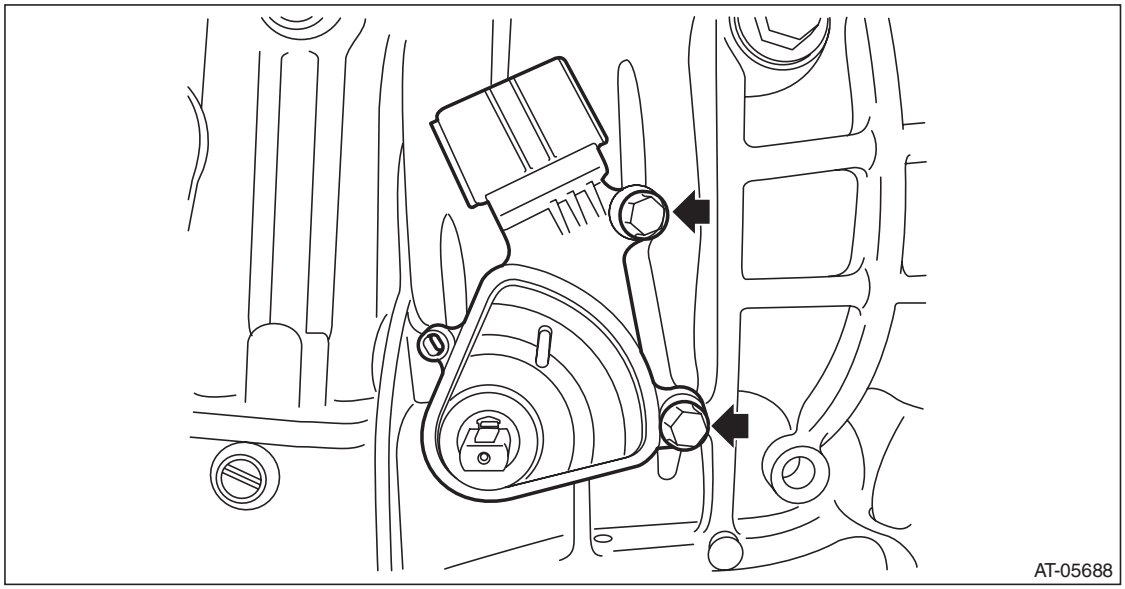

9) Remove the inhibitor switch from the transmission case.

GETtheMANUALS.org

D: INSTALLATION

1) Install the inhibitor switch to the transmission case temporarily.

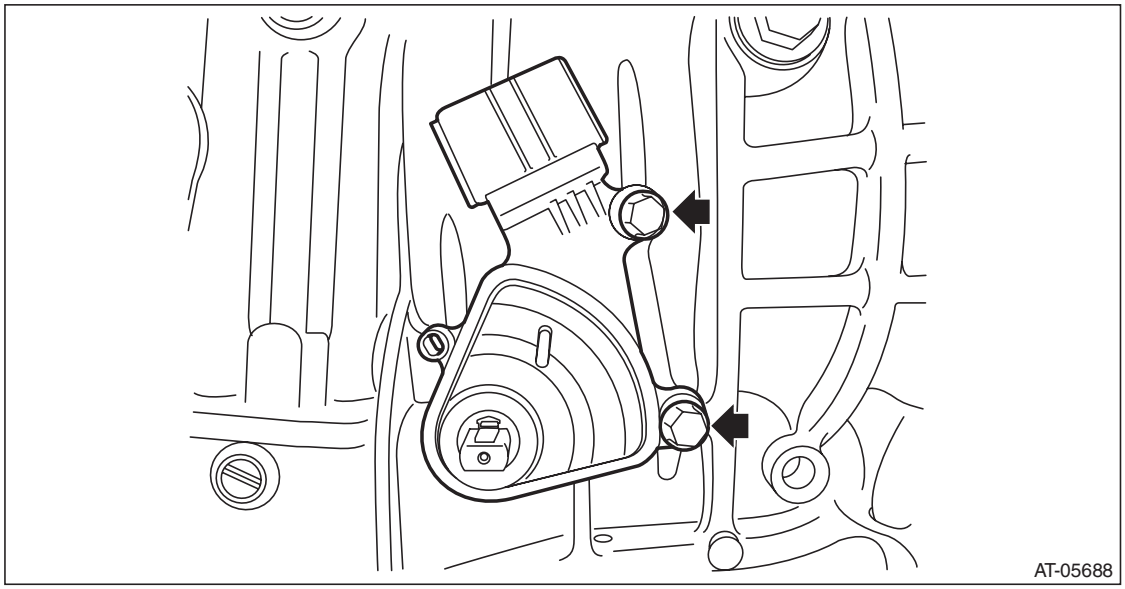

2) Connect the inhibitor harness connector to the inhibitor switch.
3) Install the shifter arm and fix with the spring pin.

NOTE:
Use new spring pin.

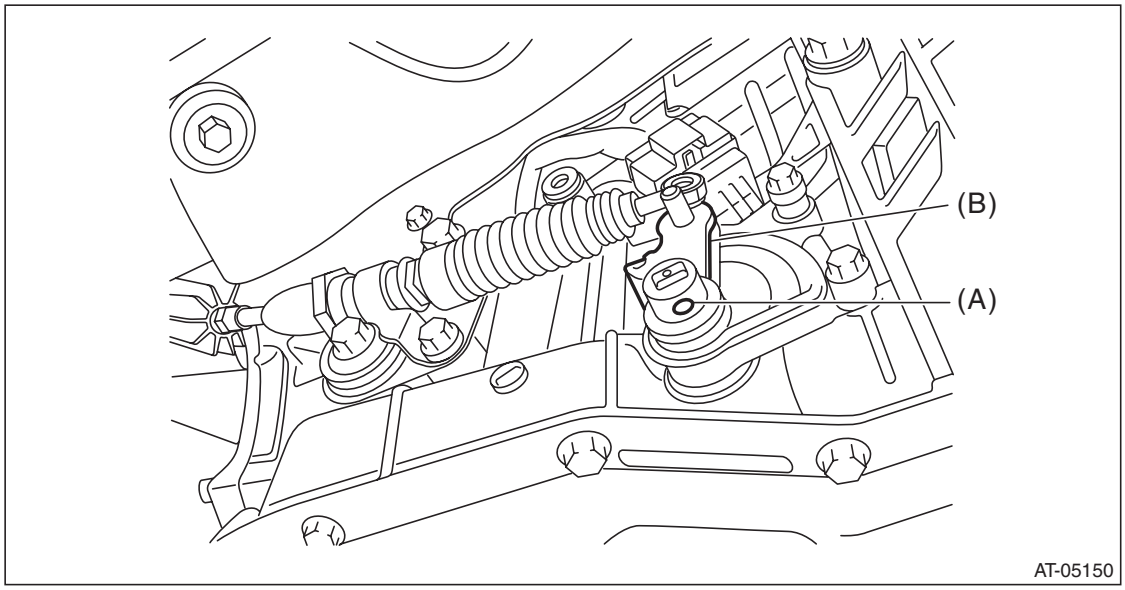

(A) Spring pin
(B) Shifter arm

4) Shift the shifter arm to “N” range.

GETtheMANUALS.org

5) Install the ST vertically in the cutout of shifter arm and the hole of switch body.
ST 499267300 STOPPER PIN

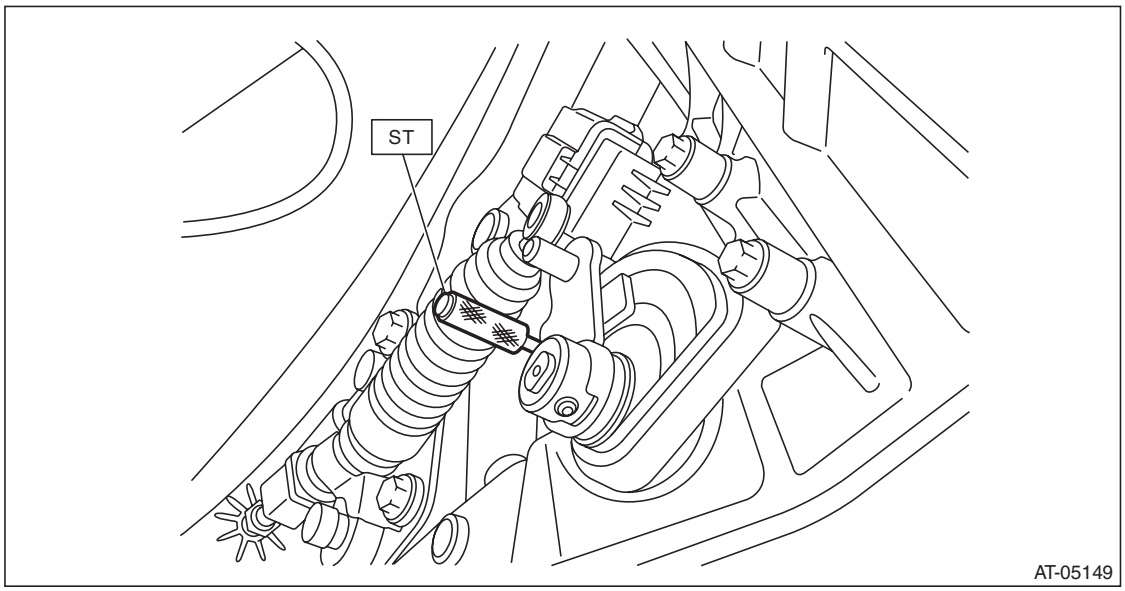

6) Tighten the two bolts holding the inhibitor switch.

Tightening torque:
5 N·m (0.5 kgf-m, 3.7 ft-lb)

7) Install the select cable to the shifter arm.
8) Install the washer and snap pin to the shifter arm.

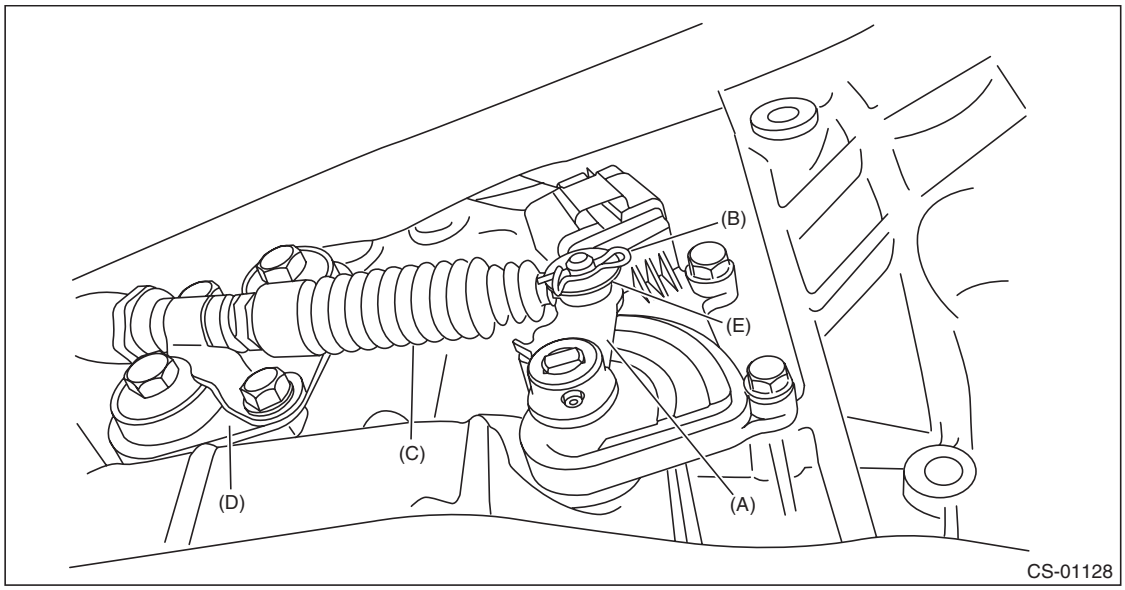

(A) Shifter arm
(B) Snap pin
(C) Select cable
(D) Plate ASSY
(E) Washer

9) Install the center exhaust pipe. <Ref. to EX(H4SO)-8, INSTALLATION, Center Exhaust Pipe.>
10) Lower the vehicle.
11) Connect the battery ground terminal.
12) Check the inhibitor switch. <Ref. to CVT-95, INSPECTION, Inhibitor Switch.>

GETtheMANUALS.org

16.Secondary Speed Sensor

A: REMOVAL

CAUTION:
Be sure to prevent water or oil from contacting the connector terminal of secondary speed sensor. If adhesion occurs, replace with a new part.

1) Remove the transmission from the vehicle. <Ref. to CVT-55, REMOVAL, Automatic Transmission Assembly.>
2) Remove the transmission cover on the transmission upper side.

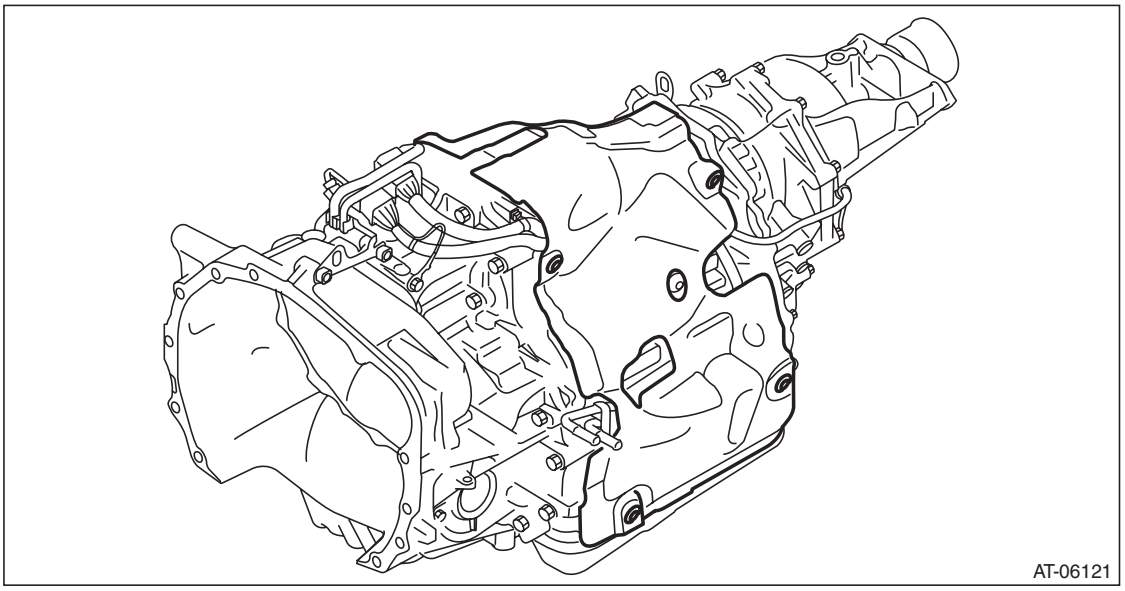

3) Remove the harness connector from secondary speed sensor.
4) Remove the secondary speed sensor.

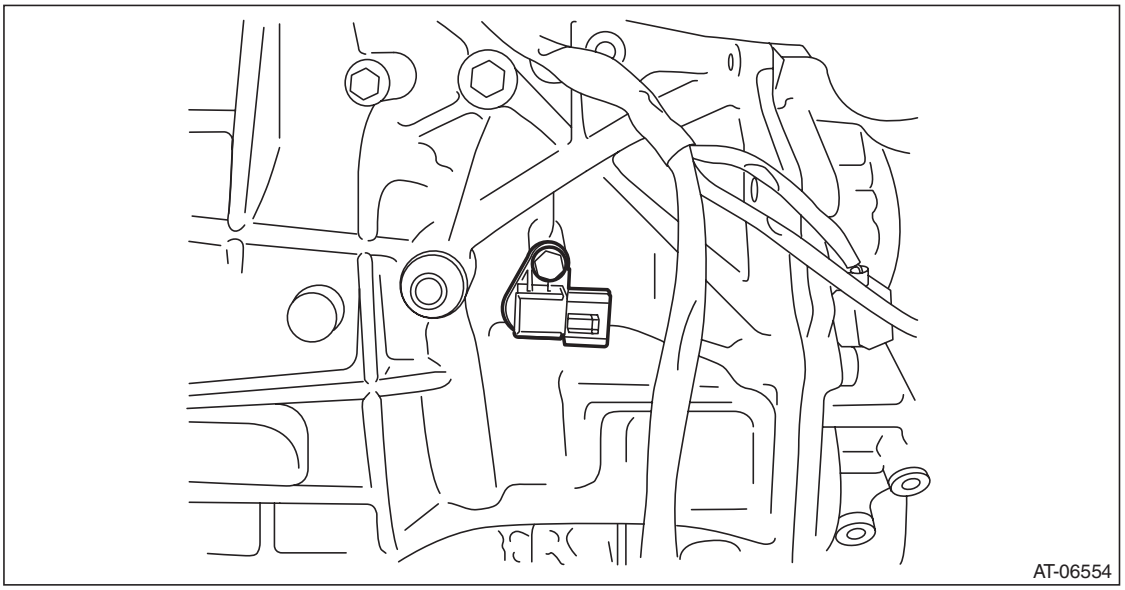

GETtheMANUALS.org

B: INSTALLATION

CAUTION:
Be sure to prevent water or oil from contacting the connector terminal of secondary speed sensor. If adhesion occurs, replace with a new part.
Install in the reverse order of removal.

NOTE:
- Use new O-rings.
- Apply CVTF to the O-ring.

Tightening torque:
Secondary speed sensor
5 N·m (0.5 kgf-m, 3.7 ft-lb)
Transmission cover
8 N·m (0.8 kgf-m, 5.9 ft-lb)

C: INSPECTION

1) Remove the instrument panel lower cover. <Ref. to EI-64, REMOVAL, Instrument Panel Lower Cover.>
2) Set the probe of oscilloscope to TCM harness connector.

Connector & terminal
(B54) No. 7 (+) — No. 14 (–):

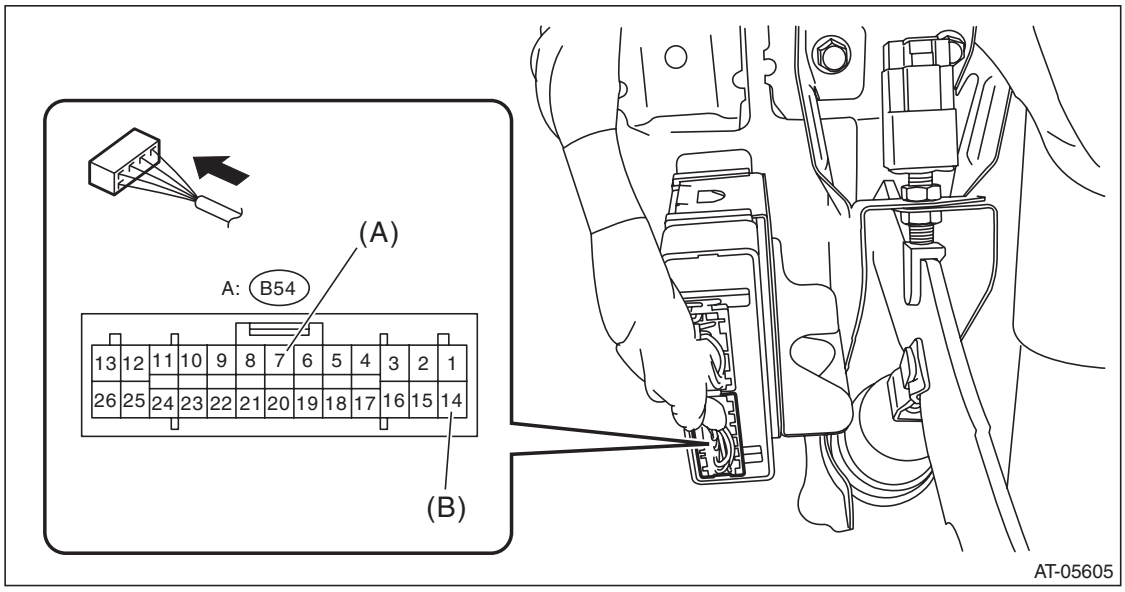

(A) + probe
(B) – probe

3) Start and warm up the engine.

GETtheMANUALS.org

4) Check the waveform of secondary speed sensor with engine idling.

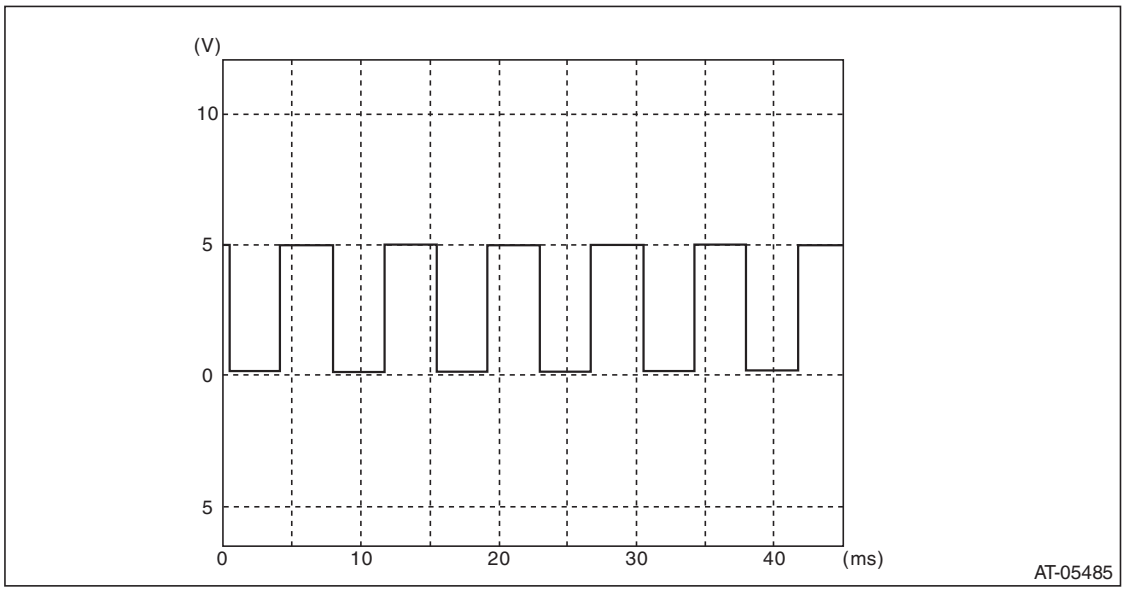

GETtheMANUALS.org

17. Primary Speed Sensor

A: REMOVAL

CAUTION:
Be sure to prevent water or oil from contacting the connector terminal of primary speed sensor. If adhesion occurs, replace with a new part.
1) Remove the air intake boot assembly. <Ref. to IN(H4SO)-8, REMOVAL, Air Intake Boot.>
2) Remove the harness connector from primary speed sensor.
3) Remove the primary speed sensor.

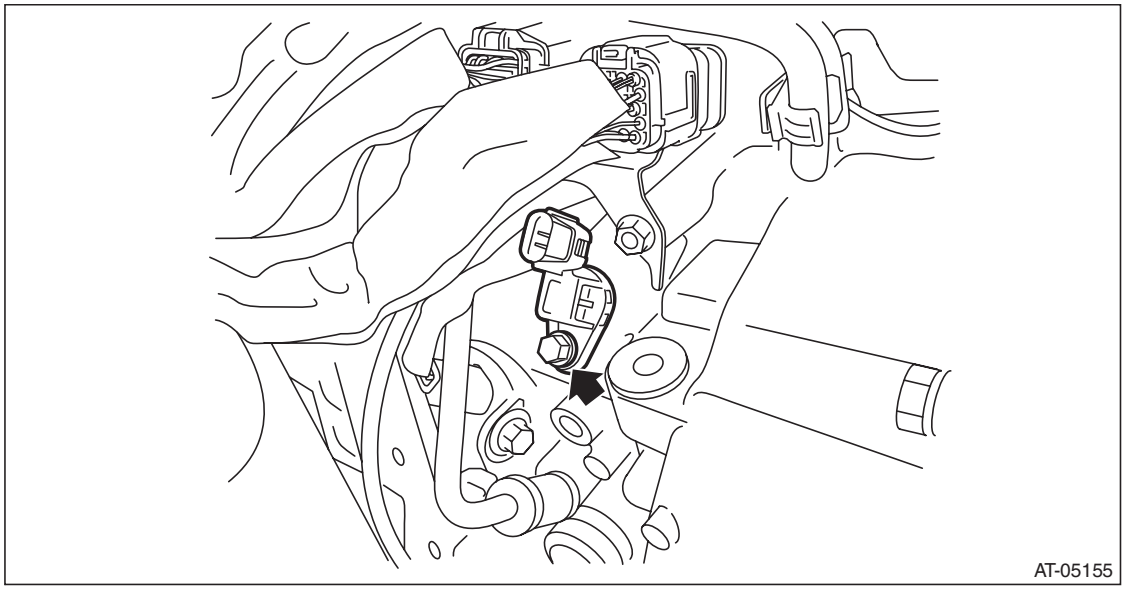

B: INSTALLATION

CAUTION:
Be sure to prevent water or oil from contacting the connector terminal of primary speed sensor. If adhesion occurs, replace with a new part.
Install in the reverse order of removal.

NOTE:
- Use new O-rings.
- Apply CVTF to the O-ring.

Tightening torque:
5 N·m (0.5 kgf-m, 3.7 ft-lb)

GETtheMANUALS.org

C: INSPECTION

1) Remove the instrument panel lower cover. <Ref. to EI-64, REMOVAL, Instrument Panel Lower Cover.>
2) Set the probe of oscilloscope to TCM harness connector.

Connector & terminal
(B54) No. 6 (+) — No. 1 (–):

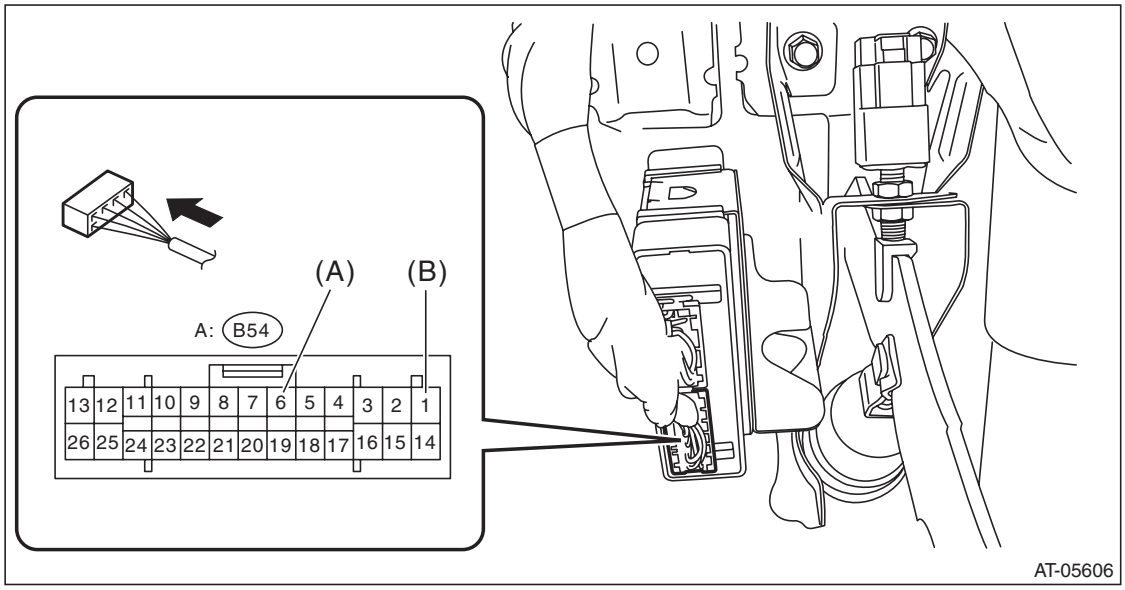

(A) + probe
(B) – probe

3) Start and warm up the engine.
4) Check the waveform of primary speed sensor with engine idling.

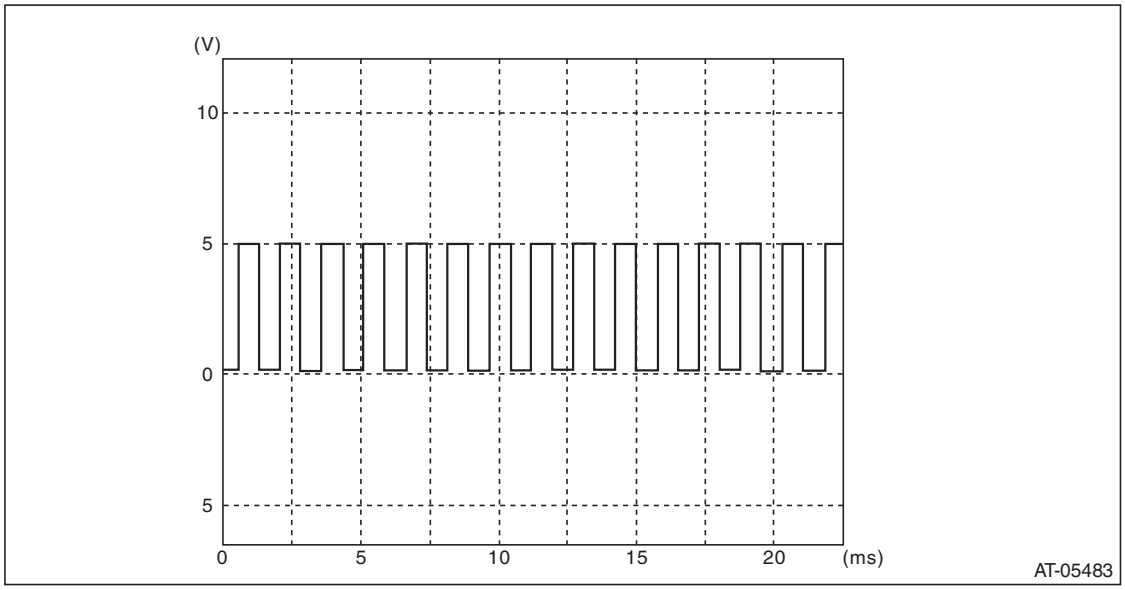

GETtheMANUALS.org

18. Front Wheel Speed Sensor

A: REMOVAL

CAUTION:
- **Be sure to prevent water or oil from contacting the connector terminal of front wheel speed sensor. If adhesion occurs, replace with a new part.**
- **When removing front wheel speed sensor, CVTF may let out. If CVTF has leaked, adjust the CVTF level after installing the front wheel speed sensor.**

1) Lift up the vehicle.
2) Clean the transmission exterior.
3) Remove the harness connector from front wheel speed sensor.
4) Remove the front wheel speed sensor.

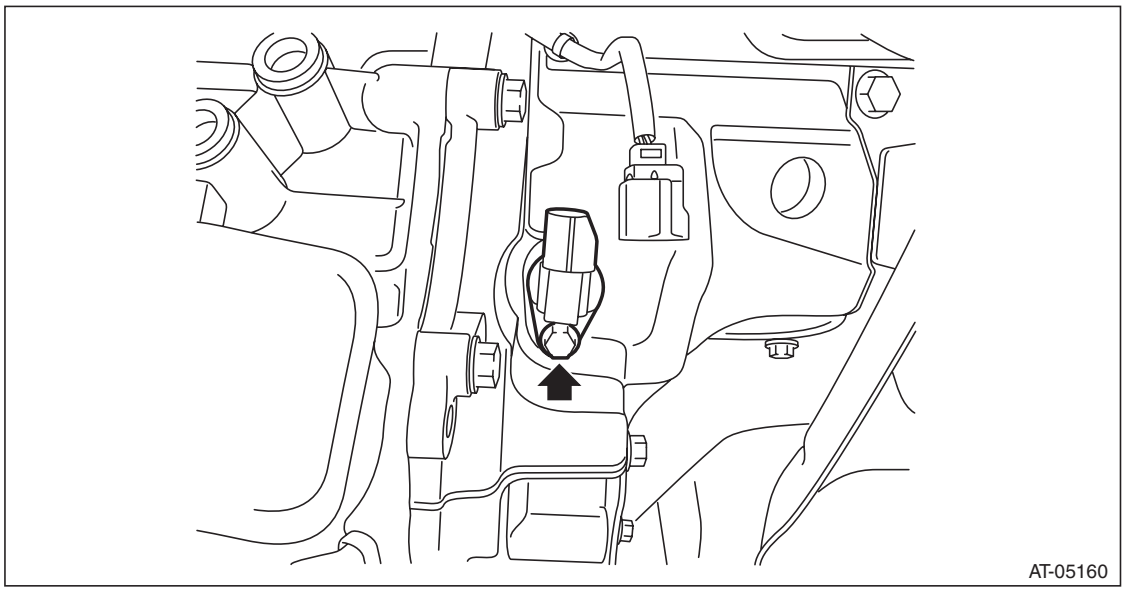

B: INSTALLATION

CAUTION:
- **Be sure to prevent water or oil from contacting the connector terminal of front wheel speed sensor. If adhesion occurs, replace with a new part.**
- **After installing the front wheel speed sensor, adjust the CVTF level.**

Install in the reverse order of removal.

NOTE:
- Use new O-rings.
- Apply CVTF to the O-ring.

Tightening torque:
5 N·m (0.5 kgf-m, 5.2 ft-lb)

GETtheMANUALS.org

C: INSPECTION

1) Remove the instrument panel lower cover. <Ref. to EI-64, REMOVAL, Instrument Panel Lower Cover.>
2) Set the probe of oscilloscope to TCM harness connector.

Connector & terminal
(B54) No. 20 (+) — No. 1 (–):

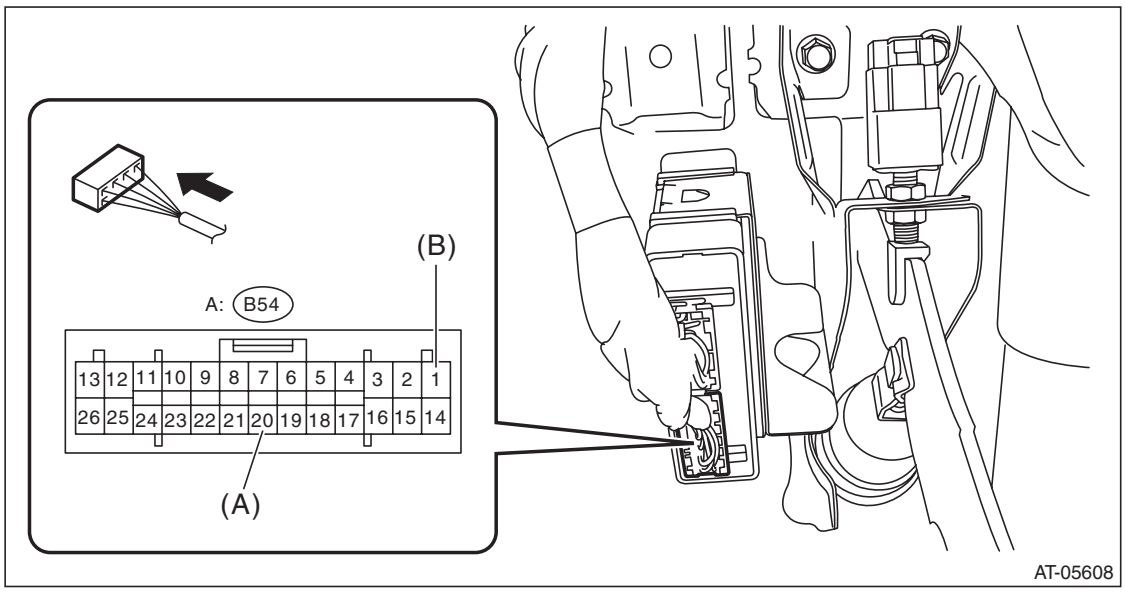

(A) + probe
(B) – probe

3) Lift up the vehicle and raise the vehicle speed up to 20 km/h (12 MPH).
4) Check the waveform of front wheel speed sensor when vehicle speed is at 20 km/h (12 MPH).

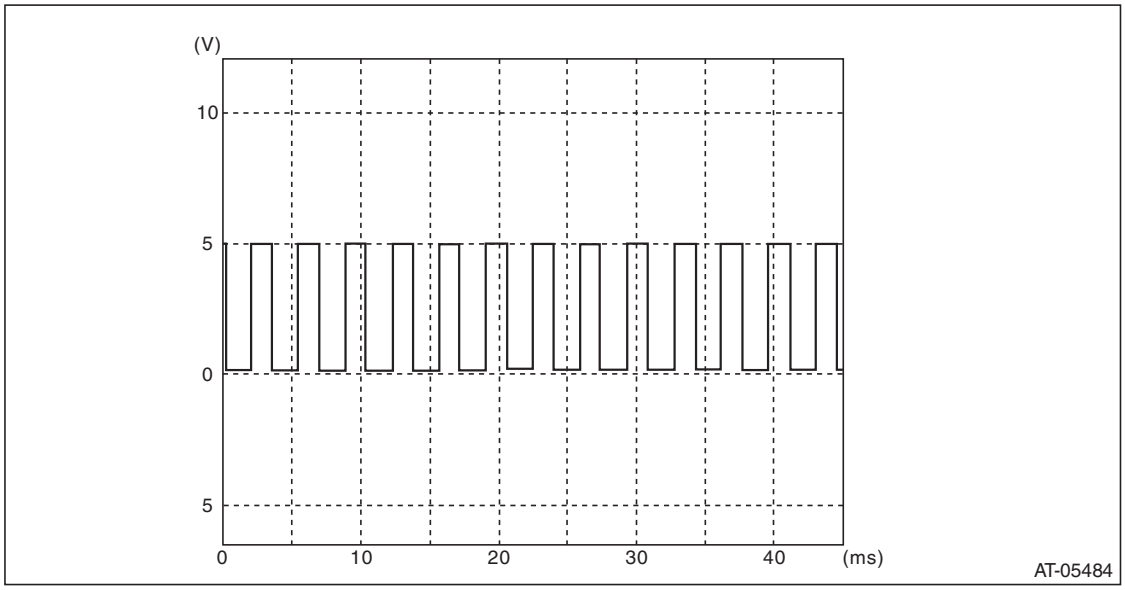

GETtheMANUALS.org

19.Secondary Pressure Sensor

A: REMOVAL

CAUTION:
- **Be sure to prevent water or oil from contacting the connector terminal of secondary pressure sensor. If adhesion occurs, replace with a new part.**
- **When removing secondary pressure sensor, CVTF may let out. If CVTF has leaked, adjust the CVTF level after installing the secondary pressure sensor.**

1) Remove the air intake boot assembly. <Ref. to IN(H4SO)-8, REMOVAL, Air Intake Boot.>
2) Remove the secondary pressure sensor connector.
3) Remove the secondary pressure sensor.

NOTE:
Use Ko-ken 3/8 12-point 27 mm (manufacturer product No. 3305M-27) deep socket.

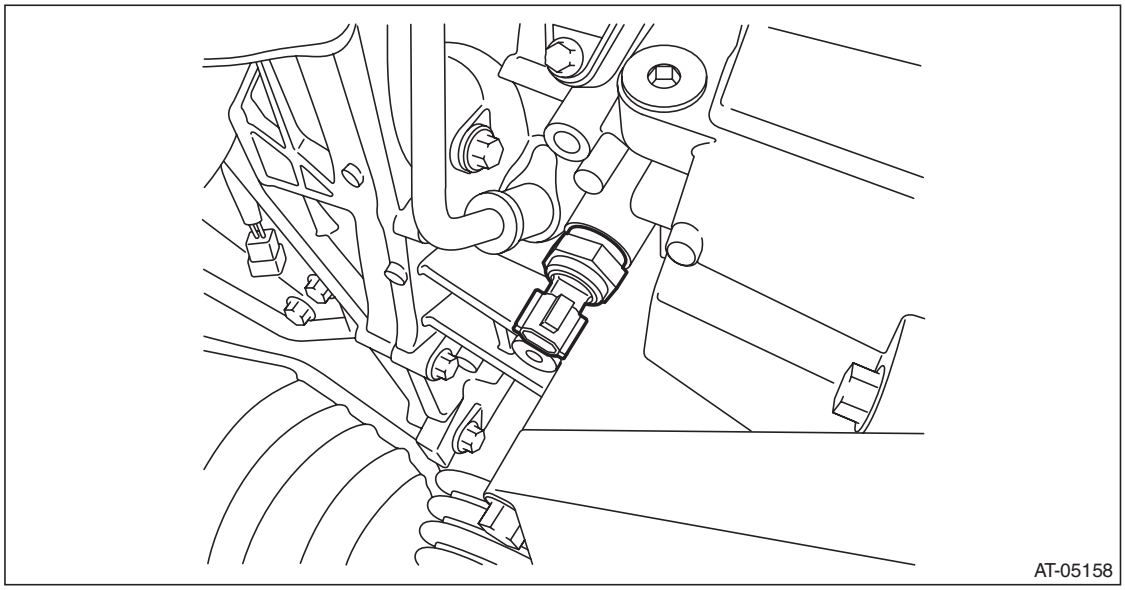

B: INSTALLATION

CAUTION:
- **Be sure to prevent water or oil from contacting the connector terminal of secondary pressure sensor. If adhesion occurs, replace with a new part.**
- **After installing the secondary pressure sensor, adjust the CVTF level.**

Install in the reverse order of removal.

NOTE:
Use new O-rings.

Tightening torque:
39 N·m (4.0 kgf-m, 28.8 ft-lb)

GETtheMANUALS.org

C: INSPECTION

1) Remove the instrument panel lower cover. <Ref. to EI-64, REMOVAL, Instrument Panel Lower Cover.>
2) Start and warm up the engine.
3) Check the voltage of secondary pressure sensor with engine idling.

Connector & terminal
(B54) No. 17 (+) — No. 15 (–):

Specification
0.7 — 0.9 V

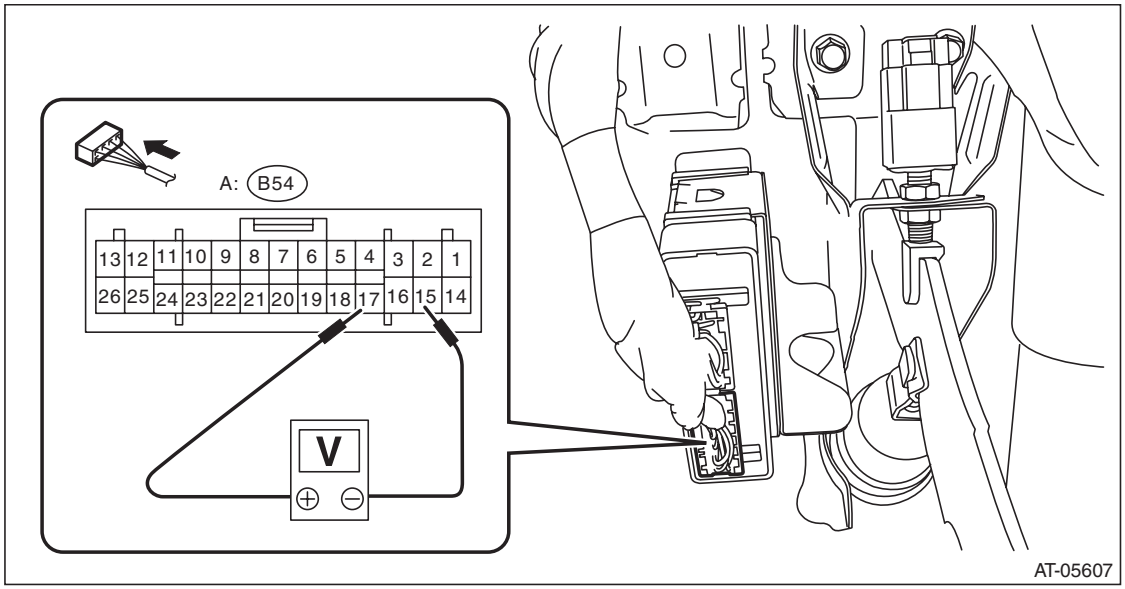

GETtheMANUALS.org

20. Control Valve Body

A: REMOVAL

CAUTION:
- **Directly after the vehicle has been running or the engine has been long idle running, the CVTF is hot. Be careful not to burn yourself.**
- **Be careful not to spill CVTF on the exhaust pipe to prevent it from emitting smoke or causing a fire. If gear oil adheres, wipe it off completely.**

NOTE:
The control valve body is replaced as an assembly only, because it is a non-disassembly part.
1) Lift up the vehicle.
2) Clean the transmission exterior.
3) Remove the CVTF drain plug to drain CVTF.

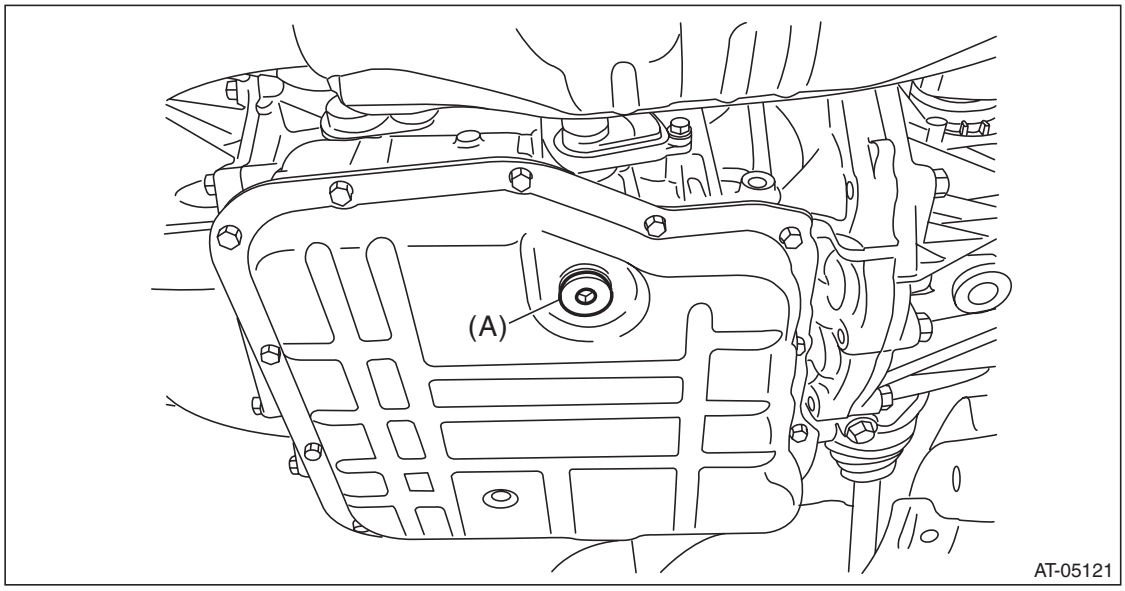

(A) CVTF drain plug

4) Install the CVTF drain plug.

NOTE:
Use a new gasket.

Tightening torque:
20 N·m (2.1 kgf-m, 14.8 ft-lb)

GETtheMANUALS.org

5) Remove the oil pan.

CAUTION:
Be careful not to allow foreign matter such as dust or dirt to enter the oil pan.

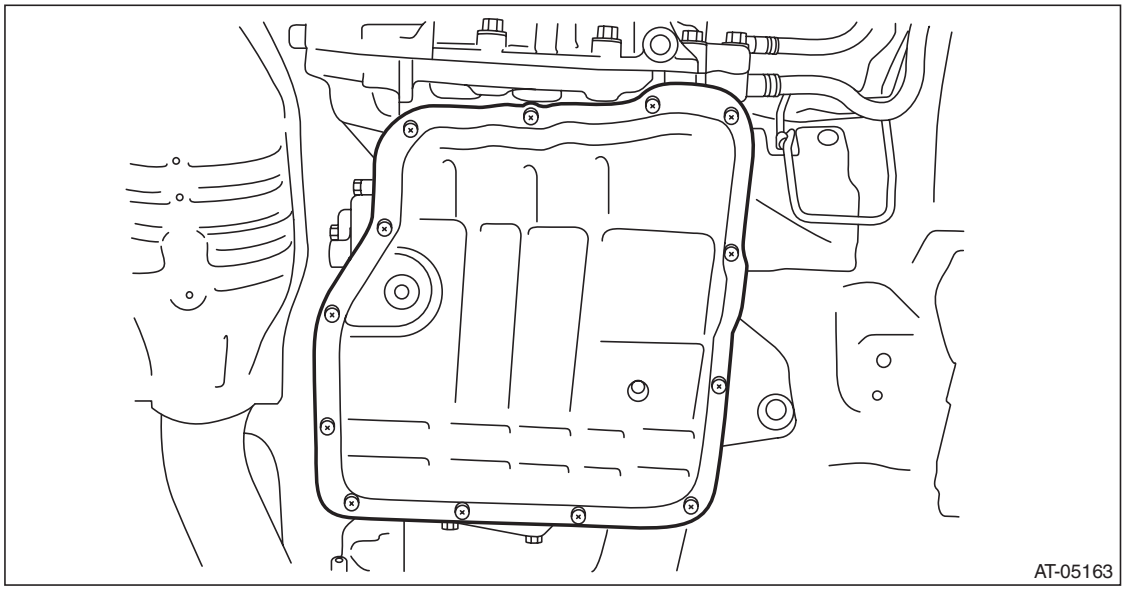

6) Remove the magnet.
7) Disconnect the control valve harness connector.

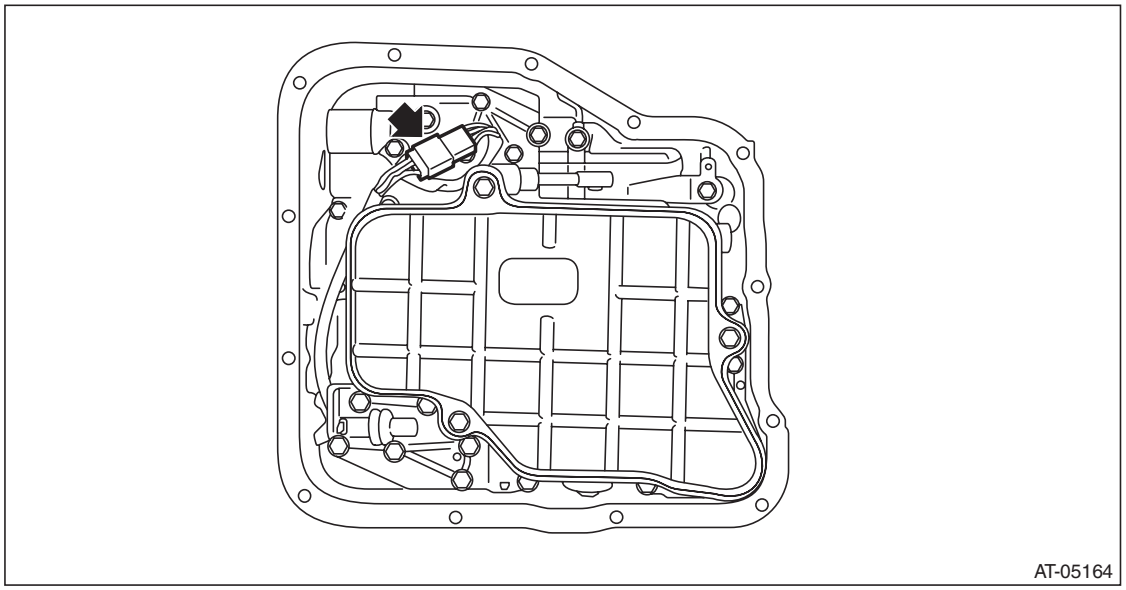

GETtheMANUALS.org

8) Remove the oil strainer.

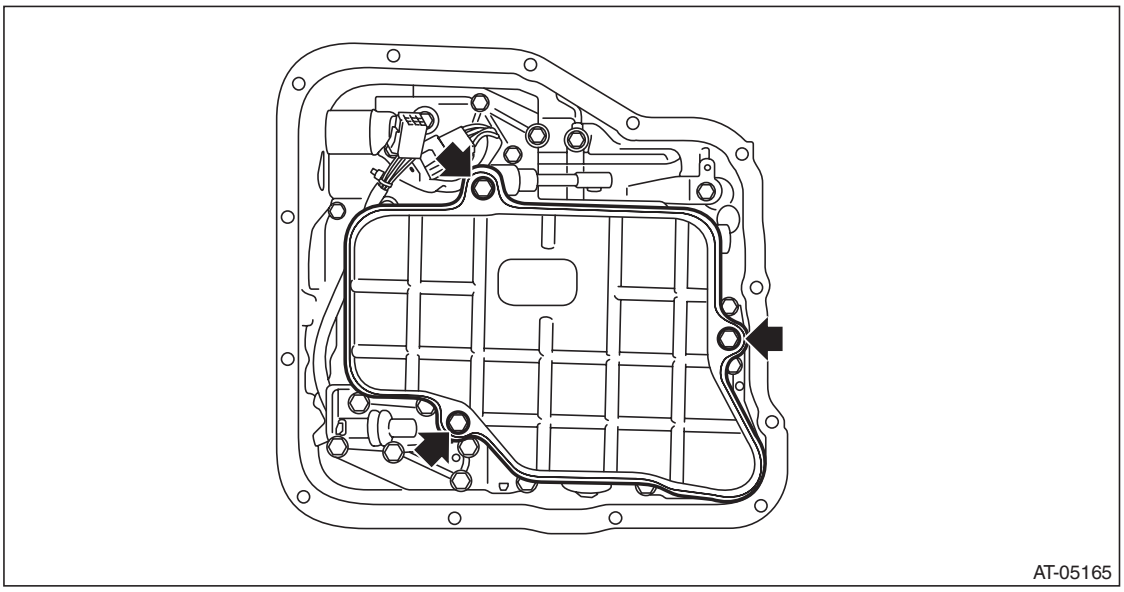

9) Remove the control valve body.

CAUTION:
Do not let the manual valve drop off.

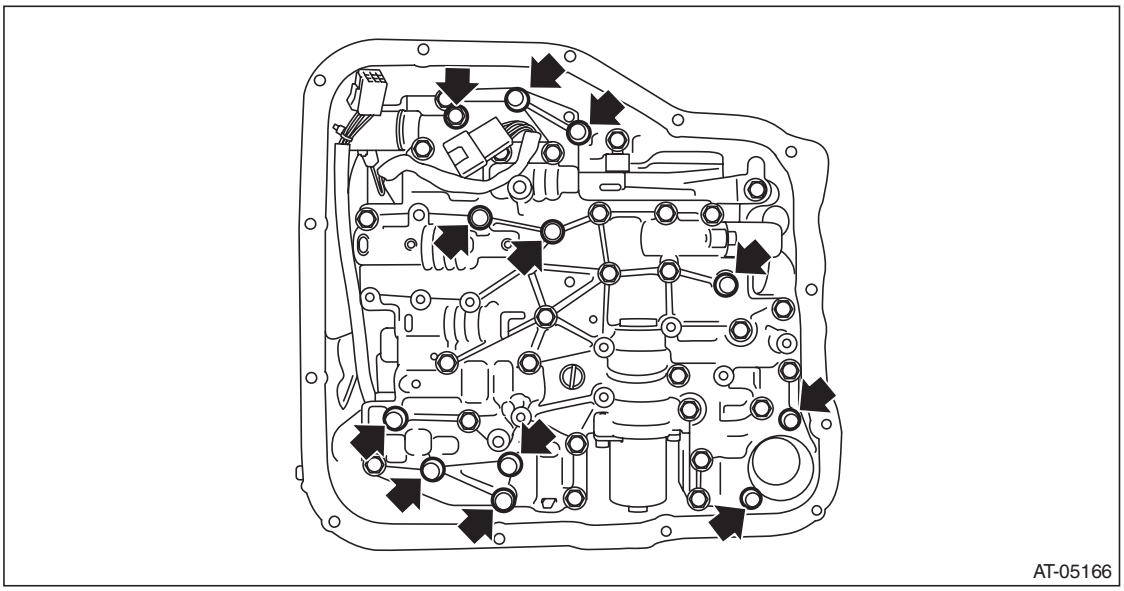

GETtheMANUALS.org

10) Remove the pressure pipe.

NOTE:
It may be located in transmission case side.

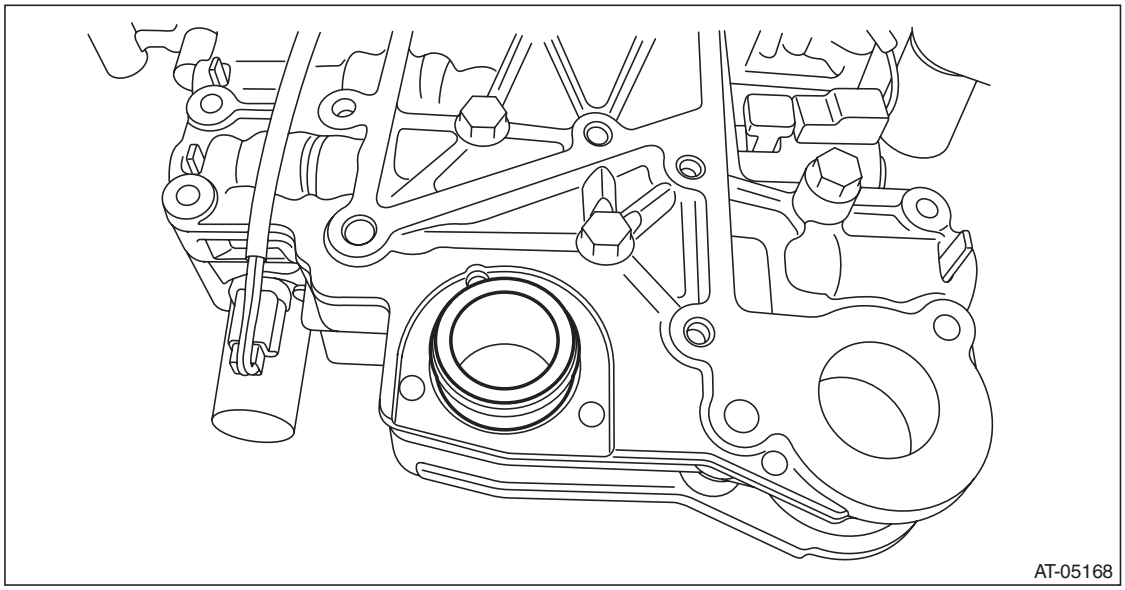

11) Remove the O-ring from oil strainer.

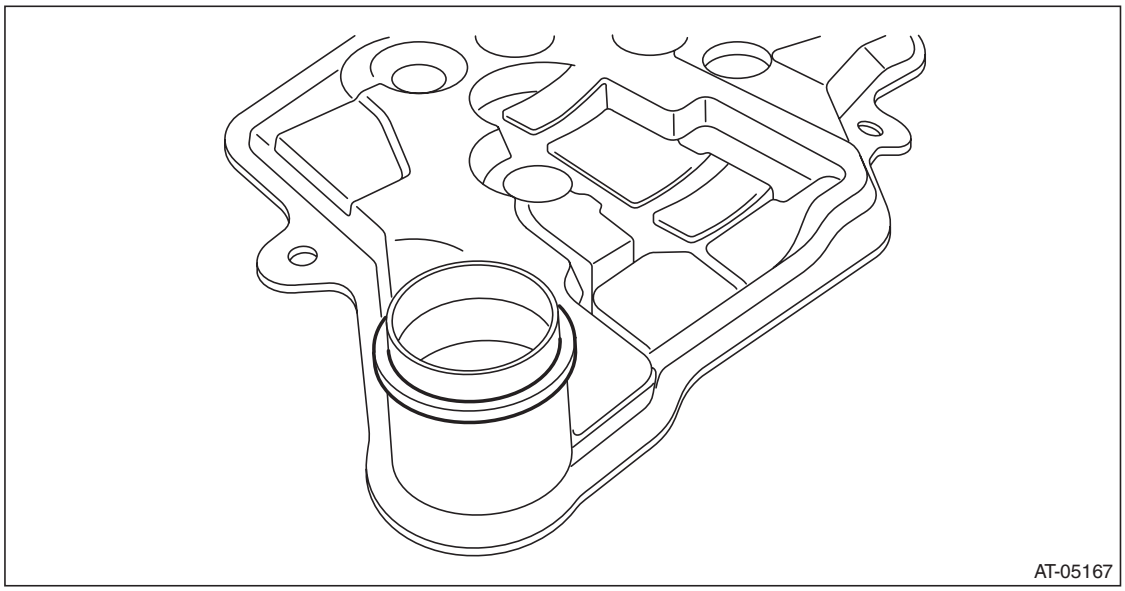

GETtheMANUALS.org

12) Remove the O-ring from pressure pipe.

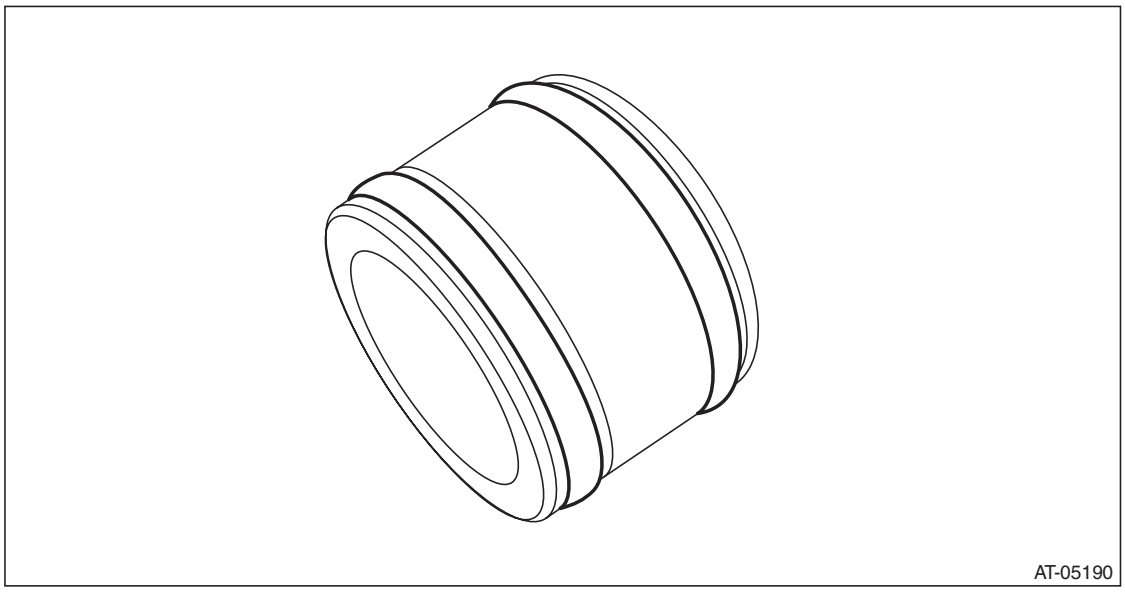

B: INSTALLATION

1) Clean the mating surface of oil pan and transmission case.
2) Check the control valve body for dust and other foreign matter.
3) Install the O-ring to the pressure pipe.

NOTE:
- Use new O-rings.
- Apply CVTF to the O-ring.

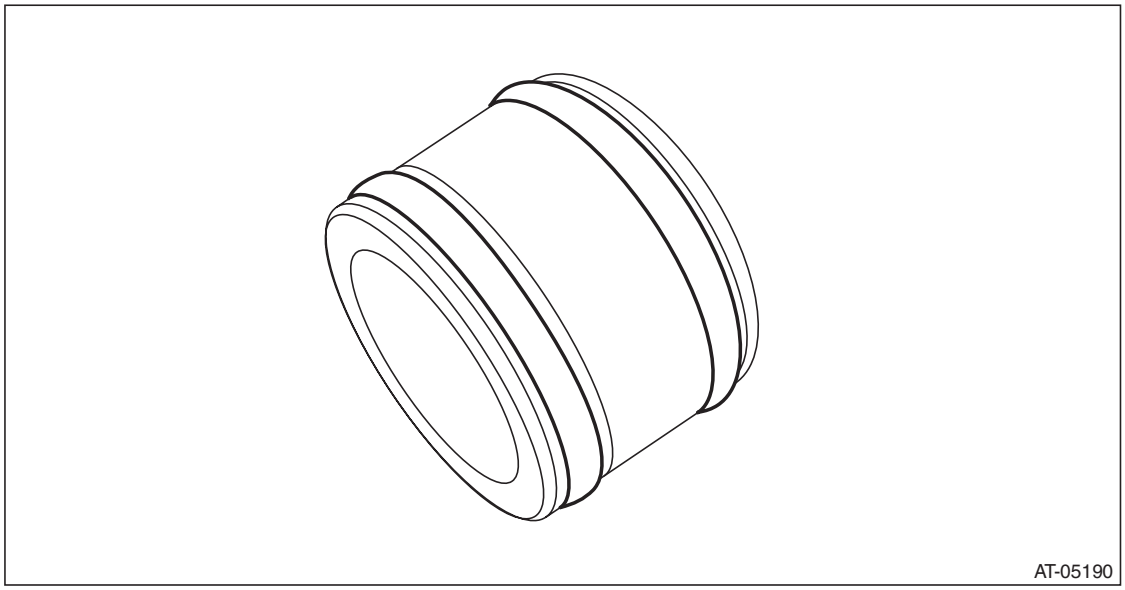

GETtheMANUALS.org

4) Install the pressure pipe.

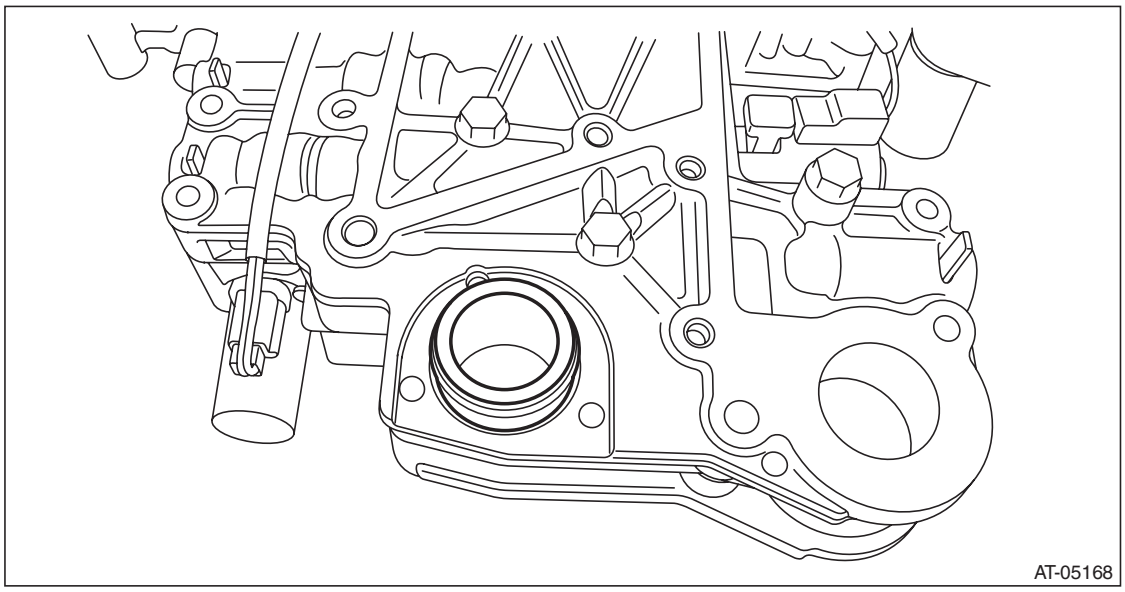

5) Install the control valve body to the transmission.

CAUTION:
- **Beware of the transmission harness getting caught in between.**
- **Do not impact or bend the transmission harness because it has the oil temperature sensor inside.**

NOTE:
- Engage the manual valve to the manual plate.
- Lead the transmission harness through from the point indicated by dashed line in the figure.

Tightening torque:
9 N·m (0.9 kgf-m, 6.6 ft-lb)

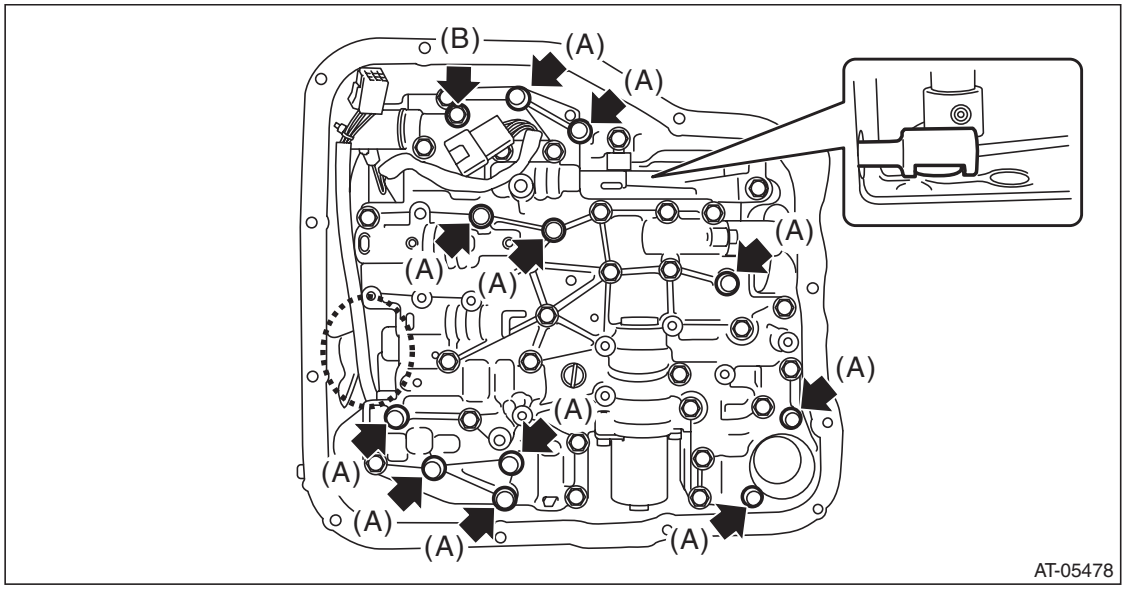

(A) Short bolt (11 pcs)
(B) Long bolt (1 pcs)

GETtheMANUALS.org

6) Install the O-ring to oil strainer and install the oil strainer.

NOTE:
- Use new O-rings.
- Apply CVTF to the O-ring.
- Let the transmission harness run between control valve body and oil strainer.

Tightening torque:
9 N·m (0.9 kgf-m, 6.6 ft-lb)

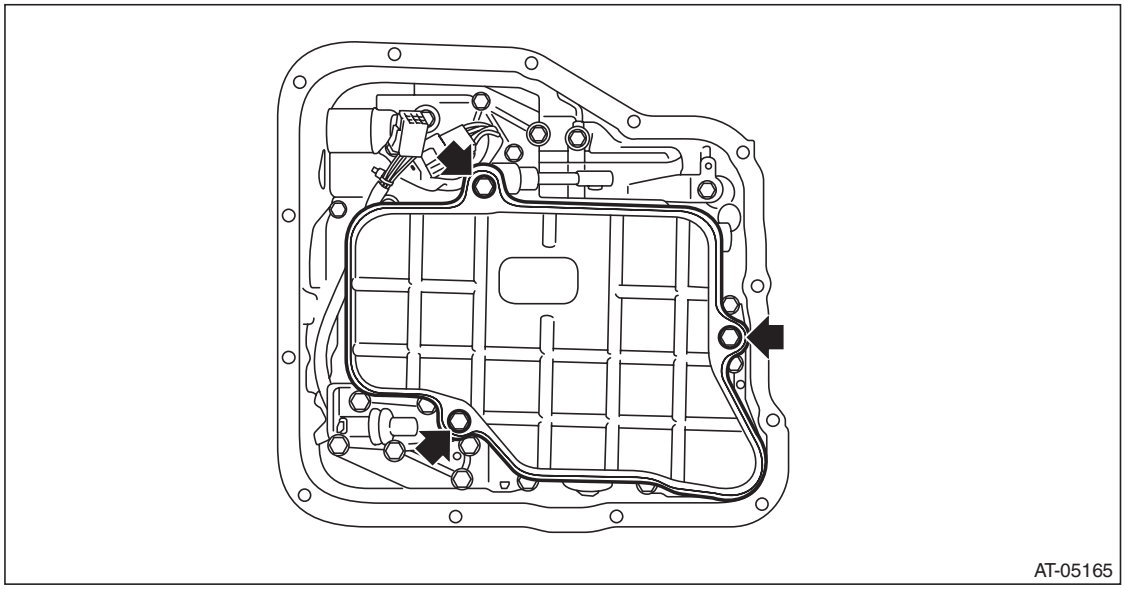

7) Connect the control valve harness connector.

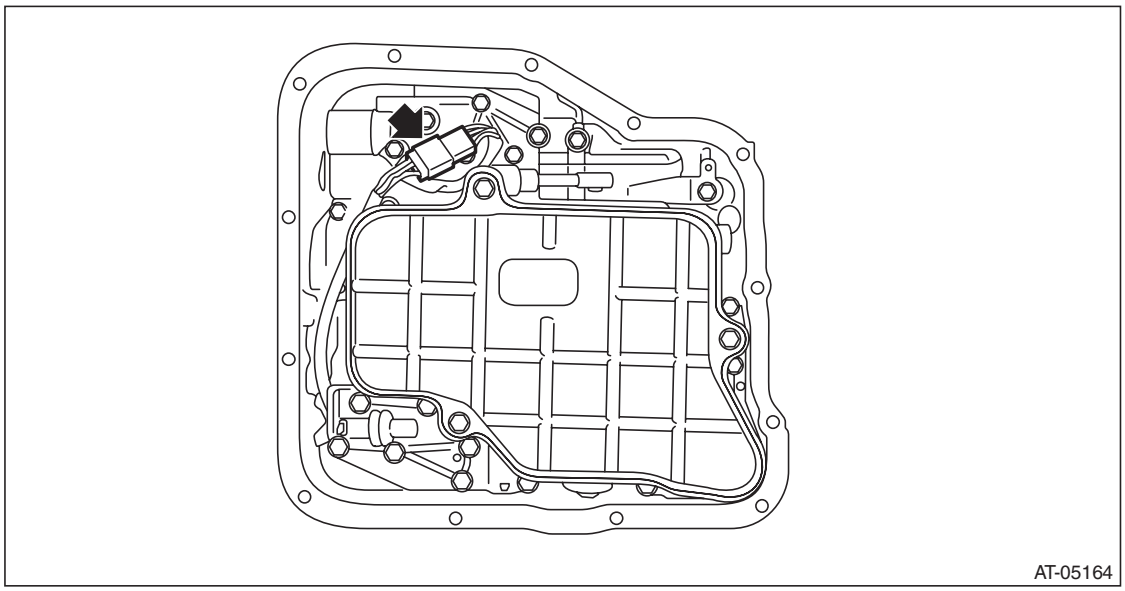

8) Clean the magnet.

GETtheMANUALS.org

9) Attach the magnet at the specified position of the oil pan.

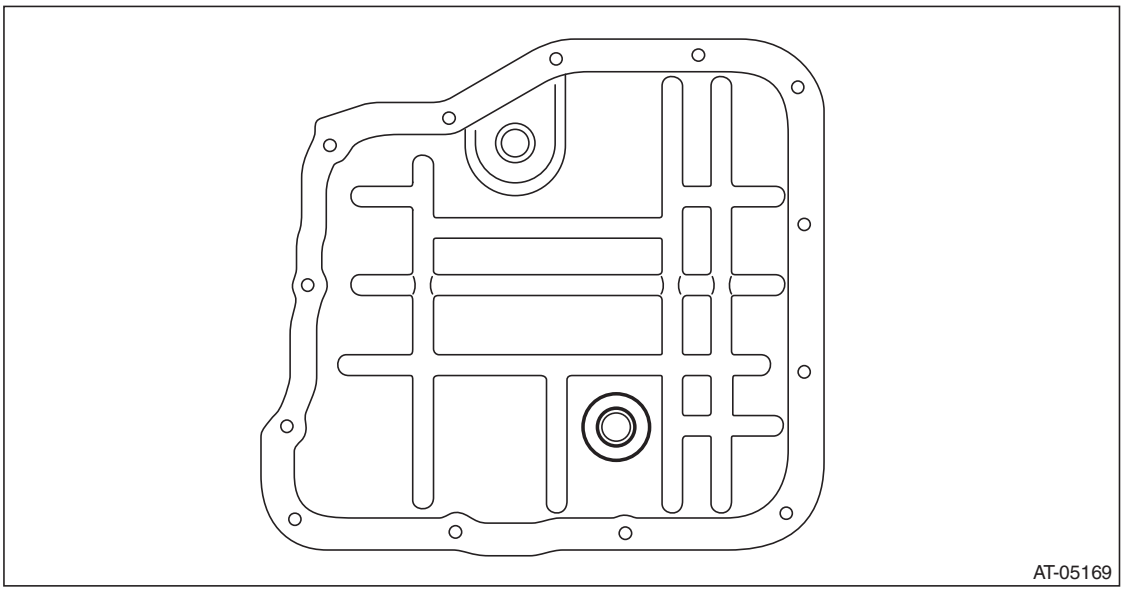

10) Apply liquid gasket all around the oil pan mating surface seamlessly.

Liquid gasket:
THREE BOND 1217B (Part No. K0877YA020) or equivalent

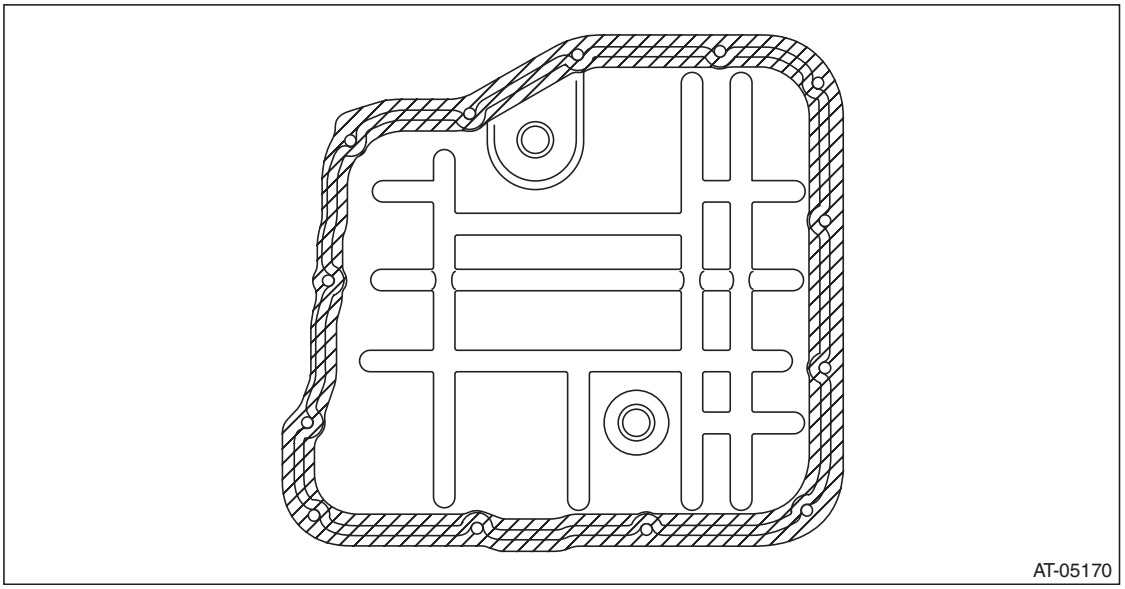

GETtheMANUALS.org

11) Install the oil pan by equally tightening the bolts.

CAUTION:
Beware of the transmission harness getting caught in between.

Tightening torque:
5 N·m (0.5 kgf-m, 3.7 ft-lb)

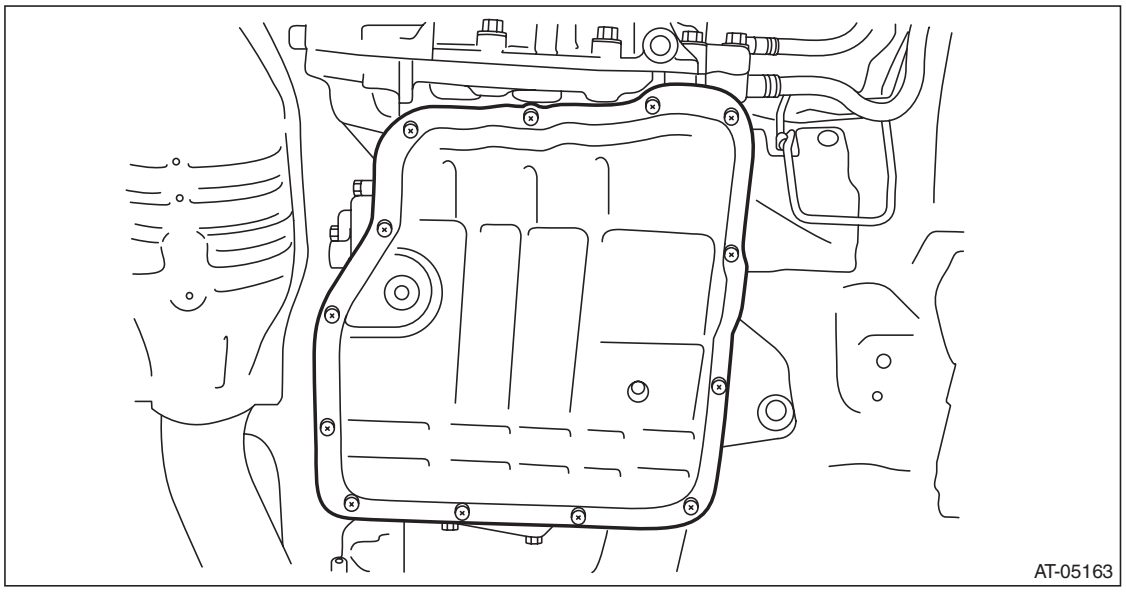

12) Fill with CVTF. <Ref. to CVT-38, REPLACEMENT, CVTF.>
13) Adjust the CVTF level. <Ref. to CVT-37, ADJUSTMENT, CVTF.>

GETtheMANUALS.org

C: INSPECTION

- Check each part for damage or dust.
- Check oil strainer for clogging.
- Measure the resistance of each solenoid.

NOTE:
Measurement should be performed at a temperature of 20°C (68°F).

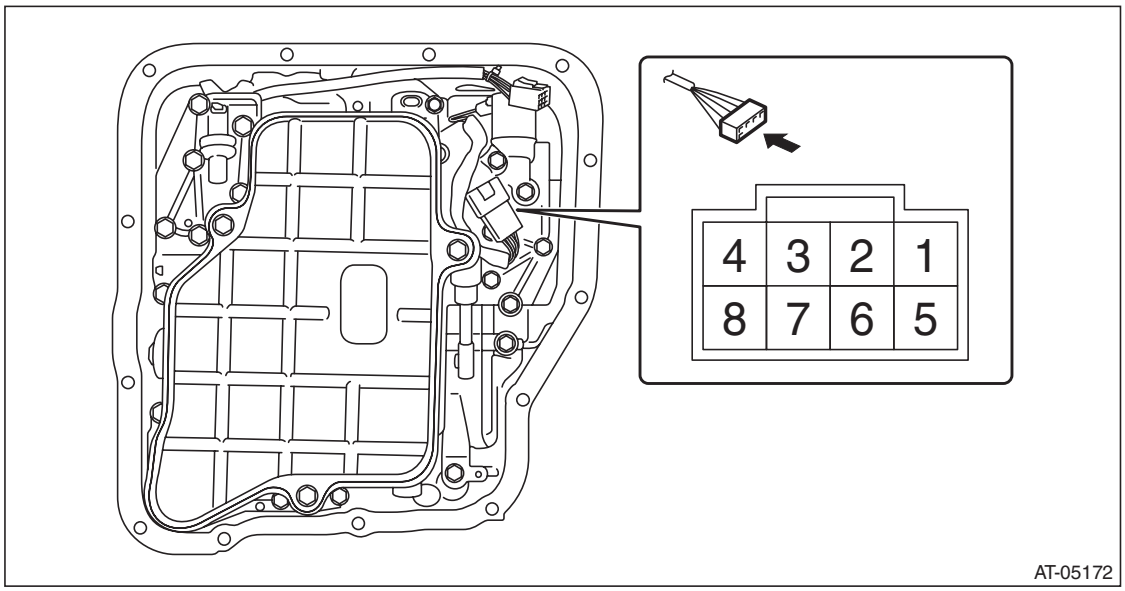

Solenoid	Terminal No.	Standard (Ω)
Secondary solenoid	No. 1 — control valve body	Approx. 6.6 Ω
Lock-up duty solenoid	No. 2 — control valve body	Approx. 12 Ω
F&R solenoid	No. 3 — control valve body	Approx. 5.3 Ω
Lock-up ON/OFF solenoid	No. 5 — control valve body	Approx. 16 Ω
Primary DOWN solenoid	No. 6 — control valve body	Approx. 12 Ω
Primary UP solenoid	No. 7 — control valve body	Approx. 12 Ω
AWD solenoid	No. 8 — control valve body	Approx. 3.2 Ω

GETtheMANUALS.org

21.Transmission Harness

A: REMOVAL

1) Remove the transmission from the vehicle. <Ref. to CVT-55, REMOVAL, Automatic Transmission Assembly.>
2) Prepare for overhaul. <Ref. to CVT-135, Preparation for Overhaul.>
3) Remove the transmission harness ground terminal and remove the harness connectors from front wheel speed sensor and secondary speed sensor.

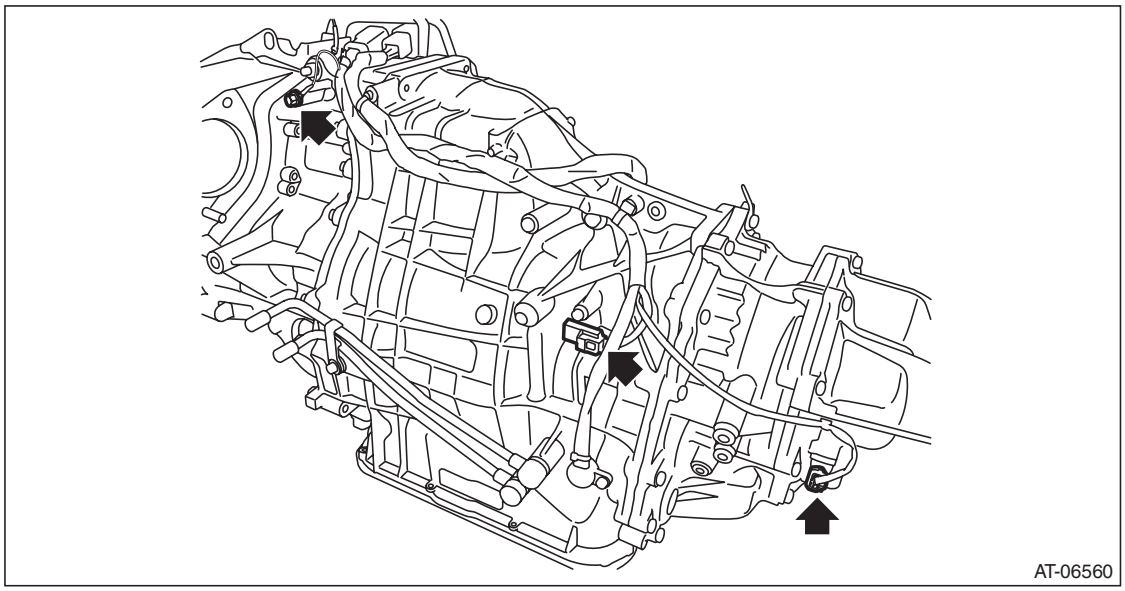

4) Remove the harness connectors from inhibitor switch, primary speed sensor and secondary pressure sensor.

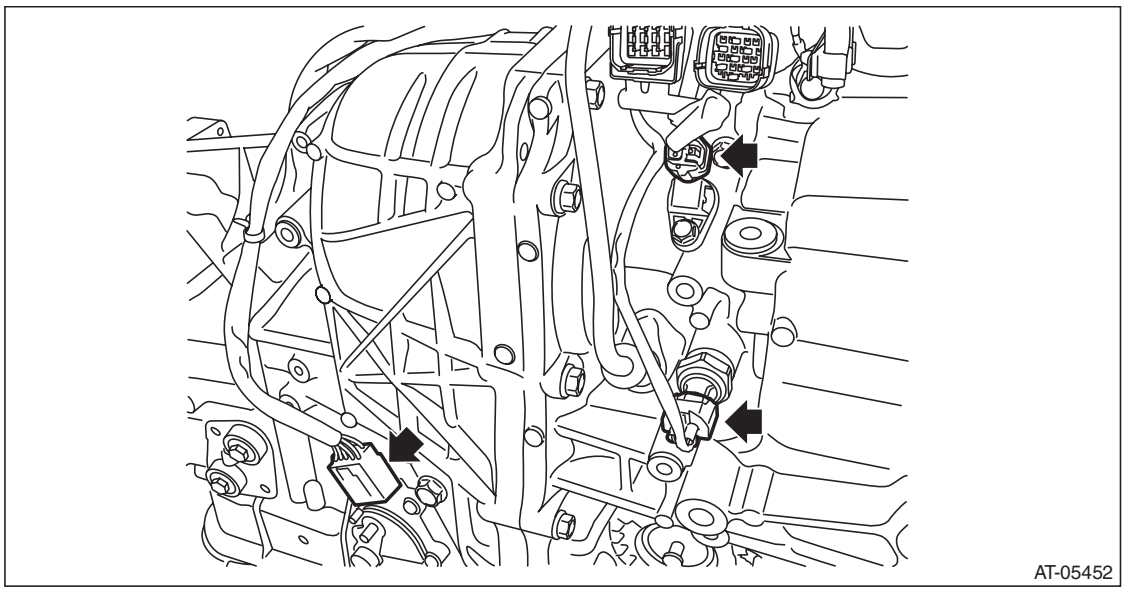

GETtheMANUALS.org

5) Remove the transmission harness stay.

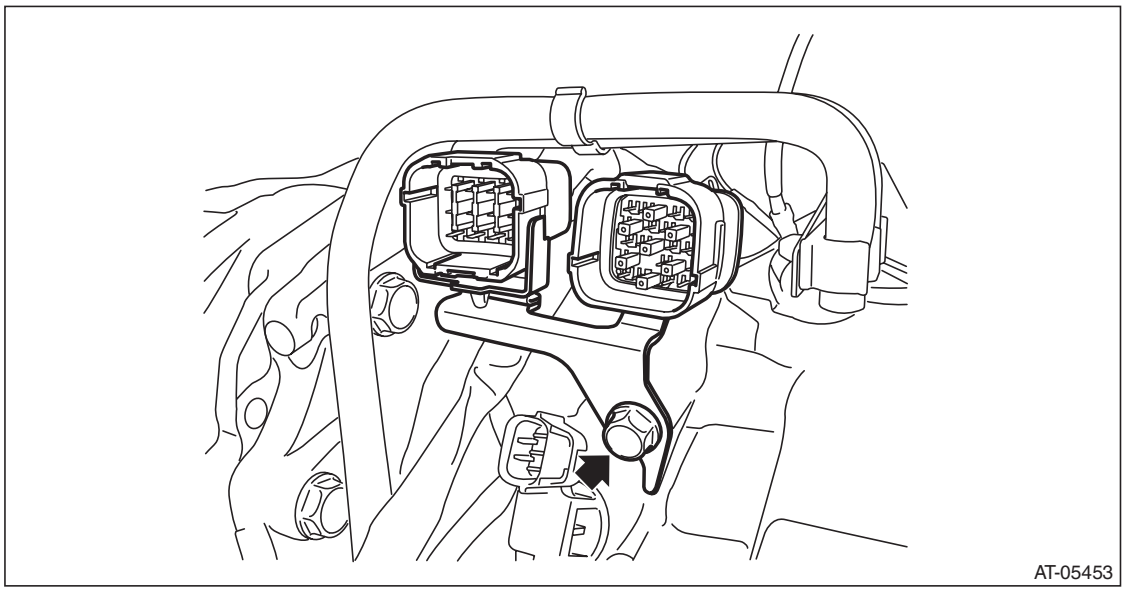

6) Remove transmission harness connector and inhibitor harness connector from harness stay.
7) Remove the control valve body. <Ref. to CVT-111, REMOVAL, Control Valve Body.>
8) Remove the mounting bolt to pull out the bushing of transmission harness from transmission case round hole.

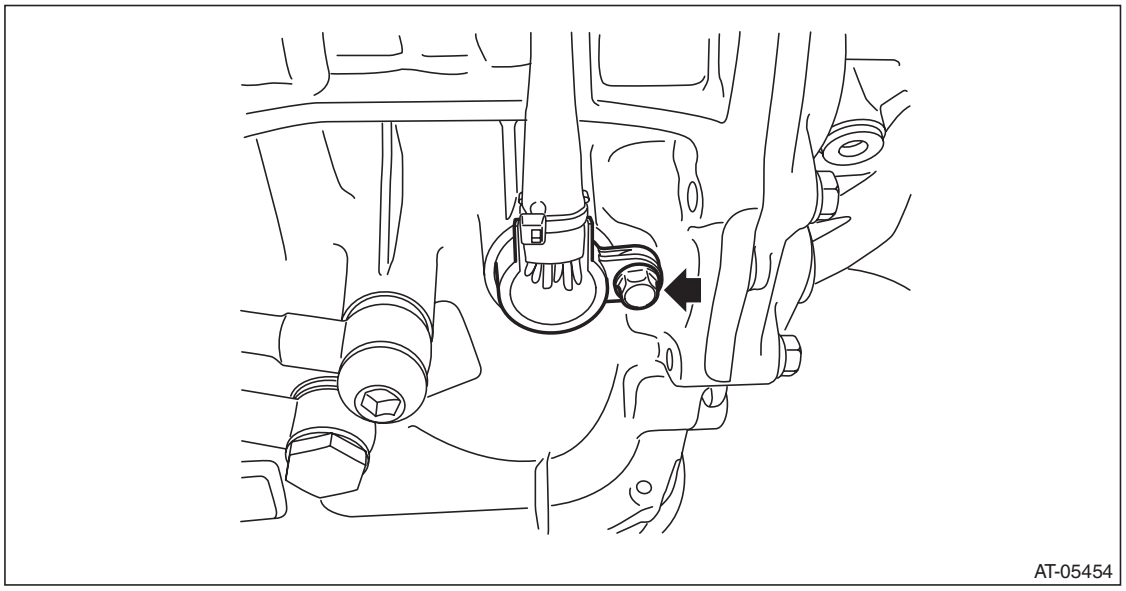

9) Remove the harness clip from transmission assembly.

GETtheMANUALS.org

B: INSTALLATION

Install in the reverse order of removal.

NOTE:
- Use new O-rings.
- Do not impact or bend the transmission harness because it has the oil temperature sensor inside.
- Install the transmission ground terminal approximately at an angle of 45°.

Tightening torque:
T1: 5 N·m (0.5 kgf-m, 3.7 ft-lb)
T2: 16 N·m (1.6 kgf-m, 11.8 ft-lb)

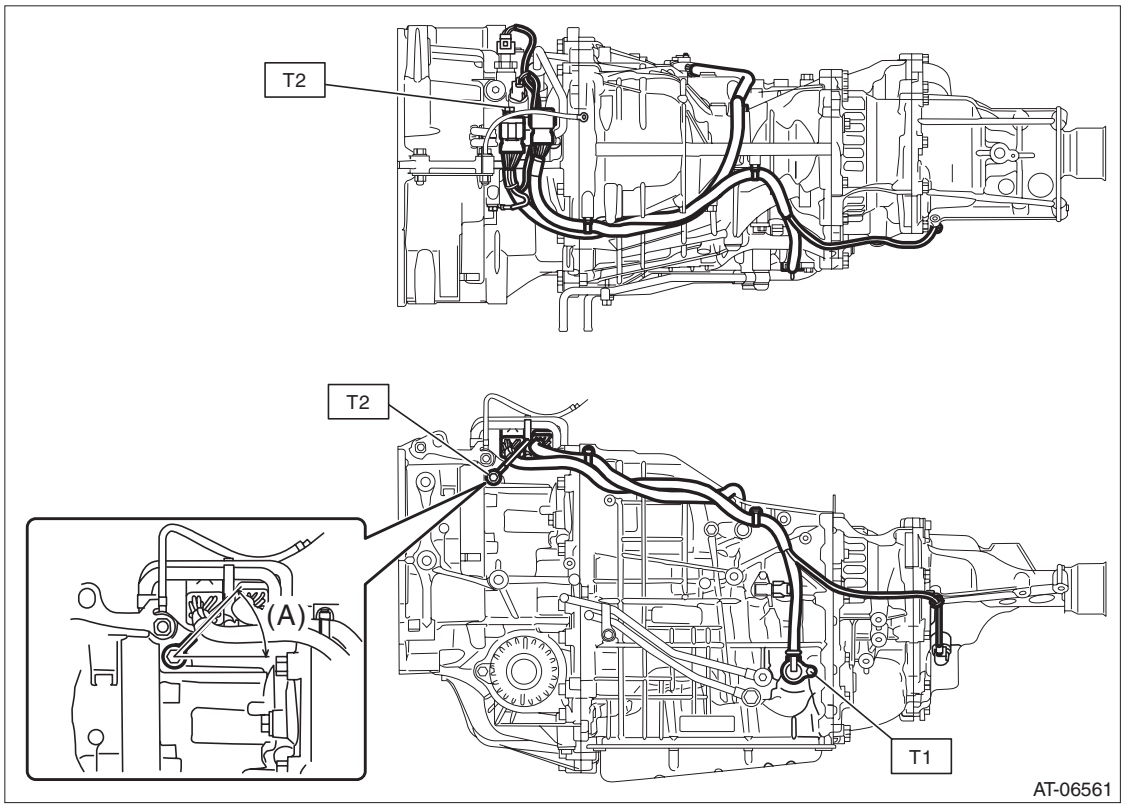

(A) Install at an angle of 45° approximately.

C: INSPECTION

1) Visually check the harness and connector for damage or crack.
2) Check the harness terminal for rust, disconnection or poor contact.
3) Check the continuity between harness terminals and oil temperature sensor.

NOTE:
Refer to WIRING SECTION for transmission harness terminal and oil temperature sensor terminal. <Ref. to WI-112, WIRING DIAGRAM, CVT Control System.>

Harness continuity standard
Less than 1 Ω

Oil temperature sensor standard
Approx. 2.6 kΩ (at 20°C)

GETtheMANUALS.org

22. Transmission Control Module (TCM)

A: REMOVAL

1) Disconnect the ground cable from battery.
2) Remove the instrument panel lower cover. <Ref. to EI-64, REMOVAL, Instrument Panel Lower Cover.>
3) Remove the bulkhead harness connector from TCM.
4) Remove the TCM.

NOTE:
Replace TCM and bracket as a set.

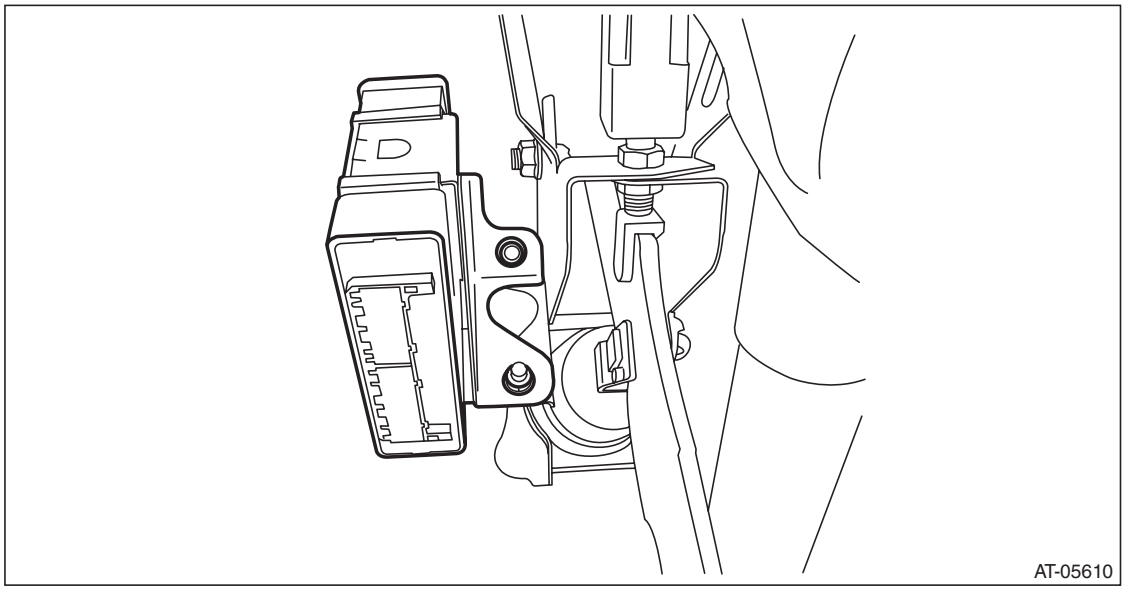

GETtheMANUALS.org

B: INSTALLATION

1) Install the TCM to the bracket.

CAUTION:
To avoid the damage to bracket and TCM, do not remove after installing TCM to bracket. If installed by mistake, the part must be replaced with a new part.

2) Install the TCM.

Tightening torque:
7.5 N·m (0.76 kgf-m, 5.5 ft-lb)

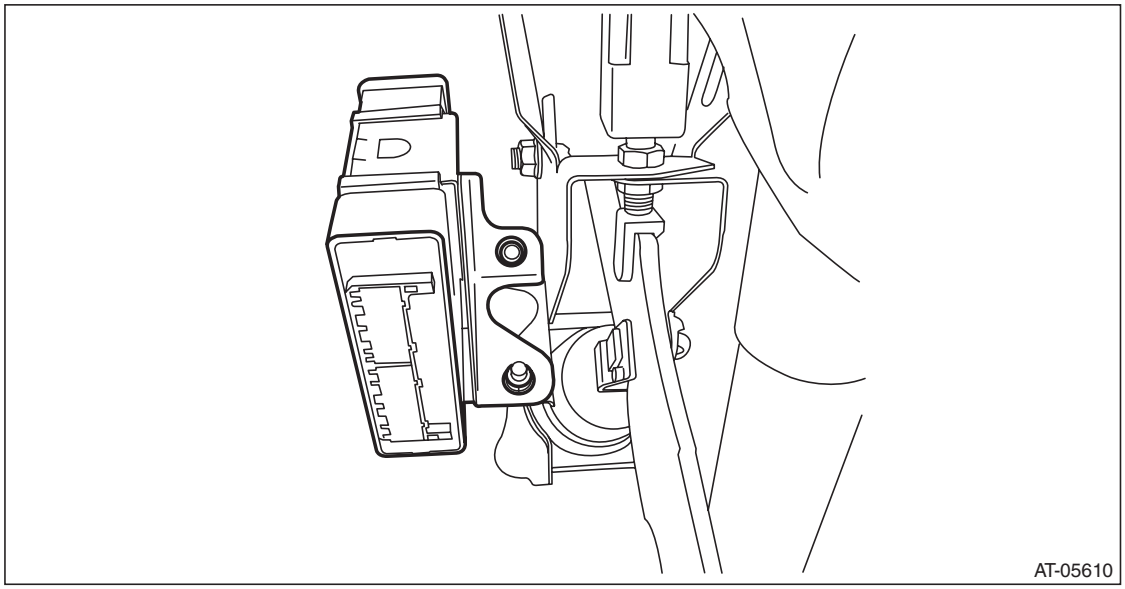

3) Install the harness connector to TCM.
4) Install the instrument panel lower cover. <Ref. to EI-65, INSTALLATION, Instrument Panel Lower Cover.>
5) Perform the diagnosis again. <Ref. to CVT(diag)-20, Learning Control.>

GETtheMANUALS.org

23. CVTF Cooler Pipe and Hose

A: REMOVAL

CAUTION:
- **Immediately after the vehicle has been running or after idling for a long time, the CVTF will be hot. Be careful not to burn yourself.**
- **If the CVTF is spilt over exhaust pipe, wipe it off with cloth to avoid emitting smoke or causing a fire.**
- **When removing the CVTF cooler pipe assembly on vehicle side, be careful not to bend the A/C pipe.**

1) Lift up the vehicle.
2) Remove the under cover.
3) Remove the CVTF CVT inlet hose and CVTF CVT outlet hose.

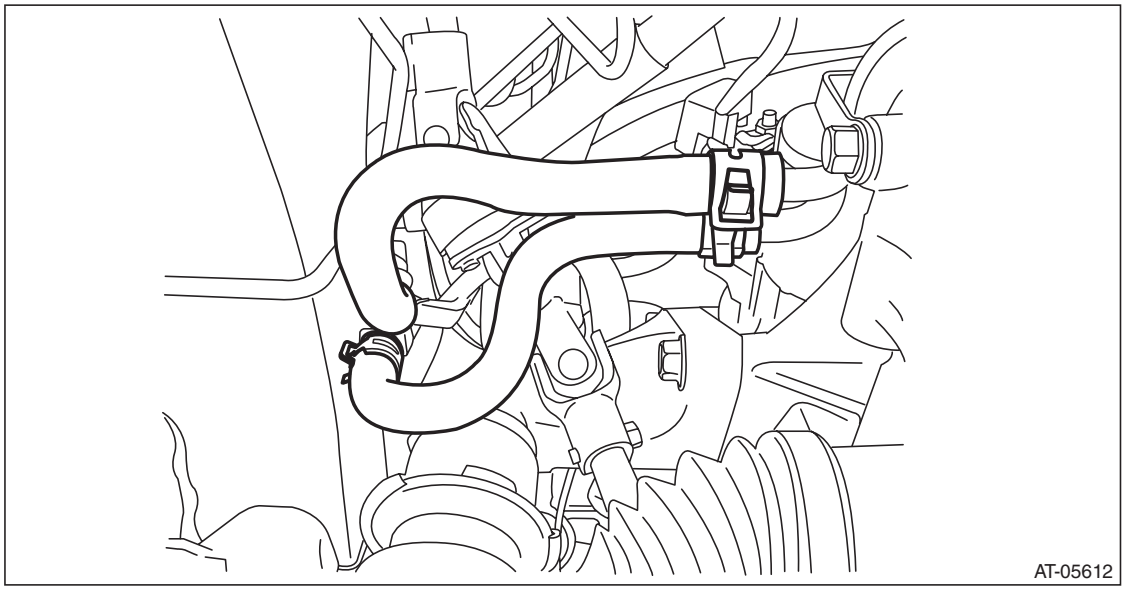

4) Remove the CVTF radiator inlet hose and CVTF radiator outlet hose on radiator side.

CAUTION:
Do not use a screwdriver or other pointed tools.

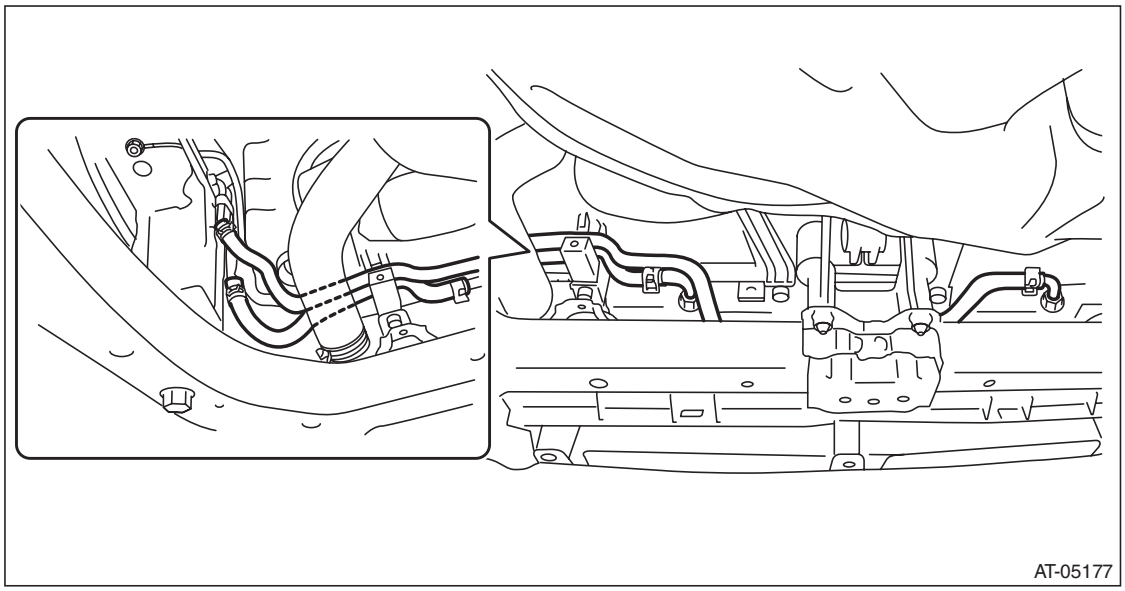

5) Lower the vehicle.

GETtheMANUALS.org

6) Remove the battery.
7) Remove the battery cable clip from the bracket, and remove the battery cable bracket.

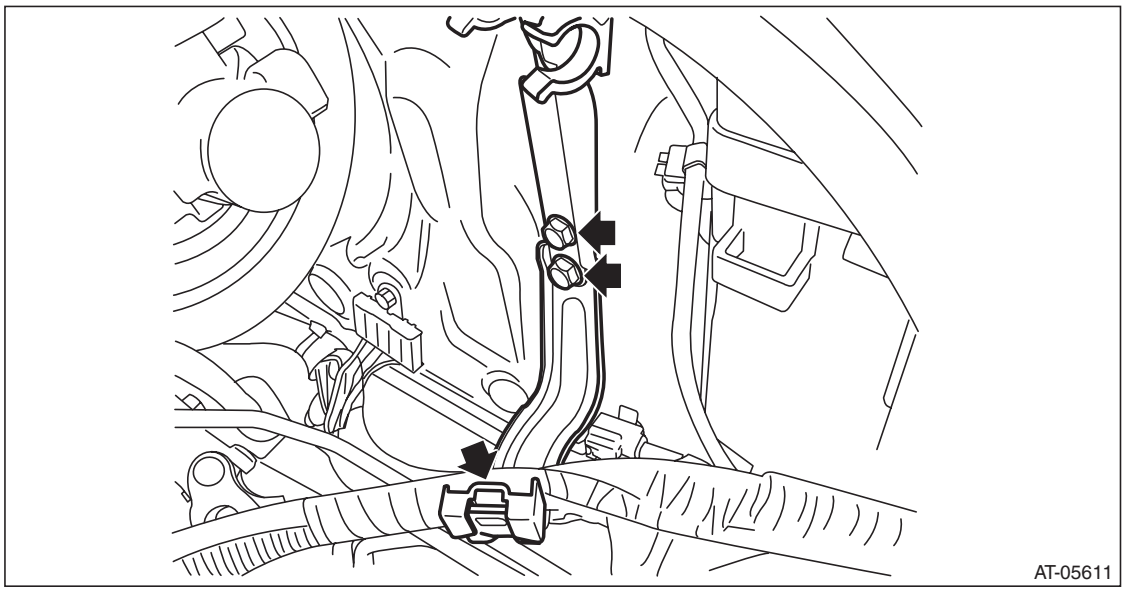

8) Remove the engine coolant reservoir tank. <Ref. to CO(H4SO)-26, REMOVAL, Reservoir Tank.>
9) Remove the CVTF cooler pipe assembly mounting bolt.

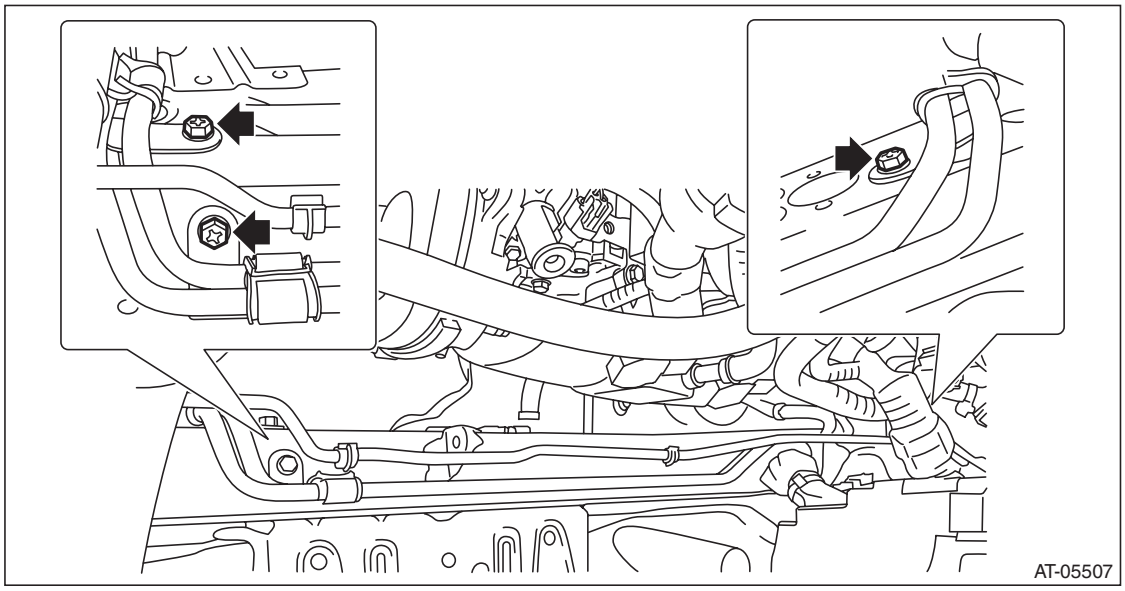

GETtheMANUALS.org

10) Detach the A/C pipe from clip.

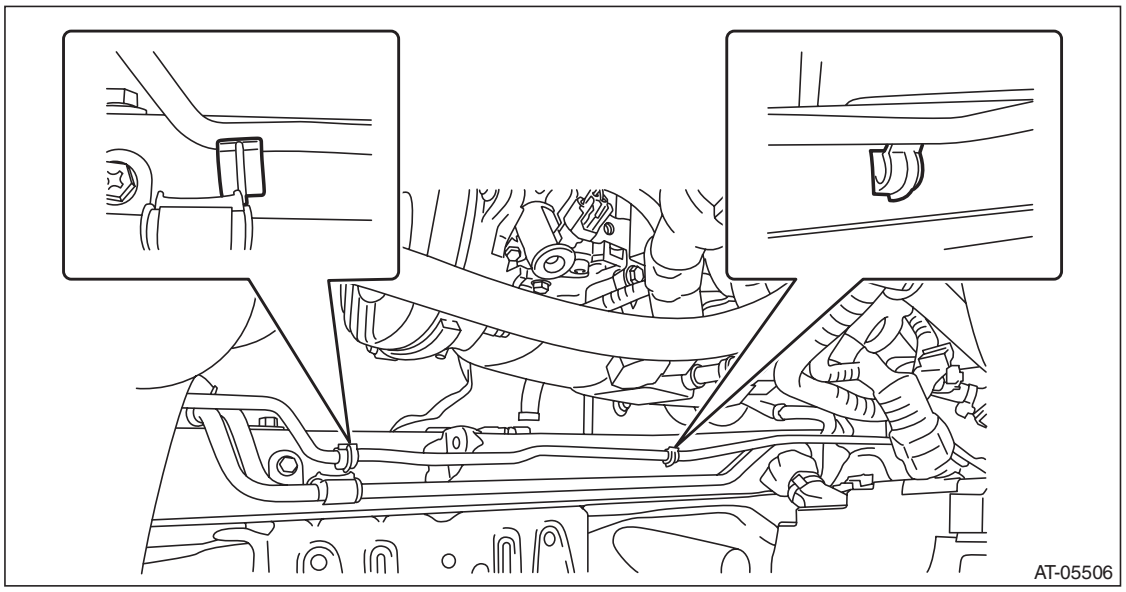

11) Remove the CVTF cooler pipe assembly from the vehicle.

GETtheMANUALS.org

B: INSTALLATION

CAUTION:
When installing the CVTF cooler pipe assembly on vehicle side, be careful not to bend the A/C pipe.
1) Install the CVTF cooler pipe assembly to vehicle.

Tightening torque:
7.5 N·m (0.76 kgf-m, 5.5 ft-lb)

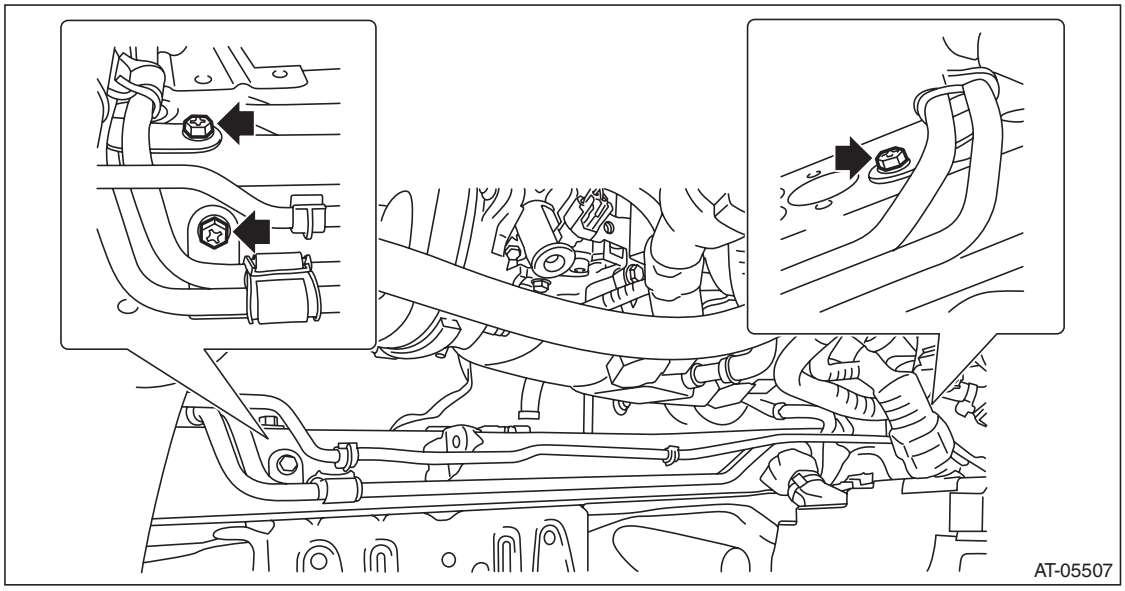

2) Install the A/C pipe to clip.
3) Install the battery cable bracket, and install the battery cable clip to the bracket.

Tightening torque:
7.5 N·m (0.76 kgf-m, 5.5 ft-lb)

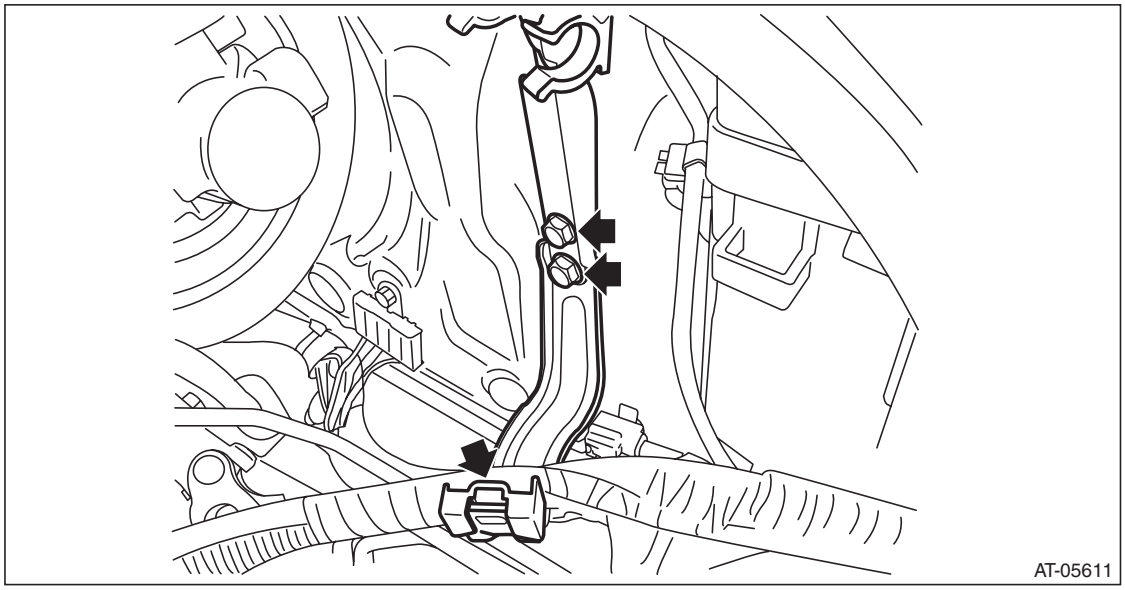

4) Install the engine coolant reservoir tank. <Ref. to CO(H4SO)-26, INSTALLATION, Reservoir Tank.>
5) Lift up the vehicle.

GETtheMANUALS.org

6) Install the CVTF CVT inlet hose and CVTF CVT outlet hose.

NOTE:
Use new CVTF CVT inlet hose and CVTF CVT outlet hose.

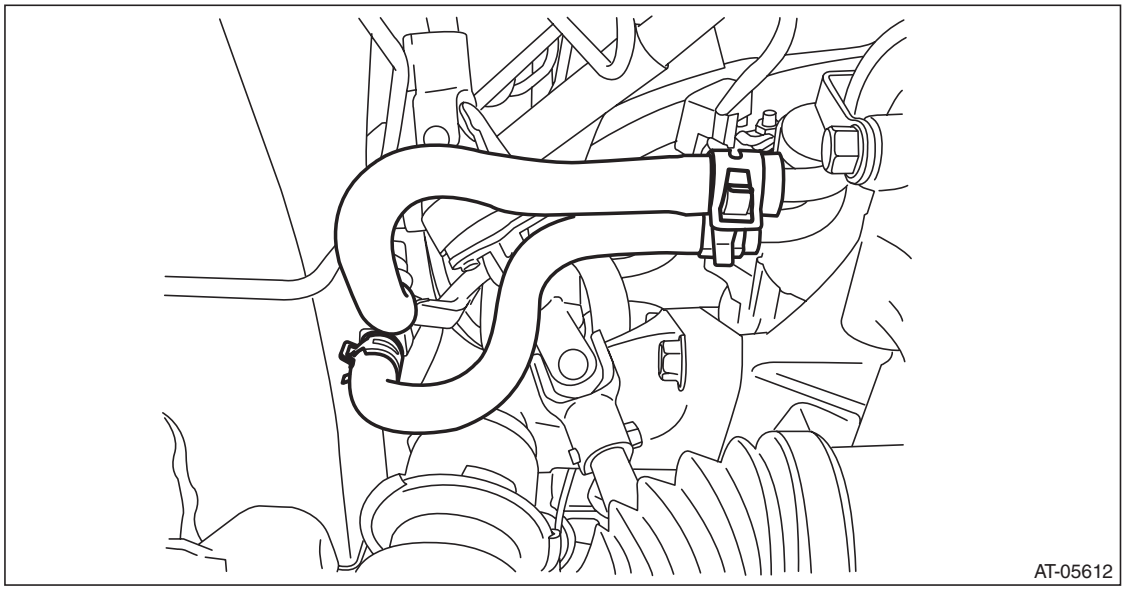

7) Install the CVTF radiator inlet hose and CVTF radiator outlet hose on radiator side.

NOTE:
Use new CVTF radiator inlet hose and CVTF radiator outlet hose.

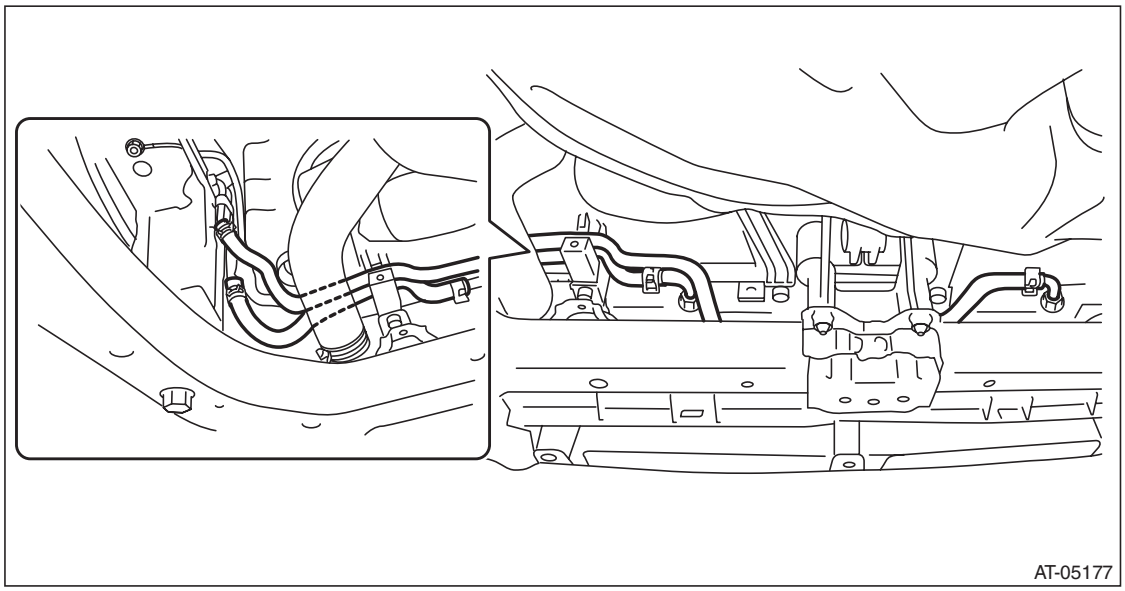

8) Install the under cover.
9) Lower the vehicle.
10) Install the battery.
11) Adjust the CVTF level and check there is no leakage. <Ref. to CVT-37, ADJUSTMENT, CVTF.>

GETtheMANUALS.org

C: INSPECTION

Repair or replace any faulty hoses, pipes, clamps, and washers found in the inspection below.

- Check for CVTF leaks in joints between the transmission, radiator, pipes, and hoses.
- Check the clamp for deformation.
- Lightly bend the hose and check for cracks in the surface or other damages.
- Pinch the hose with your fingers and check for poor elasticity. Also check for poor elasticity in the parts where the clamp was installed by pressing with your fingernail.
- Check for peeling, cracks, and deformation at the tip of the hose.

GETtheMANUALS.org

24. Air Breather Hose

A: REMOVAL

1) Remove the air intake boot assembly. <Ref. to IN(H4SO)-8, REMOVAL, Air Intake Boot.>
2) Remove the two air breather hoses.

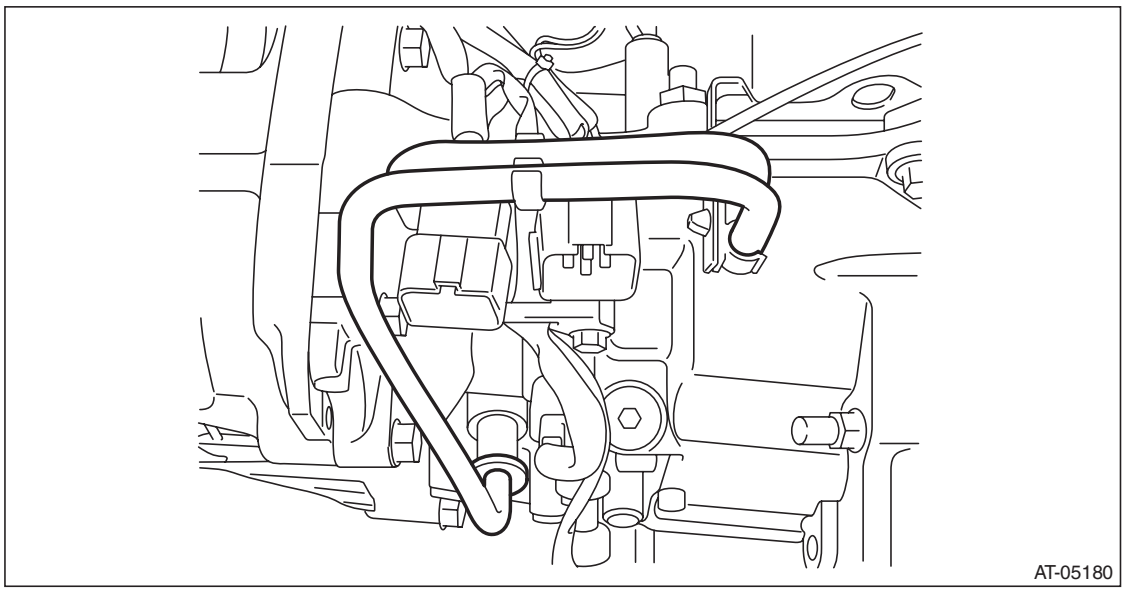

3) Remove the oil cap.

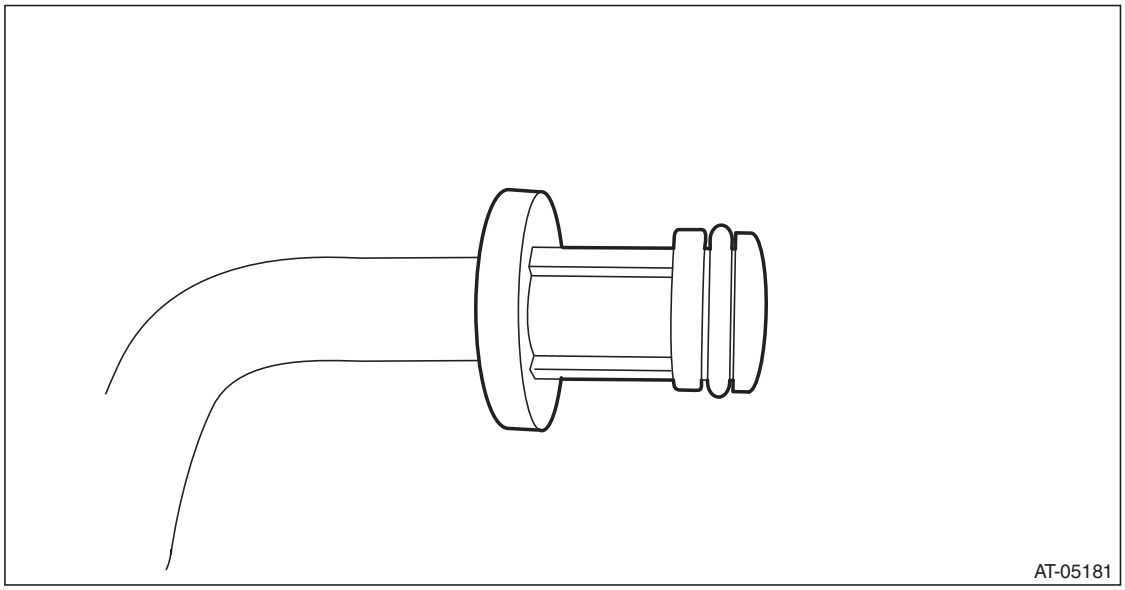

B: INSTALLATION

Install in the reverse order of removal.

NOTE:
Use new O-rings.

C: INSPECTION

- Check the hose for peeling, crack or clogging.
- Check the oil cap is not cracked or clogged.
- Check O-ring of oil cap is not damaged.

GETtheMANUALS.org

25. Drive Plate

A: REMOVAL

1) Remove the transmission assembly from the vehicle. <Ref. to CVT-55, REMOVAL, Automatic Transmission Assembly.>
2) Set the ST.
ST 498497100 CRANKSHAFT STOPPER

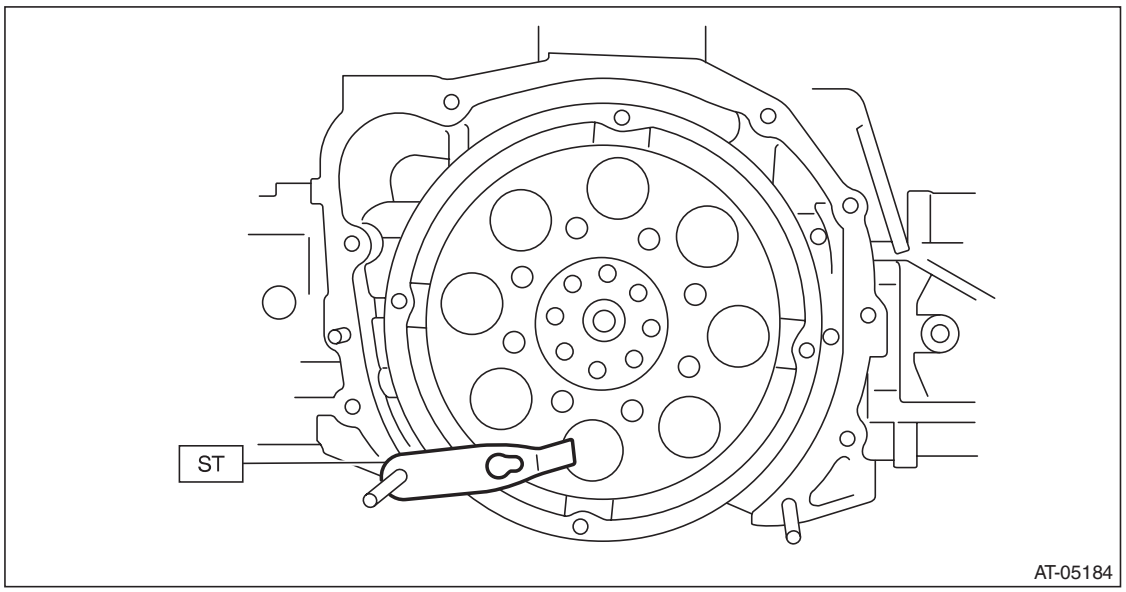

3) Remove the drive plate and reinforcement drive plate.

B: INSTALLATION

1) Temporarily install the drive plate and reinforcement drive plate.
2) Set the ST.
ST 498497100 CRANKSHAFT STOPPER

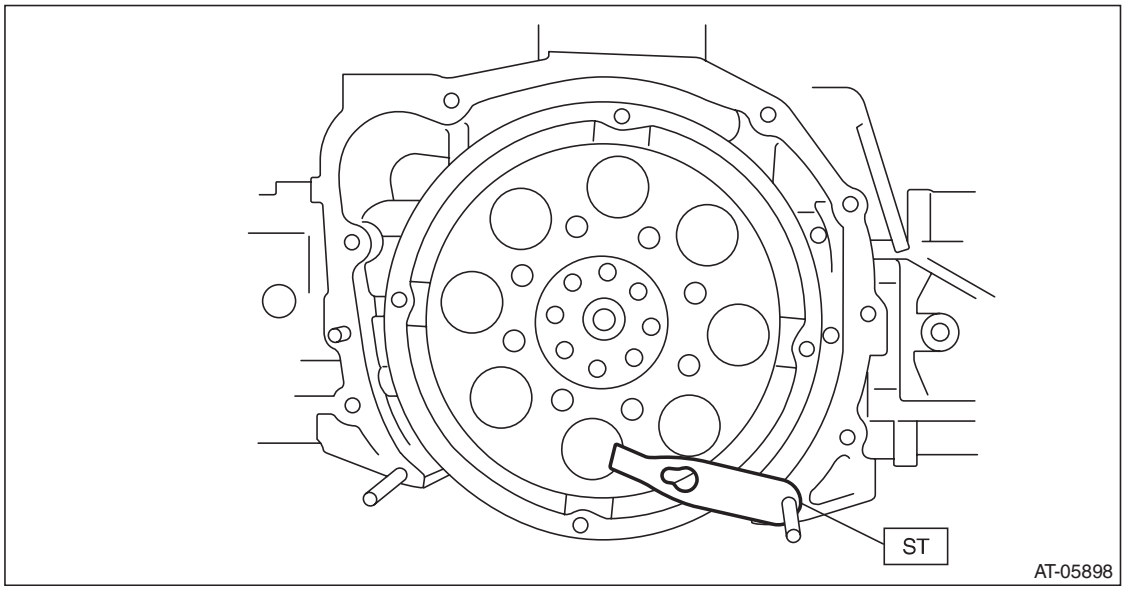

GETtheMANUALS.org

3) Tighten the drive plate mounting bolt in three stages.

NOTE:
Fix the engine unit.
(1) Tighten the drive plate mounting bolt.

Tightening torque:
10 N·m (1.0 kgf-m, 7.4 ft-lb)
(2) Additionally tighten the drive plate mounting bolts.

Tightening torque:
40 N·m (4.1 kgf-m, 29.5 ft-lb)
(3) While checking the tightening angle with the ST, tighten the drive plate mounting bolts to the specified angle.

Tightening angle:
30°±5°
ST 18854AA000 ANGLE GAUGE
4) Install the transmission assembly to the vehicle. <Ref. to CVT-70, INSTALLATION, Automatic Transmission Assembly.>

C: INSPECTION

Check the drive cable for damage.

GETtheMANUALS.org

26. Preparation for Overhaul

A: GENERAL DESCRIPTION

Before disassembling and assembling the transmission, follow the following procedures to prepare.

B: PROCEDURE

1) Clean the transmission exterior.
2) Remove the torque converter assembly. <Ref. to CVT-136, Torque Converter Assembly.>
3) Attach the ST on the transmission.
ST 18632AA000 STAND ASSY

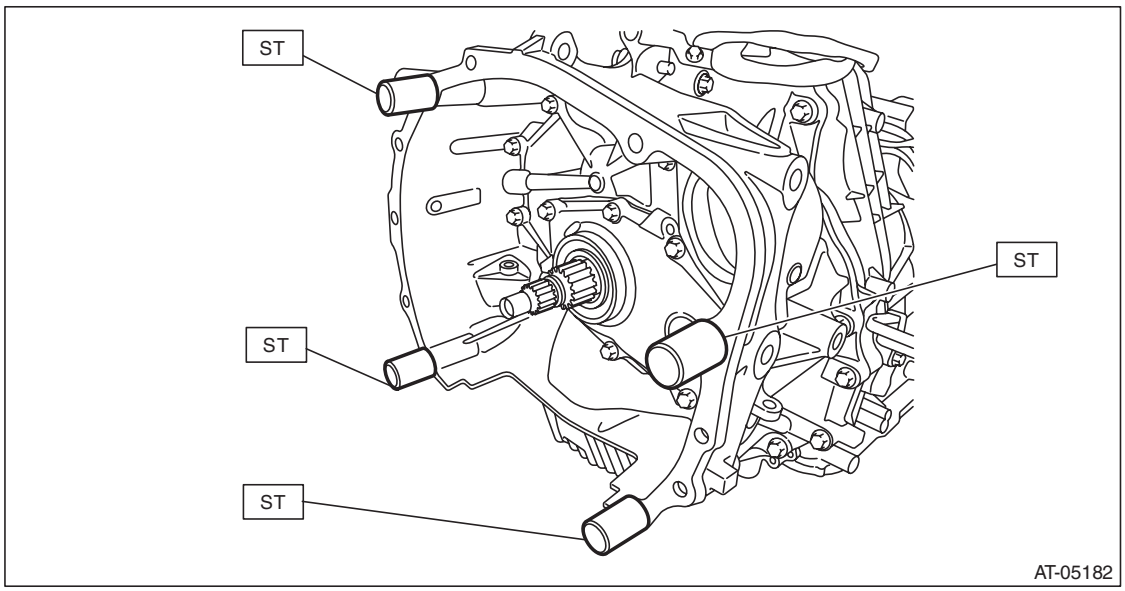

4) Remove the transmission cover on the transmission upper side.

NOTE:
Install using the following tightening torque.

Tightening torque:
8 N·m (0.8 kgf-m, 5.9 ft-lb)

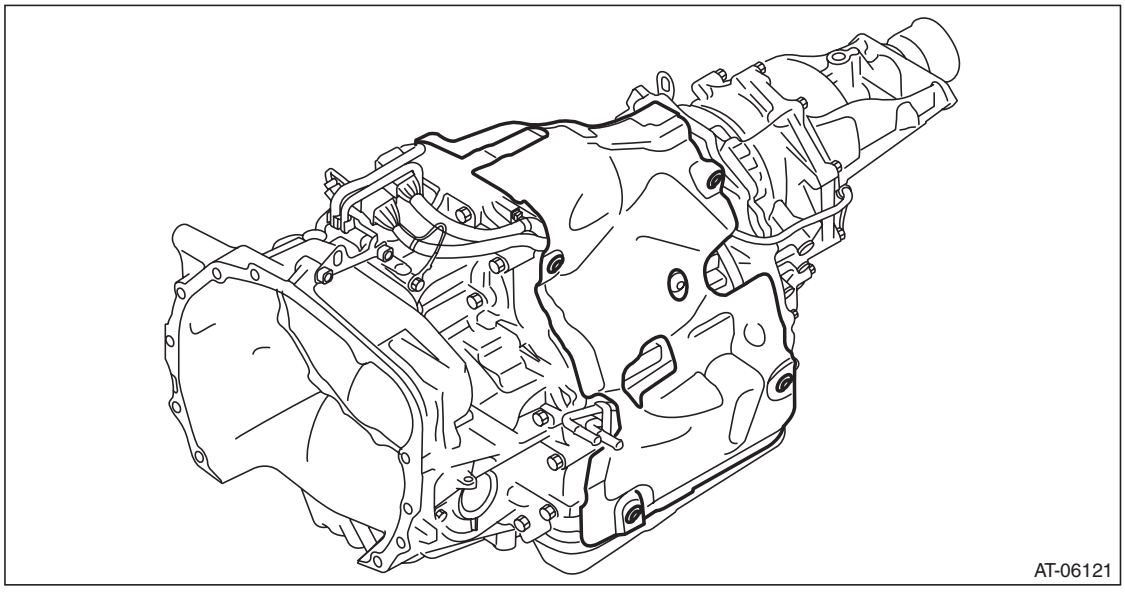

5) Place the transmission assembly on end.

GETtheMANUALS.org

27.Torque Converter Assembly

A: REMOVAL

1) Remove the transmission assembly from the vehicle. <Ref. to CVT-55, REMOVAL, Automatic Transmission Assembly.>
2) Pull out the torque converter assembly horizontally.

CAUTION:
Do not scratch the inside of engaging parts.

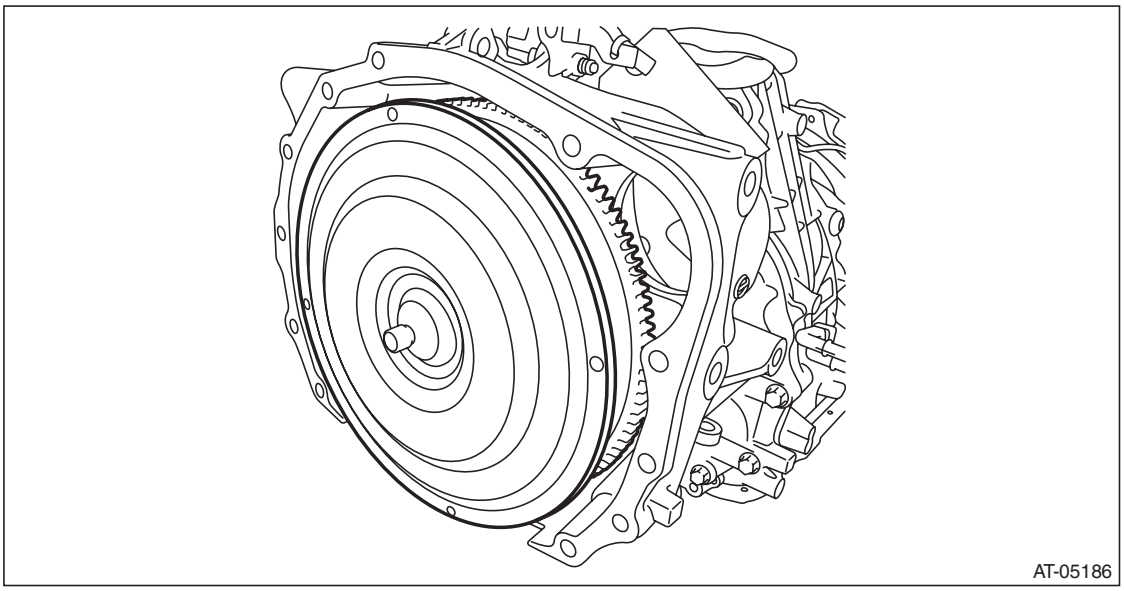

3) Remove the O-ring from the front reduction drive gear.

B: INSTALLATION

1) Install the O-ring to front reduction drive gear.

NOTE:
- Use new O-rings.
- Apply CVTF to the O-ring.

2) While holding the torque converter assembly by hand, carefully install it into the torque converter case.

NOTE:
- Apply CVTF to the oil seal lip.
- Do not damage the oil seal and O-ring.

3) Engage the splines while gently rotating the torque converter assembly by hand, and securely insert the assembly.

GETtheMANUALS.org

4) Measure depth “A”, from converter case end surface to drive plate contacting surface.

Standard (A) (reference):
6.8 mm (0.268 in)

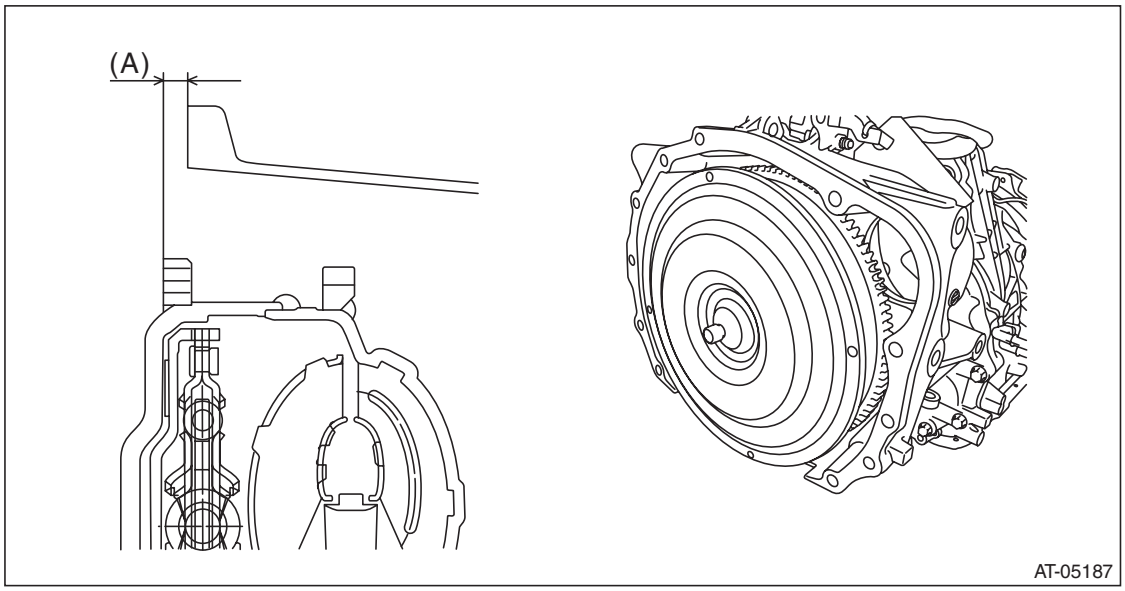

5) Install the transmission assembly to the vehicle. <Ref. to CVT-70, INSTALLATION, Automatic Transmission Assembly.>

C: INSPECTION

- Check the protrusion of torque converter center (front boss) is not deformed or damaged.
- Check the ring gear and exterior for break or damage.

GETtheMANUALS.org

28. Extension Case

A: REMOVAL

1) Remove the transmission assembly from vehicle body. <Ref. to CVT-55, REMOVAL, Automatic Transmission Assembly.>
2) Remove the front wheel speed sensor. <Ref. to CVT-107, REMOVAL, Front Wheel Speed Sensor.>
3) Remove the harness clip, and remove the extension case.

NOTE:
The total number of extension case mounting bolts is ten.

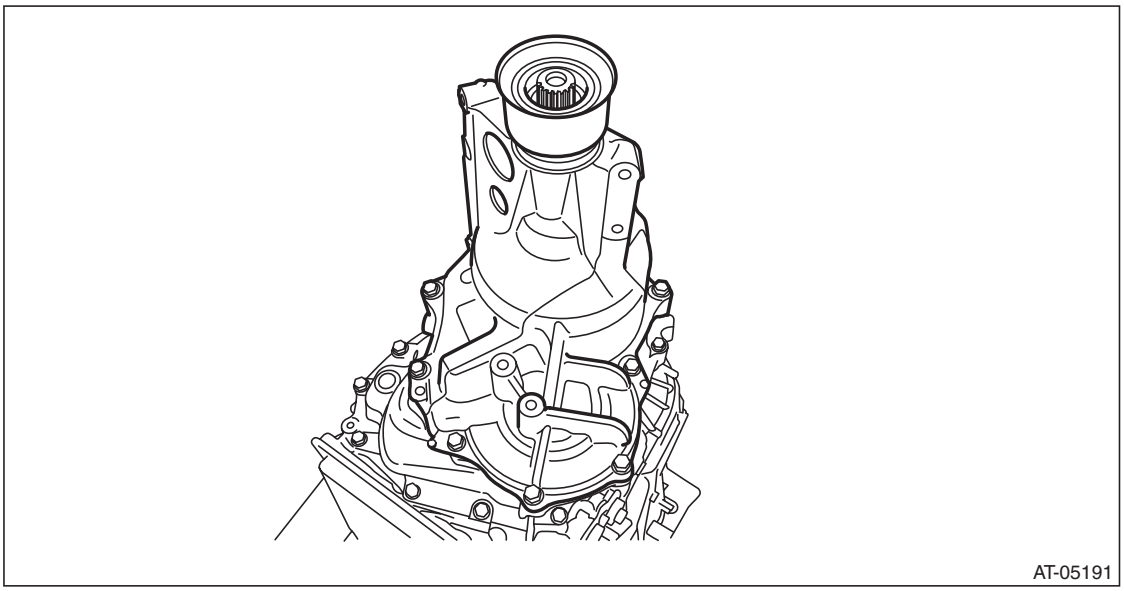

B: INSTALLATION

1) Clean the mating surface of the extension case and intermediate case.
2) Select the thrust needle bearing. <Ref. to CVT-143, ADJUSTMENT, Rear Drive Shaft.>
3) Select the shim for transfer reduction driven gear. <Ref. to CVT-161, ADJUSTMENT, Transfer Reduction Driven Gear.>
4) Install the selected thrust needle bearing to transfer clutch assembly.

NOTE:
Install the thrust needle bearing in the correct direction.

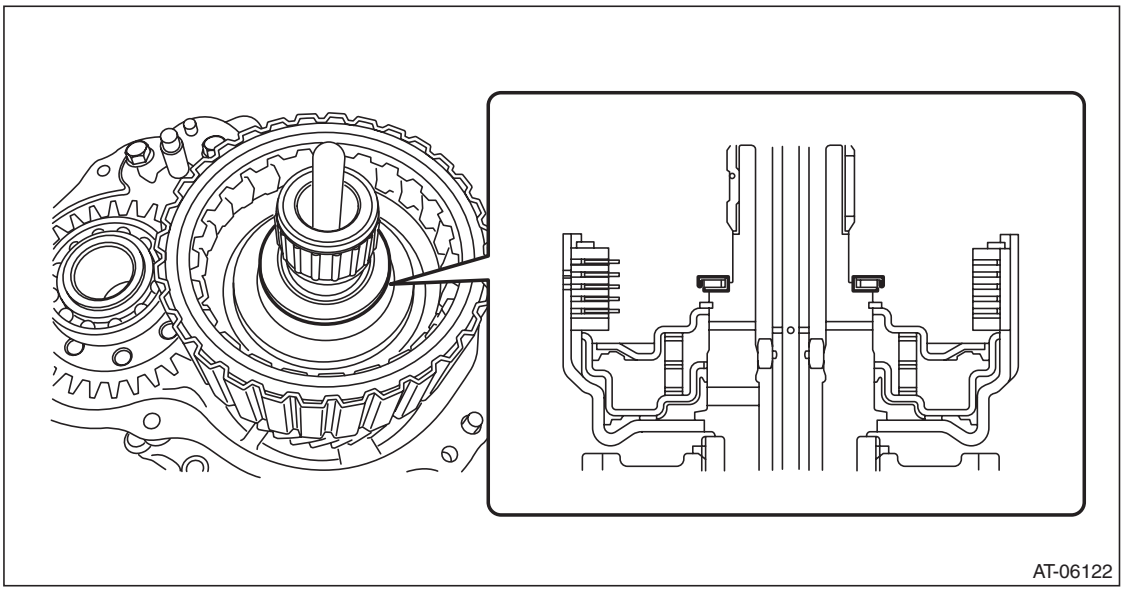

GETtheMANUALS.org

5) Attach the selected shim to transfer reduction driven gear assembly.
6) Apply liquid gasket to extension case seamlessly.

Liquid gasket:
THREE BOND 1215 (Part No. 004403007) or equivalent

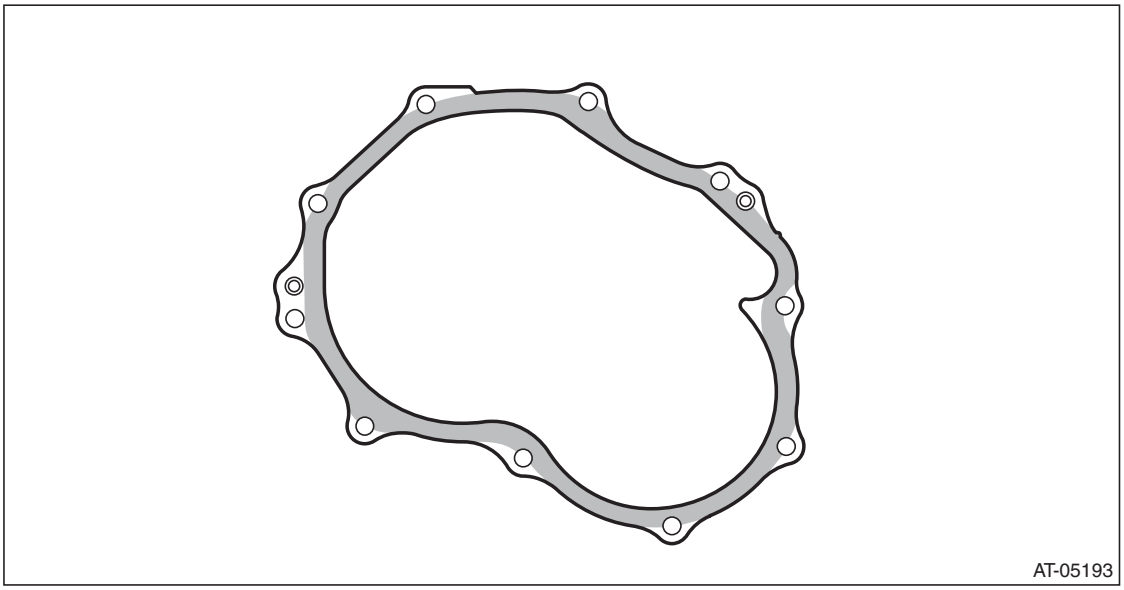

7) Install the extension case.

Tightening torque:
25 N·m (2.5 kgf-m, 18.4 ft-lb)

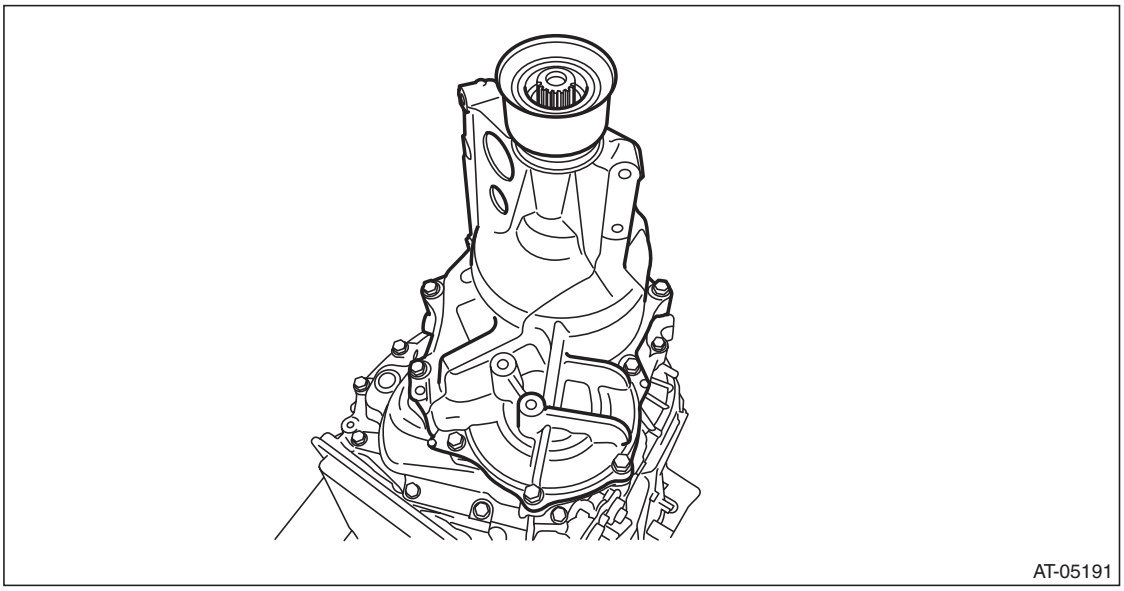

8) Install the front wheel speed sensor. <Ref. to CVT-107, INSTALLATION, Front Wheel Speed Sensor.>
9) Install the transmission assembly. <Ref. to CVT-70, INSTALLATION, Automatic Transmission Assembly.>

C: DISASSEMBLY

1) Remove the dust cover from extension case.
2) Remove the extension case oil seal from the extension case.

GETtheMANUALS.org

D: ASSEMBLY

1) Press-fit the dust cover into extension case.
2) Install the extension case oil seal to extension case.
ST 498057300 INSTALLER

E: INSPECTION

- Check there is no leak of CVTF from the joint between extension case and intermediate case.
- Check there is no damage or cracks on the extension case.

F: ADJUSTMENT

NOTE:
When replacing the extension case, select the shims for rear drive shaft thrust needle bearing and transfer reduction driven gear. <Ref. to CVT-143, ADJUSTMENT, Rear Drive Shaft.> <Ref. to CVT-161, ADJUSTMENT, Transfer Reduction Driven Gear.>

GETtheMANUALS.org

29. Rear Drive Shaft

A: REMOVAL

1) Remove the transmission assembly from vehicle body. <Ref. to CVT-55, REMOVAL, Automatic Transmission Assembly.>
2) Remove the extension case. <Ref. to CVT-138, REMOVAL, Extension Case.>
3) Remove the rear drive shaft.

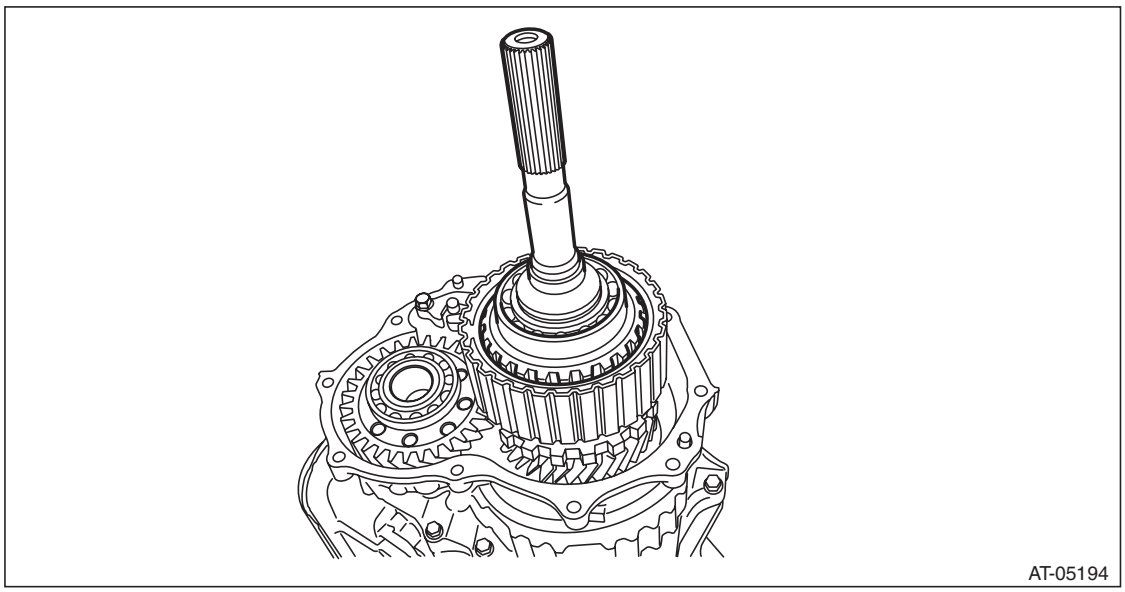

B: INSTALLATION

1) Select the thrust needle bearing. <Ref. to CVT-143, ADJUSTMENT, Rear Drive Shaft.>
2) Install the selected thrust needle bearing to transfer clutch assembly.

NOTE:
Install the thrust needle bearing in the correct direction.

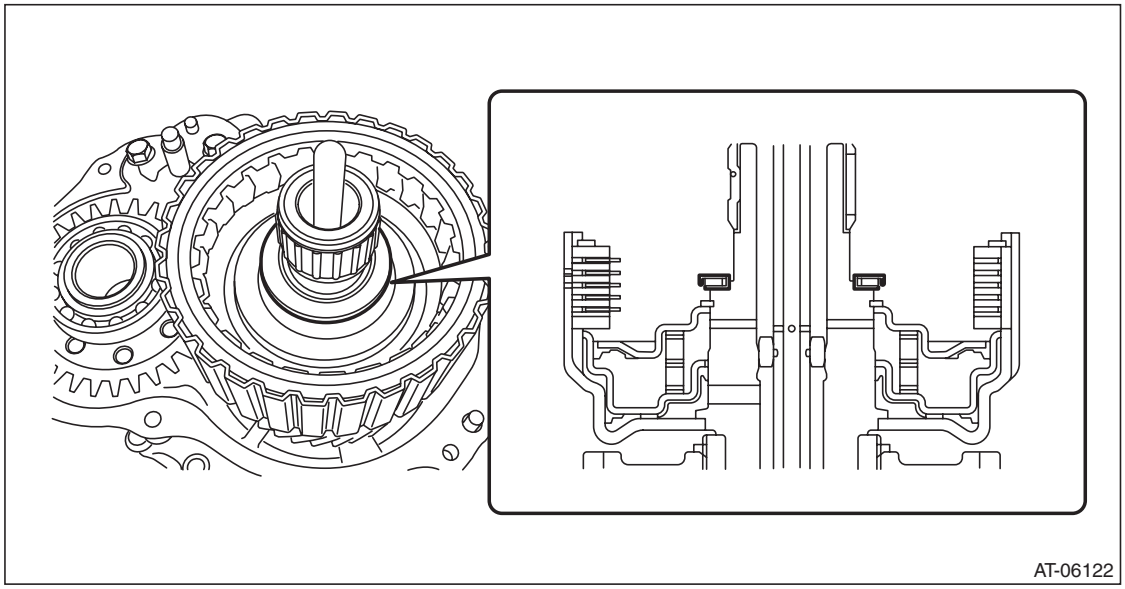

GETtheMANUALS.org

3) Install the rear drive shaft.

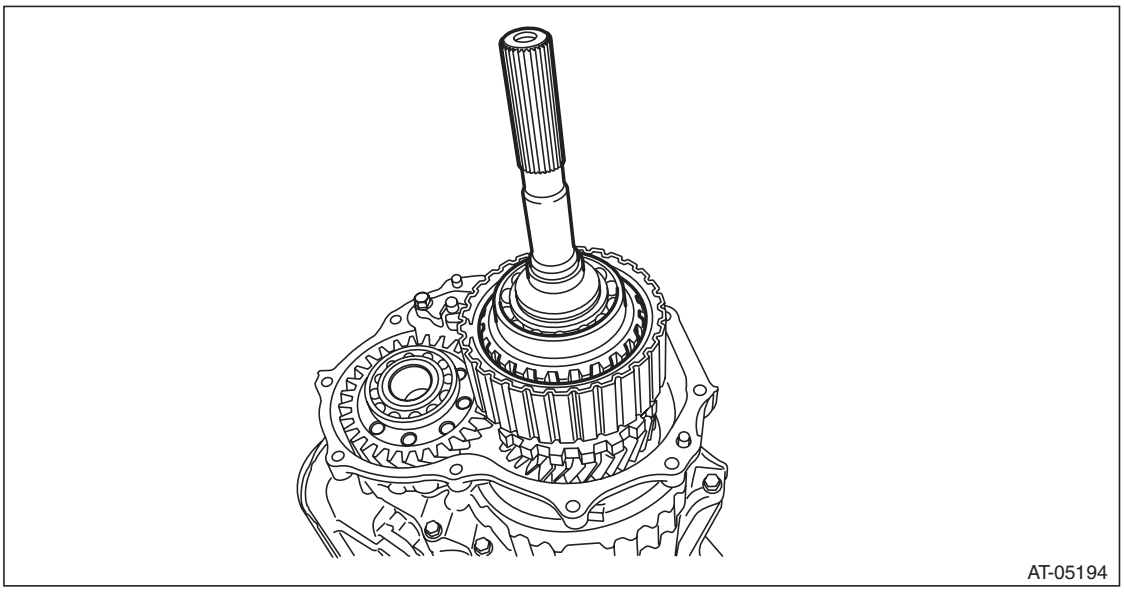

4) Install the extension case. <Ref. to CVT-138, INSTALLATION, Extension Case.>
5) Install the transmission assembly to the vehicle. <Ref. to CVT-70, INSTALLATION, Automatic Transmission Assembly.>

C: DISASSEMBLY

1) Remove the ball bearing using ST.
ST 498077600 REMOVER

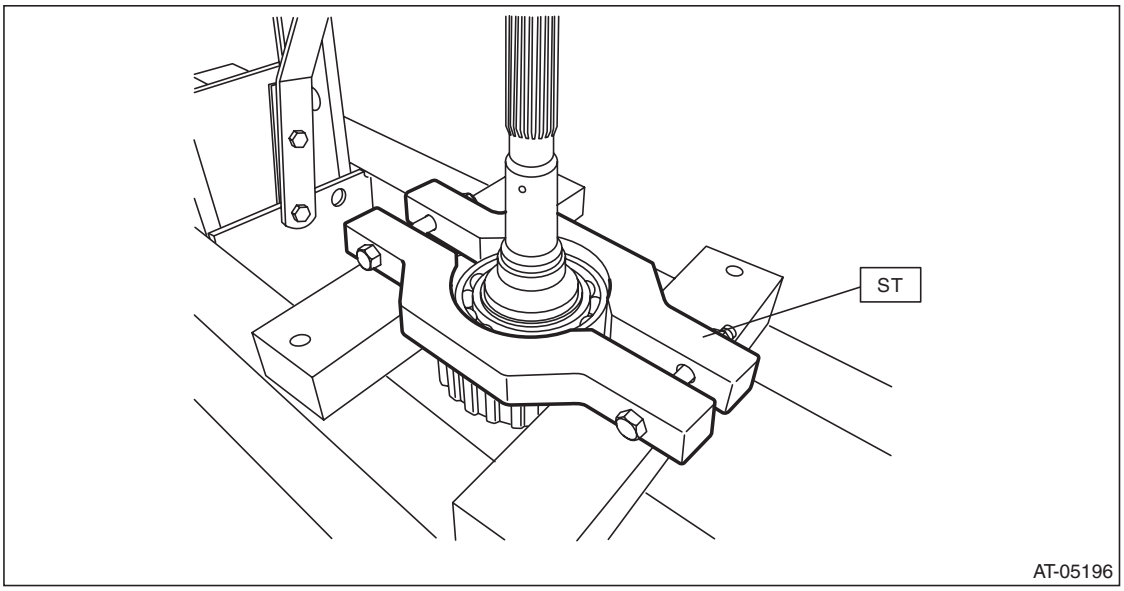

GETtheMANUALS.org

D: ASSEMBLY

1) Using the ST, install the ball bearing.

NOTE:
- Use a new ball bearing.
- Apply CVTF to press-fitting surface of ball bearing.

ST 399513600 INSTALLER

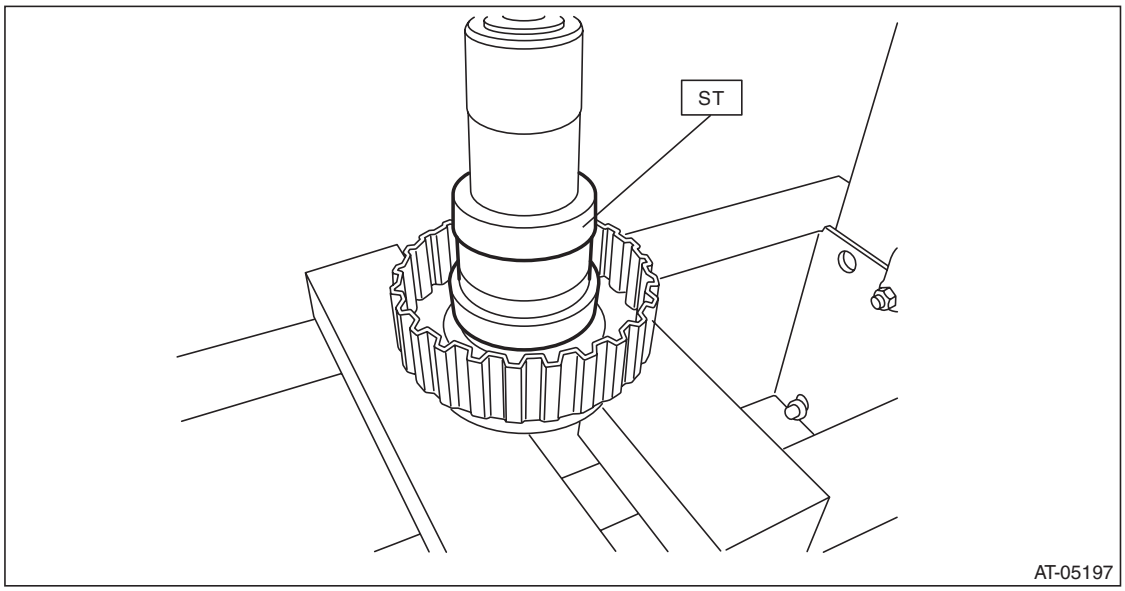

E: INSPECTION

- Check each part for crack, damage or dust.
- Check the ball bearing for smooth rotation.
- Check the ball bearing for excessive looseness.

F: ADJUSTMENT

NOTE:
When replacing the rear drive shaft or bearing, select the thrust needle bearing.

1) Using the ST, measure the distance “A” from ST end face to rear drive shaft thrust needle bearing catch surface.

ST 398643600 GAUGE

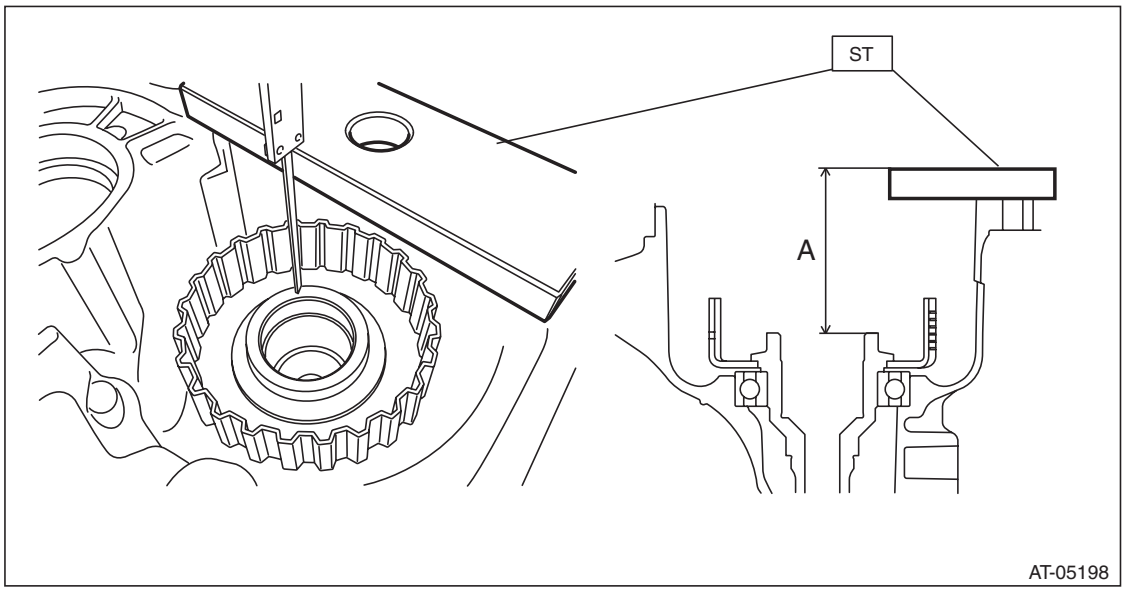

GETtheMANUALS.org

2) Using the ST, measure the height “B” from the intermediate case mating surface to the ST end face.

NOTE:
Place the measurement tool at the dent on ST upper side to measure.
ST 499737100 PULLER SET

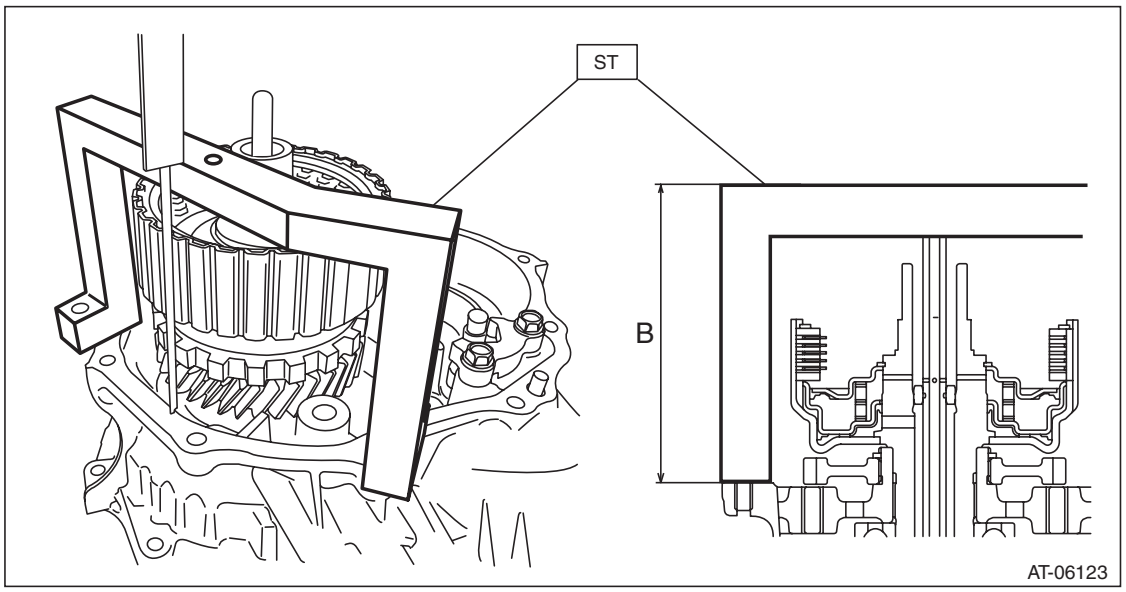

3) Using the ST, measure the height “C” from ST end face to transfer clutch assembly thrust needle bearing catch surface.

NOTE:
Place the measurement tool at the dent on ST upper side to measure.
ST 499737100 PULLER SET

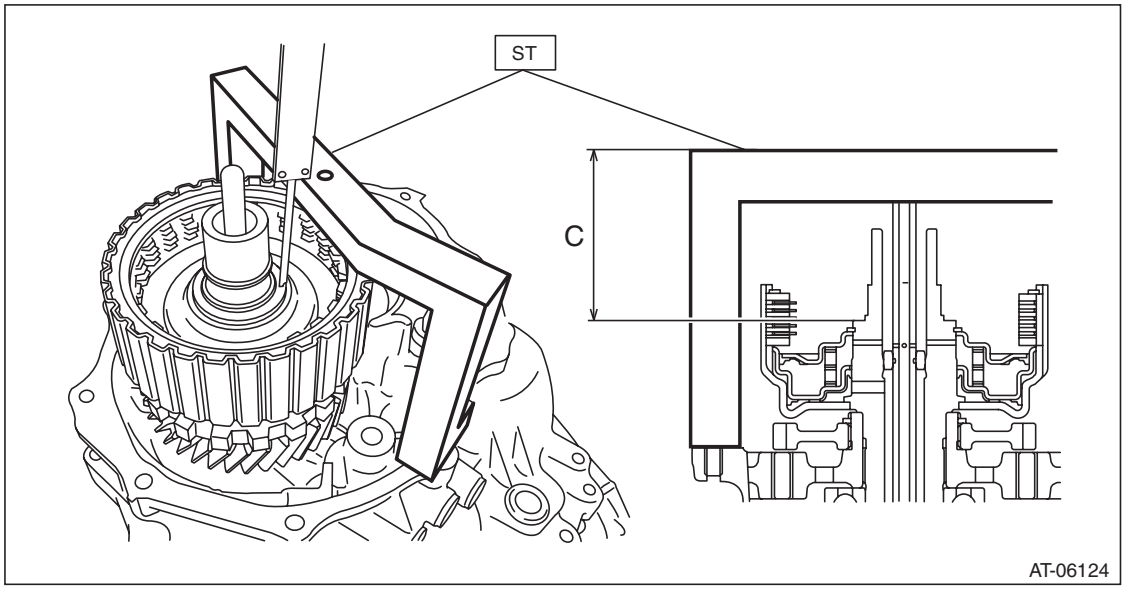

GETtheMANUALS.org

4) Obtain the thickness of thrust bearing using the following formula to select the thrust bearing.
T mm = (A – 15) – (B – C) – (0.05 — 0.25)
[T in = (A – 0.59) – (B – C) – (0.002 — 0.01)]
T: Thrust bearing thickness
A: Height from the ST end face to the rear drive shaft thrust needle bearing catch surface
B: Height from the mating surface of the intermediate case to the ST end face
C: Height from the ST end face to the transfer clutch assembly thrust needle bearing catch surface
15 mm (0.591 in): Thickness of ST
0.05 — 0.25 mm (0.002 — 0.01 in): Clearance

Thrust bearing	
Part No.	Thickness mm (in)
806536020	3.8 (0.15)
806535030	4.0 (0.157)
806535040	4.2 (0.165)
806535050	4.4 (0.173)
806535060	4.6 (0.181)
806535070	4.8 (0.189)
806535090	5.0 (0.197)

GETtheMANUALS.org

30. Transfer Clutch

A: REMOVAL

1) Remove the transmission assembly from the vehicle. <Ref. to CVT-55, REMOVAL, Automatic Transmission Assembly.>
2) Remove the extension case. <Ref. to CVT-138, REMOVAL, Extension Case.>
3) Remove the rear drive shaft. <Ref. to CVT-141, REMOVAL, Rear Drive Shaft.>
4) Remove the thrust needle bearing and needle bearing.

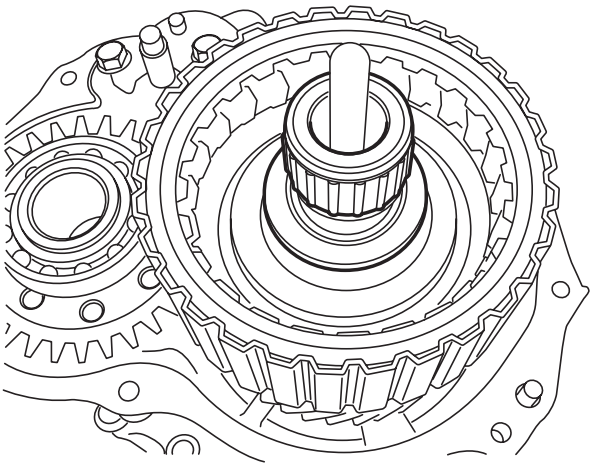

5) Remove the transfer clutch assembly.

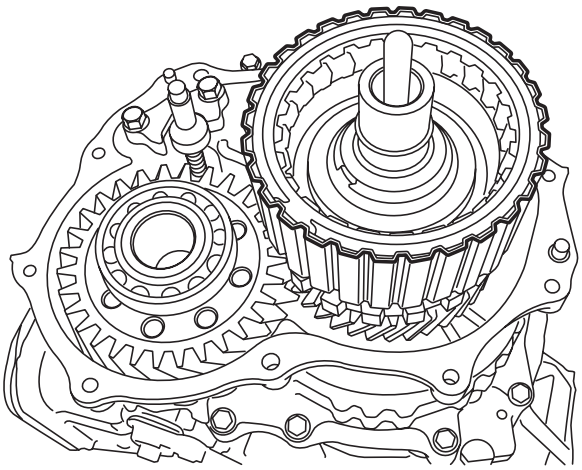

GETtheMANUALS.org

6) Remove the seal ring from transfer clutch assembly.

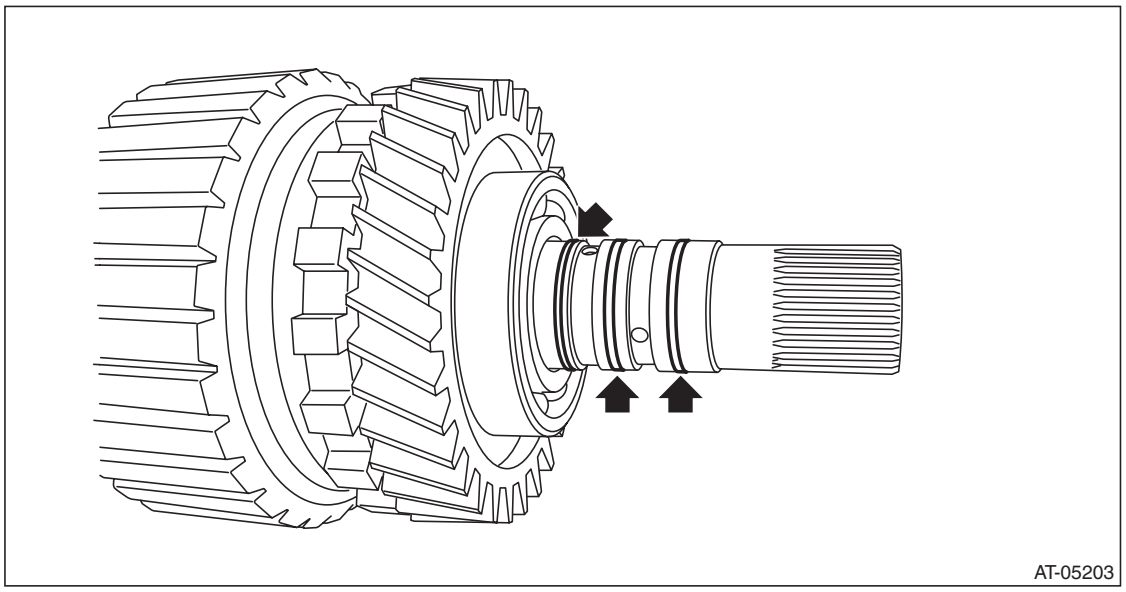

B: INSTALLATION

1) Apply vaseline to the seal ring and attach it to the seal ring groove of transfer clutch assembly.

NOTE:
- Use a new seal ring.
- When installing the seal ring, do not expand the seal ring too much.

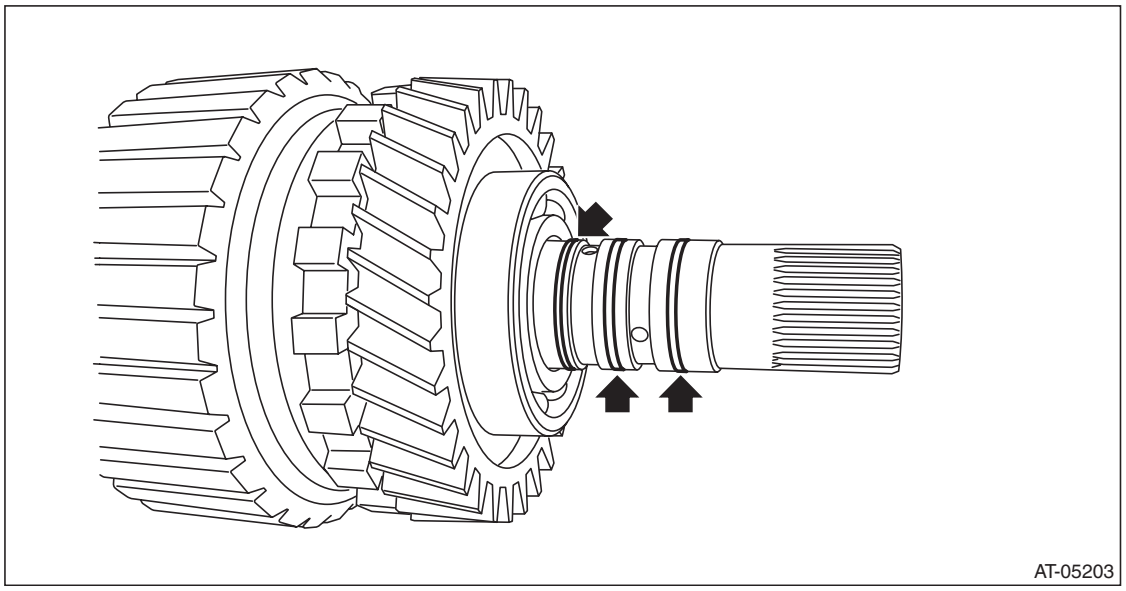

GETtheMANUALS.org

2) Install the transfer clutch assembly.

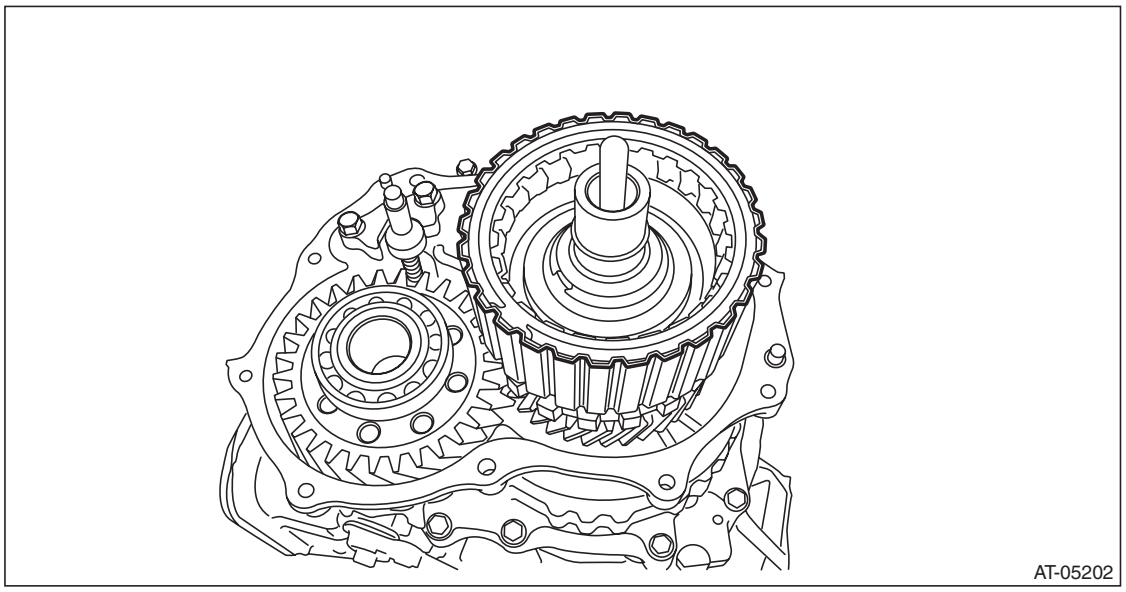

3) Select the thrust needle bearing. <Ref. to CVT-143, ADJUSTMENT, Rear Drive Shaft.>
4) Install the selected thrust needle bearing and needle bearing to transfer clutch assembly.

NOTE:
Install the thrust needle bearing in the correct direction.

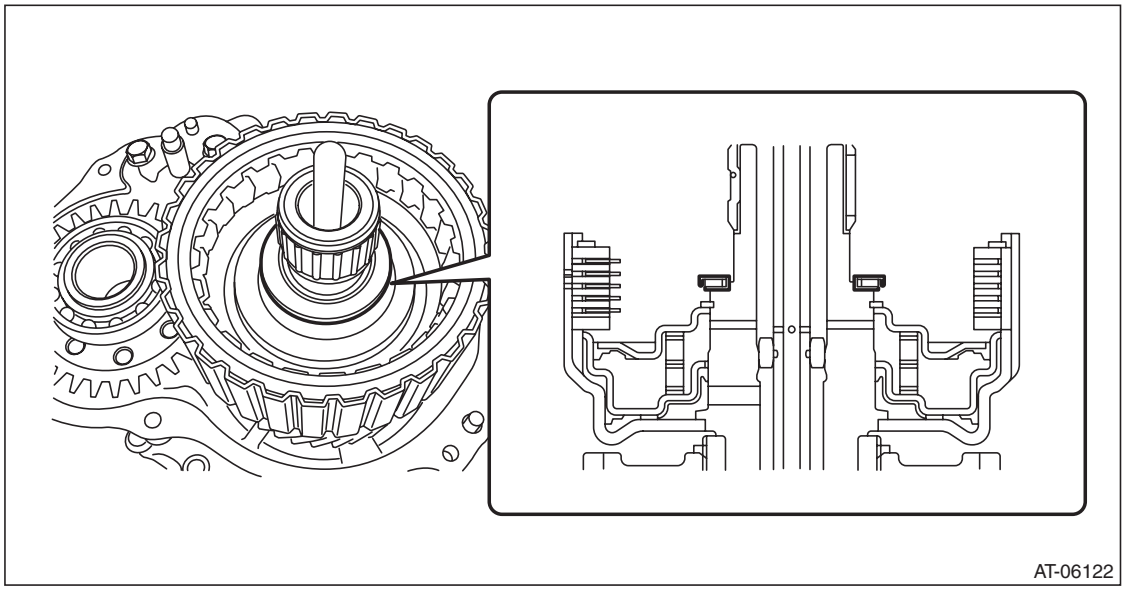

5) Install the rear drive shaft. <Ref. to CVT-141, INSTALLATION, Rear Drive Shaft.>
6) Install the extension case. <Ref. to CVT-138, INSTALLATION, Extension Case.>
7) Install the transmission assembly to the vehicle. <Ref. to CVT-70, INSTALLATION, Automatic Transmission Assembly.>

GETtheMANUALS.org

C: DISASSEMBLY

1) Remove the snap ring, and then remove the retaining plate, drive plate and driven plate.

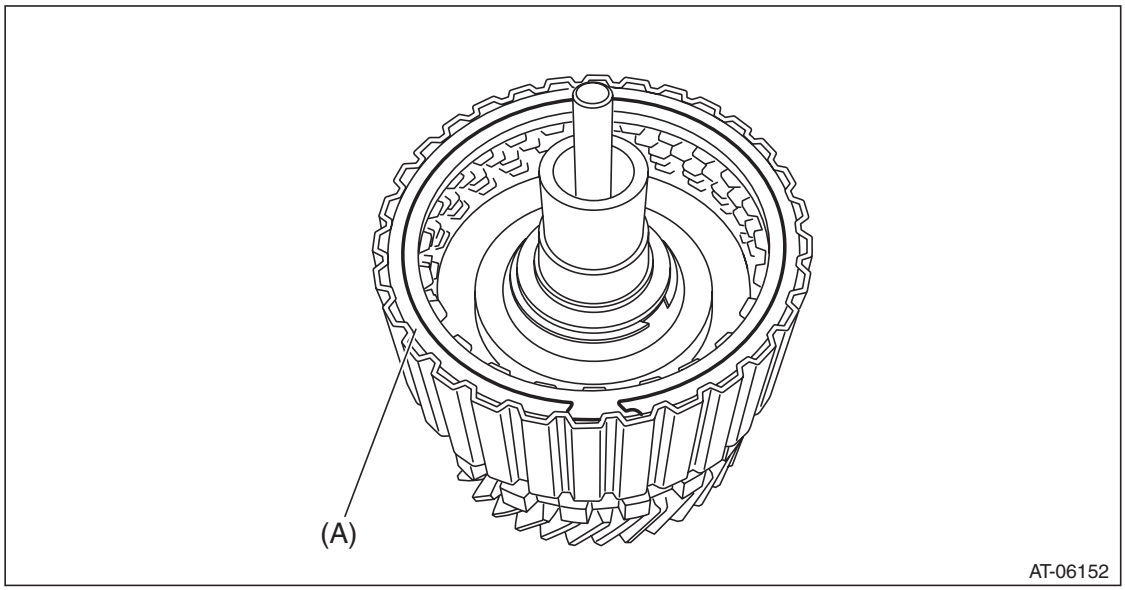

(A) Snap ring

2) Using the ST, remove the snap ring.
ST 18762AA000 COMPRESSOR SPECIAL TOOL

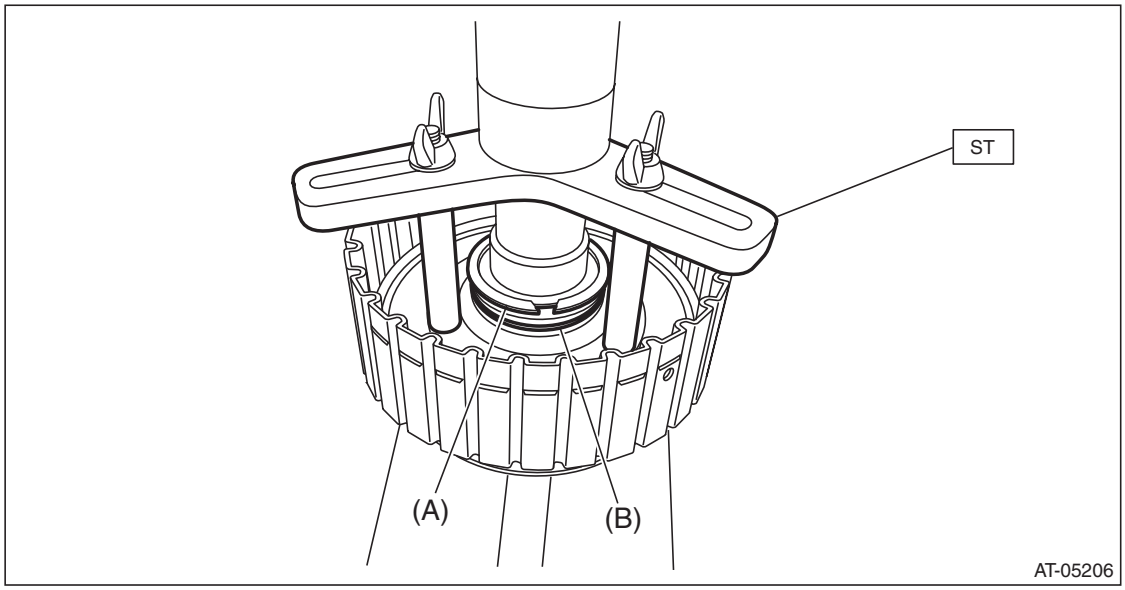

(A) Snap ring
(B) Transfer clutch piston seal

3) Remove the transfer clutch piston seal.

GETtheMANUALS.org

4) Remove the return spring.

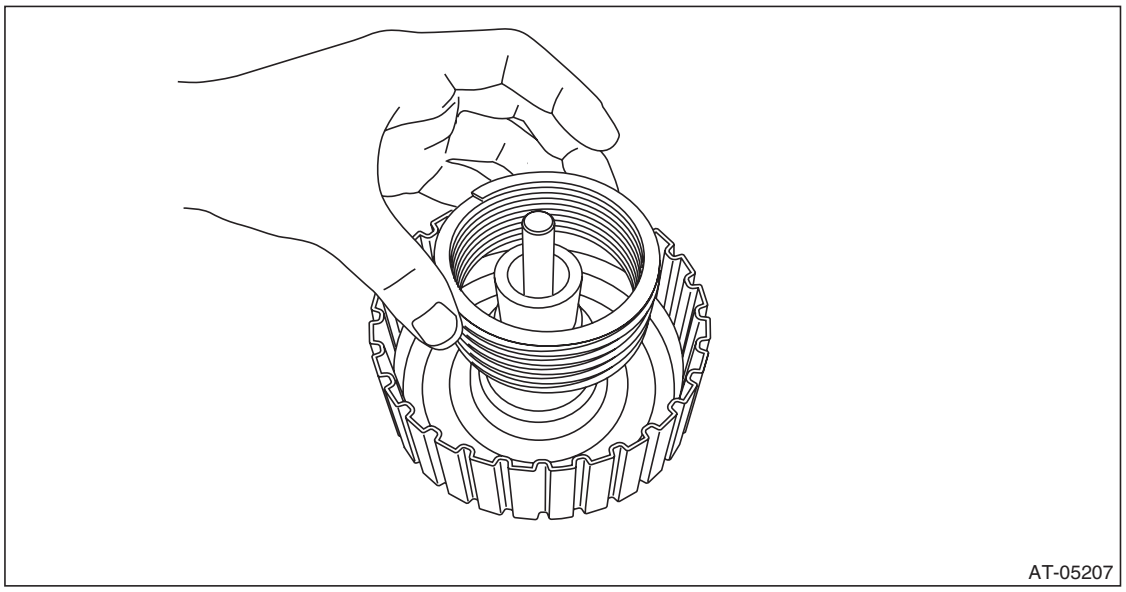

5) Remove the transfer clutch piston by blowing compressed air through transfer clutch assembly hole.

NOTE:
Block the hole opposite to the one to be blown with compressed air by your finger.

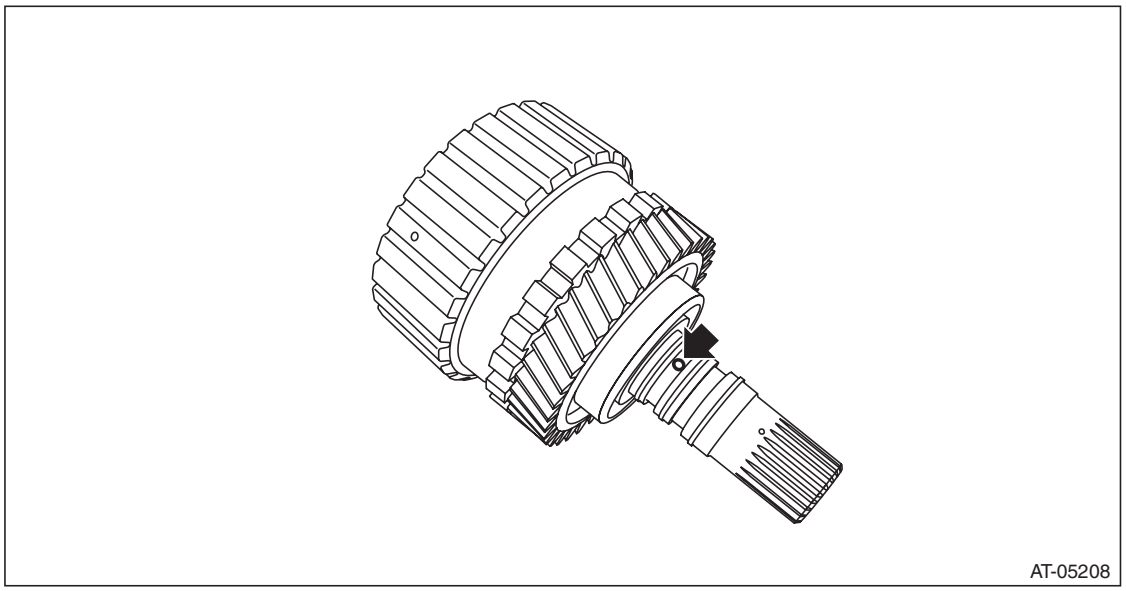

GETtheMANUALS.org

6) Using ST, remove transfer drive gear, parking gear and ball bearing.
ST 18767AA000 BEARING REMOVER

NOTE:
Let the ST sit on the parking gear.

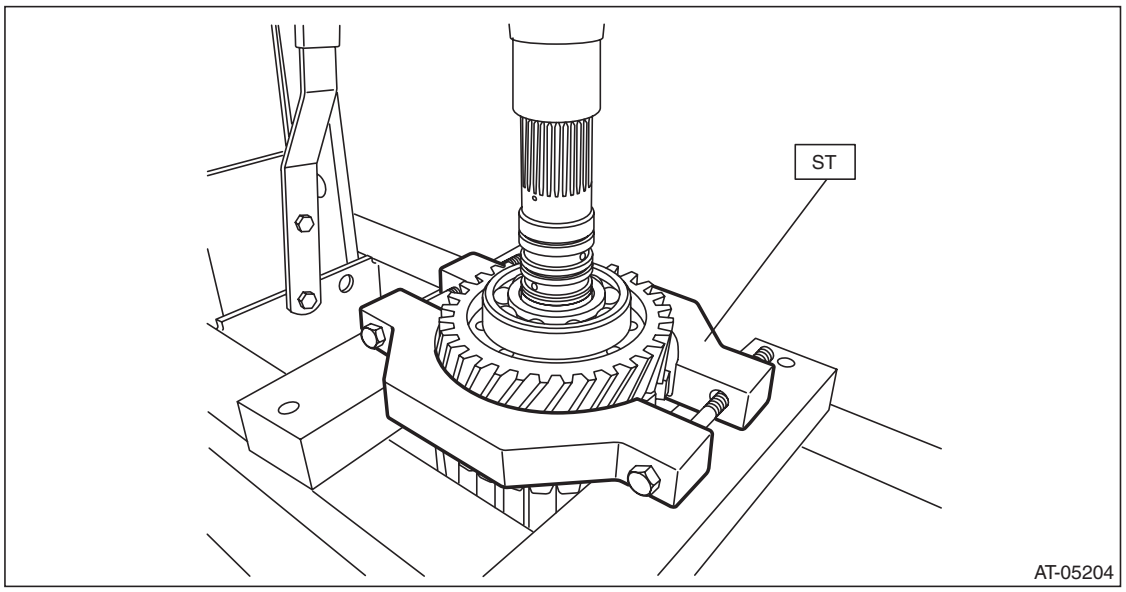

7) Remove the snap ring from transfer reduction drive gear.

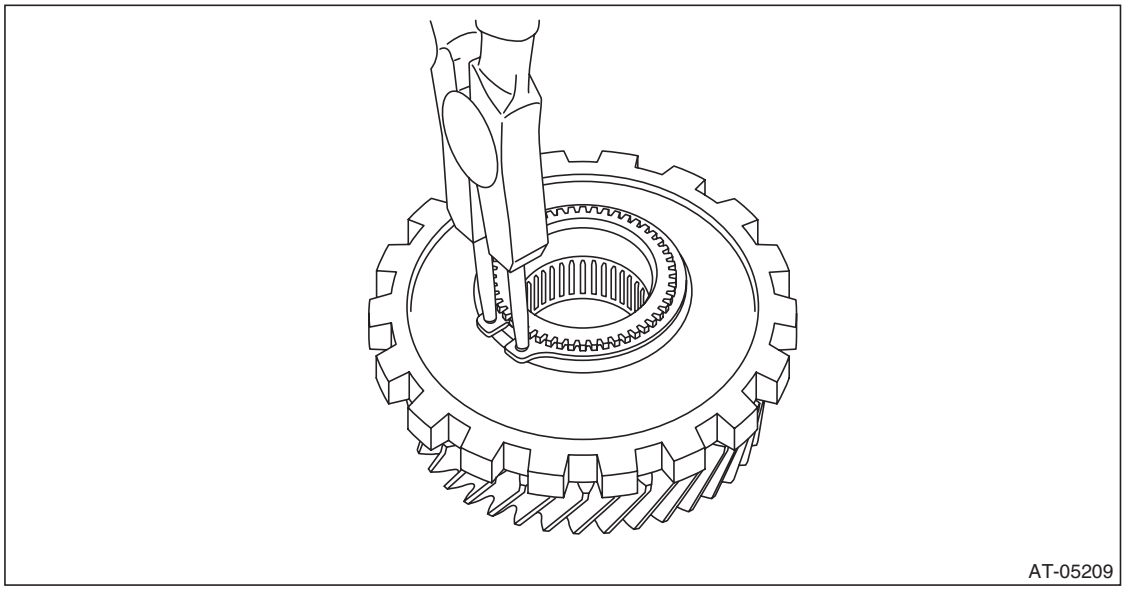

GETtheMANUALS.org

8) Using the ST, remove the parking gear from transfer reduction drive gear.
ST1 499277100 BUSHING 1-2 INSTALLER
ST2 18767AA000 BEARING REMOVER

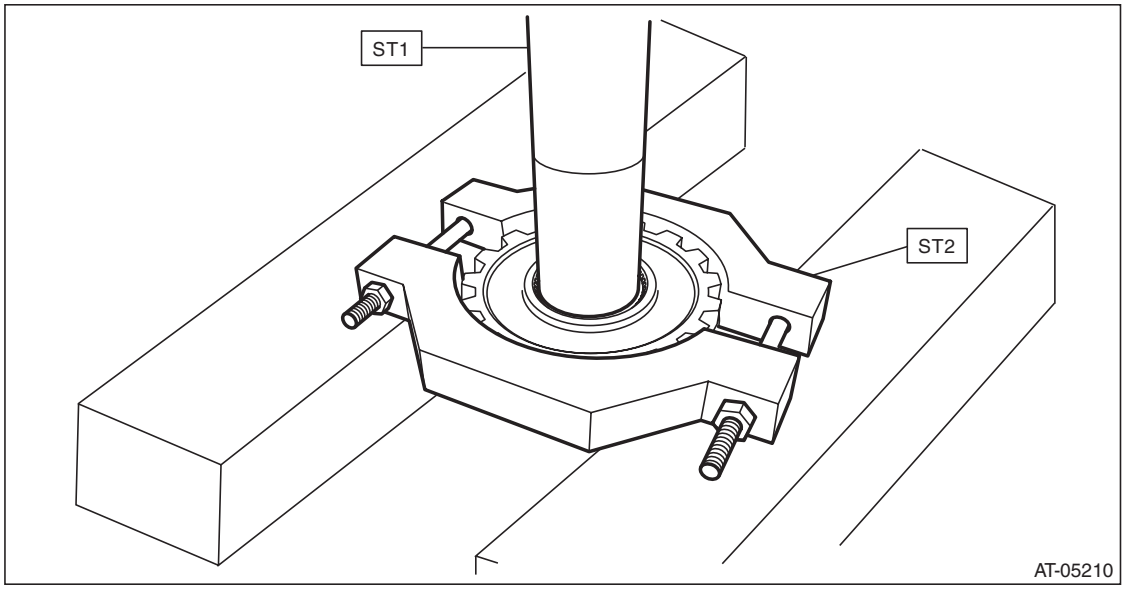

D: ASSEMBLY

1) Using the ST, install the parking gear to transfer reduction drive gear.
ST 398177700 INSTALLER

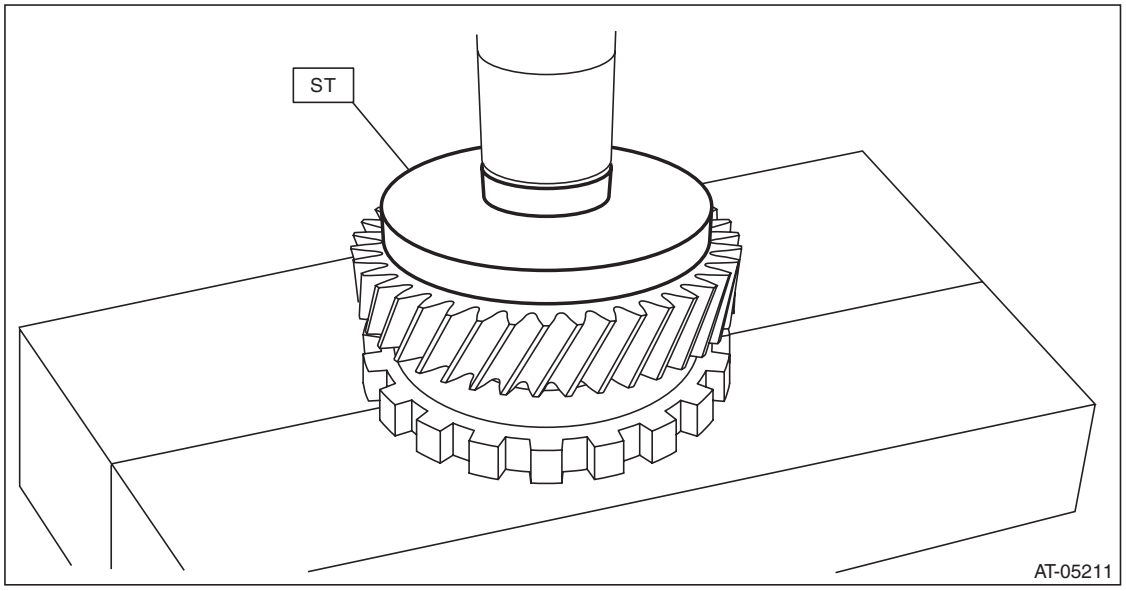

GETtheMANUALS.org

2) Install the snap ring to transfer reduction drive gear.

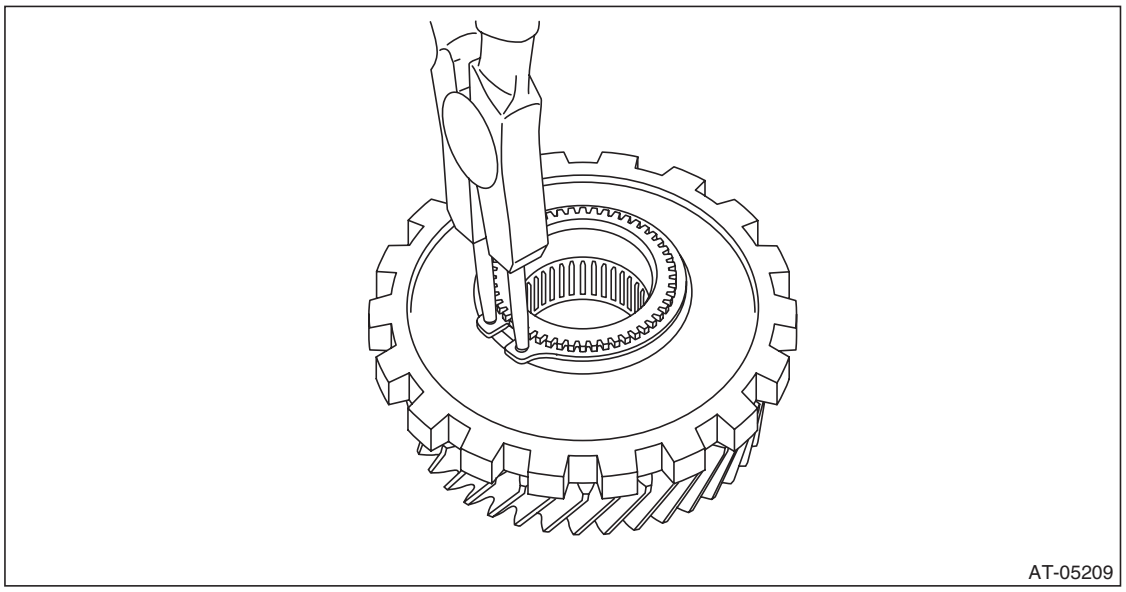

3) Using the ST, install the transfer reduction drive gear to transfer reduction drive gear shaft.
ST 499277100 BUSHING 1-2 INSTALLER

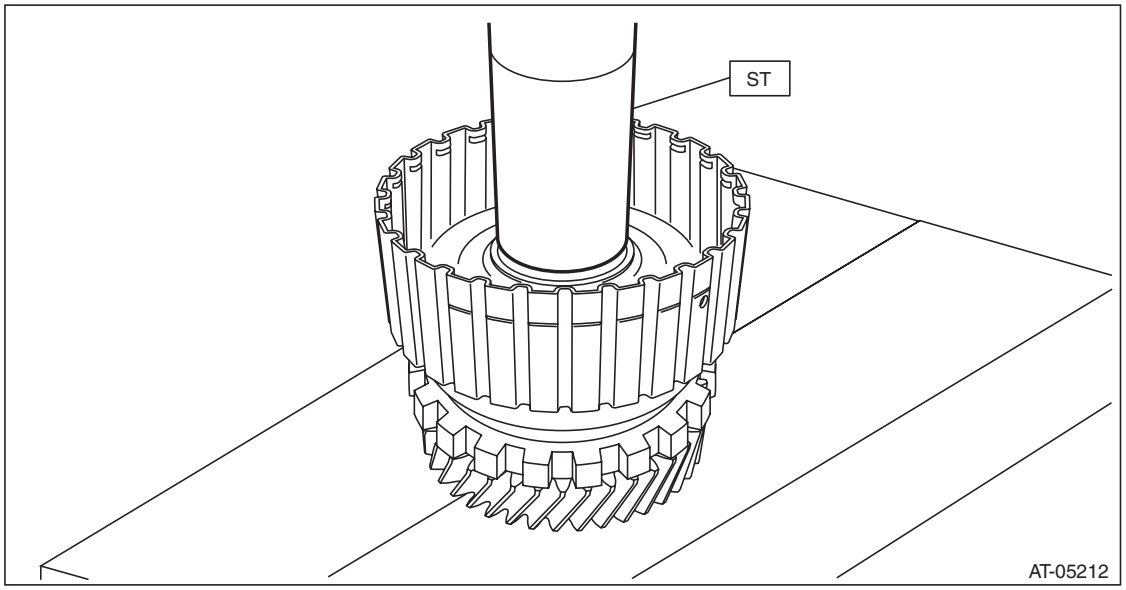

GETtheMANUALS.org

4) Using the ST, install the ball bearing.

NOTE:
Use a new ball bearing.
ST 499277100 BUSHING 1-2 INSTALLER

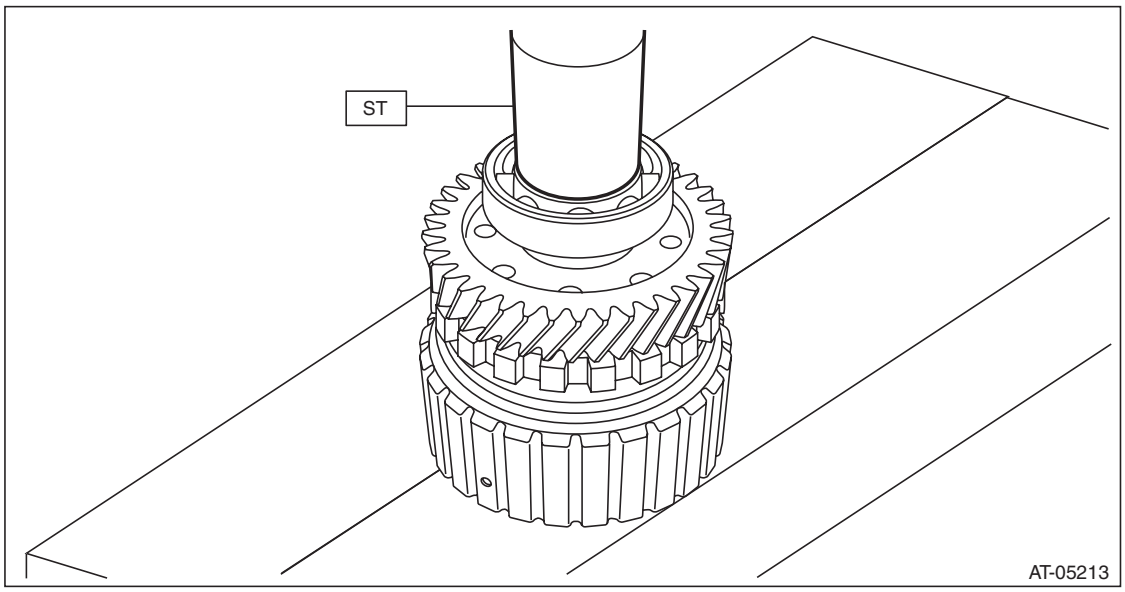

5) Attach the transfer clutch piston to the reduction drive gear shaft.

NOTE:
Apply CVTF to the transfer clutch piston lip.
6) Install the return spring.

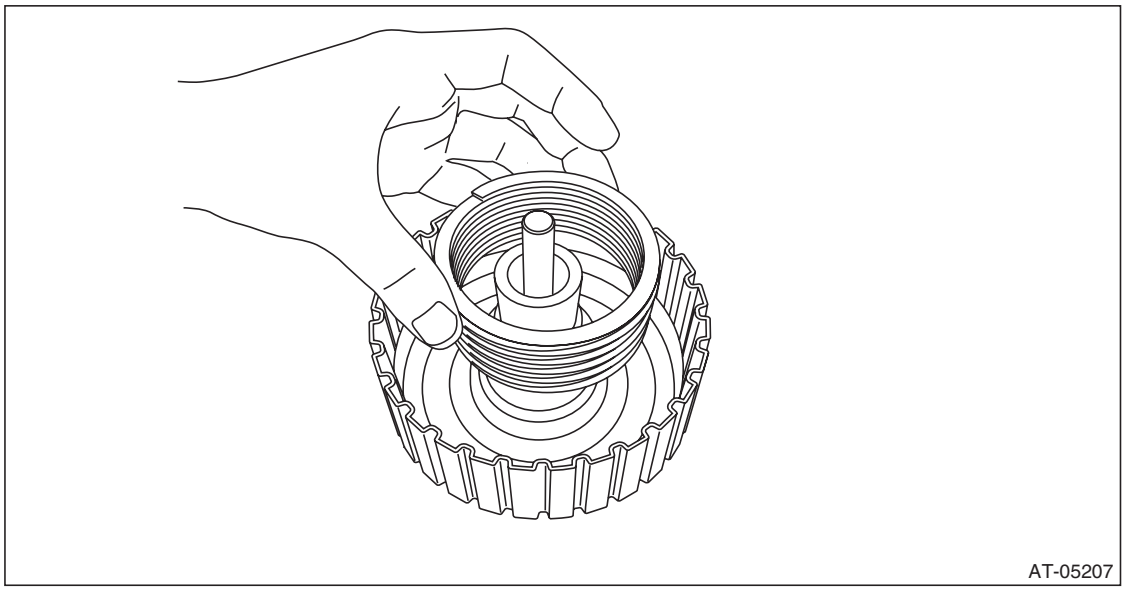

7) Install the transfer clutch piston seal.

GETtheMANUALS.org

8) Using the ST, install the snap ring.
ST 18762AA000 COMPRESSOR SPECIAL TOOL

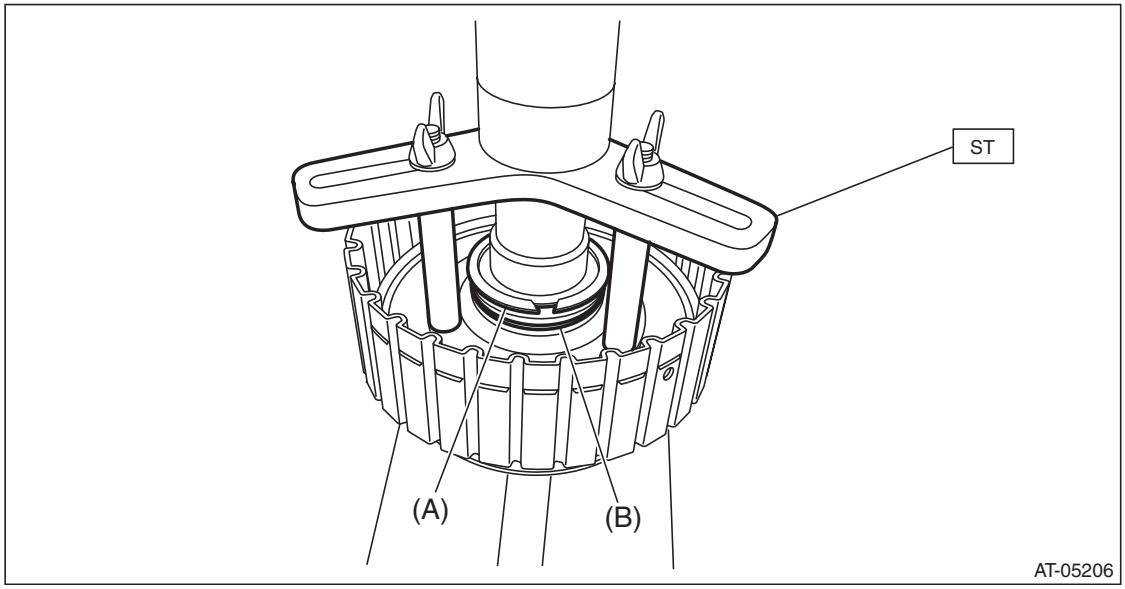

(A) Snap ring
(B) Transfer clutch piston seal

9) Install the pressure plate, driven plate, drive plate and snap ring.

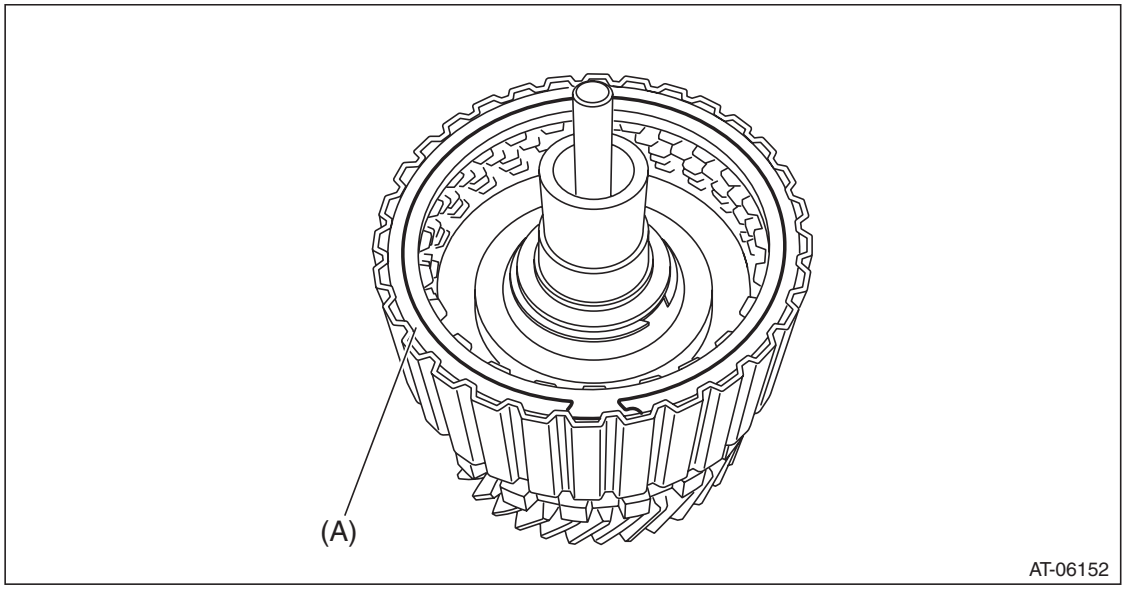

(A) Snap ring

10) Before measuring clearance “A”, place same thickness shims on both sides to prevent the retaining plate from tilting.

GETtheMANUALS.org

11) When clearance “A” exceeds the limit for use, replace the drive plate and driven plate as a set, and select and adjust the pressure plate within the initial specified value.

Initial standard:
0.7 — 1.1 mm (0.028 — 0.043 in)

Limit thickness:
1.6 mm (0.063 in)

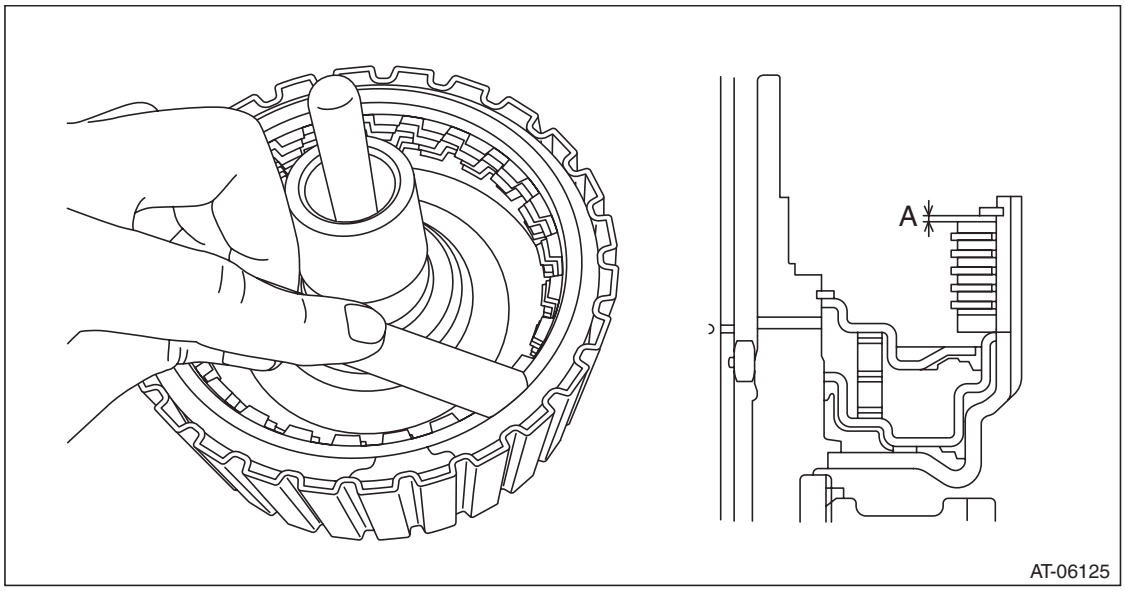

Pressure plate	
Part No.	Thickness mm (in)
31593AA151	3.3 (0.130)
31593AA161	3.7 (0.146)

12) Check the clearance between the snap ring and retaining plate. <Ref. to CVT-156, INSPECTION, Transfer Clutch.>

E: INSPECTION

- Inspect the drive plate facing for wear and damage.
- Driven plate for discoloration (burned color)
- Make sure the snap ring is not worn and the return spring has no permanent distortion, damage, or deformation.
- Check the lip seal for damage.
- Inspect the extension end play, and adjust it to within the standard value. <Ref. to CVT-157, ADJUSTMENT, Transfer Clutch.>

1) Before measuring clearance “A” between snap ring and retaining plate, place same thickness shims on both sides to prevent the retaining plate from tilting.

GETtheMANUALS.org

2) When clearance “A” exceeds the limit for use, replace the drive plate and driven plate as a set, and select the pressure plate within the initial specified value.

Initial standard:
0.7 — 1.1 mm (0.028 — 0.043 in)

Limit thickness:
1.6 mm (0.063 in)

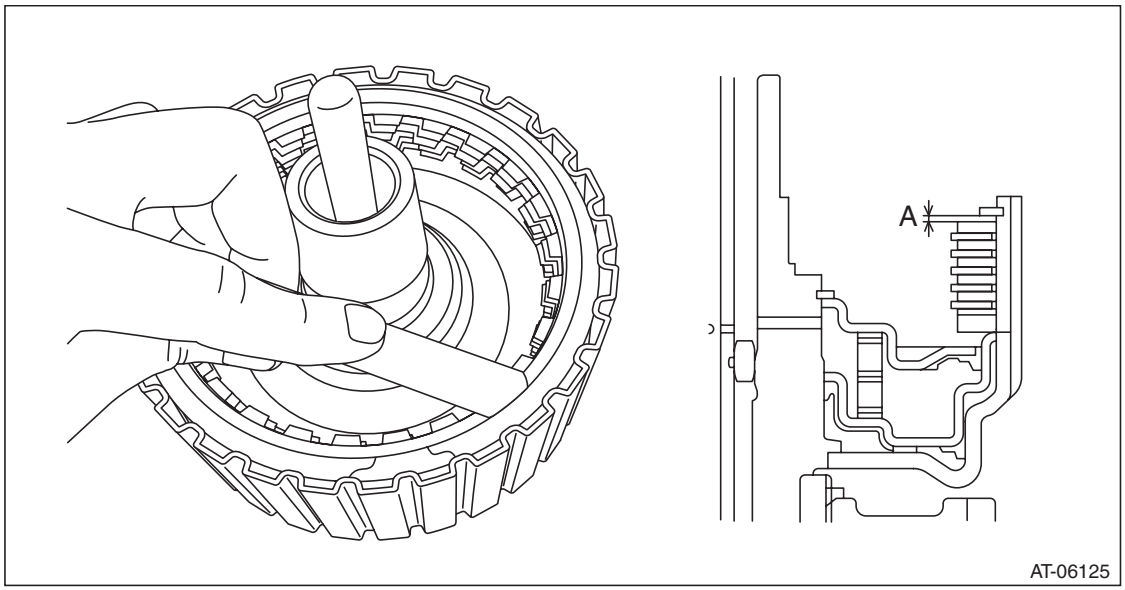

3) Check for tight corner braking phenomenon when the vehicle is moved forward with the steering fully turned. If tight corner braking occurs, perform the following procedures.
(1) With the steering wheel held at fully turned position, drive the vehicle in “D” range and with vehicle speed at approx. 5 km/h (3 MPH) in both clockwise and counterclockwise directions for approx. ten times each, while repeating acceleration and braking intermittently.
(2) If the tight corner braking phenomenon still persists, drive the vehicle again in a circle for several laps.

F: ADJUSTMENT

NOTE:
Refer to the Rear Drive Shaft. <Ref. to CVT-143, ADJUSTMENT, Rear Drive Shaft.>

GETtheMANUALS.org

31.Transfer Reduction Driven Gear

A: REMOVAL

1) Remove the transmission assembly from the vehicle. <Ref. to CVT-55, REMOVAL, Automatic Transmission Assembly.>
2) Remove the extension case. <Ref. to CVT-138, REMOVAL, Extension Case.>
3) Remove the transfer clutch assembly. <Ref. to CVT-146, REMOVAL, Transfer Clutch.>
4) Remove the transfer reduction driven gear assembly.

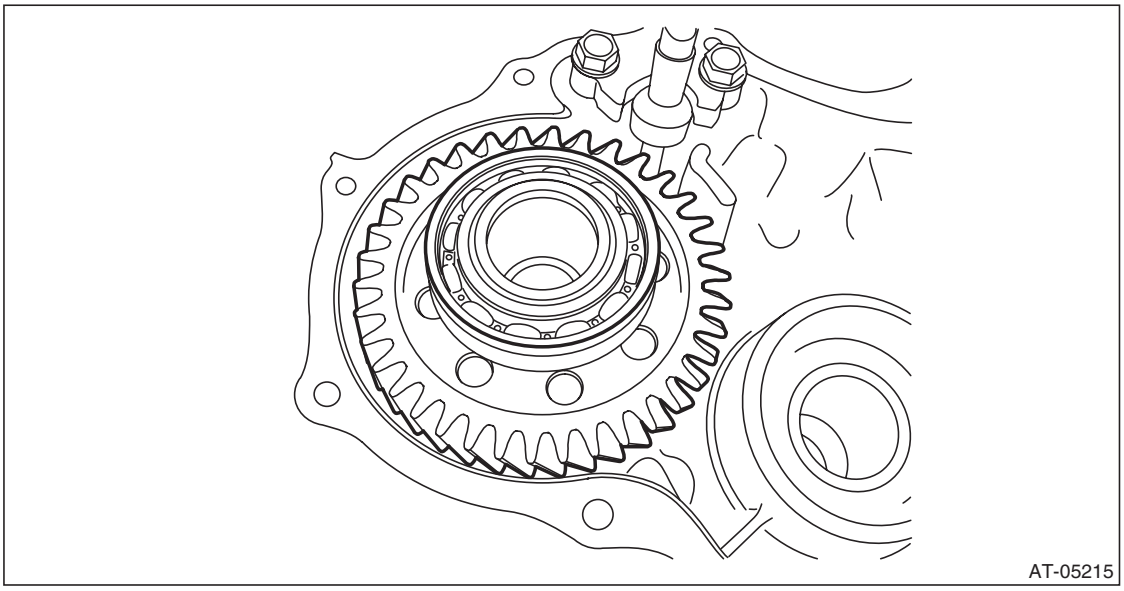

B: INSTALLATION

1) Install the reduction driven gear assembly.

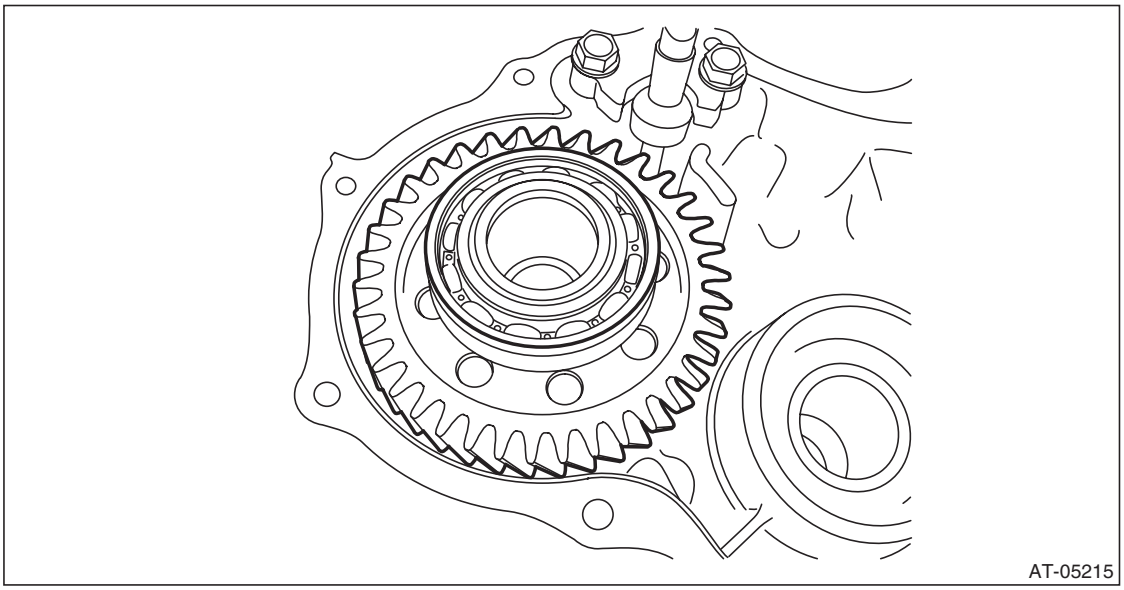

2) Select shims. <Ref. to CVT-161, ADJUSTMENT, Transfer Reduction Driven Gear.>
3) Mount the selected shim onto ball bearing.
4) Install the transfer clutch assembly. <Ref. to CVT-147, INSTALLATION, Transfer Clutch.>
5) Install the extension case. <Ref. to CVT-138, INSTALLATION, Extension Case.>
6) Install the transmission assembly to the vehicle. <Ref. to CVT-70, INSTALLATION, Automatic Transmission Assembly.>

GETtheMANUALS.org

C: DISASSEMBLY

1) Using the ST, remove the ball bearing (large) from transfer reduction driven gear.
ST1 899864100 REMOVER
ST2 398497701 SEAT
ST3 498077600 REMOVER

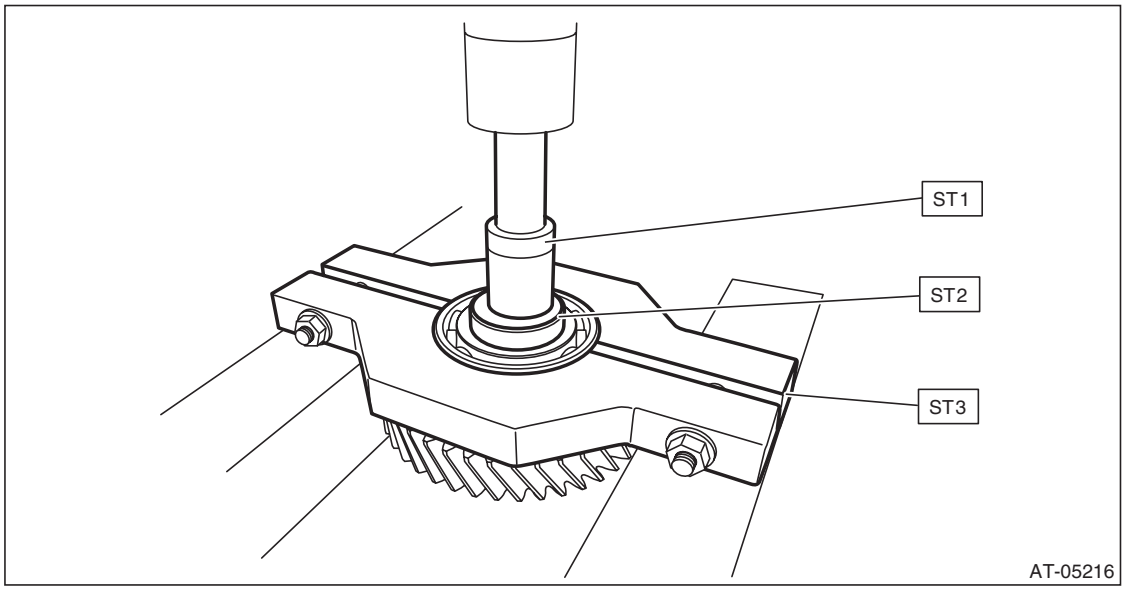

2) Using the ST, remove the ball bearing (small) from transfer reduction driven gear.
ST1 899864100 REMOVER
ST2 398497701 SEAT
ST3 18720AA000 REMOVER

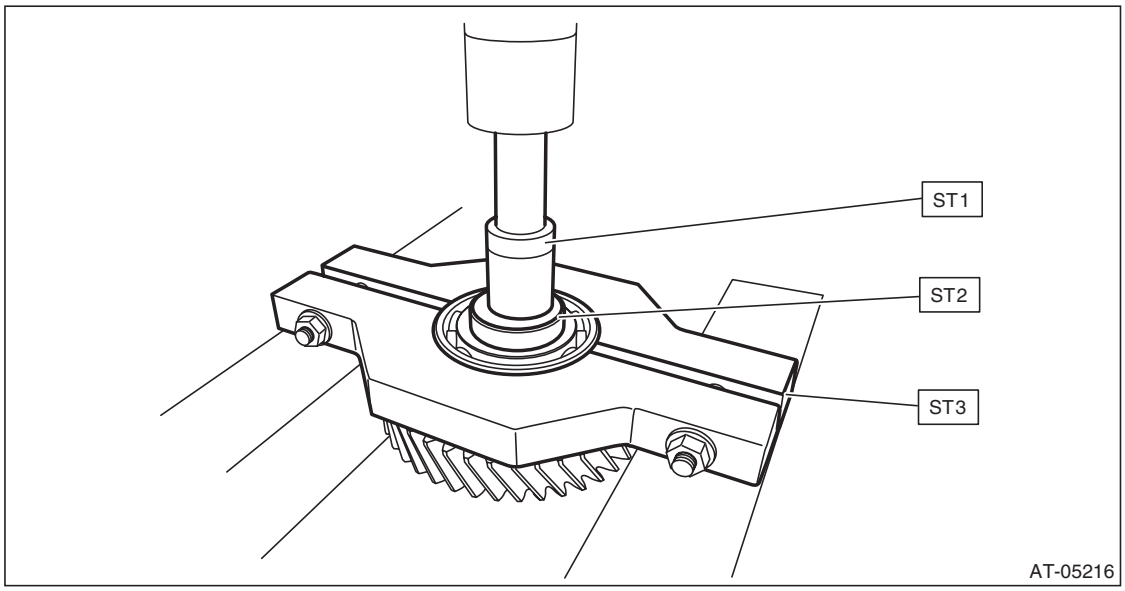

GETtheMANUALS.org

D: ASSEMBLY

1) Install the new ball bearing (large) to reduction driven gear using the ST.
ST 499277100 BUSHING 1-2 INSTALLER

NOTE:
- Use a new ball bearing.
- Install to the splines inside transfer reduction driven gear shaft.

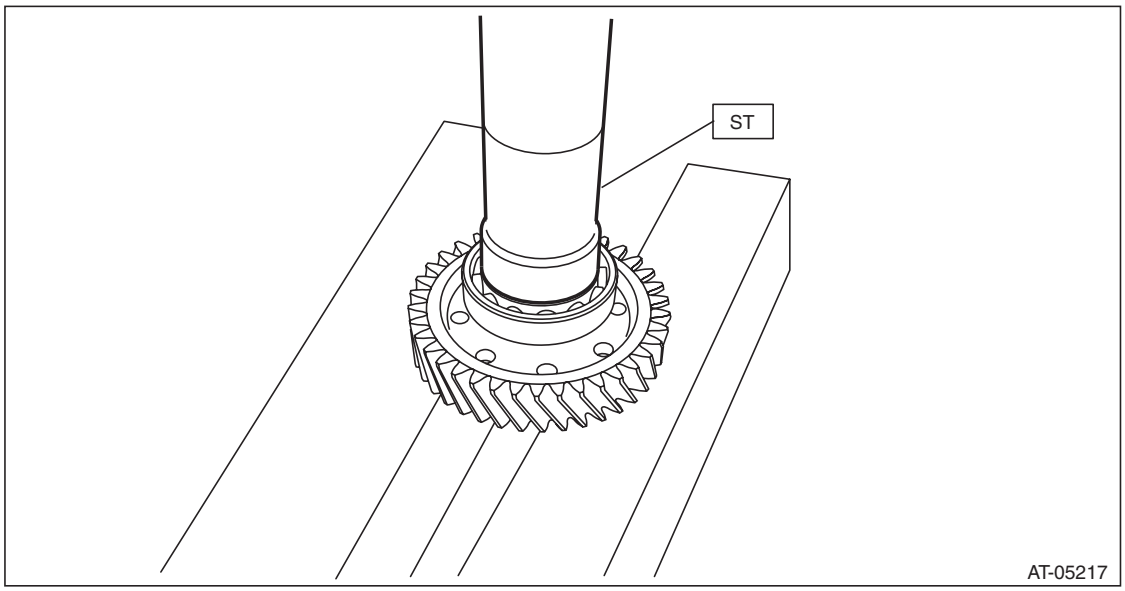

2) Install the new ball bearing (small) to reduction driven gear.

NOTE:
Use a new ball bearing.
ST 499277100 BUSHING 1-2 INSTALLER

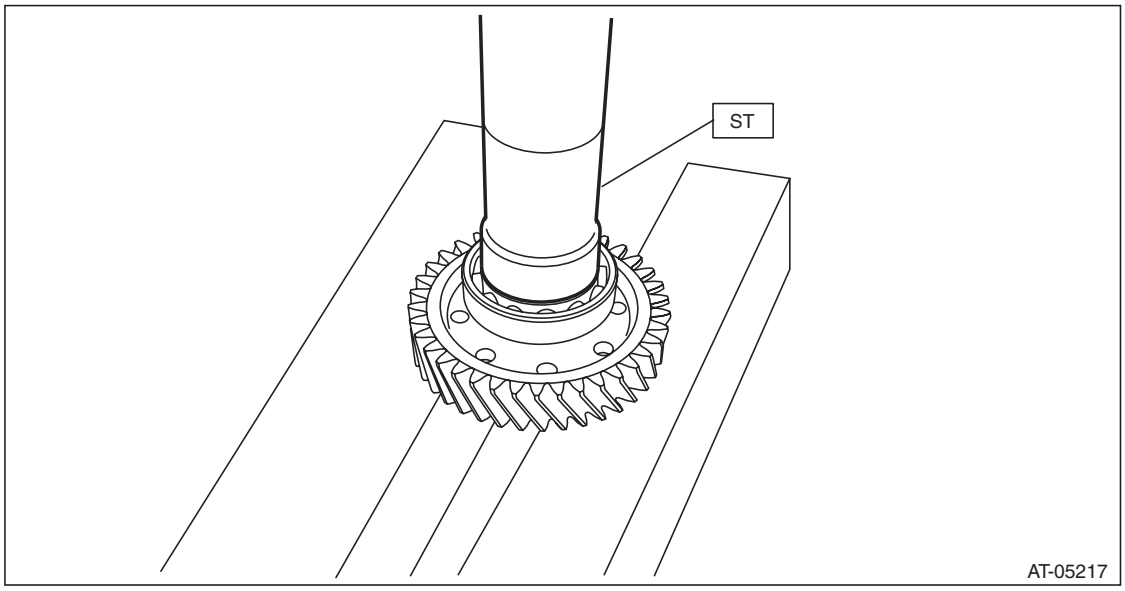

E: INSPECTION

- Check the ball bearing for smooth rotation.
- Check the ball bearing for excessive looseness.
- Make sure the gear is not broken or damaged.

GETtheMANUALS.org

F: ADJUSTMENT

1) Measure depth “A” from the ST upper face to the ball bearing catch surface.
ST 398643600 GAUGE

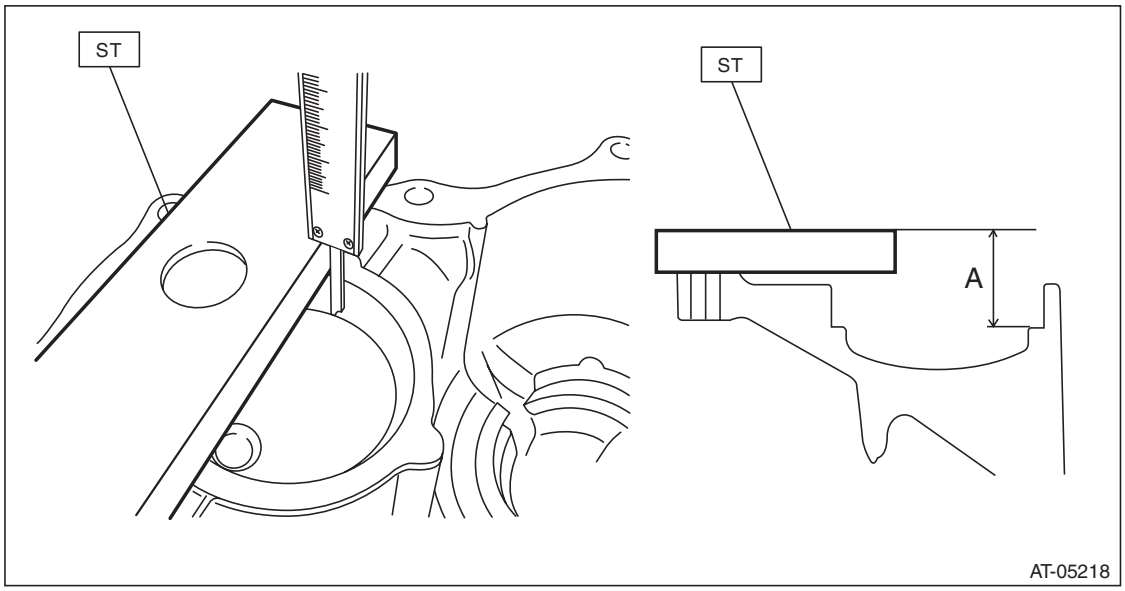

2) Measure height “B” from the ST to the end of the ball bearing outer ring.
ST 398643600 GAUGE

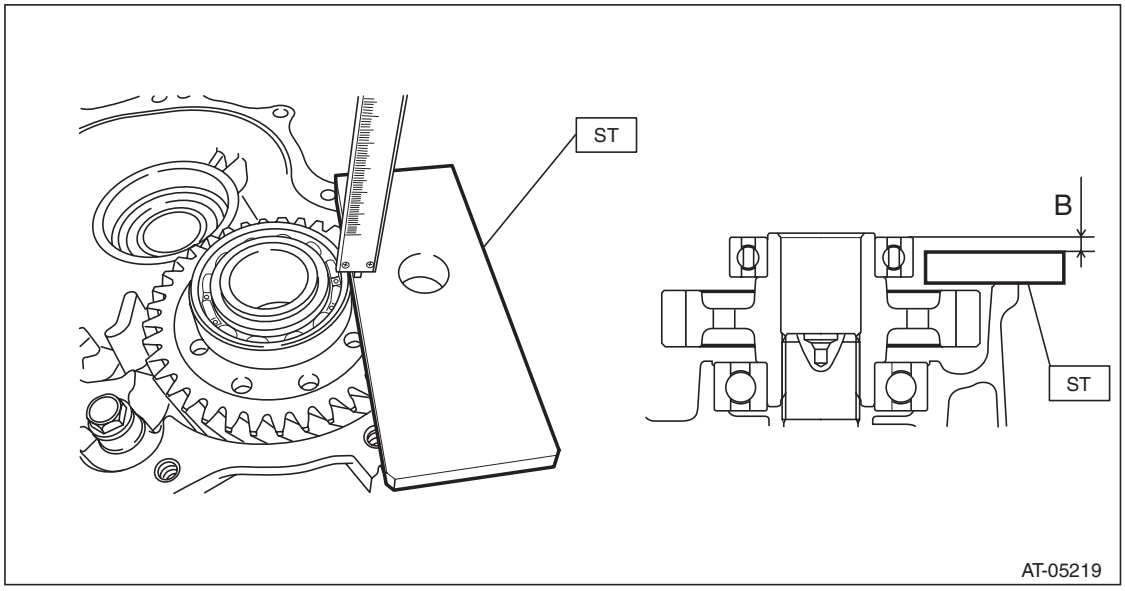

GETtheMANUALS.org

3) Obtain the thickness of shim using the following formula to select none to two shims.
T mm = (A – 15) – (B + 15) – (0.05 — 0.25)
[T in = (A – 0.591) – (B + 0.591) – (0.002 — 0.01)]
T: Shim thickness
A: Depth from the ST upper face to the ball bearing catch surface
B: Height from the ST to the end of the ball bearing outer ring
15 mm (0.591 in): Thickness of ST
0.05 — 0.25 mm (0.002 — 0.01 in): Clearance

Shim	
Part number	Thickness mm (in)
31288AA190	0.2 (0.008)
31288AA200	0.3 (0.012)
31288AA210	0.5 (0.02)

GETtheMANUALS.org

32. Parking Pawl

A: REMOVAL

1) Remove the transmission assembly from the vehicle. <Ref. to CVT-55, REMOVAL, Automatic Transmission Assembly.>
2) Shift the range select lever to “N” range.
3) Remove the extension case. <Ref. to CVT-138, REMOVAL, Extension Case.>
4) Remove the parking pawl shaft, return spring and parking pawl.

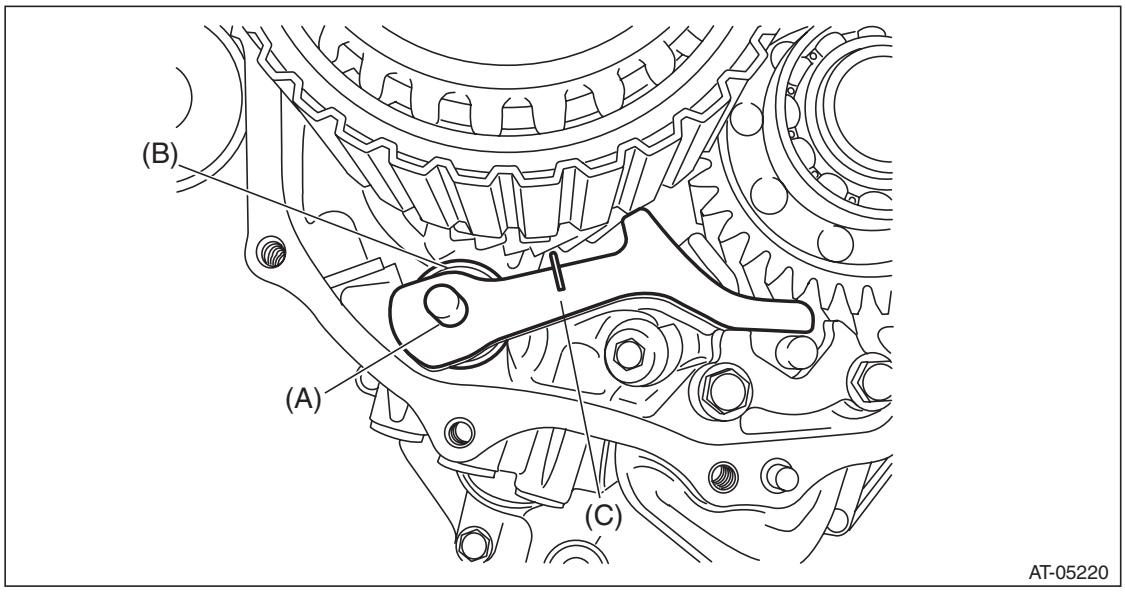

(A) Parking pawl shaft
(B) Return spring
(C) Parking pawl

GETtheMANUALS.org

B: INSTALLATION

1) Set the range select lever to the “N” range.
2) Install the parking pawl shaft, return spring and parking pawl.

NOTE:
Make sure that the end of return spring sticks out of parking pawl as shown in (a). Make sure that the other end contacts the rib of intermediate case as shown in (b).

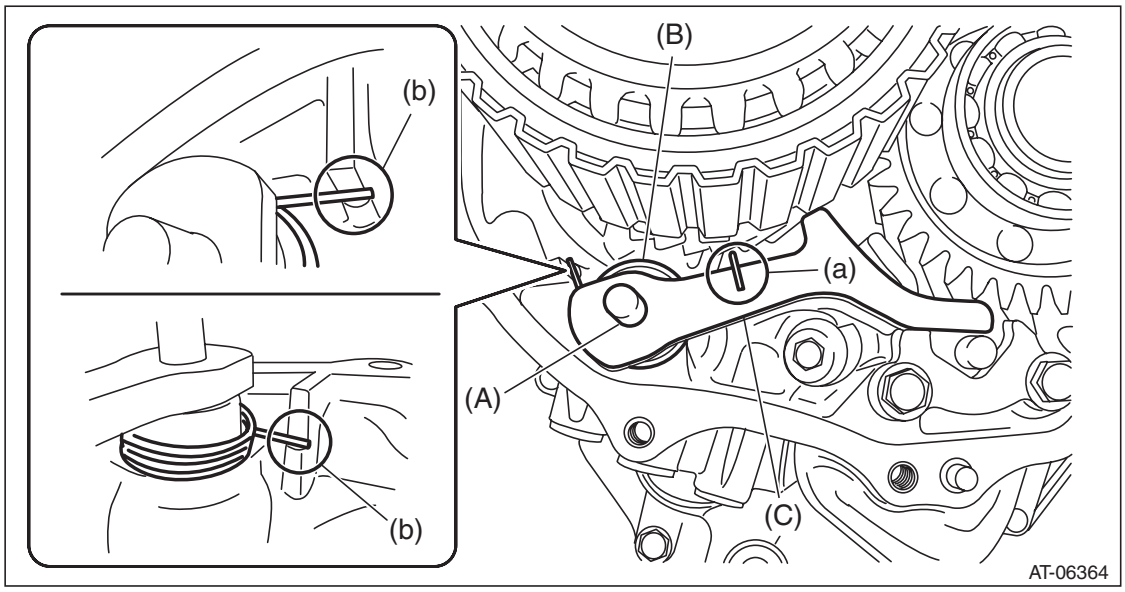

(A) Parking pawl shaft
(B) Return spring
(C) Parking pawl

3) Install the extension case. <Ref. to CVT-138, INSTALLATION, Extension Case.>
4) Install the transmission assembly to the vehicle. <Ref. to CVT-70, INSTALLATION, Automatic Transmission Assembly.>

C: INSPECTION

- Check the parking pawl for breakage or damage.
- Check the return spring for fatigue.

GETtheMANUALS.org

33.Intermediate Case

A: REMOVAL

1) Remove the transmission assembly from vehicle body. <Ref. to CVT-55, REMOVAL, Automatic Transmission Assembly.>
2) Remove the extension case. <Ref. to CVT-138, REMOVAL, Extension Case.>
3) Remove the rear drive shaft. <Ref. to CVT-141, REMOVAL, Rear Drive Shaft.>
4) Remove the transfer clutch assembly. <Ref. to CVT-146, REMOVAL, Transfer Clutch.>
5) Remove the transfer reduction driven gear assembly. <Ref. to CVT-158, REMOVAL, Transfer Reduction Driven Gear.>
6) Remove the intermediate case.

NOTE:
- The total number of intermediate case mounting bolts is 14.
- Inside the transmission is a single bolt (arrowed).

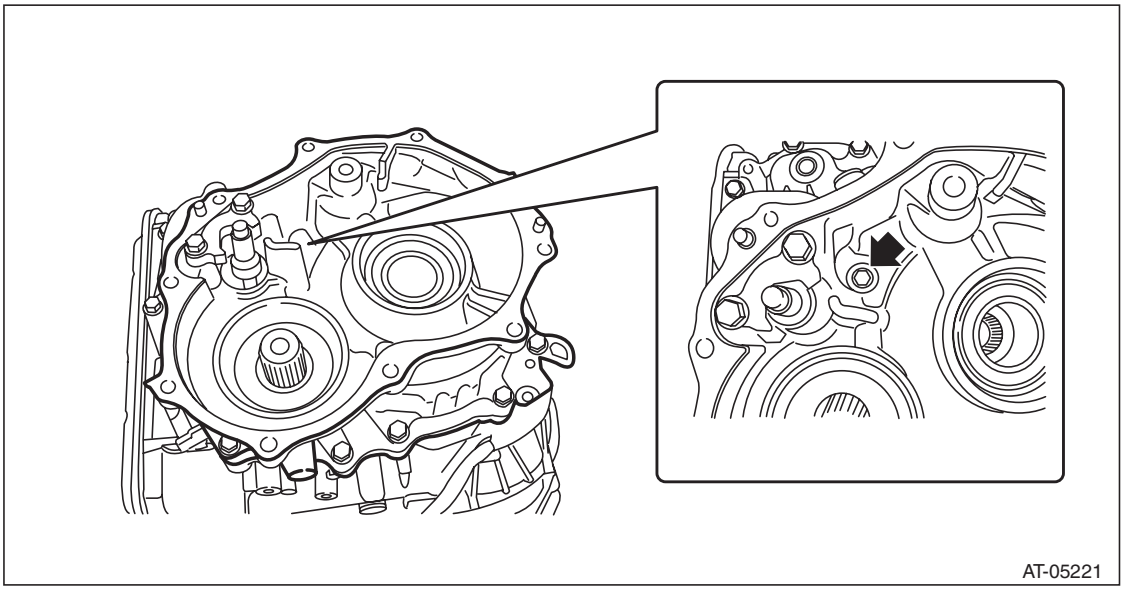

7) Remove the CVTF filter.

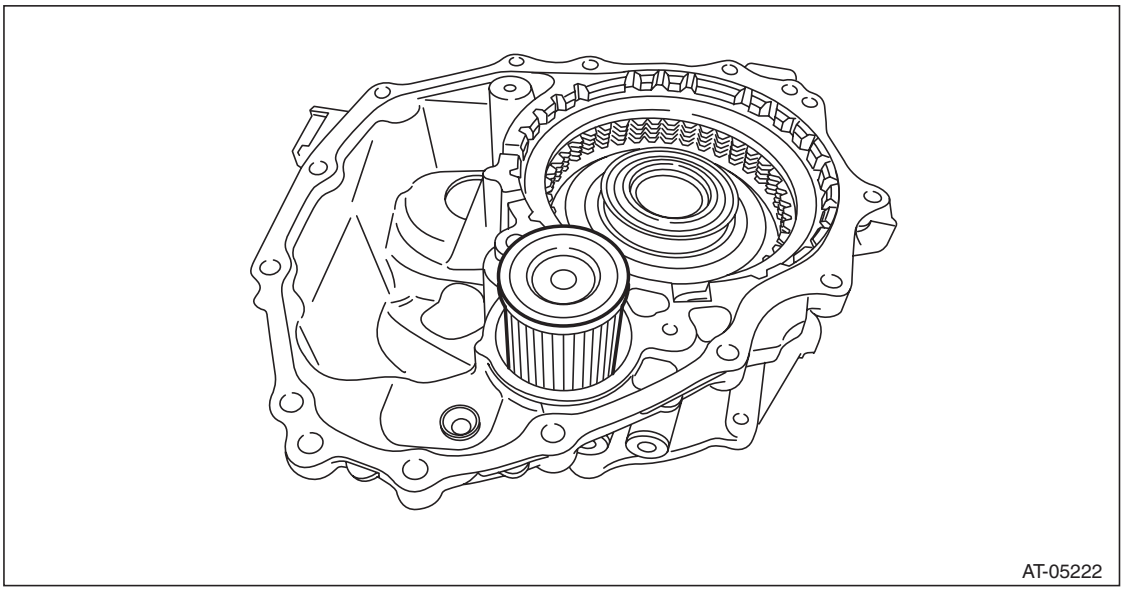

GETtheMANUALS.org

8) Remove the O-ring from the transmission case.

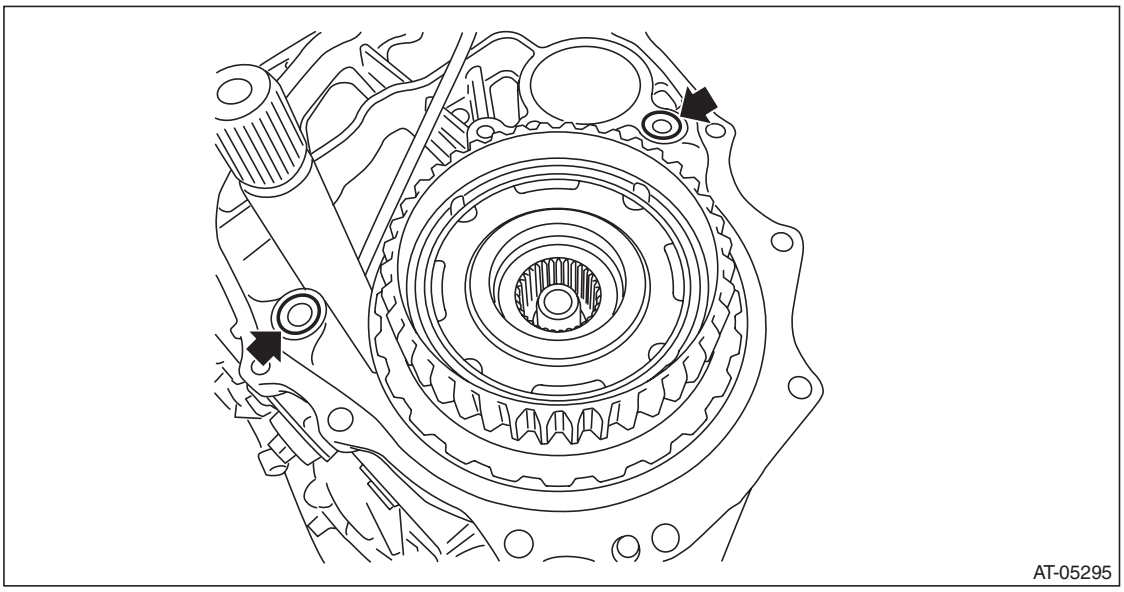

B: INSTALLATION

1) Clean the mating surface of intermediate case and transmission case.
2) Face the O-ring side of the CVTF filter to the intermediate case side, and install the CVTF filter.

NOTE:
Apply CVTF to the O-ring.

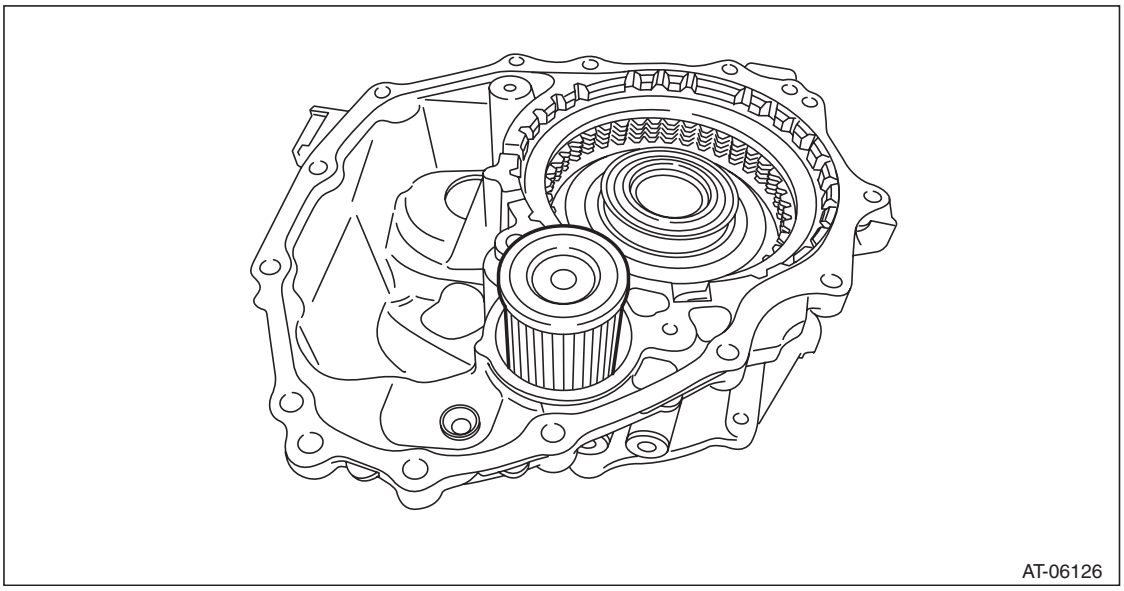

GETtheMANUALS.org

3) Install the O-ring to the transmission case.

NOTE:
- Use new O-rings.
- Apply CVTF to the O-ring.

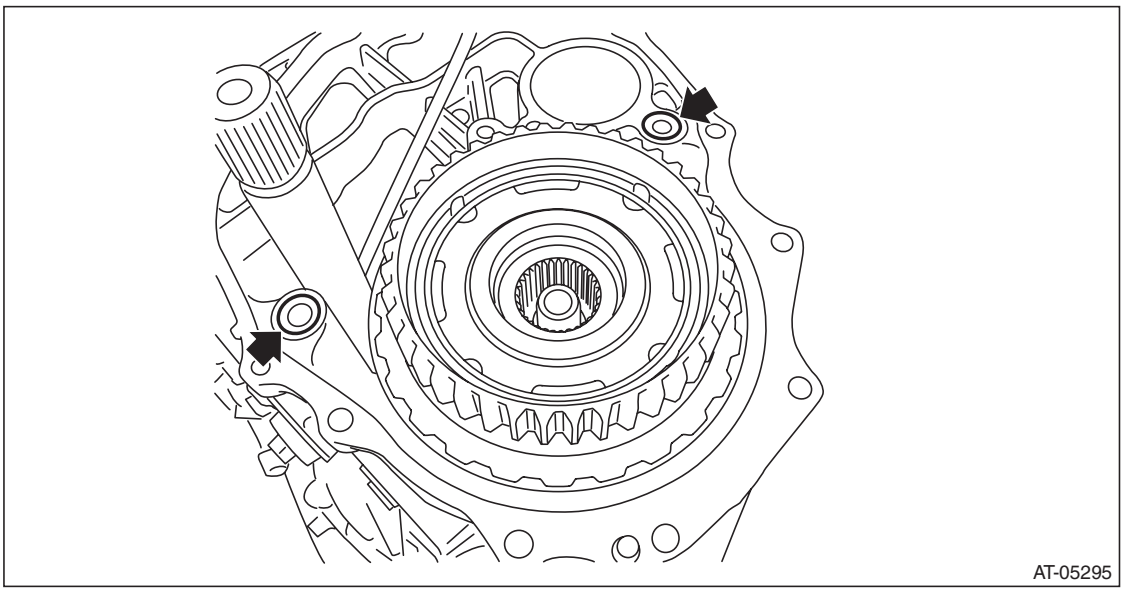

4) Apply liquid gasket to intermediate case seamlessly.

Liquid gasket:
THREE BOND 1215 (Part No. 004403007) or equivalent

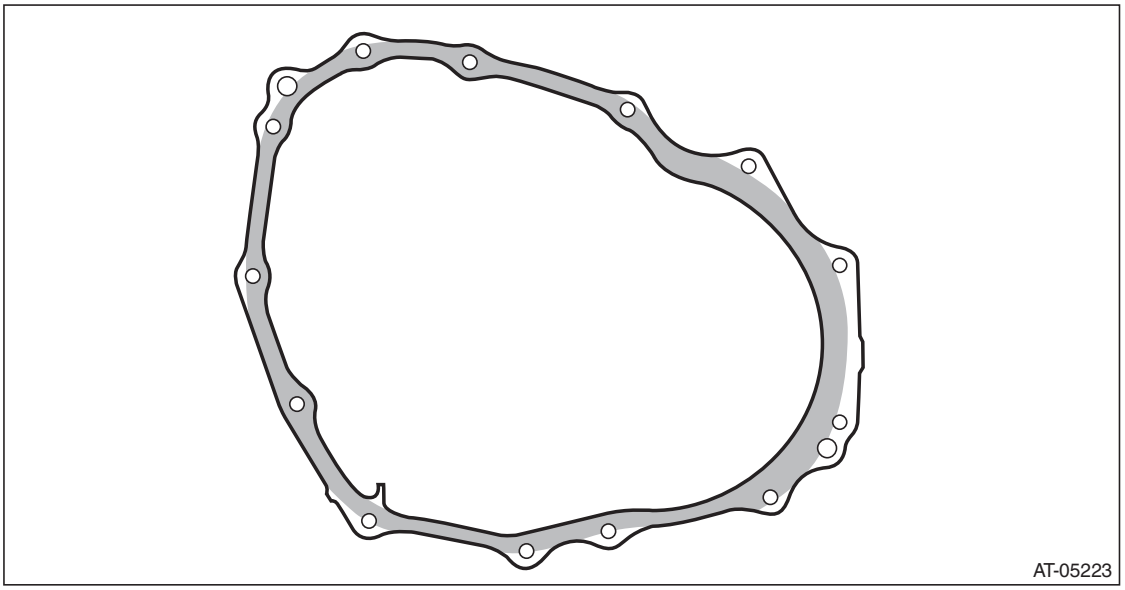

GETtheMANUALS.org

5) Install the intermediate case and the transmission hanger to the transmission case.

NOTE:
Make sure to install the arrowed bolt.

Tightening torque:
25 N·m (2.5 kgf-m, 18.4 ft-lb)

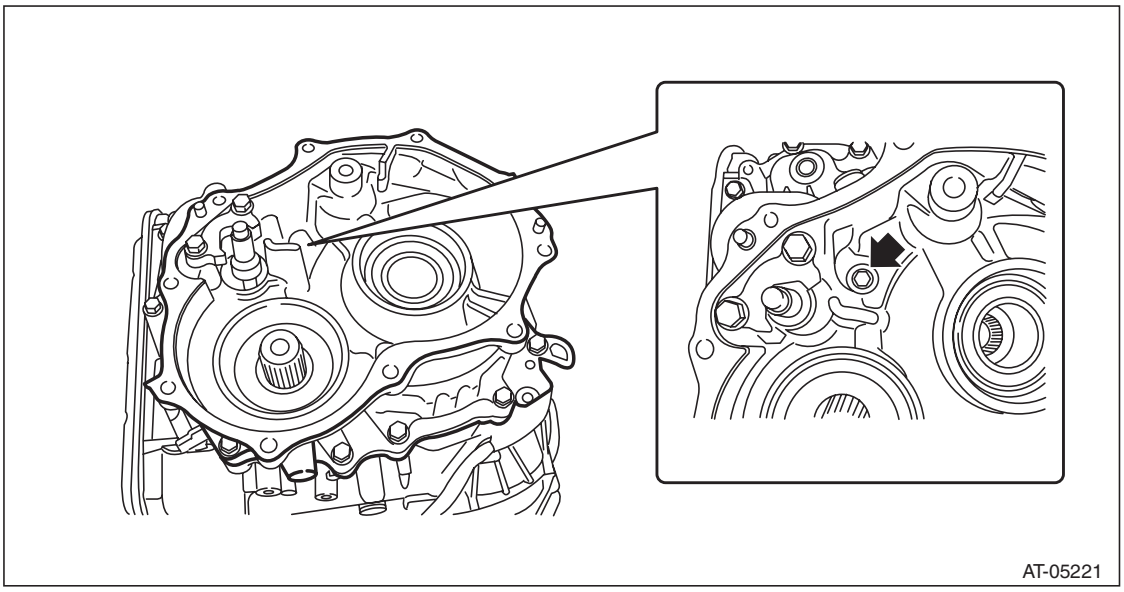

6) Install the transfer reduction driven gear assembly. <Ref. to CVT-158, INSTALLATION, Transfer Reduction Driven Gear.>
7) Install the transfer clutch assembly. <Ref. to CVT-147, INSTALLATION, Transfer Clutch.>
8) Install the rear drive shaft. <Ref. to CVT-141, INSTALLATION, Rear Drive Shaft.>
9) Install the extension case. <Ref. to CVT-138, INSTALLATION, Extension Case.>
10) Install the transmission to vehicle. <Ref. to CVT-70, INSTALLATION, Automatic Transmission Assembly.>

C: DISASSEMBLY

1) Remove the CVTF filler plug.
2) Remove all plugs from intermediate case.

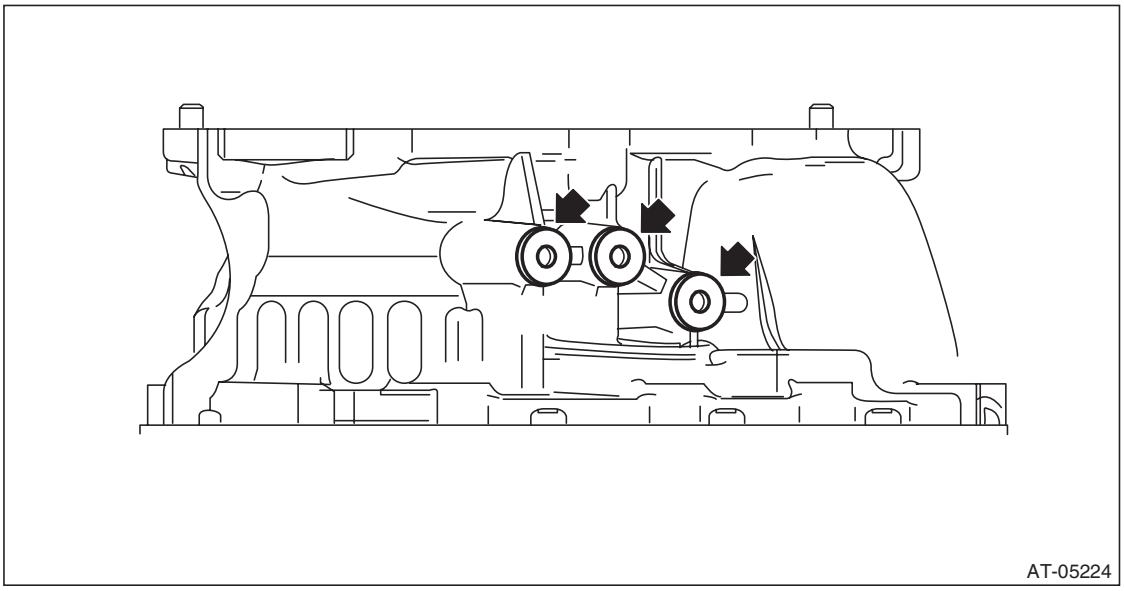

3) Remove the reverse brake assembly. <Ref. to CVT-171, DISASSEMBLY, Reverse Brake Assembly.>

GETtheMANUALS.org

D: ASSEMBLY

1) Install the reverse brake. <Ref. to CVT-174, ASSEMBLY, Reverse Brake Assembly.>
2) install all plugs to intermediate case.

Tightening torque:
25 N·m (2.5 kgf-m, 18.4 ft-lb)

NOTE:
Use new O-rings.

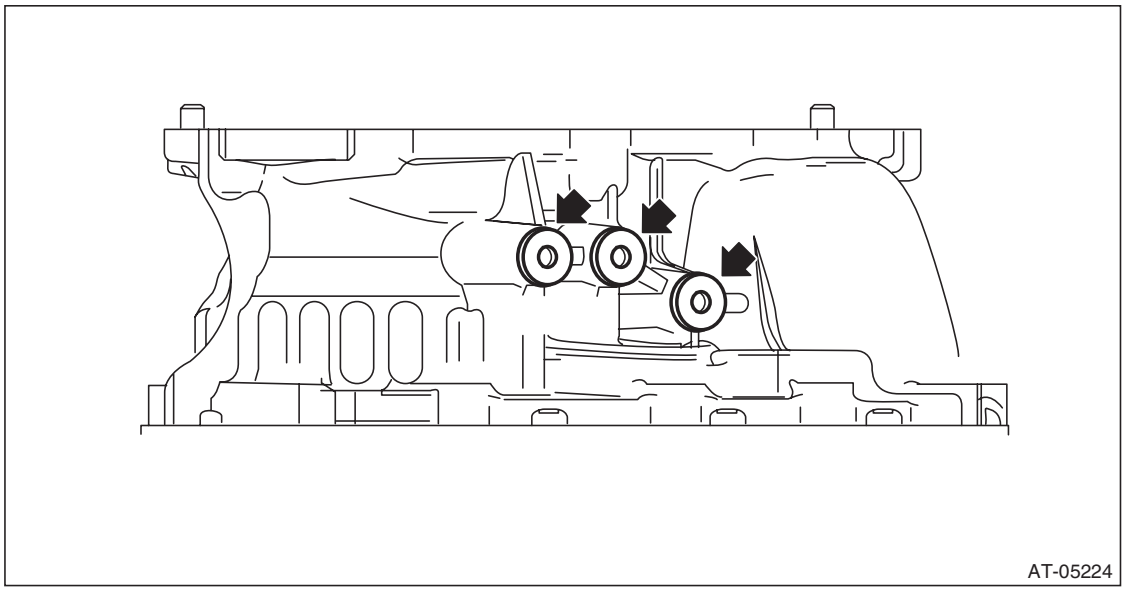

3) Install the CVTF filler plug.

NOTE:
Replace the gasket of CVTF filler plug with a new part after installing the transmission assembly to vehicle and adjusting CVTF fluid.

E: INSPECTION

- Check the intermediate case for fissures, cracks or damage.
- Check for leakage of CVTF from the connections between intermediate case and transmission case, and between intermediate case and extension case.

GETtheMANUALS.org

34.CVTF Filter

A: REMOVAL

NOTE:
- Although CVTF filter is a maintenance-free part, replace it if a large quantity of wear debris and metal particles are found in CVTF and CVTF filter.
- For removal of CVTF filter, refer to “Intermediate Case”. <Ref. to CVT-165, REMOVAL, Intermediate Case.>

B: INSTALLATION

NOTE:
For removal of CVTF filter, refer to “Intermediate Case”. <Ref. to CVT-166, INSTALLATION, Intermediate Case.>

C: INSPECTION

- Check if a large quantity of wear debris or metal particles are in CVTF and CVTF filter.
- Check for broken part or damaged O-ring.

GETtheMANUALS.org

35. Reverse Brake Assembly

A: REMOVAL

NOTE:
For removal of reverse brake assembly, refer to “Intermediate Case”. <Ref. to CVT-165, REMOVAL, Intermediate Case.>

B: INSTALLATION

NOTE:
For removal of reverse brake assembly, refer to “Intermediate Case”. <Ref. to CVT-166, INSTALLATION, Intermediate Case.>

C: DISASSEMBLY

1) Remove the snap ring.
2) Remove the retaining plate, drive plate, driven plate and dish plate.

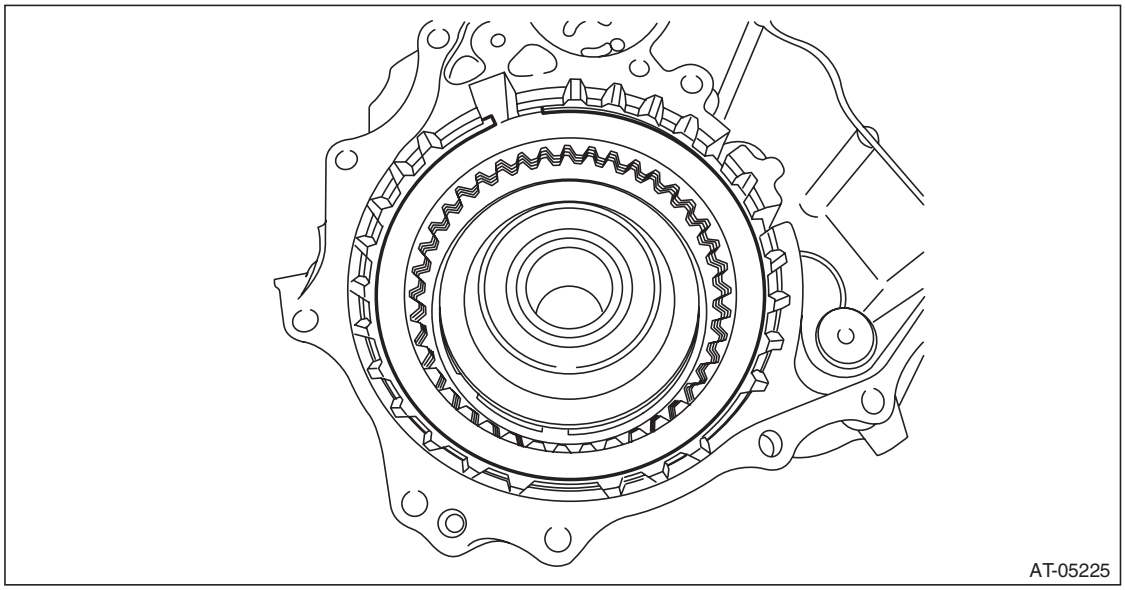

GETtheMANUALS.org

3) Set the ST1, ST2 and ST3 to intermediate case.

ST1	18762AA000	COMPRESSOR SPECIAL TOOL
ST2	18763AA000	COMPRESSOR SHAFT
ST3	18765AA000	COMPRESSOR SUPPORT

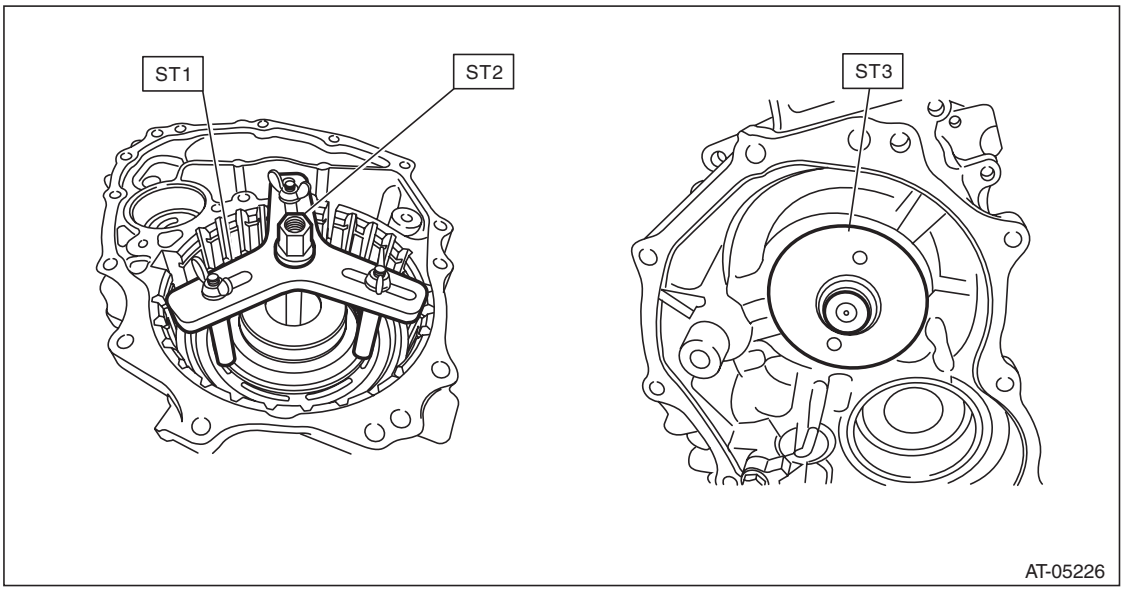

4) Compress the return spring using the set ST to remove the snap ring.

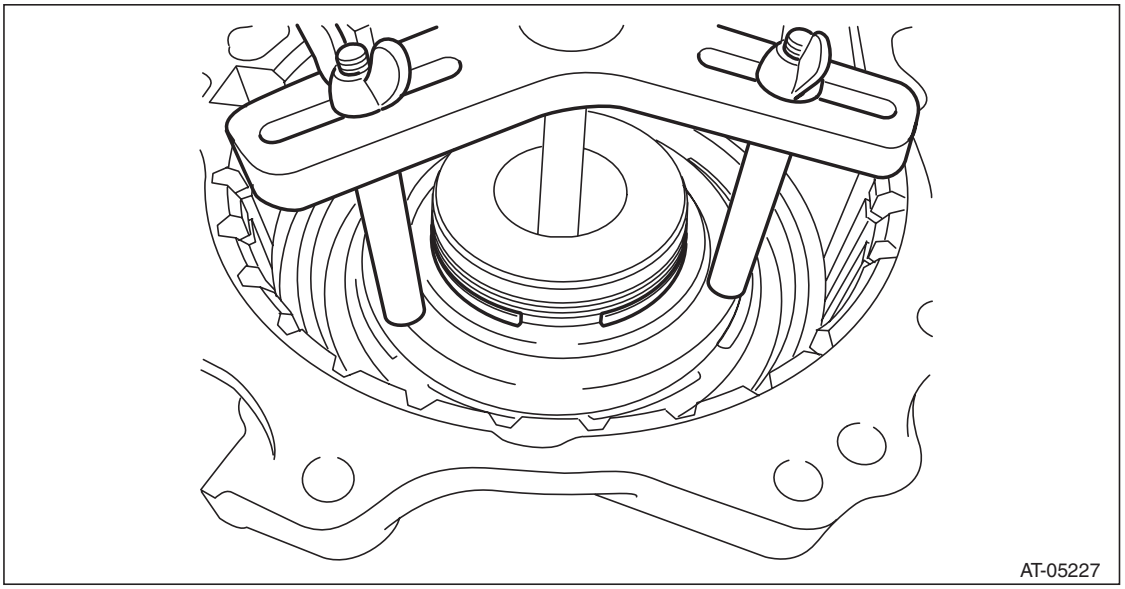

GETtheMANUALS.org

5) Using the ST, remove the snap ring and spring retainer.

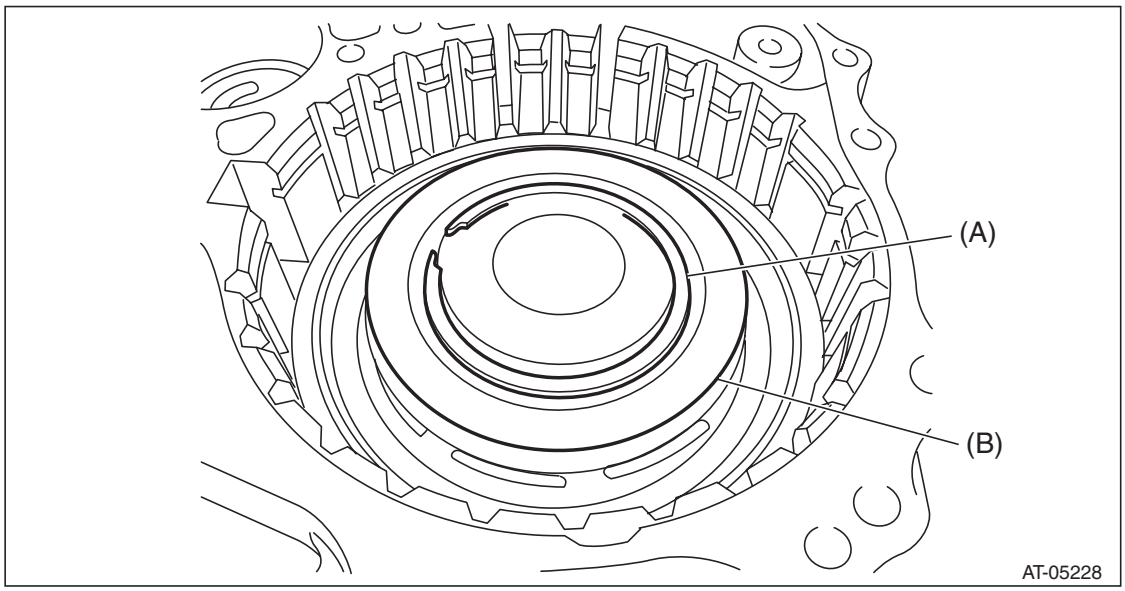

(A) Snap ring
(B) Spring retainer

6) Remove the return spring.

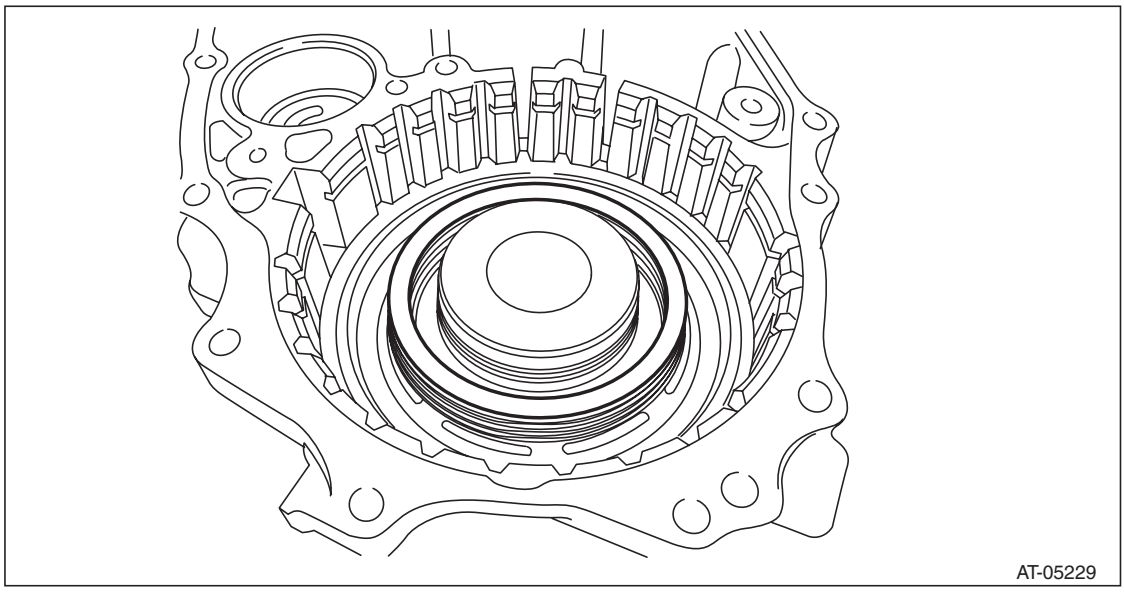

GETtheMANUALS.org

7) Remove the reverse brake piston by blowing compressed air intermittently from intermediate case hole.

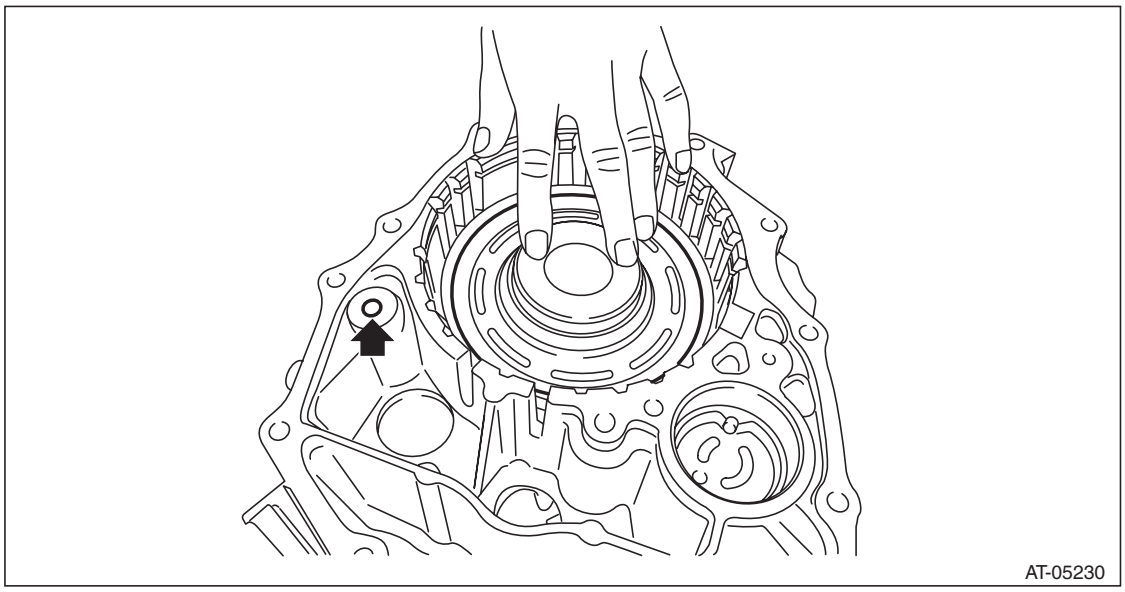

D: ASSEMBLY

1) Apply CVTF to the seal of reverse brake piston and install it to intermediate case.

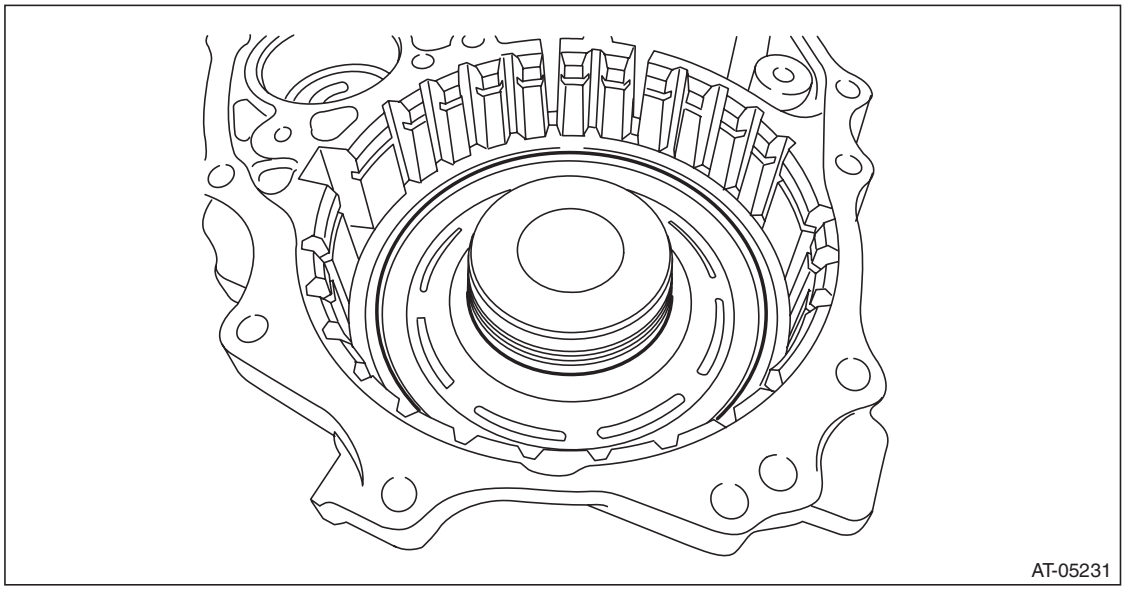

GETtheMANUALS.org

2) Install the return spring.

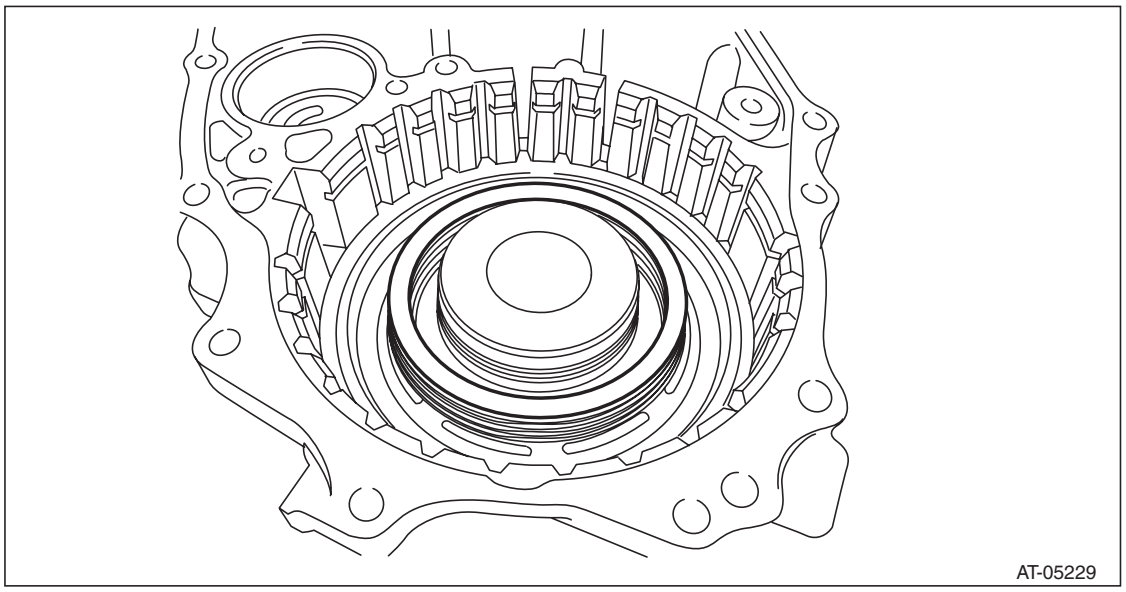

3) Install the spring retainer.

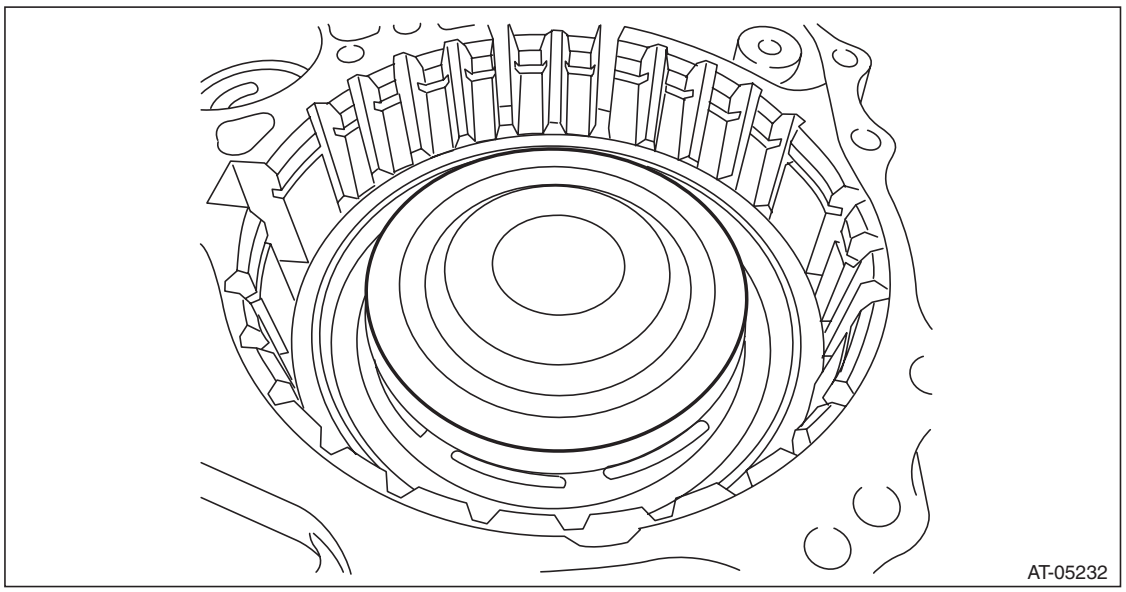

GETtheMANUALS.org

4) Set the ST1, ST2 and ST3 to intermediate case.

ST1	18762AA000	COMPRESSOR SPECIAL TOOL
ST2	18763AA000	COMPRESSOR SHAFT
ST3	18765AA000	COMPRESSOR SUPPORT

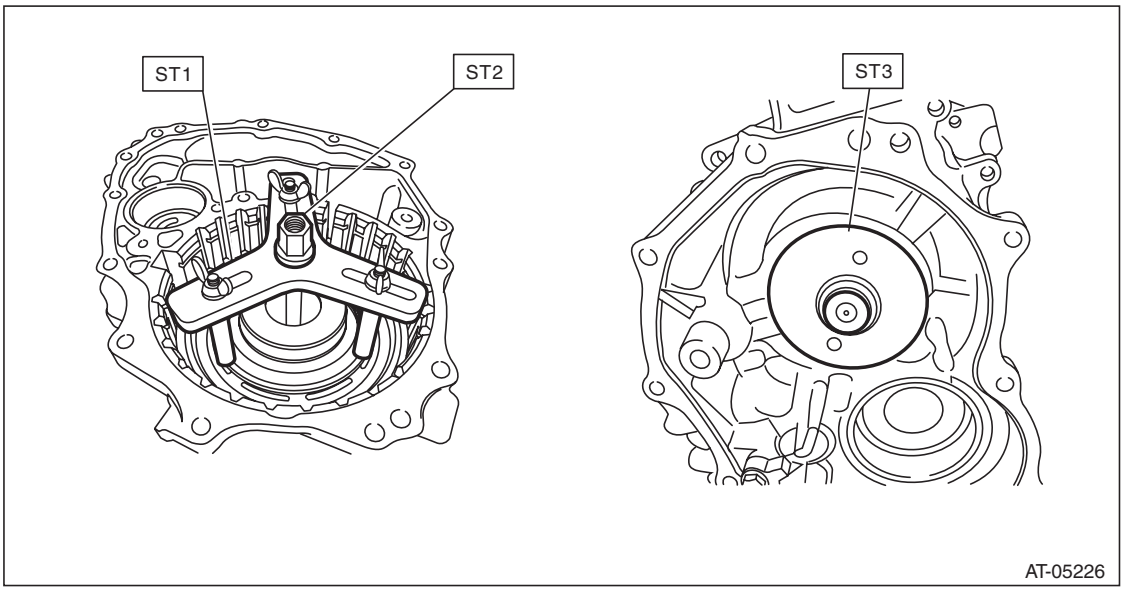

5) Compress the return spring using the set ST to install the snap ring.

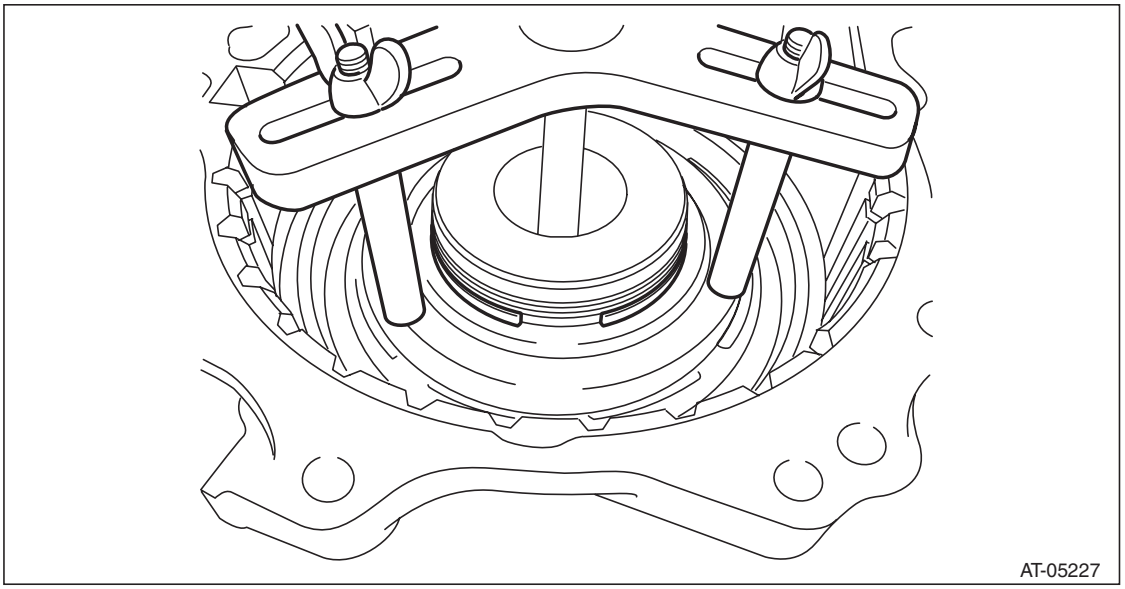

GETtheMANUALS.org

6) Check the operation of reverse brake piston by blowing compressed air intermittently from intermediate case hole.

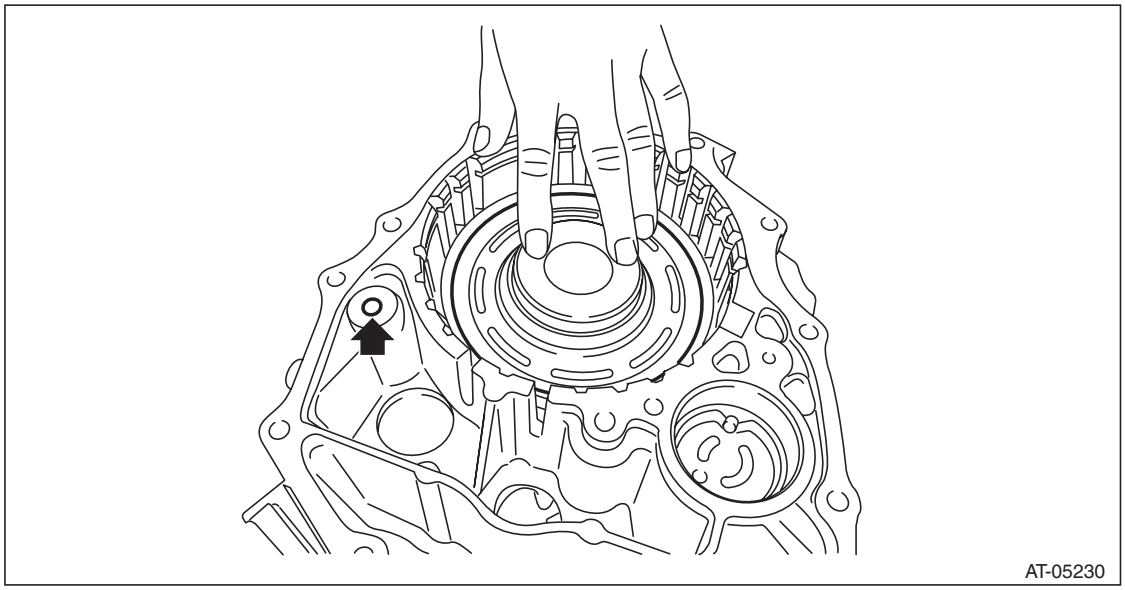

7) Place the dish plate, driven plate, drive plate and retaining plate neatly in this order on surface table.
8) Set the dial gauge to retaining plate, and read its scale.

NOTE:
The value, which is read in the gauge at this time, is zero point.
9) Scale and record the weight “Z” of a flat board which will be put on retaining plate.

NOTE:
- Use a stiff board which does not bend against load as a flat board to be put on retaining plate.
- Use a flat board weighing less than 84 N (8.6 kgf, 18.9 lb).

10) Put the flat board on retaining plate.

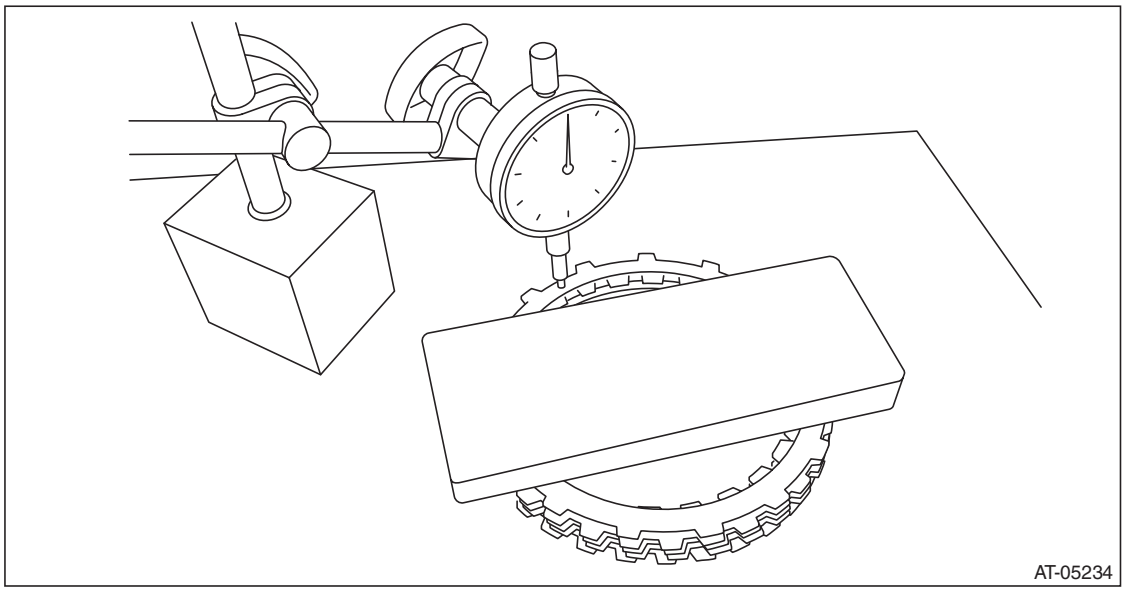

11) Using the following formula, read the push/pull gauge and calculate “N”.
N = 84 N (8.6 kgf, 18.9 lb) – Z
84 N (8.6 kgf, 18.9 lb) : Load applied to clutch plate
Z: Flat board weight

GETtheMANUALS.org

12) Press the center of retaining plate by applying a force of “N” or more using push/pull gauge, and then measure and record the compression amount “A”.

NOTE:
Measure at four points with a 90° interval and calculate the average.

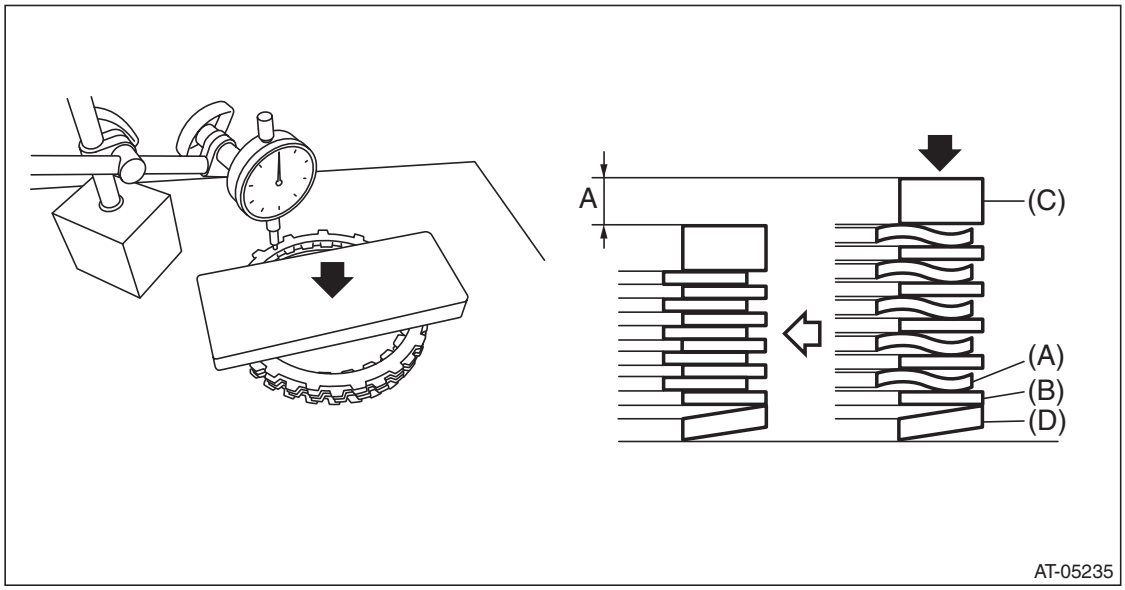

(A) Drive plate
(B) Driven plate
(C) Retaining plate
(D) Dish plate

13) Install the dish plate, drive plate, driven plate, retaining plate and snap ring to intermediate case.

NOTE:
Install the dish plate in the correct direction.

14) Measure and record the clearance “B” between the retaining plate and snap ring.

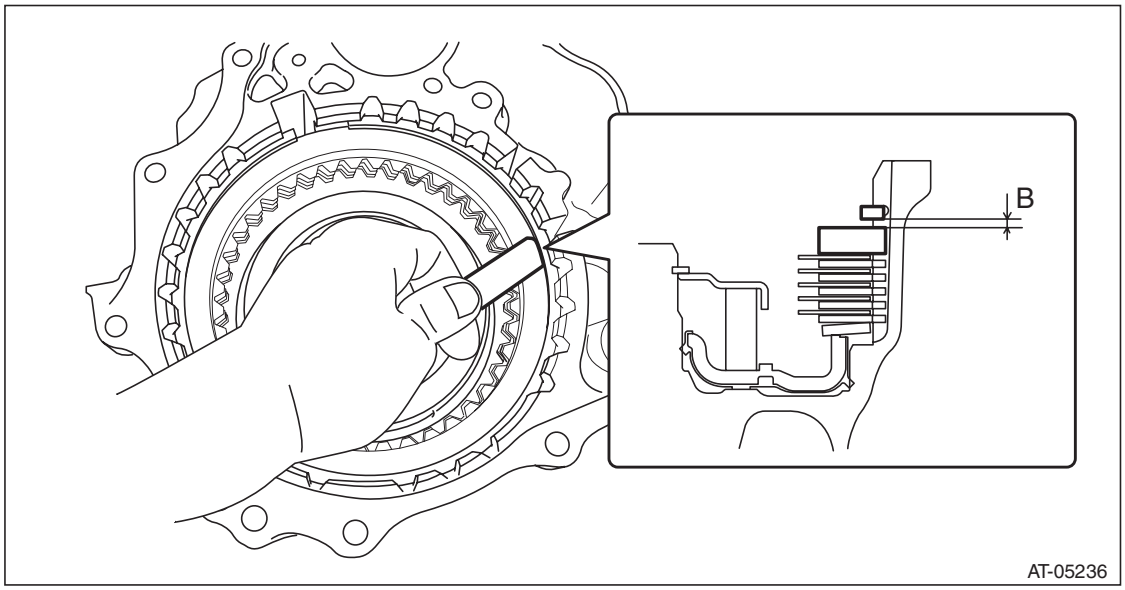

GETtheMANUALS.org

15) Piston stroke calculation
Calculate with A and B dimensions recorded before. If it exceeds the limit, replace with a new drive plate and adjust within the initial standard value.
S mm (in) = A + B
S: Piston stroke
A: Compression amount of drive plate and dish plate
B: Clearance between retaining plate and snap ring

Initial standard:
2.88 — 3.18 mm (0.113 — 0.125 in)

Limit thickness:
3.38 mm (0.133 in)

Retaining plate	
Part No.	Thickness mm (in)
31567AB680	5.6 (0.220)
31567AB690	5.8 (0.228)
31567AB700	6.0 (0.236)
31579AB710	6.2 (0.244)

E: INSPECTION

- Inspect the drive plate facing for wear and damage.
- Check the driven plate for discoloration (burnt color).
- Check for worn snap ring, fatigue or damaged return spring or deformed spring retainer.
- Make sure the clearance between retaining plate and snap ring of reverse brake is within the limit. If it exceeds the limit, replace with a new drive plate and select and adjust the retaining plate within the initial standard value. <Ref. to CVT-174, ASSEMBLY, Reverse Brake Assembly.>

GETtheMANUALS.org

36. Forward Clutch Assembly

A: REMOVAL

1) Remove the transmission from the vehicle. <Ref. to CVT-55, REMOVAL, Automatic Transmission Assembly.>
2) Remove the extension case. <Ref. to CVT-138, REMOVAL, Extension Case.>
3) Remove the rear drive shaft. <Ref. to CVT-141, REMOVAL, Rear Drive Shaft.>
4) Remove the transfer clutch assembly. <Ref. to CVT-146, REMOVAL, Transfer Clutch.>
5) Remove the transfer reduction driven gear. <Ref. to CVT-158, REMOVAL, Transfer Reduction Driven Gear.>
6) Remove the intermediate case. <Ref. to CVT-165, REMOVAL, Intermediate Case.>
7) Remove the thrust needle bearing.

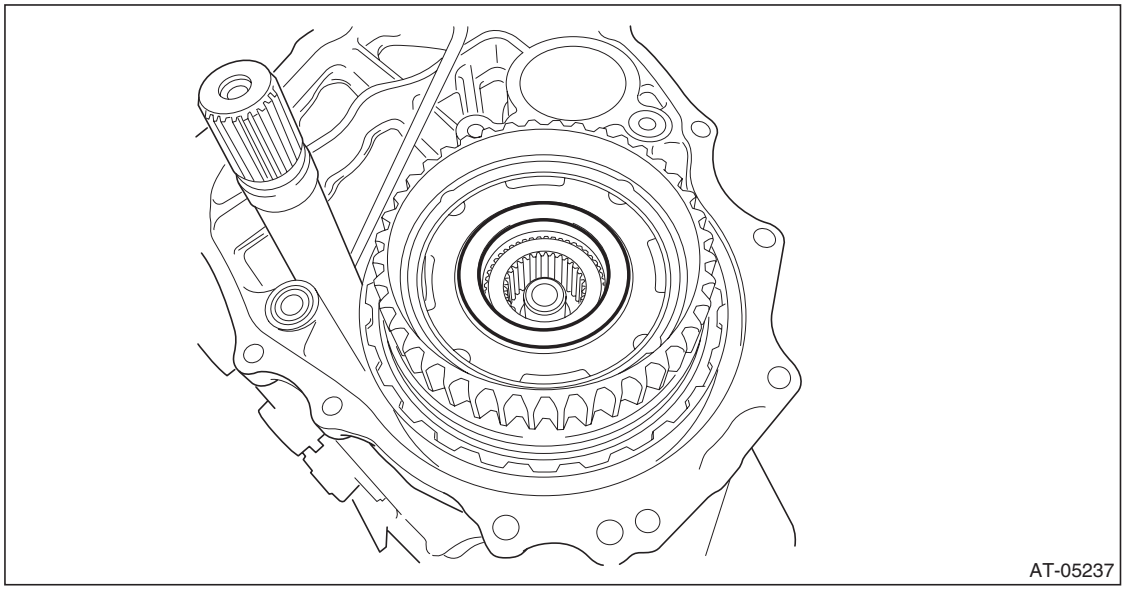

8) Remove the forward clutch assembly.

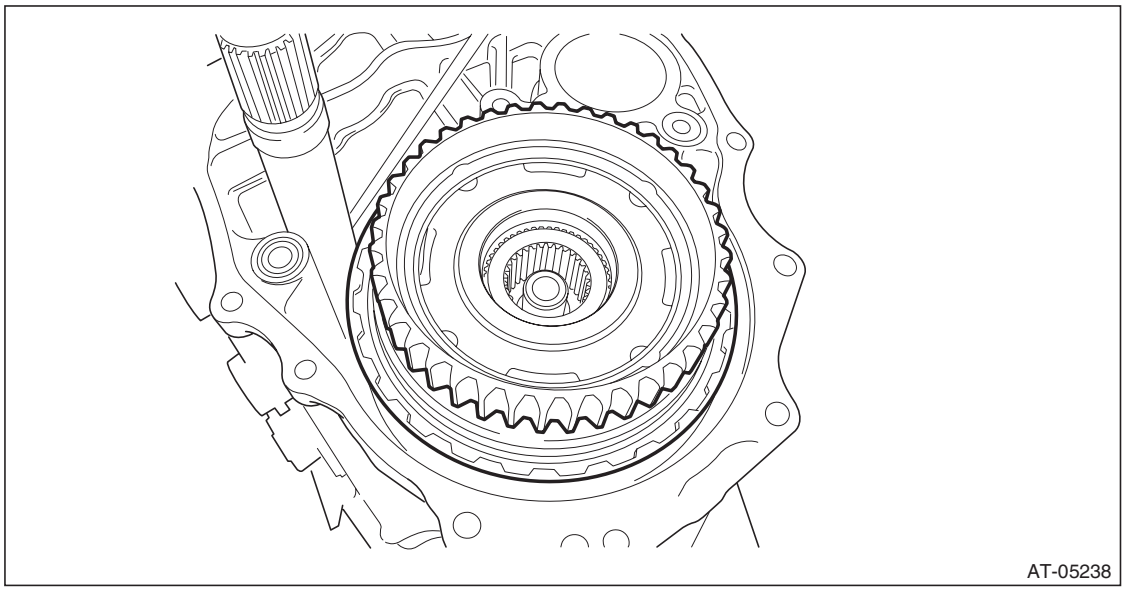

GETtheMANUALS.org

9) Remove the washer.

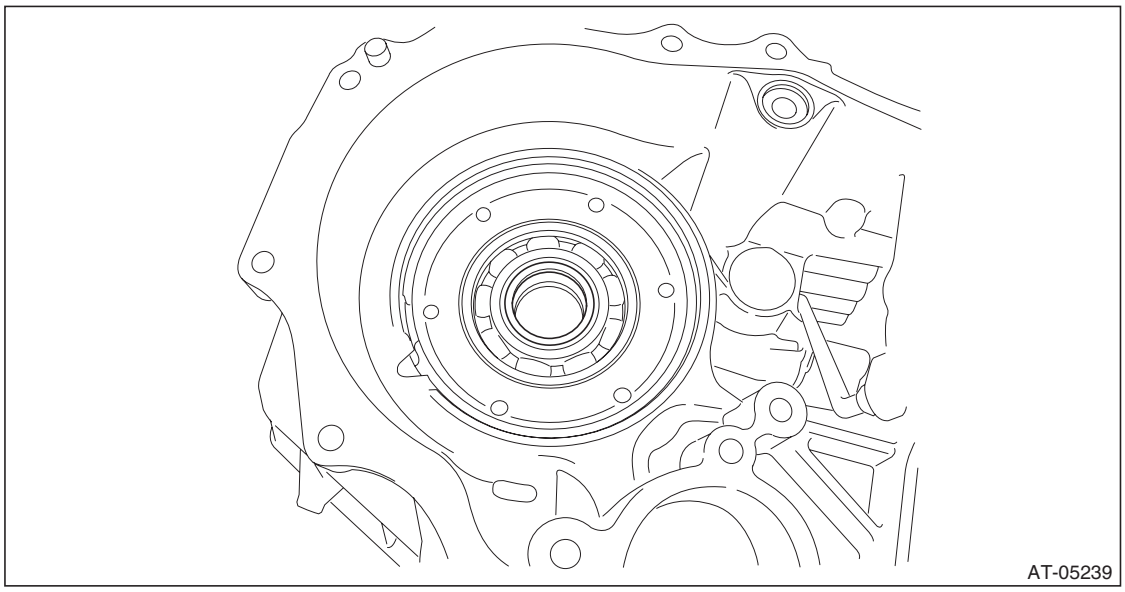

B: INSTALLATION

1) Select a washer. <Ref. to CVT-198, ADJUSTMENT, Forward Clutch Assembly.>
2) Install the selected washer.

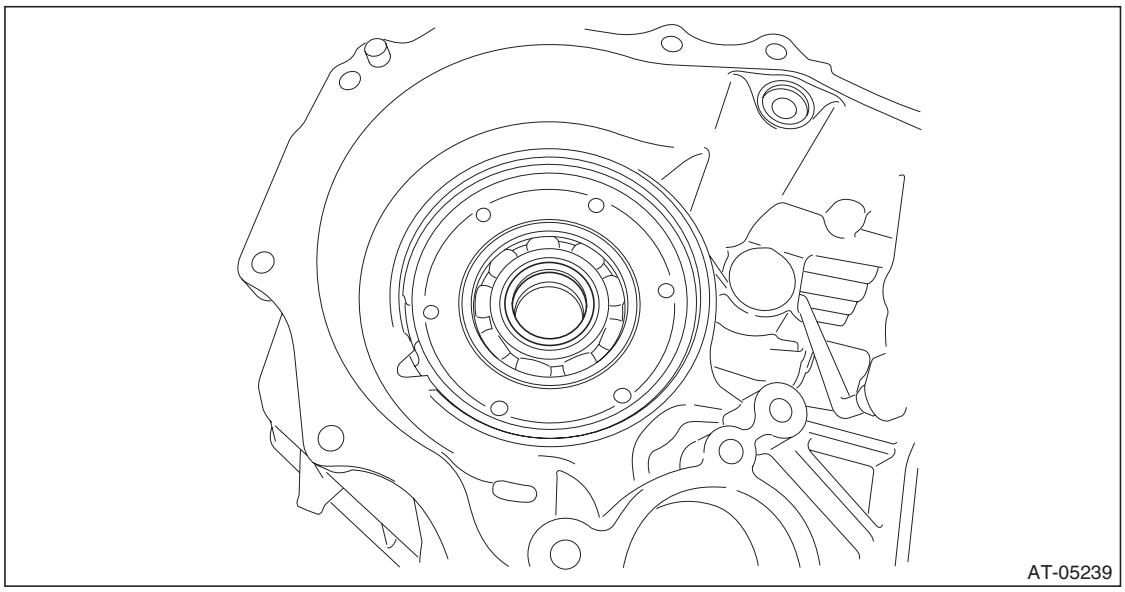

GETtheMANUALS.org

3) Install the forward clutch assembly.

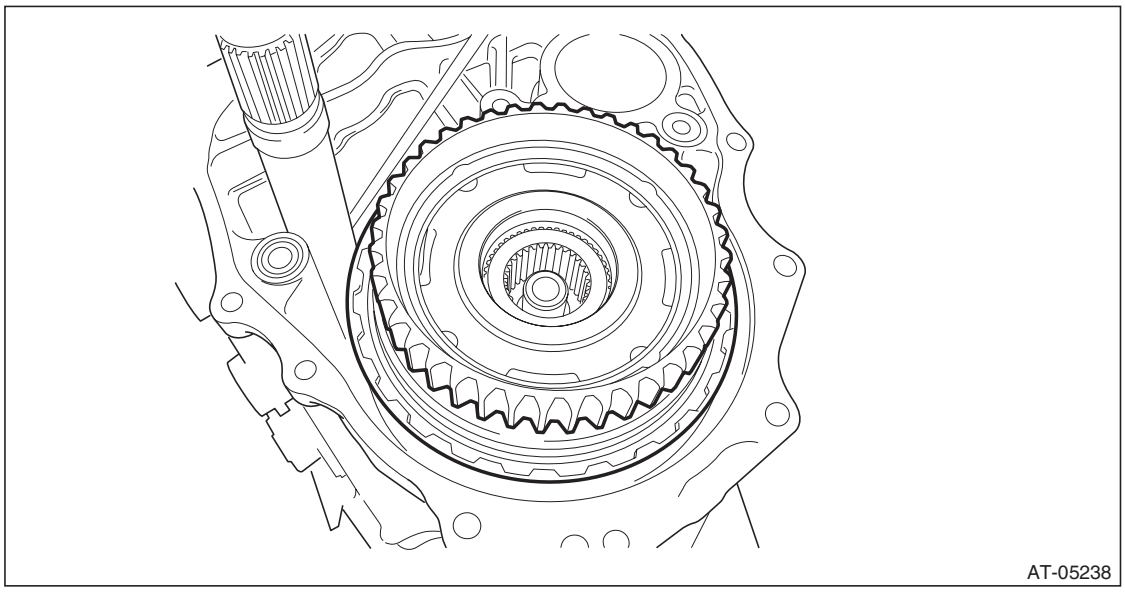

4) Install the thrust needle bearing.

NOTE:
Install the thrust needle bearing in the correct direction.

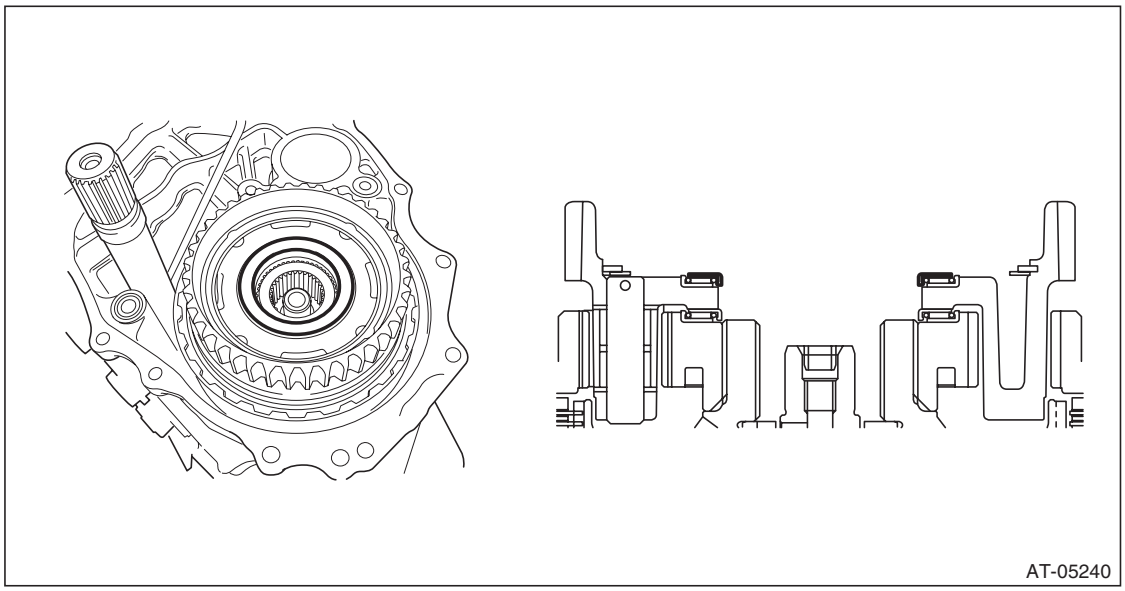

5) Install the intermediate case. <Ref. to CVT-166, INSTALLATION, Intermediate Case.>
6) Install the transfer reduction driven gear assembly. <Ref. to CVT-158, INSTALLATION, Transfer Reduction Driven Gear.>
7) Install the transfer clutch assembly. <Ref. to CVT-147, INSTALLATION, Transfer Clutch.>
8) Install the rear drive shaft. <Ref. to CVT-141, INSTALLATION, Rear Drive Shaft.>
9) Install the extension case. <Ref. to CVT-138, INSTALLATION, Extension Case.>
10) Install the transmission to vehicle. <Ref. to CVT-70, INSTALLATION, Automatic Transmission Assembly.>

GETtheMANUALS.org

C: DISASSEMBLY

1) Remove the planetary carrier assembly.

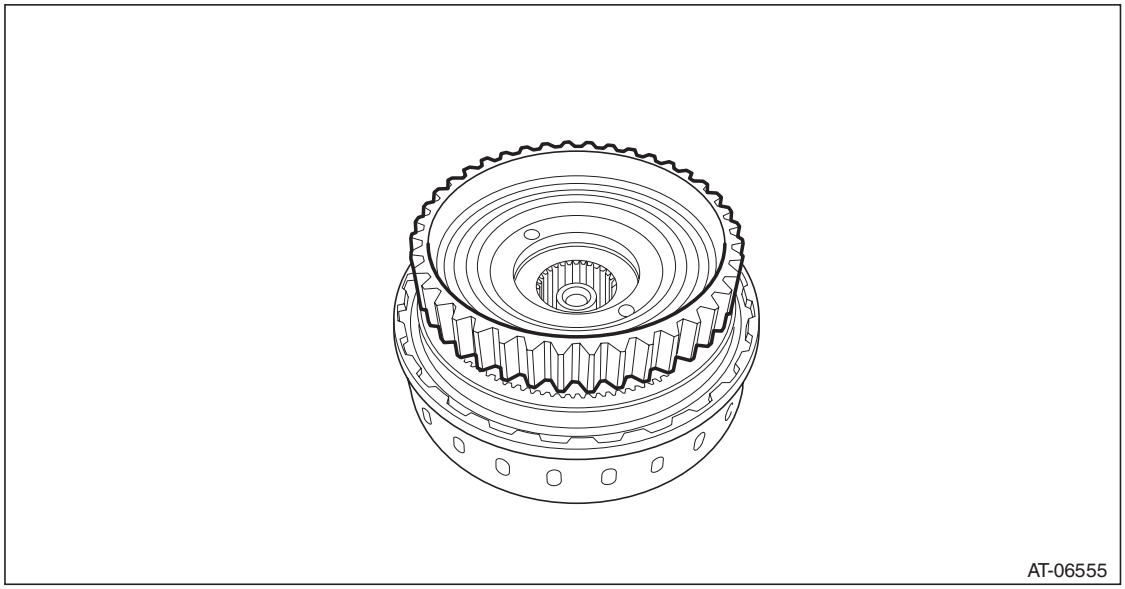

2) Remove the thrust needle bearing.

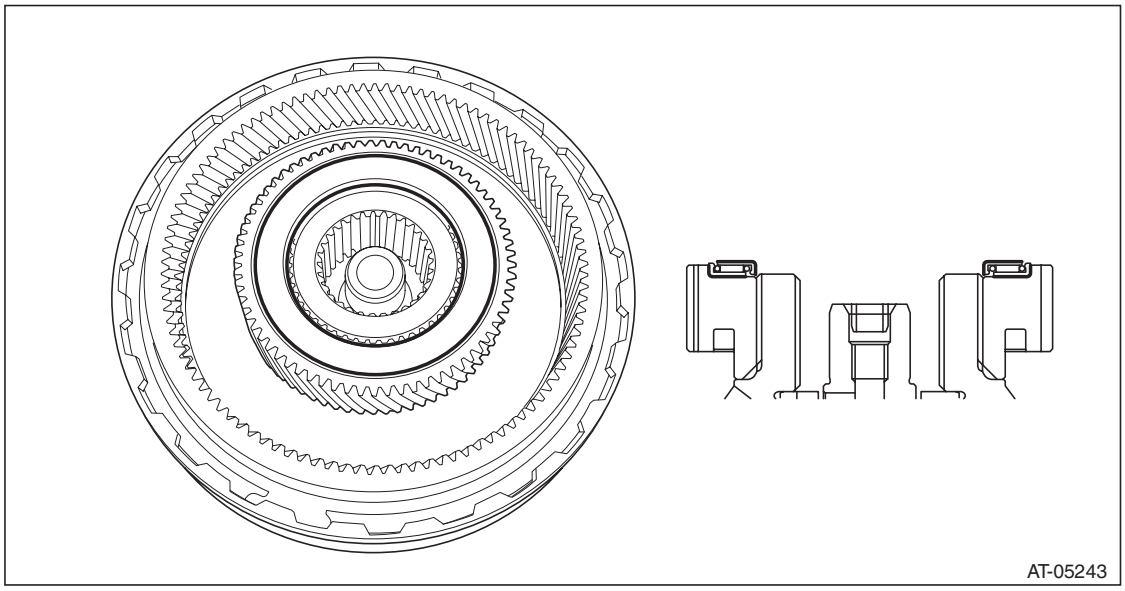

GETtheMANUALS.org

3) Remove the snap ring.

NOTE:
Use marking or labeling to the upper snap ring for measurement of the snap ring thickness when selecting the retaining plate.

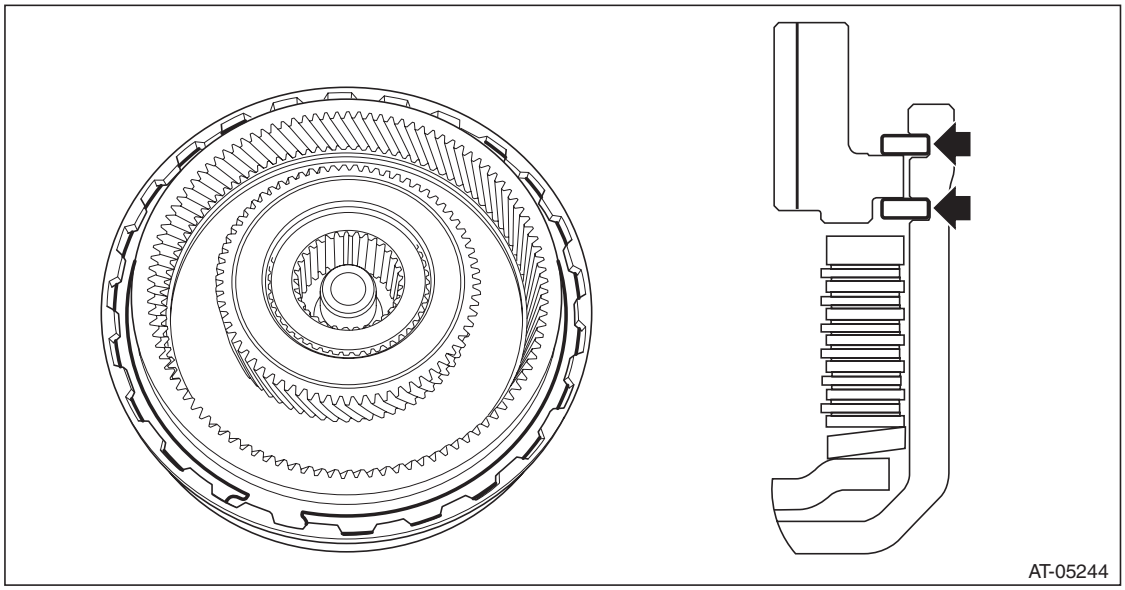

4) Remove the internal gear.

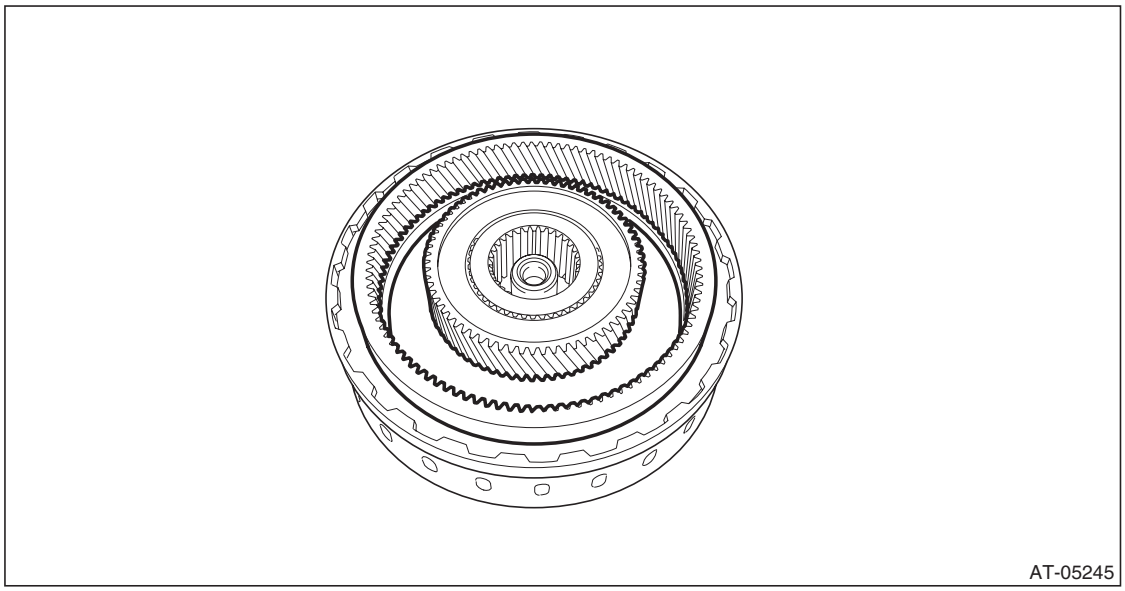

GETtheMANUALS.org

5) Remove the sun gear.

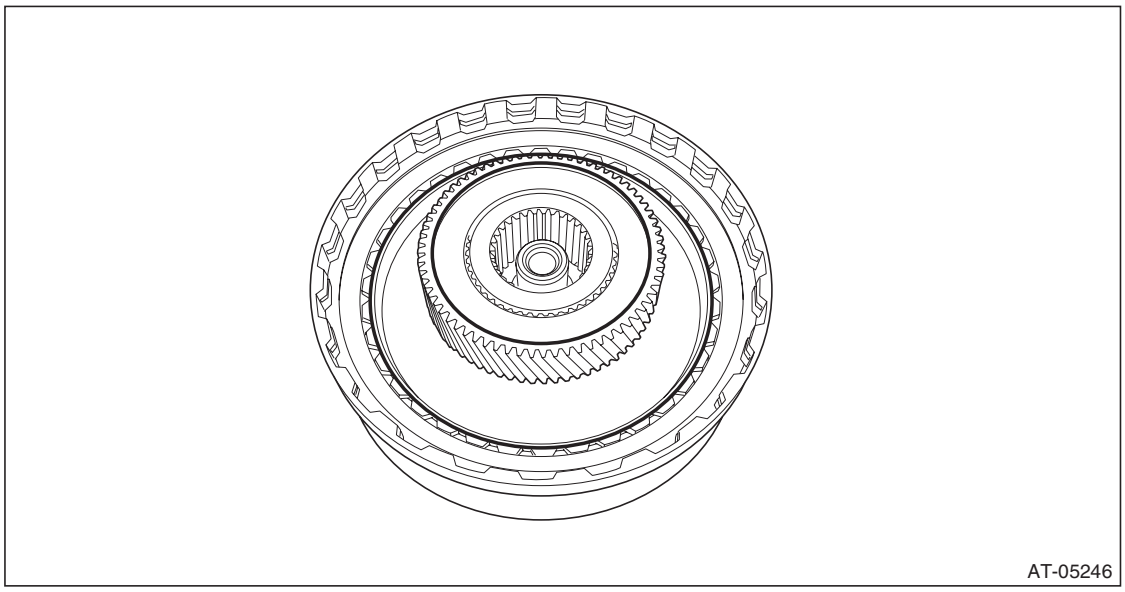

6) Remove the washer.

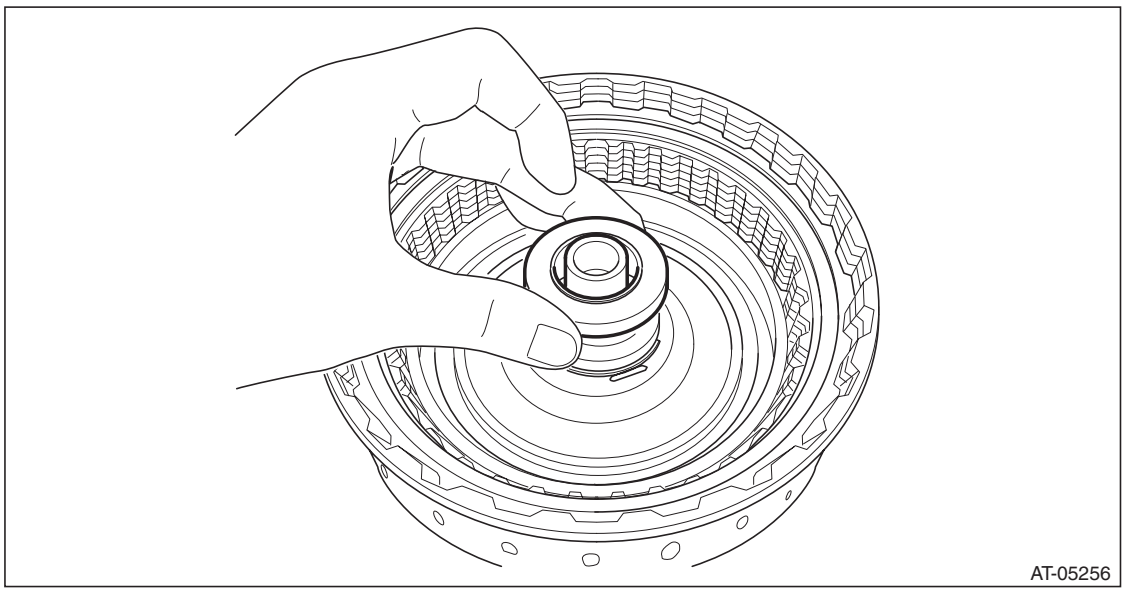

GETtheMANUALS.org

7) Remove the thrust needle bearing.

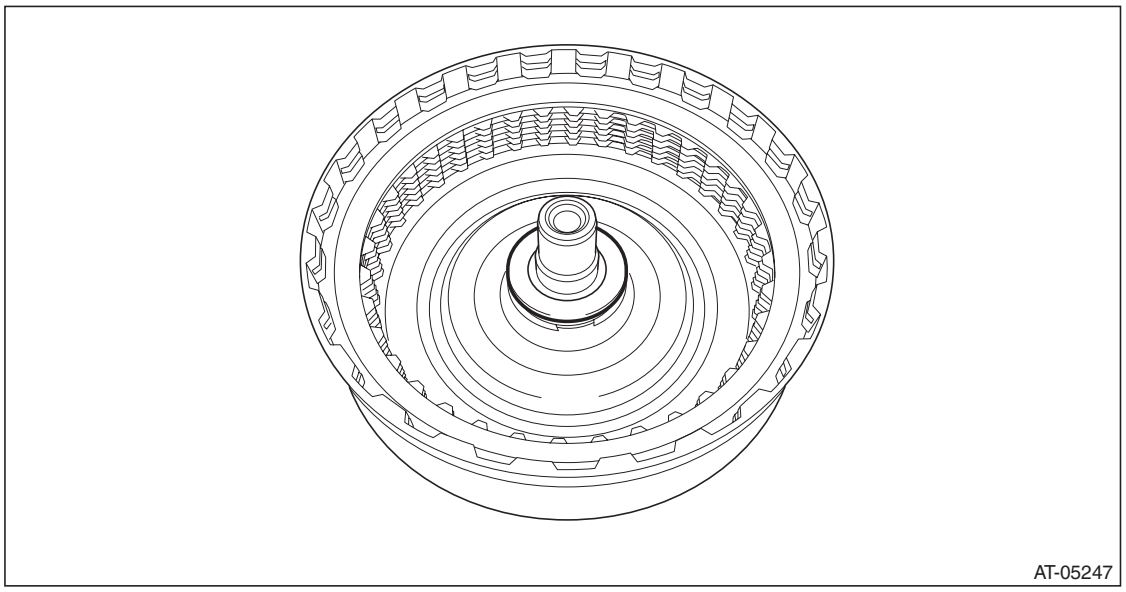

8) Remove the snap ring.

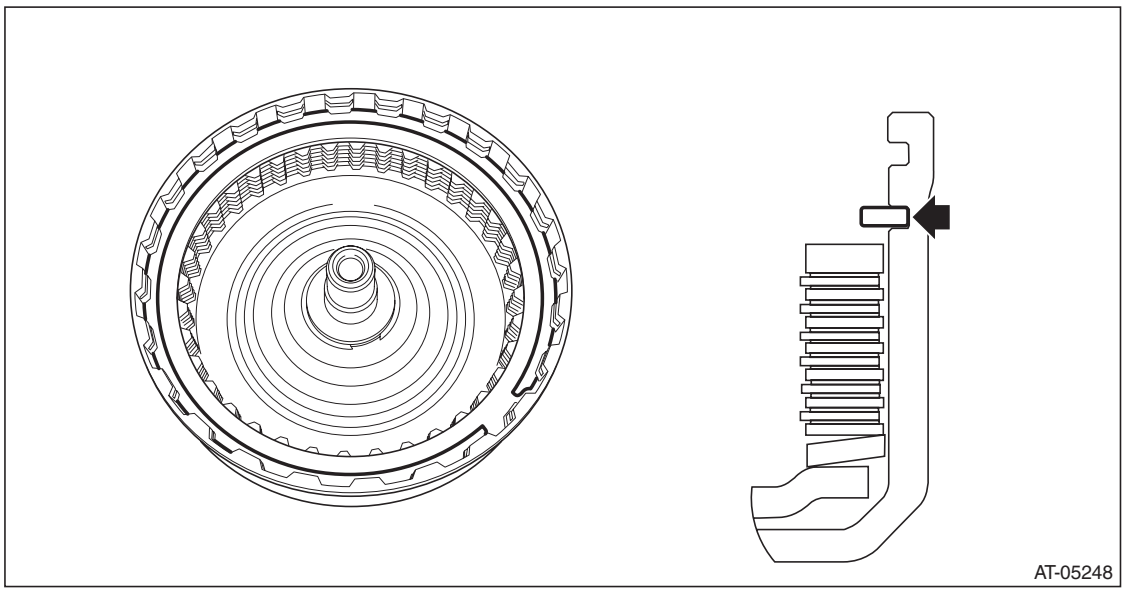

GETtheMANUALS.org

9) Remove the retaining plate, drive plate, driven plate and dish plate.

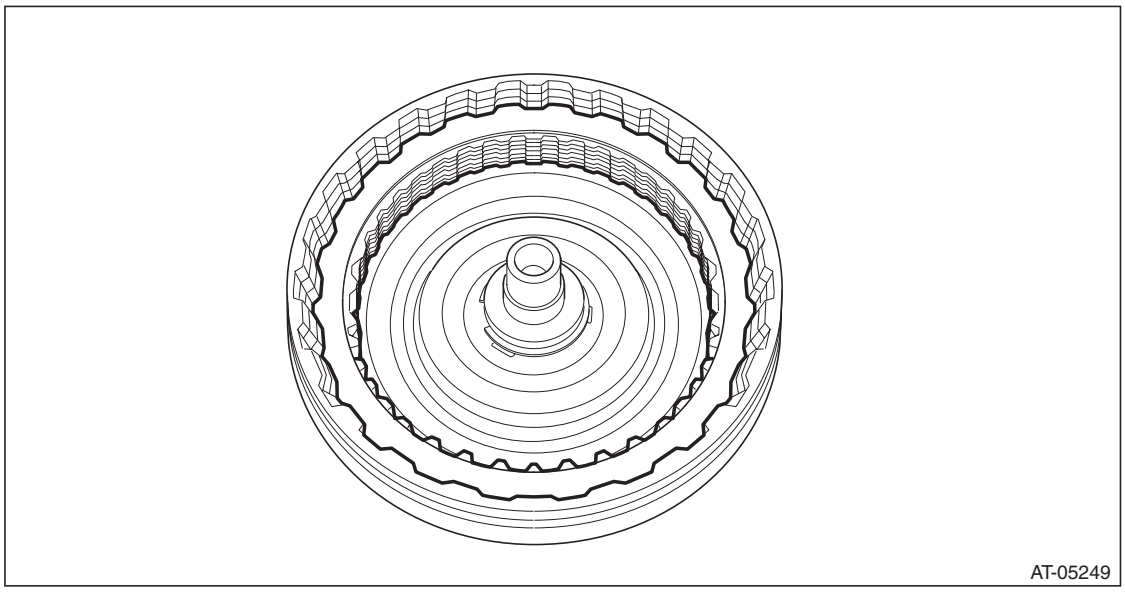

10) Using the ST, remove the snap ring.
ST 18762AA000 COMPRESSOR SPECIAL TOOL

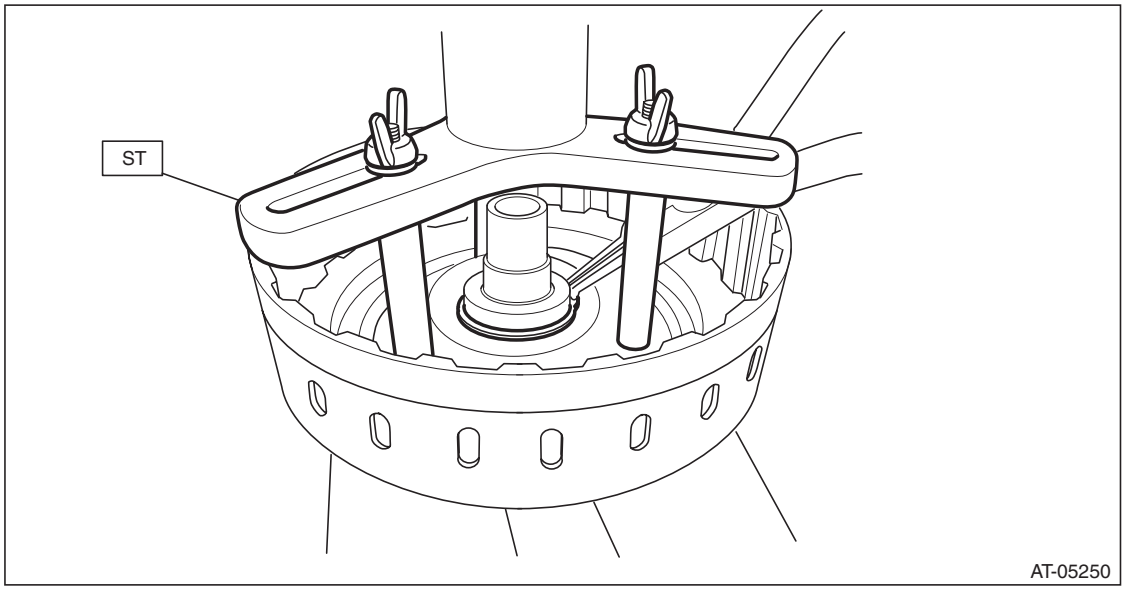

GETtheMANUALS.org

11) Remove the forward clutch piston seal.

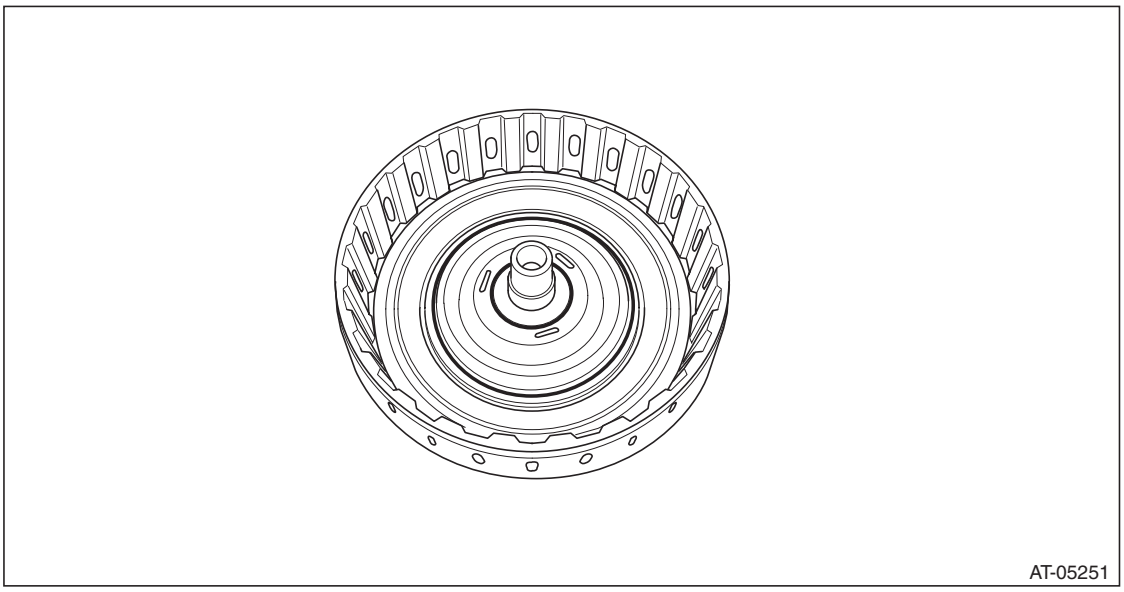

12) Remove the return spring.

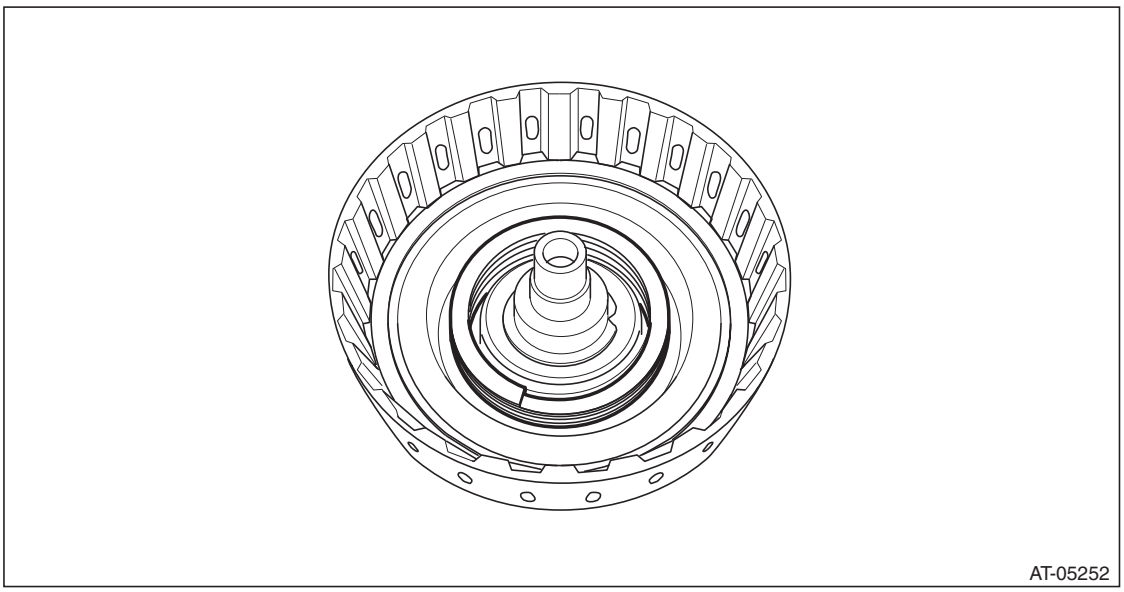

GETtheMANUALS.org

13) Remove the forward clutch piston by blowing compressed air intermittently from end of forward clutch drum.

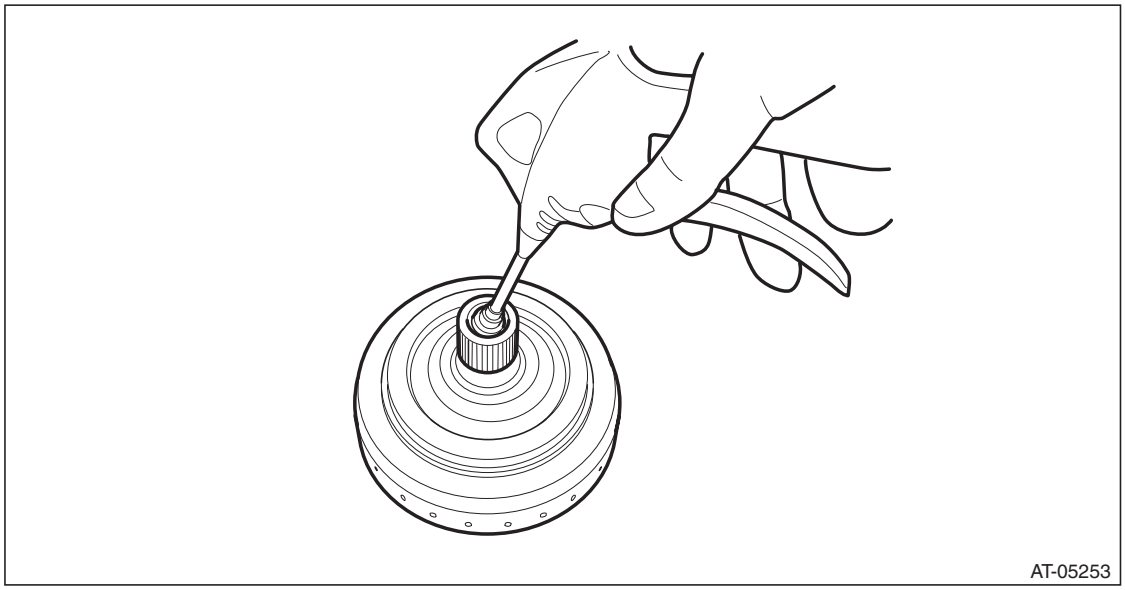

D: ASSEMBLY

1) Install the forward clutch piston to forward clutch drum.

NOTE:
- Apply CVTF to the seal of forward clutch piston.
- Insert it all the way to the end.

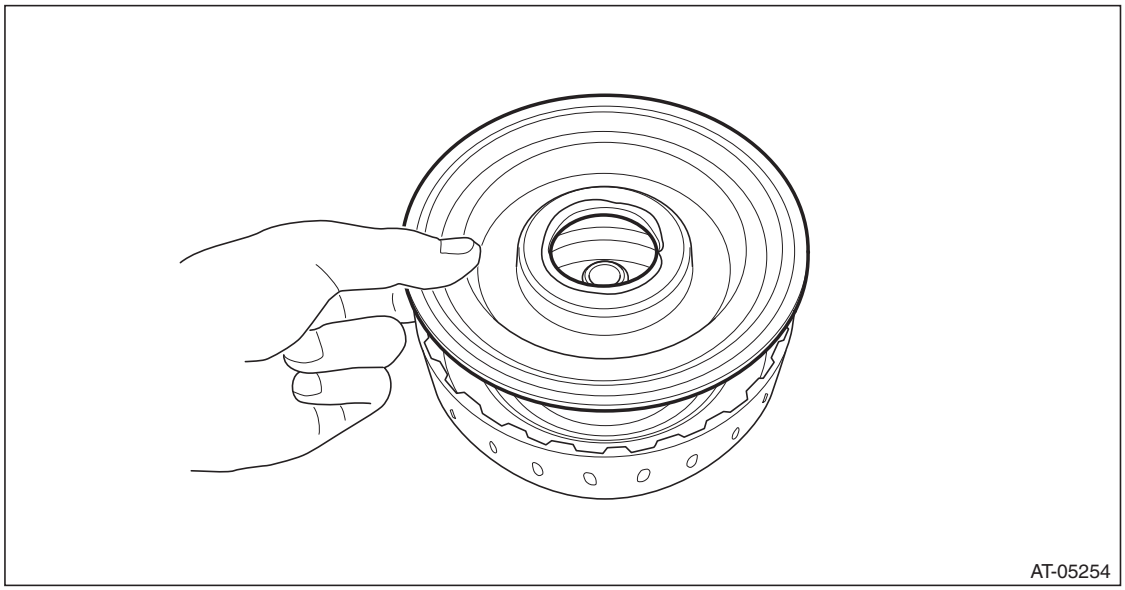

GETtheMANUALS.org

2) Install the return spring.

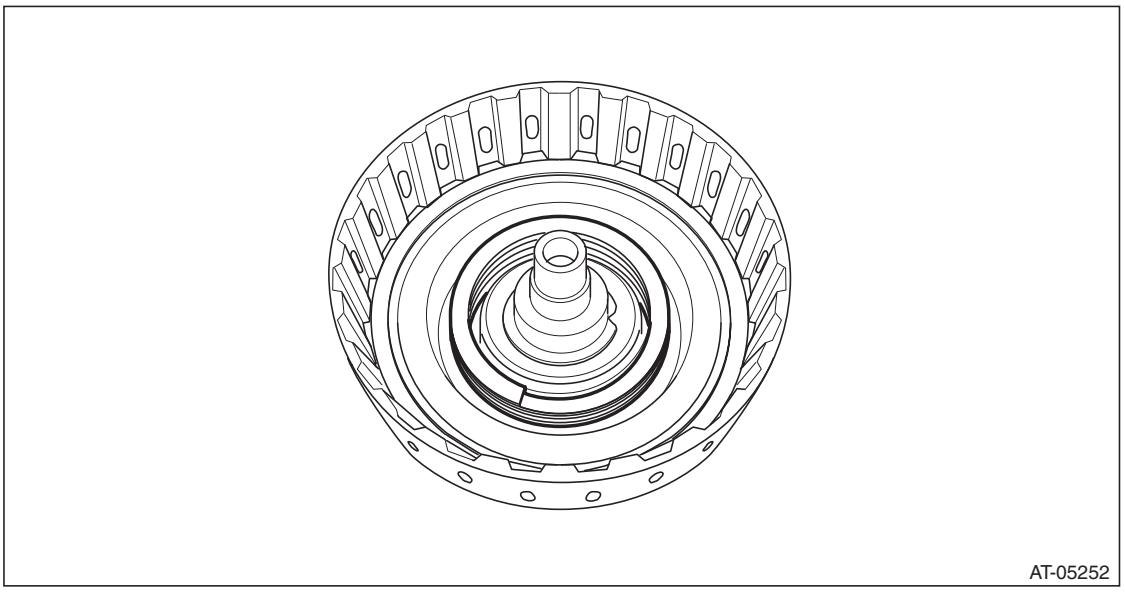

3) Install the forward clutch piston seal.

NOTE:
Apply CVTF to the sealing area of forward clutch piston seal.

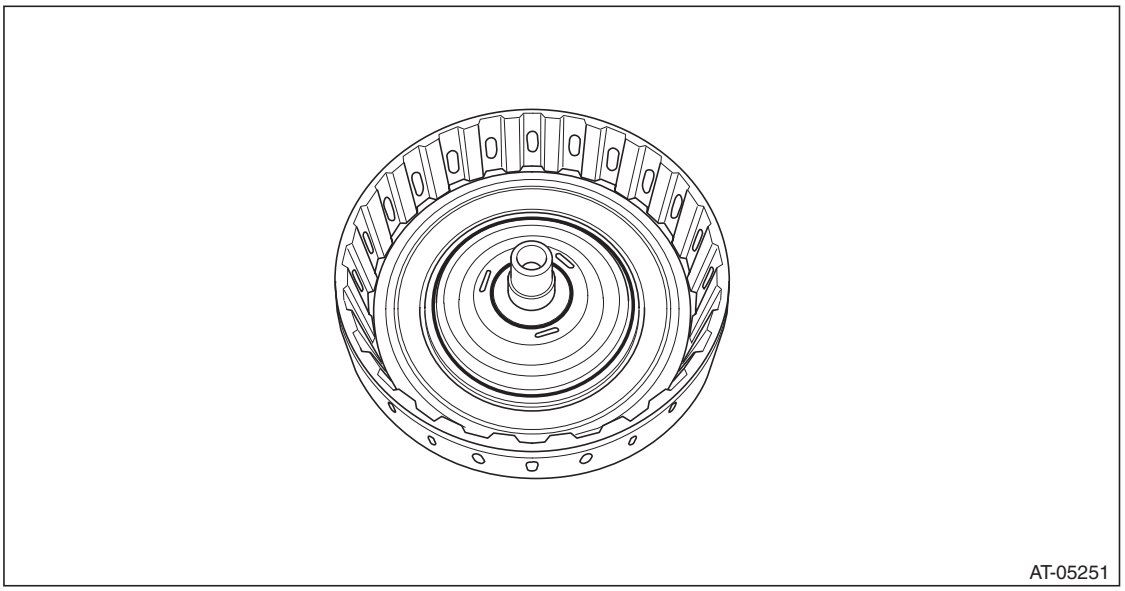

GETtheMANUALS.org

4) Compress the return spring using the ST to install the snap ring.
ST 18762AA000 COMPRESSOR SPECIAL TOOL

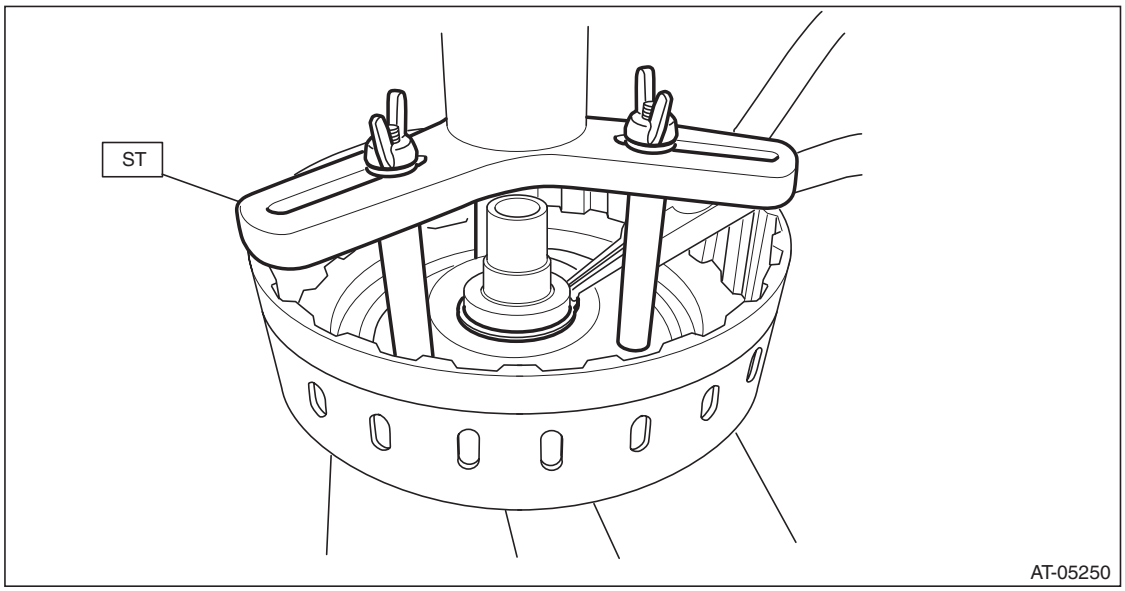

5) Measure thickness “A” of the retaining plate installed.

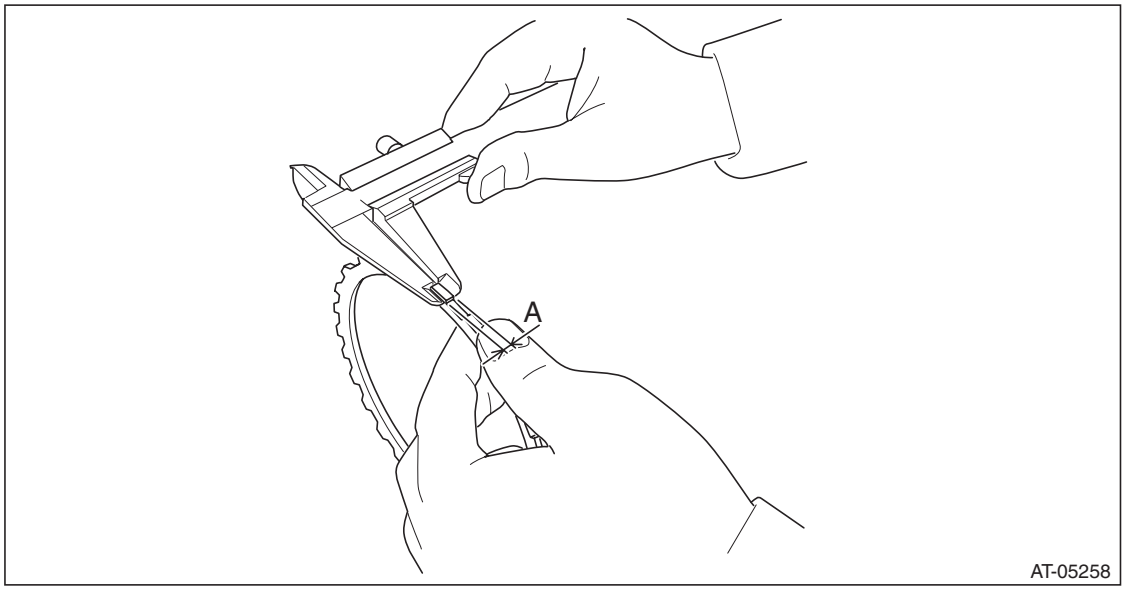

GETtheMANUALS.org

6) Measure thickness “B” of internal gear on the workbench.

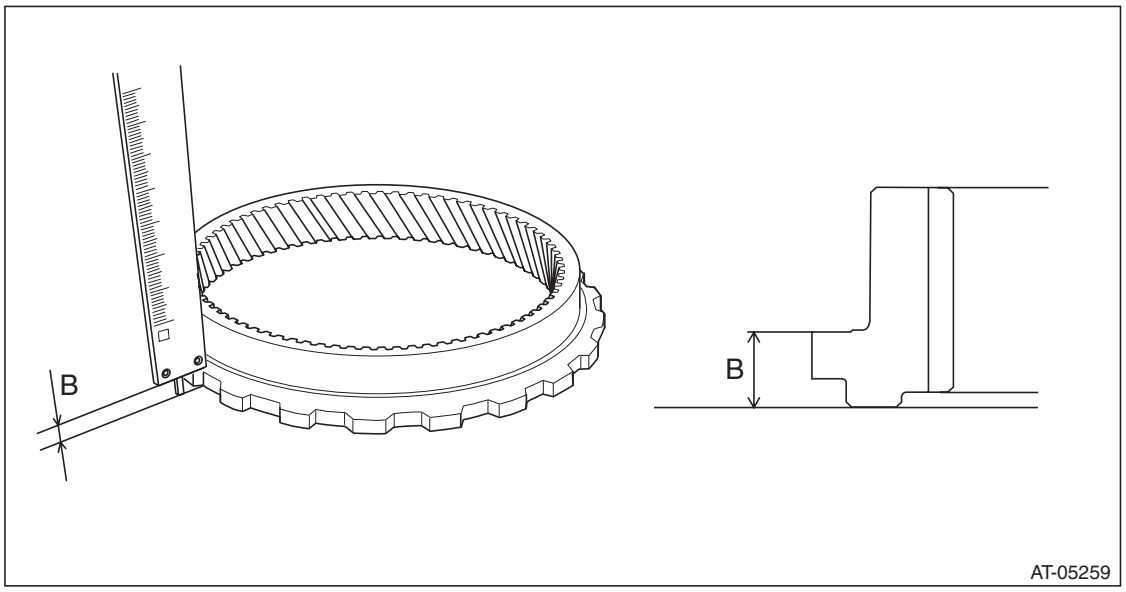

7) Measure thickness “C” of labelled or marked snap ring.

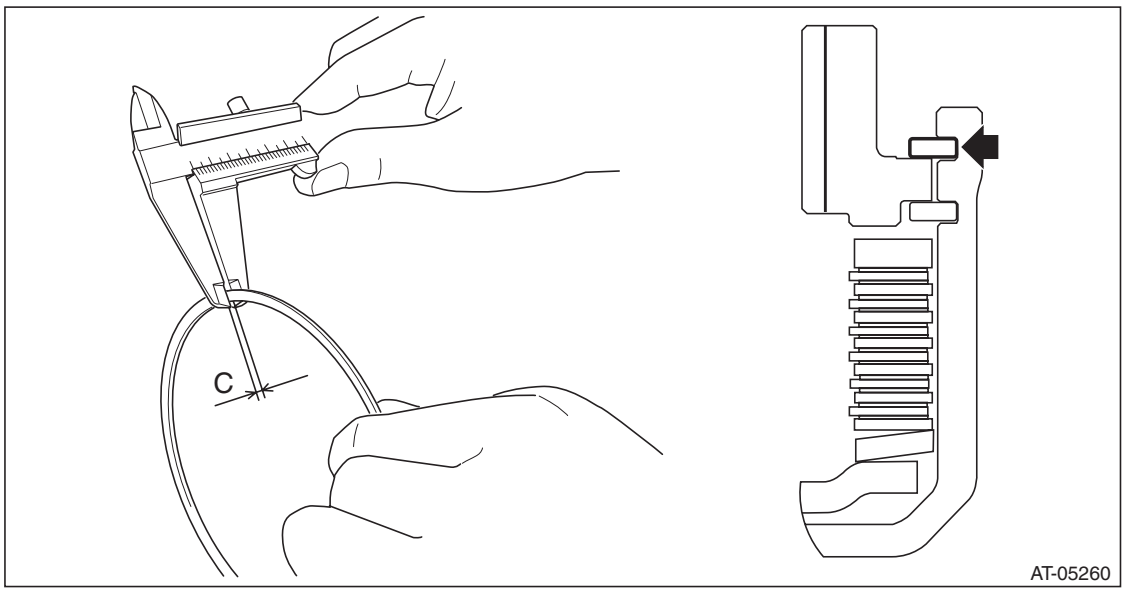

8) Install the dish plate, drive plate and driven plate.

GETtheMANUALS.org

9) Install the snap ring at the location (upper groove) indicated in the figure.

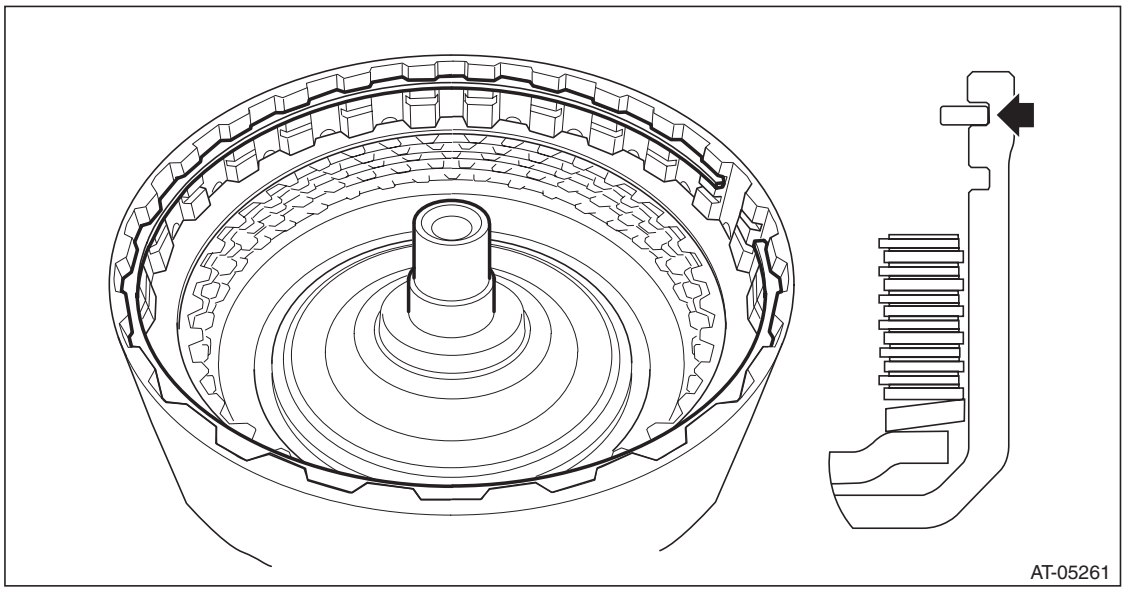

10) Measure depth “D” of snap ring and driven plate while lifting the snap ring.

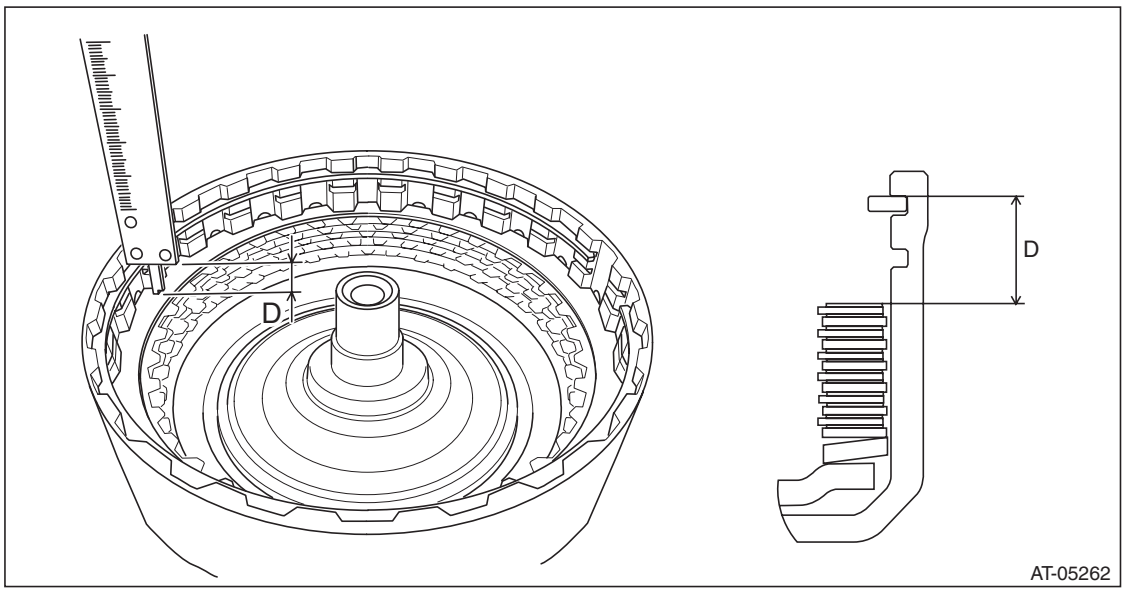

GETtheMANUALS.org

11) Calculate clearance “T” from internal gear to retaining plate with the obtained value from step 5) through step 10).
Formula: T mm (in) = D – A – B – C

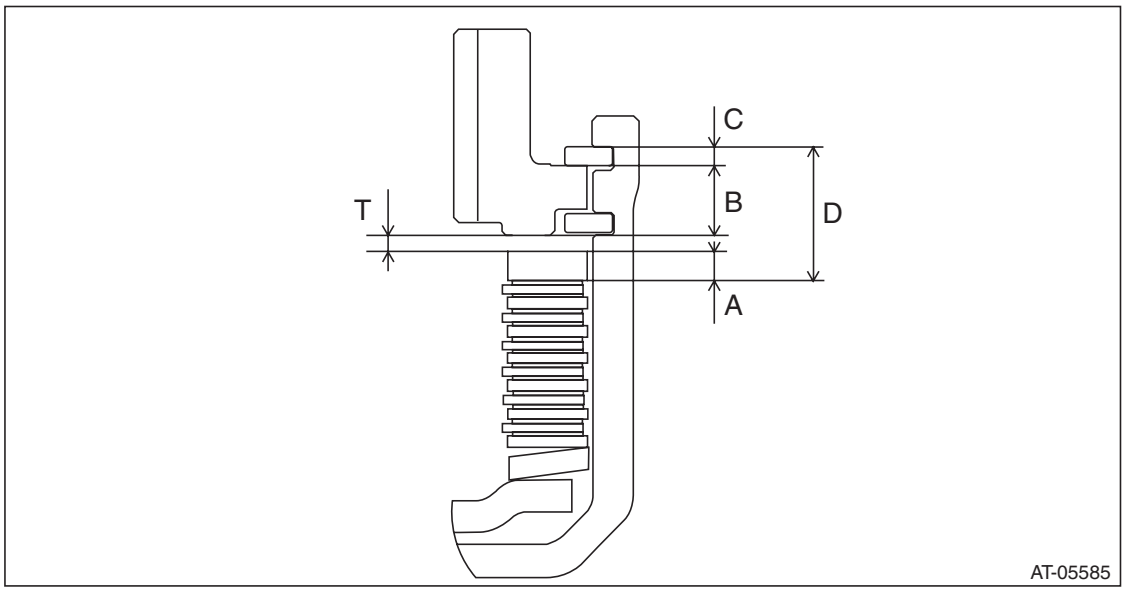

12) If the value “T” obtained from step 11) exceeds the limit for use, replace the drive plate and driven plate with new parts and select the retaining plate within the initial standard value.

Initial standard:
1.2 — 1.6 mm (0.047 — 0.063 in)

Limit thickness:
2.4 mm (0.09 in)

Retaining plate	
Item number	Thickness mm (in)
31567AB670	3.2 (0.126)
31567AB660	3.0 (0.118)
31567AB650	2.8 (0.110)
31567AB640	2.6 (0.102)

13) Remove the snap ring.

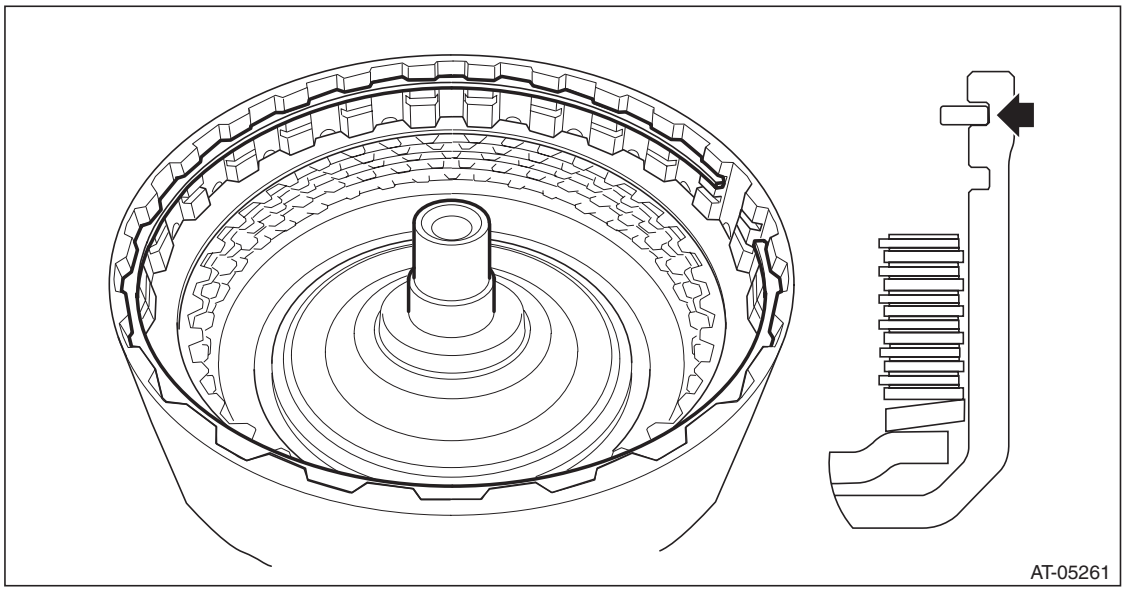

GETtheMANUALS.org

14) Replace with the selected retaining plate to install.
15) Install the snap ring to the lower groove.

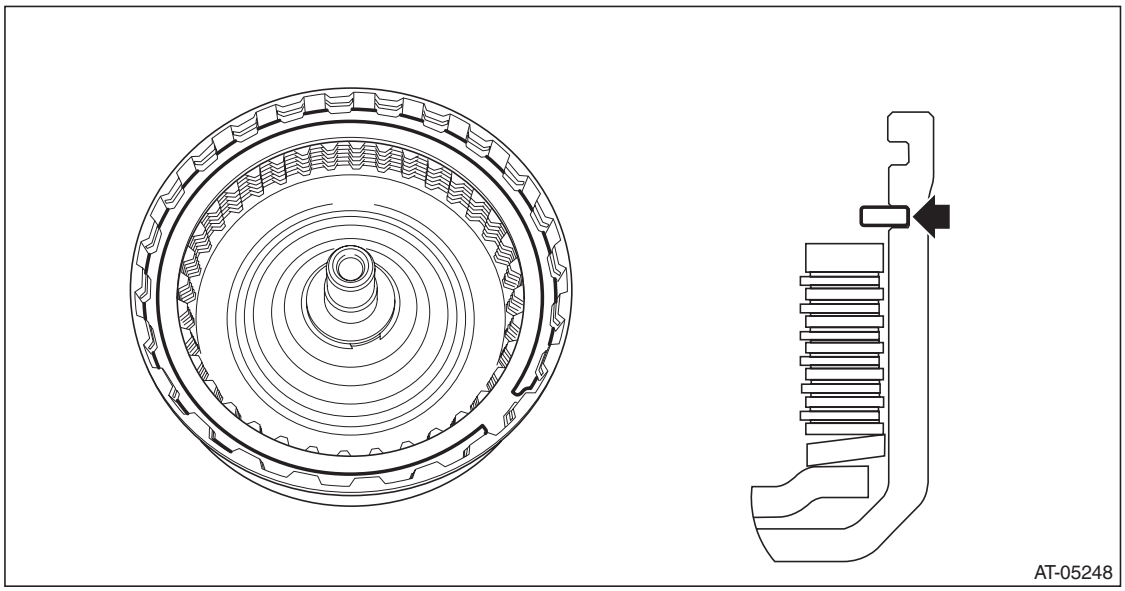

16) Install the thrust needle bearing.

NOTE:
Install the thrust needle bearing in the correct direction.

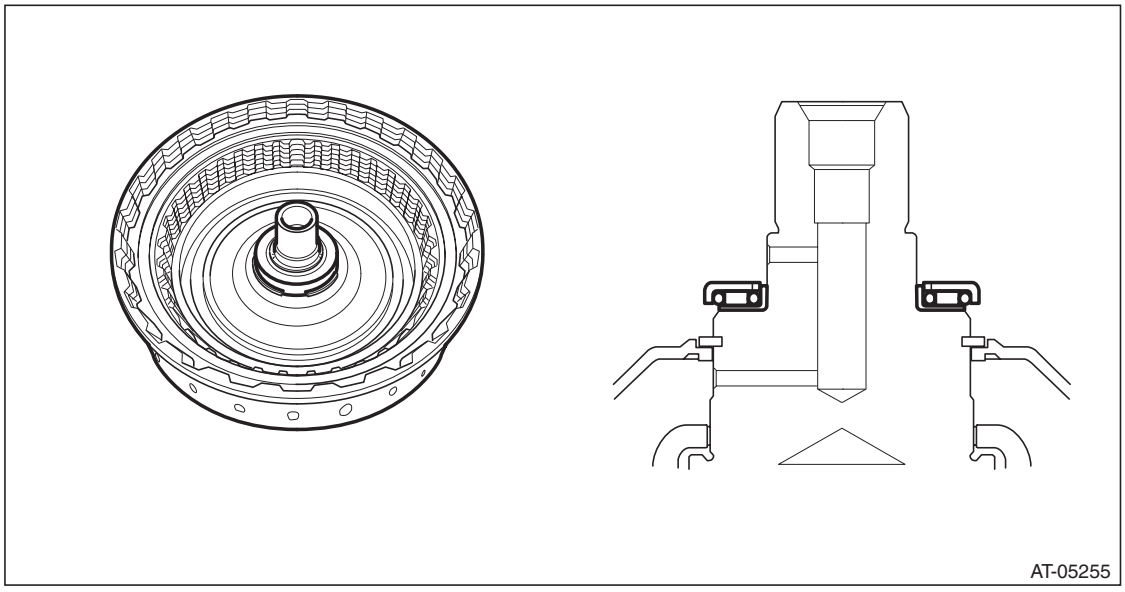

GETtheMANUALS.org

17) Install the washer.

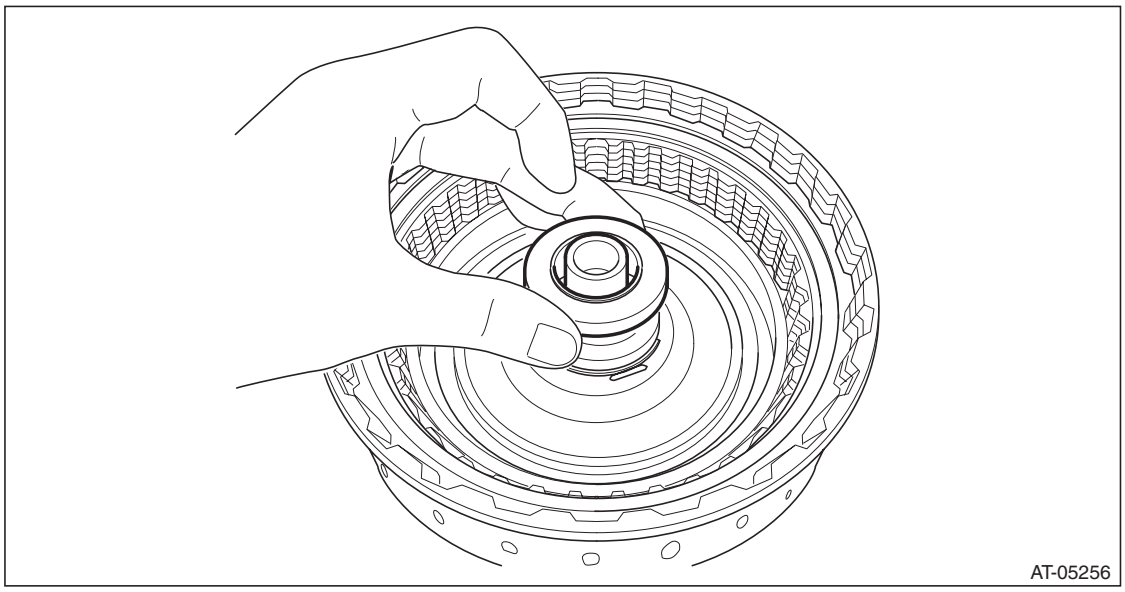

18) Install the sun gear.

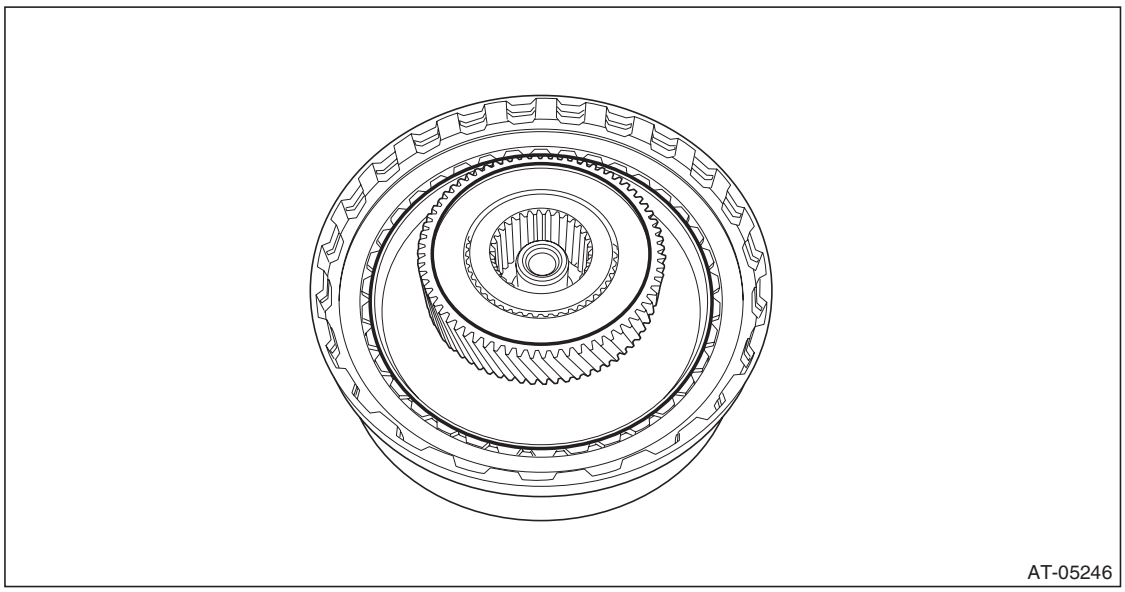

GETtheMANUALS.org

19) Install the internal gear.

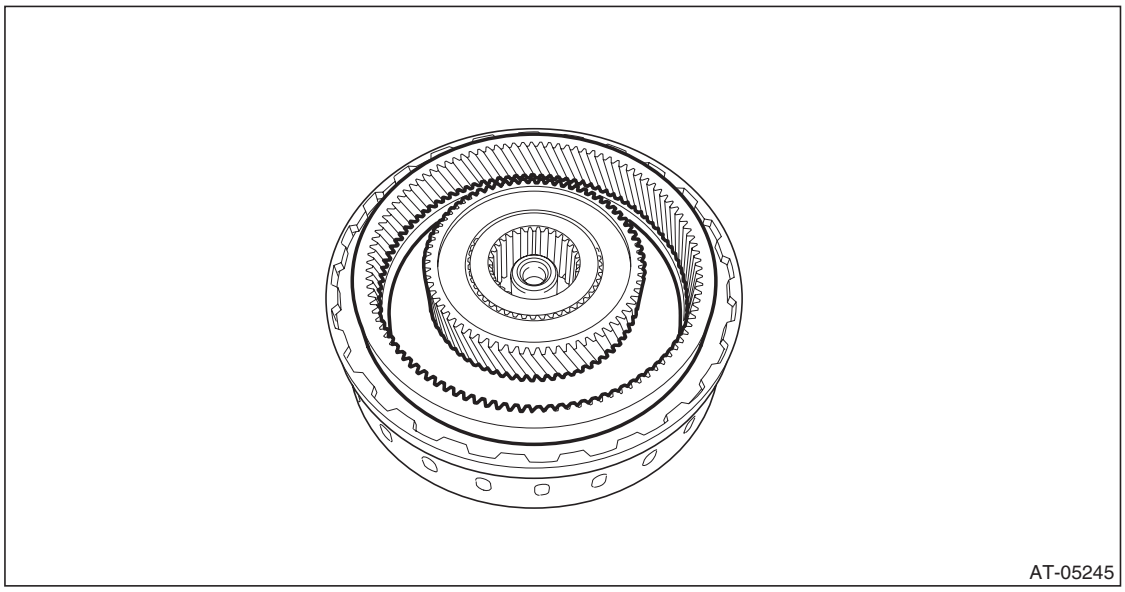

20) Install the snap ring.
21) Install the thrust needle bearing.

NOTE:
Make sure to install in the right direction.

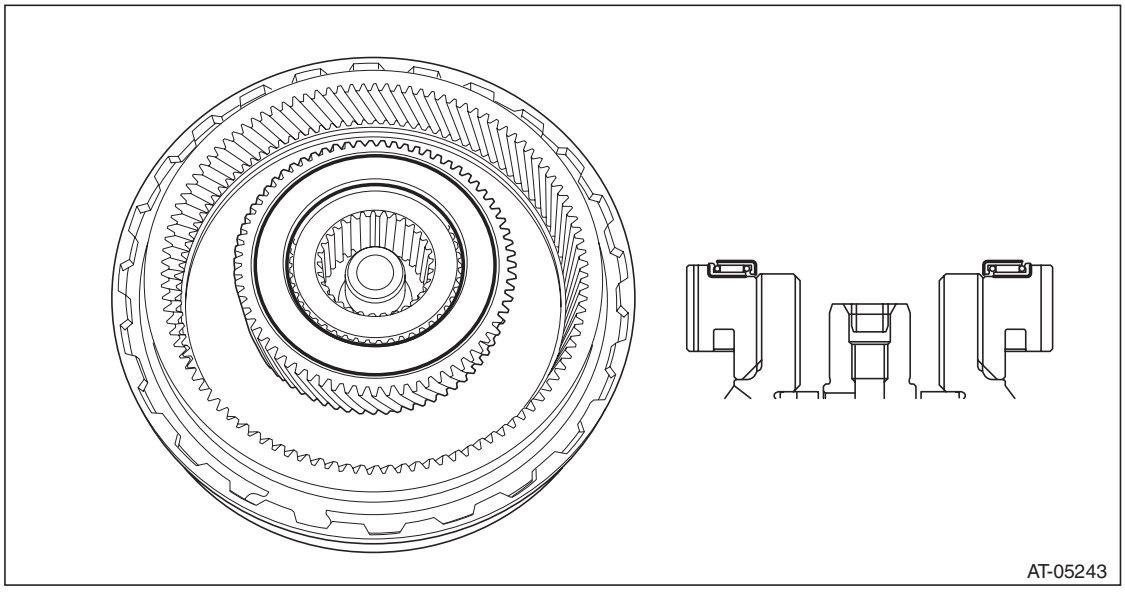

GETtheMANUALS.org

22) Install the planetary carrier assembly.

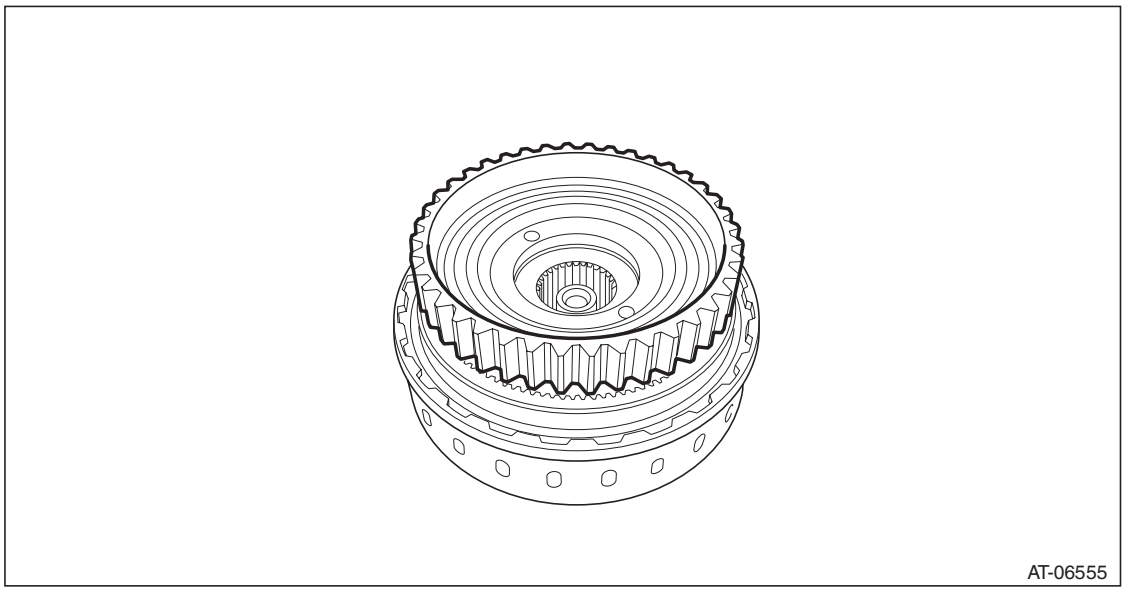

E: INSPECTION

- Check the forward clutch drum, internal gear, sun gear and forward clutch piston lip for wear or damage.
- Inspect the drive plate facing for wear and damage.
- Check the driven plate for discoloration (burnt color).
- Check for worn snap ring, fatigue or damaged return spring or deformed spring retainer.
- Make sure the clearance between retaining plate and internal gear of forward clutch is within the limit. If it exceeds the standard, replace the forward clutch assembly. <Ref. to CVT-189, ASSEMBLY, Forward Clutch Assembly.>

F: ADJUSTMENT

1) Measure depth “A” from the ST upper face to the washer catch surface.
ST 398643600 GAUGE

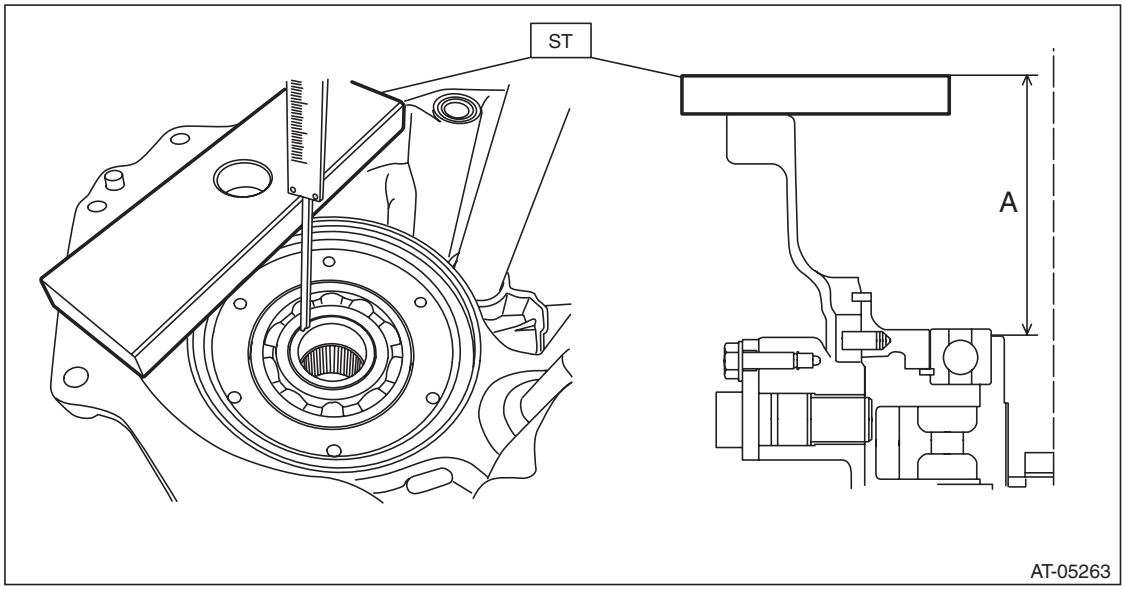

2) Install the forward clutch assembly to intermediate case.

GETtheMANUALS.org

3) Setting the ST, measure height “B” from the ST upper side to the immediate case mating surface.
ST 499575600 GAUGE

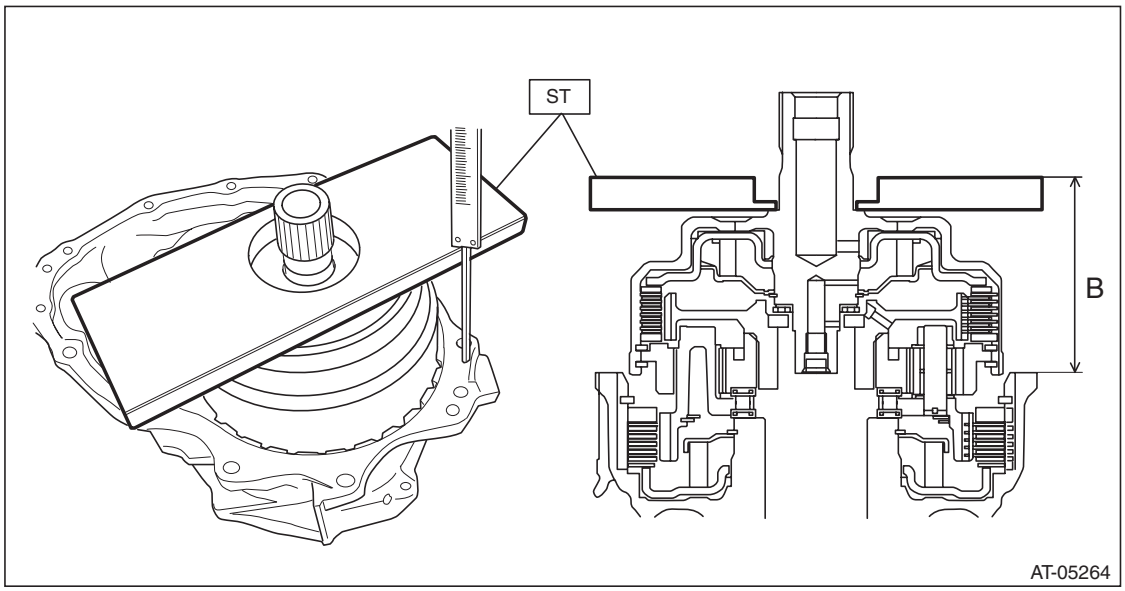

4) Obtain the thickness of washer using the following formula.
Calculation formula:
T (mm) = (A – 15) – (B – 15) – (0.35 — 0.70)
[T (in) = (A – 0.591) – (B – 0.591) – (0.014 — 0.028)]
T: Washer thickness
A: Depth from the ST upper face to the washer catch surface
B: Height from the upper surface of the ST to the mating surface of the intermediate case
15 mm (0.591 in): Thickness of ST
0.35 — 0.70 mm (0.014 — 0.028 in): Clearance
5) Select the washer matching value “T” obtained from step 4).

Washer	
Part number	Washer thickness mm (in)
803034040	1.0 (0.039)
803034041	1.2 (0.047)
803034042	1.4 (0.055)
803034043	1.6 (0.063)

GETtheMANUALS.org

37. Reduction Driven Gear

A: REMOVAL

1) Remove the transmission from the vehicle. <Ref. to CVT-55, REMOVAL, Automatic Transmission Assembly.>
2) Remove the extension case. <Ref. to CVT-138, REMOVAL, Extension Case.>
3) Remove the rear drive shaft. <Ref. to CVT-141, REMOVAL, Rear Drive Shaft.>
4) Remove the transfer clutch assembly. <Ref. to CVT-146, REMOVAL, Transfer Clutch.>
5) Remove the transfer reduction driven gear assembly. <Ref. to CVT-158, REMOVAL, Transfer Reduction Driven Gear.>
6) Remove the intermediate case. <Ref. to CVT-165, REMOVAL, Intermediate Case.>
7) Remove the forward clutch assembly. <Ref. to CVT-180, REMOVAL, Forward Clutch Assembly.>
8) Remove the snap ring.

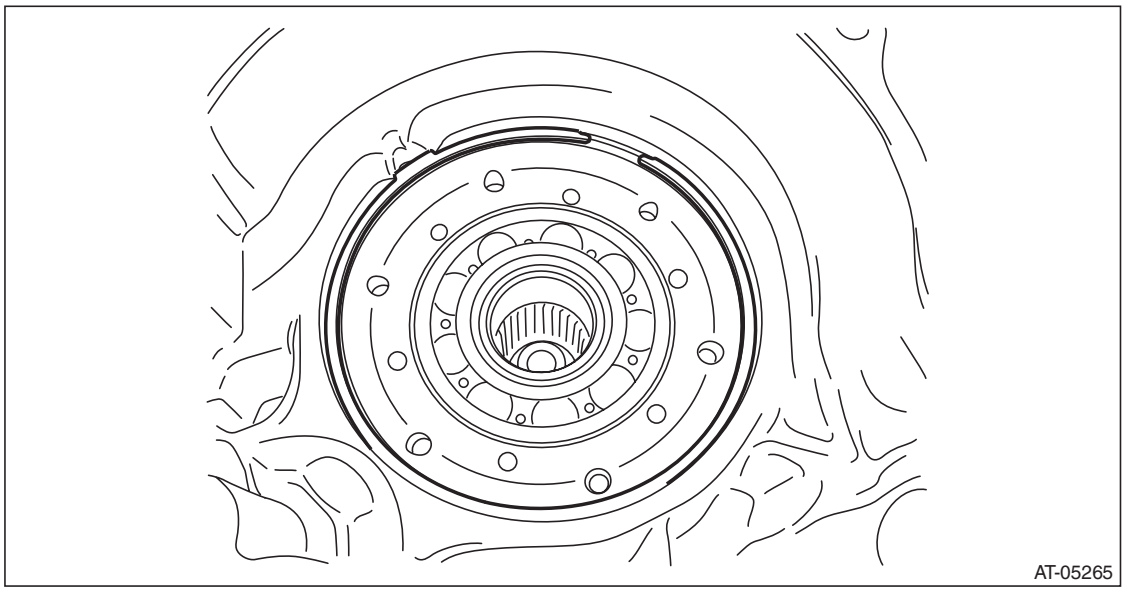

9) Remove the reduction driven gear assembly.

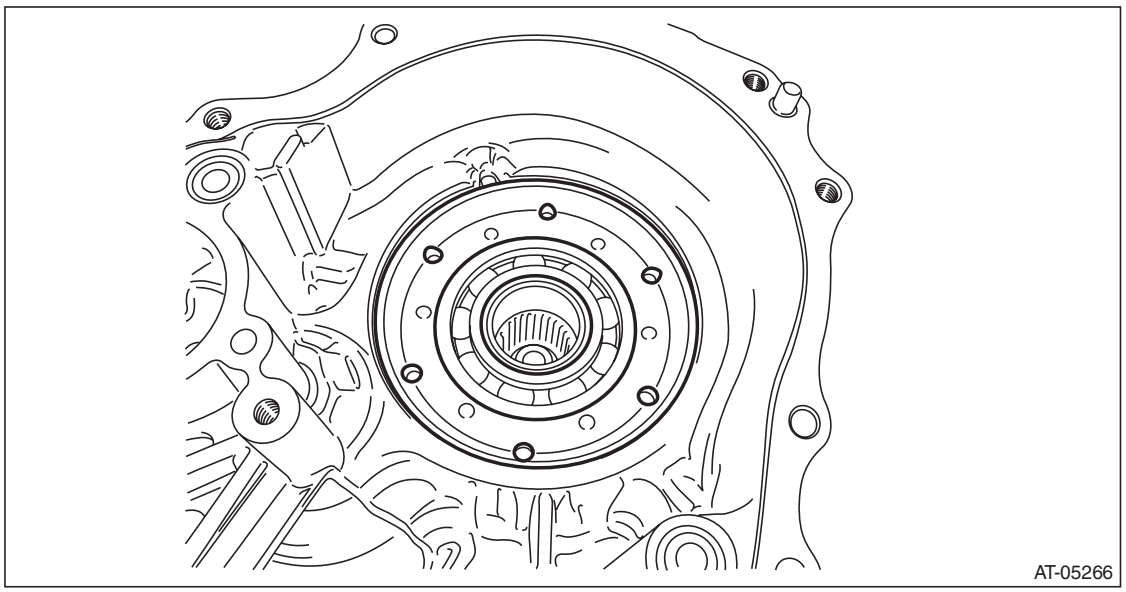

GETtheMANUALS.org

10) Remove the straight pin.

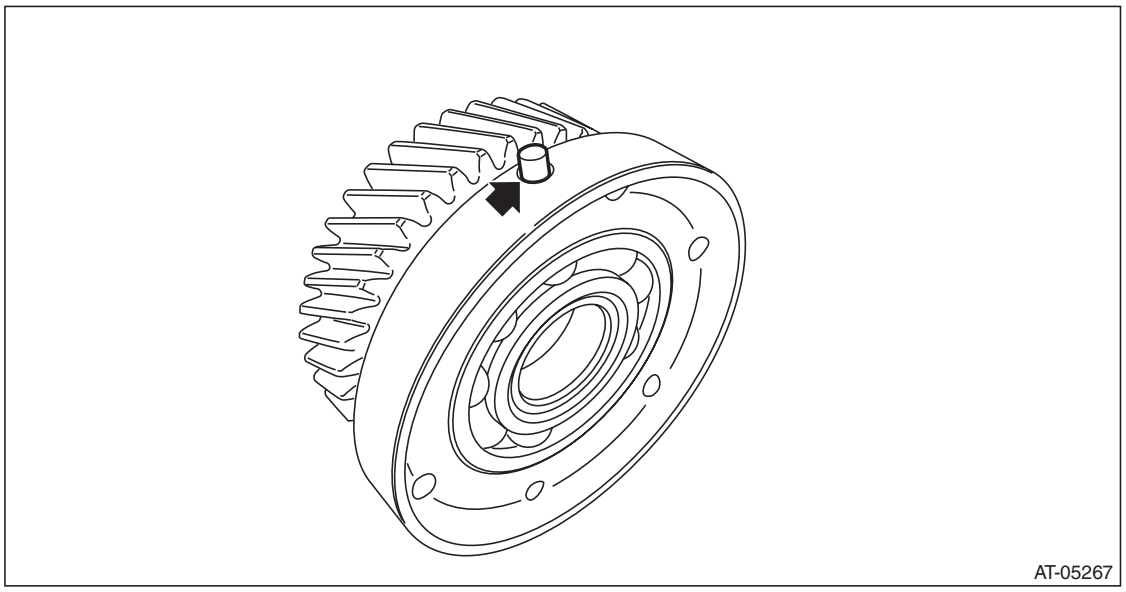

B: INSTALLATION

1) Install the straight pin to reduction driven gear assembly.

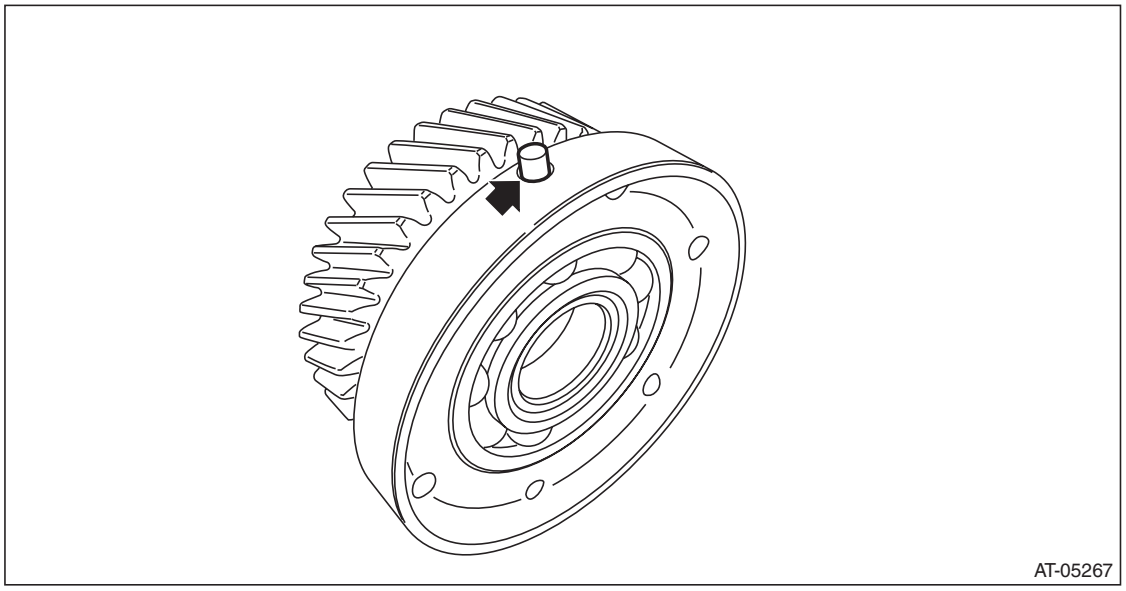

GETtheMANUALS.org

2) Fit the straight pin portion to the recess portion of transmission case and install the reduction driven gear and install the snap ring.

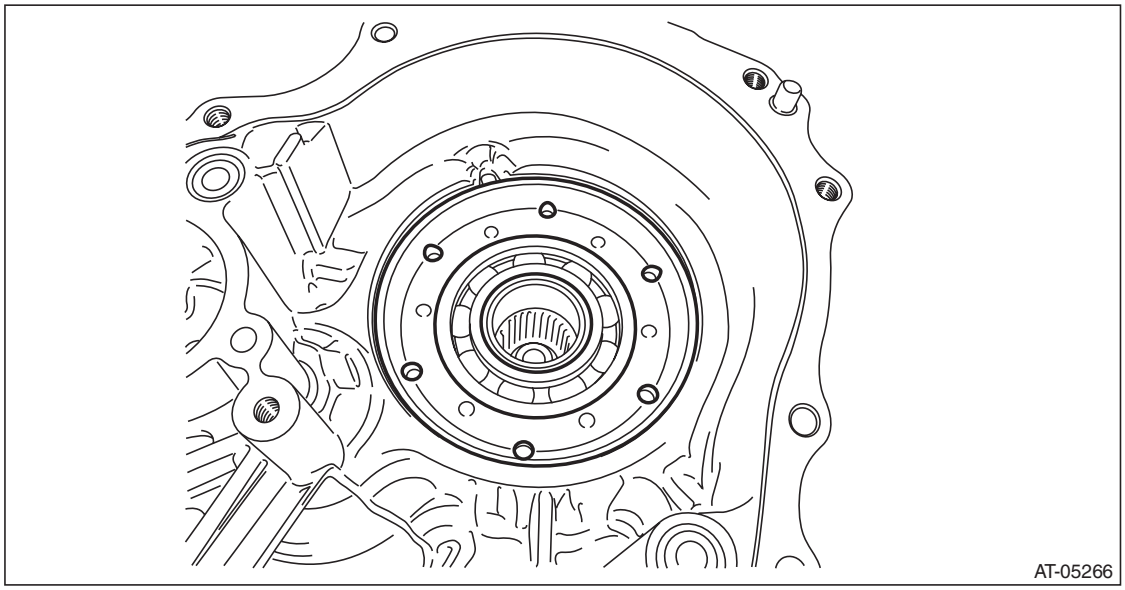

3) Select the snap ring. <Ref. to CVT-205, ADJUSTMENT, Reduction Driven Gear.>
4) Replace with the selected snap ring.

NOTE:
If the clearance measured in step 3) is within standard, the snap ring replacement is not necessary.
5) Install the forward clutch assembly. <Ref. to CVT-181, INSTALLATION, Forward Clutch Assembly.>
6) Install the intermediate case. <Ref. to CVT-166, INSTALLATION, Intermediate Case.>
7) Install the transfer reduction driven gear assembly. <Ref. to CVT-158, INSTALLATION, Transfer Reduction Driven Gear.>
8) Install the transfer clutch assembly. <Ref. to CVT-147, INSTALLATION, Transfer Clutch.>
9) Install the rear drive shaft. <Ref. to CVT-141, INSTALLATION, Rear Drive Shaft.>
10) Install the extension case. <Ref. to CVT-138, INSTALLATION, Extension Case.>
11) Install the transmission to vehicle. <Ref. to CVT-70, INSTALLATION, Automatic Transmission Assembly.>

GETtheMANUALS.org

C: DISASSEMBLY

1) Remove the bearing retainer using ST1, ST2 and ST3.

ST1 899864100 REMOVER
ST2 398497701 SEAT
ST3 18767AA000 BEARING REMOVER

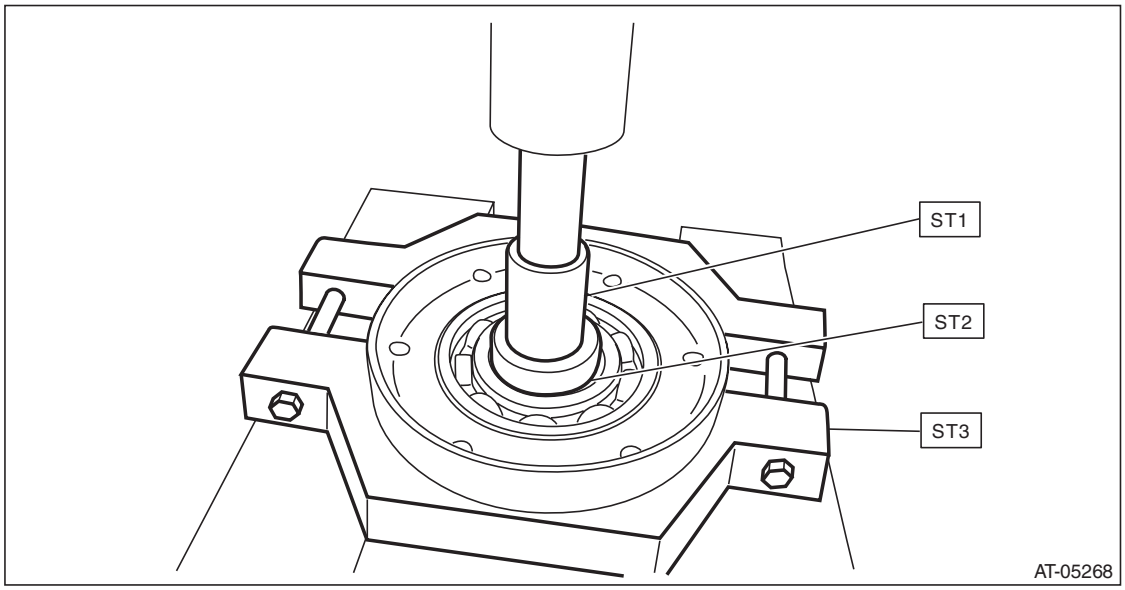

2) Remove the snap ring.

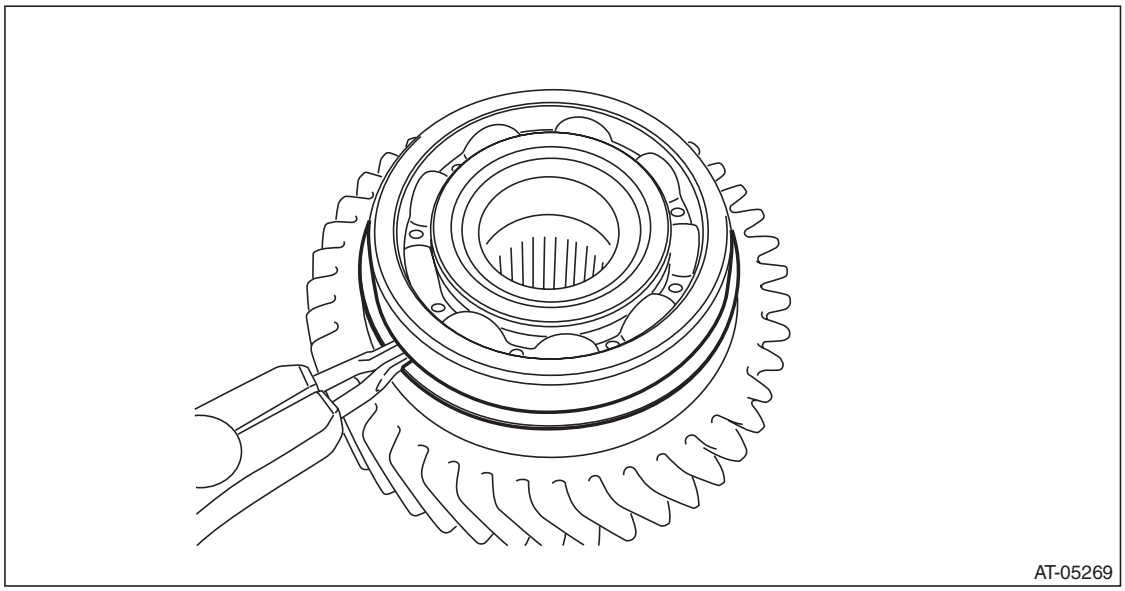

GETtheMANUALS.org

3) Remove the ball bearing using ST1, ST2 and ST3.
ST1 899864100 REMOVER
ST2 398497701 SEAT
ST3 498077600 REMOVER

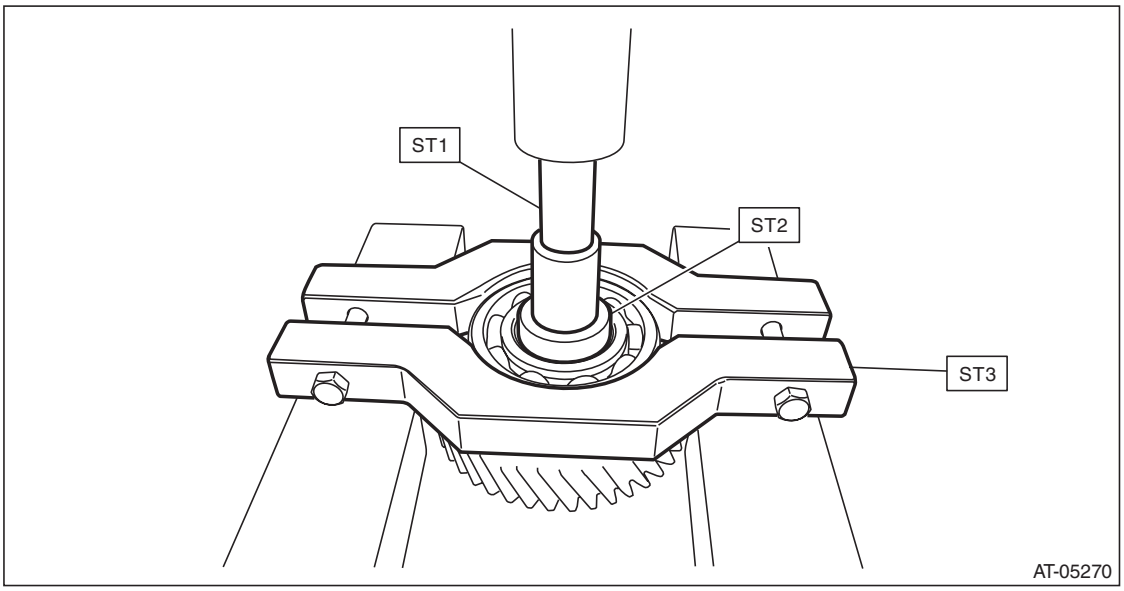

D: ASSEMBLY

1) Using the ST, install the ball bearing to bearing retainer.
ST 398177700 INSTALLER

NOTE:
- Use a new ball bearing.
- Make sure to install the ball bearing in the right direction.
- Apply CVTF to the press-fitting area.

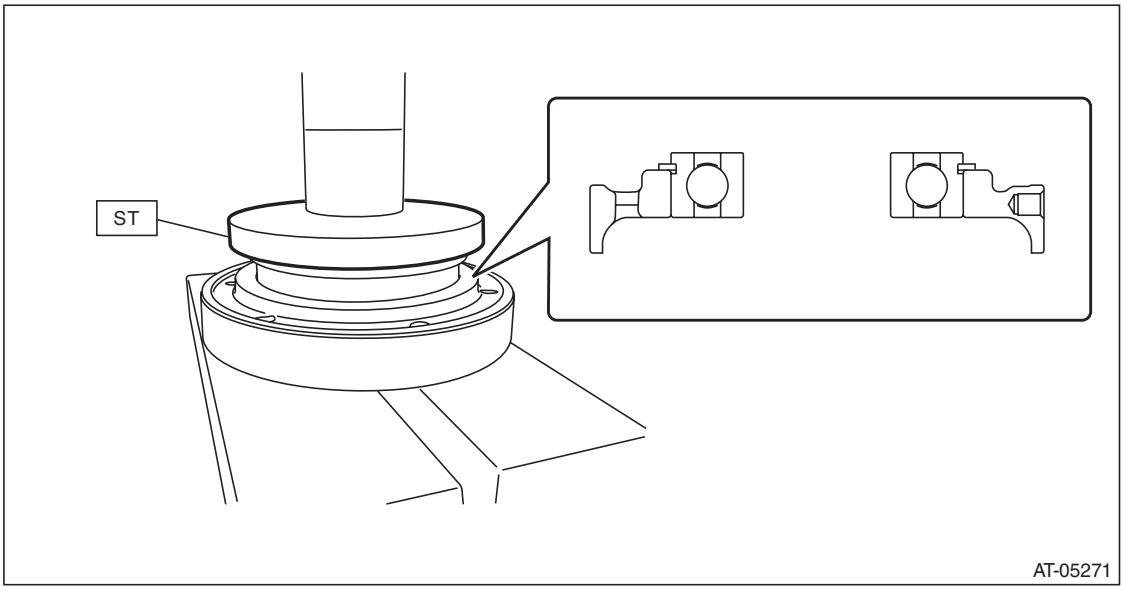

GETtheMANUALS.org

2) Using the ST, install the reduction driven gear.
ST 499277200 INSTALLER

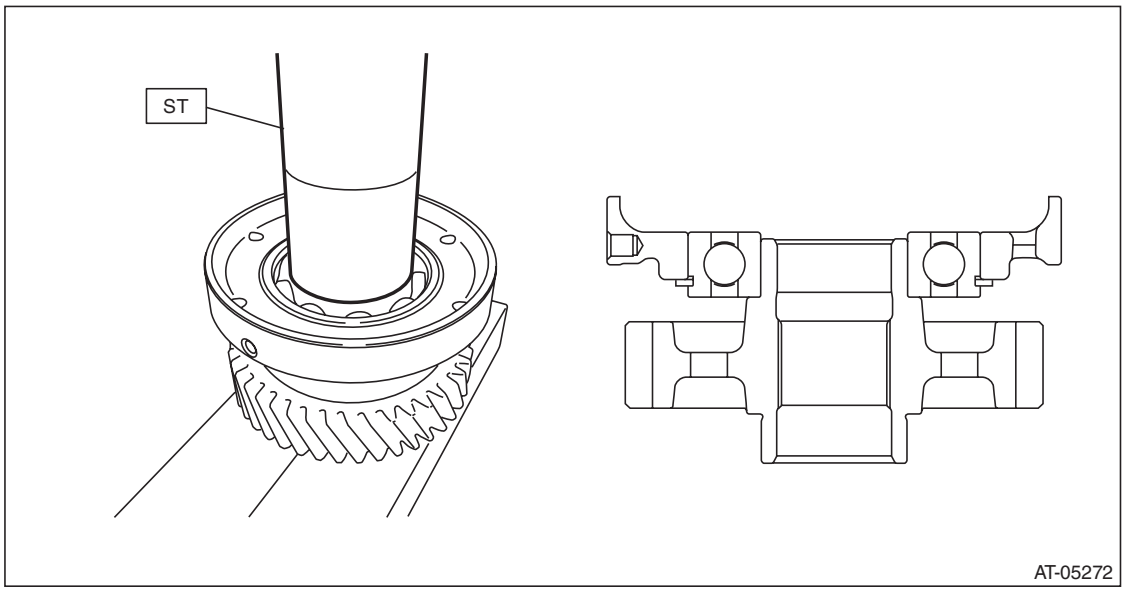

E: INSPECTION

- Check the ball bearing for smooth rotation.
- Check the ball bearing for excessive looseness.
- Check the reduction driven gear for breakage or damage.
- Check the clearance between snap ring and transmission case and replace the snap ring as necessary.

F: ADJUSTMENT

1) Measure clearance “A” between snap ring and transmission case.

Specification:
0.05 — 0.25 mm (0.002 — 0.01 in)

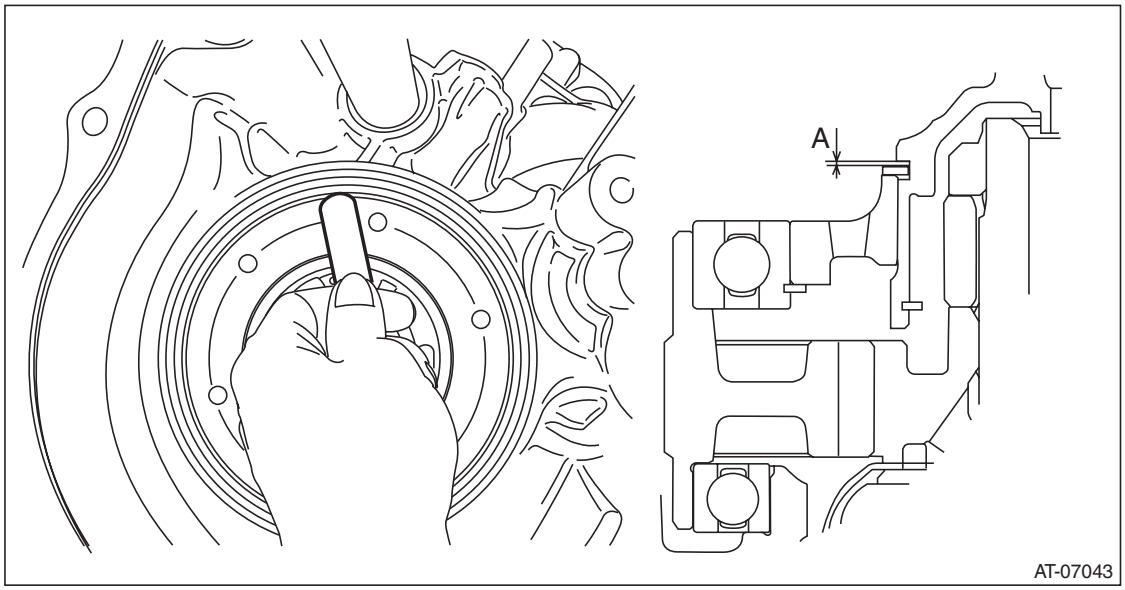

GETtheMANUALS.org

2) If clearance “A” is out of standard, select the snap ring within standard.

Snap ring	
Part No.	Thickness mm (in)
805100460	2.0 (0.079)
805100461	2.1 (0.083)
805100462	2.2 (0.087)
805100463	2.3 (0.091)
805100464	2.4 (0.094)

GETtheMANUALS.org

38. Transmission Control Device

A: REMOVAL

1) Remove the transmission assembly from vehicle body. <Ref. to CVT-55, REMOVAL, Automatic Transmission Assembly.>
2) Remove the oil pan and control valve body. <Ref. to CVT-111, REMOVAL, Control Valve Body.>
3) Remove the inhibitor switch. <Ref. to CVT-98, REMOVAL, Inhibitor Switch.>
4) Remove the spring pin.

NOTE:
Prevent the spring pin from dropping in the transmission using paper towel etc.

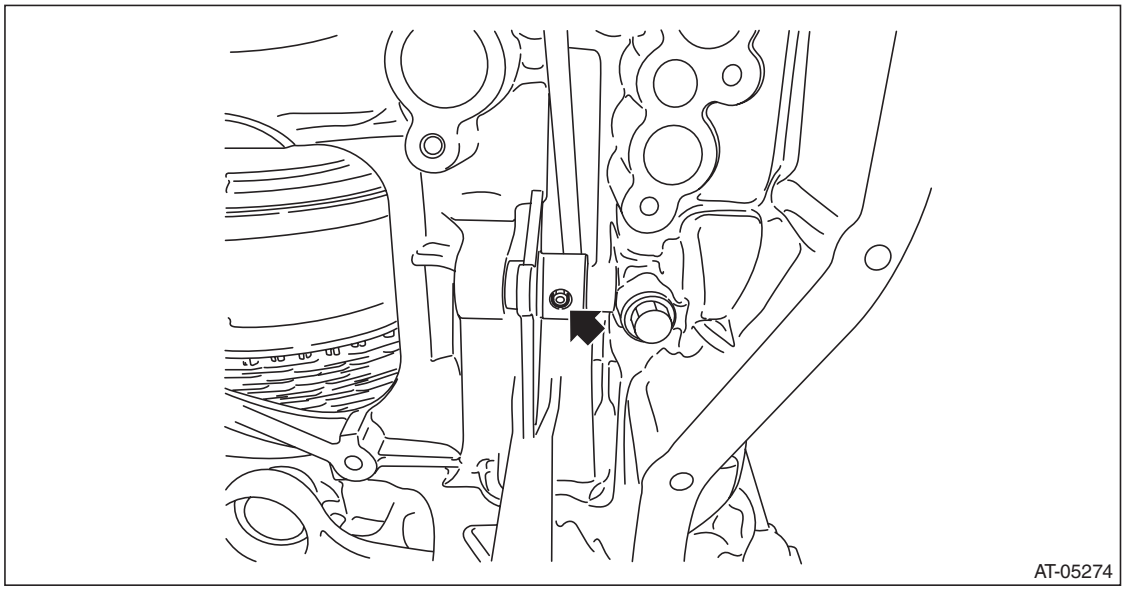

GETtheMANUALS.org

5) Remove the bolt and remove the range select lever, manual plate and parking rod.

NOTE:
Do not damage the lip of oil seal press-fitted in the case.

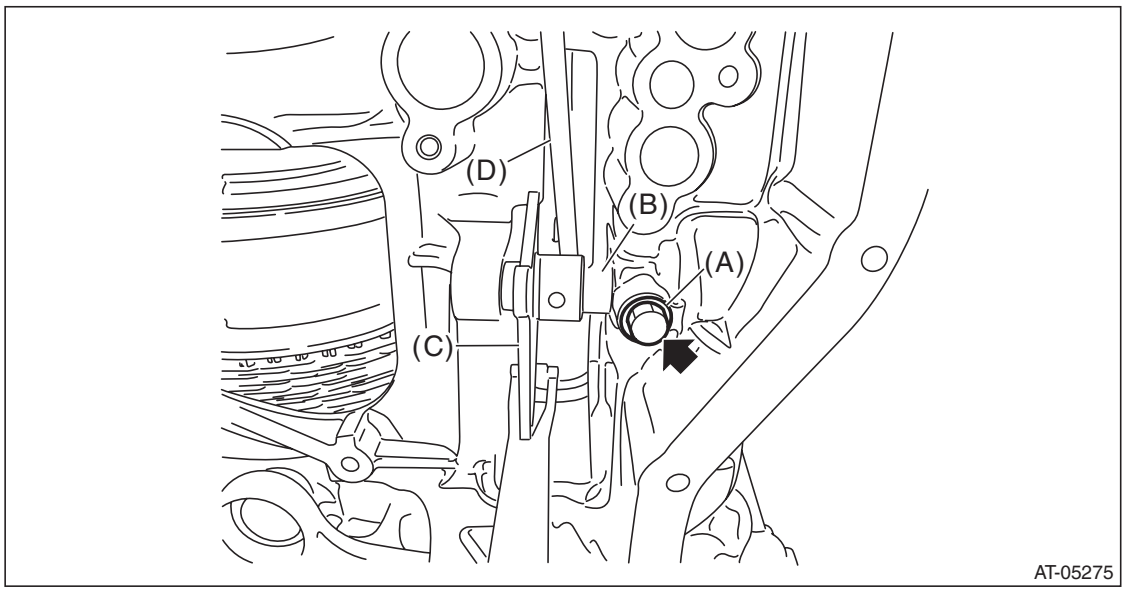

(A) Bolt
(B) Range select lever
(C) Manual plate
(D) Parking rod

6) Remove the detent spring.

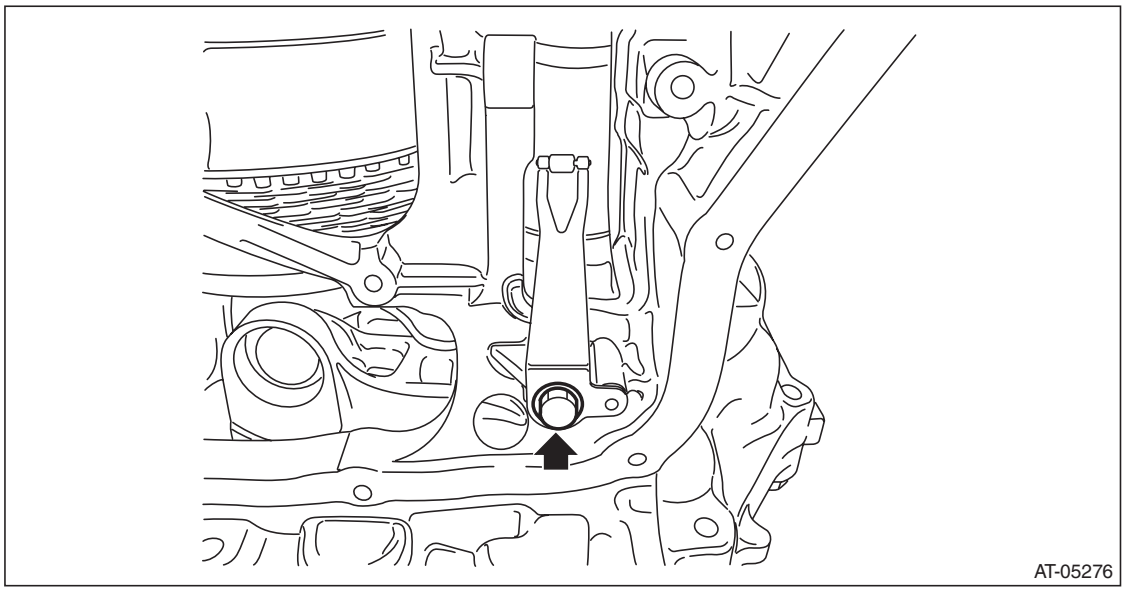

GETtheMANUALS.org

B: INSTALLATION

1) Install the detent spring to the transmission case.

Tightening torque:
7 N·m (0.7 kgf-m, 5.2 ft-lb)

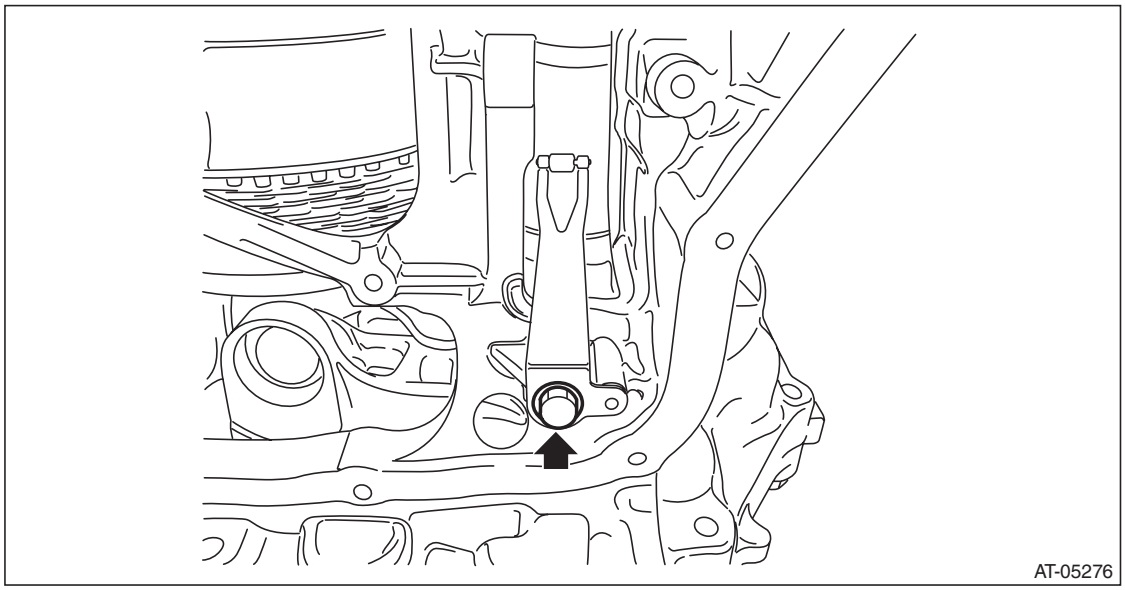

2) Install the manual plate, parking rod, range select lever and bolt.

Tightening torque:
7 N·m (0.7 kgf-m, 5.2 ft-lb)

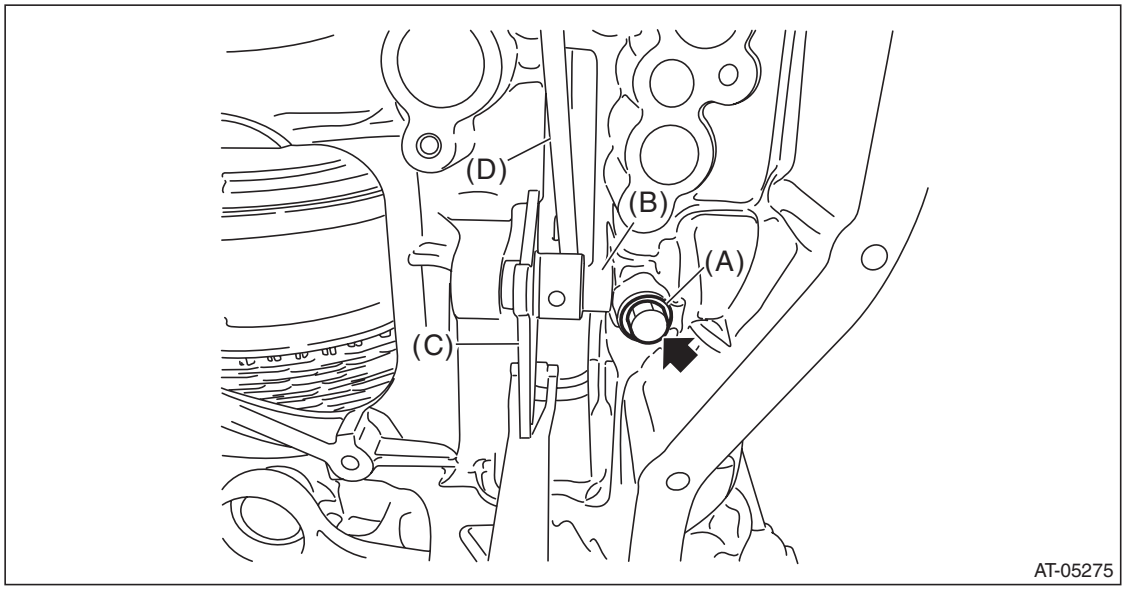

(A) Bolt
(B) Range select lever
(C) Manual plate
(D) Parking rod

GETtheMANUALS.org

3) Install the spring pin.

NOTE:
Use new spring pin.

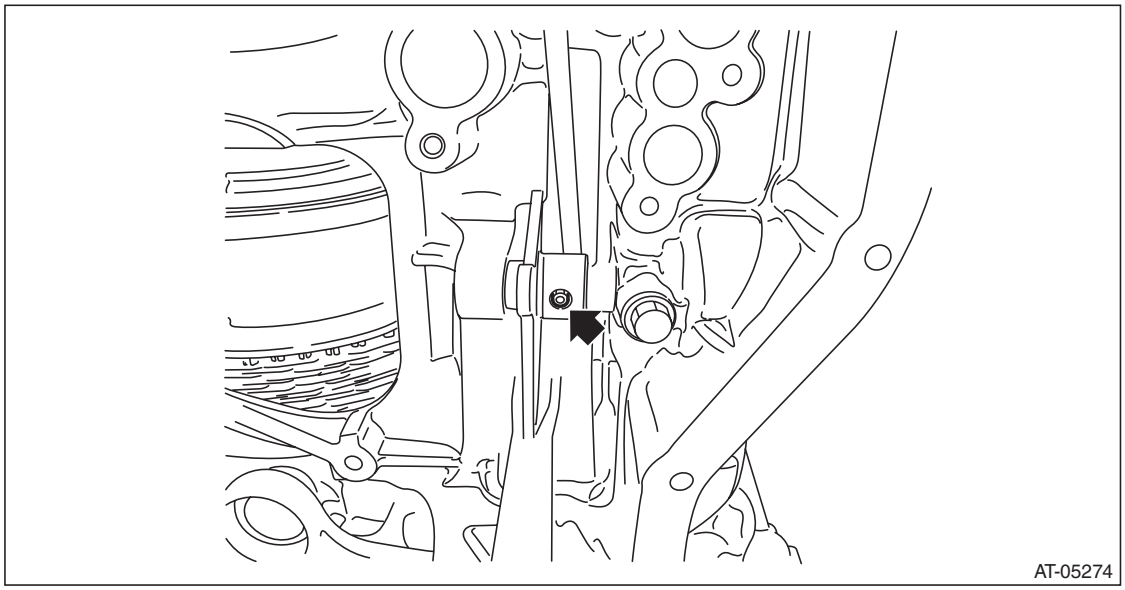

4) Install the inhibitor switch. <Ref. to CVT-95, Inhibitor Switch.>
5) Adjust the inhibitor switch. <Ref. to CVT-95, Inhibitor Switch.>
6) Install the control valve body and oil pan. <Ref. to CVT-115, INSTALLATION, Control Valve Body.>
7) Install the transmission assembly to the vehicle. <Ref. to CVT-70, INSTALLATION, Automatic Transmission Assembly.>

C: INSPECTION

Make sure that the manual lever and detent spring are not worn or otherwise damaged.

GETtheMANUALS.org

39. Transmission Case

A: REMOVAL

1) Remove the transmission assembly from the vehicle. <Ref. to CVT-55, REMOVAL, Automatic Transmission Assembly.>
2) Remove the air breather hose. <Ref. to CVT-132, REMOVAL, Air Breather Hose.>
3) Remove the transmission harness. <Ref. to CVT-121, REMOVAL, Transmission Harness.>
4) Remove the secondary speed sensor. <Ref. to CVT-102, REMOVAL, Secondary Speed Sensor.>
5) Remove the inhibitor switch. <Ref. to CVT-98, REMOVAL, Inhibitor Switch.>
6) Remove the extension case. <Ref. to CVT-138, REMOVAL, Extension Case.>
7) Remove the rear drive shaft. <Ref. to CVT-141, REMOVAL, Rear Drive Shaft.>
8) Remove the transfer clutch assembly. <Ref. to CVT-146, REMOVAL, Transfer Clutch.>
9) Remove the transfer reduction driven gear assembly. <Ref. to CVT-158, REMOVAL, Transfer Reduction Driven Gear.>
10) Remove the intermediate case. <Ref. to CVT-165, REMOVAL, Intermediate Case.>
11) Remove the forward clutch assembly. <Ref. to CVT-180, REMOVAL, Forward Clutch Assembly.>
12) Remove the reduction driven gear. <Ref. to CVT-200, REMOVAL, Reduction Driven Gear.>
13) Remove the oil pan and control valve body. <Ref. to CVT-111, REMOVAL, Control Valve Body.>

NOTE:
When removing the control valve body, also remove the pressure pipe if it is attached on the case.

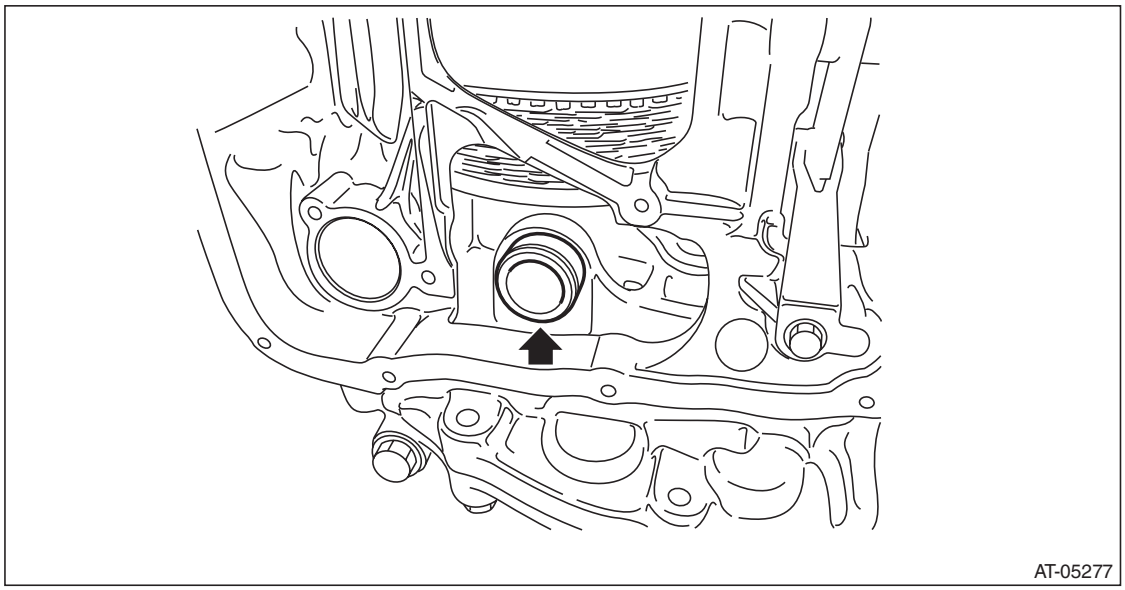

GETtheMANUALS.org

14) Remove the CVTF pipe using a tire lever etc.

NOTE:
Remove by hooking the stepped portion of CVTF pipe with a tire lever etc.

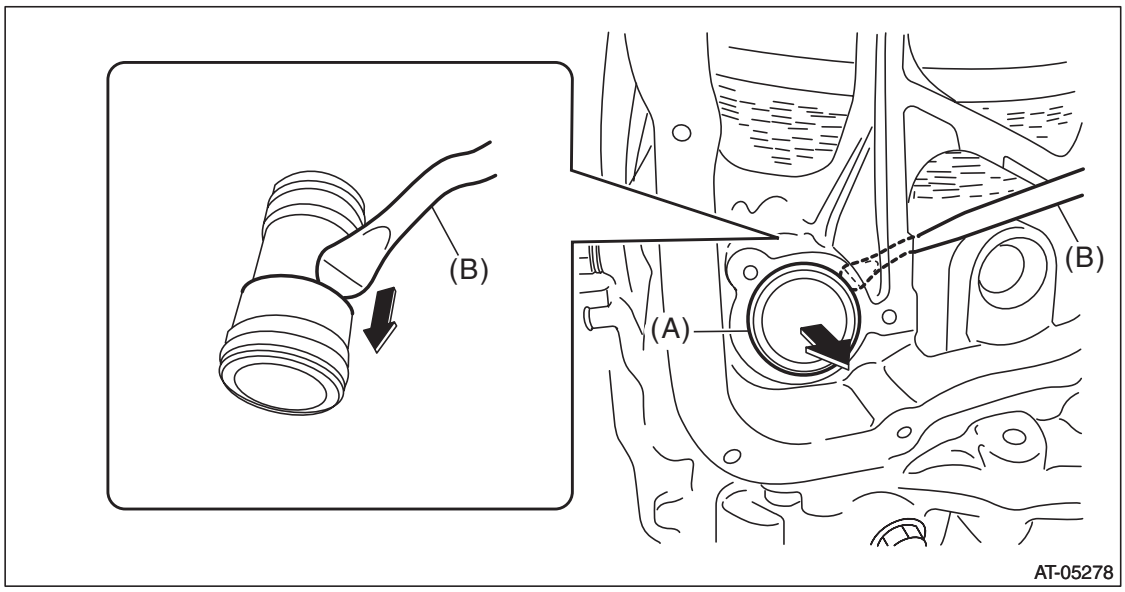

(A) CVTF pipe
(B) Tire lever

15) Remove the transmission case.

NOTE:
The total number of transmission case mounting bolts is 15.

16) Remove the O-ring of lubrication pipe.

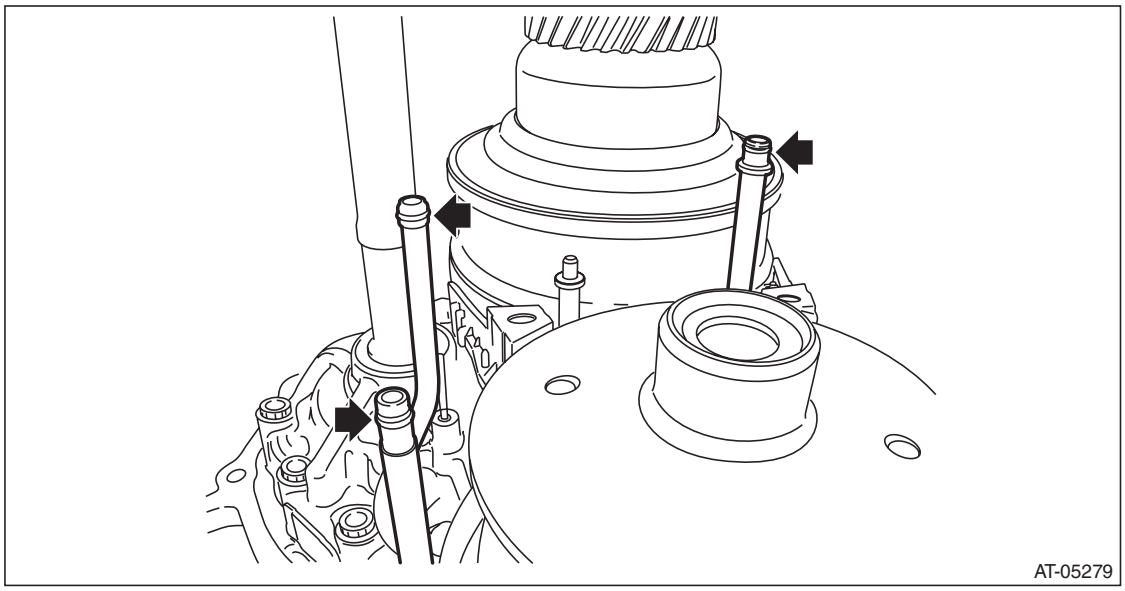

17) Remove the control device system. <Ref. to CVT-207, REMOVAL, Transmission Control Device.>

GETtheMANUALS.org

B: INSTALLATION

1) Clean the mating surface of transmission case and converter case.
2) Install the control device system. <Ref. to CVT-209, INSTALLATION, Transmission Control Device.>
3) Install the O-ring to the lubrication pipe.

NOTE:
- Use new O-rings.
- Apply CVTF to the O-ring.

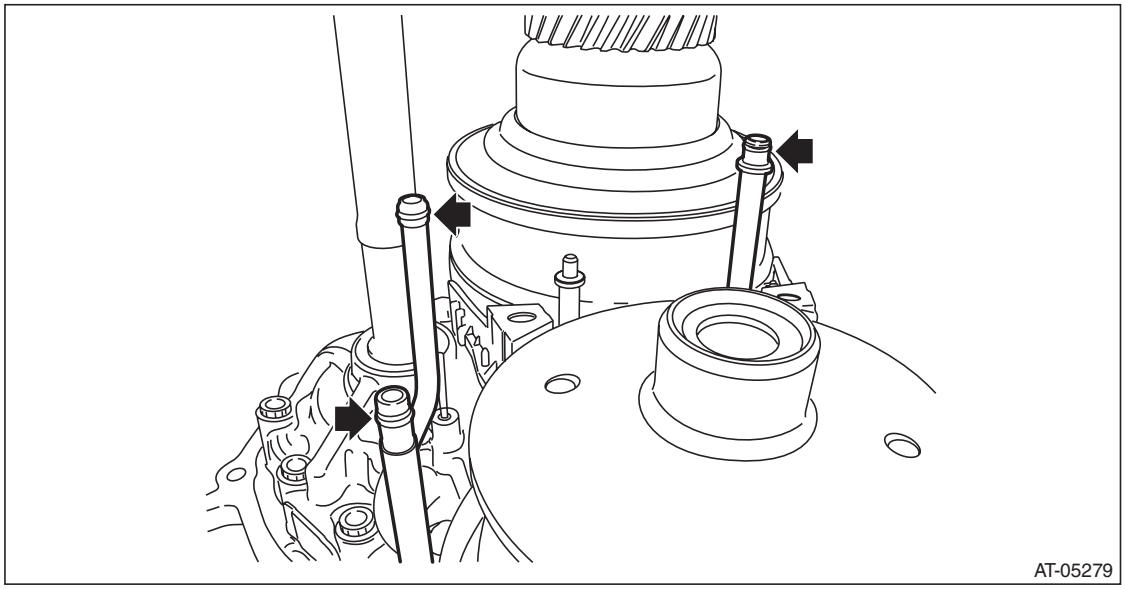

4) Make sure the lubrication pipe and support rod are in vertical position.

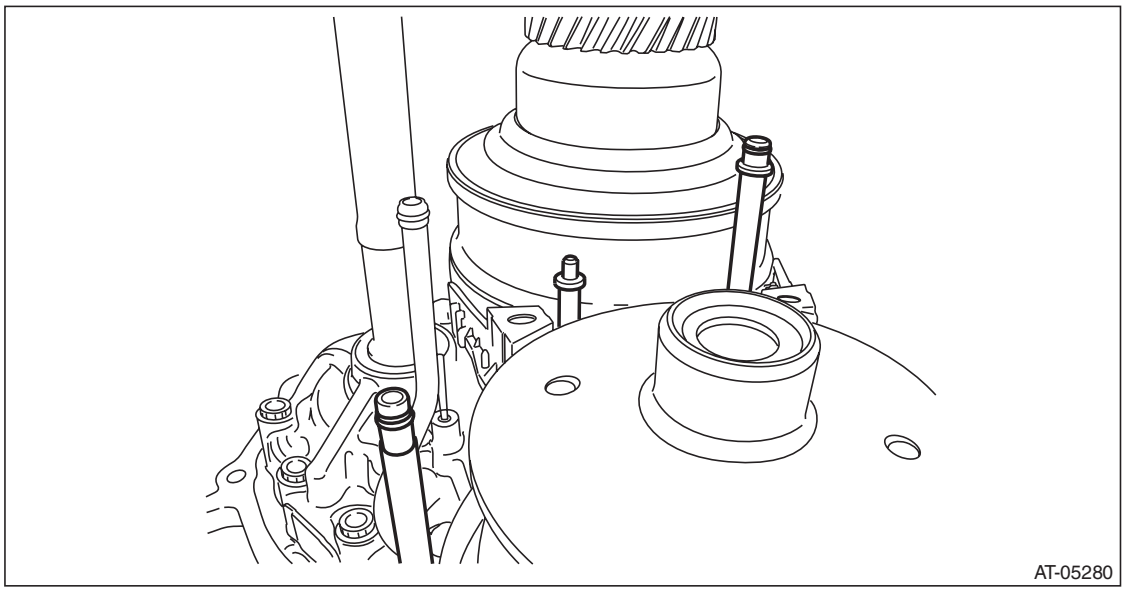

GETtheMANUALS.org

5) Apply liquid gasket seamlessly to the mating surface of transmission case.

Liquid gasket:
THREE BOND 1215 (Part No. 004403007) or equivalent

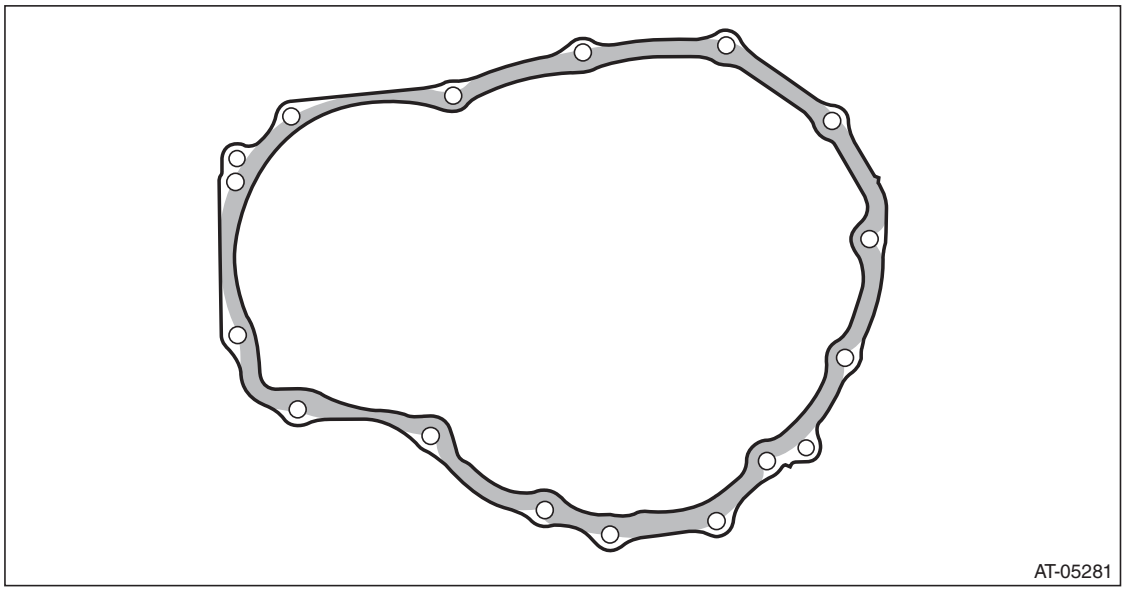

6) Install the transmission case.

CAUTION:
If the transmission case gets in contact with the lubrication pipe and support rod, do not install the transmission case forcibly.

NOTE:
- Install while checking the lubrication pipe and support rod is being inserted properly into transmission case.
- If installing the transmission is difficult, check if the lubrication pipe and support rod are bent.
- The total number of transmission case mounting bolts is 15.

Tightening torque:
41 N·m (4.2 kgf-m, 30.2 ft-lb)

7) Install the O-ring to CVTF pipe.

NOTE:
- Use new O-rings.
- Apply CVTF to the O-ring.

GETtheMANUALS.org

8) The smaller opening of CVTF pipe should be inserted to transmission.

NOTE:
After installing, make sure the CVTF pipe does not stick out of transmission case.

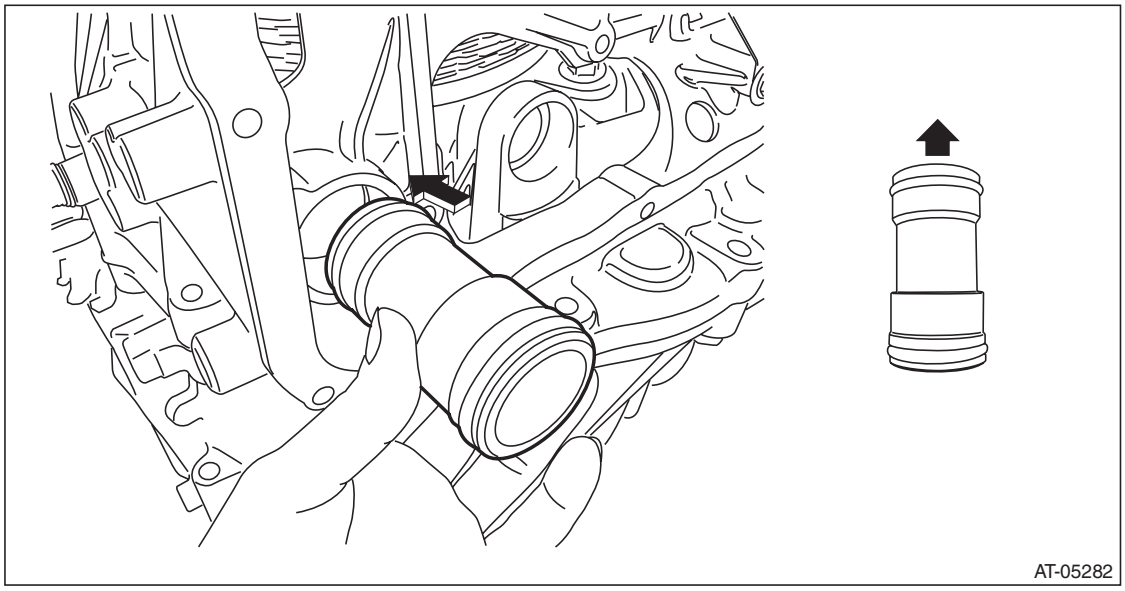

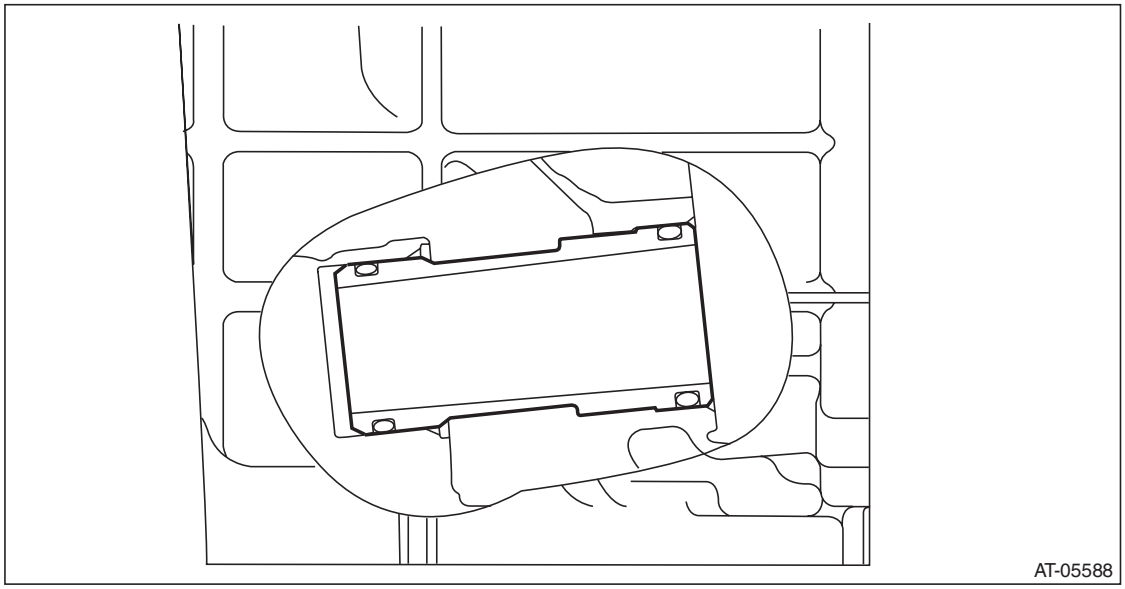

9) Install the reduction driven gear. <Ref. to CVT-201, INSTALLATION, Reduction Driven Gear.>
10) Install the forward clutch assembly. <Ref. to CVT-181, INSTALLATION, Forward Clutch Assembly.>
11) Install the intermediate case. <Ref. to CVT-166, INSTALLATION, Intermediate Case.>
12) Install the transfer reduction driven gear assembly. <Ref. to CVT-158, INSTALLATION, Transfer Reduction Driven Gear.>
13) Install the transfer clutch assembly. <Ref. to CVT-147, INSTALLATION, Transfer Clutch.>
14) Install the rear drive shaft. <Ref. to CVT-147, INSTALLATION, Transfer Clutch.>
15) Install the extension case. <Ref. to CVT-138, INSTALLATION, Extension Case.>
16) Install the inhibitor switch. <Ref. to CVT-100, INSTALLATION, Inhibitor Switch.>
17) Install the secondary speed sensor. <Ref. to CVT-103, INSTALLATION, Secondary Speed Sensor.>
18) Install the transmission harness. <Ref. to CVT-123, INSTALLATION, Transmission Harness.>
19) Install the control valve body and oil pan. <Ref. to CVT-115, INSTALLATION, Control Valve Body.>
20) Install the air breather hose. <Ref. to CVT-132, INSTALLATION, Air Breather Hose.>
21) Install the transmission assembly to the vehicle. <Ref. to CVT-70, INSTALLATION, Automatic Transmission Assembly.>

GETtheMANUALS.org

C: DISASSEMBLY

1) Remove the CVTF inlet pipe and CVTF outlet pipe.

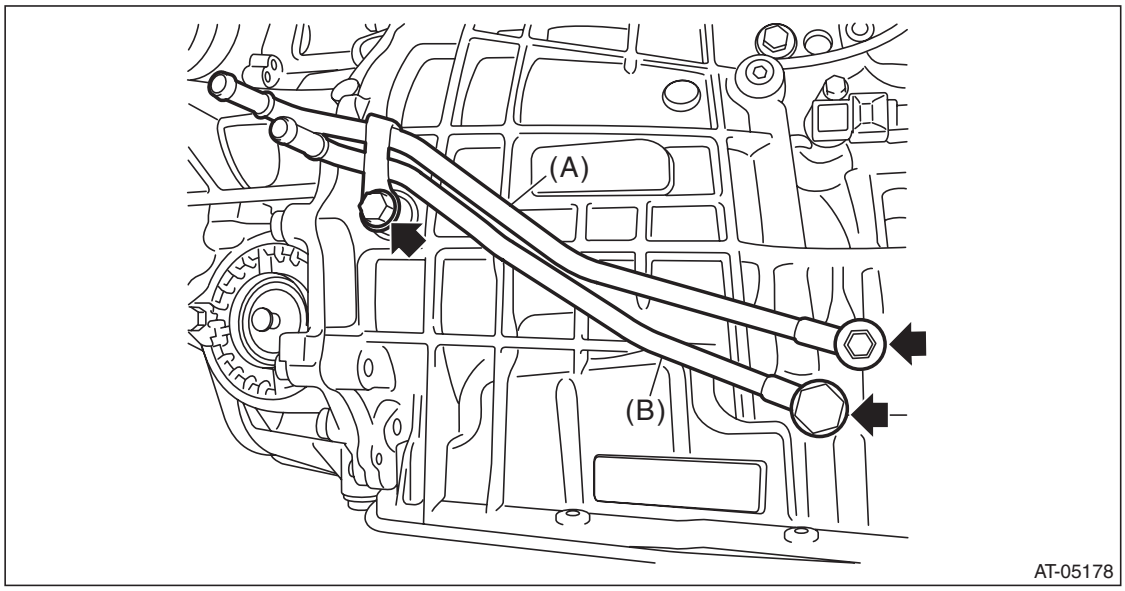

(A) CVTF outlet pipe
(B) CVTF inlet pipe

2) Remove all plugs from the transmission case.

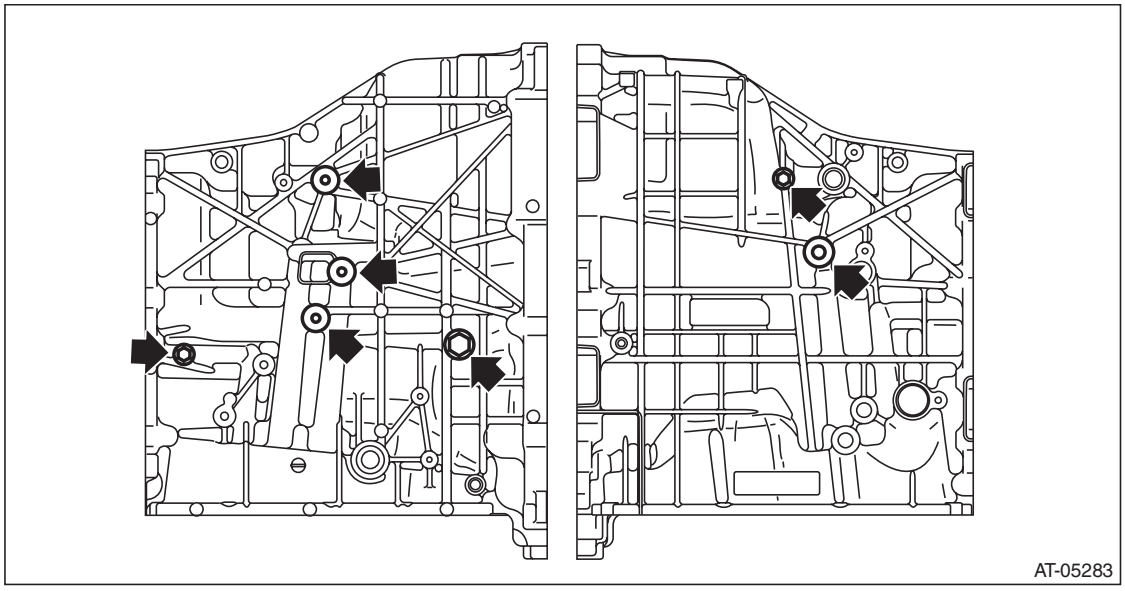

GETtheMANUALS.org

3) Remove the lubrication pipe.

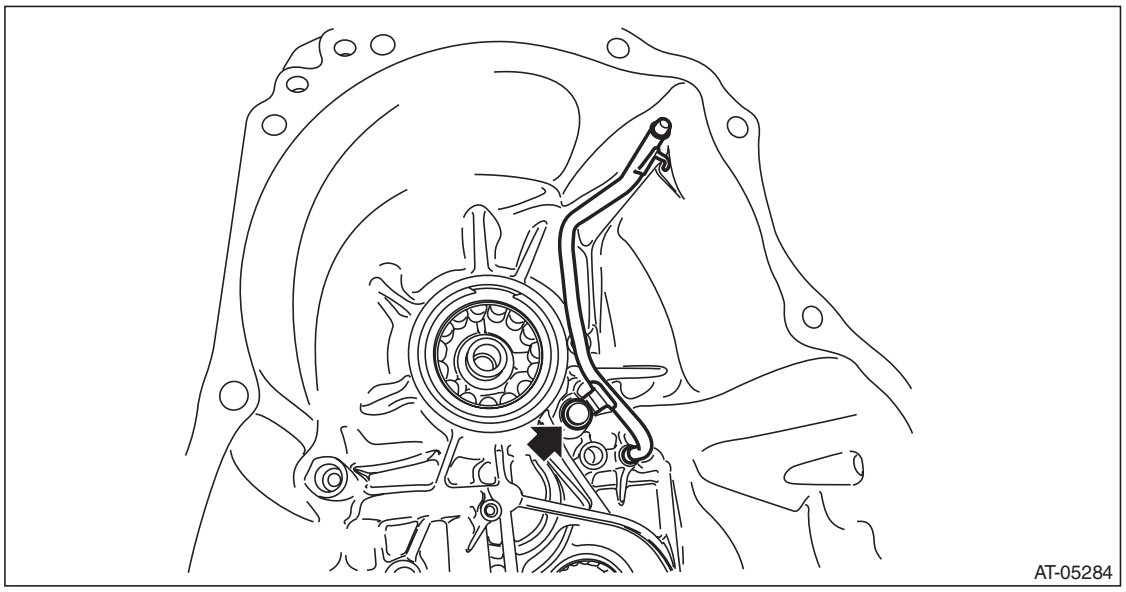

4) Remove the oil seal using a screwdriver wrapped with cloth etc.

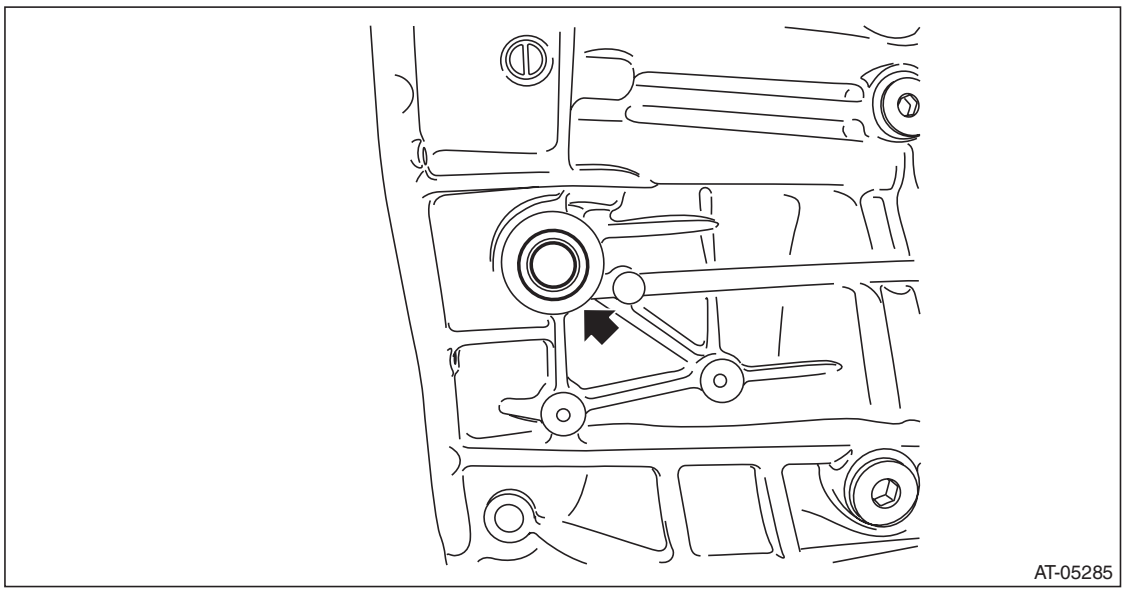

GETtheMANUALS.org

5) Remove the ball bearing from reduction driven gear using ST.
ST 398527700 PULLER ASSY

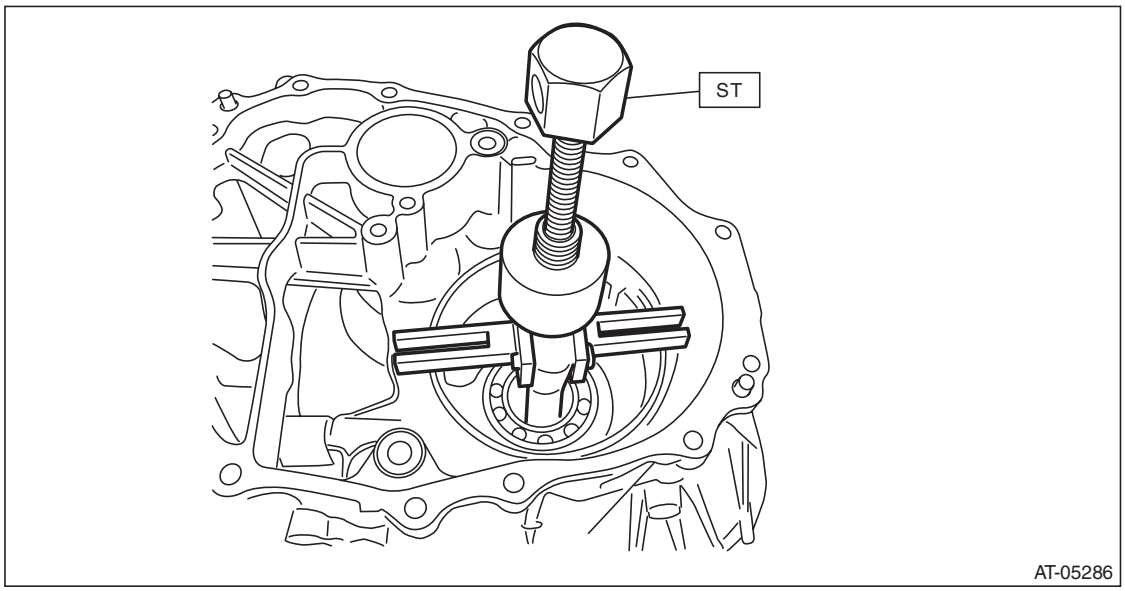

6) Remove the snap ring on primary pulley side.

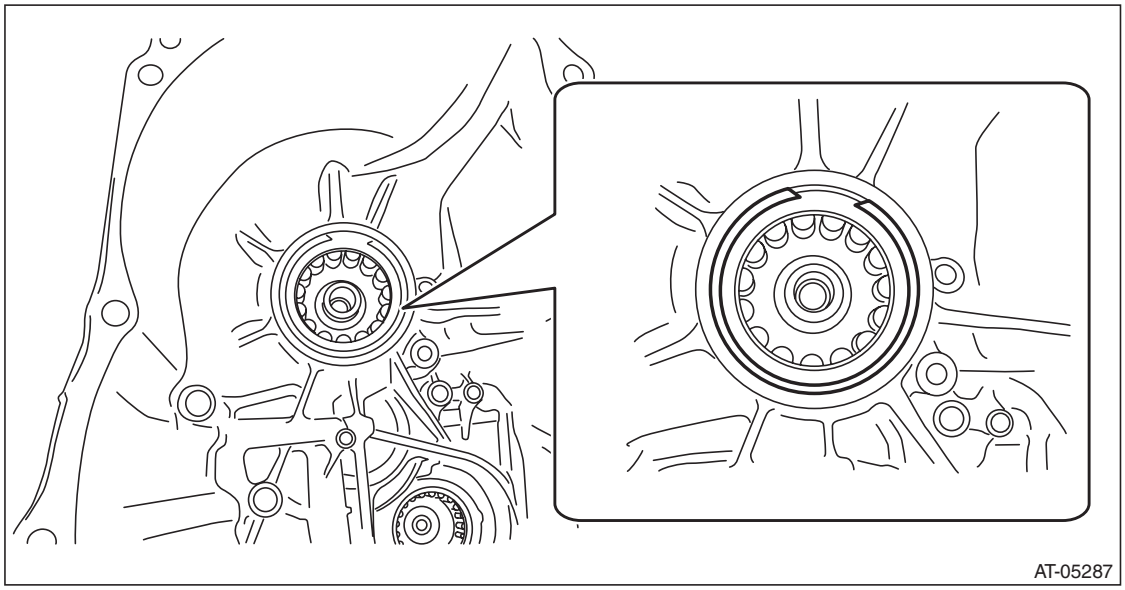

GETtheMANUALS.org

7) Using the ST, remove the roller bearing on primary pulley side.

NOTE:
Warm up the bearing area of transmission case using a drier or heat gun.
ST 398527700 PULLER ASSY

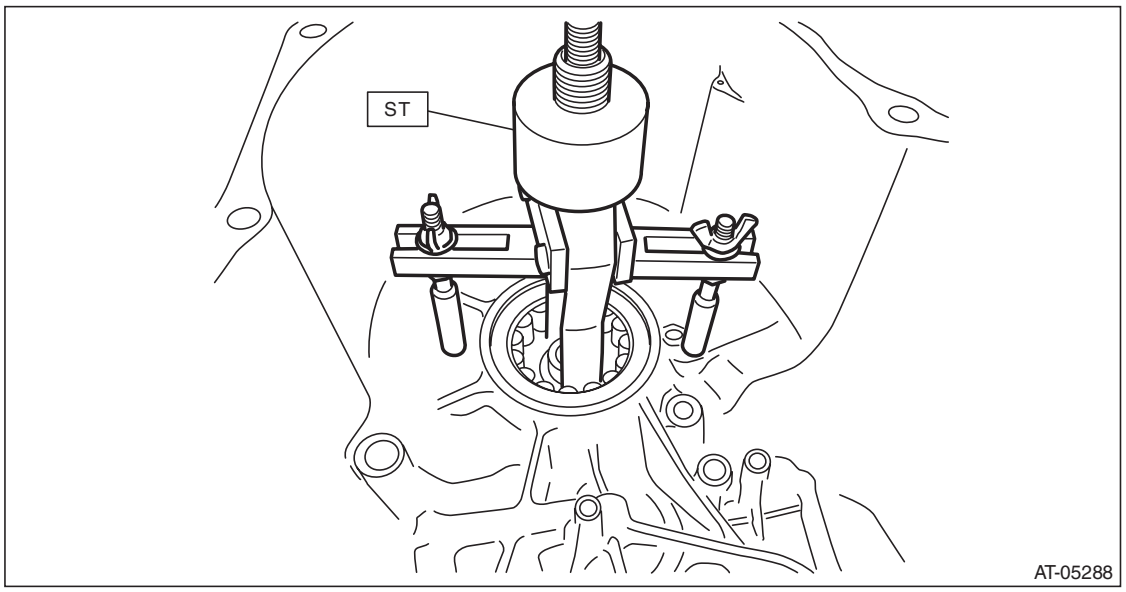

8) Remove the snap ring on secondary pulley side.

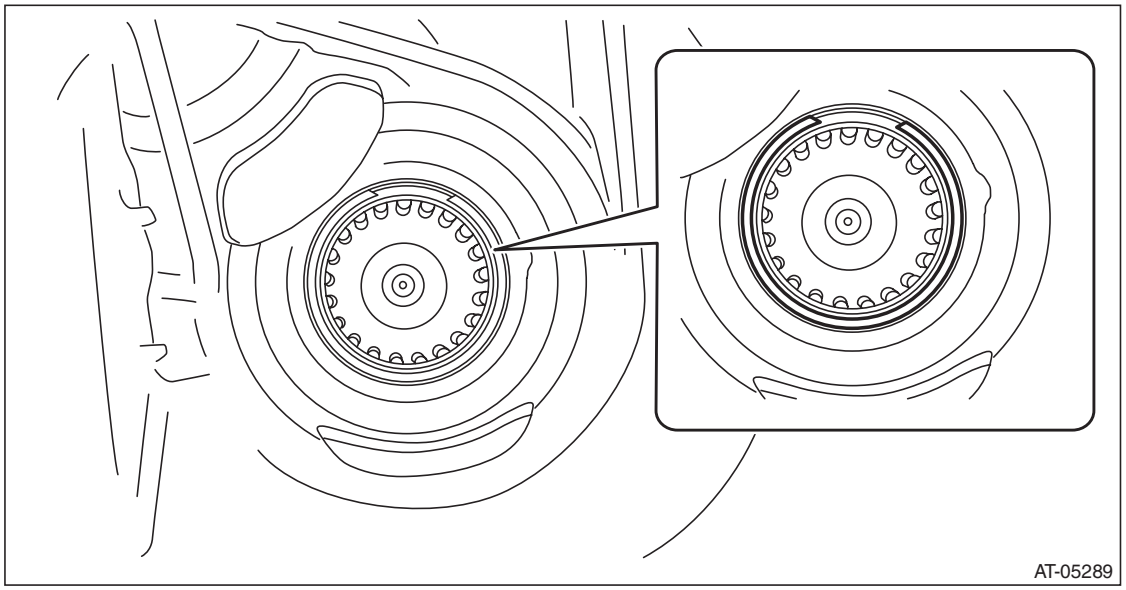

GETtheMANUALS.org

9) Using the ST, remove the roller bearing on secondary pulley side.

NOTE:
Warm up the bearing area of transmission case using a drier or heat gun.
ST 398527700 PULLER ASSY

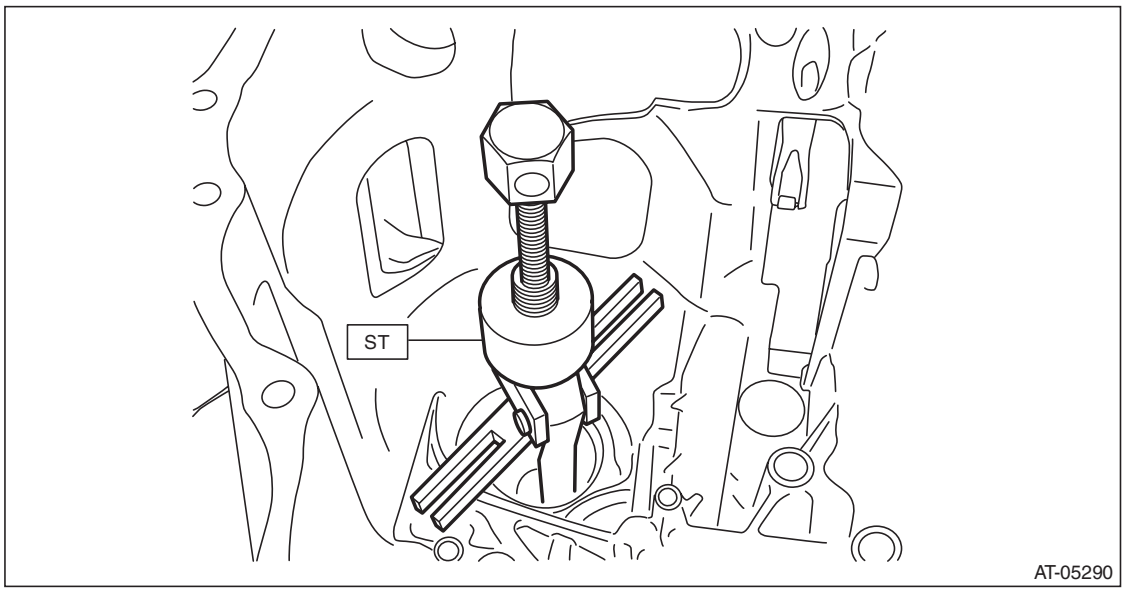

D: ASSEMBLY

1) Using the ST, install the oil seal.
ST 18657AA000 INSTALLER

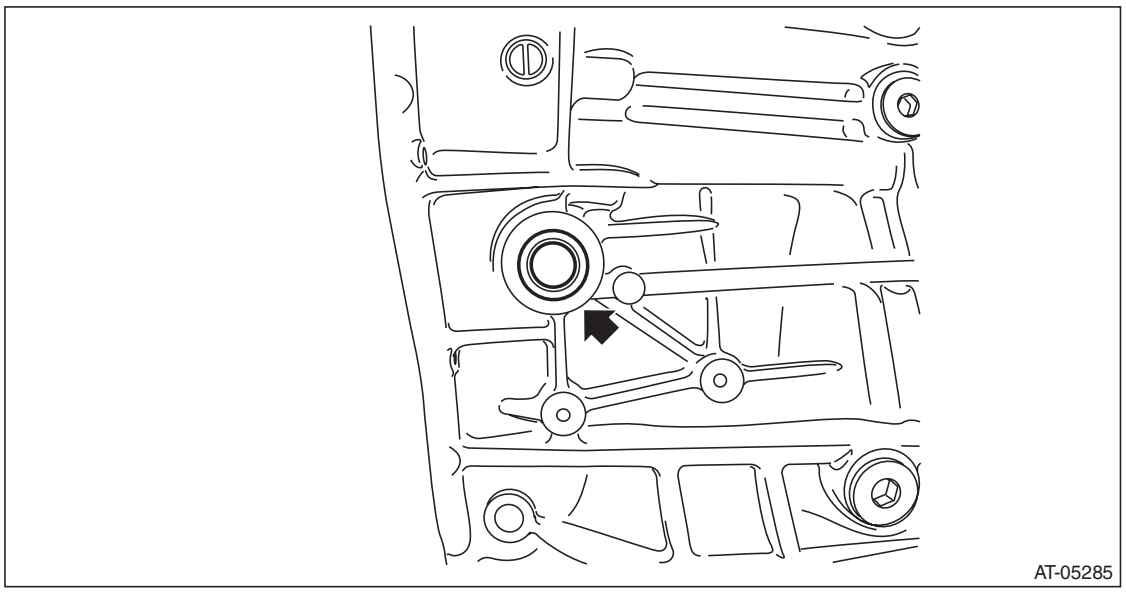

GETtheMANUALS.org

2) Using ST1 and ST2, install the ball bearing on the reduction gear side.

NOTE:
Use a new ball bearing.
ST1 398177700 INSTALLER
ST2 499755602 PRESS SNAP RING

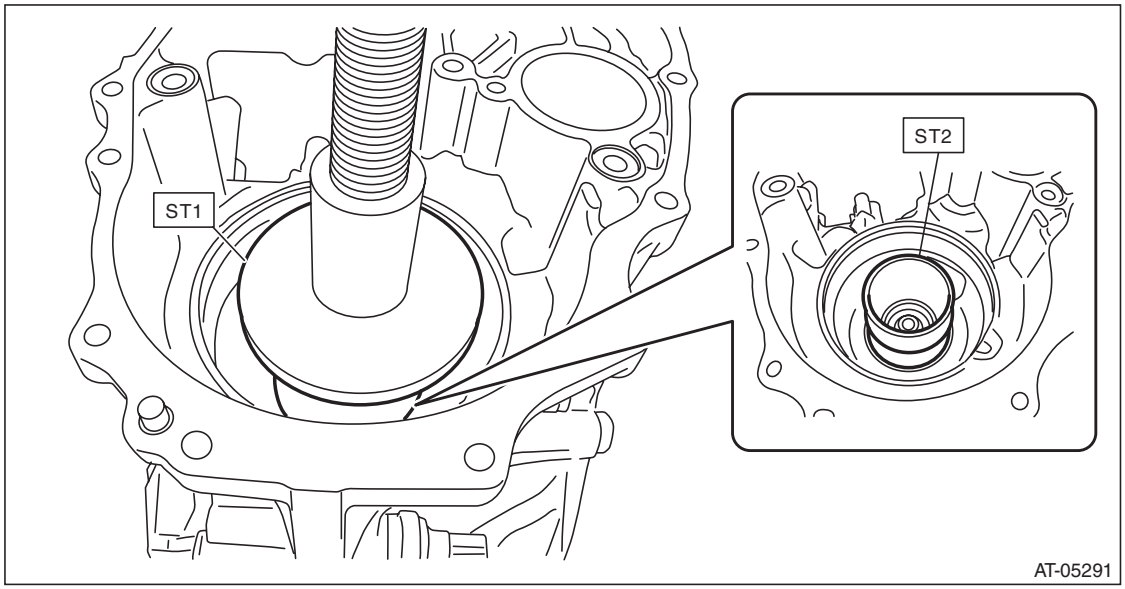

3) Using ST1 and ST2, install the roller bearing on primary pulley side.

NOTE:
- Use a new roller bearing.
- Make adjustment so that PRESS gets in contact with the center of ST2.

ST1 398177700 INSTALLER
ST2 20299AG010 PRESS SNAP RING

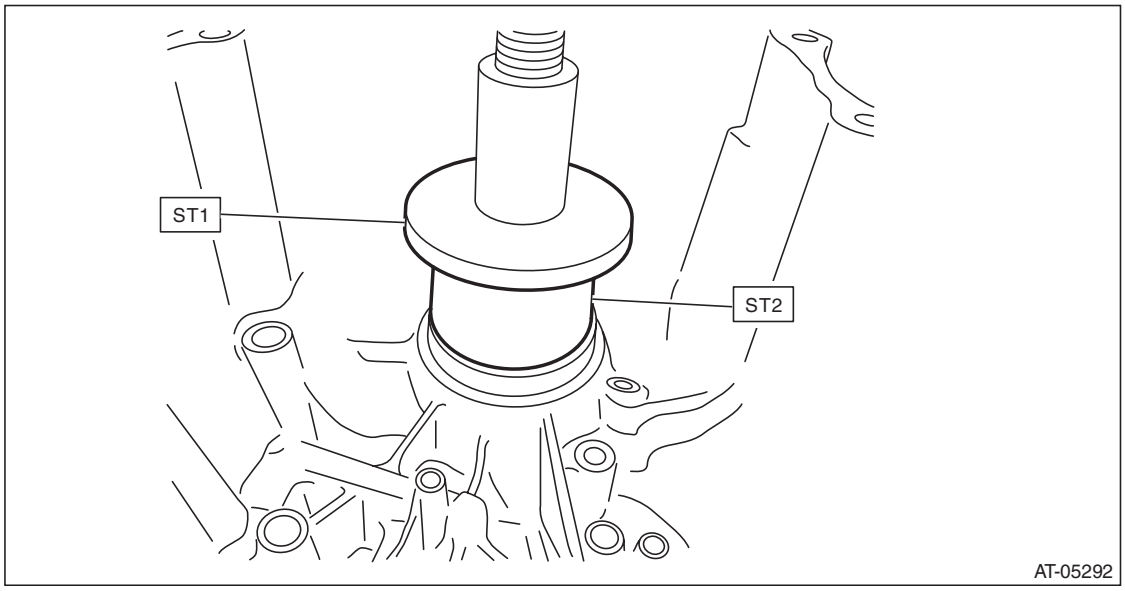

GETtheMANUALS.org

4) Install the snap ring on primary pulley side.

NOTE:
Use new snap rings.

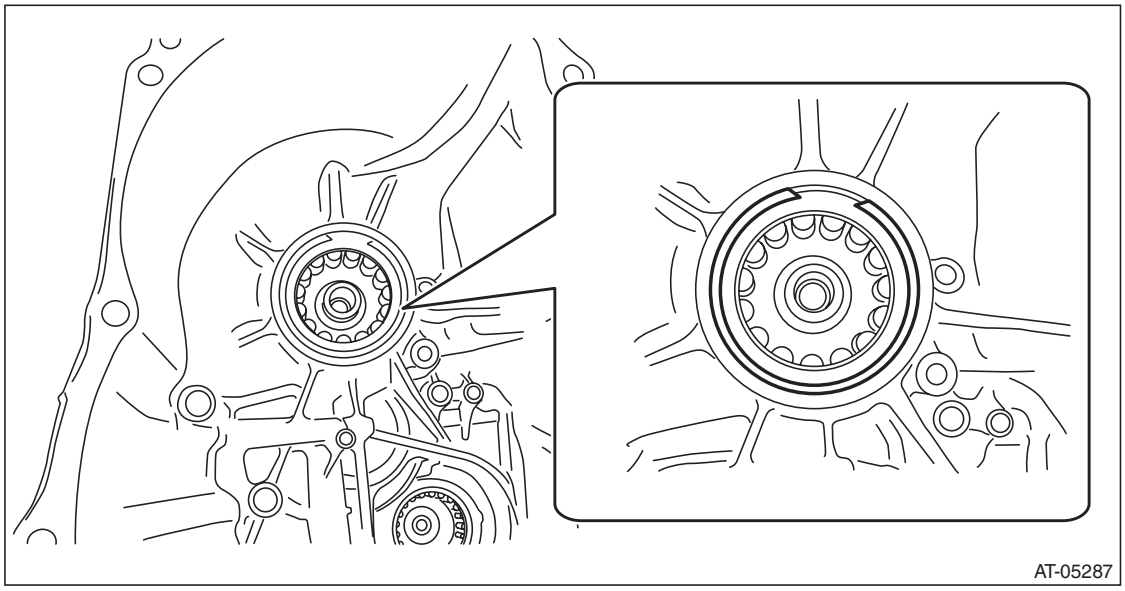

5) Using ST1 and ST2, install the roller bearing on secondary pulley side.

NOTE:
- Use a new roller bearing.
- Make adjustment so that PRESS gets in contact with the center of ST2.

ST1 398177700 INSTALLER
ST2 499755602 PRESS SNAP RING

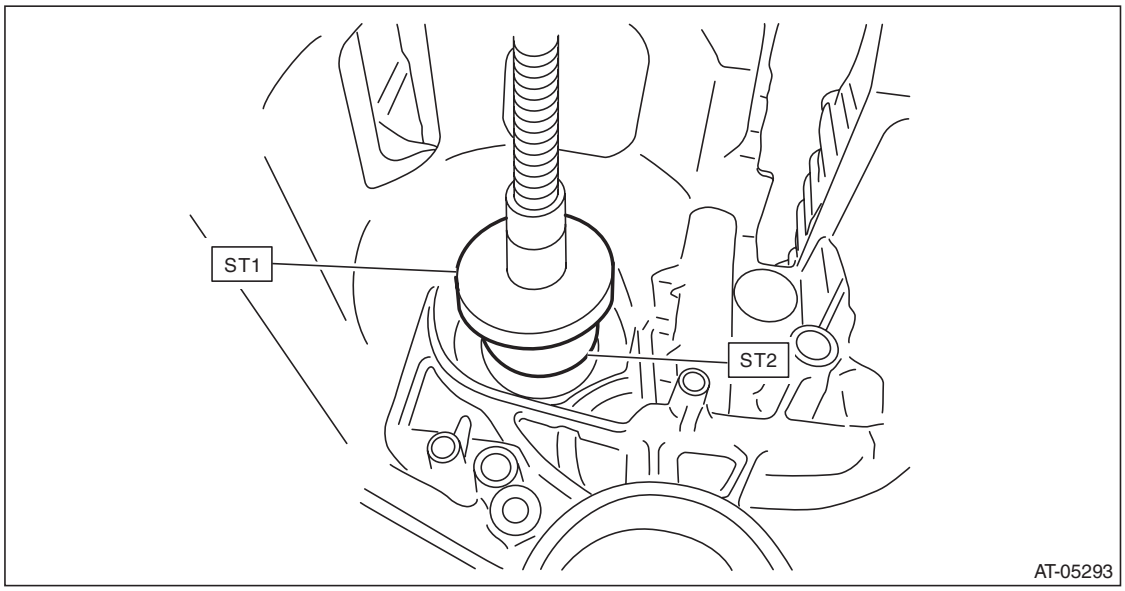

GETtheMANUALS.org

6) Install the snap ring on secondary pulley side.

NOTE:
Use new snap rings.

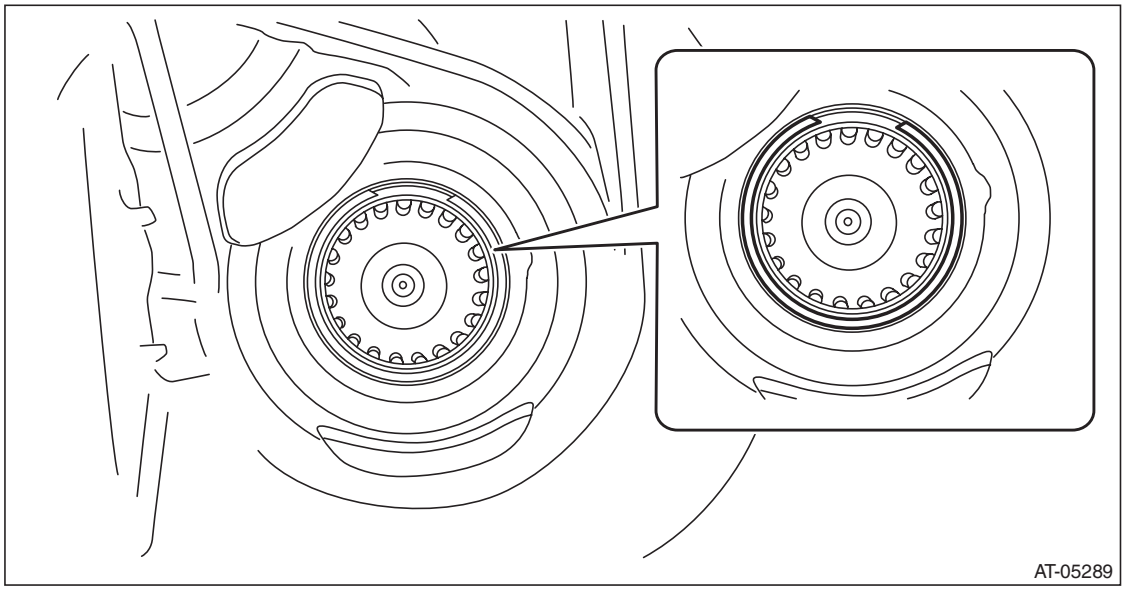

7) Install all plugs.

NOTE:
Use new gaskets and O-rings.

Tightening torque:
T1: 13 N·m (1.3 kgf-m, 9.6 ft-lb)
T2: 25 N·m (2.5 kgf-m, 18.4 ft-lb)
T3: 35 N·m (3.5 kgf-m, 25.8 ft-lb)

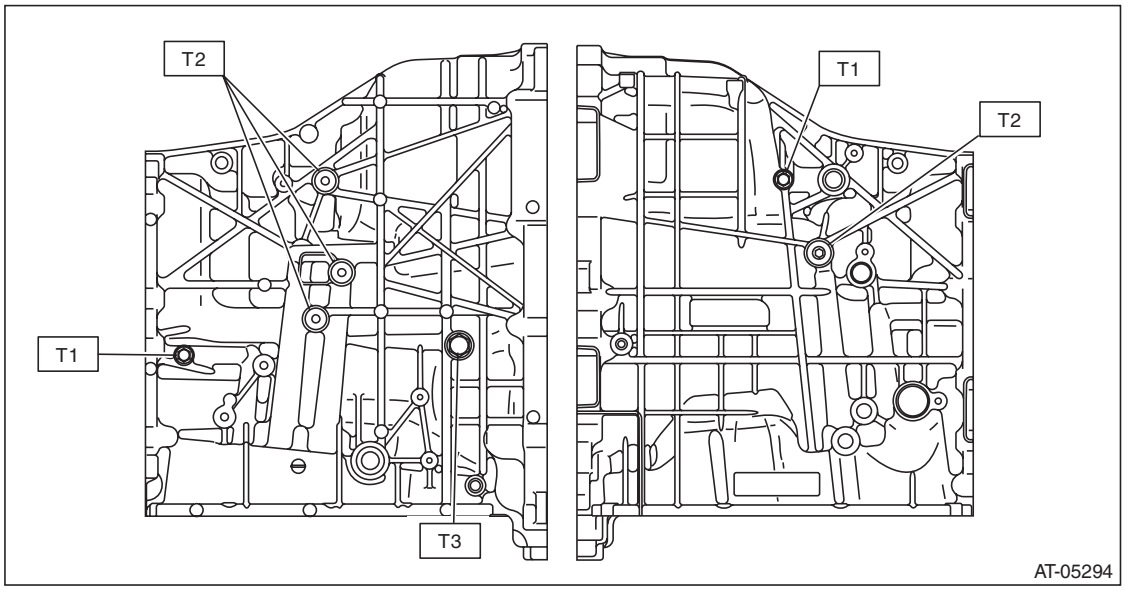

GETtheMANUALS.org

8) Install the lubrication pipe and O-ring.

NOTE:
- Use new O-rings.
- Apply CVTF to the O-ring.

Tightening torque:
16 N·m (1.6 kgf-m, 11.8 ft-lb)

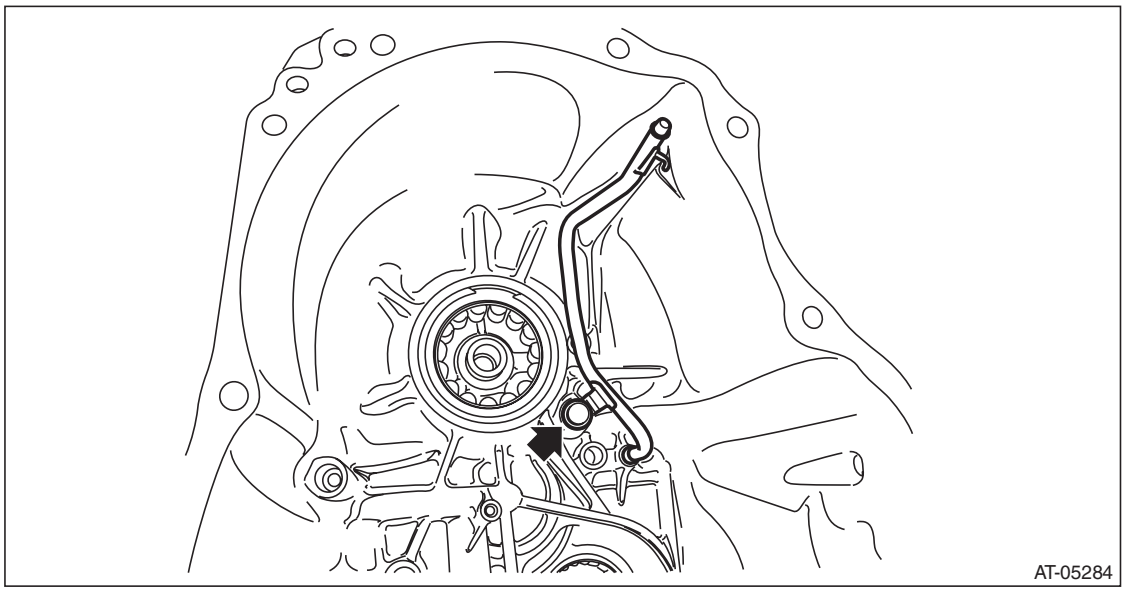

9) Install the CVTF inlet pipe and CVTF outlet pipe.

NOTE:
Use a new gasket.

Tightening torque:
T1: 16 N·m (1.6 kgf-m, 11.8 ft-lb)
T2: 40 N·m (4.1 kgf-m, 29.5 ft-lb)

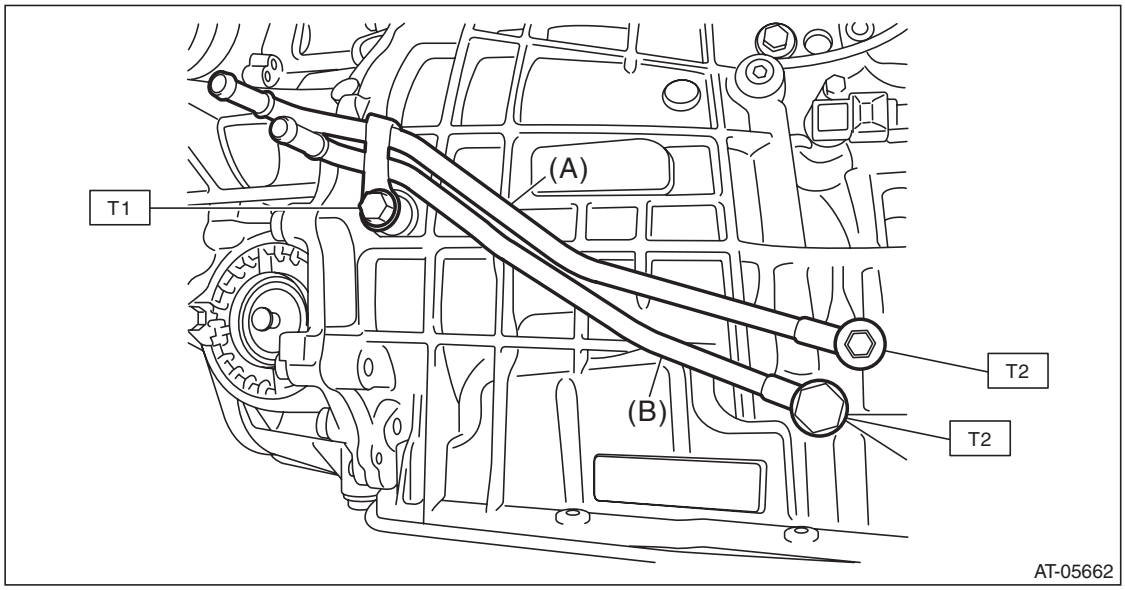

(A) CVTF outlet pipe
(B) CVTF inlet pipe

GETtheMANUALS.org

E: INSPECTION

- Check the transmission case for damage.
- Check for leakage of CVTF from the connection between converter case and transmission case.
- Check for leakage of CVTF from the connection between intermediate case and transmission case.
- Check the lubrication pipe for bend or damage.
- Check the bearing for smooth rotation.
- Check the bearing for seizure or wear.

F: ADJUSTMENT

NOTE:
When replacing the transmission case with a new part, perform the following check and adjustment for the selection.

- Select the thrust bearing for the forward clutch assembly. <Ref. to CVT-198, ADJUSTMENT, Forward Clutch Assembly.>
- Select the snap ring for the reduction gear. <Ref. to CVT-205, ADJUSTMENT, Reduction Driven Gear.>

GETtheMANUALS.org

40. Primary Pulley and Secondary Pulley

A: REMOVAL

NOTE:
Always replace primary pulley and secondary pulley as an assembly because they are non-disassembled parts.

1) Remove the transmission assembly from the vehicle. <Ref. to CVT-55, REMOVAL, Automatic Transmission Assembly.>
2) Remove the air breather hose. <Ref. to CVT-132, REMOVAL, Air Breather Hose.>
3) Remove the oil pan and control valve body. <Ref. to CVT-111, REMOVAL, Control Valve Body.>
4) Remove the transmission harness. <Ref. to CVT-121, REMOVAL, Transmission Harness.>
5) Remove the extension case. <Ref. to CVT-138, REMOVAL, Extension Case.>
6) Remove the rear drive shaft. <Ref. to CVT-141, REMOVAL, Rear Drive Shaft.>
7) Remove the transfer clutch assembly. <Ref. to CVT-146, REMOVAL, Transfer Clutch.>
8) Remove the transfer reduction driven gear assembly. <Ref. to CVT-158, REMOVAL, Transfer Reduction Driven Gear.>
9) Remove the intermediate case. <Ref. to CVT-165, REMOVAL, Intermediate Case.>
10) Remove the forward clutch assembly. <Ref. to CVT-180, REMOVAL, Forward Clutch Assembly.>
11) Remove the transmission case. <Ref. to CVT-211, REMOVAL, Transmission Case.>
12) Set the ST to the secondary pulley, and expand the V groove of pulley until the variator chain gets completely loose.
ST 18769AA000 EXPANDER PULLEY

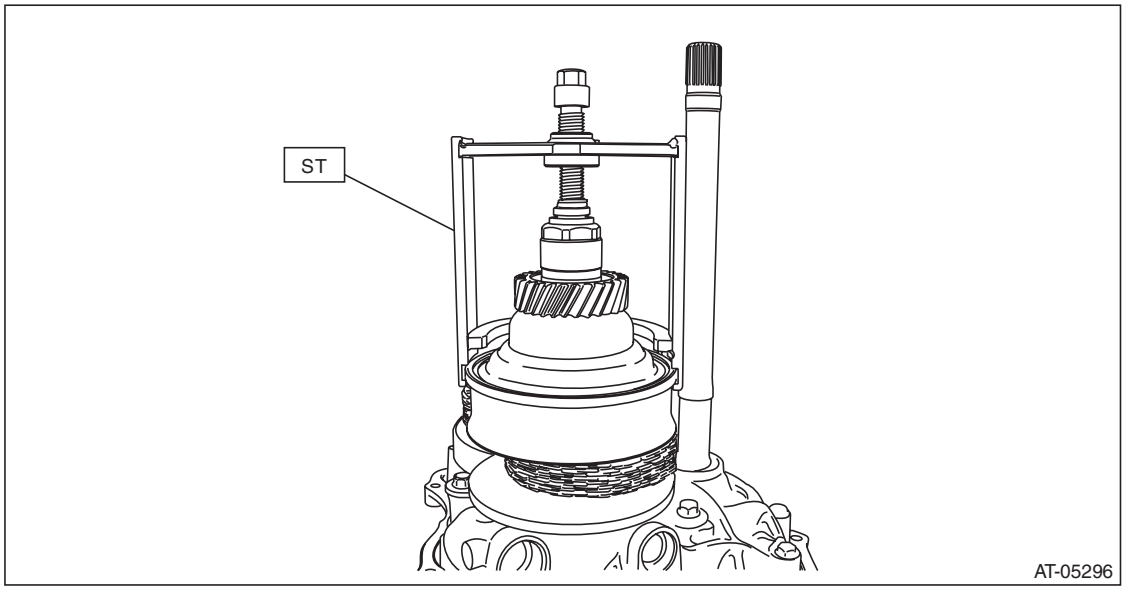

13) Remove the chain guide from lubrication pipe and support rod.

GETtheMANUALS.org

14) Remove the lubrication pipe and support rod.

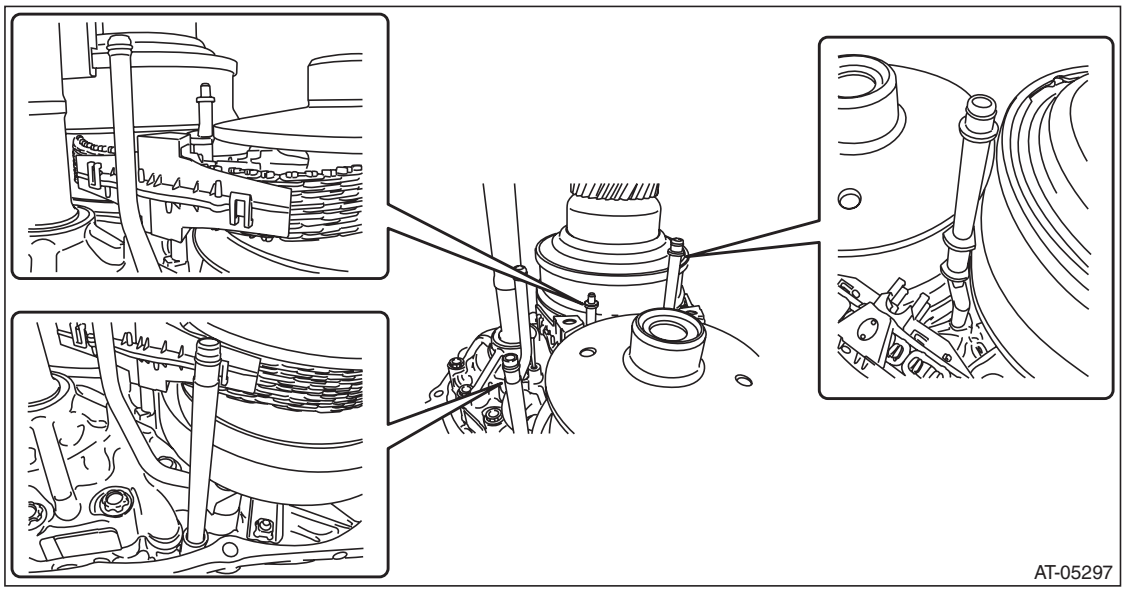

15) Detach the six claws to remove the two chain guide.

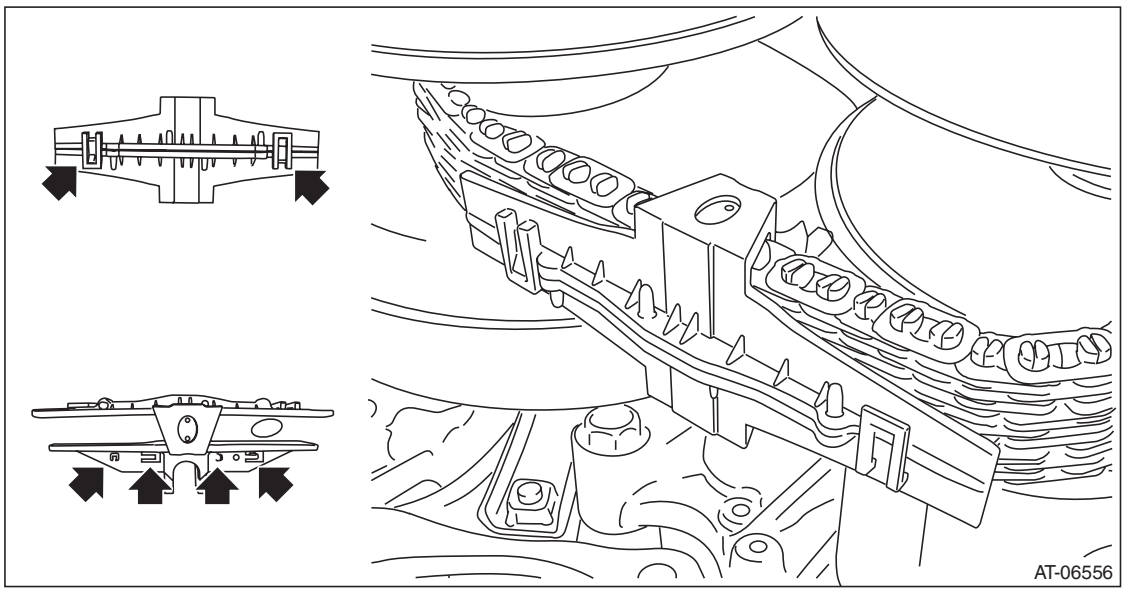

GETtheMANUALS.org

16) Remove the secondary pulley mounting bolt.

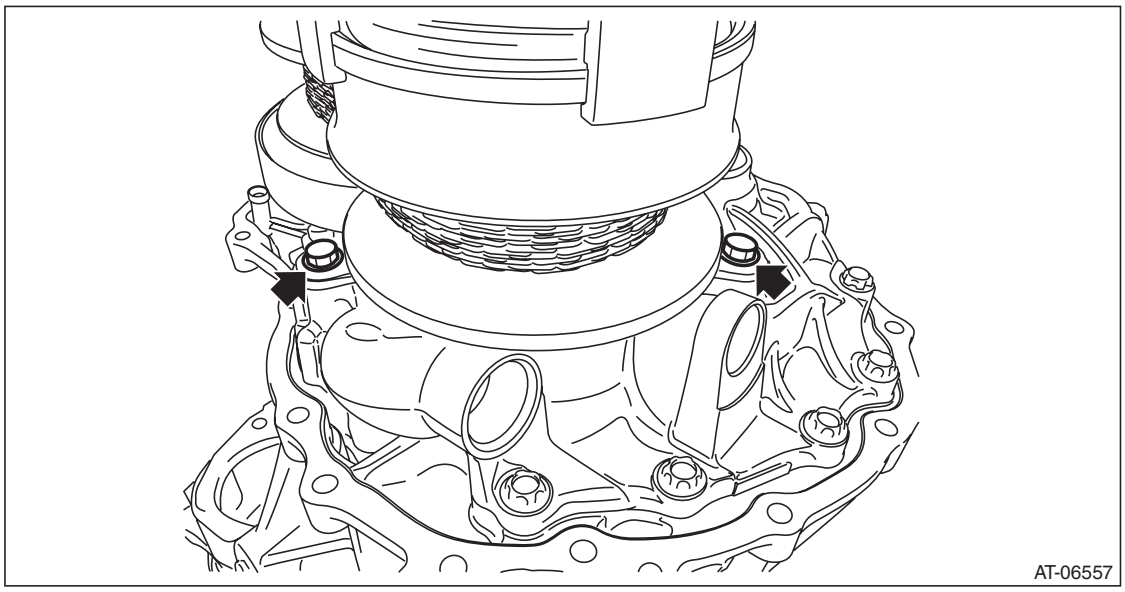

17) Remove the secondary pulley from drive pinion retainer and intersect the V groove of secondary pulley and V groove of primary pulley. Remove the variator chain from secondary pulley and remove the secondary pulley.

CAUTION:
Cover the V grooves of secondary pulley and primary pulley with cloth to protect the both pulleys and variator chain from scratching.

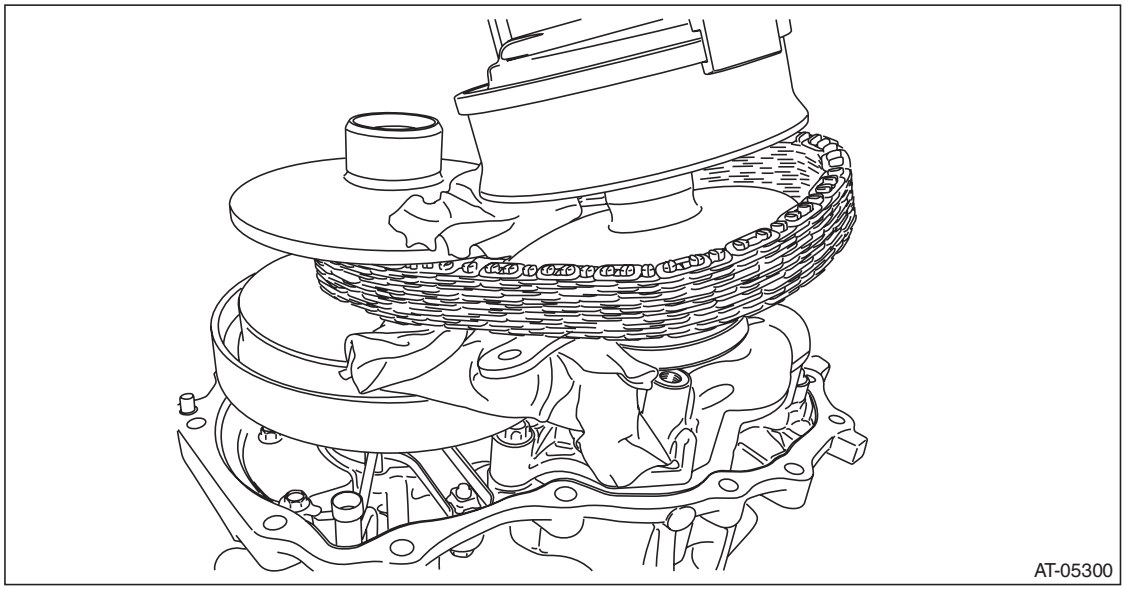

18) Remove the variator chain from primary pulley.

GETtheMANUALS.org

19) Remove the primary pulley mounting bolt.

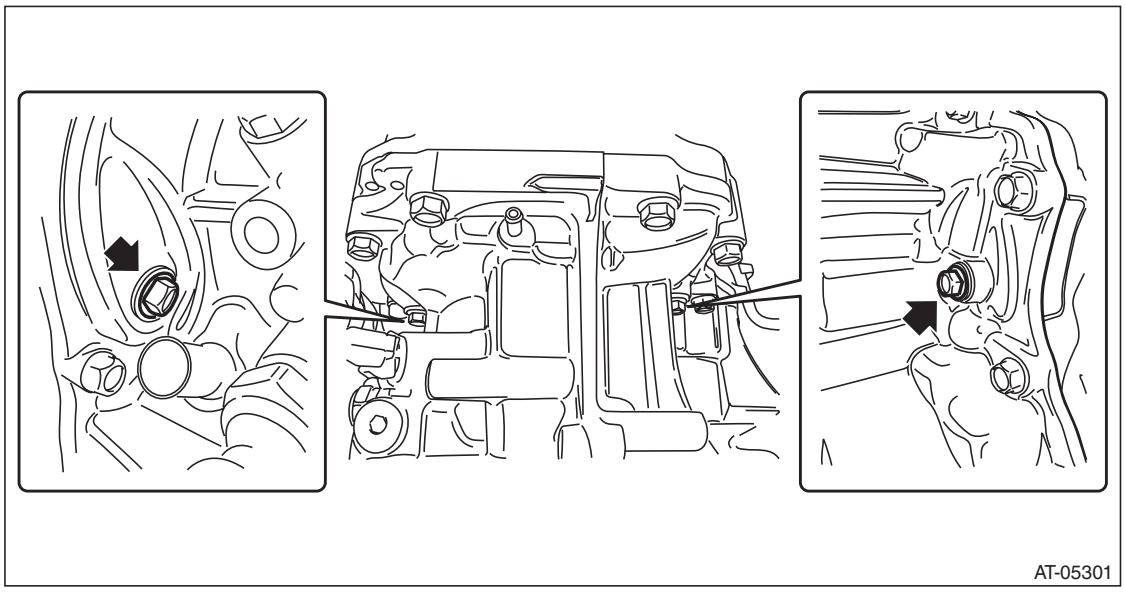

20) Remove the primary pulley.
21) Remove the two seal rings from drive pinion retainer.

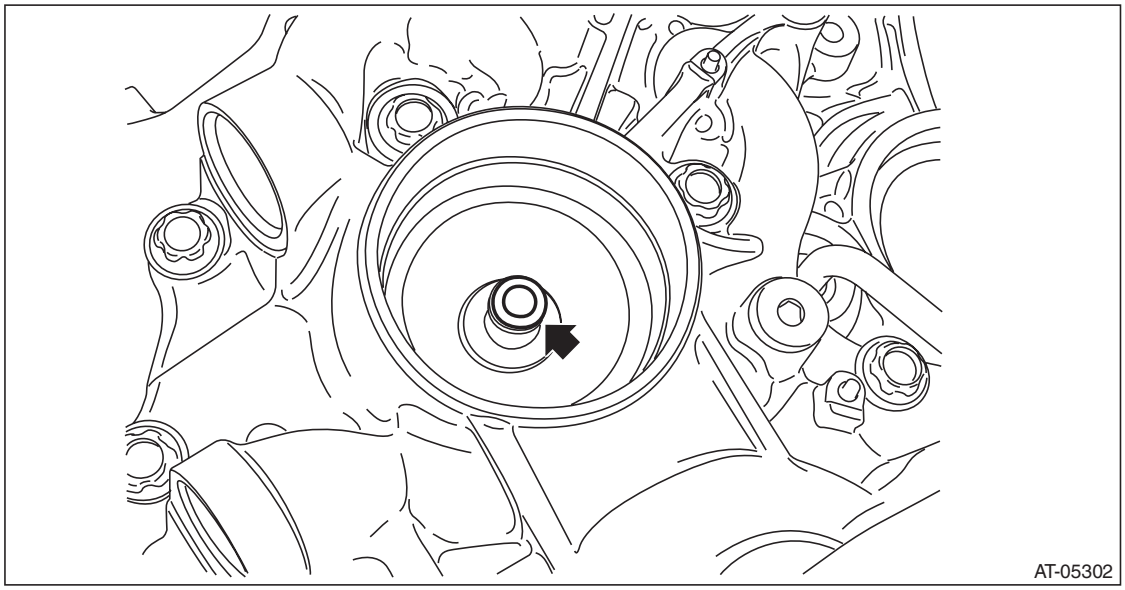

GETtheMANUALS.org

22) Remove the two seal rings from primary pulley.

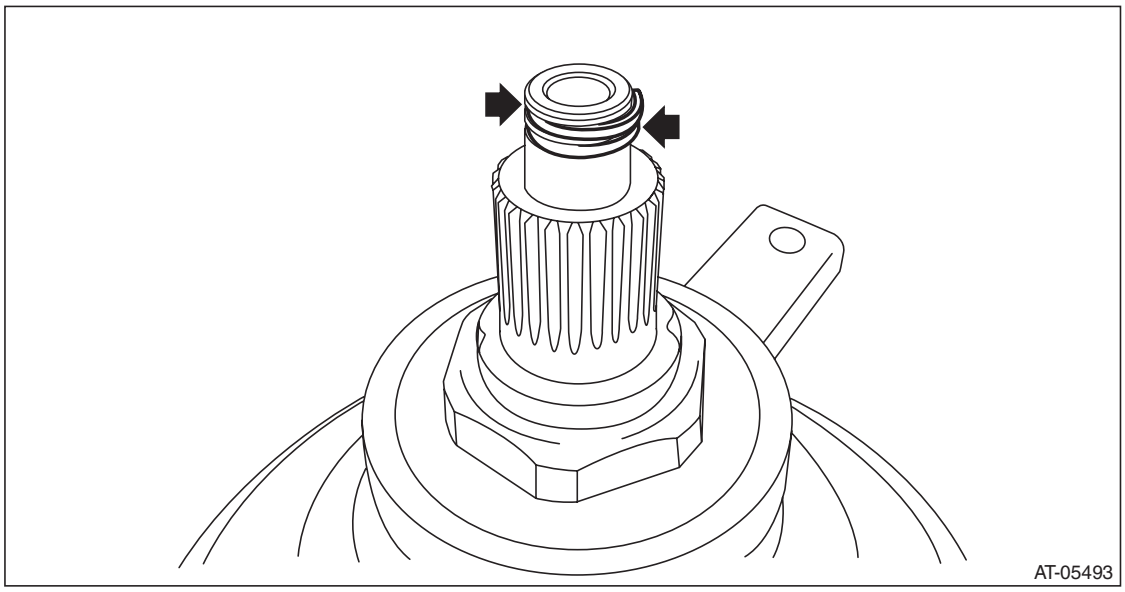

B: INSTALLATION

1) Select shims for pulley alignment. <Ref. to CVT-236, ADJUSTMENT, Primary Pulley and Secondary Pulley.>
2) Install the two seal rings to drive pinion retainer.

NOTE:
- Use a new seal ring.
- Apply CVTF to the seal rings.
- When installing the seal ring, do not expand the seal ring too much.

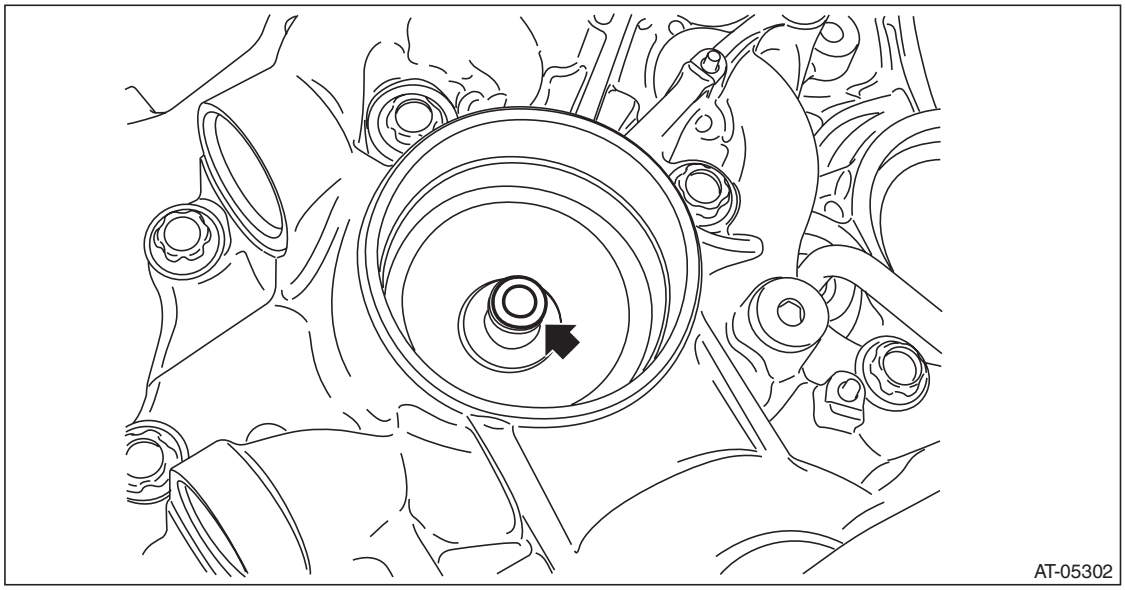

3) Install the selected shims to the primary pulley bearing catch surface.

GETtheMANUALS.org

4) Install the two seal rings to primary pulley.

NOTE:
- Use a new seal ring.
- Apply CVTF to the seal rings.

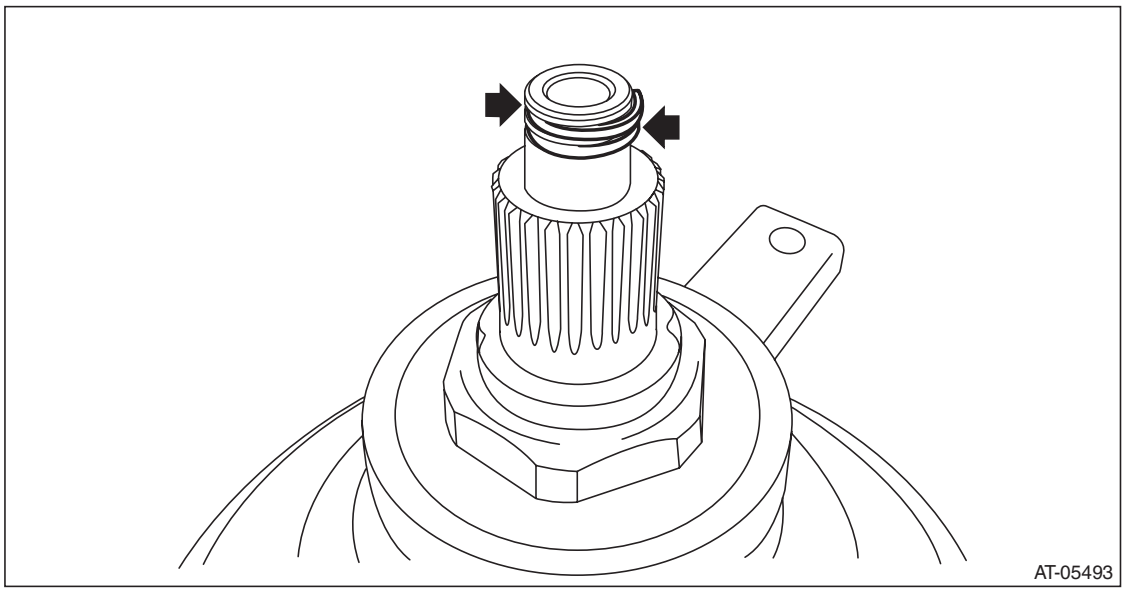

5) Install the primary pulley and adjust the position of bolt holes of primary bearing retainer and converter case to tighten the primary pulley bolt.

NOTE:
Use a new seal washer.

Tightening torque:
21 N·m (2.1 kgf-m, 15.5 ft-lb)

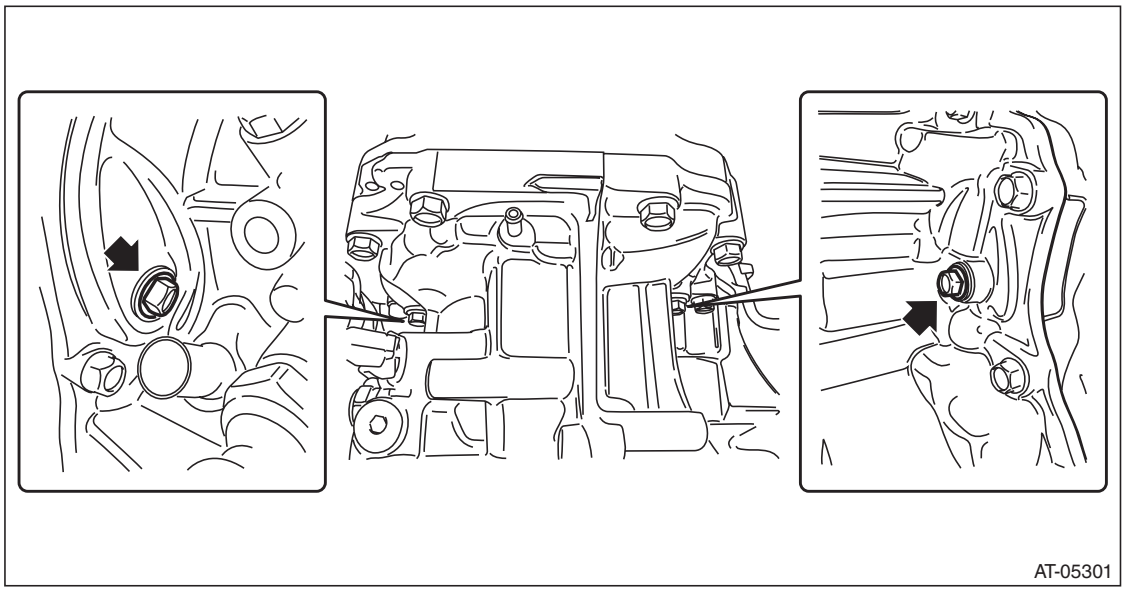

GETtheMANUALS.org

6) Set the ST to secondary pulley and expand the V groove of pulley.
ST1 18769AA000 EXPANDER PULLEY

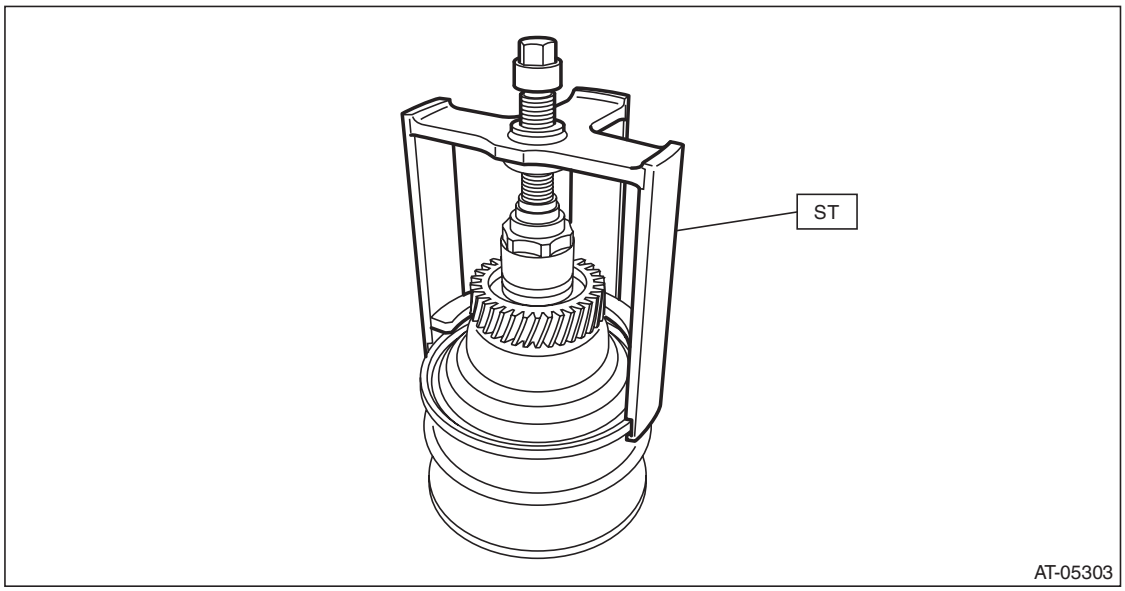

7) Place the variator chain on the primary pulley groove and attach the secondary pulley and variator chain together to the drive pinion retainer.

CAUTION:
Cover the V grooves of primary pulley and secondary pulley with cloth to protect the both pulleys and variator chain from scratching.

(1) Place the variator chain on primary pulley.
(2) Intersect the V groove of primary pulley and the V groove of secondary pulley and install the secondary pulley while placing the variator chain on secondary pulley.

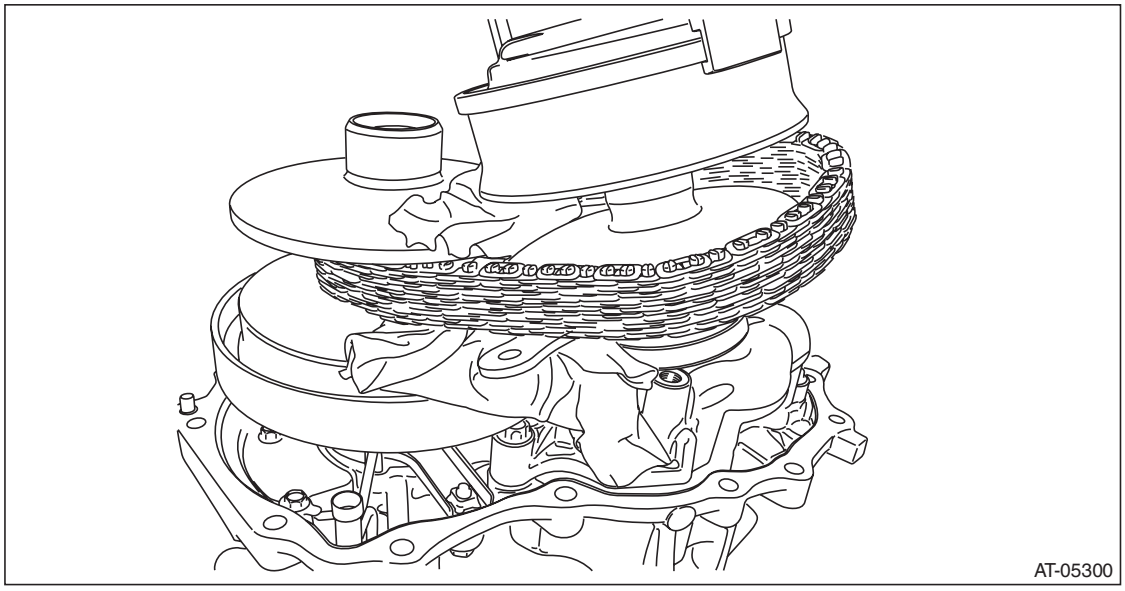

(3) While aligning the bolt hole of secondary bearing retainer and the bolt hole of driving pinion retainer, install the secondary pulley to drive pinion retainer.

GETtheMANUALS.org

8) Install the secondary pulley bolt.

Tightening torque:
33 N·m (3.4 kgf-m, 24.3 ft-lb)

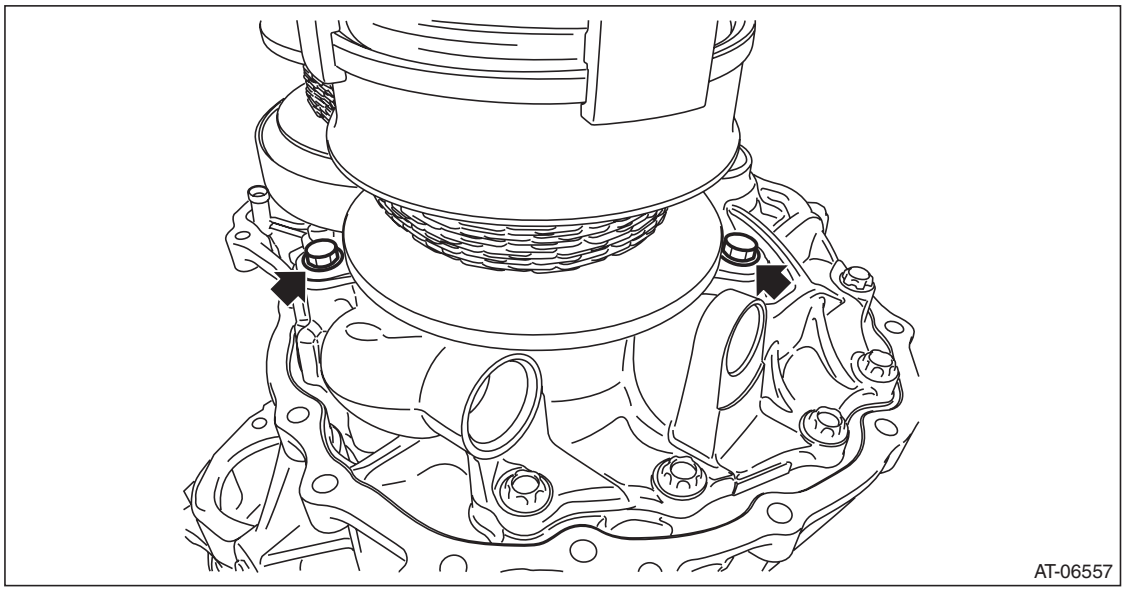

9) Install the chain guide.

NOTE:
Install it with two claws facing outward and with four claws facing inward.

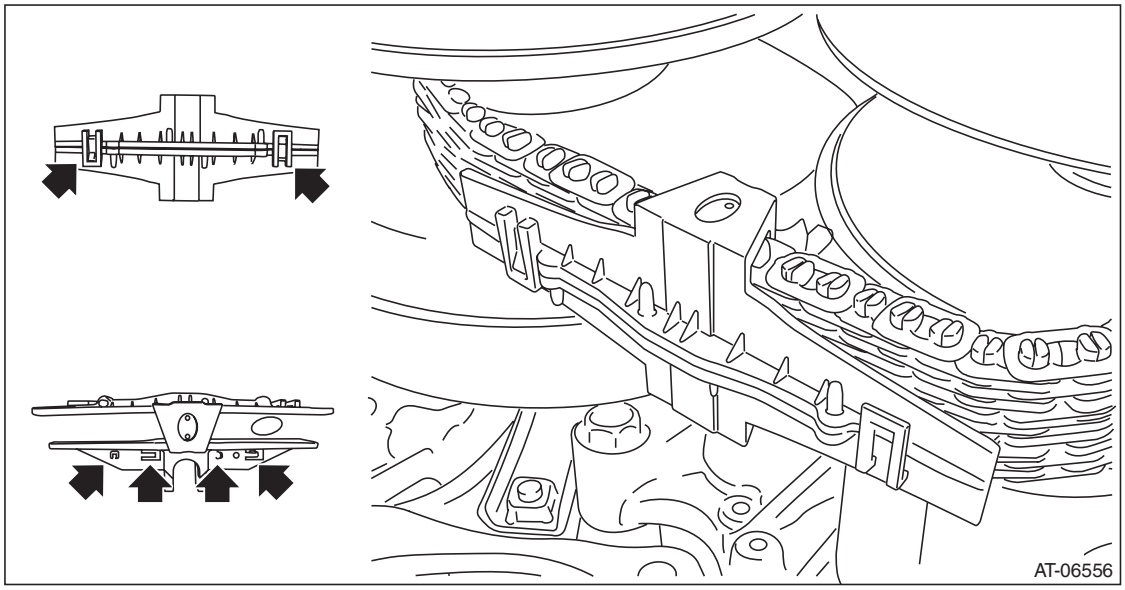

GETtheMANUALS.org

10) Engage the cutout portions of support rod and drive pinion retainer and install the support rod.

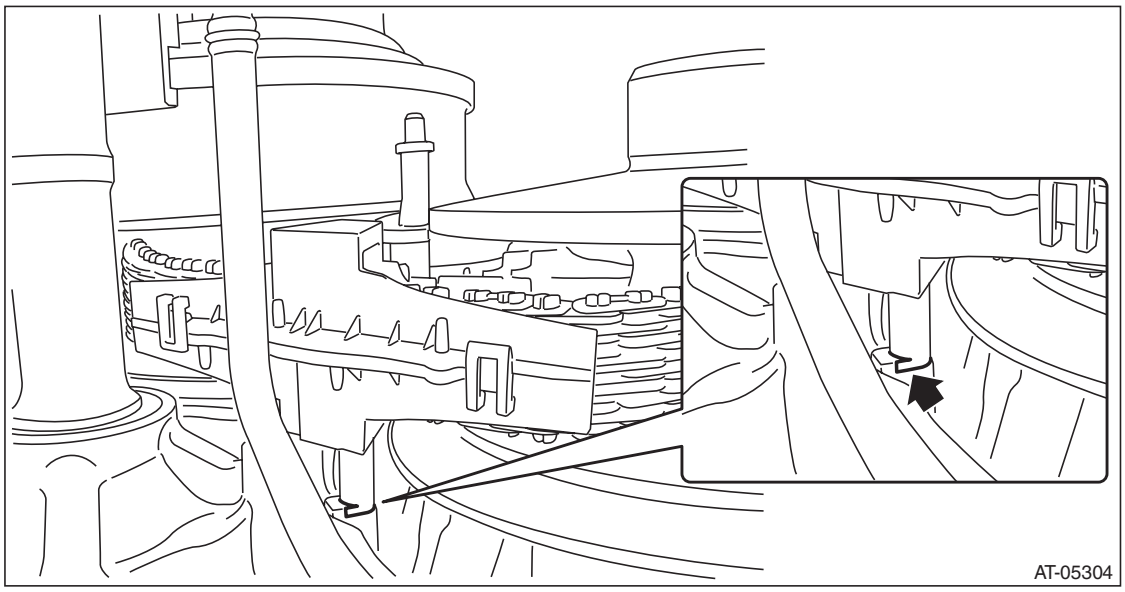

11) Engage the cutout portions of lubrication pipe and drive pinion retainer and install the lubrication pipe.

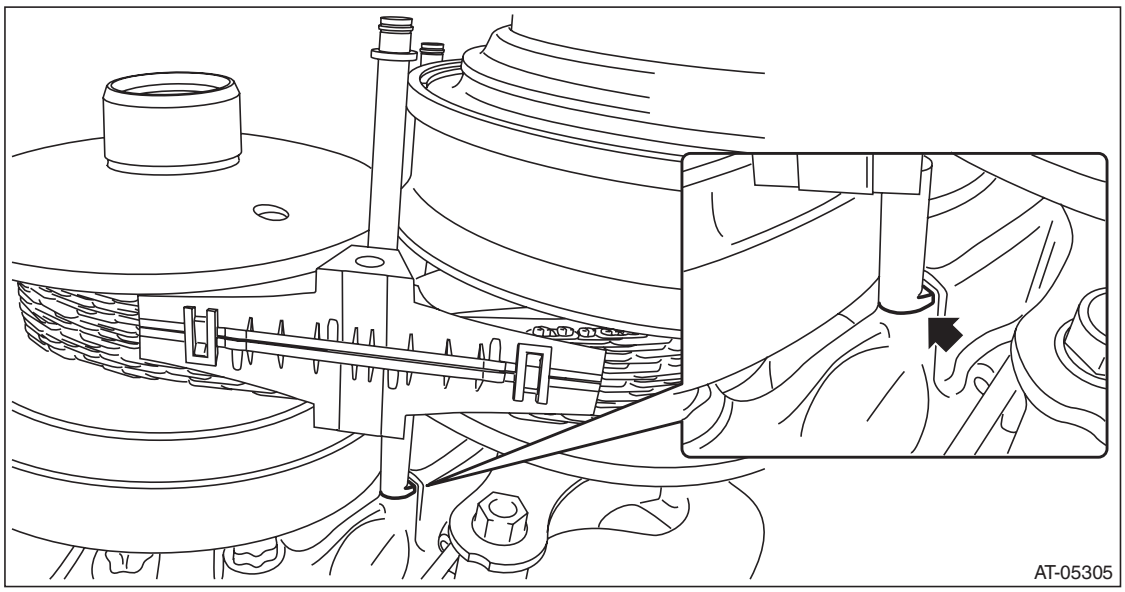

GETtheMANUALS.org

12) Install the chain guide so that the lubrication pipe and support rod run through between the protrusions of each chain guide. Then remove the ST (PULLEY EXPANDER).

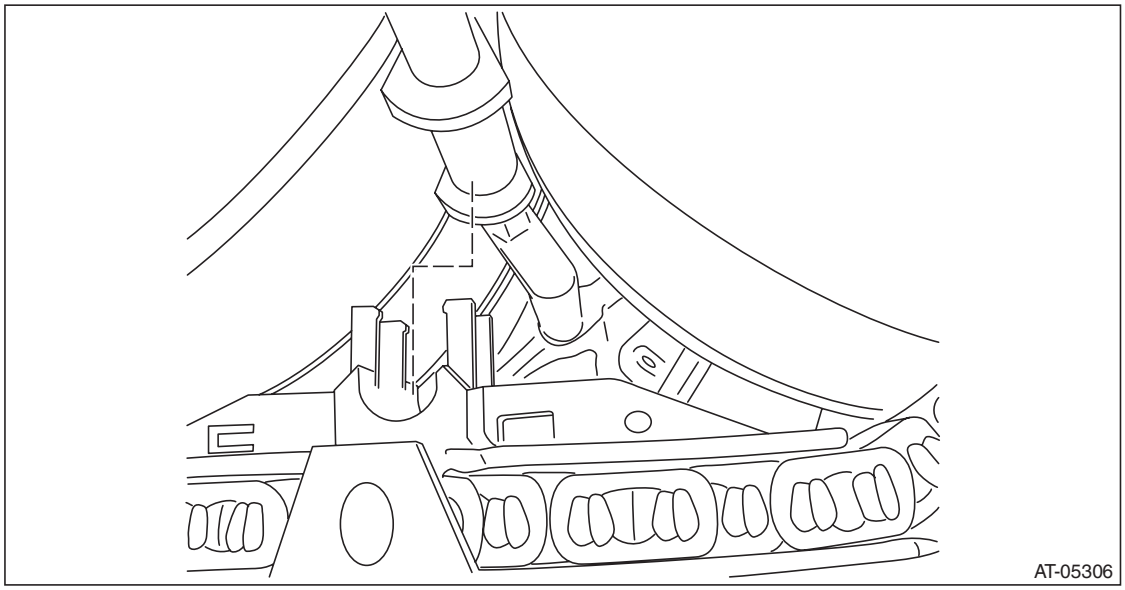

13) Install the O-ring to the lubrication pipe.

NOTE:
Use new O-rings.

14) Install the lubrication pipe.

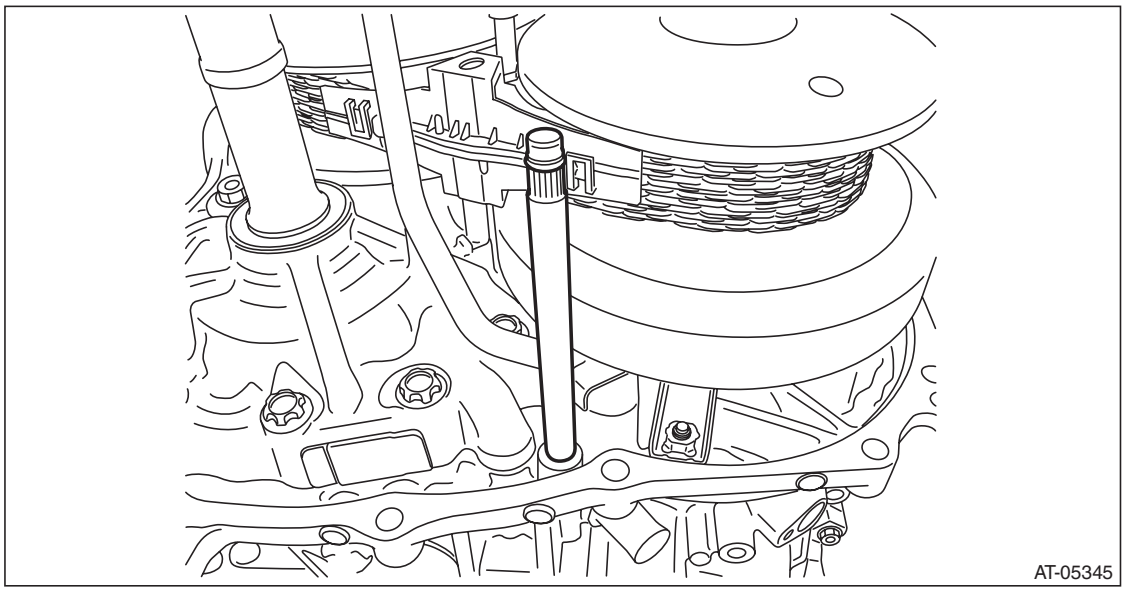

15) Install the transmission case. <Ref. to CVT-213, INSTALLATION, Transmission Case.>
16) Install the forward clutch assembly. <Ref. to CVT-181, INSTALLATION, Forward Clutch Assembly.>
17) Install the intermediate case. <Ref. to CVT-166, INSTALLATION, Intermediate Case.>
18) Install the transfer reduction driven gear assembly. <Ref. to CVT-158, INSTALLATION, Transfer Reduction Driven Gear.>
19) Install the transfer clutch assembly. <Ref. to CVT-147, INSTALLATION, Transfer Clutch.>
20) Install the rear drive shaft. <Ref. to CVT-141, INSTALLATION, Rear Drive Shaft.>
21) Install the extension case. <Ref. to CVT-138, INSTALLATION, Extension Case.>
22) Install the transmission harness. <Ref. to CVT-123, INSTALLATION, Transmission Harness.>
23) Install the control valve body and oil pan. <Ref. to CVT-115, INSTALLATION, Control Valve Body.>
24) Install the air breather hose. <Ref. to CVT-132, INSTALLATION, Air Breather Hose.>

GETtheMANUALS.org

25) Install the transmission assembly to the vehicle. <Ref. to CVT-70, INSTALLATION, Automatic Transmission Assembly.>

C: INSPECTION

- Check the surface of primary and secondary pulley cones for damage or wear.
- Check the primary and secondary pulley for damage.
- Check the bearing for seizure or wear.
- Apply CVTF to bearing and rotate the bearing to check for noise or dragging etc.

D: ADJUSTMENT

1. PROCEDURE IN REPLACEMENT OF PRIMARY AND SECONDARY PULLEY, OR IN REPLACEMENT OF PRIMARY PULLEY, SECONDARY PULLEY AND VARIATOR CHAIN

1) Measure depth “Lp” from the ST upper face to the primary pulley bearing catch surface at several points and calculate the average.
ST 499575400 GAUGE

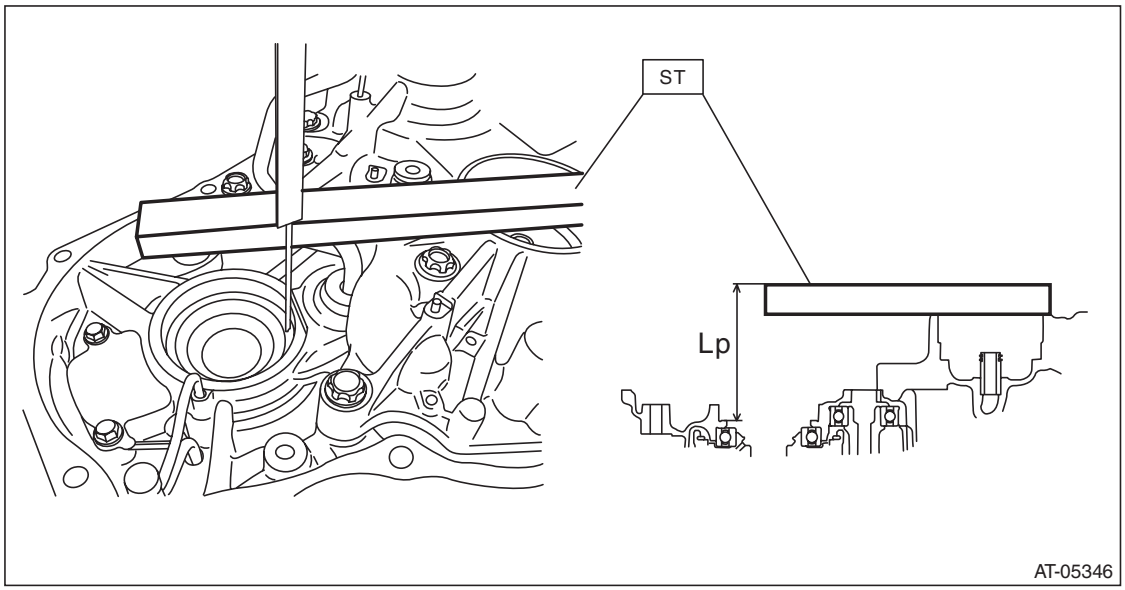

2) Measure height “Ls” from the drive pinion retainer upper face to the secondary pulley bearing catch surface at several points and calculate the average.
ST 499575400 GAUGE

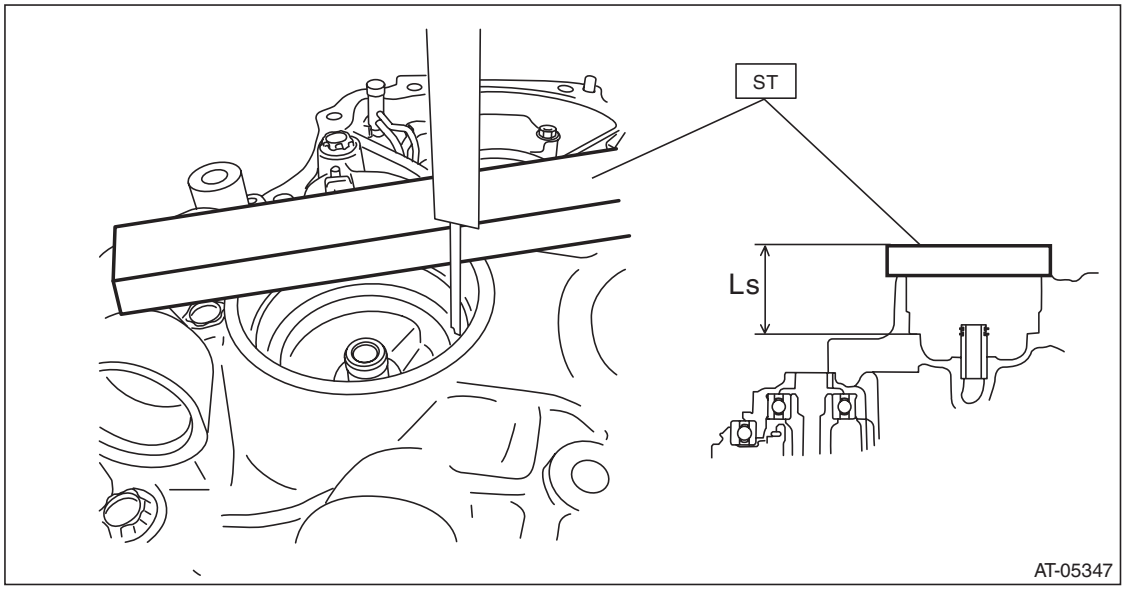

GETtheMANUALS.org

3) Calculate the following formula.
Calculation formula:
T (mm) = B + (Lp – Ls) + 31.601 – A
[T (in) = B + (Lp – Ls) + 1.224 – A]
T: Pulley alignment
A: Specified primary pulley dimension
B: Specified secondary pulley dimension
Lp: Depth from the ST upper face to the primary pulley bearing catch surface
Ls: Depth from the ST upper face to the secondary pulley bearing catch surface
31.601 mm (1.224 in): Constant

Pulley alignment T mm (in)	Shim thickness mm (in)
0.050 — 0.150 (0.002 — 0.006)	0.1 (0.004)
0.151 — 0.250 (0.006 — 0.01)	0.2 (0.008)
0.251 — 0.350 (0.01 — 0.014)	0.3 (0.012)
0.351 — 0.450 (0.014 — 0.018)	0.4 (0.016)
0.451 — 0.550 (0.018 — 0.022)	0.5 (0.020)
0.551 — 0.650 (0.022 — 0.026)	0.6 (0.024)
0.651 — 0.750 (0.026 — 0.030)	0.7 (0.028)
0.751 — 0.850 (0.030 — 0.033)	0.8 (0.031)
0.851 — 0.950 (0.033 — 0.037)	0.9 (0.035)

4) Select one to two shims so that the total thickness meets the value obtained from step 3).

Part No.	Shim thickness mm (in)
32451AA000	0.1 (0.004)
32451AA010	0.2 (0.008)
32451AA020	0.3 (0.012)
32451AA030	0.4 (0.016)
32451AA040	0.5 (0.020)

GETtheMANUALS.org

2. PROCEDURE WHEN REPLACING ONLY DRIVE PINION RETAINER OR CONVERTER CASE

1) Clean the mating surface of current drive pinion retainer and converter case.
2) Measure and record the shim thickness that is attached on the current converter case.
3) Using the current drive pinion retainer, measure depth “Lp1” from the ST upper face to the primary pulley bearing catch surface at several points and calculate the average.
ST 499575400 GAUGE

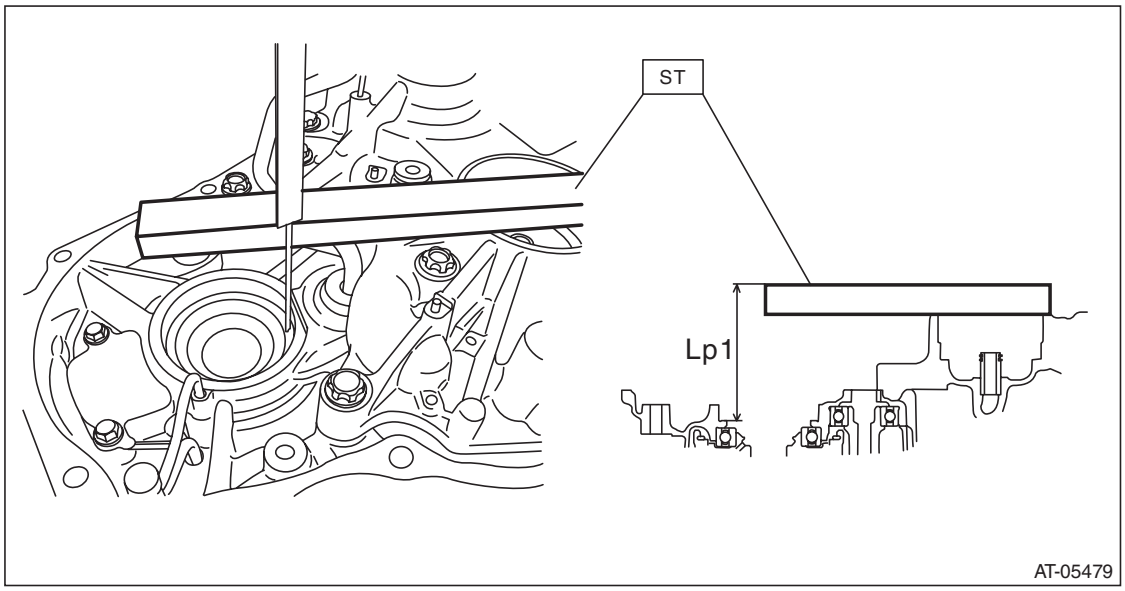

4) Using the current drive pinion retainer or current converter case, measure depth “Ls1” from the ST upper face to the secondary pulley bearing catch surface at several points and calculate the average.
ST 499575400 GAUGE

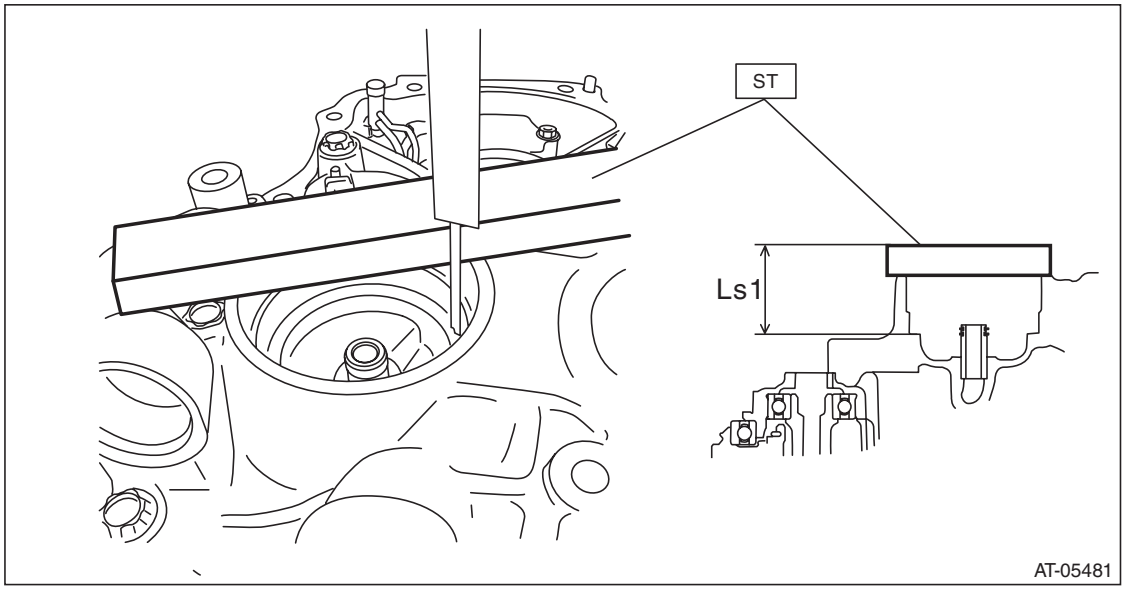

5) Calculate the “LD1” using the following formula and record it.
Calculation formula:
LD1 mm (in) = Lp1 – Ls1
LD1: Height from the primary pulley bearing catch surface to the secondary pulley bearing catch surface
Lp1: Depth from the ST upper face to the primary pulley bearing catch surface
Ls1: Depth from the ST upper face to the secondary pulley bearing catch surface

GETtheMANUALS.org

6) Using the new drive pinion retainer or new converter case, measure depth “Lp2” from the ST upper face to the primary pulley bearing catch surface at several points and calculate the average.
ST 499575400 GAUGE

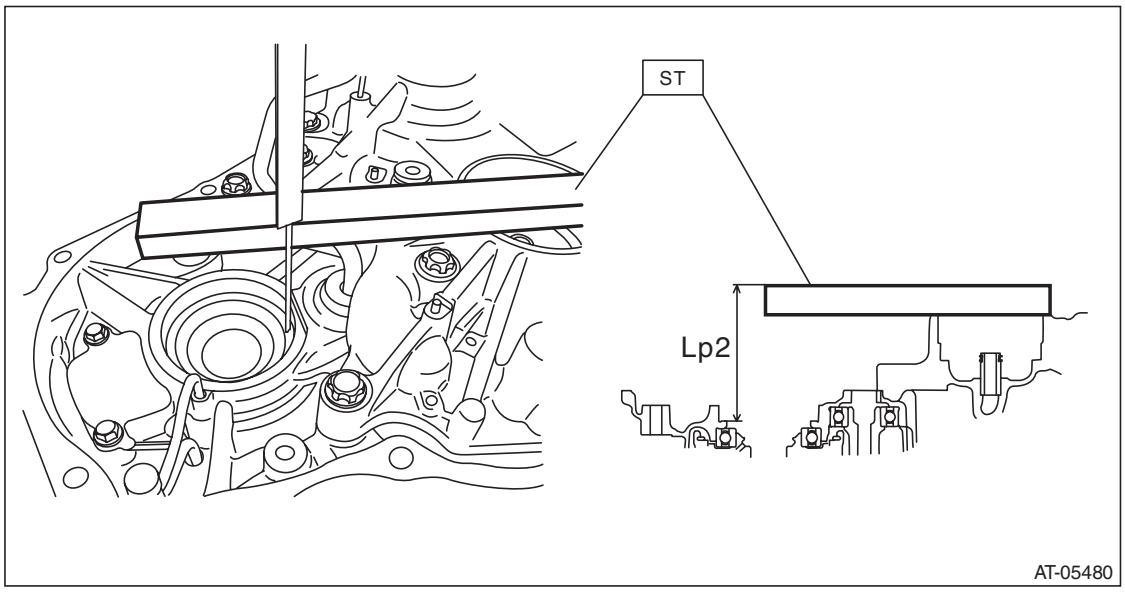

7) Using the new drive pinion retainer or new converter case, measure depth “Ls2” from the ST upper face to the secondary pulley bearing catch surface at several points and calculate the average.
ST 499575400 GAUGE

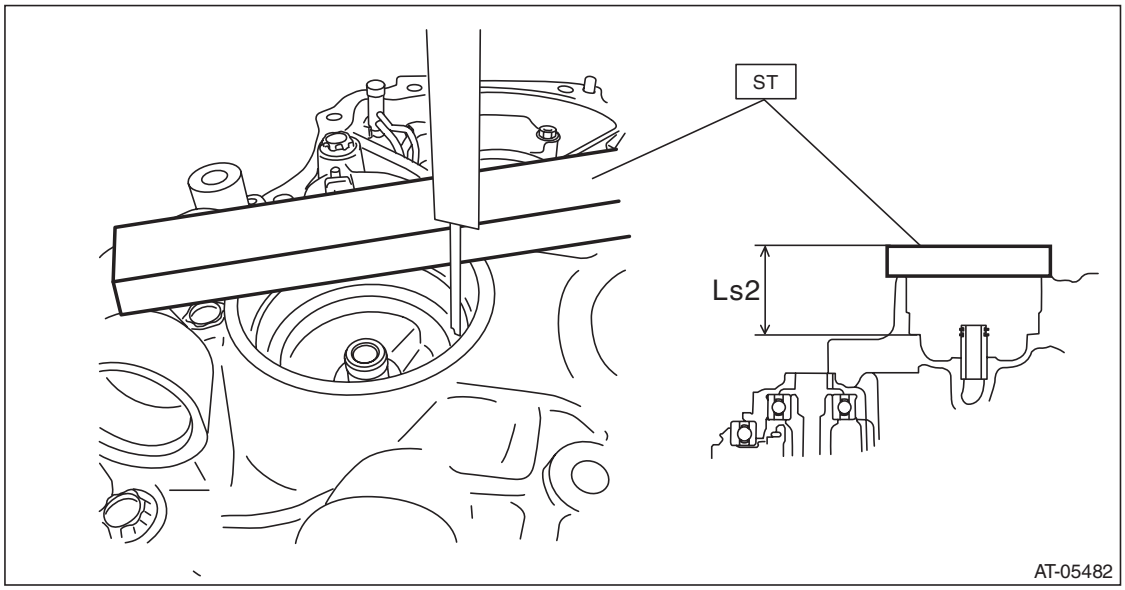

8) Calculate the “LD2” using the following formula and record it.
Calculation formula:
LD2 mm (in) = Lp2 – Ls2
LD2: Height from the primary pulley bearing catch surface to the secondary pulley bearing catch surface
Lp2: Depth from the ST upper face to the primary pulley bearing catch surface
Ls2: Depth from the ST upper face to the secondary pulley bearing catch surface

GETtheMANUALS.org

9) Calculate the recorded values of “LD1” and “LD2” to obtain the positive number to select the shims.
Calculation formula: T1 mm (in) = LD1 – LD2 or T2 mm (in) = LD2 – LD1
T1, T2: Difference between new drive pinion retainer or new converter case and current drive pinion retainer or current converter case
LD1: Calculated value of current drive pinion retainer or current converter case
LD2: Calculated value of new drive pinion retainer or new converter case

Difference of the case (T1) mm (in)	Shim selection procedure
0 — 0.020 (0 — 0.00078)	Select new shim of same thickness with the shim that is used on primary pulley side of the current converter case.
0.021 — 0.070 (0.000827 — 0.00275)	Select new shim of same thickness with the shim that is used on primary pulley side of the current converter case.
0.071 — 0.125 (0.00279 — 0.00492)	Select the shim 0.1 mm thinner than the shim that is used on primary pulley side of the current converter case.
0.126 — 0.170 (0.00496 — 0.00669)	Select the shim 0.1 mm thinner than the shim that is used on primary pulley side of the current converter case.
0.171 — 0.230 (0.00673 — 0.00905)	Select the shim 0.2 mm thinner than the shim that is used on primary pulley side of the current converter case.
0.231 — 0.250 (0.00909 — 0.00984)	Select the shim 0.3 mm thinner than the shim that is used on primary pulley side of the current converter case.
0.251 — 0.300 (0.00988 — 0.01181)	Select the shim 0.3 mm thinner than the shim that is used on primary pulley side of the current converter case.

Difference of the case (T2) mm (in)	Shim selection procedure
0 — 0.020 (0 — 0.00078)	Select new shim of same thickness with the shim that is used on primary pulley side of the current converter case.
0.021 — 0.080 (0.000827 — 0.00315)	Select new shim of same thickness with the shim that is used on primary pulley side of the current converter case.
0.081 — 0.100 (0.00318 — 0.00393)	Select the shim 0.1 mm thicker than the shim that is used on primary pulley side of the current converter case.
0.101 — 0.120 (0.00397 — 0.00472)	Select the shim 0.1 mm thicker than the shim that is used on primary pulley side of the current converter case.
0.121 — 0.180 (0.00476 — 0.00708)	Select the shim 0.1 mm thicker than the shim that is used on primary pulley side of the current converter case.
0.181 — 0.220 (0.00712 — 0.00866)	Select the shim 0.2 mm thicker than the shim that is used on primary pulley side of the current converter case.
0.221 — 0.280 (0.00870 — 0.01102)	Select the shim 0.2 mm thicker than the shim that is used on primary pulley side of the current converter case.
0.281 — 0.300 (0.01106 — 0.01181)	Select the shim 0.3 mm thicker than the shim that is used on primary pulley side of the current converter case.

Part No.	Shim thickness mm (in)
32451AA000	0.1 (0.004)
32451AA010	0.2 (0.008)
32451AA020	0.3 (0.012)
32451AA030	0.4 (0.016)
32451AA040	0.5 (0.020)

GETtheMANUALS.org

41. Variator Chain

A: REMOVAL

For removal of variator chain, refer to “Primary Pulley and Secondary Pulley”. <Ref. to CVT-226, REMOVAL, Primary Pulley and Secondary Pulley.>

B: INSTALLATION

For installation of variator chain, refer to “Primary Pulley and Secondary Pulley”. <Ref. to CVT-230, INSTALLATION, Primary Pulley and Secondary Pulley.>

C: INSPECTION

Check the variator chain for damage and wear.

GETtheMANUALS.org

42. Drive Pinion Shaft Assembly

A: REMOVAL

1) Remove the transmission assembly from the vehicle. <Ref. to CVT-55, REMOVAL, Automatic Transmission Assembly.>
2) Remove the air breather hose. <Ref. to CVT-132, REMOVAL, Air Breather Hose.>
3) Remove the oil pan and control valve body. <Ref. to CVT-111, REMOVAL, Control Valve Body.>
4) Remove the transmission harness. <Ref. to CVT-121, REMOVAL, Transmission Harness.>
5) Remove the extension case. <Ref. to CVT-138, REMOVAL, Extension Case.>
6) Remove the rear drive shaft. <Ref. to CVT-141, REMOVAL, Rear Drive Shaft.>
7) Remove the transfer clutch assembly. <Ref. to CVT-146, REMOVAL, Transfer Clutch.>
8) Remove the transfer reduction driven gear assembly. <Ref. to CVT-158, REMOVAL, Transfer Reduction Driven Gear.>
9) Remove the intermediate case. <Ref. to CVT-165, REMOVAL, Intermediate Case.>
10) Remove the forward clutch assembly. <Ref. to CVT-180, REMOVAL, Forward Clutch Assembly.>
11) Remove the transmission case. <Ref. to CVT-211, REMOVAL, Transmission Case.>
12) Remove the primary pulley, secondary pulley and variator chain. <Ref. to CVT-226, REMOVAL, Primary Pulley and Secondary Pulley.>
13) Using the ST, remove the drive pinion retainer and lubrication pipe.
ST 18270KA020 SOCKET (E20)

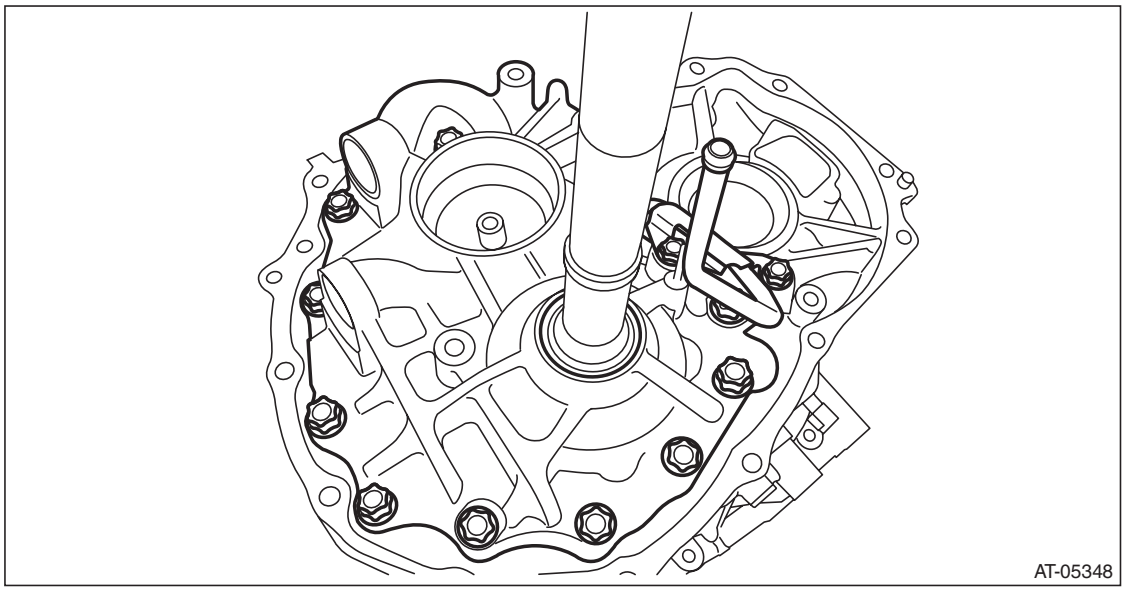

GETtheMANUALS.org

14) Remove the O-ring.

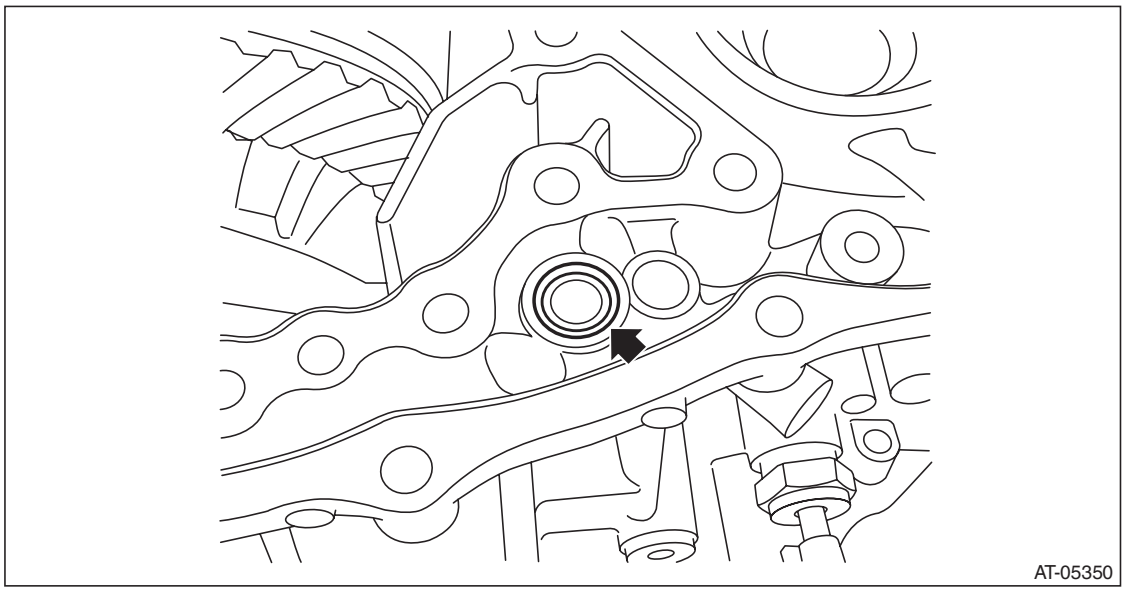

15) Remove the oil pump.

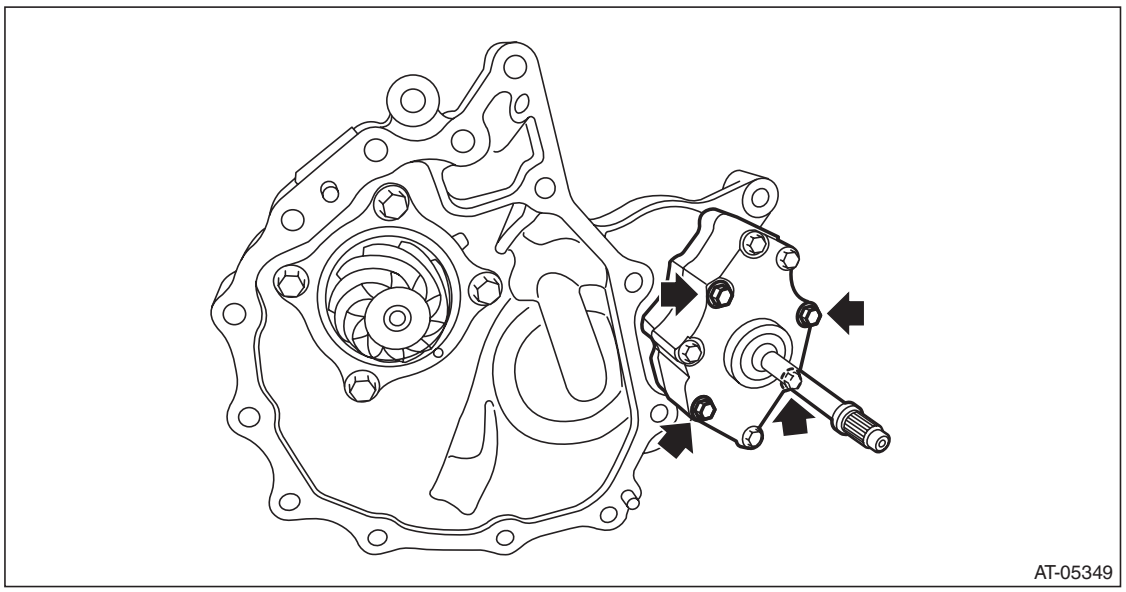

GETtheMANUALS.org

16) Remove the O-ring.

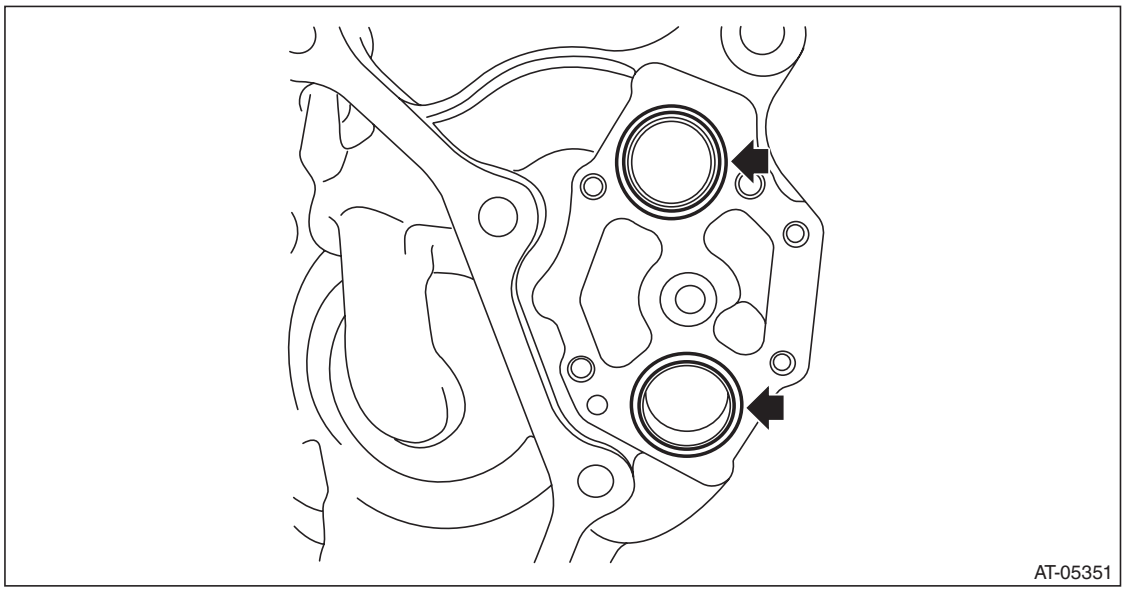

B: INSTALLATION

1) Clean the mating surface of drive pinion retainer and converter case.
2) Adjust the backlash and tooth contact between drive pinion shaft assembly and the front differential side gear. <Ref. to CVT-256, ADJUSTMENT, Drive Pinion Shaft Assembly.>
3) Install the O-ring for oil pump to drive pinion retainer.

NOTE:
- Use new O-rings.
- Apply CVTF to the O-ring.

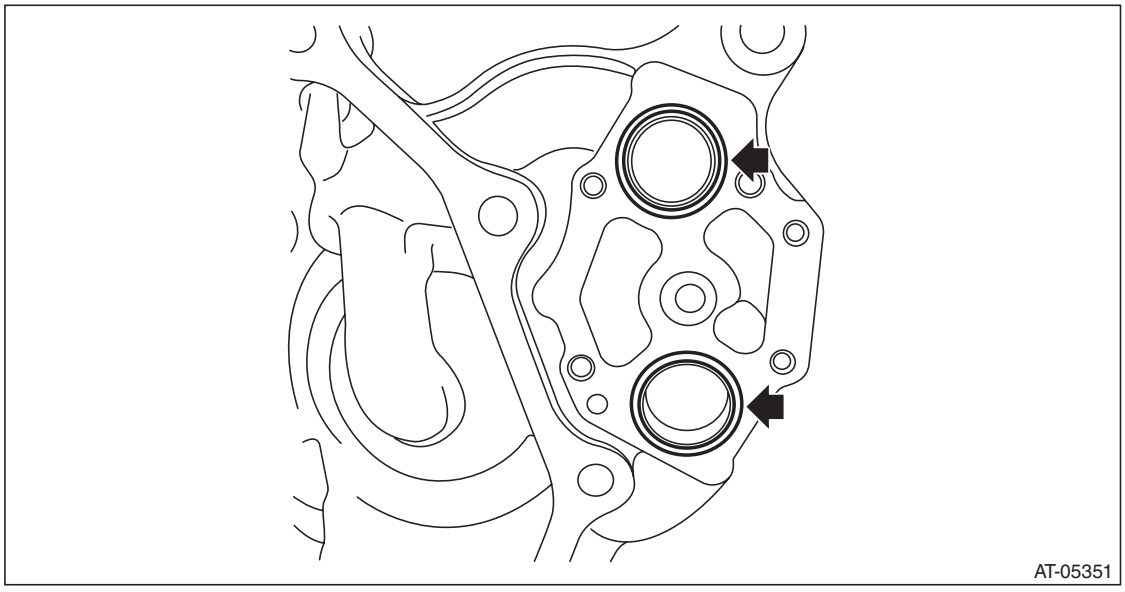

GETtheMANUALS.org

4) Install the oil pump.

NOTE:
Apply CVTF to the bolt.

Tightening torque:
8.5 N·m (0.9 kgf-m, 6.3 ft-lb)

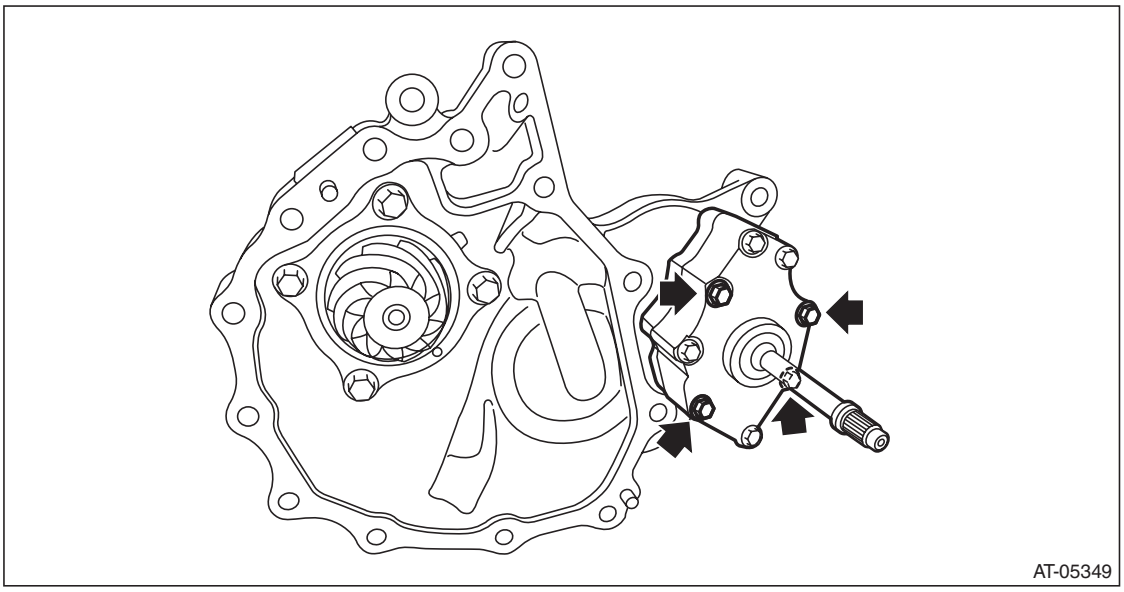

5) Apply liquid gasket seamlessly to the mating surface of drive pinion retainer.

NOTE:
Be careful not to block the arrowed hole when applying liquid gasket.

Liquid gasket:
THREE BOND 1215 (Part No. 004403007) or equivalent

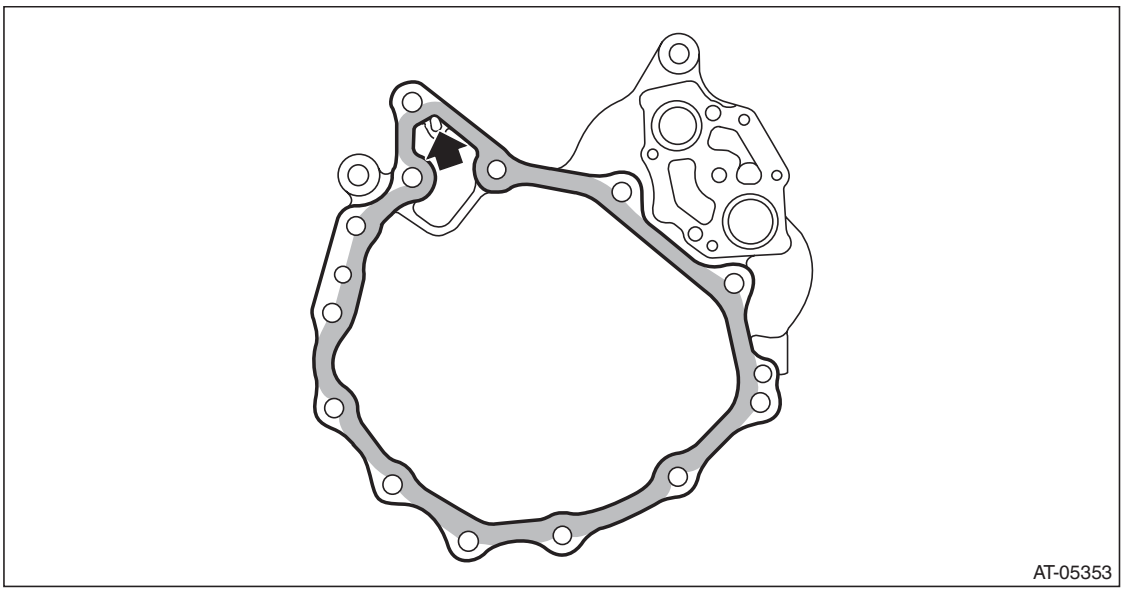

GETtheMANUALS.org

6) Install the O-ring to the lubrication pipe.

NOTE:
- Use new O-rings.
- Apply CVTF to the O-ring.

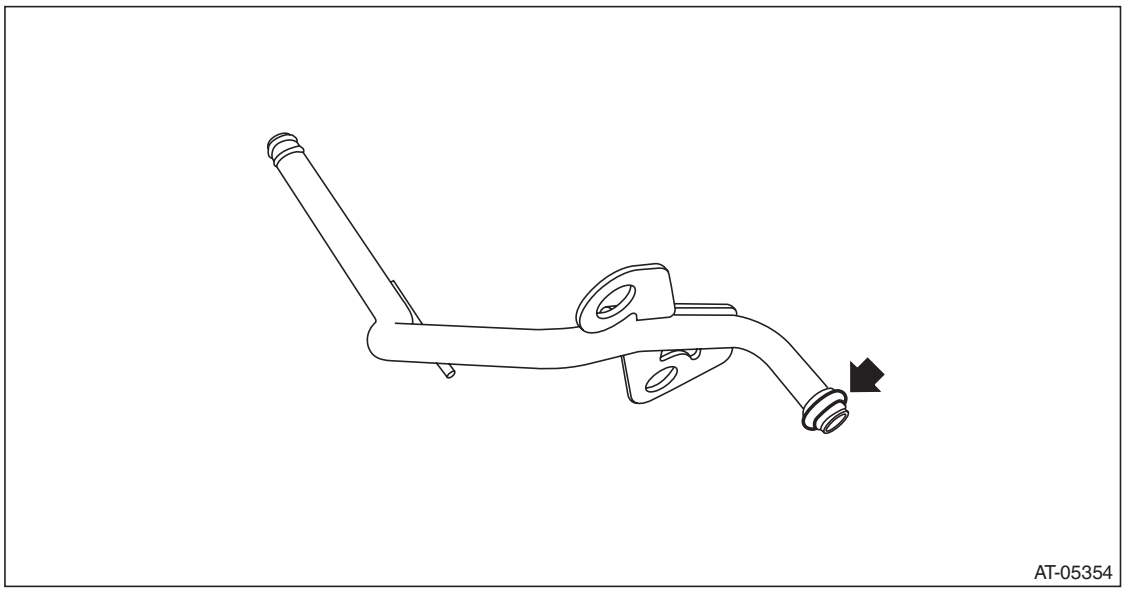

7) Install the drive pinion retainer and lubrication pipe to converter case and tighten the bolt using the ST.
ST 18270KA020 SOCKET (E20)

NOTE:
Do not confuse the three different-length bolts when installing.

Tightening torque:
43 N·m (4.4 kgf-m, 31.7 ft-lb)

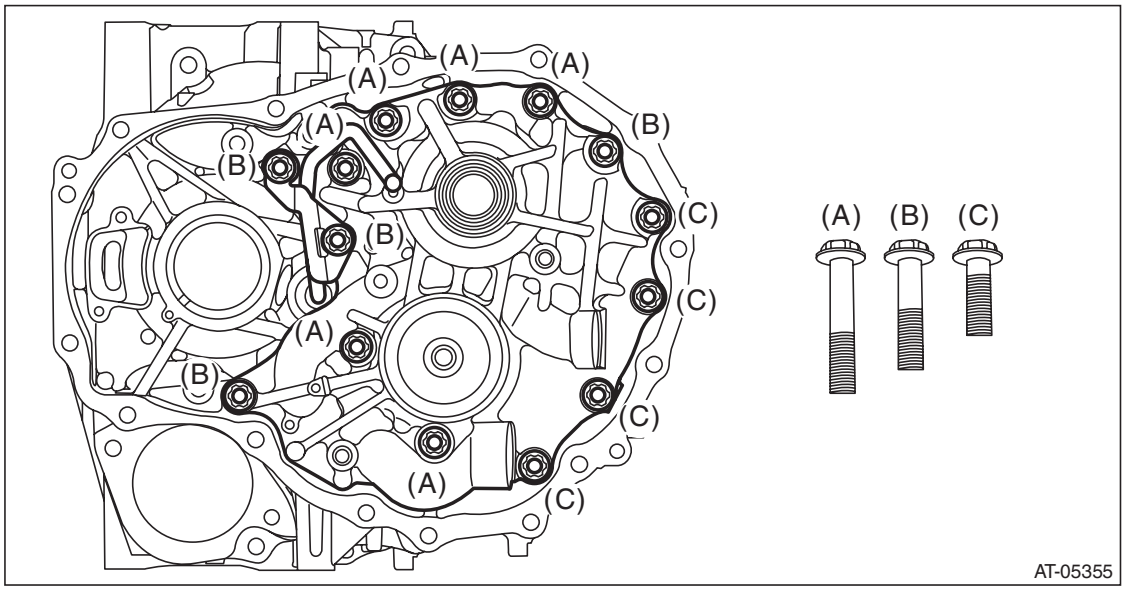

8) Install the primary pulley, secondary pulley and variator chain. <Ref. to CVT-230, INSTALLATION, Primary Pulley and Secondary Pulley.>
9) Install the transmission case. <Ref. to CVT-213, INSTALLATION, Transmission Case.>
10) Install the forward clutch assembly. <Ref. to CVT-181, INSTALLATION, Forward Clutch Assembly.>
11) Install the intermediate case. <Ref. to CVT-166, INSTALLATION, Intermediate Case.>
12) Install the transfer reduction driven gear assembly. <Ref. to CVT-158, INSTALLATION, Transfer Reduction Driven Gear.>

GETtheMANUALS.org

13) Install the transfer clutch assembly. <Ref. to CVT-147, INSTALLATION, Transfer Clutch.>
14) Install the rear drive shaft. <Ref. to CVT-141, INSTALLATION, Rear Drive Shaft.>
15) Install the extension case. <Ref. to CVT-138, INSTALLATION, Extension Case.>
16) Install the transmission harness. <Ref. to CVT-123, INSTALLATION, Transmission Harness.>
17) Install the oil pan and control valve body. <Ref. to CVT-115, INSTALLATION, Control Valve Body.>
18) Install the air breather hose. <Ref. to CVT-132, INSTALLATION, Air Breather Hose.>
19) Install the transmission assembly to the vehicle. <Ref. to CVT-70, INSTALLATION, Automatic Transmission Assembly.>

C: DISASSEMBLY

1) Remove the drive pinion assembly.

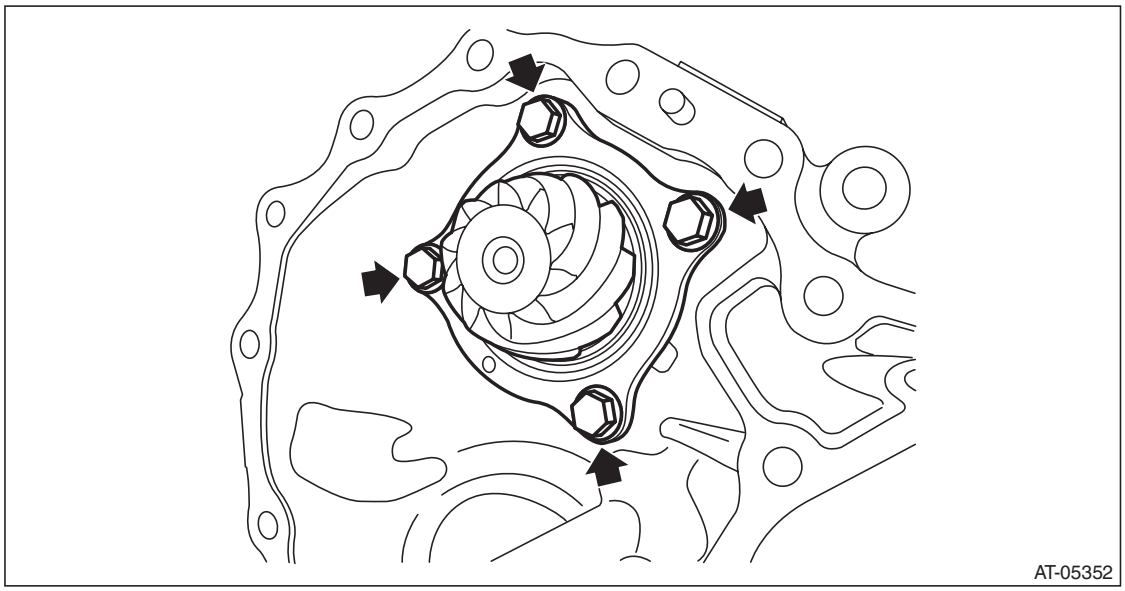

2) Flatten the tab of the lock nut.
3) Using ST1 and ST2, fix at the spline portion of drive pinion shaft to remove the lock nut.

ST1	18621AA000	WRENCH
ST2	18667AA010	HOLDER

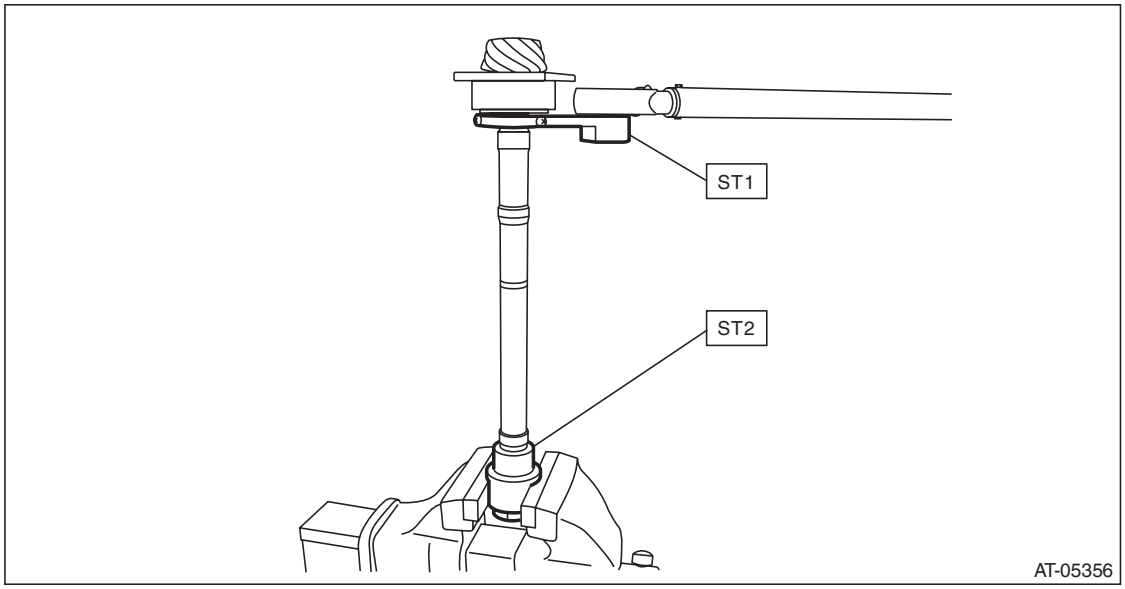

GETtheMANUALS.org

4) Remove the taper roller bearing rear side inner race and outer race from drive pinion shaft.

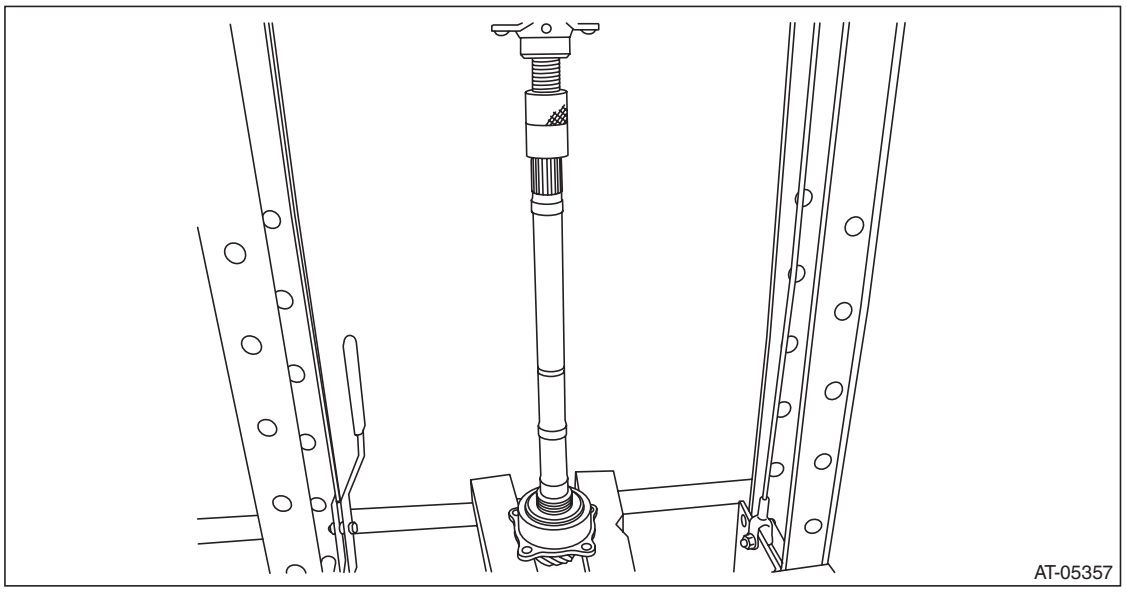

5) Using ST, remove the taper roller bearing front side inner race from drive pinion shaft.
ST 498077000 REMOVER

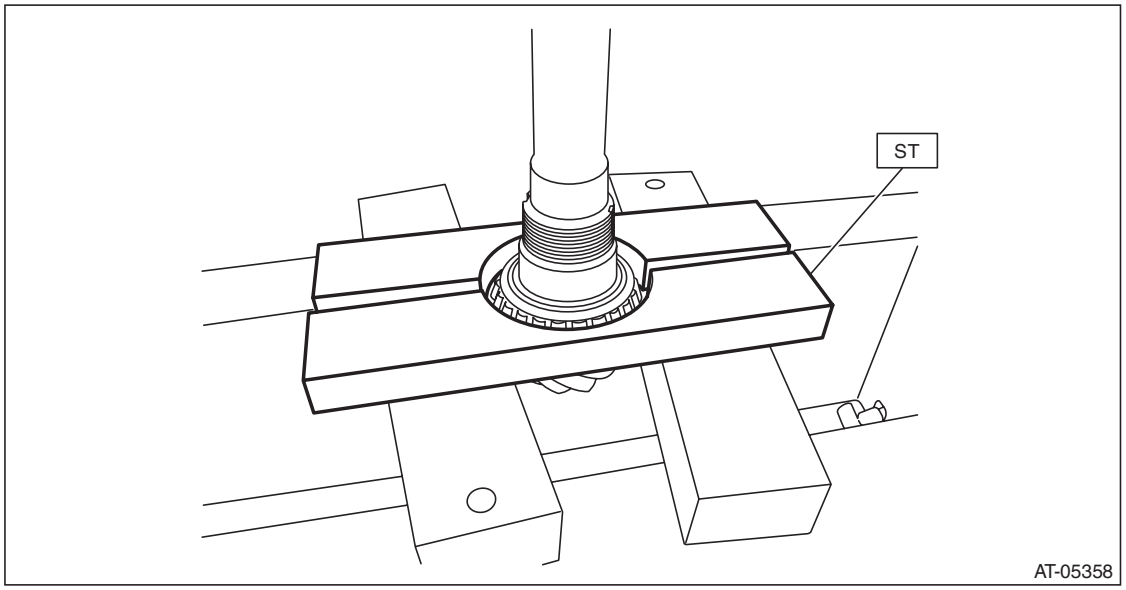

GETtheMANUALS.org

6) Remove the two oil seals using a screwdriver wrapped with cloth etc.

CAUTION:
Do not damage the fitting surface of drive pinion bearing.

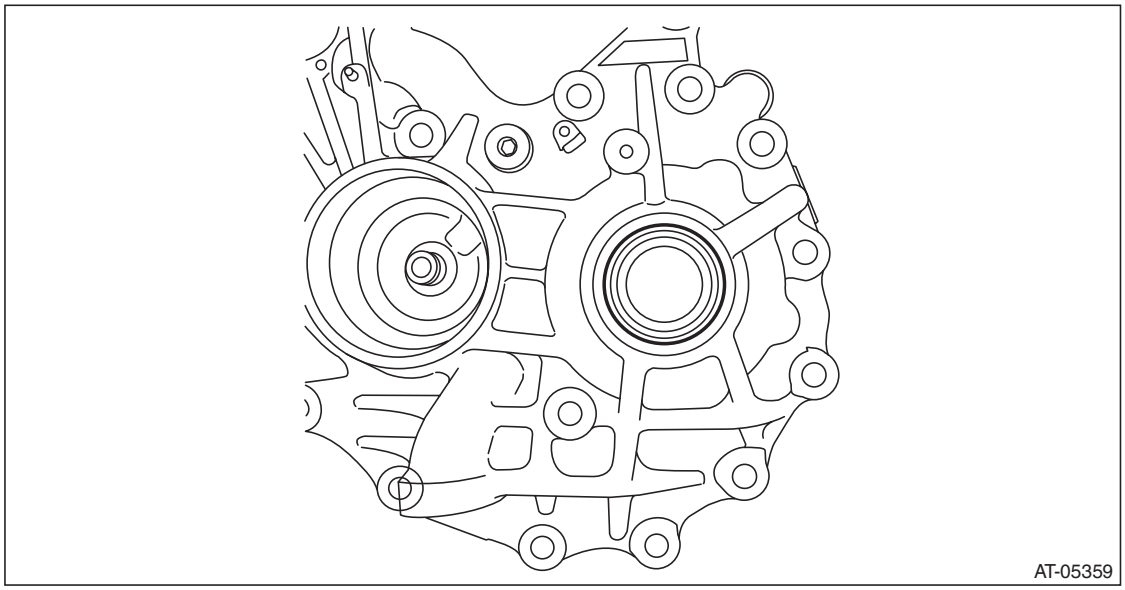

7) Remove the plug from drive pinion retainer.

D: ASSEMBLY

1) Install the O-ring to plug and install the plug to drive pinion retainer.

NOTE:
- Use new O-rings.
- Apply CVTF to the O-ring.

Tightening torque:
25 N·m (2.5 kgf-m, 18.4 ft-lb)

GETtheMANUALS.org

2) Using the ST, install the oil seal to drive pinion retainer.

NOTE:
- Apply CVTF to the oil seal press-fitting surface and lip.
- Install the oil seal in the correct direction.

Pulley side

ST 18657AA020 OIL SEAL INSTALLER

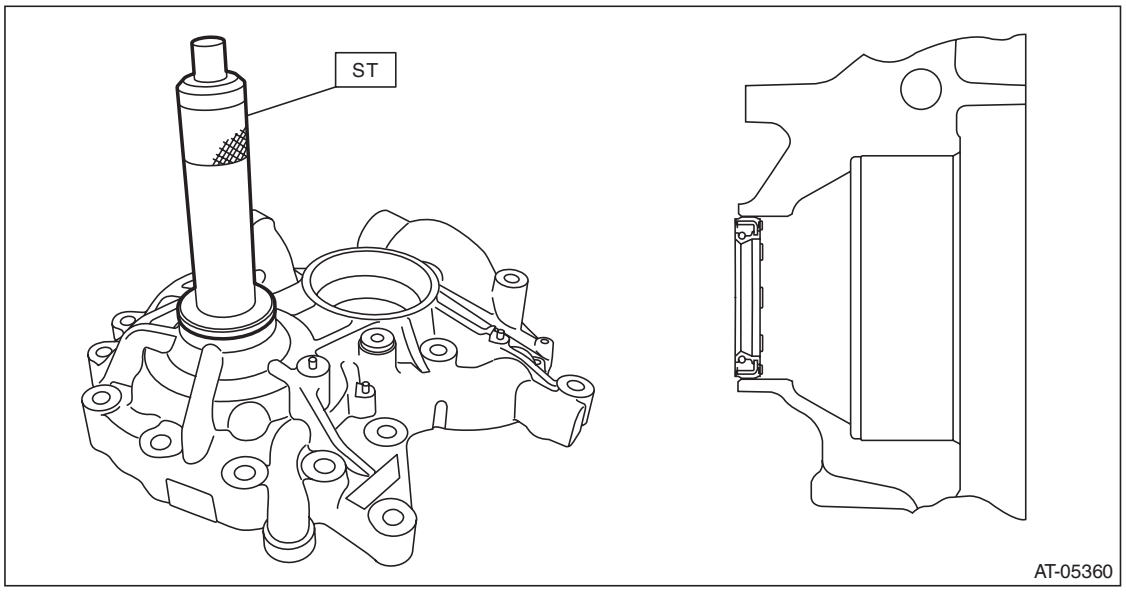

Front differential side

ST 499277100 INSTALLER

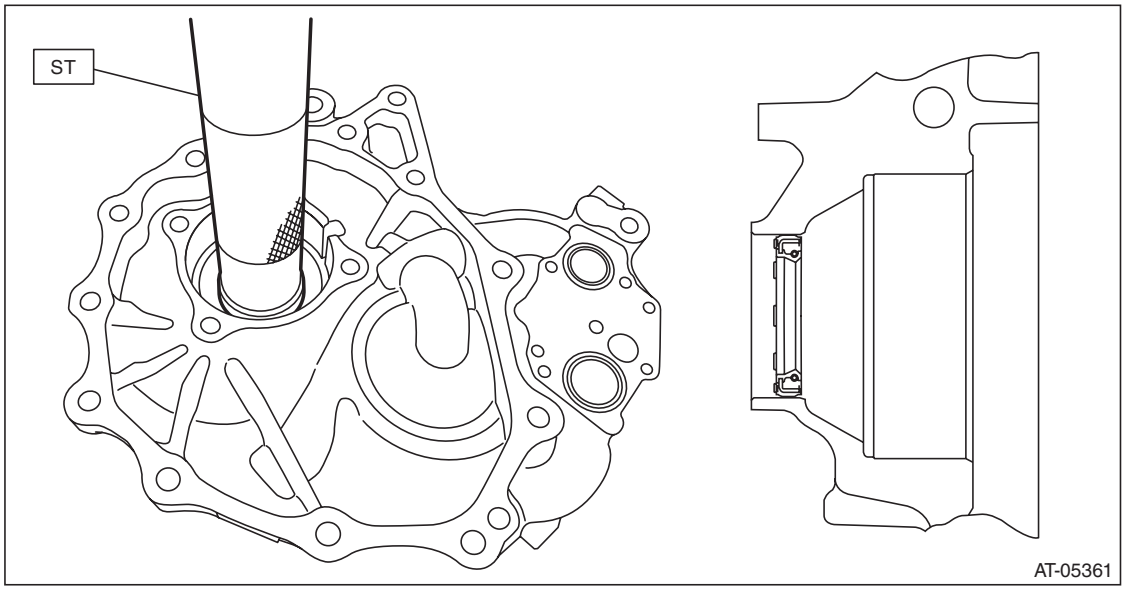

GETtheMANUALS.org

3) Measure the dimension “A” of drive pinion shaft.
ST 398643600 GAUGE

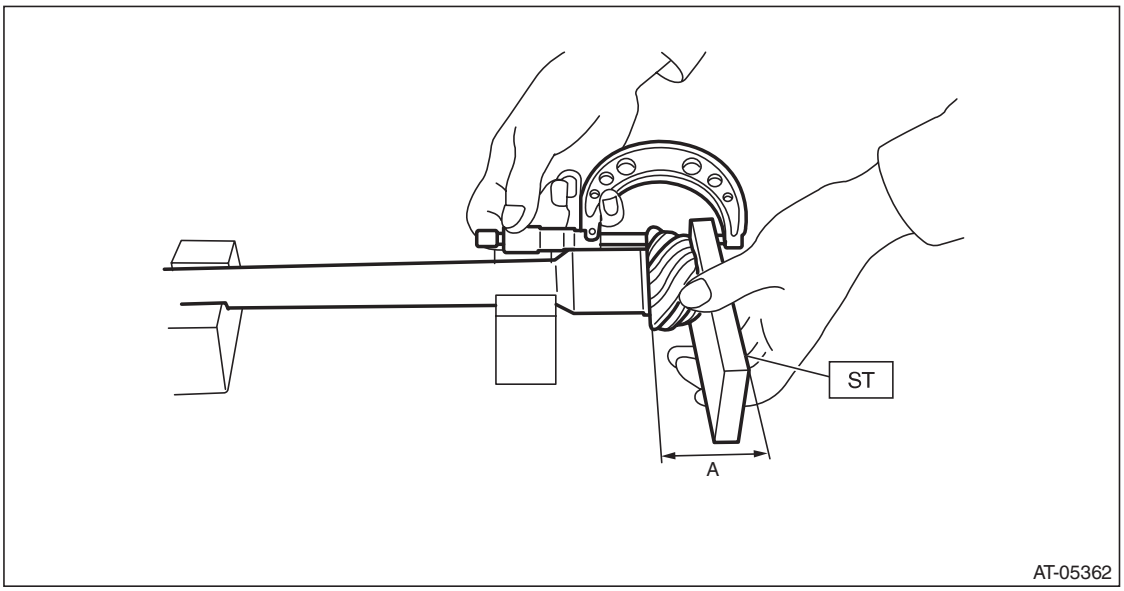

4) Press-fit the new inner bearing inner race using the ST.
ST 499277200 INSTALLER

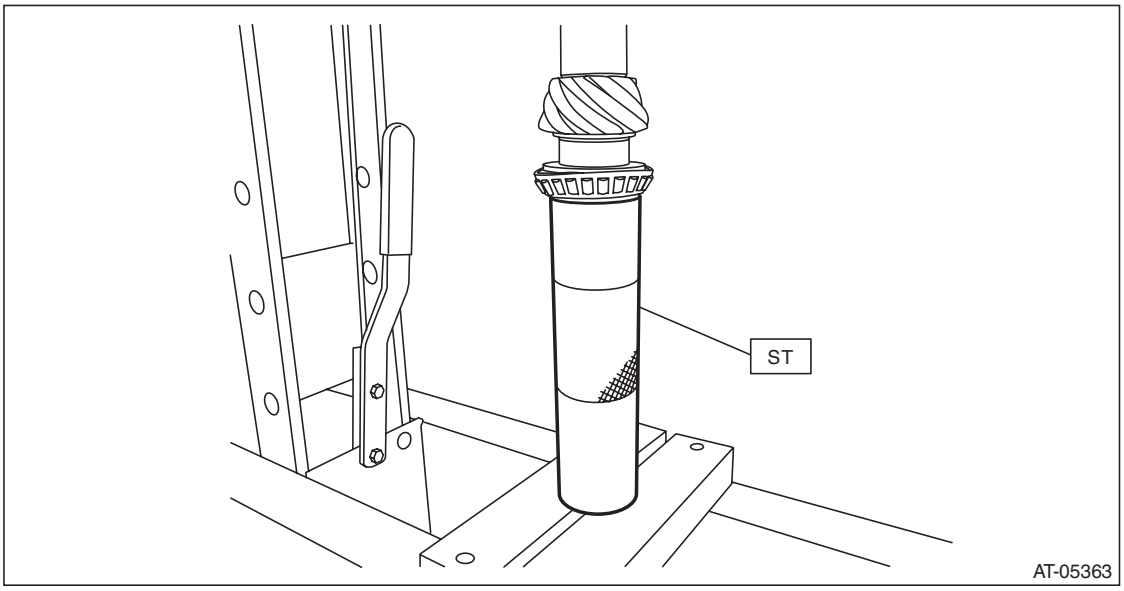

GETtheMANUALS.org

5) Press-fit the new outer bearing outer race and inner bearing inner race.

CAUTION:
Damage may result if too much force is applied to the roller bearing.

NOTE:
Press in to a position where the bearing rotates smoothly without play.

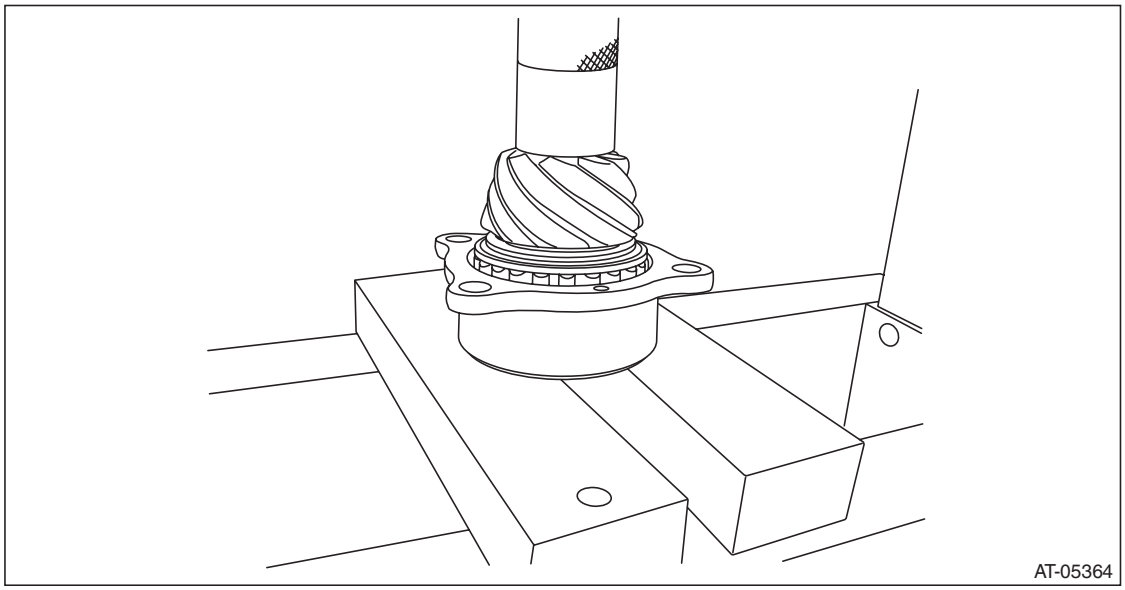

6) Tighten a new lock nut using the ST.
Using the following formula, calculate the torque for a torque wrench.
T2 = L2/(L1 + L2) × T1
T1: 130 N·m (13.3 kgf-m, 95.9 ft-lb)
[Required torque setting]
T2: Tightening torque
L1: ST1 length 0.1 m (3.94 in)
L2: Torque wrench length
Example:

Torque wrench length m (in)	Tightening torque N·m (kgf-m, ft-lb)
0.4 (15.75)	104 (10.6, 76.7)
0.45 (17.72)	106 (10.8, 78.2)
0.5 (19.69)	108 (11.0, 79.7)
0.55 (21.65)	110 (11.2, 81.1)

ST1 18621AA000 WRENCH
ST2 18667AA010 HOLDER

GETtheMANUALS.org

NOTE:
Tighten the lock nut while directly aligning ST1 and torque wrench.

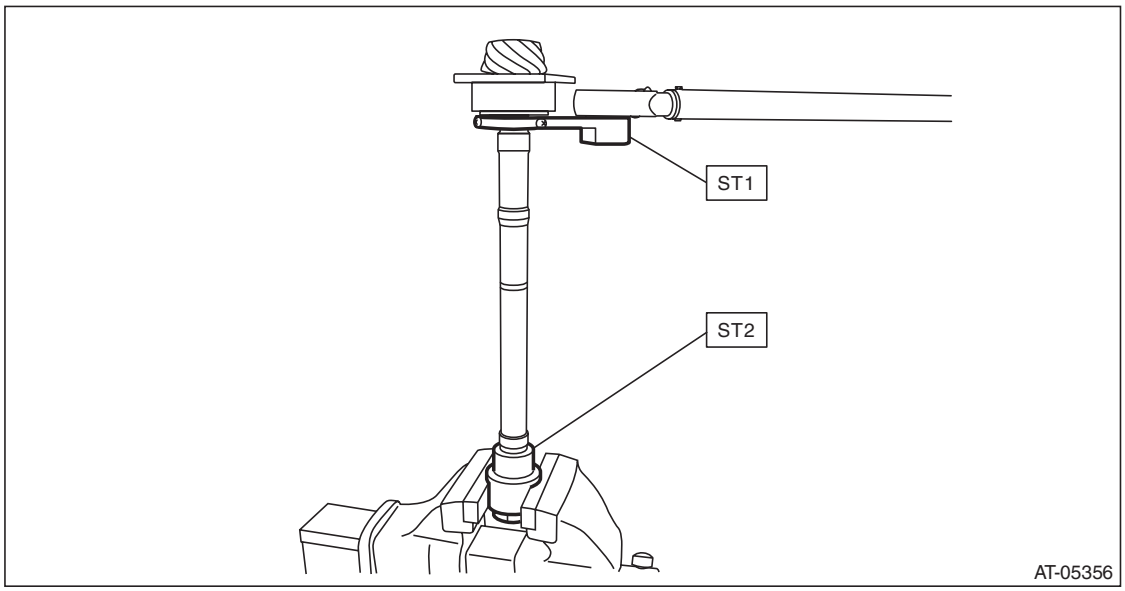

7) Apply differential gear oil to roller of bearing and rotate the bearing several times.
8) Measure the starting torque of the bearing. Make sure the starting torque is within the specified range. If the torque is not within specified range, replace the roller bearing.

Starting torque:
11.6 — 34.7 N (1.2 — 3.5 kgf, 2.6 — 7.8 lb)

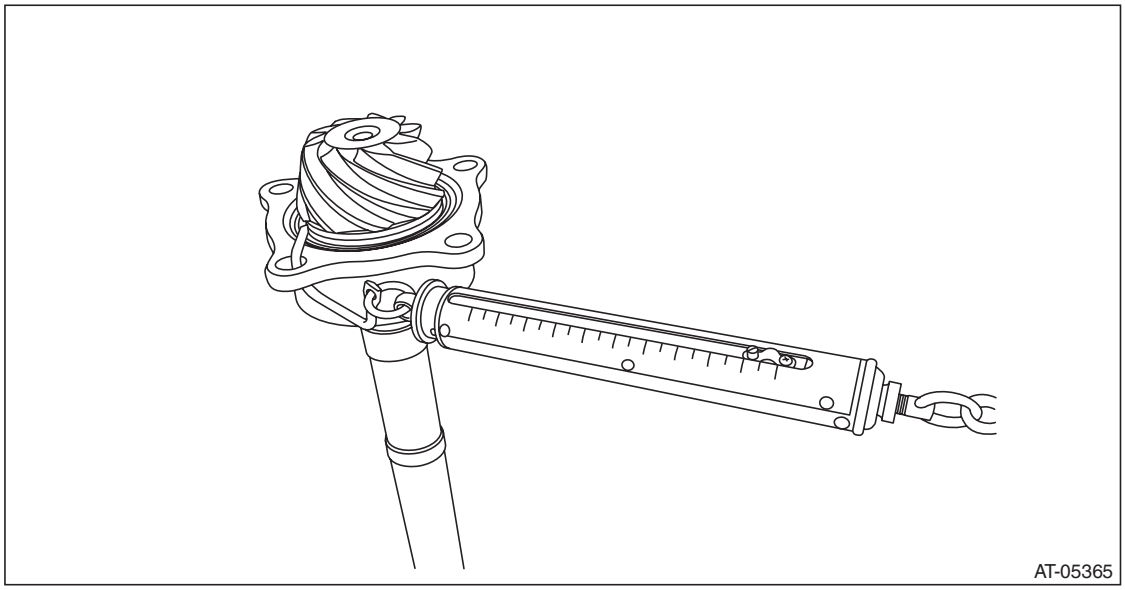

9) Crimp the lock nut in 2 locations.

GETtheMANUALS.org

10) Measure the dimension “B” of the drive pinion shaft.
ST 398643600 GAUGE

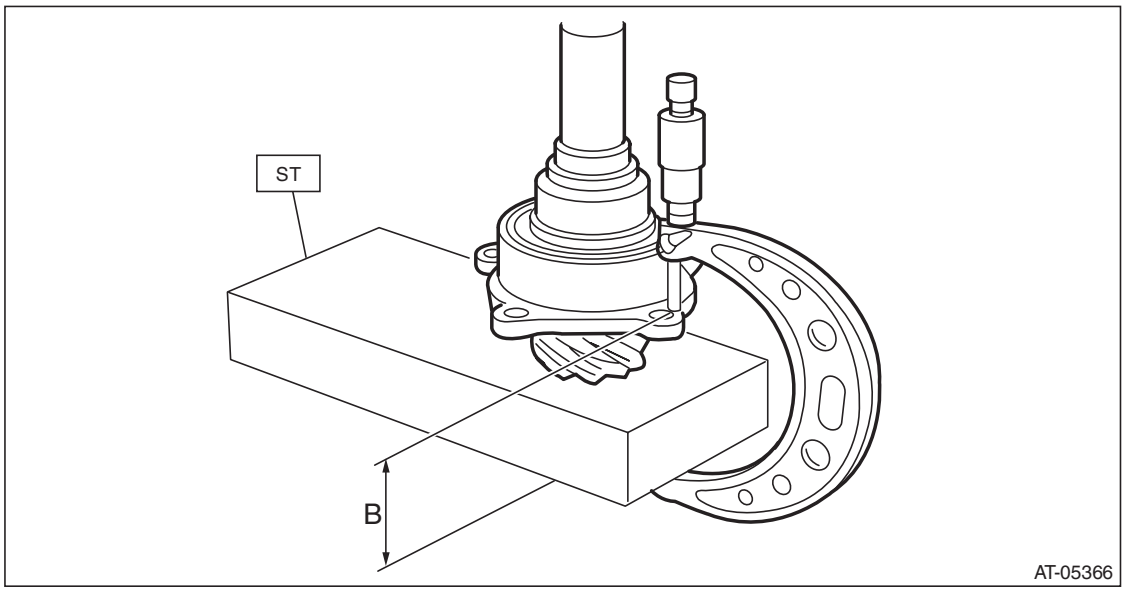

11) Obtain thickness “t” mm (in) of the drive pinion shim.
t = 6.55±0.1225 – (B – A)
12) Select three or less shims from following table.

Drive pinion shim	
Part number	Thickness mm (in)
31451AA050	0.150 (0.0059)
31451AA060	0.175 (0.0069)
31451AA070	0.200 (0.0079)
31451AA080	0.225 (0.0089)
31451AA090	0.250 (0.0098)
31451AA100	0.275 (0.0108)
31451AA240	0.300 (0.0118)

GETtheMANUALS.org

13) Install the shims selected for drive pinion retainer and drive pinion shaft assembly.

NOTE:
Be careful not to bend the shim.

Tightening torque:
70 N·m (7.1 kgf-m, 51.6 ft-lb)

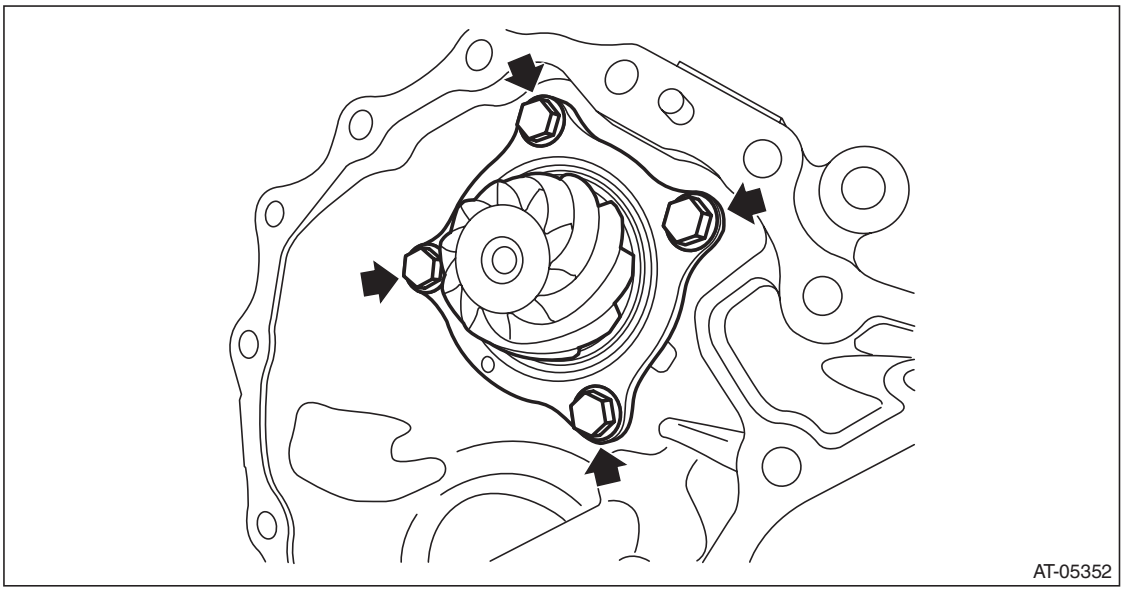

E: INSPECTION

- Make sure that all component parts are free of scratches, holes and other faults.
- Check the tooth contact. <Ref. to CVT-256, ADJUSTMENT, Drive Pinion Shaft Assembly.>
- Apply CVTF to bearing and rotate the bearing to check for noise or dragging etc.
- Check the bearing preload of drive pinion shaft.

CAUTION:
Before measuring, apply differential gear oil to roller of bearing and rotate the bearing several times.

Starting torque:
11.6 — 34.7 N (1.2 — 3.5 kgf, 2.6 — 7.8 lb)

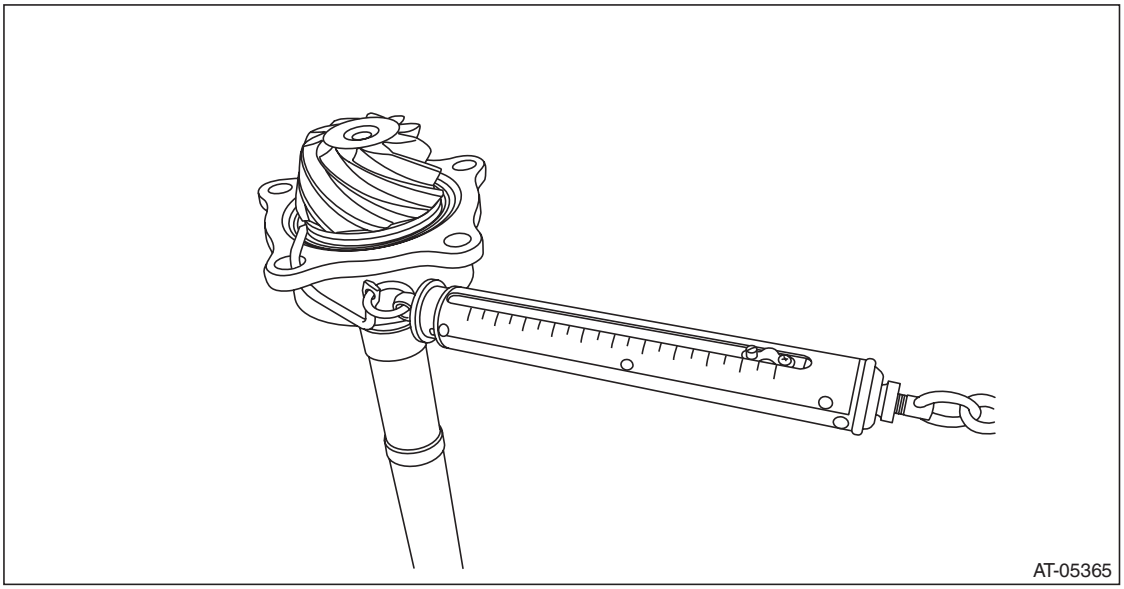

GETtheMANUALS.org

F: ADJUSTMENT

1) Remove the liquid gasket from the mating surface completely.
2) Using the ST, install the drive pinion retainer to converter case.
ST1 18270KA020 SOCKET (E20)

NOTE:
Do not confuse the three different-length bolts when installing.

Tightening torque:
43 N·m (4.4 kgf-m, 31.7 ft-lb)

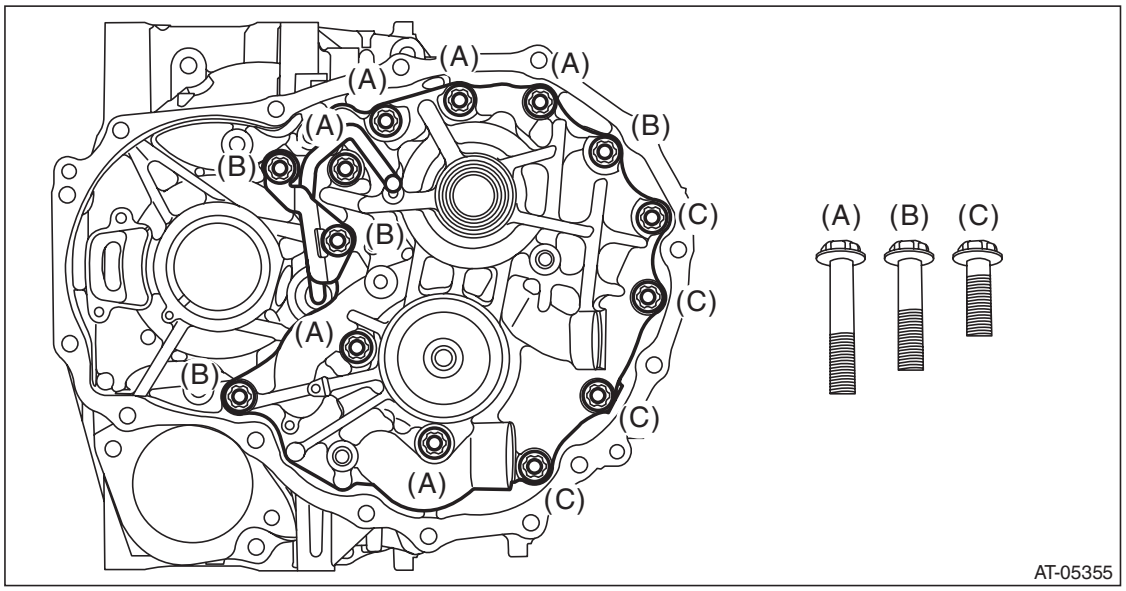

3) Rotate the drive pinion several times using ST1 and ST2.
ST1 18667AA010 HOLDER
ST2 499787700 WRENCH

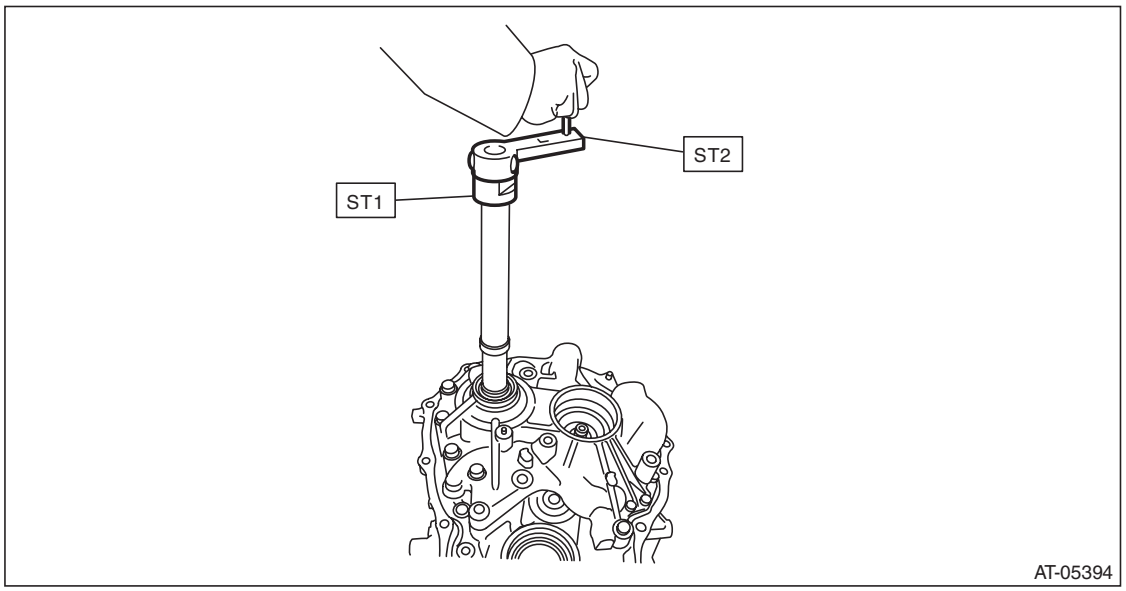

4) Adjust the drive pinion and hypoid driven gear backlash. <Ref. to CVT-277, ADJUSTMENT, Front Differential Assembly.>
5) Using the ST, remove the drive pinion retainer from converter case.
ST1 18270KA020 SOCKET (E20)

GETtheMANUALS.org

6) Apply lead-free red dye evenly on the both sides of three to four teeth of the hypoid driven gear. Then install the drive pinion retainer and rotate the drive pinion in both directions several times. Remove the drive pinion retainer and check the tooth contact pattern.
If the teeth contact is inappropriate, adjust the backlash or thickness of the shim. <Ref. to CVT-277, ADJUSTMENT, Front Differential Assembly.>

NOTE:
After correction, wipe off the lead-free red dye.

- Correct tooth contact

Check item: Tooth contact surface is slightly shifted toward the toe side under a no-load condition. (When driving, it moves towards the heel side.)

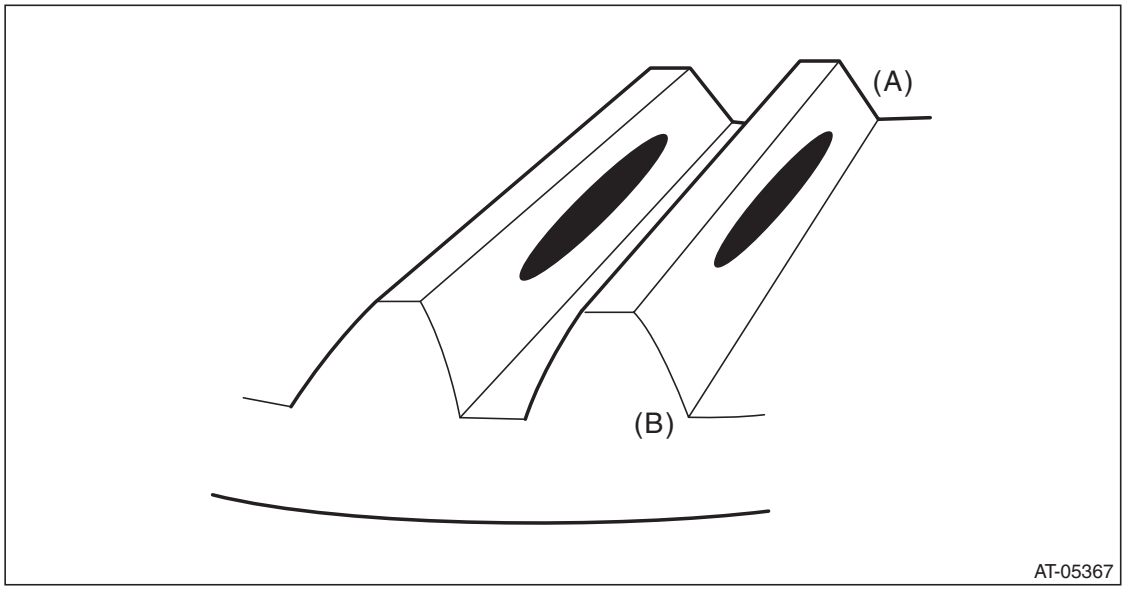

(A) Toe side
(B) Heel side

GETtheMANUALS.org

- Face contact

Check item: Backlash is too large.

Contact pattern

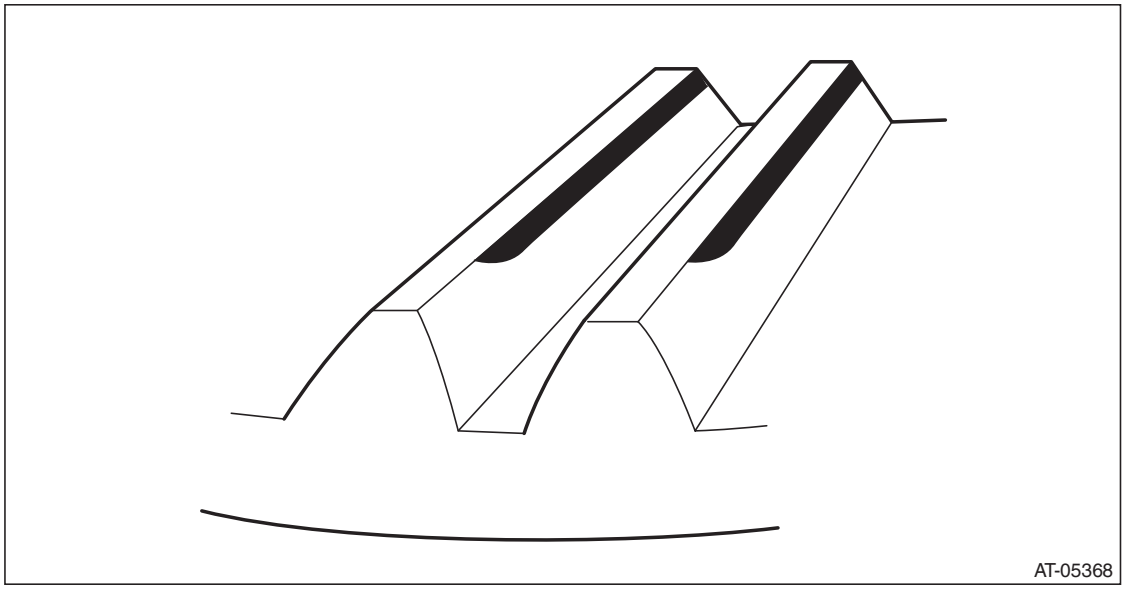

Corrective action: Increase thickness of pinion height adjusting washer according to the procedure for bringing drive pinion close to hypoid driven gear side.

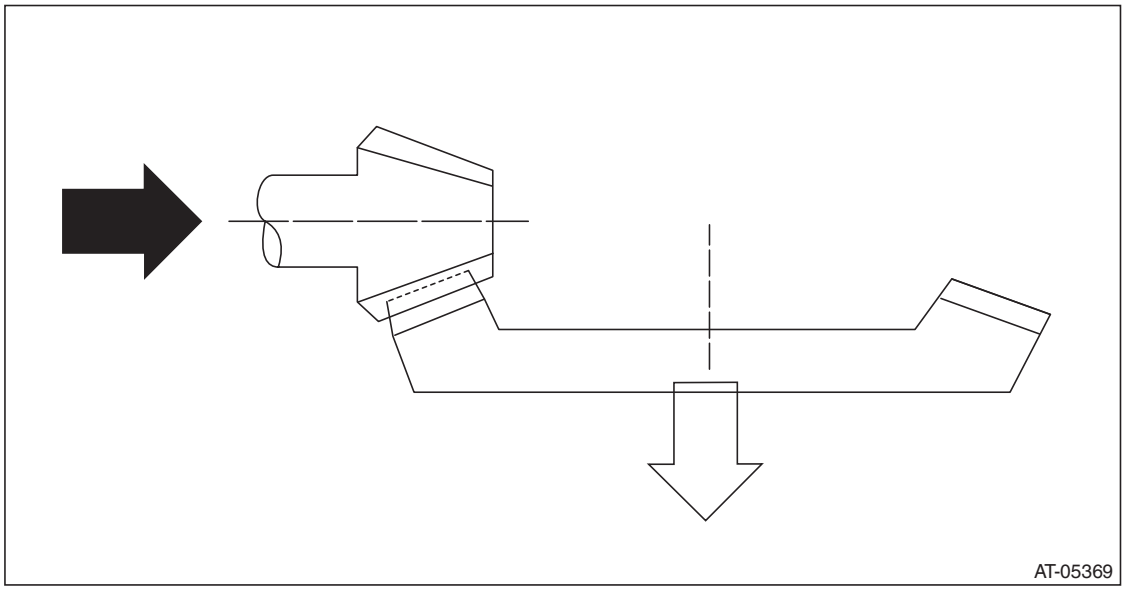

GETtheMANUALS.org

- Flank contact

Check item: Backlash is too small.

Contact pattern

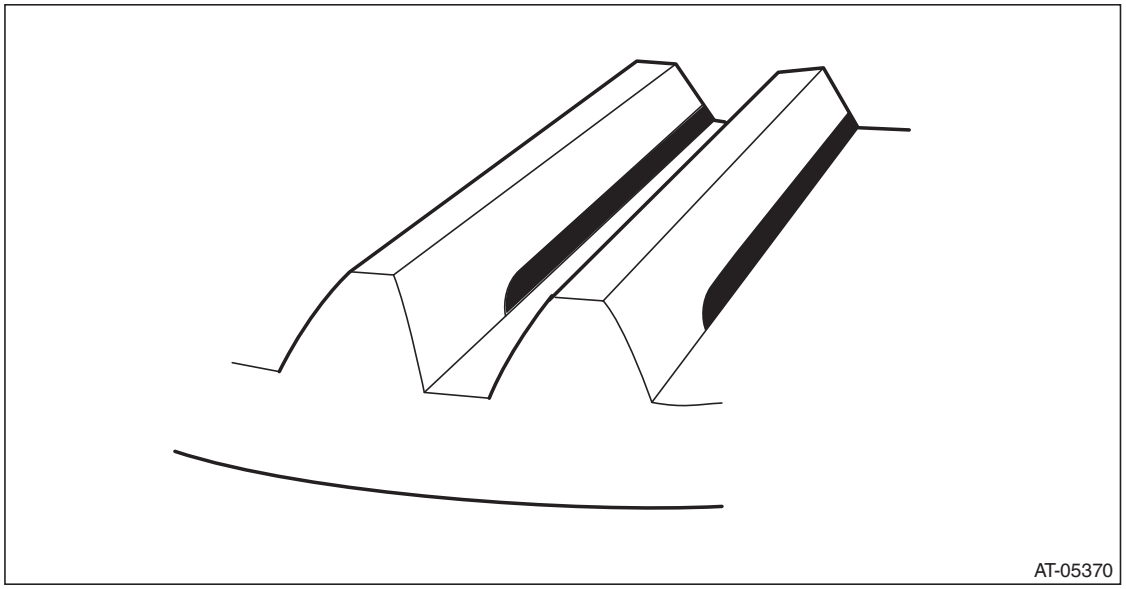

Corrective action: Reduce the thickness of pinion height adjusting washer according to the procedure for bringing drive pinion away from hypoid driven gear.

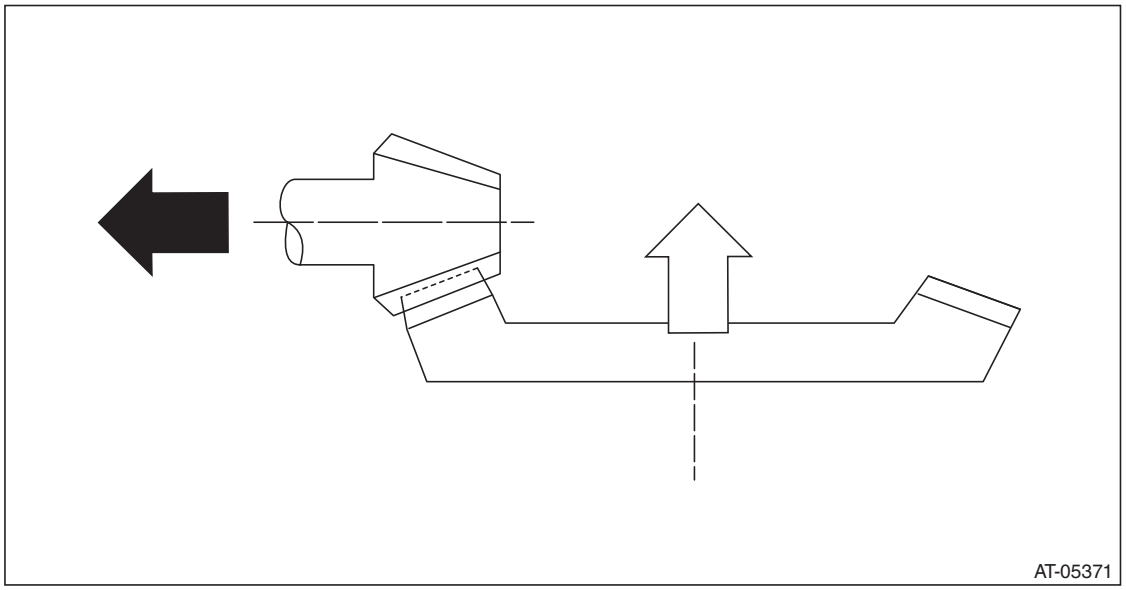

GETtheMANUALS.org

- Toe contact (inside contact)

Check item: Teeth contact area is too small.

Contact pattern

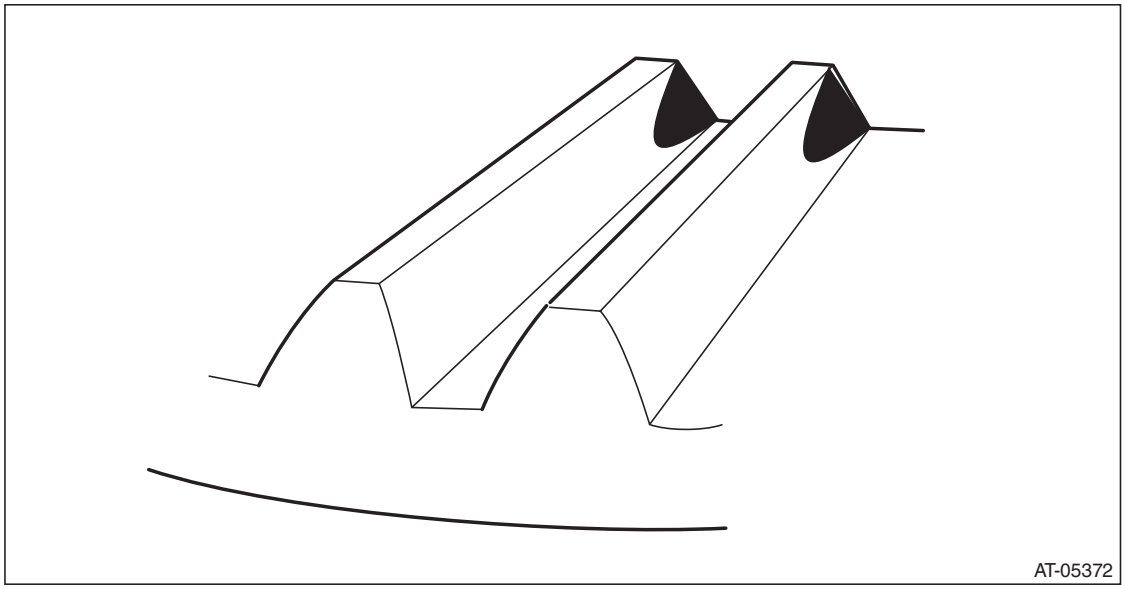

Corrective action: Reduce the thickness of pinion height adjusting washer according to the procedure for bringing drive pinion away from hypoid driven gear side.

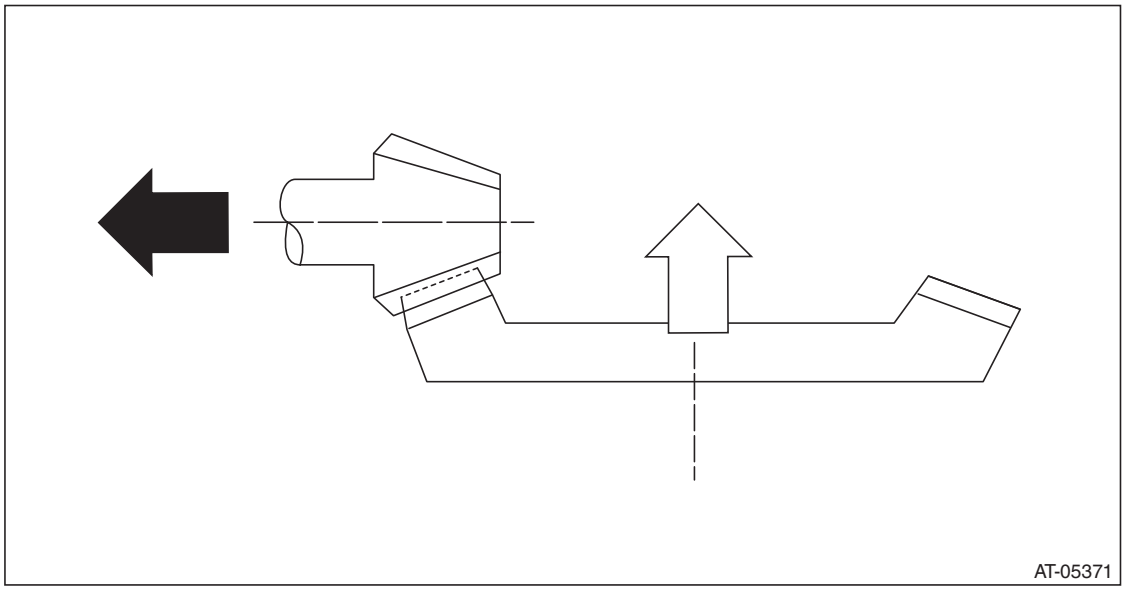

GETtheMANUALS.org

- Heel contact (outside end contact)

Check item: Teeth contact area is too small.

Contact pattern

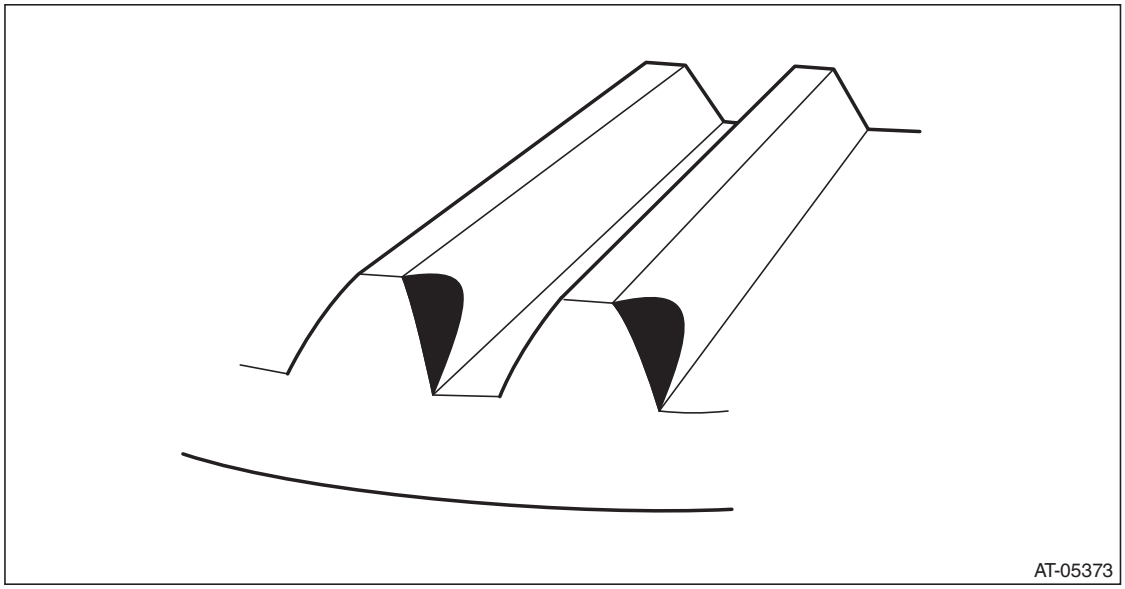

Corrective action: Increase the thickness of the pinion height adjusting washer according to the procedures for moving the drive pinion closer to the hypoid driven gear.

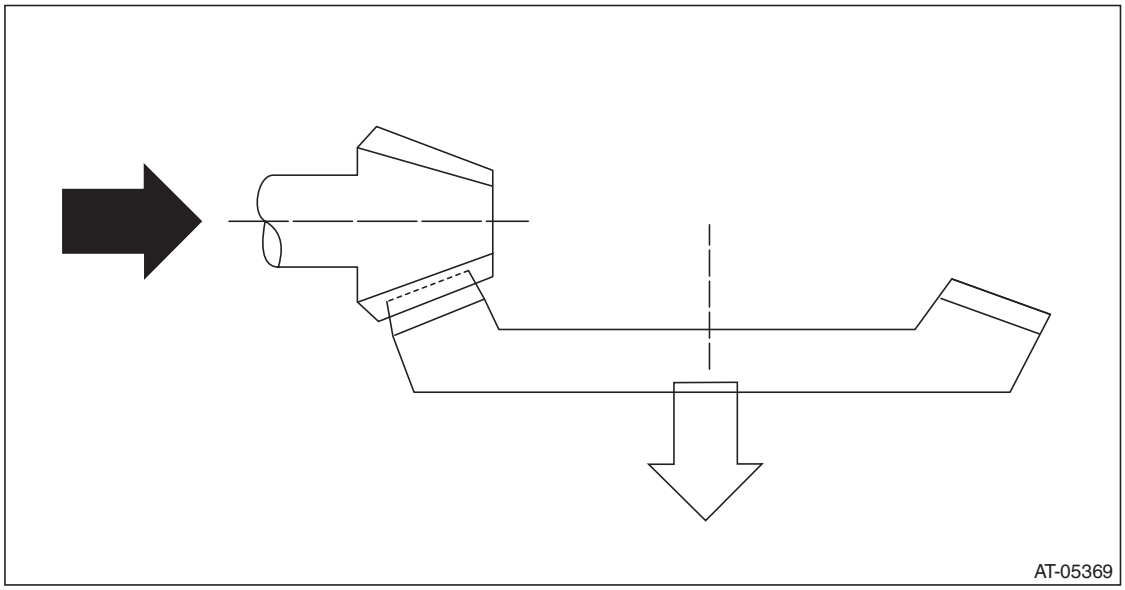

7) If tooth contact is correct, mark the differential side retainer position and loosen. After fitting a new O-ring and oil seal, screw in the differential side retainer to the marked position.

GETtheMANUALS.org

8) Tighten the lock plate with specified torque.

Tightening torque:
25 N·m (2.5 kgf-m, 18.4 ft-lb)

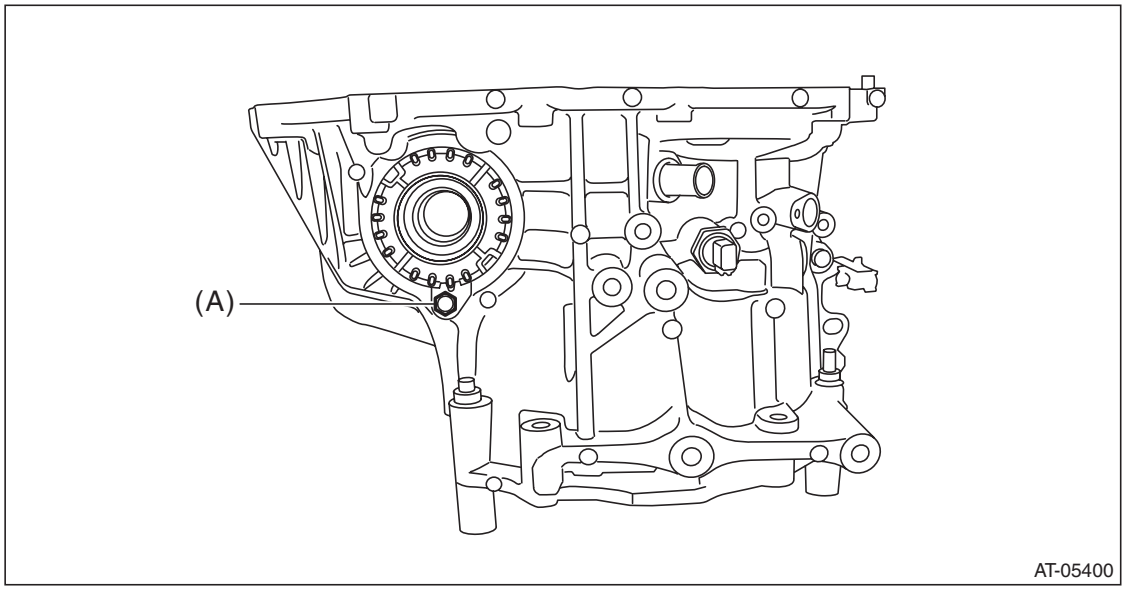

(A) Lock plate

GETtheMANUALS.org

43. Front Differential Assembly

A: REMOVAL

1) Remove the transmission assembly from the vehicle. <Ref. to CVT-55, REMOVAL, Automatic Transmission Assembly.>
2) Remove the air breather hose. <Ref. to CVT-132, REMOVAL, Air Breather Hose.>
3) Remove the oil pan and control valve body. <Ref. to CVT-111, REMOVAL, Control Valve Body.>
4) Remove the transmission harness. <Ref. to CVT-121, REMOVAL, Transmission Harness.>
5) Remove the extension case. <Ref. to CVT-138, REMOVAL, Extension Case.>
6) Remove the rear drive shaft. <Ref. to CVT-141, REMOVAL, Rear Drive Shaft.>
7) Remove the transfer clutch assembly. <Ref. to CVT-146, REMOVAL, Transfer Clutch.>
8) Remove the transfer reduction driven gear assembly. <Ref. to CVT-158, REMOVAL, Transfer Reduction Driven Gear.>
9) Remove the intermediate case. <Ref. to CVT-165, REMOVAL, Intermediate Case.>
10) Remove the forward clutch assembly. <Ref. to CVT-180, REMOVAL, Forward Clutch Assembly.>
11) Remove the transmission case. <Ref. to CVT-211, REMOVAL, Transmission Case.>
12) Remove the primary pulley, secondary pulley and variator chain. <Ref. to CVT-226, REMOVAL, Primary Pulley and Secondary Pulley.>
13) Remove the drive pinion shaft assembly. <Ref. to CVT-242, REMOVAL, Drive Pinion Shaft Assembly.>
14) Remove the lock plates on both sides.

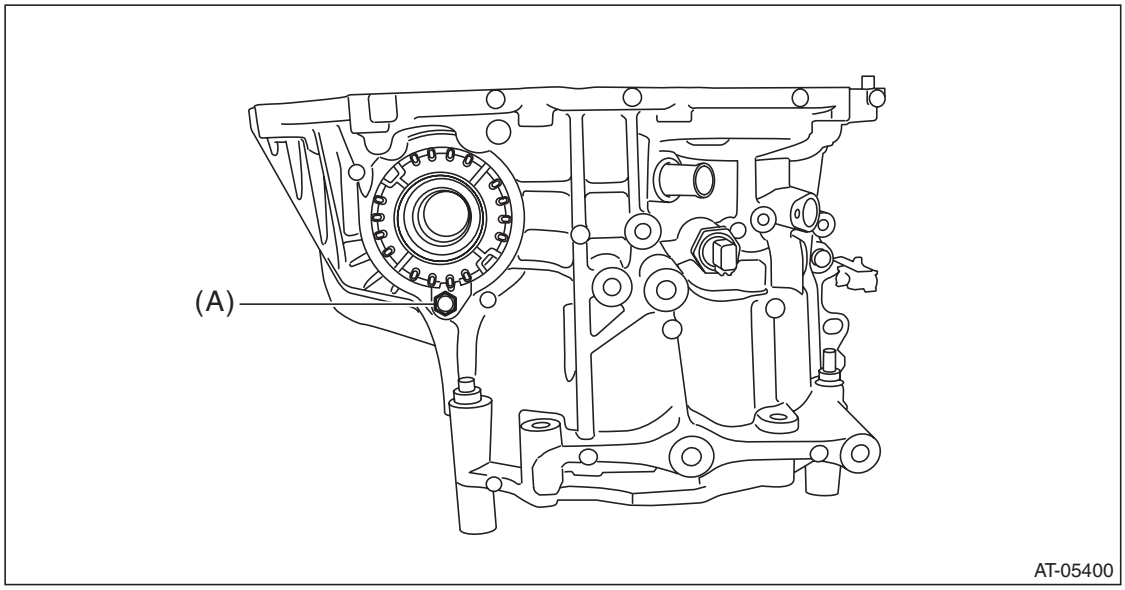

(A) Lock plate

GETtheMANUALS.org

15) Remove the differential side retainers using ST.
ST 18658AA020 WRENCH COMPL RETAINER

NOTE:
- Support the differential case assembly by hand to avoid damaging the retainer mounting hole of the converter case.
- When keeping the retainers aside, use labels etc. to avoid confusing the left and right.

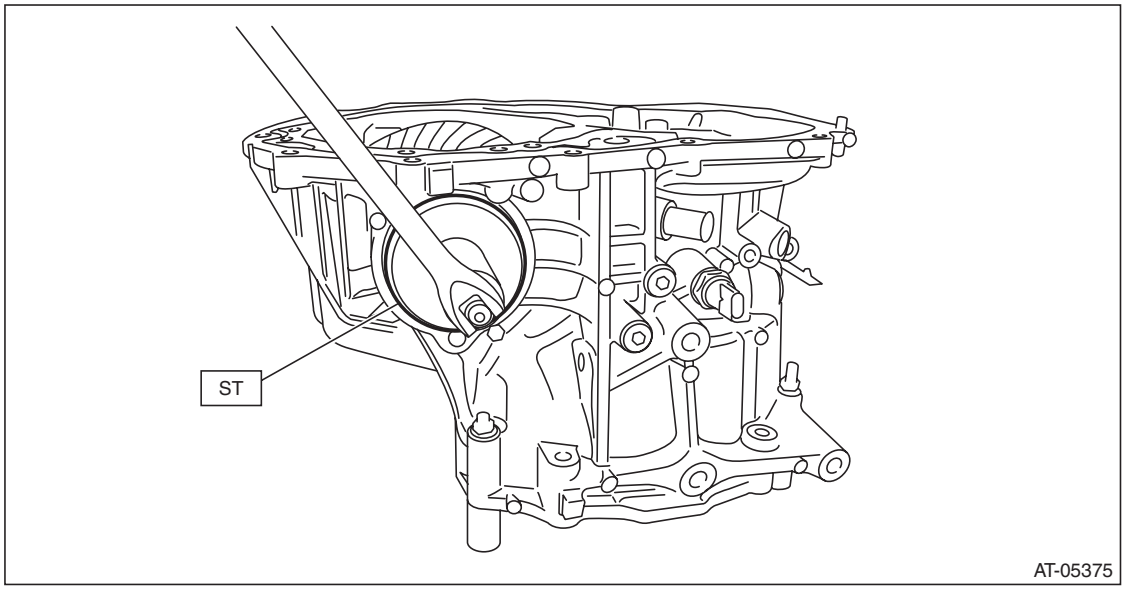

16) Remove the front differential assembly while being careful not to damage the attachment part of the retainer.
17) Remove the oil seals and O-rings from both differential side retainers. <Ref. to CVT-269, SIDE RETAINER, DISASSEMBLY, Front Differential Assembly.>

B: INSTALLATION

1) Install the front differential assembly to the converter case.

NOTE:
Be careful not to damage the inside of the case (especially the mating surface of the differential side retainers).
2) Temporarily install the differential side retainers using ST.
ST 18658AA020 WRENCH COMPL RETAINER

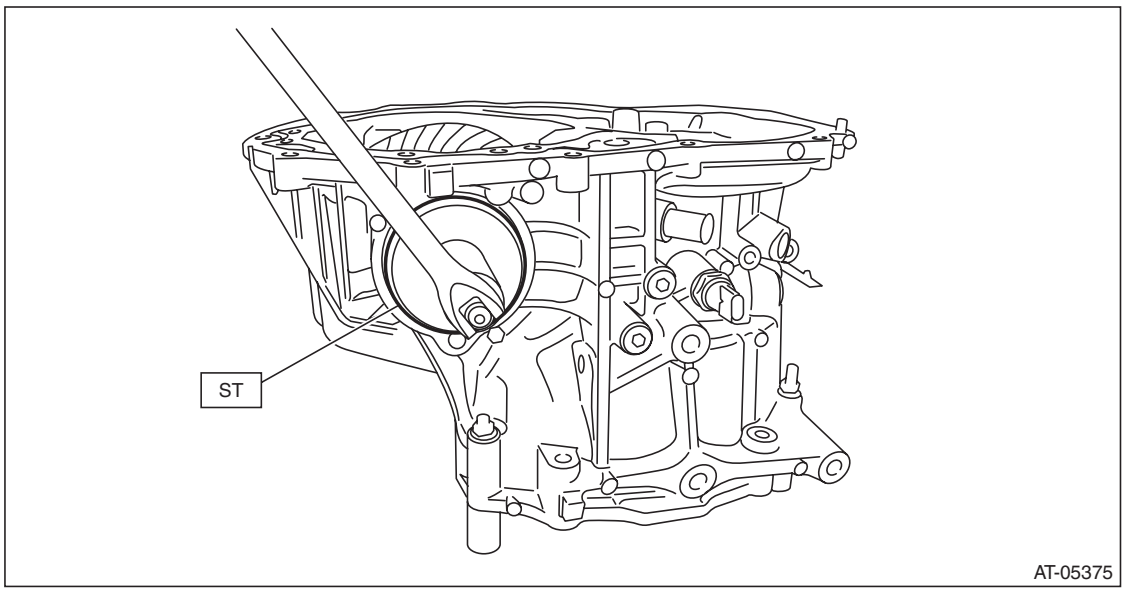

GETtheMANUALS.org

3) Adjust the backlash of the front differential. <Ref. to CVT-277, ADJUSTMENT, Front Differential Assembly.>
4) Inspect and adjust the tooth contact. <Ref. to CVT-256, ADJUSTMENT, Drive Pinion Shaft Assembly.>
5) Remove the differential side retainers and install the O-rings and oil seals. <Ref. to CVT-276, SIDE RETAINER, ASSEMBLY, Front Differential Assembly.>

NOTE:
- Record how many turns were needed to remove.
- Use new O-rings and oil seals.

6) Install the differential side retainers using ST.

NOTE:
When attaching, turn the differential side retainer by the same number of turns it took to remove, and align the marks.
ST 18658AA020 WRENCH COMPL RETAINER
7) Install the lock plate.

Tightening torque:
25 N·m (2.5 kgf-m, 18.4 ft-lb)

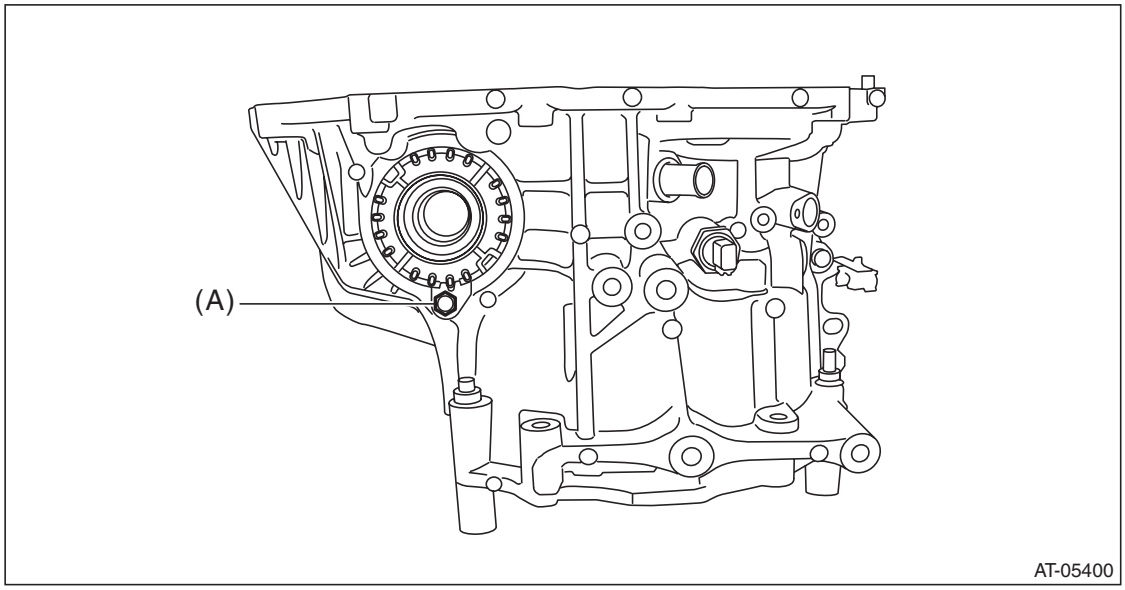

(A) Lock plate

8) Install the drive pinion shaft assembly. <Ref. to CVT-244, INSTALLATION, Drive Pinion Shaft Assembly.>
9) Install the primary pulley, secondary pulley and variator chain. <Ref. to CVT-230, INSTALLATION, Primary Pulley and Secondary Pulley.>
10) Install the transmission case. <Ref. to CVT-213, INSTALLATION, Transmission Case.>
11) Install the forward clutch assembly. <Ref. to CVT-181, INSTALLATION, Forward Clutch Assembly.>
12) Install the intermediate case. <Ref. to CVT-166, INSTALLATION, Intermediate Case.>
13) Install the transfer reduction driven gear assembly. <Ref. to CVT-158, INSTALLATION, Transfer Reduction Driven Gear.>
14) Install the transfer clutch assembly. <Ref. to CVT-147, INSTALLATION, Transfer Clutch.>
15) Install the rear drive shaft. <Ref. to CVT-141, INSTALLATION, Rear Drive Shaft.>
16) Install the extension case. <Ref. to CVT-138, INSTALLATION, Extension Case.>
17) Install the transmission harness. <Ref. to CVT-123, INSTALLATION, Transmission Harness.>
18) Install the control valve body and oil pan. <Ref. to CVT-115, INSTALLATION, Control Valve Body.>
19) Install the air breather hose. <Ref. to CVT-132, INSTALLATION, Air Breather Hose.>
20) Install the transmission assembly to the vehicle. <Ref. to CVT-70, INSTALLATION, Automatic Transmission Assembly.>

GETtheMANUALS.org

C: DISASSEMBLY

1. DIFFERENTIAL CASE ASSEMBLY

1) Remove the taper roller bearing using the ST.
ST 498077000 REMOVER

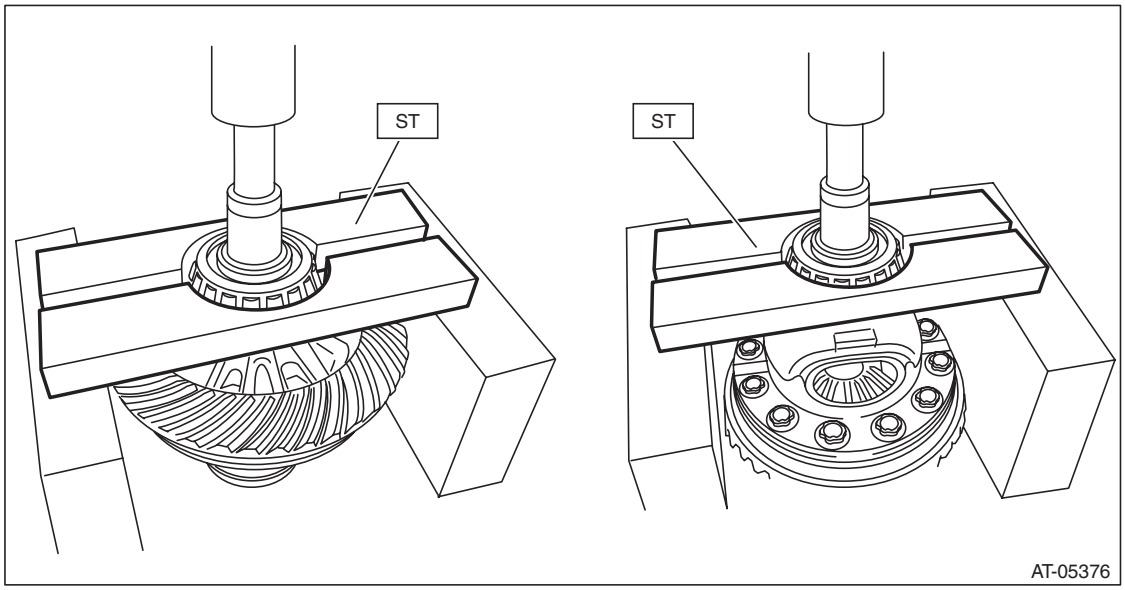

2) Remove the hypoid driven gear mounting bolt using the ST.
ST 18270KA020 SOCKET (E20)

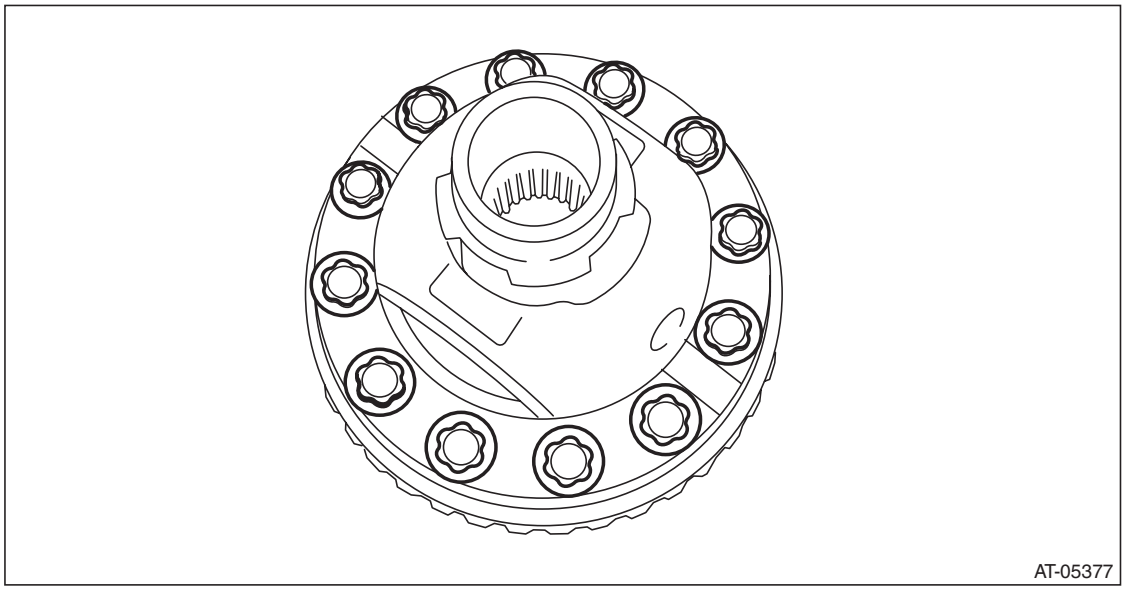

GETtheMANUALS.org

3) Remove the differential case (LH).

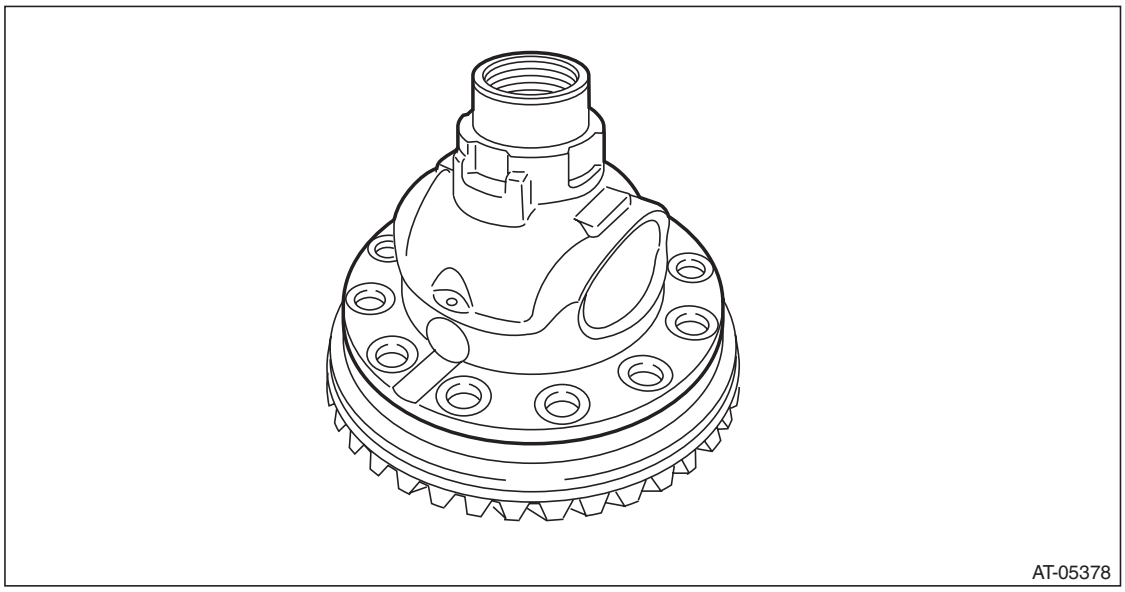

4) Remove the differential bevel gear and washer from differential case.

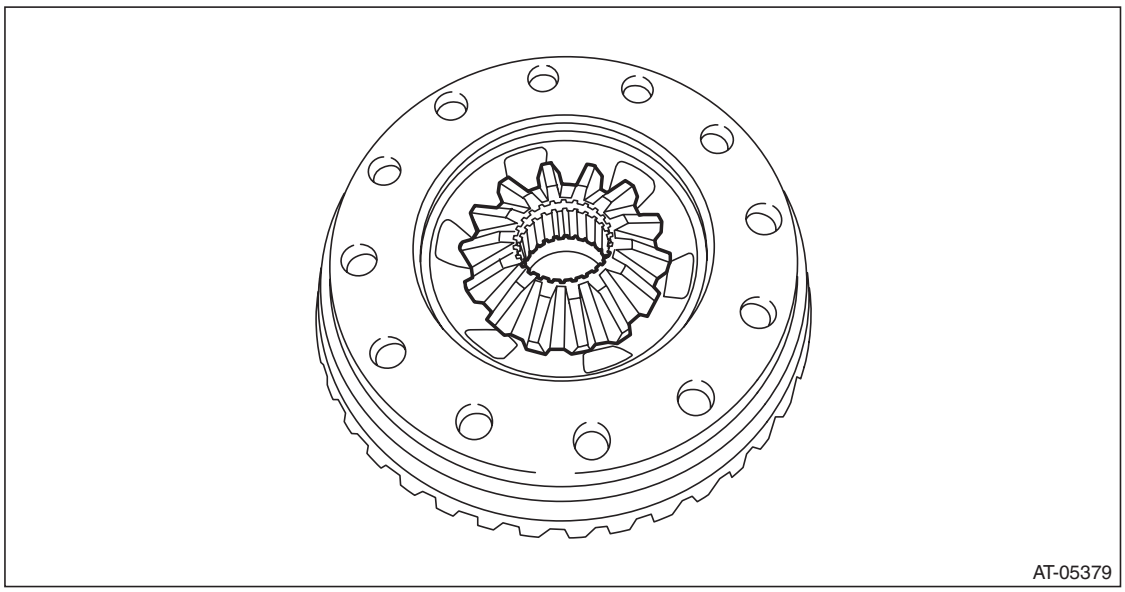

GETtheMANUALS.org

5) Remove the straight pin.

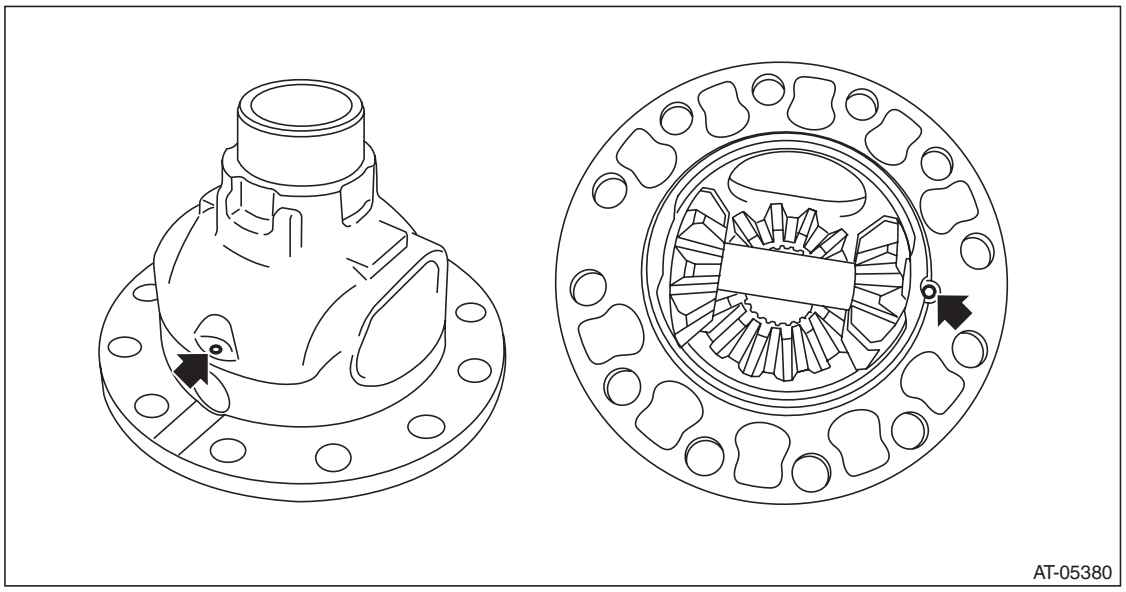

6) Remove the pinion shaft, then remove the differential bevel gear, washer and differential bevel pinion.

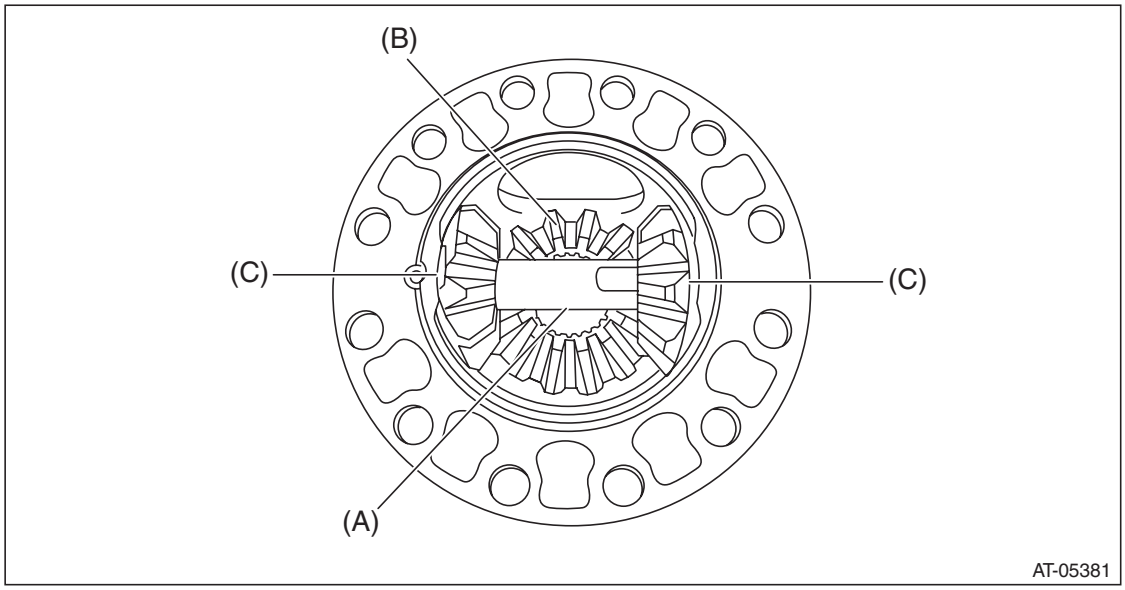

(A) Pinion shaft
(B) Differential bevel gear
(C) Differential bevel pinion

GETtheMANUALS.org

2. SIDE RETAINER

NOTE:
After adjusting the drive pinion backlash and tooth contact, replace the oil seal and O-ring with new parts.
1) Remove the O-ring.

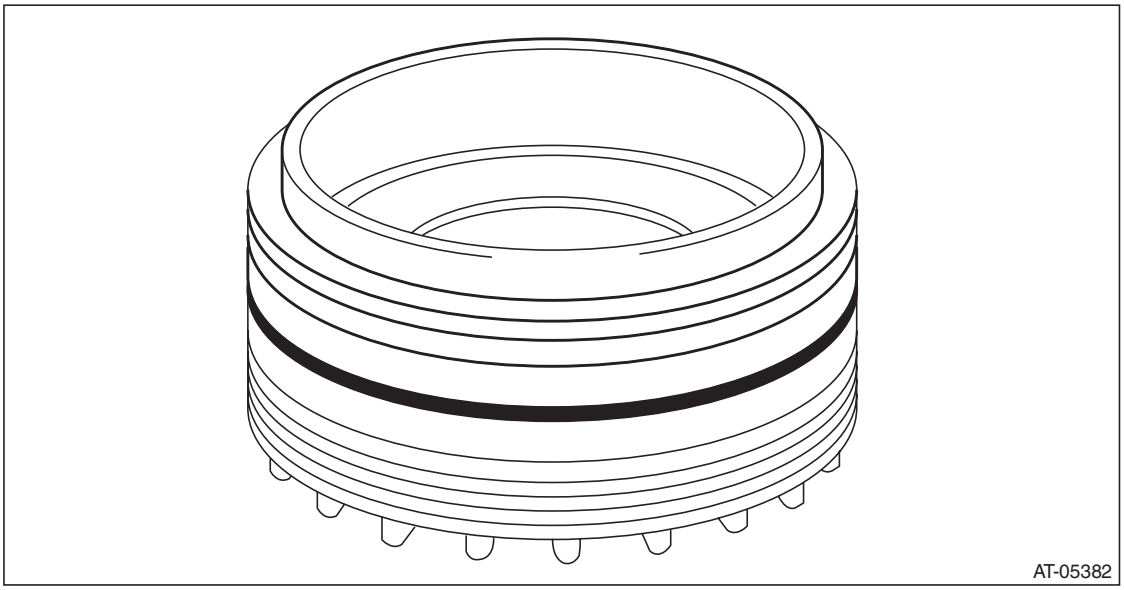

2) Remove the oil seal.

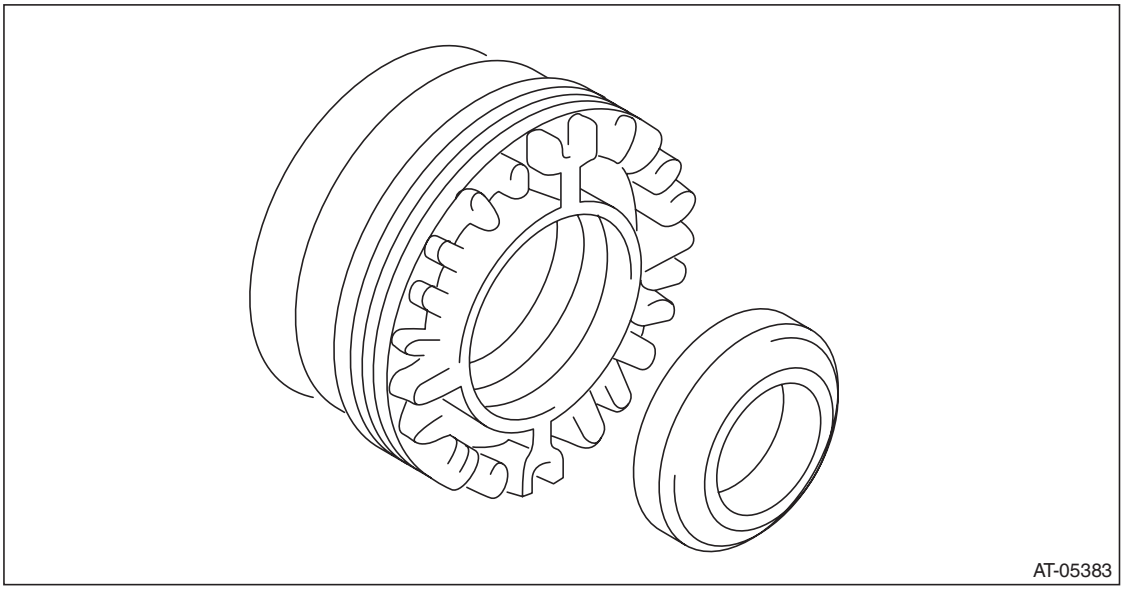

GETtheMANUALS.org

3) Remove the split pin (ST), and then remove the claw.
ST 398527700 PULLER ASSY

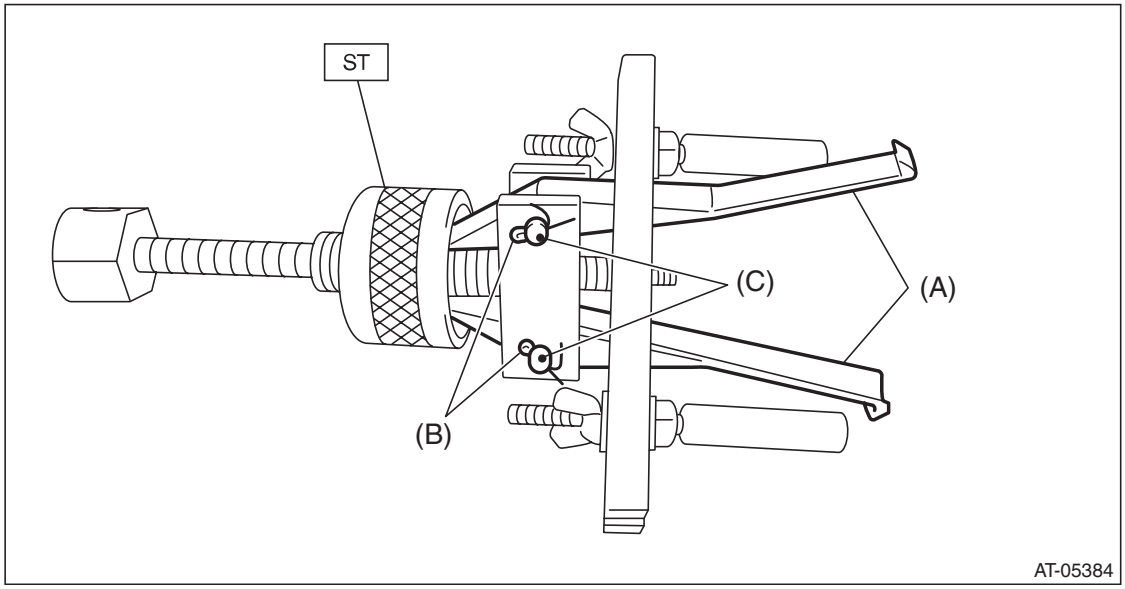

(A) Claw
(B) Split pin
(C) Pin

4) Attach two claws to the outer race, and set the ST to side retainer.
ST 398527700 PULLER ASSY

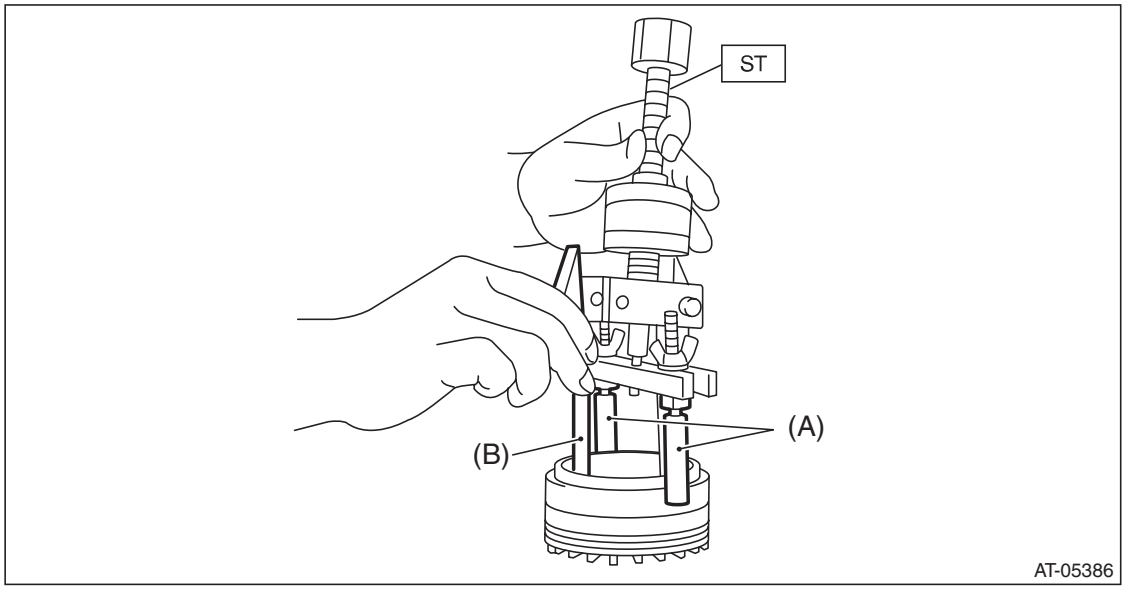

(A) Shaft
(B) Claw

5) Restore the removed claws to original position, and install the pin and split pin.

GETtheMANUALS.org

6) Hold the shaft of ST to avoid removing from side retainer, and then remove the bearing outer race.
ST 398527700 PULLER ASSY

NOTE:
Replace the bearing inner and outer races as a single unit.

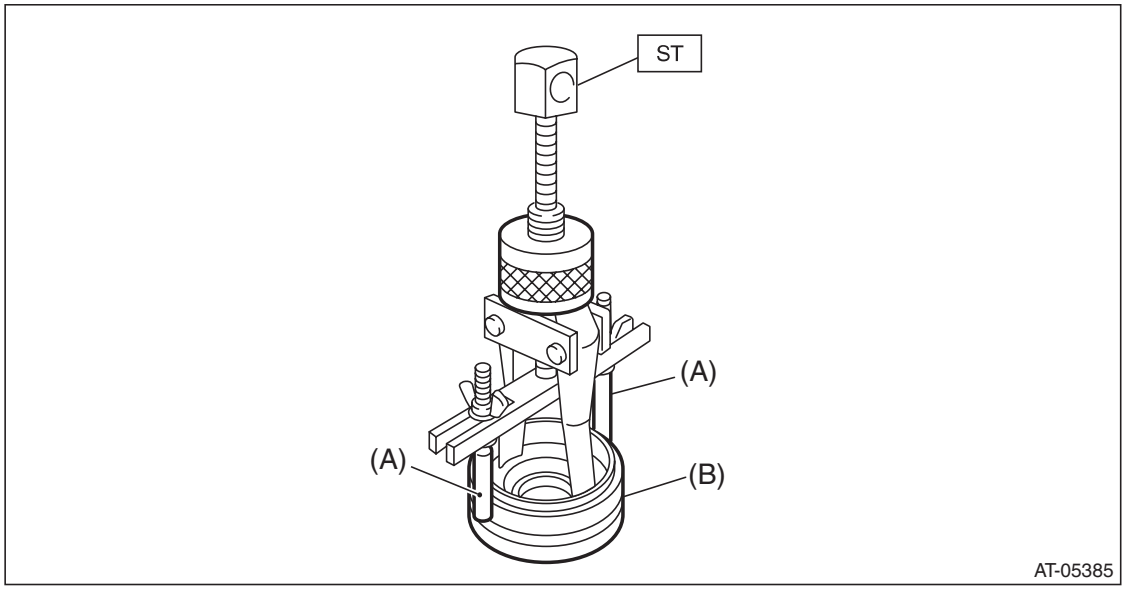

(A) Shaft
(B) Side retainer

D: ASSEMBLY

1. DIFFERENTIAL CASE ASSY

1) Install the washer and differential bevel gear into differential case (LH).

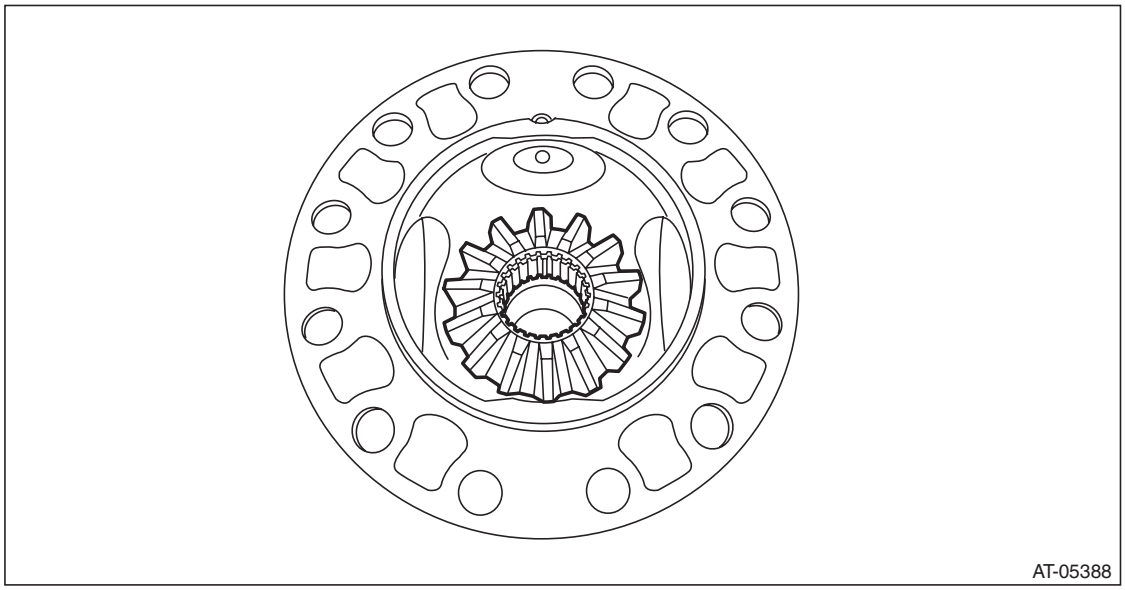

GETtheMANUALS.org

2) Install the differential bevel gear pinions into differential case (LH) and install the pinion shaft.

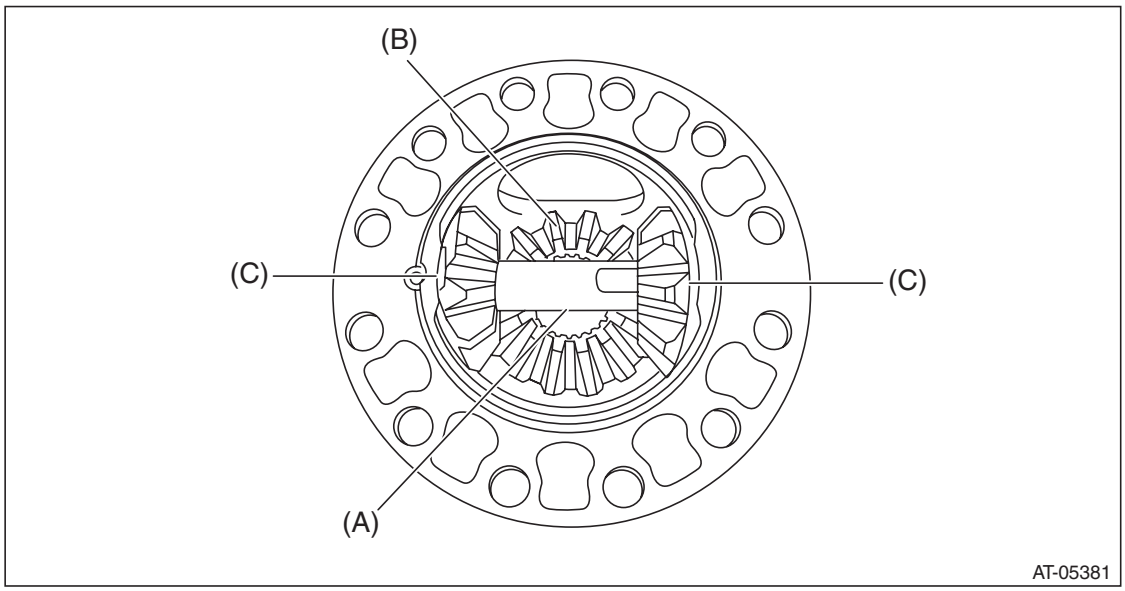

(A) Pinion shaft
(B) Differential bevel gear
(C) Differential bevel pinion

3) Install the straight pin.

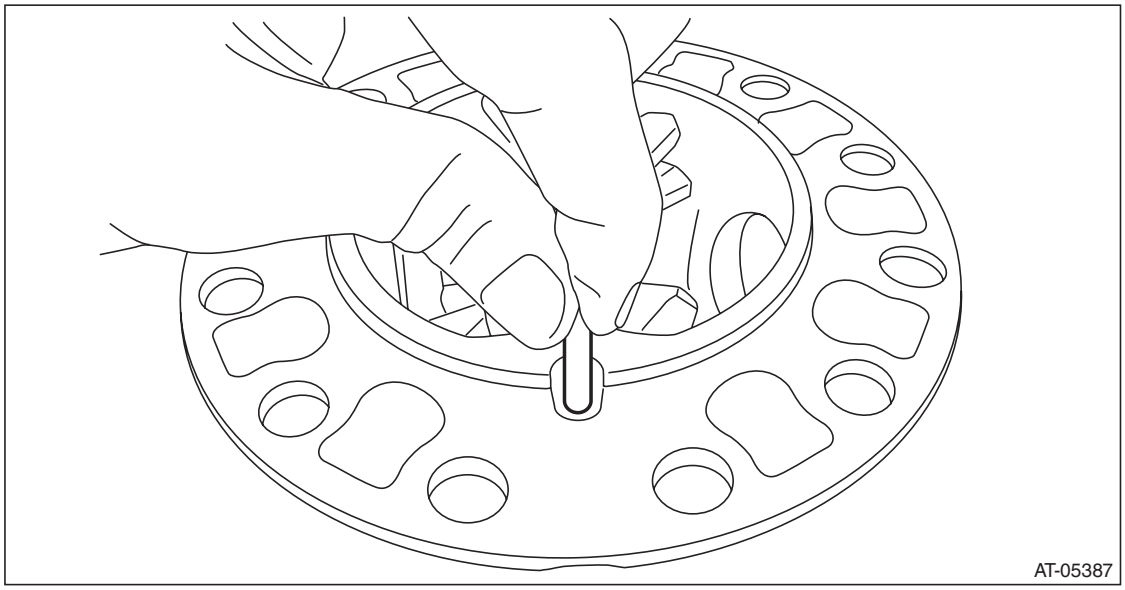

GETtheMANUALS.org

4) Install the differential case (RH) to hypoid driven gear and secure with vise.

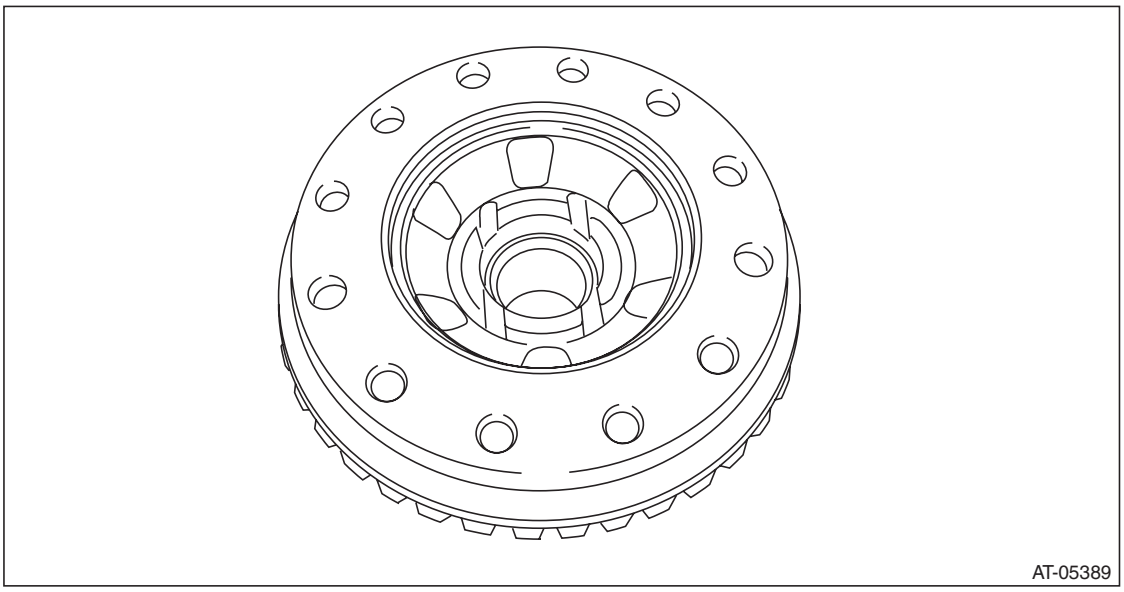

5) Install the washer and differential bevel gear to the differential case (RH).

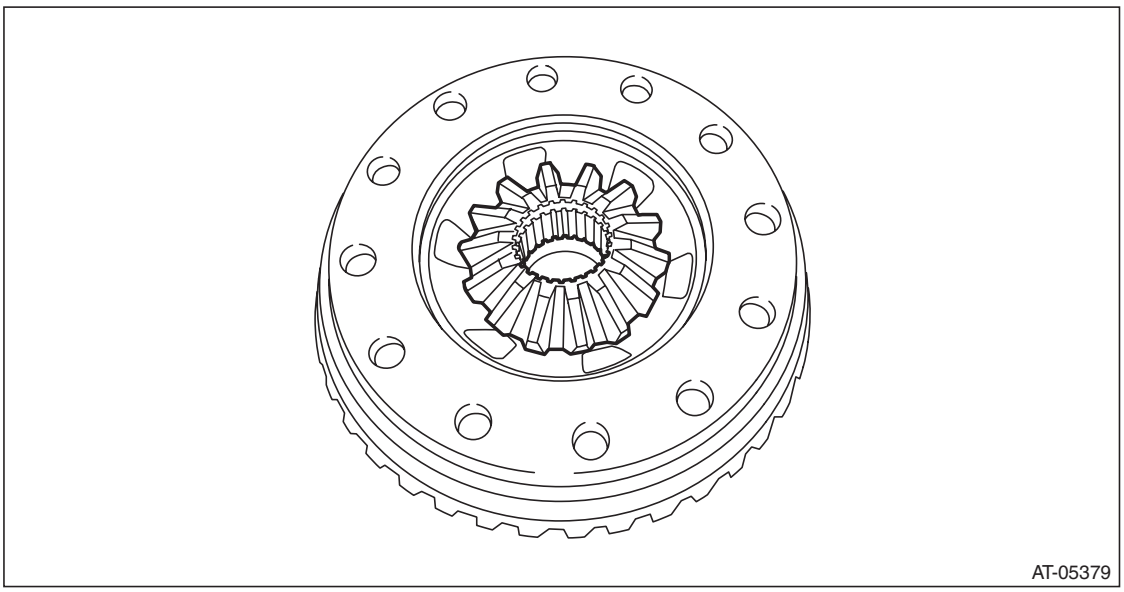

GETtheMANUALS.org

6) Using the ST, install the hypoid driven gear by tightening the installation bolt.
ST 18270KA020 SOCKET (E20)

Tightening torque:
20 N·m (2.0 kgf-m, 14.8 ft-lb)

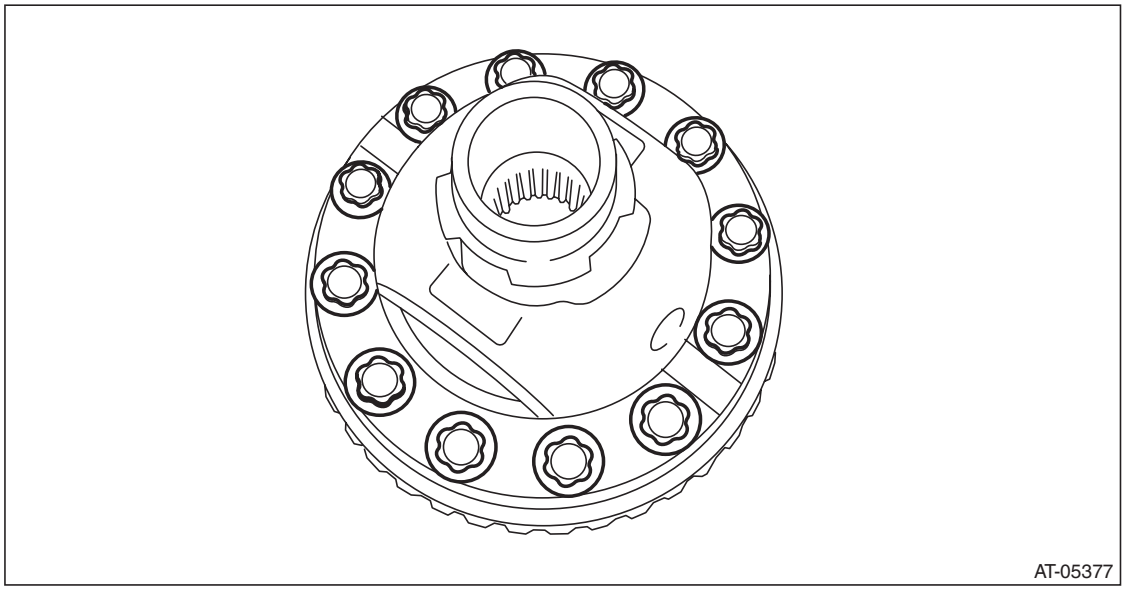

7) While checking the tightening angle with the ST, further tighten the hypoid driven gear mounting bolts.

Tightening angle:
28°±2°
ST 18554AA000 ANGLE GAUGE
8) Measurement of backlash (Selection of washer)
(1) Install the SUBARU genuine axle shaft to differential case.
Part No. 38415AA070 Axle shaft
(2) Measure the gear backlash using ST1 and ST2, and then insert the ST2 through the window of differential case.
ST1 498247001 MAGNET BASE
ST2 498247100 DIAL GAUGE

NOTE:
• Measure the backlash by applying a differential bevel pinion tooth between two differential bevel gear teeth.
• When measuring, fix the differential bevel pinion gear in place with a screwdriver covered with cloth, or a similar tool.

GETtheMANUALS.org

Specification:
0.13 — 0.18 mm (0.0051 — 0.0071 in)

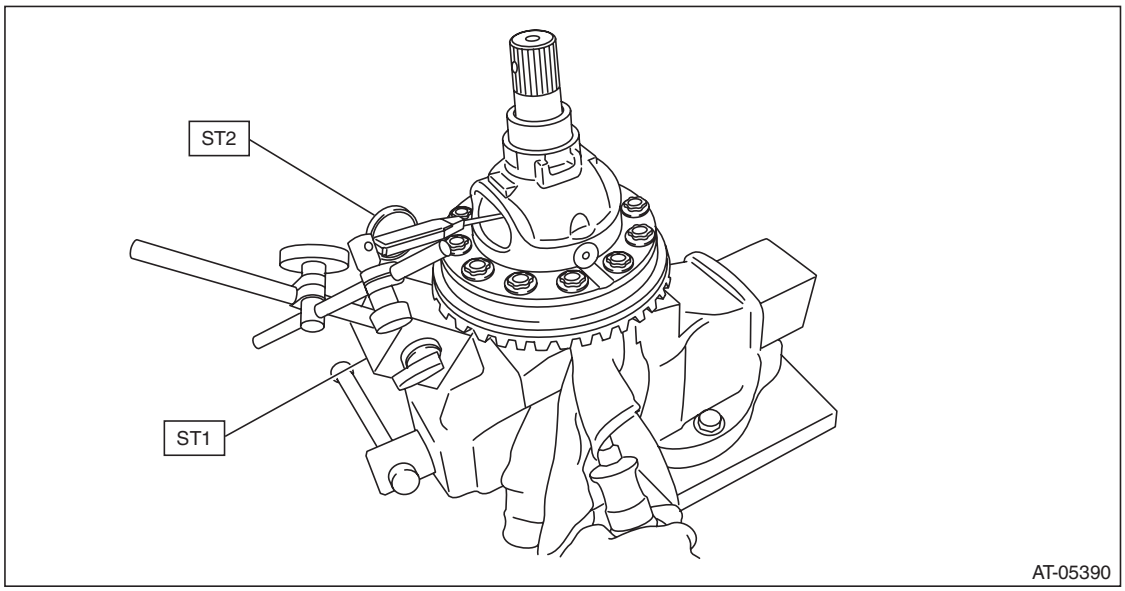

(3) If the backlash is not within specification, select a washer from the table below and replace.

Washer	
Part No.	Thickness mm (in)
803038021	0.95 (0.037)
803038022	1.00 (0.039)
803038023	1.05 (0.041)

9) Using the ST, install the left and right taper roller bearings.
ST1 499277100 BUSHING 1-2 INSTALLER
ST2 398497701 SEAT

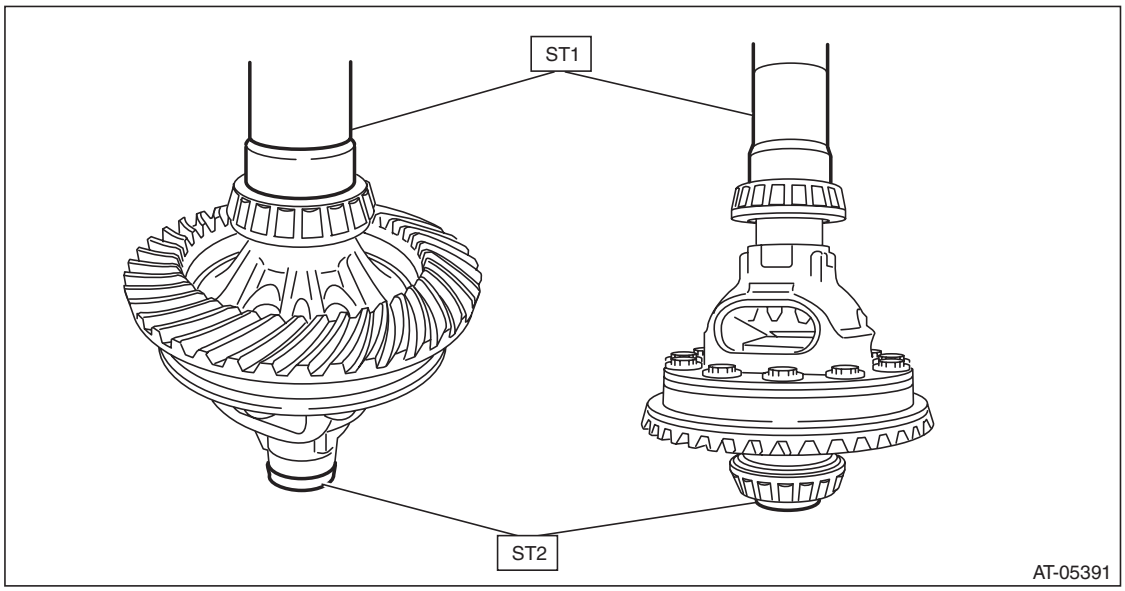

GETtheMANUALS.org

2. SIDE RETAINER

NOTE:
After adjusting the backlash and tooth contact, replace the oil seal and O-ring of side retainer with new parts.
1) Press-fit the bearing outer race to side retainer.
2) Using the ST, install the oil seal.

NOTE:
- Use a new oil seal.
- Apply differential oil to the oil seal lip.
- Oil seal has an identification mark (R, L). When installing oil seals, do not confuse the left and right.

ST 18675AA000 DIFFERENTIAL SIDE OIL SEAL INSTALLER

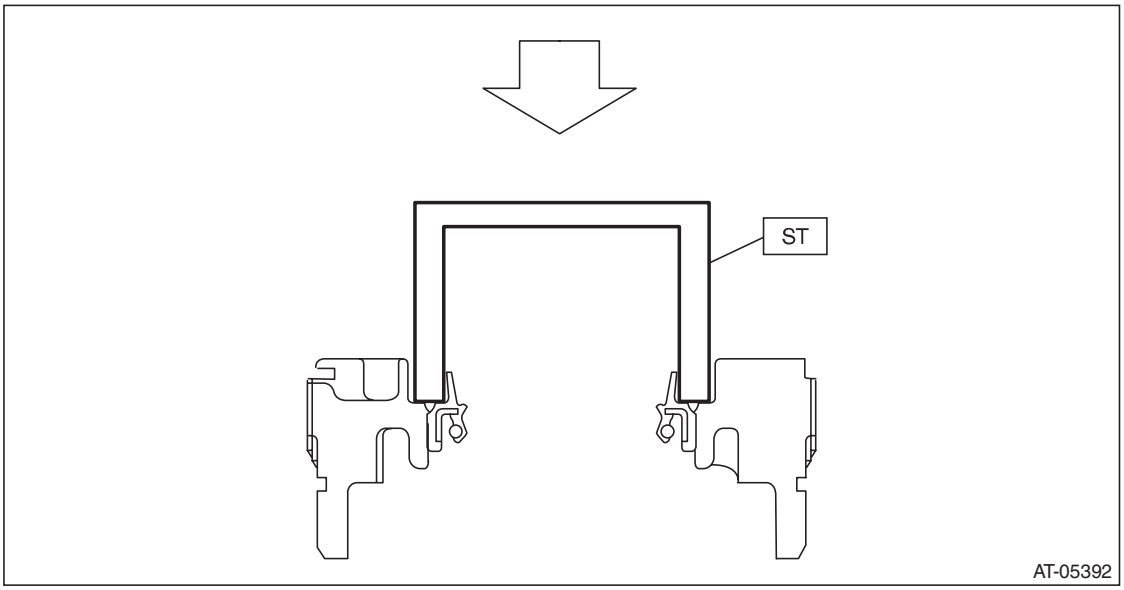

3) Install the O-ring.

NOTE:
- Use new O-rings.
- Apply CVTF to the O-ring.

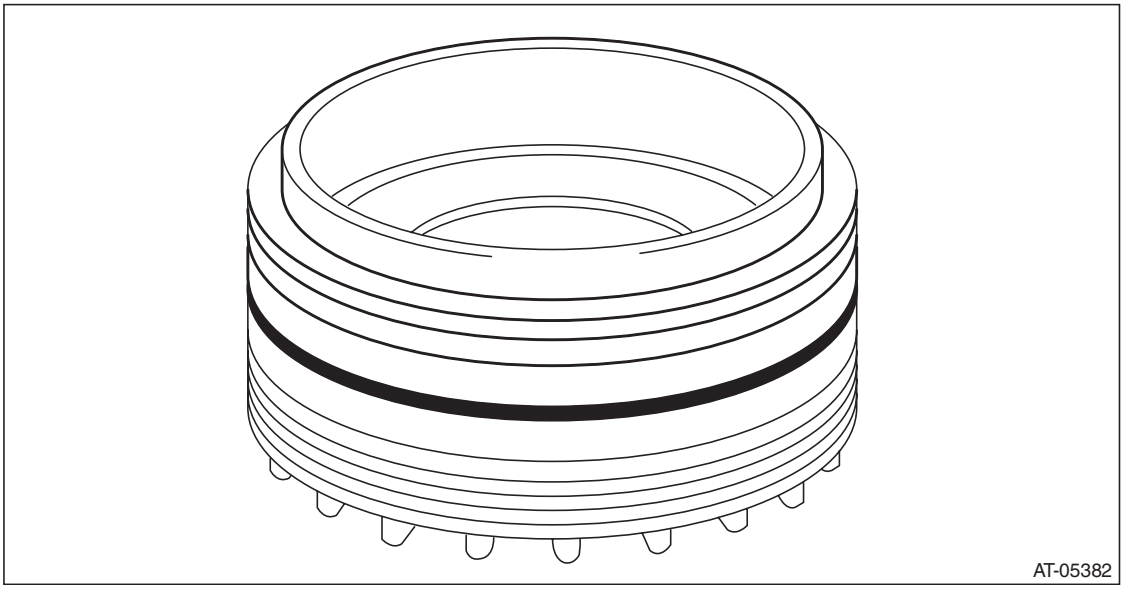

GETtheMANUALS.org

E: INSPECTION

- Check each component for scratches, damage or other faults.
- Inspect the backlash of the pinion gear.

Specification:
0.13 — 0.18 mm (0.0051 — 0.0071 in)

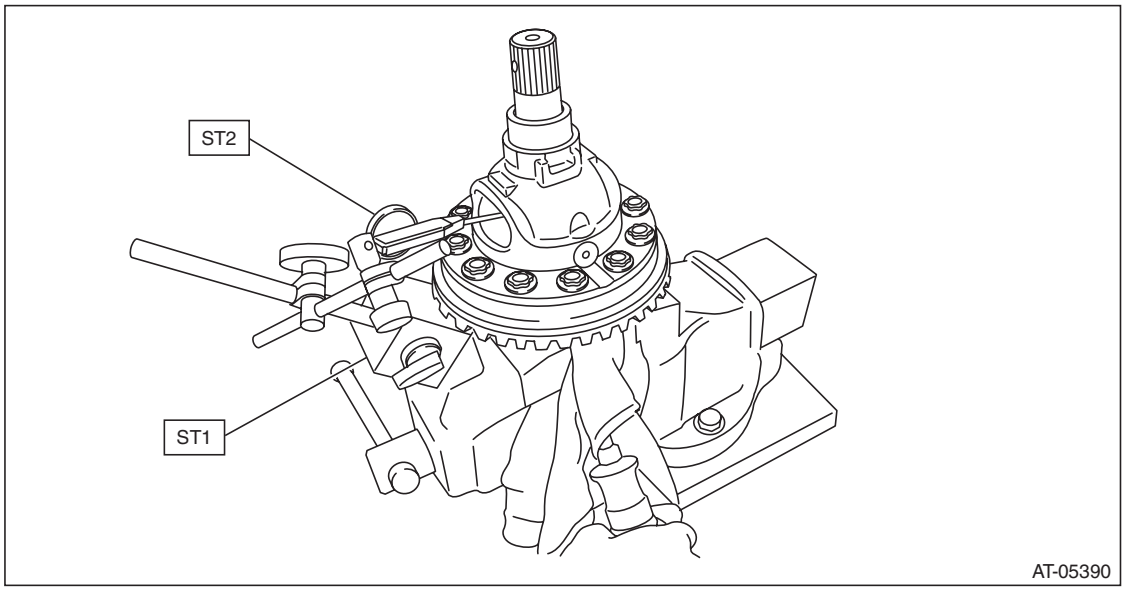

- Measure the hypoid gear backlash, and then adjust it to be within specification. <Ref. to CVT-277, ADJUSTMENT, Front Differential Assembly.>

F: ADJUSTMENT

1) Using the ST, screw-in the retainer until resistance is felt.

NOTE:
RH side should be screwed-in more than LH side.
ST 18658AA020 WRENCH COMPL RETAINER

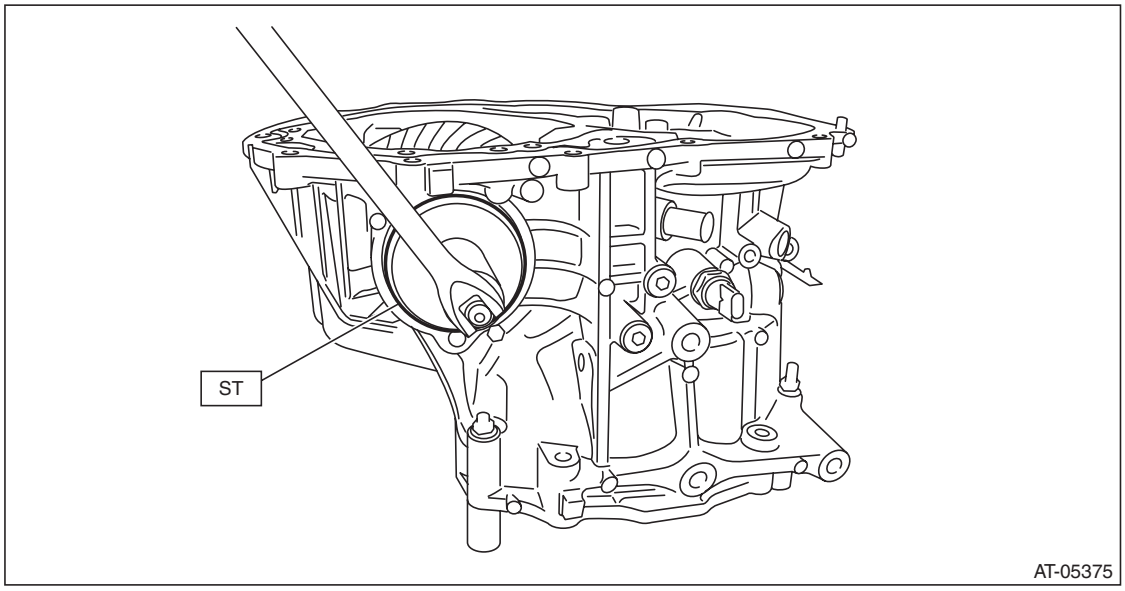

GETtheMANUALS.org

2) Remove the remaining liquid gasket from the mating surface completely.
3) Using the ST, install the drive pinion assembly to converter case.
ST1 18270KA020 SOCKET (E20)

NOTE:
Do not confuse the three different-length bolts when installing.

Tightening torque:
43 N·m (4.4 kgf-m, 31.7 ft-lb)

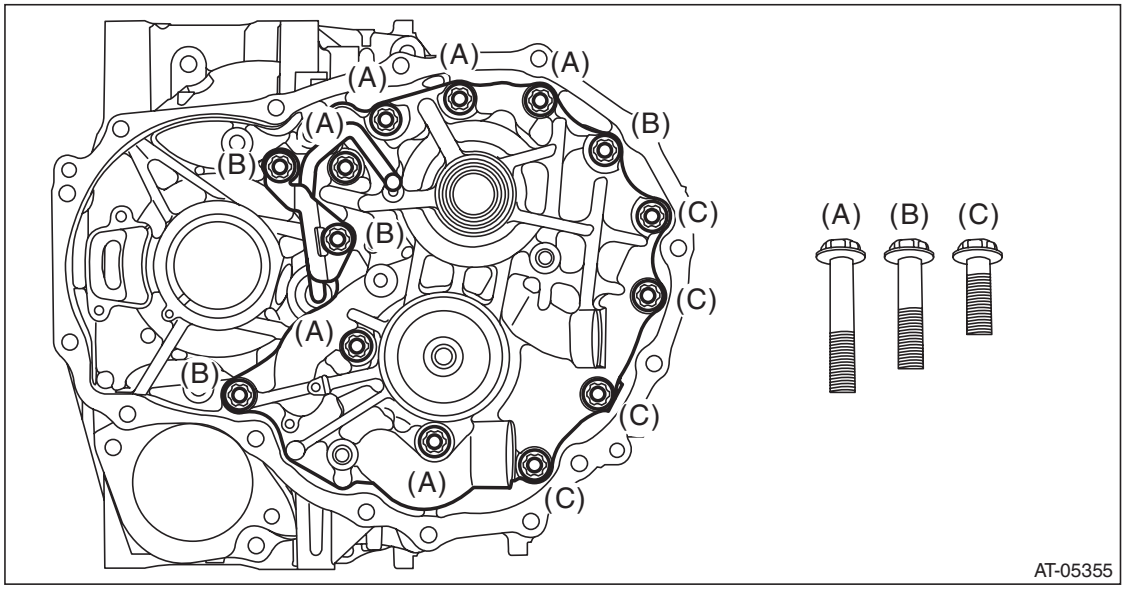

4) Rotate the drive pinion shaft more than ten times using ST1 and ST2.
ST1 18667AA010 HOLDER
ST2 499787700 WRENCH

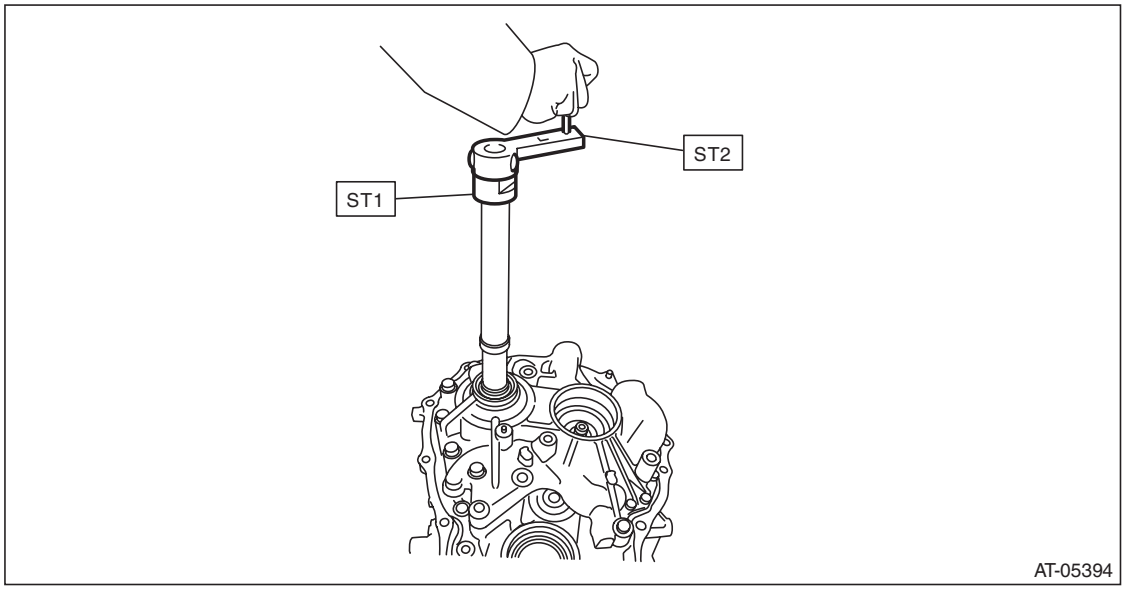

5) While rotating the pinion shaft, keep tightening the retainer LH, and loosening the retainer RH until the pinion shaft no longer be turned. When pinion shaft no longer turns, backlash is “zero”.

GETtheMANUALS.org

6) After the “zero” state is established, loosen the retainer LH by 3 notches and secure it with the lock plate. Loosen the retainer RH and retighten until it stops. Rotate the drive pinion 2 or 3 times. Tighten the retainer RH further 1-3/4 notches. This sets the preload. Finally, secure the retainer with its lock plate.

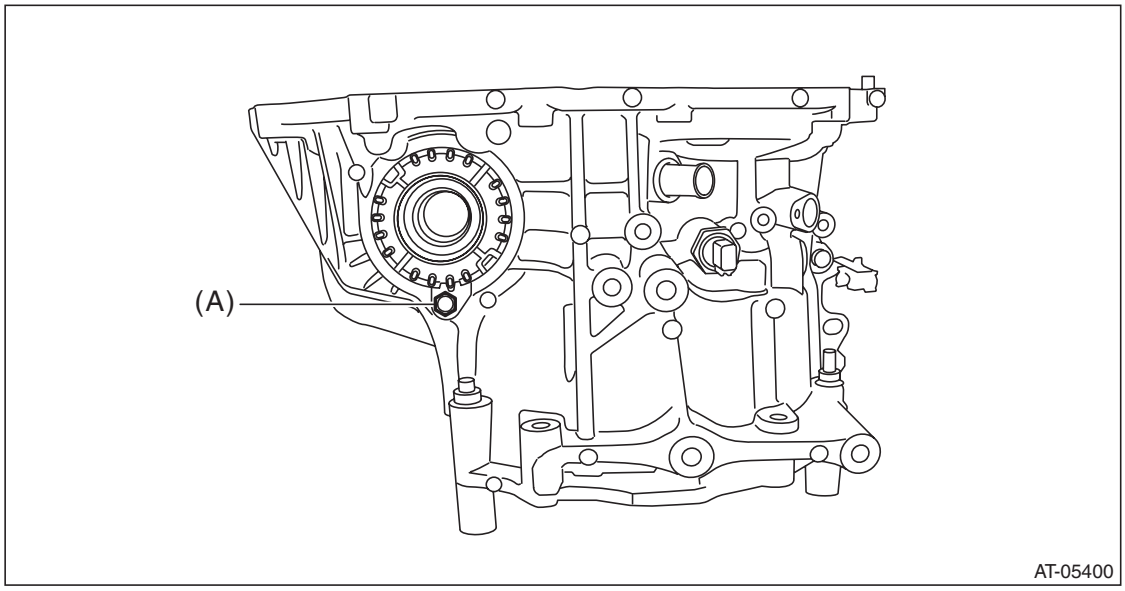

(A) Lock plate

NOTE:
Turning the retainer by every one tooth changes the backlash approx. 0.05 mm (0.0020 in).

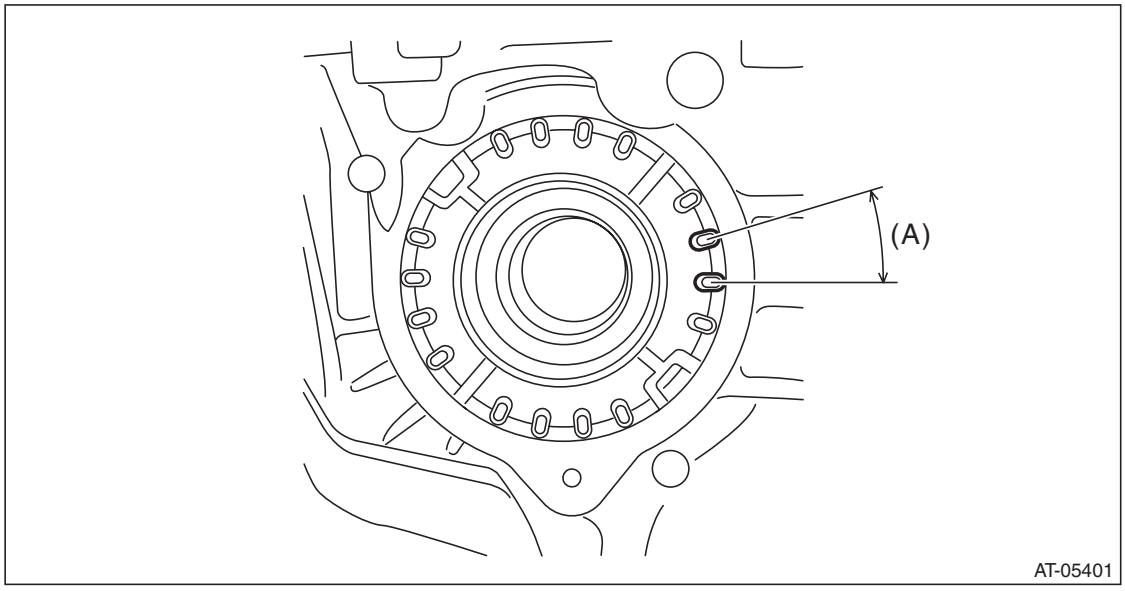

(A) 1 tooth

7) Insert the two SUBARU genuine axle shafts into differential case.
Part No. 38415AA070 Axle shaft

GETtheMANUALS.org

8) Wrap the drive shaft pinion shaft with cloth and pinch with vise pliers. Install the installation bolt into the bolt hole of secondary pulley and secure the bolt and vise pliers using a band or wire.
Make sure the drive pinion shaft does not move.

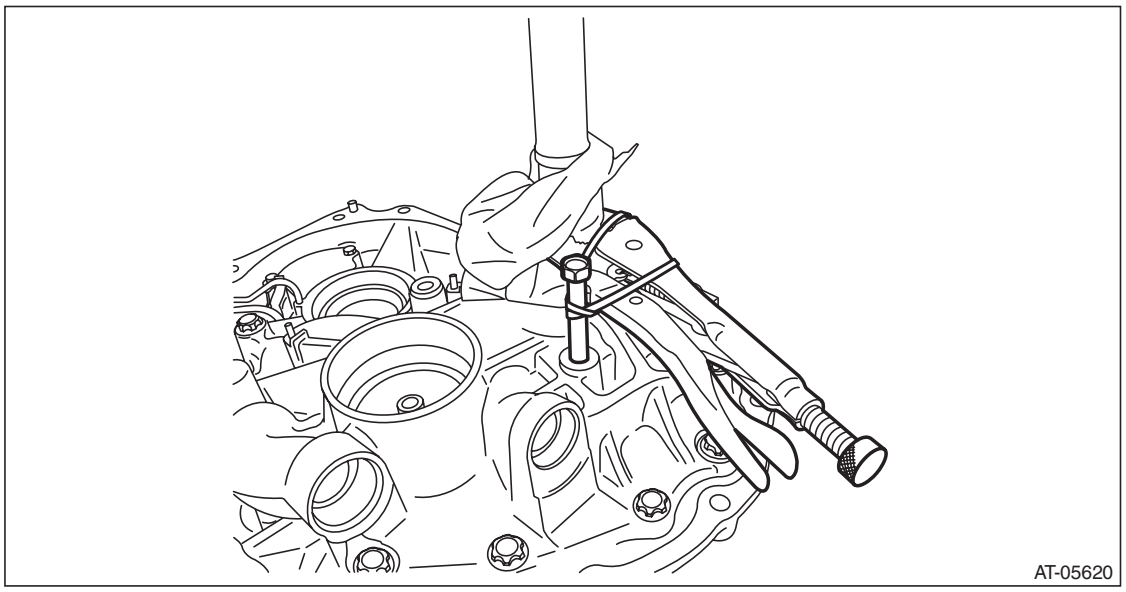

9) Check the backlash is within specification using ST1, ST2 and ST3.

ST1	498255400	PLATE
ST2	498247001	MAGNET BASE
ST3	498247100	DIAL GAUGE

Backlash:
0.13 — 0.18 mm (0.005 — 0.007 in)

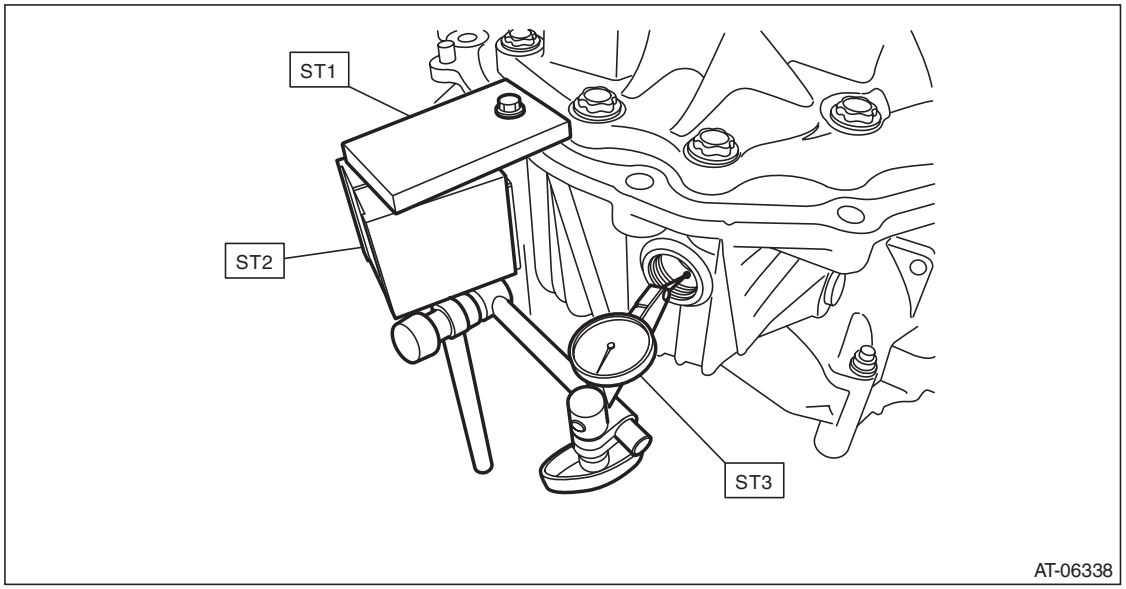

10) Adjust the teeth contact of the front differential and drive shaft. <Ref. to CVT-256, ADJUSTMENT, Drive Pinion Shaft Assembly.>

GETtheMANUALS.org

44.Oil Pump

A: REMOVAL

NOTE:
Refer to “Drive Pinion Shaft” for removal procedures. <Ref. to CVT-242, REMOVAL, Drive Pinion Shaft Assembly.>

B: INSTALLATION

NOTE:
Refer to “Drive Pinion Shaft” for removal procedures. <Ref. to CVT-244, INSTALLATION, Drive Pinion Shaft Assembly.>

C: INSPECTION

Check the following items.
- Check the oil pump for damage and wear.
- Rotate the oil pump by hand, and check that it rotates smoothly.

1) Measure the secondary pressure. <Ref. to CVT-50, INSPECTION, Secondary Pressure (Line Pressure) Test.>
2) If the secondary pressure is abnormal, remove the oil pan and oil strainer. <Ref. to CVT-111, REMOVAL, Control Valve Body.>
3) Check oil strainer for clogging.
When oil strainer has no clogging, replace the oil pump.

GETtheMANUALS.org

45.Oil Pump Chain

A: REMOVAL

1) Remove the transmission assembly from the vehicle. <Ref. to CVT-55, REMOVAL, Automatic Transmission Assembly.>
2) Remove the torque converter assembly. <Ref. to CVT-136, REMOVAL, Torque Converter Assembly.>
3) Remove the oil pump chain cover.

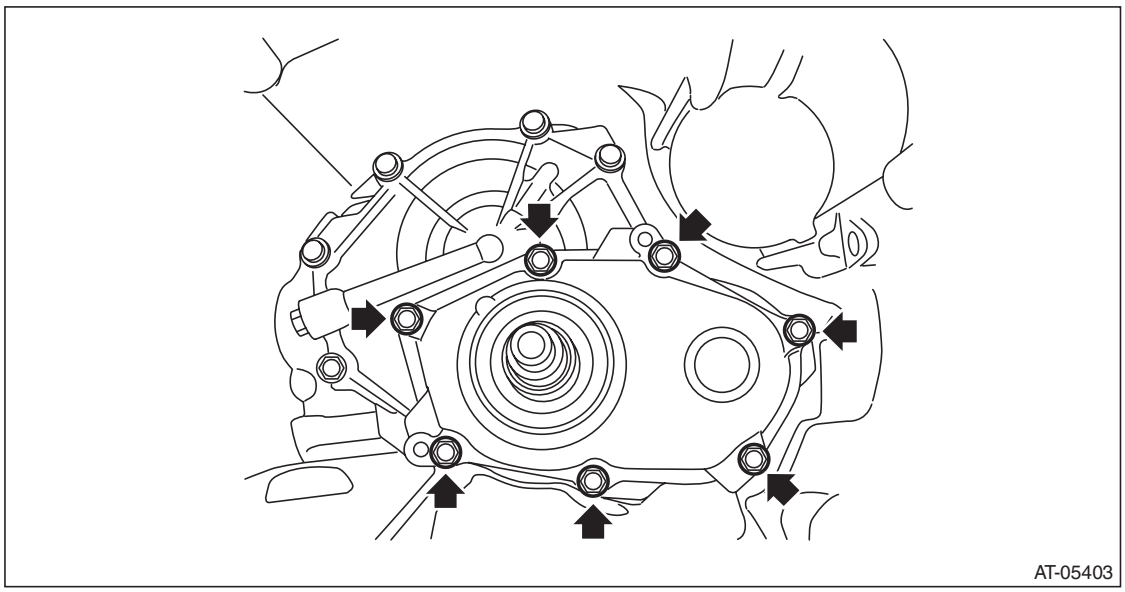

4) Remove the seal ring from center support COMPL.

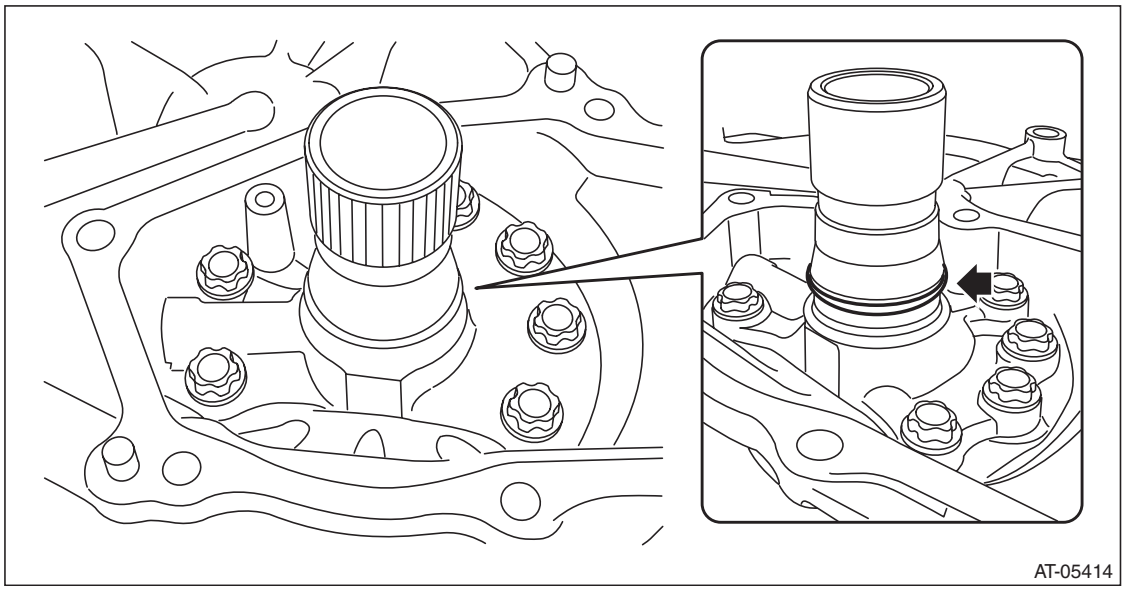

GETtheMANUALS.org

5) Remove the driven sprocket from oil pump chain cover to remove the oil pump chain.

NOTE:
The driven sprocket is replaced as an assembly only, because it is a non-disassembly part.

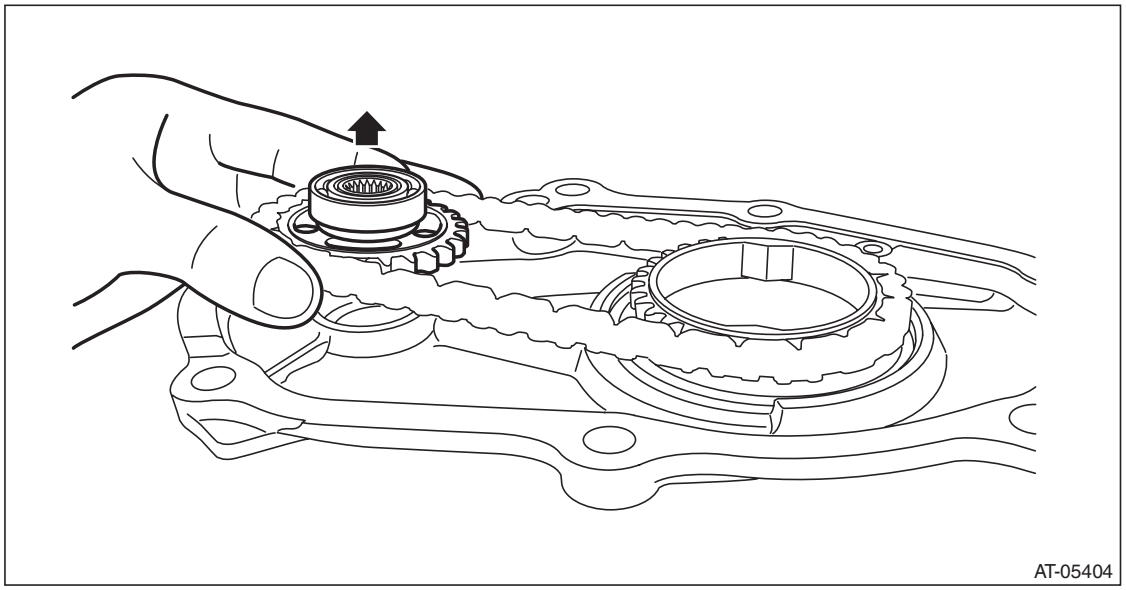

6) Remove the snap ring.

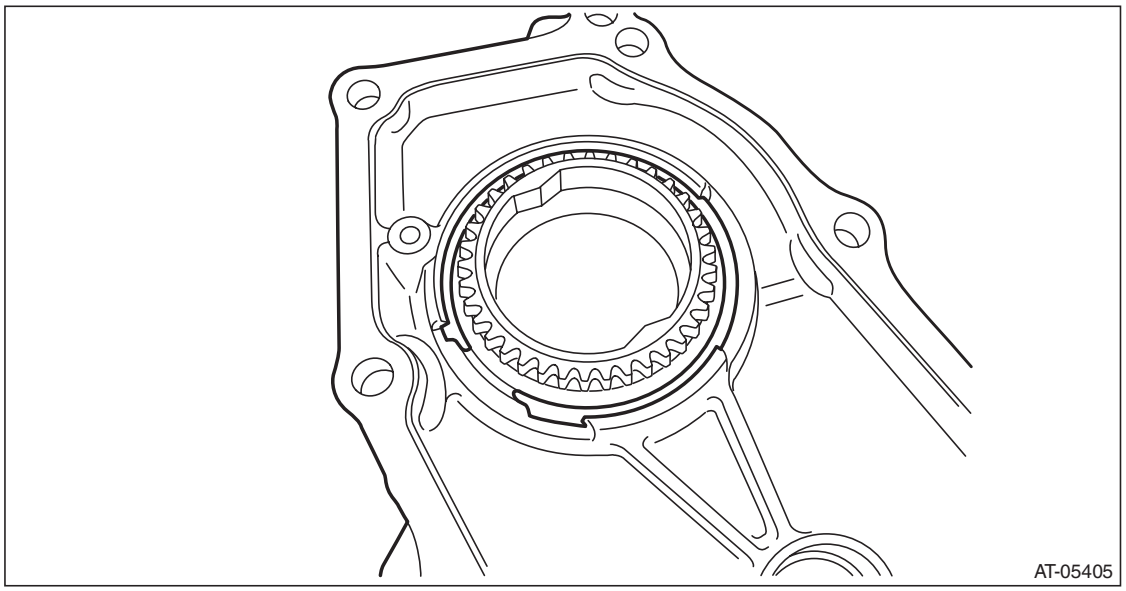

GETtheMANUALS.org

7) Remove the drive sprocket.

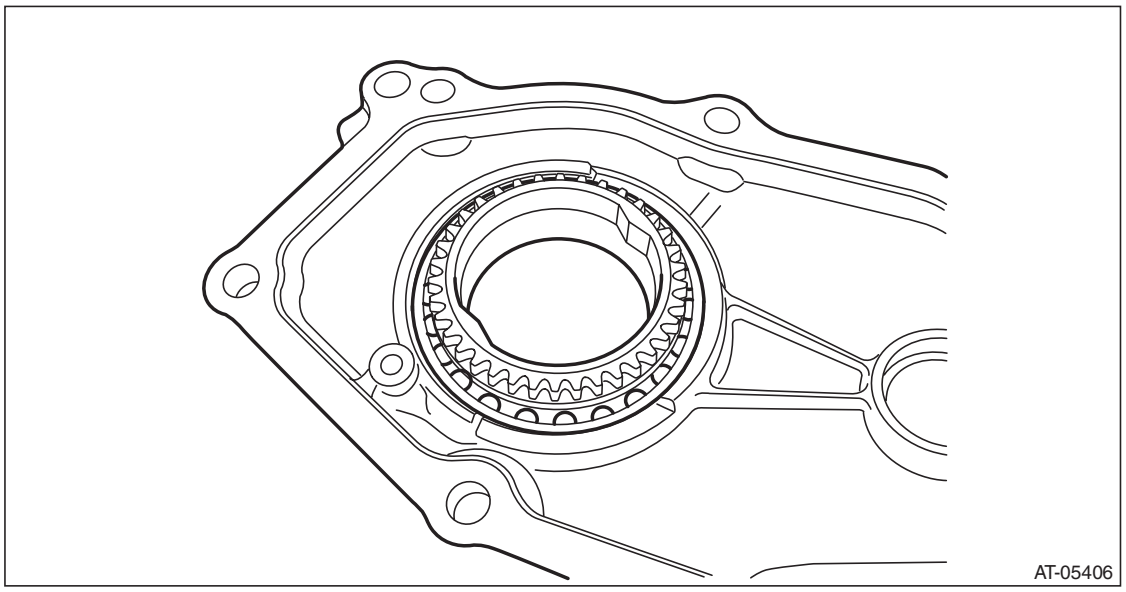

8) Remove the oil seal from the oil pump chain cover.

B: INSTALLATION

1) Clean the mating surface of oil pump chain cover and converter case cover.
2) Using the ST, install the oil seal.
ST 499755602 PRESS SNAP RING

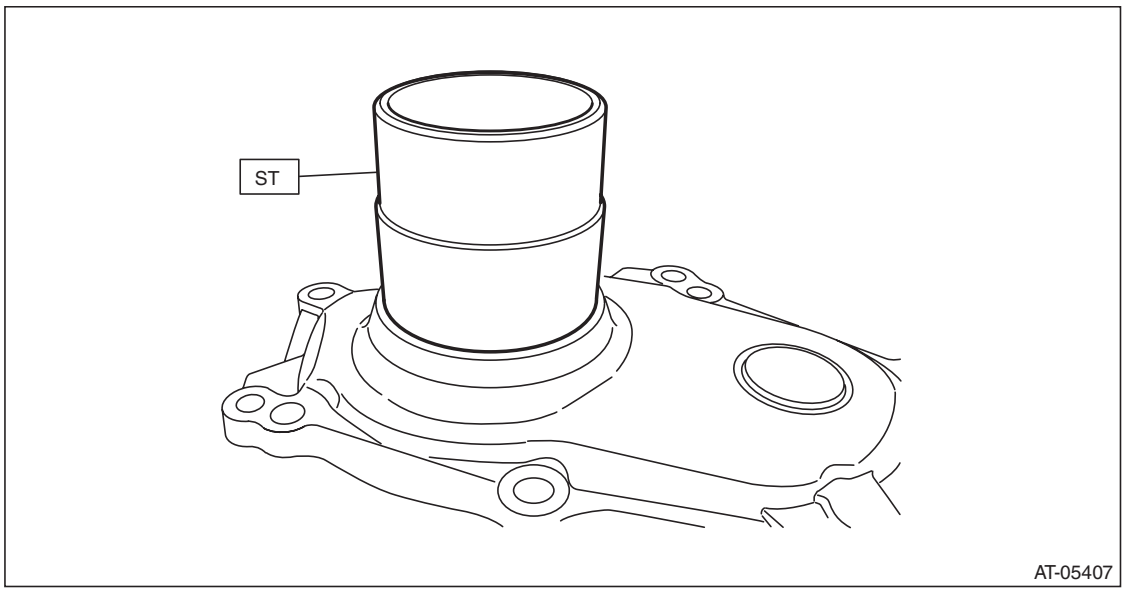

GETtheMANUALS.org

3) Install the drive sprocket and install the snap ring.

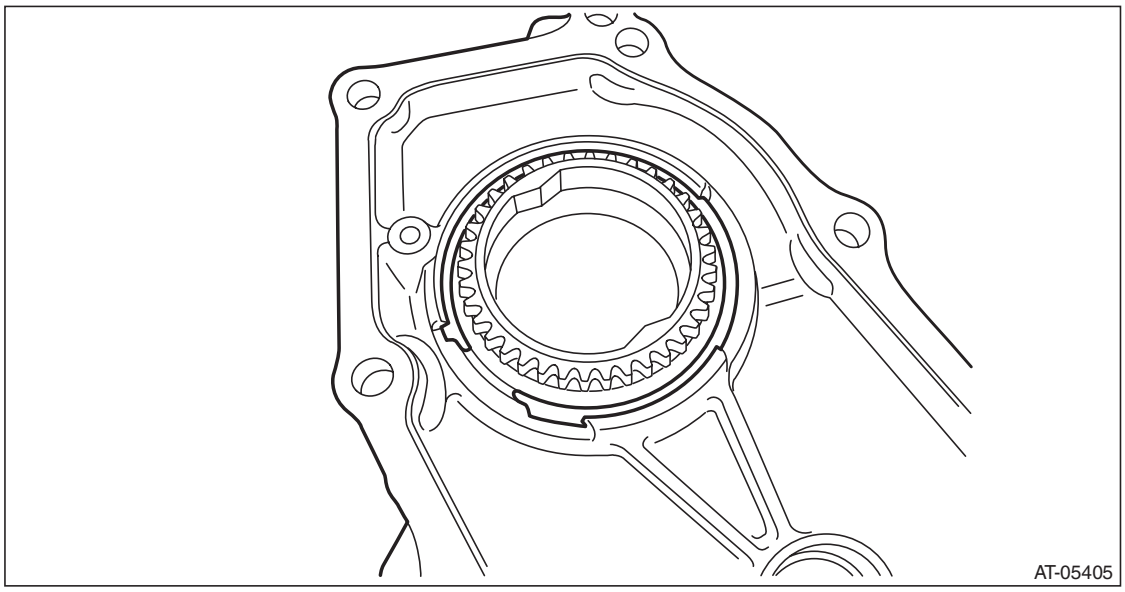

4) Place the oil pump chain on drive sprocket.
5) Place the oil pump chain on driven sprocket and install the driven sprocket to oil pump chain cover.

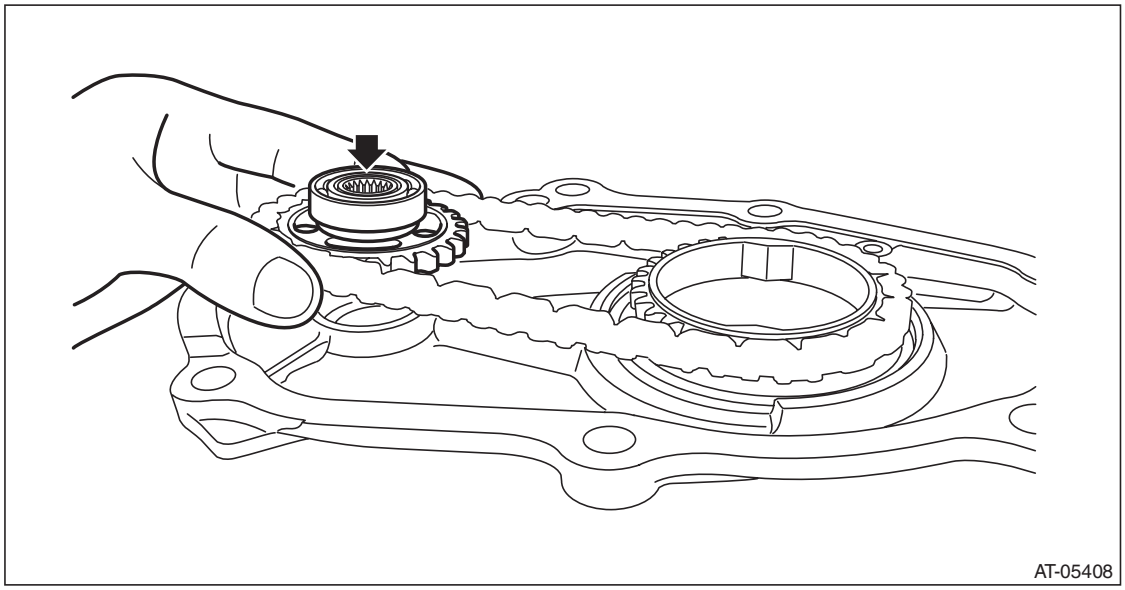

GETtheMANUALS.org

6) Install the seal ring to center support COMPL.

NOTE:
- Use a new seal ring.
- Apply CVTF to the seal rings.

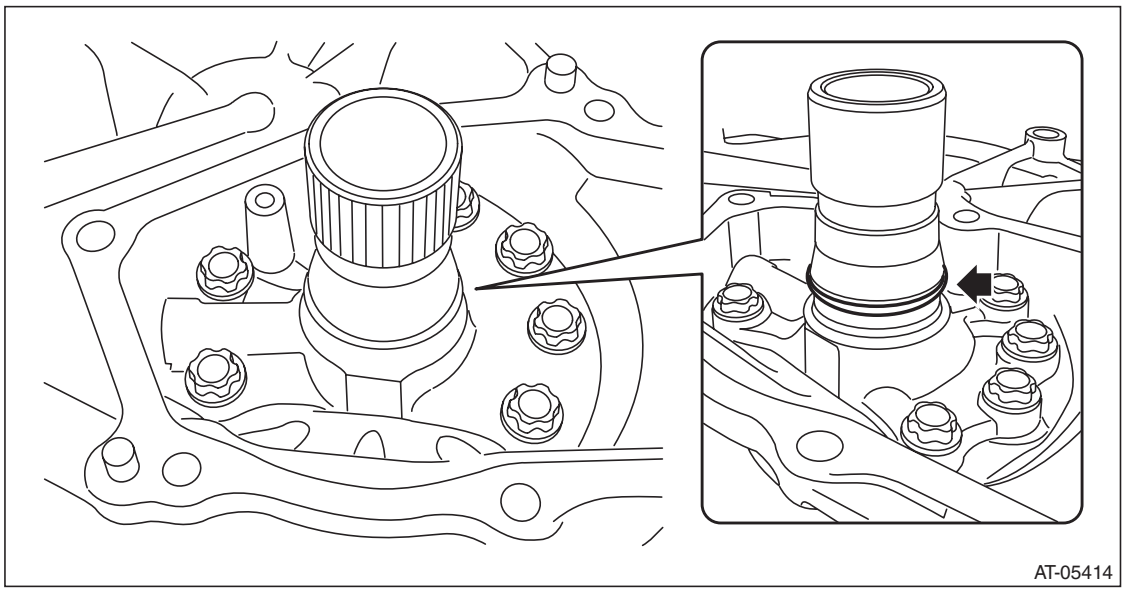

7) Apply liquid gasket seamlessly to the mating surface of oil pump chain cover.

CAUTION:
Do not apply liquid gasket at the arrowed hole.

Liquid gasket:
THREE BOND 1215 (Part No. 004403007) or equivalent

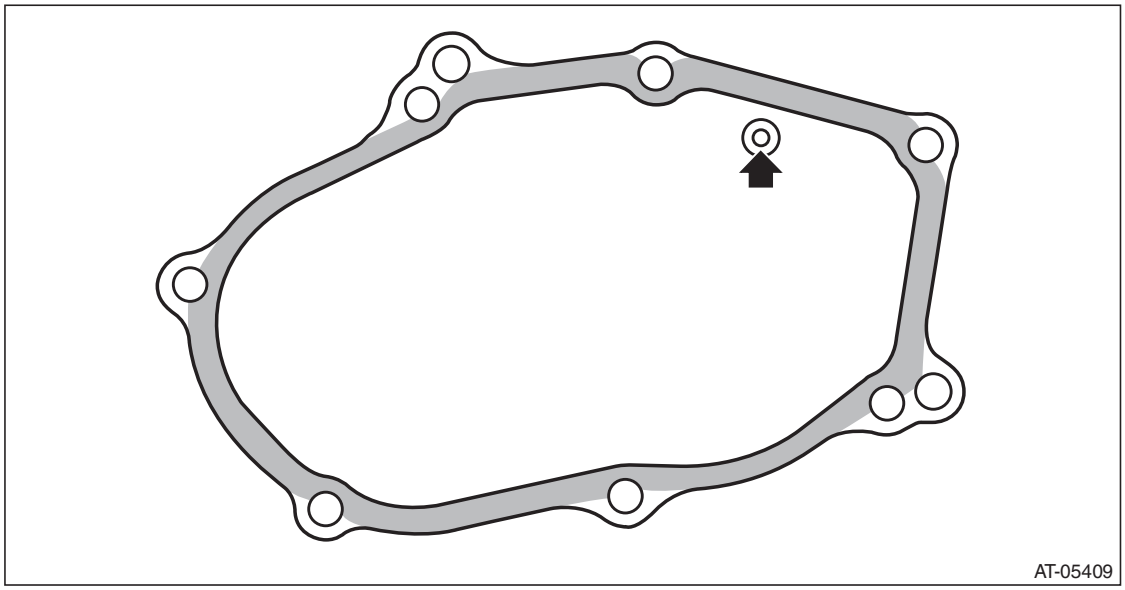

GETtheMANUALS.org

8) Install the oil pump chain cover.

NOTE:
There are two types of bolt.

Tightening torque:
24 N·m (2.4 kgf-m, 17.7 ft-lb)

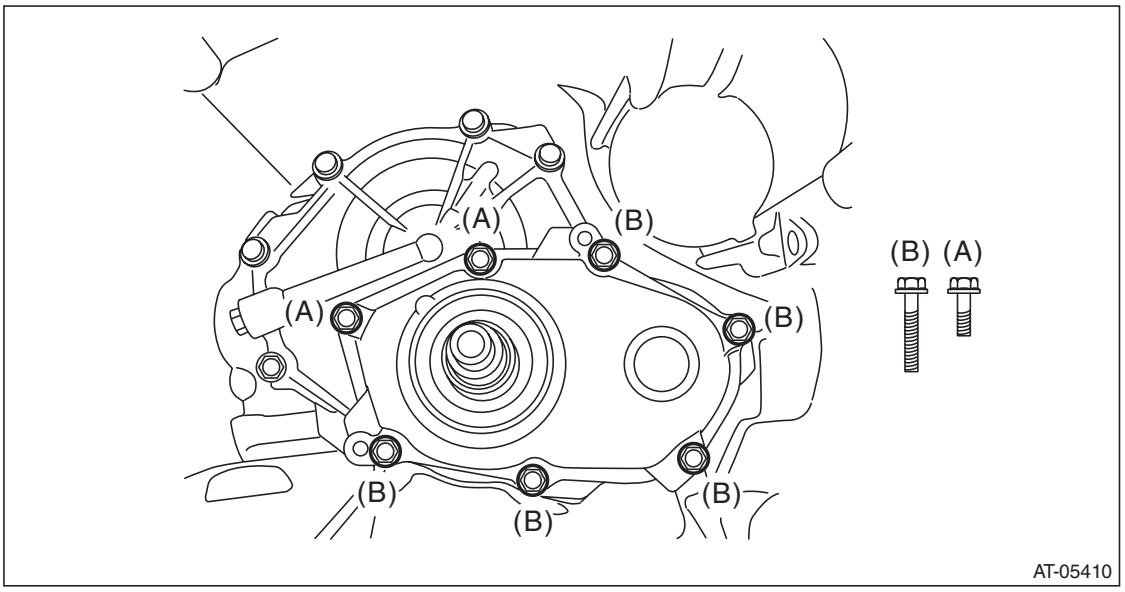

9) Install the torque converter assembly. <Ref. to CVT-136, INSTALLATION, Torque Converter Assembly.>
10) Install the transmission assembly to the vehicle. <Ref. to CVT-70, INSTALLATION, Automatic Transmission Assembly.>

C: DISASSEMBLY

1. DRIVE SPROCKET

1) Remove the ball bearing using ST.
ST1 498077600 REMOVER
ST2 399513600 INSTALLER

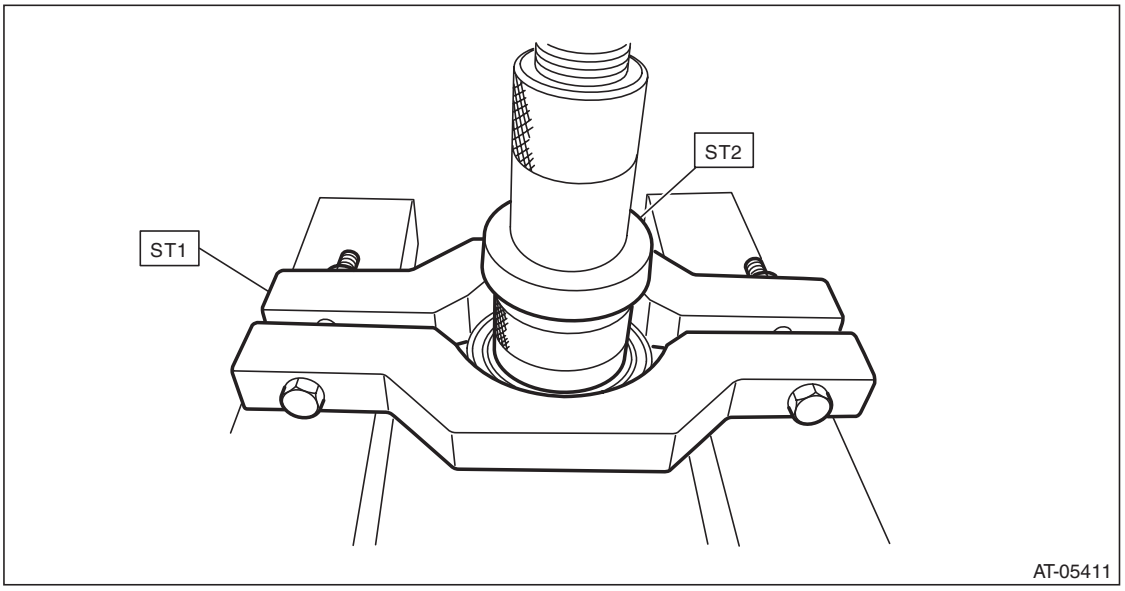

GETtheMANUALS.org

D: ASSEMBLY

1. DRIVE SPROCKET

1) Using the ST, install the ball bearing.

NOTE:
Use a new ball bearing.
ST 499755602 PRESS SNAP RING

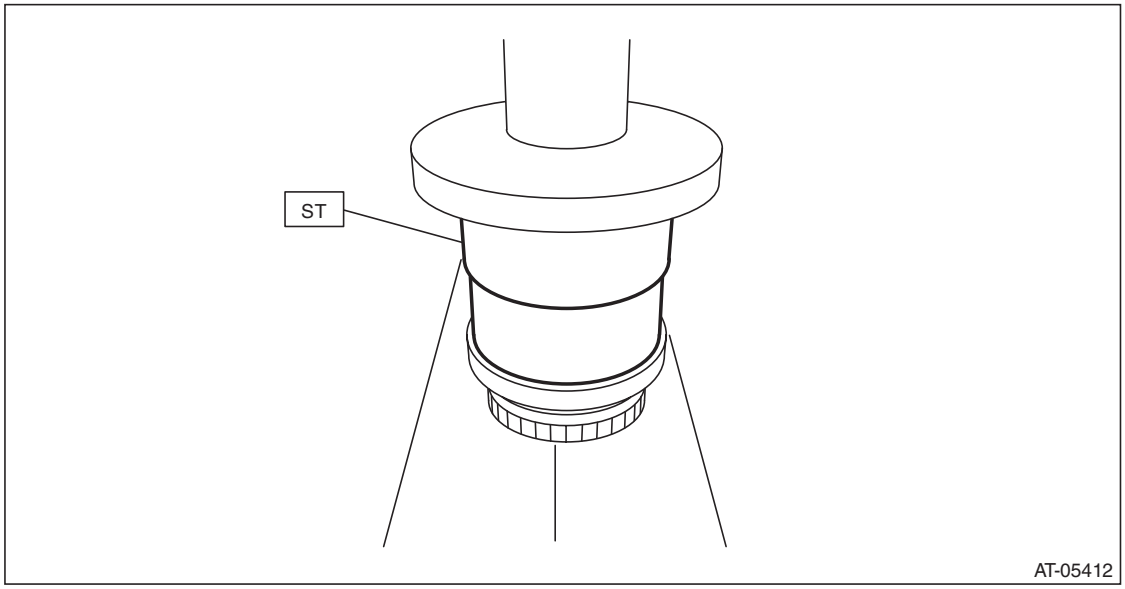

E: INSPECTION

- Check the oil pump chain for damage.
- Replace if gear teeth are broken, damaged, sharpen or excessively worn.
- Check the bearing for seizure or wear.
- Apply CVTF to bearing and rotate the bearing to check for noise or dragging etc.
- Check the oil pump chain cover for damage.
- Check for leakage of CVTF from the mating surface of oil pump chain cover.
- Check the oil seal for damage.

GETtheMANUALS.org

46. Converter Case Cover

A: REMOVAL

1) Remove the transmission assembly from the vehicle. <Ref. to CVT-55, REMOVAL, Automatic Transmission Assembly.>
2) Remove the air breather hose. <Ref. to CVT-132, REMOVAL, Air Breather Hose.>
3) Remove the oil pan and control valve body. <Ref. to CVT-111, REMOVAL, Control Valve Body.>
4) Remove the transmission harness. <Ref. to CVT-121, REMOVAL, Transmission Harness.>
5) Remove the extension case. <Ref. to CVT-138, REMOVAL, Extension Case.>
6) Remove the rear drive shaft. <Ref. to CVT-141, REMOVAL, Rear Drive Shaft.>
7) Remove the transfer clutch assembly. <Ref. to CVT-146, REMOVAL, Transfer Clutch.>
8) Remove the transfer reduction driven gear assembly. <Ref. to CVT-158, REMOVAL, Transfer Reduction Driven Gear.>
9) Remove the intermediate case. <Ref. to CVT-165, REMOVAL, Intermediate Case.>
10) Remove the forward clutch assembly. <Ref. to CVT-180, REMOVAL, Forward Clutch Assembly.>
11) Remove the transmission case. <Ref. to CVT-211, REMOVAL, Transmission Case.>
12) Remove the primary pulley, secondary pulley and variator chain. <Ref. to CVT-226, REMOVAL, Primary Pulley and Secondary Pulley.>
13) Remove the drive pinion shaft assembly. <Ref. to CVT-242, REMOVAL, Drive Pinion Shaft Assembly.>
14) Remove the oil stopper plate and lubrication pipe.

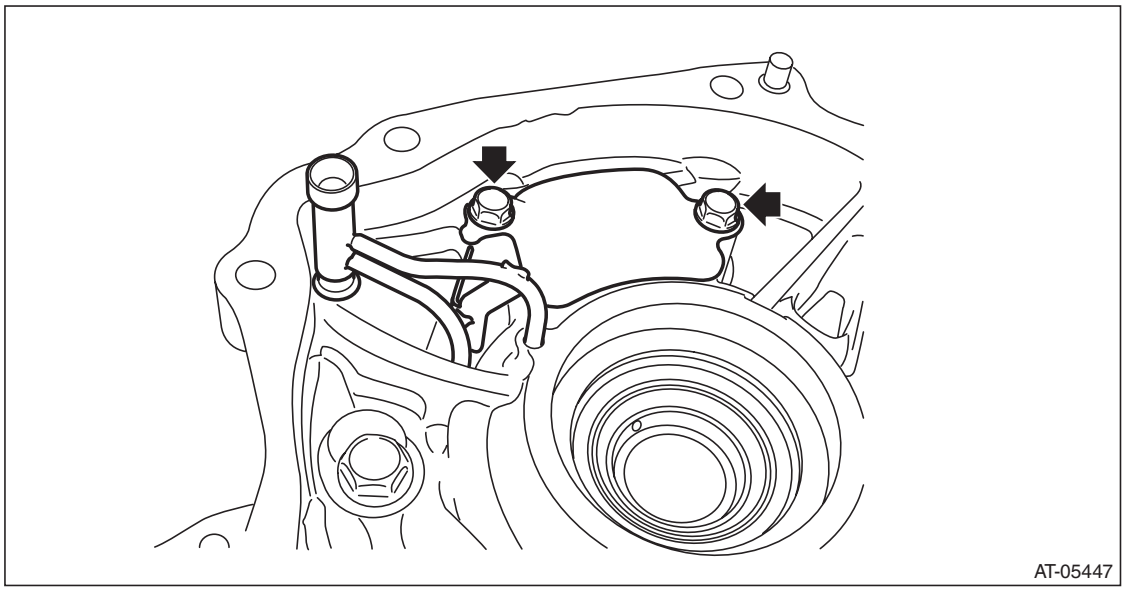

15) Flip over the converter case.
16) Remove the oil pump chain cover and the oil pump chain. <Ref. to CVT-282, REMOVAL, Oil Pump Chain.>

GETtheMANUALS.org

17) Remove the converter case cover.

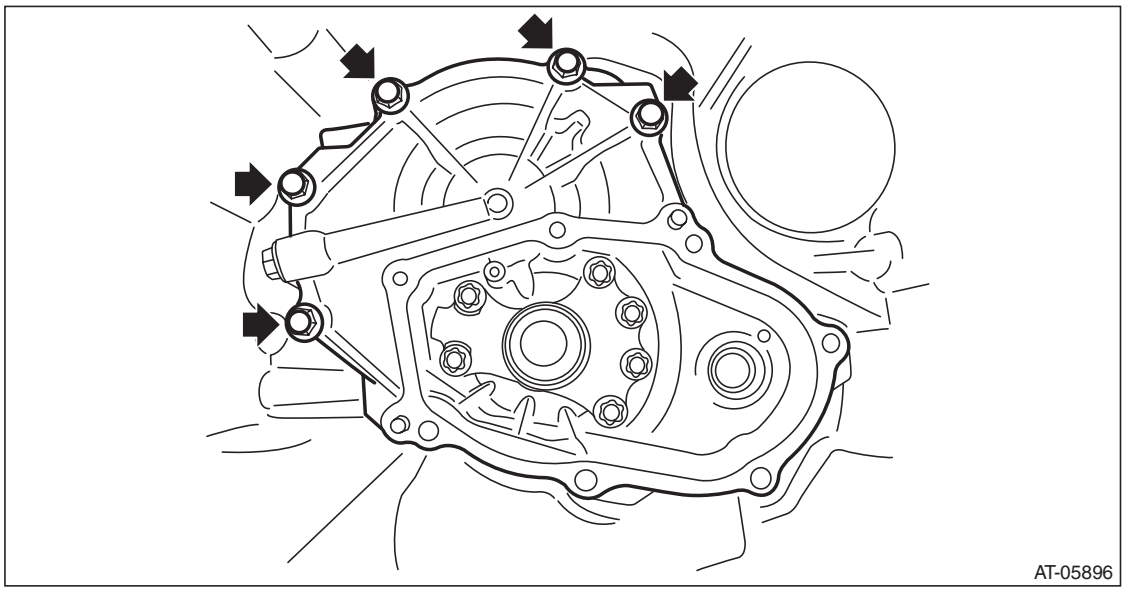

18) Remove the O-ring.

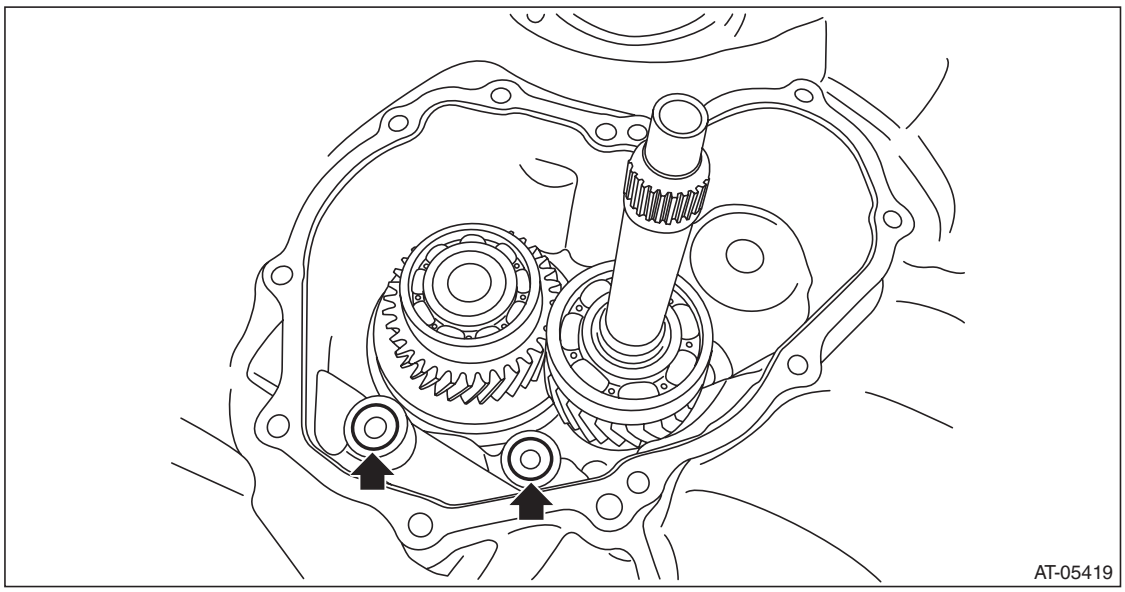

GETtheMANUALS.org

19) Remove the seal ring from converter case cover.

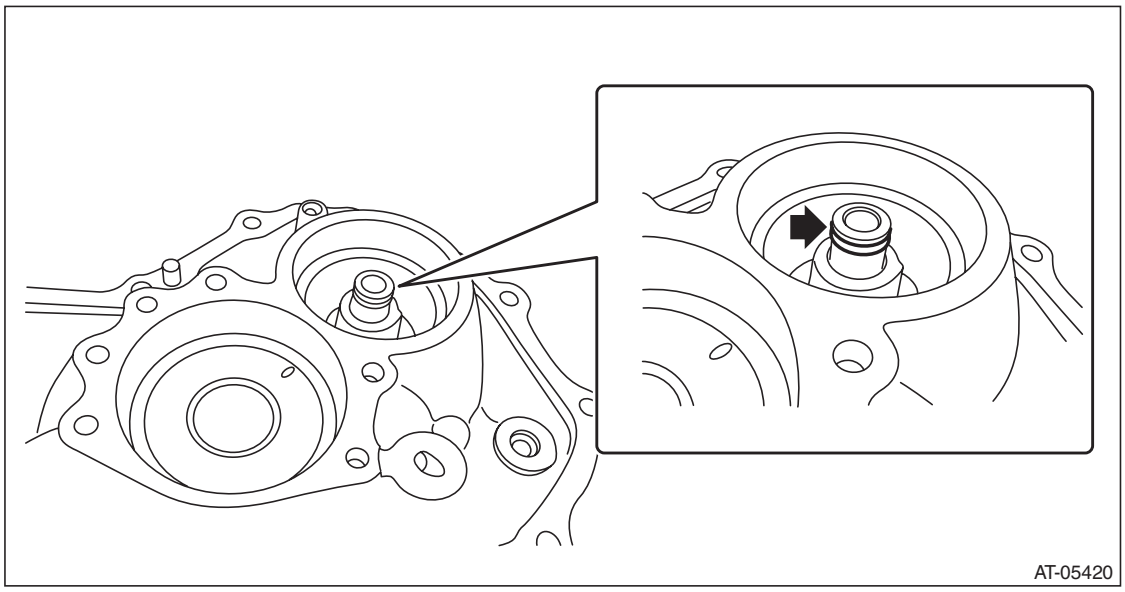

B: INSTALLATION

1) Clean the mating surface of converter case cover and converter case.
2) Adjust the shims of front reduction drive gear and front reduction driven gear. <Ref. to CVT-302, ADJUSTMENT, Front Reduction Drive Gear.> <Ref. to CVT-311, ADJUSTMENT, Front Reduction Driven Gear.>
3) Install the O-ring.

NOTE:
- Use new O-rings.
- Apply CVTF to the O-ring.

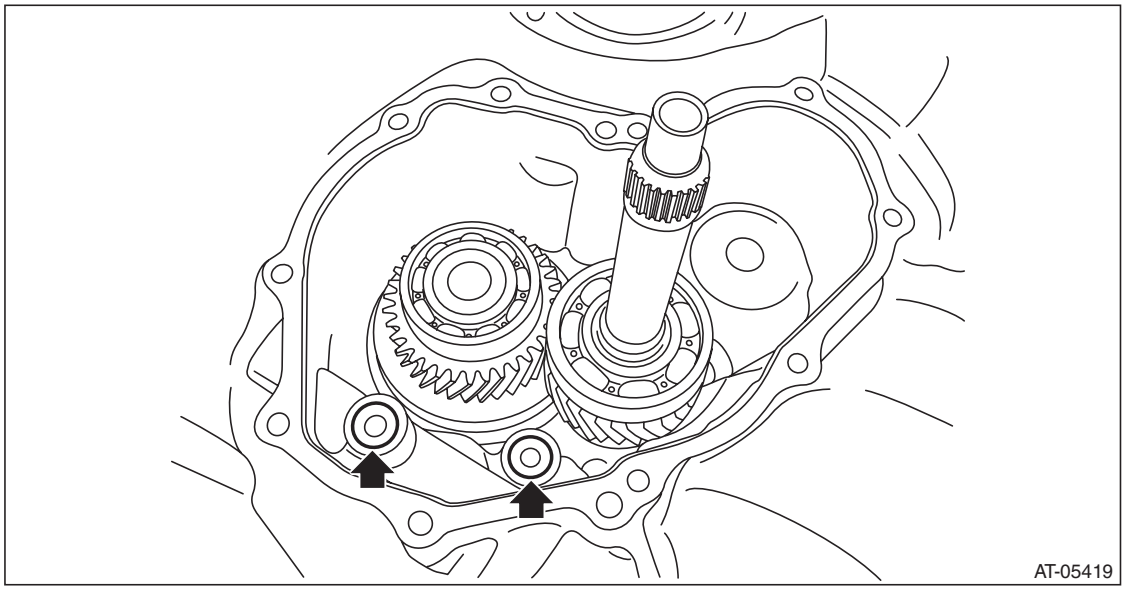

4) Apply CVTF to the selected shims and install each to the catch surface of bearing.

GETtheMANUALS.org

5) Install the seal ring to converter case cover.

NOTE:
- Use a new seal ring.
- When installing the seal ring, do not expand the seal ring too much.

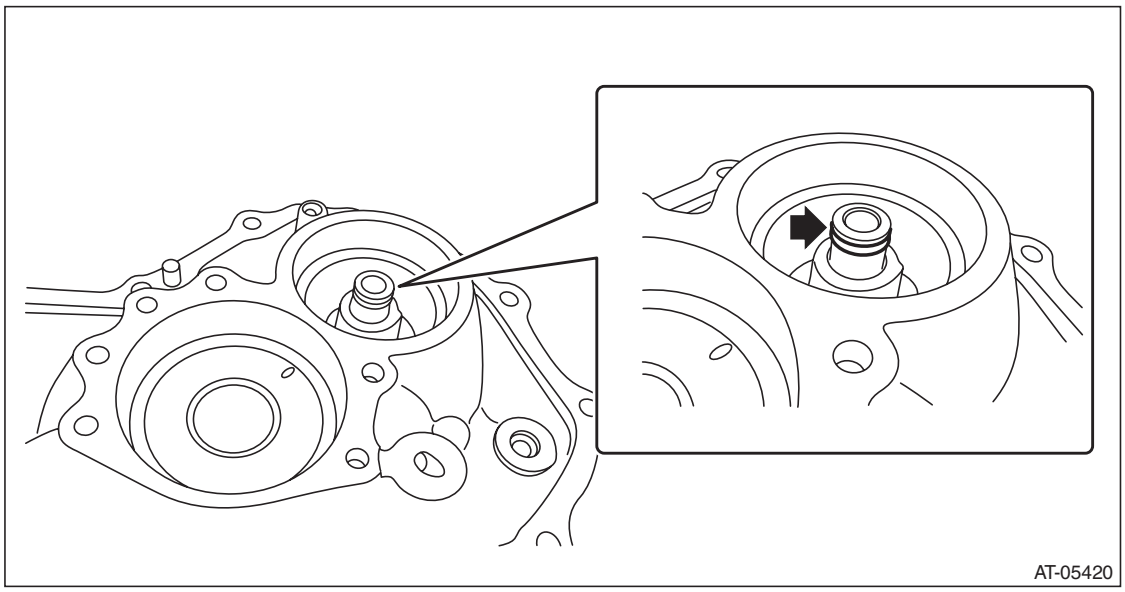

6) Apply liquid gasket seamlessly to the mating surface of converter case cover.

Liquid gasket:
THREE BOND 1215 (Part No. 004403007) or equivalent

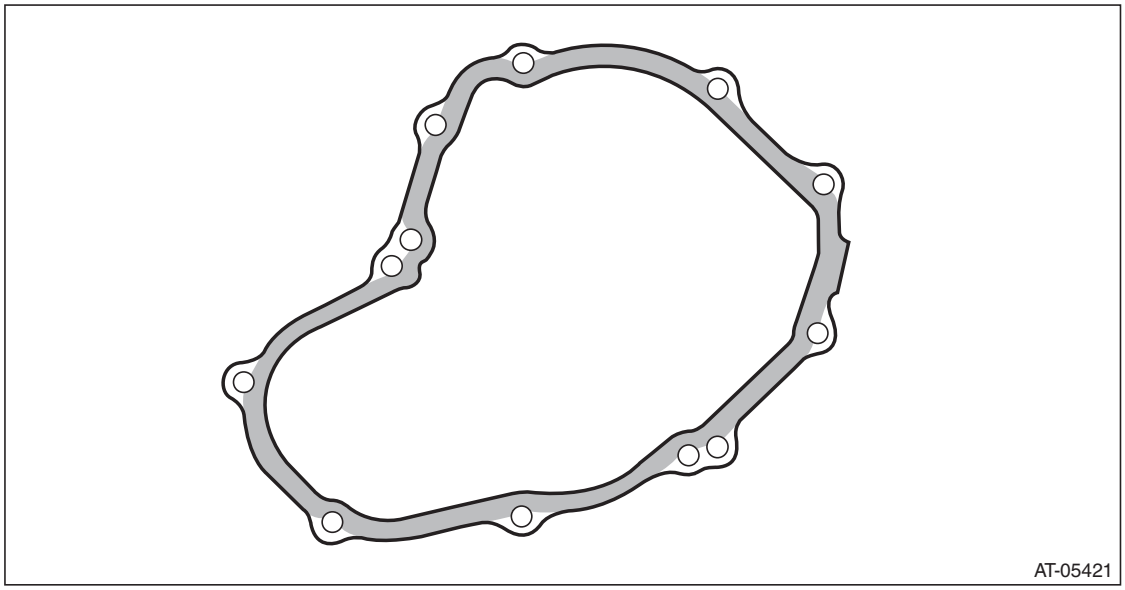

GETtheMANUALS.org

7) Install the converter case cover.

Tightening torque:
24 N·m (2.4 kgf-m, 17.7 ft-lb)

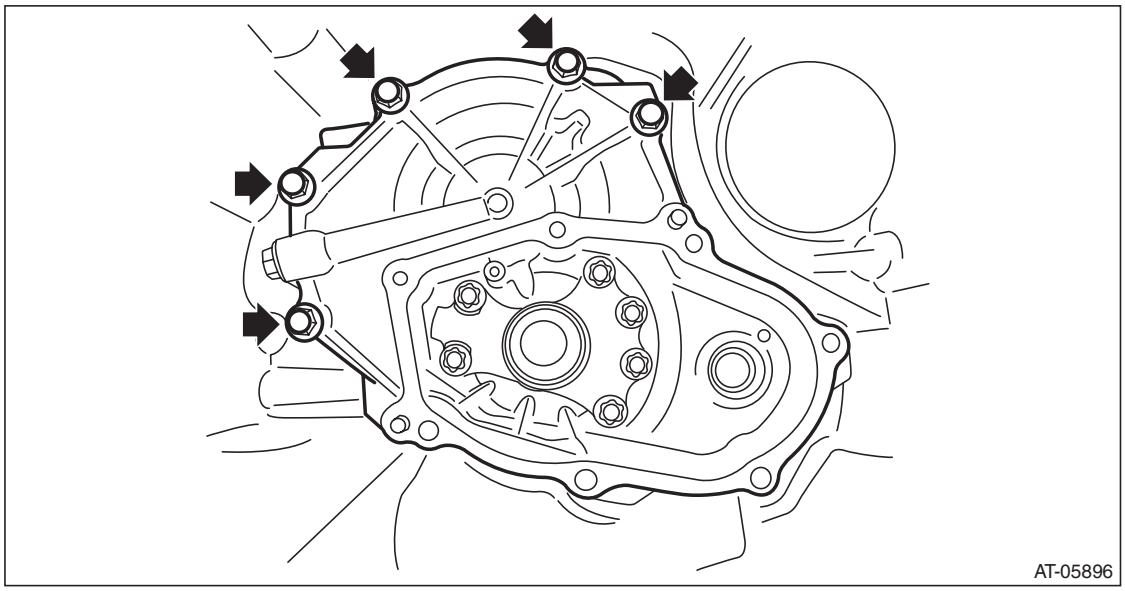

8) Install the oil pump chain cover and the oil pump chain. <Ref. to CVT-284, INSTALLATION, Oil Pump Chain.>
9) Flip over the converter case cover.
10) Install the oil stopper plate and lubrication pipe.

Tightening torque:
9 N·m (0.9 kgf-m, 6.6 ft-lb)

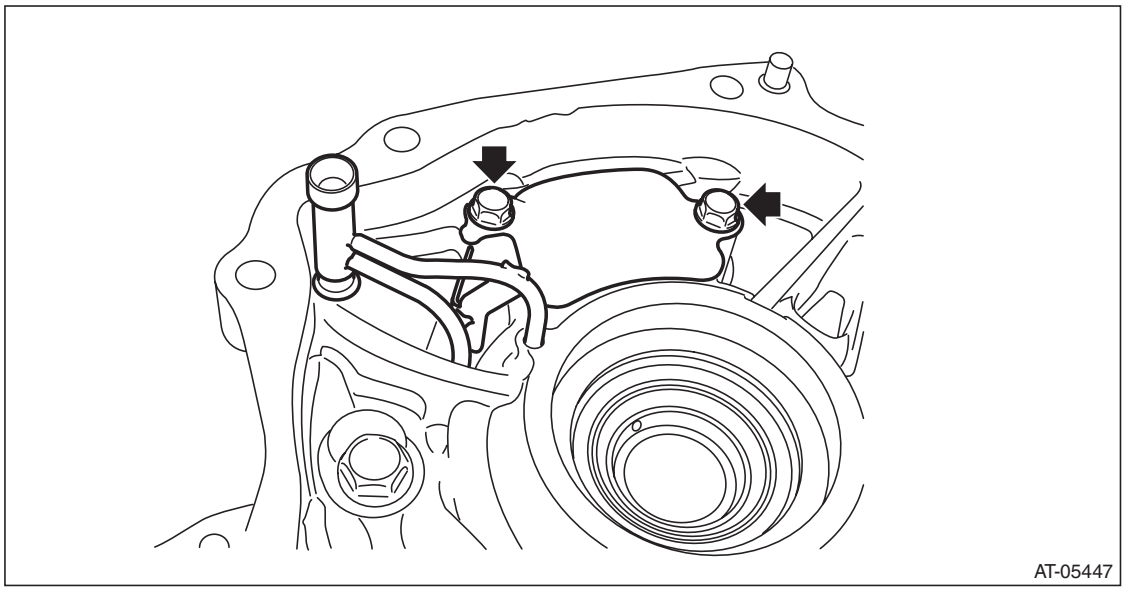

11) Install the drive pinion shaft assembly. <Ref. to CVT-244, INSTALLATION, Drive Pinion Shaft Assembly.>
12) Install the primary pulley, secondary pulley and variator chain. <Ref. to CVT-230, INSTALLATION, Primary Pulley and Secondary Pulley.>
13) Install the transmission case. <Ref. to CVT-213, INSTALLATION, Transmission Case.>
14) Install the forward clutch assembly. <Ref. to CVT-181, INSTALLATION, Forward Clutch Assembly.>
15) Install the intermediate case. <Ref. to CVT-166, INSTALLATION, Intermediate Case.>

GETtheMANUALS.org

16) Install the transfer reduction driven gear assembly. <Ref. to CVT-158, INSTALLATION, Transfer Reduction Driven Gear.>
17) Install the transfer clutch assembly. <Ref. to CVT-147, INSTALLATION, Transfer Clutch.>
18) Install the rear drive shaft. <Ref. to CVT-141, INSTALLATION, Rear Drive Shaft.>
19) Install the extension case. <Ref. to CVT-138, INSTALLATION, Extension Case.>
20) Install the transmission harness. <Ref. to CVT-123, INSTALLATION, Transmission Harness.>
21) Install the control valve body and oil pan. <Ref. to CVT-115, INSTALLATION, Control Valve Body.>
22) Install the air breather hose. <Ref. to CVT-132, INSTALLATION, Air Breather Hose.>
23) Install the transmission assembly to the vehicle. <Ref. to CVT-70, INSTALLATION, Automatic Transmission Assembly.>

C: DISASSEMBLY

1) Using ST, remove the center support COMPL.
ST 18270KA010 SOCKET (E16)

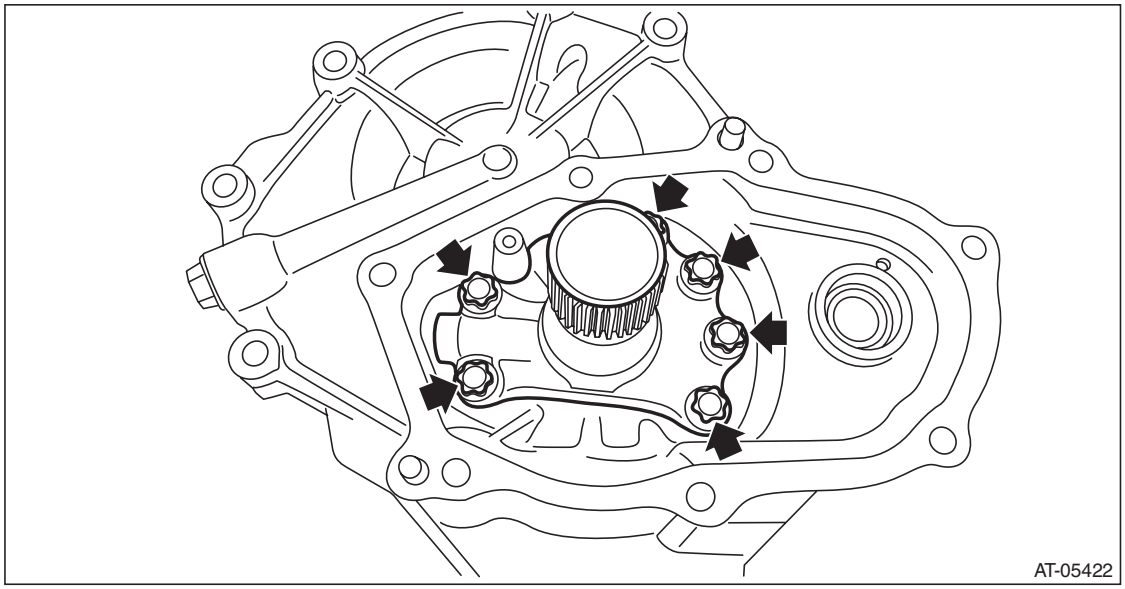

2) Remove the plug and O-ring.

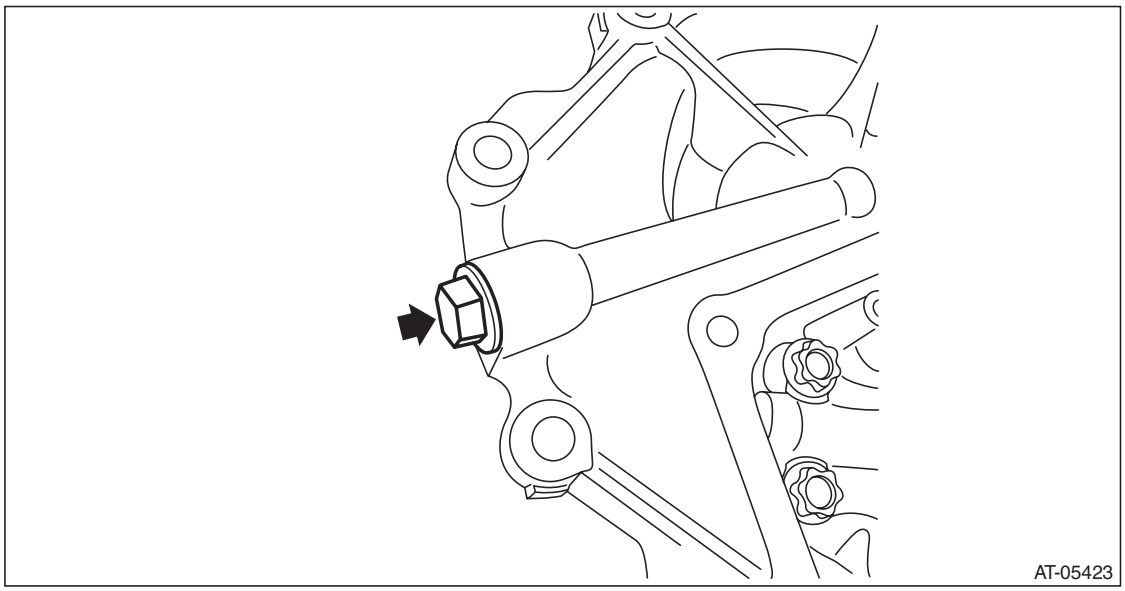

GETtheMANUALS.org

D: ASSEMBLY

1) Install the plugs.

NOTE:
- Use new O-rings.
- Apply CVTF to the O-ring.

Tightening torque:
25 N·m (2.5 kgf-m, 18.4 ft-lb)

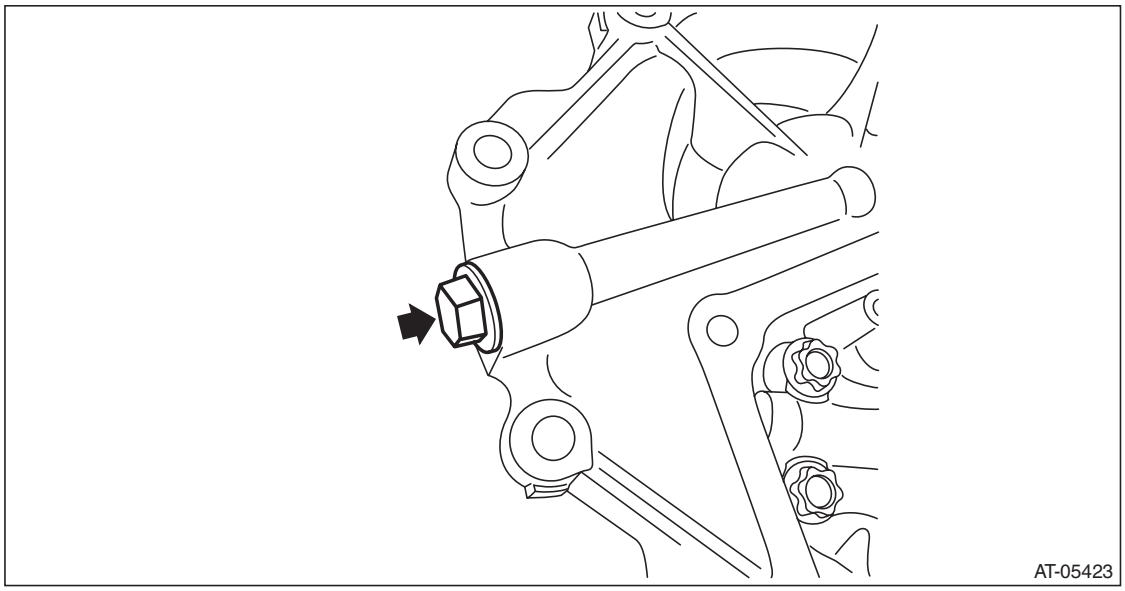

2) Using ST, install the center support COMPL.
ST 18270KA010 SOCKET (E16)

Tightening torque:
21.5 N·m (2.2 kgf-m, 15.9 ft-lb)

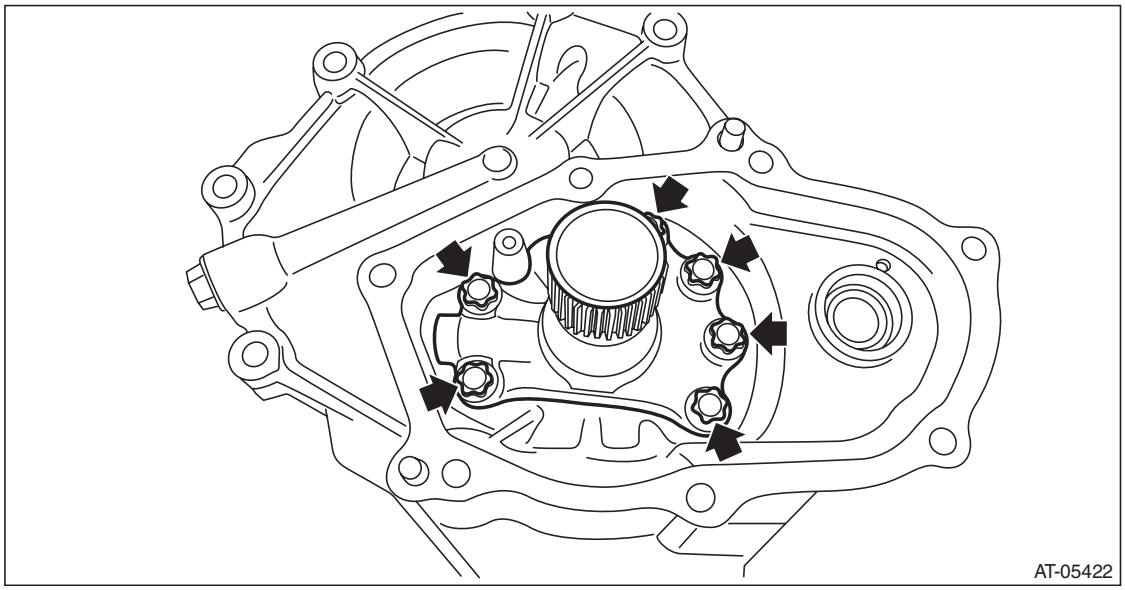

E: INSPECTION

- Check for leakage of CVTF from the connection between converter case and converter case cover.
- Check there is no damage or cracks on the converter case cover.

GETtheMANUALS.org

F: ADJUSTMENT

When replacing the converter case cover, select the following shims.

- Select the shim for front reduction drive gear. <Ref. to CVT-302, ADJUSTMENT, Front Reduction Drive Gear.>
- Select the shim for front reduction driven gear. <Ref. to CVT-311, ADJUSTMENT, Front Reduction Driven Gear.>

GETtheMANUALS.org

47. Front Reduction Drive Gear

A: REMOVAL

1) Remove the transmission assembly from the vehicle. <Ref. to CVT-55, REMOVAL, Automatic Transmission Assembly.>
2) Remove the air breather hose. <Ref. to CVT-132, REMOVAL, Air Breather Hose.>
3) Remove the oil pan and control valve body. <Ref. to CVT-111, REMOVAL, Control Valve Body.>
4) Remove the transmission harness. <Ref. to CVT-121, REMOVAL, Transmission Harness.>
5) Remove the primary speed sensor. <Ref. to CVT-105, REMOVAL, Primary Speed Sensor.>
6) Remove the extension case. <Ref. to CVT-138, REMOVAL, Extension Case.>
7) Remove the rear drive shaft. <Ref. to CVT-141, REMOVAL, Rear Drive Shaft.>
8) Remove the transfer clutch assembly. <Ref. to CVT-146, REMOVAL, Transfer Clutch.>
9) Remove the transfer reduction driven gear assembly. <Ref. to CVT-158, REMOVAL, Transfer Reduction Driven Gear.>
10) Remove the intermediate case. <Ref. to CVT-165, REMOVAL, Intermediate Case.>
11) Remove the forward clutch assembly. <Ref. to CVT-180, REMOVAL, Forward Clutch Assembly.>
12) Remove the transmission case. <Ref. to CVT-211, REMOVAL, Transmission Case.>
13) Remove the primary pulley, secondary pulley and variator chain. <Ref. to CVT-226, REMOVAL, Primary Pulley and Secondary Pulley.>
14) Remove the drive pinion shaft assembly. <Ref. to CVT-242, REMOVAL, Drive Pinion Shaft Assembly.>
15) Remove the converter case cover. <Ref. to CVT-289, REMOVAL, Converter Case Cover.>
16) Remove the front reduction drive gear and front reduction driven gear together.

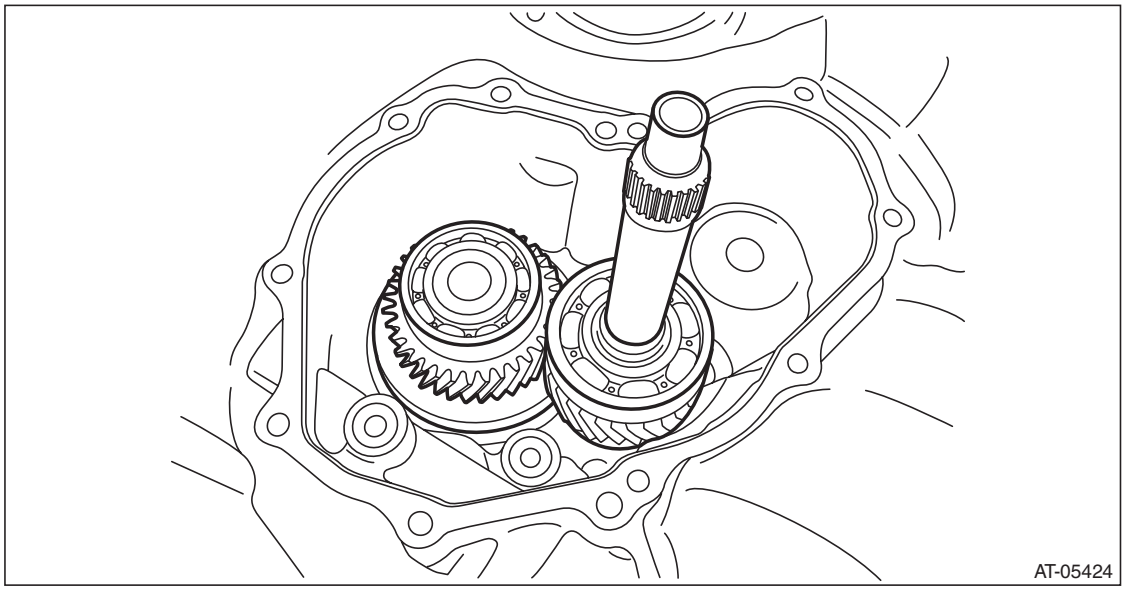

GETtheMANUALS.org

17) Remove the seal ring.

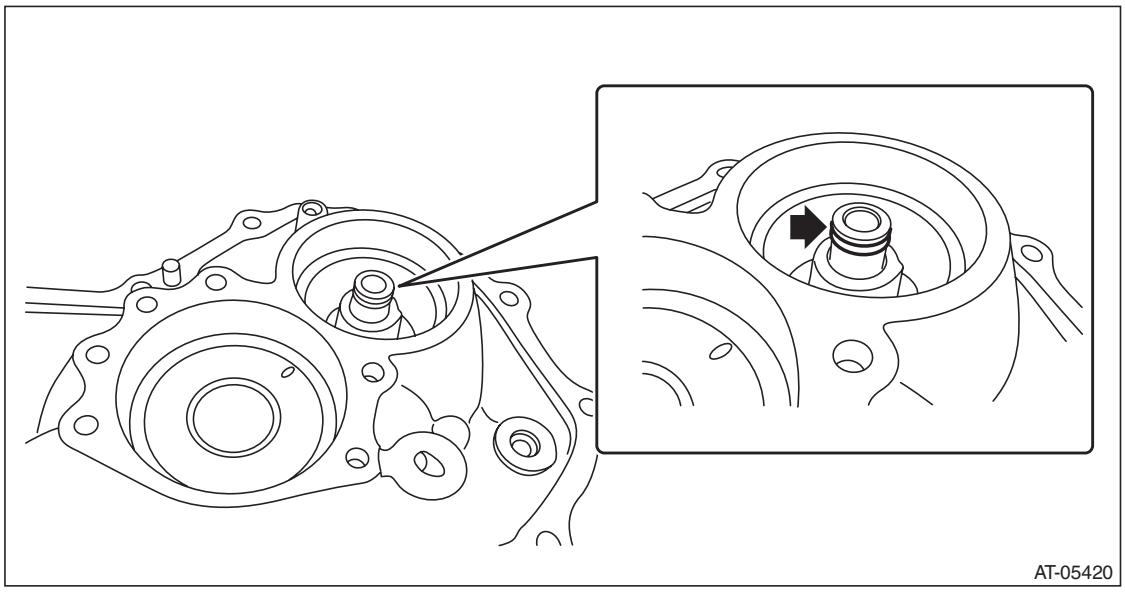

B: INSTALLATION

1) Clean the mating surface of converter case cover and converter case.
2) Select the shim for front reduction drive gear. <Ref. to CVT-302, ADJUSTMENT, Front Reduction Drive Gear.>
3) Install the front reduction drive gear and front reduction driven gear together.

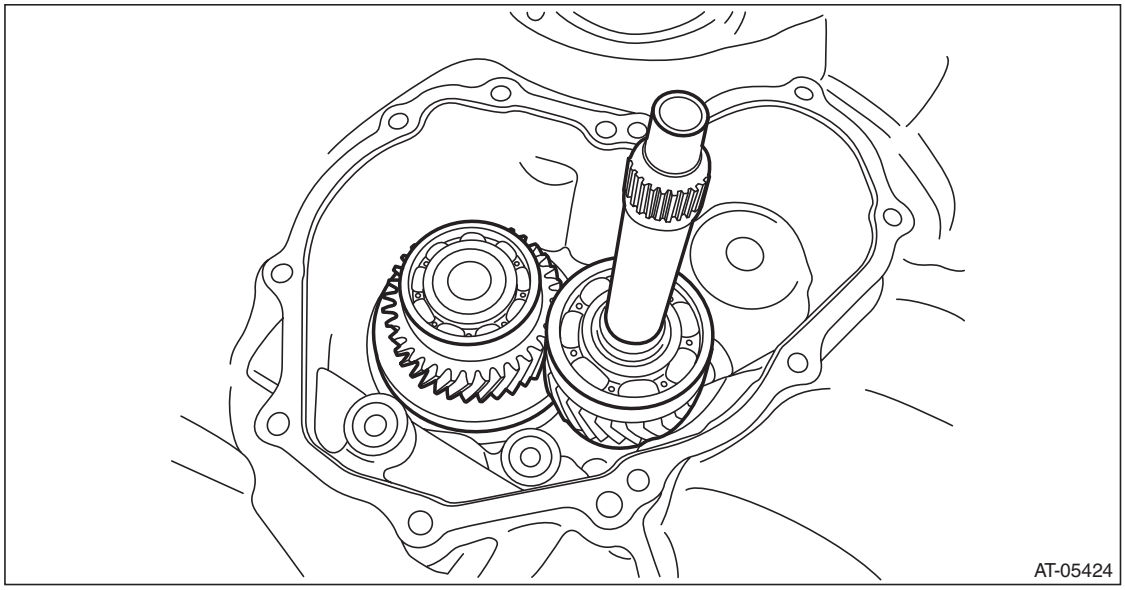

4) Install the converter case cover. <Ref. to CVT-291, INSTALLATION, Converter Case Cover.>
5) Install the drive pinion shaft assembly. <Ref. to CVT-244, INSTALLATION, Drive Pinion Shaft Assembly.>
6) Install the primary pulley, secondary pulley and variator chain. <Ref. to CVT-230, INSTALLATION, Primary Pulley and Secondary Pulley.>
7) Install the transmission case. <Ref. to CVT-213, INSTALLATION, Transmission Case.>
8) Install the forward clutch assembly. <Ref. to CVT-181, INSTALLATION, Forward Clutch Assembly.>
9) Install the intermediate case. <Ref. to CVT-166, INSTALLATION, Intermediate Case.>
10) Install the transfer reduction driven gear assembly. <Ref. to CVT-158, INSTALLATION, Transfer Reduction Driven Gear.>
11) Install the transfer clutch assembly. <Ref. to CVT-147, INSTALLATION, Transfer Clutch.>
12) Install the rear drive shaft. <Ref. to CVT-141, INSTALLATION, Rear Drive Shaft.>

GETtheMANUALS.org

13) Install the extension case. <Ref. to CVT-138, INSTALLATION, Extension Case.>
14) Install the primary speed sensor. <Ref. to CVT-105, INSTALLATION, Primary Speed Sensor.>
15) Install the transmission harness. <Ref. to CVT-123, INSTALLATION, Transmission Harness.>
16) Install the control valve body and oil pan. <Ref. to CVT-115, INSTALLATION, Control Valve Body.>
17) Install the air breather hose. <Ref. to CVT-132, INSTALLATION, Air Breather Hose.>
18) Install the transmission assembly to the vehicle. <Ref. to CVT-70, INSTALLATION, Automatic Transmission Assembly.>

C: DISASSEMBLY

1) Remove the seal ring and O-ring.

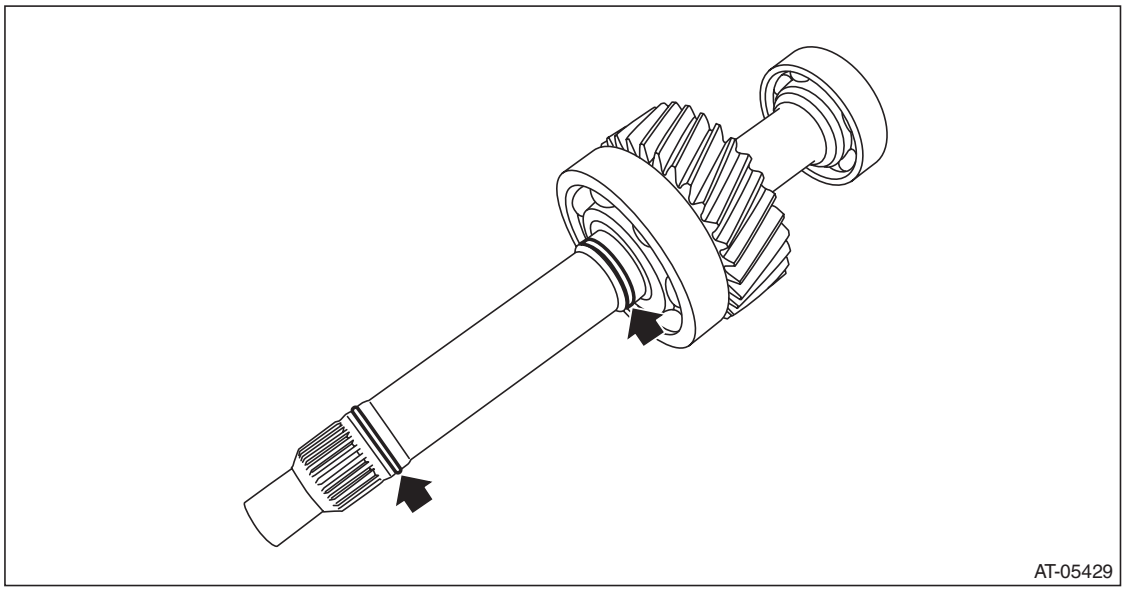

2) Using the ST, remove the ball bearing from front reduction drive gear.
ST 899864100 REMOVER

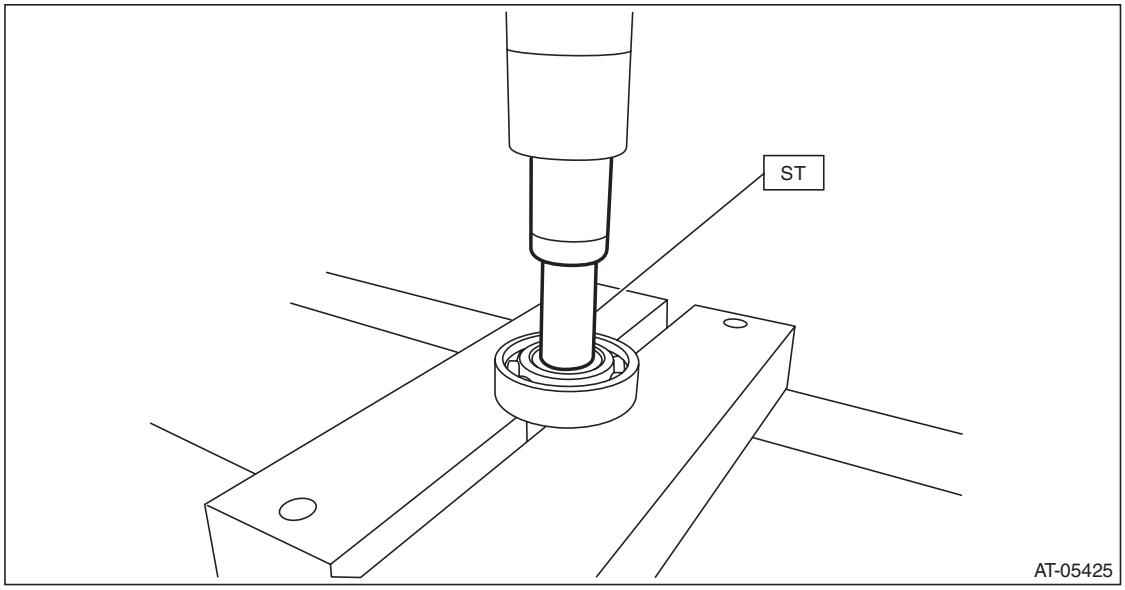

GETtheMANUALS.org

3) Using the ST, remove the ball bearing from front reduction drive gear.
ST 498077000 REMOVER

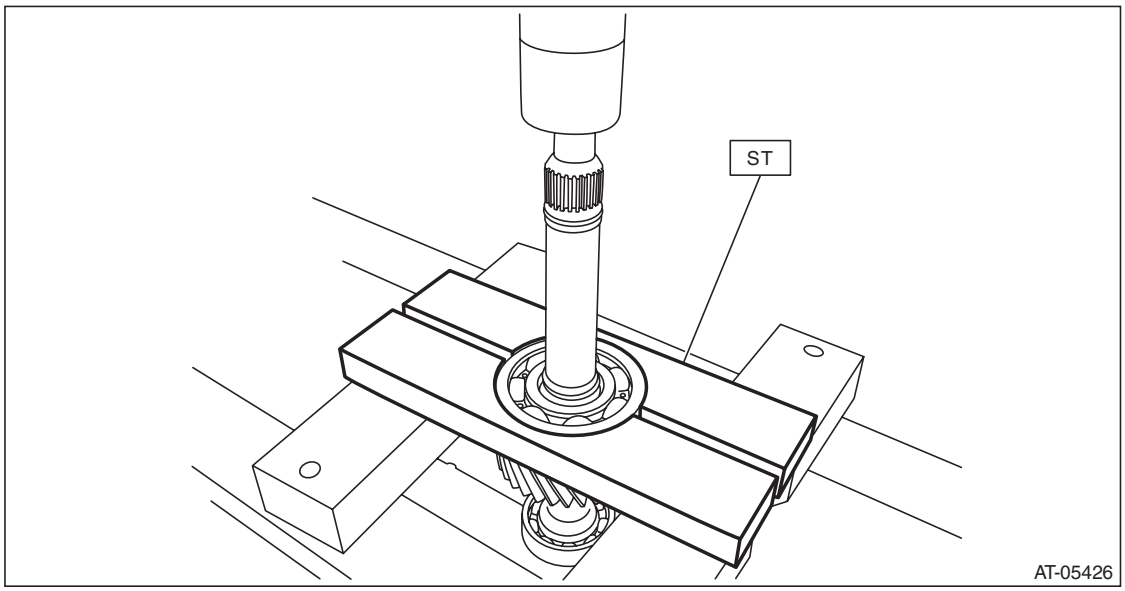

D: ASSEMBLY

1) Using the ST, install the ball bearing to front reduction drive gear.

NOTE:
Use a new ball bearing.
ST 18651AA000 INSTALLER

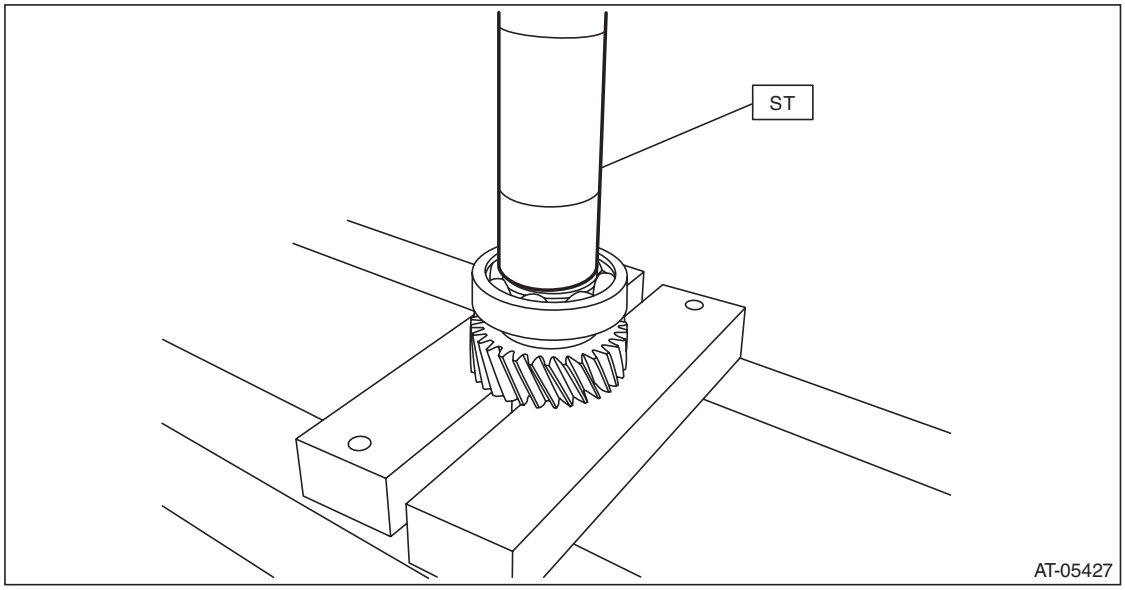

GETtheMANUALS.org

2) Using ST1 and ST2, install the ball bearing to front reduction drive gear.

NOTE:
Use a new ball bearing.
ST1 499757002 PRESS SNAP RING
ST2 398177700 INSTALLER

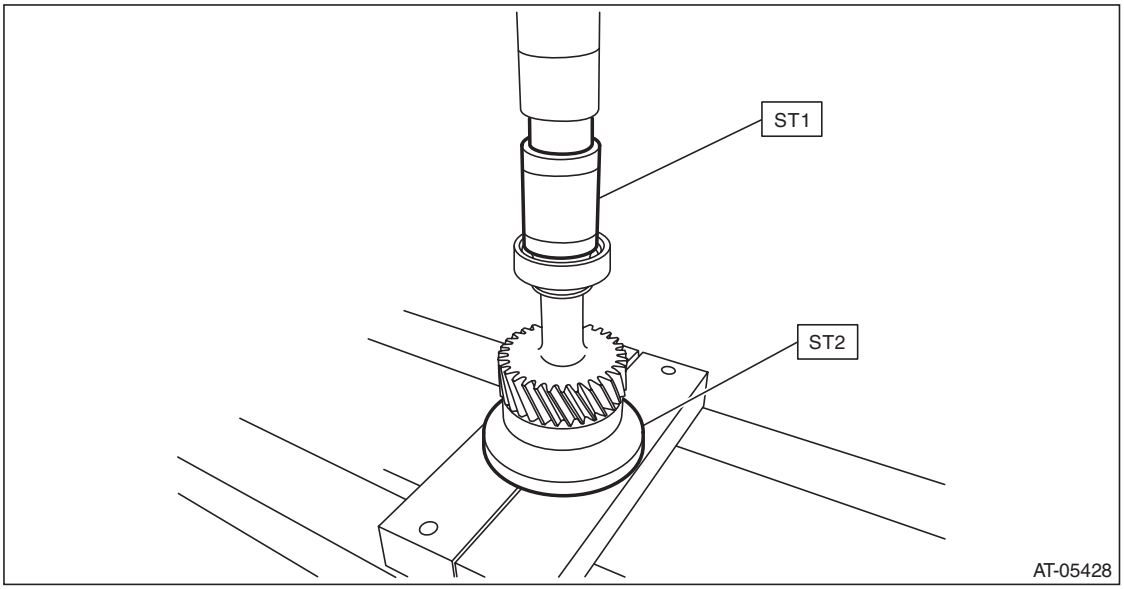

3) Install the seal ring.

NOTE:
- Use a new seal ring.
- When installing the seal ring, do not expand the seal ring too much.
- Install the O-ring when installing the torque converter assembly.

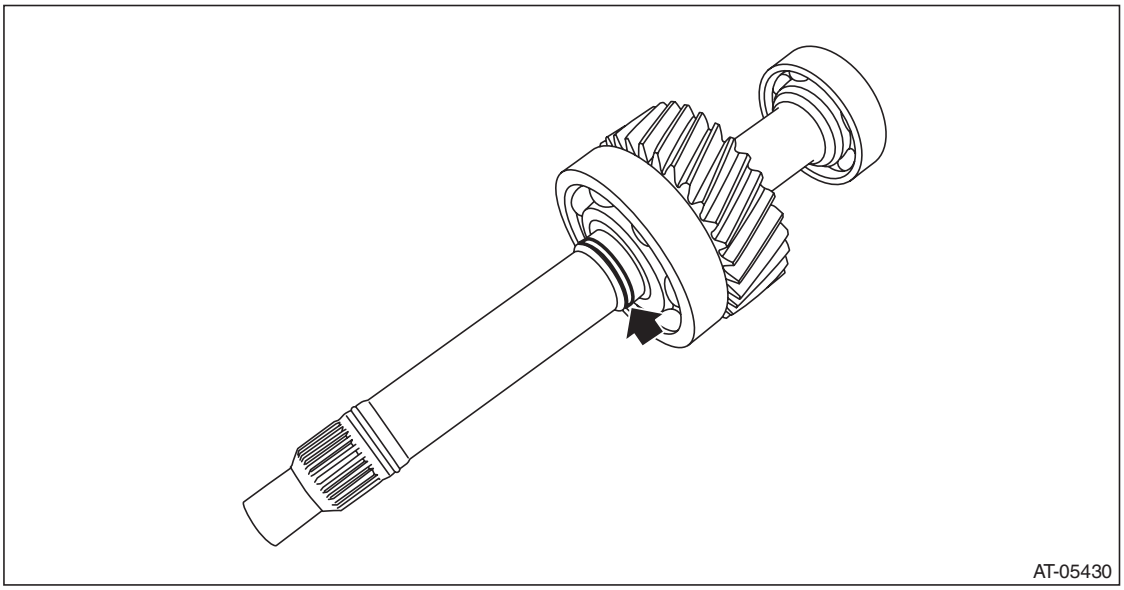

E: INSPECTION

- Replace if its tooth surfaces are broken, damaged or excessively worn.
- Check the bearing for seizure or wear.
- Apply CVTF to bearing and rotate the bearing to check for noise or dragging etc.

GETtheMANUALS.org

F: ADJUSTMENT

1) Measure height “A” from the ST upper face to the bearing end face using the ST.
ST 398643600 GAUGE

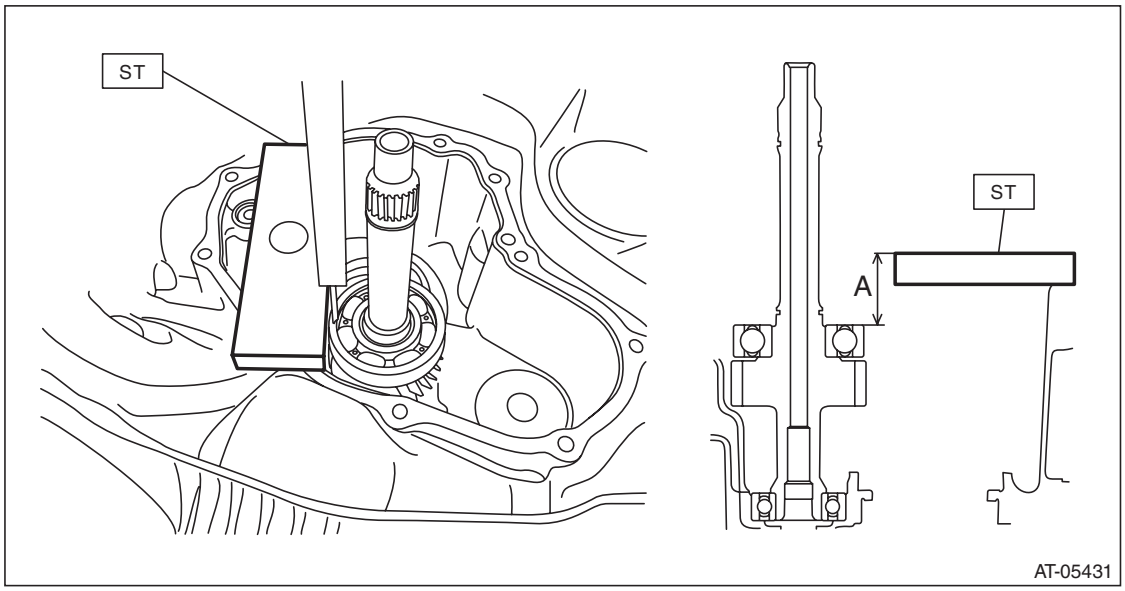

2) Measure depth “B” from the converter case cover upper face to the bearing catch surface.

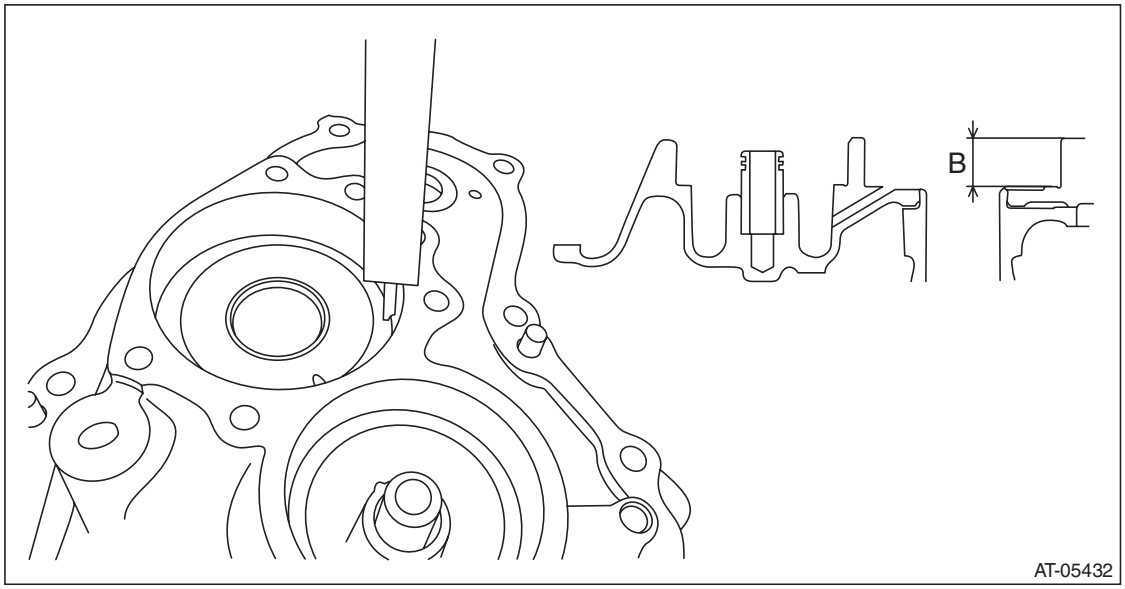

GETtheMANUALS.org

3) Using the ST, measure height “C” from the ST upper face to the converter case cover mating surface.
ST 398643600 GAUGE

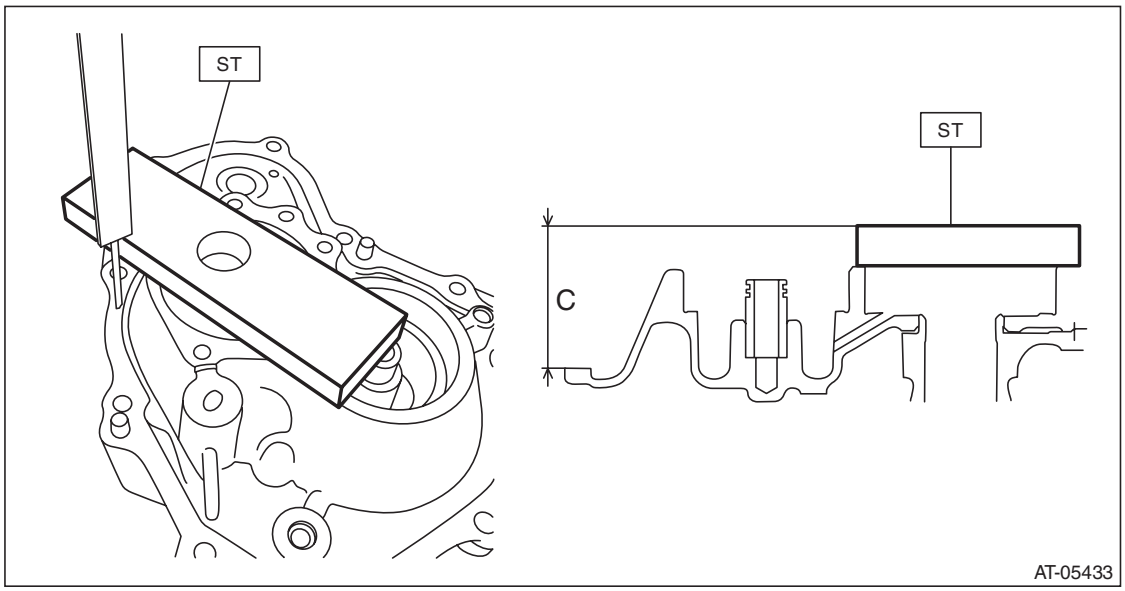

4) Calculate clearance “T” using the following formula.
Calculation formula:
T mm = (A – 15) – ((C – 15) – B)
[T in = (A – 0.591) – ((C – 0.591) – B)]
T: Clearance
A: Depth from the ST upper face to the bearing end surface
B: Depth from the converter case cover upper face to the bearing catch surface
C: Height from the ST upper face to the converter case cover mating surface
15 mm (0.591 in): Thickness of ST

Clearance “T” mm (in)	Thickness of shim mm (in)	Part number
1.070 — 1.174 (0.042 — 0.045)	1.0 (0.039)	31288AA160
1.175 — 1.274 (0.046 — 0.049)	1.1 (0.043)	31288AA170
1.275 — 1.374 (0.050 — 0.053)	1.2 (0.047)	31288AA180
1.375 — 1.474 (0.054 — 0.057)	1.3 (0.051)	31288AA220
1.475 — 1.580 (0.058 — 0.062)	1.4 (0.055)	31288AA230

GETtheMANUALS.org

48. Front Reduction Driven Gear

A: REMOVAL

NOTE:
For removal of front reduction driven gear, refer to the “Front Reduction Drive Gear”. <Ref. to CVT-297, REMOVAL, Front Reduction Drive Gear.>

B: INSTALLATION

NOTE:
For installation of front reduction driven gear, refer to the “Front Reduction Drive Gear”. <Ref. to CVT-298, INSTALLATION, Front Reduction Drive Gear.>

C: DISASSEMBLY

1) Using the ST, remove the ball bearing, front reduction driven gear and front reduction driven shaft.

ST1	899864100	REMOVER
ST2	18767AA000	BEARING REMOVER

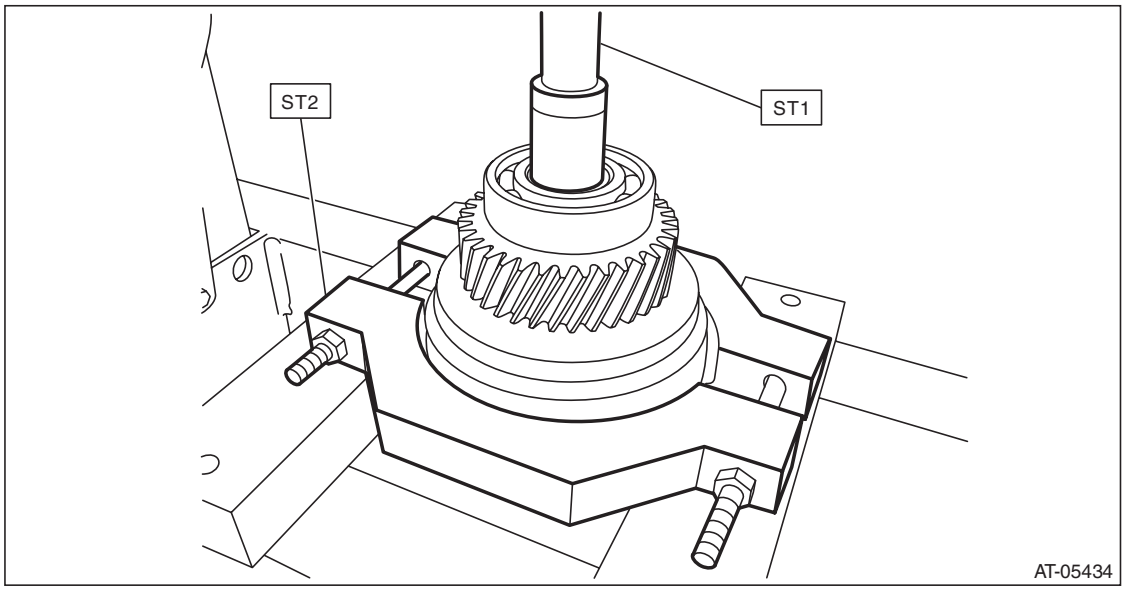

2) Remove the snap ring.

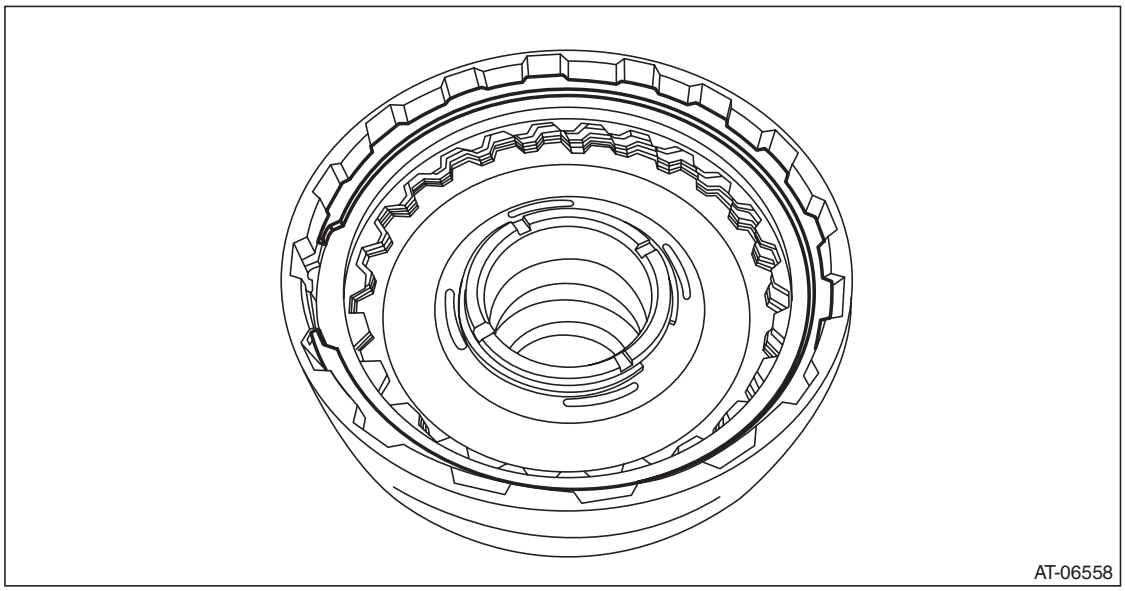

GETtheMANUALS.org

3) Remove the retaining plate, drive plate, driven plate and dish plate.

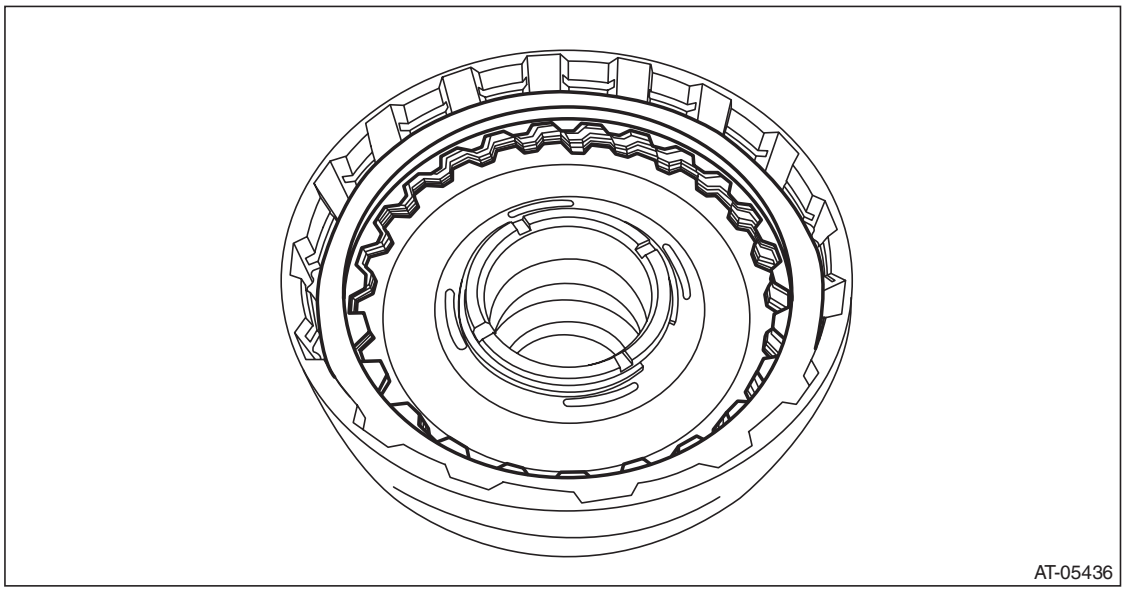

4) Remove the seal ring from front reduction driven shaft.

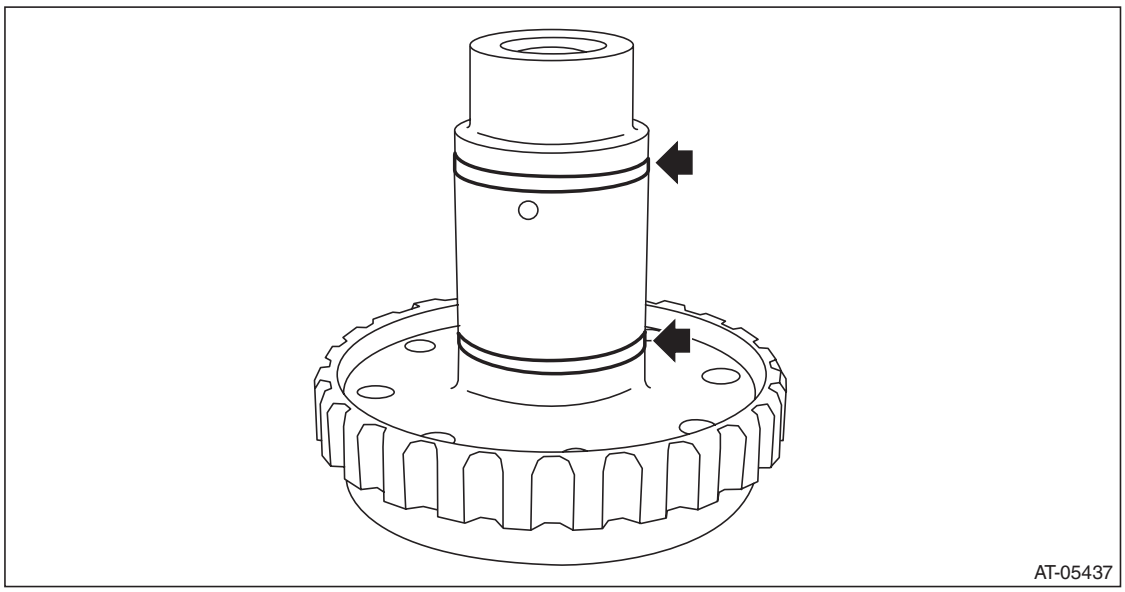

GETtheMANUALS.org

5) Using the round bar with diameter of 7 mm (0.28 in), tap the entire circumference around the ball bearing outer race a little at a time through the front reduction driven shaft hole, to remove the ball bearing.

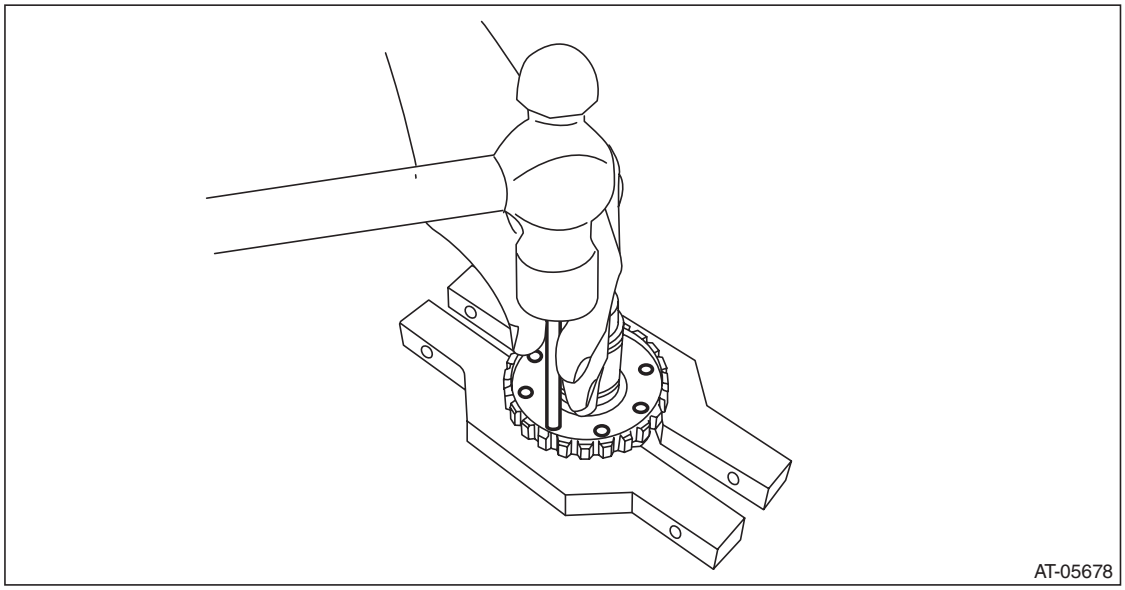

D: ASSEMBLY

1) Place the dish plate, driven plate, drive plate and retaining plate neatly in this order on surface table.

NOTE:
Make sure of the direction of dish plate.

2) Set the dial gauge to retaining plate, and read its scale.

NOTE:
The value, which is read in the gauge at this time, is zero point.

3) Scale and record the weight “Z” of a flat board which will be put on retaining plate.

NOTE:
- Use a stiff board which does not bend against load as a flat board to be put on retaining plate.
- Use a flat board weighing less than 130 N (13.3 kgf, 29.2 lb).

4) Put the flat board on retaining plate.

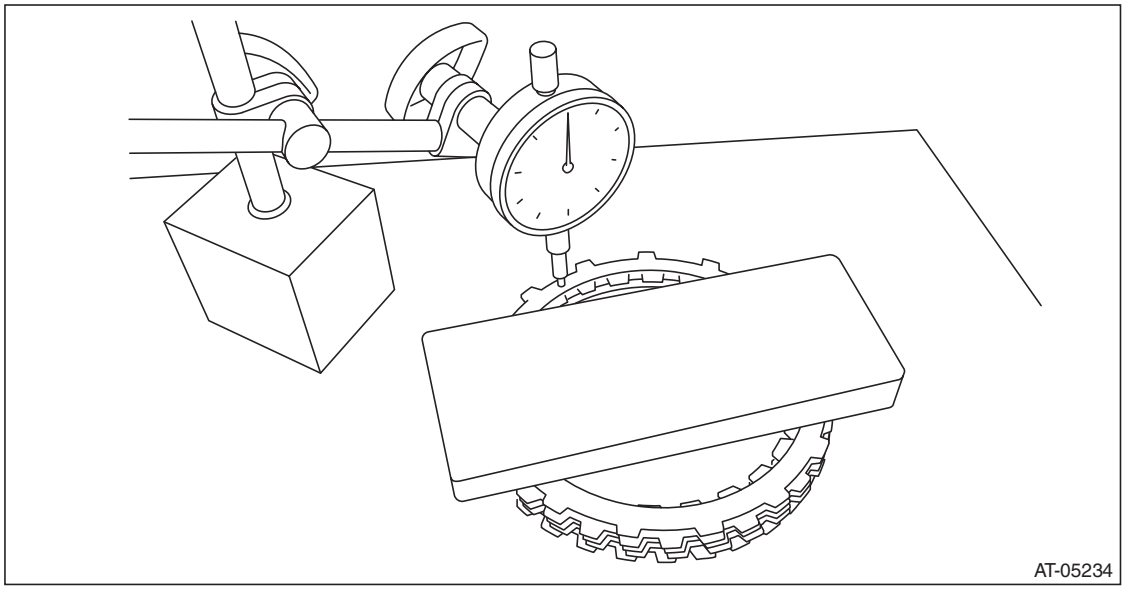

GETtheMANUALS.org

5) Using the following formula, calculate load “N”, a force of pressing with push/pull gauge.
N = 130 N (13.3 kgf, 29.2 lb) – Z
130 N (13.3 kgf, 29.2 lb) : Load applied to clutch plate
Z: Flat board weight
6) Press the center of retaining plate by applying a force of “N” using push/pull gauge, and then measure and record the compression amount “A”.

NOTE:
Measure at four points with a 90° interval and calculate the average.

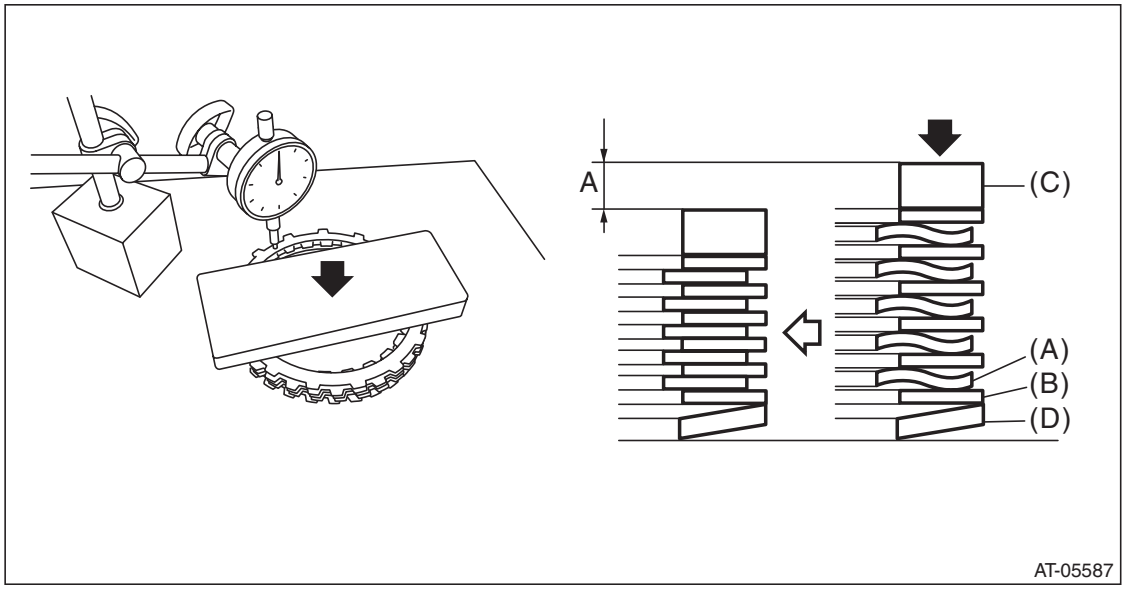

(A) Drive plate
(B) Driven plate
(C) Retaining plate
(D) Dish plate

7) Install the dish plate, driven plate, drive plate, retaining plate and snap ring.

NOTE:
Make sure of the direction of dish plate.

GETtheMANUALS.org

8) Measure and record the clearance “B” between the retaining plate and snap ring.

NOTE:
Before measuring, press down the whole circumference of retaining plate using your finger.

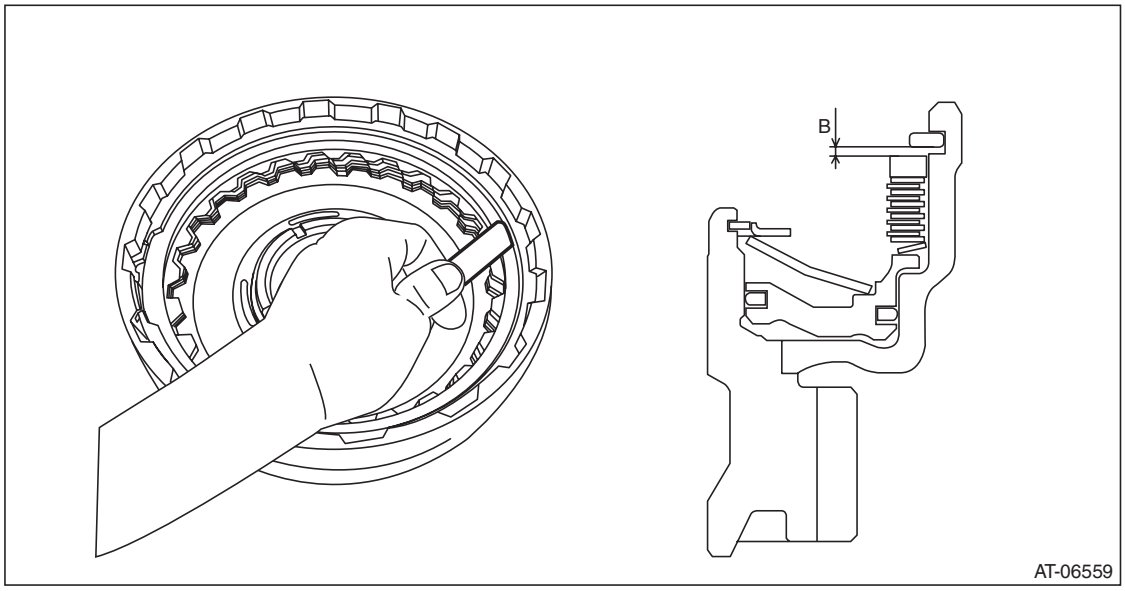

9) Piston stroke calculation
Calculate with A and B dimensions recorded before.
If out of standard, replace with a new drive plate and adjust it within standard.
S mm (in) = A + B
S: Piston stroke
A: Compression amount of drive plate and dish plate
B: Clearance between retaining plate and snap ring

Specification:
2.4 — 2.8 mm (0.094 — 0.11 in)

Retaining plate	
Part No.	Thickness mm (in)
31667AA430	3.1 (0.122)
31667AA440	3.3 (0.130)
31667AA450	3.5 (0.138)

GETtheMANUALS.org

10) Press-fit the ball bearing into front driven shaft.

NOTE:
Use a new ball bearing.

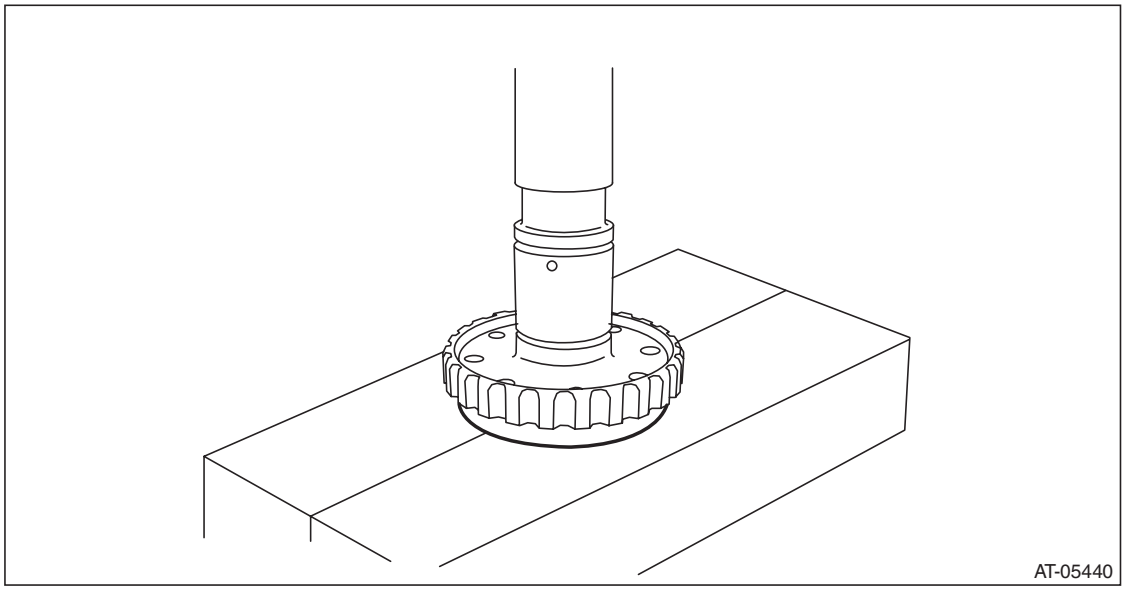

11) Install the seal ring to the front driven shaft.

NOTE:
- Install a new seal ring.
- Apply CVTF to the seal rings.

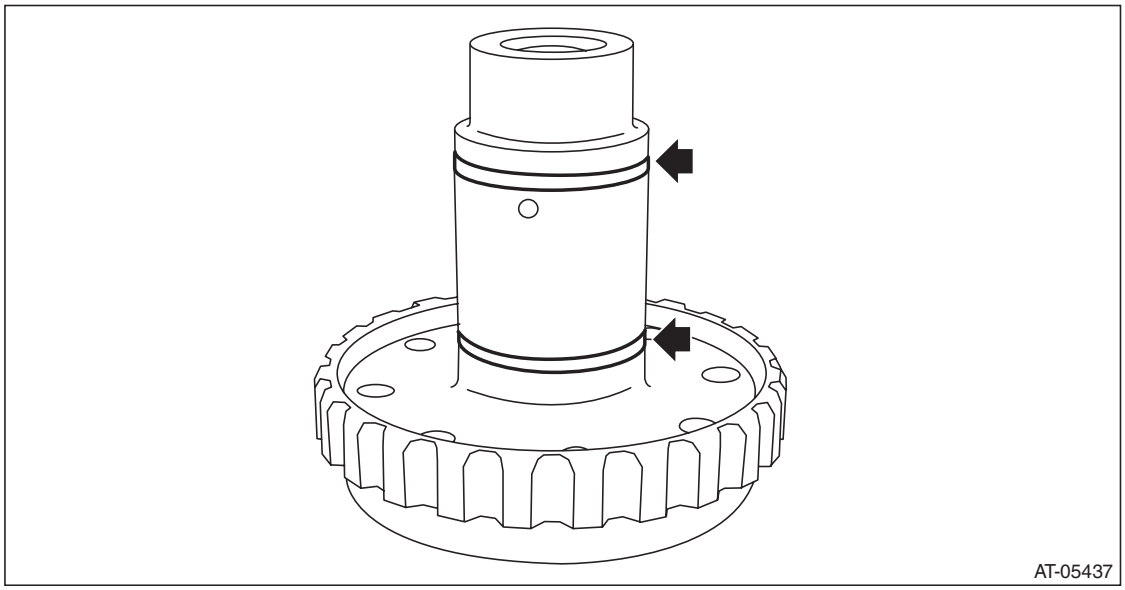

12) Install the front driven shaft to front driven gear.

GETtheMANUALS.org

13) Using the ST, install the ball bearing.

NOTE:
Use a new ball bearing.
ST 18651AA000 INSTALLER

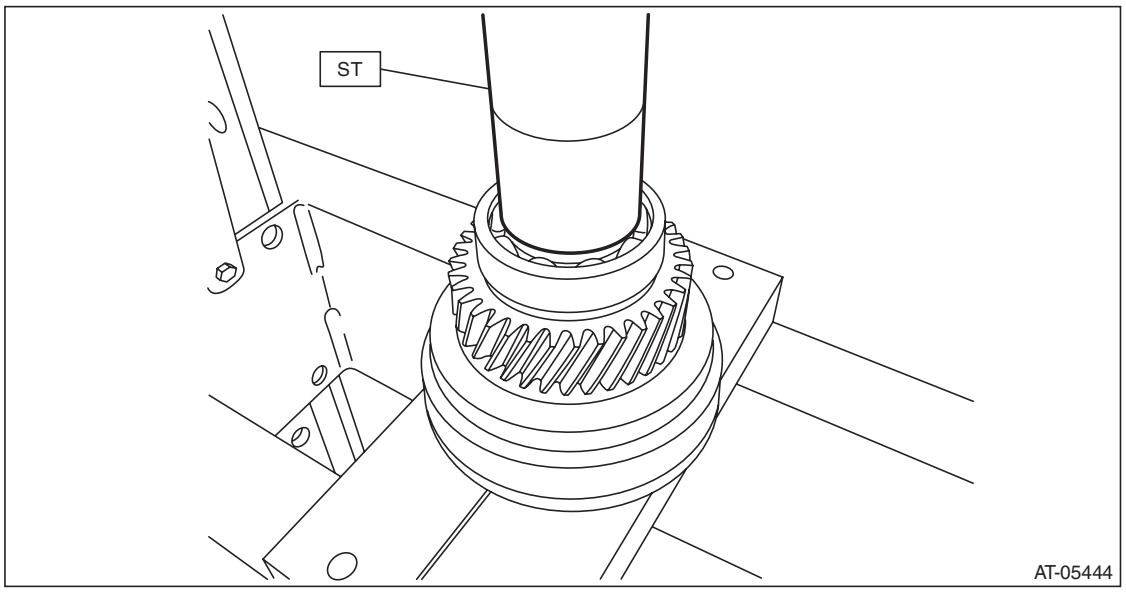

14) Install the front reduction driven gear assembly to converter case cover.

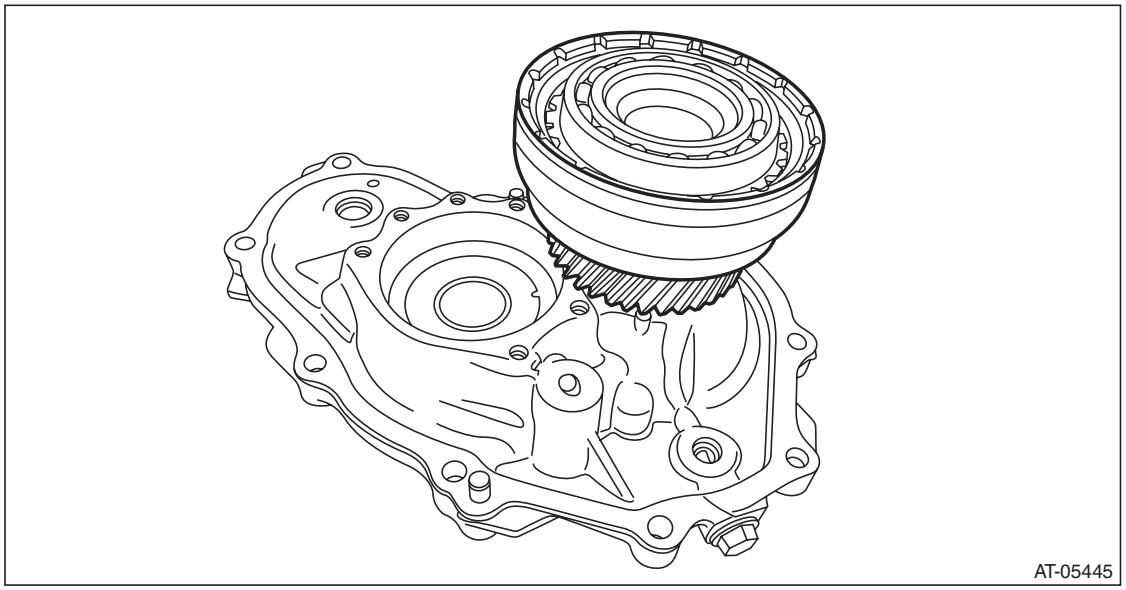

GETtheMANUALS.org

15) Apply compressed air intermittently to check the piston operation.

NOTE:
Hold the arrowed area with a finger.

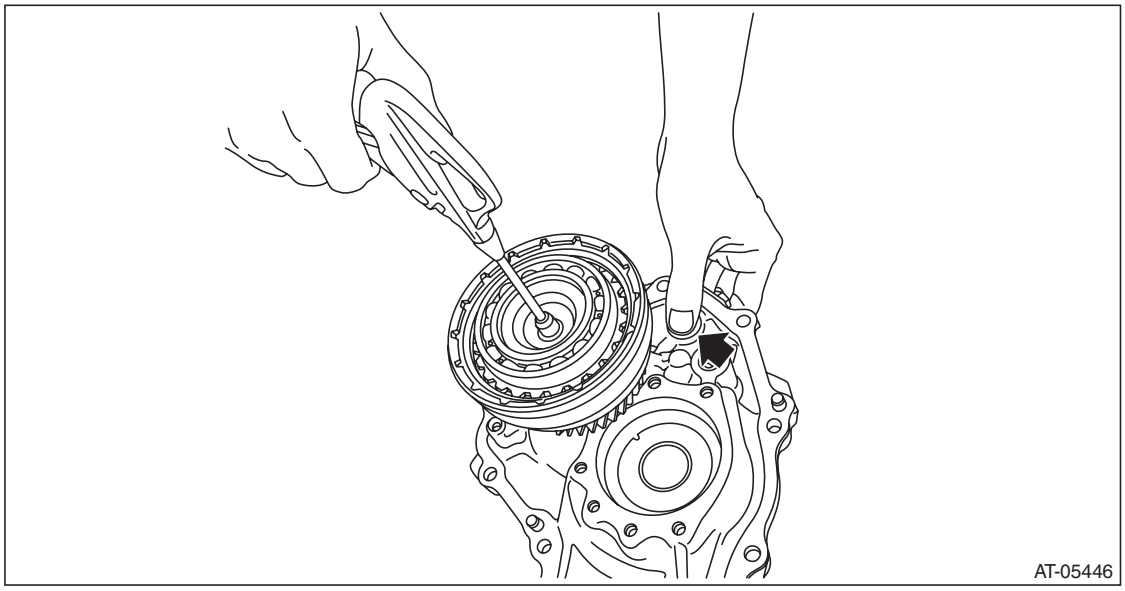

E: INSPECTION

- Check the drive plate for wear and damage.
- Check the driven plate for discoloration (burnt color).
- Check for worn snap ring, fatigue or damaged return spring or deformed piston retainer.
- Replace if its tooth surfaces are broken, damaged or excessively worn.
- Check the bearing for seizure or wear.
- Apply CVTF to bearing and rotate the bearing to check for noise or dragging etc.

F: ADJUSTMENT

1) Using the ST, measure height “A” from the ST upper face to the mating surface of the case.
ST 398643600 GAUGE

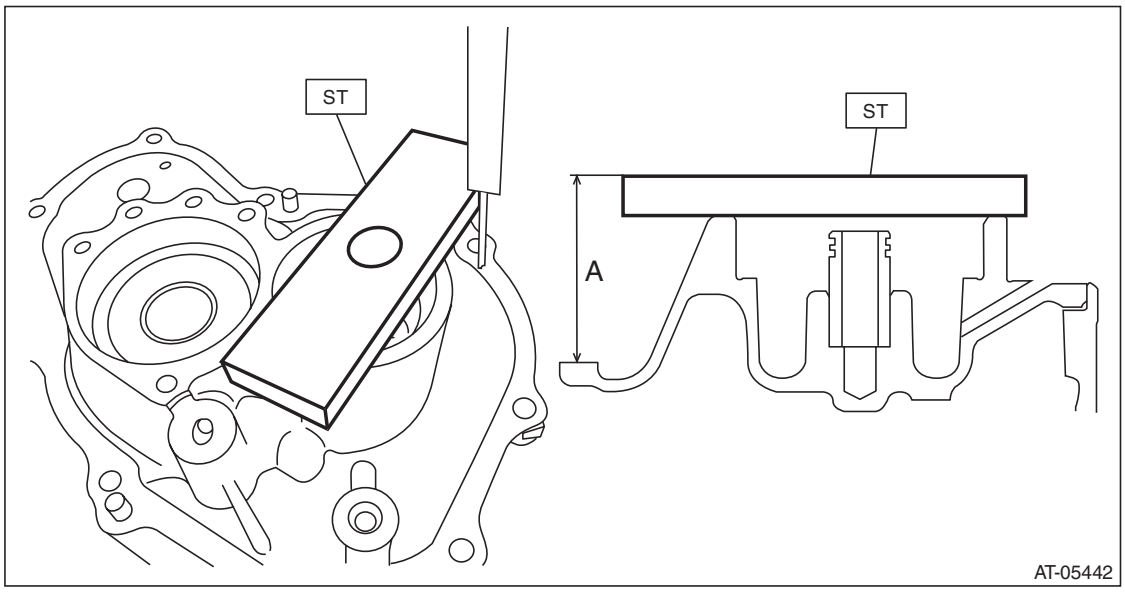

GETtheMANUALS.org

2) Measure depth “B” from the converter case cover upper face to the bearing catch surface.

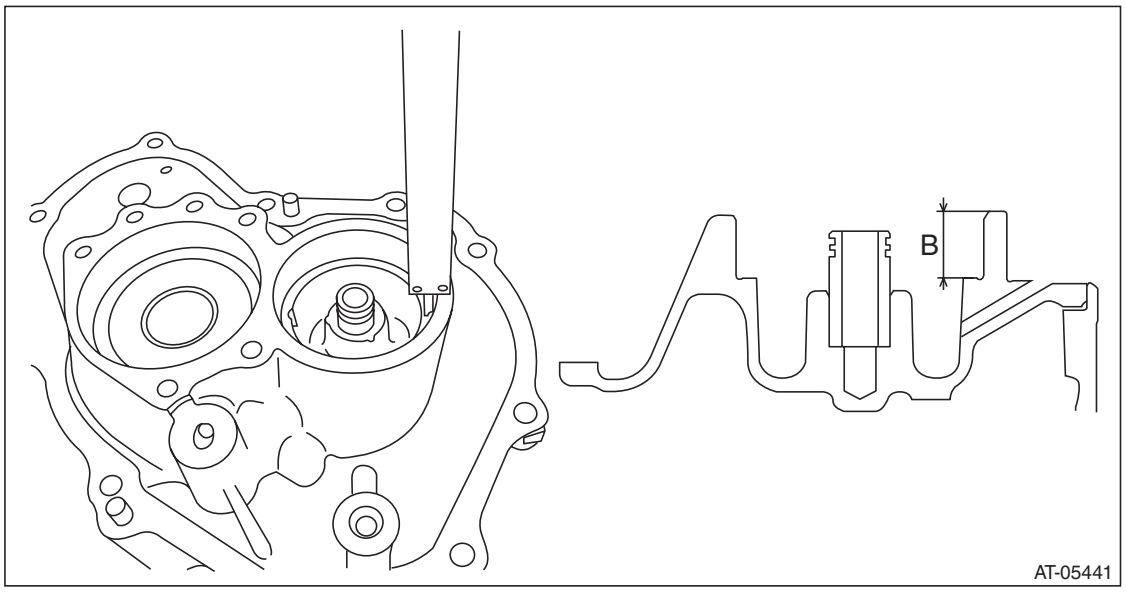

3) Measure depth “C” from the ST upper face to the bearing end face using the ST.
ST 398643600 GAUGE

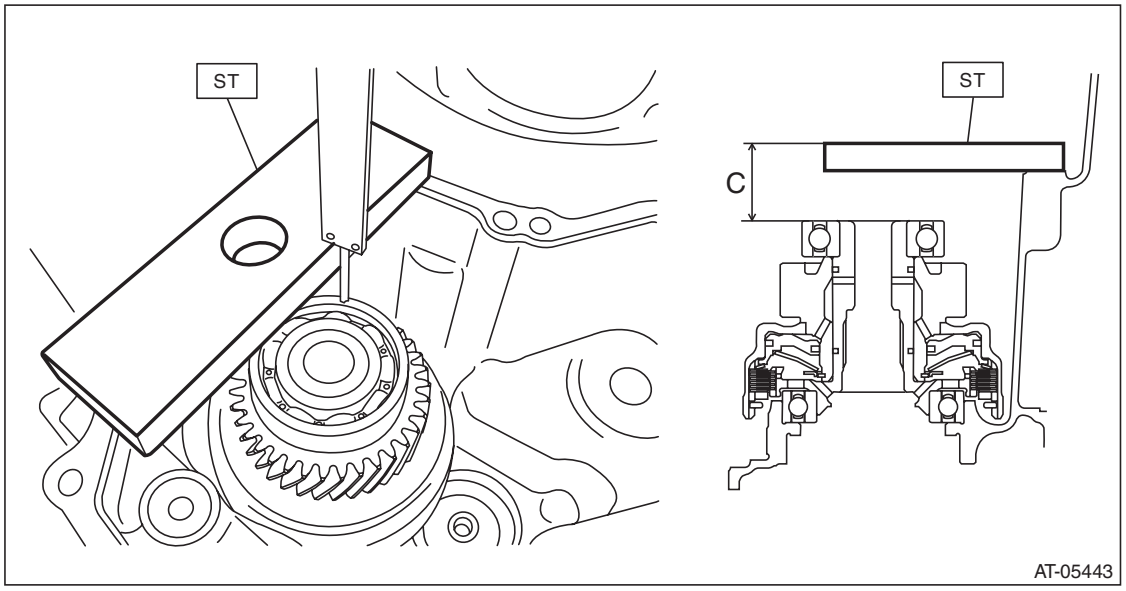

GETtheMANUALS.org

4) Using the following formula, calculate clearance “T” to select a shim.
Formula: T mm = (C – 15) – ((A – 15) – B)
[T in = (C – 0.591) – ((A – 0.591) – B)]
T: Clearance
A: Height from the ST upper face to the converter case mating surface
B: Depth from the converter case cover upper face to the bearing catch surface
C: Depth from the ST upper face to the bearing end face
15 mm (0.591 in): Thickness of ST

Clearance “T” mm (in)	Thickness of shim mm (in)
0.470 — 0.569 (0.019 — 0.021)	0.4 (0.016)
0.570 — 0.669 (0.022 — 0.025)	0.5 (0.020)
0.670 — 0.769 (0.026 — 0.029)	0.6 (0.024)
0.770 — 0.869 (0.030 — 0.033)	0.7 (0.028)
0.870 — 0.980 (0.034 — 0.039)	0.8 (0.031)

5) Select one to two shims so that the total thickness meets the value obtained from above.

Part No.	Thickness of shim mm (in)
31288AA130	0.2 (0.008)
31288AA140	0.3 (0.012)
31288AA150	0.5 (0.020)

GETtheMANUALS.org

49.Converter Case

A: REMOVAL

1) Remove the transmission assembly from the vehicle. <Ref. to CVT-55, REMOVAL, Automatic Transmission Assembly.>
2) Remove the air breather hose. <Ref. to CVT-132, REMOVAL, Air Breather Hose.>
3) Remove the oil pan and control valve body. <Ref. to CVT-111, REMOVAL, Control Valve Body.>
4) Remove the transmission harness. <Ref. to CVT-121, REMOVAL, Transmission Harness.>
5) Remove the secondary pressure sensor. <Ref. to CVT-109, REMOVAL, Secondary Pressure Sensor.>
6) Remove the primary speed sensor. <Ref. to CVT-105, REMOVAL, Primary Speed Sensor.>
7) Remove the extension case. <Ref. to CVT-138, REMOVAL, Extension Case.>
8) Remove the rear drive shaft. <Ref. to CVT-141, REMOVAL, Rear Drive Shaft.>
9) Remove the transfer clutch assembly. <Ref. to CVT-146, REMOVAL, Transfer Clutch.>
10) Remove the transfer reduction driven gear assembly. <Ref. to CVT-158, REMOVAL, Transfer Reduction Driven Gear.>
11) Remove the intermediate case. <Ref. to CVT-165, REMOVAL, Intermediate Case.>
12) Remove the forward clutch assembly. <Ref. to CVT-180, REMOVAL, Forward Clutch Assembly.>
13) Remove the transmission case. <Ref. to CVT-211, REMOVAL, Transmission Case.>
14) Remove the primary pulley, secondary pulley and variator chain. <Ref. to CVT-226, REMOVAL, Primary Pulley and Secondary Pulley.>
15) Remove the drive pinion shaft assembly. <Ref. to CVT-242, REMOVAL, Drive Pinion Shaft Assembly.>
16) Remove the front differential assembly. <Ref. to CVT-263, REMOVAL, Front Differential Assembly.>
17) Remove the converter case cover. <Ref. to CVT-289, REMOVAL, Converter Case Cover.>
18) Remove the front reduction drive gear and front reduction driven gear. <Ref. to CVT-297, REMOVAL, Front Reduction Drive Gear.>

B: INSTALLATION

1) Install the front reduction drive gear and front reduction driven gear. <Ref. to CVT-298, INSTALLATION, Front Reduction Drive Gear.>
2) Install the converter case cover. <Ref. to CVT-291, INSTALLATION, Converter Case Cover.>
3) Install the front differential assembly. <Ref. to CVT-264, INSTALLATION, Front Differential Assembly.>
4) Install the drive pinion shaft assembly. <Ref. to CVT-244, INSTALLATION, Drive Pinion Shaft Assembly.>
5) Install the primary pulley, secondary pulley and steel chain. <Ref. to CVT-230, INSTALLATION, Primary Pulley and Secondary Pulley.>
6) Install the transmission case. <Ref. to CVT-213, INSTALLATION, Transmission Case.>
7) Install the forward clutch assembly. <Ref. to CVT-181, INSTALLATION, Forward Clutch Assembly.>
8) Install the intermediate case. <Ref. to CVT-166, INSTALLATION, Intermediate Case.>
9) Install the transfer reduction driven gear. <Ref. to CVT-158, INSTALLATION, Transfer Reduction Driven Gear.>
10) Install the transfer clutch assembly. <Ref. to CVT-147, INSTALLATION, Transfer Clutch.>
11) Install the rear drive shaft. <Ref. to CVT-141, INSTALLATION, Rear Drive Shaft.>
12) Install the extension case. <Ref. to CVT-138, INSTALLATION, Extension Case.>
13) Install the primary speed sensor. <Ref. to CVT-105, INSTALLATION, Primary Speed Sensor.>
14) Install the secondary pressure sensor. <Ref. to CVT-109, INSTALLATION, Secondary Pressure Sensor.>
15) Install the transmission harness. <Ref. to CVT-123, INSTALLATION, Transmission Harness.>
16) Install the control valve body and oil pan. <Ref. to CVT-115, INSTALLATION, Control Valve Body.>
17) Install the air breather hose. <Ref. to CVT-132, INSTALLATION, Air Breather Hose.>
18) Install the transmission assembly to the vehicle. <Ref. to CVT-70, INSTALLATION, Automatic Transmission Assembly.>

GETtheMANUALS.org

C: DISASSEMBLY

1) Remove the transmission hanger and transmission radio ground cord.
2) Remove the oil drain plug and overflow drain plug. <Ref. to CVT-42, REPLACEMENT, Differential Gear Oil.>
3) Remove all plugs.

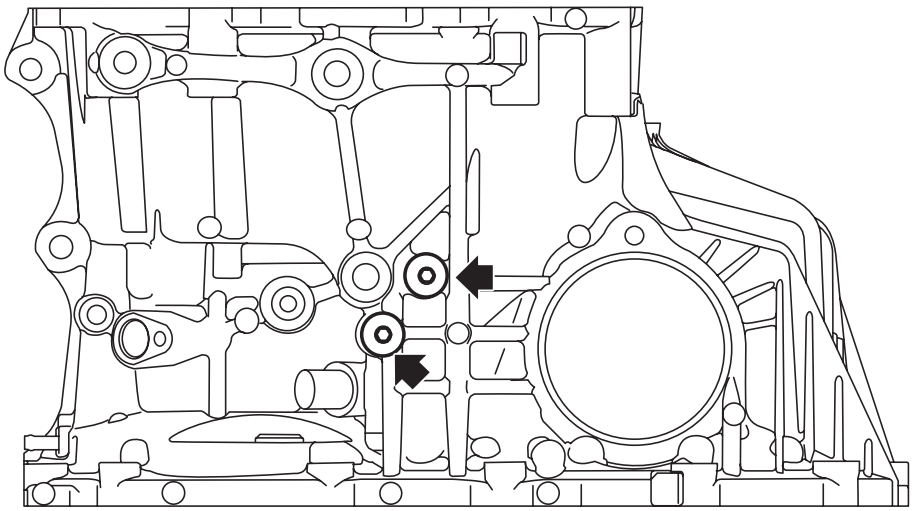

D: ASSEMBLY

1) Install the oil drain plug and overflow drain plug.

NOTE:
Overflow plug of differential gear oil is temporarily attached.
2) Install all plugs.

NOTE:
Use new O-rings.

Tightening torque:
25 N·m (2.5 kgf-m, 18.4 ft-lb)

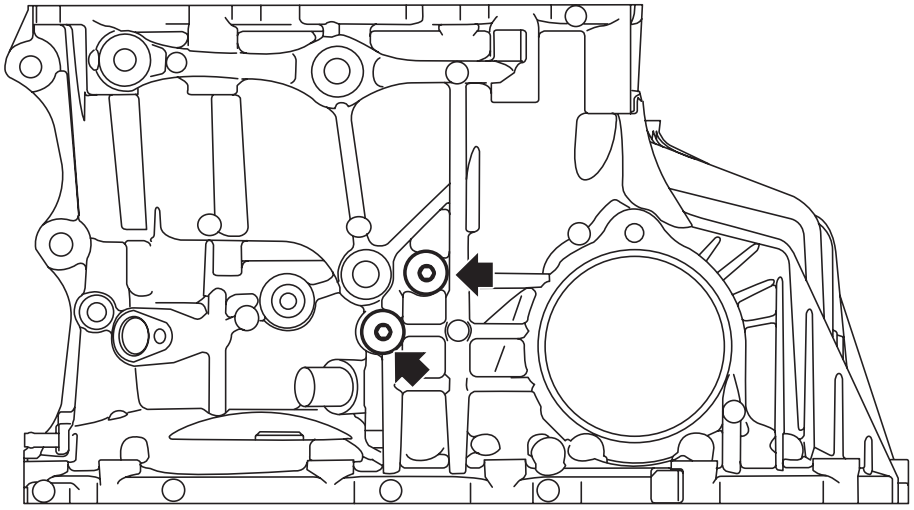

GETtheMANUALS.org

3) Install the transmission hanger and transmission radio ground cord.

Tightening torque:
41 N·m (4.2 kgf-m, 30.2 ft-lb)

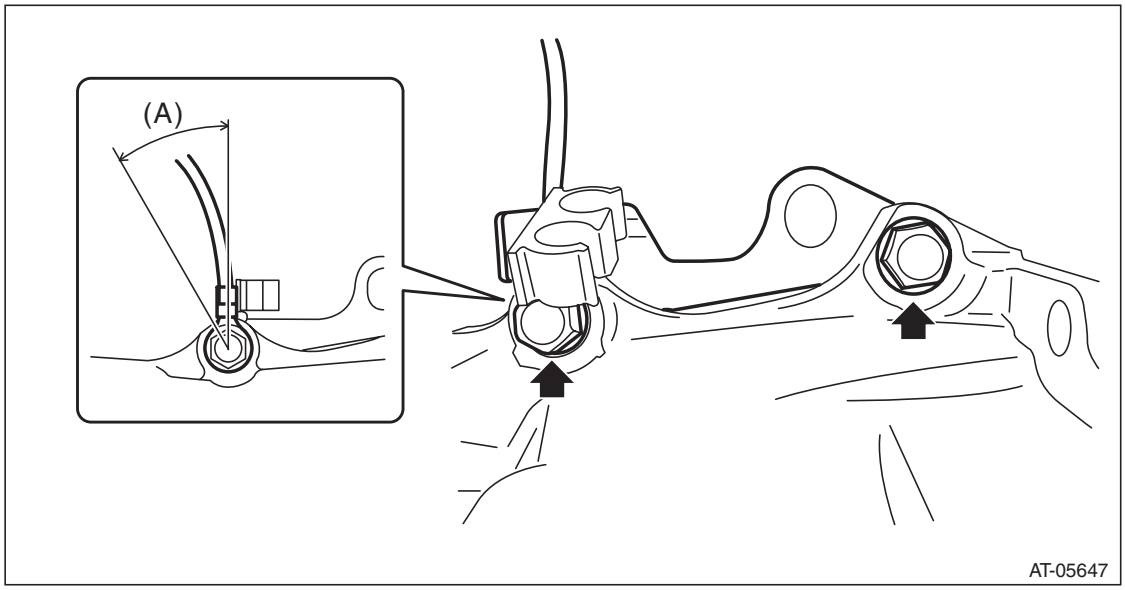

(A) Install within the range of 30° approximately.

E: INSPECTION

- Check for leakage of CVTF from the connection between converter case and transmission case.
- Check there is no damage or cracks on the converter case.

F: ADJUSTMENT

When replacing the converter case cover, select the following shims.

- Select the shim for front reduction drive gear. <Ref. to CVT-302, ADJUSTMENT, Front Reduction Drive Gear.>
- Select the shim for front reduction driven gear. <Ref. to CVT-311, ADJUSTMENT, Front Reduction Driven Gear.>
- Select shims for primary pulley. <Ref. to CVT-236, ADJUSTMENT, Primary Pulley and Secondary Pulley.>

GETtheMANUALS.org

50. Diagnostics with Phenomenon

A: INSPECTION

Symptoms	Faulty parts
Stall speed is low after warming-up, with select lever in “D” or “R” range.	Engine control system
Vehicle does not move despite engine speed rising up, with select lever in “D” or “R” range.	• Engine control system • Select cable • CVTF • Secondary pressure circuit • Pulley, gear and variator chain • Forward/reverse changeover section • TCM • Control valve body • Inhibitor switch
Vehicle does not move by engine stall, with select lever in “D” or “R” range.	• Parking mechanism • Select cable • Bearing • Forward/reverse changeover section
Excessive shock occurs at starting, with select lever in “D” or “R” range.	• Secondary pressure circuit • Pulley, gear and variator chain
Acceleration speed from standstill is insufficient, with select lever in “D” or “R” range.	• Control valve body • Forward/reverse changeover section
Engine speed suddenly rises up during driving, with select lever in “D” or “R” range.	• Control valve body • Secondary pressure circuit • Primary pressure circuit
Vibration occurs during driving, with select lever in “D” or “R” range.	• Secondary pressure circuit • Primary pressure circuit • Forward/reverse changeover section • Pulley and variator chain • Torque converter ASSY • Hydraulic pressure circuit to torque converter • Control valve body
Sudden braking occurs during driving, with select lever in “D” or “R” range.	• Secondary pressure circuit • Primary pressure circuit • Control valve body
During deceleration, lockup clutch does not disengage until just before halting, with select lever in “D” or “R” range.	• Control valve body • Torque converter ASSY
Engine stalls with vehicle at a standstill, with select lever in “D” or “R” range.	• Engine control system • Control valve body
Excessive lockup shock occurs during driving, with select lever in “D” range.	Control valve body
Slipping occurs at lockup, or lockup does not occur during driving, with select lever in “D” range.	• Control valve body • Lockup hydraulic line • Torque converter ASSY
Excessive shift shock occurs when shifting the select lever from “N” range to “D” range, or from “N” range to “R” range.	• Inhibitor switch • Control valve body • Forward/reverse changeover section
Vehicle does not keep at standstill with select lever in “P” range, or parking cannot be released when shifting from “P” range to another range.	• Select cable • Parking mechanism
Select lever does not shift smoothly.	• Select cable • Inhibitor switch • Detent spring • Manual plate

GETtheMANUALS.org

GETtheMANUALS.org

CONTINUOUSLY VARIABLE TRANSMISSION (DIAGNOSTICS)

CVT(diag)

Page

1. Basic Diagnostic Procedure 2
2. Check List for Interview 4
3. General Description 5
4. Electrical Component Location 7
5. Transmission Control Module (TCM) I/O Signal 11
6. Subaru Select Monitor 15
7. Read Current Data 16
8. Read Diagnostic Trouble Code (DTC) 17
9. Clear Memory Mode 18
10. Inspection Mode 19
11. Learning Control 20
12. AT OIL TEMP Warning Light Display 22
13. AWD Warning Light Display 25
14. Diagnostic Procedure for Subaru Select Monitor Communication 28
15. List of Diagnostic Trouble Code (DTC) 32
16. Diagnostic Procedure with Diagnostic Trouble Code (DTC) 35
17. Diagnostic Procedure without Diagnostic Trouble Code (DTC) 89
18. Diagnostics with Phenomenon 90

GETtheMANUALS.org

1. Basic Diagnostic Procedure

A: PROCEDURE

Step		Check	Yes	No
1	**CHECK PRE-INSPECTION.** 1) Ask the customer when and how the trouble occurred using the interview check list. <Ref. to CVT(diag)-4, Check List for Interview.> 2) Before performing diagnostics, check the following items which might affect CVT problems. • General inspection <Ref. to CVT(diag)-5, INSPECTION, General Description.> • Disconnection of harness connector • Visual check for harness damage • Oil leakage • Stall speed test <Ref. to CVT-47, Stall Test.> • Secondary pressure test <Ref. to CVT-50, Secondary Pressure (Line Pressure) Test.> • Transfer clutch pressure test <Ref. to CVT-53, Transfer Clutch Pressure Test.> • Time lag test <Ref. to CVT-49, Time Lag Test.> • Road test <Ref. to CVT-46, Road Test.> • Inhibitor switch <Ref. to CVT-95, Inhibitor Switch.>	Is the item that is thought to influence the CVT problem working properly?	Go to step **2**.	Repair the items which may be affecting the CVT trouble.
2	**CHECK AT OIL TEMP LIGHT.** Turn the ignition switch to ON and wait for at least 2 seconds.	Does the AT OIL TEMP light illuminate?	Go to step **3**.	Check the AT OIL TEMP light.
3	**CHECK AT OIL TEMP LIGHT.** Start the engine and wait for 2 seconds or more.	Does the AT OIL TEMP light blink?	Go to step **4**.	Go to step **6**.
4	**CHECK FOR ANY OTHER DTC ON DISPLAY.** Read the DTC. NOTE: If the communication function of Subaru Select Monitor cannot be executed normally, check the communication circuit. <Ref. to CVT(diag)-28, COMMUNICATION FOR INITIALIZING IMPOSSIBLE, Diagnostic Procedure for Subaru Select Monitor Communication.>	Is DTC displayed on Subaru Select Monitor?	Record all DTC. Go to step **5**.	Go to step **6**.
5	**CHECK FREEZE FRAME DATA.** Using the Subaru Select Monitor, check the Freeze Frame Data.	Are freeze frame data recorded?	Record the freeze frame data. Go to step **7**.	Go to step **7**.
6	**PERFORM GENERAL DIAGNOSTICS.** 1) Inspect using “Diagnostic Procedure without Diagnostic Trouble Code (DTC)”. <Ref. to CVT(diag)-89, Diagnostic Procedure without Diagnostic Trouble Code (DTC).> 2) Inspect using “Diagnostics with Phenomenon”. <Ref. to CVT(diag)-90, Diagnostics with Phenomenon.> 3) Perform the Inspection Mode. <Ref. to CVT(diag)-19, Inspection Mode.> 4) Read the DTC.	Is DTC displayed on Subaru Select Monitor?	Go to step **7**.	Finish the diagnosis.

GETtheMANUALS.org

Step		Check	Yes	No
7	**PERFORM DIAGNOSIS.** 1) Inspect by referring to “Diagnostic Procedure with Diagnostic Trouble Code (DTC)”. <Ref. to CVT(diag)-35, Diagnostic Procedure with Diagnostic Trouble Code (DTC).> NOTE: For the DTC table, refer to “List of Diagnostic Trouble Code (DTC)”. <Ref. to CVT(diag)-32, List of Diagnostic Trouble Code (DTC).> 2) Repair the trouble cause. 3) Perform the Clear Memory Mode. 4) Perform the Inspection Mode. <Ref. to CVT(diag)-19, Inspection Mode.> 5) Read the DTC.	Is DTC displayed on Subaru Select Monitor?	Inspect by referring to “Diagnostic Procedure with Diagnostic Trouble Code (DTC)”. <Ref. to CVT(diag)-35, Diagnostic Procedure with Diagnostic Trouble Code (DTC).>	Finish the diagnosis.

GETtheMANUALS.org

2. Check List for Interview

A: CHECK

Check the following items when a problem has occurred.

NOTE:
Use copies of this page for interviewing customers.

Customer's name			
Date of purchase			
Date of repair			
Transmission model	Transmission	V.I.N.	
Odometer reading	km (miles)		
Frequency	❑ Continuous ❑ Intermittent (times/day)		
Weather	❑ Fine ❑ Cloudy ❑ Rainy ❑ Snowy ❑ Others ( )		
Place	❑ Highland ❑ Suburbs ❑ Inner city ❑ Uphill ❑ Downhill ❑ Rough road ❑ Others ( )		
Ambient air temperature	❑ Hot ❑ Warm ❑ Cool ❑ Cold		
Vehicle speed	km/h (MPH)		
AT OIL TEMP light	❑ Blinks continuously	❑ Does not blink	
Select lever position	❑ P ❑ R ❑ N ❑ D ❑ Manual mode		
Driving condition	❑ Not affected ❑ At racing ❑ While decelerating	❑ At starting ❑ When accelerating ❑ While turning (❑ RH/❑ LH)	❑ While idling ❑ While cruising (Vehicle speed km/h) ❑ Immediately after starting the engine
Manual mode	❑ ON ❑ OFF		
Symptoms	❑ Vehicle does not move (❑ Any position ❑ Particular position)		
	❑ Vehicle does not move (no load racing condition as in N range)		
	❑ Vehicle does not move (engine speed does not increase, felt as stall condition)		
	❑ Noise or vibration (Describe concretely:)		
	❑ Shock felt at N → D selection (seconds after shifting, when engine cold or after warm-up)		
	❑ Shock felt at N → R selection (seconds after shifting, when engine cold or after warm-up)		
	❑ Shifting is wrong (Describe concretely:)		
	❑ Shock or judder during driving		
	❑ Fails to accelerate.		
	❑ Engine speed increases abruptly during driving		
	❑ Shock or judder during standing start		
	❑ Select lever does not move		
	❑ Others ( )		

GETtheMANUALS.org

3. General Description

A: CAUTION

1. SUPPLEMENTAL RESTRAINT SYSTEM "AIRBAG"

The airbag system wiring harness is routed near the TCM.

CAUTION:
- **All the airbag system wiring harnesses and connectors are colored yellow. Do not use an electric test equipment to check these circuits.**
- **Be careful not to damage the airbag system wiring harness when performing diagnostics or servicing the TCM.**

2. MEASUREMENT

When measuring the voltage and resistance of the ECM, TCM or each sensor, use a tapered pin with a diameter of less than 0.64 mm (0.025 in) in order to avoid poor contact. Do not insert a pin of more than 0.65 mm (0.026 in) diameter.

B: INSPECTION

1. BATTERY

Measure the battery voltage and specific gravity of the electrolyte.

Standard voltage: 12 V or more

Specific gravity: 1.260 or more

2. TRANSMISSION GROUND

Make sure that the ground terminal bolt is tightened securely.

Tightening torque:
16 N·m (1.6 kgf-m, 11.8 ft-lb)

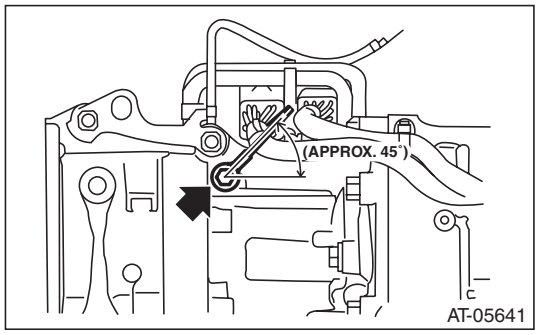

3. OPERATION OF SHIFT SELECT LEVER

Make sure there is no noise, dragging or contact pattern in each select lever range.

WARNING:
Stop the engine while checking operation of the select lever.

GETtheMANUALS.org

C: PREPARATION TOOL

1. SPECIAL TOOL

ILLUSTRATION	TOOL NUMBER	DESCRIPTION	REMARKS
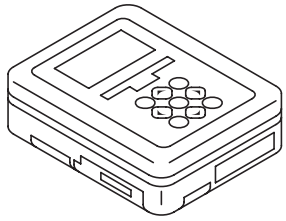 ST1B022XU0	1B022XU0	SUBARU SELECT MONITOR III KIT	Used for troubleshooting the electrical system.

2. GENERAL TOOL

TOOL NAME	REMARKS
Circuit tester	Used for measuring resistance, voltage and current.
Oscilloscope	Used for measuring the sensor.

GETtheMANUALS.org

4. Electrical Component Location

A: LOCATION

1. CONTROL MODULE

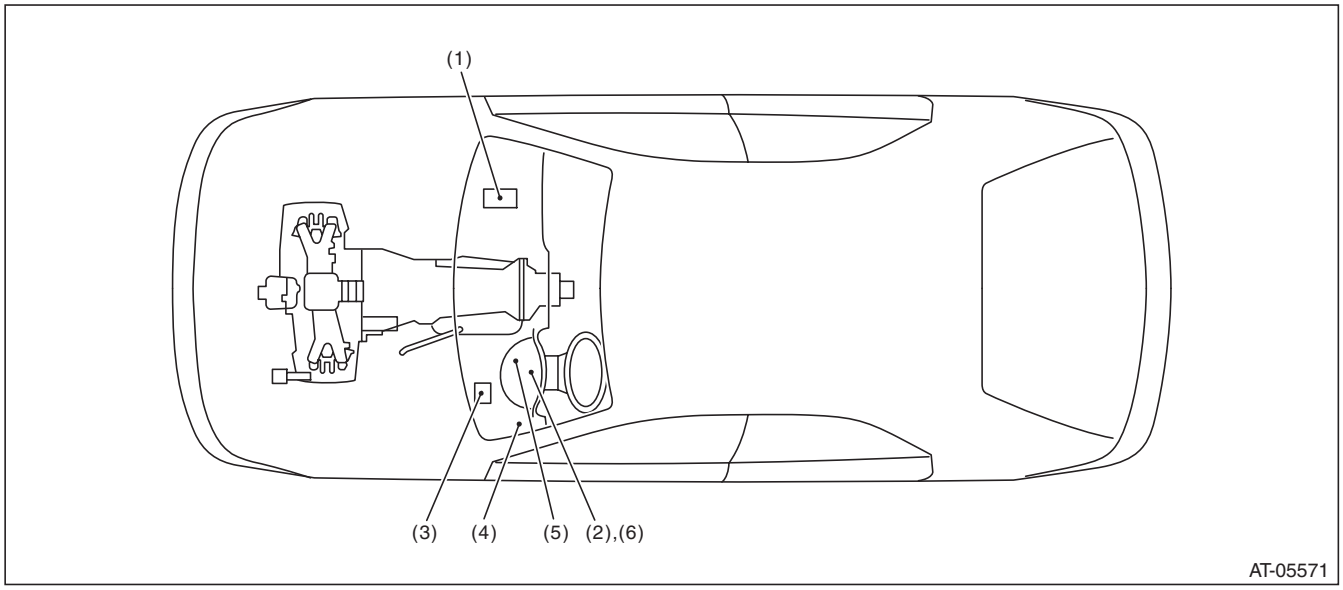

(1)	Engine control module (ECM)	(3)	Transmission control module (TCM)	(5)	Body integrated unit
(2)	AT OIL TEMP light	(4)	Data link connector	(6)	AWD light

GETtheMANUALS.org

Electrical Component Location

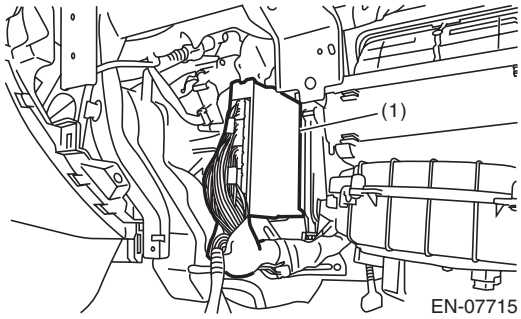

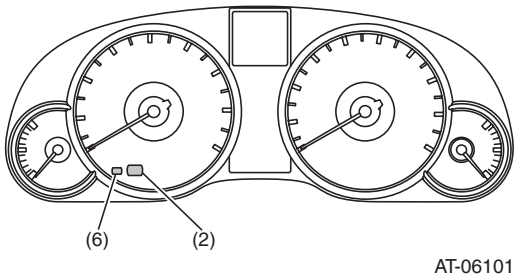

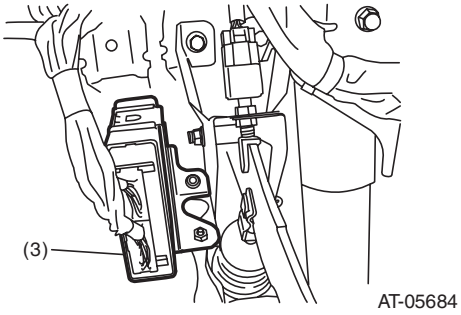

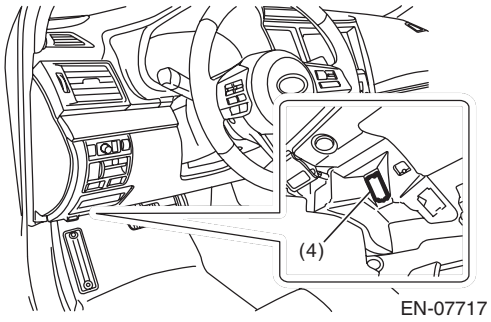

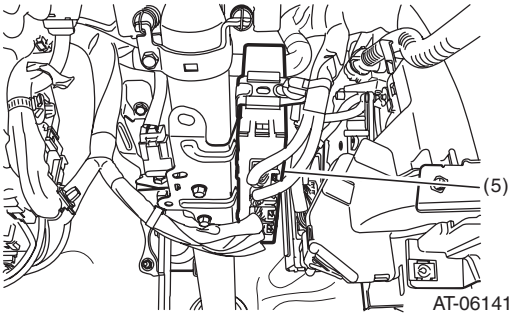

SUBARU.

GETtheMANUALS.org

2. SENSOR

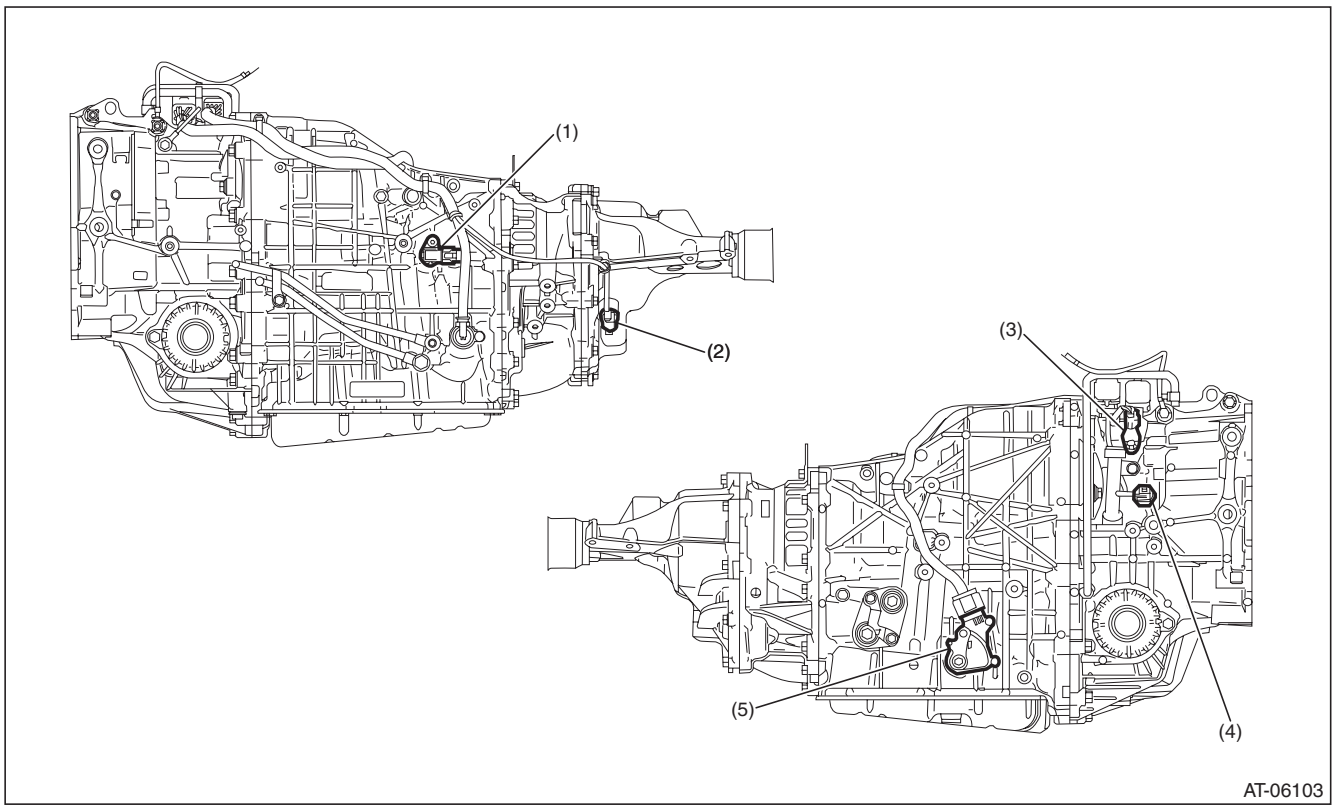

(1) Secondary speed sensor
(2) Front wheel speed sensor
(3) Primary speed sensor
(4) Secondary pressure sensor
(5) Inhibitor switch

GETtheMANUALS.org

3. SOLENOID

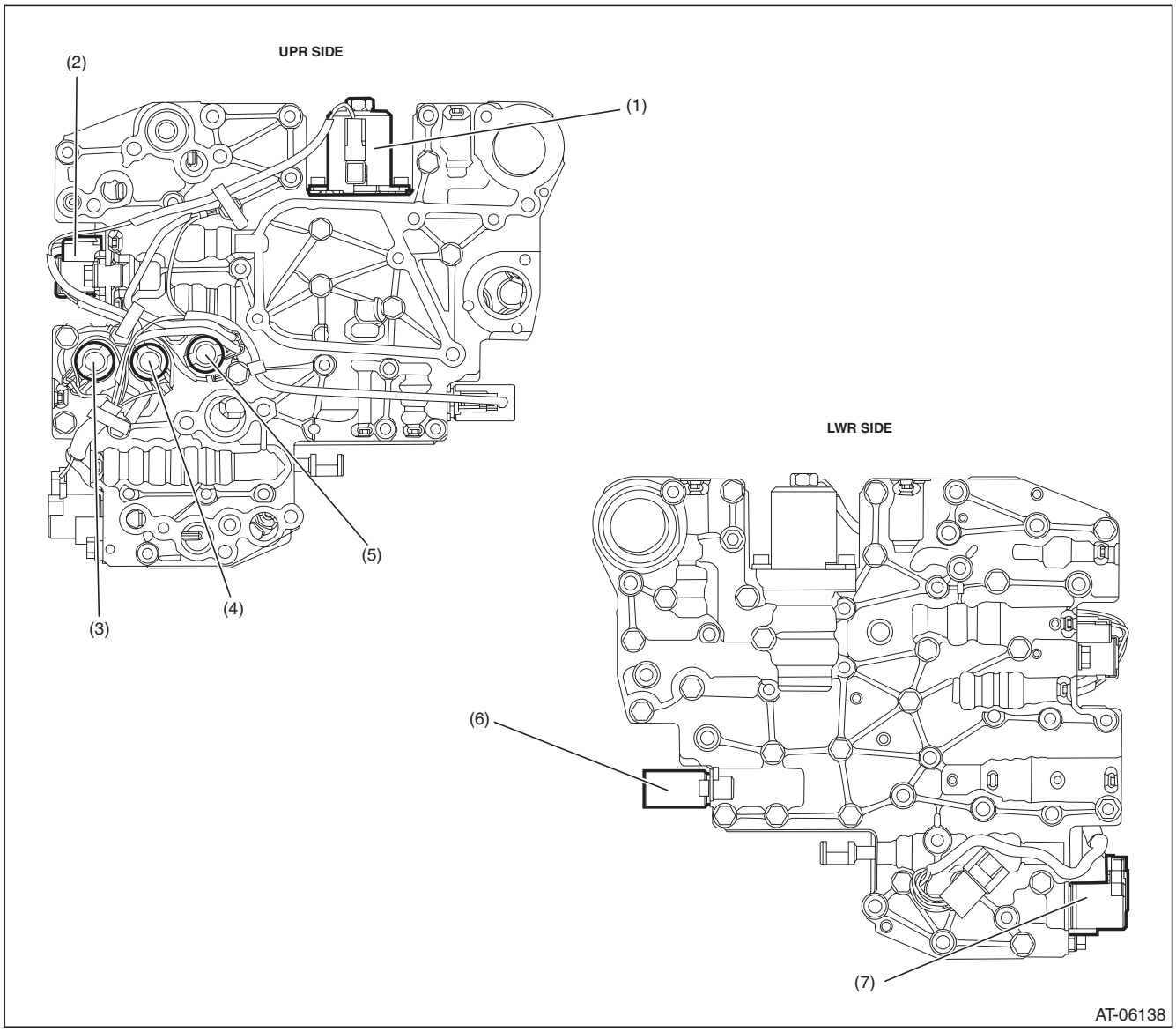

(1) Secondary solenoid
(2) AWD solenoid
(3) Lock-up duty solenoid
(4) Primary DOWN solenoid
(5) Primary UP solenoid
(6) F&R solenoid
(7) Lock-up ON/OFF solenoid

GETtheMANUALS.org

5. Transmission Control Module (TCM) I/O Signal

A: ELECTRICAL SPECIFICATION

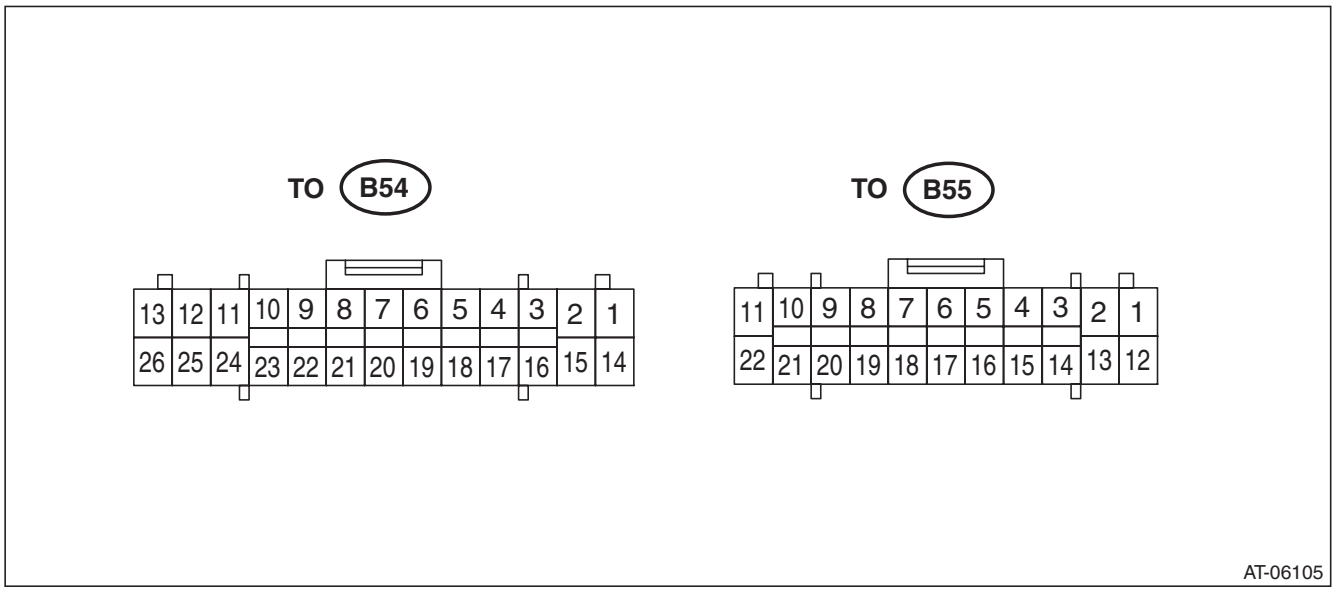

NOTE:
Measure after warming up.

Item	Connector No.	Terminal No.	Measuring conditions	Measured value	Resistance between terminal and chassis ground	Remarks
Backup power supply	B55	1	—	10 — 13 V	—	
Ignition power supply	B55	21	—	10 — 13 V	—	
Main power supply	B55	11	—	10 — 13 V	—	
Main power supply	B55	2	—	10 — 13 V	—	
Main power supply	B55	22	—	10 — 13 V	—	
Manual mode switch	B55	4	Manual mode switch ON	Less than 1 V	—	
			Manual mode switch OFF	8 V or more	—	
Manual mode UP switch	B55	5	Paddle shift UP switch ON	Less than 1 V	—	
			Paddle shift UP switch OFF	8 V or more	—	
Manual mode DOWN switch	B55	16	Paddle shift DOWN switch ON	Less than 1 V	—	
			Paddle shift DOWN switch OFF	8 V or more	—	
Stop light switch	B55	13	Stop light switch ON	8 V or more	—	
			Stop light switch OFF	Less than 1 V	—	
P range switch	B54	5	P range	Less than 1 V	—	
			Except for P range	8 V or more	—	
R range switch	B54	18	R range	Less than 1 V	—	
			Except for R range	8 V or more	—	
N range switch	B54	9	N range	Less than 1 V	—	
			Except for N range	8 V or more	—	
D range switch	B54	22	D range	Less than 1 V	—	
			Except for D range	8 V or more	—	

GETtheMANUALS.org

Item	Connector No.	Terminal No.	Measuring conditions	Measured value	Resistance between terminal and chassis ground	Remarks
ATF temperature sensor	B54	3	ATF temperature at 20°C (68°F)	Approx. 2.6 V	Approx. 2.6 kΩ	
			ATF temperature at 80°C (176°F)	Approx. 0.7 V	Approx. 370 Ω	
ATF temperature sensor GND	B54	16	Always	Approx. 0 V	—	
Secondary pressure sensor power supply output	B54	2	Ignition switch ON	5 V	—	
Secondary pressure sensor	B54	17	Ignition switch ON, engine OFF	Approx. 0.5 V (0 MPa)	—	Value increases with increase of engine load. (0.5 — 4.5 V)
			Ignition switch ON, engine ON	Approx. 1.0 V (1.0 MPa)	—	
Secondary pressure sensor GND	B54	15	Always	Approx. 0 V	—	
Primary speed sensor	B54	6	While driving	0 or 5 V	—	Refer to the waveform (sensor)
Secondary speed sensor	B54	7	While driving	0 or 5 V	—	Refer to the waveform (sensor)
Front wheel speed sensor	B54	20	While driving	0 or 5 V	—	Refer to the waveform (sensor)
Self shut output	B55	20	For three seconds after ignition ON and OFF	Less than 1 V	—	
			Ignition switch OFF	8 V or more		
F&R solenoid	B54	11	Engine ON	Refer to the waveform (solenoid (1))	Approx. 4 — 6 Ω	Resistance value at 20°C (68°F) Value is higher as the temperature increase.
Secondary solenoid	B54	12	Engine ON	Refer to the waveform (solenoid (2))	Approx. 5 — 7 Ω	Resistance value at 20°C (68°F) Value is higher as the temperature increase.
Primary UP solenoid	B54	24	Engine ON, while UP shifting	Refer to the waveform (solenoid (3))	Approx. 10 — 13.5 Ω	Resistance value at 20°C (68°F) Value is higher as the temperature increase.
Primary DOWN solenoid	B54	25	Engine ON, while DOWN shifting	Refer to the waveform (solenoid (4))	Approx. 10 — 13.5 Ω	Resistance value at 20°C (68°F) Value is higher as the temperature increase.

GETtheMANUALS.org

Item	Connector No.	Terminal No.	Measuring conditions	Measured value	Resistance between terminal and chassis ground	Remarks
Lock-up duty solenoid	B54	26	Lock-up ON	Refer to the waveform (solenoid (5))	Approx. 10 — 13.5 Ω	Resistance value at 20°C (68°F) Value is higher as the temperature increase.
AWD solenoid	B54	13	Engine ON, “P” or “N” range	Refer to the waveform (solenoid (6))	Approx. 2 — 4.5 Ω	Resistance value at 20°C (68°F) Value is higher as the temperature increase.
			Engine ON, “D” range, brake ON	Refer to the waveform (solenoid (7))		
Lock-up ON/OFF solenoid	B54	23	Lock-up OFF	Less than 1 V	Approx. 13 — 18.5 Ω	Resistance value at 20°C (68°F) Value is higher as the temperature increase.
			Lock-up ON	Battery voltage or higher		
CAN communication line (+)	B55	18	—	—	—	
CAN communication line (–)	B55	17	—	—	—	
Ground	B54	1	Always	Approx. 0 V	—	
Ground	B54	14	Always	Approx. 0 V	—	
Data link signal (Subaru Select Monitor)	B55	19	Ignition switch ON	8 V or more	—	
			Ignition switch OFF	Less than 1 V		

B: WAVEFORM

1. SENSOR

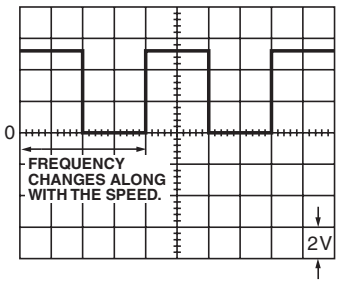

AT-04690

SUBARU.

GETtheMANUALS.org

2. SOLENOID

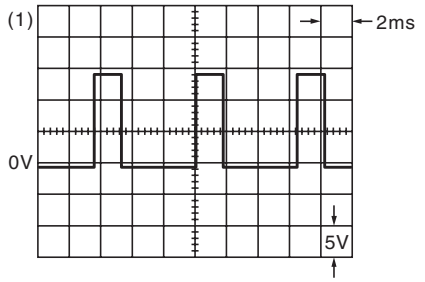

AT-05529

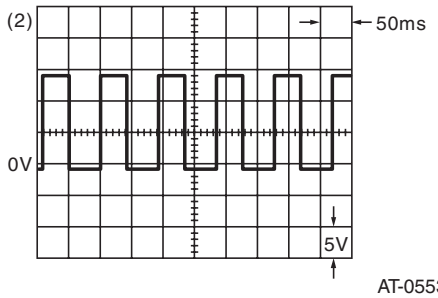

AT-05531

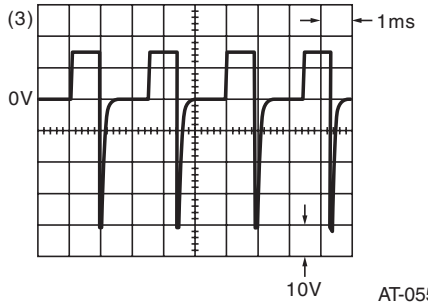

AT-05532

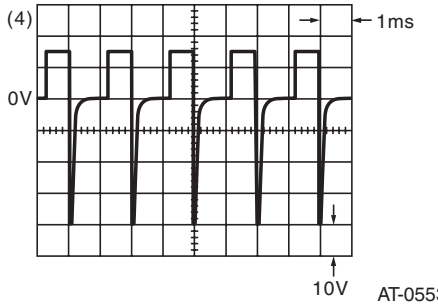

AT-05530

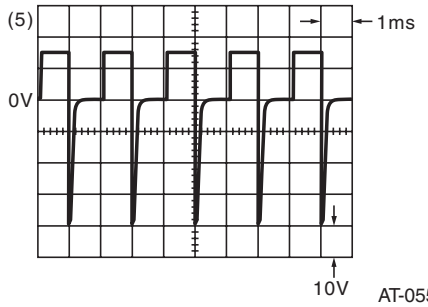

AT-05526

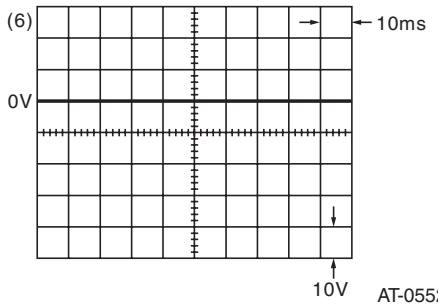

AT-05527

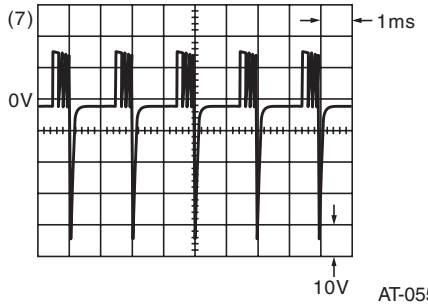

AT-05528

SUBARU.

GETtheMANUALS.org

6. Subaru Select Monitor

A: OPERATION

For detailed operation procedures, refer to “PC application help for Subaru Select Monitor”.

GETtheMANUALS.org

7. Read Current Data

A: OPERATION

For detailed operation procedures, refer to “PC application help for Subaru Select Monitor”.

- The support data list is as follows.

Item	Display	Unit of measure
Engine speed signal	Engine Speed	rpm
Battery voltage	Battery Voltage	V
Accelerator position sensor	Accel. Opening Angle	%
Vehicle speed converted from front vehicle speed sensor signal	Front Wheel Speed	km/h or MPH
Lock-up duty solenoid set duty ratio	Lock Up Duty Ratio	%
AWD solenoid set duty ratio	Transfer Duty Ratio	%
Turbine speed signal converted from primary speed sensor signal	Turbine Revolution Speed	rpm
ATF temperature sensor signal	ATF Temp.	°C or °F
Manual mode switch signal	Manual Mode Switch	ON or OFF
Manual mode down switch signal	Down Switch	ON or OFF
Stop light switch signal	Stop Light Switch	ON or OFF
Manual mode up switch signal	Up Switch	ON or OFF
Drive range signal	D Range Signal	ON or OFF
Reverse range signal	R Range Signal	ON or OFF
AT OIL TEMP light 2 Hz blink condition	Diagnosis Lamp	ON or OFF
AT OIL TEMP light ON condition	ATF Temperature Lamp	ON or OFF
Parking range signal	P Range	ON or OFF
Neutral range signal	N Range	ON or OFF
AT learning mode condition	AT learning	Completed or not completed
Secondary speed sensor signal	Secondary Pulley Speed	rpm
Secondary fluid pressure sensor signal	Actual secondary pressure	MPa
Secondary solenoid set current	Sec. Sol. Set Current	mA
Secondary solenoid actual current	Sec. Sol. Actual Current	mA
Gear ratio	Actual Gear Ratio	—
Shift step in manual mode	Shift step in Manu. mode	—
Primary UP solenoid set duty ratio	Primary UP Duty	%
Primary DOWN solenoid set duty ratio	Primary DOWN Duty	%
F&R solenoid set current	Commanded Forward & Reverse Linear Solenoid Current	mA
F&R solenoid actual current	Actual Forward & Reverse Linear Solenoid Current	mA
Primary speed sensor signal	Primary Pulley Speed	rpm
Front vehicle speed sensor signal	Front Wheel Speed	rpm
Lock-up ON/OFF solenoid set	Lock-Up ON/OFF Solenoid	ON or OFF

GETtheMANUALS.org

8. Read Diagnostic Trouble Code (DTC)

A: OPERATION

For detailed operation procedures, refer to “PC application help for Subaru Select Monitor”.

NOTE:
For details concerning DTC, refer to List of Diagnostic Trouble Code (DTC). Ref. to CVT(diag)-32, List of Diagnostic Trouble Code (DTC).

GETtheMANUALS.org

9. Clear Memory Mode

A: OPERATION

For detailed operation procedures, refer to “PC application help for Subaru Select Monitor”.

CAUTION:
- **If {Clear Memories 2} is executed, learned control memory are cleared.**
- **If {Clear Memories 2} is executed, perform learning. <Ref. to CVT(diag)-20, Learning Control.>**

GETtheMANUALS.org

10.Inspection Mode

A: PROCEDURE

<Ref. to CVT-46, Road Test.>

GETtheMANUALS.org

11.Learning Control

A: GENERAL DESCRIPTION

- Follow the messages displayed on the Subaru Select Monitor when working.
- When the following work is performed, perform learning for the transmission.

Replacement of TCM/Replacement or disassembly of transmission assembly/Replacement of control valve body/Performing “Clear Memories 2”.

B: PROCEDURE

1. PREPARATION FOR LEARNING

1) Warm up or cool down until the ATF temperature displayed on the Subaru Select Monitor is 40 — 65°C (104 — 149°F).
2) After stopping the vehicle, shift the select lever to “P” range.
3) Apply the electronic parking brake.
4) Lift up the vehicle.

CAUTION:
While working, be sure to keep the lower edge of the tires 30 cm or more above the ground as vehicle will vibrate.

5) Connect the Subaru Select Monitor to data link connector.
6) Turn the ignition switch to ON.
7) Turn off all switches causing an electrical load, such as headlights, A/C, seat heater and rear defogger.

2. SIMPLE LEARNING

NOTE:
Simple learning is performed with the vehicle lifted, without actually running the vehicle.

CAUTION:
Do not turn the power of the Subaru Select Monitor OFF during work, and do not disconnect the data link connector.

1) Select {AT related learning & inspecting mode} in the «Transmission Diagnosis» display screen of the Subaru Select Monitor.
2) Select {AT learning mode} in the «AT related learning & inspecting mode» screen of the Subaru Select Monitor.
3) Follow the messages displayed on the Subaru Select Monitor screen when working.

NOTE:
During AT learning in progress, AT OIL TEMP light in the combination meter starts flashing at 2 Hz and the learning operation starts. The following message is displayed on the screen when the AT OIL TEMP light which was flashing at 2 Hz turns off.

GETtheMANUALS.org

4) When «AT learning normally ended.» is displayed, simple AT learning is completed.

NOTE:
- If communication error occurs during learning, retry the “AT learning mode” from the beginning.
- If the message «Execute AT learning again after fixing troubles of the vehicle» appears during learning, select [OK] and display the DTC list. After repairing the locations indicated by the DTC, start the “AT learning mode” over from the beginning.
- When communication error occurs during learning, select lever does not shift occasionally. If select lever does not shift, turn the ignition switch to OFF before operating the select lever.
- If the message «AT learning ended abnormally.» is displayed, start the “AT learning mode” over from the beginning.

Message	Main causes for abnormal termination
«AT learning ended abnormally.»	• Fault is detected during AT learning. • The accelerator pedal is depressed during AT learning. • An unspecified operation was performed during AT learning • ATF temperature becomes out of specification during AT learning. • Battery voltage is low. • Malfunction indicator light illuminates. • Electric parking brake not applied strongly enough • Brake pedal is not fully depressed. • Abnormal idle speed increase, etc.

- For detailed operation procedures, refer to “PC application help for Subaru Select Monitor”.

GETtheMANUALS.org

12. AT OIL TEMP Warning Light Display

A: OPERATION

The AT OIL TEMP light illuminates or blinks, when the ATF temperature is high and malfunction occurs in CVT.

- When normal

AT OIL TEMP light always illuminates when the ignition switch is ON (engine OFF). Light goes off after two seconds from engine ON.

- When ATF temperature is high

AT OIL TEMP light illuminates when the ATF temperature is abnormally high with engine ON.

- When malfunction is detected

AT OIL TEMP light blinks at 2 Hz when the TCM detects the malfunction of CVT with engine ON. In this case, inspect using “Diagnostic Procedure with Diagnostic Trouble Code (DTC)”. <Ref. to CVT(diag)-35, Diagnostic Procedure with Diagnostic Trouble Code (DTC).>

- When AT learning is not finished

AT OIL TEMP light repeats “Blinking at 4 Hz → Turning OFF” every two seconds, when the AT learning is not finished with engine ON. In this case, perform the “Learning”. (During AT learning, the light blinks at 2 Hz or illuminates.) <Ref. to CVT(diag)-20, Learning Control.>

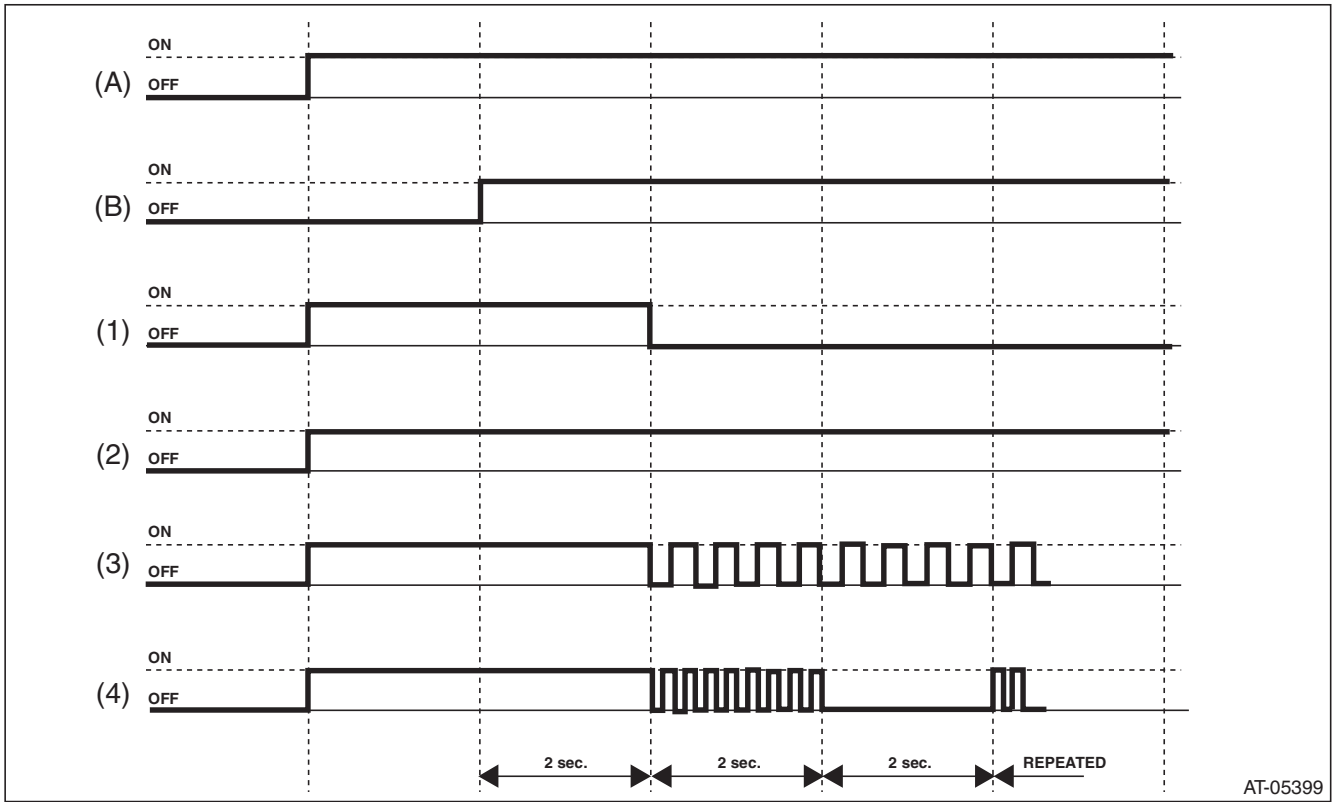

(A) Ignition switch condition
(B) Engine condition
(1) When normal
(2) When ATF temperature is high
(3) When malfunction is detected
(4) When AT learning is not finished

IF the AT OIL TEMP light does not illuminate, or illumination patterns are not as above, check the AT OIL TEMP light circuit. <Ref. to CVT(diag)-23, INSPECTION, AT OIL TEMP Warning Light Display.>

GETtheMANUALS.org

B: INSPECTION

DIAGNOSIS:
- AT OIL TEMP light circuit is open or shorted.
- Combination meter malfunction
- TCM is in special control mode.
- AT learning is not finished.

TROUBLE SYMPTOM:
- When the ignition switch is turned to ON, the AT OIL TEMP light does not illuminate.
- AT OIL TEMP light remains lit after engine start.

WIRING DIAGRAM:

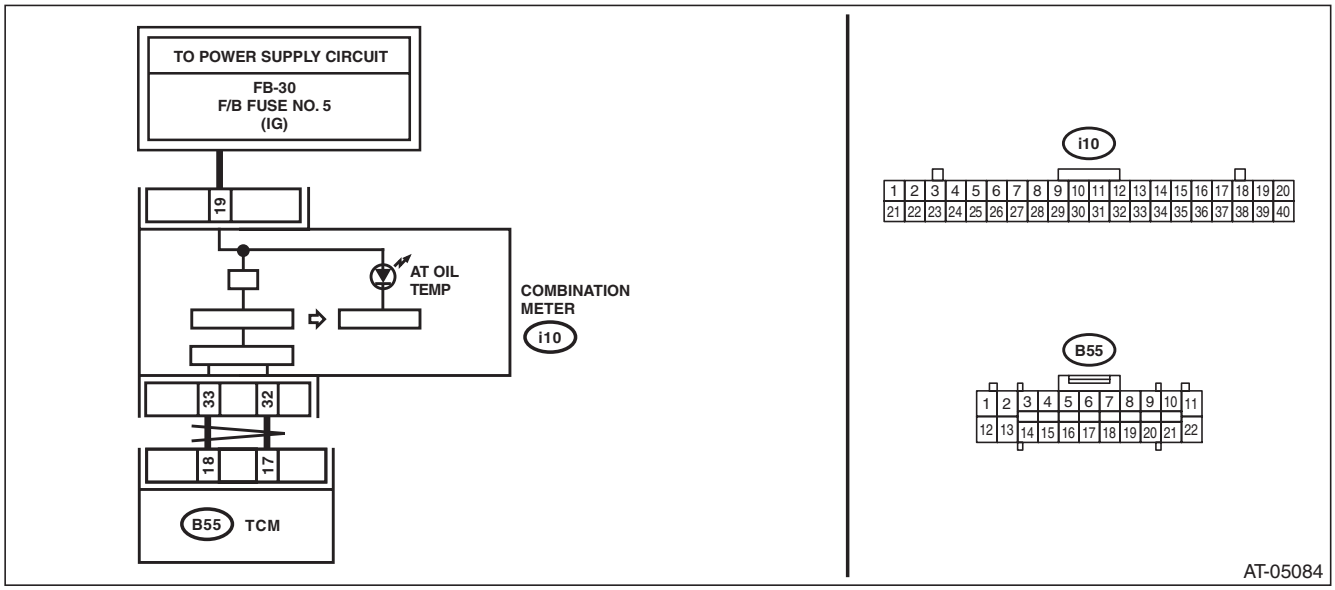

Step		Check	Yes	No
1	**CHECK AT OIL TEMP LIGHT.** Turn the ignition switch to ON.	Does the AT OIL TEMP light illuminate?	Go to step **2**.	Perform the self-diagnosis of combination meter. <Ref. to IDI-11, INSPECTION, Combination Meter System.>
2	**CHECK AT OIL TEMP LIGHT.** Start the engine.	Does AT OIL TEMP light go off after two seconds from engine start?	Current condition is normal. Go back to Basic Diagnostic Procedure. <Ref. to CVT(diag)-2, Basic Diagnostic Procedure.>	Go to step **3**.
3	**CHECK DTC.** Read the DTC relating the TCM using the Subaru Select Monitor.	Is DTC displayed?	Perform the diagnosis according to DTC.	Go to step **4**.
4	**CHECK TCM.** Read the data of «ATF Temperature Lamp» using the Subaru Select Monitor.	Is “ON” displayed?	Go to step **5**.	Perform the self-diagnosis of combination meter. <Ref. to IDI-11, INSPECTION, Combination Meter System.>
5	**CHECK TCM.** Read the data of «ATF Temp.» using the Subaru Select Monitor.	Is the display 125°C or more?	Go to step **6**.	Check the TCM.

GETtheMANUALS.org

Step		Check	Yes	No
6	**CHECK ATF TEMPERATURE.** Check the real fluid temperature from the transmission case surface temperature.	Does it clearly differ from the «ATF Temp.» displayed on Subaru Select Monitor?	Perform the diagnosis according to DTC P0712 procedure. If there is no problems, perform the diagnosis according to DTC P0713 procedure.	When ATF temperature can be judged as actually high, perform the diagnosis again after the ATF temperature lowers.

GETtheMANUALS.org

13. AWD Warning Light Display

A: OPERATION

AWD light illuminates or blinks, when the AWD is in special control condition and AWD has malfunction.

- When normal

AWD light always illuminates when the ignition switch is ON (engine OFF). Light goes off after two seconds from engine ON.

- When FF mode is selected

AWD light illuminates, when the AWD ON/OFF switching function is “FF mode” with engine ON.

- When malfunction is detected

AWD light blinks at 2 Hz when any of following malfunctions are detected with engine ON.

1. When tire with different diameter is installed, or air pressure of any of four wheels is excessively low
2. When “Rear differential inspection mode” is judged as NG <Ref. to DI-84, Rear Differential Inspection Mode.>

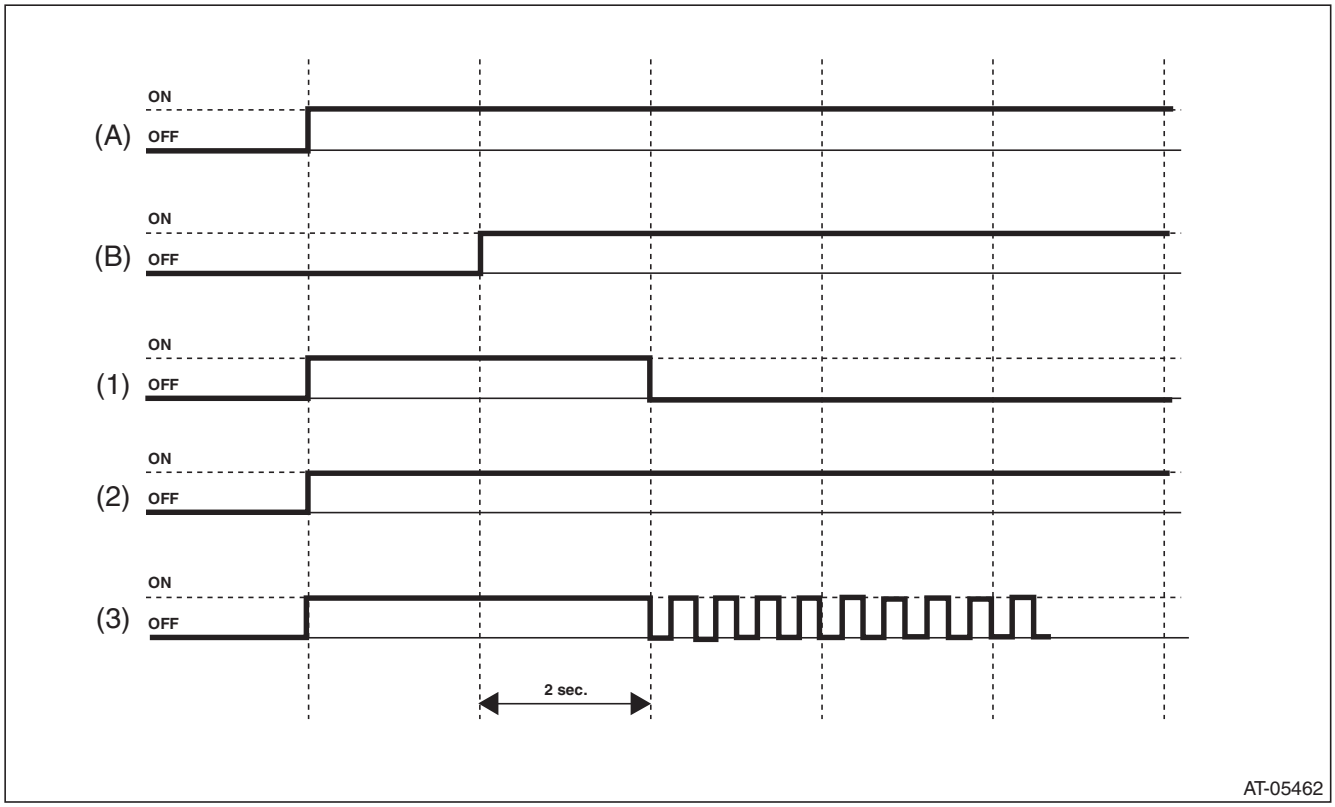

(A) Ignition switch condition (B) Engine condition

(1) When normal (2) When FF mode is selected (3) When malfunction is detected

If the AWD light does not illuminate, or illumination patterns are not as above, check the AWD light circuit. <Ref. to CVT(diag)-26, INSPECTION, AWD Warning Light Display.>

GETtheMANUALS.org

B: INSPECTION

DIAGNOSIS:
- AWD light circuit is open or shorted.
- Combination meter malfunction
- TCM is in AWD special control mode.

TROUBLE SYMPTOM:
- When the ignition switch is turned to ON, the AWD light does not illuminate.
- AWD light remains lit after engine start.
- AWD light is blinking immediately after engine start.

WIRING DIAGRAM:

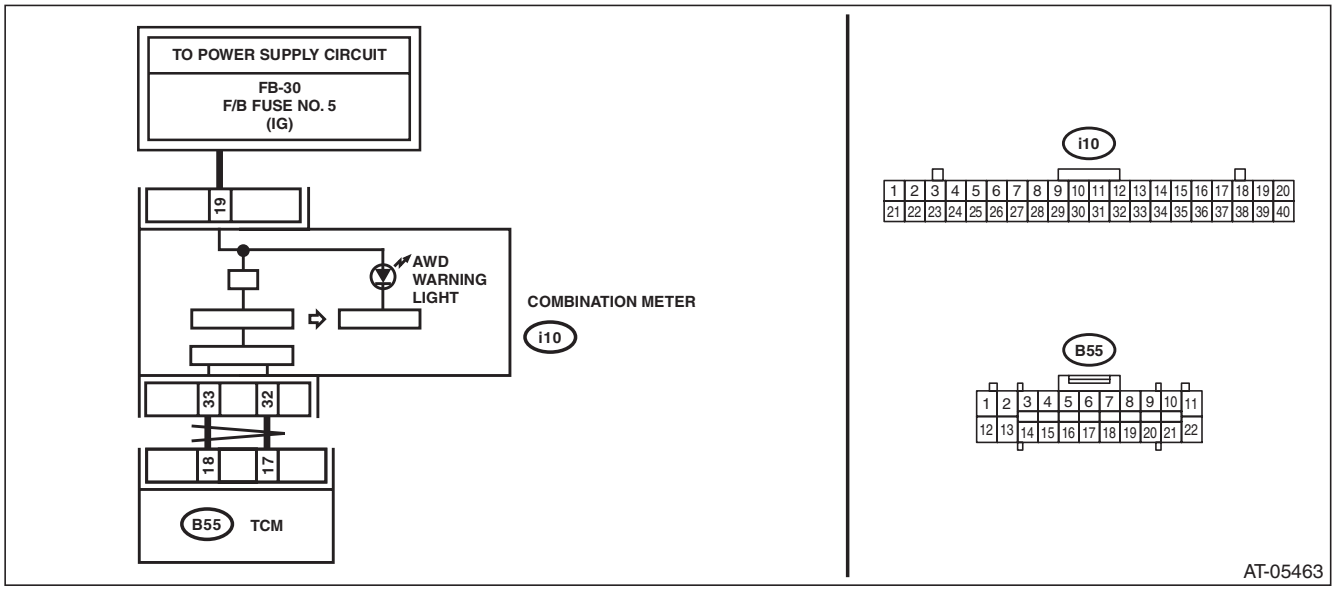

Step		Check	Yes	No
1	**CHECK AWD LIGHT.** Turn the ignition switch to ON.	Does the AWD light illuminate?	Go to step **2**.	Perform the self-diagnosis of combination meter. <Ref. to IDI-11, INSPECTION, Combination Meter System.>
2	**CHECK AWD LIGHT.** Start the engine.	Does AWD light go off after two seconds from engine start?	Current condition is normal. Go back to Basic Diagnostic Procedure. <Ref. to CVT(diag)-2, Basic Diagnostic Procedure.>	Go to step **3**.
3	**CHECK DTC.** Read the DTC relating the TCM using the Subaru Select Monitor.	Is DTC displayed?	Perform the diagnosis according to DTC.	Go to step **4**.
4	**CHECK AWD LIGHT.** Check the display of AWD light after engine start.	Is AWD light illuminating?	Go to step **6**.	Go to step **5**.
5	**CHECK AWD LIGHT.** Check the display of AWD light after engine start.	Is AWD light blinking at 2 Hz?	Go to step **7**.	Go to step **8**.

GETtheMANUALS.org

Step		Check	Yes	No
6	**CHECK AWD ON/OFF SWITCHING FUNCTION.** Using the Subaru Select Monitor, select the {AWD ON/OFF switching mode} from «AT related learning & inspecting mode», and check the current mode. <Ref. to CVT-45, AWD ON/OFF Switching Mode.>	Is the message «At present, the vehicle is in AWD. Switch to FF?» displayed?	Go to step **8**.	If the message «At present, the vehicle is in FF. Switch to AWD?» is displayed, select "OK", and switch to AWD mode.
7	**CHECK REAR DIFFERENTIAL.** Using the Subaru Select Monitor, select the {Rear differential inspection mode} from «AT related learning & inspecting mode», and check. <Ref. to DI-84, Rear Differential Inspection Mode.>	Does AWD light go off after inspection is finished normally?	Current condition is normal. Go back to Basic Diagnostic Procedure. <Ref. to CVT(diag)-2, Basic Diagnostic Procedure.>	Go to step **8**.
8	**CHECK COMBINATION METER.** Perform the self-diagnosis of combination meter. <Ref. to IDI-11, INSPECTION, Combination Meter System.>	Is there any trouble with the combination meter?	Repair the combination meter.	Check the TCM.

GETtheMANUALS.org

14. Diagnostic Procedure for Subaru Select Monitor Communication

A: COMMUNICATION FOR INITIALIZING IMPOSSIBLE

DIAGNOSIS:
Defective harness connector
TROUBLE SYMPTOM:
Subaru Select Monitor communication failure
WIRING DIAGRAM:

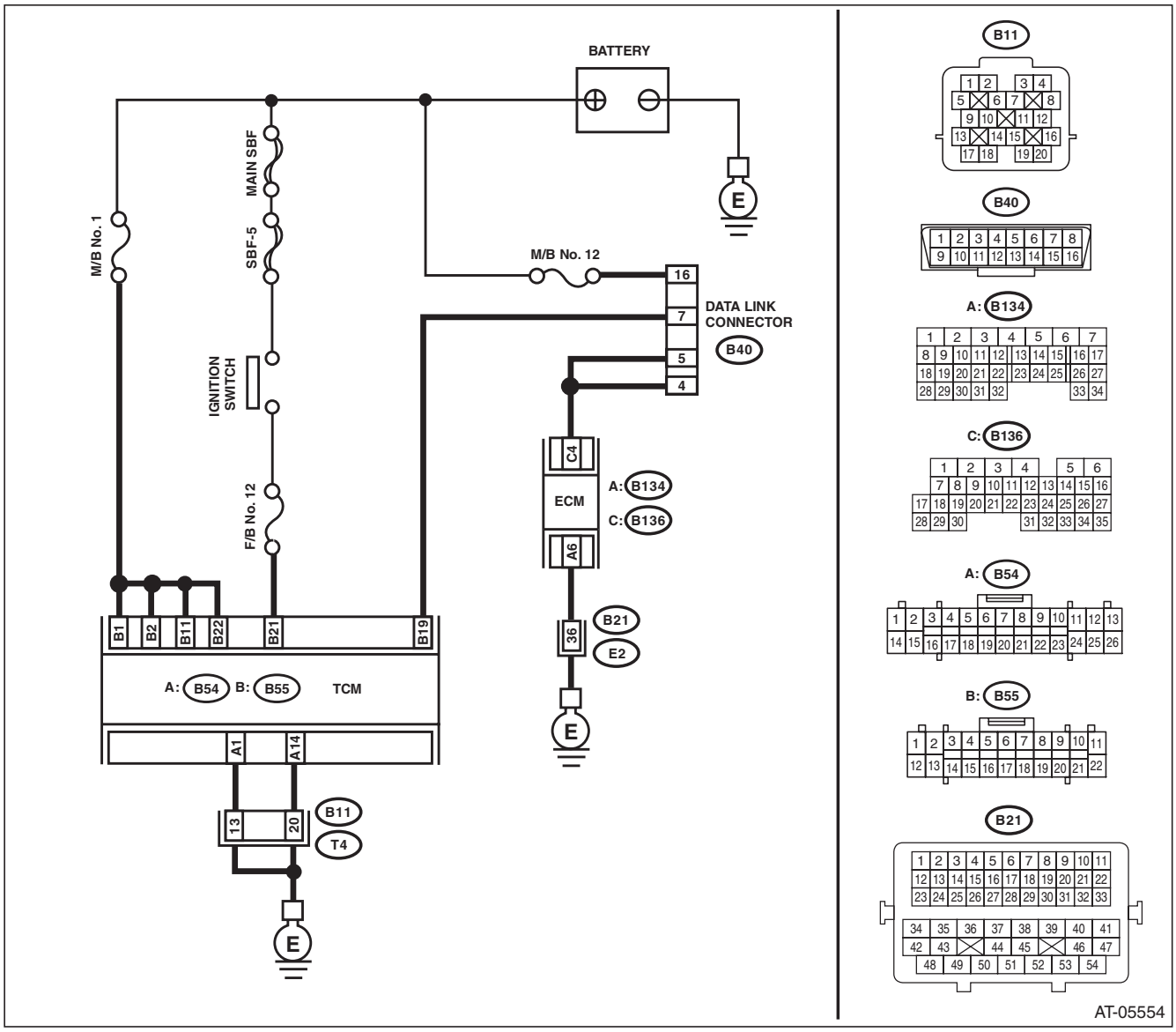

Step		Check	Yes	No
1	**CHECK INSTALLATION OF TCM CONNECTOR.** Turn the ignition switch to OFF.	Is TCM connector connected to TCM?	Go to step **2**.	Connect the TCM connector to TCM.

GETtheMANUALS.org

	Step	Check	Yes	No
2	**CHECK SUBARU SELECT MONITOR POWER SUPPLY CIRCUIT.** Measure the voltage between data link connector and chassis ground. ***Connector & terminal*** ***(B40) No. 16 (+) — Chassis ground (–):***	Is the voltage 10 V or more?	Go to step **3**.	Repair harness connector between the battery and data link connector, and poor contact of the connector.
3	**CHECK SUBARU SELECT MONITOR GROUND CIRCUIT.** 1) Disconnect the ECM connector. 2) Measure the resistance of harness between data link connector and ECM. ***Connector & terminal*** ***(B40) No. 4 — (B136) No. 4:*** ***(B40) No. 5 — (B136) No. 4:***	Is the resistance less than 1 Ω?	Go to step **4**.	Repair the open circuit of harness between data link connector and ECM.
4	**CHECK SUBARU SELECT MONITOR GROUND CIRCUIT.** Measure the resistance of harness between data link connector and chassis ground. ***Connector & terminal*** ***(B40) No. 16 — Chassis ground:***	Is the resistance 1 MΩ or more?	Go to step **5**.	Repair the short circuit of harness between data link connector and ground terminals.
5	**CHECK ENGINE GROUND CIRCUIT.** Check the engine ground circuit.	Is the engine ground circuit normal?	Go to step **6**.	Repair ground circuit of ECM.
6	**CHECK COMMUNICATION OF SUBARU SELECT MONITOR.** 1) Turn the ignition switch to ON. 2) Check the communication with the transmission.	Is the name of system displayed on Subaru Select Monitor?	Go to step **11**.	Go to step **7**.
7	**CHECK COMMUNICATION OF SUBARU SELECT MONITOR.** 1) Turn the ignition switch to OFF. 2) Disconnect the TCM connector. 3) Turn the ignition switch to ON. 4) Check communication with the engine system.	Is the name of system displayed on Subaru Select Monitor?	Go to step **9**.	Go to step **8**.
8	**CHECK OUTPUT SIGNAL OF TCM.** 1) Turn the ignition switch to OFF. 2) Connect the connector to the TCM. 3) Disconnect the control modules connectors which connecting to the data link connector (B40) No. 7, other than the TCM and ECM. **CAUTION:** **When disconnecting the connector from airbag control module, always follow the precautions on AB section. <Ref. to AB-9, CAUTION, General Description.>** 4) Turn the ignition switch to ON. 5) Check communication with the transmission system.	Is the name of system displayed on Subaru Select Monitor?	Check each control module.	Go to step **9**.

GETtheMANUALS.org

	Step	Check	Yes	No
9	**CHECK HARNESS CONNECTOR BETWEEN EACH CONTROL MODULE AND DATA LINK CONNECTOR.** 1) Turn the ignition switch to OFF. 2) Disconnect the connectors of all control modules connected to the data link connector (B40) No. 7. 3) Measure the resistance between data link connector and chassis ground. ***Connector & terminal*** ***(B40) No. 7 — Chassis ground:***	Is the resistance 1 MΩ or more?	Go to step **10**.	Check harness and connector between each control module and data link connector.
10	**CHECK OUTPUT SIGNAL OF TCM.** 1) Turn the ignition switch to ON. 2) Measure the voltage between data link connector and chassis ground. ***Connector & terminal*** ***(B40) No. 7 (+) — Chassis ground (–):***	Is the voltage 1 V or more?	Check harness and connector between each control module and data link connector.	Go to step **11**.
11	**CHECK HARNESS CONNECTOR BETWEEN TCM AND DATA LINK CONNECTOR.** 1) Disconnect the TCM connector. 2) Measure the resistance between TCM connector and data link connector. ***Connector & terminal*** ***(B40) No. 7 — (B55) No. 19:***	Is the resistance less than 1 Ω?	Go to step **12**.	Check the harness and connector between TCM and data link connector.
12	**CHECK INSTALLATION OF TRANSMISSION HARNESS CONNECTOR.**	Is the transmission harness connector connected to bulkhead harness connector?	Go to step **13**.	Connect the bulkhead harness connector to transmission harness connector.
13	**CHECK POOR CONTACT OF CONNECTORS.**	Is there poor contact of control module power supply and data link connector?	Repair the poor contact.	Go to step **14**.
14	**CHECK TCM POWER SUPPLY.** 1) Disconnect the TCM connector. 2) Turn the ignition switch to ON. 3) Measure the voltage between TCM connector and chassis ground. ***Connector & terminal*** ***(B55) No. 1 (+) — Chassis ground (–):*** ***(B55) No. 2 (+) — Chassis ground (–):*** ***(B55) No. 11 (+) — Chassis ground (–):*** ***(B55) No. 22 (+) — Chassis ground (–):***	Is the voltage 10 — 13 V?	Go to step **16**.	Go to step **15**.
15	**CHECK M/B FUSE (NO. 1).** 1) Turn the ignition switch to OFF. 2) Remove the fuse (No. 1).	Is the fuse (No. 1) blown out?	Replace the fuse. If the replaced fuse blows out easily, repair the short circuit in the harness between the fuse and the TCM.	Repair the open circuit of harness between the fuse and the TCM, or the fuse and battery, and poor contacts of connectors.
16	**CHECK IGNITION POWER SUPPLY CIRCUIT.** 1) Turn the ignition switch to ON. 2) Measure the ignition power supply voltage between TCM connector and chassis ground. ***Connector & terminal*** ***(B55) No. 21 (+) — Chassis ground (–):***	Is the voltage 10 — 13 V?	Go to step **18**.	Go to step **17**.

GETtheMANUALS.org

	Step	Check	Yes	No
17	**CHECK F/B FUSE (NO. 12).** Remove the fuse (No. 12).	Is the fuse (No. 12) blown out?	Replace the fuse. If the replaced fuse blows out easily, repair the short circuit in the harness between the fuse and the TCM.	Repair the open circuit of harness between the fuse and the TCM, or the fuse and battery, and poor contacts of connectors.
18	**CHECK HARNESS CONNECTOR BETWEEN TCM AND TRANSMISSION.** 1) Turn the ignition switch to OFF. 2) Disconnect the TCM and transmission connectors. 3) Measure the resistance of harness between TCM and transmission connector. ***Connector & terminal*** ***(B54) No. 1 — (B11) No. 13:*** ***(B54) No. 14 — (B11) No. 20:***	Is the resistance less than 1 Ω?	Go to step **19**.	Repair the open circuit of harness between TCM and transmission harness connector, and poor contact of connector.
19	**CHECK HARNESS CONNECTOR BETWEEN TRANSMISSION AND TRANSMISSION GROUND.** Measure the resistance of the harness between transmission and transmission ground. ***Connector & terminal*** ***(T4) No. 13 — Transmission ground:*** ***(T4) No. 20 — Transmission ground:***	Is the resistance less than 1 Ω?	Go to step **20**.	Repair the open circuit of the harness between transmission and transmission ground.
20	**CHECK POOR CONTACT OF CONNECTORS.**	Is there poor contact of TCM power supply, ground and data link connector?	Repair the connector.	Check the TCM.

GETtheMANUALS.org

15. List of Diagnostic Trouble Code (DTC)

A: LIST

DTC	Item	Content of diagnosis	Reference
P0705	Transmission Range Sensor Circuit (PRNDL Input)	Inhibitor switch malfunction or short circuit	<Ref. to CVT(diag)-35, DTC P0705 TRANSMISSION RANGE SENSOR CIRCUIT (PRNDL INPUT), Diagnostic Procedure with Diagnostic Trouble Code (DTC).>
P0708	AT Range Switch Not Inputted	Inhibitor switch malfunction or open circuit	<Ref. to CVT(diag)-37, DTC P0708 AT RANGE SWITCH NOT INPUTTED, Diagnostic Procedure with Diagnostic Trouble Code (DTC).>
P0712	Transmission Fluid Temperature Sensor Circuit Low Input	ATF temperature sensor is faulty or input signal circuit is shorted.	<Ref. to CVT(diag)-39, DTC P0712 TRANSMISSION FLUID TEMPERATURE SENSOR CIRCUIT LOW INPUT, Diagnostic Procedure with Diagnostic Trouble Code (DTC).>
P0713	Transmission Fluid Temperature Sensor Circuit High Input	ATF temperature sensor is faulty or input signal circuit is open or shorted.	<Ref. to CVT(diag)-40, DTC P0713 TRANSMISSION FLUID TEMPERATURE SENSOR CIRCUIT HIGH INPUT, Diagnostic Procedure with Diagnostic Trouble Code (DTC).>
P0719	Brake Switch Circuit Low	Brake switch malfunction, open or shorted input signal circuit	<Ref. to CVT(diag)-42, DTC P0719 BRAKE SWITCH CIRCUIT LOW, Diagnostic Procedure with Diagnostic Trouble Code (DTC).>
P0720	Output Speed Sensor Circuit	Front wheel speed sensor is faulty or input signal circuit is open or shorted.	<Ref. to CVT(diag)-44, DTC P0720 OUTPUT SPEED SENSOR CIRCUIT, Diagnostic Procedure with Diagnostic Trouble Code (DTC).>
P0724	Brake Switch Circuit High	Brake switch malfunction, shorted input signal circuit	<Ref. to CVT(diag)-46, DTC P0724 BRAKE SWITCH CIRCUIT HIGH, Diagnostic Procedure with Diagnostic Trouble Code (DTC).>
P0730	Gearshift Control Performance Abnormal	Primary speed sensor, secondary speed sensor, control valve, or chain malfunction	<Ref. to CVT(diag)-47, DTC P0730 GEARSHIFT CONTROL PERFORMANCE ABNORMAL, Diagnostic Procedure with Diagnostic Trouble Code (DTC).>
P0801	Reverse Inhibit Control Circuit	Shift lock solenoid is faulty or output signal circuit is open or shorted.	<Ref. to CVT(diag)-48, DTC P0801 REVERSE INHIBIT CONTROL CIRCUIT, Diagnostic Procedure with Diagnostic Trouble Code (DTC).>
P0841	Secondary Oil Pressure Sensor Performance	Secondary pressure sensor or control valve malfunction	<Ref. to CVT(diag)-49, DTC P0841 SECONDARY OIL PRESSURE SENSOR PERFORMANCE, Diagnostic Procedure with Diagnostic Trouble Code (DTC).>
P0842	Secondary Oil Pressure Sensor Circuit (Low)	Secondary pressure sensor is faulty or input signal circuit is open or shorted.	<Ref. to CVT(diag)-51, DTC P0842 SECONDARY OIL PRESSURE SENSOR CIRCUIT (LOW), Diagnostic Procedure with Diagnostic Trouble Code (DTC).>
P0843	Secondary Oil Pressure Sensor Circuit (High)	Secondary pressure sensor is faulty or input signal circuit is shorted.	<Ref. to CVT(diag)-53, DTC P0843 SECONDARY OIL PRESSURE SENSOR CIRCUIT (HIGH), Diagnostic Procedure with Diagnostic Trouble Code (DTC).>
P0890	AT Self-Shut Relay Diagnosis (Low)	Self-shut relay malfunction, open or shorted input signal circuit	<Ref. to CVT(diag)-55, DTC P0890 AT SELF-SHUT RELAY DIAGNOSIS (LOW), Diagnostic Procedure with Diagnostic Trouble Code (DTC).>
P0951	Manual Switch	Manual mode switch malfunction, open or shorted input signal circuit	<Ref. to CVT(diag)-57, DTC P0951 MANUAL SWITCH, Diagnostic Procedure with Diagnostic Trouble Code (DTC).>
P0962	Secondary Solenoid Circuit (Low)	Secondary solenoid is faulty or output signal circuit is shorted.	<Ref. to CVT(diag)-59, DTC P0962 SECONDARY SOLENOID CIRCUIT (LOW), Diagnostic Procedure with Diagnostic Trouble Code (DTC).>

GETtheMANUALS.org

DTC	Item	Content of diagnosis	Reference
P0963	Secondary Solenoid Circuit (High)	Secondary solenoid is faulty or output signal circuit is open or shorted.	<Ref. to CVT(diag)-61, DTC P0963 SECONDARY SOLENOID CIRCUIT (HIGH), Diagnostic Procedure with Diagnostic Trouble Code (DTC).>
P0965	Forward & Reverse Solenoid Function	F&R solenoid, forward clutch or control valve malfunction	<Ref. to CVT(diag)-63, DTC P0965 FORWARD & REVERSE SOLENOID FUNCTION, Diagnostic Procedure with Diagnostic Trouble Code (DTC).>
P0966	Forward & Reverse Solenoid Circuit (Low)	F&R solenoid is faulty or output signal circuit is shorted.	<Ref. to CVT(diag)-64, DTC P0966 FORWARD & REVERSE SOLENOID CIRCUIT (LOW), Diagnostic Procedure with Diagnostic Trouble Code (DTC).>
P0967	Forward & Reverse Linear Solenoid Circuit (High)	F&R solenoid is faulty or output signal circuit is open or shorted.	<Ref. to CVT(diag)-66, DTC P0967 FORWARD & REVERSE LINEAR SOLENOID CIRCUIT (HIGH), Diagnostic Procedure with Diagnostic Trouble Code (DTC).>
P0970	Transfer Solenoid Circuit (Low)	AWD solenoid is faulty or output signal circuit is shorted.	<Ref. to CVT(diag)-68, DTC P0970 TRANSFER SOLENOID CIRCUIT (LOW), Diagnostic Procedure with Diagnostic Trouble Code (DTC).>
P0971	Transfer Solenoid Circuit (High)	AWD solenoid is faulty or output signal circuit is open or shorted.	<Ref. to CVT(diag)-69, DTC P0971 TRANSFER SOLENOID CIRCUIT (HIGH), Diagnostic Procedure with Diagnostic Trouble Code (DTC).>
P0973	Primary Solenoid System A Circuit (Low)	Primary UP solenoid is faulty or output signal circuit is shorted.	<Ref. to CVT(diag)-71, DTC P0973 PRIMARY SOLENOID SYSTEM A CIRCUIT (LOW), Diagnostic Procedure with Diagnostic Trouble Code (DTC).>
P0974	Primary Solenoid System A Circuit (High)	Primary UP solenoid is faulty or output signal circuit is open or shorted.	<Ref. to CVT(diag)-72, DTC P0974 PRIMARY SOLENOID SYSTEM A CIRCUIT (HIGH), Diagnostic Procedure with Diagnostic Trouble Code (DTC).>
P0976	Primary Solenoid System B Circuit (Low)	Primary DOWN solenoid is faulty or output signal circuit is shorted.	<Ref. to CVT(diag)-74, DTC P0976 PRIMARY SOLENOID SYSTEM B CIRCUIT (LOW), Diagnostic Procedure with Diagnostic Trouble Code (DTC).>
P0977	Primary Solenoid System B Circuit (High)	Primary DOWN solenoid is faulty or output signal circuit is open or shorted.	<Ref. to CVT(diag)-75, DTC P0977 PRIMARY SOLENOID SYSTEM B CIRCUIT (HIGH), Diagnostic Procedure with Diagnostic Trouble Code (DTC).>
P1718	AT CAN Communication Circuit	• CAN communication is open or shorted. • ECM, ABS/VDCCM CAN communication error	<Ref. to CVT(diag)-76, DTC P1718 AT CAN COMMUNICATION CIRCUIT, Diagnostic Procedure with Diagnostic Trouble Code (DTC).>
P1724	AT EEPROM Error	TCM EEPROM malfunction	<Ref. to CVT(diag)-77, DTC P1724 AT EEPROM ERROR, Diagnostic Procedure with Diagnostic Trouble Code (DTC).>
P1725	AT Body System CAN Communication Trouble	Combination meter, A/C, body integrated unit CAN communication error	<Ref. to CVT(diag)-77, DTC P1725 AT BODY SYSTEM CAN COMMUNICATION TROUBLE, Diagnostic Procedure with Diagnostic Trouble Code (DTC).>
P2746	Primary Pulley Revolution Speed Sensor Circuit	Primary speed sensor malfunction, open or shorted input signal circuit	<Ref. to CVT(diag)-78, DTC P2746 PRIMARY PULLEY REVOLUTION SPEED SENSOR CIRCUIT, Diagnostic Procedure with Diagnostic Trouble Code (DTC).>

GETtheMANUALS.org

List of Diagnostic Trouble Code (DTC)

DTC	Item	Content of diagnosis	Reference
P2750	Sec. Pulley Revolution Speed Sensor Circuit	Secondary speed sensor malfunction, open or shorted input signal circuit	<Ref. to CVT(diag)-80, DTC P2750 SEC. PULLEY REVOLUTION SPEED SENSOR CIRCUIT, Diagnostic Procedure with Diagnostic Trouble Code (DTC).>
P2762	Lock-Up Duty Solenoid Malfunction	Lock-up duty solenoid, lock-up clutch or control valve malfunction	<Ref. to CVT(diag)-82, DTC P2762 LOCK-UP DUTY SOLENOID MALFUNCTION, Diagnostic Procedure with Diagnostic Trouble Code (DTC).>
P2763	Lock-Up Duty Solenoid Circuit (High)	Lock-up duty solenoid is faulty or output signal circuit is open or shorted.	<Ref. to CVT(diag)-83, DTC P2763 LOCK-UP DUTY SOLENOID CIRCUIT (HIGH), Diagnostic Procedure with Diagnostic Trouble Code (DTC).>
P2764	Lock-Up Duty Solenoid Circuit (Low)	Lock-up duty solenoid is faulty or output signal circuit is shorted.	<Ref. to CVT(diag)-85, DTC P2764 LOCK-UP DUTY SOLENOID CIRCUIT (LOW), Diagnostic Procedure with Diagnostic Trouble Code (DTC).>
P2769	Lock-Up ON/OFF Solenoid Circuit (Low)	Lock-up ON/OFF solenoid is faulty or output signal circuit is shorted.	<Ref. to CVT(diag)-86, DTC P2769 LOCK-UP ON/OFF SOLENOID CIRCUIT (LOW), Diagnostic Procedure with Diagnostic Trouble Code (DTC).>
P2770	Lock-Up ON/OFF Solenoid Circuit (High)	Lock-up ON/OFF solenoid is faulty or output signal circuit is open or shorted.	<Ref. to CVT(diag)-87, DTC P2770 LOCK-UP ON/OFF SOLENOID CIRCUIT (HIGH), Diagnostic Procedure with Diagnostic Trouble Code (DTC).>

GETtheMANUALS.org

16. Diagnostic Procedure with Diagnostic Trouble Code (DTC)

A: DTC P0705 TRANSMISSION RANGE SENSOR CIRCUIT (PRNDL INPUT)

DTC DETECTING CONDITION:

- Inhibitor switch is faulty.
- At least 2 range signal is input.

TROUBLE SYMPTOM:

- Shift characteristics are erroneous.
- The range position of the select lever and the position of shift indicator display do not match.

WIRING DIAGRAM:

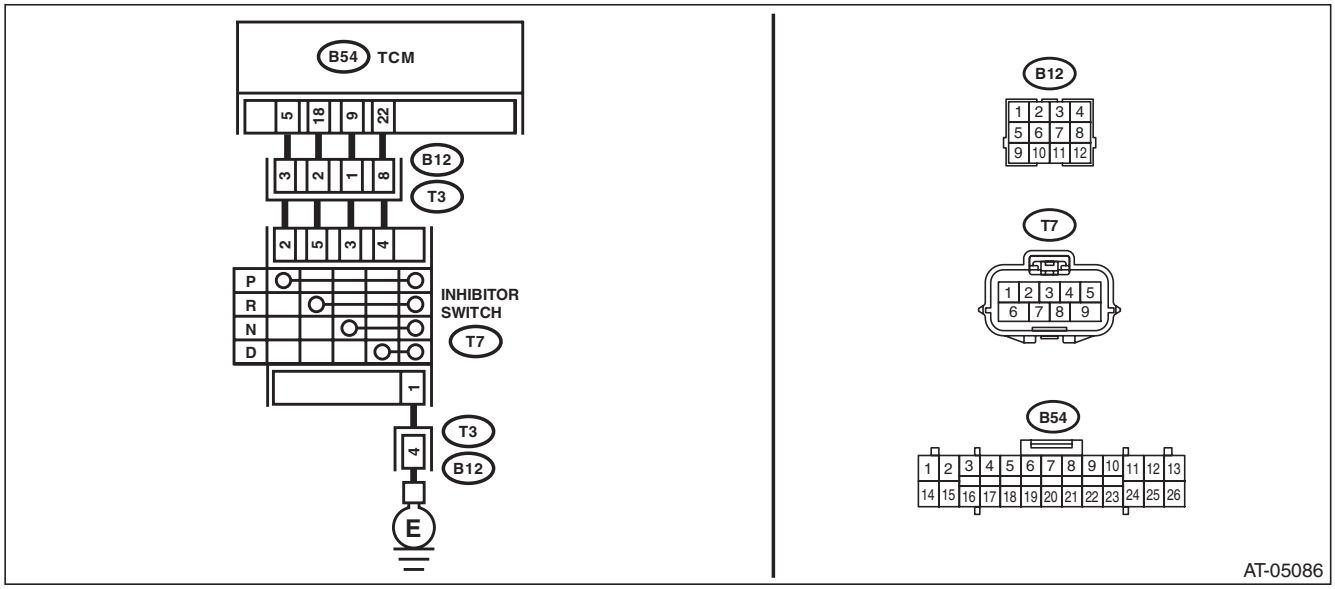

Step		Check	Yes	No
1	**CHECK INPUT SIGNAL FOR TCM.** 1) Turn the ignition switch to ON. 2) Move the select lever to each range, and read the data of «P range» «R Range Signal» «N range» «D Range Signal» using the Subaru Select Monitor.	Is display “OFF” for the range other than corresponding range?	Go to step **5**.	Go to step **2**.
2	**CHECK HARNESS.** 1) Turn the ignition switch to OFF. 2) Disconnect the TCM and transmission connectors. 3) Measure the resistance between TCM connector and chassis ground. ***Connector & terminal*** ***(B54) No. 5 — Chassis ground:*** ***(B54) No. 18 — Chassis ground:*** ***(B54) No. 9 — Chassis ground:*** ***(B54) No. 22 — Chassis ground:***	Is each resistance 1 MΩ or more?	Go to step **3**.	Repair the short circuit of harness.
3	**CHECK HARNESS.** 1) Disconnect the inhibitor switch connector. 2) Measure the resistance between transmission connector and inhibitor switch connector. ***Connector & terminal*** ***(T3) No. 3 — (T7) No. 2:*** ***(T3) No. 2 — (T7) No. 5:*** ***(T3) No. 1 — (T7) No. 3:*** ***(T3) No. 8 — (T7) No. 4:***	Is each resistance 1 MΩ or more?	Go to step **4**.	Repair the short circuit of harness.

GETtheMANUALS.org

Step		Check	Yes	No
4	**CHECK INHIBITOR SWITCH.** Move the select lever to each range, and measure the resistance between inhibitor switch connector terminals. ***Connector & terminal*** ***(T7) No. 2 — (T7) No. 1:*** ***(T7) No. 5 — (T7) No. 1:*** ***(T7) No. 3 — (T7) No. 1:*** ***(T7) No. 4 — (T7) No. 1:***	Is the resistance other than corresponding range 1 MΩ or more?	Go to step **5**.	Replace the inhibitor switch. <Ref. to CVT-95, Inhibitor Switch.>
5	**CHECK FOR POOR CONTACT.**	Is there poor contact between TCM, inhibitor switch, transmission ground?	Repair the poor contact.	Check the TCM.

GETtheMANUALS.org

B: DTC P0708 AT RANGE SWITCH NOT INPUTTED

DTC DETECTING CONDITION:

- Inhibitor switch is faulty.
- No range signal is input.

TROUBLE SYMPTOM:

- Shift characteristics are erroneous.
- The range position of the select lever and the position of shift indicator display do not match.

WIRING DIAGRAM:

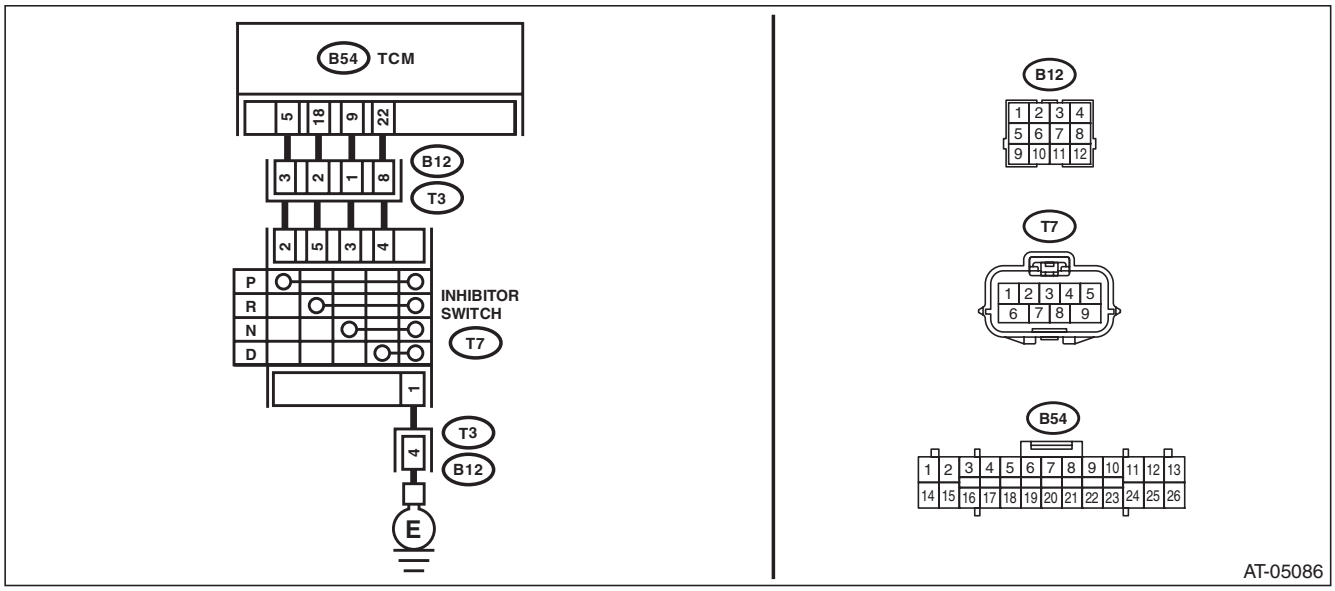

Step		Check	Yes	No
1	**CHECK INPUT SIGNAL FOR TCM.** 1) Turn the ignition switch to ON. 2) Move the select lever to each range, and read the data of «P range» «R Range Signal» «N range» «D Range Signal» using the Subaru Select Monitor.	Is the display of the corresponding range “ON”?	Go to step **7**.	Go to step **2**.
2	**CHECK HARNESS.** 1) Turn the ignition switch to OFF. 2) Disconnect the TCM and transmission connectors. 3) Measure the resistance of harness between TCM connector and transmission connector. ***Connector & terminal*** ***(B54) No. 5 — (B12) No. 3:*** ***(B54) No. 18 — (B12) No. 2:*** ***(B54) No. 9 — (B12) No. 1:*** ***(B54) No. 22 — (B12) No. 8:***	Is each resistance less than 1 Ω?	Go to step **3**.	Repair the open circuit of harness.
3	**CHECK HARNESS.** Measure the resistance of harness between transmission connector and transmission ground. ***Connector & terminal*** ***(B12) No. 4 — Transmission ground:***	Is the resistance less than 1 Ω?	Go to step **4**.	Repair the open circuit of harness.

GETtheMANUALS.org

	Step	Check	Yes	No
4	**CHECK HARNESS.** 1) Disconnect the inhibitor switch connector. 2) Measure the resistance between transmission connector and inhibitor switch connector. ***Connector & terminal*** ***(T3) No. 3 — (T7) No. 2:*** ***(T3) No. 2 — (T7) No. 5:*** ***(T3) No. 1 — (T7) No. 3:*** ***(T3) No. 8 — (T7) No. 4:*** ***(T3) No. 4 — (T7) No. 1:***	Is each resistance less than 1 Ω?	Go to step **5**.	Repair the open circuit of harness.
5	**CHECK INHIBITOR SWITCH.** Move the select lever to each range, and measure the resistance between inhibitor switch connector terminals. ***Connector & terminal*** ***(T7) No. 2 — (T7) No. 1:*** ***(T7) No. 5 — (T7) No. 1:*** ***(T7) No. 3 — (T7) No. 1:*** ***(T7) No. 4 — (T7) No. 1:***	Is the resistance of the corresponding range less than 1 MΩ?	Go to step **6**.	Replace the inhibitor switch. <Ref. to CVT-95, Inhibitor Switch.>
6	**CHECK HARNESS.** 1) Turn the ignition switch to ON. 2) Measure the voltage between each connector and chassis ground. ***Connector & terminal*** ***Transmission connector (B12 side)*** ***(B12) No. 3 (+) — Chassis ground (–):*** ***(B12) No. 2 (+) — Chassis ground (–):*** ***(B12) No. 1 (+) — Chassis ground (–):*** ***(B12) No. 8 (+) — Chassis ground (–):*** ***(B12) No. 4 (+) — Chassis ground (–):*** ***Transmission connector (T7 side)*** ***(T7) No. 2 (+) — Chassis ground (–):*** ***(T7) No. 5 (+) — Chassis ground (–):*** ***(T7) No. 3 (+) — Chassis ground (–):*** ***(T7) No. 4 (+) — Chassis ground (–):*** ***(T7) No. 1 (+) — Chassis ground (–):***	Is each voltage less than 1 V?	Go to step **7**.	Repair the harness which outputs 1 V or more.
7	**CHECK FOR POOR CONTACT.**	Is there poor contact between TCM, inhibitor switch, transmission ground?	Repair the poor contact.	Check the TCM.

GETtheMANUALS.org

C: DTC P0712 TRANSMISSION FLUID TEMPERATURE SENSOR CIRCUIT LOW INPUT

DTC DETECTING CONDITION:
Input signal circuit of ATF temperature sensor is shorted.
TROUBLE SYMPTOM:
- Excessive shift shock
- Shift characteristics malfunction

WIRING DIAGRAM:

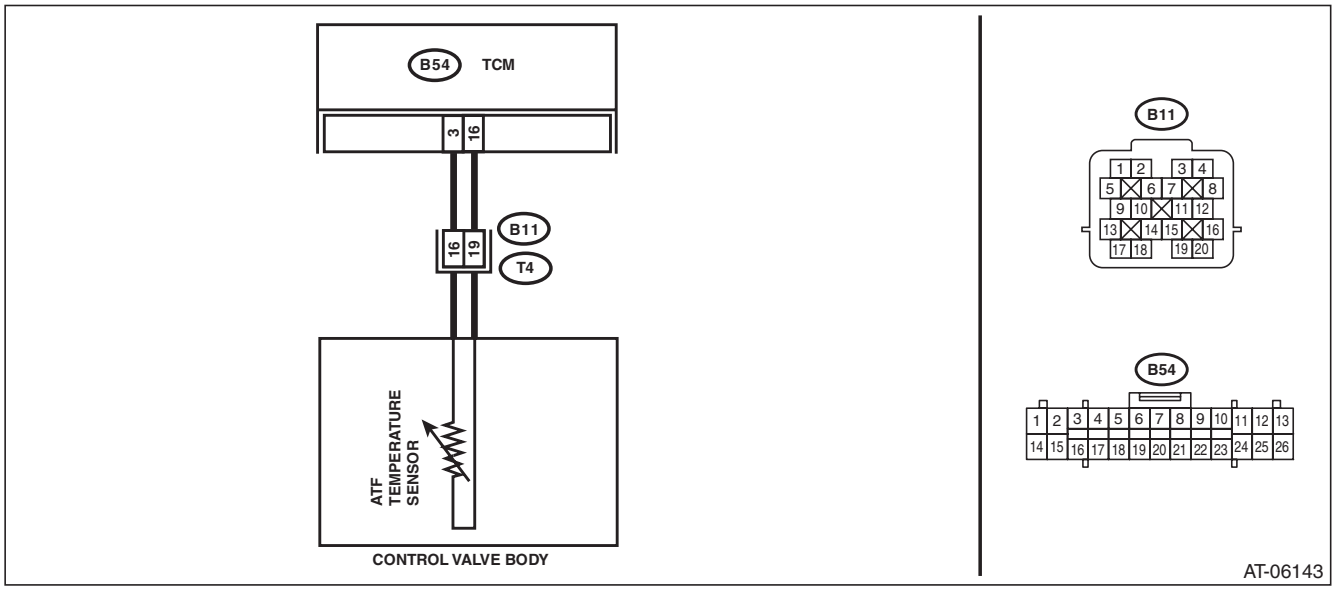

Step		Check	Yes	No
1	**CHECK HARNESS.** 1) Turn the ignition switch to OFF. 2) Disconnect the TCM and transmission connectors. 3) Measure the resistance of harness between TCM connector and chassis ground. ***Connector & terminal*** ***(B54) No. 3 — Chassis ground:*** ***(B54) No. 16 — Chassis ground:***	Is the resistance 1 MΩ or more?	Go to step **2**.	Repair the short circuit of harness.
2	**CHECK HARNESS.** Measure the resistance between TCM connector and transmission body. ***Connector & terminal*** ***(T4) No. 16 — Transmission body:*** ***(T4) No. 19 — Transmission body:***	Is the resistance 1 MΩ or more?	Go to step **3**.	Repair the short circuit of harness.
3	**CHECK HARNESS INSIDE TRANSMISSION.** **CAUTION:** **Start work after ATF cools down.** 1) Remove the transmission oil pan. 2) Check for the harness pinch, damage.	Is the harness normal?	Go to step **4**.	Replace the transmission harness.
4	**CHECK ATF TEMPERATURE SENSOR.** Measure the resistance between transmission connector terminals. ***Connector & terminal*** ***(T4) No. 16 — No. 19:***	Is resistance as follows? Fluid temperature 0°C → Approx. 6.2 kΩ Fluid temperature 20°C → Approx. 2.6 kΩ Fluid temperature 80°C → Approx. 370 Ω	Check the TCM.	Replace the transmission harness.

GETtheMANUALS.org

D: DTC P0713 TRANSMISSION FLUID TEMPERATURE SENSOR CIRCUIT HIGH INPUT

DTC DETECTING CONDITION:

Input signal circuit of ATF temperature sensor is open or shorted.

TROUBLE SYMPTOM:

- Excessive shift shock
- Shift characteristics malfunction

WIRING DIAGRAM:

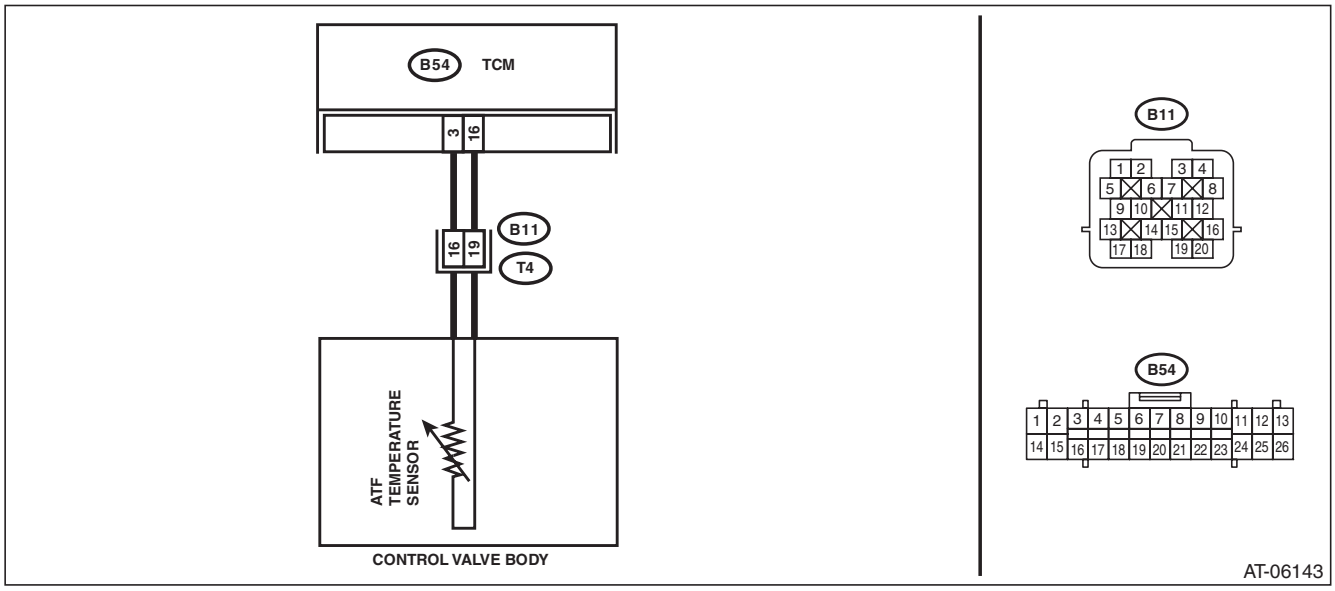

Step		Check	Yes	No
1	**CHECK HARNESS.** 1) Turn the ignition switch to ON. 2) Measure the voltage between TCM connectors. ***Connector & terminal*** ***(B54) No. 3 (+) — (B54) No. 16 (–):***	Is the voltage 5 V or more?	Repair the short circuit of harness.	Go to step **2**.
2	**CHECK HARNESS.** 1) Turn the ignition switch to OFF. 2) Disconnect the TCM and transmission connectors. 3) Measure the resistance between TCM connector and transmission connectors. ***Connector & terminal*** ***(B54) No. 3 — (B11) No. 16:*** ***(B54) No. 16 — (B11) No. 19:***	Is the resistance less than 1 Ω?	Go to step **3**.	Repair the open circuit of harness.
3	**CHECK ATF TEMPERATURE SENSOR.** 1) Turn the ignition switch to OFF. 2) Connect the connectors to TCM and transmission. 3) Start the engine. 4) Warm up until the ATF temperature exceeds 50°C (122°F). 5) Turn the ignition switch to OFF. 6) Disconnect the transmission connector. 7) Measure the resistance between transmission connector terminals. ***Connector & terminal*** ***(T4) No. 16 — No. 19:***	Is the resistance 730 — 1120 Ω?	Go to step **4**.	Go to step **6**.

GETtheMANUALS.org

Step		Check	Yes	No
4	**CHECK ATF TEMPERATURE SENSOR.** Measure the resistance between transmission connector terminals. ***Connector & terminal*** ***(T4) No. 16 — No. 19:***	Does the resistance value increase gradually while the ATF temperature decreases?	Go to step **5**.	Replace the transmission harness.
5	**CHECK INPUT SIGNAL FOR TCM.** 1) Connect the connector to transmission. 2) Turn the ignition switch to ON. (Do not start engine.) 3) Read the data of «ATF Temp.» using the Subaru Select Monitor.	Does the ATF temperature gradually decrease?	Check for poor contact of the ATF temperature sensor and transmission connector harness, and repair the defective part.	Go to step **6**.
6	**CHECK FOR POOR CONTACT.**	Is there poor contact of ATF temperature sensor circuit?	Repair the poor contact.	Check the TCM.

GETtheMANUALS.org

E: DTC P0719 BRAKE SWITCH CIRCUIT LOW

DTC DETECTING CONDITION:

Brake switch malfunction or input signal circuit of brake switch is open or shorted.

TROUBLE SYMPTOM:

- Gear is not shifted down when climbing a hill or driving down a hill.
- Neutral control does not operate.

WIRING DIAGRAM:

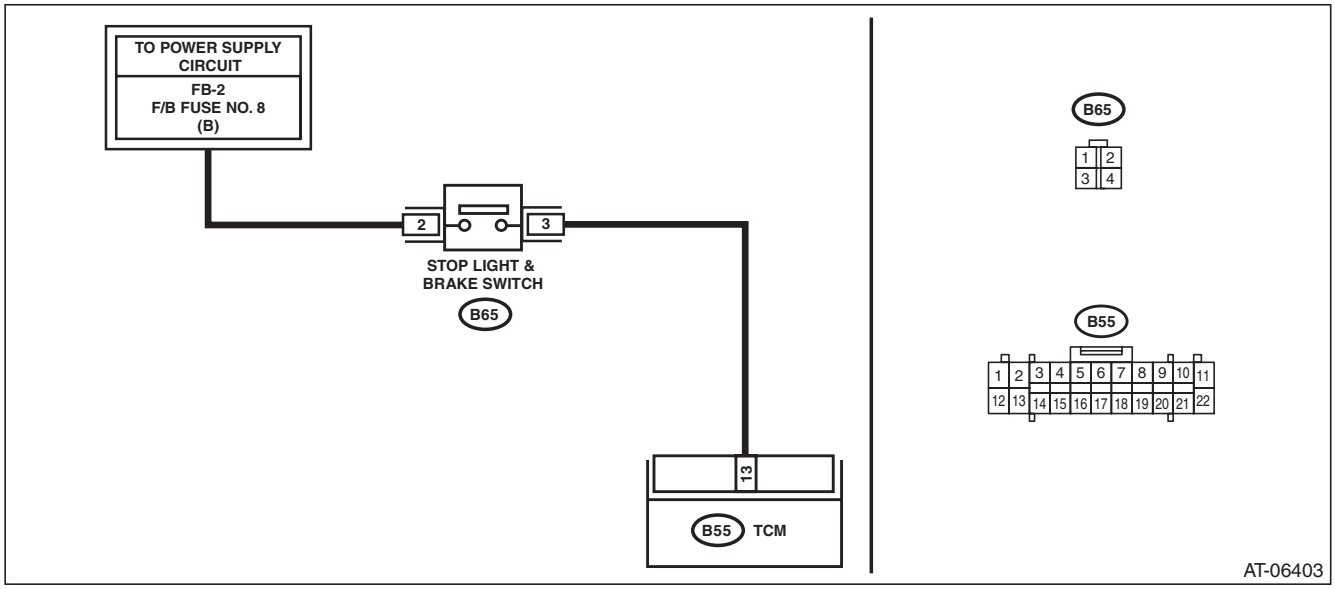

Step		Check	Yes	No
1	**CHECK FUSE (NO. 8).** 1) Turn the ignition switch to OFF. 2) Remove the fuse (No. 8).	Is the fuse (No. 8) blown out?	Replace the fuse (No. 8). If the new fuse (No. 8) has blown out easily, repair the short circuit of harness between fuse (No. 8) and stop light switch.	Go to step **2**.
2	**CHECK HARNESS.** 1) Turn the ignition switch to OFF. 2) Disconnect the TCM and stop light switch connector. 3) Measure the resistance between TCM connector and stop light switch connector. ***Connector & terminal*** ***(B55) No. 13 — (B65) No. 3:***	Is the resistance less than 1 Ω?	Go to step **3**.	Repair the open circuit of harness.
3	**CHECK HARNESS.** Measure the resistance between TCM connector and fuse (No. 8). ***Connector & terminal*** ***(B65) No. 2 — fuse (No. 8):***	Is the resistance less than 1 Ω?	Go to step **4**.	Repair the open circuit of harness.
4	**CHECK INPUT SIGNAL FOR TCM.** 1) Install the fuse (No. 8). 2) Connect the TCM and stop light switch connector. 3) Depress the brake pedal. 4) Measure the voltage between TCM connector and chassis ground. ***Connector & terminal*** ***(B55) No. 13 (+) — Chassis ground (–):***	Is the voltage 10 V or more?	Go to step **5**.	Replace the stop light switch.

GETtheMANUALS.org

Step		Check	Yes	No
5	**CHECK INPUT SIGNAL FOR TCM.** With brake pedal depressed, read the data of «Stop Light Switch» using Subaru Select Monitor.	Is “ON” displayed?	Current condition is normal. Check for poor contact in connectors or harnesses, and repair the defective part.	Go to step **6**.
6	**CHECK FOR POOR CONTACT.**	Is there poor contact of input signal of stop light switch?	Repair the poor contact.	Check the TCM.

GETtheMANUALS.org

F: DTC P0720 OUTPUT SPEED SENSOR CIRCUIT

DTC DETECTING CONDITION:

- Input signal circuit of TCM is open or shorted.
- Front wheel speed sensor malfunction

TROUBLE SYMPTOM:

- Excessive shift shock on N → D or N → R.
- Driving performance is poor.
- Neutral control does not operate.

WIRING DIAGRAM:

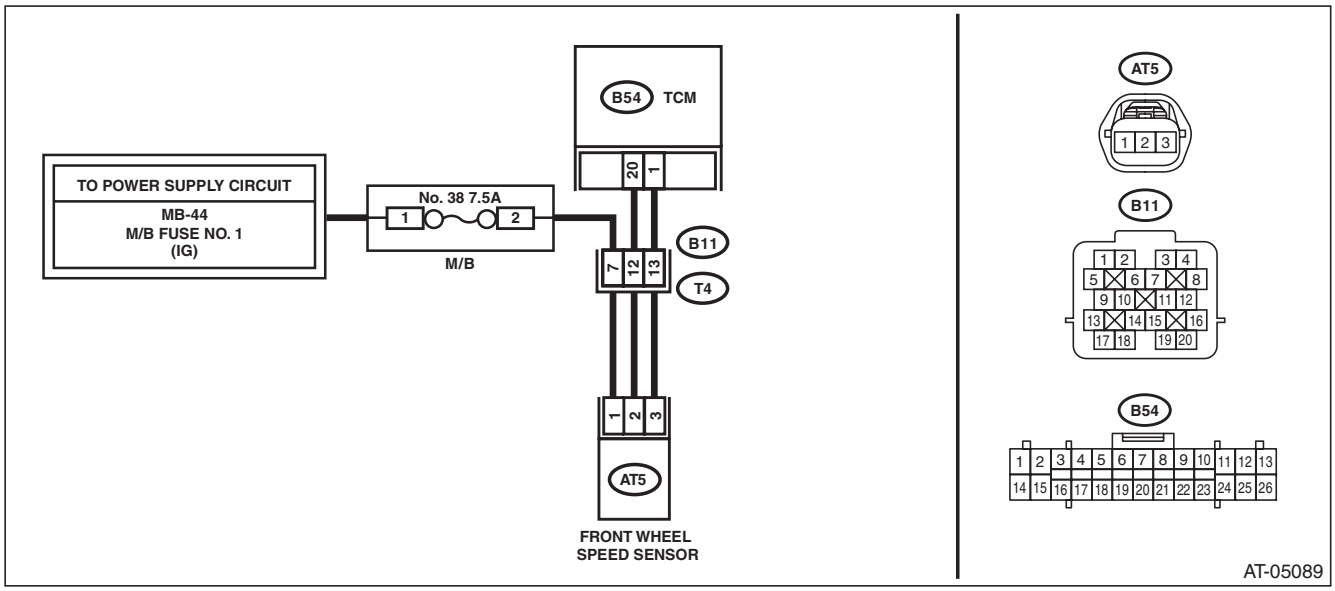

Step		Check	Yes	No
1	**CHECK FUSE.** 1) Turn the ignition switch to OFF. 2) Remove the fuse (No. 38).	Is the fuse OK?	Go to step **2**.	Replace the fuse. If the fuse blows out easily, repair the short circuit of harness.
2	**CHECK HARNESS.** 1) Turn the ignition switch to OFF. 2) Disconnect the TCM and transmission connectors. 3) Measure the resistance between TCM connector and transmission connectors. ***Connector & terminal*** ***(B54) No. 1 — (B11) No. 13:*** ***(B54) No. 20 — (B11) No. 12:*** ***(M/B No. 38) No. 2 — (B11) No. 7:***	Is the resistance less than 1 Ω?	Go to step **3**.	Repair the open circuit of harness.
3	**CHECK HARNESS.** Measure the resistance between TCM connector and chassis ground. ***Connector & terminal*** ***(B11) No. 7 — Chassis ground:*** ***(B11) No. 12 — Chassis ground:***	Is the resistance 1 MΩ or more?	Go to step **4**.	Repair the short circuit of harness.

GETtheMANUALS.org

	Step	Check	Yes	No
4	**CHECK TRANSMISSION HARNESS.** 1) Connect the TCM connector. 2) Turn the ignition switch to ON. 3) Measure the voltage between transmission connector and chassis ground. ***Connector & terminal*** ***(B11) No. 12 (+) — Chassis ground (–):*** NOTE: Delete the TCM memory after completing the CVT control system diagnosis. <Ref. to CVT(diag)-18, Clear Memory Mode.>	Is the voltage approx. 5 V?	Go to step **5**.	Repair the open circuit of harness or poor contact of connector.
5	**CHECK INPUT SIGNAL FOR TCM.** 1) Turn the ignition switch to OFF. 2) Connect the transmission connector. 3) Lift up the vehicle. 4) Start the engine. 5) Slowly increase the speed to 30 km/h (18 MPH). 6) Read the data of «Front Wheel Speed» using Subaru Select Monitor.	Does the value of «Front Wheel Speed» change according to the engine speed?	Current condition is normal. Repair the poor contacts of harnesses of front wheel speed sensor and transmission connector.	Go to step **6**.
6	**CHECK TRANSMISSION HARNESS.** 1) Turn the ignition switch to OFF. 2) Disconnect the transmission connector. 3) Lift up the vehicle. 4) Disconnect the front wheel speed sensor connector. 5) Measure the resistance between transmission connector and front wheel speed sensor connector. ***Connector & terminal*** ***(T4) No. 7 — (AT5) No. 1:*** ***(T4) No. 12 — (AT5) No. 2:*** ***(T4) No. 13 — (AT5) No. 3:***	Is the resistance less than 1 Ω?	Replace the front wheel speed sensor. <Ref. to CVT-107, Front Wheel Speed Sensor.>	Replace the transmission harness.

GETtheMANUALS.org

G: DTC P0724 BRAKE SWITCH CIRCUIT HIGH

DTC DETECTING CONDITION:

Brake switch malfunction or input signal circuit of brake switch is shorted.

TROUBLE SYMPTOM:

- Gear is not shifted down when driving a down hill.
- Neutral control does not operate.

WIRING DIAGRAM:

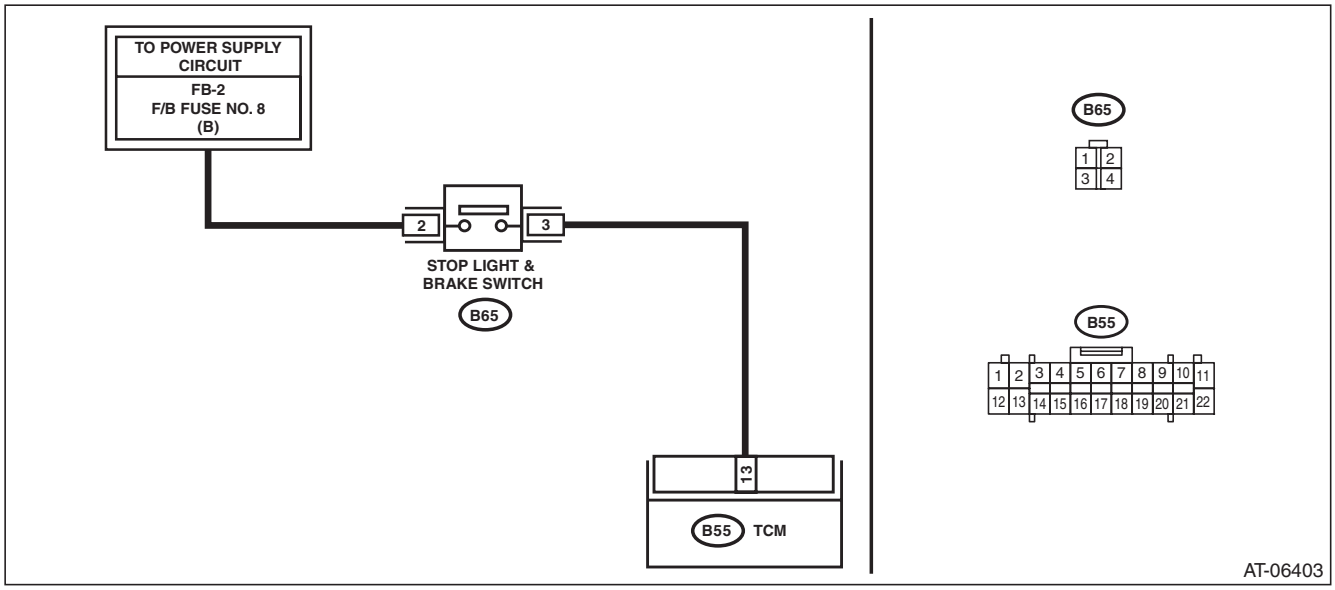

Step		Check	Yes	No
1	**CHECK STOP LIGHT SWITCH.** 1) Turn the ignition switch to OFF. 2) Disconnect the stop light switch connector. 3) Measure the resistance of harness between stop light switch connectors. ***Connector & terminal*** ***(B65) No. 2 — No. 3:***	Is the resistance 1 MΩ or more?	Go to step **2**.	Replace the stop light switch.
2	**CHECK HARNESS.** 1) Disconnect the TCM connector. 2) Turn the ignition switch to ON. 3) Measure the voltage between TCM connector and chassis ground. ***Connector & terminal*** ***(B55) No. 13 (+) — Chassis ground (–):***	Is the voltage 10 V or more?	Repair the short circuit of harness.	Go to step **3**.
3	**CHECK INPUT SIGNAL FOR TCM.** 1) Connect the TCM and stop light switch connector. 2) Turn the ignition switch to ON. 3) Read the data of «Stop Light Switch» using Subaru Select Monitor.	Is “OFF” displayed?	Current condition is normal. Check for poor contact in connectors or harnesses, and repair the defective part.	Go to step **4**.
4	**CHECK FOR POOR CONTACT.**	Is there poor contact of input signal of stop light switch?	Repair the poor contact.	Check the TCM.

GETtheMANUALS.org

H: DTC P0730 GEARSHIFT CONTROL PERFORMANCE ABNORMAL

DTC DETECTING CONDITION:

- Control valve hydraulic circuit malfunction
- Primary UP solenoid, primary DOWN solenoid characteristics malfunction
- CVT chain slippage

TROUBLE SYMPTOM:

- Acceleration is poor during standing start.
- Shift control malfunction
- Engine speed increases abruptly.

Step		Check	Yes	No
1	**CHECK TRANSMISSION FLUID.** Check the condition of ATF. <Ref. to CVT-40, CONDITION CHECK, CVTF.>	Is the ATF OK?	Go to step **2**.	Check according to the “corrective action” of ATF (CVTF) “CONDITION CHECK”. <Ref. to CVT-40, CONDITION CHECK, CVTF.>
2	**CHECK TRANSMISSION FLUID.** Check the amount of ATF. <Ref. to CVT-37, ADJUSTMENT, CVTF.>	Is the ATF amount correct?	Go to step **3**.	Adjust the amount of ATF. <Ref. to CVT-37, ADJUSTMENT, CVTF.>
3	**CHECK INPUT SIGNAL FOR TCM.** 1) Lift up the vehicle. 2) Start the engine. 3) Warm up until the ATF temperature reaches to 40 — 70°C (104 — 158°F). 4) Shift the select lever to “P” range. 5) Stabilize the engine speed at idle. 6) Read the data of «Actual secondary pressure» using Subaru Select Monitor.	Is the «Actual secondary pressure» 0.5 — 1.5 MPa?	Go to step **4**.	Perform the diagnosis according to DTC P0841 procedure.
4	**CHECK INPUT SIGNAL FOR TCM.** Read the data of «Actual Gear Ratio» using Subaru Select Monitor.	Is the «Actual Gear Ratio» 2.0 — 2.4?	Go to step **5**.	Go to step **6**.
5	**CHECK INPUT SIGNAL FOR TCM.** 1) Set the select lever to “D” range. 2) Slowly increase the speed to 40 km/h (24 MPH) and keep the constant speed. 3) Read the data of «Actual Gear Ratio» using Subaru Select Monitor.	Is the «Actual Gear Ratio» 0.5 — 0.8?	Go to step **6**.	Replace the transmission assembly. <Ref. to CVT-55, Automatic Transmission Assembly.>
6	**DRIVING CHECK BY INSPECTION MODE.** 1) Turn the ignition switch to OFF. 2) Perform a drive check based on the “Inspection Mode”. <Ref. to CVT(diag)-19, Inspection Mode.>	Does the AT OIL TEMP light blink and is DTC P0730 displayed?	Replace the transmission assembly. <Ref. to CVT-55, Automatic Transmission Assembly.>	If there is shift problems, abrupt increase of engine speed, standing start problems, replace the transmission assembly. <Ref. to CVT-55, Automatic Transmission Assembly.> If it is normal, temporary poor contact occurs.

GETtheMANUALS.org

I: DTC P0801 REVERSE INHIBIT CONTROL CIRCUIT

NOTE:
Refer to “BODY CONTROL SYSTEM” for diagnostic procedure. <Ref. to BC(diag)-31, DTC B1106 SHIFT LOCK CIRCUIT FAILURE, Diagnostic Procedure with Diagnostic Trouble Code (DTC).>

GETtheMANUALS.org

J: DTC P0841 SECONDARY OIL PRESSURE SENSOR PERFORMANCE

DTC DETECTING CONDITION:

- Control valve hydraulic circuit malfunction
- Secondary pressure sensor fault or characteristics malfunction

TROUBLE SYMPTOM:

- Acceleration is poor during standing start.
- Shift control malfunction
- Engine speed increases abruptly.

	Step	Check	Yes	No
1	**CHECK TRANSMISSION FLUID.** Check the condition of ATF. <Ref. to CVT-40, CONDITION CHECK, CVTF.>	Is the ATF OK?	Go to step **2**.	Check according to the “corrective action” of ATF (CVTF) “CONDITION CHECK”. <Ref. to CVT-40, CONDITION CHECK, CVTF.>
2	**CHECK TRANSMISSION FLUID.** Check the amount of ATF. <Ref. to CVT-37, ADJUSTMENT, CVTF.>	Is the ATF amount correct?	Go to step **3**.	Adjust the amount of ATF. <Ref. to CVT-37, ADJUSTMENT, CVTF.>
3	**CHECK INPUT SIGNAL FOR TCM.** 1) Lift up the vehicle. 2) Start the engine. 3) Warm up until the ATF temperature reaches to 40 — 70°C (104 — 158°F). 4) Shift the select lever to “P” range. 5) Stabilize the engine speed at idle. 6) Read the data of «Actual secondary pressure» using Subaru Select Monitor.	Is the «Actual secondary pressure» 0.5 — 1.5 MPa?	Go to step **4**.	Go to step **6**.
4	**CHECK INPUT SIGNAL FOR TCM.** 1) Keep the engine speed at 3000 rpm. 2) Read the data of «Actual secondary pressure» using Subaru Select Monitor.	Is the «Actual secondary pressure» higher than step 3 value? Does the value change according to the engine speed, within the range of 1.5 — 2.5 MPa?	Go to step **5**.	Go to step **6**.
5	**CHECK TCM INPUT SIGNAL (STALL TEST).** 1) Apply the electronic parking brake. 2) Set the select lever to “D” range. 3) Depress the brake pedal firmly. 4) Slowly open the accelerator fully, and stabilize the engine speed. 5) Read the data of «Actual secondary pressure» using Subaru Select Monitor.	Is the «Actual secondary pressure» higher than step 4 value? Does the value change according to the engine speed, within the range of 4.5 — 6.0 MPa?	Go to step **7**.	Go to step **6**.
6	**CHECK SECONDARY PRESSURE SENSOR.**	Is the secondary pressure sensor damaged from the standpoint of appearance?	Replace the secondary pressure sensor. <Ref. to CVT-109, Secondary Pressure Sensor.>	Perform the diagnosis according to DTC P0842, P0843 procedure.

GETtheMANUALS.org

Step		Check	Yes	No
7	**DRIVING CHECK BY INSPECTION MODE.** 1) Turn the ignition switch to OFF. 2) Perform a drive check based on the “Inspection Mode”. <Ref. to CVT(diag)-19, Inspection Mode.>	Does the AT OIL TEMP light blink and is DTC P0841 displayed?	Perform the secondary pressure test. <Ref. to CVT-50, Secondary Pressure (Line Pressure) Test.>	If there is shift problems, abrupt increase of engine speed, standing start problems, replace the transmission assembly. <Ref. to CVT-55, Automatic Transmission Assembly.> If it is normal, temporary poor contact occurs.

GETtheMANUALS.org

K: DTC P0842 SECONDARY OIL PRESSURE SENSOR CIRCUIT (LOW)

DTC DETECTING CONDITION:

Input signal circuit of secondary pressure sensor is open or shorted.

TROUBLE SYMPTOM:

Shift characteristics malfunction

WIRING DIAGRAM:

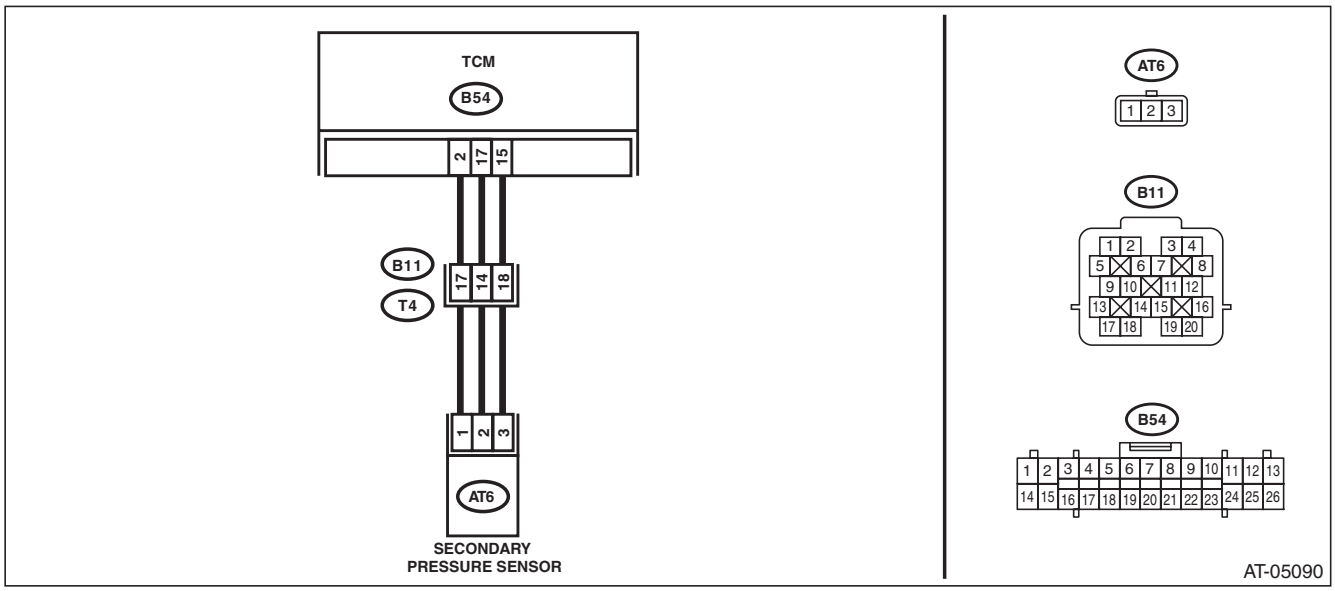

Step		Check	Yes	No
1	**CHECK INPUT SIGNAL FOR TCM.** 1) Start the engine. 2) Warm up until the ATF temperature reaches to 40 — 70°C (104 — 158°F). 3) Shift the select lever to “P” range. 4) Stabilize the engine speed at idle. 5) Read the data of «Actual secondary pressure» using Subaru Select Monitor.	Is the «Actual secondary pressure» 0.5 — 1.5 MPa?	Check for poor contact of connector.	Go to step **2**.
2	**CHECK HARNESS.** 1) Turn the ignition switch to OFF. 2) Disconnect the TCM and transmission connectors. 3) Measure the resistance between TCM connector and transmission connectors. ***Connector & terminal*** ***(B54) No. 2 — (B11) No. 17:*** ***(B54) No. 15 — (B11) No. 18:*** ***(B54) No. 17 — (B11) No. 14:***	Is the resistance less than 1 Ω?	Go to step **3**.	Repair the open circuit of harness.
3	**CHECK HARNESS.** Measure the resistance between TCM connector and chassis ground. ***Connector & terminal*** ***(B54) No. 2 — Chassis ground:*** ***(B54) No. 17 — Chassis ground:***	Is the resistance 1 MΩ or more?	Go to step **4**.	Repair the short circuit of harness.

GETtheMANUALS.org

	Step	Check	Yes	No
4	**CHECK TRANSMISSION HARNESS.** 1) Disconnect the secondary pressure sensor connector. 2) Measure the resistance between transmission connector and secondary pressure sensor connector. ***Connector & terminal*** ***(T4) No. 14 — (AT6) No. 2:*** ***(T4) No. 17 — (AT6) No. 1:*** ***(T4) No. 18 — (AT6) No. 3:***	Is the resistance less than 1 Ω?	Go to step **5**.	Repair the open circuit of harness.
5	**CHECK TRANSMISSION HARNESS.** Measure the resistance between transmission connector and chassis ground. ***Connector & terminal*** ***(T4) No. 14 — Chassis ground:*** ***(T4) No. 17 — Chassis ground:***	Is the resistance 1 MΩ or more?	Go to step **6**.	Repair the short circuit of harness.
6	**CHECK SENSOR POWER SUPPLY.** 1) Connect the connectors of TCM and transmission. 2) Turn the ignition switch to ON. 3) Measure the voltage between secondary pressure sensor connector terminals. ***Connector & terminal*** ***(AT6) No. 1 (+) — (AT6) No. 3 (–):***	Is the voltage 4.5 V or more?	Replace the secondary pressure sensor. <Ref. to CVT-109, Secondary Pressure Sensor.>	Check for poor contact of the connector, and repair the defective part.

GETtheMANUALS.org

L: DTC P0843 SECONDARY OIL PRESSURE SENSOR CIRCUIT (HIGH)

DTC DETECTING CONDITION:

Input signal circuit of secondary pressure sensor is shorted.

TROUBLE SYMPTOM:

Shift characteristics malfunction

WIRING DIAGRAM:

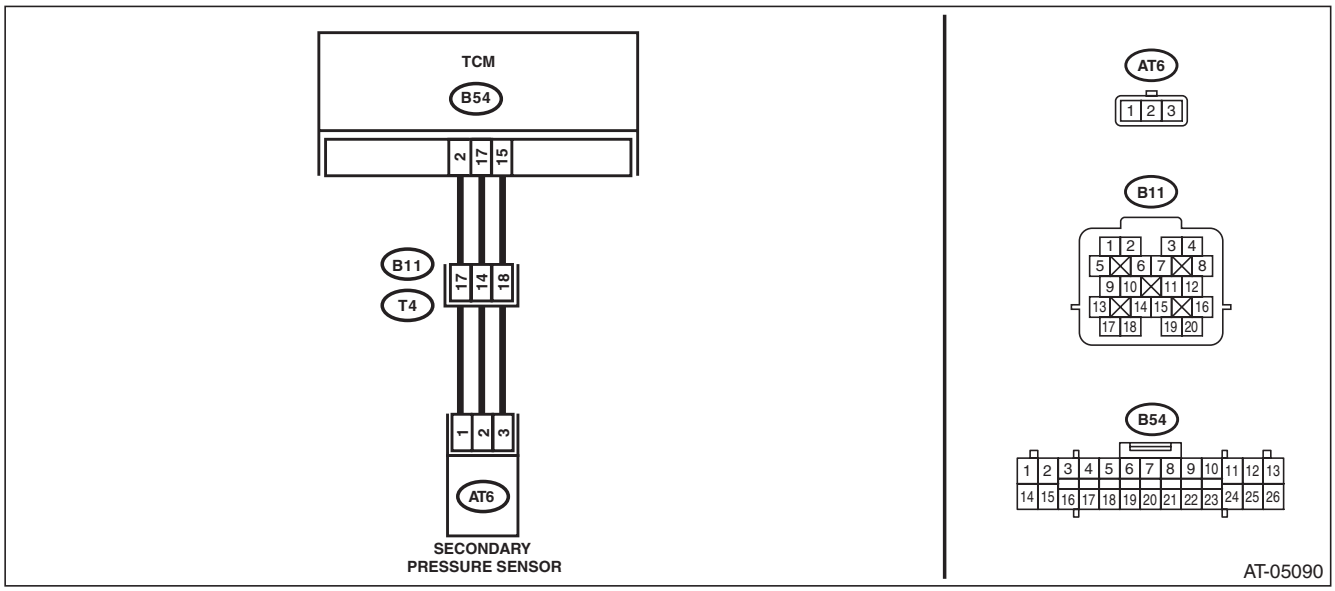

Step		Check	Yes	No
1	**CHECK INPUT SIGNAL FOR TCM.** 1) Start the engine. 2) Warm up until the ATF temperature reaches to 40 — 70°C (104 — 158°F). 3) Shift the select lever to “P” range. 4) Stabilize the engine speed at idle. 5) Read the data of «Actual secondary pressure» using Subaru Select Monitor.	Is the «Actual secondary pressure» 0.5 — 1.5 MPa?	Check for poor contact of connector.	Go to step **2**.
2	**CHECK HARNESS.** 1) Turn the ignition switch to OFF. 2) Disconnect the TCM and transmission connectors. 3) Turn the ignition switch to ON. 4) Measure the voltage between TCM connector and chassis ground. ***Connector & terminal*** ***(B54) No. 2 (+) — Chassis ground (–):*** ***(B54) No. 17 (+) — Chassis ground (–):***	Is the voltage approx. 0 V?	Go to step **3**.	Repair the short circuit of harness.
3	**CHECK HARNESS.** 1) Turn the ignition switch to OFF. 2) Measure the resistance between TCM connector terminals. ***Connector & terminal*** ***(B54) No. 2 — (B54) No. 17:***	Is the resistance less than 1 Ω?	Repair the short circuit of harness.	Go to step **4**.

GETtheMANUALS.org

Step		Check	Yes	No
4	**CHECK TRANSMISSION HARNESS.** 1) Disconnect the secondary pressure sensor connector. 2) Turn the ignition switch to ON. 3) Measure the voltage between transmission connector and chassis ground. ***Connector & terminal*** ***(T4) No. 14 (+) — Chassis ground (–):*** ***(T4) No. 17 (+) — Chassis ground (–):***	Is the voltage approx. 0 V?	Go to step **5**.	Repair the short circuit of harness.
5	**CHECK TRANSMISSION HARNESS.** 1) Turn the ignition switch to OFF. 2) Measure the resistance between transmission connector terminals. ***Connector & terminal*** ***(T4) No. 14 — (T4) No. 17:***	Is the resistance less than 1 Ω?	Repair the short circuit of harness.	Go to step **6**.
6	**CHECK SENSOR POWER SUPPLY.** 1) Connect the connectors of TCM and transmission. 2) Turn the ignition switch to ON. 3) Measure the voltage between secondary pressure sensor connector terminals. ***Connector & terminal*** ***(AT6) No. 1 (+) — (AT6) No. 3 (–):***	Is the voltage 4.5 V or more?	Replace the secondary pressure sensor. <Ref. to CVT-109, Secondary Pressure Sensor.>	Check for poor contact of the connector, and repair the defective part.

GETtheMANUALS.org

M: DTC P0890 AT SELF-SHUT RELAY DIAGNOSIS (LOW)

DTC DETECTING CONDITION:

- Power supply circuit of TCM is open or shorted.
- Self shut relay malfunction

TROUBLE SYMPTOM:

Gear is not changed.

WIRING DIAGRAM:

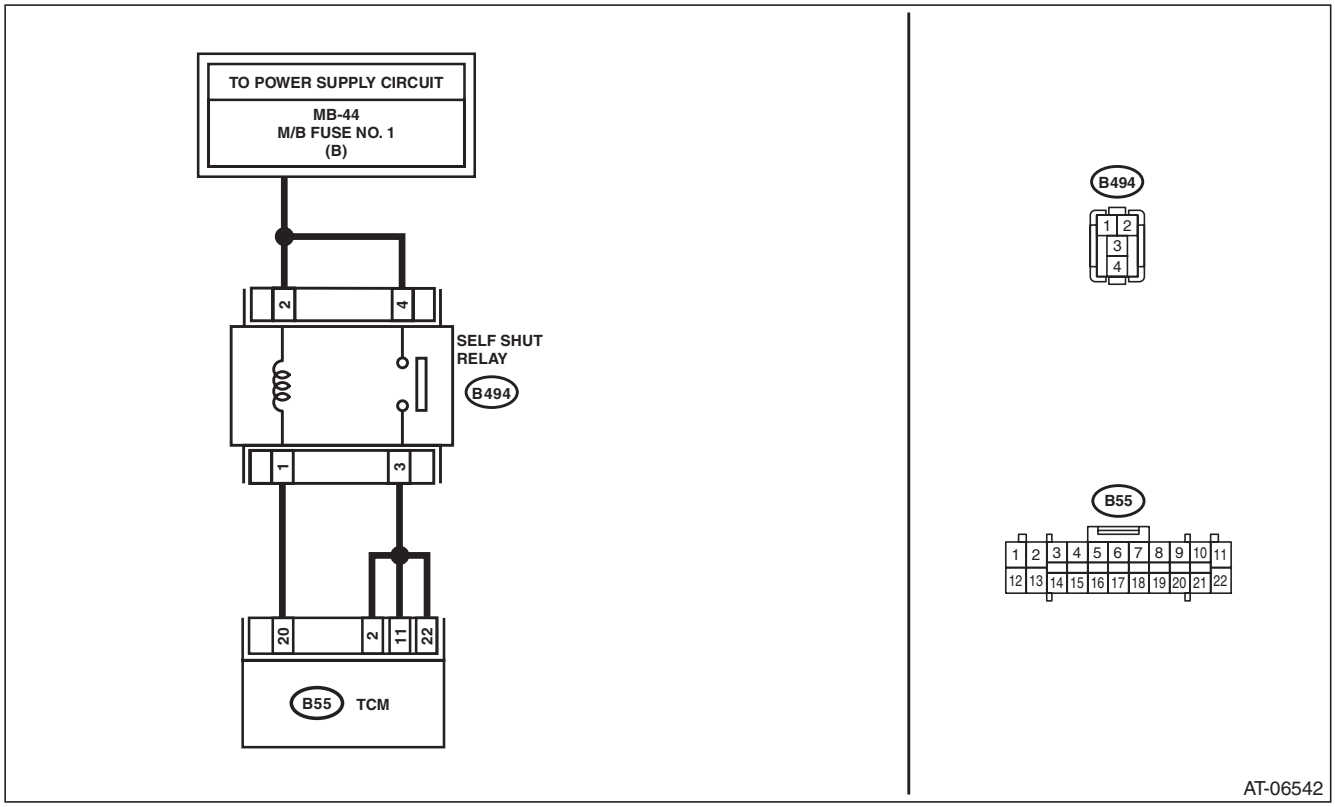

Step		Check	Yes	No
1	**CHECK HARNESS.** 1) Disconnect the TCM and self shut relay connectors. 2) Measure the resistance between TCM connector and self shut relay connector. ***Connector & terminal*** ***(B55) No. 20 — (B494) No. 1:*** ***(B55) No. 2 — (B494) No. 3:*** ***(B55) No. 11 — (B494) No. 3:*** ***(B55) No. 22 — (B494) No. 3:***	Is the resistance less than 1 Ω?	Go to step **2**.	Repair the open circuit of harness.
2	**CHECK HARNESS.** Measure the resistance between TCM connector and chassis ground. ***Connector & terminal*** ***(B55) No. 20 — Chassis ground:*** ***(B55) No. 2 — Chassis ground:*** ***(B55) No. 11 — Chassis ground:*** ***(B55) No. 22 — Chassis ground:***	Is the resistance 1 MΩ or more?	Go to step **3**.	Repair the short circuit of harness.

GETtheMANUALS.org

	Step	Check	Yes	No
3	**CHECK RELAY POWER SUPPLY.** Measure the voltage between self shut relay connector and chassis ground. ***Connector & terminal*** ***(B494) No. 2 (+) — Chassis ground (–):*** ***(B494) No. 4 (+) — Chassis ground (–):***	Is the voltage 10 V or more?	Go to step **4**.	Repair the open or short circuit of harness.
4	**CHECK SELF SHUT RELAY.** Measure the resistance between self shut relay terminals. ***Connector & terminal*** ***(B494) No. 1 — (B494) No. 2:***	Is the resistance 110 — 140 Ω?	Go to step **5**.	Replace the self shut relay.
5	**CHECK SELF SHUT RELAY.** Measure the resistance between self shut relay terminals. ***Connector & terminal*** ***(B494) No. 3 — (B494) No. 4:***	Is the resistance 1 MΩ or more?	Go to step **6**.	Replace the self shut relay.
6	**CHECK INPUT SIGNAL FOR TCM.** 1) Connect the connectors of TCM and self shut relay. 2) Read the data of «Battery voltage» using Subaru Select Monitor.	Is the «Battery voltage» 10 V or more?	Current condition is normal. Check for poor contact in connectors or harnesses, and repair the defective part.	Go to step **7**.
7	**CHECK FOR POOR CONTACT.**	Is there poor contact of the self shut relay circuit?	Repair the poor contact.	Check the TCM.

GETtheMANUALS.org

N: DTC P0951 MANUAL SWITCH

DTC DETECTING CONDITION:
Input signal circuit of manual mode switch is open or shorted.
TROUBLE SYMPTOM:
Manual mode can not be set.
WIRING DIAGRAM:

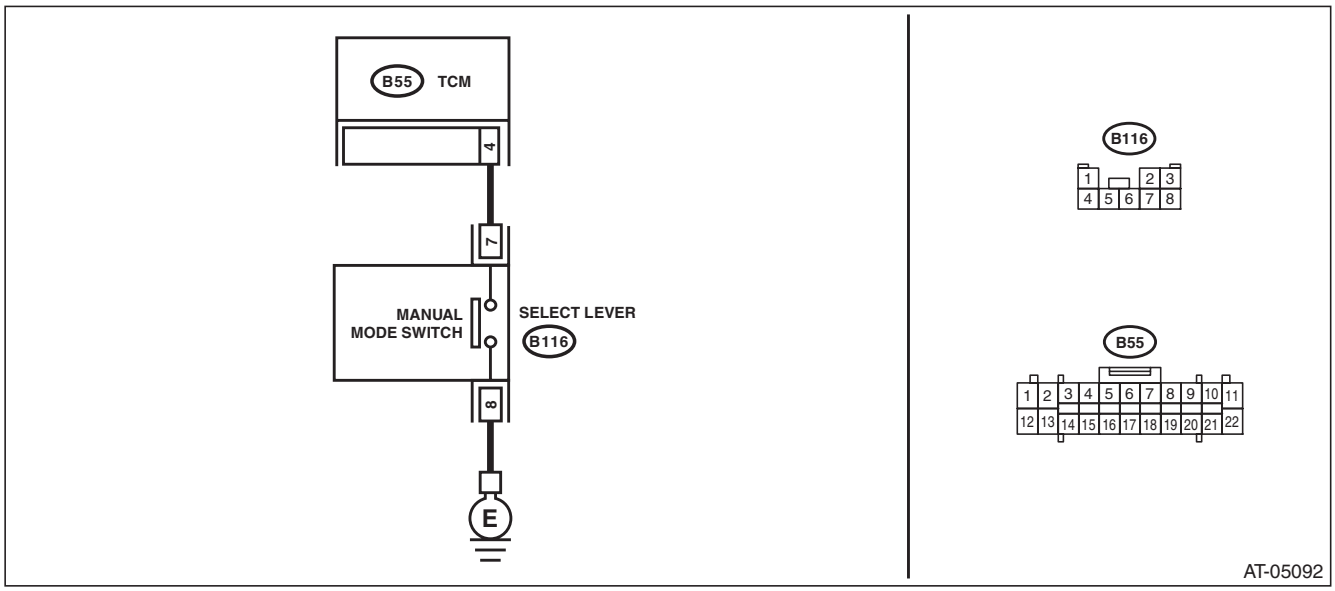

Step		Check	Yes	No
1	**CHECK HARNESS.** 1) Turn the ignition switch to OFF. 2) Disconnect the manual mode switch connector. 3) Measure the resistance between manual mode switch connector and chassis ground. ***Connector & terminal*** ***(B116) No. 8 — Chassis ground:***	Is the resistance less than 1 Ω?	Go to step **2**.	Repair the open circuit of harness.
2	**CHECK MANUAL MODE SWITCH.** Measure the resistance between manual mode switch terminals. ***Connector & terminal*** ***(B116) No. 7 — No. 8:***	Is the resistance 1 MΩ or more?	Go to step **3**.	Replace the select lever assembly. <Ref. to CS-22, Select Lever.>
3	**CHECK MANUAL MODE SWITCH.** 1) Shift the select lever to manual mode. 2) Measure the resistance between manual mode switch terminals. ***Connector & terminal*** ***(B116) No. 7 — No. 8:***	Is the resistance less than 1 Ω?	Go to step **4**.	Replace the select lever assembly. <Ref. to CS-22, Select Lever.>
4	**CHECK HARNESS.** 1) Disconnect the TCM connector. 2) Measure the resistance between TCM connector and manual mode switch connector. ***Connector & terminal*** ***(B116) No. 7 — (B55) No. 4:***	Is the resistance less than 1 Ω?	Go to step **5**.	Repair the open circuit of harness or poor contact of connector.
5	**CHECK HARNESS.** Measure the resistance between manual mode switch connector and chassis ground. ***Connector & terminal*** ***(B116) No. 7 — Chassis ground:***	Is the resistance 1 MΩ or more?	Go to step **6**.	Repair the short circuit of harness.

GETtheMANUALS.org

Step		Check	Yes	No
6	**CHECK INPUT SIGNAL FOR TCM.** 1) Connect the TCM and manual mode switch connector. 2) Turn the ignition switch to ON. 3) Set the select lever to “D” range. 4) Read the data of «Manual Mode Switch» using the Subaru Select Monitor.	Does «Manual Mode Switch» display “ON” with select lever in manual mode, and “OFF” with select lever in other than manual mode?	Current condition is normal.	Go to step **7**.
7	**CHECK FOR POOR CONTACT.**	Is there poor contact of the manual mode switch circuit?	Repair the poor contact.	Check the TCM.

GETtheMANUALS.org

O: DTC P0962 SECONDARY SOLENOID CIRCUIT (LOW)

DTC DETECTING CONDITION:

Output signal circuit of secondary solenoid is shorted.

TROUBLE SYMPTOM:

- Engine speed increases abruptly, and can not start.
- Engine speed increases abruptly during driving.

WIRING DIAGRAM:

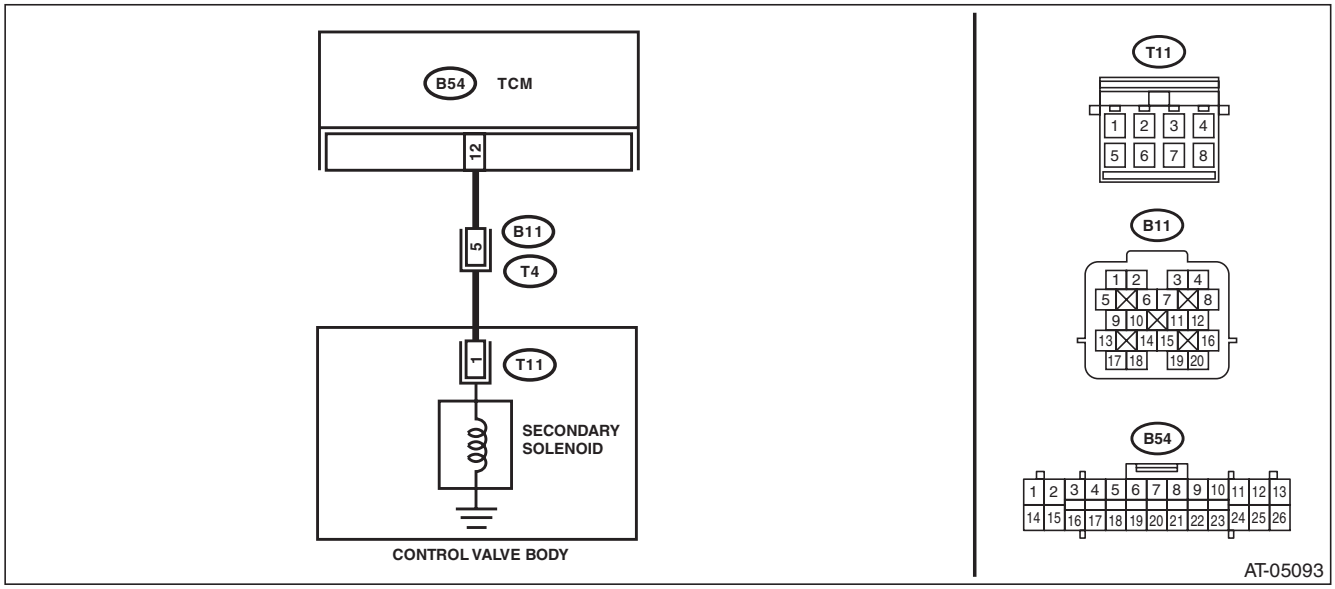

Step		Check	Yes	No
1	**CHECK INPUT SIGNAL FOR TCM.** 1) After driving with warm up condition, park the vehicle while depressing the brake pedal at “N” range. 2) Read the data of «Sec. Sol. Set Current» and «Sec. Sol. Actual Current» using Subaru Select Monitor.	Does the value of «Sec. Sol. Set Current» and «Sec. Sol. Actual Current» almost correspond?	Check for poor contact of connector.	Go to step **2**.
2	**CHECK HARNESS.** 1) Turn the ignition switch to OFF. 2) Disconnect the TCM and transmission connectors. 3) Measure the resistance between TCM connector and chassis ground. ***Connector & terminal*** ***(B54) No. 12 — Chassis ground:***	Is the resistance 1 MΩ or more?	Go to step **3**.	Repair the short circuit of harness.
3	**CHECK SECONDARY SOLENOID.** Measure the resistance between transmission connector and transmission body. ***Connector & terminal*** ***(T4) No. 5 — Transmission body:***	Is the resistance approx. 7 Ω? (when engine cold)	Check for poor contact of the connector, and repair the defective part.	Go to step **4**.
4	**CHECK HARNESS INSIDE TRANSMISSION.** **CAUTION:** **Start work after ATF cools down.** 1) Remove the transmission oil pan. 2) Check for the harness pinch, damage.	Is the harness normal?	Go to step **5**.	Replace the transmission harness.

GETtheMANUALS.org

Step		Check	Yes	No
5	**CHECK HARNESS INSIDE TRANSMISSION.** 1) Disconnect the control valve body connector. 2) Measure the resistance between transmission connector and transmission body. ***Connector & terminal*** ***(T4) No. 5 — Transmission body:***	Is the resistance 1 MΩ or more?	Replace the control valve body. <Ref. to CVT-111, Control Valve Body.>	Replace the transmission harness.

GETtheMANUALS.org

P: DTC P0963 SECONDARY SOLENOID CIRCUIT (HIGH)

DTC DETECTING CONDITION:

- Output signal circuit of secondary solenoid is open or shorted.
- Secondary solenoid has open circuit inside.

TROUBLE SYMPTOM:

- Engine speed increases abruptly, and can not start.
- Engine speed increases abruptly during driving.

WIRING DIAGRAM:

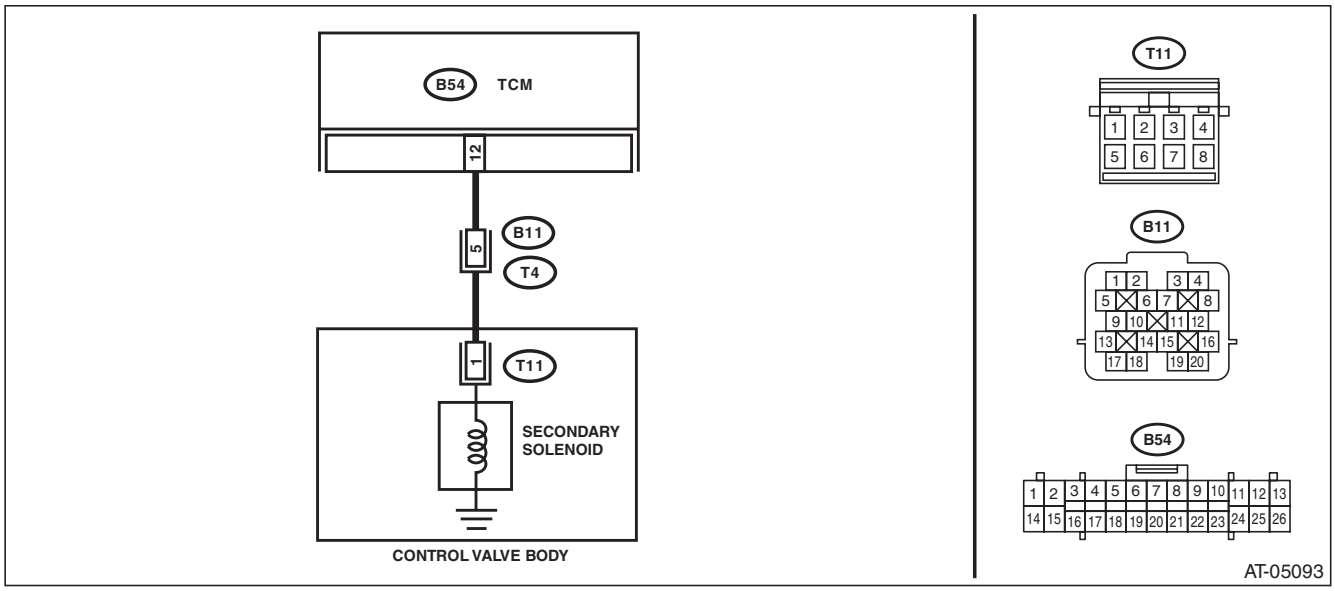

Step		Check	Yes	No
1	**CHECK INPUT SIGNAL FOR TCM.** 1) After driving with warm up condition, park the vehicle while depressing the brake pedal at “N” range. 2) Read the data of «Sec. Sol. Set Current» and «Sec. Sol. Actual Current» using Subaru Select Monitor.	Does the value of «Sec. Sol. Set Current» and «Sec. Sol. Actual Current» almost correspond?	Check for poor contact of connector.	Go to step **2**.
2	**CHECK HARNESS.** 1) Turn the ignition switch to OFF. 2) Disconnect the TCM and transmission connectors. 3) Measure the resistance between TCM connector and transmission connectors. ***Connector & terminal*** ***(B54) No. 12 — (B11) No. 5:***	Is the resistance less than 1 Ω?	Go to step **3**.	Repair the open circuit of harness.
3	**CHECK HARNESS.** 1) Turn the ignition switch to ON. 2) Measure the voltage between TCM connector and chassis ground. ***Connector & terminal*** ***(B54) No. 12 (+) — Chassis ground (–):***	Is the voltage approx. 0 V?	Go to step **4**.	Repair the short circuit of harness.
4	**CHECK SECONDARY SOLENOID.** Measure the resistance between transmission connector and transmission body. ***Connector & terminal*** ***(T4) No. 5 — Transmission body:***	Is the resistance approx. 7 Ω? (when engine cold)	Check for poor contact of the connector, and repair the defective part.	Go to step **5**.

GETtheMANUALS.org

Step		Check	Yes	No
5	**CHECK HARNESS INSIDE TRANSMISSION.** **CAUTION:** **Start work after ATF cools down.** 1) Remove the transmission oil pan. 2) Check for the harness pinch, damage.	Is the harness normal?	Go to step **6**.	Replace the transmission harness.
6	**CHECK HARNESS INSIDE TRANSMISSION.** 1) Disconnect the control valve body connector. 2) Turn the ignition switch to ON. 3) Measure the voltage between transmission connector and transmission body. ***Connector & terminal*** ***(T4) No. 5 (+) — Transmission body (–):***	Is the voltage approx. 0 V?	Replace the control valve body. <Ref. to CVT-111, Control Valve Body.>	Replace the transmission harness.

GETtheMANUALS.org

Q: DTC P0965 FORWARD & REVERSE SOLENOID FUNCTION

DTC DETECTING CONDITION:

- Control valve hydraulic circuit malfunction
- F&R solenoid characteristics malfunction
- Clutch slippage caused by forward clutch facing deterioration
- Clutch slippage caused by hydraulic pressure leaks

TROUBLE SYMPTOM:

- Engine speed increases abruptly, and can not accelerate.
- Excessive slippage is felt.

Step		Check	Yes	No
1	**CHECK TRANSMISSION FLUID.** Check the condition of ATF. <Ref. to CVT-40, CONDITION CHECK, CVTF.>	Is the ATF OK?	Go to step **2**.	Check according to the “corrective action” of ATF (CVTF) “CONDITION CHECK”. <Ref. to CVT-40, CONDITION CHECK, CVTF.>
2	**CHECK TRANSMISSION FLUID.** Check the amount of ATF. <Ref. to CVT-37, ADJUSTMENT, CVTF.>	Is the ATF amount correct?	Go to step **3**.	Adjust the amount of ATF. <Ref. to CVT-37, ADJUSTMENT, CVTF.>
3	**CHECK INPUT SIGNAL FOR TCM.** 1) Start the engine. 2) Warm up until the ATF temperature reaches to 40 — 70°C (104 — 158°F). 3) Shift the select lever to “P” range. 4) Stabilize the engine speed at idle. 5) Read the data of «Actual secondary pressure» using Subaru Select Monitor.	Is the «Actual secondary pressure» 0.5 — 1.5 MPa?	Go to step **4**.	Perform the diagnosis according to DTC P0841 procedure.
4	**STALL TEST.** Perform the stall test. <Ref. to CVT-47, Stall Test.>	Is the stall test normal?	Go to step **5**.	If the engine speed increases abruptly, replace the transmission assembly. <Ref. to CVT-55, Automatic Transmission Assembly.>
5	**DRIVING CHECK BY INSPECTION MODE.** 1) Turn the ignition switch to OFF. 2) Perform a drive check based on the “Inspection Mode”. <Ref. to CVT(diag)-19, Inspection Mode.>	Does the AT OIL TEMP light blink and is DTC P0965 displayed?	Replace the transmission assembly. <Ref. to CVT-55, Automatic Transmission Assembly.>	If there is abrupt increase of engine speed, standing start problems, replace the transmission assembly. <Ref. to CVT-55, Automatic Transmission Assembly.> If it is normal, temporary poor contact occurs.

GETtheMANUALS.org

R: DTC P0966 FORWARD & REVERSE SOLENOID CIRCUIT (LOW)

DTC DETECTING CONDITION:
Output signal circuit of F&R solenoid is shorted.
TROUBLE SYMPTOM:
Excessive shift shock
WIRING DIAGRAM:

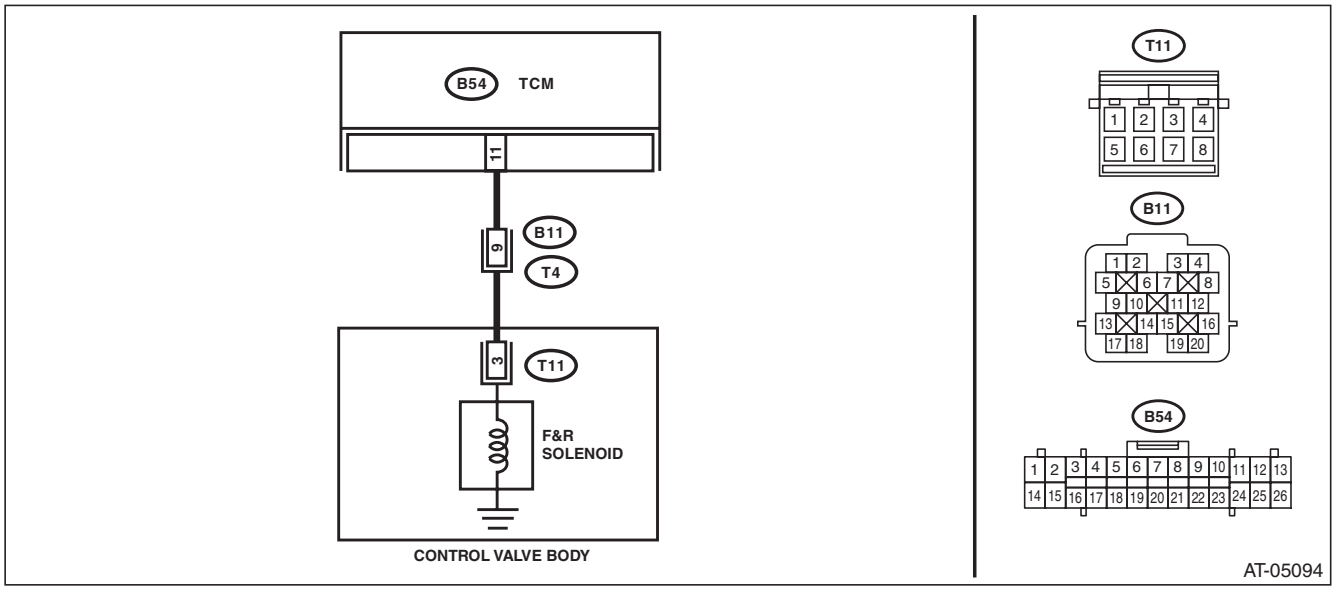

Step		Check	Yes	No
1	**CHECK INPUT SIGNAL FOR TCM.** 1) After driving with warm up condition, park the vehicle while depressing the brake pedal at “D” range. 2) Read the data of «F&R Linear Solenoid Set Current» and «F&R Linear Solenoid Actual Current» using Subaru Select Monitor.	Does the value of «F&R Linear Solenoid Set Current» and «F&R Linear Solenoid Actual Current» almost correspond?	Check for poor contact of connector.	Go to step **2**.
2	**CHECK HARNESS.** 1) Turn the ignition switch to OFF. 2) Disconnect the TCM and transmission connectors. 3) Measure the resistance between TCM connector and chassis ground. ***Connector & terminal*** ***(B54) No. 11 — Chassis ground:***	Is the resistance 1 MΩ or more?	Go to step **3**.	Repair the short circuit of harness.
3	**CHECK F&R SOLENOID.** Measure the resistance between transmission connector and transmission body. ***Connector & terminal*** ***(T4) No. 9 — Transmission body:***	Is the resistance approx. 6 Ω? (when engine cold)	Check for poor contact of the connector, and repair the defective part.	Go to step **4**.
4	**CHECK HARNESS INSIDE TRANSMISSION.** **CAUTION:** **Start work after ATF cools down.** 1) Remove the transmission oil pan. 2) Check for the harness pinch, damage.	Is the harness normal?	Go to step **5**.	Replace the transmission harness.

GETtheMANUALS.org

Step		Check	Yes	No
5	**CHECK HARNESS INSIDE TRANSMISSION.** 1) Disconnect the control valve body connector. 2) Measure the resistance between transmission connector and transmission body. ***Connector & terminal*** ***(T4) No. 9 — Transmission body:***	Is the resistance 1 MΩ or more?	Replace the control valve body. <Ref. to CVT-111, Control Valve Body.>	Replace the transmission harness.

GETtheMANUALS.org

S: DTC P0967 FORWARD & REVERSE LINEAR SOLENOID CIRCUIT (HIGH)

DTC DETECTING CONDITION:

- Output signal circuit of F&R solenoid is open or shorted.
- F&R solenoid has open circuit inside.

TROUBLE SYMPTOM:

Engine speed increases abruptly, and can not start.

WIRING DIAGRAM:

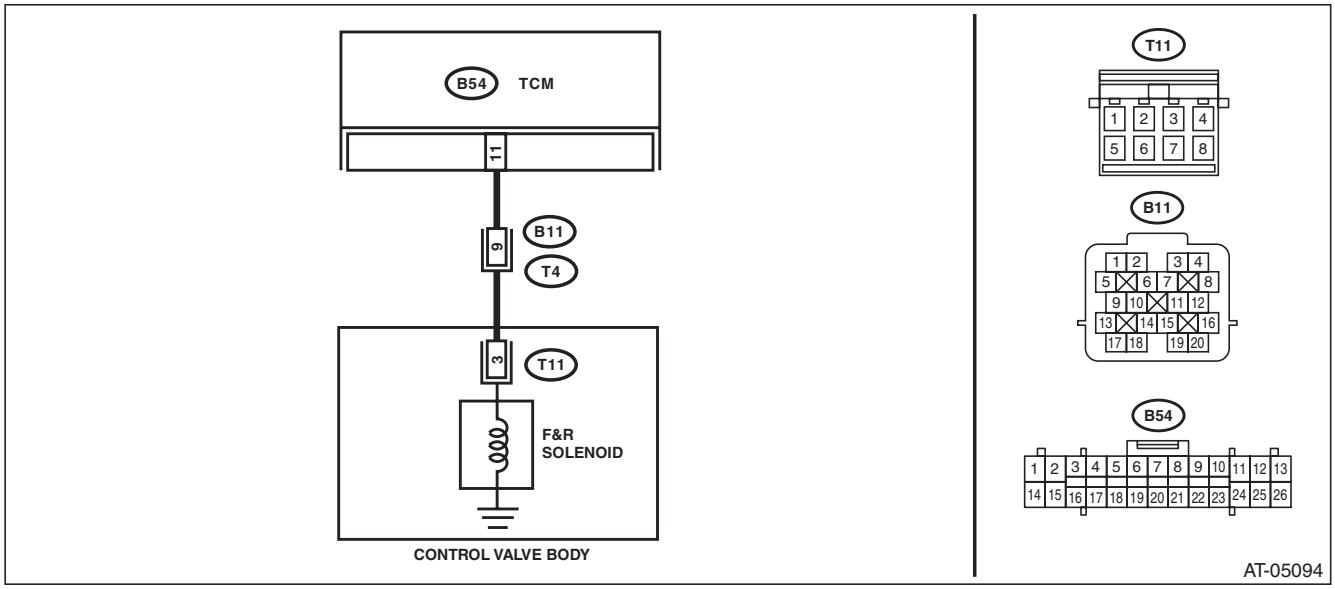

Step		Check	Yes	No
1	**CHECK INPUT SIGNAL FOR TCM.** 1) After driving with warm up condition, park the vehicle while depressing the brake pedal at “D” range. 2) Read the data of «F&R Linear Solenoid Set Current» and «F&R Linear Solenoid Actual Current» using Subaru Select Monitor.	Does the value of «F&R Linear Solenoid Set Current» and «F&R Linear Solenoid Actual Current» almost correspond?	Check for poor contact of connector.	Go to step **2**.
2	**CHECK HARNESS.** 1) Turn the ignition switch to OFF. 2) Disconnect the TCM and transmission connectors. 3) Measure the resistance between TCM connector and transmission connectors. ***Connector & terminal*** ***(B54) No. 11 — (B11) No. 9:***	Is the resistance less than 1 Ω?	Go to step **3**.	Repair the open circuit of harness.
3	**CHECK HARNESS.** 1) Turn the ignition switch to ON. 2) Measure the voltage between TCM connector and chassis ground. ***Connector & terminal*** ***(B54) No. 11 (+) — Chassis ground (–):***	Is the voltage approx. 0 V?	Go to step **4**.	Repair the short circuit of harness.
4	**CHECK F&R SOLENOID.** Measure the resistance between transmission connector and transmission body. ***Connector & terminal*** ***(T4) No. 9 — Transmission body:***	Is the resistance approx. 6 Ω? (when engine cold)	Check for poor contact of the connector, and repair the defective part.	Go to step **5**.

GETtheMANUALS.org

	Step	Check	Yes	No
5	**CHECK HARNESS INSIDE TRANSMISSION.** **CAUTION:** **Start work after ATF cools down.** 1) Remove the transmission oil pan. 2) Check for the harness pinch, damage.	Is the harness normal?	Go to step **6**.	Replace the transmission harness.
6	**CHECK HARNESS INSIDE TRANSMISSION.** 1) Disconnect the control valve body connector. 2) Turn the ignition switch to ON. 3) Measure the voltage between transmission connector and transmission body. ***Connector & terminal*** ***(T4) No. 9 (+) — Transmission body (–):***	Is the voltage approx. 0 V?	Replace the control valve body. <Ref. to CVT-111, Control Valve Body.>	Replace the transmission harness.

GETtheMANUALS.org

T: DTC P0970 TRANSFER SOLENOID CIRCUIT (LOW)

DTC DETECTING CONDITION:
Output signal circuit of AWD solenoid is shorted.
TROUBLE SYMPTOM:
Drivability getting worse.
WIRING DIAGRAM:

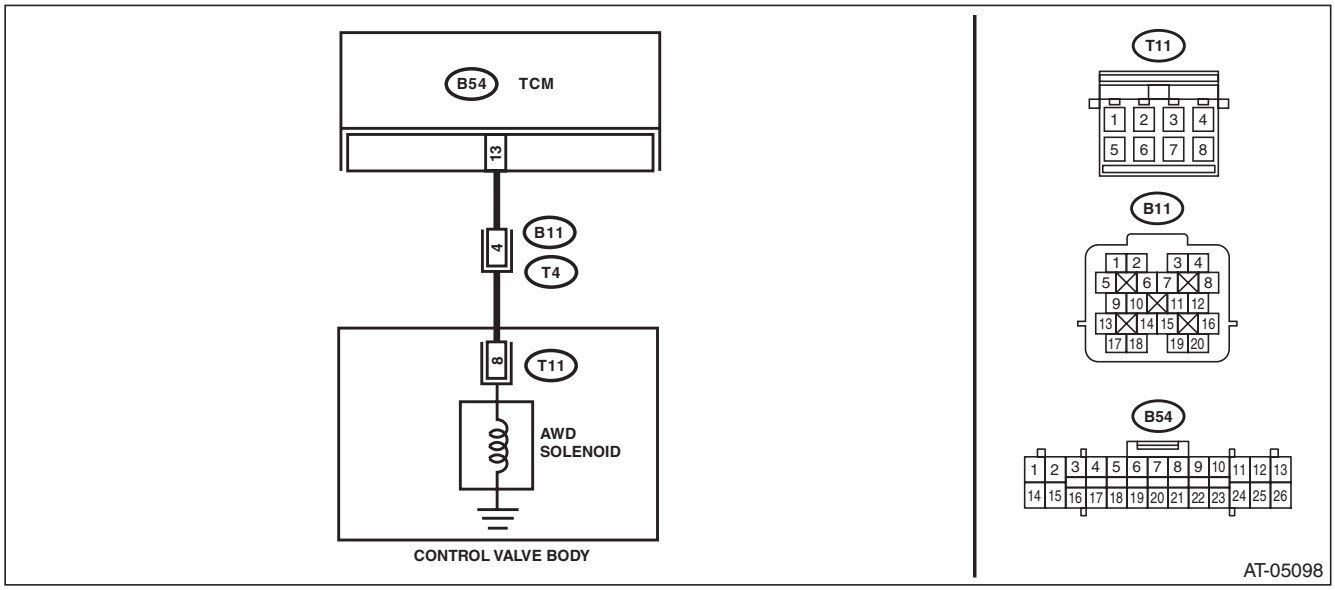

Step		Check	Yes	No
1	**CHECK HARNESS.** 1) Turn the ignition switch to OFF. 2) Disconnect the TCM and transmission connectors. 3) Measure the resistance between TCM connector and chassis ground. ***Connector & terminal*** ***(B54) No. 13 — Chassis ground:***	Is the resistance 1 MΩ or more?	Go to step **2**.	Repair the short circuit of harness.
2	**CHECK AWD SOLENOID.** Measure the resistance between transmission connector and transmission body. ***Connector & terminal*** ***(T4) No. 4 — Transmission body:***	Is the resistance approx. 4 Ω? (when engine cold)	Check for poor contact of the connector, and repair the fault location.	Go to step **3**.
3	**CHECK HARNESS INSIDE TRANSMISSION.** **CAUTION:** **Start work after ATF cools down.** 1) Remove the transmission oil pan. 2) Check for the harness pinch, damage.	Is there any malfunction in harness?	Go to step **4**.	Replace the transmission harness.
4	**CHECK HARNESS INSIDE TRANSMISSION.** 1) Disconnect the control valve body connector. 2) Measure the resistance between transmission connector and transmission body. ***Connector & terminal*** ***(T4) No. 4 — Transmission body:***	Is the resistance 1 MΩ or more?	Replace the control valve body. <Ref. to CVT-111, Control Valve Body.>	Replace the transmission harness.

GETtheMANUALS.org

U: DTC P0971 TRANSFER SOLENOID CIRCUIT (HIGH)

DTC DETECTING CONDITION:

- Output signal circuit of AWD solenoid is open or shorted.
- AWD solenoid has open circuit inside.

TROUBLE SYMPTOM:

- Tight corner braking phenomenon occurs.
- Drivability getting worse.

WIRING DIAGRAM:

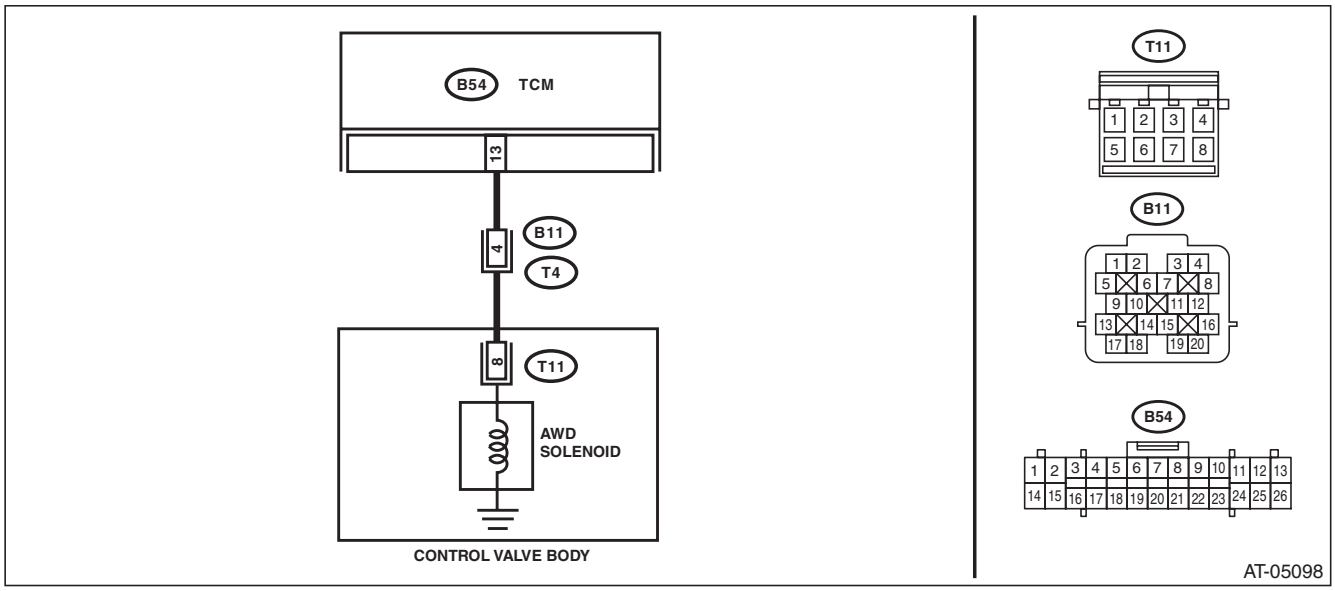

Step		Check	Yes	No
1	**CHECK HARNESS.** 1) Turn the ignition switch to OFF. 2) Disconnect the TCM and transmission connectors. 3) Measure the resistance between TCM connector and transmission connectors. ***Connector & terminal*** ***(B54) No. 13 — (B11) No. 4:***	Is the resistance less than 1 Ω?	Go to step **2**.	Repair the open circuit of harness.
2	**CHECK HARNESS.** 1) Turn the ignition switch to ON. 2) Measure the voltage between TCM connector and chassis ground. ***Connector & terminal*** ***(B54) No. 13 (+) — Chassis ground (–):***	Is the voltage approx. 0 V?	Go to step **3**.	Repair the short circuit of harness.
3	**CHECK AWD SOLENOID.** Measure the resistance between transmission connector and transmission body. ***Connector & terminal*** ***(T4) No. 4 — Transmission body:***	Is the resistance approx. 4 Ω? (when engine cold)	Check for poor contact of the connector, and repair the fault location.	Go to step **4**.
4	**CHECK HARNESS INSIDE TRANSMISSION.** **CAUTION:** **Start work after ATF cools down.** 1) Remove the transmission oil pan. 2) Check for the harness pinch, damage.	Is there any malfunction in harness?	Go to step **5**.	Replace the transmission harness.

GETtheMANUALS.org

Step		Check	Yes	No
5	**CHECK HARNESS INSIDE TRANSMISSION.** 1) Disconnect the control valve body connector. 2) Turn the ignition switch to ON. 3) Measure the voltage between transmission connector and transmission body. ***Connector & terminal*** ***(T4) No. 4 (+) — Transmission body (–):***	Is the voltage approx. 0 V?	Replace the control valve body. <Ref. to CVT-111, Control Valve Body.>	Replace the transmission harness.

GETtheMANUALS.org

V: DTC P0973 PRIMARY SOLENOID SYSTEM A CIRCUIT (LOW)

DTC DETECTING CONDITION:
Output signal circuit of primary UP solenoid is shorted.
TROUBLE SYMPTOM:
Gear is not changed. (No up-shift)
WIRING DIAGRAM:

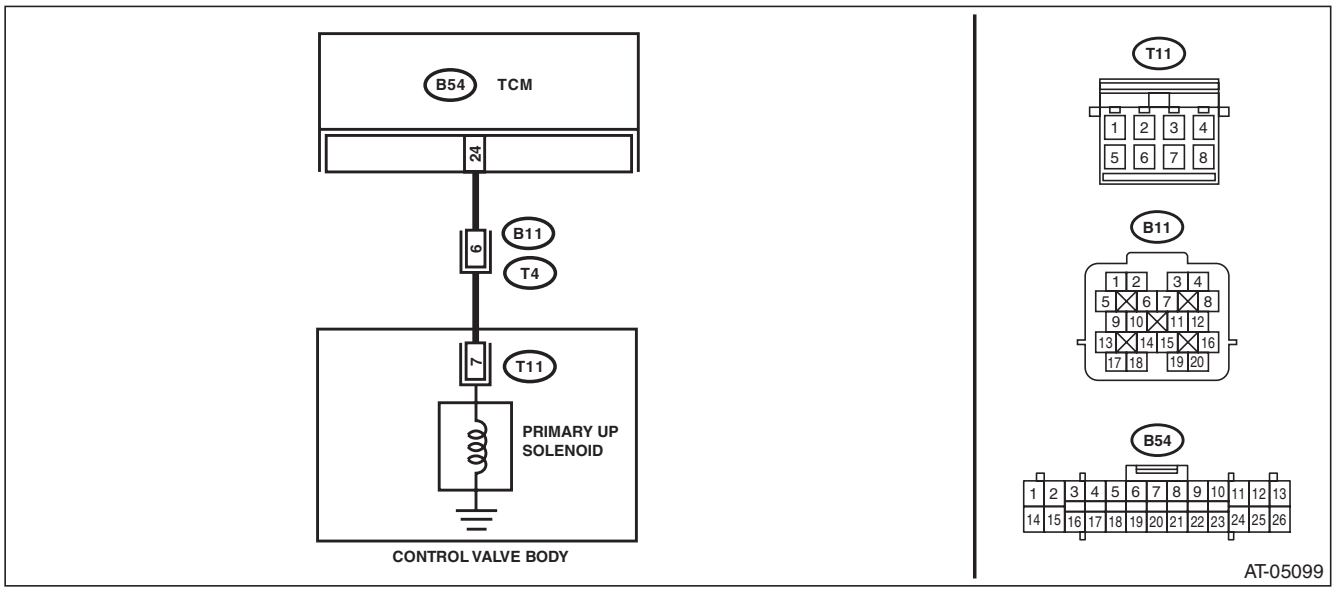

Step		Check	Yes	No
1	**CHECK HARNESS.** 1) Turn the ignition switch to OFF. 2) Disconnect the TCM and transmission connectors. 3) Measure the resistance between TCM connector and chassis ground. ***Connector & terminal*** ***(B54) No. 24 — Chassis ground:***	Is the resistance 1 MΩ or more?	Go to step **2**.	Repair the short circuit of harness.
2	**CHECK PRIMARY UP SOLENOID.** Measure the resistance between transmission connector and transmission body. ***Connector & terminal*** ***(T4) No. 6 — Transmission body:***	Is the resistance approx. 13 Ω? (when engine cold)	Check for poor contact of the connector, and repair the fault location.	Go to step **3**.
3	**CHECK HARNESS INSIDE TRANSMISSION.** **CAUTION:** **Start work after ATF cools down.** 1) Remove the transmission oil pan. 2) Check for the harness pinch, damage.	Is there any malfunction in harness?	Go to step **4**.	Replace the transmission harness.
4	**CHECK HARNESS INSIDE TRANSMISSION.** 1) Disconnect the control valve body connector. 2) Measure the resistance between transmission connector and transmission body. ***Connector & terminal*** ***(T4) No. 6 — Transmission body:***	Is the resistance 1 MΩ or more?	Replace the control valve body. <Ref. to CVT-111, Control Valve Body.>	Replace the transmission harness.

GETtheMANUALS.org

W: DTC P0974 PRIMARY SOLENOID SYSTEM A CIRCUIT (HIGH)

DTC DETECTING CONDITION:
Output signal circuit of primary UP solenoid is open or shorted.
TROUBLE SYMPTOM:
Gear is not changed. (No up-shift)
WIRING DIAGRAM:

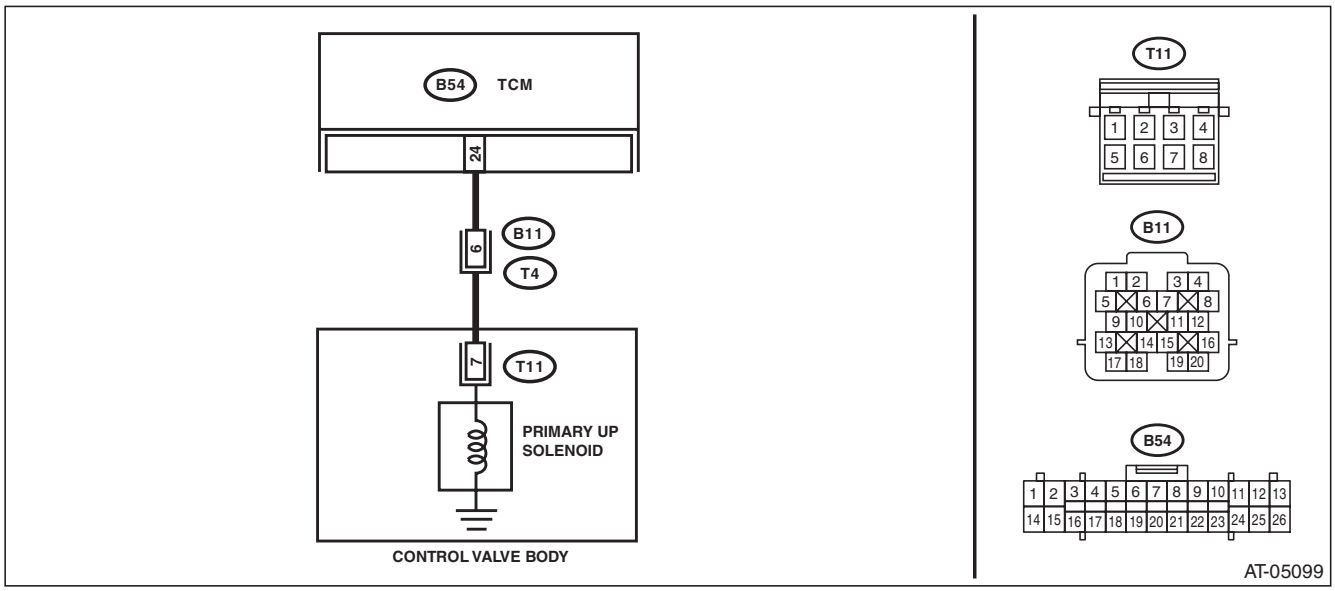

Step		Check	Yes	No
1	**CHECK HARNESS.** 1) Turn the ignition switch to OFF. 2) Disconnect the TCM and transmission connectors. 3) Measure the resistance between TCM connector and transmission connectors. ***Connector & terminal*** ***(B54) No. 24 — (B11) No. 6:***	Is the resistance less than 1 Ω?	Go to step **2**.	Repair the open circuit of harness.
2	**CHECK HARNESS.** 1) Turn the ignition switch to ON. 2) Measure the voltage between TCM connector and chassis ground. ***Connector & terminal*** ***(B54) No. 24 (+) — Chassis ground (–):***	Is the voltage approx. 0 V?	Go to step **3**.	Repair the short circuit of harness.
3	**CHECK PRIMARY UP SOLENOID.** Measure the resistance between transmission connector and transmission body. ***Connector & terminal*** ***(T4) No. 6 — Transmission body:***	Is the resistance approx. 13 Ω? (when engine cold)	Check for poor contact of the connector, and repair the fault location.	Go to step **4**.
4	**CHECK HARNESS INSIDE TRANSMISSION.** **CAUTION:** **Start work after ATF cools down.** 1) Remove the transmission oil pan. 2) Check for the harness pinch, damage.	Is there any malfunction in harness?	Go to step **5**.	Replace the transmission harness.

GETtheMANUALS.org

Step		Check	Yes	No
5	**CHECK HARNESS INSIDE TRANSMISSION.** 1) Disconnect the control valve body connector. 2) Turn the ignition switch to ON. 3) Measure the voltage between transmission connector and transmission body. ***Connector & terminal*** ***(T4) No. 6 (+) — Transmission body (–):***	Is the voltage approx. 0 V?	Replace the control valve body. <Ref. to CVT-111, Control Valve Body.>	Replace the transmission harness.

GETtheMANUALS.org

X: DTC P0976 PRIMARY SOLENOID SYSTEM B CIRCUIT (LOW)

DTC DETECTING CONDITION:
Output signal circuit of primary DOWN solenoid is shorted.
TROUBLE SYMPTOM:
Gear is not changed. (No down-shift)
WIRING DIAGRAM:

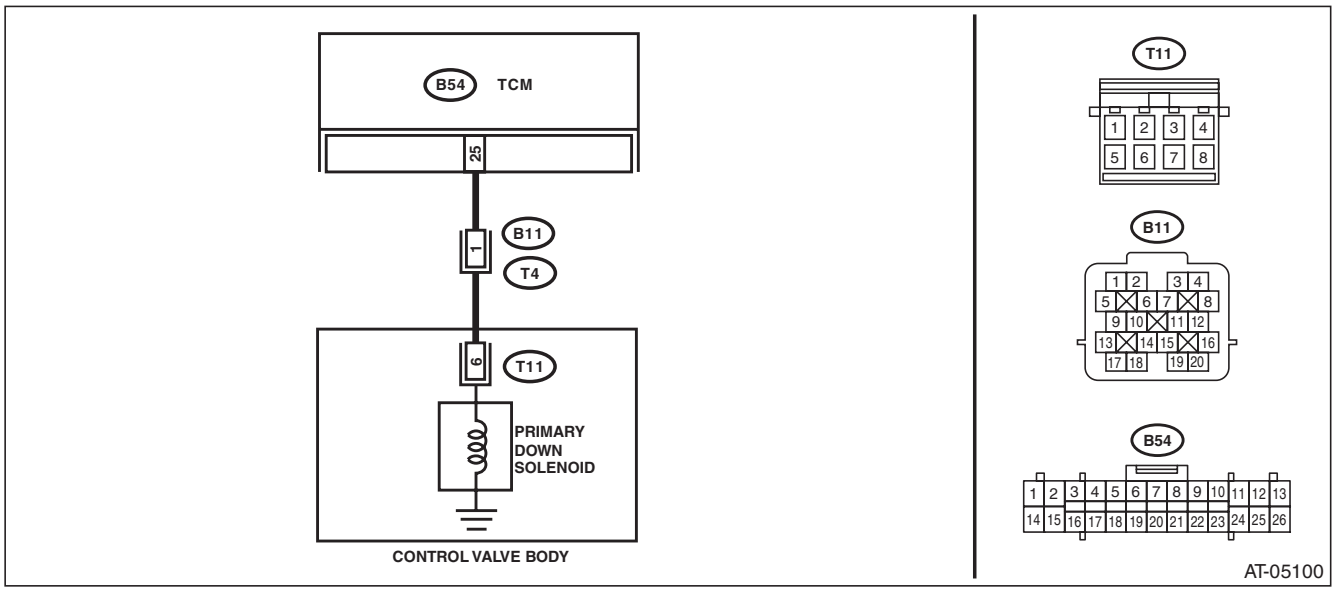

Step		Check	Yes	No
1	**CHECK HARNESS.** 1) Turn the ignition switch to OFF. 2) Disconnect the TCM and transmission connectors. 3) Measure the resistance between TCM connector and chassis ground. ***Connector & terminal*** ***(B54) No. 25 — Chassis ground:***	Is the resistance 1 MΩ or more?	Go to step **2**.	Repair the short circuit of harness.
2	**CHECK PRIMARY DOWN SOLENOID.** Measure the resistance between transmission connector and transmission body. ***Connector & terminal*** ***(T4) No. 1 — Transmission body:***	Is the resistance approx. 13 Ω? (when engine cold)	Check for poor contact of the connector, and repair the fault location.	Go to step **3**.
3	**CHECK HARNESS INSIDE TRANSMISSION.** **CAUTION:** **Start work after ATF cools down.** 1) Remove the transmission oil pan. 2) Check for the harness pinch, damage.	Is there any malfunction in harness?	Go to step **4**.	Replace the transmission harness.
4	**CHECK HARNESS INSIDE TRANSMISSION.** 1) Disconnect the control valve body connector. 2) Measure the resistance between transmission connector and transmission body. ***Connector & terminal*** ***(T4) No. 1 — Transmission body:***	Is the resistance 1 MΩ or more?	Replace the control valve body. <Ref. to CVT-111, Control Valve Body.>	Replace the transmission harness.

GETtheMANUALS.org

Y: DTC P0977 PRIMARY SOLENOID SYSTEM B CIRCUIT (HIGH)

DTC DETECTING CONDITION:
Output signal circuit of primary DOWN solenoid is open or shorted.
TROUBLE SYMPTOM:
Gear is not changed. (No down-shift)
WIRING DIAGRAM:

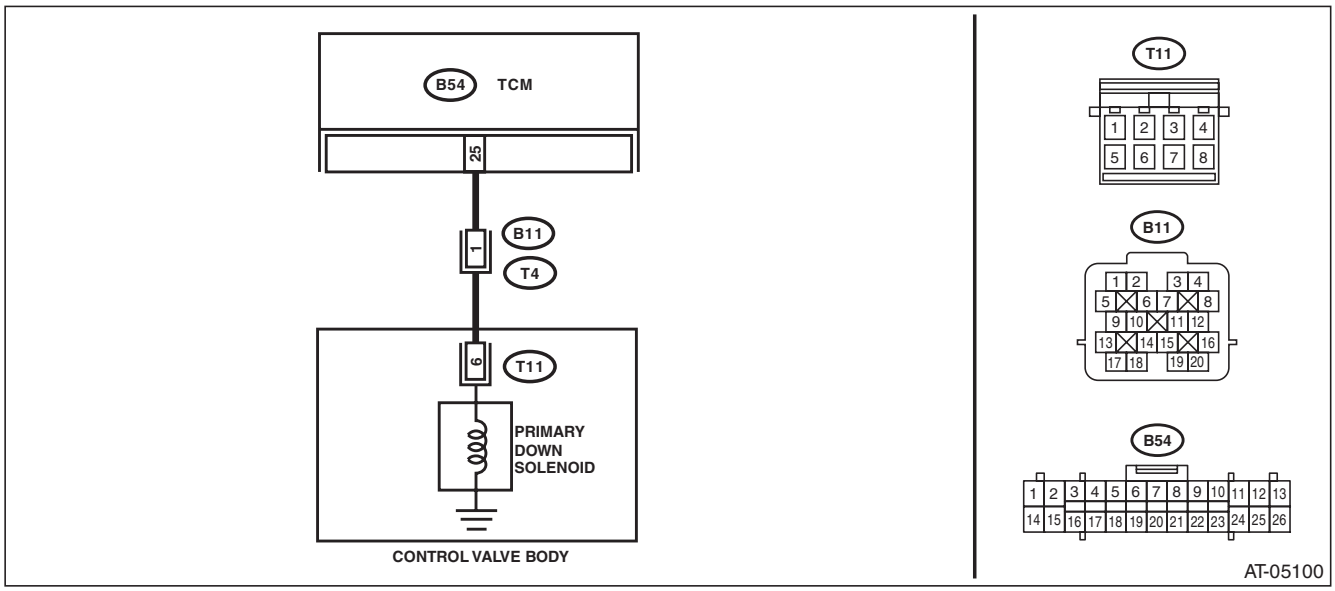

Step		Check	Yes	No
1	**CHECK HARNESS.** 1) Turn the ignition switch to OFF. 2) Disconnect the TCM and transmission connectors. 3) Measure the resistance between TCM connector and transmission connectors. ***Connector & terminal*** ***(B54) No. 25 — (B11) No. 1:***	Is the resistance less than 1 Ω?	Go to step **2**.	Repair the open circuit of harness.
2	**CHECK HARNESS.** 1) Turn the ignition switch to ON. 2) Measure the voltage between TCM connector and chassis ground. ***Connector & terminal*** ***(B54) No. 25 (+) — Chassis ground (–):***	Is the voltage approx. 0 V?	Go to step **3**.	Repair the short circuit of harness.
3	**CHECK PRIMARY DOWN SOLENOID.** Measure the resistance between transmission connector and transmission body. ***Connector & terminal*** ***(T4) No. 1 — Transmission body:***	Is the resistance approx. 13 Ω? (when engine cold)	Check for poor contact of the connector, and repair the fault location.	Go to step **4**.
4	**CHECK HARNESS INSIDE TRANSMISSION.** **CAUTION:** **Start work after ATF cools down.** 1) Remove the transmission oil pan. 2) Check for the harness pinch, damage.	Is there any malfunction in harness?	Go to step **5**.	Replace the transmission harness.

GETtheMANUALS.org

Step		Check	Yes	No
5	**CHECK HARNESS INSIDE TRANSMISSION.** 1) Disconnect the control valve body connector. 2) Turn the ignition switch to ON. 3) Measure the voltage between transmission connector and transmission body. ***Connector & terminal*** ***(T4) No. 1 (+) — Transmission body (–):***	Is the voltage approx. 0 V?	Replace the control valve body. <Ref. to CVT-111, Control Valve Body.>	Replace the transmission harness.

Z: DTC P1718 AT CAN COMMUNICATION CIRCUIT

NOTE:
Refer to “LAN SYSTEM” for diagnostic procedure. <Ref. to LAN(diag)-2, Basic Diagnostic Procedure.>

GETtheMANUALS.org

AA:DTC P1724 AT EEPROM ERROR

DTC DETECTING CONDITION:
- TCM EEPROM malfunction
- EEPROM writing error during self shut control

TROUBLE SYMPTOM:
- AT learning is not finished.
- Shock occurs when selecting N → D, N → R.

	Step	Check	Yes	No
1	**CHECK TCM CONNECTOR.**	Is the connection of TCM connector correct?	Go to step **2**.	Connect the TCM connector.
2	**CHECK SELF SHUT RELAY.** Turn the ignition switch to ON.	Does the relay operates simultaneously?	Go to step **3**.	Perform the diagnosis according to DTC P0890.
3	**CHECK SELF SHUT RELAY.** Turn the ignition switch to OFF.	Does the relay operate after two or three seconds delay?	Go to step **4**.	Perform the diagnosis according to DTC P0890.
4	**PERFORM AT LEARNING.** 1) Perform the {Clear Memories 2}. 2) Perform the AT learning. <Ref. to CVT(diag)-20, Learning Control.> 3) Start the engine.	Does the AT OIL TEMP light blink after AT learning is finished correctly?	Check the TCM.	Go to step **5**.
5	**CHECK FOR ANY OTHER DTC ON DISPLAY.** 1) Perform the {Clear Memory}. 2) Turn the ignition switch to OFF. 3) Start the engine after 10 seconds. 4) Repeat steps 2) and 3).	Does the AT OIL TEMP light blink and is DTC P1724 displayed?	Check the TCM.	Current condition is normal. Check for poor contact of TCM connector or harness.

AB:DTC P1725 AT BODY SYSTEM CAN COMMUNICATION TROUBLE

NOTE:
Refer to “LAN SYSTEM” for diagnostic procedure. <Ref. to LAN(diag)-2, Basic Diagnostic Procedure.>

GETtheMANUALS.org

AC:DTC P2746 PRIMARY PULLEY REVOLUTION SPEED SENSOR CIRCUIT

DTC DETECTING CONDITION:

- Output signal circuit of primary speed sensor is open or shorted.
- Primary speed sensor malfunction

TROUBLE SYMPTOM:

- Standing start problems
- Shock occurs when engaging the lockup clutch.
- Neutral control does not operate.

WIRING DIAGRAM:

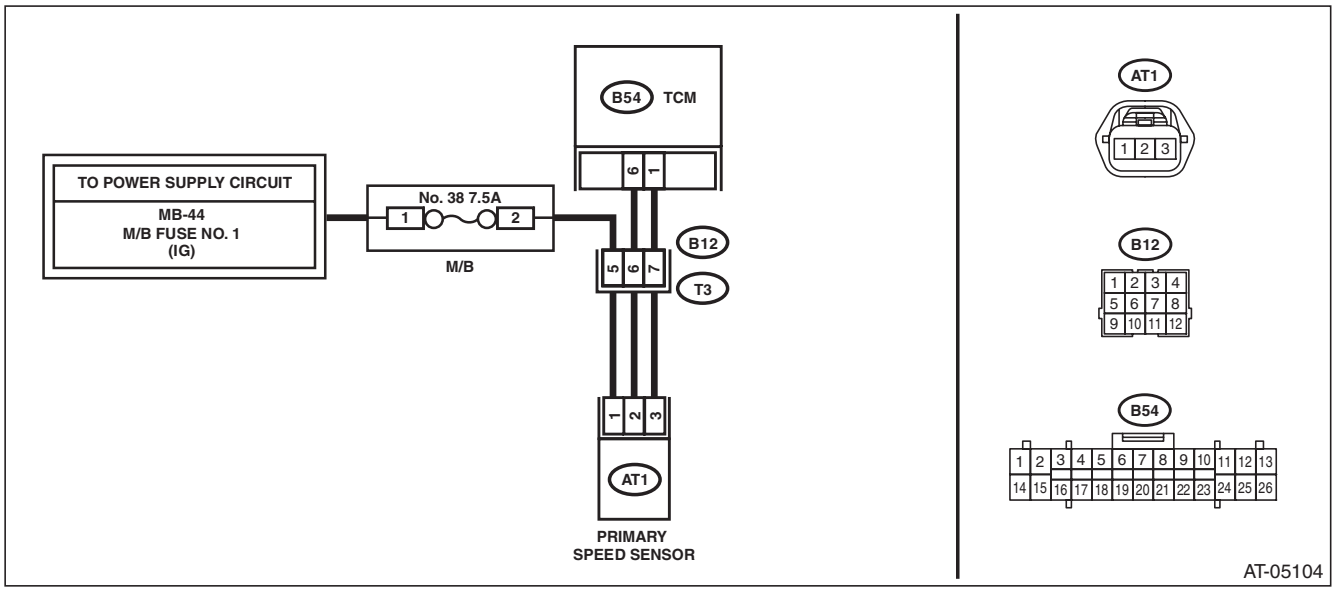

Step		Check	Yes	No
1	**CHECK FUSE.** 1) Turn the ignition switch to OFF. 2) Remove the fuse (No. 38).	Is the fuse OK?	Go to step **2**.	Replace the fuse. If the fuse blows out easily, repair the short circuit of harness.
2	**CHECK HARNESS.** 1) Turn the ignition switch to OFF. 2) Disconnect the TCM and transmission connectors. 3) Measure the resistance between TCM connector and transmission connectors. ***Connector & terminal*** ***(B54) No. 1 — (B12) No. 7:*** ***(B54) No. 6 — (B12) No. 6:*** ***(M/B No. 38) No. 2 — (B12) No. 5:***	Is the resistance less than 1 Ω?	Go to step **3**.	Repair the open circuit of harness.
3	**CHECK HARNESS.** Measure the resistance between TCM connector and chassis ground. ***Connector & terminal*** ***(B12) No. 5 — Chassis ground:*** ***(B12) No. 6 — Chassis ground:***	Is the resistance 1 MΩ or more?	Go to step **4**.	Repair the short circuit of harness.

GETtheMANUALS.org

	Step	Check	Yes	No
4	**CHECK TRANSMISSION HARNESS.** 1) Connect the TCM connector. 2) Turn the ignition switch to ON. 3) Measure the voltage between transmission connector and chassis ground. ***Connector & terminal*** ***(B12) No. 6 (+) — Chassis ground (–):*** NOTE: Delete the TCM memory after completing the CVT control system diagnosis. <Ref. to CVT(diag)-18, Clear Memory Mode.>	Is the voltage approx. 5 V?	Go to step **5**.	Repair the open circuit of harness or poor contact of connector.
5	**CHECK INPUT SIGNAL FOR TCM.** 1) Turn the ignition switch to OFF. 2) Connect the transmission connector. 3) Lift up the vehicle. 4) Start the engine. 5) Slowly increase the speed to 30 km/h (18 MPH). 6) Read the data of «Primary Pulley Speed» using Subaru Select Monitor.	Does the value of «Primary Pulley Speed» change according to the engine speed?	Current condition is normal. Repair the poor contacts of harnesses of primary speed sensor and transmission connector.	Go to step **6**.
6	**CHECK TRANSMISSION HARNESS.** 1) Turn the ignition switch to OFF. 2) Disconnect the transmission connector. 3) Disconnect the primary speed sensor connector. 4) Measure the resistance between transmission connector and primary speed sensor connector. ***Connector & terminal*** ***(T3) No. 5 — (AT1) No. 1:*** ***(T3) No. 6 — (AT1) No. 2:*** ***(T3) No. 7 — (AT1) No. 3:***	Is the resistance less than 1 Ω?	Replace the primary speed sensor. <Ref. to CVT-105, Primary Speed Sensor.>	Replace the transmission harness.

GETtheMANUALS.org

AD:DTC P2750 SEC. PULLEY REVOLUTION SPEED SENSOR CIRCUIT

DTC DETECTING CONDITION:

- Output signal circuit of secondary speed sensor is open or shorted.
- Secondary speed sensor malfunction

TROUBLE SYMPTOM:

- Shock occurs when selecting N → D, N → R.
- Neutral control does not operate.

WIRING DIAGRAM:

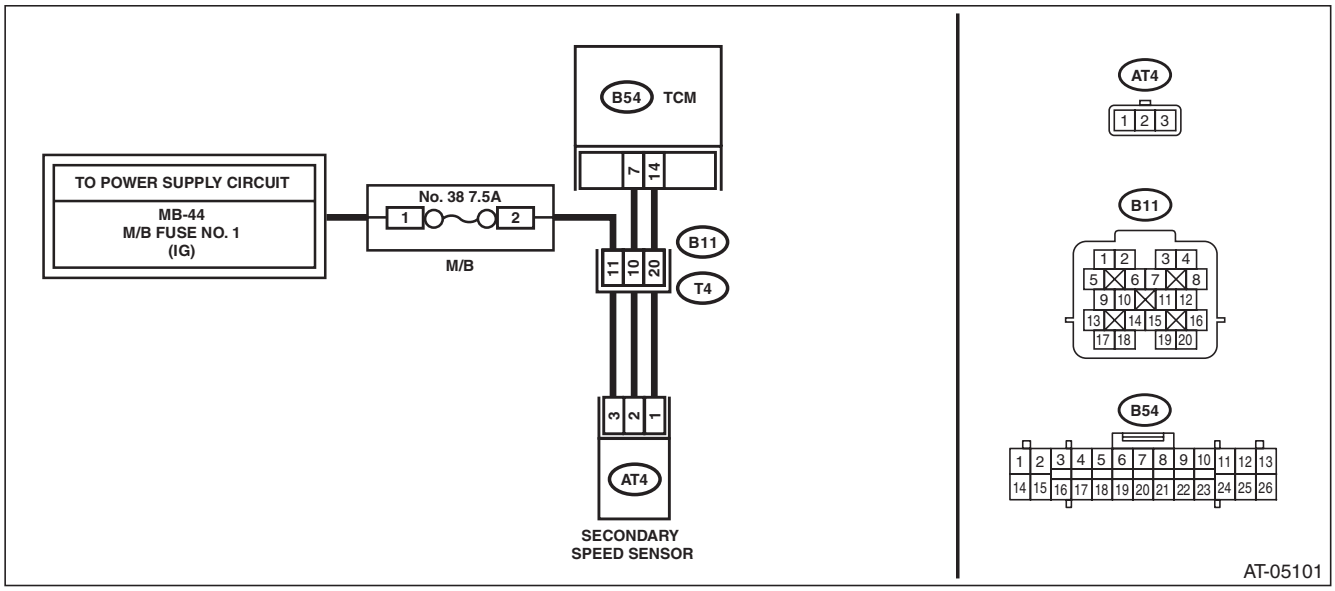

Step		Check	Yes	No
1	**CHECK FUSE.** 1) Turn the ignition switch to OFF. 2) Remove the fuse (No. 38).	Is the fuse OK?	Go to step **2**.	Replace the fuse. If the fuse blows out easily, repair the short circuit of harness.
2	**CHECK HARNESS.** 1) Turn the ignition switch to OFF. 2) Disconnect the TCM and transmission connectors. 3) Measure the resistance between TCM connector and transmission connectors. ***Connector & terminal*** ***(B54) No. 7 — (B11) No. 10:*** ***(B54) No. 14 — (B11) No. 20:*** ***(M/B No. 38) No. 2 — (B11) No. 11:***	Is the resistance less than 1 Ω?	Go to step **3**.	Repair the open circuit of harness.
3	**CHECK HARNESS.** Measure the resistance between TCM connector and chassis ground. ***Connector & terminal*** ***(B11) No. 10 — Chassis ground:*** ***(B11) No. 11 — Chassis ground:***	Is the resistance 1 MΩ or more?	Go to step **4**.	Repair the short circuit of harness.

GETtheMANUALS.org

	Step	Check	Yes	No
4	**CHECK TRANSMISSION HARNESS.** 1) Connect the TCM connector. 2) Turn the ignition switch to ON. 3) Measure the voltage between transmission connector and chassis ground. ***Connector & terminal*** ***(B11) No. 10 (+) — Chassis ground (–):*** NOTE: Delete the TCM memory after completing the CVT control system diagnosis. <Ref. to CVT(diag)-18, Clear Memory Mode.>	Is the voltage approx. 5 V?	Go to step **5**.	Repair the open circuit of harness or poor contact of connector.
5	**CHECK INPUT SIGNAL FOR TCM.** 1) Turn the ignition switch to OFF. 2) Connect the transmission connector. 3) Lift up the vehicle. 4) Start the engine. 5) Slowly increase the speed to 30 km/h (18 MPH). 6) Read the data of «Secondary Pulley Speed» using Subaru Select Monitor.	Does the value of «Secondary Pulley Speed» change according to the vehicle speed?	Current condition is normal. Repair the poor contacts of harnesses of secondary speed sensor and transmission connector.	Go to step **6**.
6	**CHECK TRANSMISSION HARNESS.** 1) Turn the ignition switch to OFF. 2) Disconnect the transmission connector. 3) Disconnect the secondary speed sensor connector. 4) Measure the resistance between transmission connector and secondary speed sensor connector. ***Connector & terminal*** ***(T4) No. 10 — (AT4) No. 2:*** ***(T4) No. 11 — (AT4) No. 3:*** ***(T4) No. 20 — (AT4) No. 1:***	Is the resistance less than 1 Ω?	Replace the secondary speed sensor. <Ref. to CVT-102, Secondary Speed Sensor.>	Replace the transmission harness.

GETtheMANUALS.org

AE:DTC P2762 LOCK-UP DUTY SOLENOID MALFUNCTION

DTC DETECTING CONDITION:

- Lock up clutch malfunction
- Hydraulic leaks or hydraulic valve stick of lock up system
- Hydraulic leaks or hydraulic valve stick of lock up ON/OFF valve system
- Lock up duty solenoid or lock up ON/OFF solenoid characteristics malfunction

TROUBLE SYMPTOM:

- No lock-up occurs.
- Engine speed increases abruptly during driving.

Step		Check	Yes	No
1	**CHECK DTC.** Read the DTC relating the ECM using the Subaru Select Monitor.	Is DTC displayed?	Perform the diagnosis according to DTC.	Go to step **2**.
2	**CHECK DTC.** Read the DTC relating the TCM using the Subaru Select Monitor.	Are DTC P0841, P0842, P0843 displayed?	Perform the diagnosis according to DTC.	Go to step **3**.
3	**CHECK TRANSMISSION FLUID.** Check the condition of ATF. <Ref. to CVT-40, CONDITION CHECK, CVTF.>	Is the ATF OK?	Go to step **4**.	Check according to the “corrective action” of ATF (CVTF) “CONDITION CHECK”. <Ref. to CVT-40, CONDITION CHECK, CVTF.>
4	**CHECK TRANSMISSION FLUID.** Check the amount of ATF. <Ref. to CVT-37, ADJUSTMENT, CVTF.>	Is the ATF amount correct?	Go to step **5**.	Adjust the amount of ATF. <Ref. to CVT-37, ADJUSTMENT, CVTF.>
5	**CHECK INPUT SIGNAL FOR TCM.** 1) Lift up the vehicle. 2) Start the engine. 3) Warm up until the ATF temperature reaches to 40 — 70°C (104 — 158°F). 4) Shift the select lever to “P” range. 5) Stabilize the engine speed at idle. 6) Read the data of «Actual secondary pressure» using Subaru Select Monitor.	Is the «Actual secondary pressure» 0.5 — 1.5 MPa?	Go to step **6**.	Perform the diagnosis according to DTC P0841 procedure.
6	**DRIVING CHECK FOR LOCK-UP CONDITION.** 1) Perform the “Clear Memory Mode”. <Ref. to CVT(diag)-18, Clear Memory Mode.> 2) Start the engine after turning the ignition switch OFF. 3) Warm up until the ATF temperature exceeds 50°C. 4) Drive the vehicle for one minute or more keeping the constant speed so that the display shown in the Subaru Select Monitor is as follows: «Lock Up Duty Ratio» is 70% or more, «Lock-Up ON/OFF Solenoid» is ON, «Front Wheel Speed» is 40 km/h or more. 5) Turn the ignition switch to OFF. 6) Start the engine. 7) Perform the procedure in step 4) again. 8) Read the DTC using Subaru Select Monitor.	Does the AT OIL TEMP light blink and is DTC P2762 displayed?	Perform the secondary pressure test. <Ref. to CVT-50, Secondary Pressure (Line Pressure) Test.> When DTC other than P2762 is displayed, perform the diagnosis corresponding to the DTC.	Current condition is normal. Temporary oil pressure malfunction.

GETtheMANUALS.org

AF:DTC P2763 LOCK-UP DUTY SOLENOID CIRCUIT (HIGH)

DTC DETECTING CONDITION:
Output signal circuit of lock-up duty solenoid is open or shorted.
TROUBLE SYMPTOM:
No lock-up occurs.
WIRING DIAGRAM:

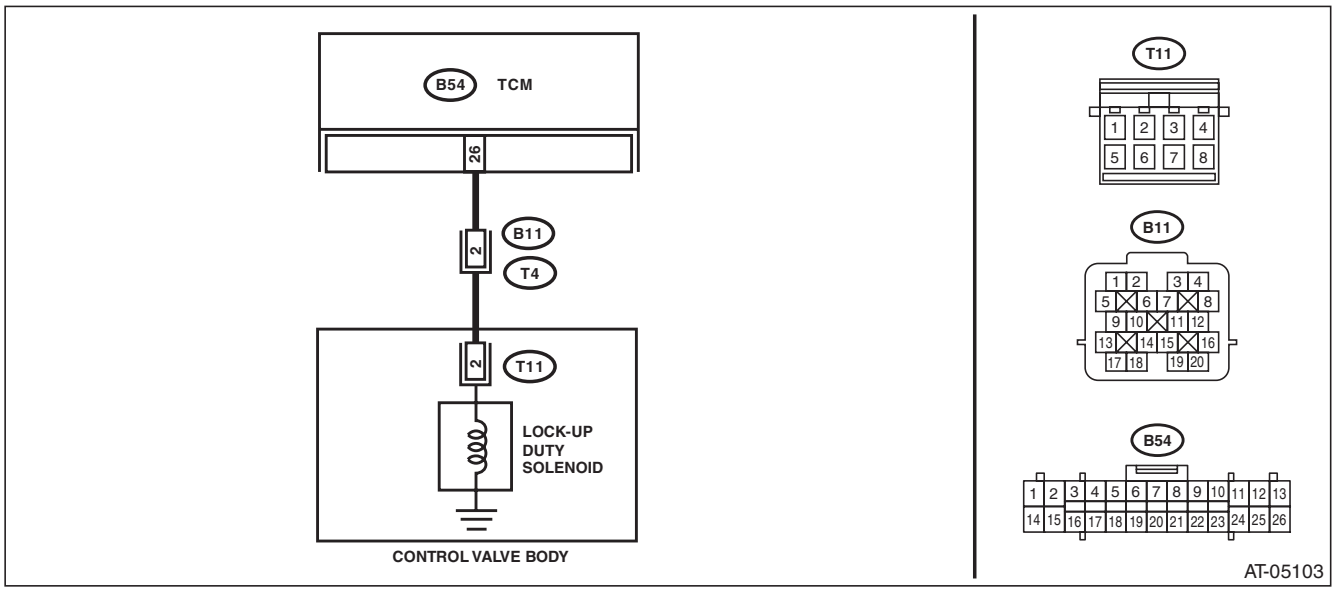

Step		Check	Yes	No
1	**CHECK HARNESS.** 1) Turn the ignition switch to OFF. 2) Disconnect the TCM and transmission connectors. 3) Measure the resistance between TCM connector and transmission connectors. ***Connector & terminal*** ***(B54) No. 26 — (B11) No. 2:***	Is the resistance less than 1 Ω?	Go to step **2**.	Repair the open circuit of harness.
2	**CHECK HARNESS.** 1) Turn the ignition switch to ON. 2) Measure the voltage between TCM connector and chassis ground. ***Connector & terminal*** ***(B54) No. 26 (+) — Chassis ground (–):***	Is the voltage approx. 0 V?	Go to step **3**.	Repair the short circuit of harness.
3	**CHECK LOCK-UP DUTY SOLENOID.** Measure the resistance between transmission connector and transmission body. ***Connector & terminal*** ***(T4) No. 2 — Transmission body:***	Is the resistance approx. 13 Ω? (when engine cold)	Check for poor contact of the connector, and repair the fault location.	Go to step **4**.
4	**CHECK HARNESS INSIDE TRANSMISSION.** **CAUTION:** **Start work after ATF cools down.** 1) Remove the transmission oil pan. 2) Check for the harness pinch, damage.	Is there any malfunction in harness?	Go to step **5**.	Replace the transmission harness.

GETtheMANUALS.org

	Step	Check	Yes	No
5	**CHECK HARNESS INSIDE TRANSMISSION.** 1) Disconnect the control valve body connector. 2) Turn the ignition switch to ON. 3) Measure the voltage between transmission connector and transmission body. ***Connector & terminal*** ***(T4) No. 2 (+) — Transmission body (–):***	Is the voltage approx. 0 V?	Replace the control valve body. <Ref. to CVT-111, Control Valve Body.>	Replace the transmission harness.

GETtheMANUALS.org

AG:DTC P2764 LOCK-UP DUTY SOLENOID CIRCUIT (LOW)

DTC DETECTING CONDITION:
Output signal circuit of lock up duty solenoid is shorted.
TROUBLE SYMPTOM:
No lock-up occurs.
WIRING DIAGRAM:

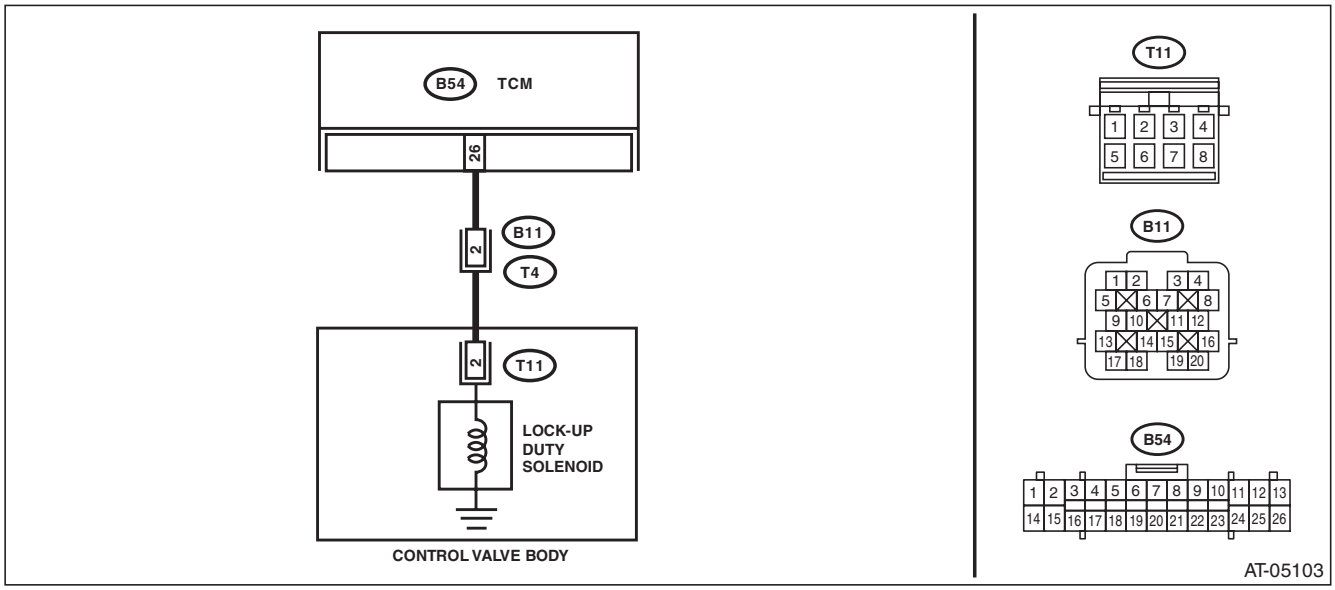

Step		Check	Yes	No
1	**CHECK HARNESS.** 1) Turn the ignition switch to OFF. 2) Disconnect the TCM and transmission connectors. 3) Measure the resistance between TCM connector and chassis ground. ***Connector & terminal*** ***(B54) No. 26 — Chassis ground:***	Is the resistance 1 MΩ or more?	Go to step **2**.	Repair the short circuit of harness.
2	**CHECK LOCK-UP DUTY SOLENOID.** Measure the resistance between transmission connector and transmission body. ***Connector & terminal*** ***(T4) No. 2 — Transmission body:***	Is the resistance approx. 13 Ω? (when engine cold)	Check for poor contact of the connector, and repair the fault location.	Go to step **3**.
3	**CHECK HARNESS INSIDE TRANSMISSION.** **CAUTION:** **Start work after ATF cools down.** 1) Remove the transmission oil pan. 2) Check for the harness pinch, damage.	Is there any malfunction in harness?	Go to step **4**.	Replace the transmission harness.
4	**CHECK HARNESS INSIDE TRANSMISSION.** 1) Disconnect the control valve body connector. 2) Measure the resistance between transmission connector and transmission body. ***Connector & terminal*** ***(T4) No. 2 — Transmission body:***	Is the resistance 1 MΩ or more?	Replace the control valve body. <Ref. to CVT-111, Control Valve Body.>	Replace the transmission harness.

GETtheMANUALS.org

AH:DTC P2769 LOCK-UP ON/OFF SOLENOID CIRCUIT (LOW)

DTC DETECTING CONDITION:
Output signal circuit of lock up ON/OFF solenoid is shorted.
TROUBLE SYMPTOM:
No lock-up occurs.
WIRING DIAGRAM:

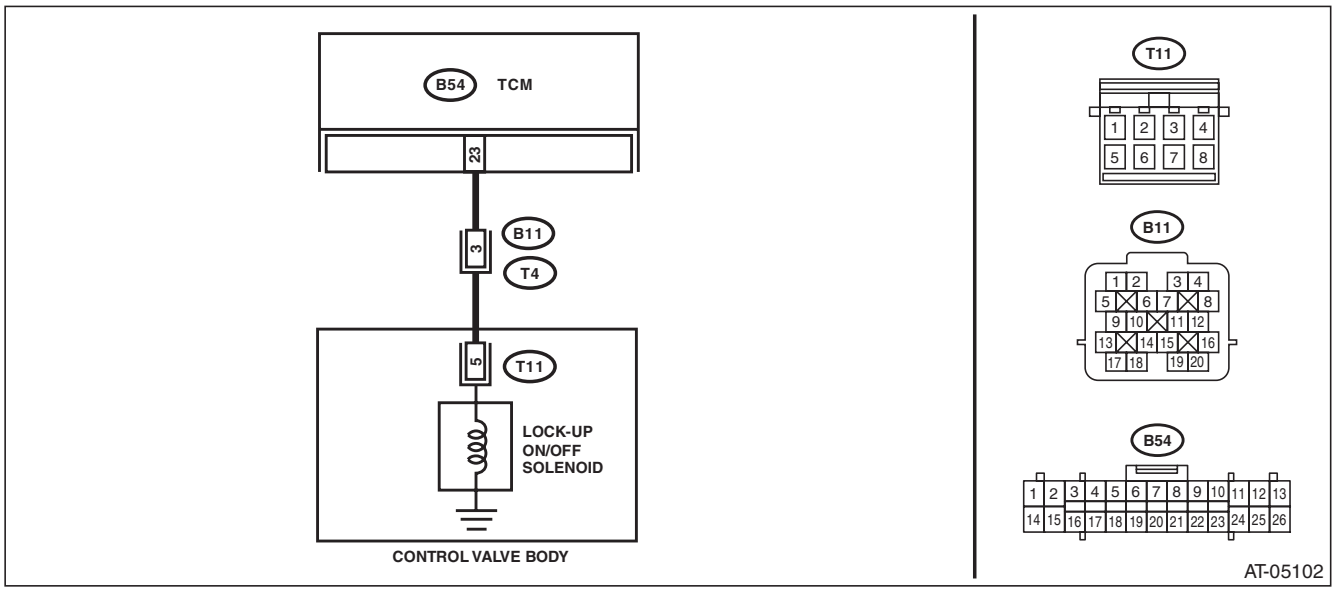

Step		Check	Yes	No
1	**CHECK HARNESS.** 1) Turn the ignition switch to OFF. 2) Disconnect the TCM and transmission connectors. 3) Measure the resistance between TCM connector and chassis ground. ***Connector & terminal*** ***(B54) No. 23 — Chassis ground:***	Is the resistance 1 MΩ or more?	Go to step **2**.	Repair the short circuit of harness.
2	**CHECK LOCK UP ON/OFF SOLENOID.** Measure the resistance between transmission connector and transmission body. ***Connector & terminal*** ***(T4) No. 3 — Transmission body:***	Is the resistance approx. 17 Ω? (when engine cold)	Check for poor contact of the connector, and repair the fault location.	Go to step **3**.
3	**CHECK HARNESS INSIDE TRANSMISSION.** **CAUTION:** **Start work after ATF cools down.** 1) Remove the transmission oil pan. 2) Check for the harness pinch, damage.	Is the harness normal?	Go to step **4**.	Replace the transmission harness.
4	**CHECK HARNESS INSIDE TRANSMISSION.** 1) Disconnect the control valve body connector. 2) Measure the resistance between transmission connector and transmission body. ***Connector & terminal*** ***(T4) No. 3 — Transmission body:***	Is the resistance 1 MΩ or more?	Replace the control valve body. <Ref. to CVT-111, Control Valve Body.>	Replace the transmission harness.

GETtheMANUALS.org

AI: DTC P2770 LOCK-UP ON/OFF SOLENOID CIRCUIT (HIGH)

DTC DETECTING CONDITION:
Output signal circuit of lock up ON/OFF solenoid is open or shorted.
TROUBLE SYMPTOM:
No lock-up occurs.
WIRING DIAGRAM:

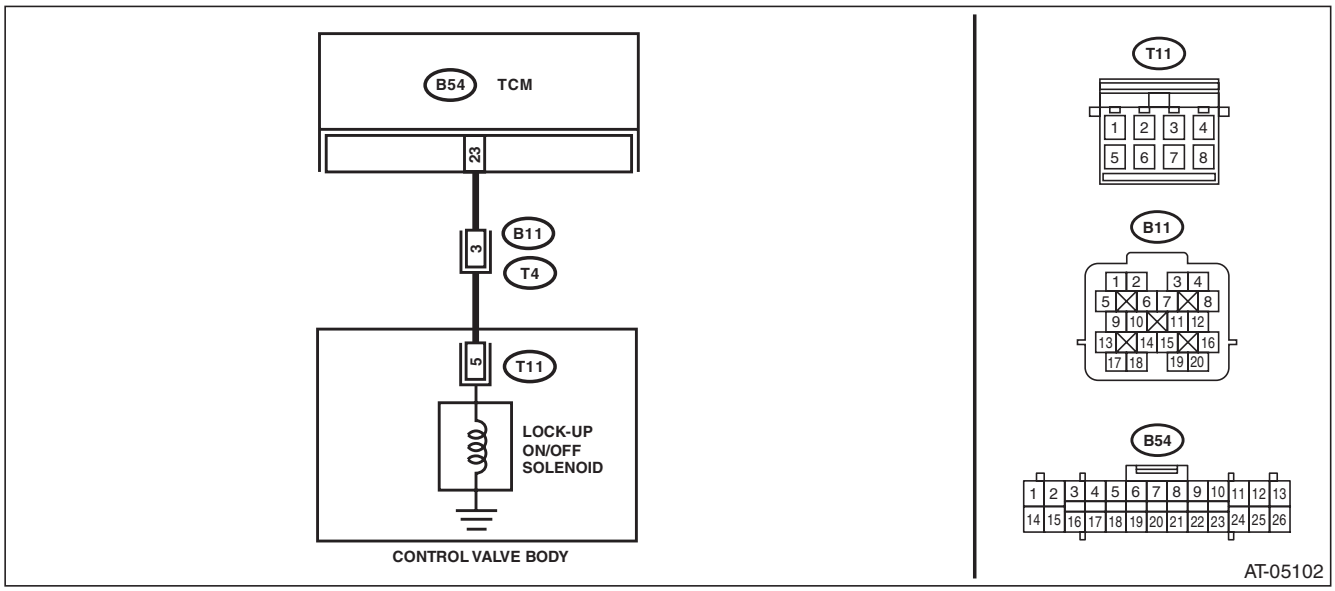

Step		Check	Yes	No
1	**CHECK HARNESS.** 1) Turn the ignition switch to OFF. 2) Disconnect the TCM and transmission connectors. 3) Measure the resistance between TCM connector and transmission connectors. ***Connector & terminal*** ***(B54) No. 23 — (B11) No. 3:***	Is the resistance less than 1 Ω?	Go to step **2**.	Repair the open circuit of harness.
2	**CHECK HARNESS.** 1) Turn the ignition switch to ON. 2) Measure the voltage between TCM connector and chassis ground. ***Connector & terminal*** ***(B54) No. 23 (+) — Chassis ground (–):***	Is the voltage approx. 0 V?	Go to step **3**.	Repair the short circuit of harness.
3	**CHECK LOCK UP ON/OFF SOLENOID.** Measure the resistance between transmission connector and transmission body. ***Connector & terminal*** ***(T4) No. 3 — Transmission body:***	Is the resistance approx. 17 Ω? (when engine cold)	Check for poor contact of the connector, and repair the fault location.	Go to step **4**.
4	**CHECK HARNESS INSIDE TRANSMISSION.** **CAUTION:** **Start work after ATF cools down.** 1) Remove the transmission oil pan. 2) Check for the harness pinch, damage.	Is the harness normal?	Go to step **5**.	Replace the transmission harness.

GETtheMANUALS.org

	Step	Check	Yes	No
5	**CHECK HARNESS INSIDE TRANSMISSION.** 1) Disconnect the control valve body connector. 2) Turn the ignition switch to ON. 3) Measure the voltage between transmission connector and transmission body. ***Connector & terminal*** ***(T4) No. 3 (+) — Transmission body (–):***	Is the voltage approx. 0 V?	Replace the control valve body. <Ref. to CVT-111, Control Valve Body.>	Replace the transmission harness.

GETtheMANUALS.org

17. Diagnostic Procedure without Diagnostic Trouble Code (DTC)

A: CHECK SHIFT INDICATOR

DIAGNOSIS:

- Output signal circuit of shift indicator is open or shorted.
- Combination meter malfunction

TROUBLE SYMPTOM:

- Shift indicator does not display or remains displayed.
- Shift indicator display does not change.

WIRING DIAGRAM:

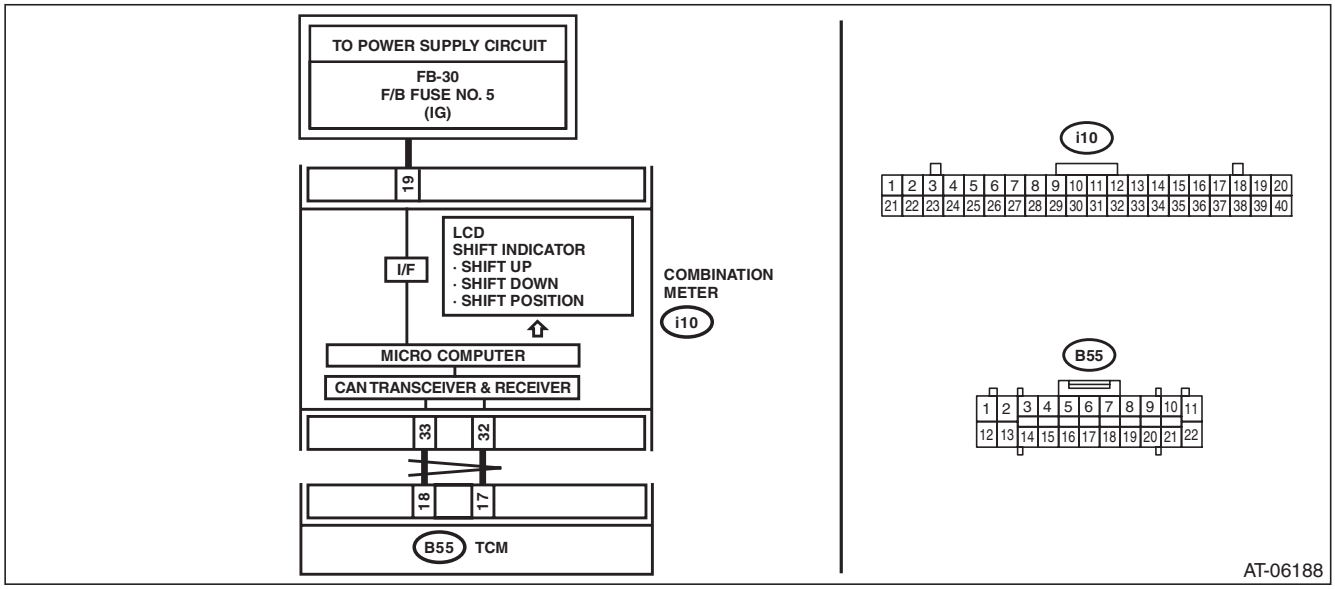

Step		Check	Yes	No
1	**CHECK TCM.** Check the DTC relating the TCM using the Subaru Select Monitor.	Is only DTC P1725 displayed?	Perform the self-diagnosis of combination meter.	Go to step **2**.
2	**CHECK TCM.** Check the DTC relating the TCM using the Subaru Select Monitor.	Are DTCs other than P1725 displayed?	Perform the diagnosis according to DTC.	Go to step **3**.
3	**CHECK COMBINATION METER.** Check the DTC of combination meter.	Is DTC displayed?	Perform the diagnosis according to DTC.	Go to step **4**.
4	**CHECK TCM.** 1) Turn the ignition switch OFF, then turn it ON again. 2) Shift the select lever to manual mode. 3) Read the data of «Shift Step in Manual Mode» using the Subaru Select Monitor.	Is “1” displayed?	Go to step **5**.	Perform the diagnosis according to DTC P0951.
5	**CHECK TCM.** 1) Shift up the select lever. 2) Read the data of «Shift Step in Manual Mode» using the Subaru Select Monitor.	Is “2” displayed?	Currently, shift indicator is normal.	Check the TCM.

GETtheMANUALS.org

18. Diagnostics with Phenomenon

A: INSPECTION

Symptoms	Faulty parts
Engine stalls when driving in “D” or “R” range, or selecting “N” → “D”, “N” → “R”.	• Control valve • Engine control system
While driving in “D” range, vibration occurs immediately before the stop or engine stalls.	• Control valve • Torque converter
Vehicle cannot shift while driving in “D” range.	• Control valve • TCM • Shift mechanism • Power supply system
Excessive shock when selecting “N” → “D”, and “N” → “R”.	• Control valve • TCM • F&R clutch pack • ATF deterioration or lack
Excessive shock at standing start in “D” range.	• Control valve • TCM • F&R clutch pack • ATF deterioration or lack
Engine speed increases abruptly during driving in “D” or “R” range.	• Control valve • Secondary pressure sensor • F&R clutch pack • ATF deterioration or lack
Vehicle can not start when depressing the accelerator pedal in “D” or “R” range, or acceleration is very poor. (without abrupt engine increase)	• Control valve • F&R clutch pack • Shift mechanism • Parking mechanism • Engine control system • Electronic parking brake system • Power supply system
Shift indicator in combination meter displays the position which differs from select lever position.	• Inhibitor switch • Select cable related • Combination meter
Manual mode enters even though the select lever and paddle shift switch is not operated.	• Manual mode switch • Paddle shift switch • Select lever • TCM
Engine speed increases abruptly in “D” or “R” range, vehicle can not start.	• F&R clutch pack • Select cable related
Manual mode can not be set	• Select lever • TCM

GETtheMANUALS.org

AUTOMATIC TRANSMISSION

5AT

		Page
1.	General Description	2
2.	Automatic Transmission Fluid	29
3.	Differential Gear Oil	31
4.	Road Test	32
5.	Stall Test	33
6.	Time Lag Test	34
7.	Line Pressure Test	35
8.	Transfer Clutch Pressure Test	36
9.	Automatic Transmission Assembly	37
10.	Transmission Mounting System	47
11.	Extension Case Oil Seal	48
12.	Differential Side Retainer Oil Seal	49
13.	Inhibitor Switch	50
14.	Front Vehicle Speed Sensor	51
15.	Rear Vehicle Speed Sensor	53
16.	Turbine Speed Sensor 1	54
17.	Control Valve Body	55
18.	Transmission Control Module (TCM)	57
19.	ATF Cooler Pipe and Hose	58
20.	Air Breather Hose	61
21.	Oil Charge Pipe	62
22.	Torque Converter Assembly	63
23.	Drive Plate	64
24.	Extension Case	65
25.	Transfer Clutch	67
26.	Rear Drive Shaft	70
27.	Reduction Driven Gear	71
28.	Center Differential Carrier	74
29.	Parking Pawl	76
30.	Converter Case	78
31.	Oil Pump Cover	80
32.	Drive Pinion Shaft Assembly	84
33.	Front Differential Assembly	89
34.	AT Main Case	94
35.	Transmission Control Device	104
36.	Diagnostics with Phenomenon	106

GETtheMANUALS.org

1. General Description

A: SPECIFICATION

1. TORQUE CONVERTER CLUTCH

Model	3.6 L non-turbo
Type	Symmetric, 3-element, single stage, 2-phase torque converter
Stall torque ratio	1.8
Nominal diameter	246 mm (9.69 in)
Stall speed (at sea level)	2,100 — 2,600 rpm
One-way clutch	Sprague type one-way clutch

2. OIL PUMP

Type	Internal gear fixed displacement pump	
Driving method	Driven by engine	
Number of teeth	Inner rotor	9
	Outer rotor	10

3. TRANSMISSION CONTROL ELEMENT

Type	5-forward, 1-reverse, double-row planetary gears
Multi-plate clutch	3 sets
Multi-plate brake	3 sets
One-way clutch (sprague type)	2 sets

4. TRANSMISSION GEAR RATIO

1st	3.540
2nd	2.264
3rd	1.471
4th	1.000
5th	0.834
Rev.	2.370

5. PLANETARY GEAR AND PLATE

Model	3.6 L non-turbo
Number of front internal gear teeth	106
Number of front carrier teeth	28
Number of front sun gear teeth	50
Number of mid internal gear teeth	78
Number of mid carrier teeth	18
Number of mid sun gear teeth	42
Number of rear internal gear teeth	110
Number of rear carrier teeth	24
Number of rear sun gear teeth	62
Number of front brake drive plates	2
Number of input clutch drive plates	6
Number of high & low reverse clutch drive plates	4
Number of direct clutch drive plates	5
Number of reverse brake drive plates	5
Number of forward brake drive plates	5

GETtheMANUALS.org

6. SELECTOR POSITION

P (Park)	Transmission is in neutral, output member is immovable, engine start is possible
R (Reverse)	Transmission is in reverse.
N (Neutral)	Transmission is in neutral and engine start is possible
D (Drive)	Automatic gear change 1st ←→ 2nd ←→ 3rd ←→ 4th ←→ 5th
M (Manual mode), Paddle shift (+)	Manual gear change 1st → 2nd → 3rd → 4th → 5th
M (Manual mode), Paddle shift (–)	Manual gear change 1st ← 2nd ← 3rd ← 4th ← 5th
Control method	Wire cable type

7. HYDRAULIC CONTROL AND LUBRICATION

Type		Electronic/hydraulic control [5 forward gear changes made by electronic signals of vehicle speed and accelerator (throttle) opening]
Fluid	Recommended materials	SUBARU ATF
	Alternative	IDEMITSU “ATF HP” **CAUTION:** **Be sure to use the recommended or equivalent ATF. Using material except recommended one or substitute would cause trouble.**
Fluid capacity ℓ (US qt, Imp qt)		9.6 — 10.0 (10.1 — 10.6, 8.4 — 8.8)
Lubrication system		Forced feed lubrication with oil pump

8. COOLING AND HARNESS

Cooling system	Liquid-cooler incorporated in radiator
Transmission harness	20 + 8 poles

9. TRANSFER

Transfer type	Variable torque distribution (VTD)
Number of transfer clutch drives & driven plates	3
Reduction gear ratio	1.000 (41/41)

10.FINAL REDUCTION GEAR

Model	3.6 L non-turbo
Front final reduction gear ratio	3.083

GETtheMANUALS.org

11.RECOMMENDED GEAR OIL

Lubrication oil	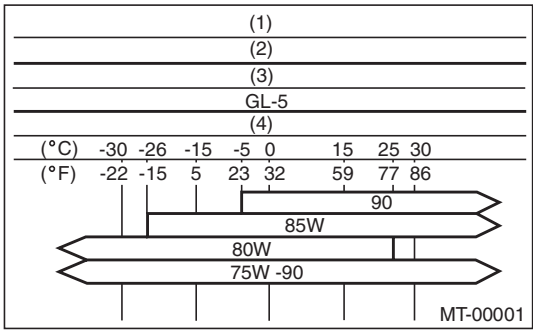 (1) Item (2) Front differential gear oil (3) API standard (4) SAE viscosity No. and applicable temperature
Front differential oil capacity ℓ (US qt, Imp qt)	1.3 — 1.5 (1.4 — 1.6, 1.1 — 1.3)

GETtheMANUALS.org

B: COMPONENT

1. TORQUE CONVERTER CLUTCH & TRANSMISSION ASSEMBLY

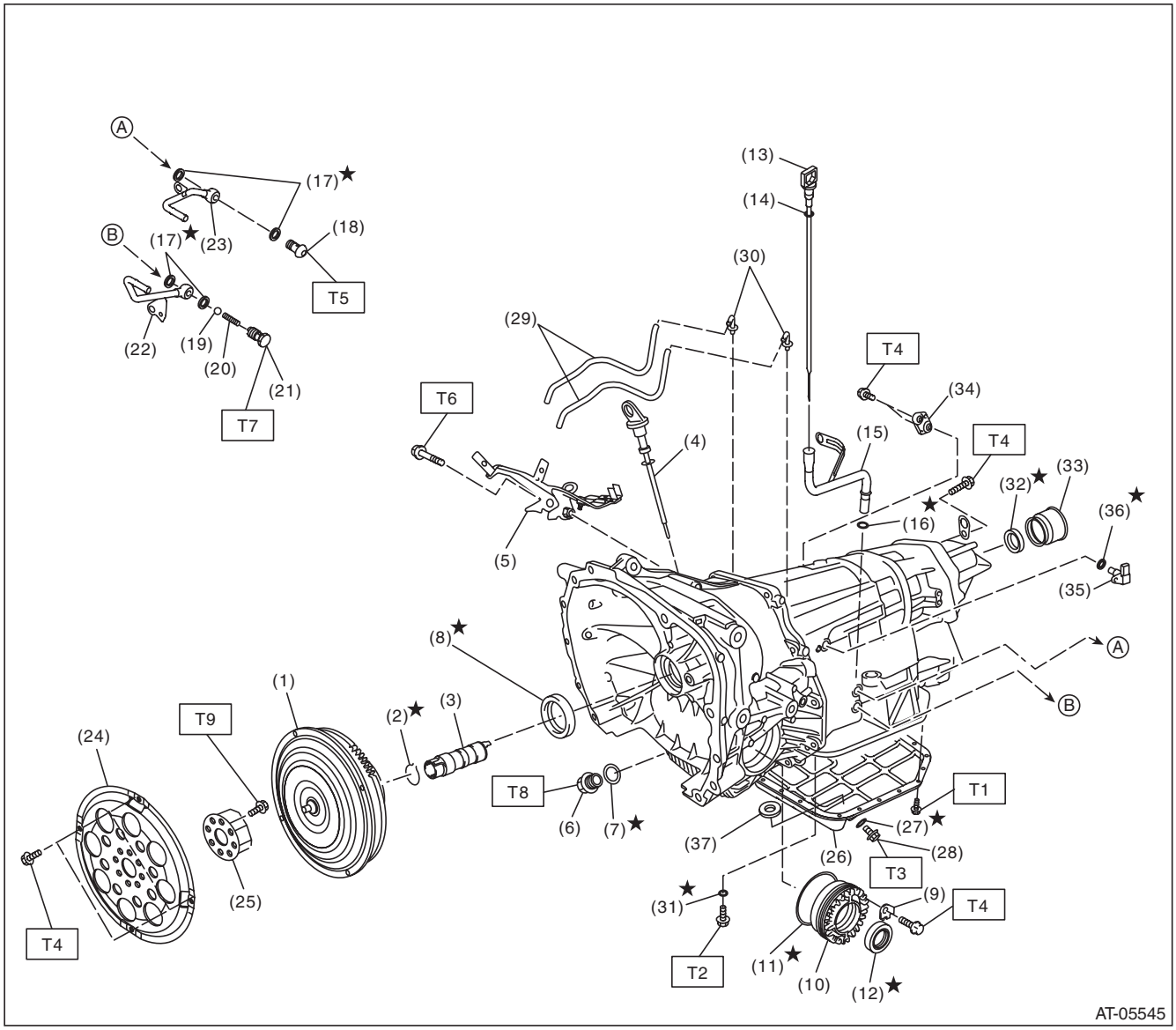

GETtheMANUALS.org

(1) Torque converter ASSY
(2) Circlip
(3) Oil pump shaft
(4) Differential oil level gauge
(5) Transmission hanger COMPL
(6) Drain plug
(7) Gasket
(8) Oil seal
(9) Lock plate
(10) Side retainer
(11) O-ring
(12) Oil seal
(13) ATF level gauge
(14) O-ring
(15) Oil charge pipe
(16) O-ring
(17) Gasket
(18) Union screw
(19) Ball
(20) Spring
(21) Union screw
(22) ATF outlet pipe
(23) ATF inlet pipe
(24) Drive plate
(25) Reinforcement drive plate
(26) Oil pan
(27) Gasket
(28) ATF drain plug
(29) Breather hose
(30) Nipple
(31) O-ring
(32) Oil seal
(33) Dust cover
(34) Floating bracket
(35) Turbine speed sensor 1
(36) O-ring
(37) Magnet

Tightening torque:N·m (kgf-m, ft-lb)	
T1:	***5 (0.5, 3.7)***
T2:	***13 (1.3, 9.6)***
T3:	***20 (2.0, 14.8)***
T4:	***25 (2.5, 18.4)***
T5:	***40 (4.1, 29.5)***
T6:	***41 (4.2, 30.2)***
T7:	***45 (4.6, 33.2)***
T8:	***70 (7.1, 51.6)***
T9:	***90 (9.2, 66.4)***

GETtheMANUALS.org

2. OIL PUMP & FRONT BRAKE

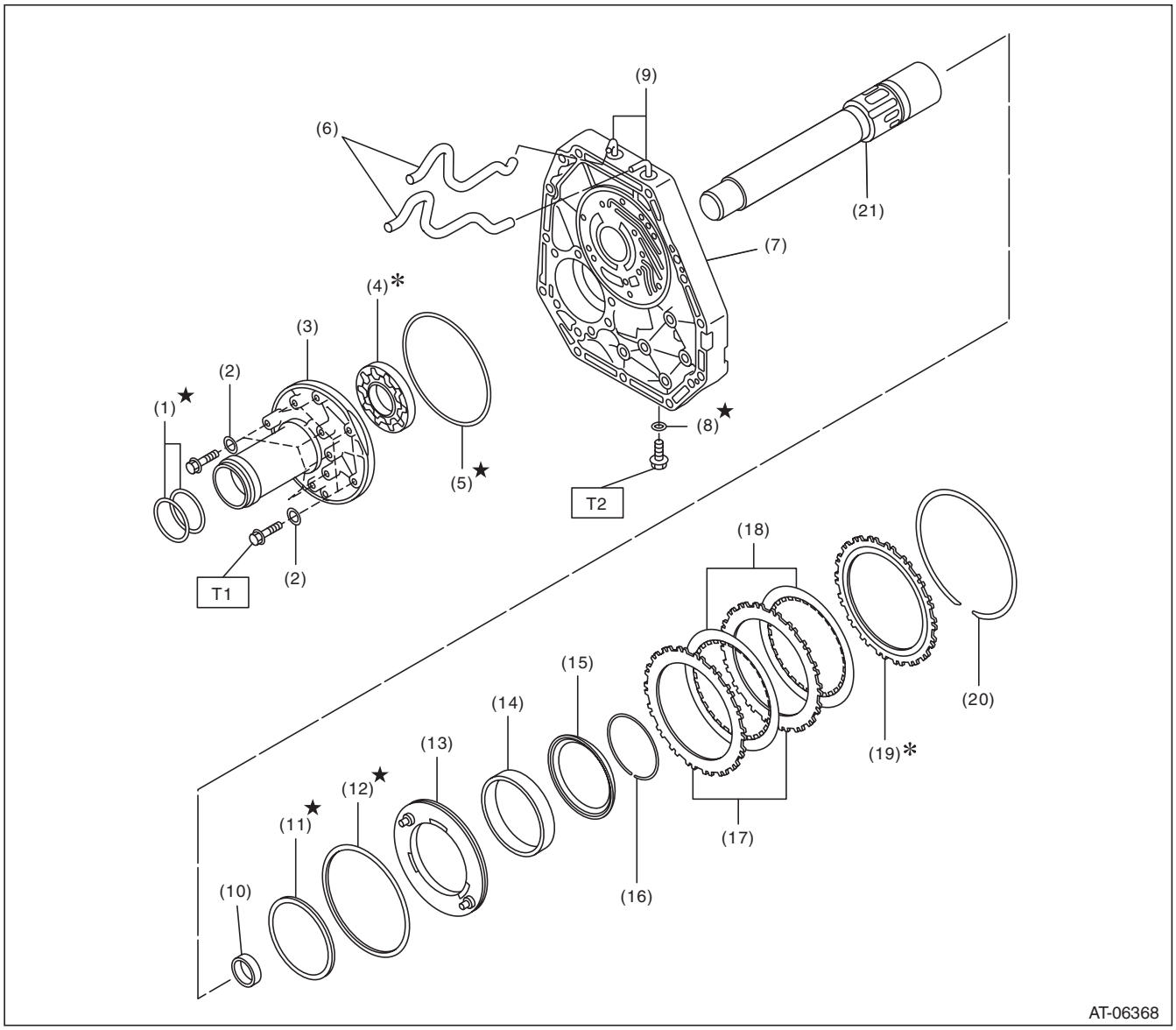

(1) O-ring
(2) Washer
(3) Oil pump housing
(4) Oil pump rotor
(5) O-ring
(6) Air breather hose
(7) Oil pump cover
(8) O-ring
(9) Nipple
(10) Needle bearing
(11) D-ring (inner)
(12) D-ring (outer)
(13) Front brake piston
(14) Return spring
(15) Retainer
(16) Snap ring
(17) Driven plate
(18) Drive plate
(19) Retaining plate
(20) Snap ring
(21) Stator shaft

Tightening torque:N·m (kgf-m, ft-lb)
T1: 10 (1.0, 7.4)
T2: 13 (1.3, 9.6)

GETtheMANUALS.org

3. FRONT PLANETARY CARRIER AND MIDDLE & REAR PLANETARY CARRIER

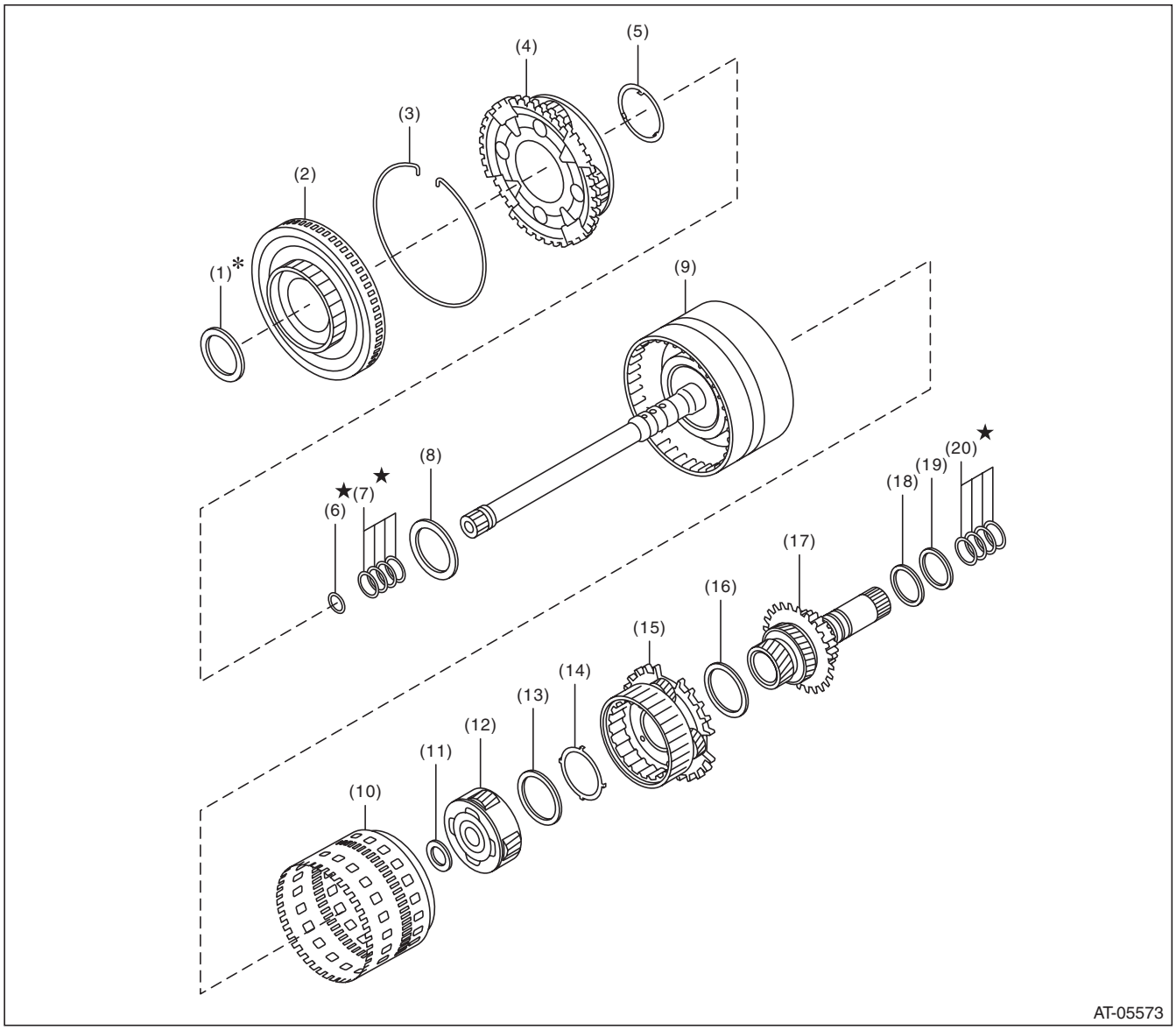

(1) Thrust bearing
(2) Front sun gear ASSY
(3) Snap ring
(4) Front carrier ASSY
(5) Race bearing
(6) O-ring
(7) Seal ring
(8) Thrust bearing
(9) Input clutch ASSY
(10) Rear internal gear ASSY
(11) Thrust bearing
(12) Middle carrier ASSY
(13) Thrust bearing
(14) Race bearing
(15) Rear carrier ASSY
(16) Thrust bearing
(17) Middle & rear sun gear ASSY
(18) Washer
(19) Thrust bearing
(20) Seal ring

GETtheMANUALS.org

4. DIRECT CLUTCH AND HIGH & LOW REVERSE CLUTCH

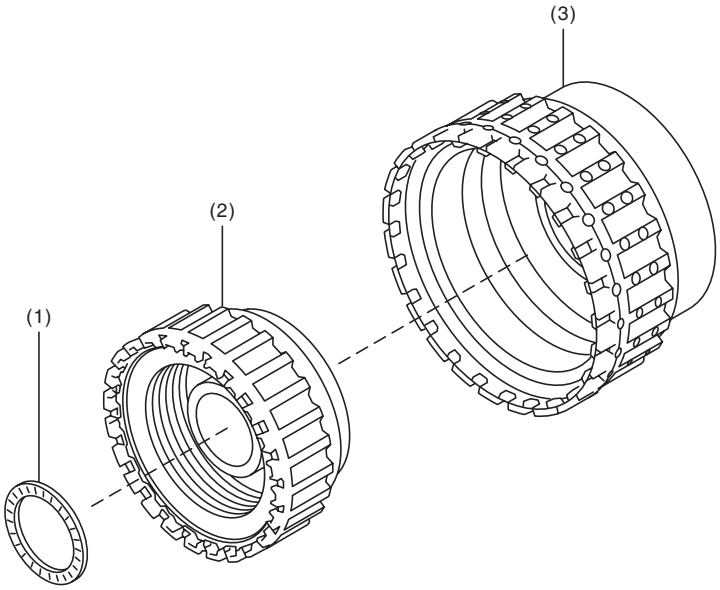

AT-02018

(1) Thrust bearing
(2) High & low reverse clutch ASSY
(3) Direct clutch ASSY

GETtheMANUALS.org

5. REVERSE BRAKE

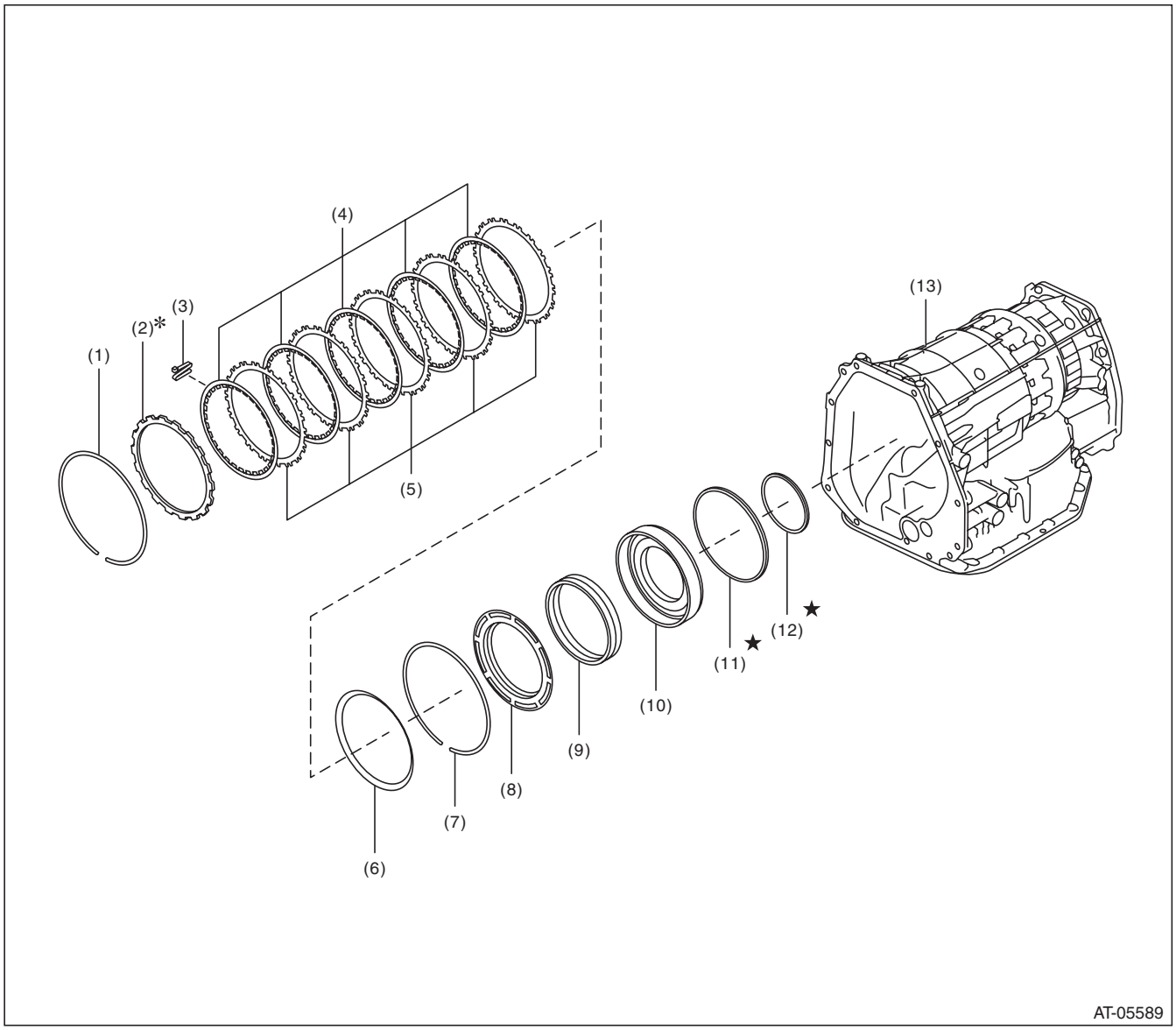

(1)	Snap ring	(6)	Dish plate	(11)	D-ring (Outer)
(2)	Retaining plate	(7)	Snap ring	(12)	D-ring (Inner)
(3)	Leaf spring	(8)	Retainer	(13)	AT main case
(4)	Drive plate	(9)	Return spring		
(5)	Driven plate	(10)	Reverse brake piston		

GETtheMANUALS.org

6. SHORT AT ASSEMBLY

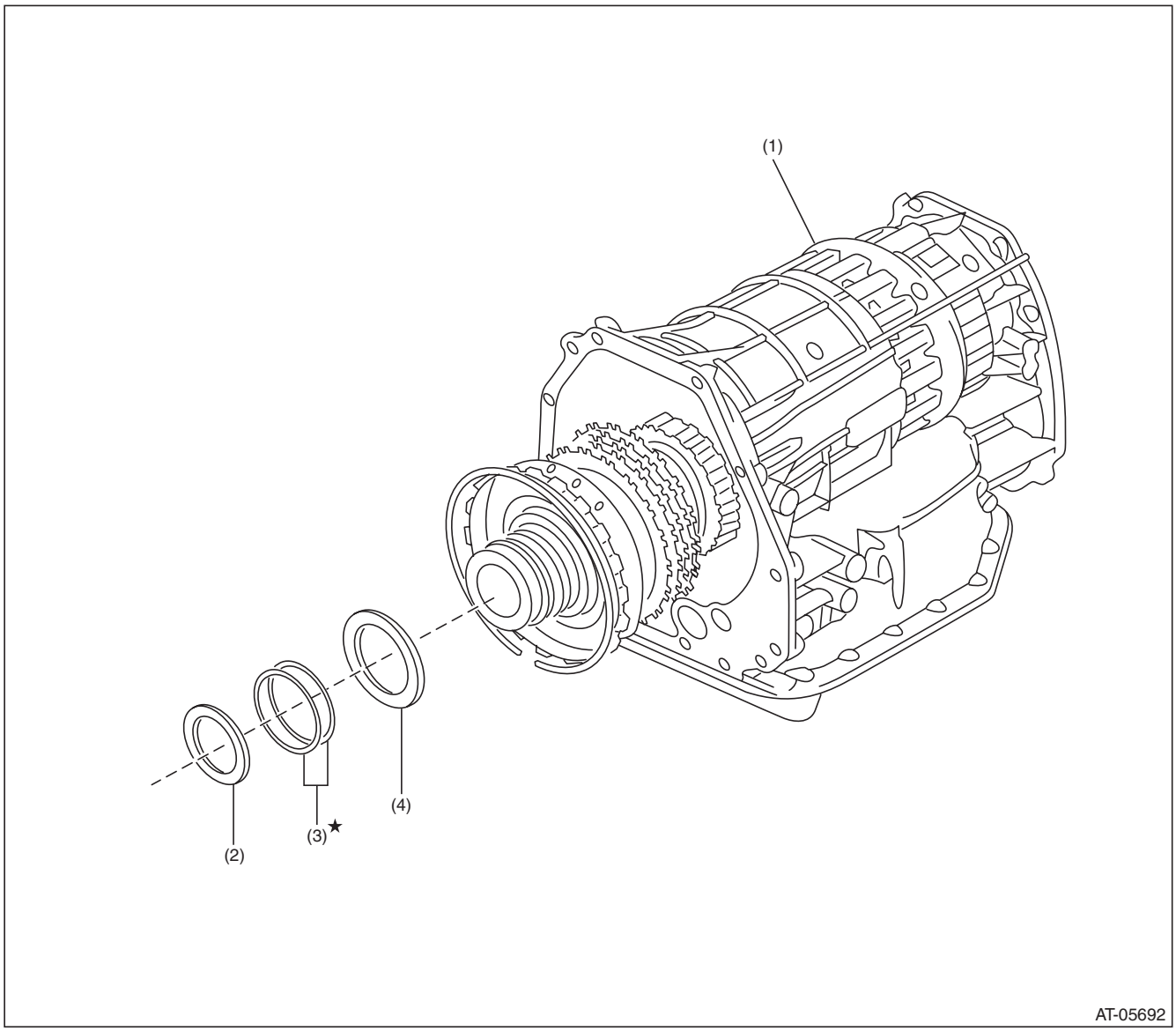

(1) Short AT ASSY (non-disassembly)
(2) Thrust bearing
(3) Seal ring
(4) Thrust bearing

GETtheMANUALS.org

7. CONTROL VALVE & TRANSMISSION HARNESS

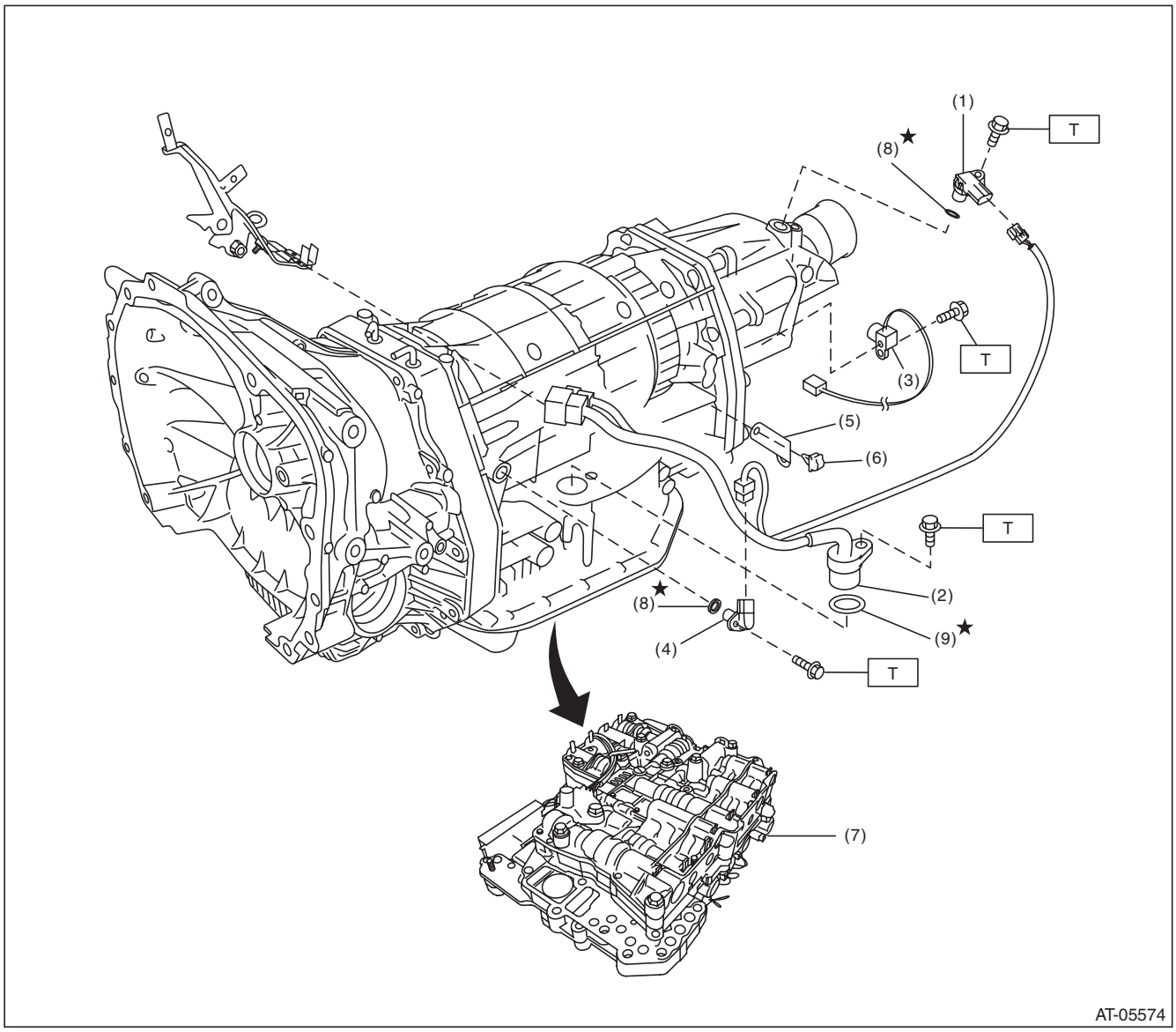

(1)	Rear vehicle speed sensor	(5)	Harness bracket	(9)	O-ring
(2)	Transmission harness ASSY	(6)	Clip		
(3)	Front vehicle speed sensor	(7)	Control valve ASSY		
(4)	Turbine speed sensor 1	(8)	O-ring		

Tightening torque:N·m (kgf-m, ft-lb)
T: 7 (0.7, 5.2)

GETtheMANUALS.org

8. DIFFERENTIAL GEAR

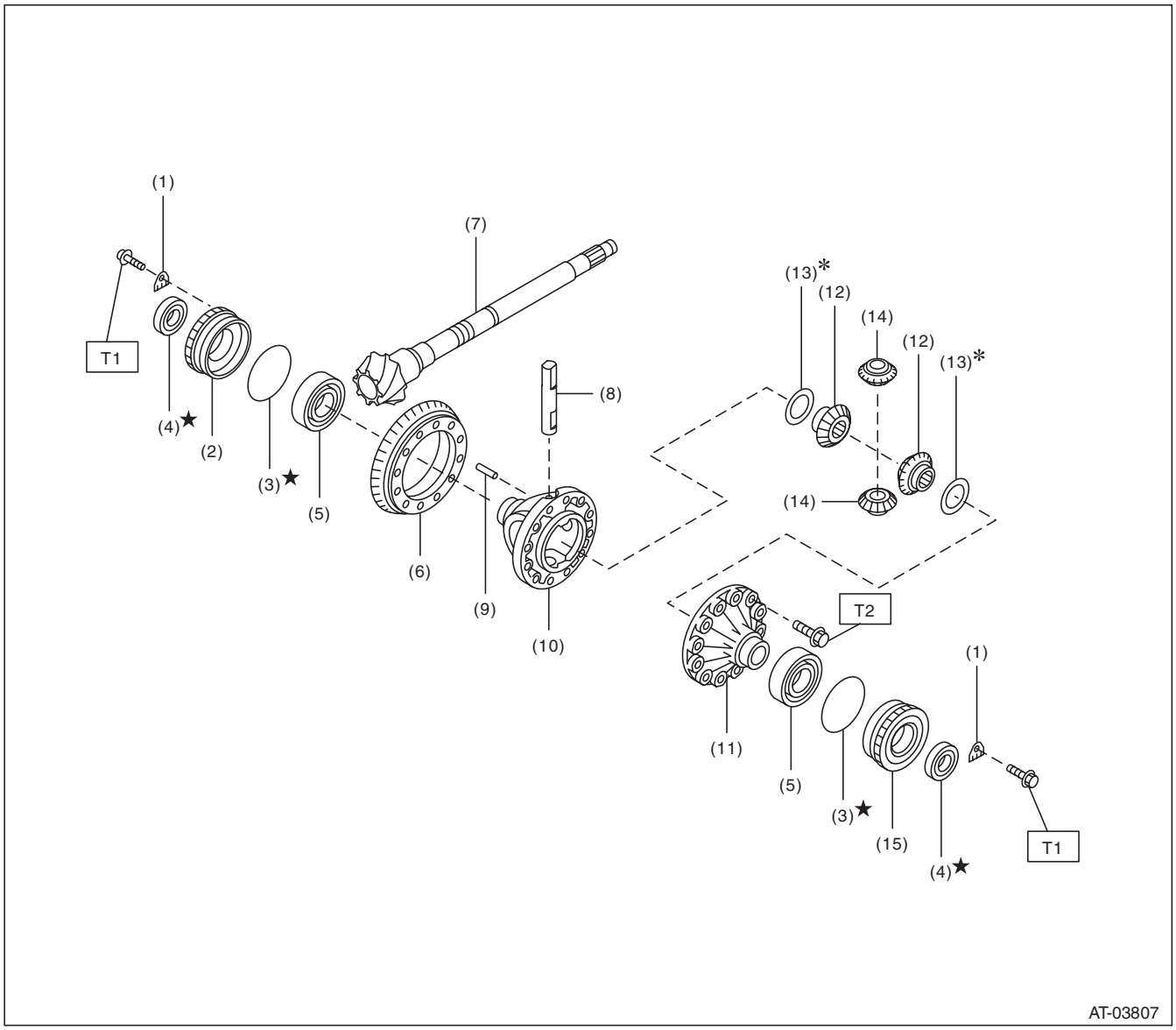

(1)	Retainer lock plate	(9)	Straight pin
(2)	Differential side retainer RH	(10)	Differential case RH
(3)	O-ring	(11)	Differential case LH
(4)	Oil seal	(12)	Differential bevel gear
(5)	Taper roller bearing	(13)	Washer
(6)	Hypoid driven gear	(14)	Differential bevel pinion
(7)	Drive pinion shaft	(15)	Differential side retainer LH
(8)	Pinion shaft		

Tightening torque:N·m (kgf-m, ft-lb)
T1: 25 (2.5, 18.4)
T2: 70 (7.1, 51.6)

GETtheMANUALS.org

9. TRANSFER CASE, EXTENSION CASE & REDUCTION GEAR

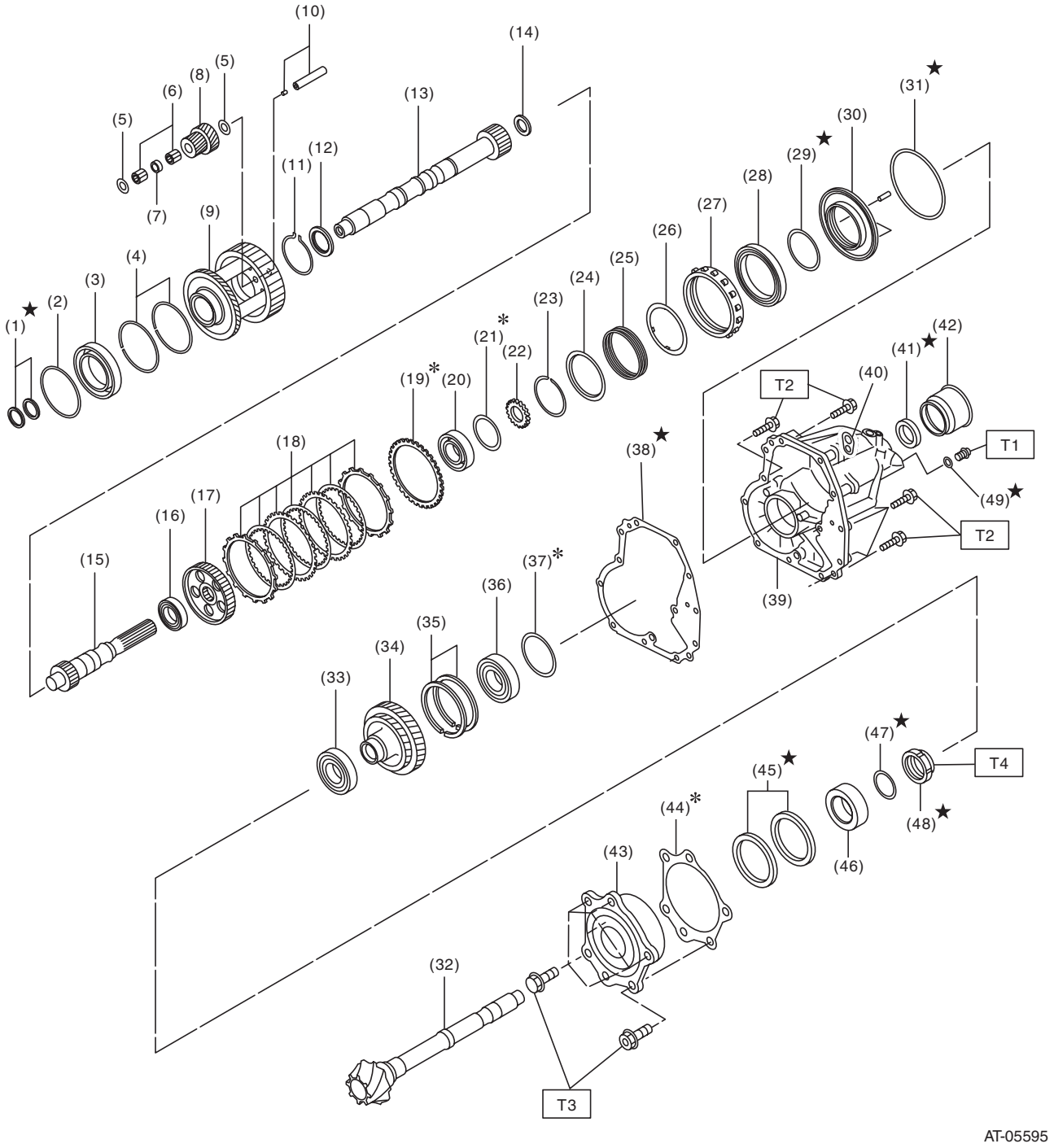

GETtheMANUALS.org

(1) Seal ring
(2) Reduction gear shim
(3) Ball bearing
(4) Snap ring
(5) Planetary pinion washer
(6) Needle bearing
(7) Spacer
(8) Pinion gear
(9) Planetary carrier ASSY
(10) Planetary pinion shaft ASSY
(11) Snap ring
(12) Thrust bearing
(13) Intermediate shaft
(14) Thrust washer
(15) Rear drive shaft
(16) Ball bearing
(17) Transfer clutch hub
(18) Transfer clutch plate
(19) Driven plate No. 3.
(20) Ball bearing
(21) Rear drive shaft shim
(22) Revolution gear
(23) Snap ring
(24) Clutch spring retainer
(25) Return spring
(26) Spring retainer
(27) Pressure plate
(28) Ball bearing
(29) O-ring
(30) Transfer clutch piston
(31) D-ring
(32) Drive pinion shaft
(33) Ball bearing
(34) Reduction driven gear
(35) Snap ring
(36) Ball bearing
(37) Shim
(38) Gasket
(39) Extension case
(40) Transmission hanger
(41) Oil seal
(42) Dust cover
(43) Taper roller bearing
(44) Drive pinion shim
(45) Oil seal
(46) Drive pinion collar
(47) O-ring
(48) Lock nut
(49) O-ring

Tightening torque:N·m (kgf-m, ft-lb)

T1: 13 (1.3, 9.6)
T2: 25 (2.5, 18.4)
T3: 70 (7.1, 51.6)
T4: 116 (11.8, 85.6)

GETtheMANUALS.org

10.TRANSMISSION CONTROL DEVICE & PARKING SUPPORT

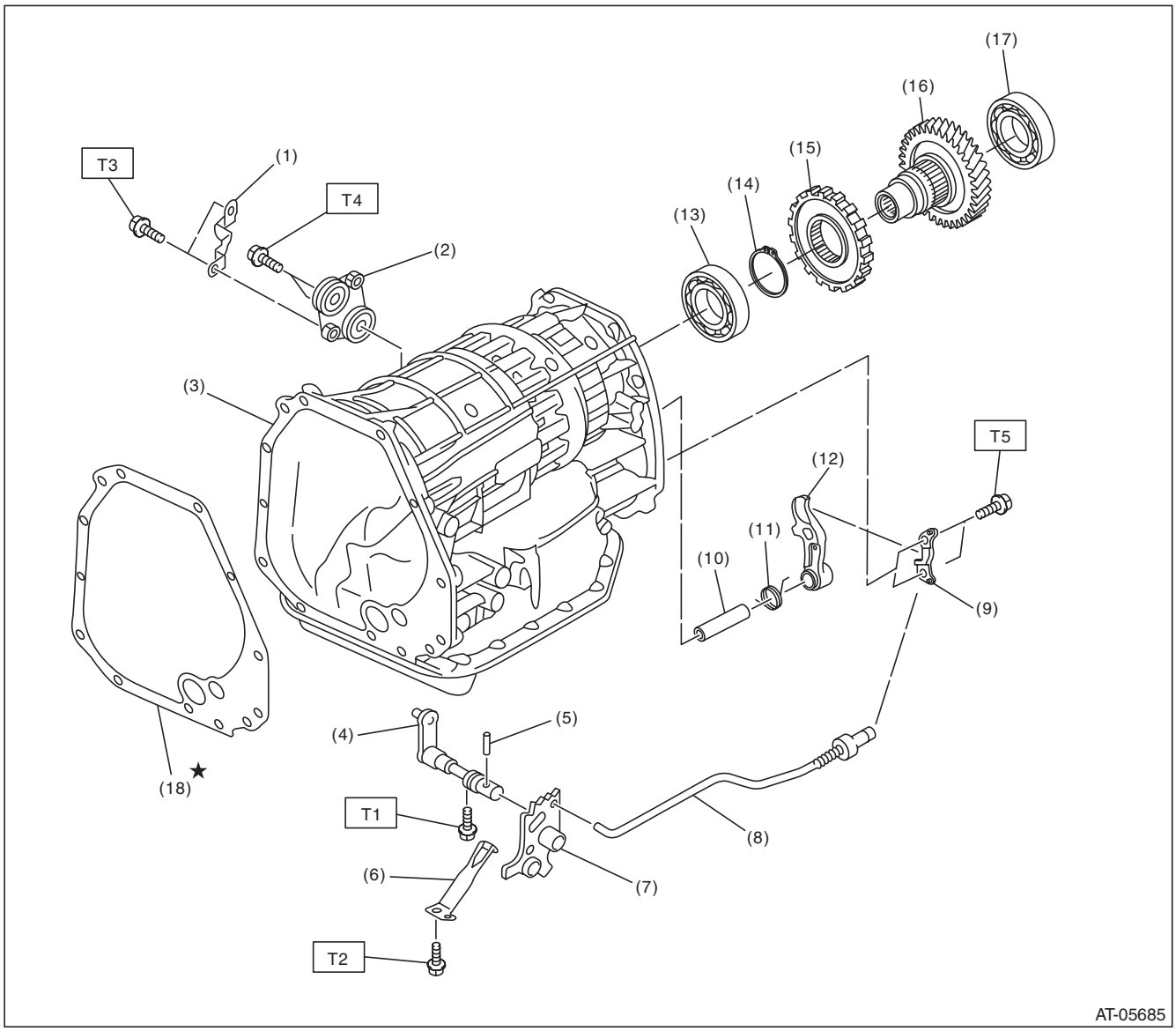

(1)	Bracket	(10)	Parking pawl shaft
(2)	Floating bracket	(11)	Return spring
(3)	AT main case	(12)	Parking pawl
(4)	Range select lever	(13)	Ball bearing
(5)	Straight pin	(14)	Snap ring
(6)	Detent spring	(15)	Parking gear
(7)	Manual plate	(16)	Reduction driven gear
(8)	Parking rod	(17)	Ball bearing
(9)	Parking support actuator	(18)	Gasket

Tightening torque:N·m (kgf-m, ft-lb)

T1: 6 (0.6, 4.4)
T2: 7 (0.7, 5.2)
T3: 18 (1.8, 13.3)
T4: 25 (2.5, 18.4)
T5: <Ref. to 5AT-76, Parking Pawl.>

GETtheMANUALS.org

11.TRANSMISSION CONTROL MODULE

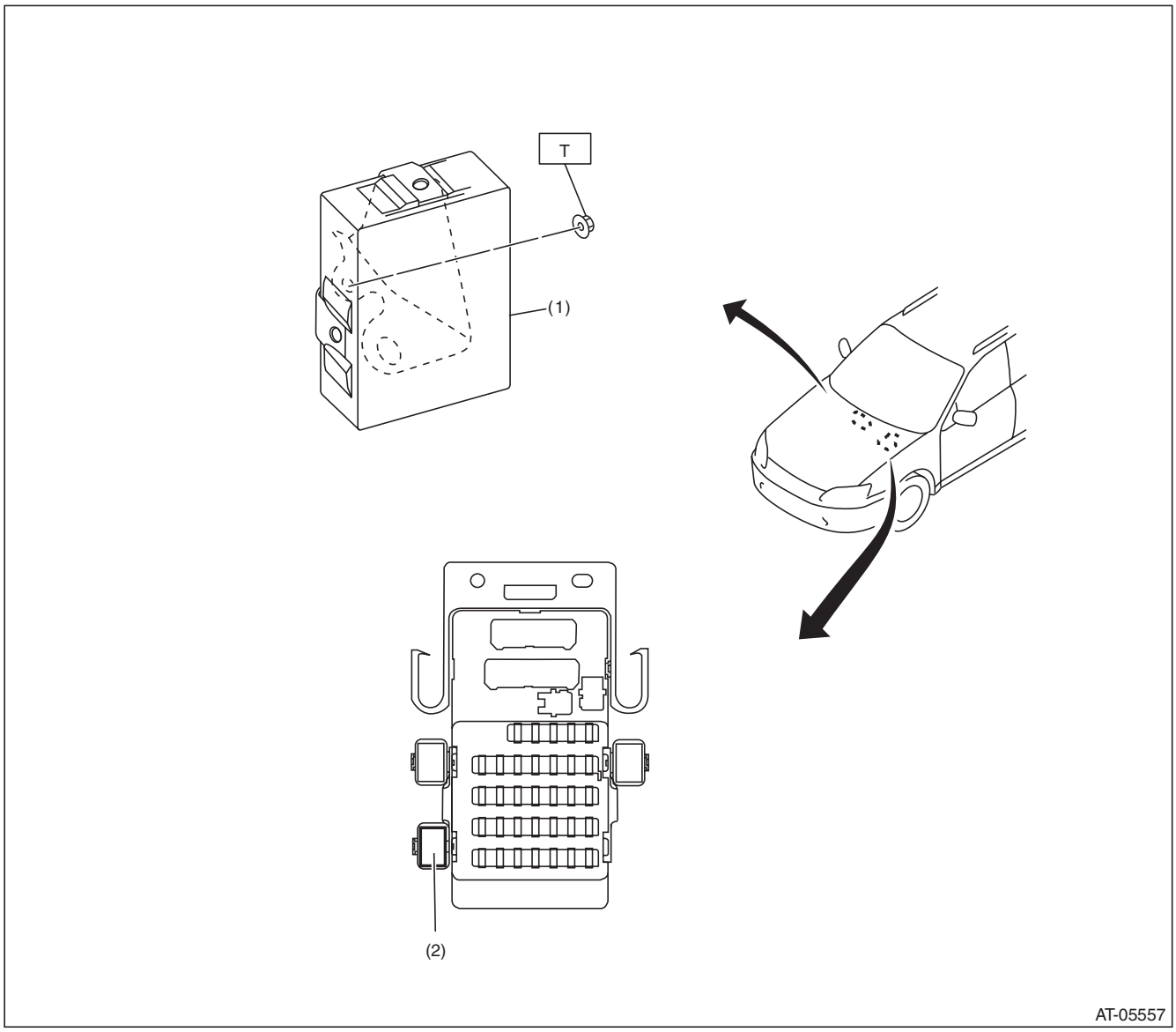

(1)	Transmission control module (TCM)	(2)	Relay	***Tightening torque:N·m (kgf-m, ft-lb)***
				T: 7.5 (0.8, 5.5)

GETtheMANUALS.org

12.TRANSMISSION MOUNTING

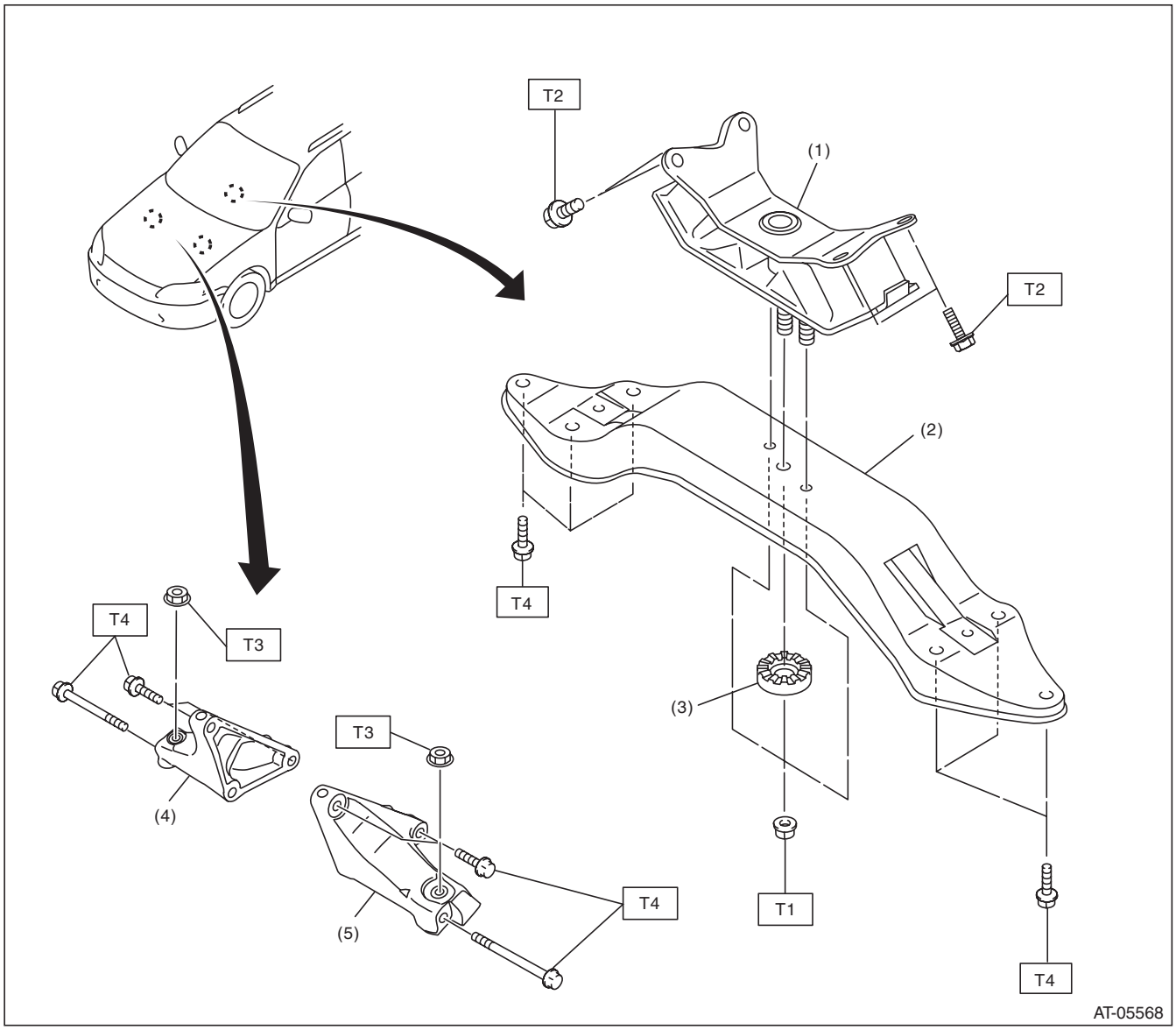

(1)	Rear cushion rubber	(4)	Transmission main mounting bracket (RH)
(2)	Crossmember	(5)	Transmission main mounting bracket (LH)
(3)	Stopper		

Tightening torque:N·m (kgf-m, ft-lb)

T1: 35 (3.6, 25.8)

T2: 40 (4.1, 29.5)

T3: 45 (4.6, 33.2)

T4: 75 (7.6, 55.3)

GETtheMANUALS.org

C: CAUTION

- Wear appropriate work clothing, including a cap, protective goggles and protective shoes when performing any work.
- Remove contamination including dirt and corrosion before removal, installation or disassembly.
- Keep the disassembled parts in order and protect them from dust and dirt.
- Until the oil pan is removed, do not place with the oil pan side facing up to prevent foreign matter from entering the valve body.
- Before removal, installation or disassembly, be sure to clarify the failure. Avoid unnecessary removal, disassembly and replacement.
- When disassembling the case and other light alloy parts, disassemble them by slightly tapping with a plastic hammer. Do not pry apart with screwdrivers or other tools.
- Vehicle components are extremely hot after driving. Be wary of receiving burns from heated parts.
- Use SUBARU genuine gear oil, grease or equivalent. Do not mix them of different grades or manufacturers.
- Be sure to tighten bolts and nuts to the specified torque.
- Place shop jacks or rigid racks at the specified points.
- Apply gear oil onto sliding or revolving surfaces before installation.
- Replace deformed or damaged snap rings with new parts.
- Before installing O-rings or oil seals, apply sufficient amount of ATF fluid to avoid damage and deformation.
- Be careful not to incorrectly install or fail to install O-rings, snap rings and other such parts.
- Before securing a part on a vise, place cushioning material such as wood blocks, aluminum plate, or cloth between the part and the vise.
- Avoid damaging the mating surface of the case.
- Before applying liquid gasket, completely remove the old liquid gasket.
- During disassembly or assembly, be sure to use nylon gloves or paper towels. Do not use cloth gloves or waste cloth.

GETtheMANUALS.org

D: PREPARATION TOOL

1. SPECIAL TOOL

ILLUSTRATION	TOOL NUMBER	DESCRIPTION	REMARKS
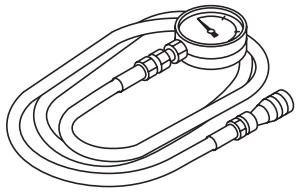 ST-498575400	498575400	OIL PRESSURE GAUGE ASSY	Used for measuring oil pressure.
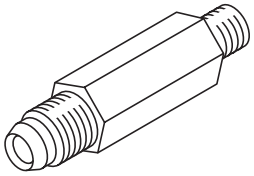 ST-498897200	498897200	OIL PRESSURE ADAPTER	Used together with oil pump cover installed on when measuring line pressure.
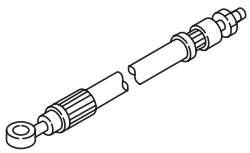 ST-498897800	498897800	OIL PRESSURE ADAPTER SET	Used for measuring the transfer clutch pressure.
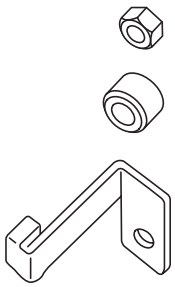 ST-498277200	498277200	STOPPER SET	• Used for removing and installing the automatic transmission assembly. • Used for preventing the torque converter from dropping off.

GETtheMANUALS.org

ILLUSTRATION	TOOL NUMBER	DESCRIPTION	REMARKS
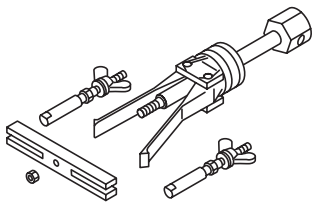 ST-398527700	398527700	PULLER ASSY	• Used for removing the extension oil seal. • Used for removing the front differential side retainer bearing outer race.
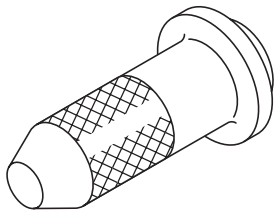 ST-498057300	498057300	INSTALLER	Used for installing the extension oil seal.
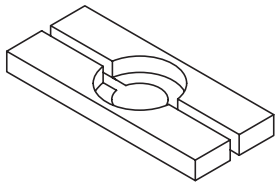 ST-498077000	498077000	REMOVER	• Used for removing the front differential taper roller bearing. • Used for installing the center differential ball bearing.
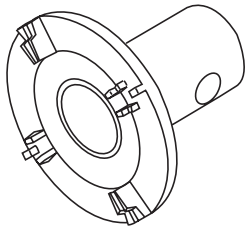 ST18658AA020	18658AA020	WRENCH COMPL RETAINER	• Used for removing and installing the differential side retainer. • WRENCH COMPL RETAINER (18630AA010) can also be used.
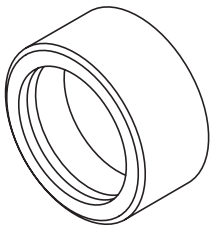 ST-398487700	398487700	DRIFT	Used for installing the front differential taper roller bearing.

GETtheMANUALS.org

ILLUSTRATION	TOOL NUMBER	DESCRIPTION	REMARKS
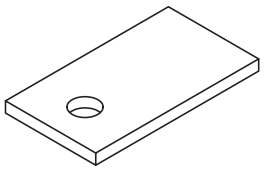 ST-498255400	498255400	PLATE	Used for measuring the backlash of hypoid gear.
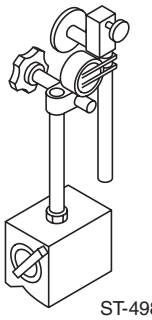 ST-498247001	498247001	MAGNET BASE	• Used for measuring the gear backlash. • Used together with DIAL GAUGE (498247100).
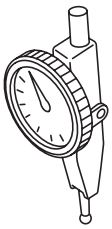 ST-498247100	498247100	DIAL GAUGE	• Used for measuring the gear backlash. • Used together with MAGNET BASE (498247001).
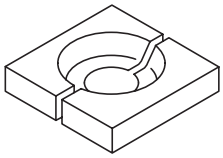 ST-498517000	498517000	REPLACER	Used for removing the drive pinion shaft front roller bearing.
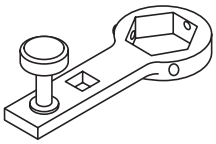 ST-499787700	499787700	WRENCH	• Used for removing and installing the drive pinion shaft lock nut. • Used for adjusting the front differential hypoid gear backlash.

GETtheMANUALS.org

ILLUSTRATION	TOOL NUMBER	DESCRIPTION	REMARKS
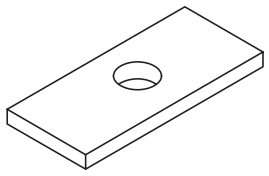 ST-398643600	398643600	GAUGE	Used for measuring total end play, extension end play and drive pinion height.
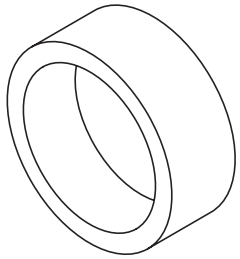 ST-398744300	398744300	PISTON GUIDE	Used for measuring height from mating surface of the main case to pressure plate.
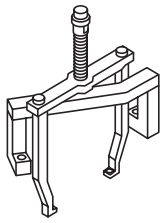 ST-499737100	499737100	PULLER SET	• Used for removing the reduction driven gear assembly. • Used together with GEAR HOLDER (18680AA010) and SUPPORT PULLER (18766AA000).
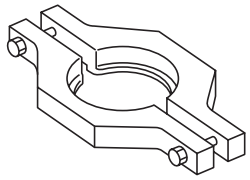 ST-498077600	498077600	REMOVER	Used for removing the center differential ball bearing.
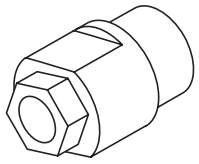 ST18667AA010	18667AA010	HOLDER	• Used for removing and installing the drive pinion lock nut. • Used as a handle to rotate gear when checking tooth contact. • Used for adjusting preload on the front differential side bearing.

GETtheMANUALS.org

ILLUSTRATION	TOOL NUMBER	DESCRIPTION	REMARKS
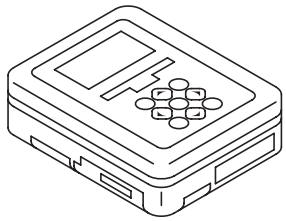 ST1B022XU0	1B022XU0	SUBARU SELECT MONITOR III KIT	Used for troubleshooting the electrical system.
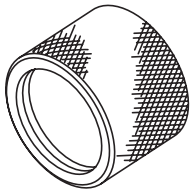 ST18675AA000	18675AA000	DIFFERENTIAL SIDE OIL SEAL INSTALLER	Used for installing the differential side retainer oil seal.
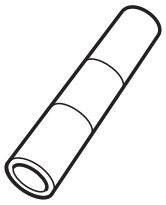 ST18654AA000	18654AA000	INSTALLER	Used for installing the reduction driven gear ball bearing.
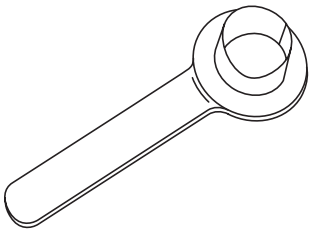 ST28399SA010	28399SA010	OIL SEAL PROTEC-TOR	Used for protecting oil seal when installing front drive shaft.
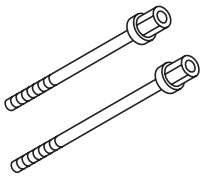 ST18763AA000	18763AA000	COMPRESSOR SHAFT	Used for disassembling and assembling front brake clutch and reverse brake clutch.

GETtheMANUALS.org

ILLUSTRATION	TOOL NUMBER	DESCRIPTION	REMARKS
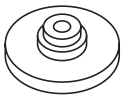 ST18765AA000	18765AA000	COMPRESSOR SUPPORT	Used for disassembling and assembling front brake clutch and reverse brake clutch.
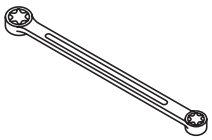 ST18676AA020	18676AA020	TORX® WRENCH	Used for removing and installing the torque converter case.
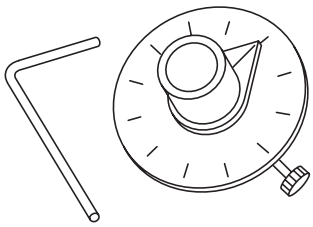 ST18854AA000	18854AA000	ANGLE GAUGE	• Used for tightening parking support. • Used for tightening the drive plate.
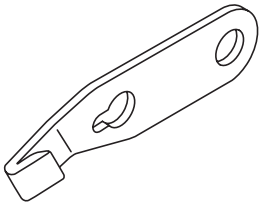 ST-498497100	498497100	CRANKSHAFT STOPPER	Used for stopping the drive plate rotation when removing and installing the drive plate.
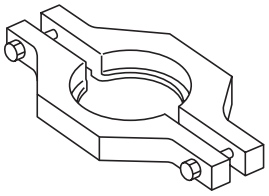 ST-498077300	498077300	REMOVER	Used for removing ball bearing of reduction driven gear.

GETtheMANUALS.org

ILLUSTRATION	TOOL NUMBER	DESCRIPTION	REMARKS
ST-499587100	499587100	OIL SEAL INSTALLER	Used for installing the converter case oil seal.
ST-499787500	499787500	ADAPTER	• Used for installing and removing drive pinion shaft lock nut. • Used for adjusting preload on the front differential side bearing.
ST-499575400	499575400	GAUGE	Used for adjusting the total end play (selecting the reduction driven gear shim).
ST18762AA000	18762AA000	COMPRESSOR SPECIAL TOOL	• Used for disassembling and assembling front brake clutch and reverse brake clutch. • Used together with COMPRESSOR SHAFT (18763AA000) and COMPRESSOR SUPPORT (18765AA000).
ST-499755602	499755602	PRESS	Used for installing the parking gear.

GETtheMANUALS.org

ILLUSTRATION	TOOL NUMBER	DESCRIPTION	REMARKS
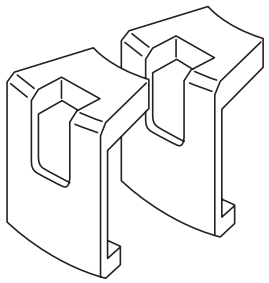 ST18680AA010	18680AA010	GEAR HOLDER	Used for removing the reduction driven gear assembly. (2-piece set)
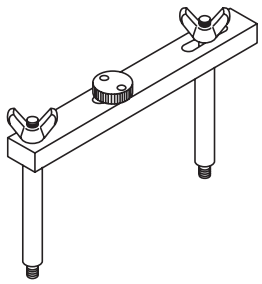 ST18766AA000	18766AA000	SUPPORT PULLER	Used for removing the reduction driven gear assembly.
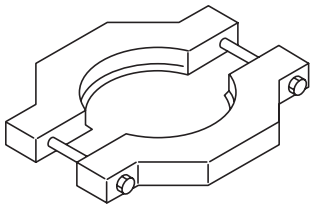 ST18767AA000	18767AA000	REMOVER	Used for removing the parking gear.
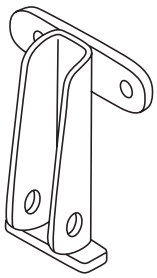 ST41099AJ010	41099AJ010	SPECIAL TOOL H6	• Used for removing and installing transmission. • For H6 engine.
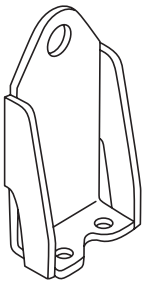 ST18360AA020	18360AA020	HANGER	• Used for removing and installing transmission. • For H6 engine.

GETtheMANUALS.org

ILLUSTRATION	TOOL NUMBER	DESCRIPTION	REMARKS
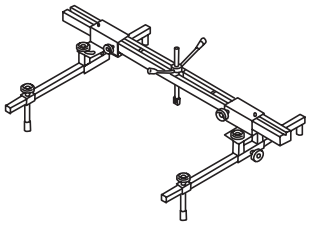 ST99099AJ000	99099AJ000	ENGINE HANGER	• Used for removing and installing transmission. • Used together with CHAIN BALANCER (99099AJ010) and sling chain (general tool).
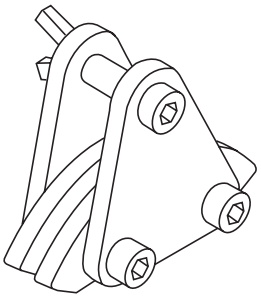 ST99099AJ010	99099AJ010	CHAIN BALANCER	• Used for removing and installing transmission. • Used together with ENGINE HANGER (99099AJ000) and sling chain (general tool). • Used to hang the engine while balancing it with the sling chain inserted in this tool.

2. GENERAL TOOL

TOOL NAME	REMARKS
Depth gauge	Used for measuring the transmission end play.
Thickness gauge	Used for measuring clearance of the clutch, brake and oil pump.
Micrometer	Used for measuring thickness of the drive pinion.
Spring scale	Used for measuring the starting torque of the drive pinion.
Circuit tester	Used for measuring resistance and voltage.
TORX® T70	Used for removing and installing the differential gear oil drain plug.
Snap ring pliers	Used for removing and installing each snap ring.
Sling chain	Used for removing and installing transmission. • Length: 0.8 — 1 m (2.6 — 3.3 ft) • Load capacity: 1.2 t (2646 lb) or more • Diameter: 6 mm (0.24 in) or 6.3 mm (0.25 in) • Chain external width: 23.5 mm (0.93 in) or less • Chain internal width: 8.5 mm (0.33 in) or more
Screw shackle	Used for removing and installing transmission. • Load capacity: 250 kg (551 lb) or more • Use two pieces.

GETtheMANUALS.org

2. Automatic Transmission Fluid

A: INSPECTION

NOTE:
The level of ATF varies with fluid temperature. Pay attention to the ATF temperature when checking ATF level.

1) Raise the ATF temperature by driving a distance of 5 to 10 km (3 to 6 miles). Otherwise, idle the engine to raise ATF temperature to 70 — 80°C (158 — 176°F) on Subaru Select Monitor. <Ref. to 5AT(diag)-18, Read Current Data.>
2) Park the vehicle on a level surface.
3) After selecting all positions (P, R, N, D), set the select lever in “P” range. Idle the engine for 1 to 2 minutes.
4) Remove the oil level gauge and wipe it clean.
5) Reinsert the level gauge all the way. Make sure the level gauge is inserted correctly and in the proper orientation.
6) Remove the oil level gauge again and make sure that the ATF level is between upper and lower marks of the HOT side.

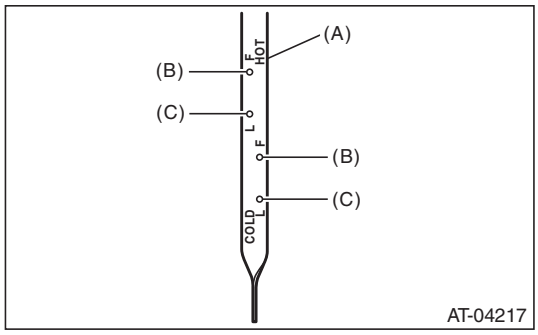

(A) ATF level gauge
(B) Upper level
(C) Lower level

7) If the ATF level is below the lower mark, add recommended ATF until the fluid level is between upper and lower marks.

CAUTION:
- **Be careful not to exceed the upper level.**
- **When the transmission is cold, be careful not to add ATF to the upper level on HOT side. Overfilling of ATF may cause oil splashing.**

8) Check the ATF for leaks.
Visually check for leaks in the transmission. If there are leaks, replace the gasket, oil seal, plug or other parts.

B: REPLACEMENT

1) Lift up the vehicle.
2) Remove the ATF drain plug to drain ATF.

CAUTION:
- **Directly after the vehicle has been running or the engine has been long idle running, the ATF is hot. Be careful not to burn yourself.**
- **Be careful not to spill the ATF on the exhaust pipe to prevent it from emitting smoke or causing fire. If ATF is spilled on the exhaust pipe, wipe it off completely.**

3) Check the ATF condition. <Ref. to 5AT-30, CONDITION CHECK, Automatic Transmission Fluid.>
4) Tighten the ATF drain plug.

NOTE:
Use a new gasket.

Tightening torque:
20 N·m (2.0 kgf-m, 14.8 ft-lb)

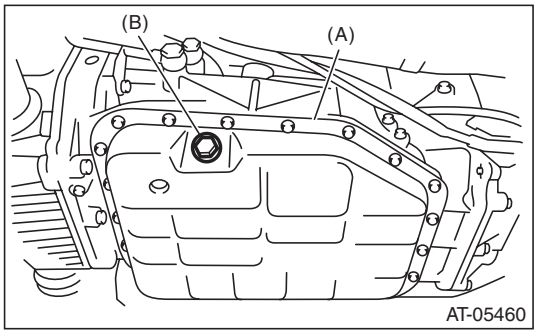

(A) Oil pan
(B) ATF drain plug

5) Lower the vehicle.
6) Pour ATF from the oil charge pipe.

Recommended fluid:
<Ref. to 5AT-3, HYDRAULIC CONTROL AND LUBRICATION, SPECIFICATION, General Description.>

CAUTION:
Be sure to use the recommended or equivalent ATF. Using material except recommended one or substitute would cause trouble.

Capacity:
Fill with the same amount of ATF as drained.

Capacity when transmission is overhauled:
9.6 — 10.0 ℓ (10.1 — 10.6 US qt, 8.4 — 8.8 Imp qt)

7) Check the level and leaks of ATF. <Ref. to 5AT-29, INSPECTION, Automatic Transmission Fluid.>

GETtheMANUALS.org

C: CONDITION CHECK

NOTE:
When replacing ATF, check the inside condition of transmission body by inspecting the drained ATF.

Fluid condition	Trouble and possible cause	Corrective action
Large amount of metallic pieces are found.	Internal metal parts of transmission body are excessively worn.	Replace ATF and check if AT operates correctly.
Is thick and is a varnish-form fluid.	Clutch etc. is burned.	Replace ATF and check the AT body or vehicle for faulty.
Clouded fluid or bubbles are found in fluid.	Water is mixed.	Replace ATF and check the water entering point.

GETtheMANUALS.org

3. Differential Gear Oil

A: INSPECTION

1) Park the vehicle on a level surface.
2) Remove the collector cover.

NOTE:
Follow the steps below when removing the collector cover.
(1) Pull up the two points at the rear (A).
(2) Pull up the two points at the front (B) while moving them forward.

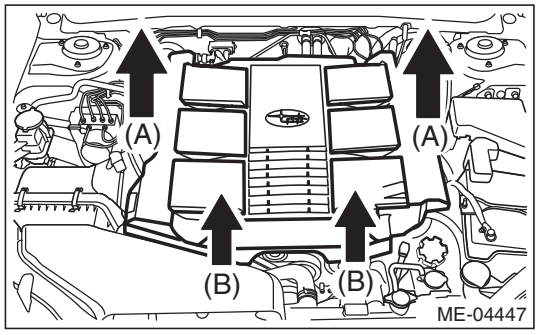

3) Remove the oil level gauge and wipe it clean.
4) Reinsert the level gauge all the way. Make sure the level gauge is inserted correctly and in the proper orientation.
5) Remove the oil level gauge again, and check the level of differential gear oil. If the oil level is below “L” line, add oil to bring the level up to “F” line.

NOTE:
To prevent overfilling the differential gear oil, do not add oil above the “F” line.

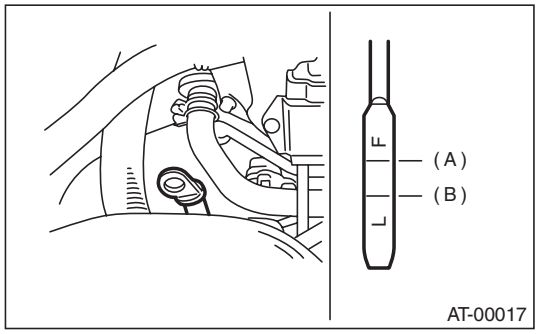

(A) Upper level
(B) Lower level

B: REPLACEMENT

1) Lift up the vehicle.
2) Drain the differential gear oil by removing drain plug using TORX® bit T70.

CAUTION:
- **Immediately after the vehicle has been running or after idling for a long time, the differential gear oil will be hot. Be careful not to burn yourself.**
- **Be careful not to spill differential gear oil on the exhaust pipe to prevent it from emitting smoke or causing a fire. If differential gear oil is spilled on the exhaust pipe, wipe it off completely.**

3) Tighten the drain plug using TORX® bit T70.

NOTE:
Use a new gasket.

Tightening torque:
70 N·m (7.1 kgf-m, 51.6 ft-lb)

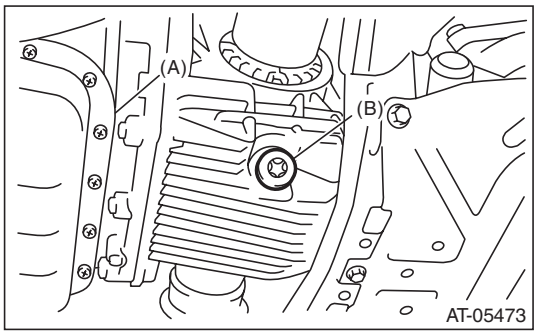

(A) Oil pan
(B) Drain plug

4) Lower the vehicle.
5) Pour gear oil into the level gauge hole.

Recommended gear oil:
<Ref. to 5AT-4, RECOMMENDED GEAR OIL, SPECIFICATION, General Description.>

Gear oil capacity:
1.3 — 1.5 ℓ (1.4 — 1.6 US qt, 1.1 — 1.3 Imp qt)

6) Check the level of differential gear oil. <Ref. to 5AT-31, INSPECTION, Differential Gear Oil.>

GETtheMANUALS.org

4. Road Test

A: INSPECTION

1. GENERAL PRECAUTION

Road tests should be conducted to properly diagnose the condition of automatic transmission.

NOTE:
When performing the test, do not exceed posted speed limit.

2. D RANGE SHIFT FUNCTION

Check shifting between 1st ←→ 2nd ←→ 3rd ←→ 4th ←→ 5th while driving on normal city streets.

3. D RANGE SHIFT SHOCK

Check the shock level when shifting up during normal driving.

4. KICK-DOWN FUNCTION

Check kick-down for each gear. Check the shock level during kick-down at the same time.

5. ENGINE BRAKE OPERATION

- Check the 4th gear engine brake when shifting down from 5th to 4th range while driving in 5th gear of manual mode [50 to 60 km/h (31 to 37 MPH)].
- Check the 3rd gear engine brake when shifting down from 4th to 3rd range while driving in 4th gear of manual mode [50 — 60 km/h (31 — 37 MPH)].
- Check the 2nd gear engine brake when shifting down from 3rd to 2nd range while driving in 3rd gear of manual mode [40 — 50 km/h (25 — 31 MPH)].
- Check the 1st gear engine brake when shifting down from 2nd to 1st range while driving in 2nd gear of manual mode [20 — 30 km/h (12 — 19 MPH)].

6. LOCK-UP FUNCTION

When the accelerator is lightly depressed while driving on a flat road in lock-up range, check that rpm does not change abruptly.

7. P RANGE OPERATION

Stop the vehicle on an uphill grade of 5% or more and shift to the “P” range. Check that the vehicle does not move when the parking brake is released.

8. NOISE AND VIBRATION

Check for noise and vibration while driving and during shifting.

9. OIL LEAKAGE

After the driving test, inspect for oil leaks from the transmission body.

GETtheMANUALS.org

5. Stall Test

A: INSPECTION

NOTE:
The stall test is extremely important in diagnosing the condition of an automatic transmission and engine. The test is necessary to measure the engine stall speeds in “2nd gear of manual mode”.
Purposes of the stall test:
- Operational check of the automatic transmission clutch
- Operational check of the torque converter clutch
- Engine performance check

1) Check that the throttle valve fully opens.
2) Check that the engine oil level is correct.
3) Check that the coolant level is correct.
4) Check that the ATF level is correct.
5) Check that the differential gear oil level is correct.
6) Raise the ATF temperature to 70 to 80°C (158 to 176°F) by driving a distance of 5 to 10 km (3 to 6 miles). Confirm the ATF temperature on Subaru Select Monitor. <Ref. to 5AT(diag)-18, Read Current Data.>
7) Place the wheel chocks at the front and rear of all wheels and apply the parking brake.
8) Move the select lever to ensure it operates properly, then set to “2nd gear of manual mode”.
9) While stepping hard on the brake pedal, gradually step on the accelerator pedal.
10) When the engine speed is stabilized, quickly record the engine speed and release accelerator pedal.
11) Shift the select lever to “N” range, and cool down the engine by idling it for one minute or more.

NOTE:
- Do not perform a stall test for over 5 seconds at a time. (Perform with the throttle from fully closed to fully open to end up reading the stall speed.) Doing so will make the engine oil and ATF deteriorate and the clutch and brake to be adversely affected.
- After performing the stall test, be sure to cool down the engine for at least one minute with the select lever set in “P” or “N” range, and at an idle speed of 1,200 rpm or less.
- If the stall speed is higher than the specified range, attempt to finish the stall test in as short a time as possible, in order to prevent the automatic transmission from sustaining damage.
- Perform the stall test in S mode.
- When depressing the accelerator pedal again after performing the stall test for 5 seconds or more, the electronic throttle control remains closed for approx. 60 seconds.
- When the stall test is performed for 15 seconds or more continuously, the test is completed forcibly to protect the transmission unit.

When depressing the accelerator pedal again, the electronic throttle control remains closed for approx. 60 seconds.

Stall speed (at sea level):
2,100 — 2,600 rpm

Stall speed (at sea level)	Range	Possible faulty parts
Over specified value	2nd gear of manual mode	• Line pressure too low • Forward brake • Direct clutch • 3rd one-way clutch

GETtheMANUALS.org

6. Time Lag Test

A: INSPECTION

NOTE:
When the select lever is shifted while the engine is idling, there will be a certain time elapse or lag before shock is felt. Using this, check the condition of forward brake, reverse brake, 1st one-way clutch and 3rd one-way clutch.

- Perform the test at normal operation fluid temperature of 70 — 80°C (158 — 176°F).
- Be sure to allow one minute or more interval between tests.
- Make three measurements and take the average value.

1) Fully apply the parking brake.
2) Start the engine.
Check the idle speed. (A/C OFF)
3) Shift the select lever from “N” to “D” range. Using a stop watch, measure the time-lag from shifting the lever until the shock is felt.

Time-lag
Standard: 1.2 seconds or less

If “N” → “D” time-lag is longer than specification:

- Line pressure too low
- Forward brake worn
- One-way clutch not operating properly

4) In the same manner, measure the time lag of “N” → “R”.

Time-lag
Standard: 1.5 seconds or less

If “N” → “R” time lag is longer than specification:

- Line pressure too low
- Reverse brake worn

GETtheMANUALS.org

7. Line Pressure Test

A: MEASUREMENT

NOTE:
If the clutch or brake shows a sign of slippage, or shifting interval is not correct, check the line pressure.
- Excessive shock during up-shift may be due to the line pressure being too high.
- In many cases, slippage or inability to operate the vehicle may be due to insufficient oil pressure for the operation of clutch, brake or control valve.

1) Lift up the vehicle.
2) Remove the test plug and install the ST.
ST 498897200 OIL PRESSURE ADAPTER

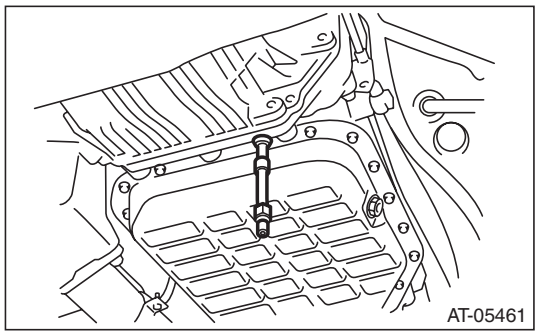

3) Set the ST1 and ST2.
ST1 498897200 OIL PRESSURE ADAPTER
ST2 498575400 OIL PRESSURE GAUGE ASSY
4) Lower the vehicle, and pull ST2, which were set in step 3), into the vehicle.
5) Connect the Subaru Select Monitor to the data link connector and read the current data. <Ref. to 5AT(diag)-18, Read Current Data.>
6) Perform line pressure test in the same manner as the stall test.

NOTE:
- Do not perform the line pressure test for 5 seconds or more at a time. Doing so will make the engine oil and ATF deteriorate and the clutch and brake to be adversely affected.
- After performing the line pressure test, be sure to cool down the engine for at least one minute with the select lever set in “P” or “N” range and with the idle speed at 1,200 rpm or less.

Range of the select lever	Accelerator pedal opening angle	ATF temperature condition	“P/L Solenoid Pressure” displayed on the Subaru Select Monitor kPa	Standard line pressure kPa (kg/cm^2, psi)
2nd gear of manual mode	Full closed	45 — 55°C (113 — 131°F)	350 — 500	Target pressure (displayed on Subaru Select Monitor) –10 — +190 (Target pressure –0.10 — +1.94, Target pressure –1.45 — +27.5)
	Full open		2,000 or more	1,320 — 1,520 (13.46 — 15.50, 191.4 — 220.4)
R	Full open		1,600 or more	1,660 — 1,860 (16.93 — 18.97, 240.7 — 269.7)

7) Remove the ST and install the test plug.

NOTE:
Use new O-rings.

Tightening torque:
13 N·m (1.3 kgf-m, 9.6 ft-lb)

GETtheMANUALS.org

8. Transfer Clutch Pressure Test

A: INSPECTION

1) Lift up the vehicle.
2) Remove the bolts holding the heat shield cover, and move the heat shield cover to the rear.
3) Remove the test plug and install the ST.

CAUTION:
Be careful not to cut yourself on the heat shield cover when removing the test plugs and setting the ST.

ST 498897800 OIL PRESSURE ADAPTER SET

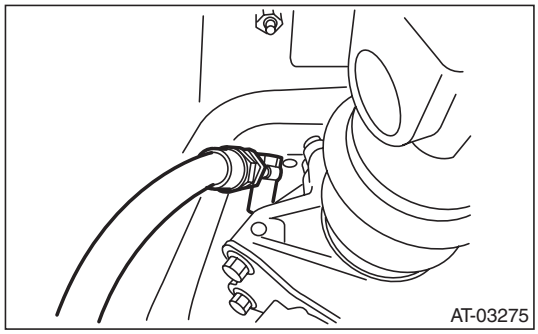

4) Set the ST.

ST 498575400 OIL PRESSURE GAUGE ASSY

5) Lower the vehicle, and pull ST, which were set in step 4), into the vehicle.
6) Connect the Subaru Select Monitor to the data link connector and read the current data. <Ref. to 5AT(diag)-18, Read Current Data.>
7) Perform the transfer clutch pressure test in the same manner as the line pressure test.

NOTE:
- Do not perform the transfer clutch pressure test for 5 seconds or more at a time. Doing so will make the engine oil and ATF deteriorate and the clutch and brake to be adversely affected.
- After performing the transfer clutch pressure test, be sure to cool down the engine for at least one minute with the select lever set in the “P” or “N” range, and at an idle speed of 1,200 rpm or less.
- Adjust the accelerator pedal opening angle in order to obtain the “T/F solenoid target pressure” displayed on the Subaru Select Monitor.

Range of the select lever	Accelerator pedal opening angle	ATF temperature condition	“T/F Solenoid Target Pressure” displayed on the Subaru Select Monitor kPa	Standard transfer clutch pressure kPa (kg/cm^2, psi)
2nd gear of manual mode	Partial throttle	45 — 55°C (113 — 131°F)	400	300 — 500 (3.06 — 5.10, 43.5 — 72.5)
N	Full closed		0	0 — 50 (0 — 0.51, 0 — 7.2)

8) Remove the ST and install the test plug.

NOTE:
Use new O-rings.

Tightening torque:
13 N·m (1.3 kgf-m, 9.6 ft-lb)

9) Install the heat shield cover. <Ref. to EI-168, INSTALLATION, Heat Shield Cover.>

GETtheMANUALS.org

9. Automatic Transmission Assembly

A: REMOVAL

1) Remove the front wheels.
2) Fully open the front hood.
3) Disconnect the ground cable from battery.
4) Remove the collector cover.

NOTE:
Follow the steps below when removing the collector cover.
(1) Pull up the two points at the rear (A).
(2) Pull up the two points at the front (B) while moving them forward.

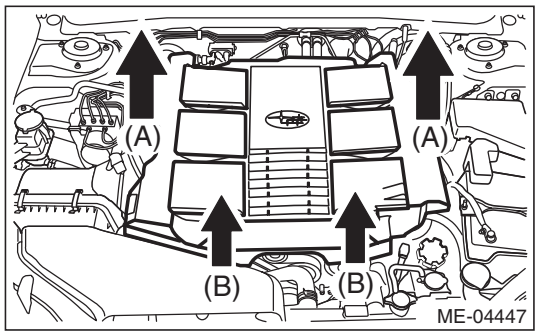

5) Remove the air intake duct. <Ref. to IN(H6DO)-8, REMOVAL, Air Intake Duct.>
6) Remove the 10 clips and detach the grille bracket.

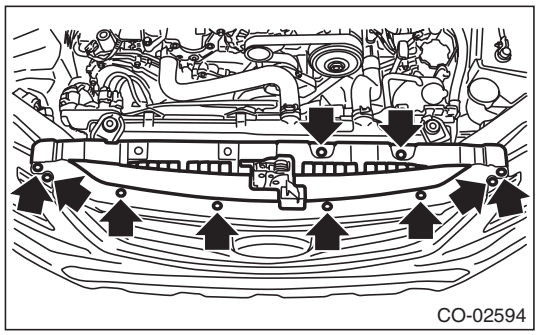

7) Remove the air intake boot. <Ref. to IN(H6DO)-7, REMOVAL, Air Intake Boot.>

8) Disconnect the following connectors.

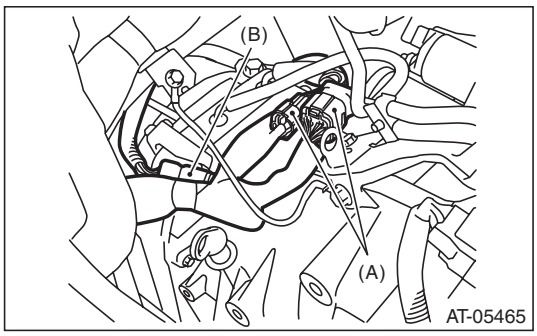

(A) Transmission harness connectors
(B) Front oxygen (A/F) sensor

9) Remove the transmission radio ground terminal.

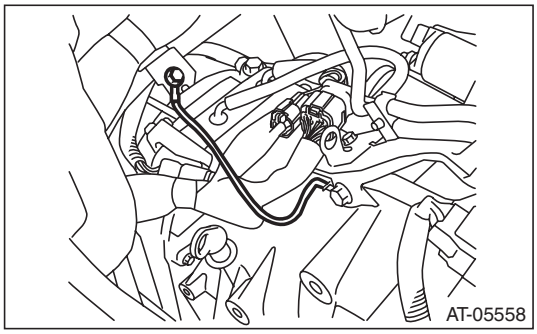

10) Remove the air breather hose. <Ref. to 5AT-61, REMOVAL, Air Breather Hose.>
11) Remove the starter. <Ref. to SC(H4SO)-9, REMOVAL, Starter.>
12) Remove the engine hanger rear.

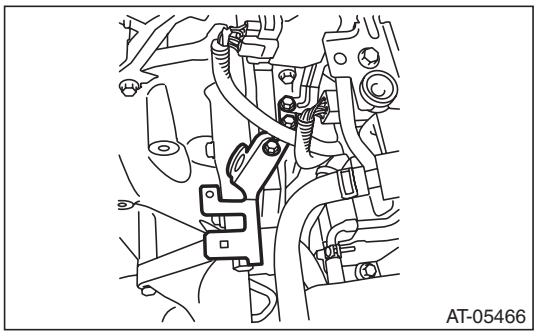

13) Separate the torque converter from drive plate.

CAUTION:
- **Be careful not to drop bolts into converter housing.**
- **Be careful not to damage the mounting bolts.**

(1) Remove the service hole plug.
(2) Remove the bolts which hold torque converter to drive plate.
(3) Remove the four bolts by rotating the crank pulley a little at a time.

GETtheMANUALS.org

(4) Make sure the torque converter moves freely by rotating with finger through the starter installation hole.

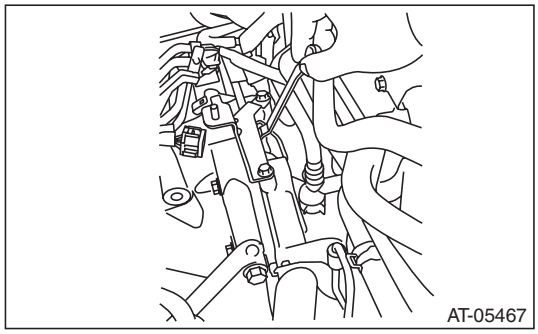

14) Attach the ST to the converter case.
ST 498277200 STOPPER SET

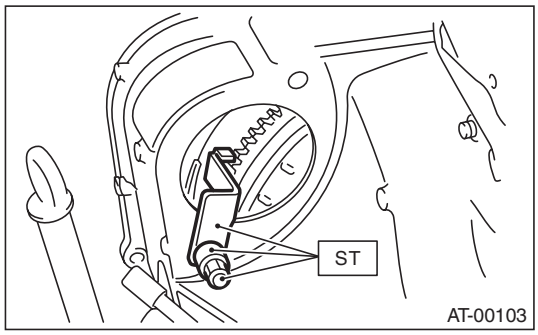

15) Attach the ST to the engine.

Tightening torque:
19 N·m (1.9 kgf-m, 14.0 ft-lb)
ST 18360AA020 HANGER

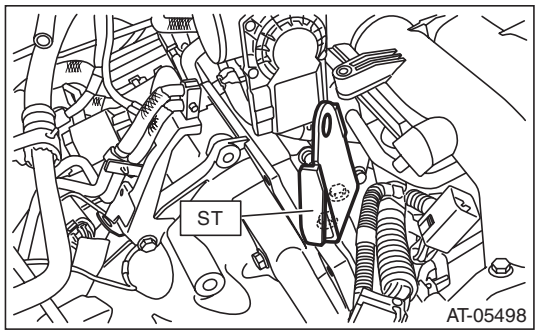

16) Lift up the vehicle.
17) Remove the under cover. <Ref. to EI-35, REMOVAL, Front Under Cover.>
18) Remove the front and rear exhaust pipes. <Ref. to EX(H6DO)-5, REMOVAL, Front Exhaust Pipe.> <Ref. to EX(H6DO)-8, REMOVAL, Rear Exhaust Pipe.>
19) Remove the heat shield cover.

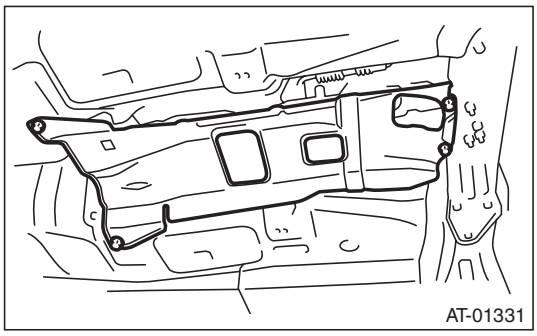

20) Remove the steering shaft universal joint. <Ref. to PS-21, REMOVAL, Universal Joint.>
21) Remove the ATF drain plug to drain ATF.

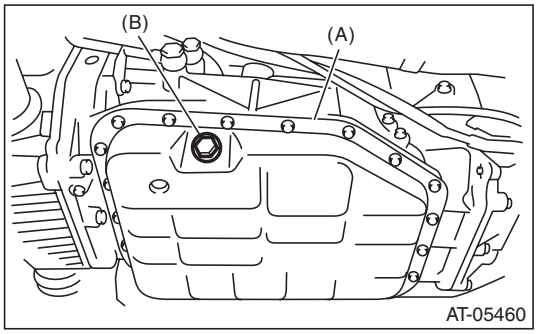

(A) Oil pan
(B) ATF drain plug

22) Remove the oil charge pipe.

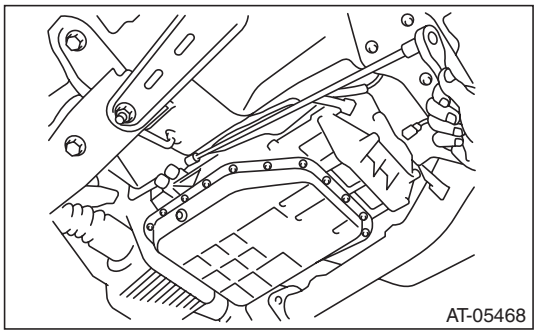

23) Disconnect the connector from turbine speed sensor 1.

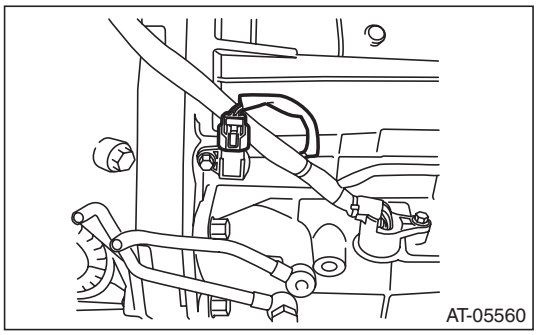

GETtheMANUALS.org

24) Remove the turbine speed sensor 1 mounting bolt and rotate the sensor by 180°.

CAUTION:
Failure to follow this procedure may cause the interference between vehicle body and sensor while removing/installing transmission, and resulting in damage.

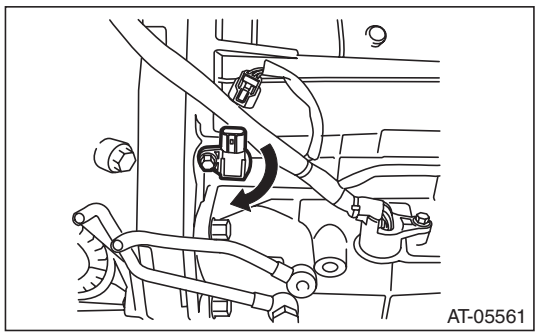

25) Remove the propeller shaft. <Ref. to DS-10, REMOVAL, Propeller Shaft.>
26) Remove the select cable. <Ref. to CS-42, REMOVAL, Select Cable.>
27) Disconnect the ATF AT inlet and outlet hoses from the ATF cooler inlet and outlet pipes.

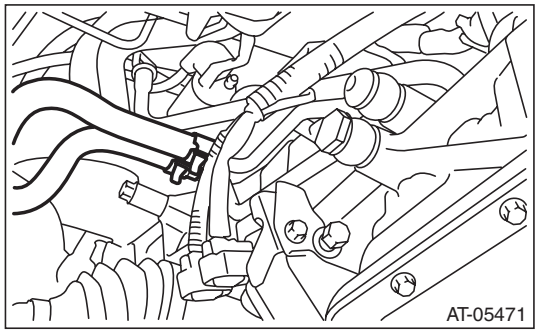

28) Remove the front stabilizer bracket. <Ref. to FS-29, REMOVAL, Front Stabilizer.>
29) Remove the bolts which secure front ball joint to the housing. <Ref. to FS-32, REMOVAL, Front Ball Joint.>
30) Pull out the drive shaft from transmission.
31) Lower the vehicle.

32) Remove the nuts connecting the engine mounting and the transmission main mounting bracket.

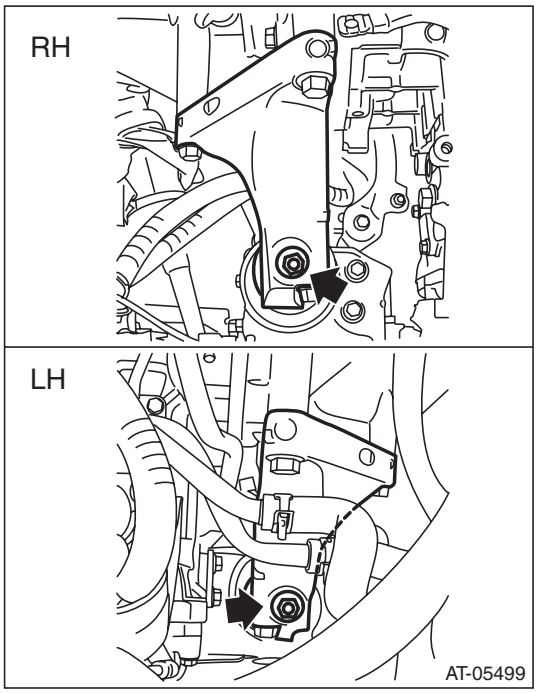

33) Remove the radiator upper brackets.

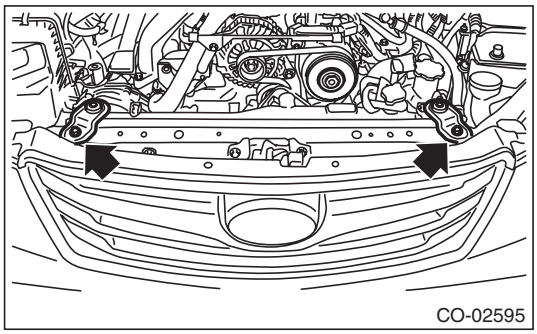

GETtheMANUALS.org

34) Set the ST on the vehicle.

CAUTION:
- **Set the ST so that the chain does not contact the sensor and other parts while hanging the engine.**
- **Set the arms of ST (ENGINE HANGER) at the locations shown in the figure.**

ST1 99099AJ000 ENGINE HANGER
ST2 99099AJ010 CHAIN BALANCER

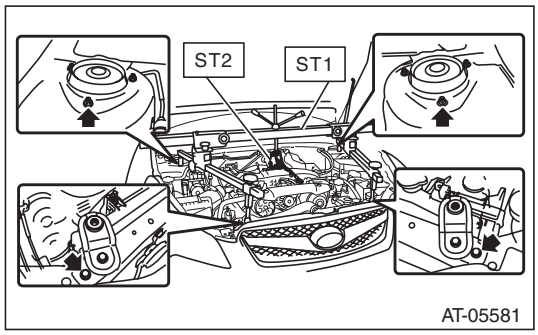

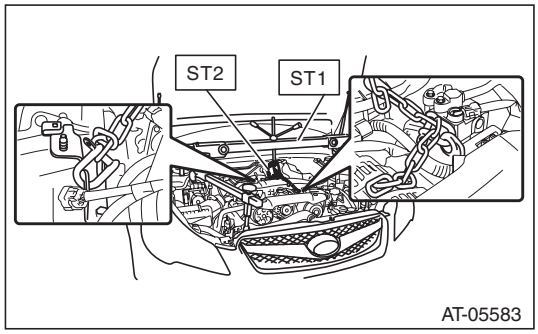

35) Lift up the radiator approximately by 30 mm (1.2 in) and keep the position with cloth or other material placed under the radiator.

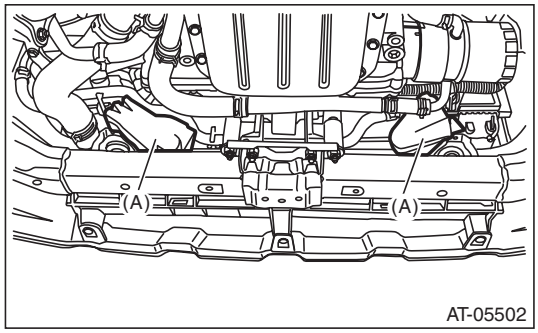

(A) Cloth

36) Lift the engine slightly and remove the engine mounting bolts.

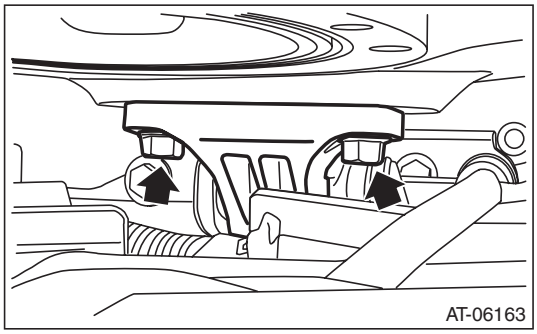

37) Remove the engine mounting nut and bolt to remove the engine mounting.
38) Temporarily attach ST by using two bolts.
ST 41099AJ010 SPECIAL TOOL H6

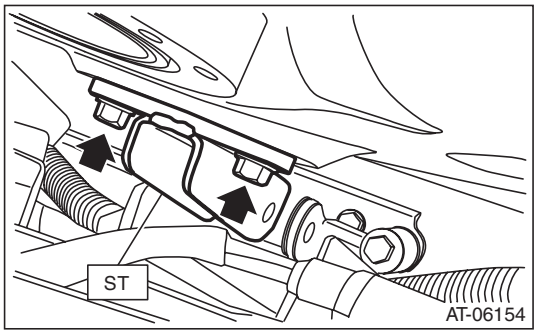

39) Lift up the engine unit high enough to install the bolt and nut to vehicle.

CAUTION:
- **Do not lift up higher than enough level to install the ST to avoid damage to the hoses and pipes inside the engine room.**
- **Do not tighten the nuts excessively, or the engine mounting bracket may be deformed.**

NOTE:
- If it is difficult to pull out the stud bolt from transmission mounting bracket, shake the engine unit slightly while lifting up.

40) Tighten the mounting bolts on the engine side.

Tightening torque:
25 N·m (2.5 kgf-m, 18.4 ft-lb)

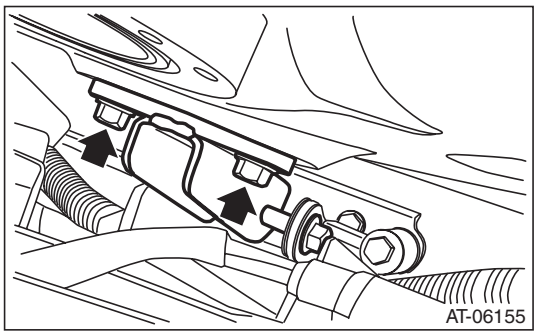

41) Remove the ST (ENGINE HANGER).

GETtheMANUALS.org

42) Remove the transmission main mounting bracket.

NOTE:
First, remove the transmission mounting bracket on the right side of vehicle, and then tilt the engine unit to remove the left transmission mounting bracket.

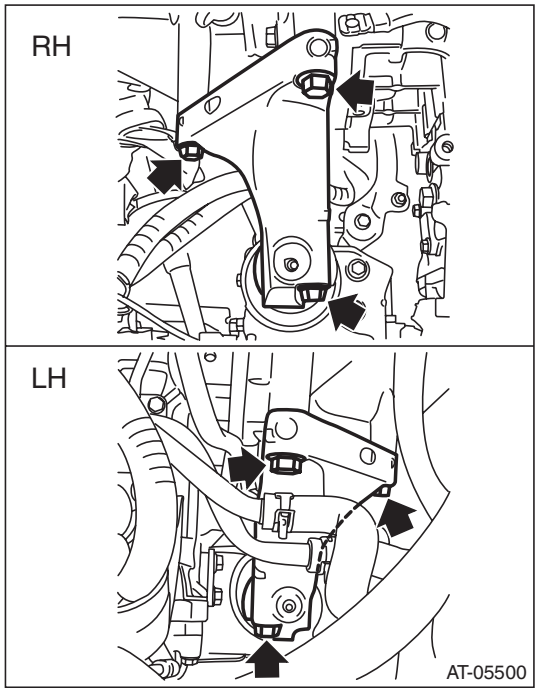

43) Remove the transmission mounting bolt (upper side).

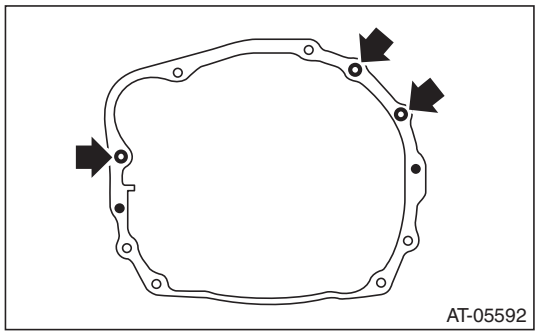

44) Set the ST (ENGINE HANGER) again to loosen the chain sling.
45) Lift up the vehicle.

46) Set the transmission jack under the transmission.

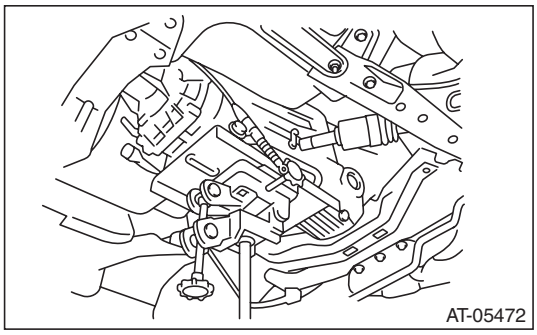

47) Remove the rear crossmember from the vehicle.

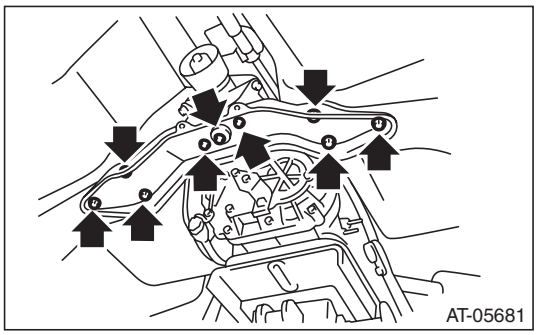

48) Lower the transmission rear end (dust cover rear end).

CAUTION:
When lowering the transmission rear end, be careful not to let the converter case and steering mechanical parts contact each other.

NOTE:
Lower the transmission rear end by approx. 80 mm (3.1 in) (reference).
49) Rotate the handle of ST (ENGINE HANGER) to apply tension to the chain sling.
50) Remove the transmission mounting bolt and nut (lower side).

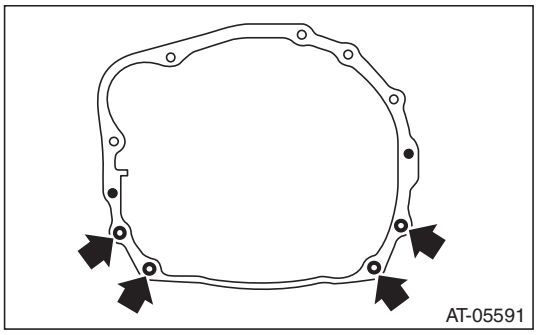

51) Remove the transmission.
52) Remove the cushion rubber from the transmission.

GETtheMANUALS.org

B: INSTALLATION

1) Replace the front differential side retainer oil seal.
   (1) Remove the oil seal by using flat tip screwdriver etc.
   (2) Using the ST, install the oil seal by lightly tapping with a plastic hammer.

NOTE:
- Use a new oil seal.
- Check the identification marks (L, R) during installation not to mix up the oil seal RH and LH.
- Apply gear oil to the oil seal lips.
- Be sure to replace the differential side retainer oil seal whenever the front drive shaft is removed from the transmission.

ST 18675AA000 DIFFERENTIAL SIDE OIL SEAL INSTALLER

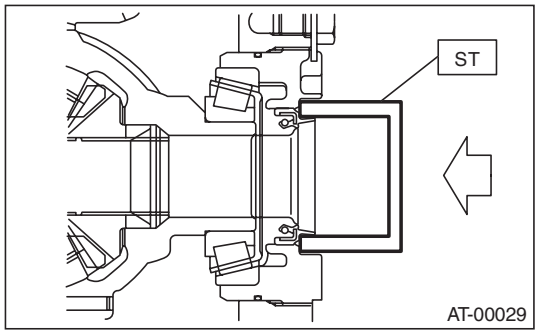

2) Attach the ST to converter case.

ST 498277200 STOPPER SET

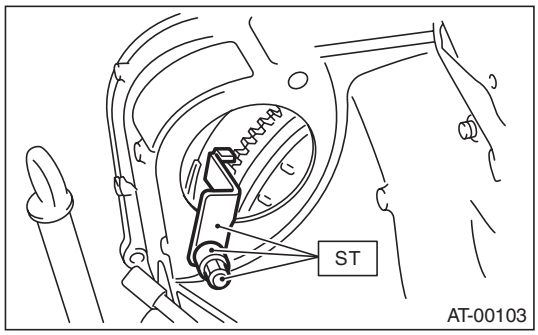

3) Install the cushion rubber on the transmission.

Tightening torque:
40 N·m (4.1 kgf-m, 29.5 ft-lb)

4) Tap the transmission hanger in the rear side of transmission with a rubber hammer to bend it until it is in close contact with the transmission case.

CAUTION:
Do not apply excessive load or impact to the transmission case.

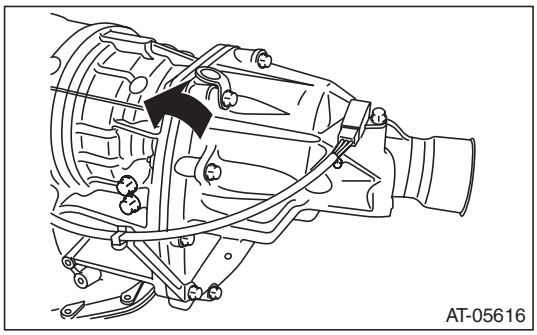

5) While lifting up the transmission gradually using transmission jack, install the transmission to the engine.

CAUTION:
This operation requires at least two persons.

NOTE:
Keep the engine level.

6) Install the engine mounting bolt and nut (lower side).

Tightening torque:
50 N·m (5.1 kgf-m, 36.9 ft-lb)

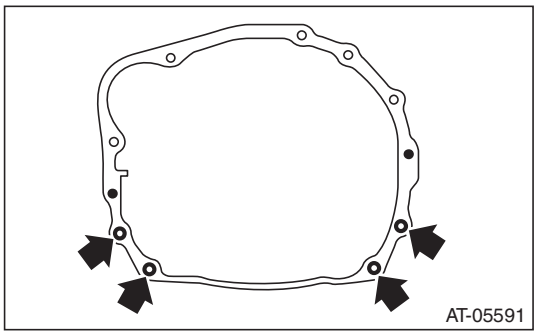

7) Install the transmission rear crossmember.

Tightening torque:
T1: 35 N·m (3.6 kgf-m, 25.8 ft-lb)
T2: 75 N·m (7.6 kgf-m, 55.3 ft-lb)

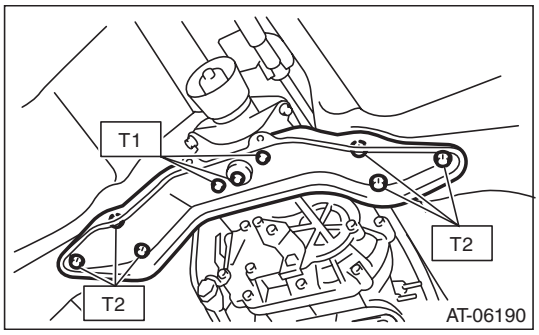

GETtheMANUALS.org

8) Remove the transmission jack.
9) Lower the vehicle.
10) Install the engine mounting bolt (upper side).

Tightening torque:
50 N·m (5.1 kgf-m, 36.9 ft-lb)

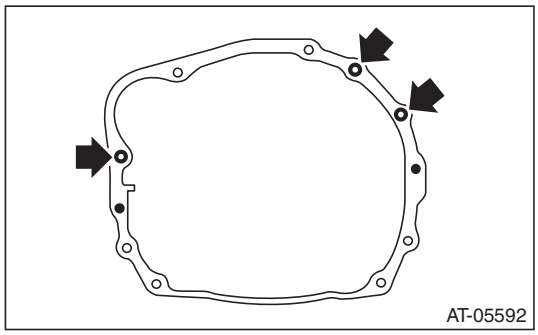

11) Remove the ST (ENGINE HANGER).
12) Install the transmission main mounting bracket.

NOTE:
Install to the left side of vehicle first.

Tightening torque:
75 N·m (7.6 kgf-m, 55.3 ft-lb)

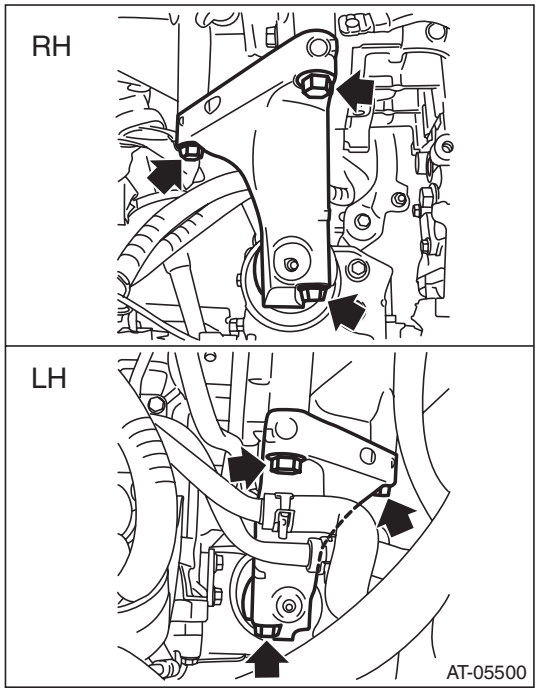

13) Attach the ST (ENGINE HANGER) again.
14) Remove the ST and install the front cushion rubber.

(1) Lift up the radiator approximately by 30 mm and keep the position with cloth or other material placed under the radiator.

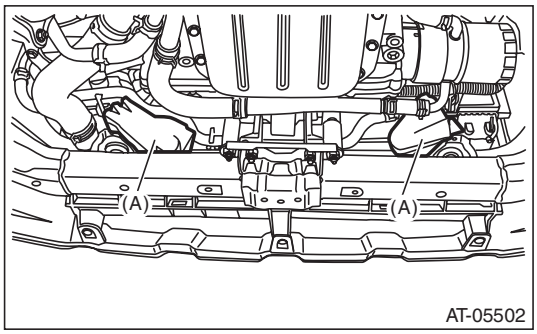

(A) Cloth

(2) Remove the bolts from ST (SPECIAL TOOL H6).

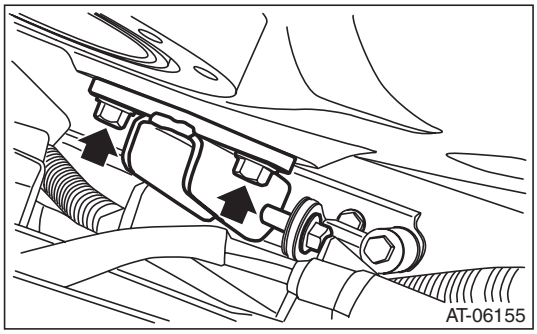

(3) Remove the bolt and nut to remove ST (SPECIAL TOOL H6).
(4) Temporarily attach the front cushion rubber with bolts.

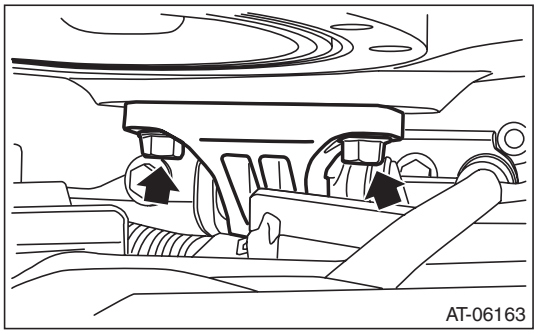

GETtheMANUALS.org

(5) Install the bolt and nut to the front engine mounting.

NOTE:
Always start tightening from the bolts on the engine side.

Tightening torque:
T1: 25 N·m (2.5 kgf-m, 18.4 ft-lb)
T2: 45 N·m (4.6 kgf-m, 33.2 ft-lb)

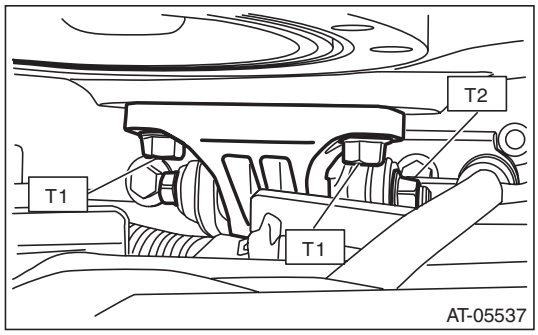

(6) Insert the lower radiator pin into the radiator lower cushion on the vehicle side, and install the radiator upper bracket.

Tightening torque:
12 N·m (1.2 kgf-m, 8.9 ft-lb)

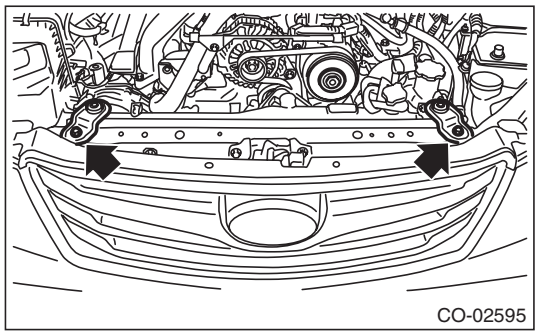

15) Remove the ST from the vehicle.

16) Tighten the nuts connecting the engine mounting and the transmission main mounting bracket.

Tightening torque:
45 N·m (4.6 kgf-m, 33.2 ft-lb)

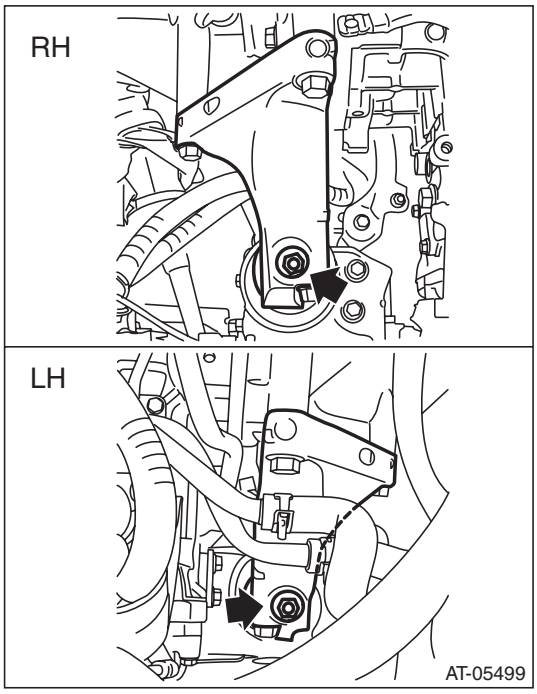

17) Remove the ST from converter case.
18) Install the torque converter to drive plate.

CAUTION:
- **Be careful not to drop bolts into the converter housing.**
- **Be careful not to damage the mounting bolts.**

(1) Install the bolts which connect the torque converter and drive plate.
(2) Install all four bolts by rotating the crank pulley a little at a time.
(3) Install the service hole plug.

Tightening torque:
25 N·m (2.5 kgf-m, 18.4 ft-lb)

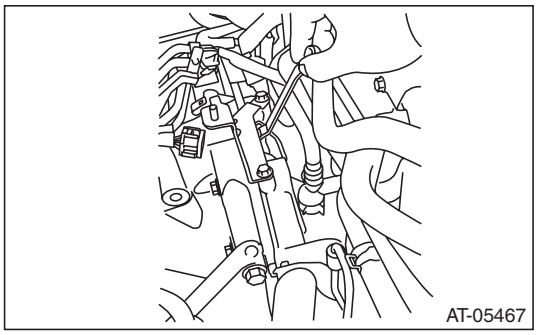

19) Install the starter. <Ref. to SC(H4SO)-10, INSTALLATION, Starter.>
20) Lift up the vehicle.

GETtheMANUALS.org

21) Set the ST to side retainer.
ST 28399SA010 OIL SEAL PROTECTOR

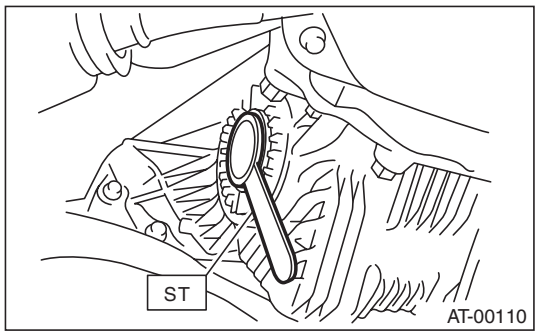

22) Install the front drive shaft into the transmission. <Ref. to DS-49, INSTALLATION, Front Drive Shaft.>
23) Connect the ATF AT inlet and outlet hoses to the ATF cooler inlet and outlet pipes.

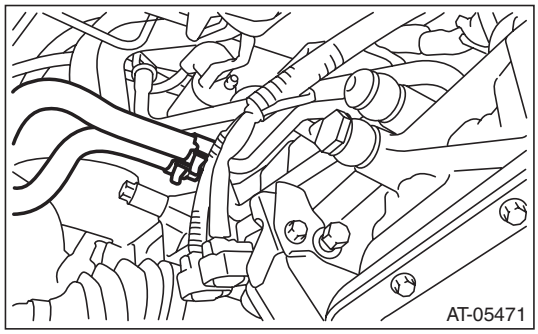

24) Insert the ball joint into housing. <Ref. to FS-33, INSTALLATION, Front Ball Joint.>
25) Install the front stabilizer bracket. <Ref. to FS-31, INSTALLATION, Front Stabilizer.>
26) Install the propeller shaft. <Ref. to DS-11, INSTALLATION, Propeller Shaft.>
27) Install the select cable. <Ref. to CS-46, INSTALLATION, Select Cable.>
28) Rotate the turbine speed sensor 1 by 180° and then restore it to the original position to install. Then, connect the connector.

Tightening torque:
7 N·m (0.7 kgf-m, 5.2 ft-lb)

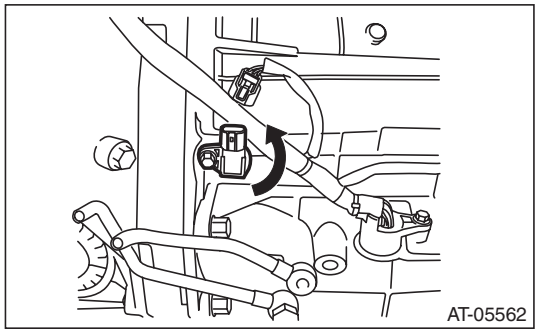

29) Install the oil charge pipe.

NOTE:
Use new bolts and O-rings.

Tightening torque:
38 N·m (3.9 kgf-m, 28.0 ft-lb)

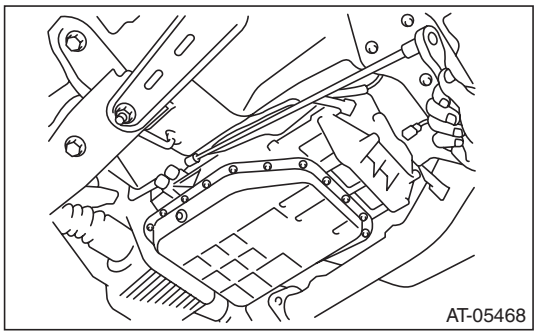

30) Install the steering shaft universal joint. <Ref. to PS-22, INSTALLATION, Universal Joint.>
31) Install the heat shield cover. <Ref. to EI-168, INSTALLATION, Heat Shield Cover.>
32) Install the front and rear exhaust pipe. <Ref. to EX(H6DO)-6, INSTALLATION, Front Exhaust Pipe.> <Ref. to EX(H6DO)-8, INSTALLATION, Rear Exhaust Pipe.>
33) Install the under cover. <Ref. to EI-35, INSTALLATION, Front Under Cover.>
34) Lower the vehicle.
35) Remove the ST and install the engine hanger rear.

Tightening torque:
19 N·m (1.9 kgf-m, 14.0 ft-lb)

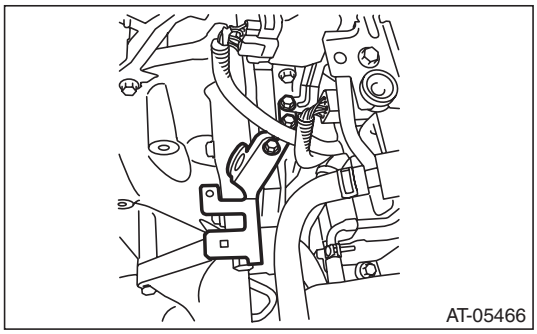

GETtheMANUALS.org

36) Connect the following connectors.

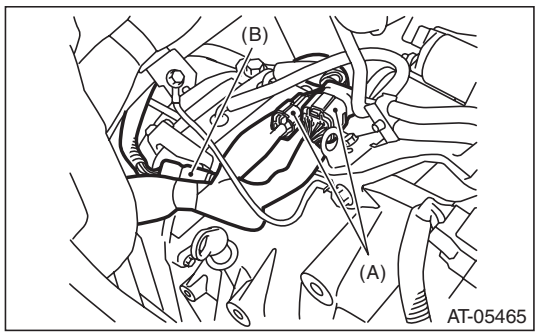

(A) Transmission harness connectors
(B) Front oxygen (A/F) sensor

37) Install the transmission radio ground terminal.

Tightening torque:
13 N·m (1.3 kgf-m, 9.6 ft-lb)

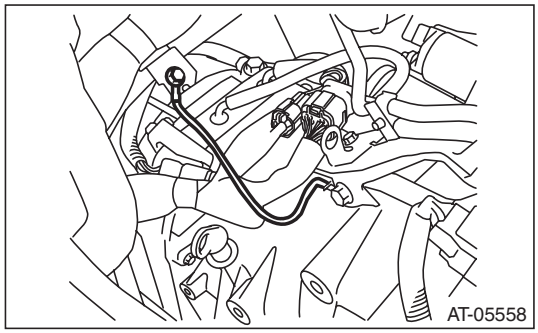

38) Pour ATF from the oil charge pipe. <Ref. to 5AT-29, Automatic Transmission Fluid.>
39) Install the air breather hose. <Ref. to 5AT-61, INSTALLATION, Air Breather Hose.>
40) Install the air intake boot. <Ref. to IN(H6DO)-7, INSTALLATION, Air Intake Boot.>
41) Attach the grille bracket.

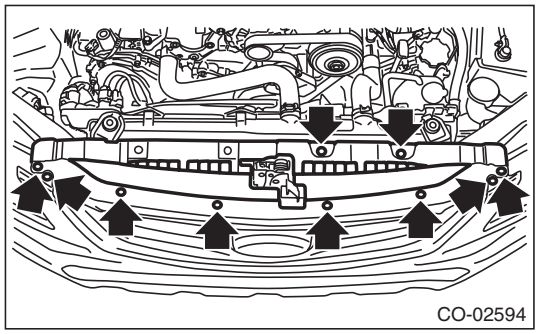

42) Install the air intake duct. <Ref. to IN(H6DO)-8, INSTALLATION, Air Intake Duct.>
43) Install the collector cover.
44) Connect the battery ground terminal.
45) Check the ATF level. <Ref. to 5AT-29, INSPECTION, Automatic Transmission Fluid.>
46) Perform Clear Memory 2 operation. <Ref. to 5AT(diag)-21, Clear Memory Mode.>
47) Perform the diagnosis again. <Ref. to 5AT(diag)-23, Learning Control.>
48) Perform the inspection at the end of repair work, and make sure there is no faulty as below;
- Excessive shift shock
- Oil leakage from the transmission body, etc.
- Occurrence of noise caused by interference etc.

GETtheMANUALS.org

10. Transmission Mounting System

A: REMOVAL

1. TRANSMISSION REAR CROSSMEMBER & REAR CUSHION RUBBER

1) Disconnect the ground cable from battery.
2) Lift up the vehicle.
3) Remove the under cover. <Ref. to EI-35, REMOVAL, Front Under Cover.>
4) Remove the front exhaust pipe. <Ref. to EX(H6DO)-5, REMOVAL, Front Exhaust Pipe.>
5) Remove the heat shield cover.

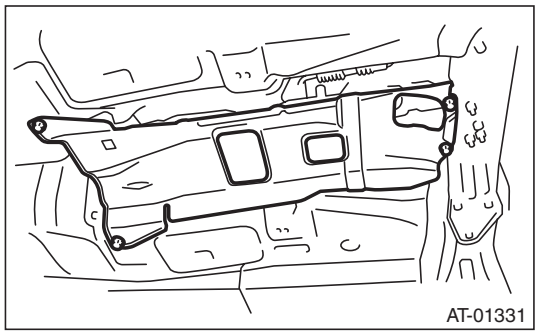

6) Set the transmission jack under transmission. Make sure that the support plate of transmission jack does not touch the oil pan.
7) Remove the transmission rear crossmember.

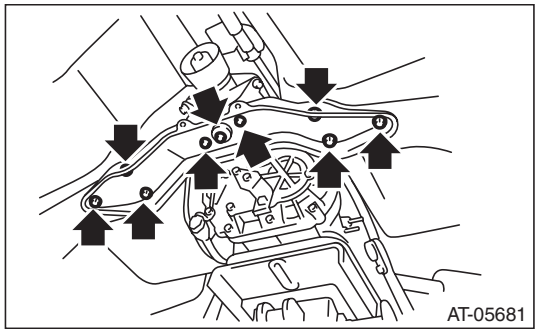

8) Remove the rear cushion rubber.

B: INSTALLATION

1. TRANSMISSION REAR CROSSMEMBER & REAR CUSHION RUBBER

1) Install the rear cushion rubber.

Tightening torque:
40 N·m (4.1 kgf-m, 29.5 ft-lb)

2) Install the crossmember.

Tightening torque:
T1: 35 N·m (3.6 kgf-m, 25.8 ft-lb)
T2: 75 N·m (7.6 kgf-m, 55.3 ft-lb)

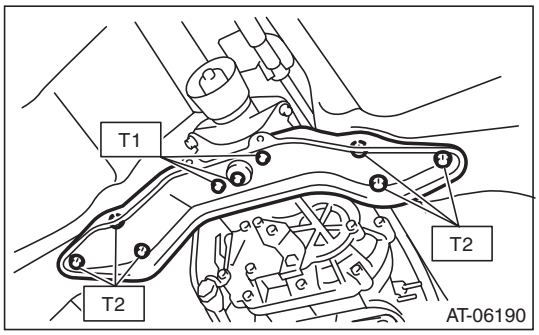

3) Remove the transmission jack.
4) Install the heat shield cover. <Ref. to EI-168, INSTALLATION, Heat Shield Cover.>
5) Install the front exhaust pipe. <Ref. to EX(H6DO)-6, INSTALLATION, Front Exhaust Pipe.>
6) Install the under cover. <Ref. to EI-35, INSTALLATION, Front Under Cover.>
7) Lower the vehicle.
8) Connect the battery ground terminal.

C: INSPECTION

Repair or replace parts if the results of the inspection below are not satisfied.

1. TRANSMISSION REAR CROSSMEMBER & REAR CUSHION RUBBER

Check crossmember for bends or damage. Check that there are no cracks, hardening, or damage on cushion rubbers.

GETtheMANUALS.org

11. Extension Case Oil Seal

A: INSPECTION

Inspect there is no ATF leakage from the joint of transmission and propeller shaft. If a leak is found, replace the oil seal. <Ref. to 5AT-48, REPLACEMENT, Extension Case Oil Seal.>

B: REPLACEMENT

1) Lift up the vehicle.
2) Clean the transmission exterior.
3) Remove the ATF drain plug to drain ATF.

CAUTION:
- **Directly after the vehicle has been running or the engine has been long idle running, the ATF is hot. Be careful not to burn yourself.**
- **Be careful not to spill the ATF on the exhaust pipe to prevent it from emitting smoke or causing fire. If ATF is spilled on the exhaust pipe, wipe it off completely.**

4) Tighten the ATF drain plug.

NOTE:
Use a new gasket.

Tightening torque:
20 N·m (2.0 kgf-m, 14.8 ft-lb)

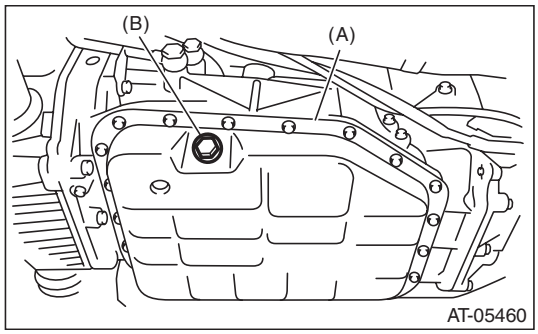

(A) Oil pan
(B) ATF drain plug

5) Remove the rear exhaust pipe. <Ref. to EX(H6DO)-8, REMOVAL, Rear Exhaust Pipe.>
6) Remove the heat shield cover.

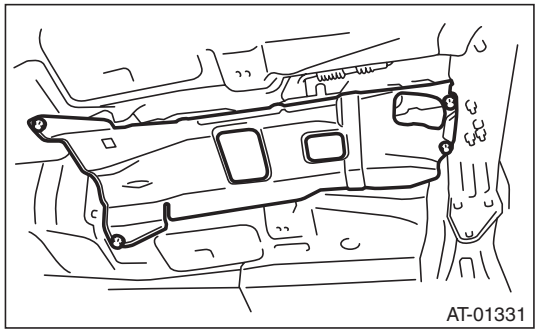

7) Remove the propeller shaft. <Ref. to DS-10, REMOVAL, Propeller Shaft.>
8) Using the ST, remove the oil seal.
ST 398527700 PULLER ASSY
9) Using the ST, install the oil seal.
ST 498057300 INSTALLER
10) Install the propeller shaft. <Ref. to DS-11, INSTALLATION, Propeller Shaft.>
11) Install the heat shield cover. <Ref. to EI-168, INSTALLATION, Heat Shield Cover.>
12) Install the rear exhaust pipe. <Ref. to EX(H6DO)-8, INSTALLATION, Rear Exhaust Pipe.>
13) Lower the vehicle.
14) Pour ATF from the oil charge pipe. <Ref. to 5AT-29, Automatic Transmission Fluid.>
15) Check the level and leaks of the ATF. <Ref. to 5AT-29, INSPECTION, Automatic Transmission Fluid.>

GETtheMANUALS.org

12. Differential Side Retainer Oil Seal

A: INSPECTION

Check for leakage of gear oil from differential side retainer oil seal part. If there is an oil leak, replace the oil seal.

B: REPLACEMENT

1) Disconnect the ground cable from battery.
2) Lift up the vehicle.
3) Remove the under cover. <Ref. to EI-35, REMOVAL, Front Under Cover.>
4) Remove the front exhaust pipe. <Ref. to EX(H6DO)-5, REMOVAL, Front Exhaust Pipe.>
5) Drain the differential gear oil by removing drain plug using TORX® bit T70.

CAUTION:
- **Immediately after the vehicle has been running or after idling for a long time, the differential gear oil will be hot. Be careful not to burn yourself.**
- **Be careful not to spill the differential gear oil on exhaust pipe to prevent it from emitting smoke or fire. If differential gear oil is spilled on the exhaust pipe, wipe it off completely.**

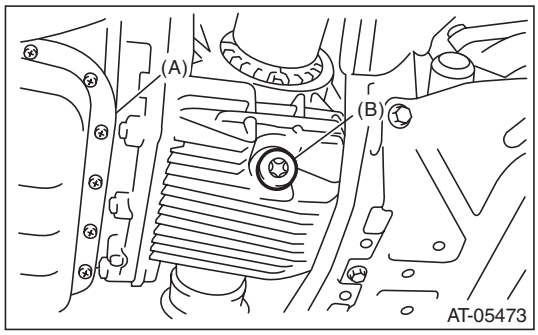

(A) Oil pan
(B) Drain plug

6) Tighten the drain plug.

NOTE:
Use a new gasket.

Tightening torque:
70 N·m (7.1 kgf-m, 51.6 ft-lb)

7) Separate the front drive shaft from the transmission. <Ref. to DS-48, REMOVAL, Front Drive Shaft.>
8) Remove the differential side retainer oil seal using driver wrapped with vinyl tape etc.
9) Using the ST, install the differential side retainer oil seal by lightly tapping with a plastic hammer.

NOTE:
- Use a new oil seal.
- Apply differential gear oil to the oil seal lip.
- Check the identification marks (L, R) during installation not to mix up the oil seal RH and LH.

ST 18675AA000 DIFFERENTIAL SIDE OIL SEAL INSTALLER

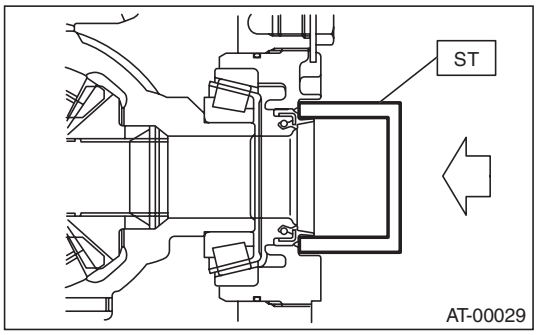

10) Install the front drive shaft. <Ref. to DS-49, INSTALLATION, Front Drive Shaft.>
11) Install the front exhaust pipe. <Ref. to EX(H6DO)-6, INSTALLATION, Front Exhaust Pipe.>
12) Install the under cover. <Ref. to EI-35, INSTALLATION, Front Under Cover.>
13) Lower the vehicle.
14) Connect the battery ground terminal.
15) Pour differential gear oil into the level gauge hole. <Ref. to 5AT-31, Differential Gear Oil.>
16) Check the level of differential gear oil. <Ref. to 5AT-31, INSPECTION, Differential Gear Oil.>

GETtheMANUALS.org

13.Inhibitor Switch

A: INSPECTION

Inhibitor switch cannot be checked, because the inhibitor switch is installed on control valve assembly. When a malfunction occurs, refer to 5AT (diag) section. <Ref. to 5AT(diag)-36, DTC P0705 TRANSMISSION RANGE SENSOR CIRCUIT (PRNDL INPUT), Diagnostic Procedure with Diagnostic Trouble Code (DTC).>

GETtheMANUALS.org

14. Front Vehicle Speed Sensor

A: REMOVAL

1) Remove the transmission assembly from the vehicle. <Ref. to 5AT-37, REMOVAL, Automatic Transmission Assembly.>
2) Disconnect the rear vehicle speed sensor connector.

NOTE:
Secure the transmission harness to the transmission body using wire etc.

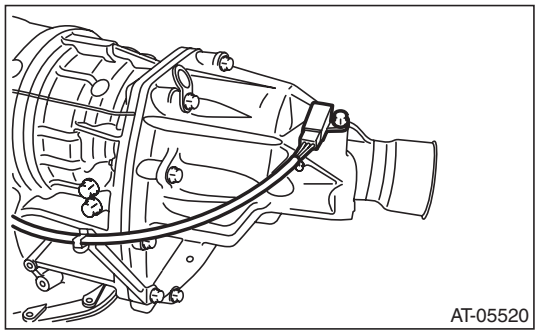
AT-05520

3) Remove the extension case.

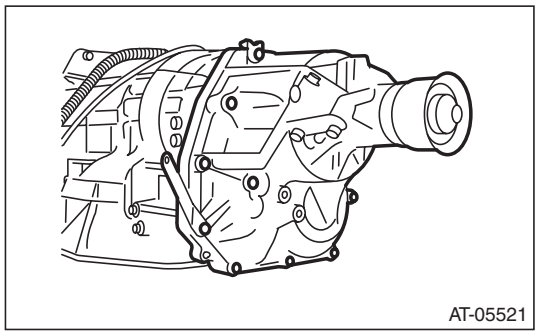
AT-05521

4) Remove the center differential carrier. <Ref. to 5AT-74, REMOVAL, Center Differential Carrier.>
5) Lay along the transmission case, and then remove the oil pan.
6) Remove the old gasket on the oil pan and transmission case completely.
7) Disconnect the front vehicle speed sensor connector.

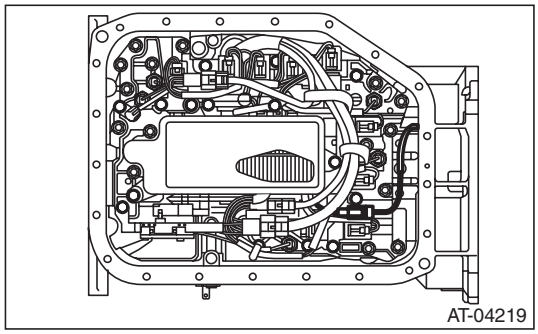
AT-04219

8) Remove the front vehicle speed sensor securing bolt.

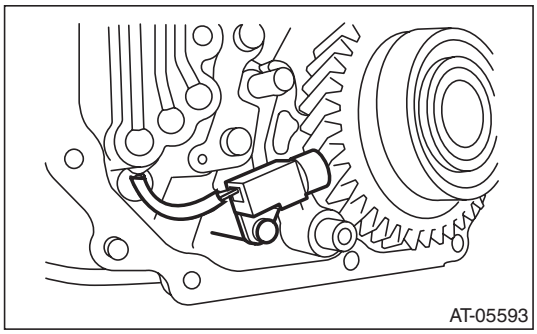
AT-05593

9) Remove the front vehicle speed sensor through the hole of AT transmission main case.

B: INSTALLATION

1) Install the front vehicle speed sensor.

Tightening torque:
7 N·m (0.7 kgf-m, 5.2 ft-lb)

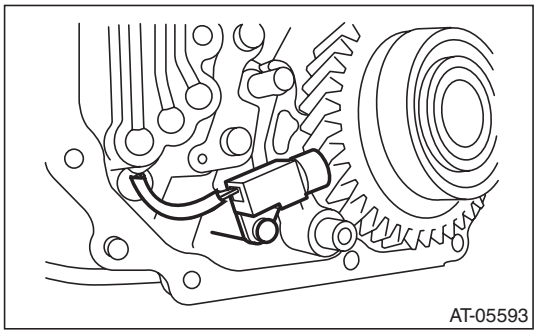
AT-05593

2) Connect the front vehicle speed sensor connector.

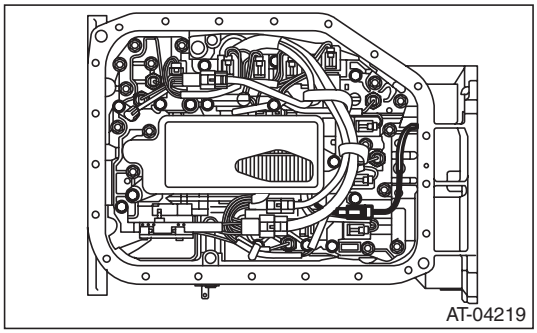
AT-04219

GETtheMANUALS.org

3) Apply proper amount of liquid gasket to the entire oil pan mating surface.

Liquid gasket:
THREE BOND 1217B (Part No. K0877YA020) or equivalent

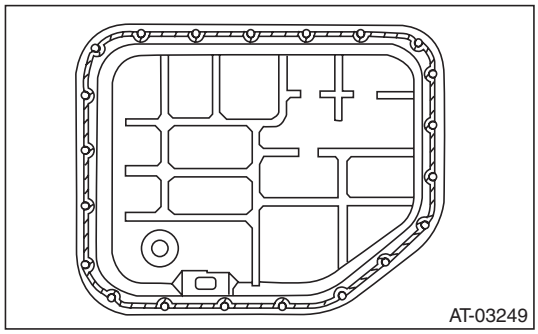

4) Install the oil pan by equally tightening the bolts.

Tightening torque:
5 N·m (0.5 kgf-m, 3.7 ft-lb)

5) Install the center differential carrier. <Ref. to 5AT-74, INSTALLATION, Center Differential Carrier.>

6) Install the extension case.

NOTE:
Use a new gasket.

Tightening torque:
25 N·m (2.5 kgf-m, 18.4 ft-lb)

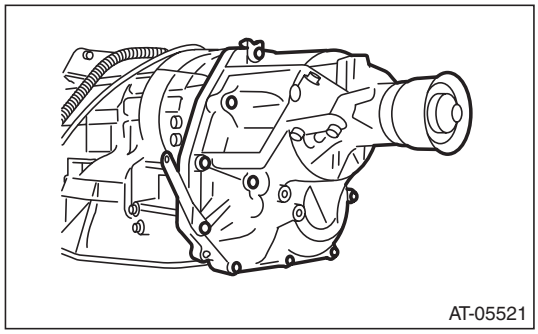

7) Connect the rear vehicle speed sensor connector.

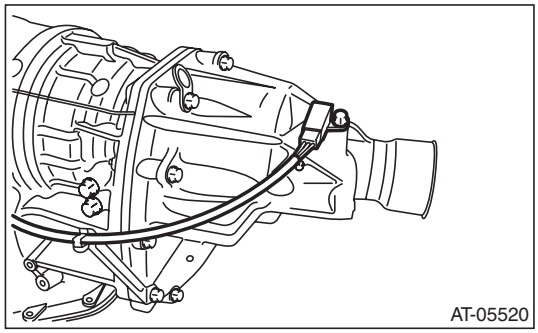

8) Install the transmission assembly to the vehicle. <Ref. to 5AT-42, INSTALLATION, Automatic Transmission Assembly.>

9) Pour ATF from the oil charge pipe. <Ref. to 5AT-29, Automatic Transmission Fluid.>

10) Check the level and leaks of ATF. <Ref. to 5AT-29, INSPECTION, Automatic Transmission Fluid.>

GETtheMANUALS.org

15. Rear Vehicle Speed Sensor

A: REMOVAL

1) Disconnect the ground cable from battery.
2) Lift up the vehicle.
3) Clean the transmission exterior.
4) Remove the bolts which connect the front exhaust pipe and rear exhaust pipe.
5) Remove the bolts holding the heat shield cover, and move the heat shield cover to the rear.
6) Disconnect the rear vehicle speed sensor connector.

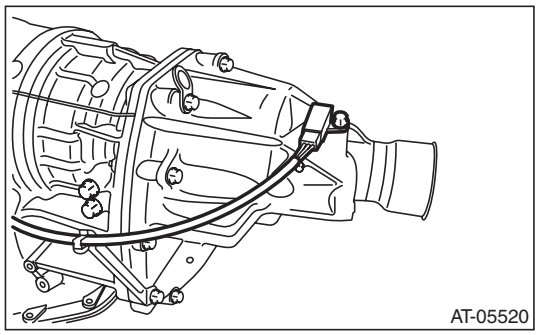

7) Remove the rear vehicle speed sensor.

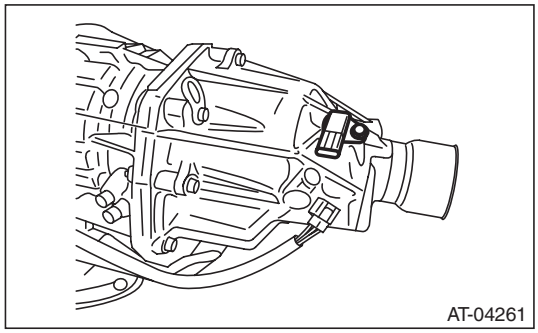

B: INSTALLATION

1) Install the rear vehicle speed sensor.

NOTE:
Use new O-rings.

Tightening torque:
7 N·m (0.7 kgf-m, 5.2 ft-lb)

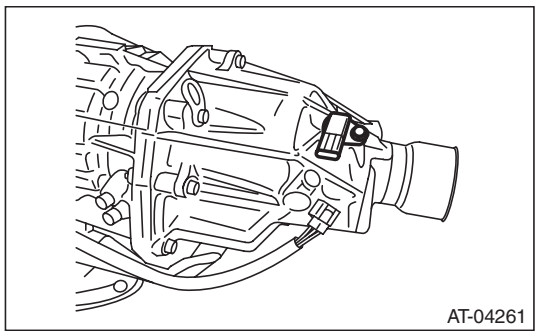

2) Connect the rear vehicle speed sensor connector.

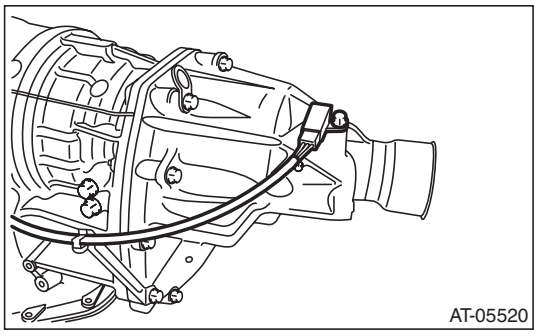

3) Install the heat shield cover. <Ref. to EI-168, INSTALLATION, Heat Shield Cover.>
4) Tighten the bolts which connect the front exhaust pipe and rear exhaust pipe.

Tightening torque:
18 N·m (1.8 kgf-m, 13.3 ft-lb)

5) Lower the vehicle.

GETtheMANUALS.org

16. Turbine Speed Sensor 1

A: REMOVAL

1) Disconnect the ground cable from battery.
2) Lift up the vehicle.
3) Remove the front exhaust pipe. <Ref. to EX(H6DO)-5, REMOVAL, Front Exhaust Pipe.>
4) Disconnect the turbine speed sensor 1 connector.

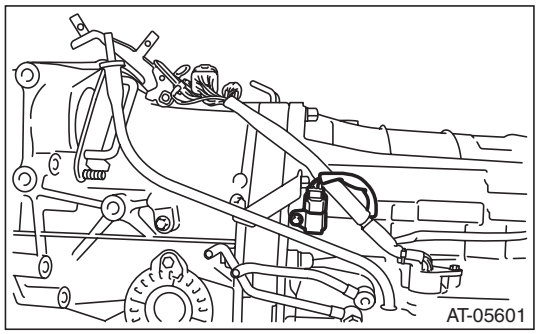

5) Remove the turbine speed sensor 1.

B: INSTALLATION

1) Install the turbine speed sensor 1.

NOTE:
Use new O-rings.

Tightening torque:
7 N·m (0.7 kgf-m, 5.2 ft-lb)

2) Connect the turbine speed sensor 1 connector.

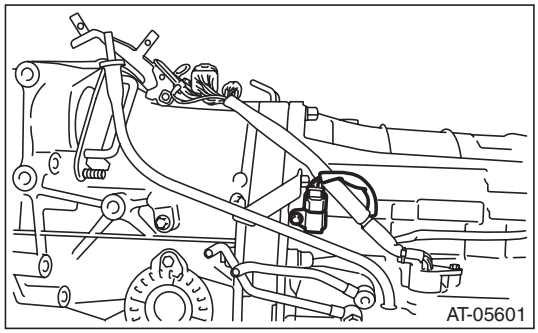

3) Install the front exhaust pipe. <Ref. to EX(H6DO)-6, INSTALLATION, Front Exhaust Pipe.>
4) Lower the vehicle.
5) Connect the battery ground terminal.

GETtheMANUALS.org

17. Control Valve Body

A: REMOVAL

1) Disconnect the ground cable from battery.
2) Lift up the vehicle.
3) Clean the transmission exterior.
4) Remove the ATF drain plug to drain ATF.

CAUTION:
Directly after the vehicle has been running or the engine has been long idle running, the ATF is hot. Be careful not to burn yourself.

5) Tighten the ATF drain plug.

NOTE:
Use a new gasket.

Tightening torque:
20 N·m (2.0 kgf-m, 14.8 ft-lb)

6) Remove the oil pan.

CAUTION:
Be sure to prevent the entering of dust and other foreign matters into oil pan.

7) Remove the magnet.

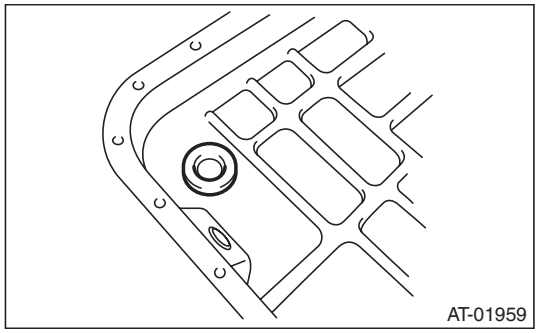

8) Clean the magnet.
9) Completely remove the remaining liquid gasket on the transmission case and oil pan.
10) Disconnect the control valve connector and front vehicle speed sensor connector.

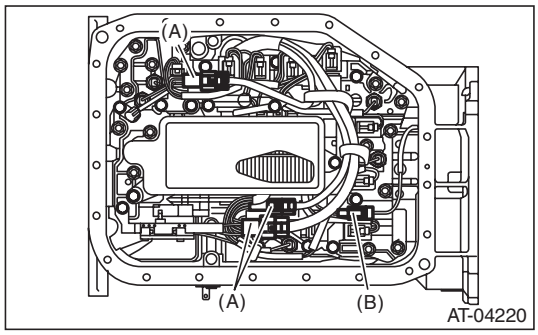

(A) Control valve connector
(B) Front vehicle speed sensor connector

11) Remove the control valve body.

NOTE:
The control valve body is replaced as an assembly only, because it is a non-disassembly part.

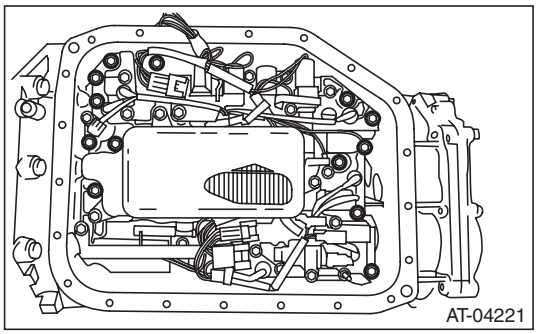

B: INSTALLATION

1) Check the control valve body for dust and other foreign matter.
2) Install the control valve body to transmission by equally tightening the bolts.

Tightening torque:
8 N·m (0.8 kgf-m, 5.9 ft-lb)

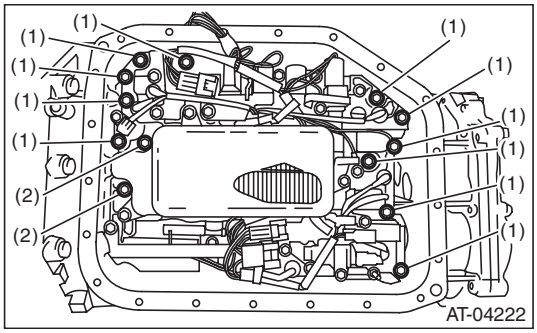

(1) 30 mm (1.18 in)
(2) 40 mm (1.57 in)

3) Connect the control valve connector and front vehicle speed sensor connector.

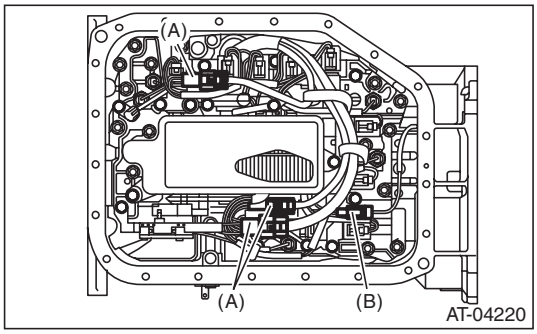

(A) Control valve connector
(B) Front vehicle speed sensor connector

GETtheMANUALS.org

4) Attach the magnet at the specified position of the oil pan.

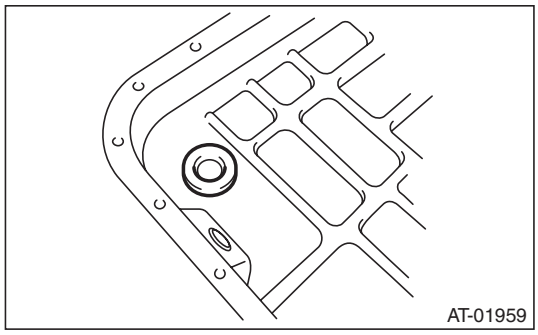

5) Apply liquid gasket to the oil pan.

Liquid gasket:
THREE BOND 1217B (Part No. K0877YA020) or equivalent

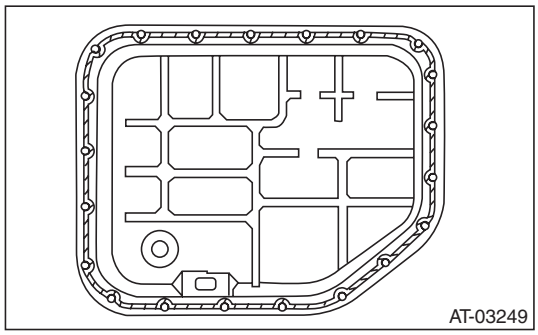

6) Install the oil pan by equally tightening the bolts.

Tightening torque:
5 N·m (0.5 kgf-m, 3.7 ft-lb)

7) Lower the vehicle.
8) Connect the ground cable to battery.
9) Pour ATF through the oil charge pipe. <Ref. to 5AT-29, Automatic Transmission Fluid.>
10) Check the ATF level. <Ref. to 5AT-29, INSPECTION, Automatic Transmission Fluid.>
11) Perform Clear Memory 2 operation. <Ref. to 5AT(diag)-21, Clear Memory Mode.>
12) Perform learning operation. <Ref. to 5AT(diag)-23, Learning Control.>
13) Perform the inspection at the end of repair work, and make sure there is no faulty as below;

- Excessive shift shock
- Oil leakage from the transmission body, etc.
- Occurrence of noise caused by interference etc.

C: INSPECTION

Check each parts for holes, damages or other foreign matters.

GETtheMANUALS.org

18. Transmission Control Module (TCM)

A: REMOVAL

1) Disconnect the ground cable from battery.
2) Remove the instrument panel lower cover. <Ref. to EI-64, REMOVAL, Instrument Panel Lower Cover.>
3) Disconnect the connector from TCM.

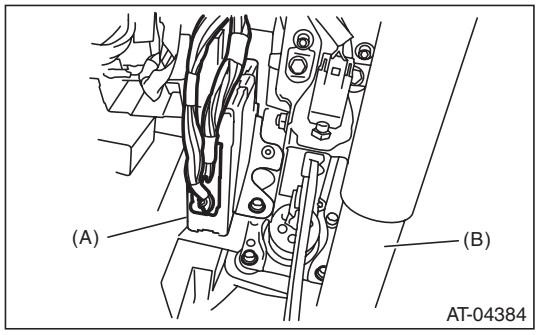

(A) Transmission control module (TCM)
(B) Steering column

4) Remove the TCM.

NOTE:
Replace the TCM and bracket as a set.

B: INSTALLATION

1) Install the TCM to the bracket.

CAUTION:
Do not remove the TCM after installed to the bracket, or the bracket and TCM may be damaged. If installed by mistake, the part must be replaced with a new part.
2) Install the TCM.

Tightening torque:
7.5 N·m (0.8 kgf-m, 5.5 ft-lb)

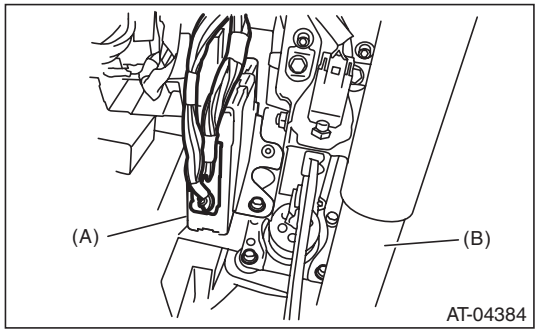

(A) Transmission control module (TCM)
(B) Steering column

3) Connect the connector to TCM.
4) Install the instrument panel lower cover. <Ref. to EI-65, INSTALLATION, Instrument Panel Lower Cover.>
5) Perform Clear Memory 2 operation. <Ref. to 5AT(diag)-21, Clear Memory Mode.>
6) Perform learning operation. <Ref. to 5AT(diag)-23, Learning Control.>

GETtheMANUALS.org

19. ATF Cooler Pipe and Hose

A: REMOVAL

1) Remove the collector cover.

NOTE:
Follow the steps below when removing the collector cover.
(1) Pull up the two points at the rear (A).
(2) Pull up the two points at the front (B) while moving them forward.

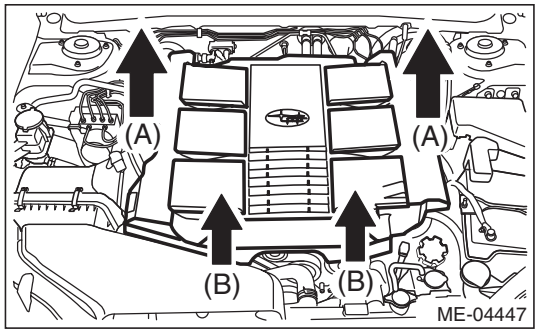

2) Remove the battery.
3) Lift up the vehicle.
4) Remove the under cover. <Ref. to EI-35, REMOVAL, Front Under Cover.>
5) Remove the front exhaust pipe. <Ref. to EX(H6DO)-5, REMOVAL, Front Exhaust Pipe.>
6) Disconnect the ATF radiator inlet and outlet hoses from the radiator.

NOTE:
- Do not use a screwdriver or other pointed tools.
- If it is hard to remove the ATF radiator hose, wrap the hose with cloth to protect it from damage, turn it with pliers, and pull it straight out by hand.

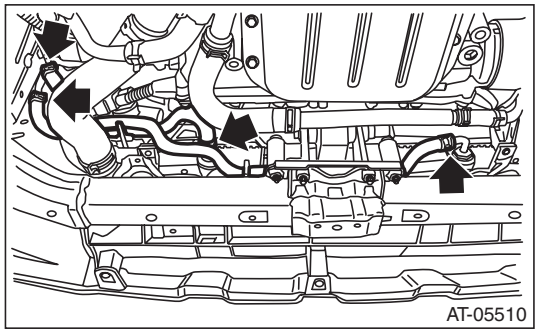

7) Disconnect the ATF AT inlet and outlet hoses from the ATF cooler pipe.

NOTE:
- Do not use a screwdriver or other pointed tools.
- If it is hard to remove the ATF AT hose, wrap the hose with cloth to protect it from damage, turn it with pliers, and pull it straight out by hand.

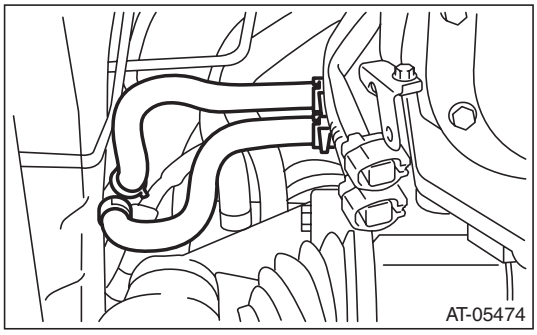

8) Remove the oil charge pipe. <Ref. to 5AT-62, REMOVAL, Oil Charge Pipe.>
9) Remove the ATF cooler inlet pipe and outlet pipe from the transmission.

NOTE:
When disconnecting the ATF cooler outlet pipe, be careful not to lose the ball and spring used together with the retaining screw.

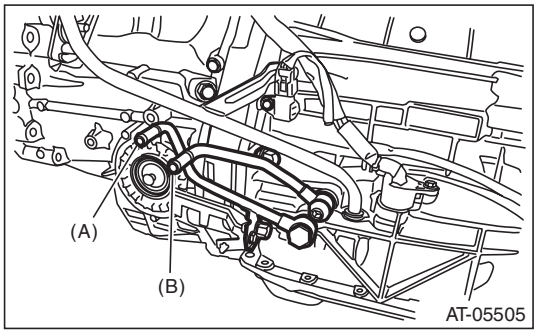

(A) ATF cooler outlet pipe
(B) ATF cooler inlet pipe

10) Lower the vehicle.

GETtheMANUALS.org

11) Remove the ATF cooler pipe assembly mounting bolt.

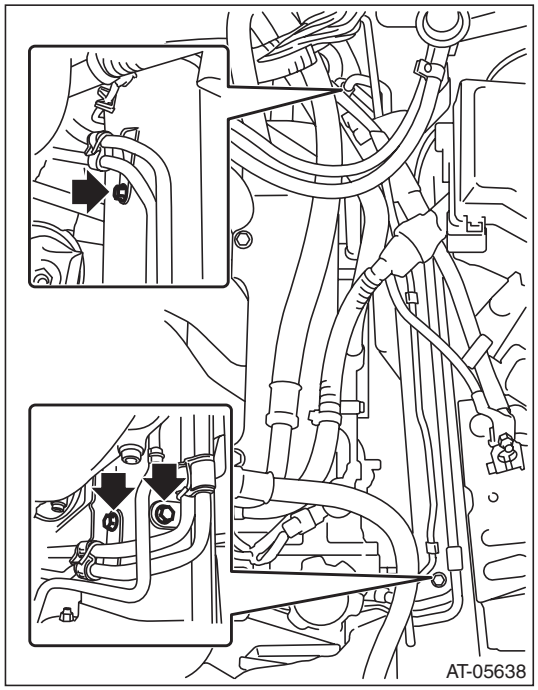

12) Remove the engine coolant reservoir tank. <Ref. to CO(H6DO)-25, REMOVAL, Reservoir Tank.>
13) Detach the A/C pipe from clip.

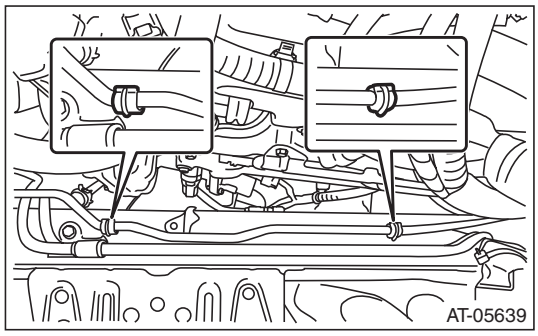

14) Remove the ATF cooler pipe from frame.

CAUTION:
Be careful not to bend A/C pipe.

B: INSTALLATION

1) Install the ATF cooler pipe to frame.

CAUTION:
Be careful not to bend the A/C pipe, when installing the ATF cooler pipe.

Tightening torque:
7.5 N·m (0.8 kgf-m, 5.5 ft-lb)

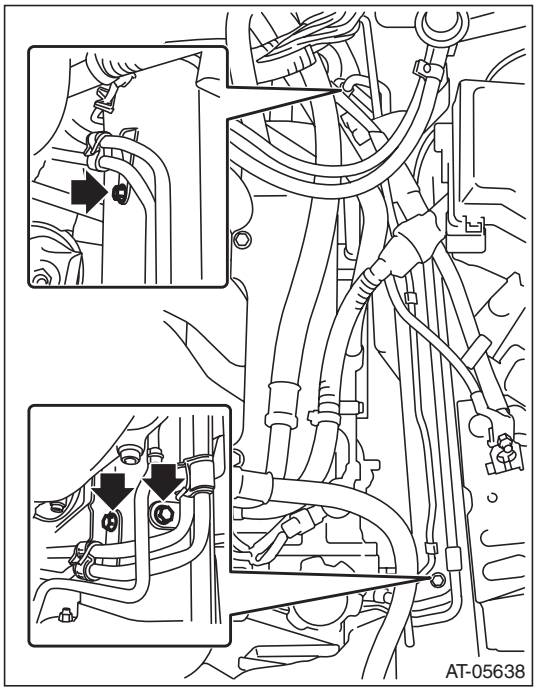

2) Install the A/C pipe to clip.
3) Install the engine coolant reservoir tank. <Ref. to CO(H6DO)-25, INSTALLATION, Reservoir Tank.>
4) Lift up the vehicle.
5) Install the ATF cooler inlet and outlet pipes with new gaskets.

NOTE:
Use a new bolt for the converter case joint.

Tightening torque:
T1: 38 N·m (3.9 kgf-m, 28.0 ft-lb)
T2: 40 N·m (4.1 kgf-m, 29.5 ft-lb)
T3: 45 N·m (4.6 kgf-m, 33.2 ft-lb)

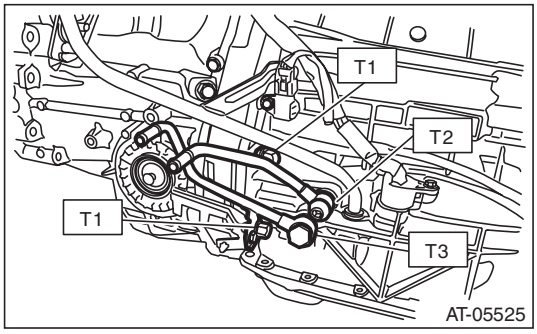

6) Install the oil charge pipe. <Ref. to 5AT-62, INSTALLATION, Oil Charge Pipe.>

GETtheMANUALS.org

7) Connect the ATF AT inlet and outlet hoses to the ATF cooler pipe on the transmission side.

NOTE:
- Use a new ATF AT hose.
- Install so that the ATF AT hose is not folded over, excessively bent or twisted.
- Insert the ATF AT hose into the specified position.

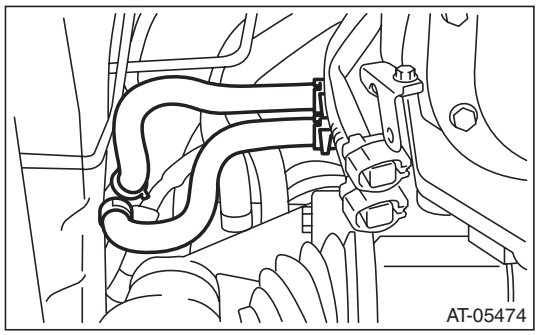

8) Connect the ATF radiator inlet and outlet hoses to the ATF cooler pipe on radiator side.

NOTE:
- Use a new ATF radiator hose.
- Install so that the ATF radiator hose is not folded over, excessively bent or twisted.
- Insert the ATF radiator hose into the specified position.

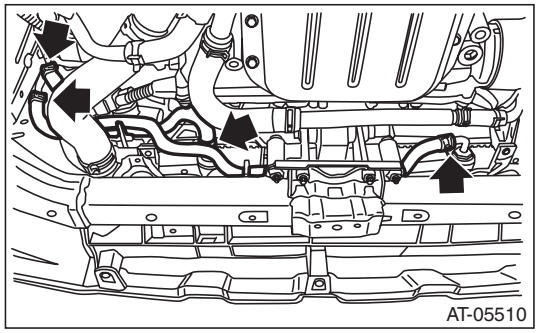

9) Install the front exhaust pipe. <Ref. to EX(H6DO)-6, INSTALLATION, Front Exhaust Pipe.>
10) Install the under cover. <Ref. to EI-35, INSTALLATION, Front Under Cover.>
11) Lower the vehicle.
12) Install the battery.
13) Check the ATF level. <Ref. to 5AT-29, INSPECTION, Automatic Transmission Fluid.>

NOTE:
Make sure there are no ATF leaks in joints between the transmission, radiator, ATF cooler pipes, and ATF cooler hoses.
14) Install the collector cover.

C: INSPECTION

Repair or replace each faulty ATF hose, ATF cooler pipes, clamps, and washers found in the inspection below.
1) Check for ATF leaks in joints between the transmission, radiator, ATF cooler pipes, and ATF hoses.
2) Check the clamp for deformation.
3) Lightly bend the ATF hose and check for cracks on the surface or other damages.
4) Pinch the ATF hose with your fingers and check for poor elasticity.
5) Check for peeling, cracks, and deformation at the tip of the ATF hose.

GETtheMANUALS.org

20. Air Breather Hose

A: REMOVAL

1) Remove the collector cover.

NOTE:
Follow the steps below when removing the collector cover.
(1) Pull up the two points at the rear (A).
(2) Pull up the two points at the front (B) while moving them forward.

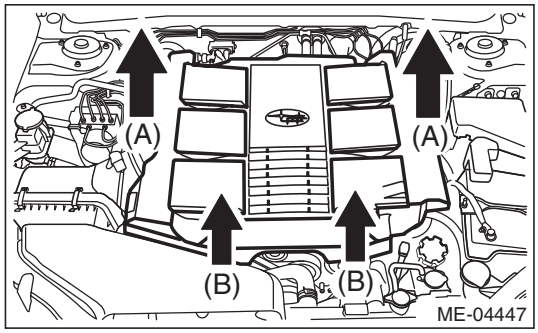

2) Remove the air intake boot. <Ref. to IN(H6DO)-7, REMOVAL, Air Intake Boot.>
3) Remove the air breather hose.

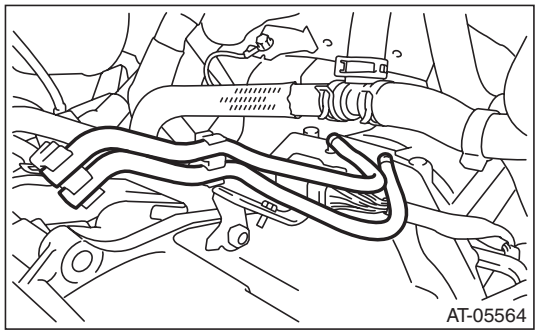

B: INSTALLATION

1) Install the air breather hose.

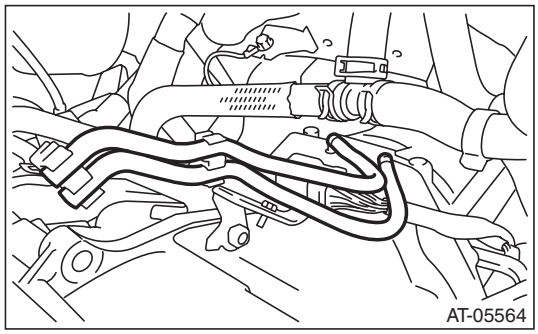

2) Install the air intake boot. <Ref. to IN(H6DO)-7, INSTALLATION, Air Intake Boot.>
3) Install the collector cover.

C: INSPECTION

Make sure the air breather hose is not cracked or clogged.

GETtheMANUALS.org

21.Oil Charge Pipe

A: REMOVAL

1) Disconnect the ground cable from battery.
2) Lift up the vehicle.
3) Remove the under cover. <Ref. to EI-35, REMOVAL, Front Under Cover.>
4) Remove the front exhaust pipe. <Ref. to EX(H6DO)-5, REMOVAL, Front Exhaust Pipe.>
5) Disconnect the connector from turbine speed sensor 1.
6) Remove the oil charge pipe, and then remove the O-ring from flange side.

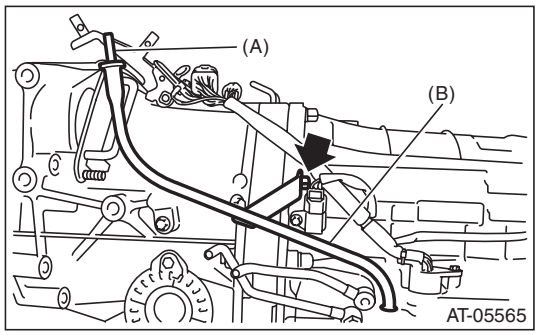

(A) ATF level gauge
(B) Oil charge pipe

B: INSTALLATION

1) Install the oil charge pipe.

NOTE:
Use new gaskets and O-rings.

Tightening torque:
38 N·m (3.9 kgf-m, 28.0 ft-lb)

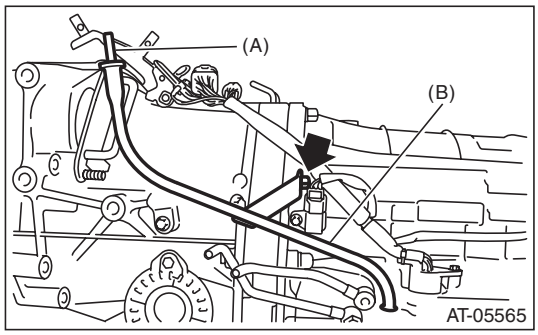

(A) ATF level gauge
(B) Oil charge pipe

2) Connect the connector to the turbine speed sensor 1.
3) Install the front exhaust pipe. <Ref. to EX(H6DO)-6, INSTALLATION, Front Exhaust Pipe.>
4) Install the under cover. <Ref. to EI-35, INSTALLATION, Front Under Cover.>
5) Lower the vehicle.
6) Connect the ground cable to battery.

C: INSPECTION

- Make sure the oil charge pipe is not deformed or damaged.
- Check that there are no ATF leaks from the O-ring.

GETtheMANUALS.org

22. Torque Converter Assembly

A: REMOVAL

1) Remove the transmission assembly from vehicle body. <Ref. to 5AT-37, REMOVAL, Automatic Transmission Assembly.>
2) Pull out the torque converter and oil pump shaft horizontally.

NOTE:
- Be sure not to scratch the inside of bushing in oil pump shaft.
- Be careful that the oil pump shaft may drawn out simultaneously.

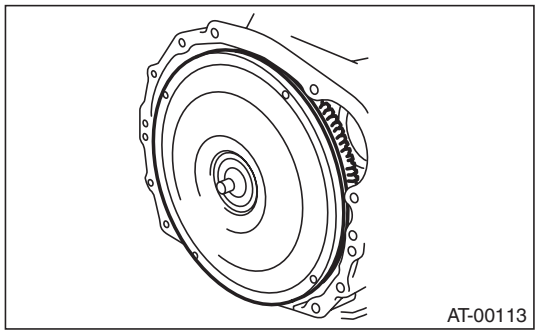

3) Remove the oil pump shaft from torque converter as necessary.

B: INSTALLATION

1) When the oil pump shaft is removed, install the shaft to torque converter.

NOTE:
- Use a new circlip.
- Make sure the circlip is firmly inserted.

2) Install the oil pump shaft to torque converter, and then make sure that the clip is secured on groove.
3) Apply ATF to the revolving and sliding surface of the oil pump shaft.
4) Holding the torque converter assembly by hand, lightly rotate it to engage with the oil pump rotor.
5) Check the protruding dimension of the torque converter assembly.

Dimension A:
8 mm (0.31 in) or less

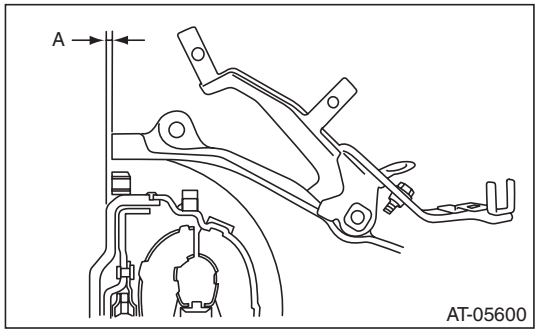

6) Install the transmission assembly to the vehicle. <Ref. to 5AT-42, INSTALLATION, Automatic Transmission Assembly.>

C: INSPECTION

Make sure the ring gear and protrusion of torque converter end are not deformed or damaged.

GETtheMANUALS.org

23. Drive Plate

A: REMOVAL

1) Remove the transmission assembly from the vehicle. <Ref. to 5AT-37, REMOVAL, Automatic Transmission Assembly.>
2) Use the ST to lock the crankshaft, and remove the drive plate.
ST 498497100 CRANKSHAFT STOPPER

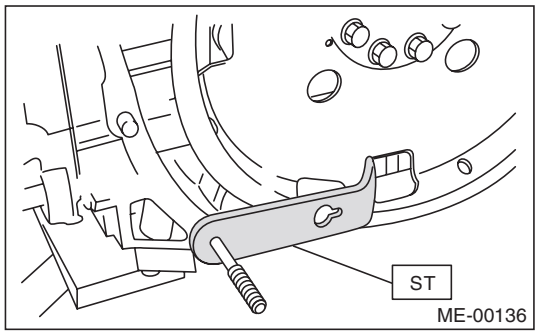

B: INSTALLATION

1) Temporarily tighten the drive plate.
2) Using the ST, lock the crankshaft.
ST 498497100 CRANKSHAFT STOPPER

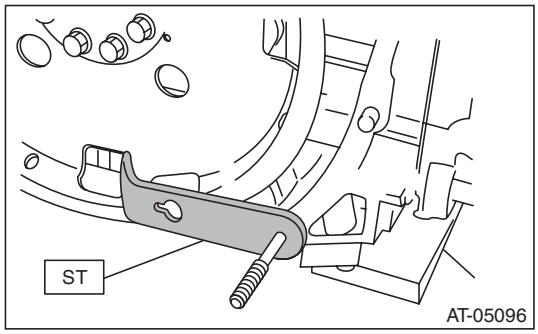

3) Tighten the drive plate mounting bolt.

NOTE:
Tighten the drive plate mounting bolts gradually. Each bolt should be tightened in a crisscross order.

Tightening torque:
90 N·m (9.2 kgf-m, 66.4 ft-lb)

4) Install the transmission assembly to the vehicle. <Ref. to 5AT-42, INSTALLATION, Automatic Transmission Assembly.>

GETtheMANUALS.org

24. Extension Case

A: REMOVAL

1) Remove the transmission assembly. <Ref. to 5AT-37, REMOVAL, Automatic Transmission Assembly.>
2) Disconnect the rear vehicle speed sensor connector.

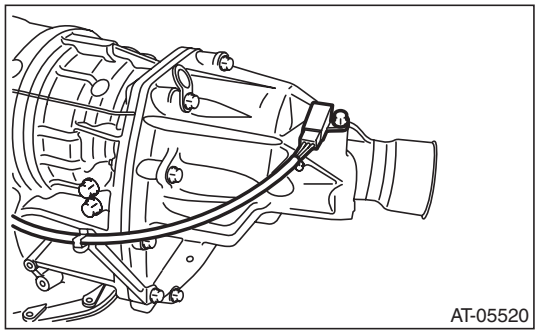

3) Remove the rear vehicle speed sensor.

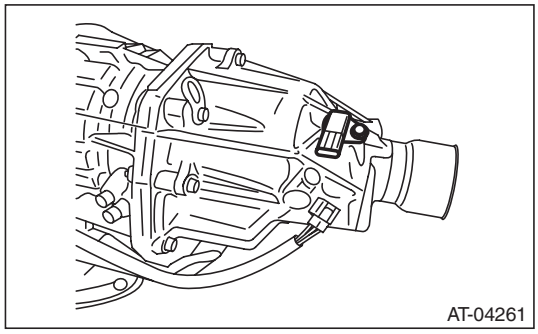

4) Remove the extension case.

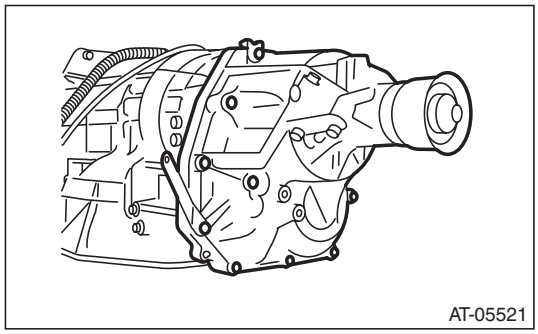

B: INSTALLATION

1) Attach the selected reduction driven gear shim to end surface of reduction driven gear with vaseline. <Ref. to 5AT-72, ADJUSTMENT, Reduction Driven Gear.>
2) Install the extension case.

NOTE:
Use a new gasket.

Tightening torque:
25 N·m (2.5 kgf-m, 18.4 ft-lb)

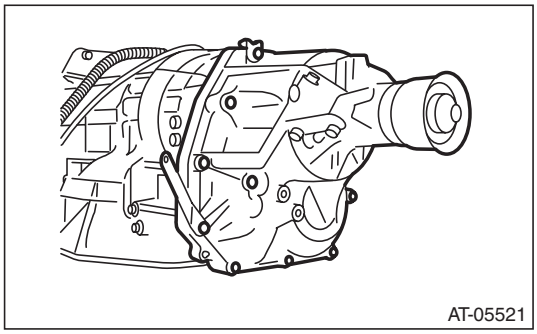

3) Install the rear vehicle speed sensor.

NOTE:
Use new O-rings.

Tightening torque:
7 N·m (0.7 kgf-m, 5.2 ft-lb)

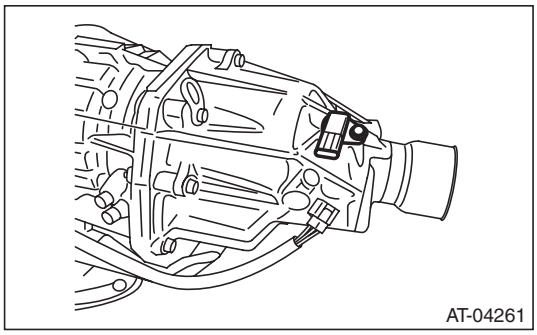

4) Connect the rear vehicle speed sensor connector.

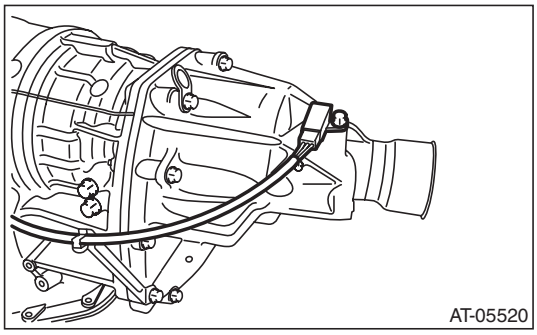

5) Install the transmission assembly. <Ref. to 5AT-42, INSTALLATION, Automatic Transmission Assembly.>

GETtheMANUALS.org

C: DISASSEMBLY

1) Take out the transfer clutch and rear drive shaft by lightly tapping the end of rear drive shaft.

NOTE:
Be careful not to damage the oil seal of the extension.

2) Remove the snap ring using the ST and press.
ST 18762AA000 COMPRESSOR SPECIAL TOOL

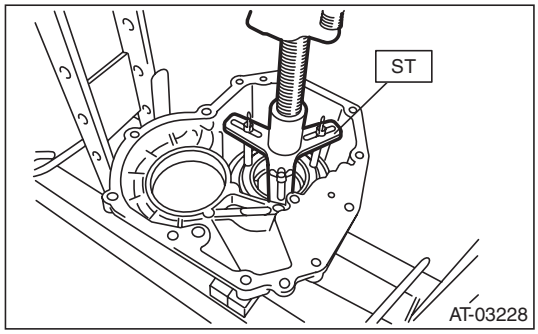

3) Supply compressed air to remove the clutch piston.

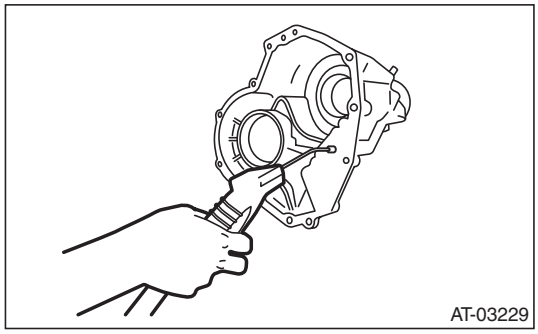

4) Remove the dust cover from extension case.
5) Remove the oil seal from the extension case.

D: ASSEMBLY

1) Press-fit the oil seal using the ST and press.

NOTE:
Use a new oil seal.
ST 498057300 INSTALLER

2) Press-fit the dust cover.
3) Insert the transfer clutch assembly, spring retainer, return spring and clutch spring retainer.

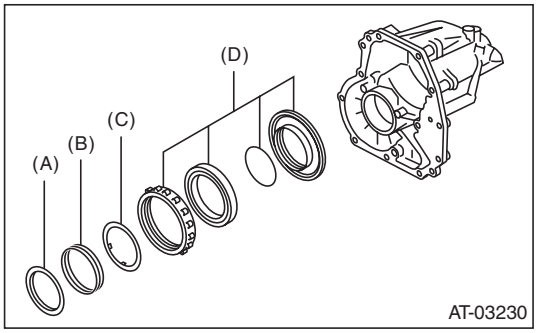

(A) Clutch spring retainer
(B) Return spring
(C) Spring retainer
(D) Transfer clutch piston ASSY

4) Using the ST and compressor, install the snap ring.
ST 18762AA000 COMPRESSOR SPECIAL TOOL

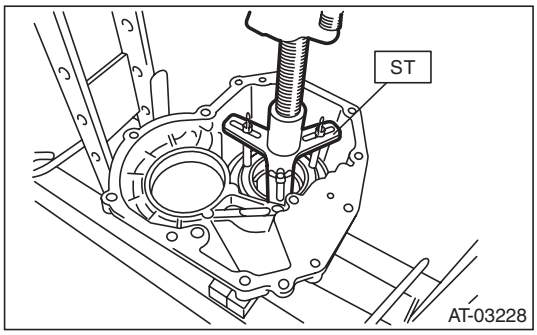

5) Install the transfer clutch. <Ref. to 5AT-67, INSTALLATION, Transfer Clutch.>
6) Install the rear drive shaft.

E: INSPECTION

- Use compressed air to make sure the extension case routes are not clogged or leaking.
- Inspect the extension end play, and adjust it to within the standard value. <Ref. to 5AT-67, ADJUSTMENT, Transfer Clutch.>

GETtheMANUALS.org

25.Transfer Clutch

A: REMOVAL

1) Remove the transmission assembly from vehicle body. <Ref. to 5AT-37, REMOVAL, Automatic Transmission Assembly.>
2) Remove the extension case, and then remove the transfer clutch. <Ref. to 5AT-65, REMOVAL, Extension Case.> <Ref. to 5AT-66, DISASSEMBLY, Extension Case.>

B: INSTALLATION

1) Select the rear drive shaft shim. <Ref. to 5AT-67, ADJUSTMENT, Transfer Clutch.>
2) Select driven plate No. 3 <Ref. to 5AT-67, ADJUSTMENT, Transfer Clutch.>
3) Install the extension case. <Ref. to 5AT-65, INSTALLATION, Extension Case.>
4) Install the transmission assembly to the vehicle. <Ref. to 5AT-42, INSTALLATION, Automatic Transmission Assembly.>

C: INSPECTION

- Inspect the drive plate facing for wear and damage.
- Make sure the snap ring is not worn and the return spring has no permanent distortion, damage, or deformation.
- Check that the D-ring is not damaged.
- Inspect the extension end play, and adjust it to within the standard value. <Ref. to 5AT-67, ADJUSTMENT, Transfer Clutch.>

D: ADJUSTMENT

1. REAR DRIVE SHAFT SHIM SELECTION

1) Insert the rear drive shaft into the reduction drive gear and center differential assembly.

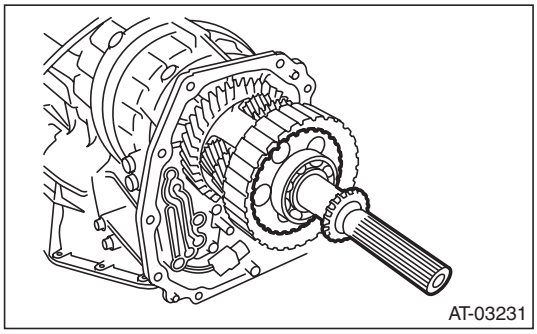

2) Using the ST, measure the depth “A”, which is from mating surface of extension case to ball bearing outer ring contact surface.
ST 398643600 GAUGE

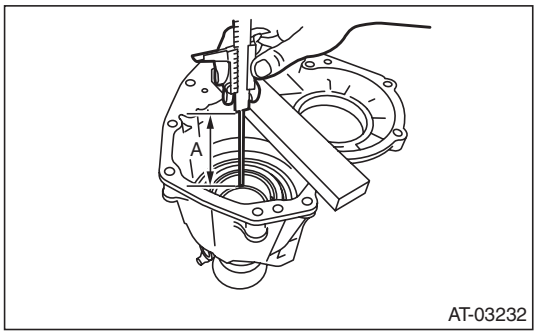

3) Using the ST, measure the height “B” from the AT main case mating surface to the ball bearing outer ring contact surface.
ST 398643600 GAUGE

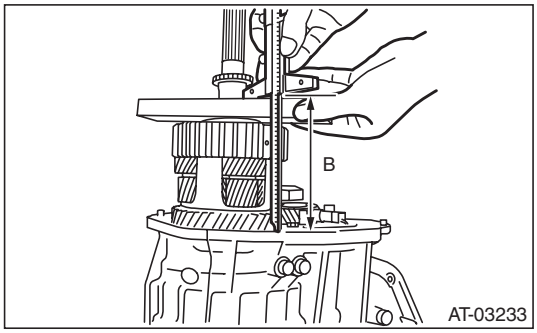

GETtheMANUALS.org

4) Calculation formula:
When clearances are 0.05 mm (0.0020 in):
T (mm) = A – B + 0.23
[T (in) = A – B + 0.0091]
When clearances are 0.25 mm (0.0098 in):
T (mm) = A – B + 0.03
[T (in) = A – B + 0.0012]
A: Depth from end of extension case to ball bearing outer ring contact surface
B: Height from end of AT main case contact surface to the ball bearing outer ring contact surface
T: Shim thickness

Specification:
0.05 — 0.25 mm (0.0020 — 0.0098 in)

NOTE:
Calculation formula for "T" above is applied when measuring with the ST (398643600 GAUGE). When not using the ST,
When clearances are 0.05 mm (0.0020 in):
T (mm) = (A – α) – ((B – β) – 0.28) – 0.05
[T (in) = (A – α) – ((B – β) – 0.011) – 0.0020]
When clearances are 0.25 mm (0.0098 in):
T (mm) = (A – α) – ((B – β) – 0.28) – 0.25
[T (in) = (A – α) – ((B – β) – 0.011) – 0.0098]
is applied.
T: Shim thickness
A: Depth from end of extension case to ball bearing outer ring contact surface
B: Height from end of AT main case contact surface to the ball bearing outer ring contact surface
α: Thickness of collar used when measuring "A"
β: Thickness of collar used when measuring "B"
0.28 (0.011): Gasket thickness (Unit mm (in))
5) Select the rear drive shaft shim so that the clearance is within the specified range.

Rear drive shaft shim	
Part No.	Thickness mm (in)
33281AA040	0.2 (0.008)
33281AA050	0.5 (0.020)
33281AA060	0.3 (0.012)

2. SELECTION OF DRIVEN PLATE NO. 3

1) Install the drive plate and driven plate to the center differential carrier.
2) Measure the depth "A" from the mating surface of the extension case to the transfer clutch piston.

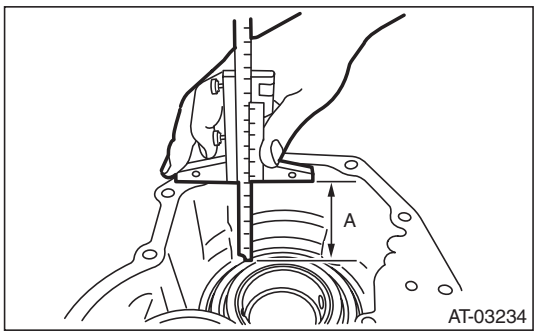

3) Using the ST, measure the height "B" from the AT main case mating surface to the end of ST.
ST 398744300 PISTON GUIDE

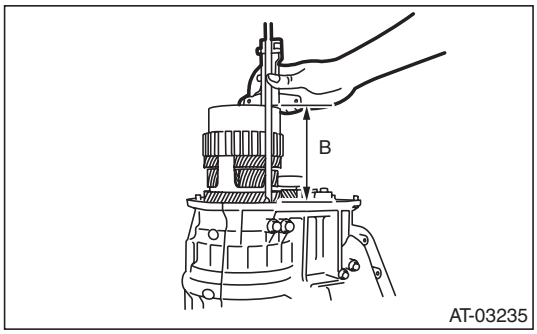

GETtheMANUALS.org

4) Calculation formula:
When clearances are 0.2 mm (0.008 in):
T (mm) = A – (B – 50) + 0.08
[T (in) = A – (B – 1.97) + 0.0031]
When clearances are 0.6 mm (0.024 in):
T (mm) = A – (B – 50) – 0.32
[T (in) = A – (B – 1.97) – 0.0126]
T: Thickness of driven plate No. 3
A: Depth from mating surface of the extension case to the transfer clutch piston.
B: Height from AT main case mating surface to end of ST
50 mm (1.97 in): Thickness of ST

Specification:
0.2 — 0.6 mm (0.008 — 0.024 in)

NOTE:
Calculation formula for "T" above is applied when measuring with the ST (398744300 PISTON GUIDE). When not using the ST,
When clearances are 0.2 mm (0.008 in):
T (mm) = A – (B – α – 0.28) – 0.2
[T (in) = A – (B – α – 0.011) – 0.008]
When clearances are 0.6 mm (0.024 in):
T (mm) = A – (B – α – 0.28) – 0.6
[T (in) = A – (B – α – 0.011) – 0.024]
is applied.
T: Thickness of driven plate No. 3
A: Depth from mating surface of the extension case to the transfer clutch piston.
B: Height from the AT main case mating surface to the contact face of the tool that was used as the substitute of the ST.
α: Thickness of tool used when measuring "B"
0.28 (0.011): Gasket thickness (Unit mm (in))
If it is out of specification, select the driven plate No. 3 to adjust within the specification.
5) Select the driven plate No. 3 so that the clearance is within the specified range.

Driven plate No. 3.	
Part No.	Thickness mm (in)
31589AA041	1.6 (0.063)
31589AA050	2.0 (0.079)
31589AA060	2.4 (0.094)
31589AA070	2.8 (0.110)

GETtheMANUALS.org

26. Rear Drive Shaft

A: REMOVAL

1) Remove the transmission assembly from the vehicle. <Ref. to 5AT-37, REMOVAL, Automatic Transmission Assembly.>
2) Remove the rear vehicle speed sensor, and then remove the extension case. <Ref. to 5AT-65, REMOVAL, Extension Case.>
3) Pull out the rear drive shaft from center differential assembly.

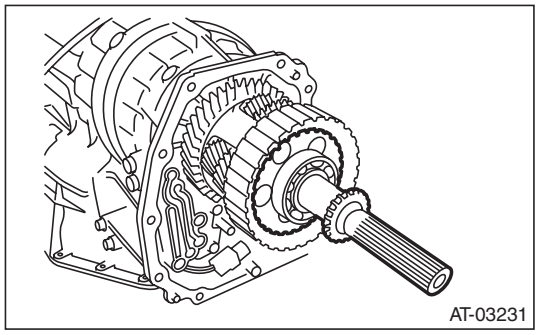

4) Remove the drive plate and driven plate.

B: INSTALLATION

1) Select shims. <Ref. to 5AT-67, ADJUSTMENT, Transfer Clutch.>
2) Install the drive plate and driven plate.
3) Insert the rear drive shaft into the center differential assembly.
4) Combine the extension case, and then install the rear vehicle speed sensor. <Ref. to 5AT-65, INSTALLATION, Extension Case.>
5) Install the transmission assembly to the vehicle. <Ref. to 5AT-42, INSTALLATION, Automatic Transmission Assembly.>

C: DISASSEMBLY

1) Using a press, remove the revolution gear.

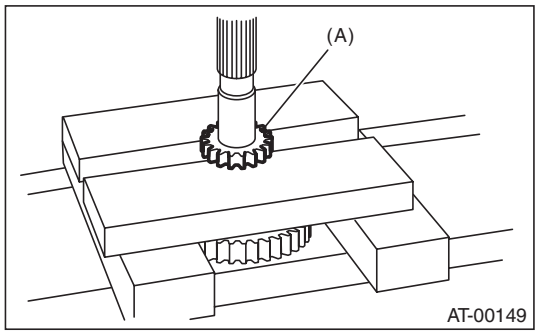

(A) Revolution gear

2) Using a press, remove the front and rear side ball bearings and clutch hub.

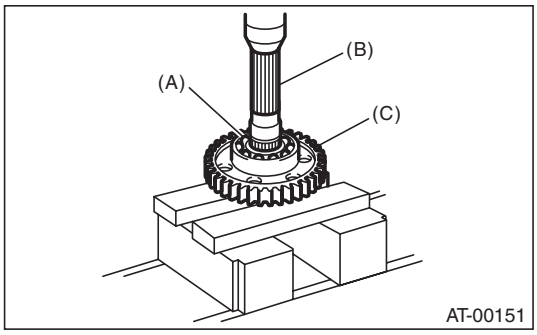

(A) Rear ball bearing
(B) Rear drive shaft
(C) Clutch hub

D: ASSEMBLY

Assemble in the reverse order of disassembly.

NOTE:
- Use new ball bearings and revolution gear.
- Make sure the clutch hub is facing the correct direction.

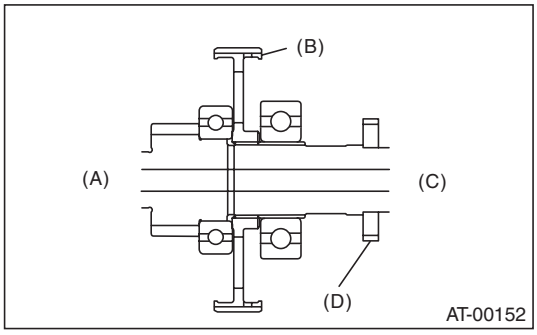

(A) Front side
(B) Clutch hub
(C) Rear side
(D) Revolution gear

E: INSPECTION

- Check each parts for holes, damages or other foreign matters.
- Inspect the extension end play, and adjust it to within the standard value. <Ref. to 5AT-67, ADJUSTMENT, Transfer Clutch.>

GETtheMANUALS.org

27. Reduction Driven Gear

A: REMOVAL

1) Remove the transmission assembly from vehicle body. <Ref. to 5AT-37, REMOVAL, Automatic Transmission Assembly.>
2) Remove the rear vehicle speed sensor, and separate the extension case from transmission case. <Ref. to 5AT-65, REMOVAL, Extension Case.>
3) Remove the center differential carrier. <Ref. to 5AT-74, REMOVAL, Center Differential Carrier.>
4) Set the range select lever to the “P” range.
5) Using ST1, ST2 and ST3, pull out the reduction driven gear.

ST1 499737100 PULLER SET
ST2 18680AA010 GEAR HOLDER
ST3 18766AA000 SUPPORT PULLER

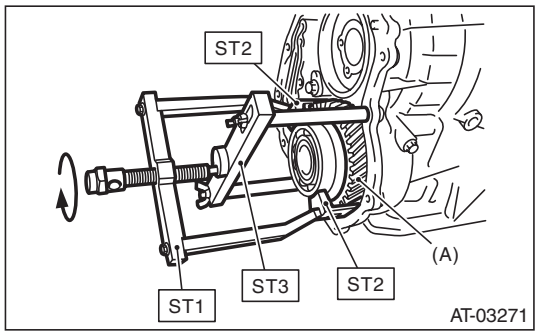

(A) Reduction driven gear

B: INSTALLATION

1) Set the range select lever to the “P” range.
2) Use a plastic hammer to install reduction driven gear assembly.
3) Select the reduction gear shims. <Ref. to 5AT-72, ADJUSTMENT, Reduction Driven Gear.>
4) Join the transmission case and the extension case, and then install the rear vehicle speed sensor. <Ref. to 5AT-65, INSTALLATION, Extension Case.>
5) Install the transmission assembly to the vehicle. <Ref. to 5AT-42, INSTALLATION, Automatic Transmission Assembly.>

C: DISASSEMBLY

1) Remove the ball bearing from reduction driven gear using ST.

ST 498077300 REMOVER

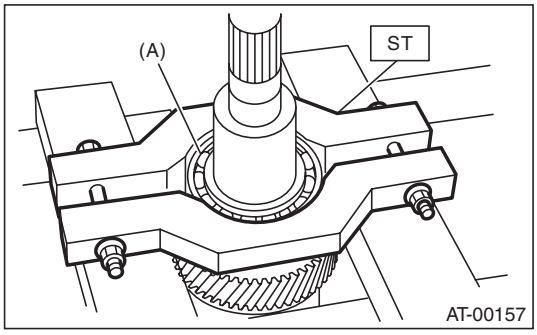

(A) Ball bearing

2) Remove the ball bearing on the reverse side with the same procedure as step 1).

ST 498077300 REMOVER

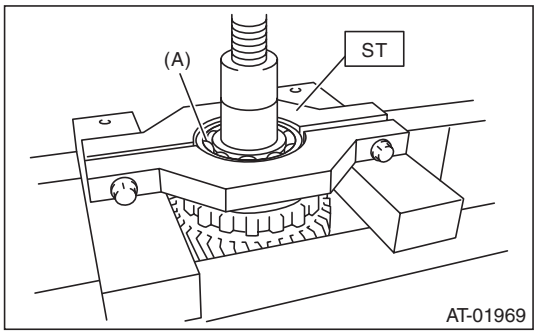

(A) Ball bearing

3) Remove the snap ring of the parking gear.

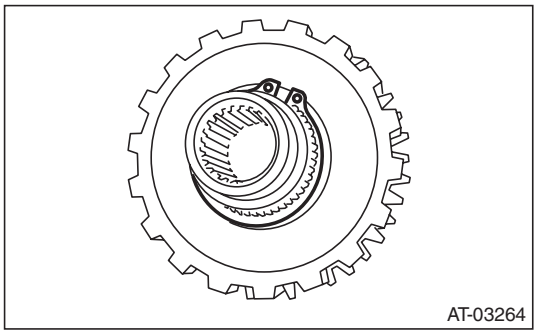

GETtheMANUALS.org

4) Using the ST, remove the parking gear.
ST 18767AA000 REMOVER

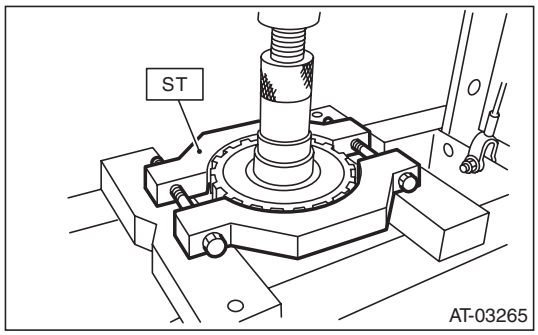

D: ASSEMBLY

1) Using the ST, install the parking gear.
ST 499755602 PRESS

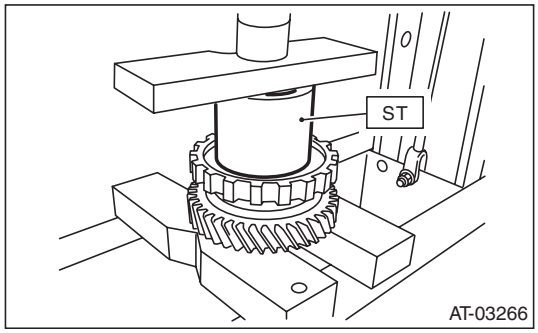

2) Install the snap ring.

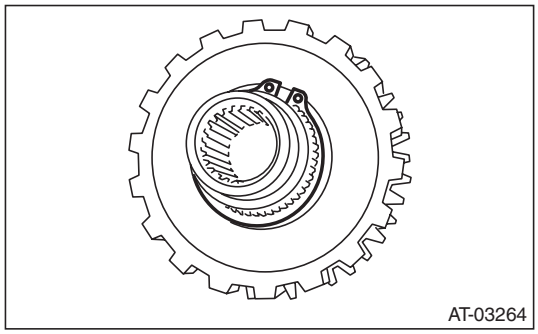

3) Install the ball bearing to the reduction driven gear using a press.

NOTE:
Use a new ball bearing.
ST 18654AA000 INSTALLER

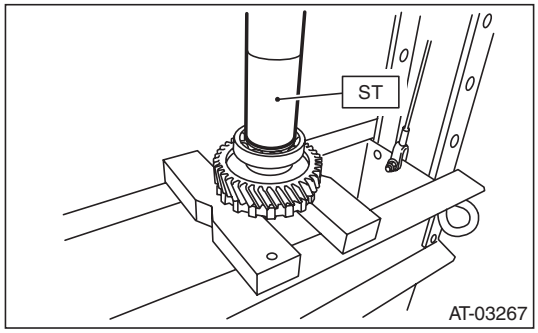

4) Install the ball bearing on the reverse side with the same procedure as step 3).
ST 18654AA000 INSTALLER

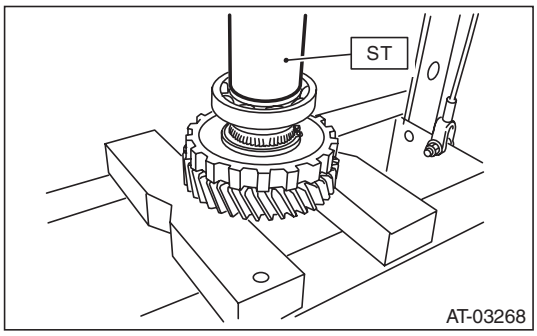

E: INSPECTION

Check the ball bearing and gear for break or damage.

F: ADJUSTMENT

1) Using the ST, measure the height “A” from the AT main case mating surface to the ball bearing outer ring contact surface.
ST 499575400 GAUGE

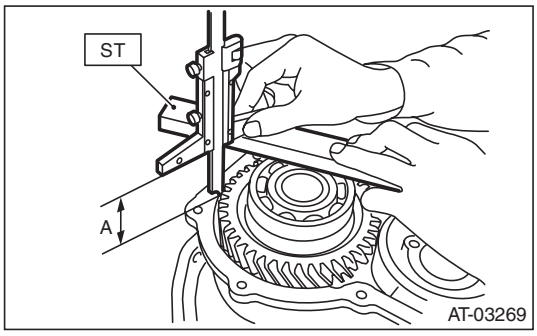

2) Using the ST, measure the depth “B”, which is from mating surface of extension case to ball bearing outer ring contact surface.
ST 499575400 GAUGE

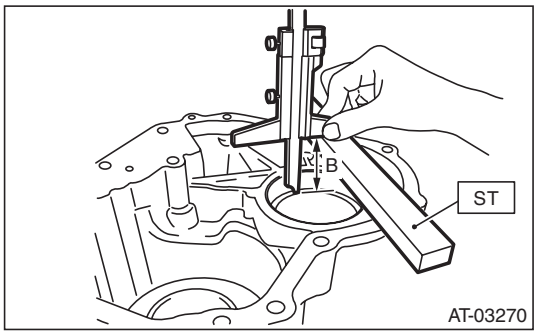

GETtheMANUALS.org

3) Calculation formula:
When clearances are 0.05 mm (0.0020 in):
T (mm) = B – A + 0.23
[T (in) = B – A + 0.0091]
When clearances are 0.25 mm (0.0098 in):
T (mm) = B – A + 0.03
[T (in) = B – A + 0.0012]
T: Shim clearance
A: Height from the mating surface of the AT main case to the ball bearing outer ring end surface
B: Depth from mating surface of extension case to ball bearing outer ring contact surface

Specification:
0.05 — 0.25 mm (0.0020 — 0.0098 in)

4) Select the reduction gear shim so that the clearance is within the specified range.

Reduction gear shim	
Part No.	Thickness mm (in)
31288AA030	0.2 (0.008)
31288AA050	0.5 (0.020)
31288AA060	0.3 (0.012)

GETtheMANUALS.org

28. Center Differential Carrier

A: REMOVAL

1) Remove the transmission assembly from the vehicle. <Ref. to 5AT-37, REMOVAL, Automatic Transmission Assembly.>
2) Remove the rear vehicle speed sensor, and separate the extension case from transmission case. <Ref. to 5AT-65, REMOVAL, Extension Case.>
3) Extract the rear drive shaft. <Ref. to 5AT-70, REMOVAL, Rear Drive Shaft.>
4) Pull out the center differential carrier assembly.

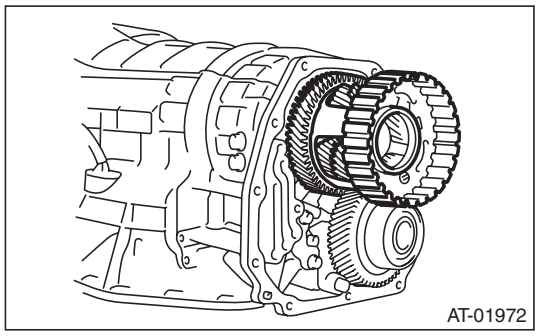

5) Remove the shim from the transmission case.

B: INSTALLATION

1) Install the center differential assembly with the shim(s).

NOTE:
Press-fit it to the bottom of bearing shoulder completely.

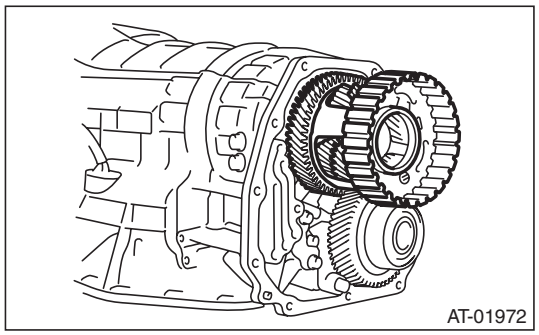

2) Insert the rear drive shaft. <Ref. to 5AT-70, INSTALLATION, Rear Drive Shaft.>
3) Join the transmission case and the extension case, and then install the rear vehicle speed sensor. <Ref. to 5AT-65, INSTALLATION, Extension Case.>
4) Install the transmission assembly to the vehicle. <Ref. to 5AT-42, INSTALLATION, Automatic Transmission Assembly.>

C: DISASSEMBLY

1) Remove the seal ring.

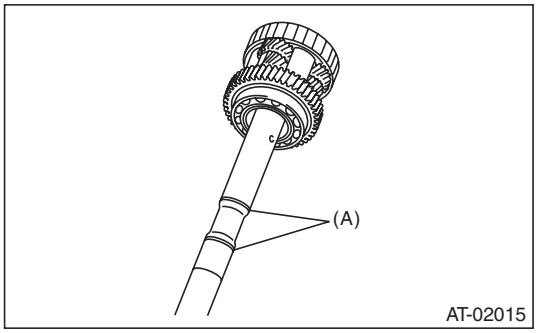

(A) Seal ring

2) Remove the ball bearing using the ST and the press.
ST 498077600 REMOVER

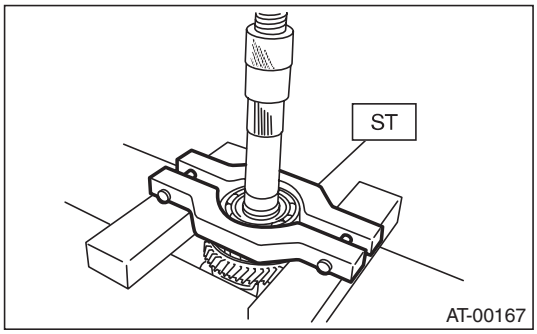

3) Remove the snap ring, and pull out the pinion shaft from center differential assembly.

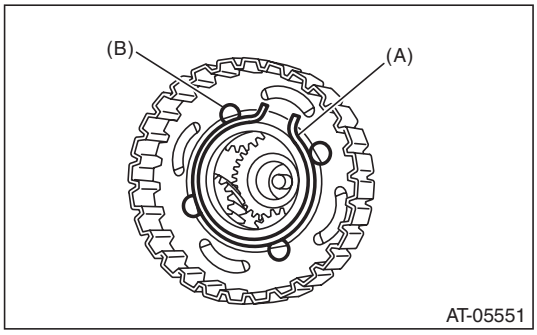

(A) Snap ring
(B) Pinion shaft

GETtheMANUALS.org

4) Remove the pinion gear and washers from center differential assembly.

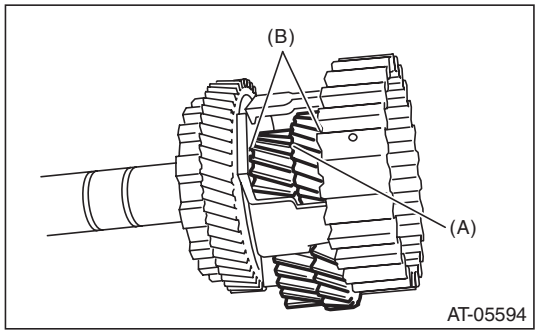

(A) Pinion gear
(B) Washer

5) Pull out the intermediate shaft and thrust bearing.

D: ASSEMBLY

1) Install the thrust bearing onto intermediate shaft.
2) Insert the intermediate shaft into the center differential assembly.
3) Install the pinion gears and washers.
4) Insert the pinion shaft into the center differential assembly.

NOTE:
- Insert the pinion shaft with the side with the plug side facing the front side (gear side).
- After inserting the pinion shaft, adjust its position so that the cutout portion on the front side is on the inner side.

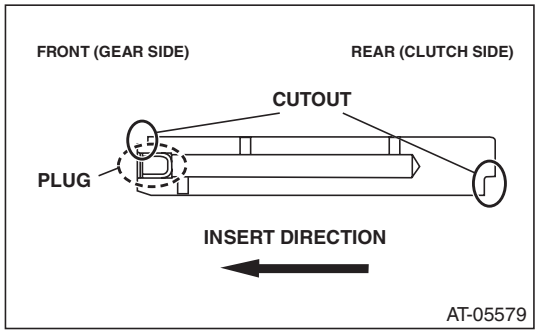

5) Install the snap ring.

6) Using a press, press-fit the ball bearing into the center differential assembly.

NOTE:
Use a new ball bearing.
ST 498077000 REMOVER

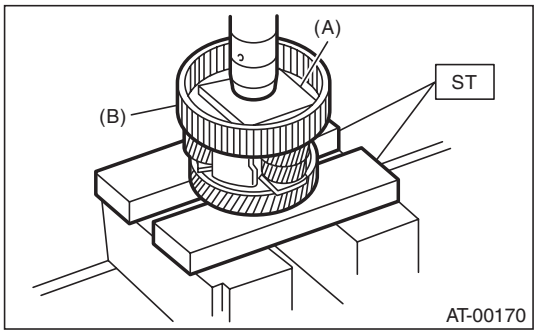

(A) Plate
(B) Center differential carrier

7) Apply vaseline onto the seal ring outer surface and shaft grooves.
8) Install a new seal ring.

E: INSPECTION

- Check each parts for holes, damages or other foreign matters.
- Inspect the extension end play, and adjust it to within the standard value. <Ref. to 5AT-67, ADJUSTMENT, Transfer Clutch.>

GETtheMANUALS.org

29. Parking Pawl

A: REMOVAL

1) Remove the transmission assembly from vehicle body. <Ref. to 5AT-37, REMOVAL, Automatic Transmission Assembly.>
2) Remove the extension case. <Ref. to 5AT-65, REMOVAL, Extension Case.>
3) Remove the center differential carrier. <Ref. to 5AT-74, REMOVAL, Center Differential Carrier.>
4) Remove the front vehicle speed sensor. <Ref. to 5AT-51, REMOVAL, Front Vehicle Speed Sensor.>
5) Remove the parking support actuator.

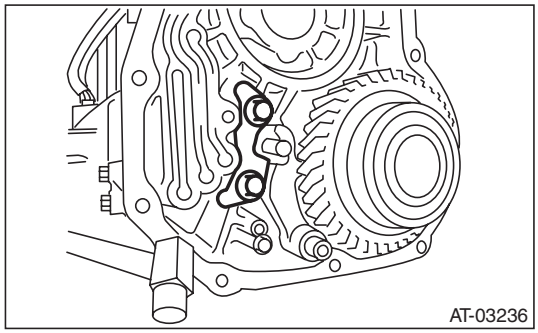

6) Remove the parking pawl, parking pawl shaft and return spring.

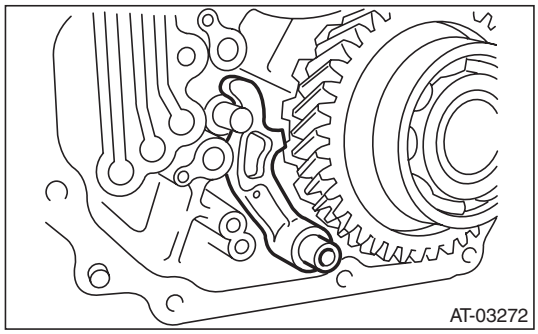

B: INSTALLATION

1) Set the transmission to the N range.
2) Install the parking pawl, parking pawl shaft and return spring.

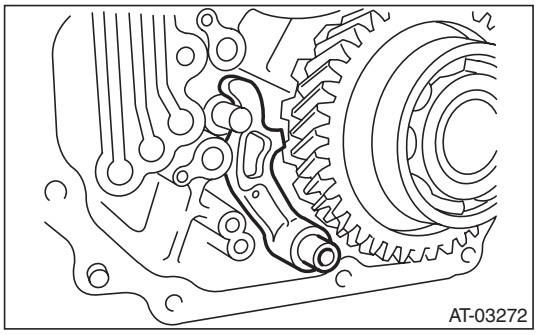

3) Install the parking support actuator.

Tightening torque:
10 N·m (1.0 kgf-m, 7.4 ft-lb)

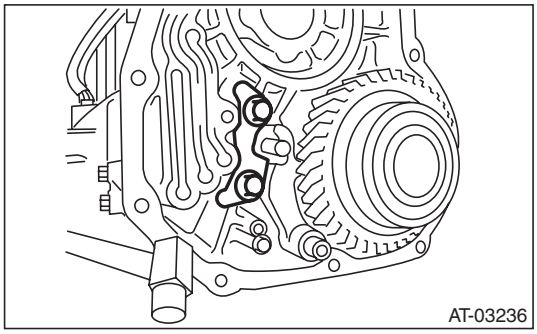

GETtheMANUALS.org

4) Using the ST, tighten the bolts which tightened in step 3) with specified angle.

NOTE:
Do not use extension as much as possible.

Tightening angle:
17°±2°

ST 18854AA000 ANGLE GAUGE

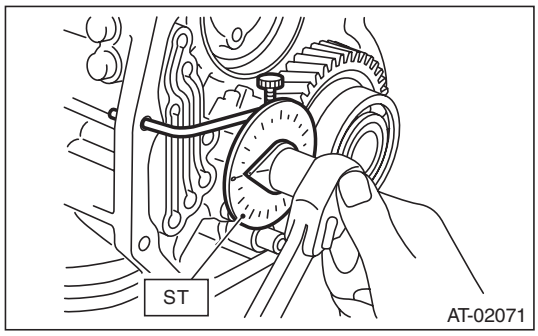

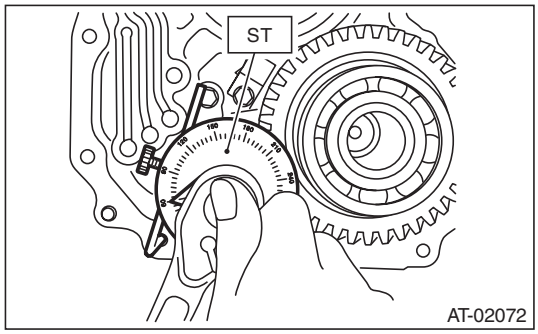

5) Make sure that the return spring is sticking out of the parking pole hole.

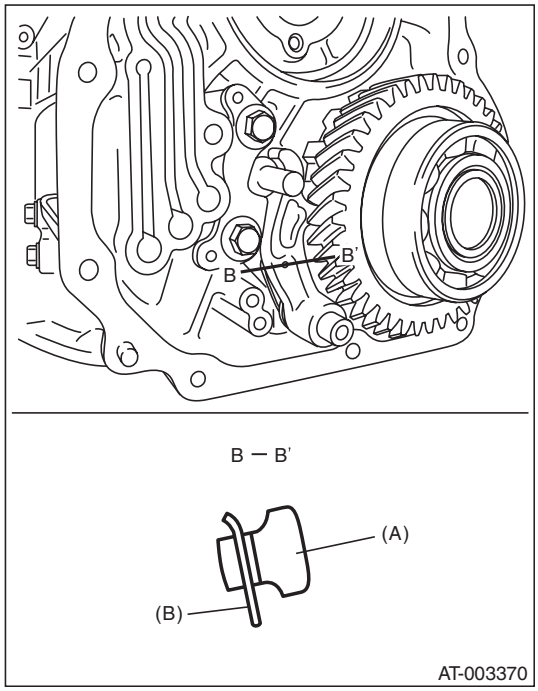

(A) Parking pawl
(B) Return spring

6) Install the front vehicle speed sensor. <Ref. to 5AT-51, INSTALLATION, Front Vehicle Speed Sensor.>
7) Install the center differential carrier. <Ref. to 5AT-74, INSTALLATION, Center Differential Carrier.>
8) Install the extension case. <Ref. to 5AT-65, INSTALLATION, Extension Case.>
9) Install the transmission assembly to the vehicle. <Ref. to 5AT-42, INSTALLATION, Automatic Transmission Assembly.>

C: INSPECTION

Make sure that the tab of parking pawl on reduction driven gear is not worn or otherwise damaged.

GETtheMANUALS.org

30. Converter Case

A: REMOVAL

1) Remove the transmission assembly from the vehicle. <Ref. to 5AT-37, REMOVAL, Automatic Transmission Assembly.>
2) Remove the torque converter assembly. <Ref. to 5AT-63, REMOVAL, Torque Converter Assembly.>
3) Remove the transmission harness connector from stay.
4) Remove the turbine speed sensor 1. <Ref. to 5AT-54, REMOVAL, Turbine Speed Sensor 1.>
5) Remove the air breather hose. <Ref. to 5AT-61, REMOVAL, Air Breather Hose.>
6) Remove the transmission hanger COMPL.
7) Remove the ATF cooler inlet pipe and outlet pipe. <Ref. to 5AT-58, REMOVAL, ATF Cooler Pipe and Hose.>
8) Remove the converter case attachment bolts.
9) Lay along the transmission body, and then remove the oil pan.
10) Remove the three converter case mounting bolts (TORX®).
ST 18676AA020 TORX® WRENCH

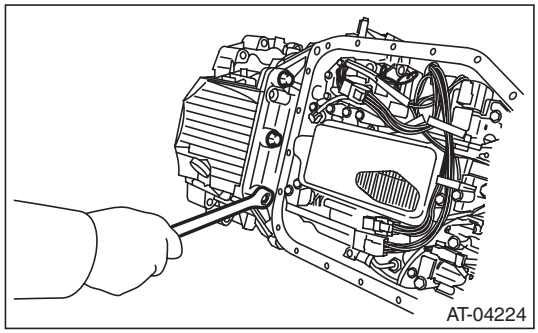

11) Separate the converter case by lightly tapping with plastic hammer.
12) Remove the front differential assembly. <Ref. to 5AT-89, REMOVAL, Front Differential Assembly.>
13) Remove the oil seal from converter case.

B: INSTALLATION

1) Check the appearance of each component and clean them.
2) Press-fit the oil seal to the converter case using ST.

NOTE:
Use a new oil seal.
ST 499587100 OIL SEAL INSTALLER

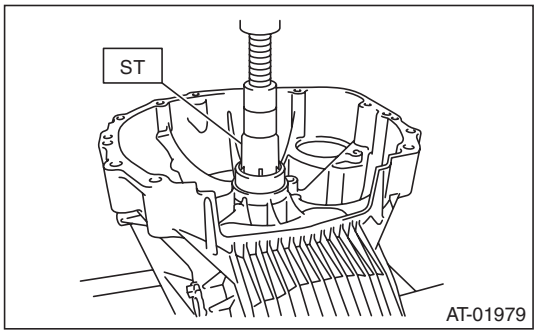

3) Install the front differential assembly and left and right side retainers to the case. <Ref. to 5AT-89, INSTALLATION, Front Differential Assembly.>
4) Remove the oil pump cover from the AT main case, and then adjust and check the backlash and tooth contact of the front differential. <Ref. to 5AT-80, REMOVAL, Oil Pump Cover.> <Ref. to 5AT-92, ADJUSTMENT, Front Differential Assembly.> <Ref. to 5AT-86, ADJUSTMENT, Drive Pinion Shaft Assembly.>
5) Apply proper amount of liquid gasket to the entire matching surface of converter case.

Liquid gasket:
THREE BOND 1215 (Part No. 004403007) or equivalent

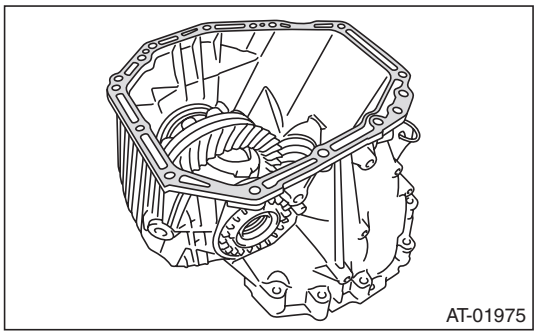

GETtheMANUALS.org

6) Install the converter case assembly without damaging bushing and oil seal.

NOTE:
Use a new bolt for the oil charge pipe and ATF cooler pipe portions

Tightening torque:
Oil charge pipe and ATF cooler pipe portions
38 N·m (3.9 kgf-m, 28.0 ft-lb)
Other than above
41 N·m (4.2 kgf-m, 30.2 ft-lb)

7) Install the three converter case mounting bolts (TORX®).

Tightening torque:
41 N·m (4.2 kgf-m, 30.2 ft-lb)

ST 18676AA020 TORX® WRENCH

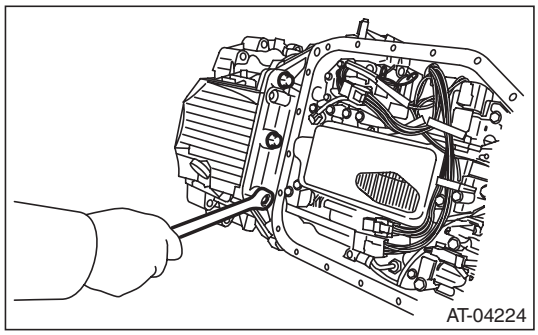

8) Apply proper amount of liquid gasket to the entire oil pan mating surface, and then install it.

Liquid gasket:
THREE BOND 1217B (Part No. K0877YA020) or equivalent

Tightening torque:
5 N·m (0.5 kgf-m, 3.7 ft-lb)

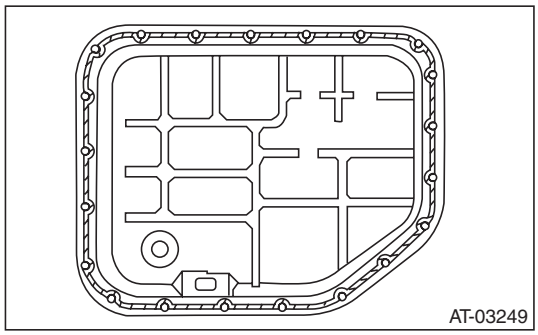

9) Install the turbine speed sensor 1. <Ref. to 5AT-54, INSTALLATION, Turbine Speed Sensor 1.>
10) Install the ATF cooler pipe. <Ref. to 5AT-59, INSTALLATION, ATF Cooler Pipe and Hose.>
11) Install the transmission hanger COMPL.

Tightening torque:
41 N·m (4.2 kgf-m, 30.2 ft-lb)

12) Install the transmission harness connector to the stay.
13) Install the air breather hose. <Ref. to 5AT-61, INSTALLATION, Air Breather Hose.>
14) Install the torque converter assembly. <Ref. to 5AT-63, INSTALLATION, Torque Converter Assembly.>
15) Install the transmission assembly to the vehicle. <Ref. to 5AT-42, INSTALLATION, Automatic Transmission Assembly.>

C: INSPECTION

Measure the backlash, and then adjust it to be within specification. <Ref. to 5AT-86, ADJUSTMENT, Drive Pinion Shaft Assembly.>

GETtheMANUALS.org

31.Oil Pump Cover

A: REMOVAL

1) Remove the transmission assembly from the vehicle. <Ref. to 5AT-37, REMOVAL, Automatic Transmission Assembly.>
2) Pull out the torque converter assembly. <Ref. to 5AT-63, REMOVAL, Torque Converter Assembly.>
3) Remove the transmission harness connector from stay.
4) Remove the ATF cooler inlet pipe and outlet pipe. <Ref. to 5AT-58, REMOVAL, ATF Cooler Pipe and Hose.>
5) Separate the converter case and transmission case. <Ref. to 5AT-78, REMOVAL, Converter Case.>
6) Remove the oil pump cover mounting bolt, and then separate the oil pump cover from the AT main case by lightly tapping with plastic hammer.

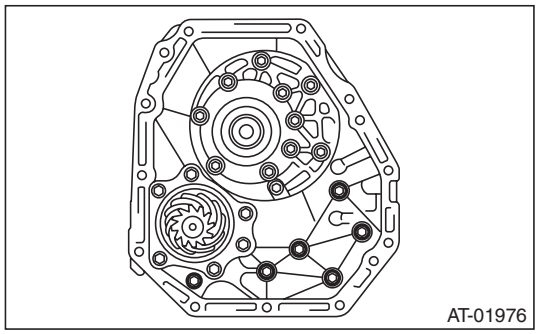

B: INSTALLATION

1) Secure the oil pump cover.

NOTE:
Use a new gasket.

Tightening torque:
41 N·m (4.2 kgf-m, 30.2 ft-lb)

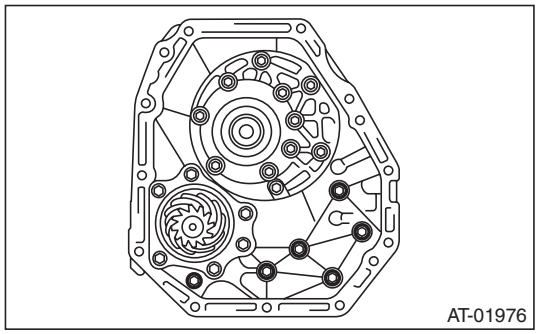

2) Install the converter case assembly to the transmission case assembly. <Ref. to 5AT-63, INSTALLATION, Torque Converter Assembly.>
3) Install the transmission harness connector to the stay.
4) Install the ATF cooler pipe. <Ref. to 5AT-59, INSTALLATION, ATF Cooler Pipe and Hose.>
5) Install the torque converter assembly. <Ref. to 5AT-63, INSTALLATION, Torque Converter Assembly.>
6) Install the transmission assembly to the vehicle. <Ref. to 5AT-42, INSTALLATION, Automatic Transmission Assembly.>

C: DISASSEMBLY

1. FRONT BRAKE

1) Remove the snap ring.

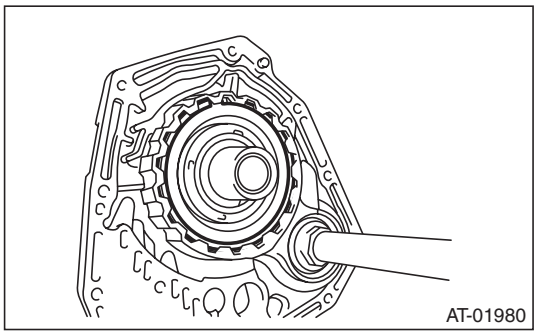

2) Remove the retaining plate, drive plate and driven plate.
3) Using the ST1, ST2 and ST3, remove the snap ring.

ST1	18762AA000	COMPRESSOR SPECIAL TOOL
ST2	18765AA000	COMPRESSOR SUPPORT
ST3	18763AA000	COMPRESSOR SHAFT

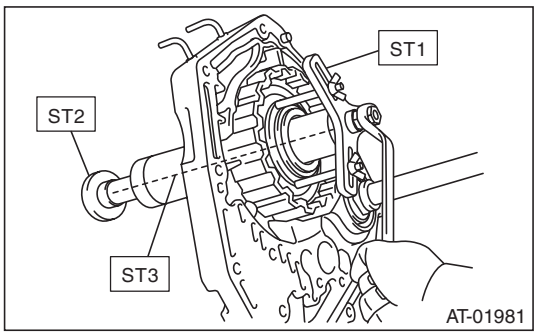

4) Remove the retainer and return spring.
5) Remove the front brake piston using compressed air.

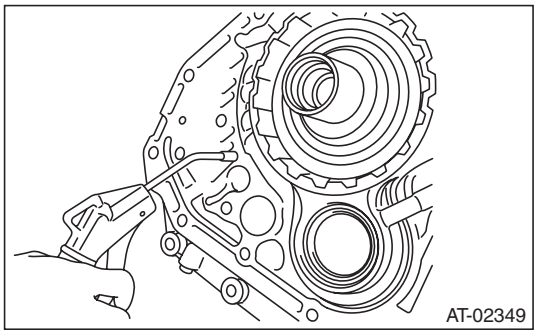

6) Remove the D-ring from front brake piston.

GETtheMANUALS.org

2. OIL PUMP

1) Take out the oil pump housing.

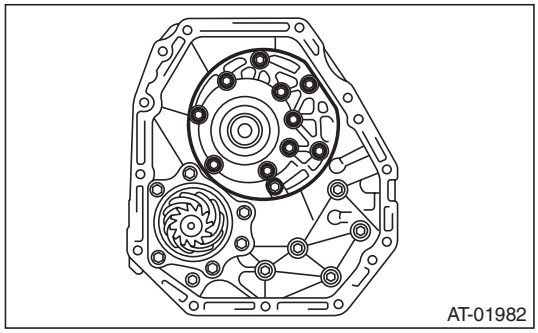

2) Take out the oil pump body.

D: ASSEMBLY

1. FRONT BRAKE

1) Apply ATF to D-ring, and then install it to the front brake piston.

NOTE:
Use a new D-ring.

2) Install the front brake piston to oil pump cover.

NOTE:
Install by aligning the "▲" mark on front brake piston surface with the oil pump cover rib.

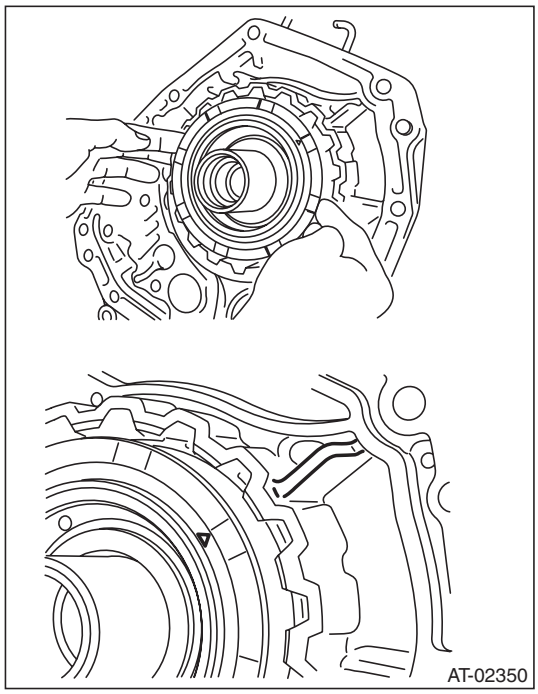

3) Install the retainer and return spring.

4) Install the front brake piston assembly using ST1, ST2 and ST3.

ST1	18762AA000	COMPRESSOR SPECIAL TOOL
ST2	18765AA000	COMPRESSOR SUPPORT
ST3	18763AA000	COMPRESSOR SHAFT

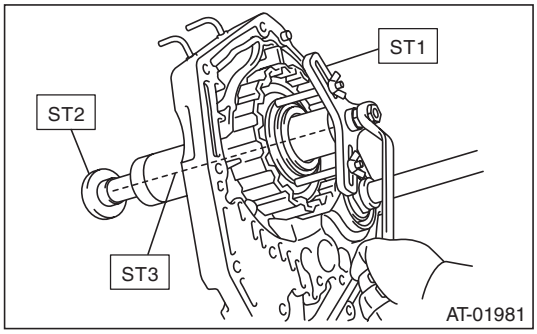

5) Install the genuine driven plate instead of retaining plate, and temporarily assemble the drive plate and driven plate.
Part No. 31536AA290 Driven plate

6) Install the snap ring.

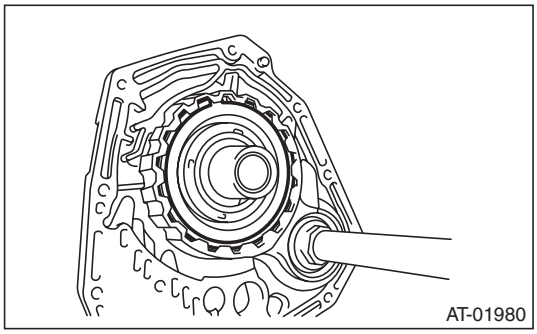

GETtheMANUALS.org

7) Measure the clearance between the retaining plate and snap ring. If the value exceeds the specification, replace the drive plate and driven plate as a set and select the retaining plate so that the value is within the specification.

NOTE:
The thickness of the genuine drive plate is 2.8±0.05 mm (0.11±0.002 in).

Front brake clearance specification:
0.7 — 1.1 mm (0.028 — 0.043 in)

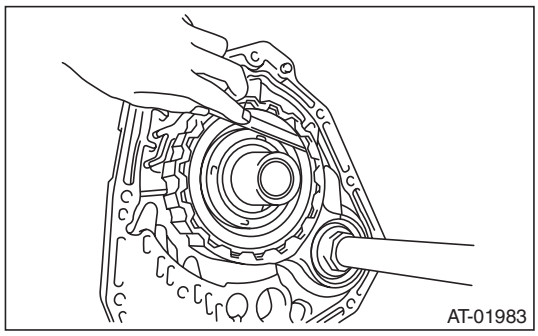

Front brake retaining plate	
Part No.	Thickness mm (in)
31567AB130	3.4 (0.134)
31567AB140	3.6 (0.142)
31567AB150	3.8 (0.150)
31567AB160	4.0 (0.157)

8) Remove the snap ring, replace the driven plate used in measurement of clearance with the retaining plate, and then reassemble.

2. OIL PUMP

1) Apply ATF to oil pump assembly, and then install it to oil pump housing.
2) Install the O-ring to oil pump cover.

NOTE:
Use new O-rings.
3) Install the oil pump housing to the oil pump cover.

Tightening torque:
10 N·m (1.0 kgf-m, 7.4 ft-lb)

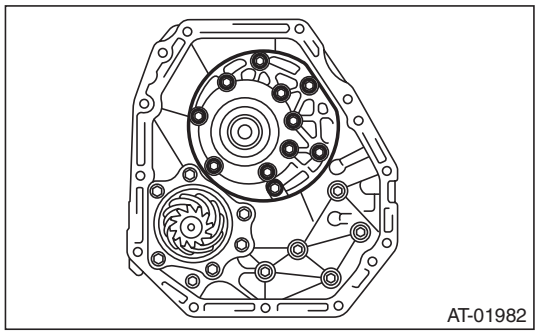

E: INSPECTION

1. FRONT BRAKE

Check the following items.
- Drive plate facing for wear or damage
- Snap ring for wear, return spring for damage, and retainer for damage
- Piston for damage
- D-ring for damage

2. OIL PUMP

Check the following items.
- Oil pump cover and oil seal for breakage or damage
- Oil pump body for scratch or damage

1) Check the seal ring and oil seal for breaks and damage.
2) Check other parts for dents or faults.
3) Oil pump rotor assembly selection
   (1) Tip clearance
   Install the inner rotor and outer rotor to oil pump housing. With rotor gears facing each other, measure the crest-to-crest clearance.

Tip clearance:
0.02 — 0.15 mm (0.0008 — 0.0059 in)

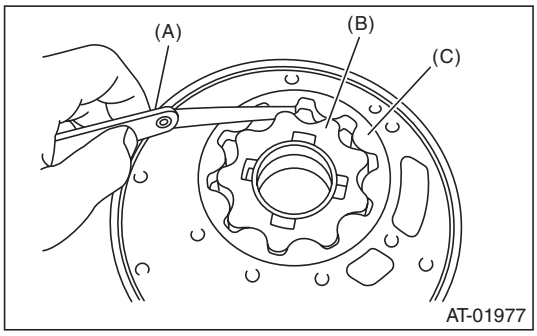

(A) Thickness gauge
(B) Inner rotor
(C) Outer rotor

GETtheMANUALS.org

(2) Side clearance
Set a depth gauge to oil pump housing, then measure the oil pump housing-to-rotor clearance.

Side clearance:
0.02 — 0.045 mm (0.0008 — 0.0018 in)

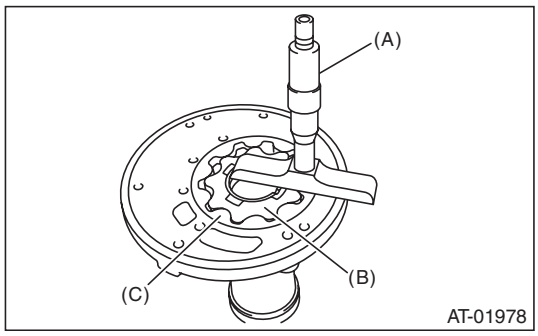

(A) Depth gauge
(B) Inner rotor
(C) Outer rotor

(3) If the tip and/or side clearance are not within the specification, replace the rotor assembly.

Oil pump rotor assembly	
Part No.	Thickness mm (in)
15008AA130	11.37 — 11.38 (0.4476 — 0.4480)
15008AA140	11.38 — 11.39 (0.4480 — 0.4484)
15008AA150	11.39 — 11.40 (0.4484 — 0.4488)

Check the total end play and adjust it to be within specifications. <Ref. to 5AT-103, ADJUSTMENT, AT Main Case.>

GETtheMANUALS.org

32. Drive Pinion Shaft Assembly

A: REMOVAL

1) Remove the transmission assembly from the vehicle. <Ref. to 5AT-37, REMOVAL, Automatic Transmission Assembly.>
2) Pull out the torque converter assembly. <Ref. to 5AT-63, REMOVAL, Torque Converter Assembly.>
3) Remove the transmission harness connector from stay.
4) Remove the ATF cooler inlet pipe and outlet pipe. <Ref. to 5AT-58, REMOVAL, ATF Cooler Pipe and Hose.>
5) Separate the converter case and transmission case. <Ref. to 5AT-78, REMOVAL, Converter Case.>
6) Remove the drive pinion shaft mounting bolts, and then remove the drive pinion shaft assembly from oil pump cover.

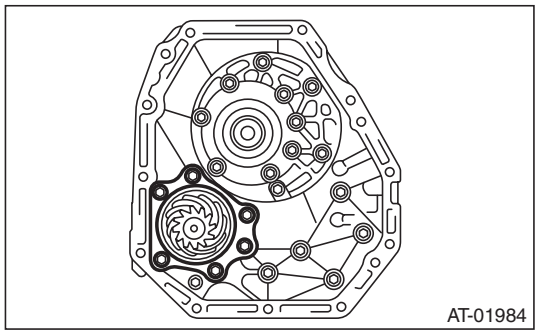

7) Remove the oil pump cover from AT main case. <Ref. to 5AT-80, Oil Pump Cover.>

B: INSTALLATION

1) Assemble the drive pinion assembly to oil pump cover.

NOTE:
Be careful not to bend the shim.

Tightening torque:
70 N·m (7.1 kgf-m, 51.6 ft-lb)

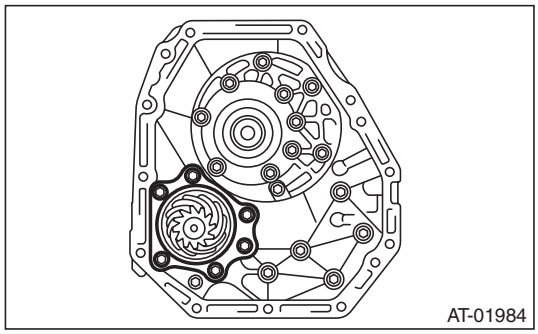

2) Adjust the tooth contact between drive pinion shaft assembly and the front differential side gear. <Ref. to 5AT-86, ADJUSTMENT, Drive Pinion Shaft Assembly.>
3) Join the converter case with the transmission case. <Ref. to 5AT-78, INSTALLATION, Converter Case.>
4) Install the transmission harness connector to the stay.
5) Install the ATF cooler pipe. <Ref. to 5AT-59, INSTALLATION, ATF Cooler Pipe and Hose.>
6) Install the torque converter assembly. <Ref. to 5AT-63, INSTALLATION, Torque Converter Assembly.>
7) Install the transmission assembly to the vehicle. <Ref. to 5AT-42, INSTALLATION, Automatic Transmission Assembly.>

C: DISASSEMBLY

1) Flatten the lock nut tab, and then remove the lock nut while holding the rear spline part of the shaft using ST1 and ST2. Pull out the drive pinion collar.

ST1	18667AA010	HOLDER
ST2	499787700	WRENCH
ST3	499787500	ADAPTER

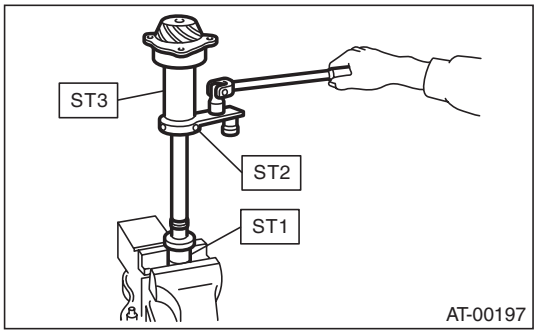

2) Remove the O-ring.
3) Separate the roller bearing and outer race from shaft using a press.

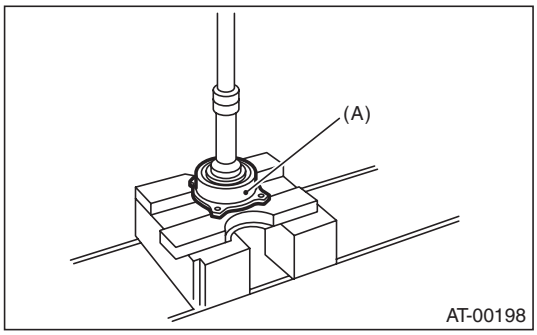

(A) Outer race

GETtheMANUALS.org

4) Separate the front roller bearing from the shaft using a press and the ST.
ST 498517000 REPLACER

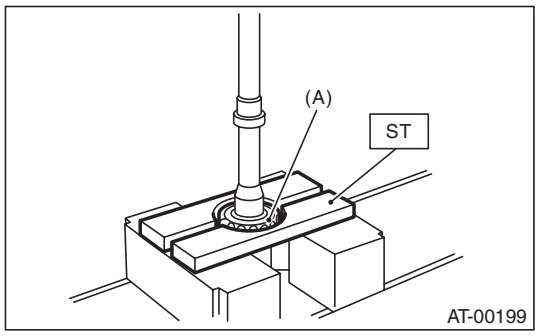

(A) Front roller bearing

D: ASSEMBLY

1) Measure the dimension “A” of drive pinion shaft.
ST 398643600 GAUGE

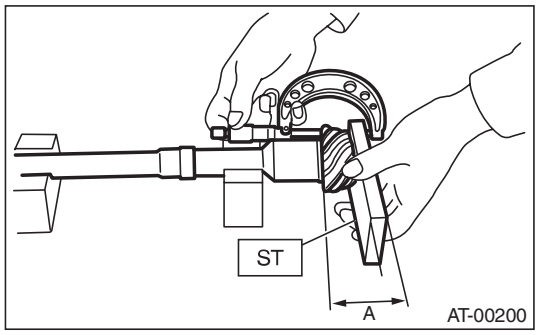

2) Using a press, press-fit the new roller bearing into the specified position.

NOTE:
If excessive force is applied to roller bearing, the roller bearing will not turn easily.

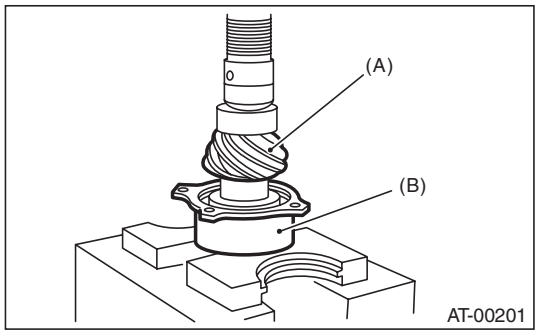

(A) Drive pinion shaft
(B) Roller bearing

3) After fitting a new O-ring to the shaft, attach the drive pinion collar to the shaft.

4) Tighten the new lock nuts using ST1, ST2 and ST3.
Calculate the tightening torque using following formula.
T2 = L2/(L1 + L2) × T1
T1: 116 N·m (11.8 kgf-m, 85.6 ft-lb)
[Required torque setting]
T2: Tightening torque
L1: ST2 length 0.072 m (2.83 in)
L2: Torque wrench length
Example:

Torque wrench length m (in)	Tightening torque N·m (kgf-m, ft-lb)
0.4 (15.75)	98 (10.0, 72.3)
0.45 (17.72)	100 (10.2, 73.8)
0.5 (19.69)	101 (10.3, 74.5)
0.55 (21.65)	102 (10.4, 75.2)

ST1 18667AA010 HOLDER
ST2 499787700 WRENCH
ST3 499787500 ADAPTER

NOTE:
Attach ST2 to torque wrench as straight as possible.

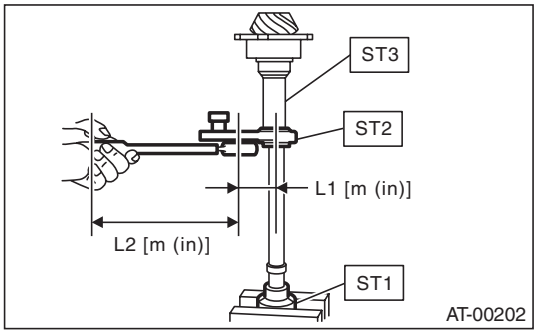

5) Measure the starting torque of the bearing. Make sure the starting torque is within the specified range. If the torque is not within specified range, replace the roller bearing.

Starting torque:
7.6 — 38.1 N (0.775 — 3.88 kgf, 1.7 — 8.6 lbf)

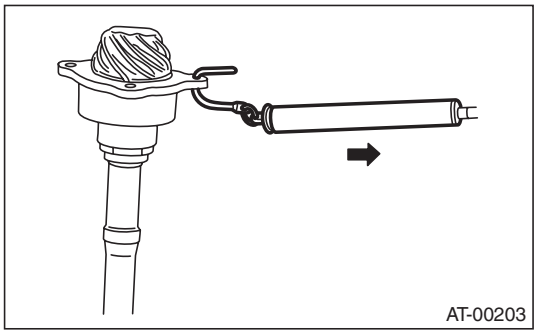

6) Crimp the locknut in 2 locations.

GETtheMANUALS.org

7) Measure the dimension “B” of the drive pinion shaft.
ST 398643600 GAUGE

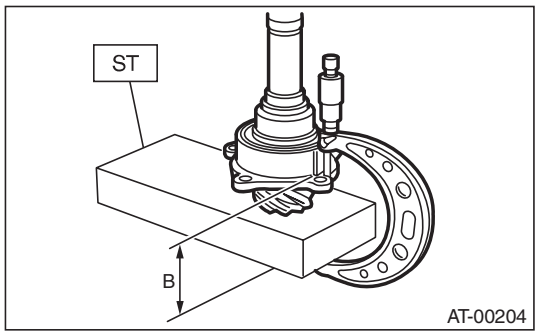

8) Calculate the thickness “t” mm (in) of the drive pinion shim.
t = 6.5±0.0625 (0.256±0.0025) – (B – A)
9) Select three or less shims from following table.

Drive pinion shim	
Part No.	Thickness mm (in)
31451AA180	0.150 (0.0059)
31451AA190	0.175 (0.0069)
31451AA200	0.200 (0.0079)
31451AA210	0.225 (0.0089)
31451AA220	0.250 (0.0098)
31451AA230	0.275 (0.0108)

E: INSPECTION

- Make sure that all component parts are free of scratches, holes and other faults.
- Adjust the tooth alignment. <Ref. to 5AT-86, ADJUSTMENT, Drive Pinion Shaft Assembly.>

F: ADJUSTMENT

1) Assemble the drive pinion shaft assembly to oil pump cover.
2) Remove the liquid gasket from the mating surface completely.
3) Install the converter case to oil pump cover, and secure them with tightening four bolts evenly.

NOTE:
Use an old gasket or aluminum washer to prevent damaging the mating surface of the housing.

Tightening torque:
41 N·m (4.2 kgf-m, 30.2 ft-lb)

4) Rotate the drive pinion a few times using ST1 and ST2.
ST1 18667AA010 HOLDER
ST2 499787700 WRENCH

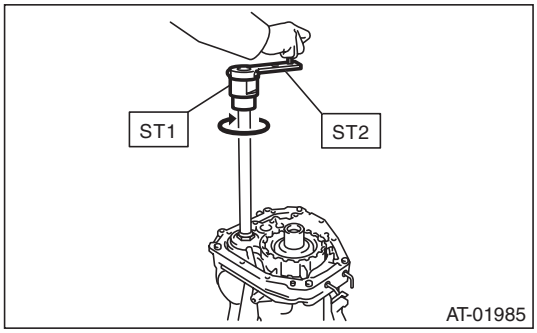

5) Adjust the drive pinion and hypoid driven gear backlash. <Ref. to 5AT-92, ADJUSTMENT, Front Differential Assembly.>
6) Apply lead-free red dye evenly on the surface of three to four teeth of the hypoid driven gear. Rotate the drive pinion in the leftward and rightward for several times. Remove the oil pump cover, and check the tooth contact pattern.
If the teeth contact is inappropriate, adjust the backlash or thickness of the shim. <Ref. to 5AT-92, ADJUSTMENT, Front Differential Assembly.>
- Correct tooth contact

Check item: Tooth contact surface is slightly shifted toward the toe side under a no-load condition. (When driving, it moves towards the heel side.

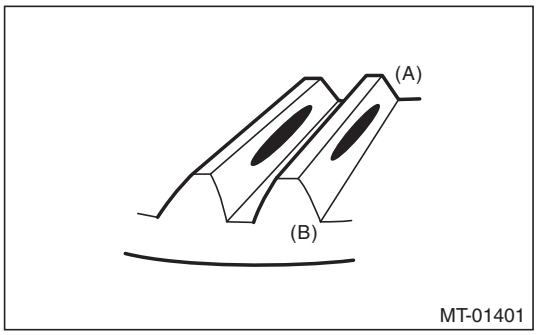

(A) Toe side
(B) Heel side

GETtheMANUALS.org

- Face contact

Check item: Backlash is too large.

Contact pattern

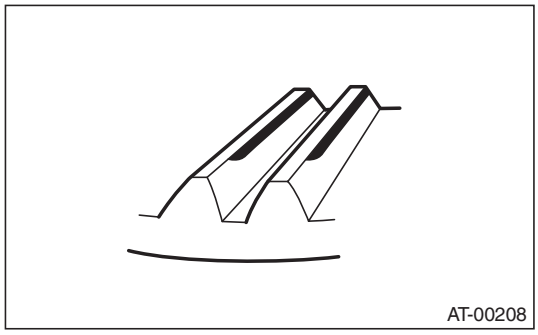

Adjustment: Increase the thickness of the shim according to the procedures for moving the drive pinion closer to the driven gear.

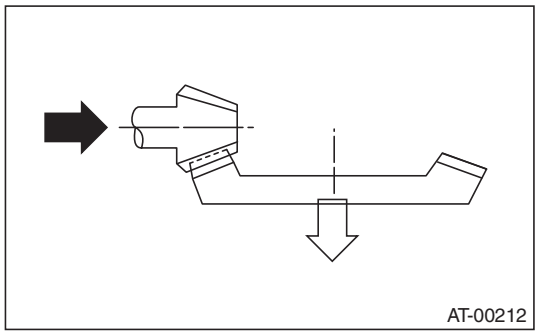

- Flank contact

Check item: Backlash is too small.

Contact pattern

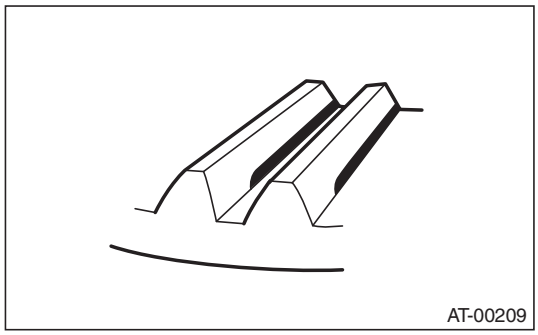

Adjustment: Reduce the thickness of the shim according to the procedure for moving the drive pinion away from the driven gear.

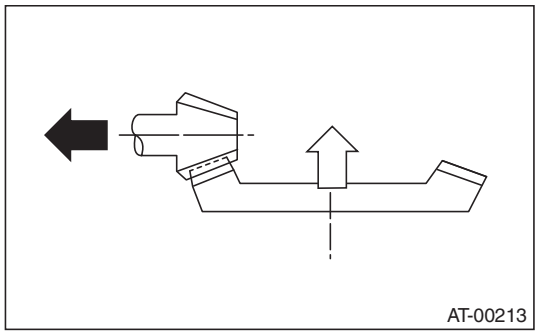

- Toe contact (inside contact)

Check item: Teeth contact area is too small.

Contact pattern

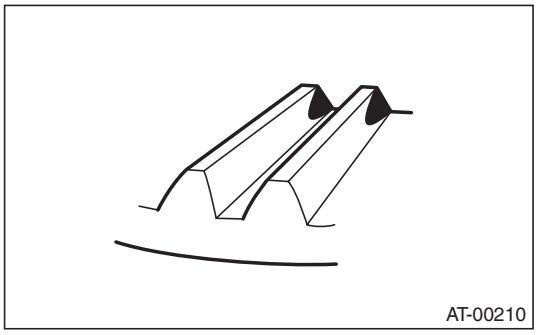

Adjustment: Reduce the thickness of the shim according to the procedure for moving the drive pinion away from the driven gear.

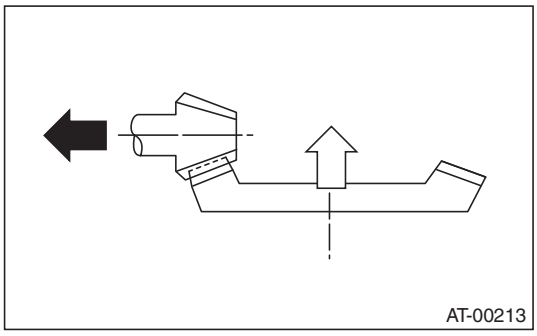

- Heel contact (outside end contact)

Check item: Teeth contact area is too small.

Contact pattern

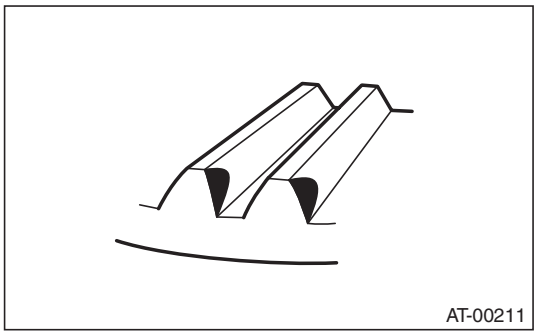

Adjustment: Increase the thickness of the shim according to the procedures for moving the drive pinion closer to the driven gear.

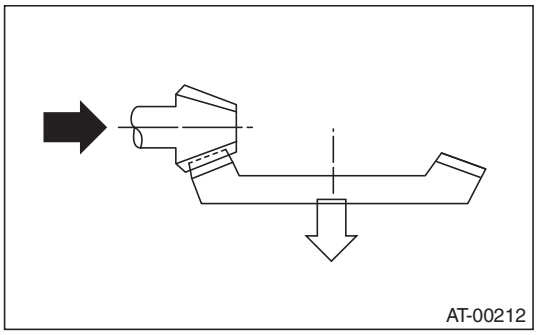

GETtheMANUALS.org

7) If tooth contact is correct, mark the retainer position and loosen it. After fitting a new O-ring and oil seal, screw in the retainer to the marked position. Tighten the lock plate with specified torque.

Tightening torque:
25 N·m (2.5 kgf-m, 18.4 ft-lb)

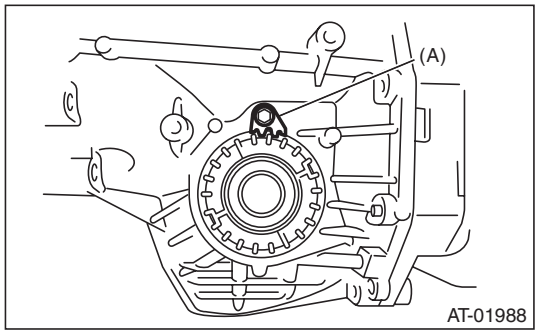

(A) Lock plate

GETtheMANUALS.org

33. Front Differential Assembly

A: REMOVAL

1) Remove the transmission assembly from the vehicle. <Ref. to 5AT-37, REMOVAL, Automatic Transmission Assembly.>
2) Pull out the torque converter assembly. <Ref. to 5AT-63, REMOVAL, Torque Converter Assembly.>
3) Remove the transmission harness connector from stay.
4) Remove the ATF cooler inlet pipe and outlet pipe. <Ref. to 5AT-58, REMOVAL, ATF Cooler Pipe and Hose.>
5) Separate the converter case from the transmission case. <Ref. to 5AT-78, REMOVAL, Converter Case.>
6) Remove the differential side retainers using ST.

NOTE:
Hold the differential case assembly by hand to avoid damaging the differential side retainer mounting hole of the converter case.

ST 18630AA010 WRENCH COMPL RETAINER

7) Remove the front differential assembly while being careful not to damage the attachment part of the retainer.

B: INSTALLATION

1) When installing the front differential assembly to the case, be careful not to damage the inside of case (particularly, the differential side retainer mating surface).

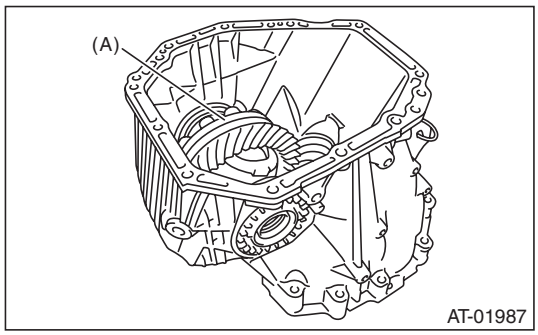

(A) Front differential ASSY

2) Install the O-ring to left and right side retainers.
3) Using the ST, install the side retainer. <Ref. to 5AT-92, ADJUSTMENT, Front Differential Assembly.>

ST 18630AA010 WRENCH COMPL RETAINER

4) Adjust the backlash of the front differential. <Ref. to 5AT-92, ADJUSTMENT, Front Differential Assembly.>
5) Install the lock plate.

Tightening torque:
25 N·m (2.5 kgf-m, 18.4 ft-lb)

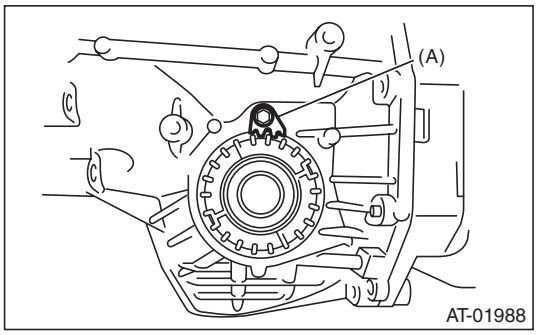

(A) Lock plate

6) Install the converter case to the transmission case. <Ref. to 5AT-78, INSTALLATION, Converter Case.>
7) Install the transmission harness connector to the stay.
8) Install the ATF cooler pipe. <Ref. to 5AT-59, INSTALLATION, ATF Cooler Pipe and Hose.>
9) Install the torque converter assembly. <Ref. to 5AT-63, INSTALLATION, Torque Converter Assembly.>
10) Install the transmission assembly to the vehicle. <Ref. to 5AT-42, INSTALLATION, Automatic Transmission Assembly.>

GETtheMANUALS.org

C: DISASSEMBLY

1. DIFFERENTIAL CASE ASSEMBLY

1) Remove the taper roller bearing using the ST and the press.
ST 498077000 REMOVER

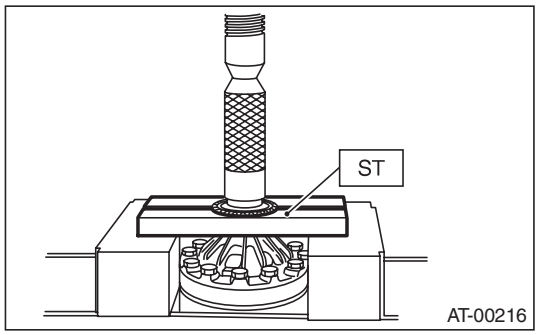

2) Secure the case in a vise, remove the hypoid driven gear tightening bolts, and then separate the hypoid driven gear into case (RH) and case (LH).

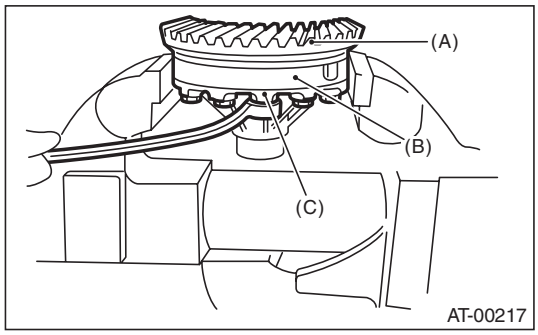

(A) Hypoid driven gear
(B) Differential case (RH)
(C) Differential case (LH)

3) Pull out the straight pin and shaft, and then remove the differential bevel gear, washer and differential bevel pinion.

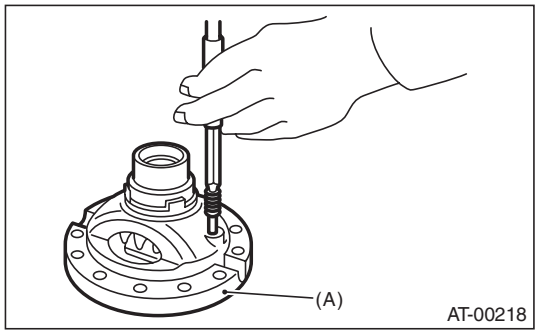

(A) Differential case (RH)

2. SIDE RETAINER

NOTE:
After adjusting the drive pinion backlash and tooth contact, remove and install the oil seal and O-ring.
1) Remove the O-ring.

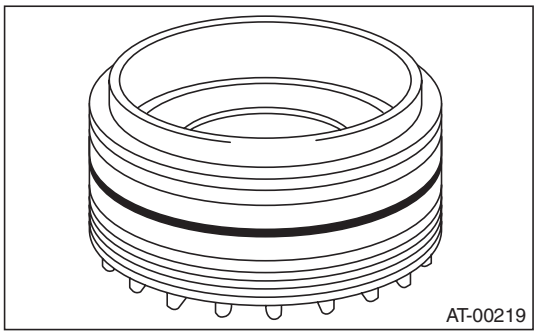

2) Remove the oil seal.

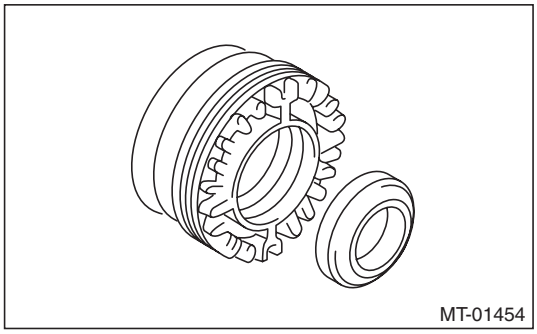

3) Remove the bearing outer race.
(1) Remove the split pin, and then remove the claw.
ST 398527700 PULLER ASSY

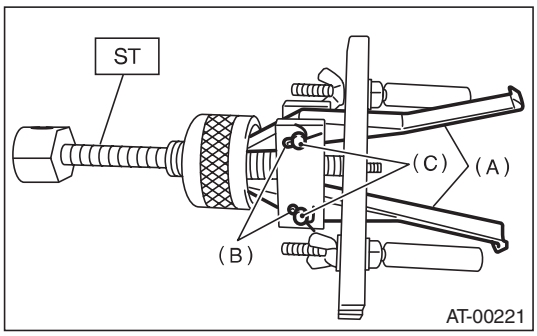

(A) Claw
(B) Split pin
(C) Pin

GETtheMANUALS.org

(2) Attach two claws to the outer race, and set the ST to side retainer.

ST 398527700 PULLER ASSY

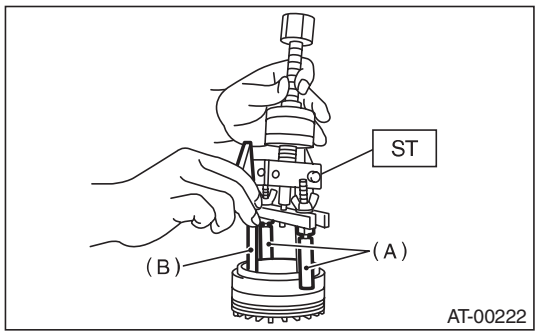

(A) Shaft
(B) Claw

(3) Restore the removed claws to original position, and install the pin and split pin.
(4) Hold the shaft of ST to avoid removing from side retainer, and then remove the bearing outer race.

NOTE:
Replace the bearing inner and outer races as a single unit.

ST 398527700 PULLER ASSY

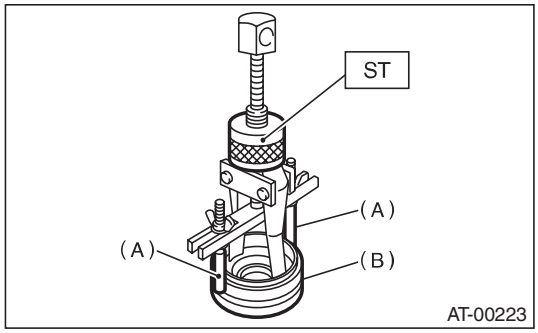

(A) Shaft
(B) Side retainer

D: ASSEMBLY

1. DIFFERENTIAL CASE ASSEMBLY

1) Install the washer, differential bevel gear and differential bevel pinion in the differential case (RH). Insert the pinion shaft.
2) Attach the straight pin in the reverse direction.

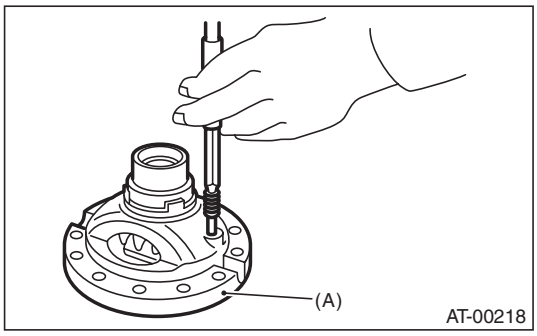

(A) Differential case (RH)

3) Install the washer and differential bevel gear to differential case (LH). Put the differential case (LH) on the differential case (RH), and assemble the two differential cases.
4) Install the hypoid driven gear and secure by tightening the bolt.

Tightening torque:
70 N·m (7.1 kgf-m, 51.6 ft-lb)

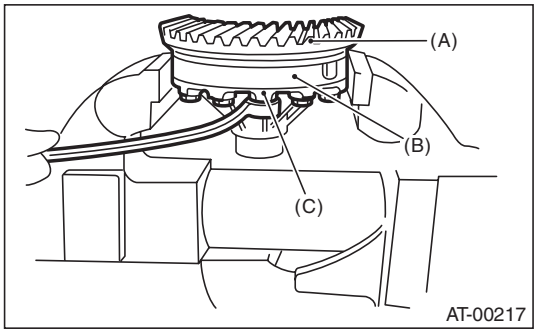

(A) Hypoid driven gear
(B) Differential case (RH)
(C) Differential case (LH)

GETtheMANUALS.org

5) Measurement of backlash (Selection of washer)
(1) Install the SUBARU genuine axle shaft to differential case.
Part No. 38415AA070 Axle shaft
(2) Measure the gear backlash using ST1 and ST2, and then insert the ST2 through the access window of differential case.

NOTE:
• Measure the backlash by applying a differential bevel pinion tooth between two differential bevel gear teeth.
• When measuring, fix the differential bevel pinion gear in place with a screwdriver covered with waste cloth, or a similar tool.

Standard:
0.13 — 0.18 mm (0.0051 — 0.0071 in)
ST1 498247001 MAGNET BASE
ST2 498247100 DIAL GAUGE

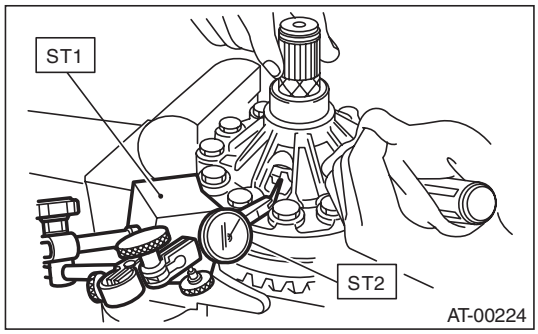

(3) If the backlash is not within specification, select a washer from the table below.

Washer	
Part No.	Thickness mm (in)
803038021	0.95 (0.037)
803038022	1.00 (0.039)
803038023	1.05 (0.041)

6) Using the ST, install the taper roller bearing.
ST 398487700 DRIFT

2. SIDE RETAINER

NOTE:
Install the oil seal and O-ring of side retainer after the adjustment of backlash and tooth contact.
1) Install the bearing outer race to side retainer.
2) Using the ST, install the oil seal.

NOTE:
• Use a new oil seal.
• Apply gear oil to the oil seal lips, and install the oil seal while being careful not to deform the lip.
• Check the identification marks (L, R) during installation not to mix up the oil seal RH and LH.
ST 18675AA000 DIFFERENTIAL SIDE OIL SEAL INSTALLER

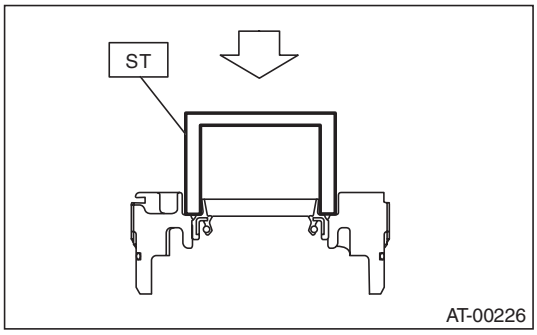

3) Install a new O-ring.

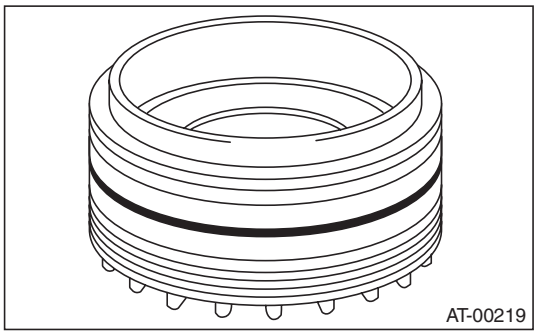

E: INSPECTION

• Check each component for scratches, damage or other faults.
• Measure the backlash, and then adjust it to be within specification. Ref. to 5AT-92, ADJUSTMENT, Front Differential Assembly.

F: ADJUSTMENT

1) Using the ST, screw-in the retainer until resistance is felt.

NOTE:
Screw-in the retainer RH side slightly deeper than the retainer LH.
ST 18658AA020 WRENCH COMPL RETAINER
2) Remove the oil pump cover.
3) Remove the liquid gasket from the mating surface completely.
4) Install the oil pump cover to converter case, and secure them with tightening four bolts evenly.

NOTE:
Use an old gasket or aluminum washer to prevent damaging the mating surface of the housing.

Tightening torque:
41 N·m (4.2 kgf-m, 30.2 ft-lb)

GETtheMANUALS.org

5) Rotate the drive pinion ten times or more using ST1 and ST2.
ST1 18667AA010 HOLDER
ST2 499787700 WRENCH

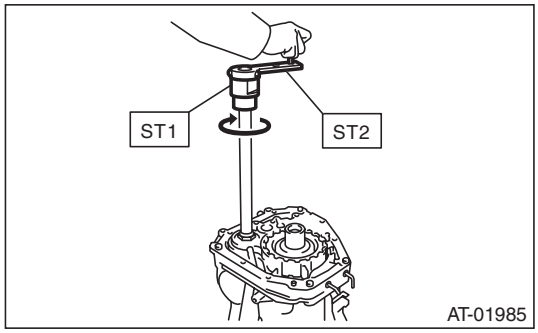

6) Tighten the LH retainer by rotating the shaft until resistance is felt. Then loosen the retainer RH. Keep tightening the retainer LH, and loosening the retainer RH until the pinion shaft no longer be turned. This is the “zero” state.

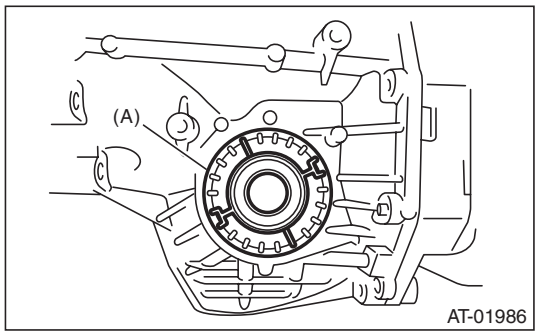

(A) Retainer

7) After the “zero” state is established, loosen the retainer LH by 3 notches and secure it with the lock plate. Then loosen the retainer RH and retighten until it stops. Rotate the drive pinion 2 or 3 times. Tighten the retainer RH further 1-3/4 notches. This sets the preload. Finally, secure the retainer with its lock plate.

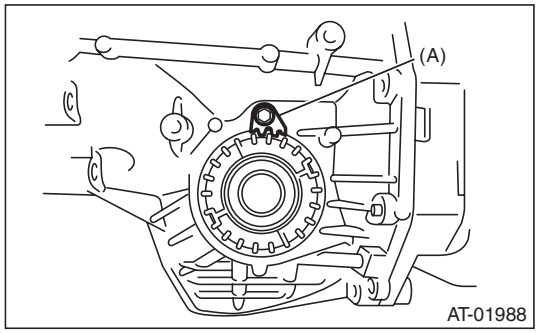

(A) Lock plate

NOTE:
Turning the retainer by one tooth changes the backlash approx. 0.05 mm (0.0020 in).

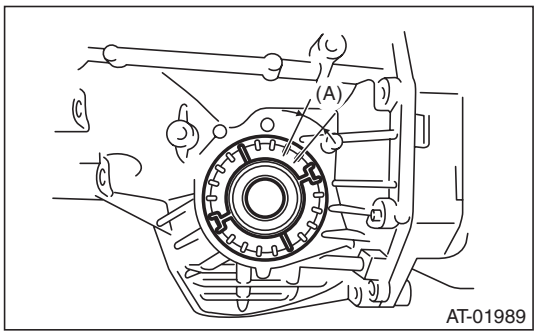

(A) 0.05 mm (0.0020 in)

8) Install the SUBARU genuine axle shaft to the left and right sides of the front differential.
9) Turn the drive pinion a few times with ST1 and check to see if the backlash is within the specified value, using ST2, ST3, ST4 and ST5.

NOTE:
Secure the ST1 and stator shaft with the tie-wrap.

Backlash:
0.13 — 0.18 mm (0.0051 — 0.0071 in)
ST1 499787700 WRENCH
ST2 498247001 MAGNET BASE
ST3 498247100 DIAL GAUGE
ST4 499787500 ADAPTER
ST5 498255400 PLATE

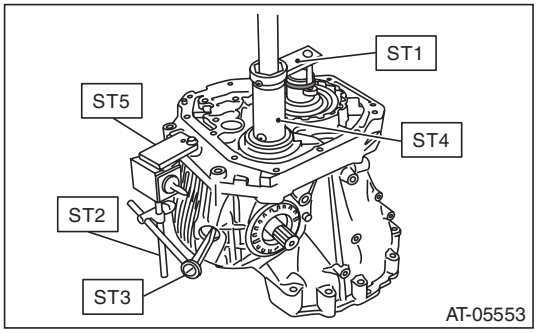

10) Adjust the teeth contact of the front differential and drive shaft. <Ref. to 5AT-86, ADJUSTMENT, Drive Pinion Shaft Assembly.>

GETtheMANUALS.org

34. AT Main Case

A: REMOVAL

1) Remove the transmission assembly from the vehicle. <Ref. to 5AT-37, REMOVAL, Automatic Transmission Assembly.>
2) Pull out the torque converter assembly. <Ref. to 5AT-63, REMOVAL, Torque Converter Assembly.>
3) Remove the transmission harness connector from stay.
4) Remove the ATF cooler inlet pipe and outlet pipe. <Ref. to 5AT-58, REMOVAL, ATF Cooler Pipe and Hose.>
5) Remove the extension case. <Ref. to 5AT-65, REMOVAL, Extension Case.>
6) Remove the center differential carrier. <Ref. to 5AT-74, REMOVAL, Center Differential Carrier.>
7) Remove the reduction driven gear. <Ref. to 5AT-71, REMOVAL, Reduction Driven Gear.>
8) Separate the converter case from the transmission case. <Ref. to 5AT-78, REMOVAL, Converter Case.>
9) Remove the control valve body. <Ref. to 5AT-55, REMOVAL, Control Valve Body.>
10) Remove the oil pump cover. <Ref. to 5AT-80, REMOVAL, Oil Pump Cover.>

NOTE:
The input clutch pack assembly and front sun gear assembly are also removed together.

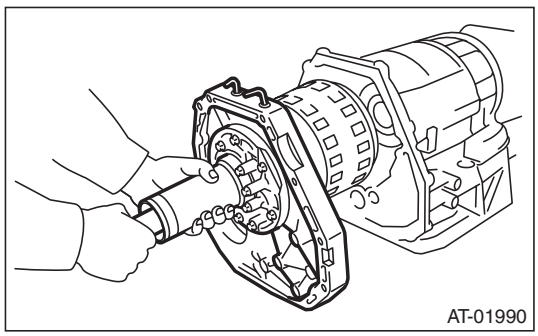
AT-01990

11) Remove the needle bearing of the middle carrier assembly.

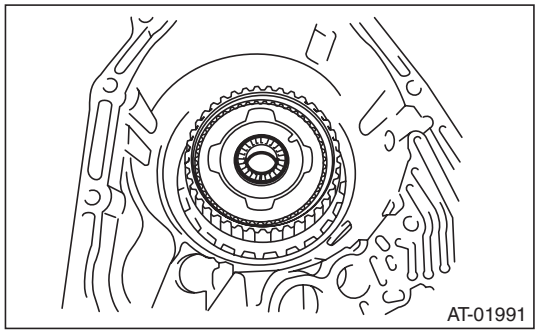
AT-01991

12) Remove the middle carrier assembly.

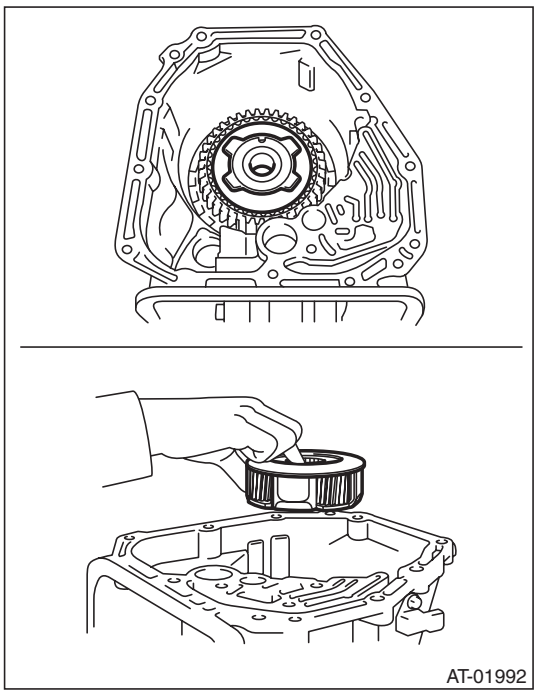
AT-01992

13) Remove the rear carrier assembly.

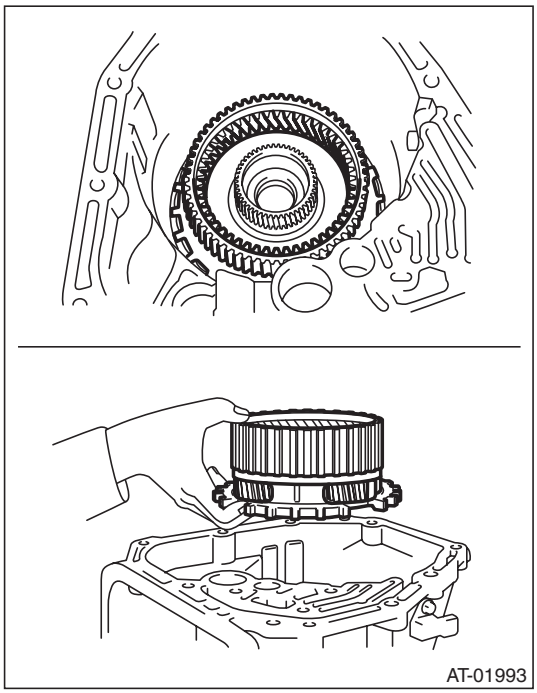
AT-01993

GETtheMANUALS.org

14) Remove the middle & rear sun gear assembly.

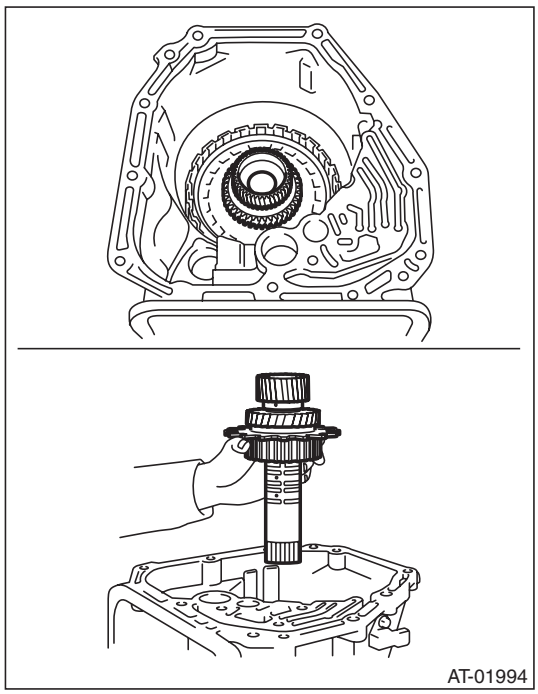

15) Remove the thrust needle bearing of high & low reverse clutch.

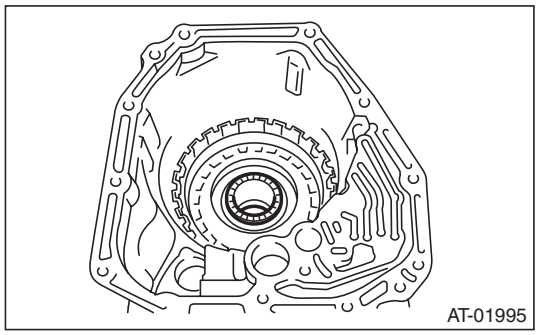

16) Remove the high & low reverse clutch assembly.

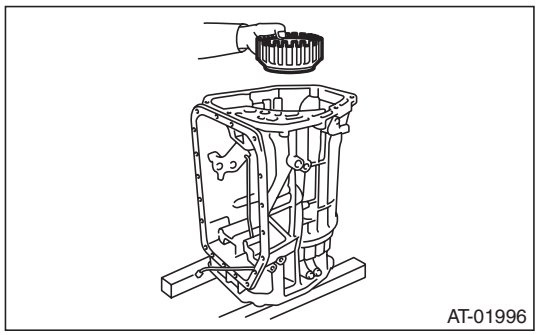

17) Remove the direct clutch assembly.

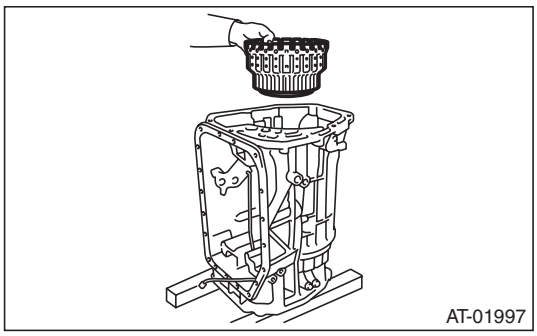

18) Remove the snap ring of reverse brake.

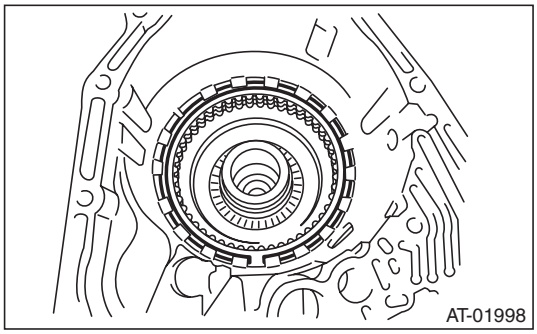

19) Remove the retaining plate.
20) Remove the leaf spring.

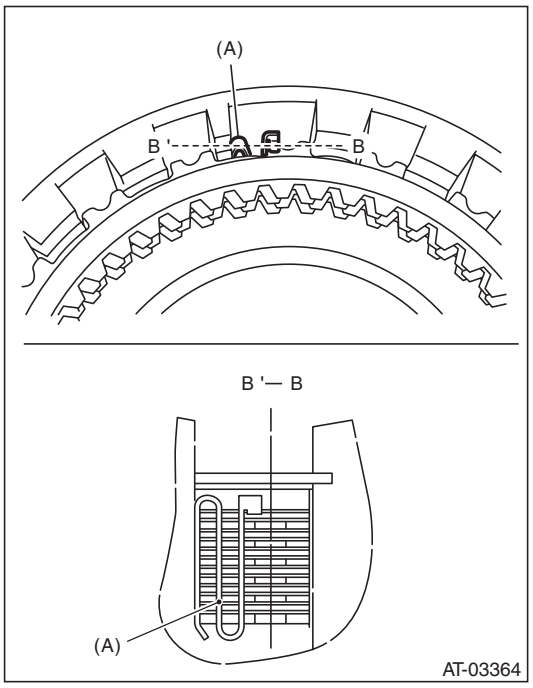

(A) Leaf spring

21) Take out the drive plate, driven plate and dish plate.

GETtheMANUALS.org

22) Remove the snap ring of the reverse brake spring retainer.

ST1	18762AA000	COMPRESSOR SPECIAL TOOL
ST2	18765AA000	COMPRESSOR SUPPORT
ST3	18763AA000	COMPRESSOR SHAFT

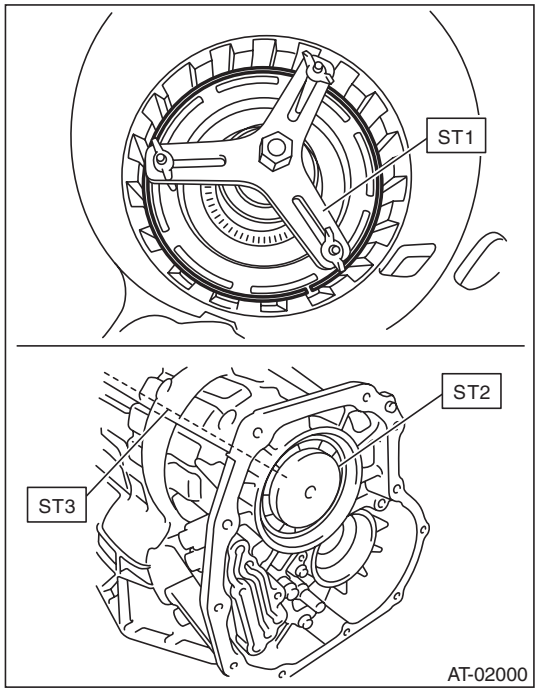

23) Remove the spring retainer.

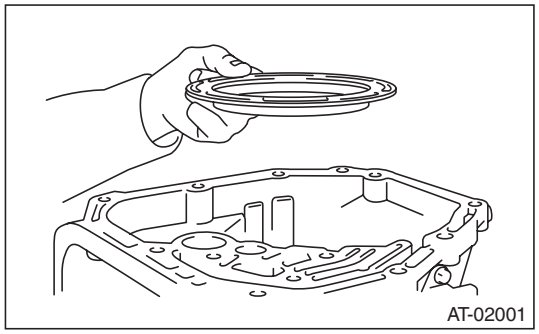

24) Remove the return spring.

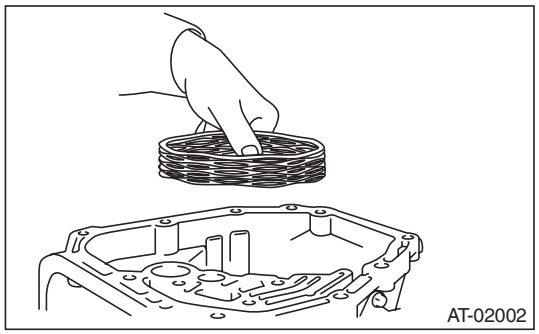

25) Apply compressed air.

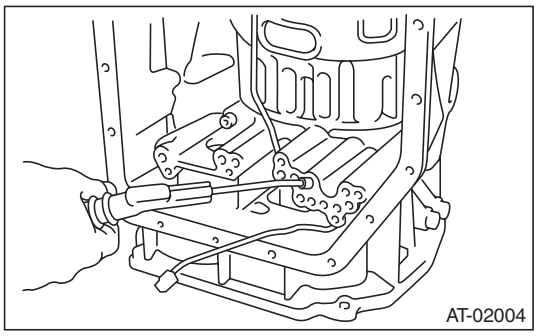

26) Remove the reverse brake piston.

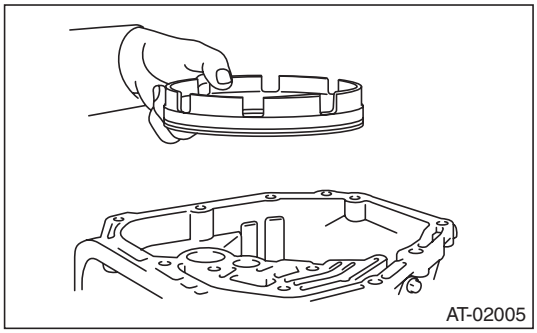

27) Remove the thrust bearing and seal ring.

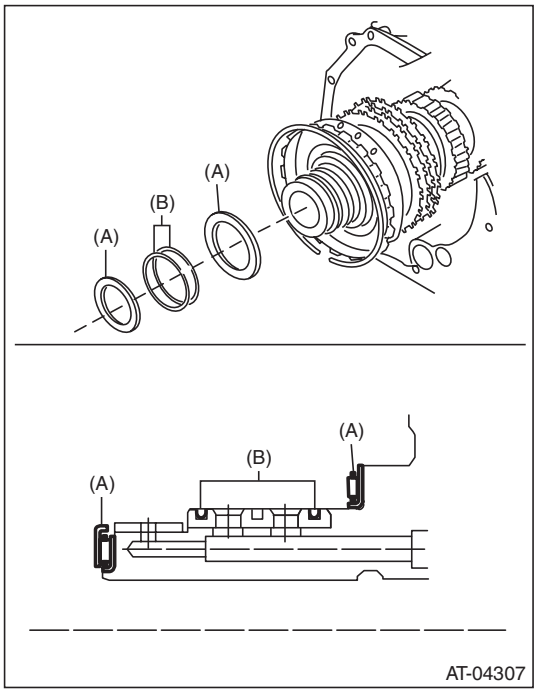

(A) Thrust bearing
(B) Seal ring

GETtheMANUALS.org

B: INSTALLATION

1) Apply ATF to the new seal ring.
2) Install the thrust bearing and new seal ring to the drum support.

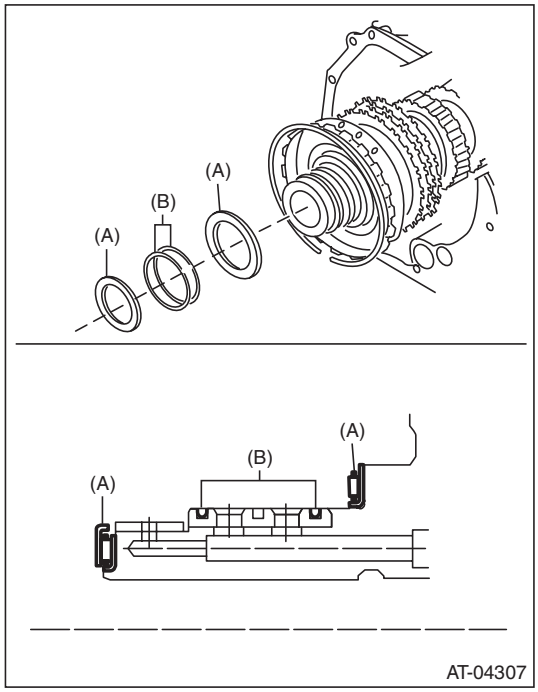

(A) Thrust bearing
(B) Seal ring

3) Install the reverse brake piston.

NOTE:
Apply ATF onto the piston sliding surface.

ST1	18762AA000	COMPRESSOR SPECIAL TOOL
ST2	18765AA000	COMPRESSOR SUPPORT
ST3	18763AA000	COMPRESSOR SHAFT

4) Install the return spring.

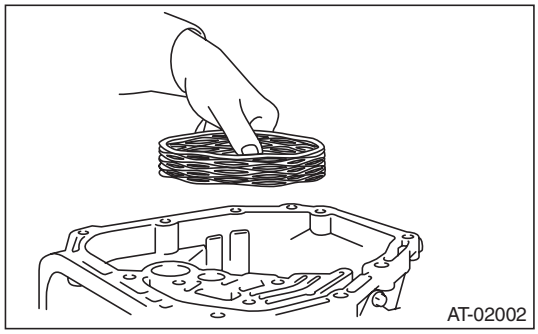

5) Install the spring retainer and snap ring.

ST1	18762AA000	COMPRESSOR SPECIAL TOOL
ST2	18765AA000	COMPRESSOR SUPPORT
ST3	18763AA000	COMPRESSOR SHAFT

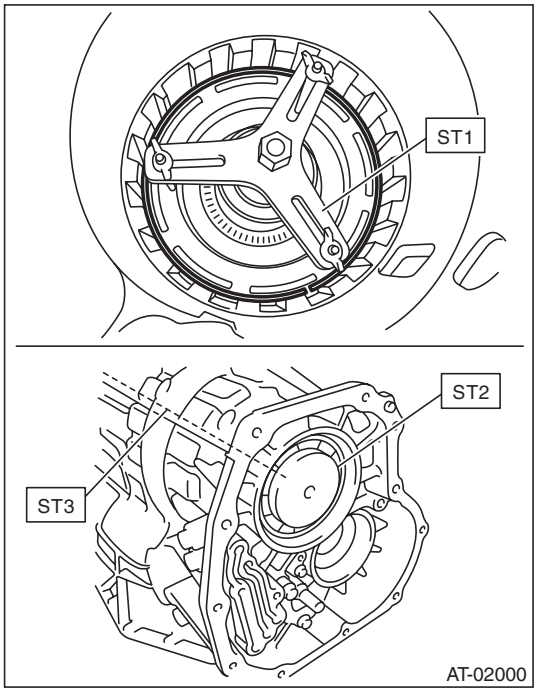

6) Install the dish plate.

NOTE:
When installing, make sure that the identification mark is facing the rear side of transmission.

7) Install the drive plate and driven plate.

NOTE:
When the reverse brake is disassembled, use a new drive plate and driven plate set.

GETtheMANUALS.org

8) Install the leaf spring.

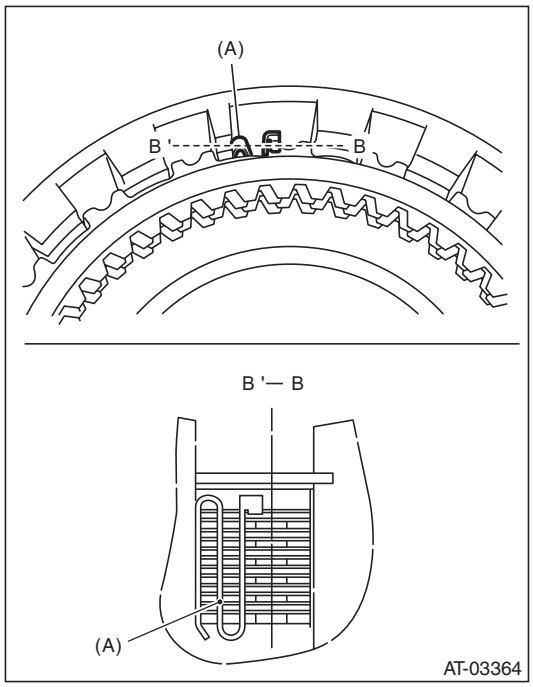

(A) Leaf spring

9) Install the retaining plate.
10) Install the snap ring of the reverse brake.

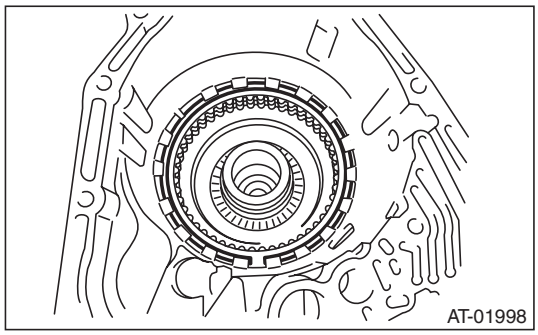

11) Apply compressed air intermittently to check for operation.

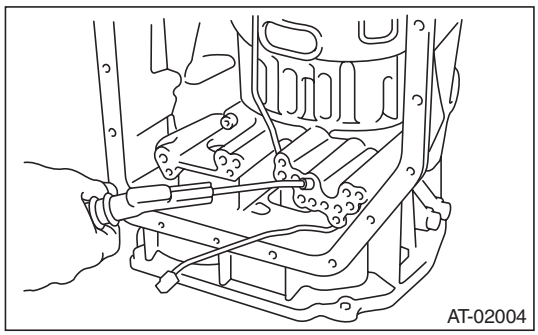

12) Check the piston stroke.

(1) Check the amount of drive plate compression “A” described in the wave clutch set of repair parts.

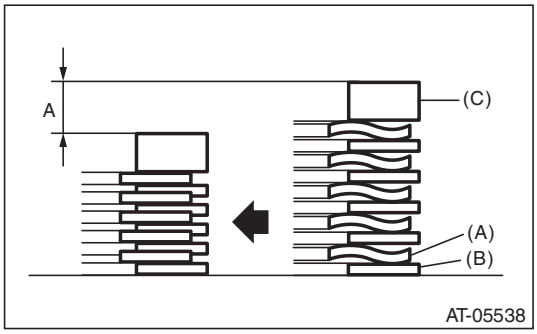

A Amount of drive plate compression

(A) Drive plate
(B) Driven plate
(C) Retaining plate

(2) Measure the clearance “B” between the retaining plate and snap ring using a thickness gauge.

NOTE:
• Set shims of the same thickness on both sides so that the retaining plate will not tilt.
• Do not push the shim down with force to a point where the waves on the drive plate will become crushed.

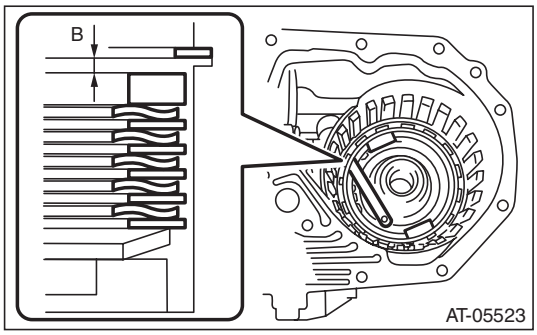

B Clearance between retaining plate and snap ring

GETtheMANUALS.org

(3) Select and install a retaining plate so that the value calculated from the dimensions A and B is within the standard.
T = A + B
T: Piston stroke
A: Amount of drive plate compression
B: Clearance between retaining plate and snap ring

Initial standard:
2.0 — 2.4 mm (0.08 — 0.09 in)

Retaining plate	
Part No.	Thickness mm (in)
31567AB100	4.2 (0.165)
31567AB170	4.4 (0.173)
31567AB180	4.6 (0.181)
31567AB190	4.8 (0.189)
31567AB200	5.0 (0.197)

13) Install the direct clutch assembly.

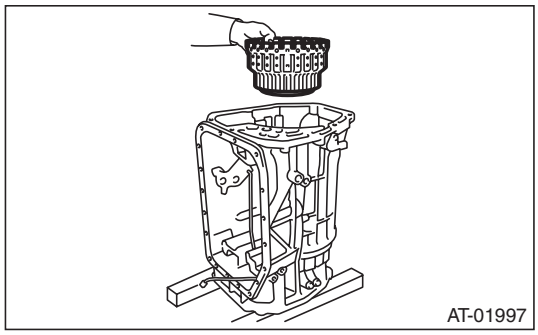

14) Install the high & low reverse clutch assembly.

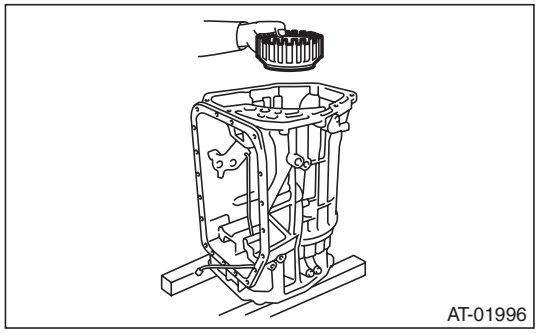

15) Install the thrust needle bearing of the high & low reverse clutch.

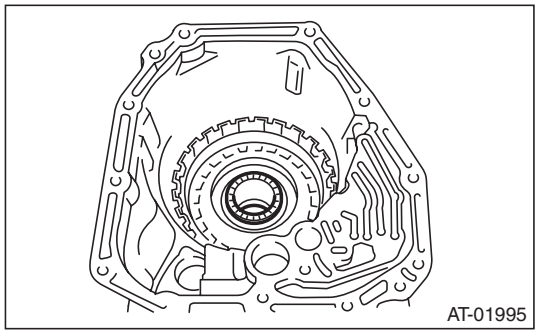

16) Install the middle & rear sun gear assembly.

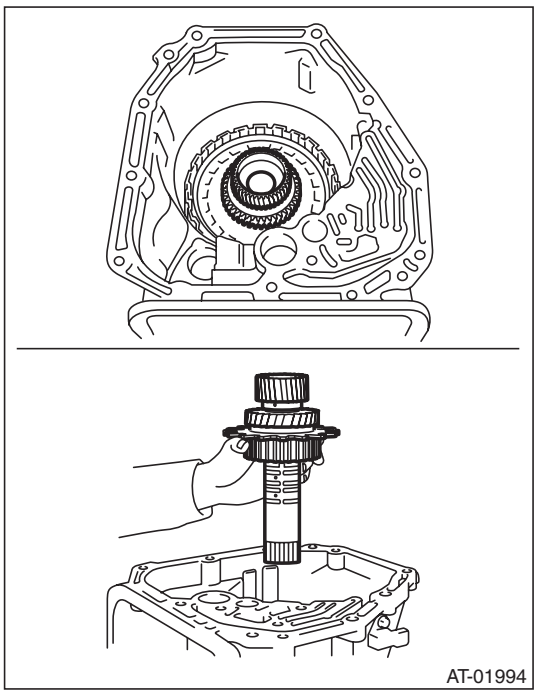

17) Install the rear carrier assembly.

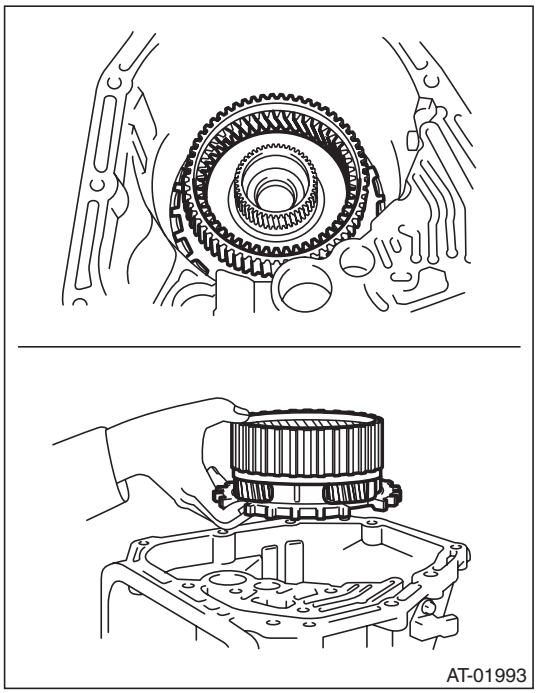

GETtheMANUALS.org

18) Install the middle carrier assembly.

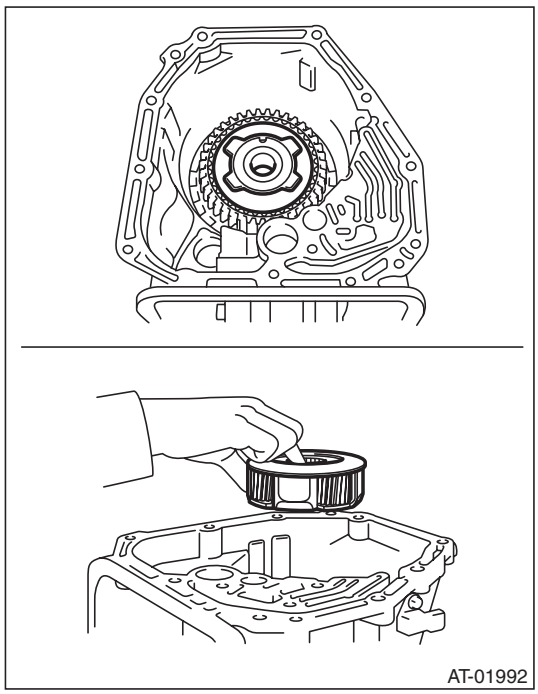

19) Install the thrust needle bearing of middle carrier assembly.

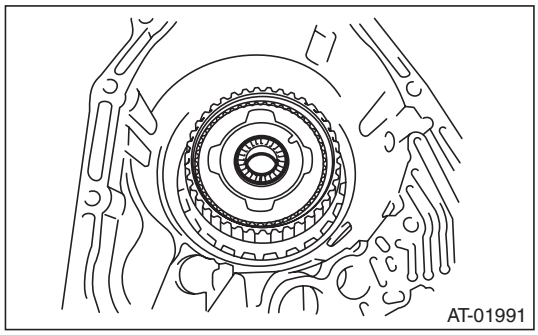

20) Measure the total end play, and select the bearing. <Ref. to 5AT-103, ADJUSTMENT, AT Main Case.>

21) Install the input clutch pack assembly to oil pump cover.

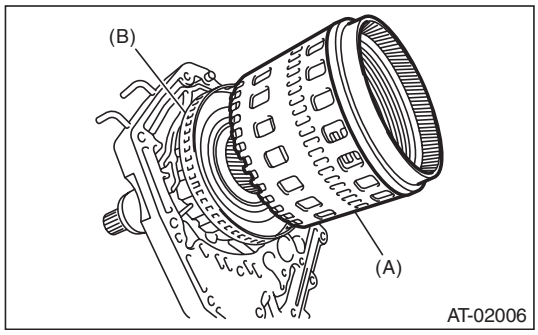

(A) Input clutch pack ASSY
(B) Front sun gear ASSY

22) Turn the transmission sideways.

23) Install the oil pump cover.
(1) Apply ATF to the O-ring of input clutch shaft.
(2) Install the oil pump cover to AT main case while supporting the input clutch shaft and oil pump housing with your hand.

NOTE:
Use a new gasket.

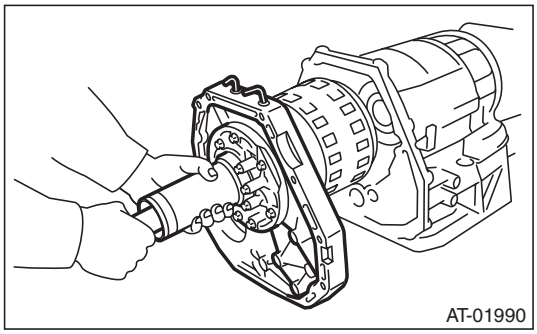

(3) Protect the input clutch shaft with a cloth, and rotate to engage the spline of the input clutch and rear carrier using pliers.

NOTE:
Work with pressing the oil pump cover.

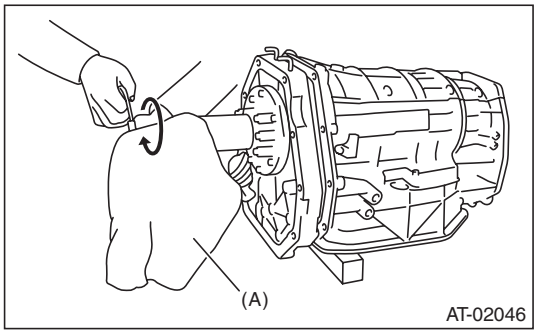

(A) Cloth

(4) Combine the oil pump cover with transmission main case.

Tightening torque:
41 N·m (4.2 kgf-m, 30.2 ft-lb)

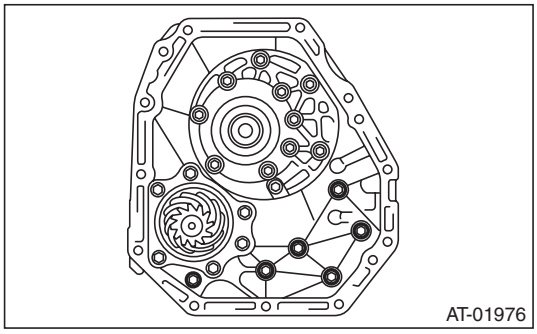

24) Install the center differential carrier. <Ref. to 5AT-74, INSTALLATION, Center Differential Carrier.>

GETtheMANUALS.org

25) Install the reduction driven gear. <Ref. to 5AT-71, INSTALLATION, Reduction Driven Gear.>
26) Install the extension case. <Ref. to 5AT-65, INSTALLATION, Extension Case.>
27) Install the control valve body. <Ref. to 5AT-55, INSTALLATION, Control Valve Body.>
28) Install the converter case assembly to the transmission case assembly. <Ref. to 5AT-78, INSTALLATION, Converter Case.>
29) Install the ATF cooler pipe. <Ref. to 5AT-59, INSTALLATION, ATF Cooler Pipe and Hose.>
30) Install the torque converter assembly. <Ref. to 5AT-63, INSTALLATION, Torque Converter Assembly.>
31) Install the transmission assembly to the vehicle. <Ref. to 5AT-42, INSTALLATION, Automatic Transmission Assembly.>
32) Perform Clear Memory 2 operation. <Ref. to 5AT(diag)-21, Clear Memory Mode.>
33) Perform the diagnosis again. <Ref. to 5AT(diag)-23, Learning Control.>
34) Perform the inspection at the end of repair work, and make sure there is no faulty as below;

- Excessive shift shock
- Oil leakage from the transmission body, etc.
- Occurrence of noise caused by interference etc.

C: DISASSEMBLY

1. INPUT CLUTCH PACK ASSEMBLY

1) Remove the front sun gear.

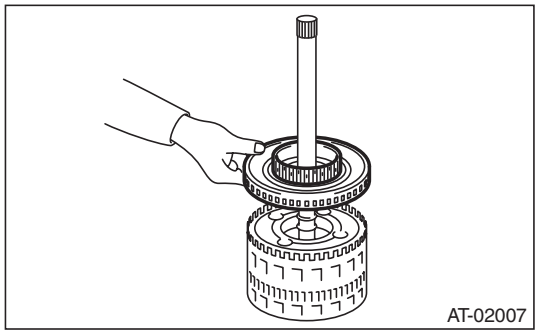

2) Remove the thrust bearing.
3) Remove the snap ring, and then remove the front carrier.

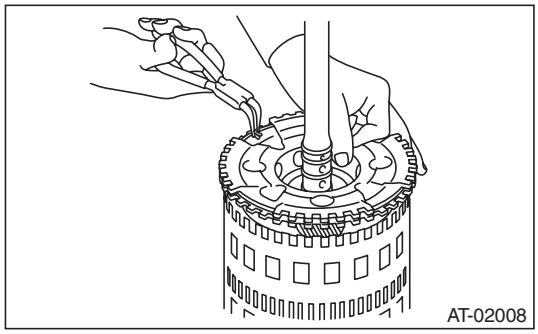

4) Remove the input clutch assembly from rear internal gear.

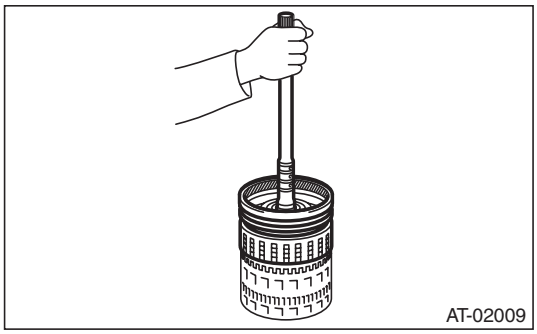

D: ASSEMBLY

1. INPUT CLUTCH PACK ASSEMBLY

1) Assemble the input clutch assembly to rear internal gear.

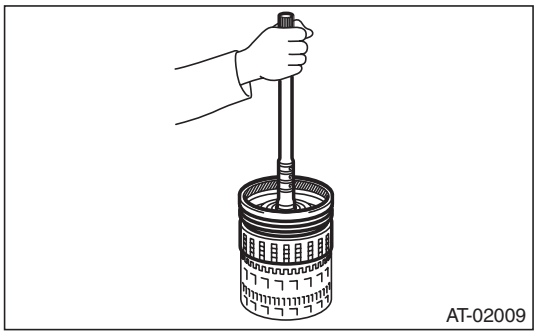

2) Install the front carrier, and then install the snap ring.

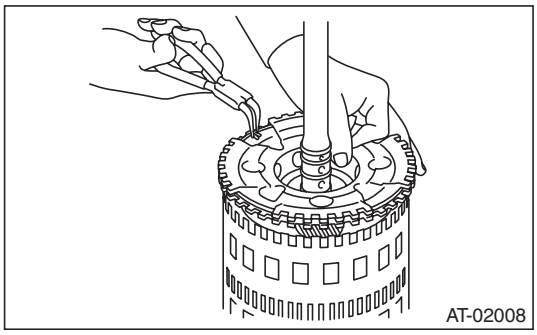

3) Install the thrust bearing.
4) Install the front sun gear.

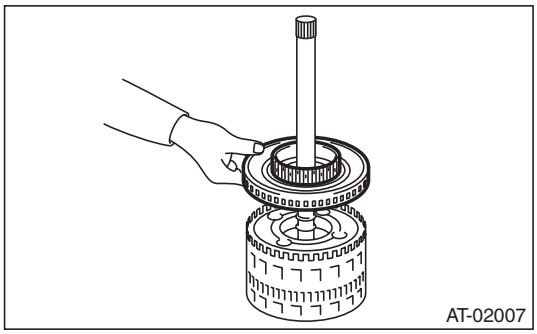

GETtheMANUALS.org

E: INSPECTION

1. FRONT, MIDDLE & REAR PLANETARY CARRIER ASSEMBLY

Check the following items.

- Visually inspect the tooth surface of planetary gear, and replace with new part if damaged, broken or excessively worn.
- Inspect the planetary carrier body for damage or breakage.

2. INPUT CLUTCH

- Check the clearance of the input clutch. Measure the clearance “L” between snap ring and retaining plate using a thickness gauge. If it is out of specification, replace the entire input clutch assembly.
- Check for damage on the drive plate, driven plate and snap ring, and replace the entire input clutch assembly if damaged.

Standard:

0.7 — 1.1 mm (0.028 — 0.043 in)

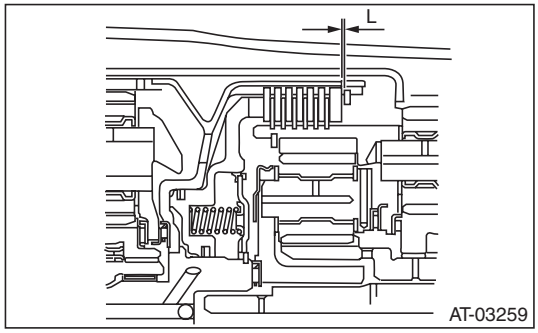

3. HIGH & LOW REVERSE CLUTCH ASSEMBLY

- Check the clearance of the high & low reverse clutch.

Measure the clearance “L” between snap ring and retaining plate using a thickness gauge. If it is out of specification, replace the entire high & low reverse clutch assembly.

- Check for damage on the drive plate, driven plate and snap ring, and replace the entire high & low reverse clutch assembly if damaged.

Standard:

1.8 — 2.2 mm (0.071 — 0.087 in)

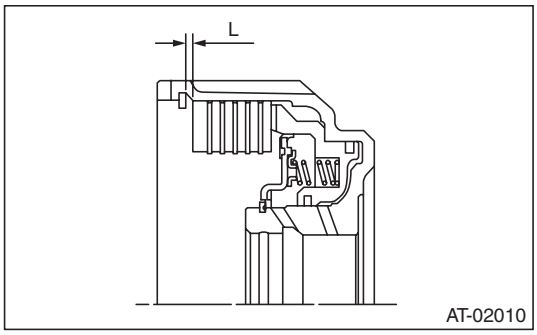

4. DIRECT CLUTCH ASSEMBLY

- Check the clearance of direct clutch.

Measure the clearance “L” between snap ring and retaining plate using a thickness gauge. If it is out of specification, replace the entire direct clutch assembly.

- Check for damage on the drive plate, driven plate and snap ring, and replace the entire direct clutch assembly if damaged.

Standard:

0.6 — 1.0 mm (0.024 — 0.039 in)

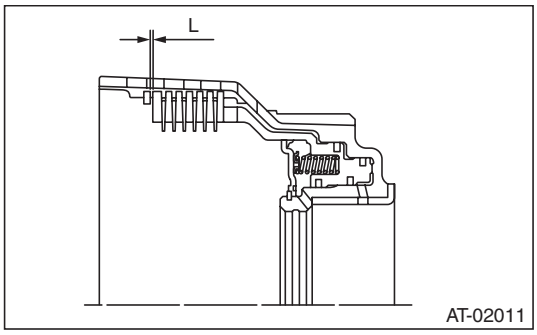

5. REVERSE BRAKE

Check the following items.

- Snap ring for wear, return spring for breakage, and spring retainer for deformation
- Lip seal and D-ring for damage
- Piston operation
- Piston stroke

GETtheMANUALS.org

F: ADJUSTMENT

1) Using the ST, measure the height “A” from the AT main case mating surface to the convex surface of oil pump cover.
ST 499575400 GAUGE

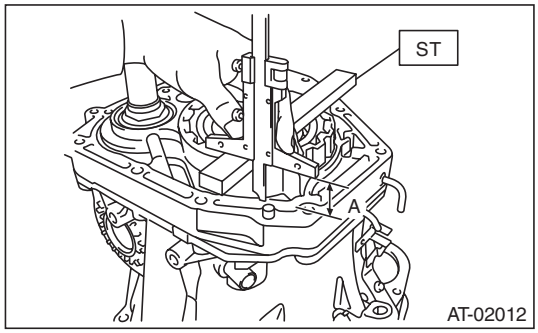

2) Using the ST, measure the depth “B” from the convex surface of oil pump cover to thrust bearing transferring surface.
ST 499575400 GAUGE

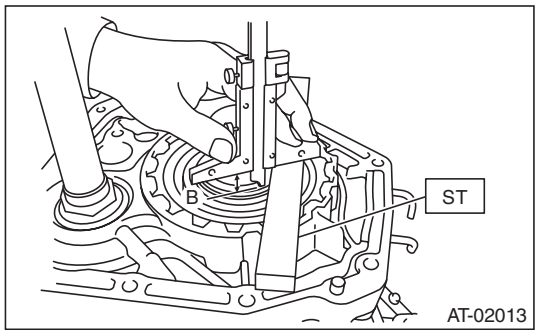

3) Calculate the measured value from step 1) and 2), and then set the calculated value as “C”.
Calculation formula: C = A – B
4) Using the ST, measure the depth “D” from the AT main case mating surface to the thrust bearing transferring surface of front sun gear.
ST 499575400 GAUGE

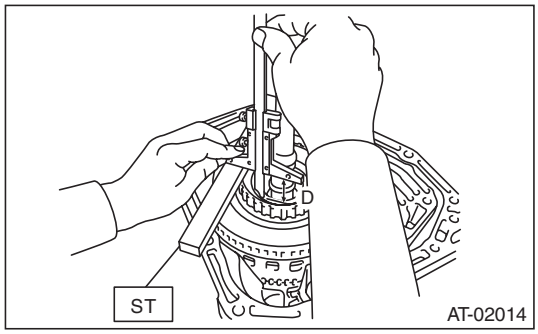

5) Set the value as “E” which subtract the thickness of ST (499575400 GAUGE) from the measured value on step 4).
Calculation: E (mm) = D – 15
[E (in) = D – 0.59]

6) Calculation formula:
When clearances are 0.25 mm (0.0098 in):
T (mm) = E – C + 0.03
[T (in) = E – C + 0.0012]
When clearances are 0.55 mm (0.0217 in):
T (mm) = E – C + 0.27
[T (in) = E – C + 0.0106]
T: Thrust bearing thickness
C: Distance from oil pump cover mating surface to rear end of oil pump cover
E: Depth from mating surface of AT main case to bearing surface of front sun gear

Specification:
0.25 — 0.55 mm (0.0098 — 0.0217 in)

NOTE:
Calculation formula for “T” above is applied when measuring with the ST (499575400 GAUGE). In the calculation without using ST, substitute the thickness of collar used to calculate the value “E” on step 5).
7) Select the thrust bearing so that the clearance is within the specified range.

Thrust bearing	
Part No.	Thickness mm (in)
806548020	3.2 (0.126)
806548030	3.4 (0.134)
806548040	3.6 (0.142)
806548050	3.8 (0.150)
806548060	4.0 (0.157)
806548070	4.2 (0.165)

GETthemANUALS.org

35. Transmission Control Device

A: REMOVAL

1) Remove the transmission assembly from the vehicle. <Ref. to 5AT-37, REMOVAL, Automatic Transmission Assembly.>
2) Pull out the torque converter assembly. <Ref. to 5AT-63, REMOVAL, Torque Converter Assembly.>
3) Lift up the lever on the rear side of transmission harness connector, and then disconnect it from the stay.
4) Wrap vinyl tape around the nipple attached to the air breather hose.
5) Remove the transmission hanger COMPL.
6) Remove the control valve body assembly. <Ref. to 5AT-55, REMOVAL, Control Valve Body.>
7) Pull out the straight pin of manual plate.

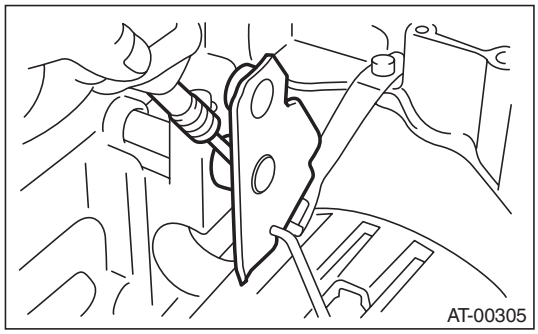

8) Remove the bolts securing range select lever, and then remove the select lever, manual plate and parking rod.

NOTE:
Be careful not to damage the lips of press-fitted oil seal in the case.

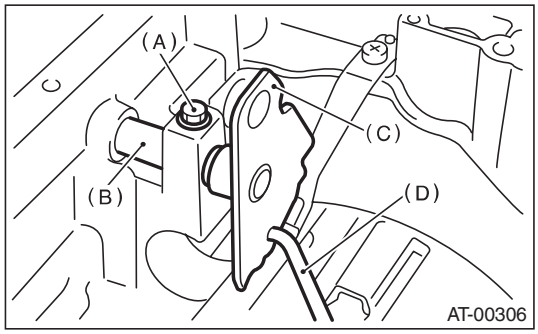

(A) Bolt
(B) Range select lever
(C) Manual plate
(D) Parking rod

9) Remove the detent spring.

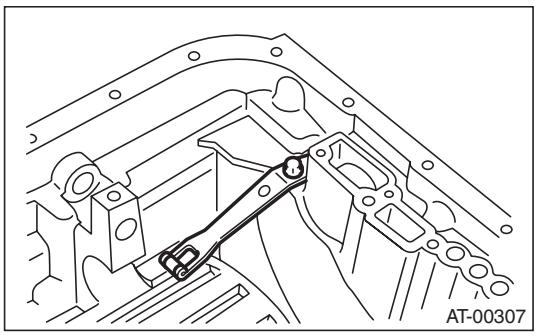

B: INSTALLATION

1) Install the detent spring to the transmission case.

Tightening torque:
7 N·m (0.7 kgf-m, 5.2 ft-lb)

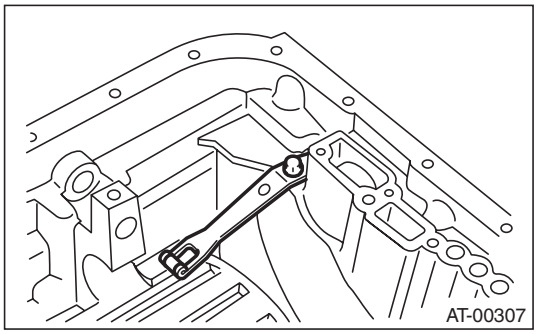

2) Insert the range select lever, and tighten the bolts.

Tightening torque:
6 N·m (0.6 kgf-m, 4.4 ft-lb)

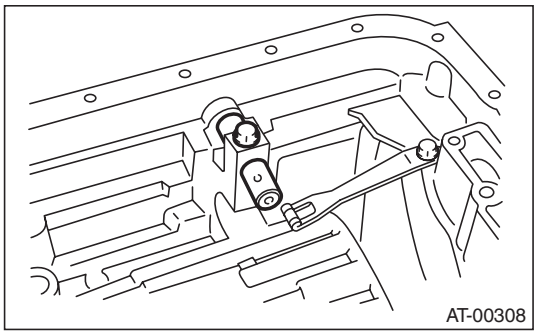

GETtheMANUALS.org

3) Insert the manual plate and parking rod.

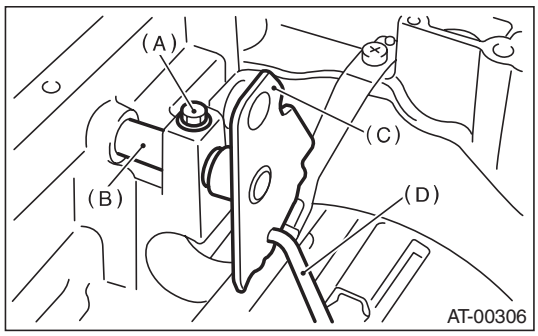

(A) Bolt
(B) Range select lever
(C) Manual plate
(D) Parking rod

4) Insert the straight pin to the manual plate.

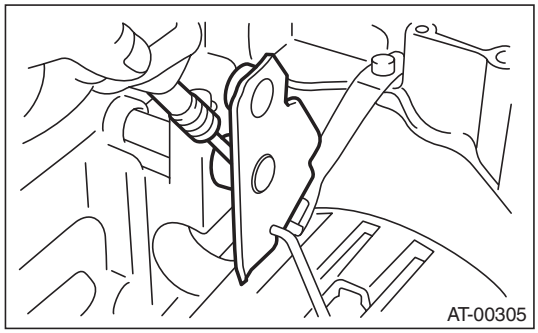

5) Install the oil pan and the control valve body assembly. <Ref. to 5AT-55, INSTALLATION, Control Valve Body.>
6) Install the transmission hanger COMPL.

Tightening torque:
41 N·m (4.2 kgf-m, 30.2 ft-lb)

7) Insert the transmission connector to the stay.
8) Install the air breather hose. <Ref. to 5AT-61, INSTALLATION, Air Breather Hose.>
9) Install the torque converter assembly. <Ref. to 5AT-63, INSTALLATION, Torque Converter Assembly.>
10) Install the transmission assembly to the vehicle. <Ref. to 5AT-42, INSTALLATION, Automatic Transmission Assembly.>

C: INSPECTION

Make sure the manual lever and detent spring are not worn or otherwise damaged.

GETtheMANUALS.org

36. Diagnostics with Phenomenon

A: INSPECTION

Symptoms	Faulty parts
Engine does not start when the select lever is in “N” and “P” range.	• Select cable • Inhibitor switch • TCM
Engine starts when the select lever is in a range other than “N” or “P” range.	• Select cable • Inhibitor switch • TCM
The vehicle is not switched to parting mode when the select lever is in “P” range.	• Inhibitor switch • Select cable • Parking mechanism
Parking mode is not canceled even if the select lever is shifted from “P” range to another range.	• Inhibitor switch • Select cable • Parking mechanism
Excessive shock when the select lever is shifted from “N” range to “D” range or from “N” range to “R” range.	• ATF • Turbine speed sensor • Line pressure solenoid • Line pressure circuit
Engine stalls when the select lever is shifted from “N” range to “D” range or from “N” range to “R” range.	• ATF • Turbine speed sensor • Line pressure circuit • Lock-up solenoid • Lock-up pressure circuit • Engine speed signal • TCM
Excessive shift shock while driving with the select lever in “D” range.	• ATF • Vehicle speed sensor • Turbine speed sensor • Line pressure circuit • Engine speed signal • TCM
Excessive shock at lock-up or lock-up does not occur when the select lever is in “D” range.	• Vehicle speed sensor • Turbine speed sensor • Line pressure circuit • Lock-up solenoid • Lock-up pressure circuit • Engine speed signal • TCM
Cannot drive in all ranges.	• ATF • Select cable • Inhibitor switch • Line pressure solenoid • Line pressure circuit • Engine speed signal • TCM • Gear and clutch
The vehicle can run when the select lever is in “P” and “N” range.	• Inhibitor switch • Select cable
Excessively poor acceleration when the select lever is in “D” range.	• ATF • Line pressure solenoid • Line pressure circuit • Vehicle speed sensor • Engine speed signal • TCM • Gear and clutch

GETtheMANUALS.org

Symptoms	Faulty parts
Noise emitted from transmission	• ATF • Gear, clutch and bearing • Control valve

GETtheMANUALS.org

GETtheMANUALS.org

AUTOMATIC TRANSMISSION (DIAGNOSTICS)

5AT(diag)

Page

1. Basic Diagnostic Procedure 2
2. Check List for Interview 4
3. General Description 5
4. Electrical Component Location 7
5. Transmission Control Module (TCM) I/O Signal 13
6. Subaru Select Monitor 17
7. Read Current Data 18
8. Read Diagnostic Trouble Code (DTC) 20
9. Clear Memory Mode 21
10. Inspection Mode 22
11. Learning Control 23
12. AT OIL TEMP Warning Light Display 25
13. AWD Warning Light Display 28
14. Diagnostic Procedure for Subaru Select Monitor Communication 30
15. List of Diagnostic Trouble Code (DTC) 33
16. Diagnostic Procedure with Diagnostic Trouble Code (DTC) 36
17. Diagnostic Procedure without Diagnostic Trouble Code (DTC) 97
18. Diagnostics with Phenomenon 98

GETtheMANUALS.org

1. Basic Diagnostic Procedure

A: PROCEDURE

Step		Check	Yes	No
1	**CHECK PRE-INSPECTION.** 1) Ask the customer when and how the trouble occurred using the interview check list. <Ref. to 5AT(diag)-4, Check List for Interview.> 2) Check the following items which may be affecting the AT trouble. • General inspection <Ref. to 5AT(diag)-5, INSPECTION, General Description.> • Oil leakage • Stall speed test <Ref. to 5AT-33, Stall Test.> • Line pressure test <Ref. to 5AT-35, Line Pressure Test.> • Transfer clutch pressure test <Ref. to 5AT-36, Transfer Clutch Pressure Test.> • Time lag test <Ref. to 5AT-34, Time Lag Test.> • Road test <Ref. to 5AT-32, Road Test.> • Inhibitor switch <Ref. to 5AT-50, Inhibitor Switch.>	Is the item that might influence the AT problem normal?	Go to step **2**.	Repair or replace items which might affect the AT problem.
2	**CHECK AT OIL TEMP LIGHT.** Turn the ignition switch to ON and wait for at least 2 seconds.	Does the AT OIL TEMP light illuminate?	Go to step **3**.	Check the AT OIL TEMP light.
3	**CHECK AT OIL TEMP LIGHT.** Start the engine and wait for 2 seconds or more.	Does the AT OIL TEMP light blink?	Go to step **4**.	Go to step **6**.
4	**CHECK DTC.** Read the DTC. <Ref. to 5AT(diag)-20, OPERATION, Read Diagnostic Trouble Code (DTC).> NOTE: If the communication function of Subaru Select Monitor cannot be executed normally, check the communication circuit. <Ref. to 5AT(diag)-30, COMMUNICATION FOR INITIALIZING IMPOSSIBLE, Diagnostic Procedure for Subaru Select Monitor Communication.>	Is DTC displayed on Subaru Select Monitor?	Record all DTC. Go to step **5**.	Go to step **6**. NOTE: When the AT OIL TEMP light blinks, check if the learning has completed.
5	**CHECK FREEZE FRAME DATA.** Using the Subaru Select Monitor, check the Freeze Frame Data.	Are freeze frame data recorded?	Record the freeze frame data. Go to step **7**.	Go to step **7**.
6	**PERFORM GENERAL DIAGNOSTICS.** 1) Inspect using “Diagnostic Procedure without Diagnostic Trouble Code (DTC)”. <Ref. to 5AT(diag)-97, Diagnostic Procedure without Diagnostic Trouble Code (DTC).> 2) Perform the Clear Memory Mode. 3) Perform the Inspection Mode. <Ref. to 5AT(diag)-22, Inspection Mode.> 4) Read the DTC.	Is DTC displayed on Subaru Select Monitor?	Go to step **7**.	Finish the diagnosis.

GETthemANUALS.org

Step		Check	Yes	No
7	**PERFORM DIAGNOSIS.** 1) Inspect by referring to “Diagnostic Procedure with Diagnostic Trouble Code (DTC)”. <Ref. to 5AT(diag)-36, Diagnostic Procedure with Diagnostic Trouble Code (DTC).> NOTE: For the DTC table, refer to “List of Diagnostic Trouble Code (DTC)”. <Ref. to 5AT(diag)-33, List of Diagnostic Trouble Code (DTC).> 2) Repair the trouble cause. 3) Perform the Clear Memory Mode. 4) Perform the Inspection Mode. <Ref. to 5AT(diag)-22, Inspection Mode.> 5) Read the DTC.	Is DTC displayed on Subaru Select Monitor?	Inspect again using Diagnostic Procedure with Diagnostic Trouble Code (DTC). <Ref. to 5AT(diag)-36, Diagnostic Procedure with Diagnostic Trouble Code (DTC).>	Finish the diagnosis.

GETtheMANUALS.org

2. Check List for Interview

A: CHECK

Check the following items when a problem has occurred.

NOTE:
Use copies of this page for interviewing customers.

Customer's name			
Date of purchase			
Date of repair			
Transmission model	Transmission	V.I.N.	
Odometer reading	km (miles)		
Symptoms	❑ No up-shift		
	❑ No down-shift		
	❑ No kick down		
	❑ Vehicle does not move (❑ Any position ❑ Particular position)		
	❑ Lock-up malfunction		
	❑ Noise or vibration		
	❑ Shift shock or slip		
	❑ Select lever does not move		
	❑ Others ( )		
Frequency	❑ Continuous ❑ Intermittent (times a day)		
Weather	❑ Fine ❑ Cloudy ❑ Rainy ❑ Snowy ❑ Others ( )		
Place	❑ Highland ❑ Suburbs ❑ Inner city ❑ Uphill ❑ Rough road ❑ Others ( )		
Ambient air temperature	❑ Hot ❑ Warm ❑ Cool ❑ Cold		
Vehicle speed	km/h (MPH)		
AT OIL TEMP light	❑ Blinks continuously	❑ Does not blink	
Select lever position	❑ P ❑ R ❑ N ❑ D ❑ Manual mode		
Driving condition	❑ Not affected ❑ At racing ❑ While decelerating	❑ At starting ❑ When accelerating ❑ While turning (❑ RH/❑ LH)	❑ While idling ❑ While cruising
Manual mode	❑ ON ❑ OFF		

GETtheMANUALS.org

3. General Description

A: CAUTION

1. SUPPLEMENTAL RESTRAINT SYSTEM "AIRBAG"

The airbag system wiring harness is routed near the TCM.

CAUTION:
- **All the airbag system wiring harnesses and connectors are colored yellow. Do not use an electric test equipment to check these circuits.**
- **Be careful not to damage the airbag system wiring harness when performing diagnostics or servicing the TCM.**

2. MEASUREMENT

When measuring the voltage and resistance of the ECM, TCM or each sensor, use a tapered pin with a diameter of less than 0.64 mm (0.025 in) in order to avoid poor contact. Do not insert a pin of more than 0.65 mm (0.026 in) diameter.

B: INSPECTION

1. BATTERY

Measure the battery voltage and specific gravity of the electrolyte.

Standard voltage:
12 V or more

Specific gravity:
1.260 or more

2. TRANSMISSION GROUND

Make sure that the ground terminal bolt is tightened securely.

Tightening torque:
7 N·m (0.7 kgf-m, 5.2 ft-lb)

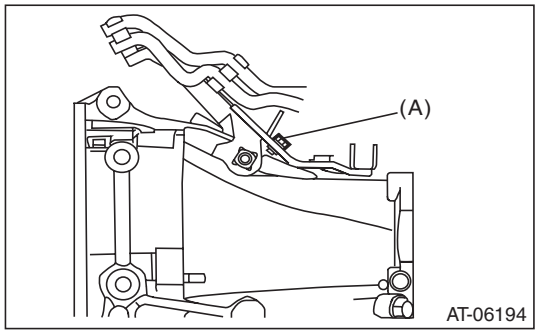

(A) Ground bolt

3. ATF LEVEL

Make sure that ATF level is the specified amount. <Ref. to 5AT-29, INSPECTION, Automatic Transmission Fluid.>

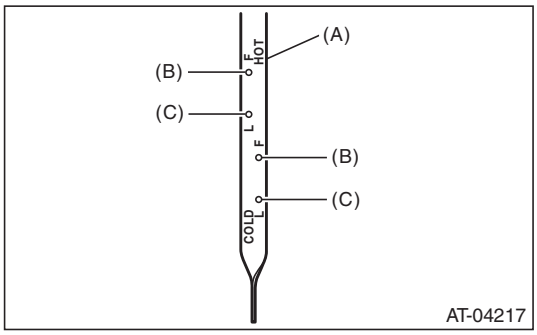

(A) Oil level gauge
(B) Upper level
(C) Lower level

4. FRONT DIFFERENTIAL OIL LEVEL

Make sure the front differential oil level is the specified amount. <Ref. to 5AT-31, INSPECTION, Differential Gear Oil.>

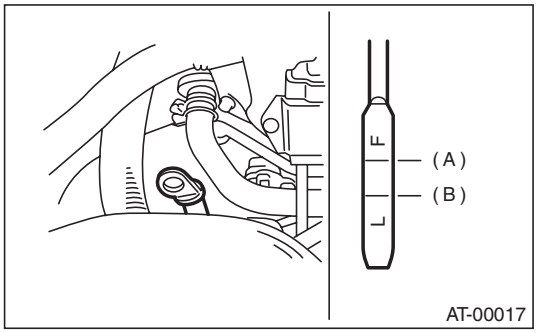

(A) Upper level
(B) Lower level

5. OPERATION OF SHIFT SELECT LEVER

Make sure there is no noise, dragging or contact pattern in each select lever range.

WARNING:
Stop the engine while checking operation of the select lever.

GETtheMANUALS.org

C: PREPARATION TOOL

1. SPECIAL TOOL

ILLUSTRATION	TOOL NUMBER	DESCRIPTION	REMARKS
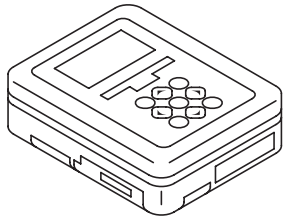 ST1B022XU0	1B022XU0	SUBARU SELECT MONITOR III KIT	Used for troubleshooting the electrical system.

2. GENERAL TOOL

TOOL NAME	REMARKS
Circuit tester	Used for measuring resistance, voltage and current.
Oscilloscope	Used for measuring the sensor.

GETtheMANUALS.org

4. Electrical Component Location

A: LOCATION

1. CONTROL MODULE

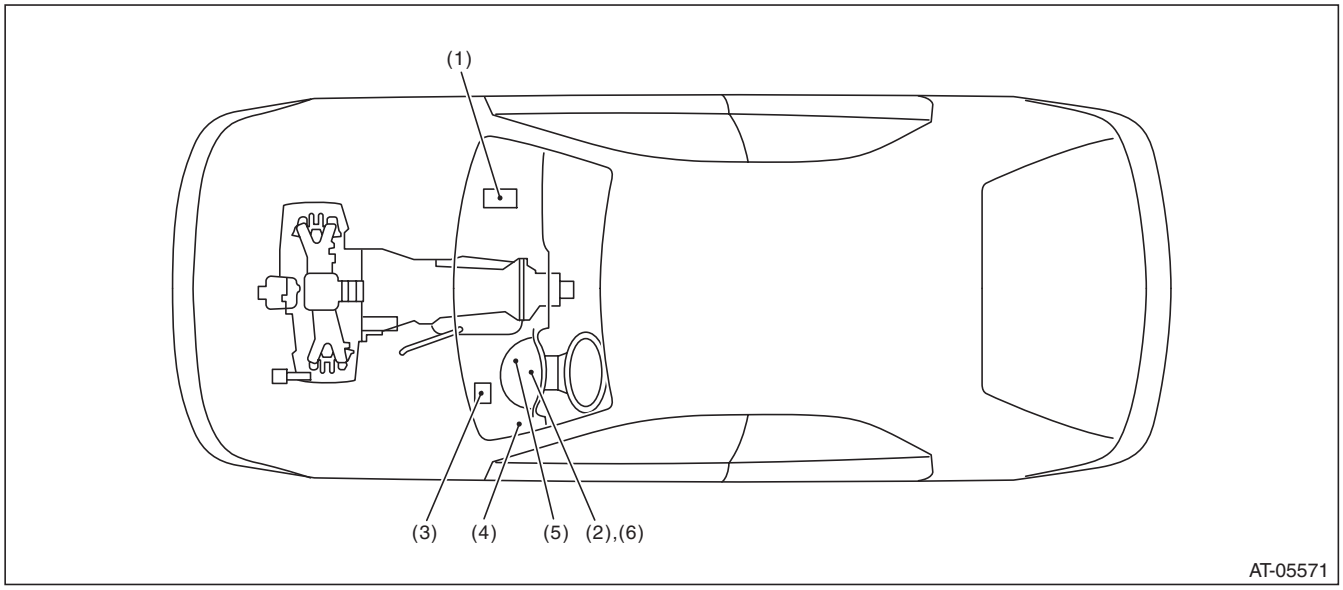

(1)	Engine control module (ECM)	(3)	Transmission control module (TCM)	(5)	Body integrated unit
(2)	AT OIL TEMP light	(4)	Data link connector	(6)	AWD light

GETtheMANUALS.org

Electrical Component Location

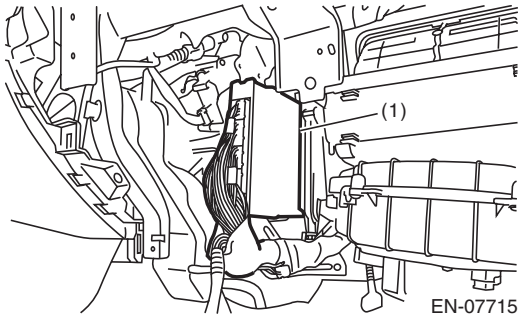

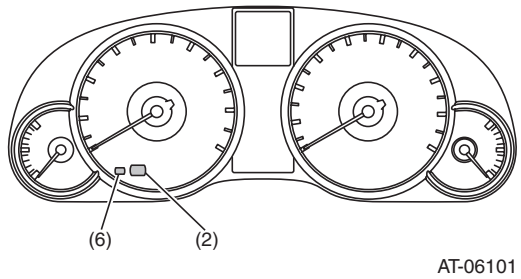

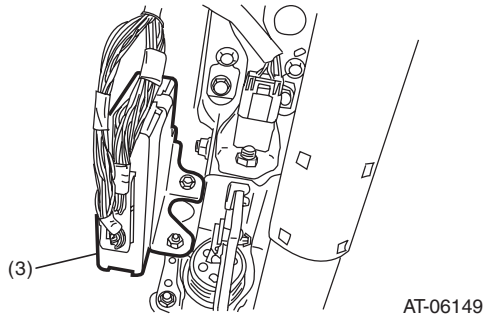

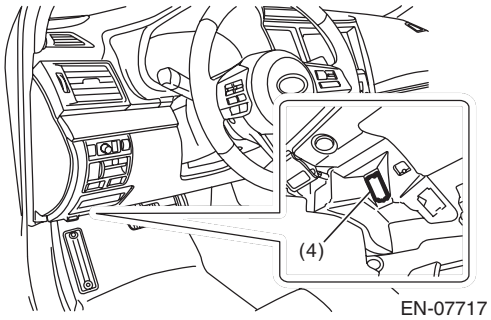

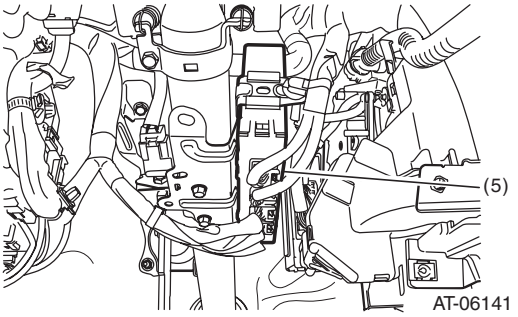

SUBARU.

GETtheMANUALS.org

2. SENSOR

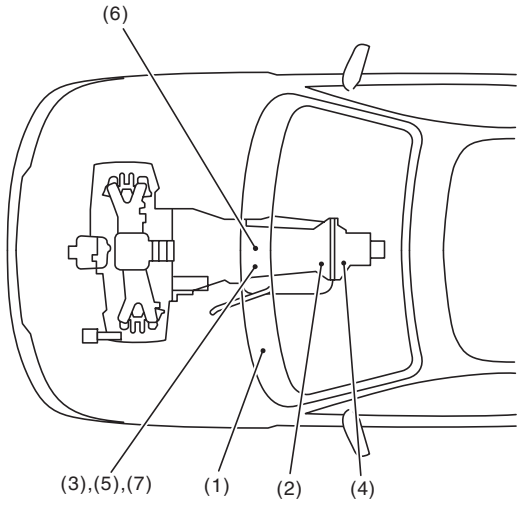

(1) Accelerator pedal position sensor
(2) Front vehicle speed sensor
(3) Inhibitor switch
(4) Rear vehicle speed sensor
(5) Turbine speed sensor 1
(6) ATF temperature sensor
(7) Turbine speed sensor 2

GETtheMANUALS.org

Electrical Component Location

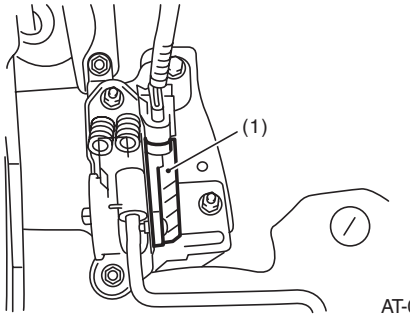

AT-00375

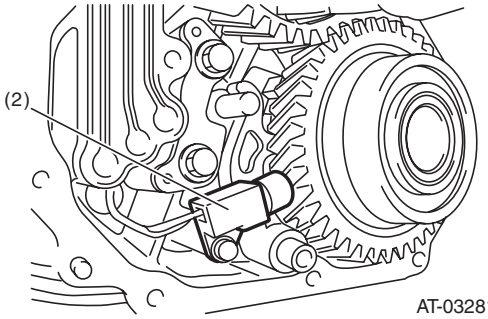

AT-03281

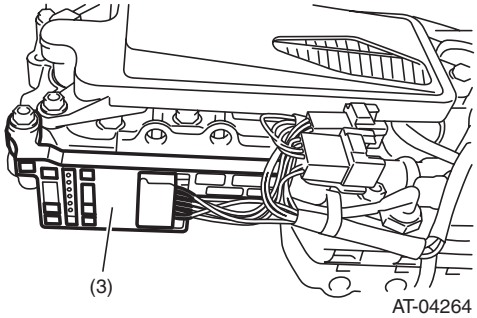

AT-04264

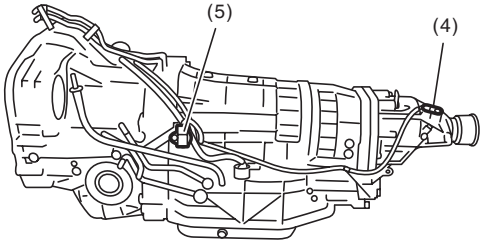

AT-03282

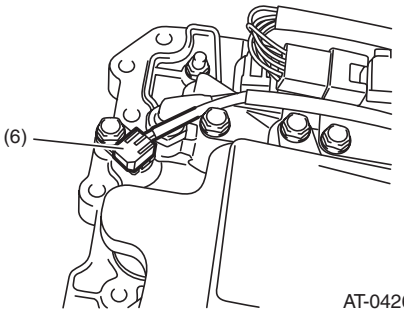

AT-04265

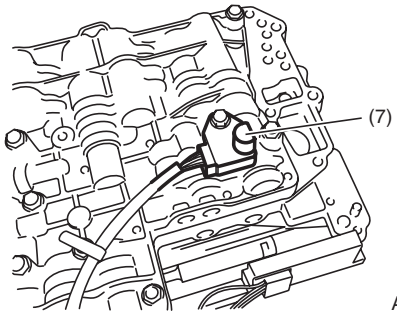

AT-04266

GETtheMANUALS.org

3. SOLENOID

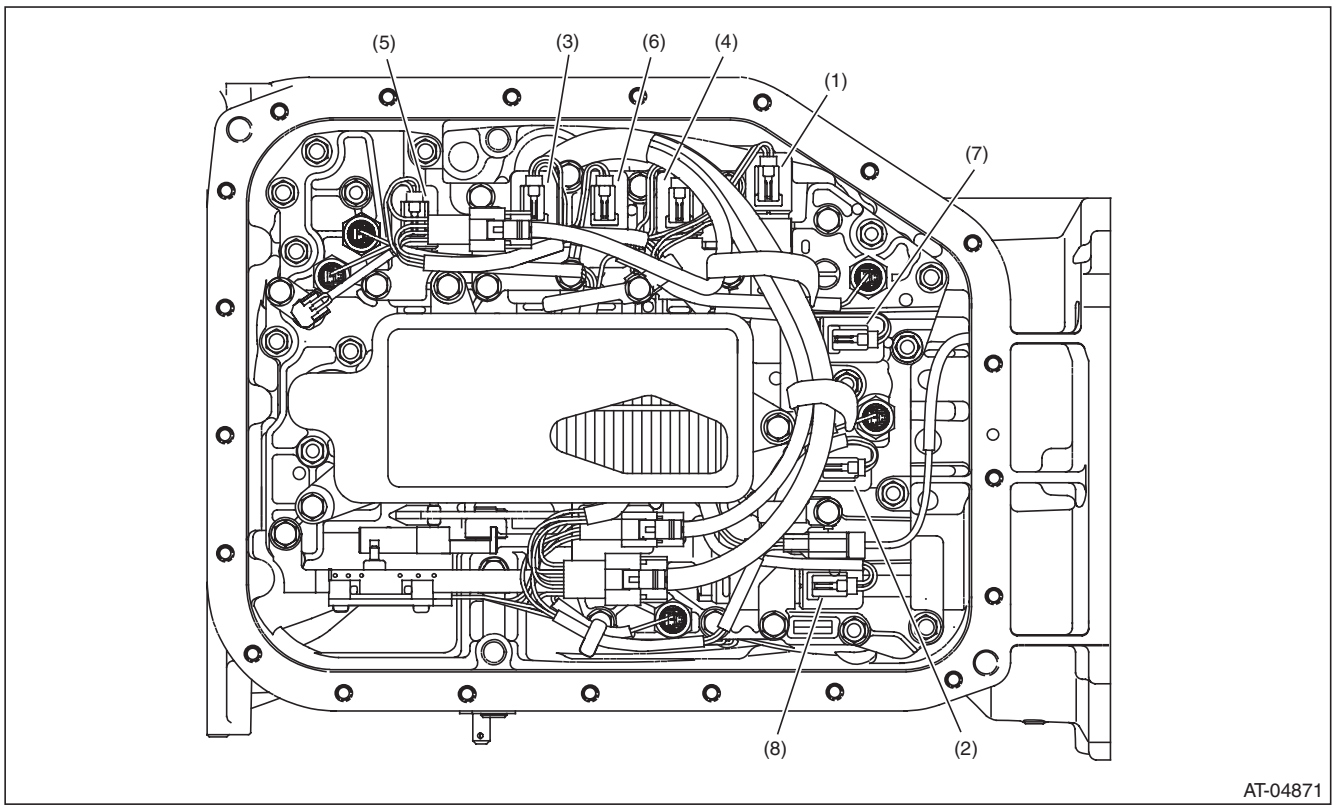

(1)	High & low reverse clutch solenoid	(4)	Input clutch solenoid	(7)	Transfer solenoid
(2)	Direct clutch solenoid	(5)	Line pressure solenoid	(8)	Forward brake solenoid
(3)	Front brake solenoid	(6)	Lock-up solenoid		

GETtheMANUALS.org

4. OIL PRESSURE SWITCH

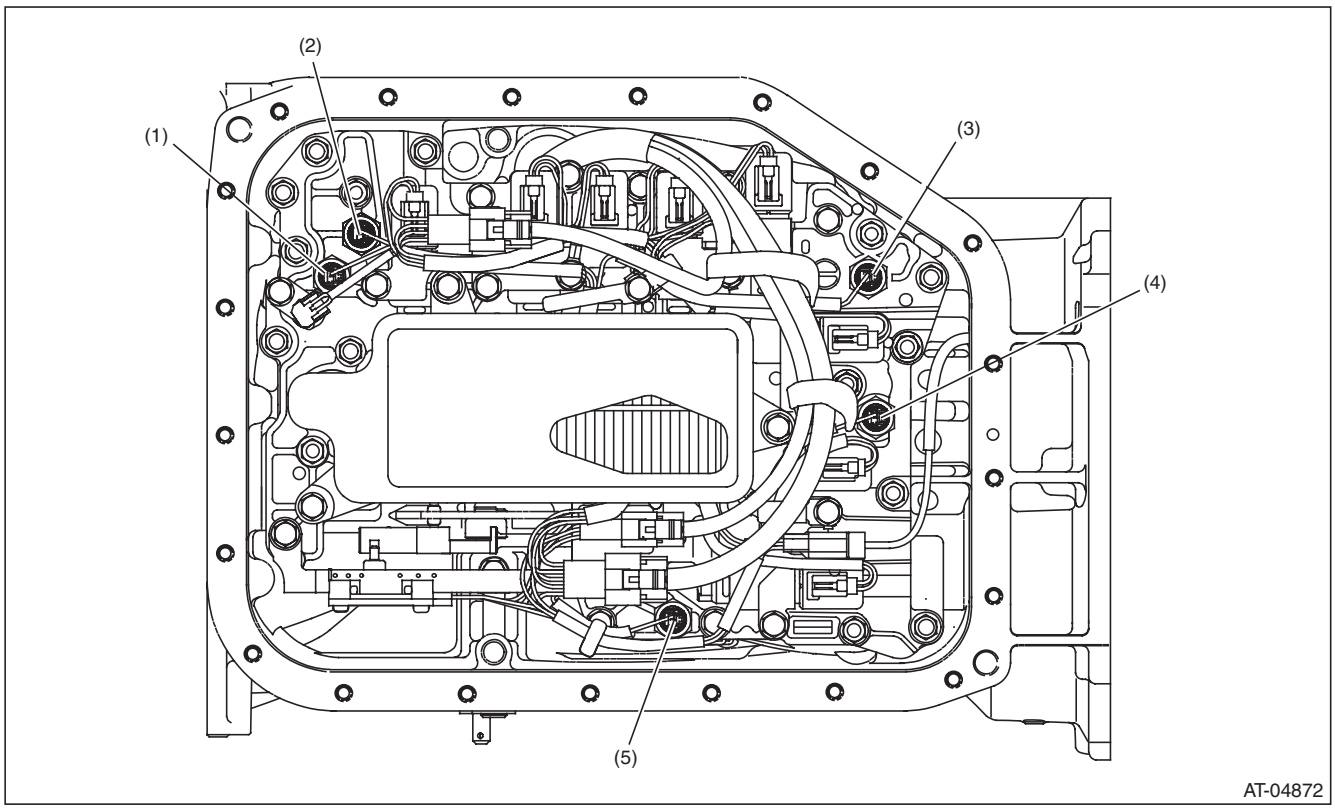

(1) Front brake oil pressure switch
(2) Input clutch oil pressure switch
(3) High & low reverse clutch oil pressure switch
(4) Direct clutch oil pressure switch
(5) Forward brake oil pressure switch

GETtheMANUALS.org

5. Transmission Control Module (TCM) I/O Signal

A: ELECTRICAL SPECIFICATION

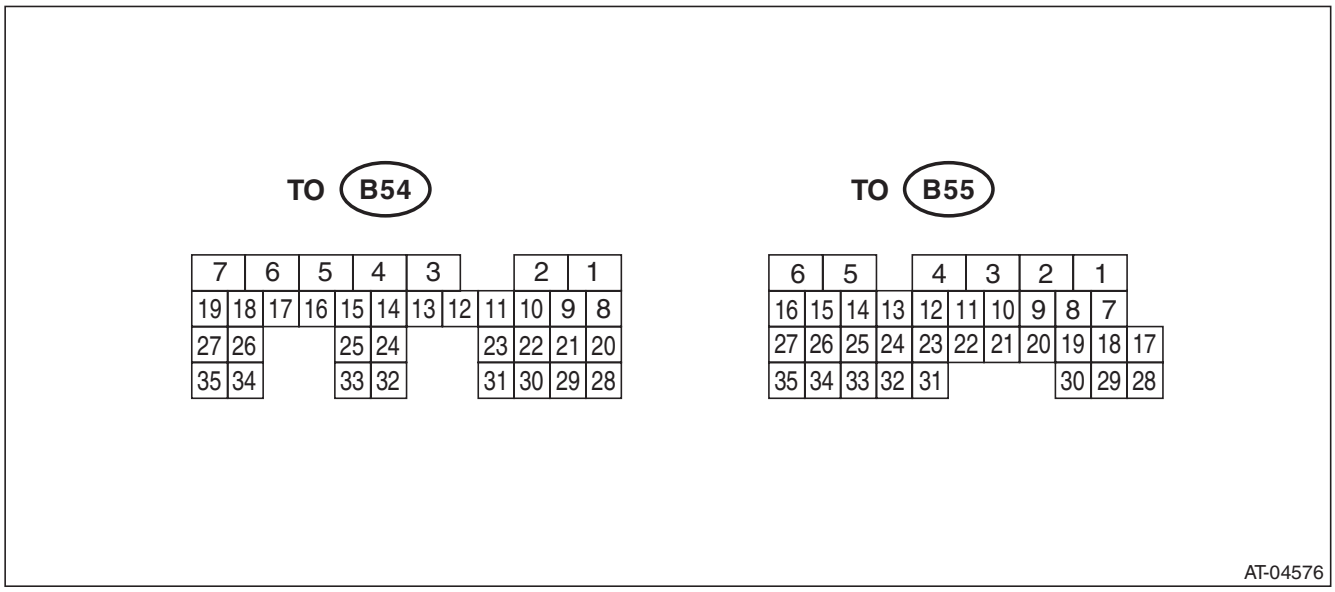

NOTE:
Measure after warming up.

Item	Connector No.	Terminal No.	Measuring conditions	Measured value	Resistance between terminal and chassis ground	Remarks
P/L solenoid output	B55	6	Engine ON, “P” range, accelerator OFF, brake ON	3.5 — 7.5 V	3 — 9 Ω (ATF temperature 20°C (68°F))	Drive frequency: 300 Hz
I/C oil pressure switch input	B55	20	While driving at 1st — 3rd of manual mode	6 V or more		
			While driving at 4th or 5th of manual mode	Less than 1.5 V		
Power GND1	B55	12	Always	Approx. 0 V	—	
CAN communication line (+)	B54	21	—	—	—	
CAN communication line (–)	B54	20	—	—	—	
ATF temperature sensor input	B55	17	Ignition switch ON ATF oil temperature 20°C (68°F)	3.5 — 4.3 V	2.5 — 7.0 kΩ	Measure the resistance with the connector disconnected.
			Ignition switch ON ATF oil temperature 80°C (176°F)	1 — 2.2 V	0.3 — 0.8 kΩ	
Backup power supply	B54	24	Ignition switch ON	8 V or more	—	
			Ignition switch OFF			
I/C solenoid output	B55	3	While driving at 1st — 3rd of manual mode	5 V or more	3 — 9 Ω (ATF temperature 20°C (68°F))	Drive frequency: 300 Hz
			While driving at 4th or 5th of manual mode	Less than 1.5 V		

GETtheWIRINGS.org

Transmission Control Module (TCM) I/O Signal

Item	Connector No.	Terminal No.	Measuring conditions	Measured value	Resistance between terminal and chassis ground	Remarks
H & LR/C solenoid output	B55	5	While driving at 2nd of manual mode	5 V or more	3 — 9 Ω (ATF temperature 20°C (68°F))	Drive frequency: 300 Hz
			While driving at 1st, 3rd — 5th of manual mode	Less than 1.5 V		
Power GND2	B55	13	Always	Approx. 0 V	—	
Analog GND	B55	18	Always	Approx. 0 V	—	
Fr/B solenoid output	B55	4	While driving at other than 4th of manual mode	5 V or more	3 — 9 Ω (ATF temperature 20°C (68°F))	Drive frequency: 300 Hz
			While driving at 4th of manual mode	Less than 1.5 V		
L/U solenoid output	B55	7	When lock-up	3 V or more	3 — 9 Ω (ATF temperature 20°C (68°F))	Drive frequency: 300 Hz
			When not lock-up	Less than 1 V		
D/C solenoid output	B55	1	While driving at 1st or 5th of manual mode	5 V or more	3 — 9 Ω (ATF temperature 20°C (68°F))	Drive frequency: 300 Hz
			While driving at 2nd-4th of manual mode	Less than 1.5 V		
D/C oil pressure switch input	B55	22	While driving at 1st or 5th of manual mode	6 V or more		
			While driving at 2nd-4th of manual mode	Less than 1.5 V		
Data link signal (Subaru Select Monitor communication line)	B54	8	Ignition switch ON	8 V or more	—	
			Ignition switch OFF	Less than 1 V		
Sensor GND (analog)	B55	16	Always	Approx. 0 V	—	
H&LR/C oil pressure switch input	B55	14	While driving at 2nd of manual mode	6 V or more	—	
			While driving at 3rd-5th of manual mode	Less than 1.5 V		
Fwd/B solenoid output	B55	19	While driving at 1st or 2nd of manual mode	5 V or more		Drive frequency: 300 Hz
			While driving at 3rd-5th of manual mode	Less than 1.5 V		
Fwd/B oil pressure switch input	B55	21	While driving at 1st or 2nd of manual mode	Less than 1.5 V		
			While driving at 3rd-5th of manual mode	6 V or more		
Front vehicle speed sensor input	B55	24	While driving at 2nd and 20 km/h (12 MPH) of manual mode	Approx. 500 — 700 rpm	—	Use the Subaru Select Monitor.
			While driving at 4th and 80 km/h (50 MPH) of manual mode	Approx. 2,000 — 2,500 rpm		Use the Subaru Select Monitor.
Inhibitor switch 1 input	B55	8	Ignition switch ON, “P” range	Less than 0.5 V	—	
			Ignition switch ON, “N” range	5 V or more		

GETtheMANUALS.org

Item	Connector No.	Terminal No.	Measuring conditions	Measured value	Resistance between terminal and chassis ground	Remarks
Inhibitor switch 2 input	B55	9	Ignition switch ON, “P” range	5 V or more	—	
			Ignition switch ON, “D” range	Less than 0.5 V		
Ignition power supply	B55	27	Ignition switch ON	8 V or more	—	
			Ignition switch OFF	Less than 1 V		
Rear vehicle speed sensor input	B55	23	While driving at 2nd and 20 km/h (12 MPH) of manual mode	Approx. 500 — 700 rpm	—	Use the Subaru Select Monitor.
			While driving at 4th and 80 km/h (50 MPH) of manual mode	Approx. 2,000 — 2,500 rpm		Use the Subaru Select Monitor.
Fr/B oil pressure switch input	B55	15	While driving at other than 4th of manual mode	Less than 1.5 V	—	
			While driving at 4th of manual mode	6 V or more		
Turbine speed sensor 1 input	B55	26	2nd of manual mode, turbine speed sensor is 2,000 rpm (Read from Subaru Select Monitor)	Approx. 0 rpm	—	Use the Subaru Select Monitor.
			4th of manual mode, turbine speed sensor is 2,000 rpm (Read from Subaru Select Monitor)	Approx. 1,900 — 2,100 rpm		Use the Subaru Select Monitor.
Inhibitor switch 3 input	B55	10	Ignition switch ON, “R” range	5 V or more	—	
			Ignition switch ON, “D” range	Less than 0.5 V		
Control GND1	B54	23	Ignition switch ON	Approx. 0 V		
			Ignition switch OFF			
Control GND2	B54	22	Ignition switch ON	Approx. 0 V		
			Ignition switch OFF			
Inhibitor switch 4 input	B55	11	Ignition switch ON, “P” range	Less than 0.5 V	—	
			Ignition switch ON, “D” range	5 V or more		
Back-up light relay output	B54	13	Ignition switch ON, “R” range	Less than 1 V	90 — 110 Ω (ATF temperature 25°C (77°F))	
			Ignition switch ON, other than “R” range	8 V or more		
AWD solenoid output	B55	2	Engine ON, “P” range or “N” range, accelerator OFF	Less than 1 V	3 — 9 Ω (ATF temperature 20°C (68°F))	Drive frequency: 300 Hz
			Engine ON, “D” range, accelerator OFF, brake ON	2 V or more		

GETtheMANUALS.org

Item	Connector No.	Terminal No.	Measuring conditions	Measured value	Resistance between terminal and chassis ground	Remarks
Turbine speed sensor 2 input	B55	25	2nd gear of manual mode, turbine speed sensor is 2,000 rpm (Read from Subaru Select Monitor)	Approx. 1,200 — 1,500 rpm	—	Use the Subaru Select Monitor.
			4th of manual mode, turbine speed sensor is 2,000 rpm (Read from Subaru Select Monitor)	Approx. 1,900 — 2,100 rpm	—	Use the Subaru Select Monitor.
PN signal output	B54	11	Ignition switch ON, Other than “P” range or “N” range	8 V or more	—	
			Ignition switch ON, “P” range or “N” range	Less than 1 V	—	
Ignition power supply 1	B54	26	Ignition switch ON	8 V or more	—	
			Ignition switch OFF	Less than 1 V	—	
Ignition power supply 2	B54	19	Ignition switch ON	8 V or more	—	
			Ignition switch OFF	Less than 1 V	—	
Ignition power supply 3	B54	18	Ignition switch ON	8 V or more	—	
			Ignition switch OFF	Less than 1 V	—	
Ignition power supply 4	B54	25	Ignition switch ON	8 V or more	—	
			Ignition switch OFF	Less than 1 V	—	
Paddle shift DOWN switch	B54	4	Ignition switch ON, Paddle shift DOWN switch ON	Less than 1 V	—	
			Ignition switch ON, Paddle shift DOWN switch OFF	8 V or more	—	
Paddle shift UP switch	B54	5	Ignition switch ON, Paddle shift UP switch ON	Less than 1 V	—	
			Ignition switch ON, Paddle shift UP switch OFF	8 V or more	—	
Manual mode switch	B54	6	Ignition switch ON, Manual mode switch ON	Less than 1 V	—	
			Ignition switch ON, Manual mode switch OFF	8 V or more	—	

GETtheMANUALS.org

6. Subaru Select Monitor

A: OPERATION

For detailed operation procedures, refer to “PC application help for Subaru Select Monitor”.

GETtheMANUALS.org

7. Read Current Data

A: OPERATION

For detailed operation procedures, refer to “PC application help for Subaru Select Monitor”.

- The support data list is as follows.

Item	Display	Unit of measure
Engine speed signal	Engine Speed	rpm
Battery voltage	Battery Voltage	V
Accelerator position sensor	Accel. Opening Angle	%
Front vehicle speed sensor signal	Front Wheel Speed	km/h
Gear position	Gear Position	—
Turbine speed sensor signal	Turbine Revolution Speed	rpm
Rear vehicle speed sensor signal	Rear Wheel Speed	km/h
ATF temperature sensor signal	ATF Temp.	°C
Turbine speed sensor 1 signal	AT Turbine Speed 1	rpm
Turbine speed sensor 2 signal	AT Turbine Speed 2	rpm
High & low reverse clutch solenoid set current	H&LR/C Solenoid Current	A
Direct clutch solenoid set current	D/C Solenoid Current	A
Front brake solenoid set current	F/B Solenoid Current	A
Input clutch solenoid set current	I/C Solenoid Current	A
Line pressure solenoid set current	P/L Solenoid Current	A
Lock-up solenoid set current	L/U Solenoid Current	A
Transfer solenoid set current	AWD Sol. Current	A
High & low reverse clutch solenoid pressure	H&LR/C Solenoid Pressure	kPa
Direct clutch solenoid pressure	D/C Solenoid Pressure	kPa
Front brake solenoid pressure	F/B Solenoid Pressure	kPa
Input clutch solenoid pressure	I/C Solenoid Pressure	kPa
Line pressure solenoid pressure	P/L Solenoid Pressure	kPa
Lock-up solenoid pressure	L/U Solenoid Pressure	kPa
Transfer solenoid pressure	AWD Solenoid Pressure	kPa
Forward brake set current	Fwd/B solenoid current	A
Forward brake solenoid target hydraulic pressure	Fwd/B solenoid target pressure	kPa
Ignition switch	Ignition Switch	ON input or OFF input
Manual mode signal	Tiptronic Mode Switch	ON or OFF
Cruise control set signal	Cruise Control Signal	ON or OFF
Down shift signal	Down Switch	ON or OFF
Stop light switch signal	Stop Light Switch	ON or OFF
Up shift signal	Up Switch	ON or OFF
Drive range signal	D Range Signal	ON or OFF
Reverse range signal	R Range Signal	ON or OFF
Diagnosis light output signal	Diagnosis Lamp	ON or OFF
ATF temperature light signal	ATF Temperature Lamp	ON or OFF
Parking range signal	P Range	ON or OFF
P/N range output signal	P/N Signal	ON or OFF
Neutral range signal	N Range	ON or OFF
Inhibitor switch 1 input signal	Inhibitor SW 1	High or Low
Inhibitor switch 2 input signal	Inhibitor SW 2	High or Low
Inhibitor switch 3 input signal	Inhibitor SW 3	High or Low
Inhibitor switch 4 input signal	Inhibitor SW 4	High or Low
Back-up light relay output signal	Back Lamp Relay	ON or OFF
High & low reverse clutch fluid pressure switch input signal	H&LR/C Fluid Pressure	ON or OFF

GETtheMANUALS.org

Item	Display	Unit of measure
Direct clutch fluid pressure switch input signal	D/C Fluid Pressure	ON or OFF
Front brake fluid pressure switch input signal	F/B Fluid Pressure	ON or OFF
Input clutch fluid pressure switch input signal	I/C Fluid Pressure	ON or OFF
Forward brake fluid pressure switch input signal	Fwd/B hydraulic pressure SW	ON or OFF
AT learning mode	AT learning	Completed or not completed

GETtheMANUALS.org

8. Read Diagnostic Trouble Code (DTC)

A: OPERATION

For detailed operation procedures, refer to “PC application help for Subaru Select Monitor”.

NOTE:
For details concerning DTC, refer to List of Diagnostic Trouble Code (DTC). <Ref. to 5AT(diag)-33, List of Diagnostic Trouble Code (DTC).>

GETtheMANUALS.org

9. Clear Memory Mode

A: OPERATION

For detailed operation procedures, refer to “PC application help for Subaru Select Monitor”.

NOTE:
- If {Clear Memories 2} is executed, DTCs and learned control memory are cleared.
- If {Clear Memories 2} is executed, perform learning. <Ref. to 5AT(diag)-23, Learning Control.>

GETtheMANUALS.org

10.Inspection Mode

A: PROCEDURE

CAUTION:
Observe the traffic law when driving on public roads.

1) Shift the select lever to “D” range, and then drive the vehicle with changing the gear from 1st to 5th.
2) When driving the vehicle at 5th speed of “D” range, set the gear to manual mode and drive the vehicle by downshifting using “–” of the paddle shift switch from 5th → 4th, 4th → 3rd, 3rd → 2nd, and 2nd → 1st.

NOTE:
At shifting down, drive the vehicle at least 10 seconds in each speed.

3) Shift the select lever to “R” range and drive the vehicle for 2 seconds or more.

GETtheWIRINGS.org

11.Learning Control

A: GENERAL DESCRIPTION

- Follow the messages displayed on the Subaru Select Monitor when working.
- When the following work is performed, perform learning for the transmission.

Replacement of TCM/Replacement or disassembly of transmission assembly/Replacement of control valve body/Performing “Clear Memories 2”.

B: PROCEDURE

1. PREPARATION FOR LEARNING

1) Warm up or cool down the vehicle until the ATF temperature displayed on the Subaru Select Monitor is 60 — 80°C (140 — 176°F).
2) Shift the select lever to “P” range.
3) Apply the electronic parking brake.
4) Lift up the vehicle.

CAUTION:
While working, be sure to keep the lower edge of the tires 30 cm or more above the ground as vehicle will vibrate.

5) Connect the Subaru Select Monitor to data link connector.
6) Turn the ignition switch to ON.
7) Turn off all switches causing an electrical load, such as headlights, A/C, seat heater and rear defogger, etc.

2. SIMPLE LEARNING

NOTE:
Simple learning is performed with the vehicle lifted, without actually running the vehicle.

CAUTION:
Do not turn the power of the Subaru Select Monitor OFF during work, and do not disconnect the data link connector.

1) Select {AT related learning & inspecting mode} in the «Transmission Diagnosis» display screen of the Subaru Select Monitor.
2) Select {AT learning mode} in the «AT related learning & inspecting mode» screen of the Subaru Select Monitor.
3) Follow the messages displayed on the Subaru Select Monitor screen when working.

NOTE:
For the messages “SHIFT control system learning in progress” and “AWD control system learning in progress”, AT OIL TEMP light in the combination meter blinks at a cycle of 2 Hz before learning operation starts. When AT OIL TEMP light in the combination meter goes off, the following message is displayed on the screen. When operation ends abnormally during the learning, AT OIL TEMP light blinks at a cycle of 4 Hz.

4) When “AT learning normally ended.” is displayed, simple AT learning is completed.

NOTE:
- If communication error occurs during learning, retry the “AT learning mode” from the beginning.
- If the message “Execute AT learning again after fixing troubles of the vehicle” is displayed during learning, select [OK] to display the List of Diagnostics Trouble Code. After repairing the locations indicated by the DTC, start the “AT learning mode” over from the beginning.
- If the message “AT learning ended abnormally.” is displayed, start the “AT learning mode” over from the beginning.

Message	Main reasons for abnormal termination
“AT learning ended abnormally.”	• Fault is detected during AT learning. • The accelerator pedal is depressed during AT learning. • An unspecified operation was performed during AT learning • Brake pedal is not fully depressed. • Electric parking brake not applied strongly enough • Abnormal idle speed increase, etc.

GETtheMANUALS.org

- For detailed operation procedures, refer to “PC application help for Subaru Select Monitor”.

3. DRIVING CHECK

Drive the vehicle to check that there is no malfunction such as shifting shock.
When shifting shock is felt, perform learning again.
When reducing of shifting shock is not felt, check that other parts are normal.

GETthemANUALS.org

12. AT OIL TEMP Warning Light Display

A: OPERATION

When any on-board diagnostics item is malfunctioning, or the learning has not yet completed, AT OIL TEMP light blinks. Blinking continues from the engine start to the ignition switch OFF. The malfunctioning part or unit can be determined by a DTC. Problems which occurred previously can also be identified through the memory function. If the AT OIL TEMP light does not blink although a problem is occurring, the problem can be determined by checking the performance characteristics of each sensor using the Subaru Select Monitor. If the learning has not yet completed, “AT learning not completed” is displayed when the Subaru Select Monitor is connected while AT OIL TEMP light is blinking. The AT OIL TEMP light blinking will go off, when the learning is performed. Indicator light signal patterns are as shown in the figure.

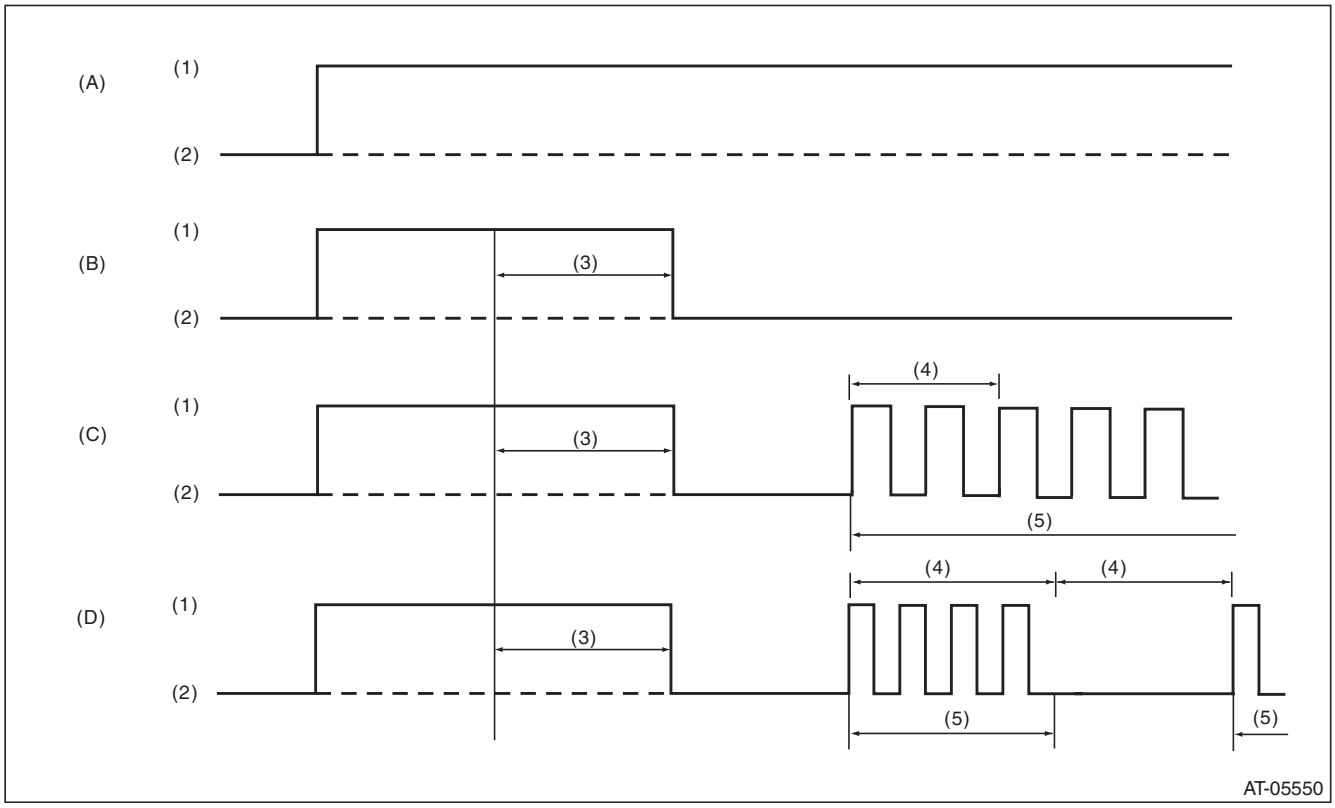

(A)	Ignition switch (engine OFF)	(B)	Normal (engine ON)	(C)	Faulty (engine ON)
(D)	Learning not completed (engine ON)				
(1)	ON	(3)	2 sec.	(5)	Blink
(2)	OFF	(4)	1 sec.		

When the AT OIL TEMP light does not operate normally, check the AT OIL TEMP light circuit. <Ref. to 5AT(diag)-26, INSPECTION, AT OIL TEMP Warning Light Display.>

GETtheWIRDALS.org

B: INSPECTION

DIAGNOSIS:
- AT OIL TEMP light circuit is open or shorted.
- Combination meter malfunction

TROUBLE SYMPTOM:
- When the ignition switch is turned to ON, the AT OIL TEMP light does not illuminate.
- AT OIL TEMP light remains lit after engine start.

WIRING DIAGRAM:

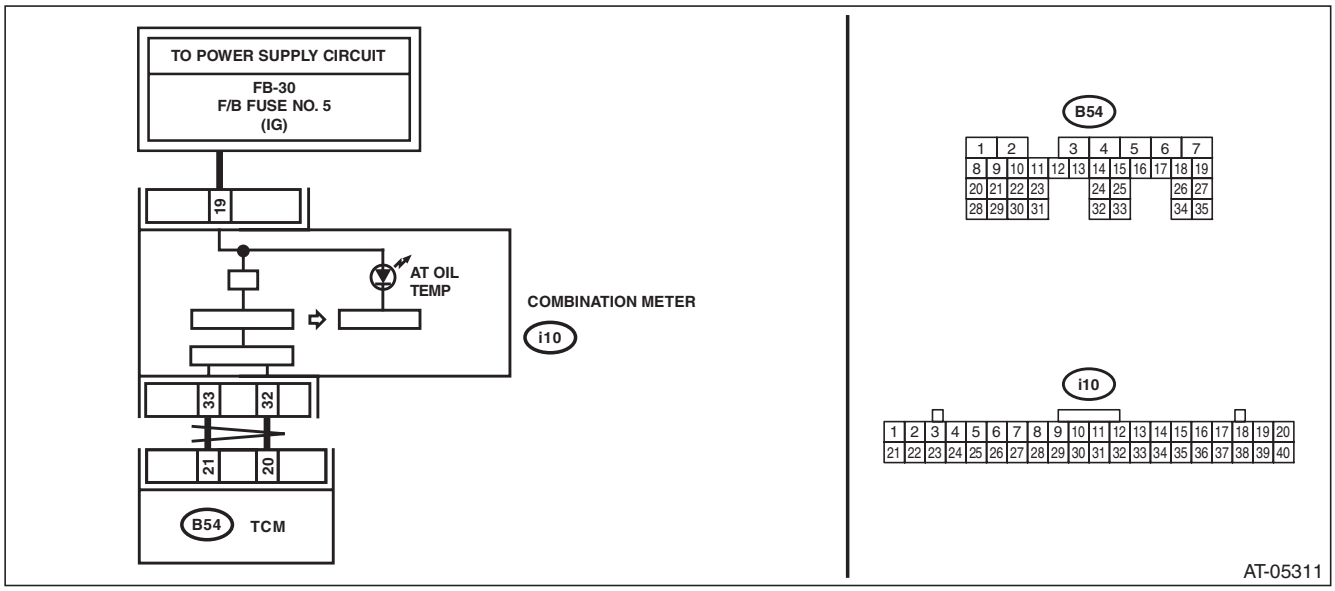

	Step	Check	Yes	No
1	**CHECK AT OIL TEMP LIGHT.** Turn the ignition switch to ON.	Does the AT OIL TEMP light illuminate?	Go to step **2**.	Perform self diagnosis of the combination meter.
2	**CHECK AT OIL TEMP LIGHT.** After the ignition switch is ON, wait for 2 seconds or more.	Does the AT OIL TEMP light illuminate?	Go to step **3**.	Go to step **4**.
3	**CHECK AT OIL TEMP LIGHT.** Start the engine.	Does the AT OIL TEMP light go off?	Normal. Go back to “Basic Diagnostic Procedure”. <Ref. to 5AT(diag)-2, Basic Diagnostic Procedure.>	Go to step **6**.
4	**CHECK SUBARU SELECT MONITOR COMMUNICATION.** Connect the Subaru Select Monitor to data link connector.	Is the communication between Subaru Select Monitor and TCM normal?	Go to step **5**.	Check the power supply ground circuit of TCM and Subaru Select Monitor communication. <Ref. to 5AT(diag)-30, Diagnostic Procedure for Subaru Select Monitor Communication.>
5	**CHECK DTC.** Read the DTC relating the TCM using the Subaru Select Monitor.	Is DTC displayed?	Perform the diagnosis according to DTC.	Go to step **6**.
6	**CHECK TCM.** Read the data of “ATF Temperature Lamp” using the Subaru Select Monitor.	Is “ON” displayed?	Go to step **7**.	Perform self diagnosis of the combination meter.

GETtheMANUALS.org

Step		Check	Yes	No
7	**CHECK TCM.** Read the data of ATF temperature using Subaru Select Monitor.	Is the display 130°C or more?	Go to step **8**.	Replace the TCM. <Ref. to 5AT-57, Transmission Control Module (TCM).>
8	**CHECK ATF TEMPERATURE.** Check the real fluid temperature from the transmission case surface temperature.	Is the temperature lower than "ATF temperature" displayed on Subaru Select Monitor?	Perform the diagnosis according to DTC P0713.	When ATF temperature can be judged as actually high, perform the diagnosis again after the ATF temperature lowers.

GETtheMANUALS.org

13. AWD Warning Light Display

A: OPERATION

AWD warning light illuminates or blinks at start, or when AWD is faulty.

- Normal

AWD light always illuminates when the ignition switch is ON (engine OFF). Light goes off after two seconds from engine ON.

- Faulty

AWD warning light blinks at 2 Hz, when tires with different diameters are installed, or when the vehicle is driven with air pressure of any of the four tires significantly low.

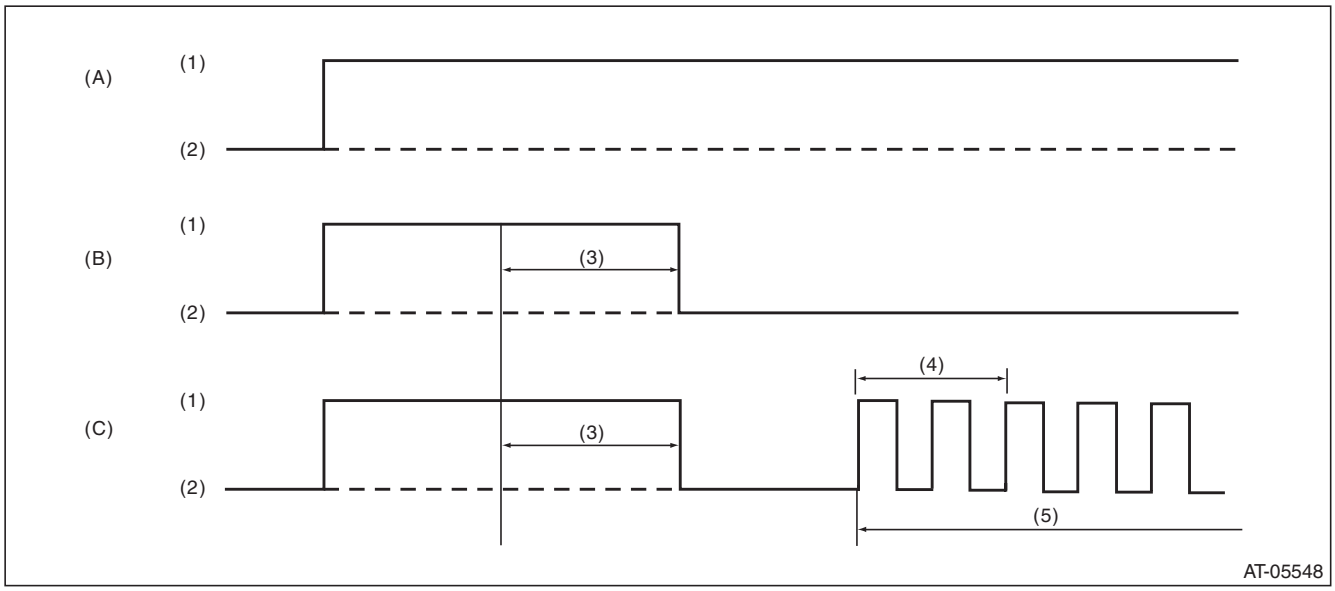

(A)	Ignition switch (engine OFF)	(B)	Normal (engine ON)	(C)	Faulty (engine ON)
(1)	ON	(3)	2 sec.	(5)	Blink
(2)	OFF	(4)	1 sec.		

If the AWD light does not illuminate, or illumination patterns are not as above, check the AWD light circuit. <Ref. to 5AT(diag)-29, INSPECTION, AWD Warning Light Display.>

GETtheWIRDALS.org

B: INSPECTION

DIAGNOSIS:
- AWD light circuit is open or shorted.
- Combination meter malfunction
- TCM malfunction

TROUBLE SYMPTOM:
- When the ignition switch is turned to ON, the AWD light does not illuminate.
- AWD light remains lit after engine start.

WIRING DIAGRAM:

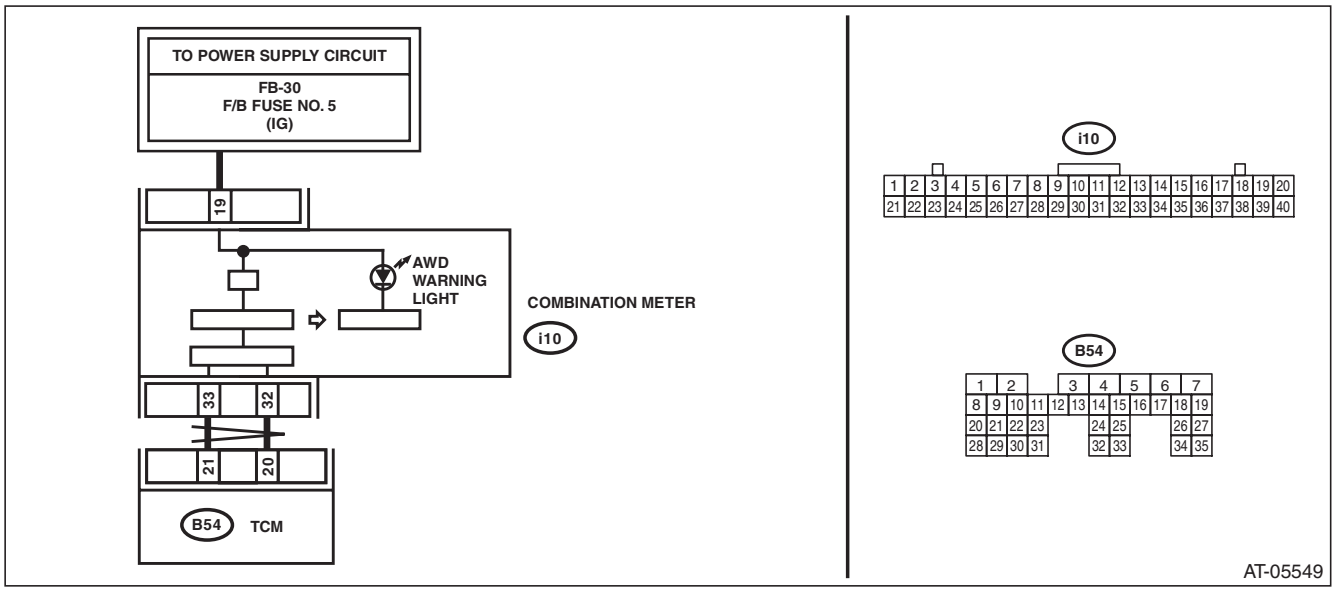

Step		Check	Yes	No
1	**CHECK AWD LIGHT.** Turn the ignition switch to ON.	Does the AWD light illuminate?	Go to step **2**.	Perform self diagnosis of the combination meter. <Ref. to IDI-11, INSPECTION, Combination Meter System.>
2	**CHECK AWD LIGHT.** Start the engine.	Does AWD light go off after two seconds from engine start?	Current condition is normal. Go back to “Basic Diagnostic Procedure”. <Ref. to 5AT(diag)-2, Basic Diagnostic Procedure.>	Go to step **3**.
3	**CHECK COMBINATION METER.** Perform self diagnosis of the combination meter. <Ref. to IDI-11, INSPECTION, Combination Meter System.>	Is there any trouble with the combination meter?	Repair the combination meter.	Replace the TCM. <Ref. to 5AT-57, Transmission Control Module (TCM).>

GETtheMANUALS.org

14. Diagnostic Procedure for Subaru Select Monitor Communication

A: COMMUNICATION FOR INITIALIZING IMPOSSIBLE

DIAGNOSIS:
Defective harness connector
TROUBLE SYMPTOM:
Subaru Select Monitor communication failure
WIRING DIAGRAM:

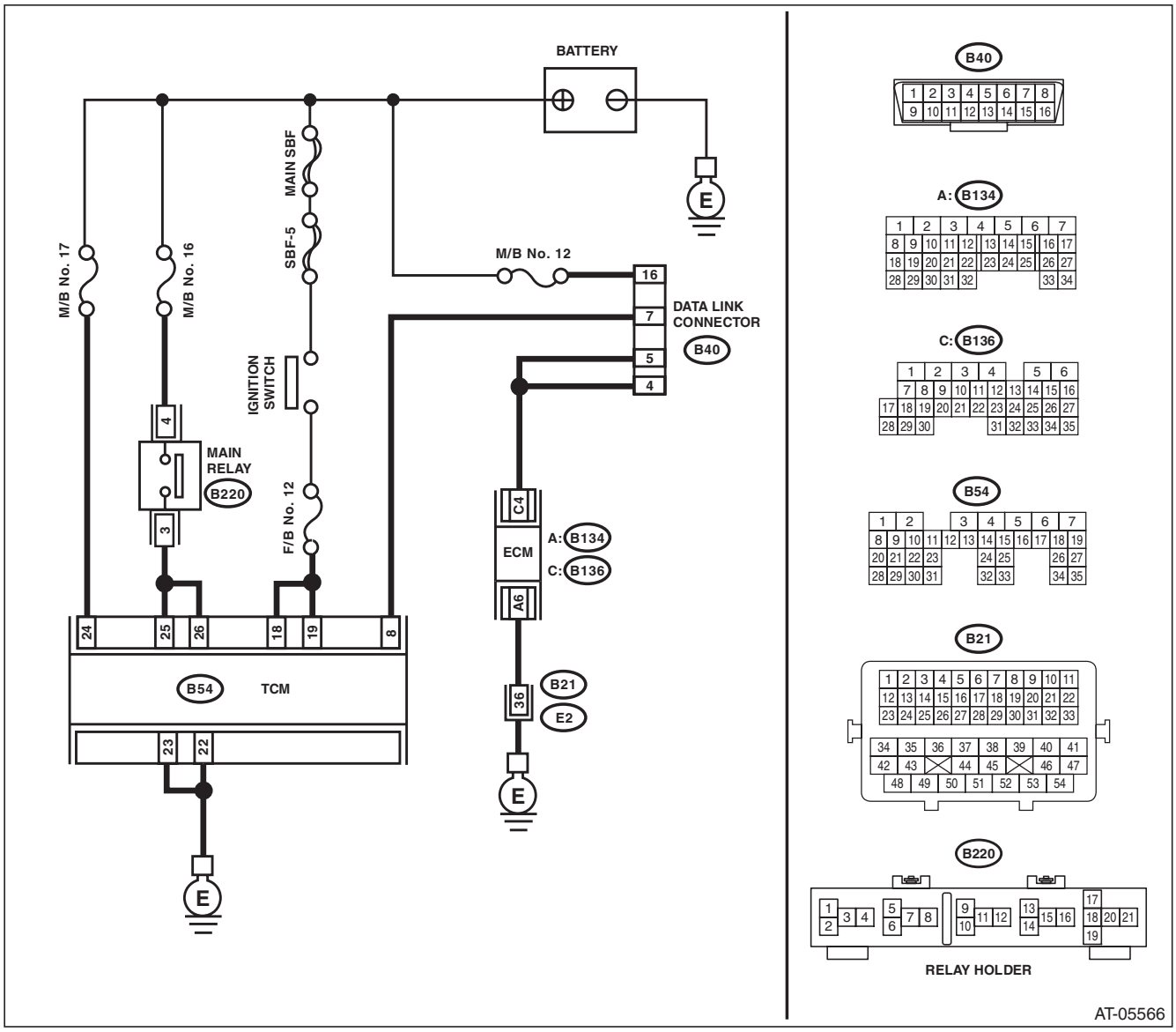

Step		Check	Yes	No
1	**CHECK INSTALLATION OF TCM CONNECTOR.** Turn the ignition switch to OFF.	Is TCM connector connected to TCM?	Go to step **2**.	Connect the TCM connector to TCM.

GETtheMANUALS.org

	Step	Check	Yes	No
2	**CHECK SUBARU SELECT MONITOR POWER SUPPLY CIRCUIT.** Measure the voltage between data link connector and chassis ground. ***Connector & terminal*** ***(B40) No. 16 (+) — Chassis ground (–):***	Is the voltage 10 V or more?	Go to step **3**.	Repair harness connector between the battery and data link connector, and poor contact of the connector.
3	**CHECK SUBARU SELECT MONITOR GROUND CIRCUIT.** Measure the resistance of harness between data link connector and chassis ground. ***Connector & terminal*** ***(B40) No. 4 — Chassis ground:*** ***(B40) No. 5 — Chassis ground:***	Is the resistance less than 1 Ω?	Go to step **4**.	Repair the open circuit of harness between data link connector and ground terminal, and poor contact of connector.
4	**CHECK COMMUNICATION OF SUBARU SELECT MONITOR.** 1) Turn the ignition switch to ON. 2) Check communication with the transmission system.	Is the name of system displayed on Subaru Select Monitor?	Go to step **9**.	Go to step **5**.
5	**CHECK COMMUNICATION OF SUBARU SELECT MONITOR.** 1) Turn the ignition switch to OFF. 2) Disconnect the TCM connector. 3) Turn the ignition switch to ON. 4) Check communication with the engine system.	Is the name of system displayed on Subaru Select Monitor?	Go to step **7**.	Go to step **6**.
6	**CHECK COMMUNICATION OF SUBARU SELECT MONITOR.** 1) Turn the ignition switch to OFF. 2) Connect the TCM connector. 3) Disconnect the connector from ECM. 4) Turn the ignition switch to ON. 5) Check communication with the transmission system.	Is the name of system displayed on Subaru Select Monitor?	Inspect the ECM.	Go to step **7**.
7	**CHECK HARNESS CONNECTOR BETWEEN EACH CONTROL MODULE AND DATA LINK CONNECTOR.** 1) Turn the ignition switch to OFF. 2) Disconnect the TCM and ECM connector. 3) Measure the resistance between TCM connector and chassis ground. ***Connector & terminal*** ***(B40) No. 7 — Chassis ground:***	Is the resistance 1 MΩ or more?	Go to step **8**.	Check harness and connector between each control module and data link connector.
8	**CHECK OUTPUT SIGNAL OF TCM.** 1) Turn the ignition switch to ON. 2) Measure the voltage between TCM and chassis ground. ***Connector & terminal*** ***(B40) No. 7 (+) — Chassis ground (–):***	Is the voltage 1 V or more?	Check harness and connector between each control module and data link connector.	Go to step **9**.
9	**CHECK HARNESS CONNECTOR BETWEEN TCM AND DATA LINK CONNECTOR.** Measure the resistance between TCM connector and data link connector. ***Connector & terminal*** ***(B54) No. 8 — (B40) No. 7:***	Is the resistance less than 1 Ω?	Go to step **10**.	Check the harness and connector between TCM and data link connector.

GETthemANUALS.org

	Step	Check	Yes	No
10	**CHECK INSTALLATION OF TRANSMISSION HARNESS CONNECTOR.**	Is the transmission harness connector connected to bulkhead harness connector?	Go to step **11**.	Connect the bulkhead harness connector to transmission harness connector.
11	**CHECK POOR CONTACT OF CONNECTORS.**	Is there poor contact of control module power supply and data link connector?	Repair the poor contact.	Go to step **12**.
12	**CHECK POWER SUPPLY OF TCM.** 1) Disconnect the connector from TCM. 2) Turn the ignition switch to ON. 3) Measure the voltage between TCM connector and chassis ground. ***Connector & terminal*** ***(B54) No. 24 (+) — Chassis ground (–):*** ***(B54) No. 25 (+) — Chassis ground (–):*** ***(B54) No. 26 (+) — Chassis ground (–):***	Is the voltage 10 — 13 V?	Go to step **15**.	Go to step **13**.
13	**CHECK M/B FUSE.** 1) Turn the ignition switch to OFF. 2) Remove the fuse (No. 16 and No. 17).	Is the fuse blown out?	Replace the fuse.	Go to step **14**.
14	**CHECK HARNESS.** Measure the resistance between TCM connector and chassis ground. ***Connector & terminal*** ***(B54) No. 24 — Chassis ground:*** ***(B54) No. 25 — Chassis ground:*** ***(B54) No. 26 — Chassis ground:***	Is the resistance 10 Ω or less?	Replace the fuse. If the replaced fuse has blown out easily, repair short circuit of harness between fuse and TCM.	Go to step **15**.
15	**CHECK IGNITION POWER SUPPLY CIRCUIT.** 1) Turn the ignition switch to ON. 2) Measure the ignition power supply voltage between TCM connector and chassis ground. ***Connector & terminal*** ***(B54) No. 18 (+) — Chassis ground (–):*** ***(B54) No. 19 (+) — Chassis ground (–):***	Is the voltage 10 — 13 V?	Go to step **17**.	Go to step **16**.
16	**CHECK F/B FUSE.** Remove the fuse (No. 12).	Is the fuse blown out?	Replace the fuse. If the replaced fuse has blown out easily, repair short circuit of harness between fuse and TCM.	Go to step **17**.
17	**CHECK HARNESS CONNECTOR BETWEEN TCM AND TRANSMISSION.** 1) Turn the ignition switch to OFF. 2) Disconnect the connector from TCM. 3) Measure the resistance of the harness between TCM and transmission ground. ***Connector & terminal*** ***(B54) No. 22 — Transmission ground:*** ***(B54) No. 23 — Transmission ground:***	Is the resistance 1 MΩ or more?	Repair the short circuit of harness between TCM and transmission harness connector, and poor contact of connector.	Go to step **18**.
18	**CHECK POOR CONTACT OF CONNECTORS.**	Is there poor contact of TCM power supply, ground and data link connector?	Repair the connector.	Replace the TCM. <Ref. to 5AT-57, Transmission Control Module (TCM).>

GETtheWIRINGS.org

15. List of Diagnostic Trouble Code (DTC)

A: LIST

DTC	Item	Content of diagnosis	Reference
P0705	Transmission Range Sensor Circuit (PRNDL Input)	Inhibitor switch malfunction, open or short circuit	<Ref. to 5AT(diag)-36, DTC P0705 TRANSMISSION RANGE SENSOR CIRCUIT (PRNDL INPUT), Diagnostic Procedure with Diagnostic Trouble Code (DTC).>
P0712	Transmission Fluid Temperature Sensor Circuit Low Input	ATF temperature sensor 1 is faulty or input signal circuit is open.	<Ref. to 5AT(diag)-40, DTC P0712 TRANSMISSION FLUID TEMPERATURE SENSOR CIRCUIT LOW INPUT, Diagnostic Procedure with Diagnostic Trouble Code (DTC).>
P0713	Transmission Fluid Temperature Sensor Circuit High Input	ATF temperature sensor 1 is faulty or input signal circuit is shorted.	<Ref. to 5AT(diag)-42, DTC P0713 TRANSMISSION FLUID TEMPERATURE SENSOR CIRCUIT HIGH INPUT, Diagnostic Procedure with Diagnostic Trouble Code (DTC).>
P0715	Input/Turbine Speed Sensor Circuit	Turbine speed sensor 1 malfunction, open or shorted input signal circuit	<Ref. to 5AT(diag)-44, DTC P0715 INPUT/TURBINE SPEED SENSOR CIRCUIT, Diagnostic Procedure with Diagnostic Trouble Code (DTC).>
P0719	Brake Switch Circuit Low	Brake switch malfunction, open input signal circuit, body integrated unit malfunction, or CAN communication error	<Ref. to 5AT(diag)-46, DTC P0719 BRAKE SWITCH CIRCUIT LOW, Diagnostic Procedure with Diagnostic Trouble Code (DTC).>
P0720	Output Speed Sensor Circuit	Front vehicle speed sensor malfunction, open or shorted input signal circuit, ground, power supply	<Ref. to 5AT(diag)-48, DTC P0720 OUTPUT SPEED SENSOR CIRCUIT, Diagnostic Procedure with Diagnostic Trouble Code (DTC).>
P0724	Brake Switch Circuit High	Brake switch malfunction, shorted input signal circuit, body integrated unit malfunction, or CAN communication error	<Ref. to 5AT(diag)-51, DTC P0724 BRAKE SWITCH CIRCUIT HIGH, Diagnostic Procedure with Diagnostic Trouble Code (DTC).>
P0731	Gear 1 Incorrect Ratio	Vehicle speed sensor, turbine speed sensor, control valve, or gear shift clutch malfunction	<Ref. to 5AT(diag)-52, DTC P0731 GEAR 1 INCORRECT RATIO, Diagnostic Procedure with Diagnostic Trouble Code (DTC).>
P0732	Gear 2 Incorrect Ratio	Vehicle speed sensor, turbine speed sensor, control valve, or gear shift clutch malfunction	<Ref. to 5AT(diag)-52, DTC P0732 GEAR 2 INCORRECT RATIO, Diagnostic Procedure with Diagnostic Trouble Code (DTC).>
P0733	Gear 3 Incorrect Ratio	Vehicle speed sensor, turbine speed sensor or gear shift clutch malfunction	<Ref. to 5AT(diag)-52, DTC P0733 GEAR 3 INCORRECT RATIO, Diagnostic Procedure with Diagnostic Trouble Code (DTC).>
P0734	Gear 4 Incorrect Ratio	Vehicle speed sensor, turbine speed sensor or gear shift clutch malfunction	<Ref. to 5AT(diag)-52, DTC P0734 GEAR 4 INCORRECT RATIO, Diagnostic Procedure with Diagnostic Trouble Code (DTC).>
P0735	Gear 5 Incorrect Ratio	Vehicle speed sensor, turbine speed sensor or gear shift clutch malfunction	<Ref. to 5AT(diag)-52, DTC P0735 GEAR 5 INCORRECT RATIO, Diagnostic Procedure with Diagnostic Trouble Code (DTC).>
P0736	Reverse Incorrect Ratio	Vehicle speed sensor, turbine speed sensor or gear shift clutch malfunction	<Ref. to 5AT(diag)-53, DTC P0736 REVERSE INCORRECT RATIO, Diagnostic Procedure with Diagnostic Trouble Code (DTC).>
P0741	Torque Converter Clutch Circuit Performance or Stuck Off	Lock-up clutch is faulty or valve is stuck.	<Ref. to 5AT(diag)-54, DTC P0741 TORQUE CONVERTER CLUTCH CIRCUIT PERFORMANCE OR STUCK OFF, Diagnostic Procedure with Diagnostic Trouble Code (DTC).>
P0743	Torque Converter Clutch Circuit Electrical	L/U solenoid circuit or L/U solenoid unit malfunction	<Ref. to 5AT(diag)-55, DTC P0743 TORQUE CONVERTER CLUTCH CIRCUIT ELECTRICAL, Diagnostic Procedure with Diagnostic Trouble Code (DTC).>

GETtheMANUALS.org

List of Diagnostic Trouble Code (DTC)

DTC	Item	Content of diagnosis	Reference
P0748	Pressure Control Solenoid “A” Electrical	Line pressure solenoid circuit or line pressure solenoid unit malfunction	<Ref. to 5AT(diag)-57, DTC P0748 PRESSURE CONTROL SOLENOID “A” ELECTRICAL, Diagnostic Procedure with Diagnostic Trouble Code (DTC).>
P0751	Shift Solenoid “A” Performance or Stuck Off	Fr/B solenoid malfunction	<Ref. to 5AT(diag)-59, DTC P0751 SHIFT SOLENOID “A” PERFORMANCE OR STUCK OFF, Diagnostic Procedure with Diagnostic Trouble Code (DTC).>
P0753	Shift Solenoid “A” Electrical	Fr/B solenoid circuit or Fr/B solenoid unit malfunction	<Ref. to 5AT(diag)-61, DTC P0753 SHIFT SOLENOID “A” ELECTRICAL, Diagnostic Procedure with Diagnostic Trouble Code (DTC).>
P0756	Shift Solenoid “B” Performance or Stuck Off	I/C solenoid malfunction	<Ref. to 5AT(diag)-63, DTC P0756 SHIFT SOLENOID “B” PERFORMANCE OR STUCK OFF, Diagnostic Procedure with Diagnostic Trouble Code (DTC).>
P0758	Shift Solenoid “B” Electrical	I/C solenoid circuit or I/C solenoid unit malfunction	<Ref. to 5AT(diag)-65, DTC P0758 SHIFT SOLENOID “B” ELECTRICAL, Diagnostic Procedure with Diagnostic Trouble Code (DTC).>
P0761	Shift Solenoid “C” Performance or Stuck Off	H&LR/C solenoid malfunction	<Ref. to 5AT(diag)-67, DTC P0761 SHIFT SOLENOID “C” PERFORMANCE OR STUCK OFF, Diagnostic Procedure with Diagnostic Trouble Code (DTC).>
P0763	Shift Solenoid “C” Electrical	H&LR/C solenoid circuit or H&LR/C solenoid unit malfunction	<Ref. to 5AT(diag)-69, DTC P0763 SHIFT SOLENOID “C” ELECTRICAL, Diagnostic Procedure with Diagnostic Trouble Code (DTC).>
P0766	Shift Solenoid “D” Performance or Stuck Off	D/C solenoid malfunction	<Ref. to 5AT(diag)-71, DTC P0766 SHIFT SOLENOID “D” PERFORMANCE OR STUCK OFF, Diagnostic Procedure with Diagnostic Trouble Code (DTC).>
P0768	Shift Solenoid “D” Electrical	D/C solenoid circuit or D/C solenoid unit malfunction	<Ref. to 5AT(diag)-73, DTC P0768 SHIFT SOLENOID “D” ELECTRICAL, Diagnostic Procedure with Diagnostic Trouble Code (DTC).>
P0771	Shift Solenoid “E” Performance or Stuck Off	Fwd/B solenoid malfunction	<Ref. to 5AT(diag)-75, DTC P0771 SHIFT SOLENOID “E” PERFORMANCE OR STUCK OFF, Diagnostic Procedure with Diagnostic Trouble Code (DTC).>
P0773	Shift Solenoid “E” Electrical	Fwd/B solenoid circuit or Fwd/B solenoid unit malfunction	<Ref. to 5AT(diag)-77, DTC P0773 SHIFT SOLENOID “E” ELECTRICAL, Diagnostic Procedure with Diagnostic Trouble Code (DTC).>
P0801	Reverse Inhibit Control Circuit	Shift lock solenoid is faulty or output signal circuit is open or shorted.	<Ref. to 5AT(diag)-79, DTC P0801 REVERSE INHIBIT CONTROL CIRCUIT, Diagnostic Procedure with Diagnostic Trouble Code (DTC).>
P0817	Starter Disable Circuit	• Open or short in PN signal output circuit • ECM power supply malfunction • TCM+B fuse is blown.	<Ref. to 5AT(diag)-81, DTC P0817 STARTER DISABLE CIRCUIT, Diagnostic Procedure with Diagnostic Trouble Code (DTC).>
P0957	Backup Light Relay Circuit Low	Open or shorted back-up light relay output circuit or relay OFF malfunction	<Ref. to 5AT(diag)-83, DTC P0957 BACKUP LIGHT RELAY CIRCUIT LOW, Diagnostic Procedure with Diagnostic Trouble Code (DTC).>
P0958	Backup Light Relay Circuit High	Shorted back-up light relay output circuit or relay ON malfunction	<Ref. to 5AT(diag)-85, DTC P0958 BACKUP LIGHT RELAY CIRCUIT HIGH, Diagnostic Procedure with Diagnostic Trouble Code (DTC).>
P1706	AT Vehicle Speed Sensor Circuit Malfunction (Rear wheel)	Rear vehicle speed sensor malfunction, open or shorted input circuit, ground, power supply	<Ref. to 5AT(diag)-87, DTC P1706 AT VEHICLE SPEED SENSOR CIRCUIT MALFUNCTION (REAR WHEEL), Diagnostic Procedure with Diagnostic Trouble Code (DTC).>

GETtheMANUALS.org

List of Diagnostic Trouble Code (DTC)

DTC	Item	Content of diagnosis	Reference
P1707	AT AWD Solenoid Valve Circuit Malfunction	AWD solenoid circuit or AWD solenoid unit malfunction	<Ref. to 5AT(diag)-89, DTC P1707 AT AWD SOLENOID VALVE CIRCUIT MALFUNCTION, Diagnostic Procedure with Diagnostic Trouble Code (DTC).>
P1710	Torque Converter Turbine 2 Speed Signal Circuit Malfunction	Turbine speed sensor 2 malfunction, open or shorted input circuit, ground, power supply	<Ref. to 5AT(diag)-91, DTC P1710 TORQUE CONVERTER TURBINE 2 SPEED SIGNAL CIRCUIT MALFUNCTION, Diagnostic Procedure with Diagnostic Trouble Code (DTC).>
P1718	AT CAN Communication Circuit	Open CAN communication bus off, shorted ECM, ABS/VDCCM, body integrated unit malfunction	<Ref. to 5AT(diag)-92, DTC P1718 AT CAN COMMUNICATION CIRCUIT, Diagnostic Procedure with Diagnostic Trouble Code (DTC).>
P1724	AT EEPROM Error	TCM EEPROM malfunction	<Ref. to 5AT(diag)-93, DTC P1724 AT EEPROM ERROR, Diagnostic Procedure with Diagnostic Trouble Code (DTC).>
P1817	Sports Mode Switch Circuit (Manual Switch)	Open or shorted manual mode switch or switch malfunction	<Ref. to 5AT(diag)-94, DTC P1817 SPORTS MODE SWITCH CIRCUIT (MANUAL SWITCH), Diagnostic Procedure with Diagnostic Trouble Code (DTC).>
P1840	Transmission Fluid Pressure Sensor Switch A Circuit	Open or shorted Fr/B fluid pressure switch or switch malfunction	<Ref. to 5AT(diag)-96, DTC P1840 TRANSMISSION FLUID PRESSURE SENSOR SWITCH A CIRCUIT, Diagnostic Procedure with Diagnostic Trouble Code (DTC).>
P1841	Transmission Fluid Pressure Sensor Switch B Circuit	Open or shorted Fwd/B fluid pressure switch or switch malfunction	<Ref. to 5AT(diag)-96, DTC P1841 TRANSMISSION FLUID PRESSURE SENSOR SWITCH B CIRCUIT, Diagnostic Procedure with Diagnostic Trouble Code (DTC).>
P1842	Transmission Fluid Pressure Sensor Switch C Circuit	Open or shorted I/O fluid pressure switch or switch malfunction	<Ref. to 5AT(diag)-96, DTC P1842 TRANSMISSION FLUID PRESSURE SENSOR SWITCH C CIRCUIT, Diagnostic Procedure with Diagnostic Trouble Code (DTC).>
P1843	Transmission Fluid Pressure Sensor Switch D Circuit	Open or shorted D/C fluid pressure switch or switch malfunction	<Ref. to 5AT(diag)-96, DTC P1843 TRANSMISSION FLUID PRESSURE SENSOR SWITCH D CIRCUIT, Diagnostic Procedure with Diagnostic Trouble Code (DTC).>
P1844	Transmission Fluid Pressure Sensor Switch E Circuit	Open or shorted H&LR/C fluid pressure switch or switch malfunction	<Ref. to 5AT(diag)-96, DTC P1844 TRANSMISSION FLUID PRESSURE SENSOR SWITCH E CIRCUIT, Diagnostic Procedure with Diagnostic Trouble Code (DTC).>

GETtheMANUALS.org

16. Diagnostic Procedure with Diagnostic Trouble Code (DTC)

A: DTC P0705 TRANSMISSION RANGE SENSOR CIRCUIT (PRNDL INPUT)

DTC DETECTING CONDITION:

The inhibitor switch is open or short.

TROUBLE SYMPTOM:

- Shift characteristics are erroneous.
- Shift indicator does not match with select lever.
- Shift indicator does not illuminate.
- N-D, N-R shock occur.

WIRING DIAGRAM:

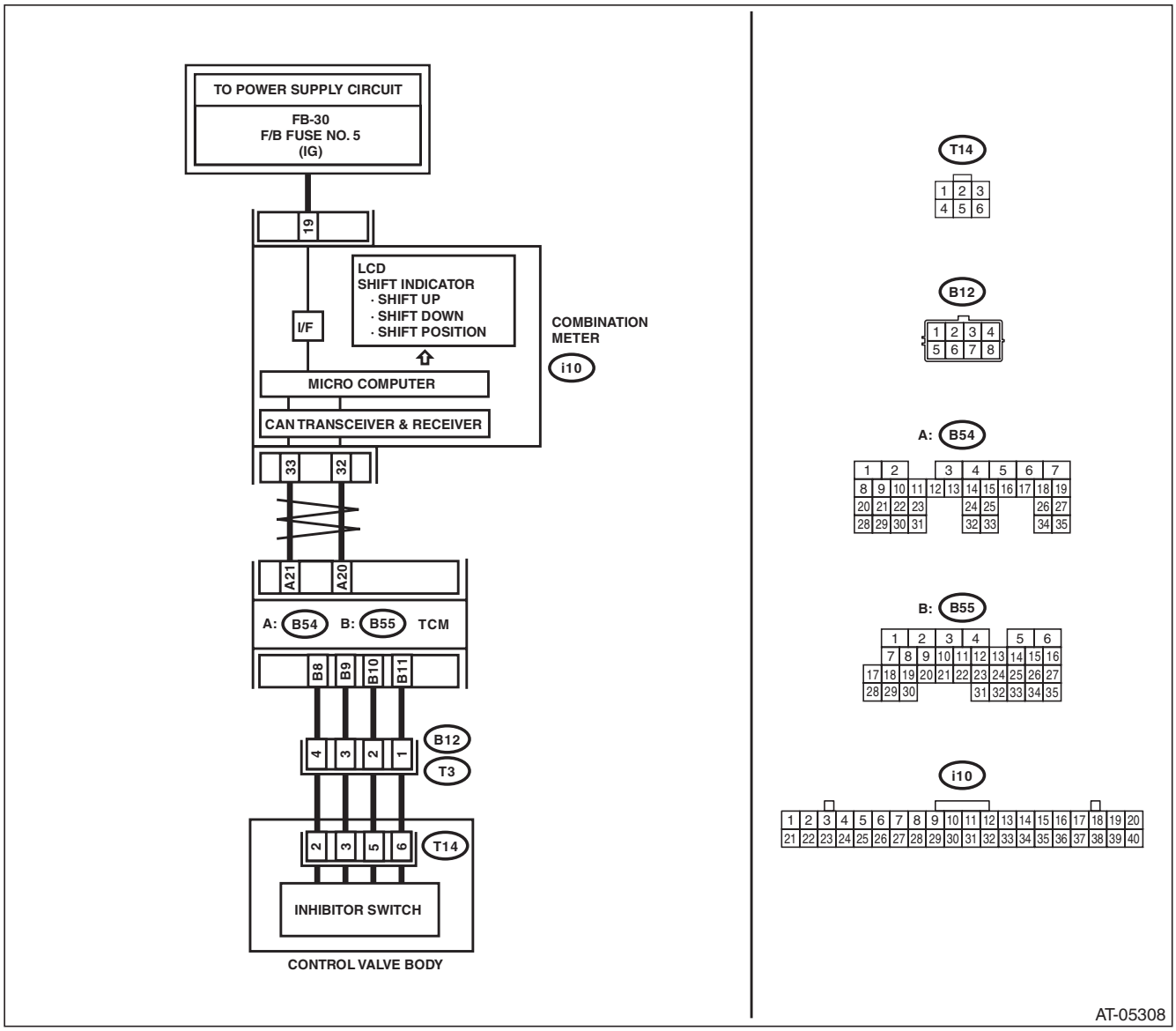

Step	Check	Yes	No
1 CHECK DTC OF TCM.	Is DTC of AT CAN communication circuit displayed?	Perform the diagnosis according to DTC.	Go to step **2**.

GETtheWIRINGS.org

Step		Check	Yes	No
2	**CHECK INHIBITOR SWITCH.** Using Subaru Select Monitor, read the data of "Inhibitor SW 1 — 4" for each range. ○=High AT-05083	Is the display as in the table of step 2?	Go to step **9**.	Go to step **3**.
3	**CHECK INHIBITOR SWITCH.** Using Subaru Select Monitor, read the data of "Inhibitor SW 1" for "P" and "D" ranges.	Is the display "High" for both "P" and "D"?	Go to step **4**.	Go to step **7**.
4	**CHECK INHIBITOR SWITCH.** Using Subaru Select Monitor, read the data of "Inhibitor SW 2" for "R" and "D" ranges.	Is the display "High" for both "R" and "D"?	Go to step **5**.	Go to step **7**.
5	**CHECK INHIBITOR SWITCH.** Using Subaru Select Monitor, read the data of "Inhibitor SW 3" for "N" and "D" ranges.	Is the display "High" for both "N" and "D"?	Go to step **6**.	Go to step **7**.
6	**CHECK INHIBITOR SWITCH.** Using Subaru Select Monitor, read the data of "Inhibitor SW 4" for "P" and "N" ranges.	Is the display "High" for both "P" and "N"?	Go to step **8**.	Go to step **7**.
7	**CHECK HARNESS CONNECTOR BETWEEN TCM AND TRANSMISSION.** 1) Turn the ignition switch to OFF. 2) Disconnect the connectors from TCM and transmission. 3) Measure the resistance of harness between TCM connector and transmission connector. ***Connector & terminal*** ***(B55) No. 8 — (B12) No. 4:*** ***(B55) No. 9 — (B12) No. 3:*** ***(B55) No. 10 — (B12) No. 2:*** ***(B55) No. 11 — (B12) No. 1:***	Is the resistance less than 1 Ω?	Go to step **8**.	Repair the open circuit of harness between TCM and transmission connector.
8	**CHECK HARNESS CONNECTOR BETWEEN TCM AND TRANSMISSION.** 1) Turn the ignition switch to OFF. 2) Disconnect the connectors from TCM and transmission. 3) Measure the resistance between TCM connector and chassis ground. ***Connector & terminal*** ***(B55) No. 8 — Chassis ground:*** ***(B55) No. 9 — Chassis ground:*** ***(B55) No. 10 — Chassis ground:*** ***(B55) No. 11 — Chassis ground:***	Is the resistance 1 MΩ or more?	Go to step **9**.	Repair the short circuit of harness between TCM and transmission connector.

GETtheMANUALS.org

	Step	Check	Yes	No
9	**CHECK INPUT SIGNAL CIRCUIT FOR TCM.** 1) Turn the ignition switch to OFF. 2) Disconnect the transmission connector (B12). 3) Connect the TCM connector. 4) Turn the ignition switch to ON. 5) Measure the voltage between TCM terminals. ***Connector & terminal*** ***(B55) No. 8 (+) — (B54) No. 23 (–):*** ***(B55) No. 9 (+) — (B54) No. 23 (–):*** ***(B55) No. 10 (+) — (B54) No. 23 (–):*** ***(B55) No. 11 (+) — (B54) No. 23 (–):***	Is the voltage of “Inhibitor SW 1 — 4” 8 V or more?	Go to step **11**.	Go to step **10**.
10	**CHECK TCM I/O SIGNAL.** Check the power supply and ground I/O signals. <Ref. to 5AT(diag)-13, ELECTRICAL SPECIFICATION, Transmission Control Module (TCM) I/O Signal.>	Is TCM I/O signal OK?	Replace the TCM. <Ref. to 5AT-57, Transmission Control Module (TCM).>	Repair the open or short circuit for power supply and ground.
11	**CHECK INPUT SIGNAL FOR TCM.** 1) Connect all connectors. 2) Lift up the vehicle. 3) Start the engine. 4) Using Subaru Select Monitor, read the data of “Front Wheel Speed” and “AT Turbine Speed 2”. <Ref. to 5AT(diag)-18, Read Current Data.> NOTE: The speed difference between front and rear wheels lights the ABS warning light or the VDC warning light, but this does not indicate a malfunction. If the warning light is illuminated, clear the memory of ABS or VDC after completing AT control diagnosis. <Ref. to VDC(diag)-25, Clear Memory Mode.>	Does the speedometer indication increase as “Front Wheel Speed” and “AT Turbine Speed 2” values increase?	Go to step **12**.	Replace the control valve body. <Ref. to 5AT-55, Control Valve Body.>
12	**CHECK INPUT SIGNAL FOR TCM.** 1) Drive at 4th of manual mode. NOTE: Turbine speed sensor 1 signal can be measured only on 4th speed. 2) Using Subaru Select Monitor, read the data of “Rear Wheel Speed” and “AT Turbine Speed 1”. <Ref. to 5AT(diag)-18, Read Current Data.> NOTE: The speed difference between front and rear wheels lights the ABS warning light or the VDC warning light, but this does not indicate a malfunction. If the warning light is illuminated, clear the memory of ABS or VDC after completing AT control diagnosis. <Ref. to VDC(diag)-25, Clear Memory Mode.>	Does the speedometer indication increase as “Rear Wheel Speed” and “AT Turbine Speed 1” values increase?	Go to step **13**.	Repair the open circuit of harness or poor contact of connector between TCM and rear vehicle speed sensor and turbine speed sensor 1.

GETtheMANUALS.org

Step		Check	Yes	No
13	**CHECK HARNESS CONNECTOR BETWEEN TRANSMISSION AND CONTROL VALVE BODY.** 1) Turn the ignition switch to OFF. 2) Disconnect the connector from transmission. 3) Remove the transmission connector from bracket. 4) Lift up the vehicle. 5) Drain the ATF. **CAUTION:** **Do not drain ATF until it cools down.** 6) Remove the oil pan. 7) Disconnect the connector from control valve body connector. 8) Measure the resistance between transmission connector and control valve body connector. ***Connector & terminal*** ***(T3) No. 4 — (T14) No. 2:*** ***(T3) No. 3 — (T14) No. 3:*** ***(T3) No. 2 — (T14) No. 5:*** ***(T3) No. 1 — (T14) No. 6:***	Is the resistance less than 1 Ω?	Go to step **14**.	Repair the open circuit of harness between control valve body connector and transmission connector.
14	**CHECK HARNESS CONNECTOR BETWEEN TRANSMISSION AND CONTROL VALVE BODY.** Measure the resistance between transmission ground and control valve body connector. ***Connector & terminal*** ***(T14) No. 2 — Transmission ground:*** ***(T14) No. 3 — Transmission ground:*** ***(T14) No. 5 — Transmission ground:*** ***(T14) No. 6 — Transmission ground:***	Is the resistance 1 MΩ or more?	Go to step **15**.	Repair the short circuit of harness between control valve body connector and transmission connector.
15	**CHECK FOR POOR CONTACT.**	Is there any poor contact of “Inhibitor SW 1 — 4” monitor circuit?	Repair the poor contact.	Replace the control valve body. <Ref. to 5AT-55, Control Valve Body.>

GETtheMANUALS.org

B: DTC P0712 TRANSMISSION FLUID TEMPERATURE SENSOR CIRCUIT LOW INPUT

DTC DETECTING CONDITION:
Input signal circuit to ATF temperature sensor is open.
TROUBLE SYMPTOM:
Excessive shift shock
WIRING DIAGRAM:

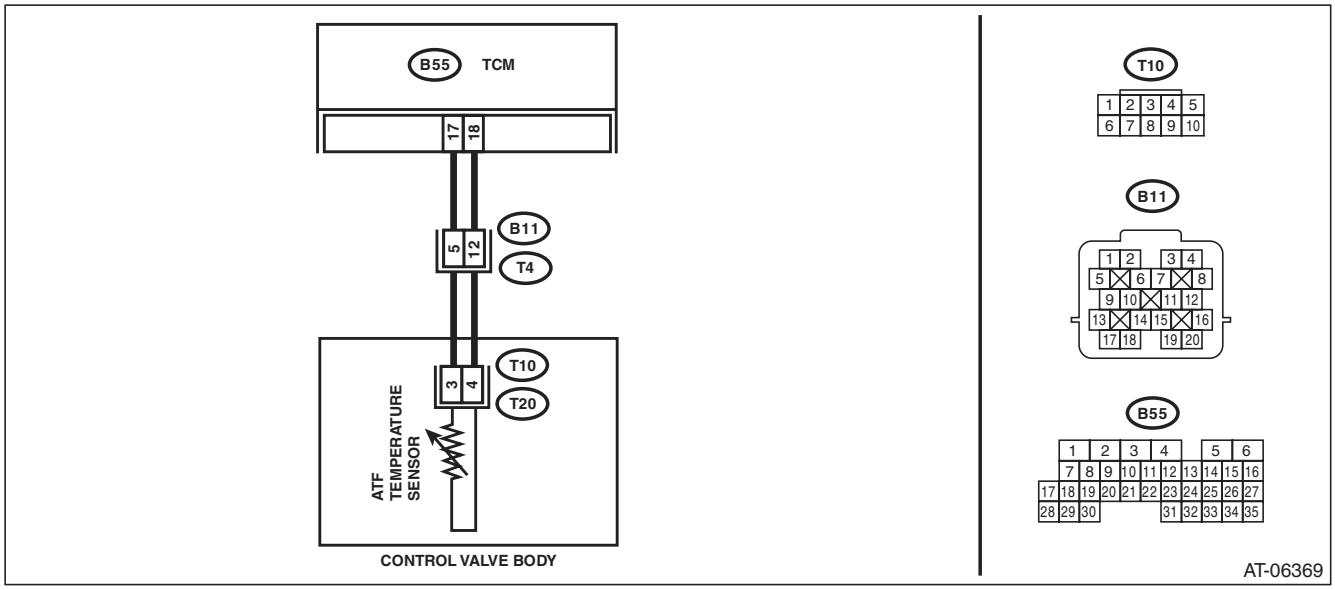

Step		Check	Yes	No
1	**CHECK HARNESS CONNECTOR BETWEEN TCM AND TRANSMISSION.** 1) Turn the ignition switch to OFF. 2) Disconnect the connectors from TCM and transmission. 3) Measure the resistance of harness between TCM connector and transmission connector. ***Connector & terminal*** ***(B55) No. 17 — (B11) No. 5:*** ***(B55) No. 18 — (B11) No. 12:***	Is the resistance less than 1 Ω?	Go to step **2**.	Repair the open circuit of harness between TCM and transmission connector.
2	**CHECK ATF TEMPERATURE SENSOR.** 1) Turn the ignition switch to OFF. 2) Connect the connectors to transmission and TCM. 3) Start the engine. 4) Warm up the transmission until the ATF temperature exceeds 80°C (176°F). 5) Disconnect the connector from transmission. 6) Measure the resistance between transmission connector terminals. ***Connector & terminal*** ***(T4) No. 5 — (T4) No. 12:***	Is the resistance 300 — 800 Ω?	Go to step **3**.	Go to step **5**.
3	**CHECK ATF TEMPERATURE SENSOR.** Measure the resistance between transmission connector terminals. ***Connector & terminal*** ***(T4) No. 5 — (T4) No. 12:***	Does the resistance value increase while the ATF temperature decreases?	Go to step **4**.	Go to step **5**.

GETtheMANUALS.org

	Step	Check	Yes	No
4	**CHECK INPUT SIGNAL FOR TCM.** 1) Connect the connector. 2) Turn the ignition switch to ON. 3) Read the data of “ATF Temp.” using Subaru Select Monitor.	Does the ATF temperature gradually decrease?	Check for poor contact of the harness between the ATF temperature sensor and transmission connector, and repair the defective part.	Go to step **6**.
5	**CHECK HARNESS CONNECTOR BETWEEN TRANSMISSION AND CONTROL VALVE BODY.** 1) Turn the ignition switch to OFF. 2) Disconnect the connector from transmission. 3) Remove the transmission connector from bracket. 4) Lift up the vehicle. 5) Drain the ATF. **CAUTION:** **Do not drain ATF until it cools down.** 6) Remove the oil pan. 7) Disconnect the control valve body connector. 8) Measure the resistance between transmission connector and control valve body connector. ***Connector & terminal*** ***(T4) No. 5 — (T10) No. 3:*** ***(T4) No. 12 — (T10) No. 4:***	Is the resistance less than 1 Ω?	Replace the control valve body. <Ref. to 5AT-55, Control Valve Body.>	Repair the open circuit of harness between transmission connector and control valve body connector.
6	**CHECK FOR POOR CONTACT.**	Is there poor contact of ATF temperature sensor circuit?	Repair the poor contact.	Replace the TCM. <Ref. to 5AT-57, Transmission Control Module (TCM).>

GETtheMANUALS.org

C: DTC P0713 TRANSMISSION FLUID TEMPERATURE SENSOR CIRCUIT HIGH INPUT

DTC DETECTING CONDITION:
Input signal circuit to ATF temperature sensor is shorted.
TROUBLE SYMPTOM:
Excessive shift shock
WIRING DIAGRAM:

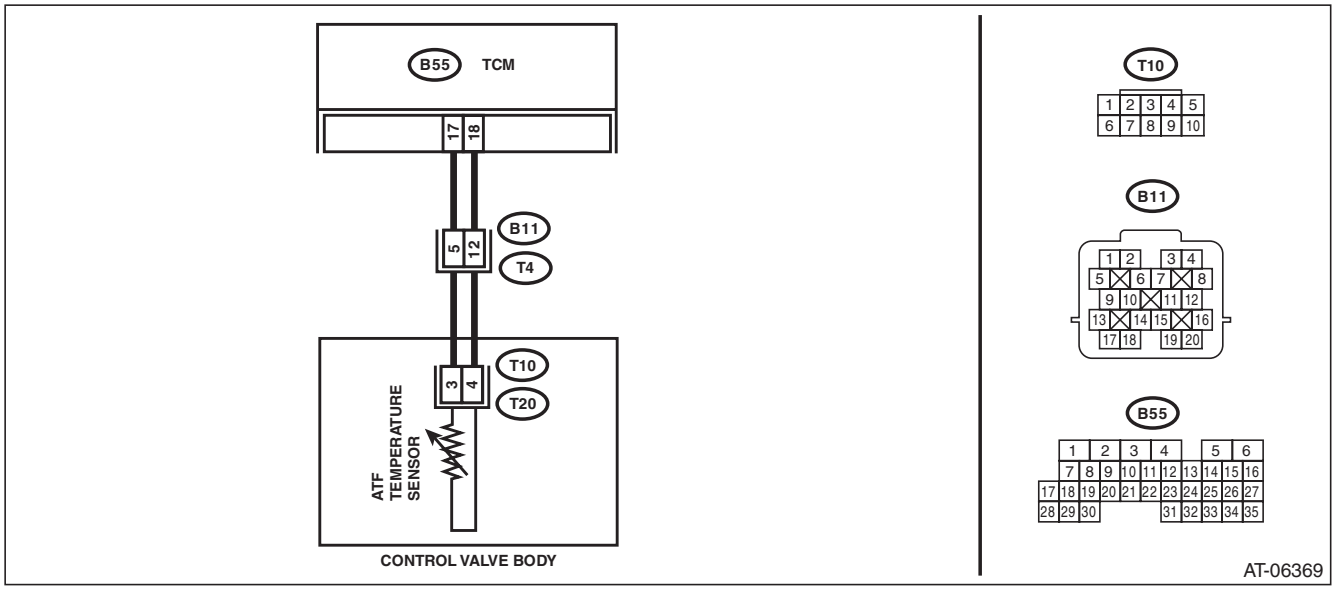

Step		Check	Yes	No
1	**CHECK HARNESS CONNECTOR BETWEEN TCM AND TRANSMISSION.** 1) Turn the ignition switch to OFF. 2) Disconnect the connectors from TCM and transmission. 3) Measure the resistance of harness between TCM connector and chassis ground. ***Connector & terminal*** ***(B55) No. 17 — Chassis ground:*** ***(B55) No. 18 — Chassis ground:***	Is the resistance 1 MΩ or more?	Go to step **2**.	Repair the short circuit of harness between TCM and transmission connector.
2	**CHECK ATF TEMPERATURE SENSOR.** 1) Turn the ignition switch to OFF. 2) Connect the connectors to transmission and TCM. 3) Start the engine. 4) Warm up the transmission until the ATF temperature exceeds 80°C (176°F). 5) Disconnect the connector from transmission. 6) Measure the resistance between transmission connector terminals. ***Connector & terminal*** ***(T4) No. 5 — (T4) No. 12:***	Is the resistance 300 — 800 Ω?	Go to step **3**.	Go to step **5**.
3	**CHECK ATF TEMPERATURE SENSOR.** Measure the resistance between transmission connector terminals. ***Connector & terminal*** ***(T4) No. 5 — (T4) No. 12:***	Does the resistance value increase while the ATF temperature decreases?	Go to step **4**.	Go to step **5**.

GETtheMANUALS.org

	Step	Check	Yes	No
4	**CHECK INPUT SIGNAL FOR TCM.** 1) Connect the connector. 2) Turn the ignition switch to ON. 3) Read the data of “ATF Temp.” using Subaru Select Monitor.	Does the ATF temperature gradually decrease?	Check for poor contact of the harness between the ATF temperature sensor and transmission connector, and repair the defective part.	Go to step **6**.
5	**CHECK HARNESS CONNECTOR BETWEEN TRANSMISSION AND CONTROL VALVE BODY.** 1) Turn the ignition switch to OFF. 2) Disconnect the connector from transmission. 3) Remove the transmission connector from bracket. 4) Lift up the vehicle. 5) Drain the ATF. **CAUTION:** **Do not drain ATF until it cools down.** 6) Remove the oil pan. 7) Disconnect the control valve body connector. 8) Measure the resistance between chassis ground and control valve body connector. ***Connector & terminal*** ***(T10) No. 3 — Chassis ground:*** ***(T10) No. 4 — Chassis ground:***	Is the resistance 1 MΩ or more?	Replace the control valve body. <Ref. to 5AT-55, Control Valve Body.>	Repair the short circuit of harness between transmission connector and control valve body connector.
6	**CHECK FOR POOR CONTACT.**	Is there poor contact of ATF temperature sensor circuit?	Repair the poor contact.	Replace the TCM. <Ref. to 5AT-57, Transmission Control Module (TCM).>

GETtheMANUALS.org

D: DTC P0715 INPUT/TURBINE SPEED SENSOR CIRCUIT

DTC DETECTING CONDITION:

Input signal circuit of TCM is open or shorted.

TROUBLE SYMPTOM:

- Excessive shift shock
- Does not shift to 5th.

WIRING DIAGRAM:

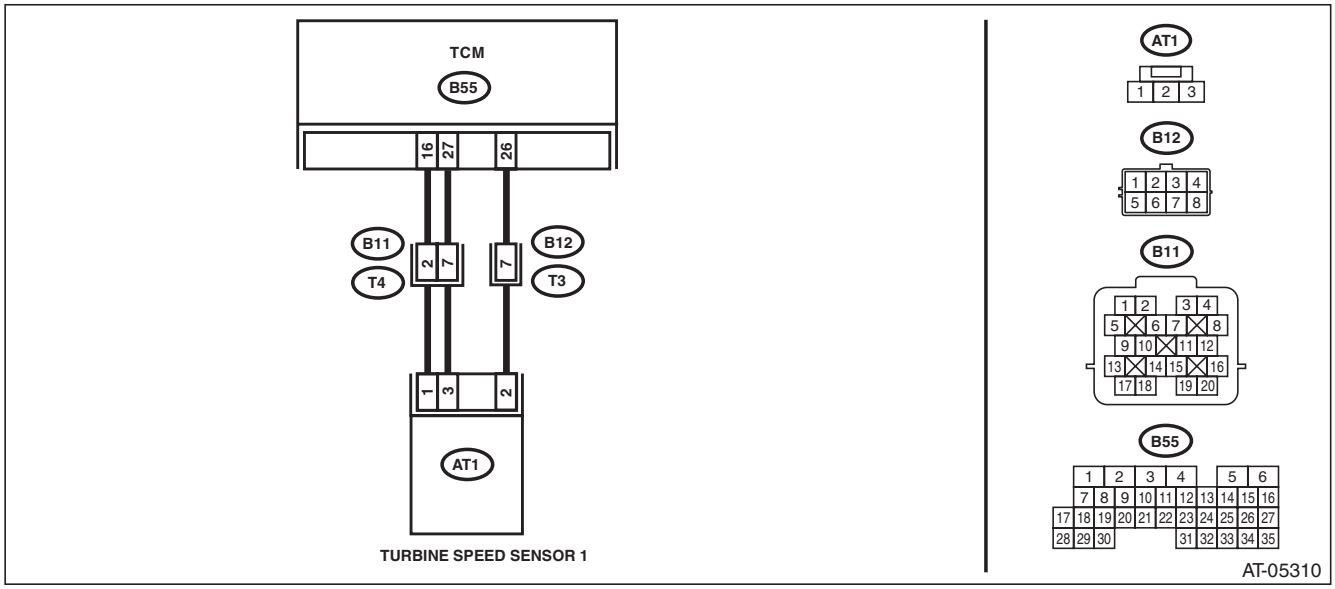

Step		Check	Yes	No
1	**CHECK TCM I/O SIGNAL.** Check the power supply and ground I/O signals. <Ref. to 5AT(diag)-13, ELECTRICAL SPECIFICATION, Transmission Control Module (TCM) I/O Signal.>	Is TCM I/O signal OK?	Go to step **2**.	Repair the open or short circuit for power supply and ground.
2	**CHECK TCM AND TRANSMISSION HARNESS CONNECTOR.** 1) Disconnect the connectors from TCM and transmission. 2) Measure the resistance of harness between TCM connector and transmission connector. ***Connector & terminal*** ***(B55) No. 16 — (B11) No. 2:*** ***(B55) No. 26 — (B12) No. 7:*** ***(B55) No. 27 — (B11) No. 7:***	Is the resistance less than 1 Ω?	Go to step **3**.	Repair the open circuit of harness between TCM and transmission connector.
3	**CHECK TCM AND TRANSMISSION HARNESS CONNECTOR.** Measure the resistance of harness between TCM connector and chassis ground. ***Connector & terminal*** ***(B55) No. 16 — Chassis ground:*** ***(B55) No. 26 — Chassis ground:*** ***(B55) No. 27 — Chassis ground:***	Is the resistance 1 MΩ or more?	Go to step **4**.	Repair the short circuit of harness between TCM and transmission connector.
4	**CHECK TCM POWER SUPPLY OUTPUT.** 1) Connect the connector to TCM. (Transmission connector is disconnected) 2) Turn the ignition switch to ON. 3) Measure the voltage between transmission connector and chassis ground. ***Connector & terminal*** ***(B12) No. 7 (+) — Chassis ground (–):***	Is the voltage 10 — 13 V?	Go to step **5**.	Replace the TCM. <Ref. to 5AT-57, Transmission Control Module (TCM).>

GETtheMANUALS.org

	Step	Check	Yes	No
5	**CHECK INPUT CIRCUIT OF TCM TURBINE SPEED SENSOR.** Measure the voltage between TCM connector terminals. ***Connector & terminal*** ***(B12) No. 7 (+) — (B11) No. 2 (–):***	Is the voltage 4 — 6 V?	Go to step **6**.	Replace the TCM. <Ref. to 5AT-57, Transmission Control Module (TCM).>
6	**CHECK HARNESS ASSEMBLY (TURBINE SPEED SENSOR GROUND).** Check the installing condition of ground connecting harness of harness assembly (used for both of turbine speed sensor 1, rear vehicle speed sensor).	Is the ground connecting harness installed to transmission body correctly, or the harness and terminals not damaged?	Go to step **7**.	When poor installation of ground occurs, install it securely. Replace the transmission assembly if the harness or terminal is damaged. <Ref. to 5AT-37, Automatic Transmission Assembly.>
7	**CHECK HARNESS ASSEMBLY.** 1) Turn the ignition switch to OFF. 2) Disconnect the connector from transmission. 3) Disconnect the connector from turbine speed sensor 1. 4) Measure the resistance between transmission connector and turbine speed sensor 1 connector. ***Connector & terminal*** ***(T3) No. 7 — (AT1) No. 2:*** ***(T4) No. 7 — (AT1) No. 3:*** ***(T4) No. 2 — (AT1) No. 1:***	Is the resistance less than 1 Ω?	Go to step **8**.	Repair the open circuit of the harness or poor contact of the connector between the transmission connector and turbine speed sensor 1 connector.
8	**CHECK HARNESS ASSEMBLY.** Measure the resistance between transmission connector and chassis ground. ***Connector & terminal*** ***(T3) No. 7 — Chassis ground:*** ***(T4) No. 7 — Chassis ground:*** ***(T4) No. 2 — Chassis ground:***	Is the resistance 1 MΩ or more?	Go to step **9**.	Repair the short circuit of the harness between the transmission connector and turbine speed sensor 1 connector.
9	**CHECK INPUT SIGNAL FOR TCM.** 1) Connect all connectors. 2) Lift up the vehicle. 3) Start the engine. 4) Drive at 4th of manual mode. NOTE: Turbine speed sensor 1 signal can be measured only on 4th speed. 5) Using Subaru Select Monitor, read the data of “AT Turbine Speed 1” and “AT Turbine Speed 2”. <Ref. to 5AT(diag)-18, Read Current Data.> NOTE: The speed difference between front and rear wheels lights the ABS warning light or the VDC warning light, but this does not indicate a malfunction. If the warning light is illuminated, clear the memory of ABS or VDC after completing AT control diagnosis. <Ref. to VDC(diag)-25, Clear Memory Mode.>	Are the values of “AT Turbine Speed 1” and “AT Turbine Speed 2” almost the same?	Check for poor contact of the harness of the turbine speed sensor 1 circuit, and repair the faulty part.	Replace the turbine speed sensor 1. <Ref. to 5AT-54, Turbine Speed Sensor 1.>

GETtheMANUALS.org

E: DTC P0719 BRAKE SWITCH CIRCUIT LOW

DTC DETECTING CONDITION:
Brake switch malfunction, open input signal circuit
TROUBLE SYMPTOM:
Brake down control does not operate in manual mode.
WIRING DIAGRAM:

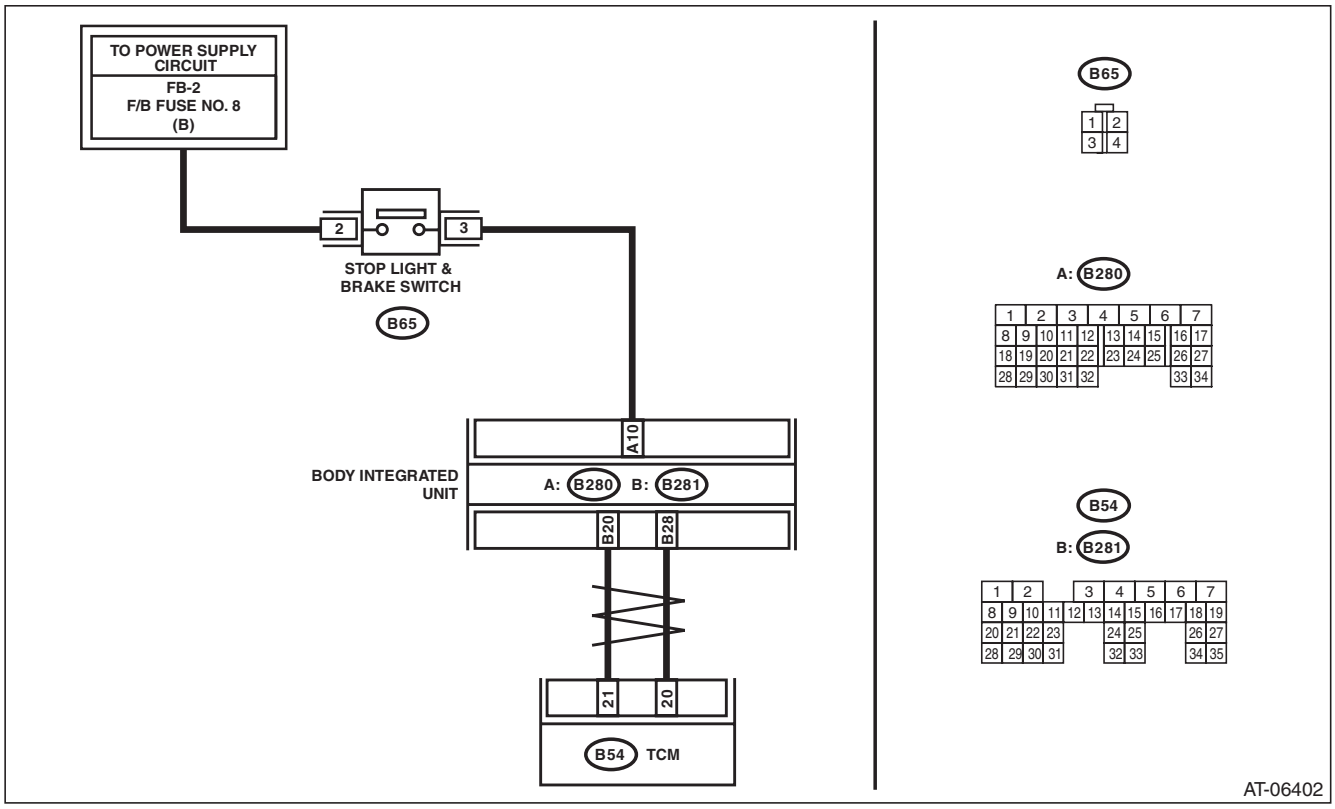

Step		Check	Yes	No
1	**CHECK DTC.**	Is any of following DTC displayed? / AT CAN Communication Circuit / Output Speed Sensor Circuit / AT Vehicle Speed Sensor Circuit Malfunction (Rear Wheel) / VDC Brake SW Circuit	Perform the diagnosis according to DTC.	Go to step **2**.
2	**CHECK BODY INTEGRATED UNIT.** 1) Turn the ignition switch to OFF. 2) Connect the Subaru Select Monitor to data link connector. 3) Turn the ignition switch to ON. 4) Run the Subaru Select Monitor. 5) Depress the brake pedal. 6) Read the data of “Stop Light Switch” using Subaru Select Monitor. <Ref. to BC(diag)-12, Read Current Data.>	Is “ON” displayed?	Go to step **3**.	Go to step **4**.
3	**CHECK TCM.** Read the data of “Stop Light Switch” using Subaru Select Monitor. <Ref. to 5AT(diag)-18, Read Current Data.>	Is “ON” displayed?	A temporary poor contact of connector or harness may be the cause. Check the poor contact.	Replace the TCM. <Ref. to 5AT-57, Transmission Control Module (TCM).>

GETtheMANUALS.org

Step		Check	Yes	No
4	**CHECK BODY INTEGRATED UNIT INPUT SIGNAL.** 1) Disconnect the connector from body integrated unit. 2) Depress the brake pedal. 3) Measure the voltage between body integrated unit connector and chassis ground. ***Connector & terminal*** ***(B280) No. 10 (+) — Chassis ground (–):***	Is the voltage 10 V or more?	Go to step **7**.	Go to step **5**.
5	**CHECK HARNESS CONNECTOR BETWEEN BODY INTEGRATED UNIT AND STOP LIGHT SWITCH.** 1) Turn the ignition switch to OFF. 2) Disconnect the connector from stop light switch. 3) Measure the resistance of harness between body integrated unit connector and stop light switch connector. ***Connector & terminal*** ***(B280) No. 10 — (B65) No. 3:***	Is the resistance less than 1 Ω?	Go to step **6**.	Repair the open circuit of the harness between the body integrated unit and stop light switch connector.
6	**CHECK HARNESS CONNECTOR BETWEEN BODY INTEGRATED UNIT AND STOP LIGHT SWITCH.** Measure the resistance of harness between body integrated unit connector and stop light switch connector. ***Connector & terminal*** ***(B280) No. 10 — Chassis ground:***	Is the resistance 1 MΩ or more?	Go to step **7**.	Repair the short circuit of the harness between the body integrated unit and stop light switch connector.
7	**CHECK FOR POOR CONTACT.**	Is there poor contact of input signal of brake switch?	Repair the poor contact.	Check body integrated unit.

GETtheMANUALS.org

F: DTC P0720 OUTPUT SPEED SENSOR CIRCUIT

DTC DETECTING CONDITION:

- AT vehicle speed signal is abnormal.
- The harness connector between TCM and vehicle speed sensor is open or shorted.

TROUBLE SYMPTOM:

- Shifting quality malfunction
- Driving performance is poor.

WIRING DIAGRAM:

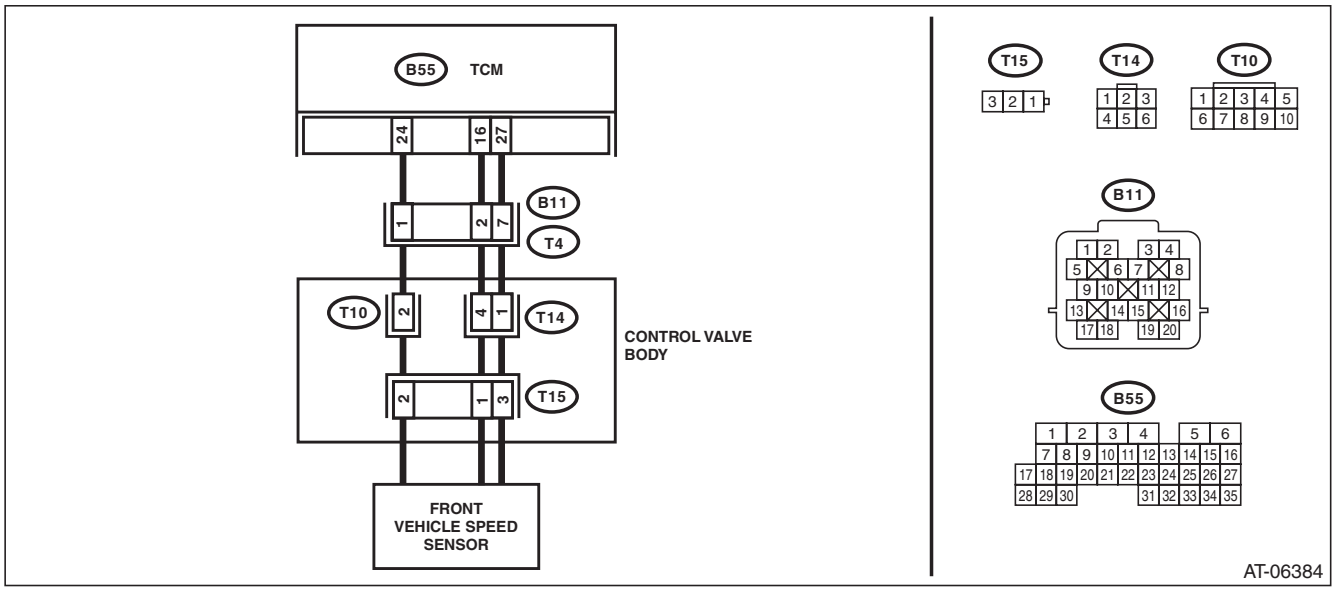

Step		Check	Yes	No
1	**CHECK TCM I/O SIGNAL.** Check the power supply and ground I/O signals. <Ref. to 5AT(diag)-13, ELECTRICAL SPECIFICATION, Transmission Control Module (TCM) I/O Signal.>	Is TCM I/O signal OK?	Go to step **2**.	Repair the open or short circuit for power supply and ground.
2	**CHECK TCM AND TRANSMISSION HARNESS CONNECTOR.** 1) Disconnect the connectors from TCM and transmission. 2) Measure the resistance of harness between TCM connector and transmission connector. ***Connector & terminal*** ***(B55) No. 16 — (B11) No. 2:*** ***(B55) No. 24 — (B11) No. 1:*** ***(B55) No. 27 — (B11) No. 7:***	Is the resistance less than 1 Ω?	Go to step **3**.	Repair the open circuit of harness between TCM and transmission connector.
3	**CHECK TCM AND TRANSMISSION HARNESS CONNECTOR.** Measure the resistance of harness between TCM connector and chassis ground. ***Connector & terminal*** ***(B55) No. 24 — Chassis ground:***	Is the resistance 1 MΩ or more?	Go to step **4**.	Repair the short circuit of harness between TCM and transmission connector.
4	**CHECK TCM POWER SUPPLY OUTPUT.** 1) Connect the connector to TCM. (Transmission connector is disconnected) 2) Turn the ignition switch to ON. 3) Measure the voltage between transmission connector and chassis ground. ***Connector & terminal*** ***(B11) No. 7 (+) — Chassis ground (–):***	Is the voltage 10 — 13 V?	Go to step **5**.	Replace the TCM. <Ref. to 5AT-57, Transmission Control Module (TCM).>

GETtheMANUALS.org

	Step	Check	Yes	No
5	**CHECK INPUT CIRCUIT OF TCM TURBINE SPEED SENSOR.** Measure the voltage variation between TCM connector terminals. ***Connector & terminal*** ***(B11) No. 1 (+) — (B11) No. 2 (–):***	Is the voltage 4 — 6 V?	Go to step **6**.	Replace the TCM. <Ref. to 5AT-57, Transmission Control Module (TCM).>
6	**CHECK INPUT SIGNAL FOR TCM.** 1) Connect all connectors. 2) Lift up the vehicle. 3) Start the engine. 4) Read the data of "Front Wheel Speed" using Subaru Select Monitor. <Ref. to 5AT(diag)-18, Read Current Data.> NOTE: The speed difference between front and rear wheels lights the ABS warning light or the VDC warning light, but this does not indicate a malfunction. If the warning light is illuminated, clear the memory of ABS or VDC after completing AT control diagnosis. <Ref. to VDC(diag)-25, Clear Memory Mode.>	Does the speedometer indication increase as "Front Wheel Speed" data increases?	Check the harness of the front vehicle speed sensor circuit, and repair the defective part.	Go to step **7**.
7	**CHECK HARNESS CONNECTOR BETWEEN TRANSMISSION AND CONTROL VALVE BODY.** 1) Turn the ignition switch to OFF. 2) Disconnect the connector from transmission. 3) Remove the transmission connector from bracket. 4) Lift up the vehicle. 5) Drain the ATF. **CAUTION:** **Do not drain ATF until it cools down.** 6) Remove the oil pan. 7) Disconnect the control valve body connector. 8) Measure the resistance between transmission connector and control valve body connector. ***Connector & terminal*** ***(T4) No. 1 — (T10) No. 2:***	Is the resistance less than 1 Ω?	Go to step **8**.	Repair the open circuit of harness between control valve body connector and transmission connector.
8	**CHECK HARNESS CONNECTOR BETWEEN TRANSMISSION AND CONTROL VALVE BODY.** Measure the resistance between transmission ground and control valve body connector. ***Connector & terminal*** ***(T10) No. 2 — Transmission ground:***	Is the resistance 1 MΩ or more?	Go to step **9**.	Repair the short circuit of harness between control valve body connector and transmission ground.
9	**CHECK HARNESS CONNECTOR BETWEEN CONTROL VALVE BODY AND FRONT VEHICLE SPEED SENSOR.** 1) Disconnect the connector from the front vehicle speed sensor. 2) Measure the resistance of the harness between the control valve body connector and front vehicle speed sensor connector. ***Connector & terminal*** ***(T10) No. 2 — (T15) No. 2:*** ***(T14) No. 1 — (T15) No. 3:*** ***(T14) No. 4 — (T15) No. 1:***	Is the resistance less than 1 Ω?	Go to step **10**.	Replace the control valve body. <Ref. to 5AT-55, Control Valve Body.>

GETtheMANUALS.org

Step		Check	Yes	No
10	**CHECK HARNESS CONNECTOR BETWEEN CONTROL VALVE BODY AND FRONT VEHICLE SPEED SENSOR.** Measure the resistance of harness between control valve body connector and transmission ground. ***Connector & terminal*** ***(T10) No. 2 — Transmission ground:***	Is the resistance 1 MΩ or more?	Replace the front vehicle speed sensor.	Replace the control valve body. <Ref. to 5AT-55, Control Valve Body.>

GETtheMANUALS.org

G: DTC P0724 BRAKE SWITCH CIRCUIT HIGH

DTC DETECTING CONDITION:

Brake switch malfunction, open input signal circuit

TROUBLE SYMPTOM:

Gear is not shifted down when climbing a hill.

WIRING DIAGRAM:

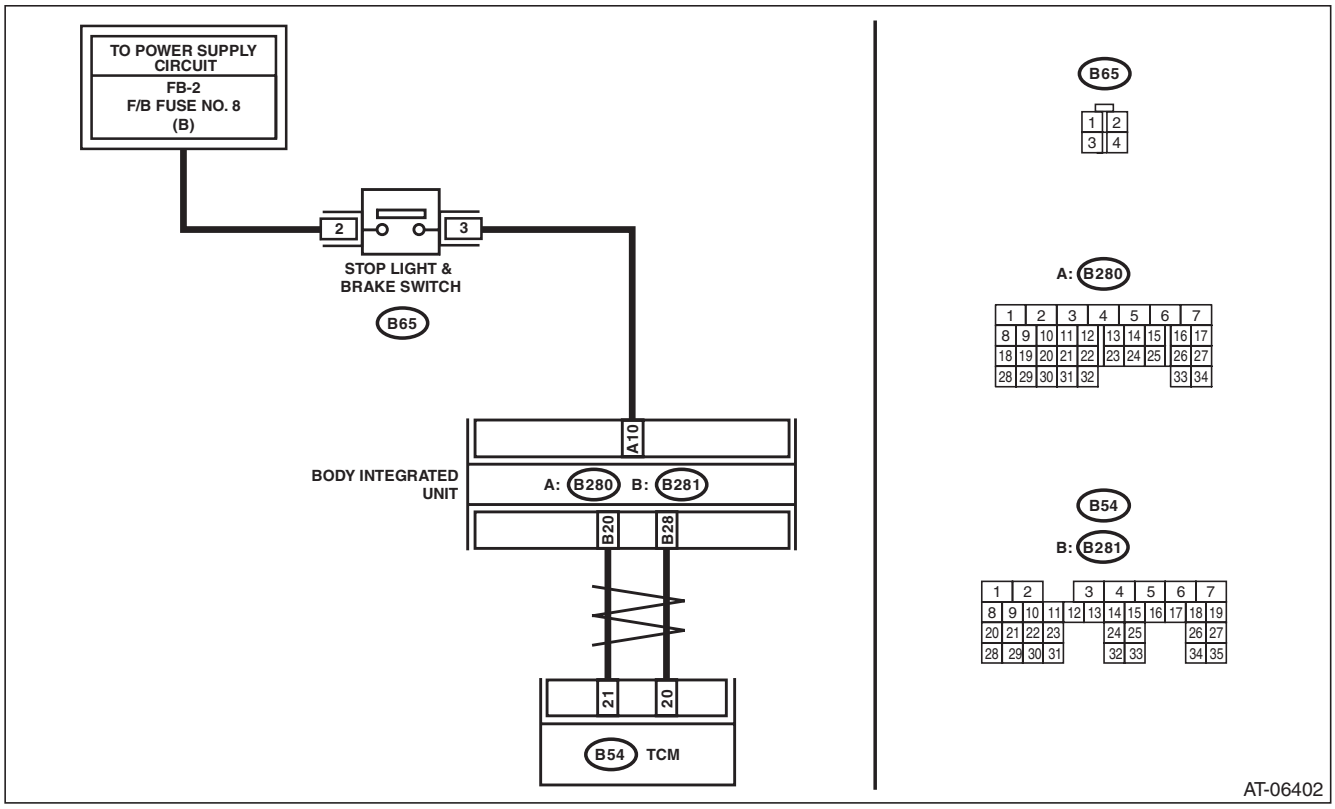

Step		Check	Yes	No
1	**CHECK DTC.**	Is any of following DTC detected? / AT CAN Communication Circuit / Output Speed Sensor Circuit / AT Vehicle Speed Sensor Circuit Malfunction (Rear Wheel) / VDC Brake SW Circuit	Perform the diagnosis according to DTC.	Go to step **2**.
2	**CHECK BODY INTEGRATED UNIT.** 1) Turn the ignition switch to OFF. 2) Connect the Subaru Select Monitor to data link connector. 3) Turn the ignition switch to ON. 4) Run the Subaru Select Monitor. 5) Read the data of “Stop Light Switch” using Subaru Select Monitor. <Ref. to BC(diag)-12, Read Current Data.>	Is “OFF” displayed?	Go to step **3**.	Go to step **4**.
3	**CHECK TCM.** Read the data of “Stop Light Switch” using Subaru Select Monitor. <Ref. to 5AT(diag)-18, Read Current Data.>	Is “OFF” displayed?	A temporary poor contact of connector or harness may be the cause. Check the poor contact.	Replace the TCM. <Ref. to 5AT-57, Transmission Control Module (TCM).>

GETtheMANUALS.org

Step		Check	Yes	No
4	**CHECK BODY INTEGRATED UNIT INPUT SIGNAL.** 1) Disconnect the connector from body integrated unit. 2) Measure the voltage between body integrated unit connector and chassis ground. ***Connector & terminal*** ***(B280) No. 10 (+) — Chassis ground (–):***	Is the voltage 10 V or more?	Go to step **5**.	Go to step **7**.
5	**CHECK STOP LIGHT SWITCH.** 1) Turn the ignition switch to OFF. 2) Disconnect the connector from stop light switch. 3) Measure the resistance of harness between stop light switch connectors. ***Connector & terminal*** ***(B65) No. 3 — (B65) No. 2:***	Is the resistance 1 MΩ or more?	Go to step **6**.	Replace the stop light switch.
6	**CHECK HARNESS CONNECTOR BETWEEN BODY INTEGRATED UNIT AND STOP LIGHT SWITCH.** 1) Turn the ignition switch to ON. 2) Measure the voltage of harness between body integrated unit connector and chassis ground. ***Connector & terminal*** ***(B280) No. 10 (+) — Chassis ground (–):***	Is the voltage less than 1 V?	Go to step **7**.	Repair the short circuit of the harness between the body integrated unit and stop light switch connector.
7	**CHECK FOR POOR CONTACT.**	Is there poor contact of input signal of brake switch?	Repair the poor contact.	Check body integrated unit.

H: DTC P0731 GEAR 1 INCORRECT RATIO

NOTE:
Refer to DTC P0736 for diagnostic procedure. <Ref. to 5AT(diag)-53, DTC P0736 REVERSE INCORRECT RATIO, Diagnostic Procedure with Diagnostic Trouble Code (DTC).>

I: DTC P0732 GEAR 2 INCORRECT RATIO

NOTE:
Refer to DTC P0736 for diagnostic procedure. <Ref. to 5AT(diag)-53, DTC P0736 REVERSE INCORRECT RATIO, Diagnostic Procedure with Diagnostic Trouble Code (DTC).>

J: DTC P0733 GEAR 3 INCORRECT RATIO

NOTE:
Refer to DTC P0736 for diagnostic procedure. <Ref. to 5AT(diag)-53, DTC P0736 REVERSE INCORRECT RATIO, Diagnostic Procedure with Diagnostic Trouble Code (DTC).>

K: DTC P0734 GEAR 4 INCORRECT RATIO

NOTE:
Refer to DTC P0736 for diagnostic procedure. <Ref. to 5AT(diag)-53, DTC P0736 REVERSE INCORRECT RATIO, Diagnostic Procedure with Diagnostic Trouble Code (DTC).>

L: DTC P0735 GEAR 5 INCORRECT RATIO

NOTE:
Refer to DTC P0736 for diagnostic procedure. <Ref. to 5AT(diag)-53, DTC P0736 REVERSE INCORRECT RATIO, Diagnostic Procedure with Diagnostic Trouble Code (DTC).>

GETtheWIRINGS.org

M: DTC P0736 REVERSE INCORRECT RATIO

DTC DETECTING CONDITION:

Target gear ratio and actual gear ratio do not match.

TROUBLE SYMPTOM:

- Shift point is too high or too low.
- Excessive shift shock
- Gear is not changed.
- The vehicle does not move in “D” or “R” range with the engine running at high speed.

Step		Check	Yes	No
1	**CHECK DTC.**	Is any of the following DTCs displayed? P0751, P0753, P0756, P0758, P0761, P0763, P0766, P0768, P0771, P0773	Perform the diagnosis according to DTC.	Go to step **2**.
2	**CHECK DTC.**	Is DTC P1718 displayed?	Perform the diagnosis according to DTC.	Go to step **3**.
3	**CHECK AT TURBINE SPEED SENSOR CIRCUIT.** Perform diagnosis according to DTC P0715. <Ref. to 5AT(diag)-44, DTC P0715 INPUT/ TURBINE SPEED SENSOR CIRCUIT, Diagnostic Procedure with Diagnostic Trouble Code (DTC).>	Is there any trouble?	Check the turbine speed sensor 1 circuit.	Go to step **4**.
4	**CHECK AT TURBINE SPEED SENSOR CIRCUIT.** Perform diagnosis according to DTC P1710. <Ref. to 5AT(diag)-91, DTC P1710 TORQUE CONVERTER TURBINE 2 SPEED SIGNAL CIRCUIT MALFUNCTION, Diagnostic Procedure with Diagnostic Trouble Code (DTC).>	Is there any trouble?	Check the turbine speed sensor 2 circuit.	Go to step **5**.
5	**CHECK AT VEHICLE SPEED SENSOR CIRCUIT.** Perform diagnosis according to DTC P0720. <Ref. to 5AT(diag)-48, DTC P0720 OUTPUT SPEED SENSOR CIRCUIT, Diagnostic Procedure with Diagnostic Trouble Code (DTC).>	Is there any trouble?	Check for poor contact of the front vehicle speed sensor circuit harness and repair the fault location.	Go to step **6**.
6	**CHECK AT VEHICLE SPEED SENSOR CIRCUIT.** Perform diagnosis according to DTC P1706. <Ref. to 5AT(diag)-87, DTC P1706 AT VEHICLE SPEED SENSOR CIRCUIT MALFUNCTION (REAR WHEEL), Diagnostic Procedure with Diagnostic Trouble Code (DTC).>	Is there any trouble?	Check for poor contact of the rear vehicle speed sensor circuit harness and repair the fault location.	Go to step **7**.
7	**CHECK TRANSMISSION RANGE SENSOR CIRCUIT (PRNDL INPUT).** Perform diagnosis according to DTC P0705. <Ref. to 5AT(diag)-36, DTC P0705 TRANSMISSION RANGE SENSOR CIRCUIT (PRNDL INPUT), Diagnostic Procedure with Diagnostic Trouble Code (DTC).>	Is there any trouble?	Check the inhibitor switch circuit.	There are malfunctions in TCM, TCM connector poor contact, or transmission assembly mechanical malfunction.

GETtheWIRINGS.org

N: DTC P0741 TORQUE CONVERTER CLUTCH CIRCUIT PERFORMANCE OR STUCK OFF

DTC DETECTING CONDITION:

- Lock up clutch malfunction
- Defective torque converter assembly
- Defective control valve
- Defective turbine speed sensor 1 or 2

TROUBLE SYMPTOM:

No lock-up occurs. (After engine is warmed up)

Step		Check	Yes	No
1	**CHECK DTC OF TCM.**	Is any DTC of the followings detected? P0715, P0720, P0753, P0758, P0763, P0768, P0773, P0751, P0756, P0761, P0766, P0771, P1710, P1718	Perform the diagnosis according to each DTC.	Go to step **2**.
2	**DRIVING CHECK FOR LOCK-UP CONDITION.** 1) Perform the Clear Memory Mode. 2) While keeping “Accel. Opening Angle” displayed on Subaru Select Monitor, drive at 85 km/h or more. 3) Check that “L/U Solenoid Current” is 0.6 A or more by using Subaru Select Monitor. 4) Read the data of “Engine Speed” and “Turbine Revolution Speed” using Subaru Select Monitor.	Is the difference between “Engine Speed” and “Turbine Revolution Speed” within 100 rpm?	Temporary poor contact or open circuit occurs. Recheck that the harness connector has no faulty.	Replace the transmission assembly when the difference is 100 rpm or more, or DTC P0741 is displayed. When DTC other than P0741 is displayed, perform the diagnosis corresponding to the DTC.

GETtheWIRINGS.org

O: DTC P0743 TORQUE CONVERTER CLUTCH CIRCUIT ELECTRICAL

DTC DETECTING CONDITION:

The output signal circuit of lock up solenoid is open or shorted.

TROUBLE SYMPTOM:

No lock-up occurs. (After engine is warmed up)

WIRING DIAGRAM:

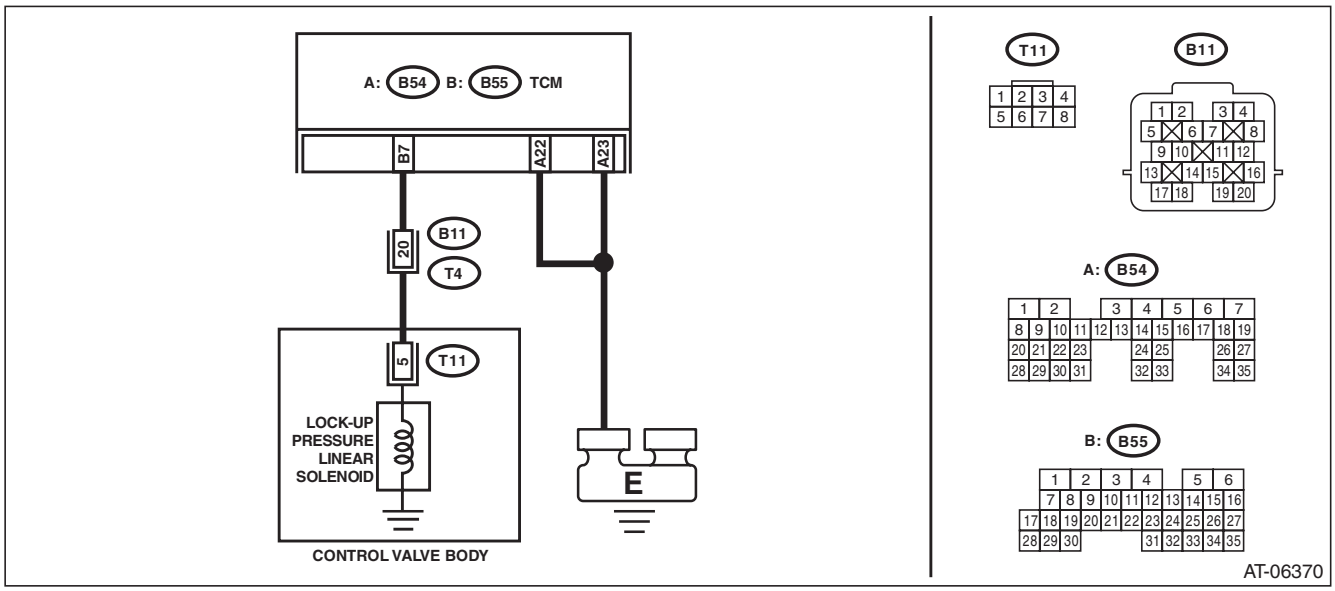

Step		Check	Yes	No
1	**CHECK HARNESS CONNECTOR BETWEEN TCM AND TRANSMISSION.** 1) Turn the ignition switch to OFF. 2) Disconnect the connectors from TCM and transmission. 3) Measure the resistance of harness between TCM connector and transmission connector. ***Connector & terminal*** ***(B54) No. 22 — Chassis ground:*** ***(B54) No. 23 — Chassis ground:*** ***(B55) No. 7 — (B11) No. 20:***	Is the resistance less than 1 Ω?	Go to step **2**.	Repair the open circuit of harness between TCM and transmission connector.
2	**CHECK HARNESS CONNECTOR BETWEEN TCM AND CHASSIS GROUND.** Measure the resistance of harness between TCM connector and chassis ground. ***Connector & terminal*** ***(B55) No. 7 — Chassis ground:***	Is the resistance 1 MΩ or more?	Go to step **3**.	Repair the short circuit of harness between TCM and transmission connector.

GETtheMANUALS.org

	Step	Check	Yes	No
3	**CHECK HARNESS CONNECTOR BETWEEN TRANSMISSION AND CONTROL VALVE BODY.** 1) Turn the ignition switch to OFF. 2) Disconnect the connector from transmission. 3) Remove the transmission connector from bracket. 4) Lift up the vehicle. 5) Drain the ATF. NOTE: Do not drain ATF until it cools down. 6) Remove the oil pan. 7) Disconnect the control valve body connector. 8) Measure the resistance between transmission connector and control valve body connector. ***Connector & terminal*** ***(T4) No. 20 — (T11) No. 5:***	Is the resistance less than 1 Ω?	Go to step **4**.	Repair the open circuit of harness between transmission connector and control valve body connector.
4	**CHECK HARNESS CONNECTOR BETWEEN TRANSMISSION AND CONTROL VALVE BODY.** Measure the resistance between transmission ground and control valve body connector. ***Connector & terminal*** ***(T11) No. 5 — Transmission ground:***	Is the resistance 1 MΩ or more?	Repair the open circuit of harness between control valve body connector and transmission ground.	Go to step **5**.
5	**CHECK LOCK-UP SOLENOID.** Measure the resistance between transmission ground and control valve body connector. ***Connector & terminal*** ***(T11) No. 5 — Transmission ground:***	Is the resistance 3 — 9 Ω?	Go to step **6**.	Replace the control valve body. <Ref. to 5AT-55, Control Valve Body.>
6	**CHECK FOR POOR CONTACT.** Check the TCM connector, transmission connector and control valve body connector.	Is there poor contact, loosing terminal, entering foreign matter, or damaging connector body?	Repair the poor contact.	Go to step **7**.
7	**CHECK AFTER REPAIR.** 1) Perform the Clear Memory Mode. 2) Drive for a while and read DTC.	Is DTC displayed?	Replace the TCM. <Ref. to 5AT-57, Transmission Control Module (TCM).>	Temporary poor contact or open circuit occurs. Recheck that the harness connector has no faulty.

GETtheMANUALS.org

P: DTC P0748 PRESSURE CONTROL SOLENOID “A” ELECTRICAL

DTC DETECTING CONDITION:
Output signal circuit of line pressure solenoid is open or shorted.
TROUBLE SYMPTOM:
Excessive shift shock
WIRING DIAGRAM:

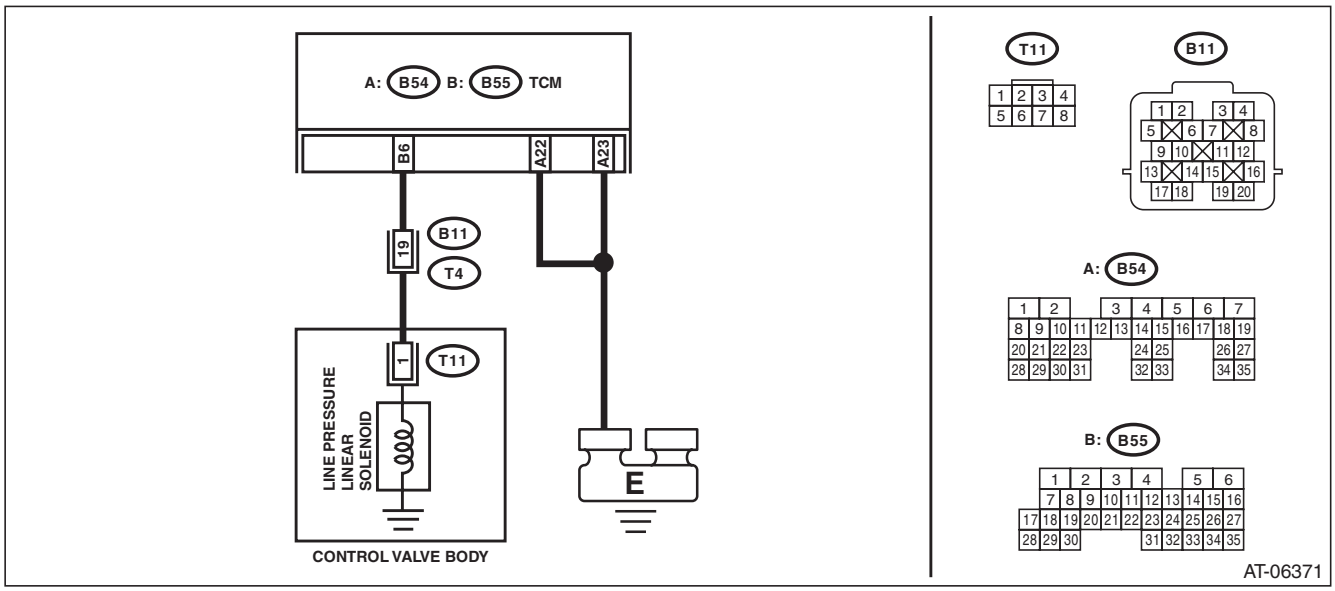

Step		Check	Yes	No
1	**CHECK HARNESS CONNECTOR BETWEEN TCM AND TRANSMISSION.** 1) Turn the ignition switch to OFF. 2) Disconnect the connectors from TCM and transmission. 3) Measure the resistance of harness between TCM connector and transmission connector. ***Connector & terminal*** ***(B54) No. 22 — Chassis ground:*** ***(B54) No. 23 — Chassis ground:*** ***(B55) No. 6 — (B11) No. 19:***	Is the resistance less than 1 Ω?	Go to step **2**.	Repair the open circuit of harness between TCM and transmission connector.
2	**CHECK HARNESS CONNECTOR BETWEEN TCM AND CHASSIS GROUND.** Measure the resistance between TCM connector and chassis ground. ***Connector & terminal*** ***(B55) No. 6 — Chassis ground:***	Is the resistance 1 MΩ or more?	Go to step **3**.	Repair the short circuit of harness between TCM and transmission connector.

GETtheMANUALS.org

	Step	Check	Yes	No
3	**CHECK HARNESS CONNECTOR BETWEEN TRANSMISSION AND CONTROL VALVE BODY.** 1) Turn the ignition switch to OFF. 2) Disconnect the connector from transmission. 3) Remove the transmission connector from bracket. 4) Lift up the vehicle. 5) Drain the ATF. **CAUTION:** **Do not drain ATF until it cools down.** 6) Remove the oil pan. 7) Disconnect the control valve body connector. 8) Measure the resistance between transmission connector and control valve body connector. ***Connector & terminal*** ***(T4) No. 19 — (T11) No. 1:***	Is the resistance less than 1 Ω?	Go to step **4**.	Repair the open circuit of harness between transmission connector and control valve body connector.
4	**CHECK HARNESS CONNECTOR BETWEEN TRANSMISSION AND CONTROL VALVE BODY.** Measure the resistance between transmission ground and control valve body connector. ***Connector & terminal*** ***(T11) No. 1 — Transmission ground:***	Is the resistance 1 MΩ or more?	Repair the open circuit of harness between control valve body connector and transmission ground.	Go to step **5**.
5	**CHECK LINE PRESSURE SOLENOID.** Measure the resistance between transmission ground and control valve body connector. ***Connector & terminal*** ***(T11) No. 1 — Transmission ground:***	Is the resistance 3 — 9 Ω?	Go to step **6**.	Replace the control valve body. <Ref. to 5AT-55, Control Valve Body.>
6	**CHECK FOR POOR CONTACT.** Check the TCM connector, transmission connector and control valve body connector.	Is there poor contact, loosing terminal, entering foreign matter, or damaging connector body?	Repair the poor contact.	Go to step **7**.
7	**CHECK AFTER REPAIR.** 1) Perform the Clear Memory Mode. 2) Drive for a while and read DTC.	Is DTC displayed?	Replace the TCM. <Ref. to 5AT-57, Transmission Control Module (TCM).>	Temporary poor contact or open circuit occurs. Recheck that the harness connector has no faulty.

GETtheMANUALS.org

Q: DTC P0751 SHIFT SOLENOID “A” PERFORMANCE OR STUCK OFF

DTC DETECTING CONDITION:
Output signal of front brake solenoid does not match with oil pressure.
TROUBLE SYMPTOM:
Locked to 1st gear.
WIRING DIAGRAM:

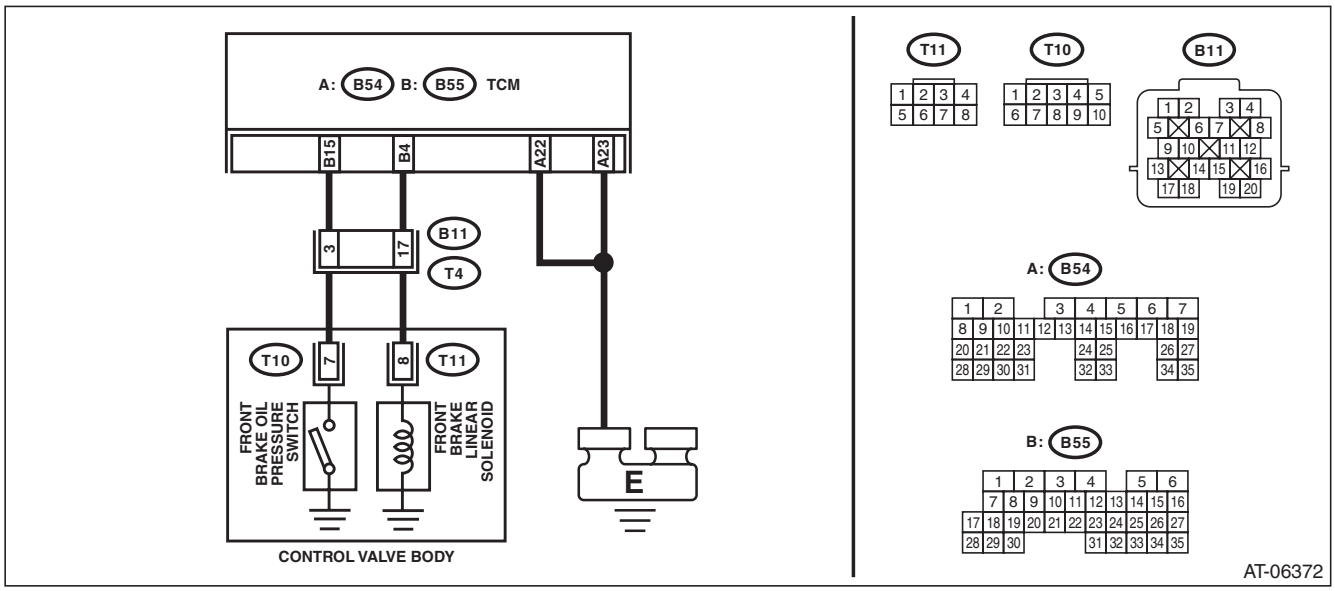

Step		Check	Yes	No
1	**CHECK HARNESS CONNECTOR BETWEEN TCM AND TRANSMISSION.** 1) Turn the ignition switch to OFF. 2) Disconnect the connectors from TCM and transmission. 3) Measure the resistance of harness between TCM connector and transmission connector. ***Connector & terminal*** ***(B54) No. 22 — Chassis ground:*** ***(B54) No. 23 — Chassis ground:*** ***(B55) No. 4 — (B11) No. 17:*** ***(B55) No. 15 — (B11) No. 3:***	Is the resistance less than 1 Ω?	Go to step **2**.	Repair the open circuit of harness between TCM and transmission connector.
2	**CHECK HARNESS CONNECTOR BETWEEN TCM AND CHASSIS GROUND.** Measure the resistance of harness between TCM connector and chassis ground. ***Connector & terminal*** ***(B55) No. 4 — Chassis ground:***	Is the resistance 1 MΩ or more?	Go to step **3**.	Repair the short circuit of harness between TCM and transmission connector.
3	**CHECK INPUT SIGNAL FOR TCM.** 1) Connect all connectors. 2) Turn the ignition switch to ON. 3) Read the data of “F/B Fluid Pressure” using Subaru Select Monitor.	Is “OFF” displayed?	Go to step **4**.	Go to step **6**.
4	**CHECK INPUT SIGNAL FOR TCM.** 1) Turn the ignition switch to OFF. 2) Start the engine. 3) Shift to 1st speed while checking the current gear position using Subaru Select Monitor. 4) Read the data of “F/B Fluid Pressure” using Subaru Select Monitor.	Is “ON” displayed?	Check for poor contact of harness in the solenoid output and oil pressure SW input, and repair the defective part.	Go to step **5**.

GETtheWIRINGS.org

Step		Check	Yes	No
5	**CHECK HARNESS CONNECTOR BETWEEN TRANSMISSION AND CONTROL VALVE BODY.** 1) Turn the ignition switch to OFF. 2) Disconnect the connector from transmission. 3) Remove the transmission connector from bracket. 4) Lift up the vehicle. 5) Drain the ATF. **CAUTION:** **Do not drain ATF until it cools down.** 6) Remove the oil pan. 7) Disconnect the control valve body connector. 8) Measure the resistance between transmission connector and control valve body connector. ***Connector & terminal*** ***(B11) No. 3 — (T10) No. 7:*** ***(B11) No. 17 — (T11) No. 8:***	Is the resistance less than 1 Ω?	Replace the control valve body. <Ref. to 5AT-55, Control Valve Body.>	Replace the transmission harness assembly.
6	**CHECK HARNESS CONNECTOR BETWEEN TRANSMISSION AND CONTROL VALVE BODY.** 1) Turn the ignition switch to OFF. 2) Disconnect the connector from transmission. 3) Remove the transmission connector from bracket. 4) Lift up the vehicle. 5) Drain the ATF. **CAUTION:** **Do not drain ATF until it cools down.** 6) Remove the oil pan. 7) Disconnect the control valve body connector. 8) Measure the resistance between transmission ground and control valve body connector. ***Connector & terminal*** ***(T10) No. 7 — Transmission ground:***	Is the resistance 1 MΩ or more?	Replace the control valve body. <Ref. to 5AT-55, Control Valve Body.>	Replace the transmission harness assembly.

GETtheMANUALS.org

R: DTC P0753 SHIFT SOLENOID “A” ELECTRICAL

DTC DETECTING CONDITION:

Output signal circuit of front brake solenoid is open or shorted.

TROUBLE SYMPTOM:

Locked to 1st gear.

WIRING DIAGRAM:

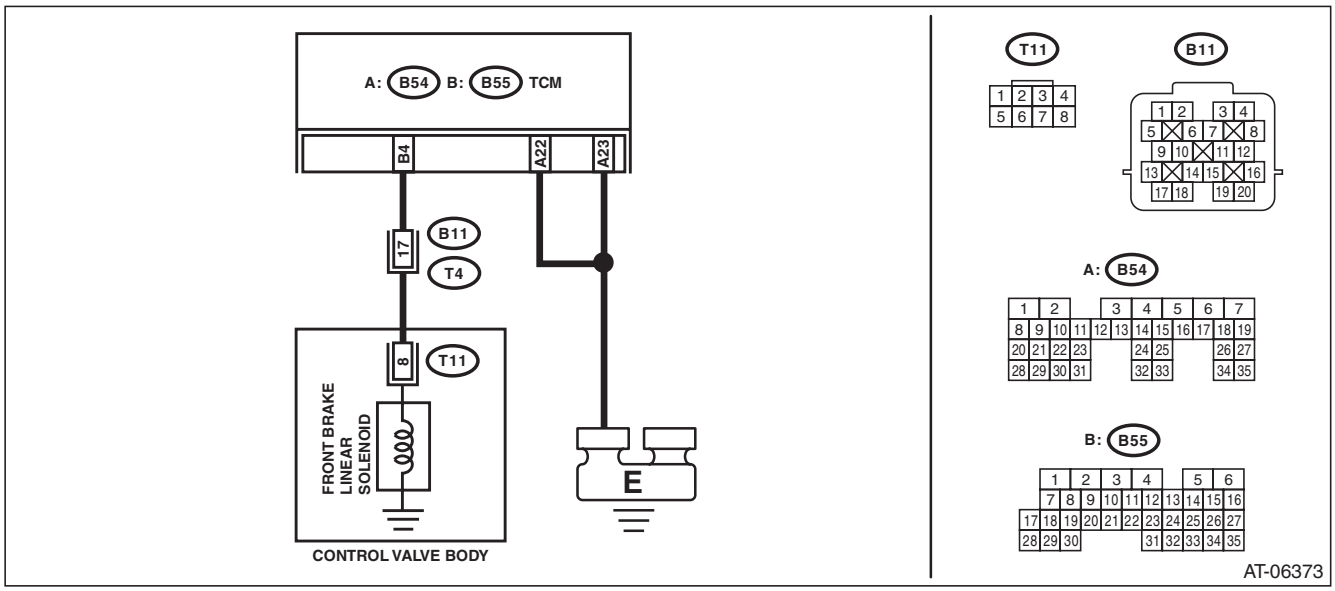

Step		Check	Yes	No
1	**CHECK HARNESS CONNECTOR BETWEEN TCM AND TRANSMISSION.** 1) Turn the ignition switch to OFF. 2) Disconnect the connectors from TCM and transmission. 3) Measure the resistance of harness between TCM connector and transmission connector. ***Connector & terminal*** ***(B54) No. 22 — Chassis ground:*** ***(B54) No. 23 — Chassis ground:*** ***(B55) No. 4 — (B11) No. 17:***	Is the resistance less than 1 Ω?	Go to step **2**.	Repair the open circuit of harness between TCM and transmission connector.
2	**CHECK HARNESS CONNECTOR BETWEEN TCM AND CHASSIS GROUND.** Measure the resistance of harness between TCM connector and chassis ground. ***Connector & terminal*** ***(B55) No. 4 — Chassis ground:***	Is the resistance 1 MΩ or more?	Go to step **3**.	Repair the short circuit of harness between TCM and transmission connector.

GETtheWIRINGS.org

	Step	Check	Yes	No
3	**CHECK HARNESS CONNECTOR BETWEEN TRANSMISSION AND CONTROL VALVE BODY.** 1) Turn the ignition switch to OFF. 2) Disconnect the connector from transmission. 3) Remove the transmission connector from bracket. 4) Lift up the vehicle. 5) Drain the ATF. **CAUTION:** **Do not drain ATF until it cools down.** 6) Remove the oil pan. 7) Disconnect the control valve body connector. 8) Measure the resistance between transmission connector and control valve body connector. ***Connector & terminal*** ***(T4) No. 17 — (T11) No. 8:***	Is the resistance less than 1 Ω?	Go to step **4**.	Repair the open circuit of harness between transmission connector and control valve body connector.
4	**CHECK HARNESS CONNECTOR BETWEEN TRANSMISSION AND CONTROL VALVE BODY.** Measure the resistance between transmission ground and control valve body connector. ***Connector & terminal*** ***(T11) No. 8 — Transmission ground:***	Is the resistance 1 MΩ or more?	Repair the open circuit of harness between control valve body connector and transmission ground.	Go to step **5**.
5	**CHECK FRONT BRAKE SOLENOID.** Measure the resistance between transmission ground and control valve body connector. ***Connector & terminal*** ***(T11) No. 8 — Transmission ground:***	Is the resistance 3 — 9 Ω?	Go to step **6**.	Replace the control valve body. <Ref. to 5AT-55, Control Valve Body.>
6	**CHECK FOR POOR CONTACT.** Check the TCM connector, transmission connector and control valve body connector.	Is there poor contact, loosing terminal, entering foreign matter, or damaging connector body?	Repair the poor contact.	Go to step **7**.
7	**CHECK AFTER REPAIR.** 1) Perform the Clear Memory Mode. 2) Drive for a while and read DTC.	Is DTC displayed?	Replace the TCM. <Ref. to 5AT-57, Transmission Control Module (TCM).>	Temporary poor contact or open circuit occurs. Recheck that the harness connector has no faulty.

GETtheMANUALS.org

S: DTC P0756 SHIFT SOLENOID “B” PERFORMANCE OR STUCK OFF

DTC DETECTING CONDITION:

Output signal value of input clutch solenoid and oil pressure does not match.

TROUBLE SYMPTOM:

Locked to 1st or 4th gear.

WIRING DIAGRAM:

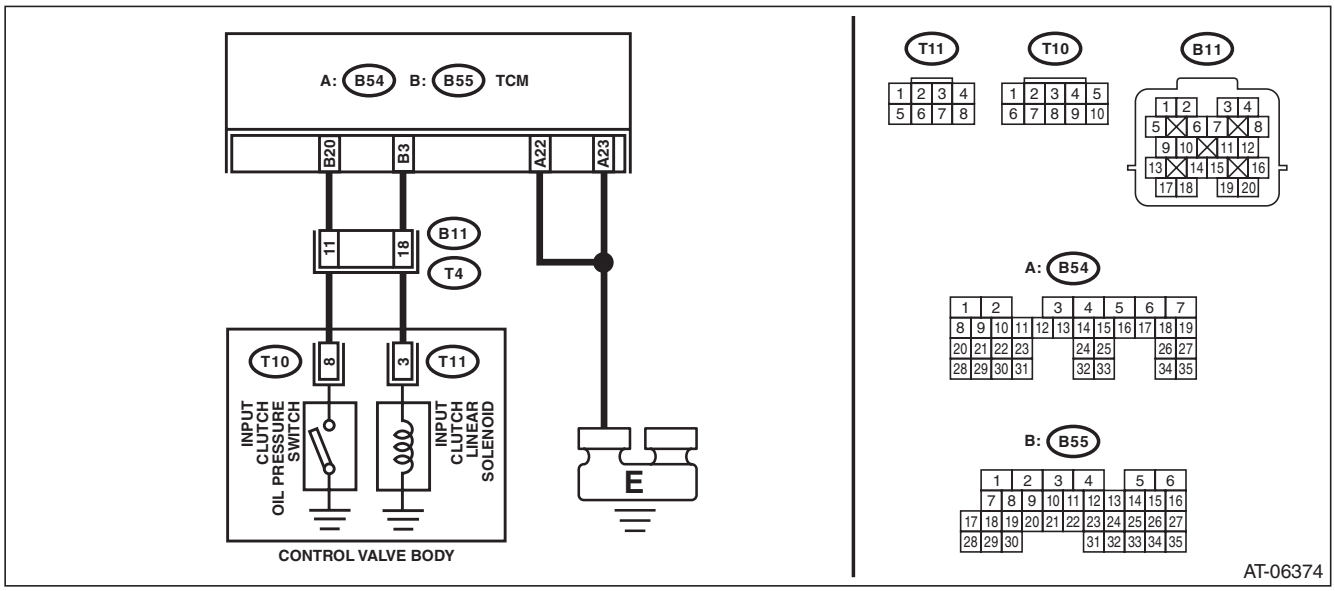

Step		Check	Yes	No
1	**CHECK HARNESS CONNECTOR BETWEEN TCM AND TRANSMISSION.** 1) Turn the ignition switch to OFF. 2) Disconnect the connectors from TCM and transmission. 3) Measure the resistance of harness between TCM connector and transmission connector. ***Connector & terminal*** ***(B54) No. 22 — Chassis ground:*** ***(B54) No. 23 — Chassis ground:*** ***(B55) No. 3 — (B11) No. 18:*** ***(B55) No. 20 — (B11) No. 11:***	Is the resistance less than 1 Ω?	Go to step **2**.	Repair the open circuit of harness between TCM and transmission connector.
2	**CHECK HARNESS CONNECTOR BETWEEN TCM AND CHASSIS GROUND.** Measure the resistance of harness between TCM connector and chassis ground. ***Connector & terminal*** ***(B55) No. 20 — Chassis ground:***	Is the resistance 1 MΩ or more?	Go to step **3**.	Repair the short circuit of harness between TCM and transmission connector.
3	**CHECK INPUT SIGNAL FOR TCM.** 1) Connect all connectors. 2) Turn the ignition switch to ON. 3) Read the data of “I/C Fluid Pressure” using Subaru Select Monitor.	Is “OFF” displayed?	Go to step **4**.	Go to step **6**.
4	**CHECK INPUT SIGNAL FOR TCM.** 1) Turn the ignition switch to OFF. 2) Start the engine. 3) Drive the vehicle on 4th speed of manual mode with checking current gear position using Subaru Select Monitor. 4) Read the data of “I/C Fluid Pressure” using Subaru Select Monitor.	Is “ON” displayed?	Check for poor contact of harness in the solenoid output and oil pressure SW input, and repair the defective part.	Go to step **5**.

GETtheMANUALS.org

	Step	Check	Yes	No
5	**CHECK HARNESS CONNECTOR BETWEEN TRANSMISSION AND CONTROL VALVE BODY.** 1) Turn the ignition switch to OFF. 2) Disconnect the connector from transmission. 3) Remove the transmission connector from bracket. 4) Lift up the vehicle. 5) Drain the ATF. **CAUTION:** **Do not drain ATF until it cools down.** 6) Remove the oil pan. 7) Disconnect the control valve body connector. 8) Measure the resistance between transmission connector and control valve body connector. ***Connector & terminal*** ***(T4) No. 11 — (T10) No. 8:*** ***(T4) No. 18 — (T11) No. 3:***	Is the resistance less than 1 Ω?	Replace the control valve body. <Ref. to 5AT-55, Control Valve Body.>	Replace the transmission harness assembly.
6	**CHECK HARNESS CONNECTOR BETWEEN TRANSMISSION AND CONTROL VALVE BODY.** 1) Turn the ignition switch to OFF. 2) Disconnect the connector from transmission. 3) Remove the transmission connector from bracket. 4) Lift up the vehicle. 5) Drain the ATF. **CAUTION:** **Do not drain ATF until it cools down.** 6) Remove the oil pan. 7) Disconnect the control valve body connector. 8) Measure the resistance between transmission ground and control valve body connector. ***Connector & terminal*** ***(T10) No. 8 — Transmission ground:***	Is the resistance 1 MΩ or more?	Replace the control valve body. <Ref. to 5AT-55, Control Valve Body.>	Replace the transmission harness assembly.

GETtheMANUALS.org

T: DTC P0758 SHIFT SOLENOID “B” ELECTRICAL

DTC DETECTING CONDITION:
Output signal circuit of input clutch solenoid is open or shorted.
TROUBLE SYMPTOM:
Locked to 1st or 4th gear.
WIRING DIAGRAM:

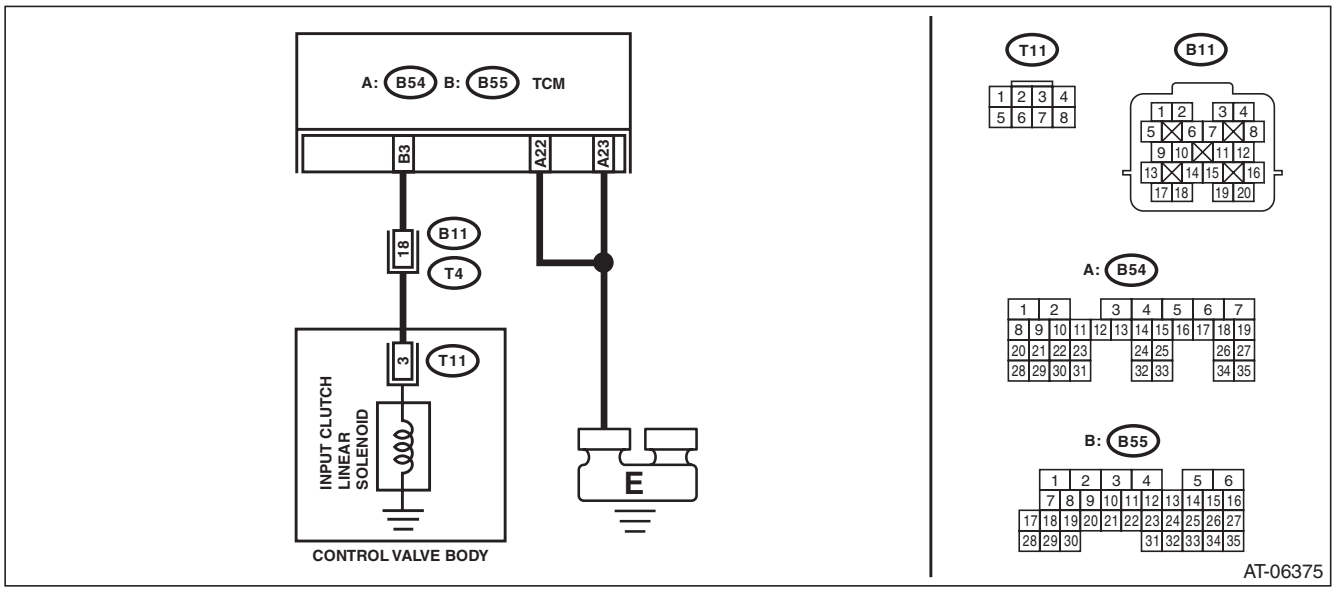

Step		Check	Yes	No
1	**CHECK HARNESS CONNECTOR BETWEEN TCM AND TRANSMISSION.** 1) Turn the ignition switch to OFF. 2) Disconnect the connectors from TCM and transmission. 3) Measure the resistance of harness between TCM connector and transmission connector. ***Connector & terminal*** ***(B54) No. 22 — Chassis ground:*** ***(B54) No. 23 — Chassis ground:*** ***(B55) No. 3 — (B11) No. 18:***	Is the resistance less than 1 Ω?	Go to step **2**.	Repair the open circuit of harness between TCM and transmission connector.
2	**CHECK HARNESS CONNECTOR BETWEEN TCM AND CHASSIS GROUND.** Measure the resistance of harness between TCM connector and body harness. ***Connector & terminal*** ***(B55) No. 3 — Chassis ground:***	Is the resistance 1 MΩ or more?	Go to step **3**.	Repair the short circuit of harness between TCM and transmission connector.

GETtheWIRINGS.org

	Step	Check	Yes	No
3	**CHECK HARNESS CONNECTOR BETWEEN TRANSMISSION AND CONTROL VALVE BODY.** 1) Turn the ignition switch to OFF. 2) Disconnect the connector from transmission. 3) Remove the transmission connector from bracket. 4) Lift up the vehicle. 5) Drain the ATF. **CAUTION:** **Do not drain ATF until it cools down.** 6) Remove the oil pan. 7) Disconnect the control valve body connector. 8) Measure the resistance between transmission connector and control valve body connector. ***Connector & terminal*** ***(T4) No. 18 — (T11) No. 3:***	Is the resistance less than 1 Ω?	Go to step **4**.	Repair the open circuit of harness between transmission connector and control valve body connector.
4	**CHECK HARNESS CONNECTOR BETWEEN TRANSMISSION AND CONTROL VALVE BODY.** Measure the resistance between transmission ground and control valve body connector. ***Connector & terminal*** ***(T11) No. 3 — Transmission ground:***	Is the resistance 1 MΩ or more?	Repair the open circuit of harness between control valve body connector and transmission ground.	Go to step **5**.
5	**CHECK INPUT CLUTCH SOLENOID.** Measure the resistance between transmission ground and control valve body connector. ***Connector & terminal*** ***(T11) No. 3 — Transmission ground:***	Is the resistance 3 — 9 Ω?	Go to step **6**.	Replace the control valve body. <Ref. to 5AT-55, Control Valve Body.>
6	**CHECK FOR POOR CONTACT.** Check the TCM connector, transmission connector and control valve body connector.	Is there poor contact, loosing terminal, entering foreign matter, or damaging connector body?	Repair the poor contact.	Go to step **7**.
7	**CHECK AFTER REPAIR.** 1) Perform the Clear Memory Mode. 2) Drive for a while and read DTC.	Is DTC displayed?	Replace the TCM. <Ref. to 5AT-57, Transmission Control Module (TCM).>	Temporary poor contact or open circuit occurs. Recheck that the harness connector has no faulty.

GETthemANUALS.org

U: DTC P0761 SHIFT SOLENOID “C” PERFORMANCE OR STUCK OFF

DTC DETECTING CONDITION:

Output signal value of high & low reverse clutch solenoid and oil pressure does not match.

TROUBLE SYMPTOM:

Locked to 1st gear.

WIRING DIAGRAM:

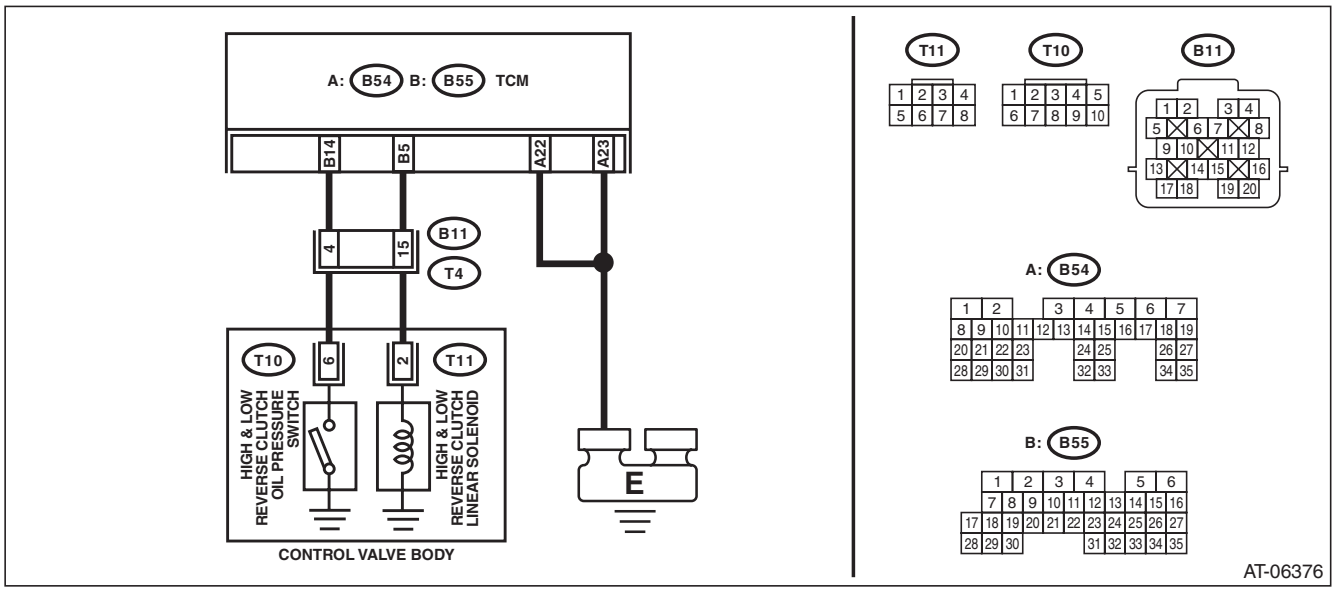

Step		Check	Yes	No
1	**CHECK HARNESS CONNECTOR BETWEEN TCM AND TRANSMISSION.** 1) Turn the ignition switch to OFF. 2) Disconnect the connectors from TCM and transmission. 3) Measure the resistance of harness between TCM connector and transmission connector. ***Connector & terminal*** ***(B54) No. 22 — Chassis ground:*** ***(B54) No. 23 — Chassis ground:*** ***(B55) No. 5 — (B11) No. 15:*** ***(B55) No. 14 — (B11) No. 4:***	Is the resistance less than 1 Ω?	Go to step **2**.	Repair the open circuit of harness between TCM and transmission connector.
2	**CHECK HARNESS CONNECTOR BETWEEN TCM AND CHASSIS GROUND.** Measure the resistance of harness between TCM connector and chassis ground. ***Connector & terminal*** ***(B55) No. 14 — Chassis ground:***	Is the resistance 1 MΩ or more?	Go to step **3**.	Repair the short circuit of harness between TCM and transmission connector.
3	**CHECK INPUT SIGNAL FOR TCM.** 1) Connect all connectors. 2) Turn the ignition switch to ON. 3) Read the data of “H&LR/C Oil Pressure Switch” using Subaru Select Monitor.	Is “OFF” displayed?	Go to step **4**.	Go to step **6**.
4	**CHECK INPUT SIGNAL FOR TCM.** 1) Turn the ignition switch to OFF. 2) Start the engine. 3) Set the select lever to “N” range while depressing the brake pedal. 4) Read the data of “H&LR/C Oil Pressure Switch” using Subaru Select Monitor.	Does the display show “OFF”?	Check for poor contact of harness in the solenoid output and oil pressure SW input, and repair the defective part.	Go to step **5**.

GETtheMANUALS.org

	Step	Check	Yes	No
5	**CHECK HARNESS CONNECTOR BETWEEN TRANSMISSION AND CONTROL VALVE BODY.** 1) Turn the ignition switch to OFF. 2) Disconnect the connector from transmission. 3) Remove the transmission connector from bracket. 4) Lift up the vehicle. 5) Drain the ATF. **CAUTION:** **Do not drain ATF until it cools down.** 6) Remove the oil pan. 7) Disconnect the control valve body connector. 8) Measure the resistance between transmission connector and control valve body connector. ***Connector & terminal*** ***(T4) No. 4 — (T10) No. 6:*** ***(T4) No. 15 — (T11) No. 2:***	Is the resistance less than 1 Ω?	Replace the control valve body. <Ref. to 5AT-55, Control Valve Body.>	Replace the transmission harness assembly.
6	**CHECK HARNESS CONNECTOR BETWEEN TRANSMISSION AND CONTROL VALVE BODY.** 1) Turn the ignition switch to OFF. 2) Disconnect the connector from transmission. 3) Remove the transmission connector from bracket. 4) Lift up the vehicle. 5) Drain the ATF. **CAUTION:** **Do not drain ATF until it cools down.** 6) Remove the oil pan. 7) Disconnect the control valve body connector. 8) Measure the resistance between transmission ground and control valve body connector. ***Connector & terminal*** ***(T10) No. 6 — Transmission ground:***	Is the resistance 1 MΩ or more?	Replace the control valve body. <Ref. to 5AT-55, Control Valve Body.>	Replace the transmission harness assembly.

GETtheMANUALS.org

V: DTC P0763 SHIFT SOLENOID “C” ELECTRICAL

DTC DETECTING CONDITION:

Output signal circuit of high & low reverse clutch solenoid is open or shorted.

TROUBLE SYMPTOM:

Locked to 1st gear.

WIRING DIAGRAM:

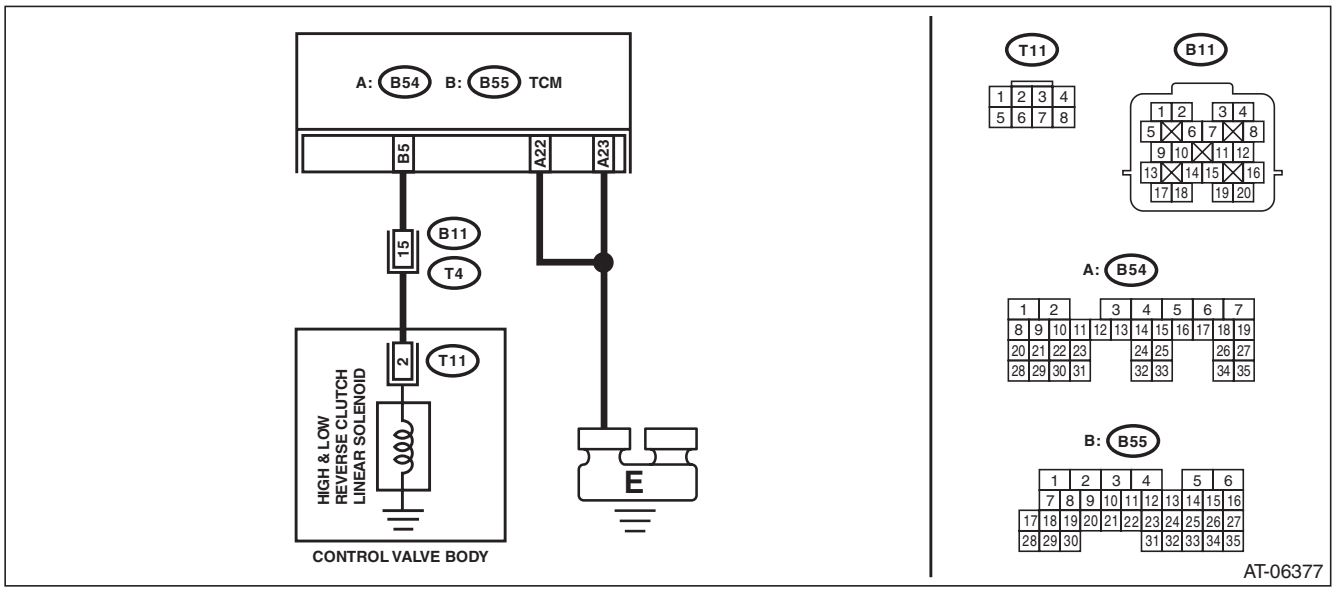

Step		Check	Yes	No
1	**CHECK HARNESS CONNECTOR BETWEEN TCM AND TRANSMISSION.** 1) Turn the ignition switch to OFF. 2) Disconnect the connectors from TCM and transmission. 3) Measure the resistance of harness between TCM connector and transmission connector. ***Connector & terminal*** ***(B54) No. 22 — Chassis ground:*** ***(B54) No. 23 — Chassis ground:*** ***(B55) No. 5 — (B11) No. 15:***	Is the resistance less than 1 Ω?	Go to step **2**.	Repair the open circuit of harness between TCM and transmission connector.
2	**CHECK HARNESS CONNECTOR BETWEEN TCM AND CHASSIS GROUND.** Measure the resistance of harness between TCM connector and chassis ground. ***Connector & terminal*** ***(B55) No. 5 — Chassis ground:***	Is the resistance 1 MΩ or more?	Go to step **3**.	Repair the short circuit of harness between TCM and transmission connector.

GETtheWIRINGS.org

	Step	Check	Yes	No
3	**CHECK HARNESS CONNECTOR BETWEEN TRANSMISSION AND CONTROL VALVE BODY.** 1) Turn the ignition switch to OFF. 2) Disconnect the connector from transmission. 3) Remove the transmission connector from bracket. 4) Lift up the vehicle. 5) Drain the ATF. **CAUTION:** **Do not drain ATF until it cools down.** 6) Remove the oil pan. 7) Disconnect the control valve body connector. 8) Measure the resistance between transmission connector and control valve body connector. ***Connector & terminal*** ***(T4) No. 15 — (T11) No. 2:***	Is the resistance less than 1 Ω?	Go to step **4**.	Repair the open circuit of harness between transmission connector and control valve body connector.
4	**CHECK HARNESS CONNECTOR BETWEEN TRANSMISSION AND CONTROL VALVE BODY.** Measure the resistance between transmission ground and control valve body connector. ***Connector & terminal*** ***(T11) No. 2 — Transmission ground:***	Is the resistance 1 MΩ or more?	Repair the open circuit of harness between control valve body connector and transmission ground.	Go to step **5**.
5	**CHECK HIGH & LOW REVERSE CLUTCH SOLENOID.** Measure the resistance between transmission ground and control valve body connector. ***Connector & terminal*** ***(T11) No. 2 — Transmission ground:***	Is the resistance 3 — 9 Ω?	Go to step **6**.	Replace the control valve body. <Ref. to 5AT-55, Control Valve Body.>
6	**CHECK FOR POOR CONTACT.** Check the TCM connector, transmission connector and control valve body connector.	Is there poor contact, loosing terminal, entering foreign matter, or damaging connector body?	Repair the poor contact.	Go to step **7**.
7	**CHECK AFTER REPAIR.** 1) Perform the Clear Memory Mode. 2) Drive for a while and read DTC.	Is DTC displayed?	Replace the TCM. <Ref. to 5AT-57, Transmission Control Module (TCM).>	Temporary poor contact or open circuit occurs. Recheck that the harness connector has no faulty.

GETtheMANUALS.org

W: DTC P0766 SHIFT SOLENOID “D” PERFORMANCE OR STUCK OFF

DTC DETECTING CONDITION:

Output signal value of direct clutch solenoid and oil pressure does not match.

TROUBLE SYMPTOM:

Locked to 1st or 4th gear.

WIRING DIAGRAM:

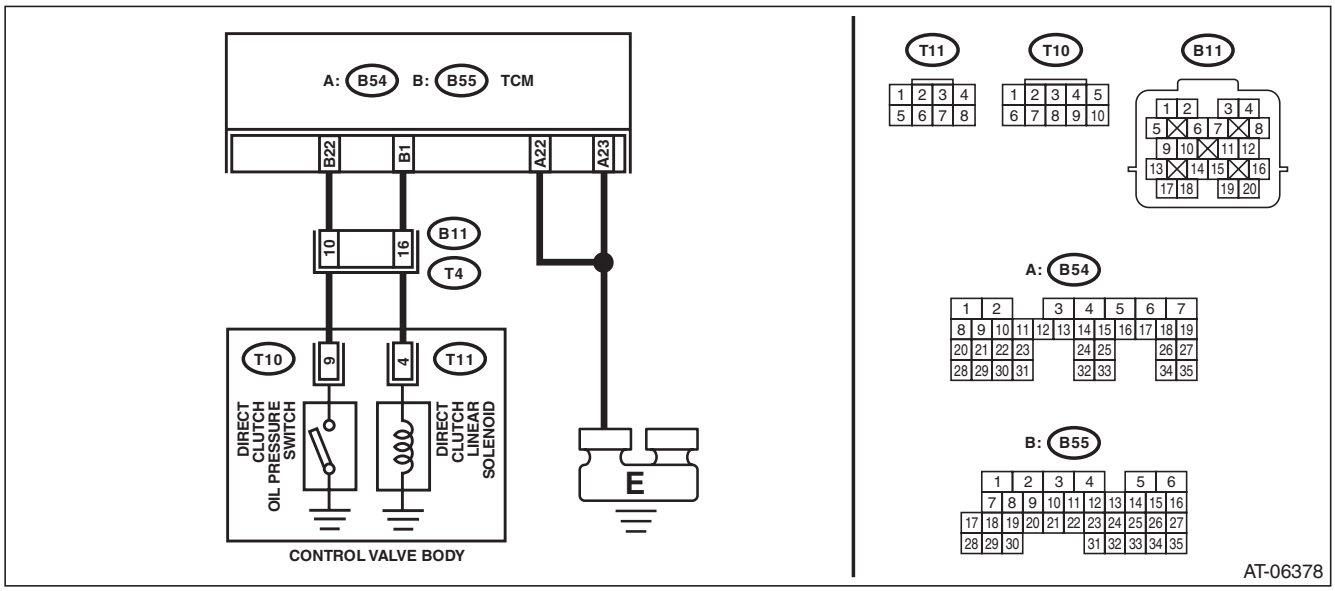

Step		Check	Yes	No
1	**CHECK HARNESS CONNECTOR BETWEEN TCM AND TRANSMISSION.** 1) Turn the ignition switch to OFF. 2) Disconnect the connectors from TCM and transmission. 3) Measure the resistance of harness between TCM connector and transmission connector. ***Connector & terminal*** ***(B54) No. 22 — Chassis ground:*** ***(B54) No. 23 — Chassis ground:*** ***(B55) No. 1 — (B11) No. 16:*** ***(B55) No. 22 — (B11) No. 10:***	Is the resistance less than 1 Ω?	Go to step **2**.	Repair the open circuit of harness between TCM and transmission connector.
2	**CHECK HARNESS CONNECTOR BETWEEN TCM AND BODY HARNESS.** Measure the resistance of harness between TCM connector and body harness. ***Connector & terminal*** ***(B55) No. 22 — Chassis ground:***	Is the resistance 1 MΩ or more?	Go to step **3**.	Repair the short circuit of harness between TCM and transmission connector.
3	**CHECK INPUT SIGNAL FOR TCM.** 1) Connect all connectors. 2) Turn the ignition switch to ON. 3) Read the data of “D/C Fluid Pressure” using Subaru Select Monitor.	Is “OFF” displayed?	Go to step **4**.	Go to step **6**.
4	**CHECK INPUT SIGNAL FOR TCM.** 1) Turn the ignition switch to OFF. 2) Start the engine. 3) Shift to 2nd speed of manual mode and depress the brake with checking current gear position using Subaru Select Monitor. 4) Read the data of “D/C Fluid Pressure” using Subaru Select Monitor.	Is “ON” displayed?	Check for poor contact of harness in the solenoid output and oil pressure SW input, and repair the defective part.	Go to step **5**.

GETtheMANUALS.org

Step		Check	Yes	No
5	**CHECK HARNESS CONNECTOR BETWEEN TRANSMISSION AND CONTROL VALVE BODY.** 1) Turn the ignition switch to OFF. 2) Disconnect the connector from transmission. 3) Remove the transmission connector from bracket. 4) Lift up the vehicle. 5) Drain the ATF. **CAUTION:** **Do not drain ATF until it cools down.** 6) Remove the oil pan. 7) Disconnect the control valve body connector. 8) Measure the resistance between transmission connector and control valve body connector. ***Connector & terminal*** ***(T4) No. 10 — (T10) No. 9:*** ***(T4) No. 16 — (T11) No. 4:***	Is the resistance less than 1 Ω?	Replace the control valve body. <Ref. to 5AT-55, Control Valve Body.>	Replace the transmission harness assembly.
6	**CHECK HARNESS CONNECTOR BETWEEN TRANSMISSION AND CONTROL VALVE BODY.** 1) Turn the ignition switch to OFF. 2) Disconnect the connector from transmission. 3) Remove the transmission connector from bracket. 4) Lift up the vehicle. 5) Drain the ATF. **CAUTION:** **Do not drain ATF until it cools down.** 6) Remove the oil pan. 7) Disconnect the control valve body connector. 8) Measure the resistance between transmission ground and control valve body connector. ***Connector & terminal*** ***(T10) No. 9 — Transmission ground:***	Is the resistance 1 MΩ or more?	Replace the control valve body. <Ref. to 5AT-55, Control Valve Body.>	Replace the transmission harness assembly.

GETtheMANUALS.org

X: DTC P0768 SHIFT SOLENOID “D” ELECTRICAL

DTC DETECTING CONDITION:

The output signal circuit of direct clutch solenoid is open or shorted.

TROUBLE SYMPTOM:

Locked to 1st or 4th gear.

WIRING DIAGRAM:

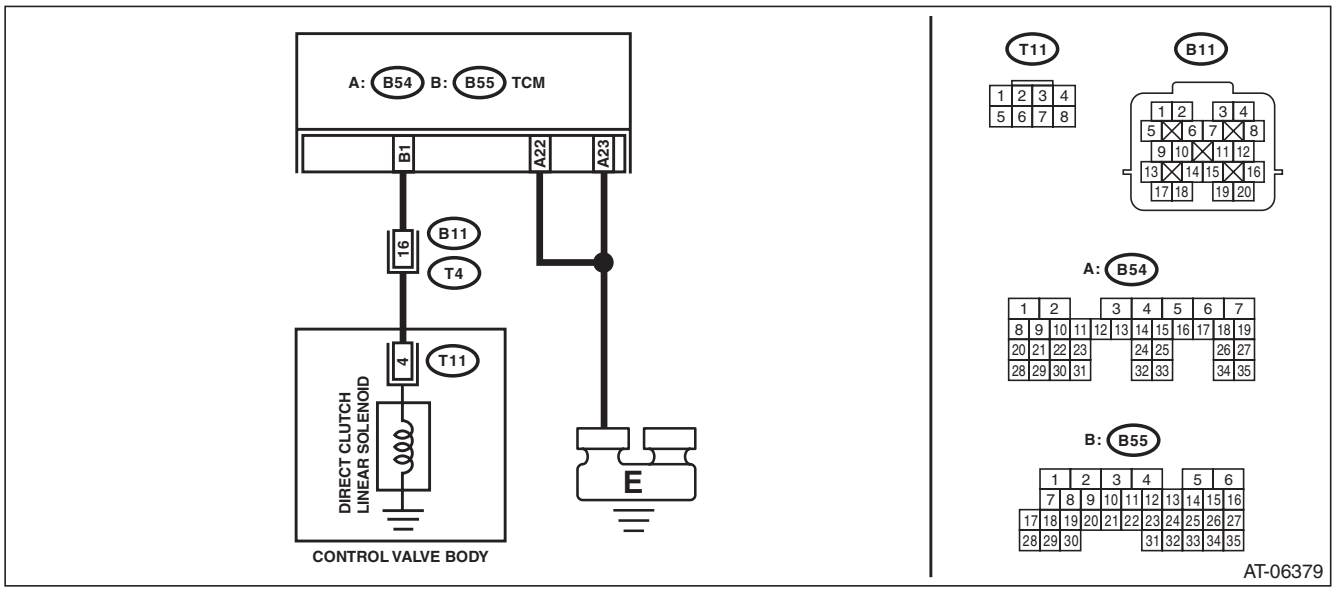

Step		Check	Yes	No
1	**CHECK HARNESS CONNECTOR BETWEEN TCM AND TRANSMISSION.** 1) Turn the ignition switch to OFF. 2) Disconnect the connectors from TCM and transmission. 3) Measure the resistance of harness between TCM connector and transmission connector. ***Connector & terminal*** ***(B54) No. 22 — Chassis ground:*** ***(B54) No. 23 — Chassis ground:*** ***(B55) No. 1 — (B11) No. 16:***	Is the resistance less than 1 Ω?	Go to step **2**.	Repair the open circuit of harness between TCM and transmission connector.
2	**CHECK HARNESS CONNECTOR BETWEEN TCM AND CHASSIS GROUND.** Measure the resistance of harness between TCM connector and chassis ground. ***Connector & terminal*** ***(B55) No. 1 — Chassis ground:***	Is the resistance 1 MΩ or more?	Go to step **3**.	Repair the short circuit of harness between TCM and transmission connector.

GETtheWIRINGS.org

	Step	Check	Yes	No
3	**CHECK HARNESS CONNECTOR BETWEEN TRANSMISSION AND CONTROL VALVE BODY.** 1) Turn the ignition switch to OFF. 2) Disconnect the connector from transmission. 3) Remove the transmission connector from bracket. 4) Lift up the vehicle. 5) Drain the ATF. **CAUTION:** **Do not drain ATF until it cools down.** 6) Remove the oil pan. 7) Disconnect the control valve body connector. 8) Measure the resistance between transmission connector and control valve body connector. ***Connector & terminal*** ***(T4) No. 16 — (T11) No. 4:***	Is the resistance less than 1 Ω?	Go to step **4**.	Repair the open circuit of harness between transmission connector and control valve body connector.
4	**CHECK HARNESS CONNECTOR BETWEEN TRANSMISSION AND CONTROL VALVE BODY.** Measure the resistance between transmission ground and control valve body connector. ***Connector & terminal*** ***(T11) No. 4 — Transmission ground:***	Is the resistance 1 MΩ or more?	Repair the open circuit of harness between control valve body connector and transmission ground.	Go to step **5**.
5	**CHECK DIRECT CLUTCH SOLENOID.** Measure the resistance between transmission ground and control valve body connector. ***Connector & terminal*** ***(T11) No. 4 — Transmission ground:***	Is the resistance 3 — 9 Ω?	Go to step **6**.	Replace the control valve body. <Ref. to 5AT-55, Control Valve Body.>
6	**CHECK FOR POOR CONTACT.** Check the TCM connector, transmission connector and control valve body connector.	Is there poor contact, loosing terminal, entering foreign matter, or damaging connector body?	Repair the poor contact.	Go to step **7**.
7	**CHECK AFTER REPAIR.** 1) Perform the Clear Memory Mode. 2) Drive for a while and read DTC.	Is DTC displayed?	Replace the TCM. <Ref. to 5AT-57, Transmission Control Module (TCM).>	Temporary poor contact or open circuit occurs. Recheck that the harness connector has no faulty.

GETtheWIRINGS.org

Y: DTC P0771 SHIFT SOLENOID “E” PERFORMANCE OR STUCK OFF

DTC DETECTING CONDITION:

Output signal of forward brake solenoid does not match the oil pressure.

TROUBLE SYMPTOM:

Locked to 2nd, 3rd or 4th gear.

WIRING DIAGRAM:

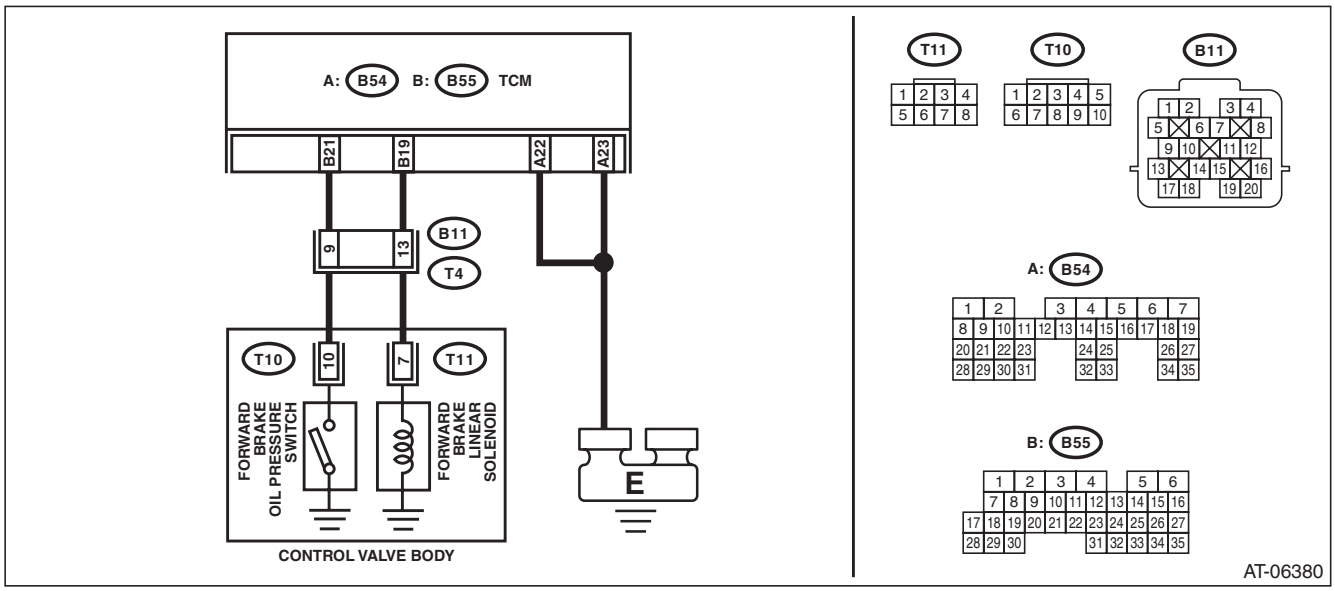

Step		Check	Yes	No
1	**CHECK HARNESS CONNECTOR BETWEEN TCM AND TRANSMISSION.** 1) Turn the ignition switch to OFF. 2) Disconnect the connectors from TCM and transmission. 3) Measure the resistance of harness between TCM connector and transmission connector. ***Connector & terminal*** ***(B54) No. 22 — Chassis ground:*** ***(B54) No. 23 — Chassis ground:*** ***(B55) No. 19 — (B11) No. 13:*** ***(B55) No. 21 — (B11) No. 9:***	Is the resistance less than 1 Ω?	Go to step **2**.	Repair the open circuit of harness between TCM and transmission connector.
2	**CHECK HARNESS CONNECTOR BETWEEN TCM AND CHASSIS GROUND.** Measure the resistance between TCM connector and chassis ground. ***Connector & terminal*** ***(B55) No. 21 — Chassis ground:***	Is the resistance 1 MΩ or more?	Go to step **3**.	Repair the short circuit of harness between TCM and transmission connector.
3	**CHECK INPUT SIGNAL FOR TCM.** 1) Connect all connectors. 2) Turn the ignition switch to ON. 3) Read the data of “Fwd/B hydraulic pressure SW” using Subaru Select Monitor.	Is “OFF” displayed?	Go to step **4**.	Go to step **6**.
4	**CHECK INPUT SIGNAL FOR TCM.** 1) Turn the ignition switch to OFF. 2) Start the engine. 3) Drive the vehicle on 2nd speed of manual mode at 15 km/h (9 MPH) with checking current gear position using Subaru Select Monitor. 4) Read the data of “Fwd/B hydraulic pressure SW” using Subaru Select Monitor.	Is “ON” displayed?	Check for poor contact of harness in the solenoid output and oil pressure SW input, and repair the defective part.	Go to step **5**.

GETthemANUALS.org

	Step	Check	Yes	No
5	**CHECK HARNESS CONNECTOR BETWEEN TRANSMISSION AND CONTROL VALVE BODY.** 1) Turn the ignition switch to OFF. 2) Disconnect the connector from transmission. 3) Remove the transmission connector from bracket. 4) Lift up the vehicle. 5) Drain the ATF. **CAUTION:** **Do not drain ATF until it cools down.** 6) Remove the oil pan. 7) Disconnect the control valve body connector. 8) Measure the resistance between transmission connector and control valve body connector. ***Connector & terminal*** ***(T4) No. 9 — (T10) No. 10:*** ***(T4) No. 13 — (T11) No. 7:***	Is the resistance less than 1 Ω?	Replace the control valve body. <Ref. to 5AT-55, Control Valve Body.>	Replace the transmission harness assembly.
6	**CHECK HARNESS CONNECTOR BETWEEN TRANSMISSION AND CONTROL VALVE BODY.** 1) Turn the ignition switch to OFF. 2) Disconnect the connector from transmission. 3) Remove the transmission connector from bracket. 4) Lift up the vehicle. 5) Drain the ATF. **CAUTION:** **Do not drain ATF until it cools down.** 6) Remove the oil pan. 7) Disconnect the control valve body connector. 8) Measure the resistance between transmission ground and control valve body connector. ***Connector & terminal*** ***(T10) No. 10 — Transmission ground:***	Is the resistance 1 MΩ or more?	Replace the control valve body. <Ref. to 5AT-55, Control Valve Body.>	Replace the transmission harness assembly.

GETtheMANUALS.org

Z: DTC P0773 SHIFT SOLENOID “E” ELECTRICAL

DTC DETECTING CONDITION:
Output signal circuit of forward brake solenoid is open or shorted.
TROUBLE SYMPTOM:
Locked to 2nd, 3rd or 4th gear.
WIRING DIAGRAM:

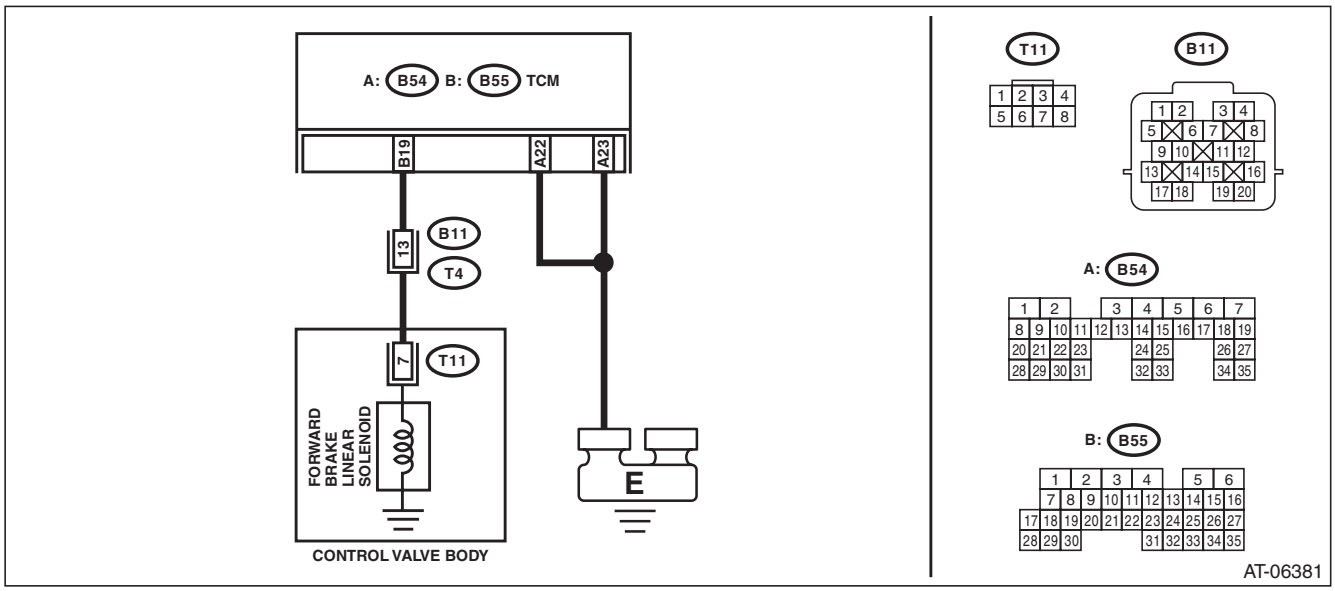

Step		Check	Yes	No
1	**CHECK HARNESS CONNECTOR BETWEEN TCM AND TRANSMISSION.** 1) Turn the ignition switch to OFF. 2) Disconnect the connectors from TCM and transmission. 3) Measure the resistance of harness between TCM connector and transmission connector. ***Connector & terminal*** ***(B54) No. 22 — Chassis ground:*** ***(B54) No. 23 — Chassis ground:*** ***(B55) No. 19 — (B11) No. 13:***	Is the resistance less than 1 Ω?	Go to step **2**.	Repair the open circuit of harness between TCM and transmission connector.
2	**CHECK HARNESS CONNECTOR BETWEEN TCM AND BODY HARNESS.** Measure the resistance of harness between TCM connector and body harness. ***Connector & terminal*** ***(B55) No. 19 — Chassis ground:***	Is the resistance 1 MΩ or more?	Go to step **3**.	Repair the short circuit of harness between TCM and transmission connector.

GETtheMANUALS.org

	Step	Check	Yes	No
3	**CHECK HARNESS CONNECTOR BETWEEN TRANSMISSION AND CONTROL VALVE BODY.** 1) Turn the ignition switch to OFF. 2) Disconnect the connector from transmission. 3) Remove the transmission connector from bracket. 4) Lift up the vehicle. 5) Drain the ATF. **CAUTION:** **Do not drain ATF until it cools down.** 6) Remove the oil pan. 7) Disconnect the control valve body connector. 8) Measure the resistance between transmission connector and control valve body connector. ***Connector & terminal*** ***(T4) No. 13 — (T11) No. 7:***	Is the resistance less than 1 Ω?	Go to step **4**.	Repair the open circuit of harness between transmission connector and control valve body connector.
4	**CHECK HARNESS CONNECTOR BETWEEN TRANSMISSION AND CONTROL VALVE BODY.** Measure the resistance between transmission ground and control valve body connector. ***Connector & terminal*** ***(T11) No. 7 — Transmission ground:***	Is the resistance 1 MΩ or more?	Repair the open circuit of harness between control valve body connector and transmission ground.	Go to step **5**.
5	**CHECK FORWARD BRAKE SOLENOID.** Measure the resistance between transmission ground and control valve body connector. ***Connector & terminal*** ***(T11) No. 7 — Transmission ground:***	Is the resistance 5 — 17 Ω?	Go to step **6**.	Replace the control valve body. <Ref. to 5AT-55, Control Valve Body.>
6	**CHECK FOR POOR CONTACT.** Check the TCM connector, transmission connector and control valve body connector.	Is there poor contact, loosing terminal, entering foreign matter, or damaging connector body?	Repair the poor contact.	Go to step **7**.
7	**CHECK AFTER REPAIR.** 1) Perform the Clear Memory Mode. 2) Drive for a while and read DTC.	Is DTC displayed?	Replace the TCM. <Ref. to 5AT-57, Transmission Control Module (TCM).>	Temporary poor contact or open circuit occurs. Recheck that the harness connector has no faulty.

GETtheMANUALS.org

AA:DTC P0801 REVERSE INHIBIT CONTROL CIRCUIT

DTC DETECTING CONDITION:

Shift lock solenoid malfunction, open or short reverse inhibitor control circuit

TROUBLE SYMPTOM:

- Gear is shifted from “N” range to “R” range during driving at 20 km/h (12 MPH) or more.
- Gear cannot be shifted from “N” range to “R” range though the vehicle is parked.

WIRING DIAGRAM:

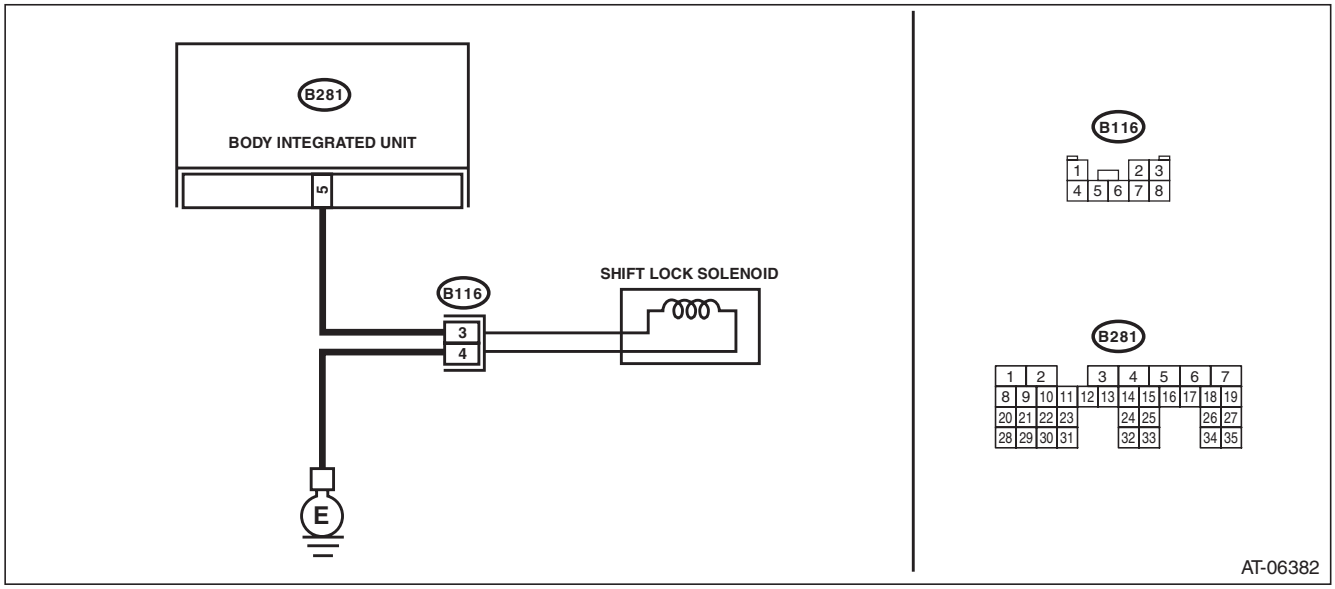

Step		Check	Yes	No
1	**CHECK SHIFT LOCK SOLENOID.** 1) Forcibly activate the body integrated unit to check the operation of shift lock solenoid. <Ref. to BC(diag)-20, Function Check.> 2) Move the shift lever without depressing the brake pedal.	Does the shift lever move?	Go to step **2**.	Go to step **3**.
2	**CHECK OUTPUT SIGNAL OF BODY INTEGRATED UNIT.** 1) Display the following items using Subaru Select Monitor. <Ref. to BC(diag)-12, Read Current Data.> • Key-lock warning SW • Shift position • PSW • Stop light switch 2) With the brake pedal depressed, shift the select lever to “P” range.	Do the units of measure of items displayed change?	Go to step **3**.	Check the circuits of the items whose values do not change.
3	**CHECK HARNESS CONNECTOR BETWEEN BODY INTEGRATED UNIT AND SHIFT LOCK SOLENOID.** Measure the harness resistance between the body integrated unit and chassis ground. ***Connector & terminal*** ***(B281) No. 5 — Chassis ground:***	Is the resistance 1 MΩ or more?	Go to step **4**.	Repair the short circuit of harness between body integrated unit and shift lock solenoid connector.

GETtheWIRINGDIAGRAMS.org

Step		Check	Yes	No
4	**CHECK HARNESS BETWEEN SHIFT LOCK SOLENOID AND CHASSIS GROUND TERMINAL.** Measure the resistance of harness between shift lock solenoid connector and chassis ground. ***Connector & terminal*** ***(B116) No. 4 — Chassis ground:***	Is the resistance less than 1 Ω?	Go to step **5**.	Repair the open circuit of the harness between the shift lock solenoid connector and chassis ground terminal.
5	**CHECK SHIFT LOCK SOLENOID.** Measure the resistance between the shift lock solenoid connector terminals. ***Connector & terminal*** ***(B116) No. 3 — No. 4:***	Is the resistance 12 — 18 Ω?	Go to step **6**.	Replace the shift lock solenoid.
6	**CHECK OUTPUT SIGNAL OF BODY INTEGRATED UNIT.** 1) Connect all connectors. 2) Turn the ignition switch to ON. 3) Set the select lever to “D” range. 4) Measure the voltage between body integrated unit and chassis ground. ***Connector & terminal*** ***(B281) No. 5 (+) — Chassis ground (–):***	Is the voltage 10.5 V or more?	Go to step **7**.	Go to step **8**.
7	**CHECK OUTPUT SIGNAL OF BODY INTEGRATED UNIT.** 1) Lift up the vehicle. 2) Start the engine. 3) Shift the select lever to “D” range and slowly increase vehicle speed to over 20 km/h (12 MPH). NOTE: The speed difference between front and rear wheels lights the ABS warning light or the VDC warning light, but this does not indicate a malfunction. If the warning light is illuminated, clear the memory of ABS or VDC after completing AT control diagnosis. <Ref. to VDC(diag)-25, Clear Memory Mode.> 4) Measure the voltage between body integrated unit and chassis ground. ***Connector & terminal*** ***(B281) No. 5 (+) — Chassis ground (–):***	Is the voltage less than 1 V?	Check the harnesses or connectors in reverse inhibitor control circuit, and repair the defective part.	Go to step **8**.
8	**CHECK FOR POOR CONTACT.**	Is there poor contact of the reverse inhibitor control circuit?	Repair the poor contact.	Replace the body integrated unit. <Ref. to SL-71, Body Integrated Unit.>

GETtheMANUALS.org

AB:DTC P0817 STARTER DISABLE CIRCUIT

DTC DETECTING CONDITION:

Open or short in P/N signal output circuit

TROUBLE SYMPTOM:

- Engine can be started on other than “P” or “N” range.
- Engine can not be started on “P” or “N” range.

WIRING DIAGRAM:

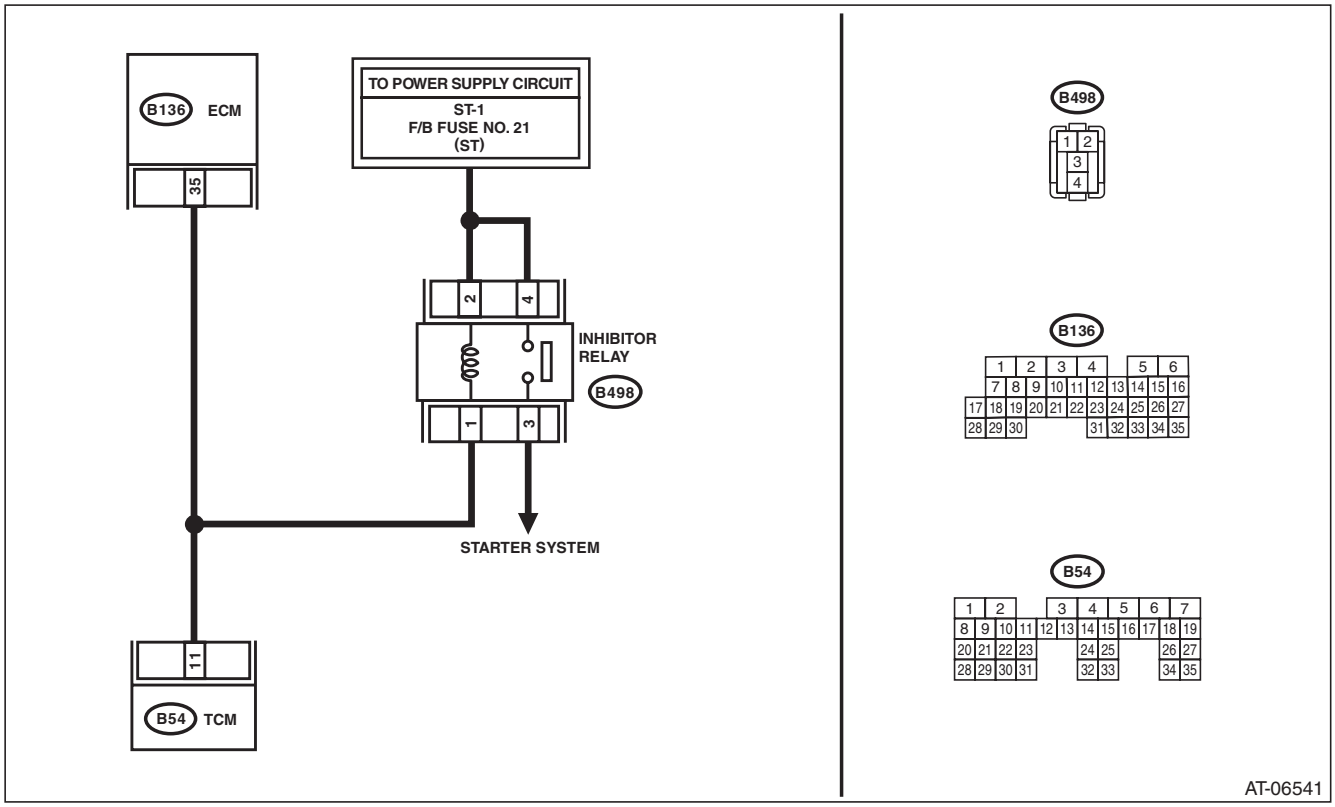

Step		Check	Yes	No
1	**CHECK DTC OF TCM.**	Is DTC of Transmission Range Sensor Circuit (PRNDL Input) detected?	Perform the diagnosis according to DTC.	Go to step **2**.
2	**CHECK ECM.**	Is the communication between Subaru Select Monitor and ECM normal?	Go to step **3**.	Perform the diagnosis according to DTC of ECM.
3	**CHECK FUSE (NO. 21).** 1) Turn the ignition switch to OFF. 2) Remove the fuse.	Is the fuse (No. 21) blown out?	Replace the fuse (No. 21). If the replaced fuse (No. 21) has blown out easily, repair the short circuit of harness between fuse (No. 21) and inhibitor relay.	Go to step **4**.

GETtheMANUALS.org

	Step	Check	Yes	No
4	**CHECK HARNESS CONNECTOR BETWEEN TCM AND ECM.** 1) Turn the ignition switch to OFF. 2) Disconnect the connectors from TCM, ECM and inhibitor relay. 3) Measure the resistance of harness between TCM connector and ECM connector. ***Connector & terminal*** ***(B54) No. 11 — (B136) No. 35***	Is the resistance less than 1 Ω?	Go to step **5**.	Repair the open circuit of harness between TCM and ECM connector, or poor contact of connector.
5	**CHECK HARNESS CONNECTOR BETWEEN TCM AND INHIBITOR RELAY.** Measure the resistance of the harness between TCM connector and inhibitor relay. ***Connector & terminal*** ***(B54) No. 11 — (B498) No. 1:***	Is the resistance less than 1 Ω?	Go to step **6**.	Repair the open circuit of harness between TCM and inhibitor relay, or poor contact of connector.
6	**CHECK HARNESS CONNECTOR BETWEEN TCM AND CHASSIS GROUND.** Measure the resistance of harness between TCM connector and chassis ground. ***Connector & terminal*** ***(B54) No. 11 — Chassis ground:***	Is the resistance 1 MΩ or more?	Go to step **7**.	Repair the short circuit of the harness between TCM and chassis ground.
7	**CHECK OUTPUT SIGNAL OF TCM.** 1) Connect the TCM, ECM, and inhibitor relay connector. 2) Turn the ignition switch to ON. 3) Shift the select lever to “P” range. 4) Measure the voltage between TCM connector and chassis ground. ***Connector & terminal*** ***(B54) No. 11 (+) — Chassis ground (–):***	Is the voltage 1 V or less?	Go to step **8**.	Replace the TCM. <Ref. to 5AT-57, Transmission Control Module (TCM).>
8	**CHECK OUTPUT SIGNAL OF TCM.** 1) Set the select lever to “D” range. 2) Measure the voltage between TCM connector and chassis ground. ***Connector & terminal*** ***(B54) No. 11 (+) — Chassis ground (–):***	Is the voltage 8 V or more?	Go to step **9**.	Replace the TCM. <Ref. to 5AT-57, Transmission Control Module (TCM).>
9	**CHECK FOR POOR CONTACT.**	Is there any open or poor contact of connector (loosing terminal, entering foreign matter, damaging connector body)?	Repair the poor contact.	Check the neutral switch circuit of ECM.

GETtheWANDALS.org

AC:DTC P0957 BACKUP LIGHT RELAY CIRCUIT LOW

DTC DETECTING CONDITION:

Output circuit of the back-up light relay is open or shorted

TROUBLE SYMPTOM:

Back-up light does not illuminate in “R” range.

WIRING DIAGRAM:

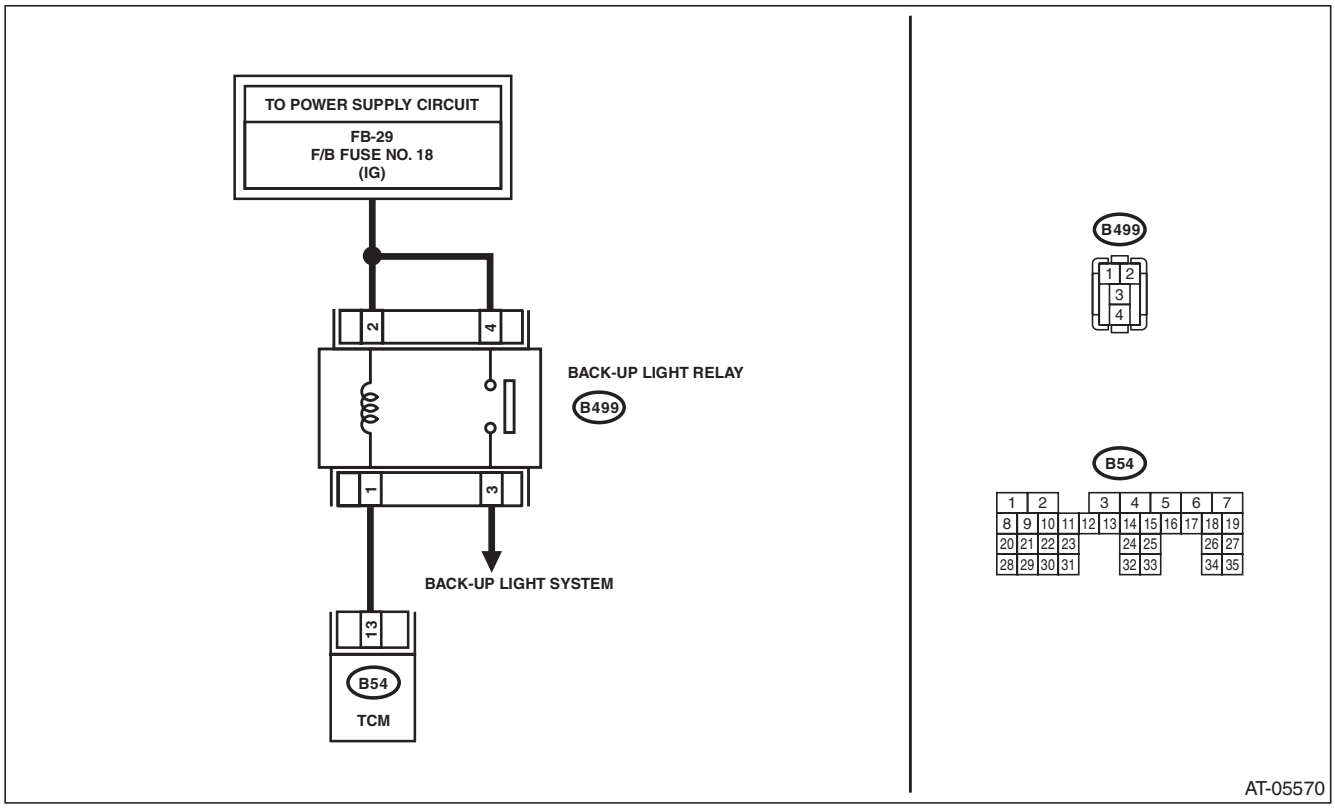

Step		Check	Yes	No
1	**CHECK DTC OF TCM.**	Is DTC of Transmission Range Sensor Circuit (PRNDL Input) detected?	Perform the diagnosis according to DTC.	Go to step **2**.
2	**CHECK HARNESS CONNECTOR BETWEEN TCM AND BACK-UP LIGHT RELAY.** 1) Turn the ignition switch to OFF. 2) Disconnect the connector from TCM and back-up light relay. 3) Measure the resistance of harness between TCM connector and back-up light relay connector. ***Connector & terminal*** ***(B54) No. 13 — (B499) No. 1:***	Is the resistance less than 1 Ω?	Go to step **3**.	Repair the open circuit of the harness or poor contact of the connector between TCM and back-up light relay connector.
3	**CHECK HARNESS CONNECTOR BETWEEN TCM AND CHASSIS GROUND.** Measure the resistance of harness between TCM connector and chassis ground. ***Connector & terminal*** ***(B54) No. 13 — Chassis ground:***	Is the resistance 1 MΩ or more?	Go to step **4**.	Repair the short circuit of the harness between TCM and back-up light relay connector.

GETtheMANUALS.org

	Step	Check	Yes	No
4	**CHECK OUTPUT SIGNAL OF TCM.** 1) Turn the ignition switch to ON. 2) Shift the select lever to “P” range. 3) Measure the voltage between TCM connector and chassis ground. ***Connector & terminal*** ***(B54) No. 13 (+) — Chassis ground (–):***	Is the voltage 8 V or more?	Go to step **5**.	Replace the TCM. <Ref. to 5AT-57, Transmission Control Module (TCM).>
5	**CHECK OUTPUT SIGNAL OF TCM.** 1) Set the select lever to “R” range. 2) Measure the voltage between TCM connector and chassis ground. ***Connector & terminal*** ***(B54) No. 13 (+) — Chassis ground (–):***	Is the voltage 1 V or less?	Go to step **6**.	Replace the TCM. <Ref. to 5AT-57, Transmission Control Module (TCM).>
6	**CHECK INPUT VOLTAGE FOR BACK-UP LIGHT RELAY.** Measure the voltage between back-up light relay and chassis ground.	Is the voltage 10 — 13 V?	Replace the back-up light relay.	Check open or short circuit of harness between fuse (No. 18) and back-up light relay.

GETtheWIRINGS.org

AD:DTC P0958 BACKUP LIGHT RELAY CIRCUIT HIGH

DTC DETECTING CONDITION:

Output circuit of the back-up light relay is open or shorted

TROUBLE SYMPTOM:

Back-up light does not illuminate in “R” range.

WIRING DIAGRAM:

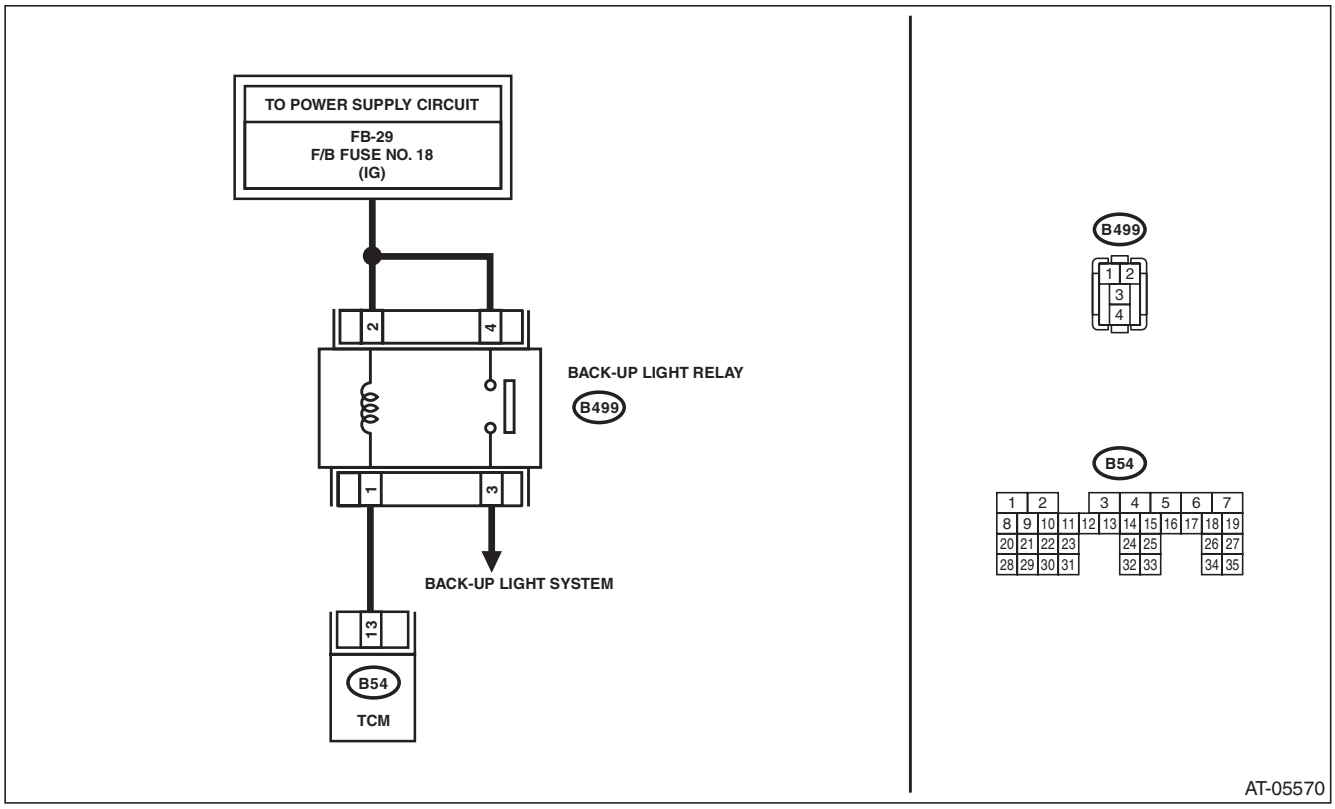

Step		Check	Yes	No
1	**CHECK DTC OF TCM.**	Is DTC of Transmission Range Sensor Circuit (PRNDL Input) detected?	Perform the diagnosis according to DTC.	Go to step **2**.
2	**CHECK HARNESS CONNECTOR BETWEEN TCM AND BACK-UP LIGHT RELAY.** 1) Turn the ignition switch to OFF. 2) Disconnect the connector from TCM and back-up light relay. 3) Measure the resistance of harness between TCM connector and back-up light relay connector. ***Connector & terminal*** ***(B54) No. 13 — (B499) No. 1:***	Is the resistance less than 1 Ω?	Go to step **3**.	Repair the open circuit of the harness or poor contact of the connector between TCM and back-up light relay connector.
3	**CHECK HARNESS CONNECTOR BETWEEN TCM AND CHASSIS GROUND.** Measure the resistance of harness between TCM connector and chassis ground. ***Connector & terminal*** ***(B54) No. 13 — Chassis ground:***	Is the resistance 1 MΩ or more?	Go to step **4**.	Repair the short circuit of the harness between TCM and back-up light relay connector.

GETtheMANUALS.org

Step		Check	Yes	No
4	**CHECK OUTPUT SIGNAL OF TCM.** 1) Turn the ignition switch to ON. 2) Shift the select lever to “P” range. 3) Measure the voltage between TCM connector and chassis ground. ***Connector & terminal*** ***(B54) No. 13 (+) — Chassis ground (–):***	Is the voltage 8 V or more?	Go to step **5**.	Replace the TCM. <Ref. to 5AT-57, Transmission Control Module (TCM).>
5	**CHECK OUTPUT SIGNAL OF TCM.** 1) Set the select lever to “R” range. 2) Measure the voltage between TCM connector and chassis ground. ***Connector & terminal*** ***(B54) No. 13 (+) — Chassis ground (–):***	Is the voltage 1 V or less?	Go to step **6**.	Replace the TCM. <Ref. to 5AT-57, Transmission Control Module (TCM).>
6	**CHECK INPUT VOLTAGE FOR BACK-UP LIGHT RELAY.** Measure the voltage between back-up light relay and chassis ground.	Is the voltage 10 — 13 V?	Replace the back-up light relay.	Check open or short circuit of harness between fuse (No. 18) and back-up light relay.

GETtheMANUALS.org

AE:DTC P1706 AT VEHICLE SPEED SENSOR CIRCUIT MALFUNCTION (REAR WHEEL)

DTC DETECTING CONDITION:
Input signal circuit of TCM is open or shorted.
TROUBLE SYMPTOM:
Shifting quality malfunction
WIRING DIAGRAM:

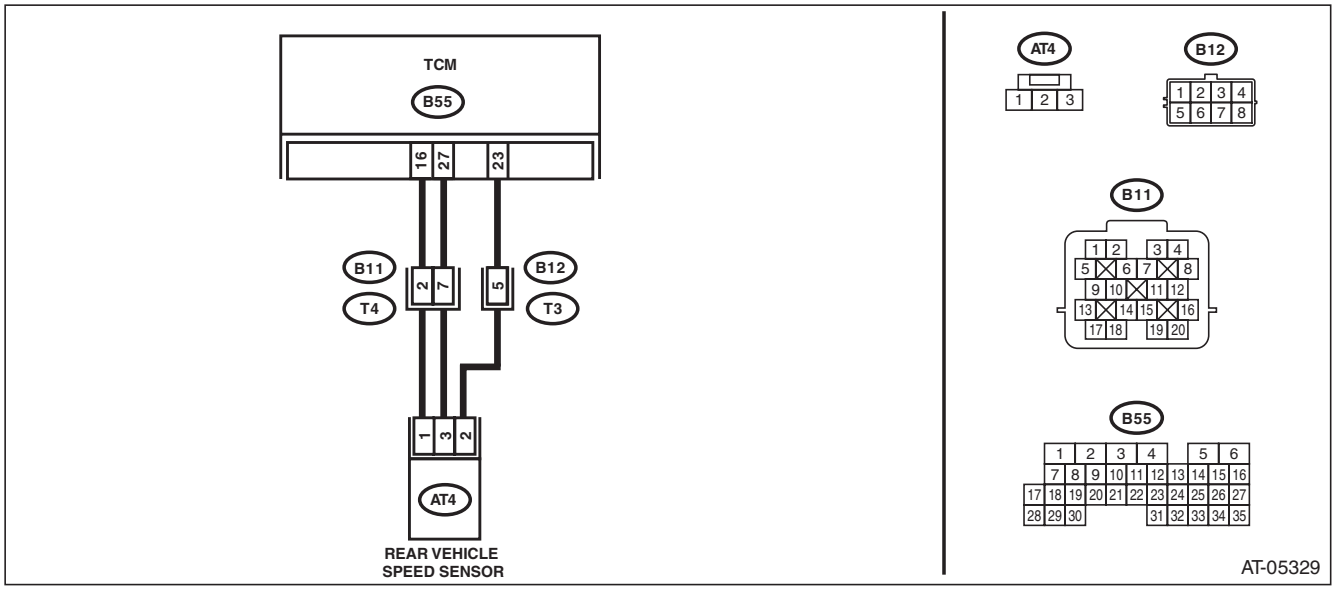

Step		Check	Yes	No
1	**CHECK TCM I/O SIGNAL.** Check the power supply and ground I/O signals. <Ref. to 5AT(diag)-13, ELECTRICAL SPECIFICATION, Transmission Control Module (TCM) I/O Signal.>	Is TCM I/O signal OK?	Go to step **2**.	Repair the open or short circuit for power supply and ground.
2	**CHECK TCM AND TRANSMISSION HARNESS CONNECTOR.** 1) Disconnect the connectors from TCM and transmission. 2) Measure the resistance of harness between TCM connector and transmission connector. ***Connector & terminal*** ***(B55) No. 16 — (B11) No. 2:*** ***(B55) No. 23 — (B12) No. 5:*** ***(B55) No. 27 — (B11) No. 7:***	Is the resistance less than 1 Ω?	Go to step **3**.	Repair the open circuit of harness between TCM and transmission connector.
3	**CHECK TCM AND TRANSMISSION HARNESS CONNECTOR.** Measure the resistance of harness between TCM connector and chassis ground. ***Connector & terminal*** ***(B55) No. 16 — Chassis ground:*** ***(B55) No. 23 — Chassis ground:*** ***(B55) No. 27 — Chassis ground:***	Is the resistance 1 MΩ or more?	Go to step **4**.	Repair the short circuit of harness between TCM and transmission connector.

GETtheMANUALS.org

Step		Check	Yes	No
4	**CHECK TCM POWER SUPPLY OUTPUT.** 1) Connect the connector to TCM. (Transmission connector is disconnected) 2) Turn the ignition switch to ON. 3) Measure the voltage between transmission connector and chassis ground. ***Connector & terminal*** ***(B11) No. 7 (+) — Chassis ground (–):***	Is the voltage 10 — 13 V?	Go to step **5**.	Replace the TCM. <Ref. to 5AT-57, Transmission Control Module (TCM).>
5	**CHECK INPUT CIRCUIT OF TCM TURBINE SPEED SENSOR.** Measure the voltage variation between TCM connector terminals. ***Connector & terminal*** ***(B12) No. 5 (+) — (B11) No. 2 (–):***	Is the voltage 4 — 6 V?	Go to step **7**.	Go to step **6**.
6	**CHECK HARNESS ASSEMBLY (TURBINE SPEED SENSOR GROUND).** Check the installing condition of ground connecting harness (used for both of turbine speed sensor 1, rear vehicle speed sensor).	Is the ground connecting harness installed to transmission body correctly, or the harness and connector terminals not damaged?	Go to step **7**.	When the poor installation of ground connecting harness, install it securely. Replace the transmission assembly when the harness is damaged. <Ref. to 5AT-37, Automatic Transmission Assembly.>
7	**CHECK INPUT SIGNAL FOR TCM.** 1) Connect all connectors. 2) Lift up the vehicle. 3) Start the engine. 4) Read the data of “Rear Wheel Speed” using Subaru Select Monitor. <Ref. to 5AT(diag)-18, Read Current Data.> NOTE: The speed difference between front and rear wheels lights the ABS warning light or the VDC warning light, but this does not indicate a malfunction. If the warning light is illuminated, clear the memory of ABS or VDC after completing AT control diagnosis. <Ref. to VDC(diag)-25, Clear Memory Mode.>	Does the speedometer indication in the combination meter change according to “Rear Wheel Speed” data?	Check for poor contact of rear vehicle speed sensor circuit harness, and repair the defective part.	Replace the transmission harness assembly.

GETtheMANUALS.org

AF:DTC P1707 AT AWD SOLENOID VALVE CIRCUIT MALFUNCTION

DTC DETECTING CONDITION:

Output signal circuit of transfer solenoid is open or shorted.

TROUBLE SYMPTOM:

- Tight corner braking phenomenon occurs.
- Drivability getting worse.

WIRING DIAGRAM:

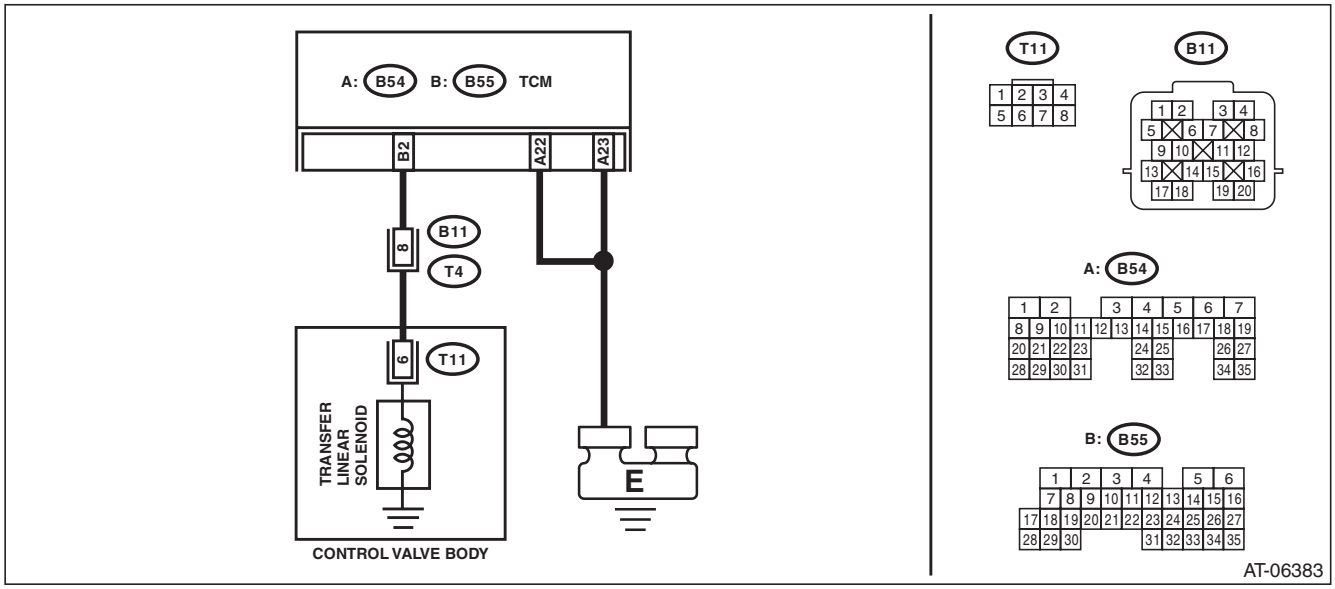

Step		Check	Yes	No
1	**CHECK HARNESS CONNECTOR BETWEEN TCM AND TRANSMISSION.** 1) Turn the ignition switch to OFF. 2) Disconnect the connectors from TCM and transmission. 3) Measure the resistance of harness between TCM connector and transmission connector. ***Connector & terminal*** ***(B54) No. 22 — Chassis ground:*** ***(B54) No. 23 — Chassis ground:*** ***(B55) No. 2 — (B11) No. 8:***	Is the resistance less than 1 Ω?	Go to step **2**.	Repair the open circuit of harness between TCM and transmission connector.
2	**CHECK HARNESS CONNECTOR BETWEEN TCM AND CHASSIS GROUND.** Measure the resistance of harness between TCM connector and chassis ground. ***Connector & terminal*** ***(B54) No. 23 — Chassis ground:***	Is the resistance 1 MΩ or more?	Go to step **3**.	Repair the short circuit of harness between TCM and transmission connector.

GETtheWIRINGS.org

	Step	Check	Yes	No
3	**CHECK HARNESS CONNECTOR BETWEEN TRANSMISSION AND CONTROL VALVE BODY.** 1) Turn the ignition switch to OFF. 2) Disconnect the connector from transmission. 3) Remove the transmission connector from bracket. 4) Lift up the vehicle. 5) Drain the ATF. **CAUTION:** **Do not drain ATF until it cools down.** 6) Remove the oil pan. 7) Disconnect the control valve body connector. 8) Measure the resistance between transmission connector and control valve body connector. ***Connector & terminal*** ***(T4) No. 8 — (T11) No. 6:***	Is the resistance less than 1 Ω?	Go to step **4**.	Repair the open circuit of harness between transmission connector and control valve body connector.
4	**CHECK HARNESS CONNECTOR BETWEEN TRANSMISSION AND CONTROL VALVE BODY.** Measure the resistance between transmission ground and control valve body connector. ***Connector & terminal*** ***(T11) No. 6 — Transmission ground:***	Is the resistance 1 MΩ or more?	Repair the open circuit of harness between control valve body connector and transmission ground.	Go to step **5**.
5	**CHECK TRANSFER SOLENOID.** Measure the resistance between transmission ground and control valve body connector. ***Connector & terminal*** ***(T11) No. 6 — Transmission ground:***	Is the resistance 3 — 9 Ω?	Go to step **6**.	Replace the control valve body. <Ref. to 5AT-55, Control Valve Body.>
6	**CHECK FOR POOR CONTACT.** Check the TCM connector, transmission connector and control valve body connector.	Is there poor contact, loosing terminal, entering foreign matter, or damaging connector body?	Repair the poor contact.	Go to step **7**.
7	**CHECK AFTER REPAIR.** 1) Perform the Clear Memory Mode. 2) Drive for a while and read DTC.	Is DTC displayed?	Replace the TCM. <Ref. to 5AT-57, Transmission Control Module (TCM).>	Temporary poor contact or open circuit occurs. Recheck that the harness connector has no faulty.

GETtheMANUALS.org

AG:DTC P1710 TORQUE CONVERTER TURBINE 2 SPEED SIGNAL CIRCUIT MALFUNCTION

DTC DETECTING CONDITION:

Input signal circuit of TCM is open or shorted.

TROUBLE SYMPTOM:

- Excessive shift shock
- Does not shift to 5th.

WIRING DIAGRAM:

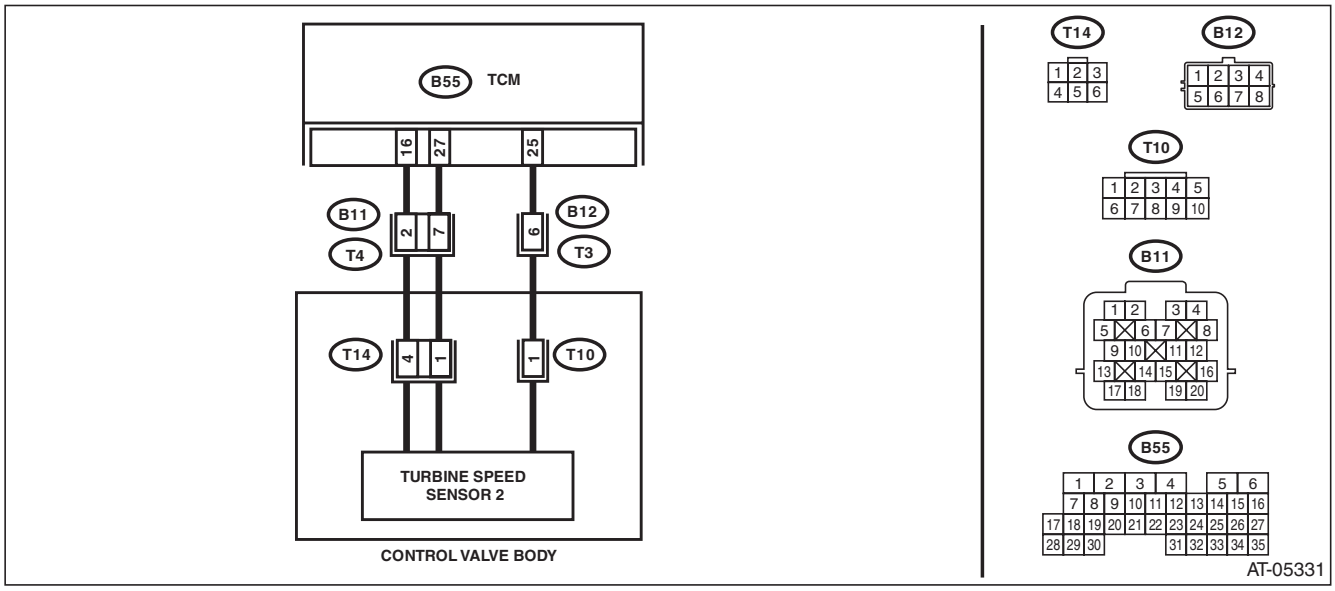

Step		Check	Yes	No
1	**CHECK TCM I/O SIGNAL.** Check the power supply and ground I/O signals. <Ref. to 5AT(diag)-13, ELECTRICAL SPECIFICATION, Transmission Control Module (TCM) I/O Signal.>	Is TCM I/O signal OK?	Go to step **2**.	Repair the open or short circuit for power supply and ground.
2	**CHECK TCM AND TRANSMISSION HARNESS CONNECTOR.** 1) Disconnect the connectors from TCM and transmission. 2) Measure the resistance of harness between TCM connector and transmission connector. ***Connector & terminal*** ***(B55) No. 16 — (B11) No. 2:*** ***(B55) No. 25 — (B12) No. 6:*** ***(B55) No. 27 — (B11) No. 7:***	Is the resistance less than 1 Ω?	Go to step **3**.	Repair the open circuit of harness between TCM and transmission connector.
3	**CHECK TCM AND TRANSMISSION HARNESS CONNECTOR.** Measure the resistance of harness between TCM connector and chassis ground. ***Connector & terminal*** ***(B55) No. 25 — Chassis ground:***	Is the resistance 1 MΩ or more?	Go to step **4**.	Repair the short circuit of harness between TCM and transmission connector.
4	**CHECK TCM POWER SUPPLY OUTPUT.** 1) Connect the connector to TCM. (Transmission connector is disconnected) 2) Turn the ignition switch to ON. 3) Measure the voltage between transmission connector and chassis ground. ***Connector & terminal*** ***(B11) No. 7 (+) — Chassis ground (–):***	Is the voltage 10 — 13 V?	Go to step **5**.	Replace the TCM. <Ref. to 5AT-57, Transmission Control Module (TCM).>

GETtheMANUALS.org

	Step	Check	Yes	No
5	**CHECK INPUT CIRCUIT OF TCM TURBINE SPEED SENSOR 2.** Measure the voltage between TCM connector terminals. ***Connector & terminal*** ***(B12) No. 6 (+) — (B11) No. 2 (–):***	Is the voltage 4 — 6 V?	Go to step **6**.	Replace the TCM. <Ref. to 5AT-57, Transmission Control Module (TCM).>
6	**CHECK INPUT SIGNAL FOR TCM.** 1) Connect all connectors. 2) Lift up the vehicle. 3) Start the engine. 4) Drive at 1st of manual mode. 5) Using Subaru Select Monitor, read the data of “AT Turbine Speed 2”. <Ref. to 5AT(diag)-18, Read Current Data.> NOTE: The speed difference between front and rear wheels lights the ABS warning light or the VDC warning light, but this does not indicate a malfunction. If the warning light is illuminated, clear the memory of ABS or VDC after completing AT control diagnosis. <Ref. to VDC(diag)-25, Clear Memory Mode.>	Does the speedometer indication in the combination meter change according to “AT Turbine Speed 2” data?	Check for poor contact of the turbine speed sensor 2 and transmission connector harness, and repair the fault location.	Go to step **7**.
7	**CHECK HARNESS CONNECTOR BETWEEN TRANSMISSION AND CONTROL VALVE BODY.** 1) Turn the ignition switch to OFF. 2) Disconnect the connector from transmission. 3) Remove the transmission connector from bracket. 4) Lift up the vehicle. 5) Drain the ATF. **CAUTION:** **Do not drain ATF until it cools down.** 6) Remove the oil pan. 7) Disconnect the control valve body connector. 8) Measure the resistance between transmission connector and control valve body connector. ***Connector & terminal*** ***(T3) No. 6 — (T10) No. 1:***	Is the resistance less than 1 Ω?	Go to step **8**.	Repair the open circuit of harness between transmission connector and control valve body connector.
8	**CHECK HARNESS CONNECTOR BETWEEN TRANSMISSION AND CONTROL VALVE BODY.** Measure the resistance between transmission ground and control valve body connector. ***Connector & terminal*** ***(T10) No. 1 — Transmission ground:***	Is the resistance 1 MΩ or more?	Replace the control valve body. <Ref. to 5AT-55, Control Valve Body.>	Repair the short circuit of harness between control valve body connector and transmission ground.

AH:DTC P1718 AT CAN COMMUNICATION CIRCUIT

NOTE:
Refer to “LAN SYSTEM” for diagnostic procedure. <Ref. to LAN(diag)-2, Basic Diagnostic Procedure.>

GETtheWIRINGS.org

AI: DTC P1724 AT EEPROM ERROR

DTC DETECTING CONDITION:
TCM EEPROM malfunction
TROUBLE SYMPTOM:
- AT learning is not finished.
- Shock occurs when selecting N → D, N → R.

Step		Check	Yes	No
1	**CHECK BATTERY.** 1) Turn the ignition switch to ON. 2) Read the data of “Battery voltage” using Subaru Select Monitor.	Is the “Battery voltage” 10 V or more?	Go to step **2**.	Check the battery.
2	**CHECK DTC.** 1) Turn the ignition switch to OFF. 2) Turn the ignition switch to ON after one minute.	Is DTC P1724 displayed as a temporary code?	Replace the TCM. <Ref. to 5AT-57, Transmission Control Module (TCM).>	Current condition is normal. Check for poor contact of TCM connector or harness.

GETtheWIRINGS.org

AJ:DTC P1817 SPORTS MODE SWITCH CIRCUIT (MANUAL SWITCH)

DTC DETECTING CONDITION:

Input signal circuit of manual mode switch is open or shorted.

TROUBLE SYMPTOM:

- Manual mode can not be set.
- Shift indicator displays when shifting “N” → “D”.

WIRING DIAGRAM:

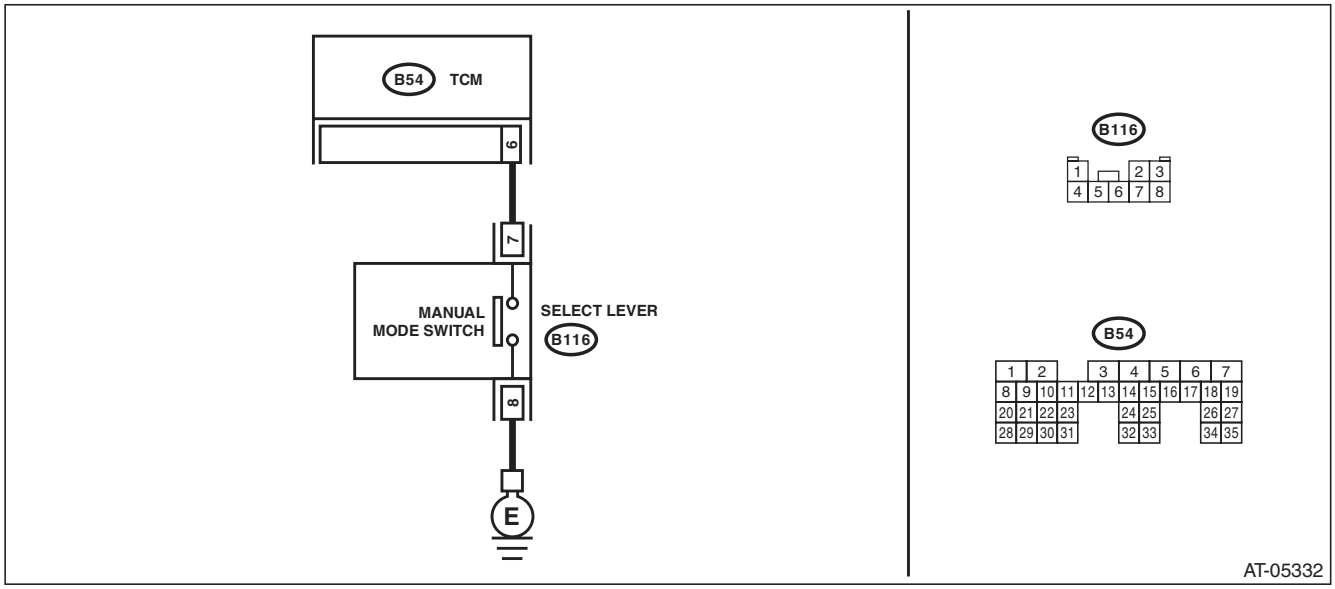

Step		Check	Yes	No
1	**CHECK GROUND CIRCUIT OF MANUAL MODE SWITCH.** 1) Turn the ignition switch to OFF. 2) Disconnect the connector from manual mode switch. 3) Measure the resistance of the harness between the manual mode switch connector and chassis ground. ***Connector & terminal*** ***(B116) No. 8 — Chassis ground:***	Is the resistance less than 1 Ω?	Go to step **2**.	Repair the open circuit of the harness between the manual mode switch and chassis ground.
2	**CHECK MANUAL MODE SWITCH.** Measure the resistance between manual mode switch terminals. ***Connector & terminal*** ***(B116) No. 7 — No. 8:***	Is the resistance 1 MΩ or more?	Go to step **3**.	Replace the select lever assembly. <Ref. to CS-22, Select Lever.>
3	**CHECK MANUAL MODE SWITCH.** 1) Shift the select lever to manual mode. 2) Measure the resistance between manual mode switch terminals. ***Connector & terminal*** ***(B116) No. 7 — No. 8:***	Is the resistance less than 1 Ω?	Go to step **4**.	Replace the select lever assembly. <Ref. to CS-22, Select Lever.>
4	**CHECK HARNESS CONNECTOR BETWEEN TCM AND MANUAL MODE SWITCH.** 1) Disconnect the connector from TCM. 2) Measure the resistance of harness between TCM connector and manual mode switch connector. ***Connector & terminal*** ***(B116) No. 7 — (B54) No. 6:***	Is the resistance less than 1 Ω?	Go to step **5**.	Repair the open circuit of the harness or poor contact of the connector between TCM and manual mode switch connector.

GETtheWIRINGS.org

Step		Check	Yes	No
5	**CHECK HARNESS CONNECTOR BETWEEN TCM AND MANUAL MODE SWITCH.** 1) Disconnect the connector from TCM. 2) Measure the resistance of the harness between the manual mode switch connector and chassis ground. ***Connector & terminal*** ***(B116) No. 7 — Chassis ground:***	Is the resistance 1 MΩ or more?	Go to step **6**.	Repair the short circuit of the harness between TCM and manual mode switch connector.
6	**CHECK INPUT SIGNAL FOR TCM.** 1) Connect the connector to TCM and manual mode switch. 2) Turn the ignition switch to ON. 3) Shift the select lever to normal mode. 4) Measure the voltage of signal to TCM. ***Connector & terminal*** ***(B54) No. 6 (+) — Chassis ground (–):***	Is the voltage 10 V or more?	Go to step **7**.	Replace the TCM. <Ref. to 5AT-57, Transmission Control Module (TCM).>
7	**CHECK FOR POOR CONTACT.**	Is there poor contact of the manual mode switch circuit?	Repair the poor contact.	Replace the TCM. <Ref. to 5AT-57, Transmission Control Module (TCM).>

GETtheMANUALS.org

AK:DTC P1840 TRANSMISSION FLUID PRESSURE SENSOR SWITCH A CIRCUIT

DTC DETECTING CONDITION:
Front brake oil pressure switch malfunction
TROUBLE SYMPTOM:
Excessive shift shock

NOTE:
Refer to DTC P0751 for diagnostic procedure. <Ref. to 5AT(diag)-59, DTC P0751 SHIFT SOLENOID “A” PERFORMANCE OR STUCK OFF, Diagnostic Procedure with Diagnostic Trouble Code (DTC).>

AL:DTC P1841 TRANSMISSION FLUID PRESSURE SENSOR SWITCH B CIRCUIT

DTC DETECTING CONDITION:
Forward brake oil pressure switch malfunction.
TROUBLE SYMPTOM:
Excessive shift shock

NOTE:
Refer to DTC P0771 for diagnostic procedure. <Ref. to 5AT(diag)-75, DTC P0771 SHIFT SOLENOID “E” PERFORMANCE OR STUCK OFF, Diagnostic Procedure with Diagnostic Trouble Code (DTC).>

AM:DTC P1842 TRANSMISSION FLUID PRESSURE SENSOR SWITCH C CIRCUIT

DTC DETECTING CONDITION:
Input clutch oil pressure switch is malfunction.
TROUBLE SYMPTOM:
Excessive shift shock

NOTE:
Refer to DTC P0756 for diagnostic procedure. <Ref. to 5AT(diag)-63, DTC P0756 SHIFT SOLENOID “B” PERFORMANCE OR STUCK OFF, Diagnostic Procedure with Diagnostic Trouble Code (DTC).>

AN:DTC P1843 TRANSMISSION FLUID PRESSURE SENSOR SWITCH D CIRCUIT

DTC DETECTING CONDITION:
Direct clutch oil pressure switch malfunction.
TROUBLE SYMPTOM:
Excessive shift shock

NOTE:
Refer to DTC P0766 for diagnostic procedure. <Ref. to 5AT(diag)-71, DTC P0766 SHIFT SOLENOID “D” PERFORMANCE OR STUCK OFF, Diagnostic Procedure with Diagnostic Trouble Code (DTC).>

AO:DTC P1844 TRANSMISSION FLUID PRESSURE SENSOR SWITCH E CIRCUIT

DTC DETECTING CONDITION:
High & low reverse clutch oil pressure switch malfunction.
TROUBLE SYMPTOM:
Excessive shift shock

NOTE:
Refer to DTC P0761 for diagnostic procedure. <Ref. to 5AT(diag)-67, DTC P0761 SHIFT SOLENOID “C” PERFORMANCE OR STUCK OFF, Diagnostic Procedure with Diagnostic Trouble Code (DTC).>

GETtheWIRINGS.org

17. Diagnostic Procedure without Diagnostic Trouble Code (DTC)

A: CHECK SHIFT INDICATOR

DIAGNOSIS:

- Output signal circuit of shift indicator is open or shorted.
- Combination meter malfunction

TROUBLE SYMPTOM:

- Shift indicator does not display or remains displayed.
- Shift indicator display does not change.

WIRING DIAGRAM:

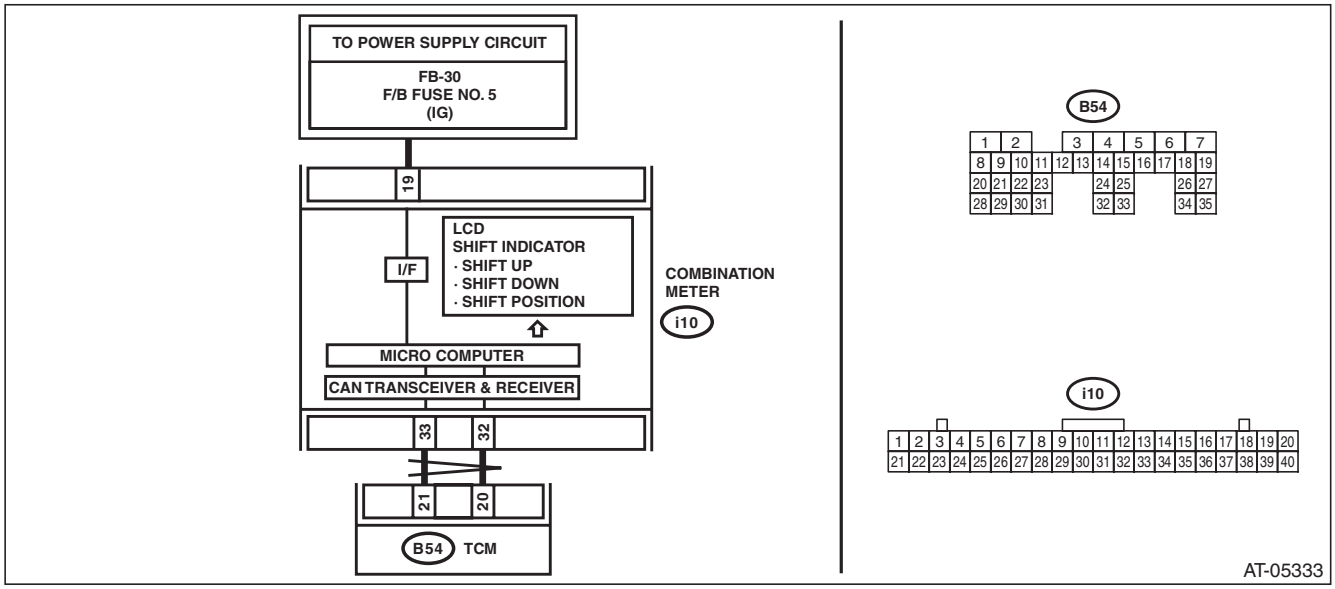

Step		Check	Yes	No
1	**CHECK TCM.** Check the DTC relating the TCM using the Subaru Select Monitor.	Is DTC displayed?	Perform the diagnosis according to DTC.	Go to step **2**.
2	**CHECK COMBINATION METER.** Check the DTC of combination meter.	Is DTC displayed?	Perform the diagnosis according to DTC.	Go to step **3**.
3	**CHECK TCM.** 1) Turn the ignition switch to OFF. 2) Connect the Subaru Select Monitor to data link connector. 3) Turn the ignition switch to ON. 4) Run the Subaru Select Monitor. 5) Shift the select lever to manual mode. 6) Read the data of “Gear Position” using Subaru Select Monitor.	Is the gear position “1”?	Go to step **4**.	Replace the TCM. <Ref. to 5AT-57, Transmission Control Module (TCM).>
4	**CHECK TCM.** 1) Shift up the select lever. 2) Read the data of “Gear Position” using Subaru Select Monitor.	Is the gear position “2”?	Replace the combination meter assembly. <Ref. to IDI-21, Combination Meter.>	Replace the TCM. <Ref. to 5AT-57, Transmission Control Module (TCM).>

GETtheMANUALS.org

18. Diagnostics with Phenomenon

A: INSPECTION

Symptoms	Faulty parts
Shifting vehicle speed is low on “D” range.	• Front and rear vehicle speed sensors • Accelerator pedal position sensor • Throttle position sensor • ATF temperature sensor • CAN communication signal
Shifting vehicle speed is high on “D” range.	• Front and rear vehicle speed sensors • Accelerator pedal position sensor • Throttle position sensor • CAN communication signal • Brake switch signal • ATF temperature sensor
Excessive shift shock (“N” → “D” range)	• Engine idle speed • Engine speed signal • Accelerator pedal position sensor • Throttle position sensor • Control cable adjustment • ATF temperature sensor • Oil pressure switch 1 and front brake solenoid valve • CAN communication signal • Fluid level and condition • TCM power supply
Excessive shift shock on 1st of “D” range → 2nd of “D” range or “1st of manual mode” → “2nd of manual mode”.	• Accelerator pedal position sensor • Throttle position sensor • Control cable adjustment • Oil pressure switch 4 and direct clutch solenoid valve • CAN communication signal • Engine speed signal • Turbine speed sensor 1 and turbine speed sensor 2 • Front and rear vehicle speed sensors • Fluid level and condition
Excessive shift shock on 2nd of “D” range → 3rd of “D” range or “2nd of manual mode” → “3rd of manual mode”.	• Accelerator pedal position sensor • Throttle position sensor • Control cable adjustment • Oil pressure switch 5 and high & low reverse clutch solenoid valve • CAN communication signal • Engine speed signal • Turbine speed sensor 1 and turbine speed sensor 2 • Front and rear vehicle speed sensors • Fluid level and condition
Excessive shift shock on 3rd of “D” range → 4th of “D” range or “3rd of manual mode” → “4th of manual mode”.	• Accelerator pedal position sensor • Throttle position sensor • Control cable adjustment • Oil pressure switch 3 and input clutch solenoid valve • CAN communication signal • Engine speed signal • Turbine speed sensor 1 and turbine speed sensor 2 • Front and rear vehicle speed sensors • Fluid level and condition

GETtheWIRINGS.org

Symptoms	Faulty parts
Excessive shift shock on 4th of “D” range → 5th of “D” range or “4th of manual mode” → “5th of manual mode”.	• Accelerator pedal position sensor • Throttle position sensor • Control cable adjustment • Oil pressure switch 1 and front brake solenoid valve • CAN communication signal • Engine speed signal • Turbine speed sensor 1 and turbine speed sensor 2 • Front and rear vehicle speed sensors • Fluid level and condition
Excessive shock at kick down.	• Accelerator pedal position sensor • Throttle position sensor • Control cable adjustment • CAN communication signal • Engine speed signal • Turbine speed sensor 1 and turbine speed sensor 2 • Front and rear vehicle speed sensors • Fluid level and condition
Excessive shock at shift up.	• Accelerator pedal position sensor • Throttle position sensor • Control cable adjustment • Engine speed signal • CAN communication signal • Turbine speed sensor 1 and turbine speed sensor 2 • Front and rear vehicle speed sensors • Fluid level and condition
Excessive shock at lock up.	• Accelerator pedal position sensor • Throttle position sensor • Control cable adjustment • Engine speed signal • CAN communication signal • Turbine speed sensor 1 and turbine speed sensor 2 • Lock up solenoid valve • Front and rear vehicle speed sensors • Fluid level and condition
Excessive shock at engine brake.	• Accelerator pedal position sensor • Throttle position sensor • Control cable adjustment • CAN communication signal • Fluid level and condition • Line pressure • Forward brake solenoid valve
Judder is occurred at lock up.	• Fluid level and condition • Engine speed signal • Turbine speed sensor 1 and turbine speed sensor 2 • Front and rear vehicle speed sensors • Accelerator pedal position sensor • Throttle position sensor • Lock up solenoid valve • ATF temperature sensor
Noise at “R”, “N” and “D” range.	• Fluid level and condition • Engine speed signal • ATF temperature sensor
Hold at “D” range or 1st on manual mode.	• Fluid level and condition • Front and rear vehicle speed sensors • Direct clutch solenoid valve • Line pressure • Up switch signal • CAN communication signal • Accelerator pedal position sensor

GETtheMANUALS.org

Symptoms	Faulty parts
Hold at “D” range or 2nd on manual mode.	• Fluid level and condition • Front and rear vehicle speed sensors • Forward brake solenoid valve • Line pressure • Up switch signal • Down switch signal • CAN communication signal • Accelerator pedal position sensor
Hold at “D” range or 3rd on manual mode.	• Fluid level and condition • Front and rear vehicle speed sensors • Line pressure • Up switch signal • Down switch signal • CAN communication signal • Accelerator pedal position sensor
Hold at “D” range or 4th on manual mode.	• Fluid level and condition • Front and rear vehicle speed sensors • Oil pressure switch 3 and input clutch solenoid valve • Oil pressure switch 4 and direct clutch solenoid valve • Oil pressure switch 5 and high & low reverse clutch solenoid valve • Forward brake solenoid valve • Front brake solenoid valve • Line pressure • Up switch signal • Down switch signal • CAN communication signal • Accelerator pedal position sensor • TCM power supply
Hold at “D” range or 5th on manual mode.	• Fluid level and condition • Front and rear vehicle speed sensors • Oil pressure switch 1 and front brake solenoid valve • Line pressure • Down switch signal • CAN communication signal • Accelerator pedal position sensor
Gear does not shift 1st of “D” range → 2nd of “D” range or “1st of manual mode” → “2nd of manual mode”.	• Fluid level and condition • Front and rear vehicle speed sensors • Oil pressure switch 4 and direct clutch solenoid valve • Line pressure • Up switch signal • CAN communication signal • Accelerator pedal position sensor
Gear does not shift 2nd of “D” range → 3rd of “D” range or “2nd of manual mode” → “3rd of manual mode”.	• Fluid level and condition • Front and rear vehicle speed sensors • Oil pressure switch 5 and high & low reverse clutch solenoid valve • Line pressure • Up switch signal • CAN communication signal • Accelerator pedal position sensor
Gear does not shift 3rd of “D” range → 4th of “D” range or “3rd of manual mode” → “4th of manual mode”.	• Fluid level and condition • Front and rear vehicle speed sensors • Oil pressure switch 3 and input clutch solenoid valve • Oil pressure switch 1 and front brake solenoid valve • Line pressure • Up switch signal • CAN communication signal • Accelerator pedal position sensor

GETtheMANUALS.org

Symptoms	Faulty parts
Gear does not shift 4th of “D” range → 5th of “D” range or “4th of manual mode” → “5th of manual mode”.	• Fluid level and condition • Front and rear vehicle speed sensors • Oil pressure switch 1 and front brake solenoid valve • Oil pressure switch 4 and direct clutch solenoid valve • Turbine speed sensor 1 and turbine speed sensor 2 • ATF temperature sensor • Line pressure • Up switch signal • CAN communication signal • Accelerator pedal position sensor
Gear does not shift down to 4th on “D” range or manual mode.	• Fluid level and condition • Front and rear vehicle speed sensors • Oil pressure switch 1 and front brake solenoid valve • Oil pressure switch 4 and direct clutch solenoid valve • Line pressure • Down switch signal • CAN communication signal • Accelerator pedal position sensor
Gear does not shift down to 3rd on “D” range or manual mode.	• Fluid level and condition • Front and rear vehicle speed sensors • Oil pressure switch 3 and input clutch solenoid valve • Oil pressure switch 1 and front brake solenoid valve • Line pressure • Down switch signal • CAN communication signal • Accelerator pedal position sensor • TCM power supply
Gear does not shift down to 2nd on “D” range or manual mode.	• Fluid level and condition • Front and rear vehicle speed sensors • Oil pressure switch 5 and high & low reverse clutch solenoid • Line pressure • Down switch signal • CAN communication signal • Accelerator pedal position sensor
Gear does not shift down to 1st on “D” range or manual mode.	• Fluid level and condition • Front and rear vehicle speed sensors • Oil pressure switch 4 and direct clutch solenoid valve • Line pressure • Down switch signal • CAN communication signal • Accelerator pedal position sensor
No lock-up occurs.	• Fluid level and condition • Line pressure • Engine speed signal • Turbine speed sensor 1 and turbine speed sensor 2 • Lock up solenoid valve • CAN communication signal • ATF temperature sensor • Accelerator pedal position sensor • Brake switch signal • Range signal
No shift shock occurred when shifting 1st of “D” range → 2nd of “D” range or “1st of manual mode” → “2nd of manual mode”. Or clutch slipping occurred.	• Fluid level and condition • Front and rear vehicle speed sensors • Oil pressure switch 4 and direct clutch solenoid valve • Line pressure • CAN communication signal

GETtheMANUALS.org

Symptoms	Faulty parts
No shift shock occurred when shifting 2nd of “D” range → 3rd of “D” range or “2nd of manual mode” → “3rd of manual mode”. Or clutch slipping occurred.	• Fluid level and condition • Front and rear vehicle speed sensors • Oil pressure switch 5 and high & low reverse clutch solenoid valve • Line pressure • CAN communication signal
No shift shock occurred when shifting 3rd of “D” range → 4th of “D” range or “3rd of manual mode” → “4th of manual mode”. Or clutch slipping occurred.	• Fluid level and condition • Front and rear vehicle speed sensors • Oil pressure switch 3 and input clutch solenoid valve • Oil pressure switch 1 and front brake solenoid valve • Line pressure • CAN communication signal
No shift shock occurred when shifting 4th of “D” range → 5th of “D” range or “4th of manual mode” → “5th of manual mode”. Or clutch slipping occurred.	• Fluid level and condition • Front and rear vehicle speed sensors • Oil pressure switch 1 and front brake solenoid valve • Oil pressure switch 4 and direct clutch solenoid valve • Line pressure • Accelerator pedal position sensor • Throttle position sensor
Engine skids when shifting 5th of “D” range → 4th of “D” range or “5th of manual mode” → “4th of manual mode”. Or slipping occurred.	• Fluid level and condition • Front and rear vehicle speed sensors • Oil pressure switch 1 and front brake solenoid valve • Oil pressure switch 4 and direct clutch solenoid valve • Line pressure • Accelerator pedal position sensor • Throttle position sensor
Engine skids when shifting 4th of “D” range → 3rd of “D” range or “4th of manual mode” → “3rd of manual mode”. Or slipping occurred.	• Fluid level and condition • Front and rear vehicle speed sensors • Oil pressure switch 3 and input clutch solenoid valve • Oil pressure switch 1 and front brake solenoid valve • Line pressure • Accelerator pedal position sensor • Throttle position sensor
Engine skids when shifting 3rd of “D” range → 2nd of “D” range or “3rd of manual mode” → “2nd of manual mode”. Or slipping occurred.	• Fluid level and condition • Front and rear vehicle speed sensors • Oil pressure switch 5 and high & low reverse clutch solenoid valve • Oil pressure switch 4 and direct clutch solenoid valve • Line pressure • Accelerator pedal position sensor • Throttle position sensor
Engine skids when shifting 2nd of “D” range → 1st of “D” range or “2nd of manual mode” → “1st of manual mode”. Or slipping occurred.	• Fluid level and condition • Front and rear vehicle speed sensors • Oil pressure switch 4 and direct clutch solenoid valve • Line pressure • Accelerator pedal position sensor • Throttle position sensor
Engine brake does not function at 5th → 4th of manual mode.	• Inhibitor switch • Fluid level and condition • Control cable adjustment • Manual mode switch • Oil pressure switch 1 • Down switch signal
Engine brake does not function at 4th → 3rd of manual mode.	• Inhibitor switch • Fluid level and condition • Control cable adjustment • Manual mode switch • Oil pressure switch 1 and oil pressure switch 3 • Down switch signal

GETtheMANUALS.org

Symptoms	Faulty parts
Engine brake does not function at 3rd → 2nd of manual mode.	• Inhibitor switch • Fluid level and condition • Control cable adjustment • Manual mode switch • Oil pressure switch 5 • Forward brake solenoid valve
Engine brake does not function at 2nd → 1st of manual mode.	• Inhibitor switch • Fluid level and condition • Control cable adjustment • Manual mode switch • Oil pressure switch 4 • Forward brake solenoid valve
Excessive acceleration failure on “D” range.	• Fluid level and condition • Line pressure • Accelerator pedal position sensor • Throttle position sensor • CAN communication signal • Inhibitor switch • Control cable adjustment • Front and rear vehicle speed sensors
Excessive acceleration failure in “R” range.	• Fluid level and condition • Line pressure • Accelerator pedal position sensor • Throttle position sensor • Oil pressure switch 5 and high & low reverse clutch solenoid valve • CAN communication signal • Inhibitor switch • Control cable adjustment • Front and rear vehicle speed sensors
Engine skids when start driving (1st) the vehicle. Or slipping occurred.	• Fluid level and condition • Line pressure • Accelerator pedal position sensor • Throttle position sensor • CAN communication signal
Engine skids when driving at 2nd. Or slipping occurred.	• Fluid level and condition • Line pressure • Accelerator pedal position sensor • Throttle position sensor • CAN communication signal • Oil pressure switch 4 and direct clutch solenoid valve
Engine skids when driving at 3rd. Or slipping occurred.	• Fluid level and condition • Line pressure • Accelerator pedal position sensor • Throttle position sensor • CAN communication signal • Oil pressure switch 5 and high & low reverse clutch solenoid valve
Engine skids when driving at 4th. Or slipping occurred.	• Fluid level and condition • Line pressure • Accelerator pedal position sensor • Throttle position sensor • CAN communication signal • Oil pressure switch 3 and input clutch solenoid valve

GETtheMANUALS.org

Symptoms	Faulty parts
Engine skids when driving at 5th. Or slipping occurred.	• Fluid level and condition • Line pressure • Accelerator pedal position sensor • Throttle position sensor • CAN communication signal • Oil pressure switch 1 and front brake solenoid valve
Slip at lock up.	• Fluid level and condition • Line pressure • Engine speed signal • Turbine speed sensor 1 and turbine speed sensor 2 • Lock up solenoid valve • CAN communication signal
Maximum vehicle speed is low.	• Fluid level and condition • Line pressure • Accelerator pedal position sensor • Throttle position sensor • CAN communication signal • Direct clutch solenoid valve • Front and rear vehicle speed sensors
There is completely no creep.	• Fluid level and condition • Engine speed signal • CAN communication signal • Oil pressure switch 4 and direct clutch solenoid valve • Line pressure
Excessive large creep.	• Engine speed signal • CAN communication signal • Oil pressure switch 4
Vehicle cannot be parking condition on “P” range. Parking condition is not released though shifting to other ranges.	• Inhibitor switch • Control cable adjustment
Vehicle can drive on “P” range.	• Inhibitor switch • Fluid level and condition • Control cable adjustment • Line pressure
Vehicle can drive on “N” range.	• Inhibitor switch • Fluid level and condition • Control cable adjustment • Line pressure
Vehicle cannot drive at any range.	• Fluid level and condition • Line pressure • Inhibitor switch • Control cable adjustment • Loosing or damaging of propeller shaft. • Loosing or damaging of drive shaft.
Vehicle cannot drive on “D” range.	• Fluid level and condition • Line pressure • Inhibitor switch • Control cable adjustment • Loosing or damaging of propeller shaft. • Loosing or damaging of drive shaft.
Vehicle cannot drive on “R” range.	• Fluid level and condition • Line pressure • Inhibitor switch • Control cable adjustment • Loosing or damaging of propeller shaft. • Loosing or damaging of drive shaft.

GETtheMANUALS.org

Symptoms	Faulty parts
Engine cannot start on “N” or “P” range.	• Starter • Control cable adjustment • Inhibitor switch • CAN communication line • TCM
Engine start other than “N” or “P” range.	• Starter • Control cable adjustment • Inhibitor switch • TCM
Engine stalls.	• Fluid level and condition • Engine speed signal • Turbine speed sensor 1 and turbine speed sensor 2 • Lock up solenoid valve • Line pressure
Engine stalls when shifting to “N” → “D” and “R” range.	• Fluid level and condition • Engine speed signal • Turbine speed sensor 1 and turbine speed sensor 2 • Lock up solenoid valve • Line pressure

GETtheMANUALS.org

GETtheMANUALS.org

MANUAL TRANSMISSION AND DIFFERENTIAL

6MT

		Page
1.	General Description	2
2.	Transmission Gear Oil	24
3.	Manual Transmission Assembly	25
4.	Transmission Mounting System	33
5.	Oil Seal	35
6.	Differential Side Retainer Oil Seal	36
7.	Switches and Harness	37
8.	Preparation for Overhaul	39
9.	Transfer Case and Extension Case Assembly	40
10.	Transfer Drive Gear	45
11.	Transfer Driven Gear	47
12.	Center Differential	49
13.	Shift Link Assembly	50
14.	Transmission Case	57
15.	Main Shaft Assembly for Single-Range	60
16.	Drive Pinion Shaft Assembly	67
17.	Front Differential Assembly	77
18.	Reverse Idler Gear	85
19.	Shifter Fork and Rod	90
20.	General Diagnostic Table	95

GETtheMANUALS.org

1. General Description

A: SPECIFICATION

1. MANUAL TRANSMISSION AND DIFFERENTIAL

Model			2.5 L non-turbo		2.5 L turbo
			Except for OUTBACK	OUTBACK	
Type			6-forward speeds and 1-reverse		
Transmission gear ratio		1st	3.454		
		2nd	1.947		
		3rd	1.296		
		4th	0.972		
		5th	0.825		0.780
		6th	0.695		0.666
		Rev.	3.636		
Front reduction gear	Final	Type of gear	Hypoid		
		Gear ratio	4.111	4.444	4.111
Rear reduction gear	Transfer	Type of gear	Helical		
		Gear ratio	1.000		
	Final	Type of gear	Hypoid		
		Gear ratio	4.111	4.444	4.111
Front differential	Type and number of gear		Straight bevel gear (bevel pinion: 2, bevel gear: 2)		
Center differential	Type and number of gear		Straight bevel gear (bevel pinion: 2, bevel gear: 2, viscous coupling)		
Transmission gear oil			GL-5		
Transmission gear oil capacity		Single-range model	3.7 ℓ (3.9 US qt, 3.3 Imp qt)		

2. TRANSMISSION GEAR OIL

Recommended oil:
GL-5 (75W-90) or equivalent

GETtheMANUALS.org

B: COMPONENT

1. TRANSMISSION CASE

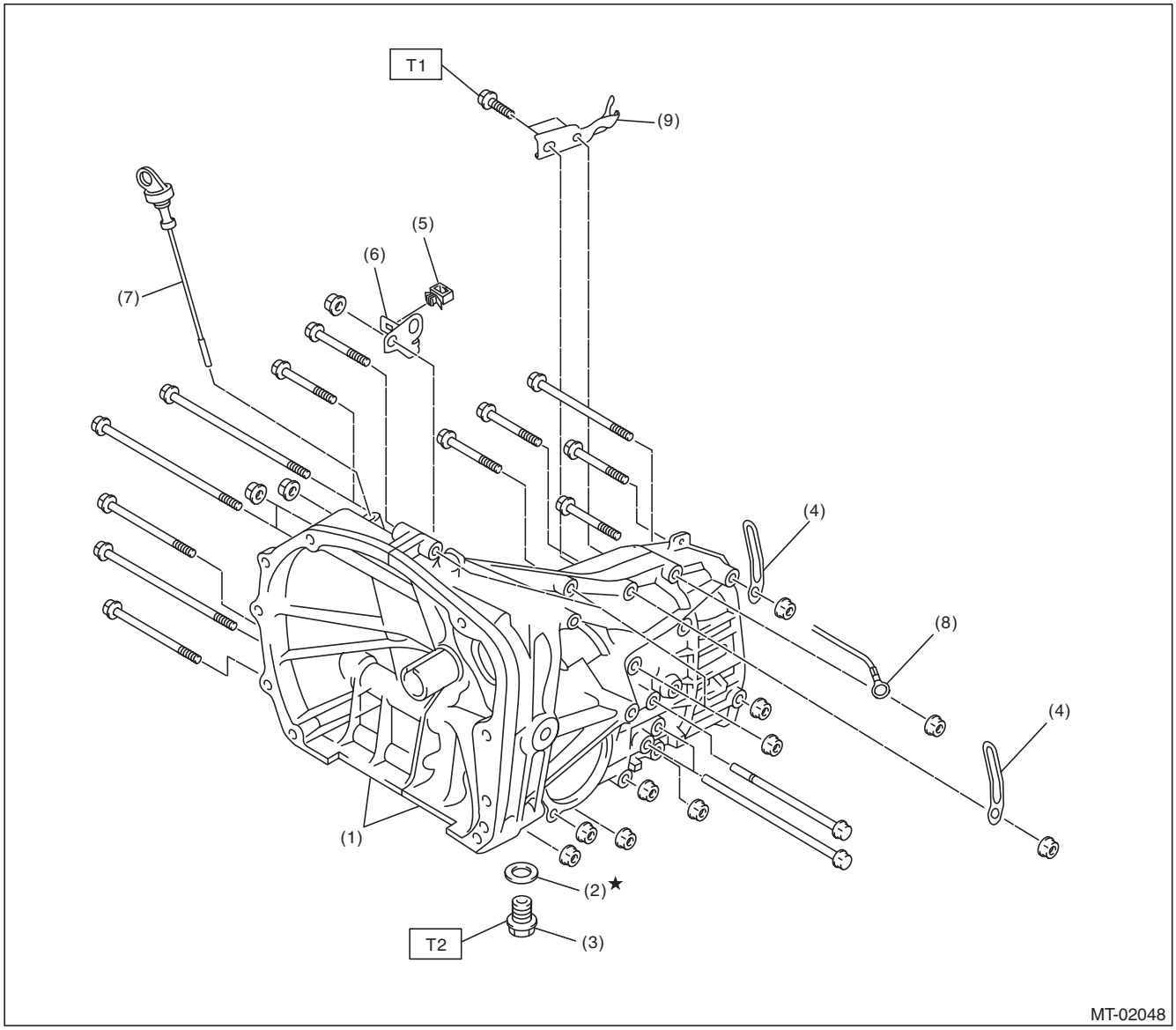

(1)	Transmission case ASSY	(6)	Harness bracket
(2)	Gasket	(7)	Oil level gauge
(3)	Drain plug	(8)	Transmission radio ground cord
(4)	Harness clip	(9)	Select bracket
(5)	Clamp		

Tightening torque:N·m (kgf-m, ft-lb)

T1: 18 (1.8, 13.3)

T2: 44 (4.5, 32.5) (Aluminum gasket, silver)

70 (7.1, 51.6) (Copper gasket, brown)

70 (7.1, 51.6) (Metal gasket, black)

GETtheMANUALS.org

Transmission case tightening torque

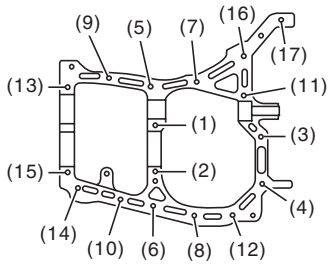

Bolt No.	Bolt size mm	Tightening torque: N·m (kgf-m, ft-lb)
(5) — (15)	8	25 (2.5, 18.4)
(1) — (4) (16), (17)	10	40 (4.1, 29.5)

GETtheMANUALS.org

2. DRIVE PINION ASSEMBLY

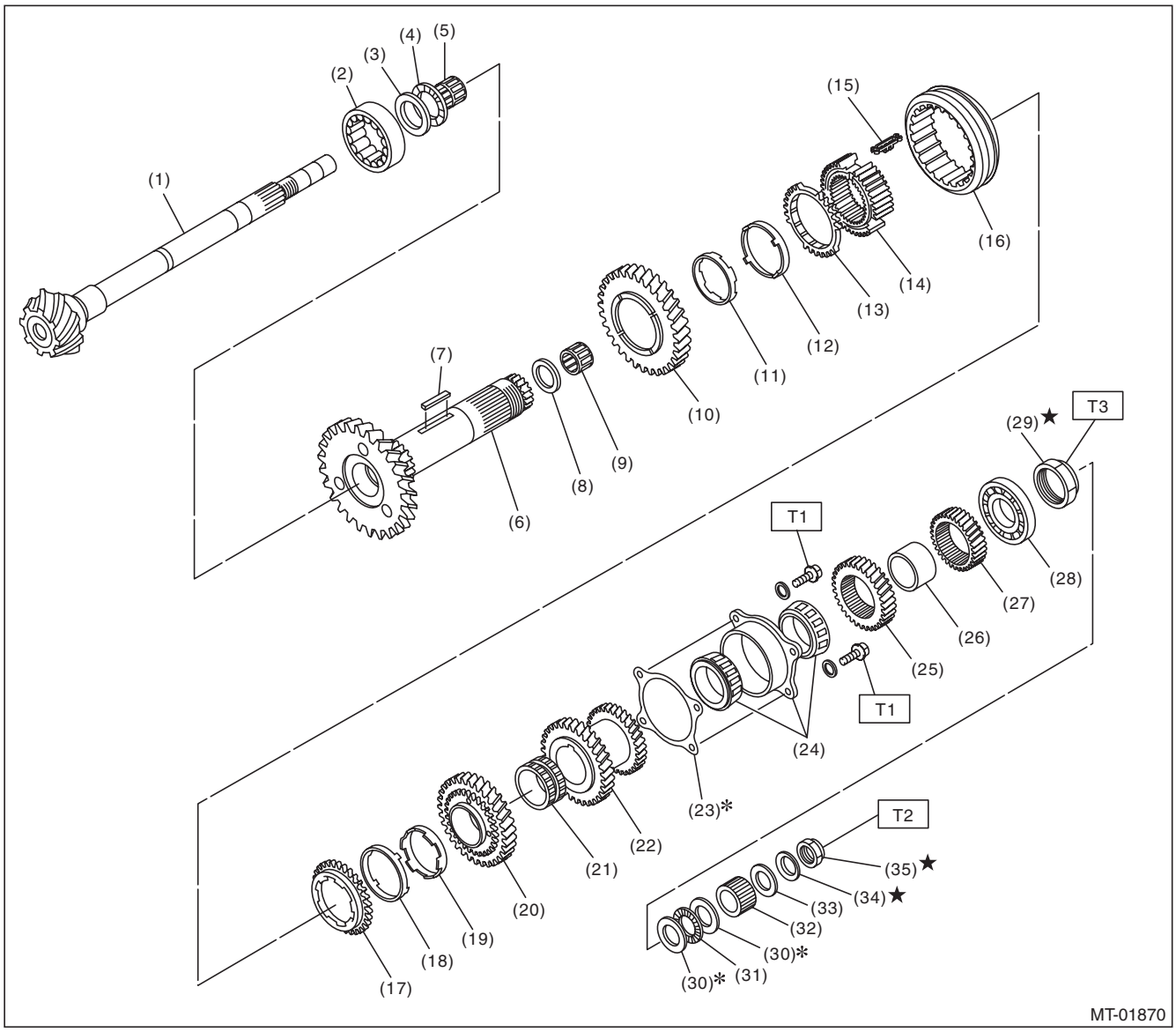

(1)	Drive pinion shaft	(15)	1st-2nd shifting insert key	(29)	Lock nut
(2)	Roller bearing	(16)	1st-2nd coupling sleeve	(30)	Adjusting washer
(3)	Washer	(17)	Outer baulk ring	(31)	Thrust bearing
(4)	Thrust bearing	(18)	2nd synchro cone	(32)	Differential bevel gear sleeve
(5)	Needle bearing	(19)	Inner baulk ring	(33)	Adjusting washer
(6)	Driven shaft	(20)	2nd driven gear	(34)	Lock washer
(7)	Key	(21)	2nd driven gear bushing	(35)	Lock nut
(8)	Drive pinion collar	(22)	3rd-4th driven gear		
(9)	Needle bearing	(23)	Drive pinion shim		
(10)	1st driven gear	(24)	Double taper roller bearing		
(11)	Inner baulk ring	(25)	5th driven gear		
(12)	1st synchro cone	(26)	Drive pinion spacer		
(13)	Outer baulk ring	(27)	6th driven gear		
(14)	1st-2nd synchronizer hub	(28)	Ball bearing		

Tightening torque:N·m (kgf-m, ft-lb)

T1: 30 (3.1, 22.1)
T2: 126 (12.8, 92.9)
T3: 440 (44.9, 324.5)

GETtheMANUALS.org

3. MAIN SHAFT FOR SINGLE-RANGE

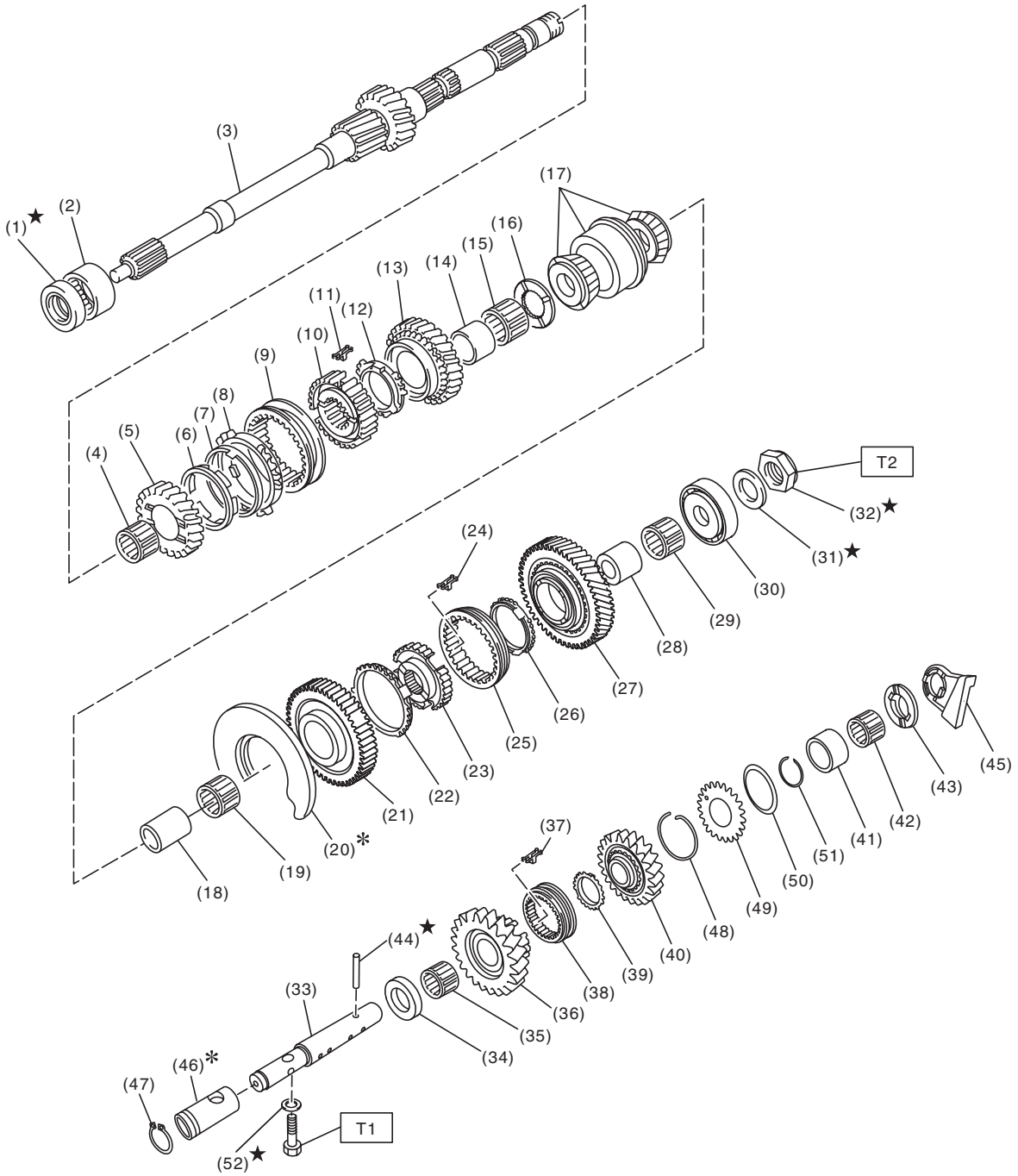

MT-02298

GETtheMANUALS.org

(1) Oil seal
(2) Needle bearing
(3) Transmission main shaft
(4) Needle bearing
(5) 3rd drive gear
(6) Inner baulk ring
(7) 3rd synchro cone
(8) Outer baulk ring
(9) 3rd-4th coupling sleeve
(10) 3rd-4th synchronizer hub
(11) 3rd-4th shifting insert key
(12) 4th baulk ring
(13) 4th drive gear
(14) 4th needle bearing race
(15) Needle bearing
(16) 4th gear thrust washer
(17) Double taper roller bearing
(18) 5th needle bearing race
(19) Needle bearing
(20) Main shaft rear plate
(21) 5th drive gear
(22) 5th baulk ring
(23) 5th-6th synchronizer hub
(24) 5th-6th shifting insert key
(25) 5th-6th coupling sleeve
(26) 6th baulk ring
(27) 6th drive gear
(28) 6th needle bearing race
(29) Needle bearing
(30) Ball bearing
(31) Lock washer
(32) Lock nut
(33) Reverse idler gear shaft
(34) Washer
(35) Needle bearing
(36) Reverse idler gear No. 2
(37) Reverse shifting insert key
(38) Reverse coupling sleeve
(39) Baulk ring
(40) Reverse idler gear
(41) Reverse idler gear collar
(42) Needle bearing
(43) Washer
(44) Straight pin
(45) Oil case guide
(46) Reverse idler gear bushing
(47) Snap ring
(48) Reverse idler spring
(49) Reverse idler sub gear
(50) Friction plate
(51) Snap ring
(52) Gasket

Tightening torque:N·m (kgf-m, ft-lb)
T1: 25 (2.5, 18.4)
T2: 160 (16.3, 118.0)

GETtheMANUALS.org

4. SHIFTER FORK AND SHIFTER ROD

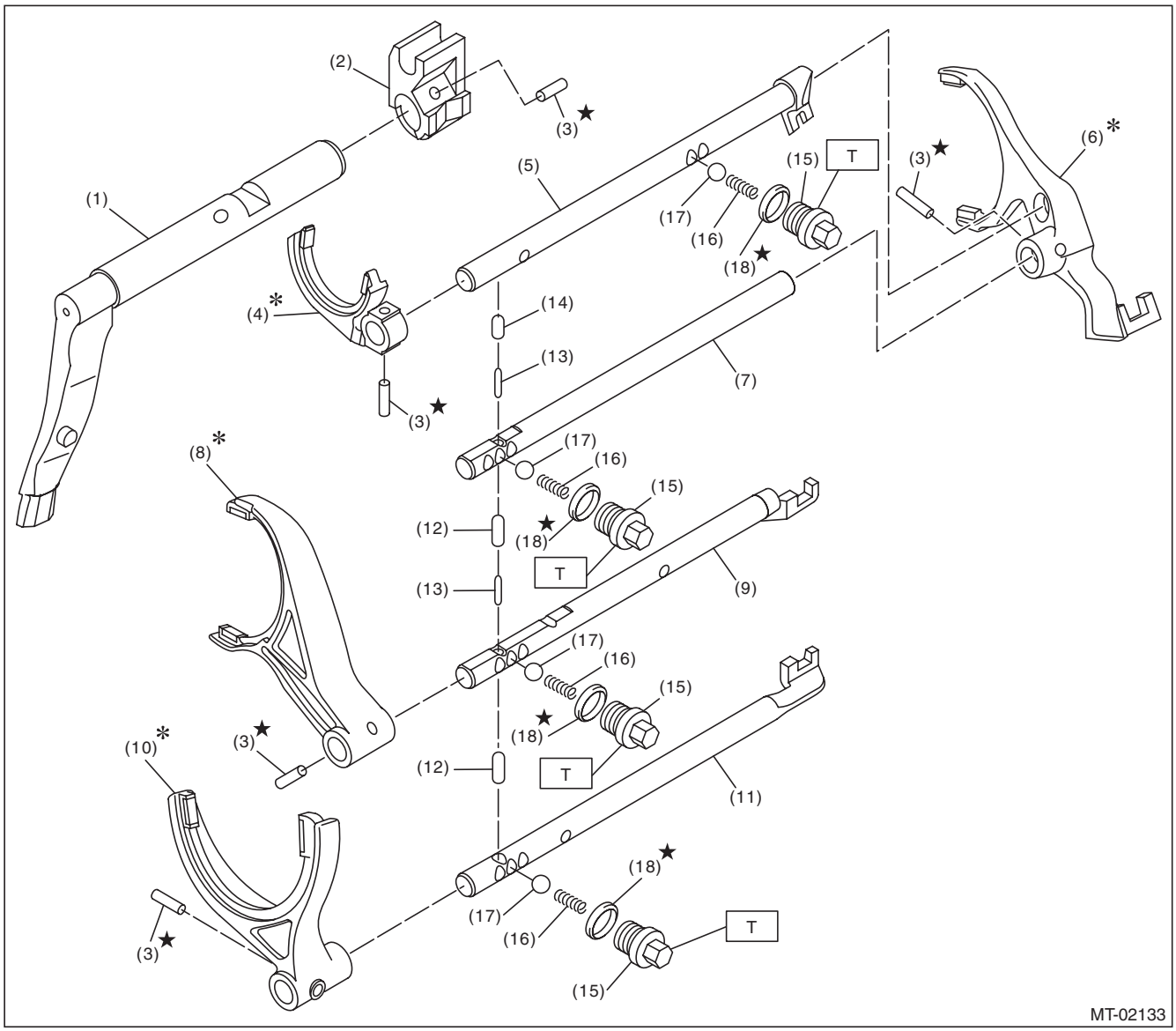

(1)	Shifter arm	(8)	3rd-4th shifter fork	(15)	Checking ball plug
(2)	Selector arm	(9)	3rd-4th fork rod	(16)	Checking ball spring
(3)	Spring pin	(10)	1st-2nd shifter fork	(17)	Check ball
(4)	Reverse shifter fork	(11)	1st-2nd fork rod	(18)	Gasket
(5)	Reverse fork rod	(12)	Interlock plunger		
(6)	5th-6th shifter fork	(13)	Interlock plunger		
(7)	5th-6th fork rod	(14)	Interlock plunger		

Tightening torque:N·m (kgf-m, ft-lb)
T: 20 (2.0, 14.8)

GETtheMANUALS.org

5. TRANSFER CASE AND EXTENSION

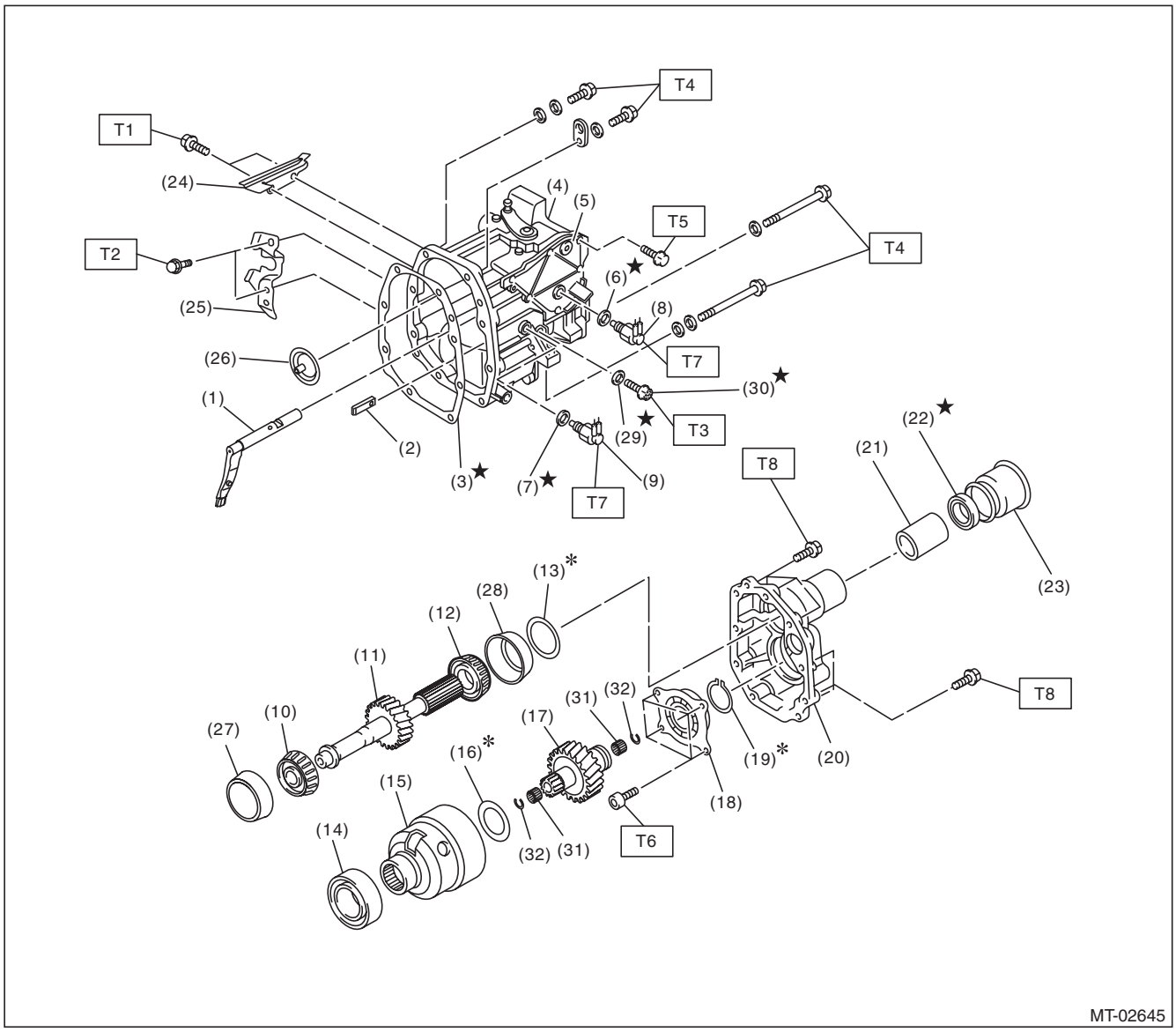

(1)	Shifter arm	(15)	Center differential	(29)	Gasket
(2)	Interlock plate	(16)	Adjusting washer	(30)	Precoat bolt
(3)	Gasket	(17)	Transfer drive gear	(31)	Needle bearing
(4)	Transfer case	(18)	Ball bearing	(32)	Snap ring
(5)	Transmission cover	(19)	Snap ring		
(6)	Gasket	(20)	Extension case		
(7)	Gasket	(21)	Bushing		
(8)	Neutral position switch	(22)	Oil seal		
(9)	Back-up light switch	(23)	Dust cover		
(10)	Roller bearing	(24)	Dust cover (OUTBACK model)		
(11)	Transfer driven gear	(25)	Shift bracket		
(12)	Roller bearing	(26)	Oil guide		
(13)	Adjusting washer	(27)	Outer race		
(14)	Ball bearing	(28)	Outer race		

Tightening torque:N·m (kgf-m, ft-lb)

T1: x15 (1.5, 11.1)
T2: 18 (1.8, 13.3)
T3: T3:
T4: 24.5 (2.5, 18.1)
T5: 25 (2.5, 18.4)
T6: 26 (2.7, 19.2)
T7: 32.3 (3.3, 23.8)
T8: 40 (4.1, 29.5)

GETtheMANUALS.org

6. SHIFT LINK ASSEMBLY

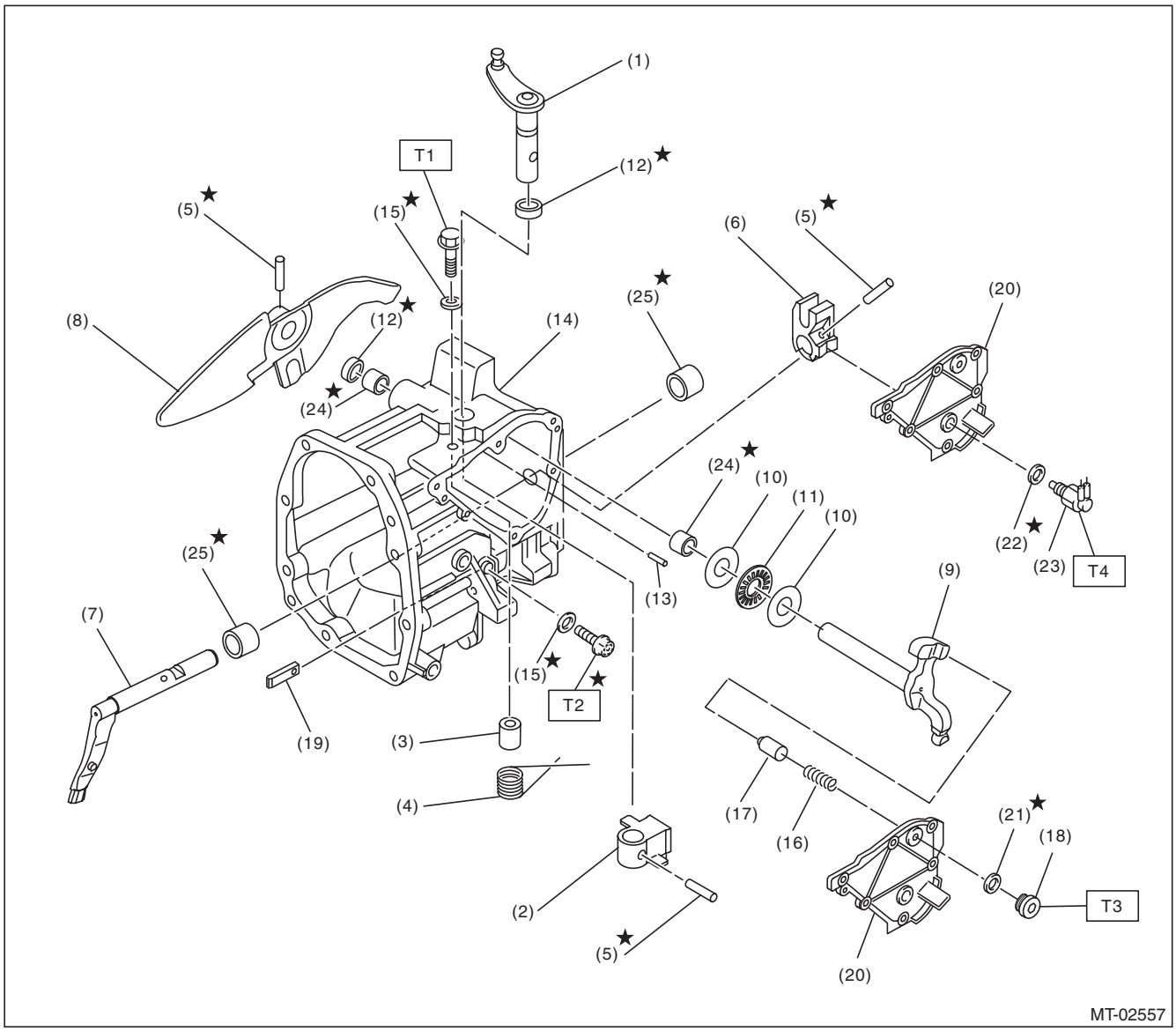

(1)	Selector lever COMPL	(12)	Oil seal	(23)	Neutral position switch
(2)	Selector arm No. 2	(13)	Straight pin	(24)	Needle bearing
(3)	Shifter arm collar	(14)	Transfer case	(25)	Roller bearing
(4)	Neutral set spring	(15)	Gasket		
(5)	Spring pin	(16)	Checking ball spring		
(6)	Selector arm	(17)	Plunger		
(7)	Shifter arm	(18)	Seal bolt		
(8)	Shift lever COMPL	(19)	Interlock plate		
(9)	Shifter arm No. 2	(20)	Transmission cover		
(10)	Washer	(21)	Seal ring		
(11)	Thrust bearing	(22)	Gasket		

Tightening torque:N·m (kgf-m, ft-lb)

T1: 6.4 (0.7, 4.7)
T2: 20 (2.0, 14.8)
T3: 25 (2.5, 18.4)
T4: 32.3 (3.3, 23.8)

GETtheMANUALS.org

7. FRONT DIFFERENTIAL

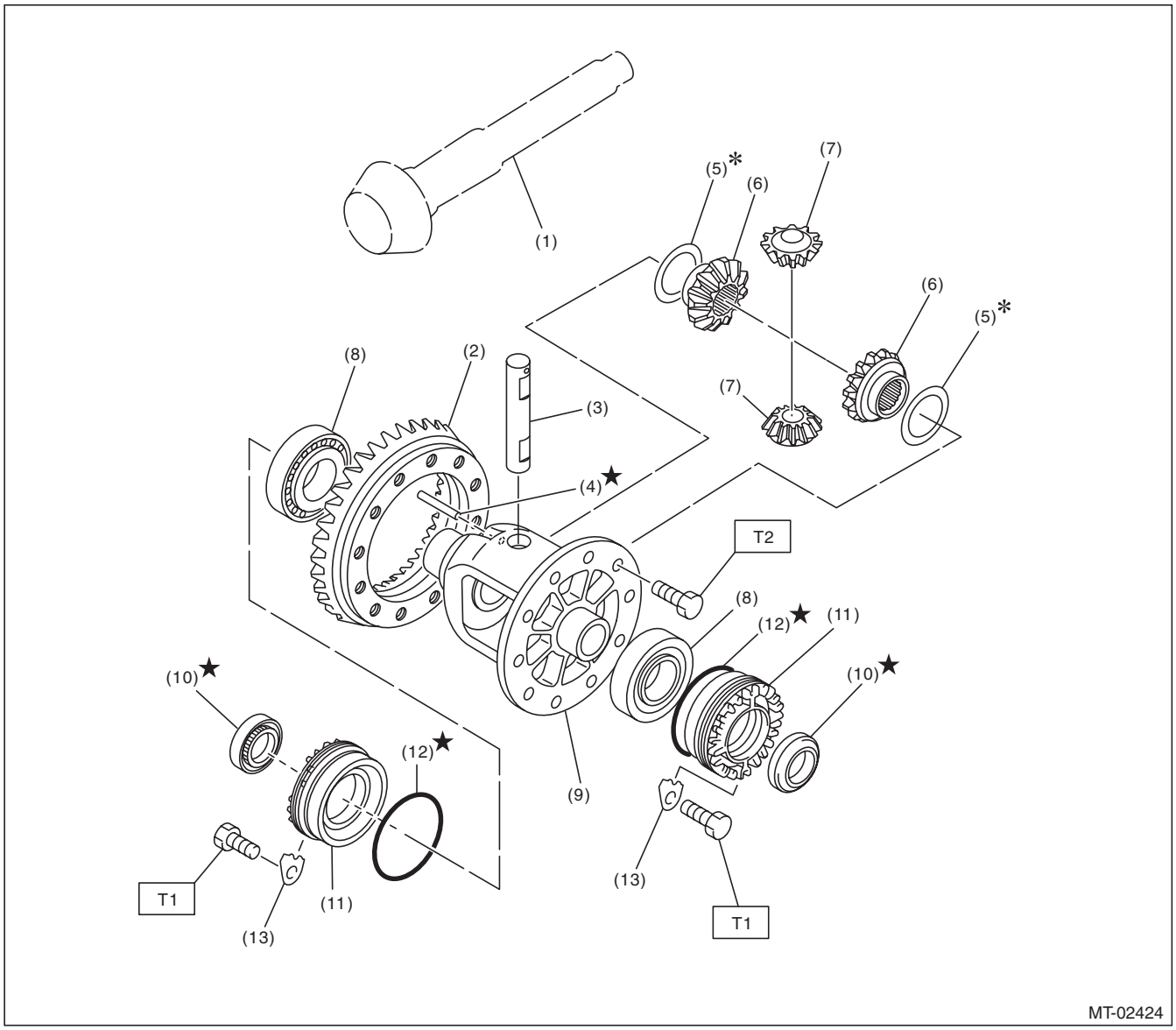

(1)	Drive pinion shaft	(7)	Differential bevel pinion	(13)	Retainer lock plate
(2)	Hypoid driven gear	(8)	Roller bearing		
(3)	Pinion shaft	(9)	Differential case		
(4)	Straight pin	(10)	Oil seal		
(5)	Washer	(11)	Differential side retainer		
(6)	Differential bevel gear	(12)	O-ring		

Tightening torque:N·m (kgf-m, ft-lb)
T1: 25 (2.5, 18.4)
T2: 62 (6.3, 45.7)

GETtheMANUALS.org

8. TRANSMISSION MOUNTING

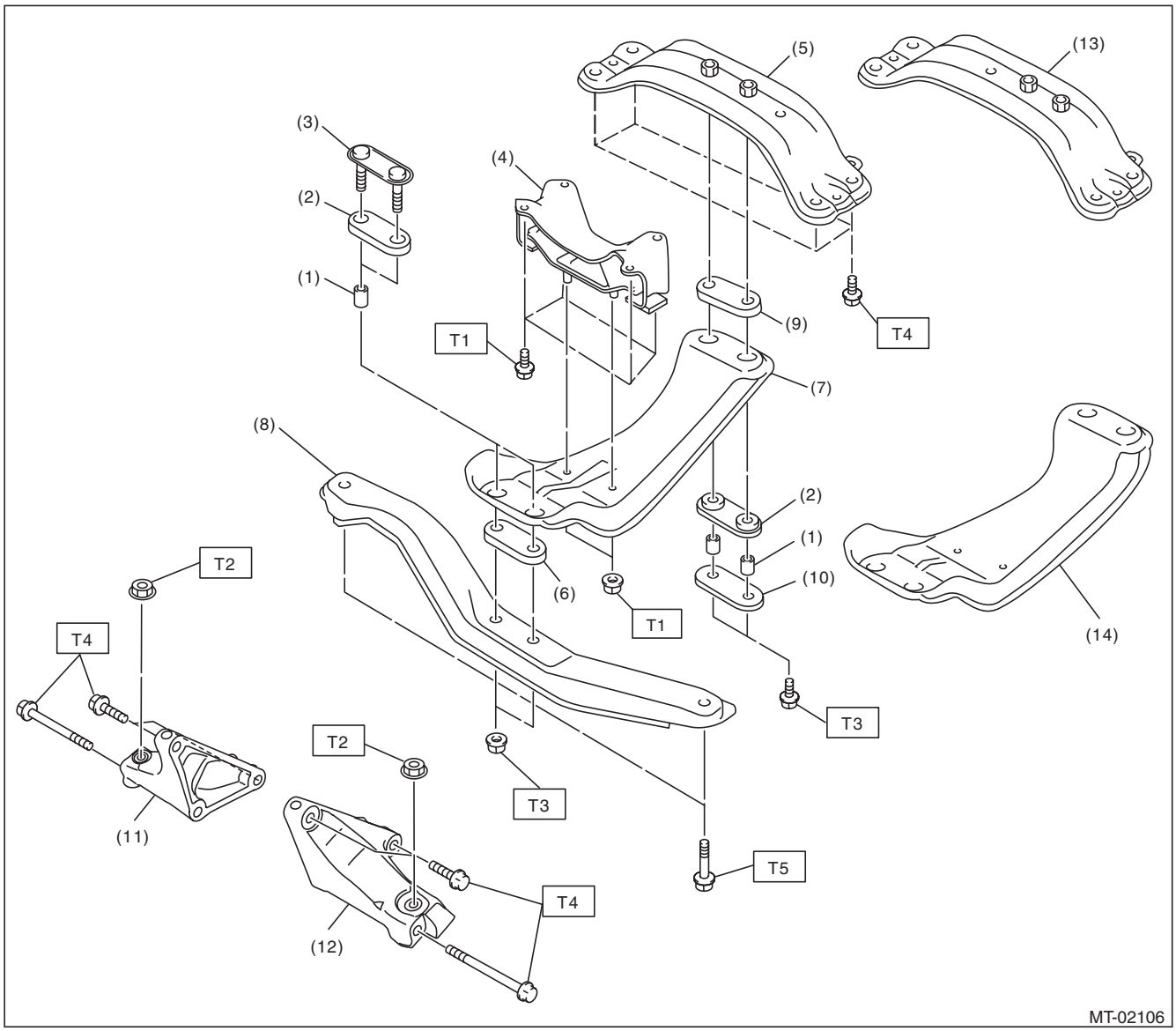

(1)	Spacer	(8)	Front crossmember
(2)	Lower cushion rubber	(9)	Rear cushion rubber
(3)	Front plate	(10)	Rear plate
(4)	Transmission cushion rubber	(11)	Transmission main mounting bracket (RH)
(5)	Rear crossmember (turbo model)	(12)	Transmission main mounting bracket (LH)
(6)	Upper cushion rubber	(13)	Rear crossmember (non-turbo model)
(7)	Center crossmember (turbo model)	(14)	Center crossmember (non-turbo model)

Tightening torque:N·m (kgf-m, ft-lb)

T1: 35 (3.6, 25.8)
T2: 45 (4.6, 33.2)
T3: 70 (7.1, 51.6)
T4: 75 (7.6, 55.3)
T5: 140 (14.3, 103.3)

GETtheMANUALS.org

C: CAUTION

- Wear appropriate work clothing, including a cap, protective goggles and protective shoes when performing any work.
- Remove contamination including dirt and corrosion before removal, installation or disassembly.
- Keep the disassembled parts in order and protect them from dust and dirt.
- Before removal, installation or disassembly, be sure to clarify the failure. Avoid unnecessary removal, installation, disassembly and replacement.
- When disassembling the case and other light alloy parts, use a plastic hammer to force it apart. Do not pry apart with screwdrivers or other tools.
- Vehicle components are extremely hot after driving. Be wary of receiving burns from heated parts.
- Use SUBARU genuine gear oil, grease or equivalent. Do not mix gear oil, grease, etc. of different grades or manufacturers.
- Be sure to tighten fasteners including bolts and nuts to the specified torque.
- Place shop jacks or rigid racks at the specified points.
- Apply gear oil onto sliding or revolving surfaces before installation.
- Replace deformed or damaged snap rings with new parts.
- Before installing O-rings or oil seals, apply sufficient amount of gear oil to avoid damage and deformation.
- Be careful not to incorrectly install or fail to install O-rings, snap rings and other such parts.
- Before securing a part on a vise, place cushioning material such as wood blocks, aluminum plate, or cloth between the part and the vise.
- Avoid damaging the mating surface of the case.
- Before applying liquid gasket, completely remove the old liquid gasket.

GETtheMANUALS.org

D: PREPARATION TOOL

1. SPECIAL TOOL

ILLUSTRATION	TOOL NUMBER	DESCRIPTION	REMARKS
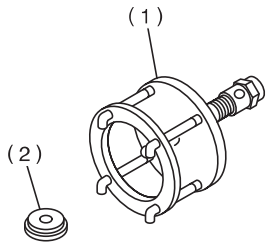 ST-899524100	899524100	PULLER SET	Used for removing the front differential roller bearing. (1) Puller (2) Cap
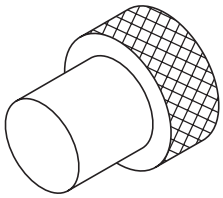 ST-399780104	399780104	WEIGHT	Used for adjusting preload on the front differential roller bearing.
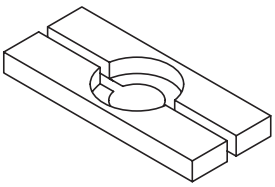 ST-498077000	498077000	REMOVER	• Used for removing the roller bearing of the drive pinion shaft. • Used for removing the transfer driven gear taper roller bearing.
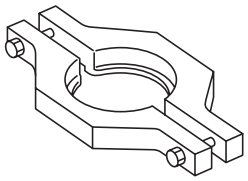 ST-498077600	498077600	CENTER DIFFERENTIAL BEARING REMOVER	Used for removing the center differential ball bearing.

GETtheMANUALS.org

ILLUSTRATION	TOOL NUMBER	DESCRIPTION	REMARKS
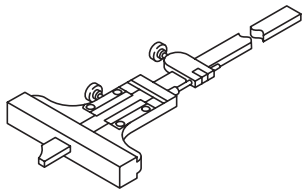 ST-498147001	498147001	DEPTH GAUGE	Used for adjusting the extension end play and main shaft end play.
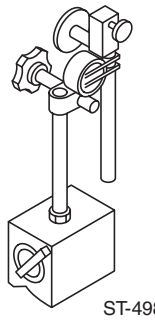 ST-498247001	498247001	MAGNET BASE	• Used for measuring the backlash of bevel pinion gear and hypoid gear. • Used together with DIAL GAUGE (498247100).
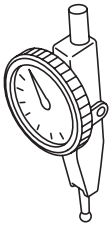 ST-498247100	498247100	DIAL GAUGE	• Used for measuring the backlash of bevel pinion gear and hypoid gear. • Used together with MAGNET BASE (498247001).
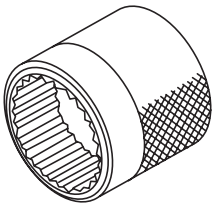 ST18667AA020	18667AA020	HOLDER	• Used for removing and installing the drive pinion shaft lock nut. • Used for measuring the backlash of hypoid gear. • Used for adjusting preload on the front differential roller bearing.
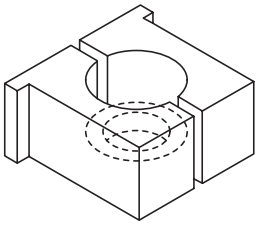 ST-498937000	498937000	TRANSMISSION HOLDER	Used for removing and installing the main shaft lock nut.

GETtheMANUALS.org

ILLUSTRATION	TOOL NUMBER	DESCRIPTION	REMARKS
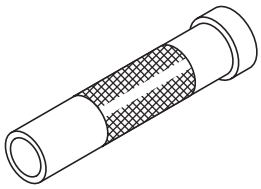 ST-499277100	499277100	BUSHING 1-2 INSTALLER	• Used for installing the drive pinion shaft washer. • Used for installing the front differential roller bearing outer race.
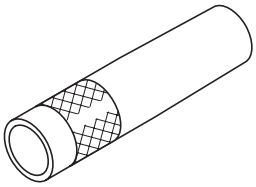 ST-499277200	499277200	INSTALLER	• Used for installing the 2nd driven gear bushing, roller bearings, 3rd-4th driven gear, 5th driven gear and the 6th driven gear. • Used for installing the drive pinion shaft washer.
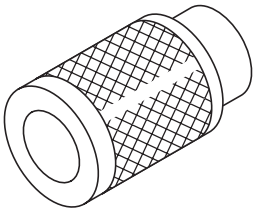 ST-499757002	499757002	INSTALLER	Used for installing the roller bearing (transfer case side) of transfer driven gear.
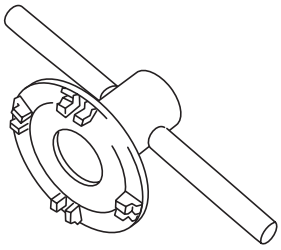 ST18630AA010	18630AA010	WRENCH COMPL RETAINER	• Used for removing and installing the differential side retainer. • Used for adjusting preload on the front differential roller bearing. • WRENCH COMPL RETAINER (18630AA020) can also be used.
ST18722AA000	18722AA000	REMOVER	Used for removing the 5th drive gear and 6th drive gear.

GETtheMANUALS.org

ILLUSTRATION	TOOL NUMBER	DESCRIPTION	REMARKS
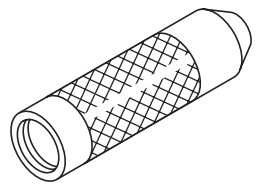 ST-499877000	499877000	RACE 4-5 INSTALLER	• Used for installing the 4th, 5th and 6th drive gear needle bearing races and the main shaft double taper roller bearings. • Used together with REMOVER (899714110).
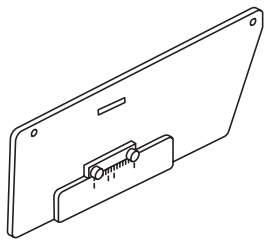 ST-499917500	499917500	DRIVE PINION GAUGE ASSY	Used for adjusting the drive pinion shaft shim.
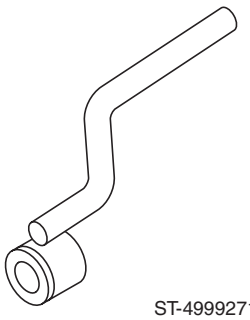 ST-499927100	499927100	HANDLE	Used for backlash measurement of the hypoid gear and preload adjustment of the front differential roller bearing.
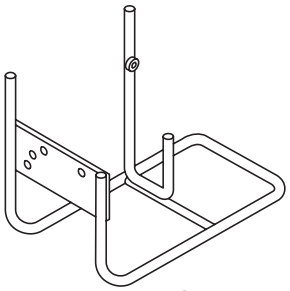 ST-499937100	499937100	TRANSMISSION STAND	Used for disassembling and assembling the transmission.
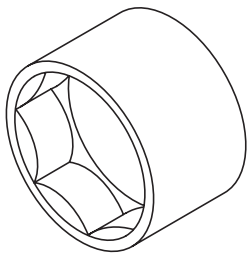 ST-499987003	499987003	SOCKET WRENCH (35)	Used for removing and installing the main shaft lock nut.

GETtheMANUALS.org

ILLUSTRATION	TOOL NUMBER	DESCRIPTION	REMARKS
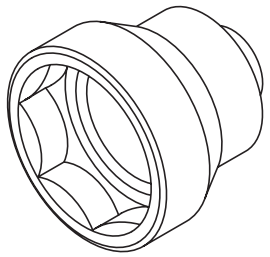 ST-499987300	499987300	SOCKET WRENCH (50)	Used for removing and installing the driven shaft lock nut.
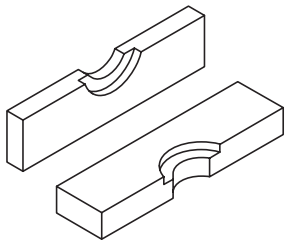 ST-899714110	899714110	REMOVER	Used for removing and installing the parts of main shaft and driven shaft.
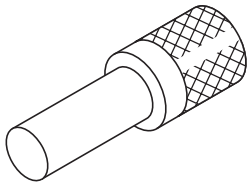 ST-899864100	899864100	REMOVER	• Used for removing the parts of the main shaft. • Used for removing the transfer driven gear roller bearing (transfer case side) and for installing it (extension case side). • Used for removing the transfer drive gear ball bearing.
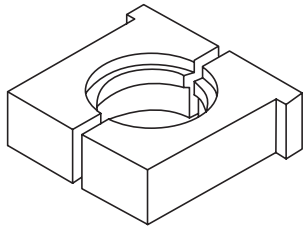 ST18680AA020	18680AA020	HOLDER	• Used for removing and installing the drive pinion shaft lock nut. • Used for removing and installing the driven shaft lock nut.
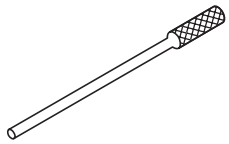 ST-899904100	899904100	STRAIGHT PIN REMOVER	Used for removing and installing the straight pin.

GETtheMANUALS.org

ILLUSTRATION	TOOL NUMBER	DESCRIPTION	REMARKS
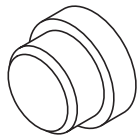 ST-398497701	398497701	ADAPTER	• Used for installing the front differential roller bearing. • Used together with BUSHING 1-2 INSTALLER (499277100).
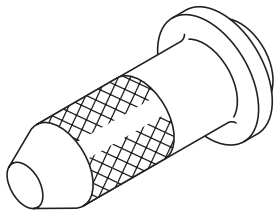 ST-498057300	498057300	INSTALLER	Used for installing the extension case oil seal.
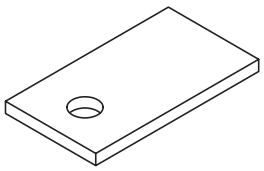 ST-498255400	498255400	PLATE	Used for measuring the hypoid gear backlash.
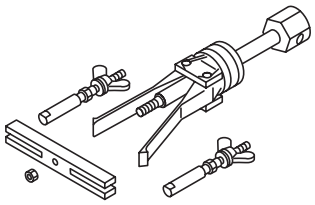 ST-398527700	398527700	PULLER ASSY	• Used for removing the extension case oil seal. • Used for removing the front differential side retainer bearing outer race. • Used for removing the front differential side retainer oil seal.
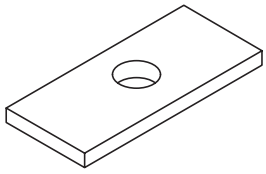 ST-398643600	398643600	GAUGE	Used for adjusting the extension end play.

GETtheMANUALS.org

ILLUSTRATION	TOOL NUMBER	DESCRIPTION	REMARKS
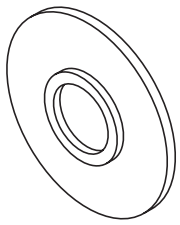 ST-398177700	398177700	INSTALLER	• Used for installing the transfer drive gear ball bearing. • Used for installing the roller bearing of transfer driven gear (extension case side). • Used for installing the 4th drive gear needle bearing race.
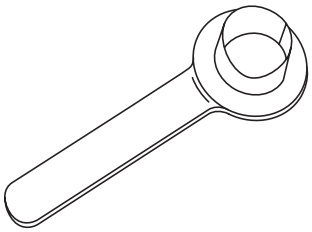 ST28399SA010	28399SA010	OIL SEAL PROTEC-TOR	Used for protecting the oil seal from damage when inserting the front drive shaft.
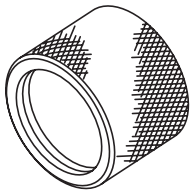 ST18675AA000	18675AA000	DIFFERENTIAL SIDE OIL SEAL INSTALLER	Used for installing the front differential side retainer oil seal.
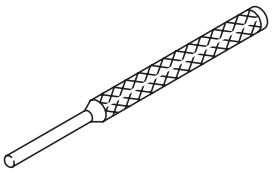 ST-398791700	398791700	SPRING PIN REMOVER 2	Used for installing and removing the spring pin.
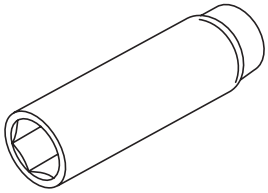 ST18662AA010	18662AA010	SOCKET (27)	Used for removing and installing the drive pinion shaft lock nut.

GETtheMANUALS.org

ILLUSTRATION	TOOL NUMBER	DESCRIPTION	REMARKS
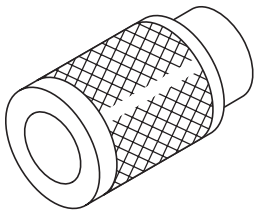 ST-899754112	899754112	PRESS	• Used for removing driven shaft parts. • Used to install the main shaft ball bearing.
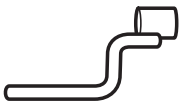 ST18631AA000	18631AA000	HANDLE	Used for installing transfer case assembly and extension case assembly.
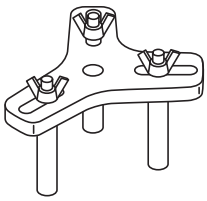 ST18762AA000	18762AA000	COMPRESSOR SPECIAL TOOL	Used for removing the 1st driven gear.
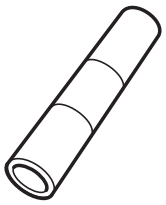 ST18654AA000	18654AA000	INSTALLER	Used for installing the 2nd driven gear bushing.
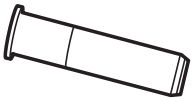 ST18657AA000	18657AA000	INSTALLER	Used for installing the transfer case oil seal.

GETtheMANUALS.org

ILLUSTRATION	TOOL NUMBER	DESCRIPTION	REMARKS
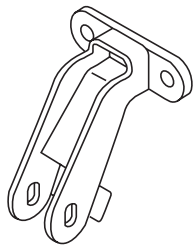 ST41099AJ000	41099AJ000	SPECIAL TOOL H4	Used for removing and installing transmission.
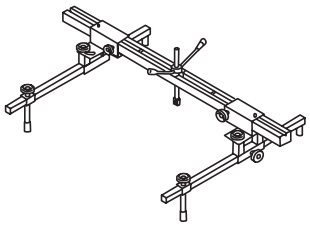 ST99099AJ000	99099AJ000	ENGINE HANGER	• Used for removing and installing transmission. • Used together with CHAIN BALANCER (99099AJ010) and sling chain (general tool).
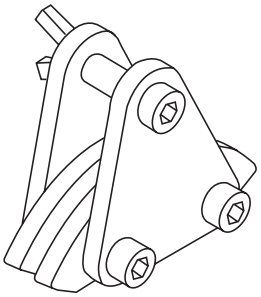 ST99099AJ010	99099AJ010	CHAIN BALANCER	• Used for removing and installing transmission. (Weight of 350 kg (772 lb) is supported) • Used together with ENGINE HANGER (99099AJ000) and sling chain (general tool). • Used to hang the engine while balancing it with the sling chain inserted in this tool.
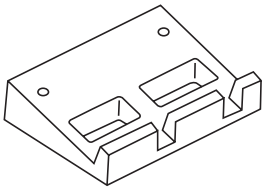 ST-498267200	498267200	CYLINDER HEAD TABLE	Used for installing and removing the roller bearing of the transfer case.
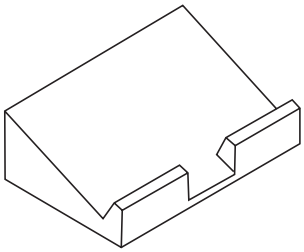 ST-498267300	498267300	CYLINDER HEAD TABLE	Used for installing and removing the roller bearing of the transfer case.

GETtheMANUALS.org

ILLUSTRATION	TOOL NUMBER	DESCRIPTION	REMARKS
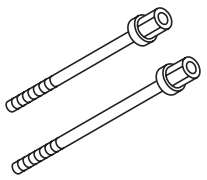 ST18763AA000	18763AA000	COMPRESSOR SHAFT	Used for installing and removing the needle bearing of the transfer case.
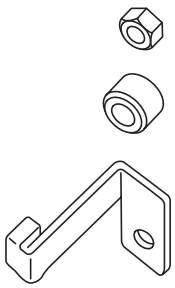 ST-498277200	498277200	STOPPER SET	• Used for installing the needle bearing of the transfer case. • Use only the spacer.

2. GENERAL TOOL

TOOL NAME	REMARKS
Circuit tester	Used for measuring resistance.
TORX® bit T70	Used for installing and removing the drain plug.
Spring pin remover	Used for removing and installing the spring pin. (3 — 3.3 mm)
Socket driver (TORX® 45 size, tamper resistant type)	Used for removing and installing interlock plate.
Sling chain	Used for removing and installing transmission. • Length: 0.8 — 1 m (2.6 — 3.3 ft) • Load capacity: 1.2 t (2646 lb) or more • Diameter: 6 mm (0.24 in) or 6.3 mm (0.25 in) • Chain external width: 23.5 mm (0.93 in) or less • Chain internal width: 8.5 mm (0.33 in) or more
Screw shackle	Used for removing and installing transmission. • Load capacity: 250 kg (551 lb) or more • Use two pieces.

GETtheMANUALS.org

2. Transmission Gear Oil

A: INSPECTION

1) Park the vehicle on a level surface.
2) Turn the ignition switch to OFF, and wait until the engine cools.
3) Remove the collector cover. (turbo model)
4) Remove the oil level gauge and wipe it clean.
5) Reinsert the oil level gauge all the way. Be sure that the oil level gauge is correctly inserted in the proper direction.
6) Pull out the oil level gauge again, and check the oil level. If it is below the lower level, add oil through the oil level gauge hole to bring the level up to the upper level.

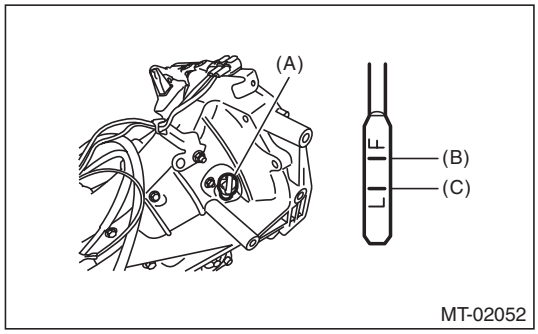

(A) Oil level gauge
(B) Upper level
(C) Lower level

B: REPLACEMENT

1) Pull out the oil level gauge.
2) Lift up the vehicle.
3) Using the TORX® bit T70, remove the drain plug, and drain the transmission gear oil completely.

CAUTION:
- **Immediately after the vehicle has been running or after idling for a long time, the transmission gear oil will be hot. Be careful not to receive burns.**
- **Be careful not to spill the transmission gear oil on the exhaust pipe, to prevent emission of smoke or causing a fire. If gear oil is spilt, wipe it off completely.**

4) Tighten the drain plug using TORX® bit T70.

NOTE:
Use a new gasket.

Tightening torque:
44 N·m (4.5 kgf-m, 32.5 ft-lb) (Aluminum gasket silver)
70 N·m (7.1 kgf-m, 51.6 ft-lb) (Copper gasket brown)
70 N·m (7.1 kgf-m, 51.6 ft-lb) (Metal gasket black)

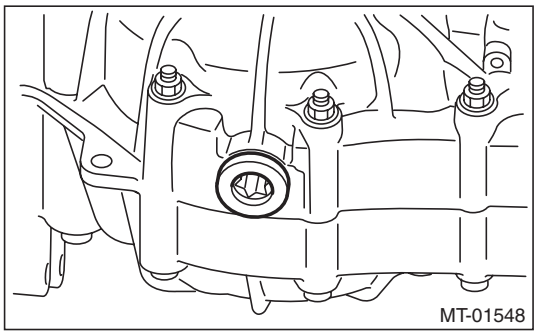

5) Lower the vehicle.
6) Pour gear oil through the oil level gauge hole.

Recommended gear oil:
GL-5 (75W-90) or equivalent

Gear oil capacity:
3.7 ℓ (3.9 US qt, 3.3 Imp qt)

7) Measure the transmission gear oil amount, and check that it is within the specification.
8) Install the collector cover. (turbo model)

GETtheMANUALS.org

3. Manual Transmission Assembly

A: REMOVAL

1) Set the vehicle on a lift.
2) Remove the front wheels.
3) Open the front hood completely.
4) Remove the collector cover. (turbo model)
5) Remove the air intake duct. <Ref. to IN(H4SO)-9, REMOVAL, Air Intake Duct.> <Ref. to IN(H4DOTC)-12, REMOVAL, Air Intake Duct.>
6) Remove the 10 clips and detach the grille bracket.

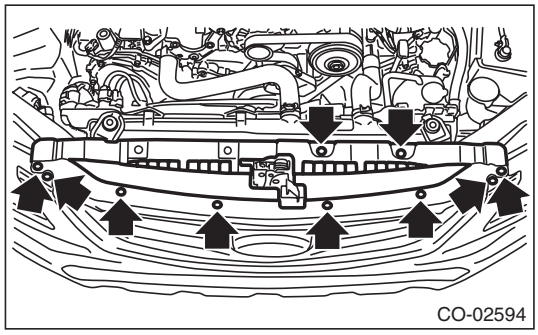

7) Disconnect the ground cable from battery.
8) Remove the air intake boot assembly. (non-turbo model) <Ref. to IN(H4SO)-8, REMOVAL, Air Intake Boot.>
9) Remove the intercooler and the intercooler stay. (turbo model) <Ref. to IN(H4DOTC)-17, REMOVAL, Intercooler.>
10) Disconnect the engine harness connector.

- Non-turbo model

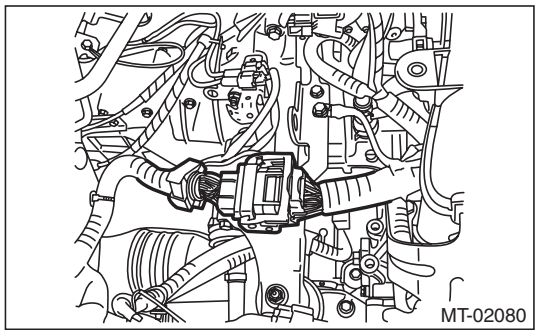

- Turbo model

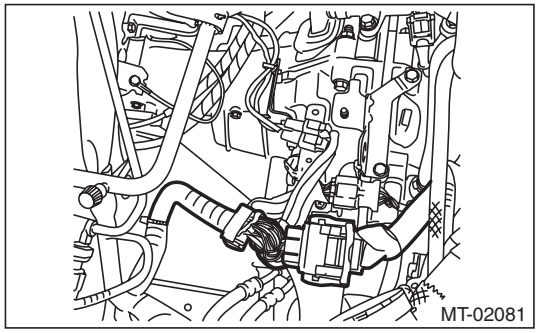

11) Disconnect the connector back-up light switch & neutral position switch.

- Non-turbo model

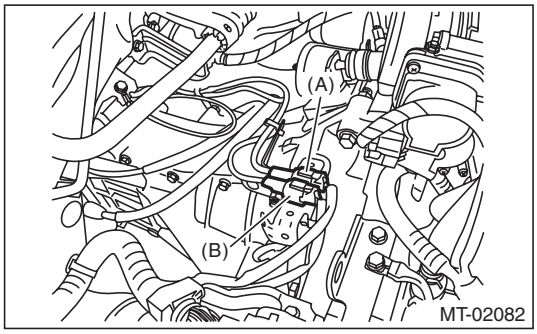

(A) Neutral position switch connector (Brown)
(B) Back-up light switch connector (Gray)

- Turbo model

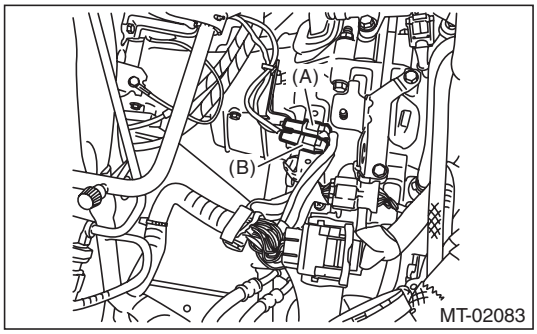

(A) Neutral position switch connector (Brown)
(B) Back-up light switch connector (Gray)

12) Disconnect the transmission radio ground terminal.

- Non-turbo model

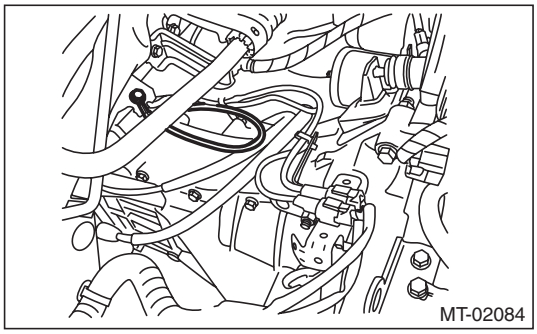

GETtheMANUALS.org

- Turbo model

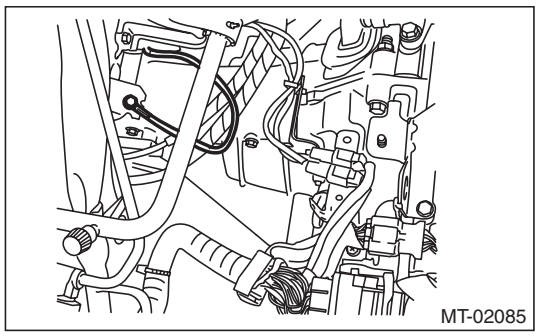

13) Remove the throttle body. (non-turbo model) <Ref. to FU(H4SO)-15, REMOVAL, Throttle Body.>
14) Remove the starter. <Ref. to SC(H4SO)-9, REMOVAL, Starter.>
15) Remove the operating cylinder from the transmission, and suspend on a wire.

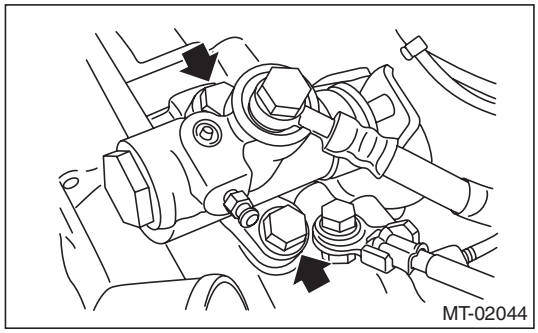

16) Lift up the vehicle.
17) Remove the front under cover. <Ref. to EI-35, REMOVAL, Front Under Cover.>
18) Drain transmission gear oil completely. <Ref. to 6MT-24, REPLACEMENT, Transmission Gear Oil.>
19) Remove the front, center and rear exhaust pipes. (non-turbo model) <Ref. to EX(H4SO)-5, REMOVAL, Front Exhaust Pipe.> <Ref. to EX(H4SO)-8, REMOVAL, Center Exhaust Pipe.> <Ref. to EX(H4SO)-9, REMOVAL, Rear Exhaust Pipe.>
20) Remove the center and rear exhaust pipes. (turbo model) <Ref. to EX(H4DOTC)-12, REMOVAL, Center Exhaust Pipe.> <Ref. to EX(H4DOTC)-15, REMOVAL, Rear Exhaust Pipe.>

CAUTION:
When removing the exhaust pipes, make sure that each exhaust pipe does not drop off.

21) Remove the heat shield cover.

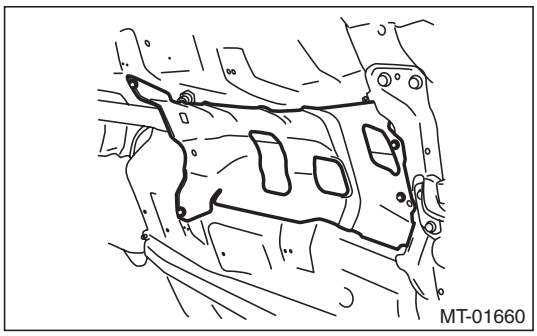

22) Remove the steering shaft universal joint. <Ref. to PS-21, REMOVAL, Universal Joint.>
23) Remove the propeller shaft. <Ref. to DS-10, REMOVAL, Propeller Shaft.>
24) Remove the MT gear shift cable and MT gear select cable from MT gear shift lever. <Ref. to CS-57, REMOVAL, MT Gear Shift Lever.>

CAUTION:
- **Do not bend MT gear shift cable and MT gear select cable at a sharp angle.**
- **Disconnect the MT gear shift cable and MT gear select cable at the MT gear shift lever side.**
- **Always use new MT gear select cable if the cable is removed from selector lever COMPL of transmission side.**

25) Disconnect the stabilizer link from the front arm. <Ref. to FS-29, REMOVAL, Front Stabilizer.>
26) Remove the bolt securing the ball joint of the front arm to the housing, then separate the front arms and the housing. <Ref. to FS-32, REMOVAL, Front Ball Joint.>
27) Separate the front drive shafts on both sides from the transmission. <Ref. to DS-48, REMOVAL, Front Drive Shaft.>
28) Lower the vehicle.
29) Remove the engine hanger rear, and install the engine hanger rear for turbo model. (non-turbo model)

Tightening torque:
16 N·m (1.6 kgf-m, 11.8 ft-lb)

Part No. 10004AA180 Engine hanger rear

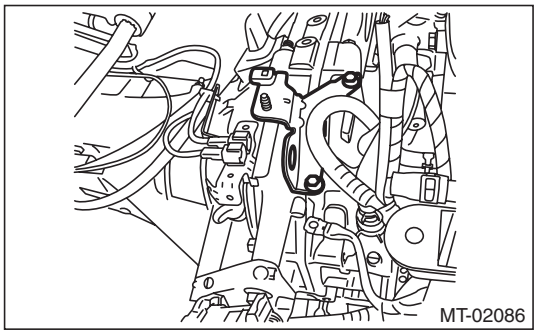

GETtheMANUALS.org

30) Remove the nuts connecting the engine mounting and the transmission main mounting bracket.

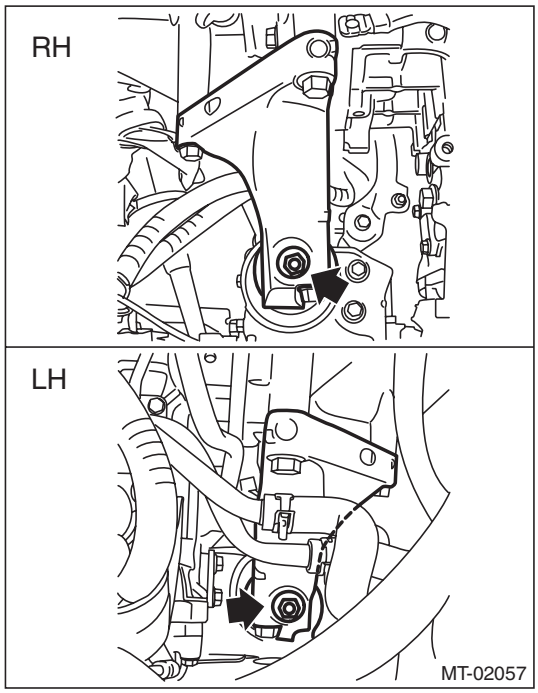

31) Set the ST on the vehicle.

CAUTION:

- **Set the chain so that it does not contact the sensors.**
- **Set the arms of ST (ENGINE HANGER) at the locations shown in the figure.**

ST1 99099AJ000 ENGINE HANGER
ST2 99099AJ010 CHAIN BALANCER

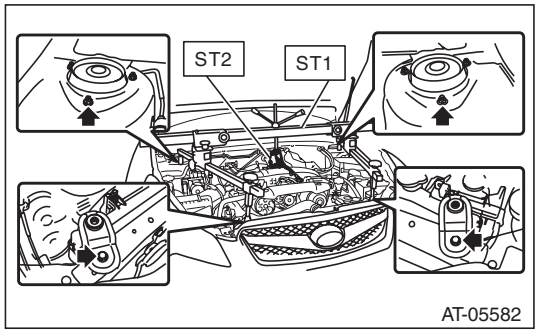

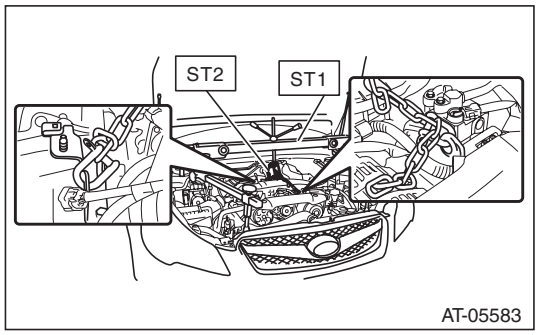

32) Remove the stopper rod.

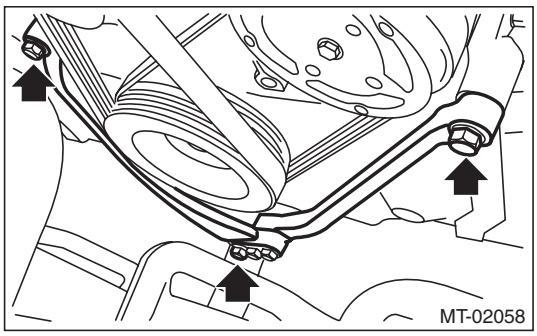

33) Lift the engine slightly and remove the bolts of front cushion rubber.

34) Remove the nut and bolt of the front cushion rubber, then remove the front cushion rubber.

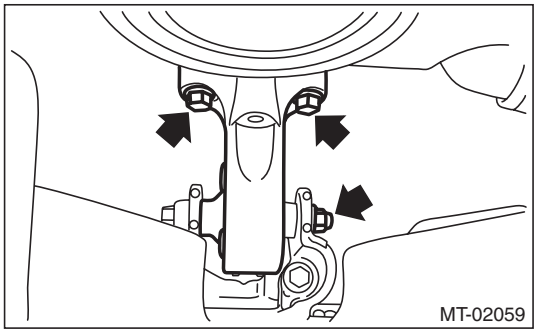

35) Temporarily attach ST by using two bolts.

ST 41099AJ000 SPECIAL TOOL H4

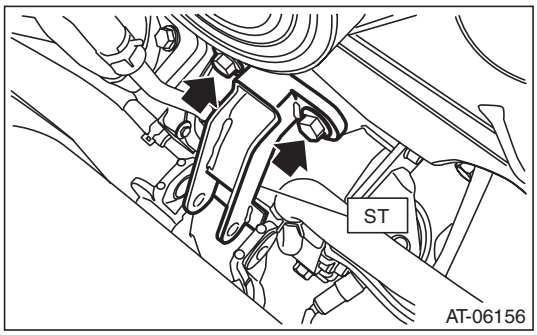

36) Lift up the engine unit high enough to install the bolt and nut to vehicle.

CAUTION:

- **Do not lift up higher than enough level to install the ST to avoid damage to the hoses and pipes inside the engine room.**
- **Do not tighten the bolts and nuts excessively, or the engine mounting bracket may be deformed.**

NOTE:
If it is difficult to pull out the stud bolt from transmission mounting bracket, slightly shake the engine unit while lifting up.

GETtheMANUALS.org

37) Tighten the mounting bolts on the engine side.

Tightening torque:
25 N·m (2.6 kgf-m, 18.4 ft-lb)

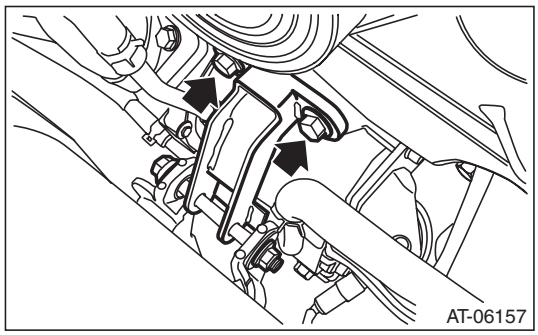

38) Remove the ST (ENGINE HANGER).
39) Remove the transmission main mounting bracket.

NOTE:
First, remove the transmission mounting bracket on the right side of vehicle, and then tilt the engine unit to remove the left transmission mounting bracket.

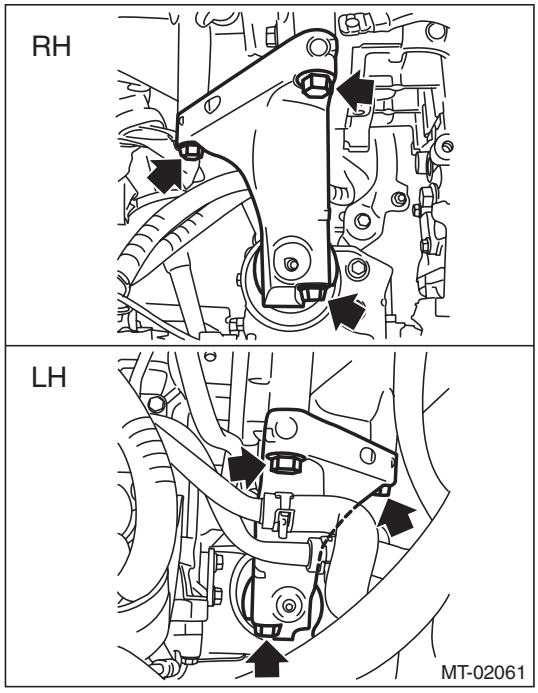

40) Remove the two mounting bolts on the upper side of the transmission.

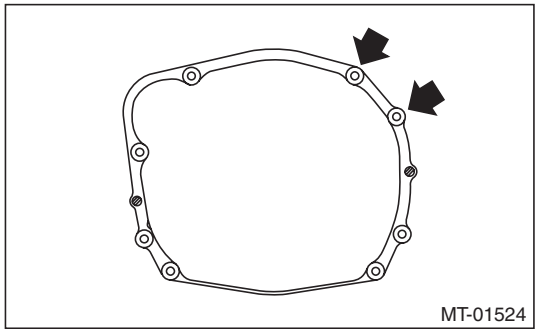

41) Set the ST (ENGINE HANGER) again to loosen the chain sling.
42) Lift up the vehicle.
43) Place the transmission jack under the transmission.

CAUTION:
Always support the transmission case with a transmission jack.

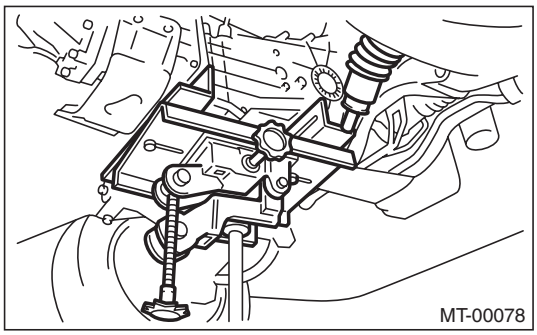

44) Remove the bolts and nuts which hold lower side of transmission to engine.

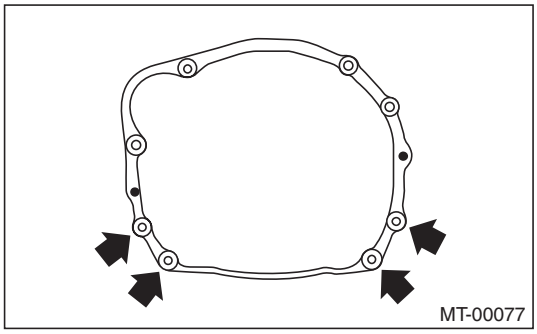

45) Remove the front crossmember and rear crossmember from the vehicle.

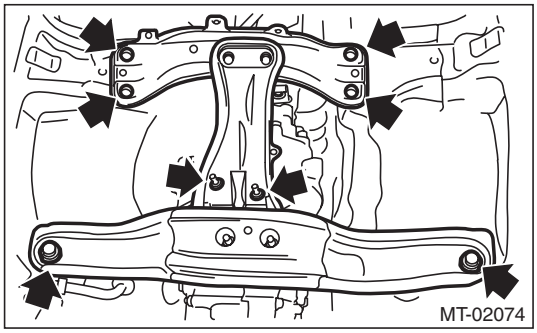

46) Lower the transmission rear end (dust cover rear end).

CAUTION:
When lowering the transmission rear end, be careful not to let the converter case and steering mechanical parts contact each other.

NOTE:
Lower the transmission rear end by approx. 80 mm (3.1 in) (reference).
47) Rotate the handle of ST (ENGINE HANGER) to apply tension to the chain sling.

GETtheMANUALS.org

48) Remove the transmission assembly.

NOTE:
- Move the transmission jack towards the rear until the main shaft is withdrawn from the clutch disc.
- Remove it while moving the transmission jack up and down so that the engine and transmission remain directly aligned.

49) Remove the transmission cushion rubber.

B: INSTALLATION

1) Replace the differential side retainer oil seal. <Ref. to 6MT-36, REPLACEMENT, Differential Side Retainer Oil Seal.>

NOTE:
Be sure to replace the differential side retainer oil seal after removing the front drive shaft.

ST 18675AA000 DIFFERENTIAL SIDE OIL SEAL INSTALLER

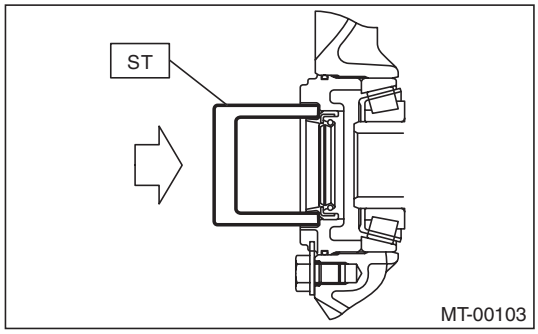

2) Install the transmission cushion rubber to the transmission assembly, and tighten bolt (A).
3) Install the transmission cushion rubber to the center crossmember, and tighten the nut (B).

Tightening torque:
Bolt (A)
35 N·m (3.6 kgf-m, 25.8 ft-lb)
Nut (B)
35 N·m (3.6 kgf-m, 25.8 ft-lb)

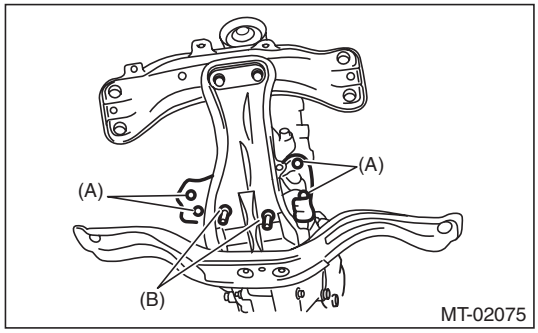

4) Tap the transmission hanger in the rear side of transmission with a rubber hammer to bend it until it is in close contact with the transmission case.

CAUTION:
Do not apply excessive load or impact to the transmission case.

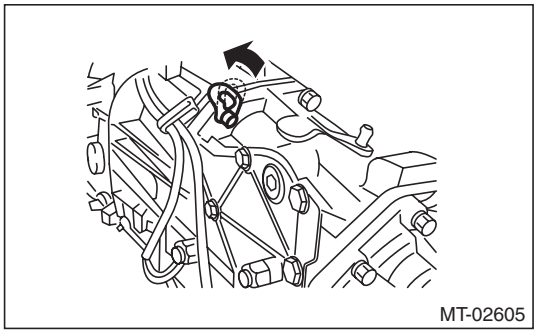

5) Install the transmission onto the engine.

CAUTION:
This operation requires at least two persons.

NOTE:
Keep the engine level.
(1) Lift up the transmission gradually using a transmission jack.
(2) Engage at the spline section.

NOTE:
Be careful not to hit the main shaft against the clutch housing cover.

6) Temporarily tighten the bolts and nuts which hold lower side of transmission to engine.
7) Install the front crossmember and rear crossmember.

Tightening torque:
T1: 75 N·m (7.6 kgf-m, 55.3 ft-lb)
T2: 140 N·m (14.3 kgf-m, 103.3 ft-lb)

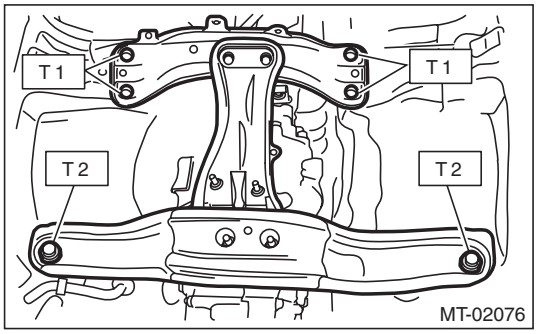

8) Take out the transmission jack.

GETtheMANUALS.org

9) Tighten the bolts and nuts which hold the lower side of transmission to the engine.

Tightening torque:
50 N·m (5.1 kgf-m, 36.9 ft-lb)

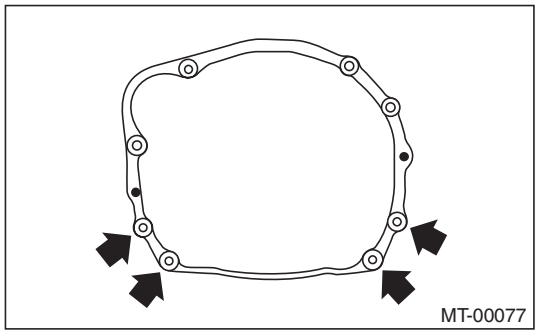

10) Lower the vehicle.
11) Install the two mounting bolts on the upper side of the transmission.

Tightening torque:
50 N·m (5.1 kgf-m, 36.9 ft-lb)

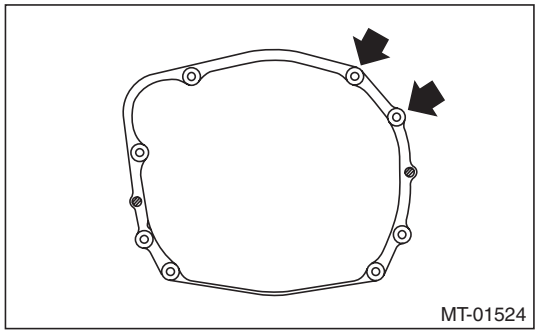

12) Remove the ST (ENGINE HANGER).
13) Install the transmission main mounting bracket.

NOTE:
Incline the engine, and install the transmission main mounting bracket for the left side of the vehicle first.

Tightening torque:
75 N·m (7.6 kgf-m, 55.3 ft-lb)

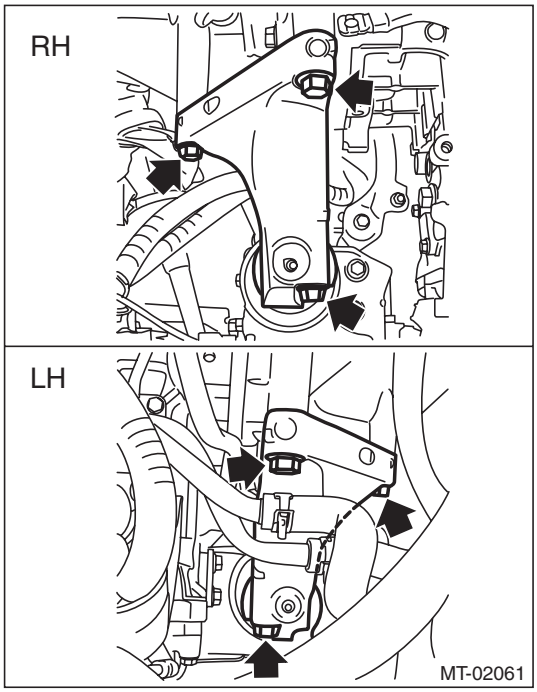

14) Attach the ST (ENGINE HANGER) again.
15) Remove the bolts from ST (SPECIAL TOOL H4).

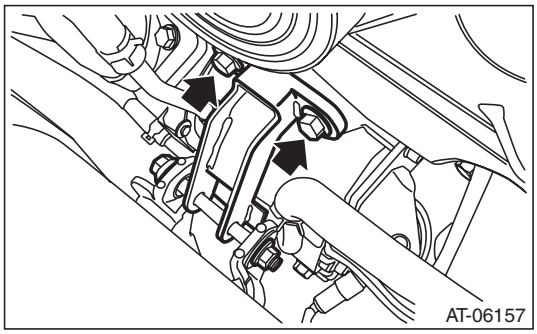

16) Remove the bolt and nut to remove ST (SPECIAL TOOL H4).
17) Temporarily attach the front cushion rubber with bolts.

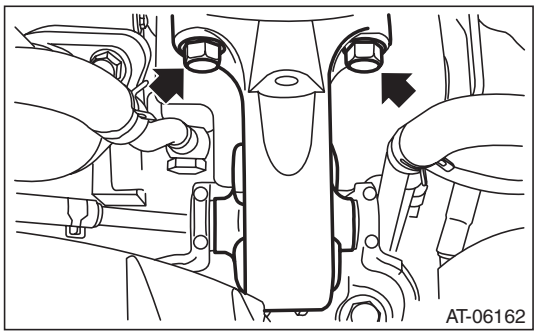

18) Install the bolt and nut to the front cushion rubber.

GETtheMANUALS.org

19) Tighten the bolts and nuts of front cushion rubber.

NOTE:
Always start tightening from the bolts on the engine side.

Tightening torque:
T1: 25 N·m (2.5 kgf-m, 18.4 ft-lb)
T2: 45 N·m (4.6 kgf-m, 33.2 ft-lb)

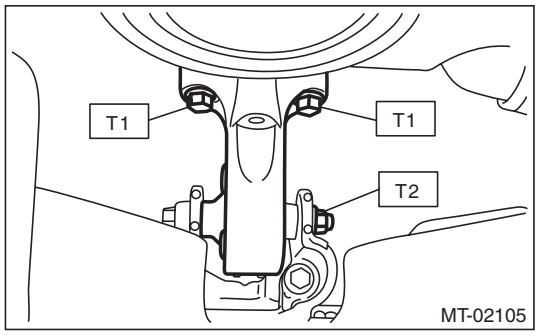

20) Remove the ST (ENGINE HANGER) from the vehicle.
21) Install the stopper rod.

Tightening torque:
36 N·m (3.7 kgf-m, 26.6 ft-lb)

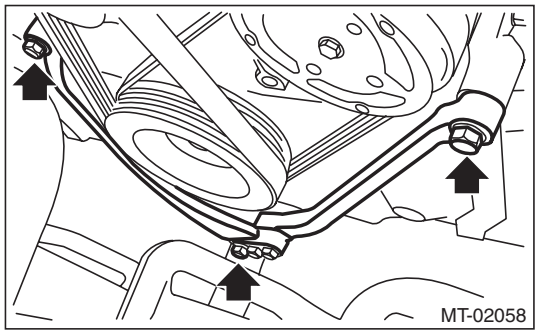

22) Tighten the nuts connecting the engine mount and the transmission main mounting bracket.

Tightening torque:
45 N·m (4.6 kgf-m, 33.2 ft-lb)

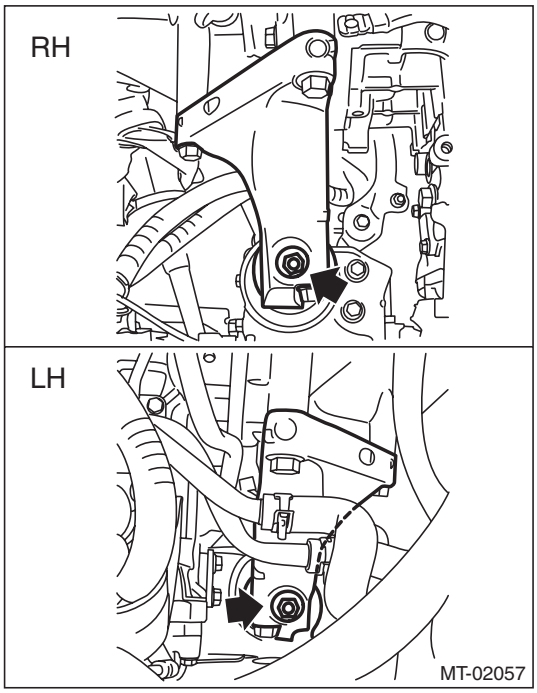

23) Remove the engine hanger rear for turbo model and install the engine hanger rear for non-turbo model. (non-turbo model)

Tightening torque:
16 N·m (1.6 kgf-m, 11.8 ft-lb)
24) Install the starter. <Ref. to SC(H4SO)-10, INSTALLATION, Starter.>
25) Install the operating cylinder.

Tightening torque:
37 N·m (3.8 kgf-m, 27.3 ft-lb)

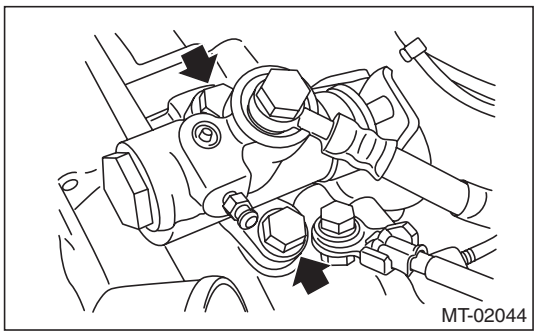

26) Lift up the vehicle.
27) Install the front drive shaft into the transmission. <Ref. to DS-49, INSTALLATION, Front Drive Shaft.>
28) Insert the front arm ball joint into the housing lower part. <Ref. to FS-33, INSTALLATION, Front Ball Joint.>

GETtheMANUALS.org

29) Attach the stabilizer link to the front arm. <Ref. to FS-31, INSTALLATION, Front Stabilizer.>
30) Install the MT gear shift cable and MT gear select cable to MT gear shift lever. <Ref. to CS-60, INSTALLATION, MT Gear Shift Lever.>

CAUTION:
- **Do not bend MT gear shift cable and MT gear select cable at a sharp angle.**
- **Always use new MT gear select cable if the cable is removed from selector lever COMPL of transmission side.**

31) Install the propeller shaft. <Ref. to DS-11, INSTALLATION, Propeller Shaft.>
32) Install the steering shaft universal joint. <Ref. to PS-22, INSTALLATION, Universal Joint.>
33) Install the heat shield cover. <Ref. to EI-168, INSTALLATION, Heat Shield Cover.>
34) Install the front, center and rear exhaust pipe. (non-turbo model) <Ref. to EX(H4SO)-6, INSTALLATION, Front Exhaust Pipe.> <Ref. to EX(H4SO)-8, INSTALLATION, Center Exhaust Pipe.> <Ref. to EX(H4SO)-9, INSTALLATION, Rear Exhaust Pipe.>
35) Install the center and rear exhaust pipe. (turbo model) <Ref. to EX(H4DOTC)-13, INSTALLATION, Center Exhaust Pipe.> <Ref. to EX(H4DOTC)-15, INSTALLATION, Rear Exhaust Pipe.>
36) Install the front under cover. <Ref. to EI-35, INSTALLATION, Front Under Cover.>
37) Lower the vehicle.
38) Install the throttle body. (non-turbo model) <Ref. to SC(H4SO)-10, INSTALLATION, Starter.>
39) Connect the following connectors.
(1) Transmission radio ground terminal

Tightening torque:
13 N·m (1.3 kgf-m, 9.6 ft-lb)

(2) Neutral position switch connector (Brown)
(3) Back-up light switch connector (Gray)
(4) Engine harness connectors

40) Fill transmission gear oil through the transmission oil level gauge hole. <Ref. to 6MT-24, Transmission Gear Oil.>
41) Install the air intake boot assembly. (non-turbo model) <Ref. to IN(H4SO)-8, INSTALLATION, Air Intake Boot.>
42) Install the intercooler and the intercooler stay. (turbo model) <Ref. to IN(H4DOTC)-18, INSTALLATION, Intercooler.>
43) Attach the grille bracket.

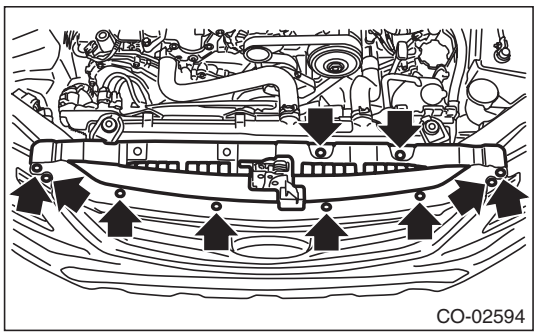

44) Install the air intake duct. <Ref. to IN(H4SO)-9, INSTALLATION, Air Intake Duct.> <Ref. to IN(H4DOTC)-12, INSTALLATION, Air Intake Duct.>
45) Install the collector cover. (turbo model)
46) Install the front wheels.
47) Connect the battery ground terminal.

GETtheMANUALS.org

4. Transmission Mounting System

A: REMOVAL

1. CROSSMEMBER AND CUSHION RUBBER

1) Disconnect the ground cable from battery.
2) Lift up the vehicle.
3) Remove the front under cover. <Ref. to EI-35, REMOVAL, Front Under Cover.>
4) Remove the front and center exhaust pipes. (non-turbo model) <Ref. to EX(H4SO)-5, REMOVAL, Front Exhaust Pipe.> <Ref. to EX(H4SO)-8, REMOVAL, Center Exhaust Pipe.>
5) Remove the center exhaust pipe. (turbo model) <Ref. to EX(H4DOTC)-12, REMOVAL, Center Exhaust Pipe.>
6) Remove the heat shield cover.

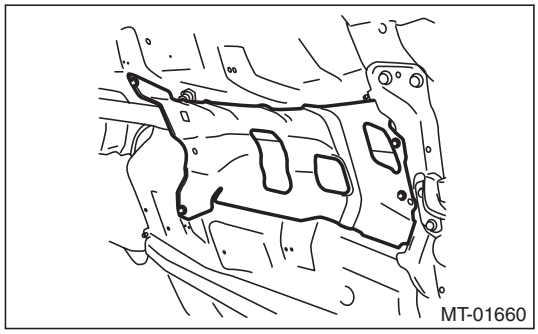

7) Set the transmission jack.

CAUTION:
Always support the transmission case with a transmission jack.

8) Remove the front crossmember and the rear crossmember.

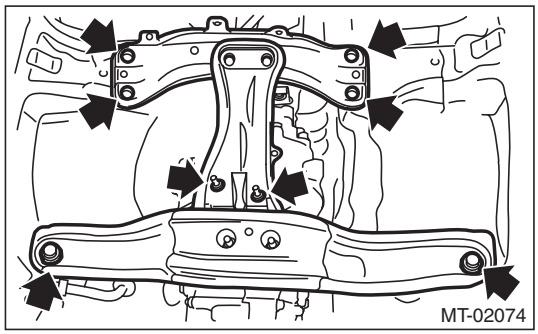

9) Remove the transmission cushion rubber.

B: INSTALLATION

1. CROSSMEMBER AND CUSHION RUBBER

1) Install the transmission cushion rubber to the transmission, and tighten the bolt (A).
2) Attach the transmission cushion rubber to the center crossmember, and tighten nut (B).

Tightening torque:
Bolt (A)
35 N·m (3.6 kgf-m, 25.8 ft-lb)
Nut (B)
35 N·m (3.6 kgf-m, 25.8 ft-lb)

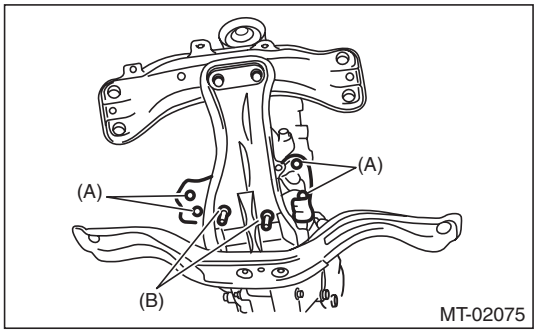

3) Install the front crossmember and rear crossmember.

Tightening torque:
T1: 75 N·m (7.6 kgf-m, 55.3 ft-lb)
T2: 140 N·m (14.3 kgf-m, 103.3 ft-lb)

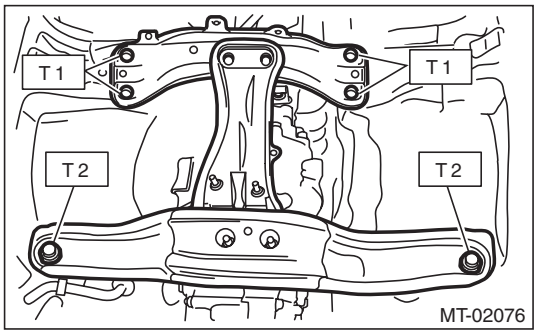

4) Remove the transmission jack.
5) Install the heat shield cover. <Ref. to EI-168, INSTALLATION, Heat Shield Cover.>
6) Install the front and center exhaust pipe. (non-turbo model) <Ref. to EX(H4SO)-6, INSTALLATION, Front Exhaust Pipe.> <Ref. to EX(H4SO)-8, INSTALLATION, Center Exhaust Pipe.>
7) Install the center exhaust pipe. (turbo model) <Ref. to EX(H4DOTC)-13, INSTALLATION, Center Exhaust Pipe.>
8) Install the front under cover. <Ref. to EI-35, INSTALLATION, Front Under Cover.>
9) Lower the vehicle.
10) Connect the ground cable to battery.

GETtheMANUALS.org

C: INSPECTION

Perform the following inspection procedures and repair or replace faulty parts.

1. CROSSMEMBER AND CUSHION RUBBER

Check crossmember for bends or damage. Check that the cushion rubber is not stiff, cracked, or otherwise damaged.

GETtheMANUALS.org

5. Oil Seal

A: INSPECTION

Check for transmission gear oil leaks at oil seal area. If there is an oil leak, replace the oil seal with new one and check the propeller shaft.

B: REPLACEMENT

1) Remove the collector cover. (turbo model)
2) Lift up the vehicle.
3) Remove the front under cover. <Ref. to EI-35, REMOVAL, Front Under Cover.>
4) Clean the transmission exterior.
5) Using the TORX® bit T70, remove the drain plug, and drain the transmission gear oil completely.
6) Tighten the drain plug using TORX® bit T70.

NOTE:
Use a new gasket.

Tightening torque:
44 N·m (4.5 kgf-m, 32.5 ft-lb) (Aluminum gasket silver)
70 N·m (7.1 kgf-m, 51.6 ft-lb) (Copper gasket brown)
70 N·m (7.1 kgf-m, 51.6 ft-lb) (Metal gasket black)

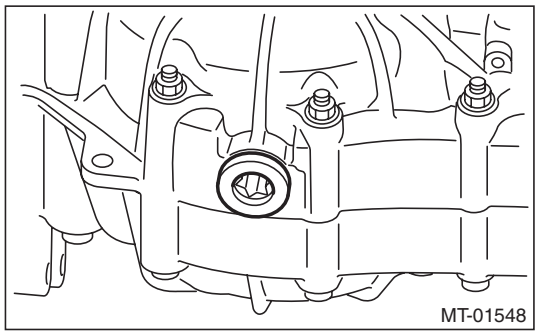

7) Remove the center exhaust pipe. (non-turbo model) <Ref. to EX(H4SO)-8, REMOVAL, Center Exhaust Pipe.>
8) Remove the center exhaust pipe. (turbo model) <Ref. to EX(H4DOTC)-12, REMOVAL, Center Exhaust Pipe.>
9) Remove the heat shield cover.

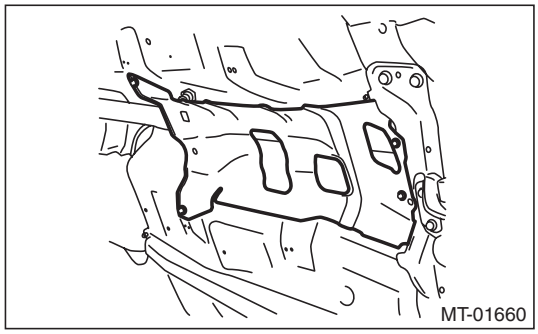

10) Remove the propeller shaft. <Ref. to DS-10, REMOVAL, Propeller Shaft.>
11) Using the ST, remove the oil seal.
ST 398527700 PULLER ASSY

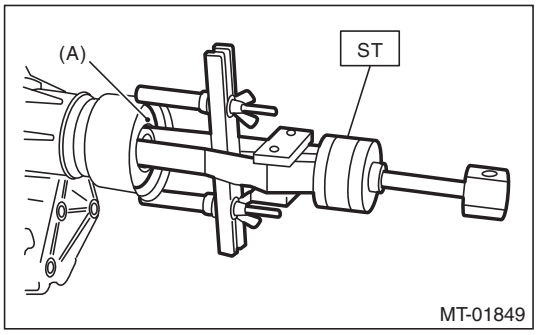

(A) Oil seal

12) Using the ST, install the oil seal.
ST 498057300 INSTALLER

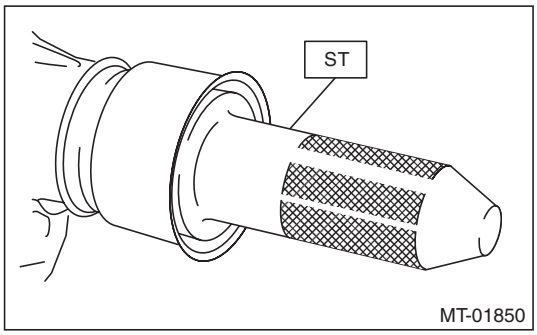

13) Apply transmission gear oil to the oil seal lips.
14) Install the propeller shaft. <Ref. to DS-11, INSTALLATION, Propeller Shaft.>
15) Install the heat shield cover. <Ref. to EI-168, INSTALLATION, Heat Shield Cover.>
16) Install the center exhaust pipe. (non-turbo model) <Ref. to EX(H4SO)-8, INSTALLATION, Center Exhaust Pipe.>
17) Install the center exhaust pipe. (turbo model) <Ref. to EX(H4DOTC)-13, INSTALLATION, Center Exhaust Pipe.>
18) Install the front under cover. <Ref. to EI-35, INSTALLATION, Front Under Cover.>
19) Lower the vehicle.
20) Pour in transmission gear oil and check the oil level. <Ref. to 6MT-24, Transmission Gear Oil.>
21) Install the collector cover. (turbo model)

GETtheMANUALS.org

6. Differential Side Retainer Oil Seal

A: INSPECTION

Check for leakage of transmission gear oil from the differential side retainer oil seal. If there is oil leakage, replace the oil seal with the new part and check the drive shaft.

B: REPLACEMENT

1) Remove the collector cover. (turbo model)
2) Lift up the vehicle.
3) Remove the front under cover. <Ref. to EI-35, REMOVAL, Front Under Cover.>
4) Using the TORX® bit T70, remove the drain plug, and drain the transmission gear oil completely.

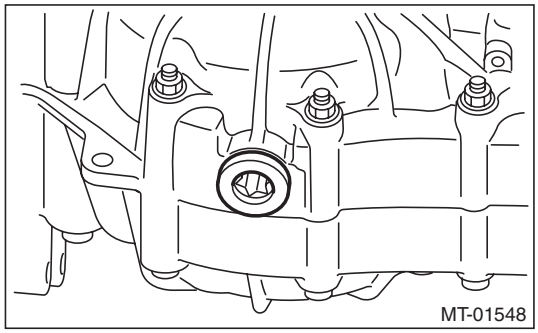

5) Tighten the drain plug using TORX® bit T70.

NOTE:
Use a new gasket.

Tightening torque:
44 N·m (4.5 kgf-m, 32.5 ft-lb) (Aluminum gasket silver)
70 N·m (7.1 kgf-m, 51.6 ft-lb) (Copper gasket brown)
70 N·m (7.1 kgf-m, 51.6 ft-lb) (Metal gasket black)

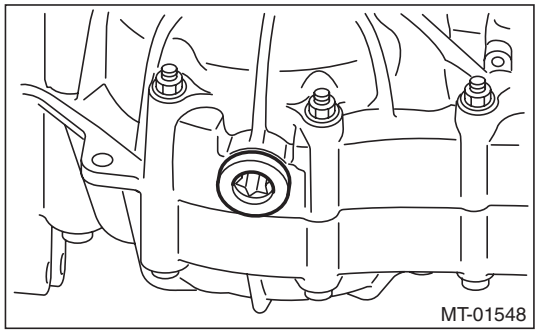

6) Remove the center exhaust pipe. (non-turbo model) <Ref. to EX(H4SO)-8, REMOVAL, Center Exhaust Pipe.>
7) Remove the center exhaust pipe. (turbo model) <Ref. to EX(H4DOTC)-12, REMOVAL, Center Exhaust Pipe.>
8) Separate the front drive shaft from the transmission. <Ref. to DS-48, REMOVAL, Front Drive Shaft.>
9) Remove the differential side retainer oil seal.

NOTE:
Use the ST 398527700 PULLER ASSY to remove the oil seal. If removing the oil seal with a flat tip screwdriver, be careful not to scratch the differential side retainer.
10) Using the ST, install the differential side retainer oil seal by lightly tapping with a plastic hammer.

NOTE:
- Apply transmission gear oil to the oil seal lips, and install the oil seal while being careful not to deform the lip.
- Check the identification marks (L, R) during installation not to mix up the oil seal RH and LH.
- Use a new oil seal.

ST 18675AA000 DIFFERENTIAL SIDE OIL SEAL INSTALLER

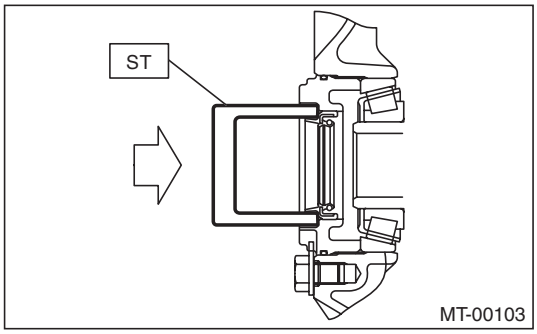

11) Install the front drive shaft. <Ref. to DS-49, INSTALLATION, Front Drive Shaft.>
12) Install the center exhaust pipe. (non-turbo model) <Ref. to EX(H4SO)-8, INSTALLATION, Center Exhaust Pipe.>
13) Install the center exhaust pipe. (turbo model) <Ref. to EX(H4DOTC)-13, INSTALLATION, Center Exhaust Pipe.>
14) Install the front under cover. <Ref. to EI-35, INSTALLATION, Front Under Cover.>
15) Lower the vehicle.
16) Add the transmission gear oil through the oil level gauge hole. <Ref. to 6MT-24, Transmission Gear Oil.>
17) Install the collector cover. (turbo model)

GETtheMANUALS.org

7. Switches and Harness

A: REMOVAL

1. BACK-UP LIGHT AND NEUTRAL POSITION SWITCH

1) Disconnect the ground cable from battery.
2) Remove the collector cover. (turbo model)
3) Remove the air intake boot assembly. (non-turbo model) <Ref. to IN(H4SO)-8, REMOVAL, Air Intake Boot.>
4) Remove the intercooler. (turbo model) <Ref. to IN(H4DOTC)-17, REMOVAL, Intercooler.>
5) Disconnect the connector back-up light switch & neutral position switch.

- Non-turbo model

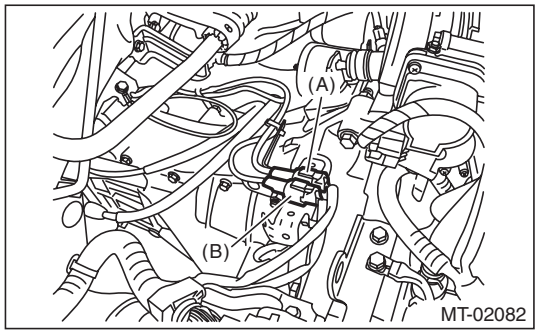

(A) Neutral position switch connector (Brown)
(B) Back-up light switch connector (Gray)

- Turbo model

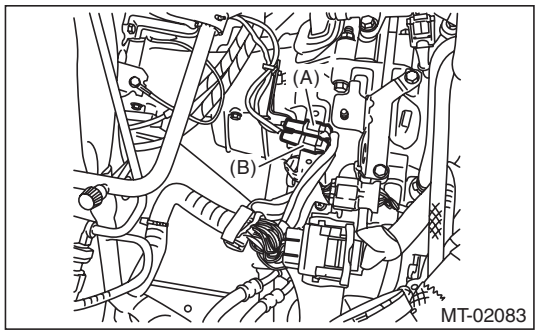

(A) Neutral position switch connector (Brown)
(B) Back-up light switch connector (Gray)

6) Lift up the vehicle.
7) Remove the back-up light switch & neutral position switch with the harness.

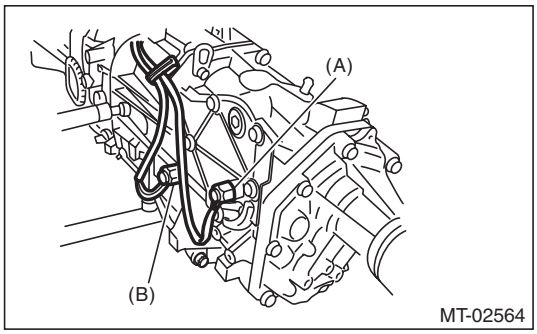

(A) Neutral position switch
(B) Back-up light switch

B: INSTALLATION

1. BACK-UP LIGHT SWITCH & NEUTRAL POSITION SWITCH

1) Install the back-up light switch & neutral position switch with the harness.

NOTE:
Use a new gasket.

Tightening torque:
32.3 N·m (3.3 kgf-m, 23.8 ft-lb)

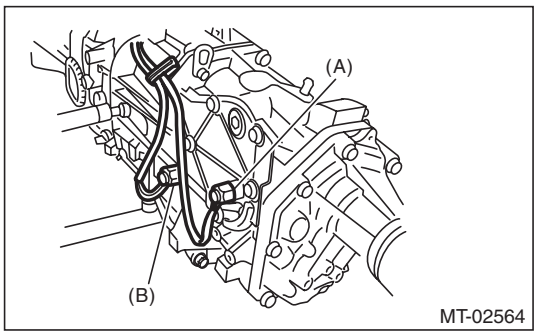

(A) Neutral position switch
(B) Back-up light switch

2) Lower the vehicle.
3) Connect the connectors of back-up light switch & neutral position switch.
4) Install the air intake boot assembly. (non-turbo model) <Ref. to IN(H4SO)-8, INSTALLATION, Air Intake Boot.>
5) Install the intercooler. (turbo model) <Ref. to IN(H4DOTC)-18, INSTALLATION, Intercooler.>
6) Install the collector cover. (turbo model)
7) Connect the battery ground terminal.

GETtheMANUALS.org

C: INSPECTION

1. BACK-UP LIGHT SWITCH

Check the back-up light switch. <Ref. to LI-13, INSPECTION, Back-up Light System.>

2. NEUTRAL POSITION SWITCH

1) Turn the ignition switch to OFF.
2) Disconnect the connector of neutral position switch.
3) Measure the resistance between neutral position switch terminals.

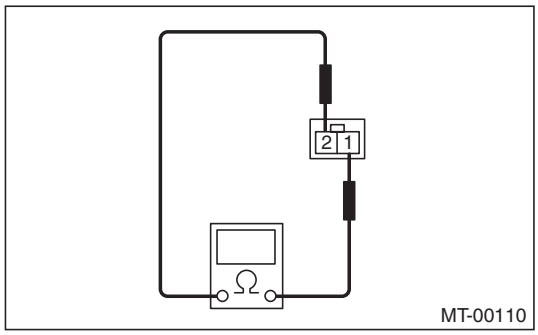

Gear shift position	Terminal No.	Specified resistance
Neutral position	1 and 2	Less than 1 Ω
Other positions		1 MΩ or more

4) Replace faulty parts.

GETtheMANUALS.org

8. Preparation for Overhaul

A: PROCEDURE

1) Clean oil, grease, dirt and dust from the transmission.
2) When gear oil remains in the transmission, using the TORX® bit T70, remove the drain plug, and drain the transmission gear oil completely.
3) Tighten the drain plug using TORX® bit T70.

NOTE:
Use a new gasket.

Tightening torque:
44 N·m (4.5 kgf-m, 32.5 ft-lb) (Aluminum gasket silver)
70 N·m (7.1 kgf-m, 51.6 ft-lb) (Copper gasket brown)
70 N·m (7.1 kgf-m, 51.6 ft-lb) (Metal gasket black)

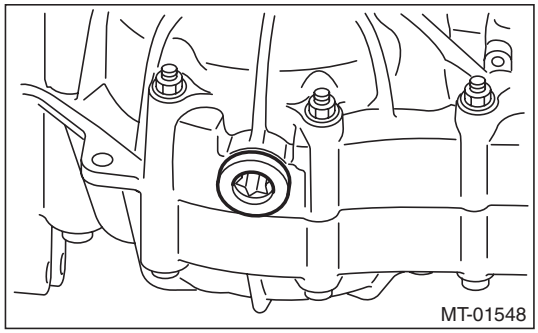

4) Attach the transmission to the ST.
ST 499937100 TRANSMISSION STAND

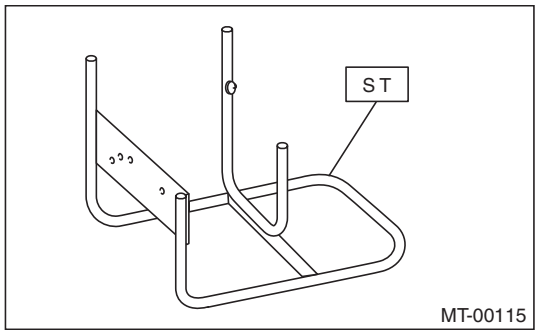

5) Apply oil to rotating parts before assembly.
6) All disassembled parts, if to be reused, should be reinstalled in the original positions and directions.
7) Gaskets, lock washers and lock nuts must be replaced with new ones.
8) Apply liquid gasket to the specified areas to prevent leakage.

GETtheMANUALS.org

9. Transfer Case and Extension Case Assembly

A: REMOVAL

1) Remove the manual transmission assembly from the vehicle. <Ref. to 6MT-25, REMOVAL, Manual Transmission Assembly.>
2) Remove the back-up light switch and the neutral position switch. <Ref. to 6MT-37, REMOVAL, Switches and Harness.>
3) Remove the transfer case together with the extension case assembly.
(1) Remove the transmission cover.

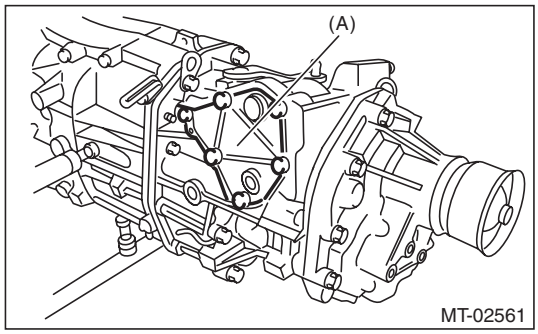

(A) Transmission cover

(2) Set and hold the selector lever COMPL to the 1st-2nd side, and remove the transfer case and extension case assembly as a unit.

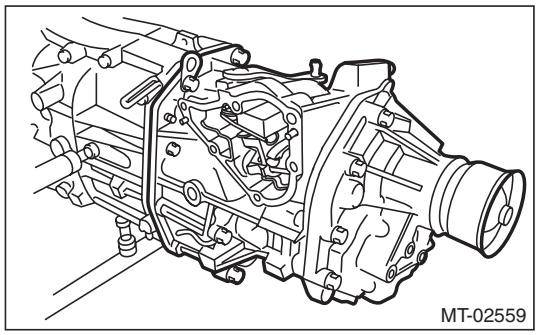

4) Use the ST to push out the spring pin and remove the shift lever COMPL from shifter arm No. 2.
ST 398791700 SPRING PIN REMOVER 2

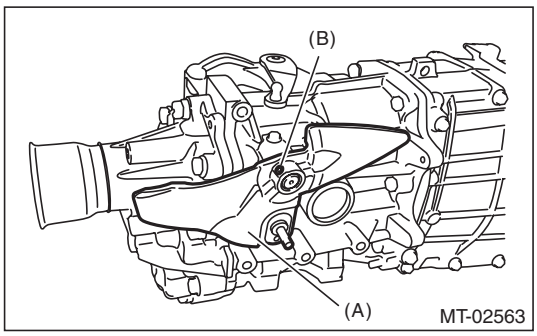

(A) Shift lever COMPL
(B) Spring pin

5) Remove the extension case assembly.

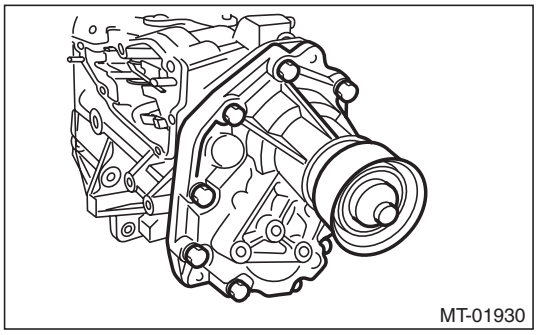

B: INSTALLATION

1) Install the center differential and transfer driven gear into the transfer case.

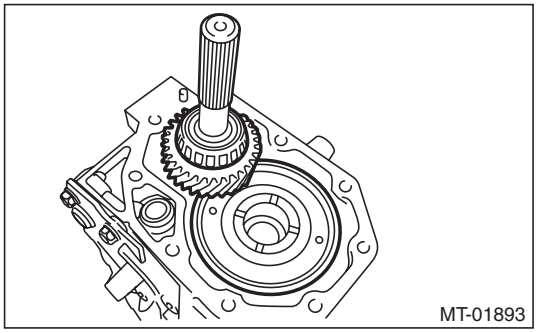

GETtheMANUALS.org

2) Remove the bearing outer race and thrust washer from the extension case.

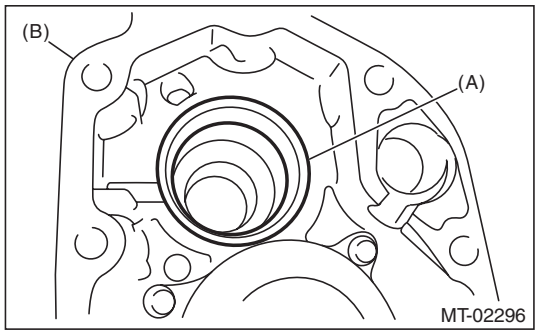

(A) Bearing outer race
(B) Extension case

3) Install the bearing outer race to transfer driven gear.
4) While pressing the bearing outer race horizontally, rotate the driven shaft for ten turns.
5) Measure the height “W” between transfer case and taper roller bearing on the transfer driven gear.

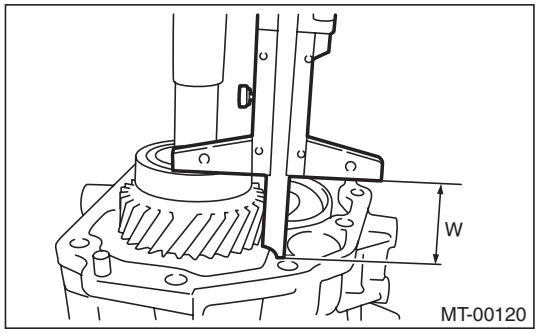

6) Measure depth “X” of bearing insertion part of the extension case.

NOTE:
Measure with bearing outer race and thrust washer removed.

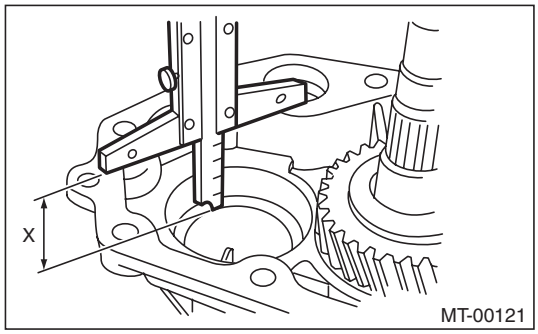

7) Calculate the thrust washer thickness “t” using the following calculation.
t = X – W + (0.15 — 0.20 mm (0.006 — 0.008 in))

8) Select the washer with the nearest value in the following table.

NOTE:
Be sure that it is always within the preload.

Preload of the taper roller bearing (amount of standard protrusion):
0.15 — 0.20 mm (0.006 — 0.008 in)

Thrust washer (50 × 61 × t)	
Part No.	Thickness mm (in)
803050060	0.50 (0.0197)
803050061	0.55 (0.0217)
803050062	0.60 (0.0236)
803050063	0.65 (0.0256)
803050064	0.70 (0.0276)
803050065	0.75 (0.0295)
803050066	0.80 (0.0315)
803050067	0.85 (0.0335)
803050068	0.90 (0.0354)
803050069	0.95 (0.0374)
803050070	1.00 (0.0394)
803050071	1.05 (0.0413)
803050072	1.10 (0.0433)
803050073	1.15 (0.0453)
803050074	1.20 (0.0472)
803050075	1.25 (0.0492)
803050076	1.30 (0.0512)
803050077	1.35 (0.0531)
803050078	1.40 (0.0551)
803050079	1.45 (0.0571)

9) Install the thrust washer to extension case.
10) Replace the bearing outer race attached to the transfer driven gear with the extension case.
11) Measure the depth “S” between transfer case and center differential.
ST 398643600 GAUGE

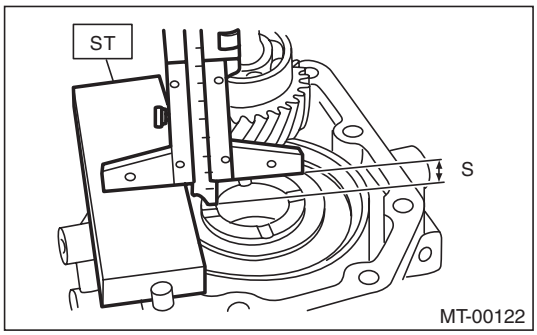

GETtheMANUALS.org

12) Measure the height “T” between the extension case and transfer drive gear.
ST 398643600 GAUGE

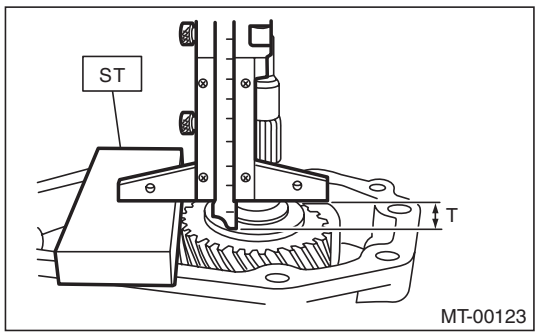

13) Calculate the thrust washer thickness “U” using the following calculation.
U = S + T – 30 mm (1.18 in) [Thickness of ST]

NOTE:
Thickness of ST: 15 mm (0.59 in)

14) Select a suitable washer in the following table.

Standard clearance:
0.15 — 0.35 mm (0.0059 — 0.0138 in)

Thrust washer	
Part No.	Thickness mm (in)
803036050	0.9 (0.035)
803036054	1.0 (0.039)
803036051	1.1 (0.043)
803036055	1.2 (0.047)
803036052	1.3 (0.051)
803036056	1.4 (0.055)
803036053	1.5 (0.059)
803036057	1.6 (0.063)
803036058	1.7 (0.067)
803036080	1.8 (0.071)
803036081	1.9 (0.075)

15) Install the selected thrust washer to center differential.

16) Apply a proper amount of liquid gasket to the transfer case mating surface.

Liquid gasket:
THREE BOND 1215 (Part No. 004403007) or equivalent

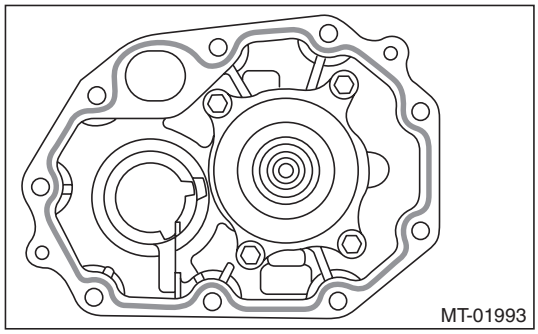

17) Install the extension case assembly to the transfer case.

Tightening torque:
40 N·m (4.1 kgf-m, 29.5 ft-lb)

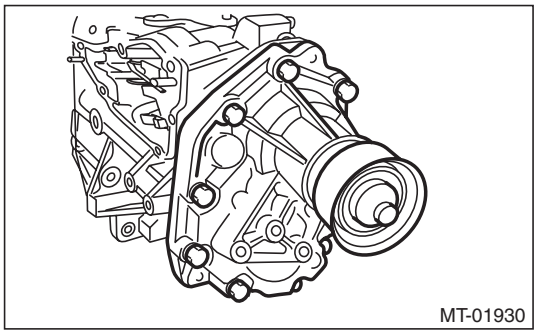

18) Install the gasket, and install the transfer case along with the extension case assembly to the transmission case.

NOTE:
Use a new gasket.

(1) Insert the axle shaft and hold, then move the ST (HANDLE) to align the spline position to install.

ST 18631AA000 HANDLE
Part No. 38415AA100 Axle shaft

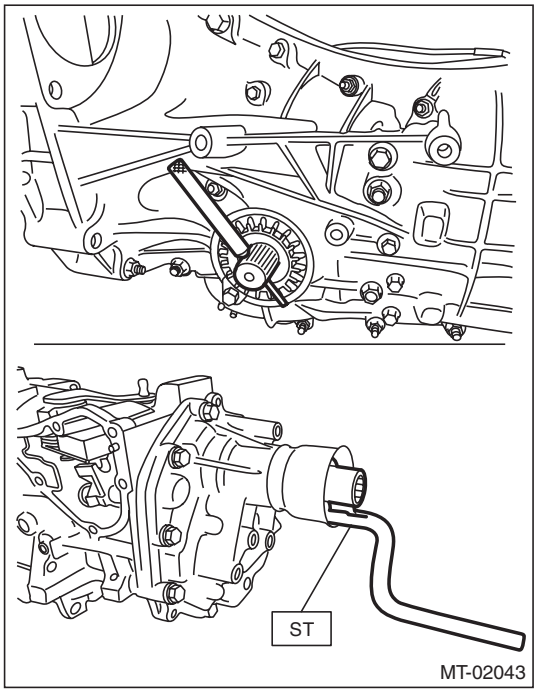

GETtheMANUALS.org

NOTE:
Push the transfer case assembly until the knock pin protrudes slightly from the transfer case.

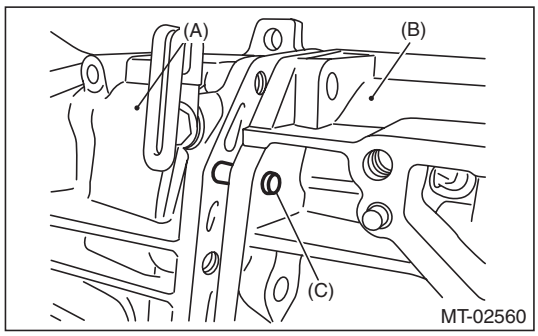

(A) Transmission case
(B) Transfer case
(C) Knock pin

(2) Set and hold the selector lever to the 1st-2nd side, and install the transfer case assembly so that the shifter arm edge and fork rod does not contact.

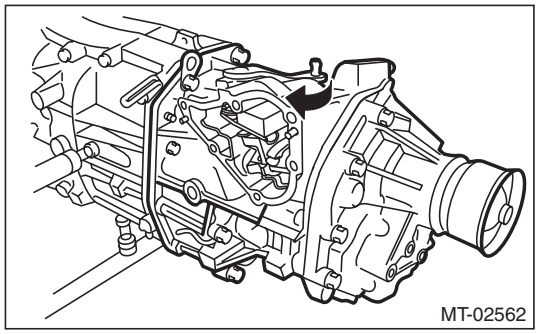

19) Temporarily tighten the transfer case assembly.
20) Install the shift lever COMPL to the shifter arm No. 2, then insert the remover or similar tool instead of spring pin.

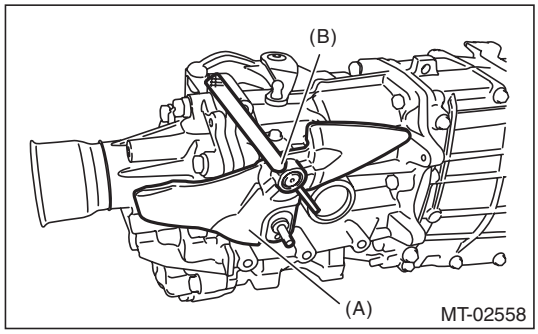

(A) Shift lever COMPL
(B) Remover

21) Operate the selector lever and shift lever COMPL to confirm the correct shifting into each gear is possible.

22) Tighten the transfer case assembly to the specified torque.

Tightening torque:
24.5 N·m (2.5 kgf-m, 18.1 ft-lb)

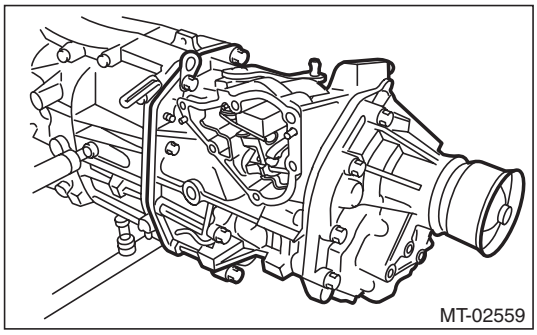

23) Install the shift lever COMPL to the shifter arm No. 2, then fix it using a spring pin.

NOTE:
Use new spring pin.

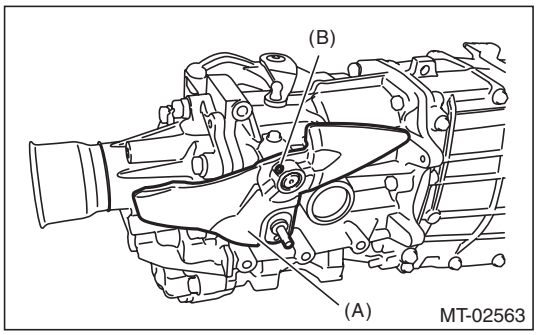

(A) Shift lever COMPL
(B) Spring pin

24) Install the transmission cover. <Ref. to 6MT-53, INSTALLATION, Shift Link Assembly.>

GETtheMANUALS.org

C: DISASSEMBLY

1. TRANSFER CASE

1) Remove the interlock plate.

NOTE:
Do not remove the interlock plate mounting bolt if the parts are assembled as a transmission assembly. Do not attempt to replace the interlock plate unless necessary. Do not reuse the bolts and gaskets once they are removed.

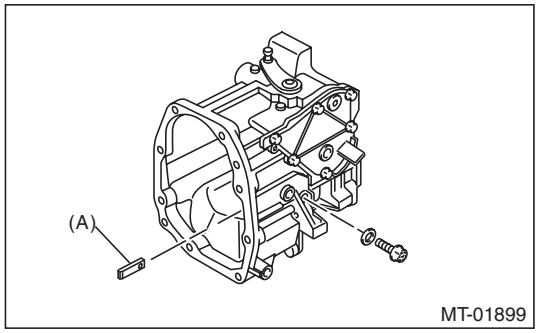

(A) Interlock plate

2) Remove the shift link assembly. <Ref. to 6MT-50, REMOVAL, Shift Link Assembly.>

2. EXTENSION CASE

1) Remove the transfer drive gear assembly. <Ref. to 6MT-45, REMOVAL, Transfer Drive Gear.>
2) Remove the oil seal from the extension case. <Ref. to 6MT-35, Oil Seal.>

D: ASSEMBLY

1. TRANSFER CASE

1) Install the shift link assembly to the transfer case. <Ref. to 6MT-53, INSTALLATION, Shift Link Assembly.>
2) Install the interlock plate to the transfer case.

NOTE:
- Use a new bolt and gasket.
- Before installing the interlock plate, clean the screw threads.

Tightening torque:
20 N·m (2.0 kgf-m, 14.8 ft-lb)

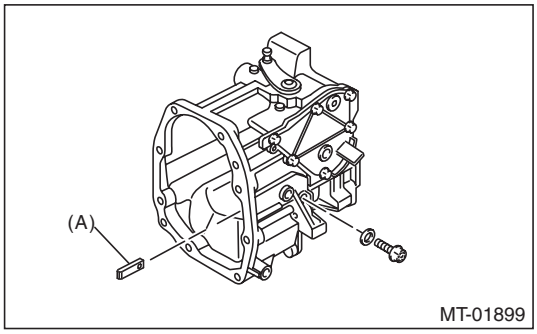

(A) Interlock plate

2. EXTENSION CASE

1) Using the ST, install the oil seal to the extension case. <Ref. to 6MT-35, Oil Seal.>

NOTE:
Use a new oil seal.
2) Install the transfer drive gear to the extension case. <Ref. to 6MT-45, INSTALLATION, Transfer Drive Gear.>

GETtheMANUALS.org

10. Transfer Drive Gear

A: REMOVAL

1) Remove the manual transmission assembly from the vehicle. <Ref. to 6MT-25, REMOVAL, Manual Transmission Assembly.>
2) Remove the back-up light switch neutral position switch. <Ref. to 6MT-37, REMOVAL, Switches and Harness.>
3) Remove the transfer case together with the extension case assembly. <Ref. to 6MT-40, REMOVAL, Transfer Case and Extension Case Assembly.>
4) Remove the extension case assembly.
5) Remove the transfer driven gear. <Ref. to 6MT-47, REMOVAL, Transfer Driven Gear.>
6) Remove the transfer drive gear.

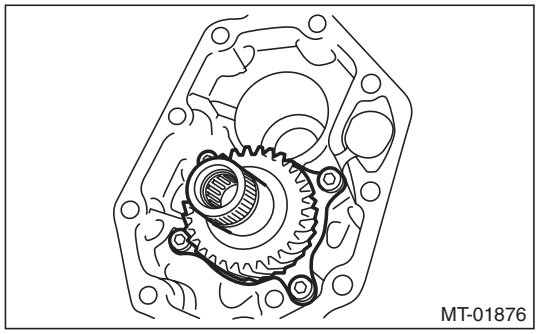

B: INSTALLATION

1) Install the transfer drive gear.

Tightening torque:
26 N·m (2.7 kgf-m, 19.2 ft-lb)

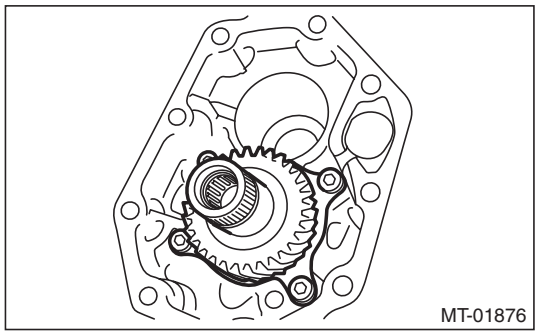

2) Install the transfer driven gear. <Ref. to 6MT-47, INSTALLATION, Transfer Driven Gear.>
3) Install the extension case assembly.
4) Install the transfer case and the extension case assembly. <Ref. to 6MT-40, INSTALLATION, Transfer Case and Extension Case Assembly.>
5) Install the back-up light switch neutral position switch. <Ref. to 6MT-37, INSTALLATION, Switches and Harness.>
6) Install the manual transmission assembly to the vehicle. <Ref. to 6MT-29, INSTALLATION, Manual Transmission Assembly.>

C: DISASSEMBLY

1) Remove the snap ring.

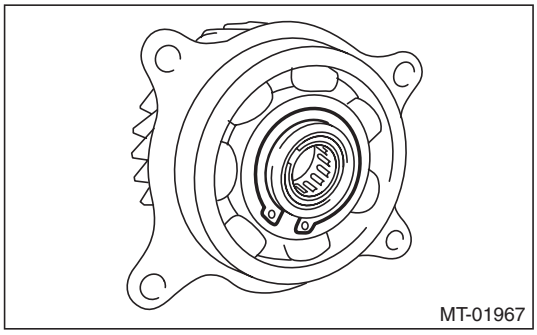

2) Remove the ball bearing.
ST 899864110 REMOVER

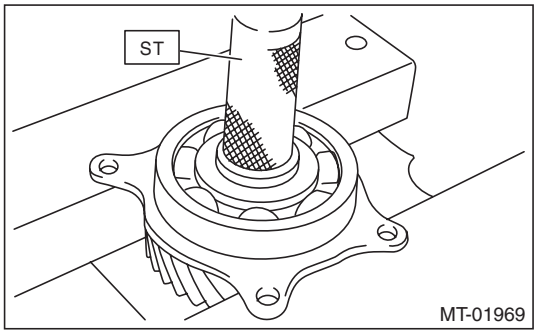

3) Remove the snap ring from transfer drive gear, and remove the needle bearing.

D: ASSEMBLY

1) Install the needle bearing and snap ring to the transfer drive gear.
2) Set the ST to the bearing inner race, then install the transfer drive shaft.

CAUTION:
Do not apply a load in excess of 10 kN (1 ton, 1.1 US ton, 1.0 Imp ton).
ST 398177700 INSTALLER

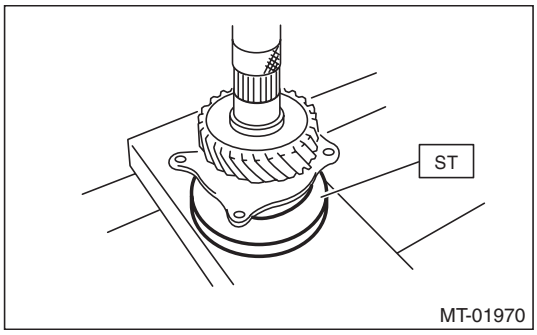

GETtheMANUALS.org

3) Install the snap ring on the transfer drive shaft.

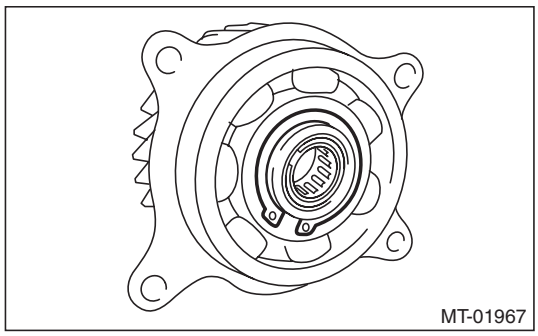

4) Inspect the clearance between the snap ring and the ball bearing. <Ref. to 6MT-46, INSPECTION, Transfer Drive Gear.>

E: INSPECTION

1) Bearing
Replace the bearings in the following cases.
- In case of broken or rusty bearings
- In case of wear or damage
- When the bearings fail to turn smoothly or emit noise in rotation after gear oil lubrication.

2) Drive gear
If the drive gear tooth surface and shaft are excessively broken or damaged, replace the drive gear.
3) Measure the clearance between snap ring and inner race of ball bearing with a thickness gauge.

Clearance:
0.01 — 0.15 mm (0.0004 — 0.0059 in)

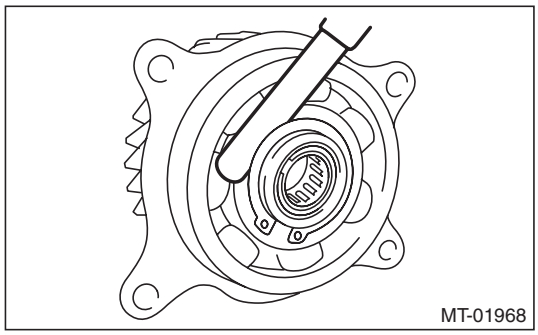

If the measurement is not within specification, select a suitable snap ring and replace it.

Snap ring (Outer-30)	
Part number	Thickness mm (in)
805030041	1.53 (0.0602)
805030042	1.65 (0.0650)
805030043	1.77 (0.0697)

GETtheMANUALS.org

11.Transfer Driven Gear

A: REMOVAL

1) Remove the manual transmission assembly from the vehicle. <Ref. to 6MT-25, REMOVAL, Manual Transmission Assembly.>
2) Remove the back-up light switch neutral position switch. <Ref. to 6MT-37, REMOVAL, Switches and Harness.>
3) Remove the transfer case together with the extension case assembly. <Ref. to 6MT-40, REMOVAL, Transfer Case and Extension Case Assembly.>
4) Remove the extension case assembly.
5) Remove the transfer driven gear.

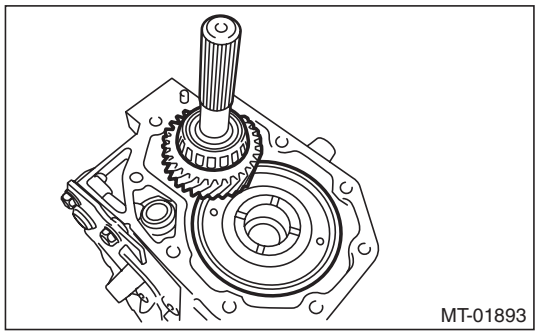

6) Remove bearing outer races from the extension case and transfer case.

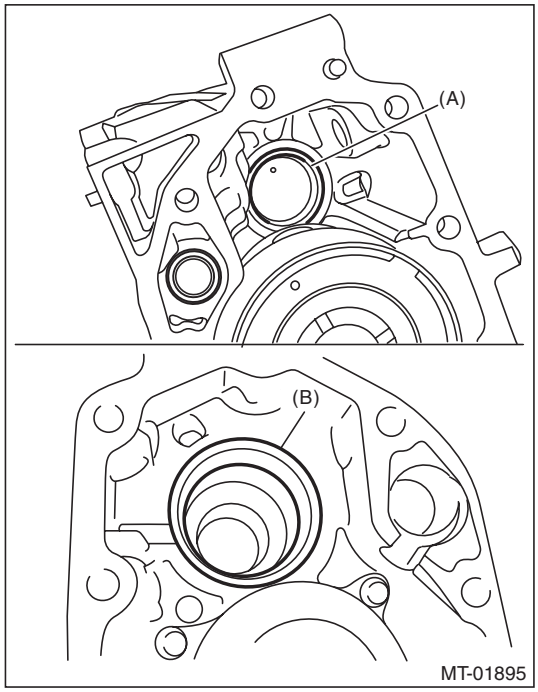

(A) Bearing outer race (Transfer case side)
(B) Bearing outer race (Extension case side)

B: INSTALLATION

1) Select a thrust washer. <Ref. to 6MT-40, INSTALLATION, Transfer Case and Extension Case Assembly.>
2) Install the bearing outer races to extension case and transfer case.

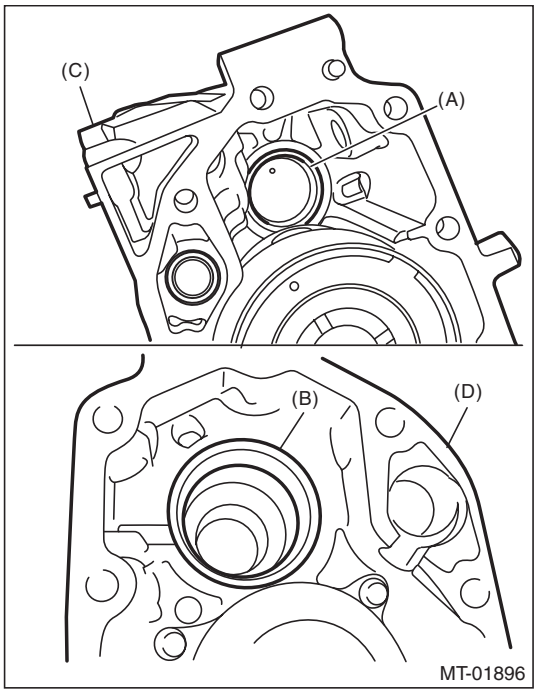

(A) Bearing outer race
(B) Bearing outer race
(C) Transfer case
(D) Extension case

3) Install the transfer driven gear.

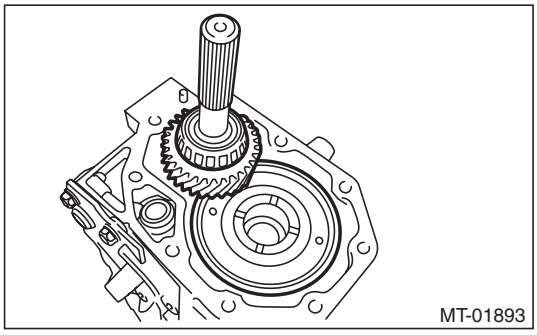

4) Install the transfer case and the extension case assembly. <Ref. to 6MT-40, INSTALLATION, Transfer Case and Extension Case Assembly.>
5) Install the back-up light switch and the neutral position switch. <Ref. to 6MT-37, INSTALLATION, Switches and Harness.>
6) Install the manual transmission assembly to the vehicle. <Ref. to 6MT-29, INSTALLATION, Manual Transmission Assembly.>

GETtheMANUALS.org

C: DISASSEMBLY

1) Using the ST, remove the roller bearing (extension case side).
ST 498077000 REMOVER

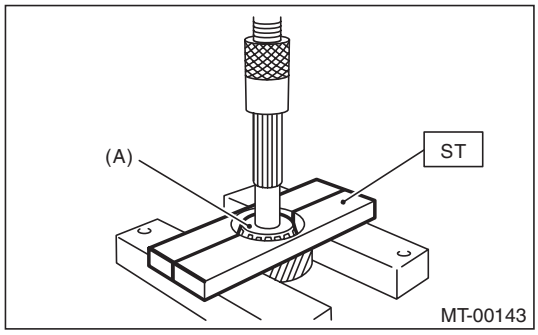

(A) Roller bearing

2) Using ST1 and ST2, remove the roller bearing (transfer case side).
ST1 498077000 REMOVER
ST2 899864100 REMOVER

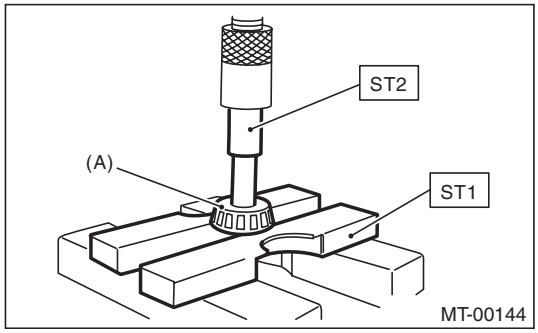

(A) Roller bearing

D: ASSEMBLY

1) Using the ST, install the roller bearing (extension case side).

CAUTION:
Do not apply a load in excess of 10 kN (1 ton, 1.1 US ton, 1.0 Imp ton).
ST1 398177700 INSTALLER
ST2 899864100 REMOVER

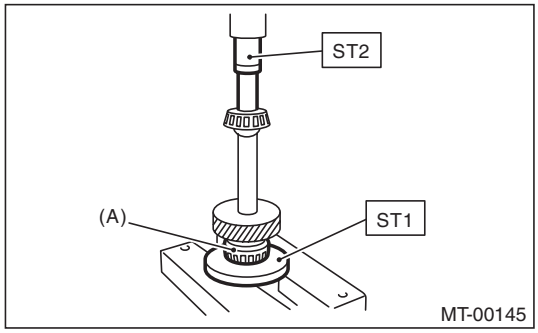

(A) Roller bearing

2) Using ST, install the roller bearing (transfer case side).

CAUTION:
Do not apply a load in excess of 10 kN (1 ton, 1.1 US ton, 1.0 Imp ton).
ST 499757002 INSTALLER

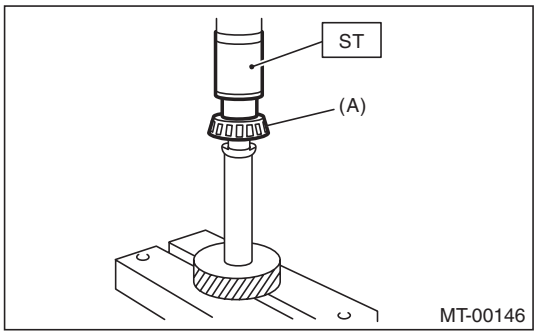

(A) Roller bearing

E: INSPECTION

1) Bearing
Replace the bearings in the following cases.
- In case of broken or rusty bearings
- In case of wear or damage
- When the bearings fail to turn smoothly or emit noise in rotation after gear oil lubrication.

2) Driven gear
If the tooth face of driven gear and the shaft are excessively broken or damaged, replace the driven gear.

GETtheMANUALS.org

12. Center Differential

A: REMOVAL

1) Remove the manual transmission assembly from the vehicle. <Ref. to 6MT-25, REMOVAL, Manual Transmission Assembly.>
2) Remove the back-up light switch neutral position switch. <Ref. to 6MT-37, REMOVAL, Switches and Harness.>
3) Remove the transfer case together with the extension case assembly. <Ref. to 6MT-40, REMOVAL, Transfer Case and Extension Case Assembly.>
4) Remove the extension case assembly. <Ref. to 6MT-40, REMOVAL, Transfer Case and Extension Case Assembly.>
5) Remove the transfer driven gear. <Ref. to 6MT-47, REMOVAL, Transfer Driven Gear.>
6) Remove the center differential.

B: INSTALLATION

1) Install the center differential into transfer case.
2) Install the transfer driven gear. <Ref. to 6MT-47, INSTALLATION, Transfer Driven Gear.>
3) Install the extension case assembly. <Ref. to 6MT-40, INSTALLATION, Transfer Case and Extension Case Assembly.>
4) Install the transfer case together with the extension case assembly. <Ref. to 6MT-40, INSTALLATION, Transfer Case and Extension Case Assembly.>
5) Install the back-up light switch neutral position switch. <Ref. to 6MT-37, INSTALLATION, Switches and Harness.>
6) Install the manual transmission assembly to the vehicle. <Ref. to 6MT-29, INSTALLATION, Manual Transmission Assembly.>

C: DISASSEMBLY

Remove the ball bearing using ST.

NOTE:
- Center differential is a non-disassembled part which should not be disassembled.
- Do not reuse the ball bearing.

ST 498077600 CENTER DIFFERENTIAL BEARING REMOVER

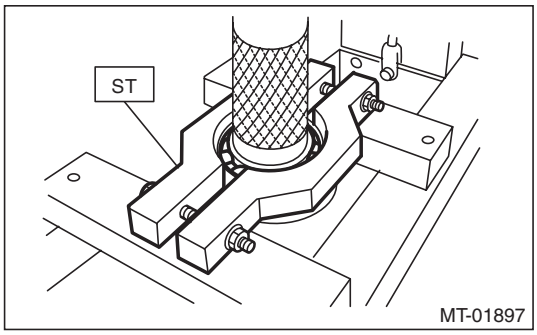

D: ASSEMBLY

Install the ball bearing to the center differential assembly.

CAUTION:
Do not apply a load in excess of 10 kN (1 ton, 1.1 US ton, 1.0 Imp ton).

NOTE:
Use a new ball bearing.

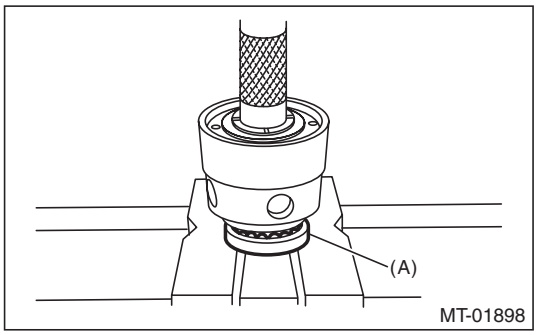

(A) Ball bearing

E: INSPECTION

1) Bearing
Replace the bearings in the following cases.
- In case of broken or rusty bearings
- In case of wear or damage
- When the bearings fail to turn smoothly or emit noise in rotation after gear oil lubrication.
- When bearing has other defects.

2) Center differential
If there is wear or damage, replace the center differential case assembly.

GETtheMANUALS.org

13.Shift Link Assembly

A: REMOVAL

1) Remove the manual transmission assembly from the vehicle. <Ref. to 6MT-25, REMOVAL, Manual Transmission Assembly.>
2) Remove the back-up light switch and the neutral position switch. <Ref. to 6MT-37, REMOVAL, Switches and Harness.>
3) Remove the transfer case together with the extension case assembly. <Ref. to 6MT-40, REMOVAL, Transfer Case and Extension Case Assembly.>
4) Remove the extension case assembly.
5) Remove the center differential and transfer driven gear as a unit.
6) Pull out the straight pin.

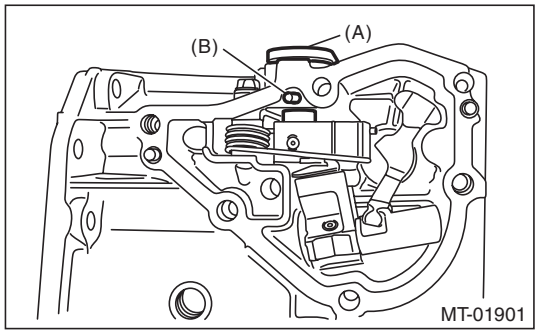

(A) Selector lever COMPL
(B) Straight pin

7) Use the ST to remove the spring pin, and remove the selector lever COMPL.
ST 398791700 SPRING PIN REMOVER 2

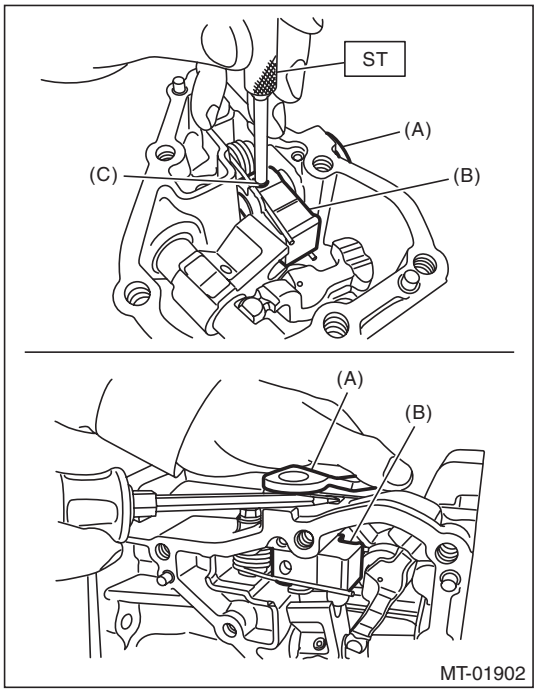

(A) Selector lever COMPL
(B) Selector arm No. 2
(C) Spring pin

8) Pull out the selector arm No. 2 from neutral set spring.

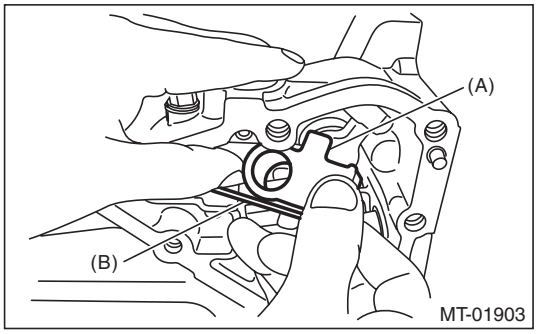

(A) Selector arm No. 2
(B) Neutral set spring

GETtheMANUALS.org

9) Remove the shifter arm collar and neutral set spring from transfer case.

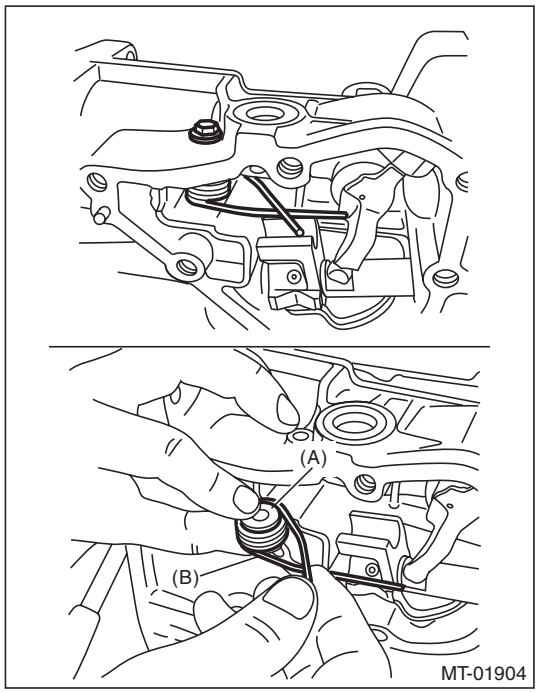

(A) Shifter arm collar
(B) Neutral set spring

10) Remove the shifter arm No. 2, washers and thrust bearing from transfer case.

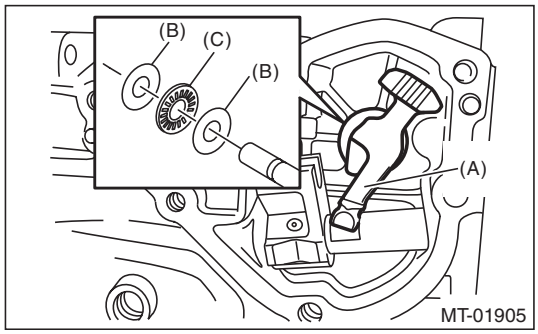

(A) Shifter arm No. 2
(B) Washer
(C) Thrust bearing

11) Use the ST to remove the spring pin, and remove the shifter arm and selector arm.
ST 398791700 SPRING PIN REMOVER 2

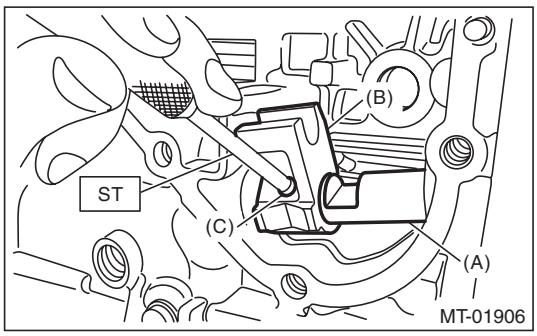

(A) Shifter arm
(B) Selector arm
(C) Spring pin

12) Remove the oil seal from the transfer case by using a screwdriver wrapped with vinyl tape etc.

NOTE:
The illustration shows the oil seal of selector lever COMPL. Perform the same procedures for removing the shifter arm No. 2.

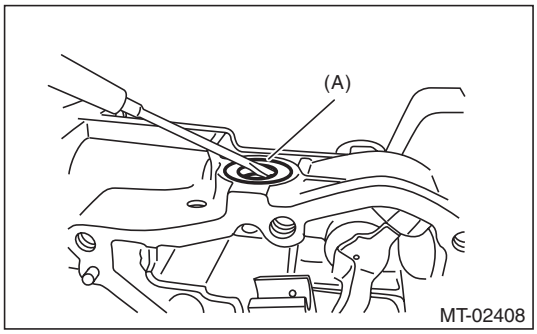

(A) Oil seal

GETtheMANUALS.org

13) Remove the needle bearing from the transfer case by using a tube with the diameter of 20 mm (0.79 in) or 21 mm (0.83 in) and the ST.
ST 18763AA000 COMPRESSOR SHAFT

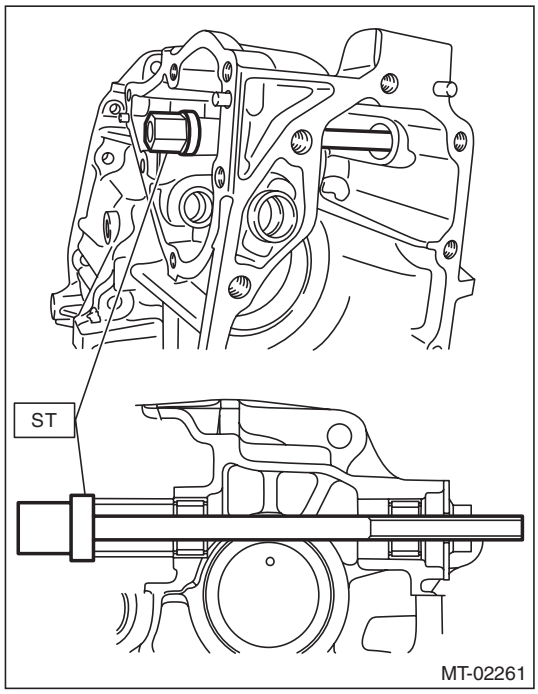

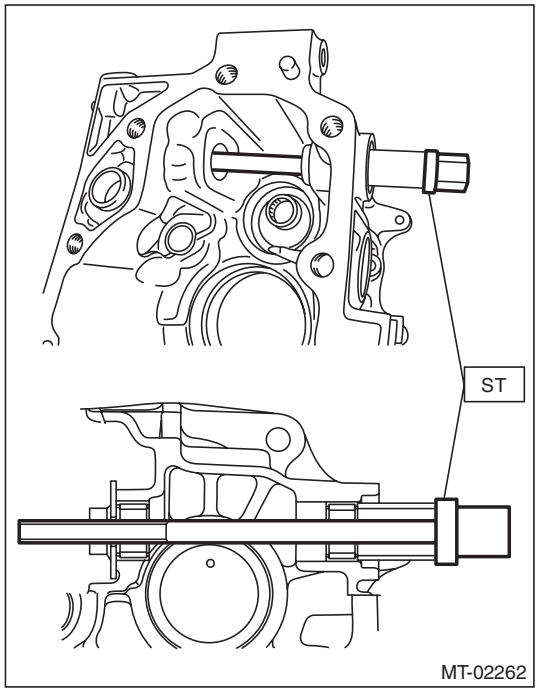

14) Set ST1, ST2 and transfer case to a press.

NOTE:
- Set the ST2 under ST1.
- Set the transfer case so that the hole for shifter arm is positioned vertically.

ST1 498267300 CYLINDER HEAD TABLE
ST2 498267200 CYLINDER HEAD TABLE

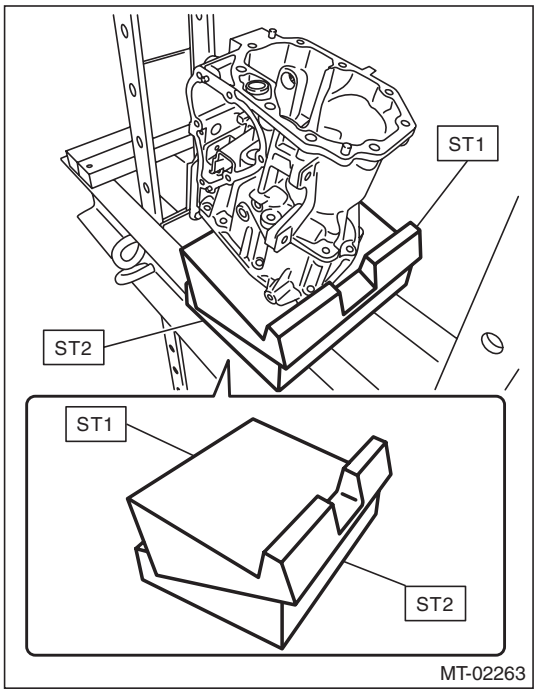

15) Remove the roller bearing by using a round bar with the diameter of 22 mm (0.87 in) or 23 mm (0.91 in).

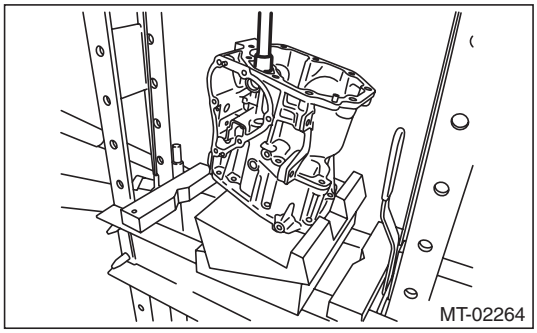

16) Flip over the transfer case, and set an iron plate between transfer case and ST.

NOTE:
- Insert the iron plate which is thicker than the exposed length of the transfer case knock pin between the ST and transfer case.
- Set the iron plate so that the transfer case knock pin does not ride on the iron plate.

GETtheMANUALS.org

17) Remove the roller bearing by using a tube with the diameter of 22 mm (0.87 in) or 23 mm (0.91 in).

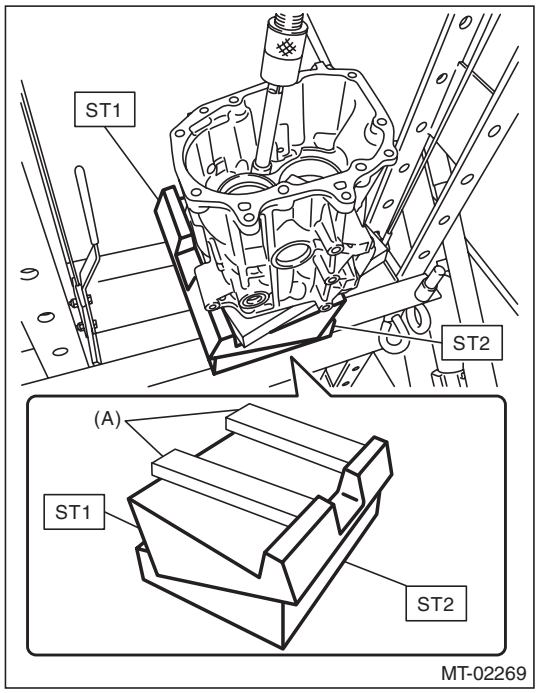

(A) Iron plate

18) Remove the plunger and check ball spring from transmission cover.

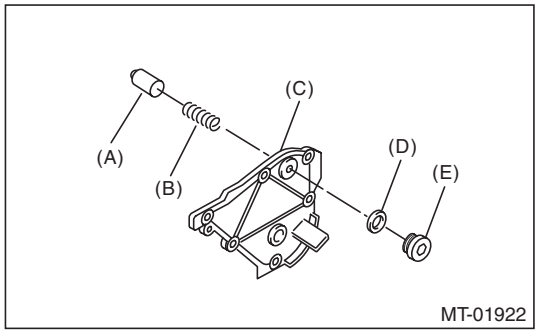

(A) Plunger
(B) Checking ball spring
(C) Transmission cover
(D) Seal ring
(E) Seal bolt

B: INSTALLATION

1) Install the plunger and check ball spring to transmission cover.

NOTE:
Use a new seal ring.

Tightening torque:
25 N·m (2.5 kgf-m, 18.4 ft-lb)

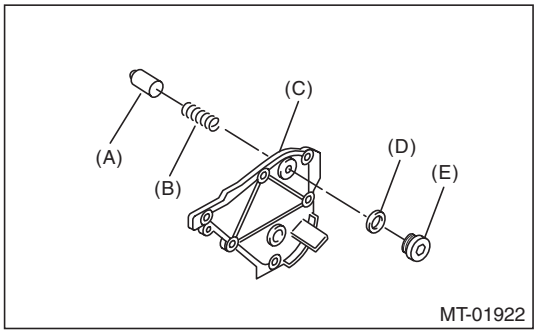

(A) Plunger
(B) Checking ball spring
(C) Transmission cover
(D) Seal ring
(E) Seal bolt

2) Using the ST, install the needle bearing to the transfer case.

NOTE:
- Use a new needle bearing.
- If the press-fit depth exceeds the service limit, replace with a new needle bearing.

ST1 18763AA000 COMPRESSOR SHAFT
ST2 498277200 STOPPER SET

GETtheMANUALS.org

Press-fit depth of needle bearing:

A: 8.5±0.2 mm (0.33±0.01 in) from the end of transfer case

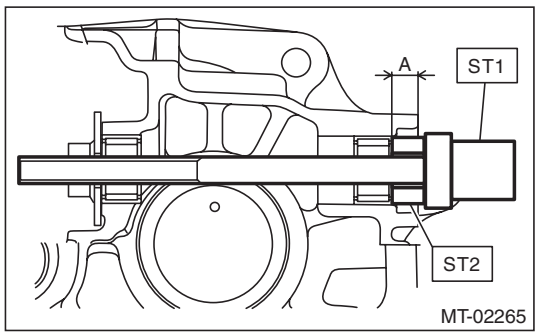

B: 0.2±0.2 mm (0.01±0.01 in) from the end of transfer case

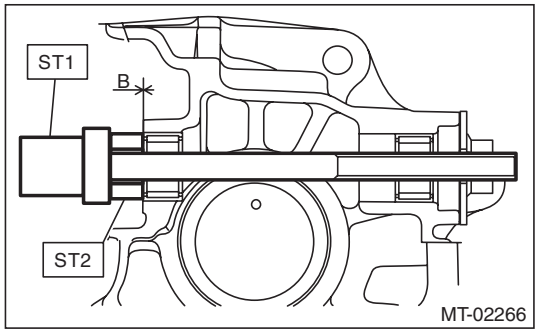

3) Set ST1, ST2 and transfer case to a press.

NOTE:
- Set the ST2 under ST1.
- Set the transfer case so that the hole for shifter arm is positioned vertically.

ST1 498267300 CYLINDER HEAD TABLE
ST2 498267200 CYLINDER HEAD TABLE

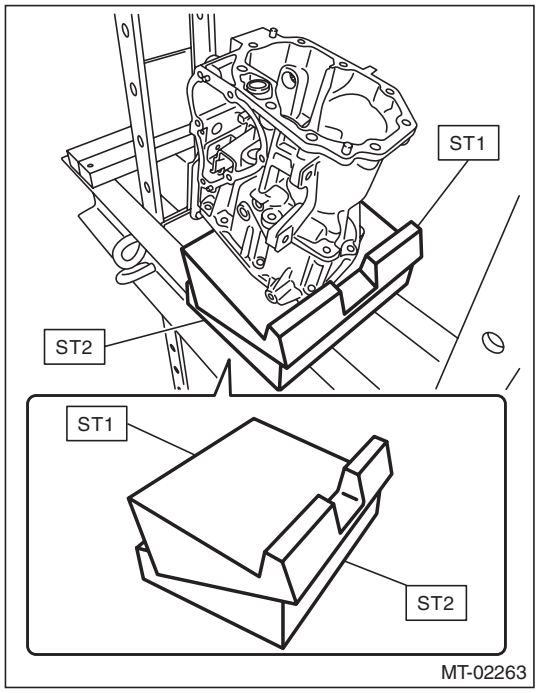

4) Using the ST, install the roller bearing to the transfer case.

NOTE:
- Use a new bearing.
- Gradually perform the press-fit operation while measuring the press-fit depth.
- If the press-fit depth exceeds the service limit, replace with a new bearing.

ST 899864100 REMOVER

Press-fit depth of roller bearing:

A: 5.1±0.2 mm (0.20±0.01 in) from the finished surface of transfer case

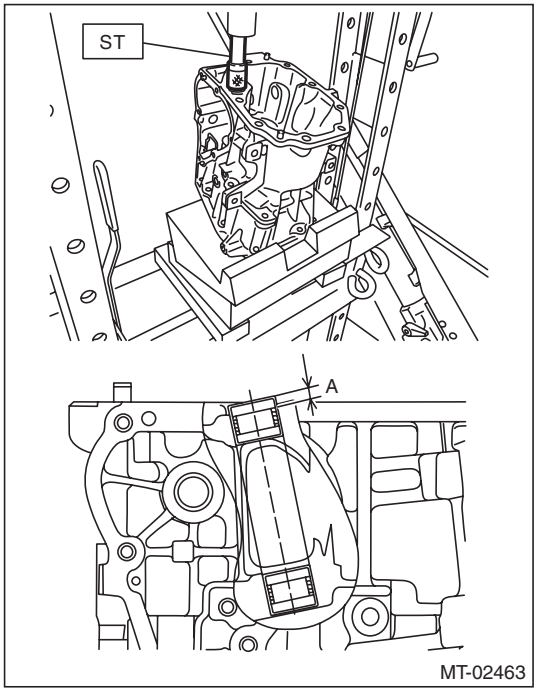

5) Flip over the transfer case, and set an iron plate between transfer case and ST.

NOTE:
- Insert the iron plate which is thicker than the exposed length of the transfer case knock pin between the ST and transfer case.
- Set the parts while taking care that the transfer case knock pin and the roller bearing do not ride over the iron plate.

6) Using the ST, install the roller bearing to the transfer case.

NOTE:
- Use a new bearing.
- Gradually perform the press-fit operation while measuring the press-fit depth.
- If the press-fit depth exceeds the service limit, replace with a new bearing.

ST 899864100 REMOVER

GETtheMANUALS.org

Press-fit depth of roller bearing:
A: 0±0.2 mm (0±0.01 in) from the end of transfer case

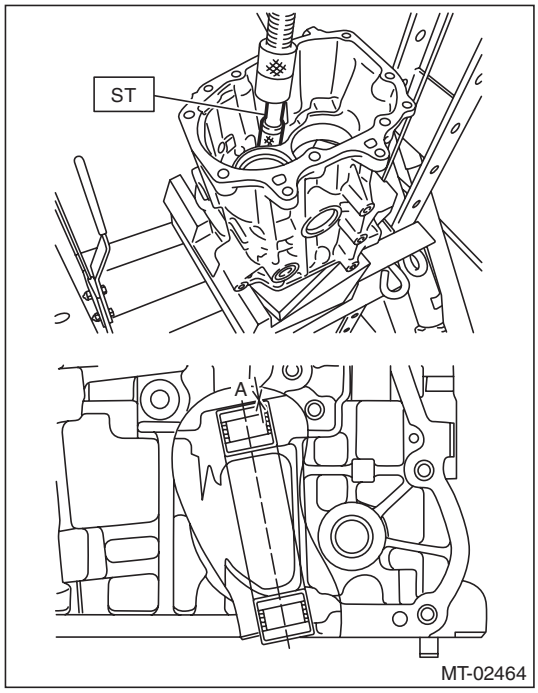

7) Using the ST, install the oil seal to the transfer case.

NOTE:
- Use a new oil seal.
- The illustration shows the oil seal of selector lever COMPL. Perform the same procedures for installing the shifter arm No. 2.
- Apply transmission gear oil to the oil seal lips.

ST 18657AA000 INSTALLER

Press-fit depth of oil seal:
1±0.2 mm (0.04±0.01 in) from the end of transfer case

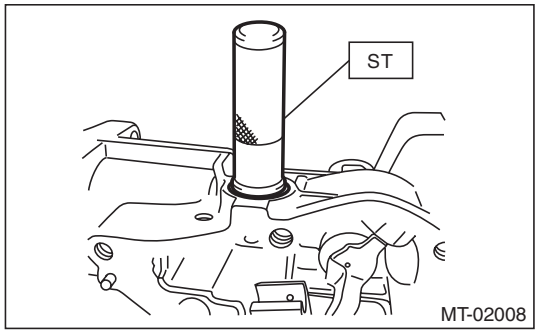

8) Insert the shifter arm into the selector arm, and fix with a spring pin.

NOTE:
Use new spring pin.
ST 398791700 SPRING PIN REMOVER 2

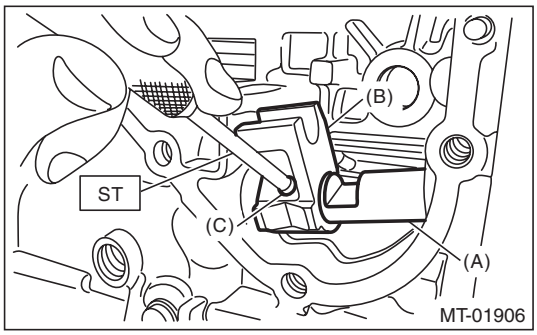

(A) Shifter arm
(B) Selector arm
(C) Spring pin

9) Install the shifter arm No. 2, washers and thrust bearing to transfer case.

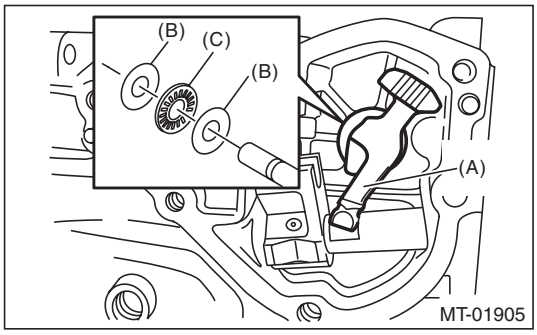

(A) Shifter arm No. 2
(B) Washer
(C) Thrust bearing

10) Install the shifter arm collar and neutral set spring to transfer case.

NOTE:
Use a new gasket.

Tightening torque:
6.4 N·m (0.7 kgf-m, 4.7 ft-lb)

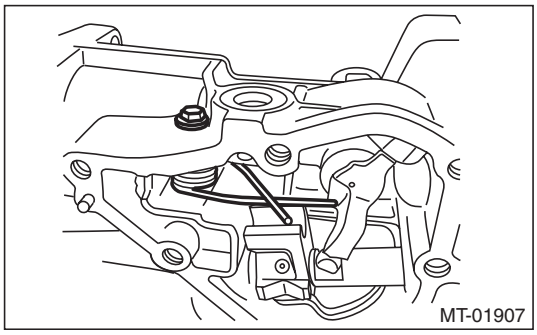

GETtheMANUALS.org

11) Install the selector arm No. 2 to neutral set spring.

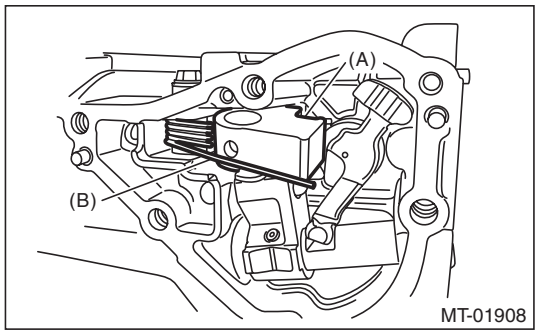

(A) Selector arm No. 2
(B) Neutral set spring

12) Insert the selector lever COMPL into the selector arm No. 2, and fix with a spring pin.

NOTE:
Use new spring pin.
ST 398791700 SPRING PIN REMOVER 2

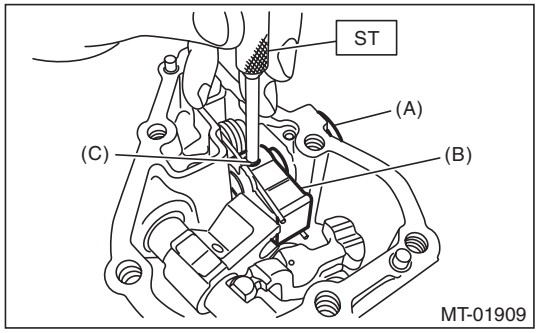

(A) Selector lever COMPL
(B) Selector arm No. 2
(C) Spring pin

13) Insert a new straight pin.

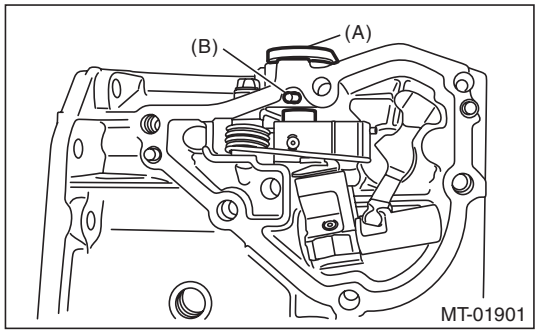

(A) Selector lever COMPL
(B) Straight pin

14) Apply liquid gasket seamlessly to the mating surface of transmission cover.

Liquid gasket:
THREE BOND 1215 (Part No. 004403007) or equivalent

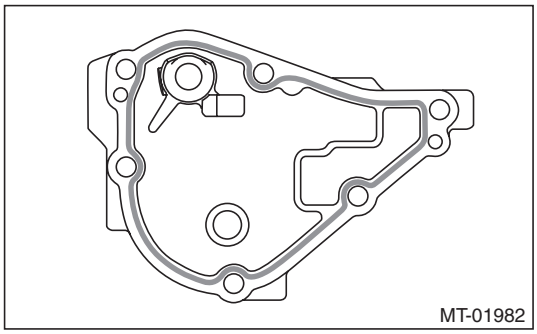

15) Install the transmission cover to transfer case.

Tightening torque:
25 N·m (2.5 kgf-m, 18.4 ft-lb)

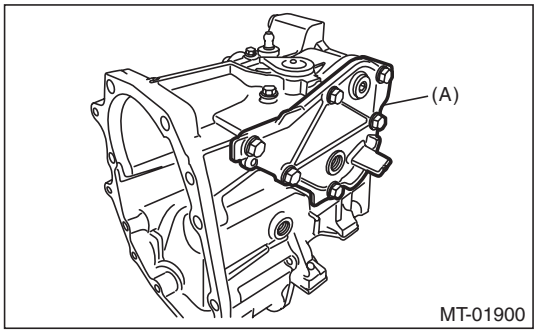

(A) Transmission cover

16) Install the center differential and transfer driven gear as a unit.
17) Attach the extension assembly to the transfer case. <Ref. to 6MT-40, INSTALLATION, Transfer Case and Extension Case Assembly.>
18) Install the transfer case and the extension case assembly. <Ref. to 6MT-40, INSTALLATION, Transfer Case and Extension Case Assembly.>
19) Install the back-up light switch and the neutral position switch. <Ref. to 6MT-37, INSTALLATION, Switches and Harness.>
20) Install the manual transmission assembly to the vehicle. <Ref. to 6MT-29, INSTALLATION, Manual Transmission Assembly.>

GETtheMANUALS.org

14. Transmission Case

A: REMOVAL

1) Remove the manual transmission assembly from the vehicle. <Ref. to 6MT-25, REMOVAL, Manual Transmission Assembly.>
2) Remove the clutch release lever. <Ref. to CL-15, REMOVAL, Release Bearing and Lever.>
3) Remove the transfer case together with the extension case assembly. <Ref. to 6MT-40, REMOVAL, Transfer Case and Extension Case Assembly.>
4) Remove the bearing mounting bolt.

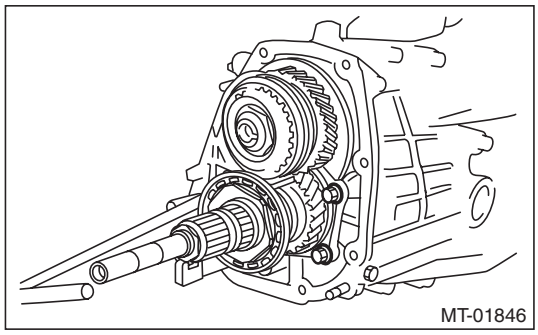

5) Remove the main shaft rear plate.

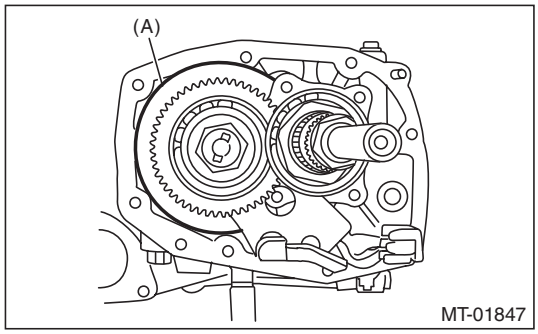

(A) Main shaft rear plate

6) Separate the transmission case into the right and left cases by loosening the coupling bolts and nuts.

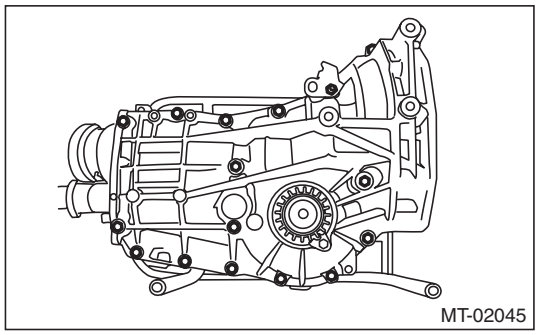

7) Remove the drive pinion shaft assembly from the left side of the transmission case.

NOTE:
Use a hammer handle, etc. to remove if too tight.

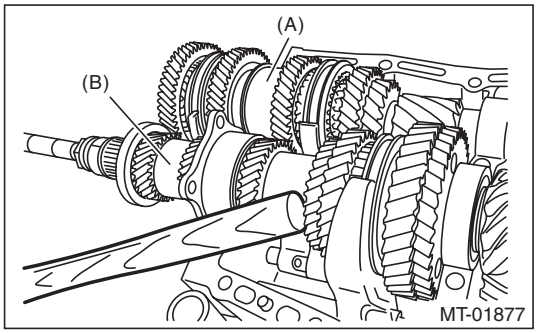

(A) Main shaft ASSY for single-range
(B) Drive pinion shaft ASSY

8) Remove the main shaft assembly for single-range.
9) Remove the front differential assembly.

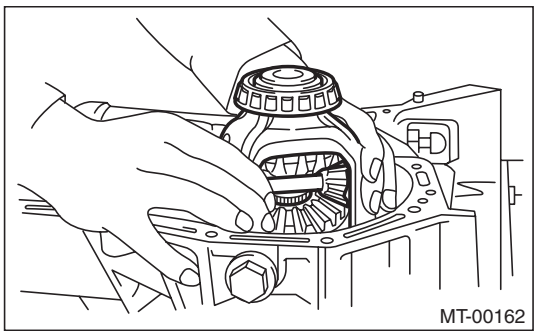

10) Remove the differential side retainers and bearing outer races on the right and left sides. <Ref. to 6MT-77, REMOVAL, Front Differential Assembly.>

NOTE:
Do not confuse the right and left roller bearing outer races.

11) Remove the reverse idler gear. <Ref. to 6MT-90, REMOVAL, Shifter Fork and Rod.>
12) Remove the shifter fork and rod. <Ref. to 6MT-90, REMOVAL, Shifter Fork and Rod.>

GETtheMANUALS.org

B: INSTALLATION

1) Wipe off grease, oil and dust on the mating surfaces of transmission cases with cleaning solvent.
2) Install the shifter fork and rod. <Ref. to 6MT-91, INSTALLATION, Shifter Fork and Rod.>
3) Select the drive pinion shim. <Ref. to 6MT-67, INSTALLATION, Drive Pinion Shaft Assembly.>
4) Install the differential side retainer, from which the bearing outer race and O-ring have already been removed, to the transmission case LH side.
5) Install the front differential assembly.
6) Install the main shaft assembly for single-range. Install the transmission case knock pin into the knock pin hole of needle bearing.
7) Install the drive pinion shaft assembly.
Install the transmission case knock pin into the roller bearing knock pin hole.
8) Apply liquid gasket, then join the right side and left side of the case together.

Liquid gasket:
THREE BOND 1215 (Part No. 004403007) or equivalent

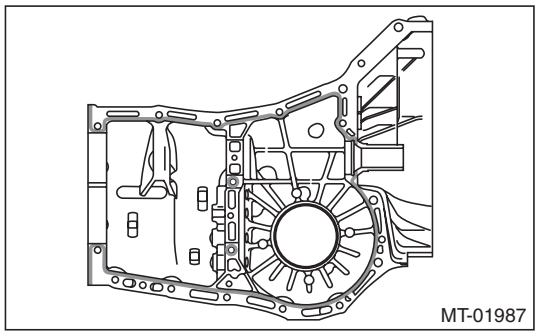

9) With brackets and clips as shown in the figure, tighten the seventeen bolts.

NOTE:
Match the cases together so that the drive pinion shims are not caught between the cases.

Tightening torque:
8 mm bolt
25 N·m (2.5 kgf-m, 18.4 ft-lb)
★ 10 mm bolt
40 N·m (4.1 kgf-m, 29.5 ft-lb)

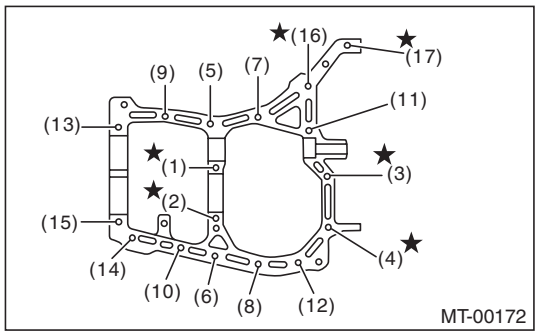

10) Tighten the taper roller bearing mounting bolts.

Tightening torque:
30 N·m (3.1 kgf-m, 22.1 ft-lb)

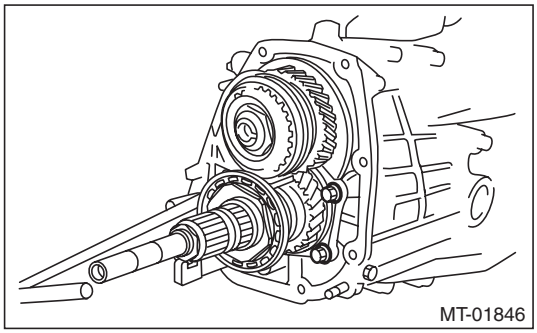

11) Perform backlash adjustment of the hypoid gear and preload measurement of the roller bearing.

NOTE:
Attach the ST on drive pinion assembly.
ST 18667AA020 HOLDER

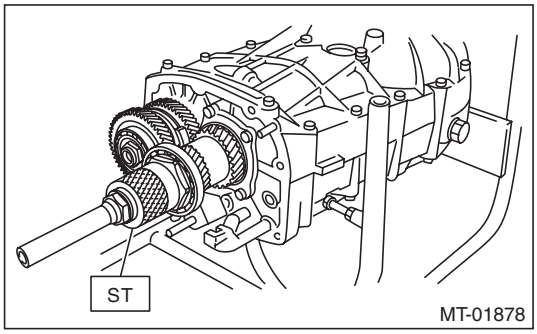

12) Place the transmission with the left side of case facing downward, and put ST1 on bearing race.
13) Screw the retainer assembly from the bottom into left case using ST2. Fit the ST3 on transmission main shaft. Shift the gear into 4th or 5th, and turn the shaft several times. Screw in the retainer while rotating the ST3 until a slight resistance is felt on ST2.
This is the contact point of the hypoid gear and the drive pinion shaft. Repeat the above sequence several times to ensure the contact point.

ST1	399780104	WEIGHT
ST2	18630AA010	WRENCH COMPL RETAINER
ST3	499927100	HANDLE

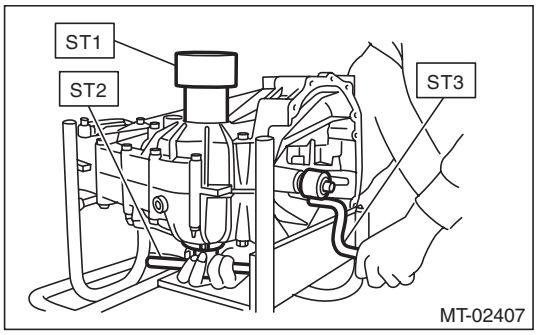

GETtheMANUALS.org

14) Remove the weight, and screw in the retainer without the O-ring on the upper side, and stop at the point where a slight resistance is felt.

NOTE:
In this condition, the backlash between hypoid gear and drive pinion shaft is zero.

ST 18630AA010 WRENCH COMPL RETAINER

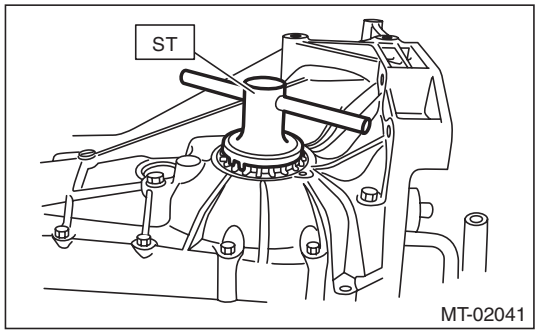

15) Loosen the retainer on the lower side by 3 notches, and turn the retainer on the upper side by the same amount in order to apply backlash.
16) Rotate the retainer of the upper side additionally by 1 notch in order to apply preload on taper roller bearing.
17) Temporarily attach both the upper and lower lock plates, and put marks both the retainer and lock plate for later readjustment.

NOTE:
If it is hard to install the lock plates, reverse the sides and install them.

18) Turn the transmission main shaft several times while tapping around the retainer lightly with plastic hammer.
19) Inspect and adjust backlash and tooth contact of the hypoid gear. <Ref. to 6MT-81, INSPECTION, Front Differential Assembly.>
20) After checking the tooth contact of the hypoid gears, remove the lock plate. Then loosen the retainer until the O-ring groove appears. Fit the O-ring into the groove and tighten the retainer into the position before it was loosened.
Install the lock plate.

NOTE:
- When loosening the retainer, record the number of the turns made.
- Perform this operation for both upper and lower retainers.
- Use new O-rings.

Tightening torque:
T: 25 N·m (2.5 kgf-m, 18.4 ft-lb)

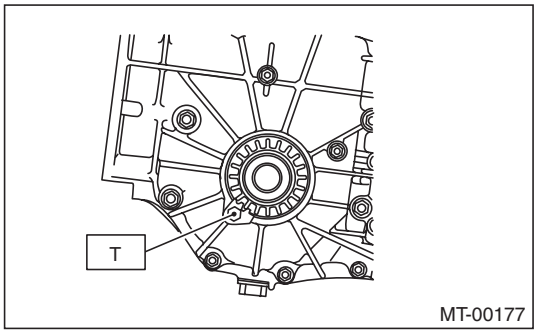

21) Select a main shaft rear plate. <Ref. to 6MT-66, ADJUSTMENT, Main Shaft Assembly for Single-Range.>
22) Install the clutch release lever and bearing. <Ref. to CL-16, INSTALLATION, Release Bearing and Lever.>
23) Install the transfer case together with the extension case assembly. <Ref. to 6MT-40, INSTALLATION, Transfer Case and Extension Case Assembly.>
24) Install the manual transmission assembly to the vehicle. <Ref. to 6MT-29, INSTALLATION, Manual Transmission Assembly.>

C: INSPECTION

Check the transmission case for cracks, damage, or oil leaks.

GETtheMANUALS.org

15. Main Shaft Assembly for Single-Range

A: REMOVAL

1) Remove the manual transmission assembly from the vehicle. <Ref. to 6MT-25, REMOVAL, Manual Transmission Assembly.>
2) Remove the transfer case together with the extension case assembly. <Ref. to 6MT-40, REMOVAL, Transfer Case and Extension Case Assembly.>
3) Remove the transmission case. <Ref. to 6MT-57, REMOVAL, Transmission Case.>
4) Remove the drive pinion shaft assembly. <Ref. to 6MT-67, REMOVAL, Drive Pinion Shaft Assembly.>
5) Remove the main shaft assembly for single-range.

B: INSTALLATION

1) Install the needle bearing and oil seal to the front of the transmission single-range main shaft assembly.

NOTE:
- Wrap the clutch connection (splined section) with vinyl tape to prevent damage to the oil seal.
- Apply NICHIMOLY N-130 to the sealing lip of the oil seal.
- Use a new oil seal.

2) Rotate the reverse idler sub gear by two teeth from free status to make it engage with the reverse gear of the main shaft and install the main shaft assembly.
   (1) When the reverse idler sub gear is at free status, put alignment marks on reverse idler sub gear and reverse idler gear.
   (2) Rotate the reverse idler sub gear in the arrow direction by two teeth from the alignment mark and secure it with a wire.

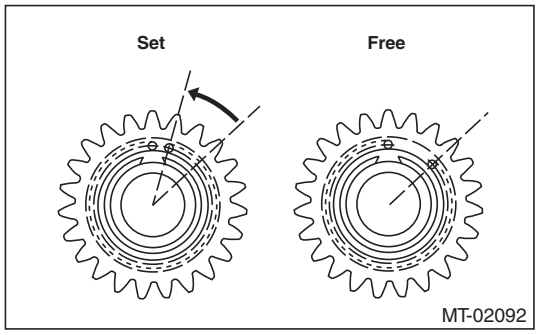

   (3) After installing the main shaft assembly, check that the reverse idler gear and reverse idler sub gear are misaligned by two teeth and remove the wire.

CAUTION:
Make sure to remove the wire.

3) Align the transmission case knock pin into the knock pin hole of the needle bearing outer race.

NOTE:
- Align the end face of the seal with surface (A) when installing the oil seal.

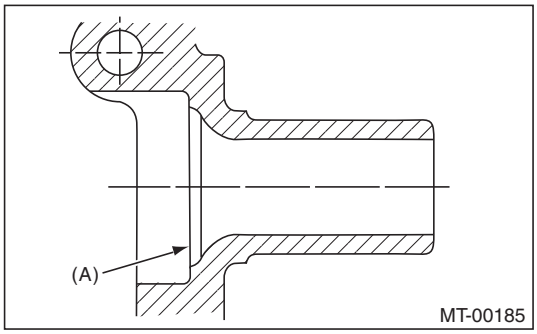

- Face the cutout portion of the snap ring for the double taper roller bearing to the drive pinion shaft assembly.

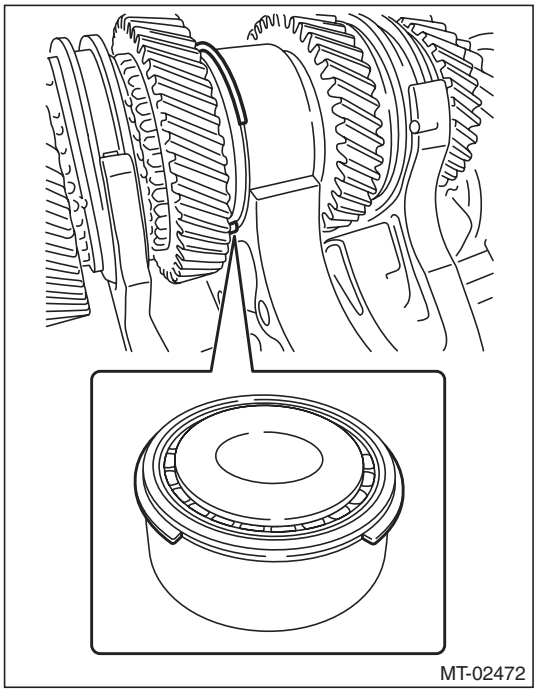

4) Install the drive pinion shaft assembly. <Ref. to 6MT-67, INSTALLATION, Drive Pinion Shaft Assembly.>
5) Install the transmission case. <Ref. to 6MT-58, INSTALLATION, Transmission Case.>
6) Install the transfer case together with the extension case assembly. <Ref. to 6MT-40, INSTALLATION, Transfer Case and Extension Case Assembly.>
7) Install the manual transmission assembly to the vehicle. <Ref. to 6MT-29, INSTALLATION, Manual Transmission Assembly.>

GETtheMANUALS.org

C: DISASSEMBLY

NOTE:
- When replacing the sleeve & hub, replace them as a set.
- Do not disassemble the sleeve & hub; the aligning position is pre-matched.
- If it is necessary to disassemble, mark the engaging points on the splines beforehand.

1) Put vinyl tape around main shaft spline to protect the oil seal from damage. Then pull out the oil seal and needle bearing by hand.
2) Flatten the tab of the lock nut.
3) Remove the lock nut from transmission main shaft assembly for single-range.
ST1 498937000 TRANSMISSION HOLDER
ST2 499987003 SOCKET WRENCH (35)

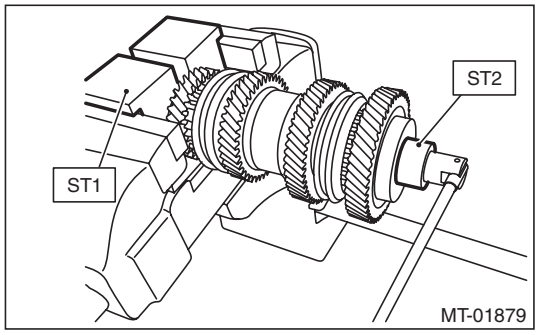

4) Remove the 6th drive gear and ball bearing using the ST1, ST2 and a press.
ST1 899864100 REMOVER
ST2 18722AA000 REMOVER

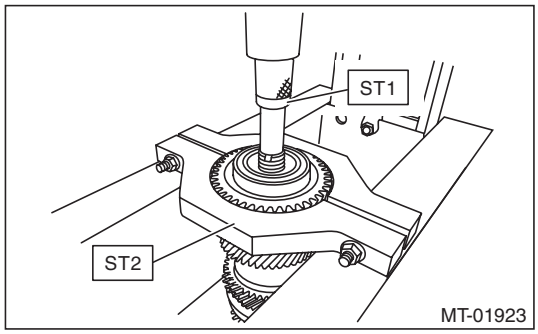

5) Remove the needle bearing, 6th baulk ring and 5th-6th coupling sleeve.

6) Remove the 5th drive gear, 6th needle bearing race, 5th baulk ring, 5th-6th synchronizer hub and needle bearing using the ST1, ST2 and a press.
ST1 899864100 REMOVER
ST2 18722AA000 REMOVER

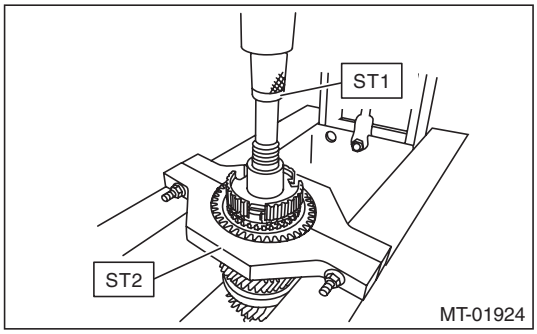

7) Shift the 3rd-4th coupling sleeve into 3rd, then remove the 4th drive gear, taper roller bearing and 5th needle bearing race using the ST1, ST2 and a press.
ST1 899864100 REMOVER
ST2 899714110 REMOVER

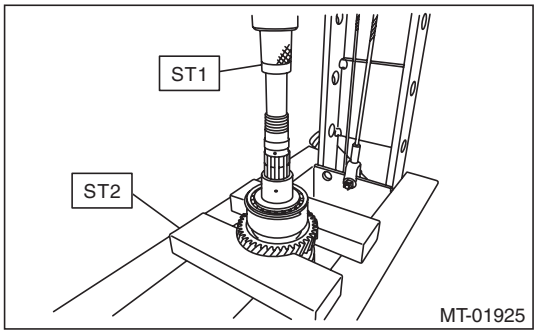

8) Remove the 4th gear thrust washer, 4th baulk ring, needle bearing and 3rd-4th coupling sleeve.
9) Remove the 3rd drive gear, 4th needle bearing race, 3rd-4th synchronizer hub, inner baulk ring, 3rd synchro cone, outer baulk ring and needle bearing using the ST1, ST2 and a press.
ST1 899864100 REMOVER
ST2 899714110 REMOVER

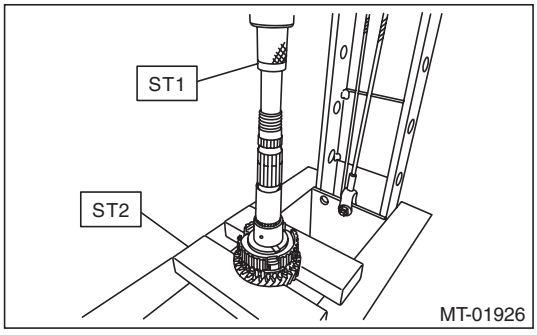

GETtheMANUALS.org

D: ASSEMBLY

1) When the sleeve & hub assemblies have been disassembled, reassemble by aligning the alignment marks.

NOTE:
Position the open ends of the spring 120° apart.

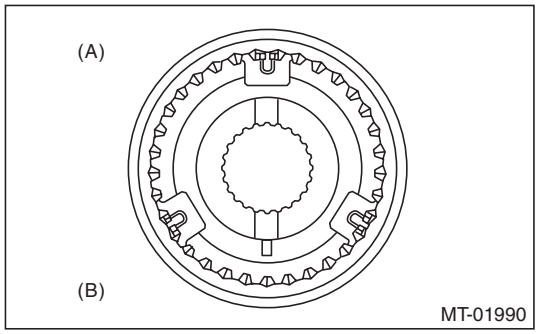

(A) 3rd-4th hub ASSY
(B) 3rd gear side

2) Install the needle bearing, 3rd drive gear, outer baulk ring, 3rd synchro cone, inner baulk ring and 3rd-4th synchronizer hub on the transmission main shaft.

NOTE:
Align the groove in baulk ring with the shifting insert.

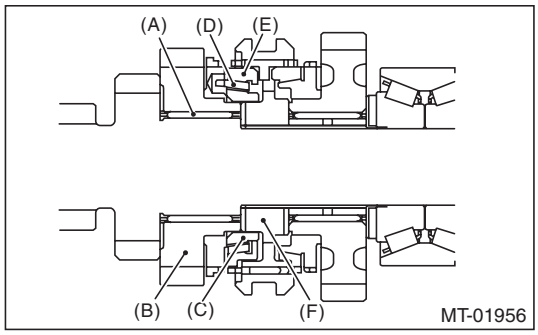

(A) 3rd needle bearing
(B) 3rd drive gear
(C) Inner baulk ring
(D) 3rd synchro cone
(E) Outer baulk ring
(F) 3rd-4th synchronizer hub

3) Install the 4th needle bearing race onto transmission main shaft using ST1, ST2, ST3 and a press.

CAUTION:
Do not apply a load in excess of 10 kN (1 ton, 1.1 US ton, 1.0 Imp ton).

ST1	899714110	REMOVER
ST2	499877000	RACE 4-5 INSTALLER
ST3	398177700	INSTALLER

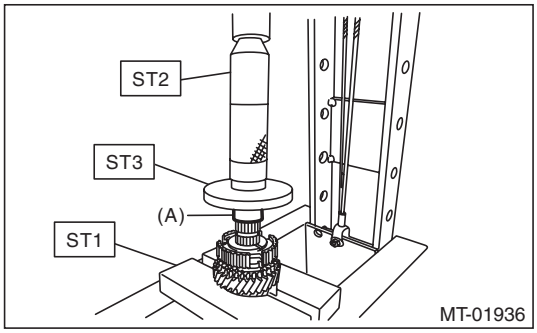

(A) 4th needle bearing race

4) Install the 3rd-4th coupling sleeve, 4th baulk ring, needle bearing, 4th drive gear and 4th gear thrust washer to the transmission main shaft.

NOTE:
- Align the 4th baulk ring and 3rd-4th synchronizer hub with the key groove.
- Install the 3rd-4th coupling sleeve with the groove side facing the 3rd drive gear.

GETtheMANUALS.org

- Install the 4th gear thrust washer with the groove side facing the 4th drive gear.

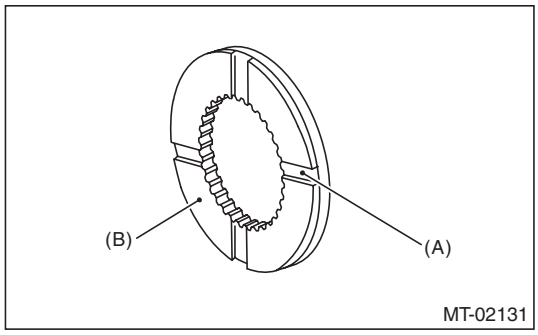

(A) Groove
(B) Face this surface to the 4th gear side.

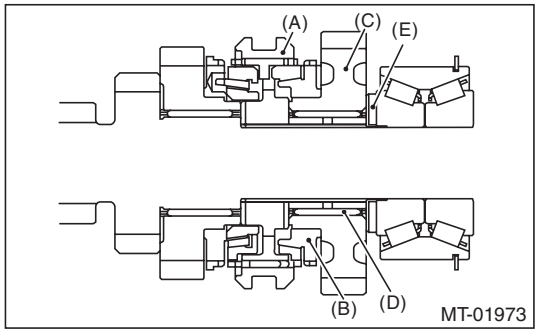

(A) 3rd-4th coupling sleeve
(B) 4th baulk ring
(C) 4th drive gear
(D) Needle bearing
(E) 4th gear thrust washer

5) Install the double taper roller bearing into the rear section of transmission main shaft using ST1, ST2 and a press.

CAUTION:
Do not apply a load in excess of 10 kN (1 ton, 1.1 US ton, 1.0 Imp ton).

NOTE:
Install the double taper roller bearing with snap ring side facing the 5th drive gear side.
ST1 899714110 REMOVER
ST2 499877000 RACE 4-5 INSTALLER

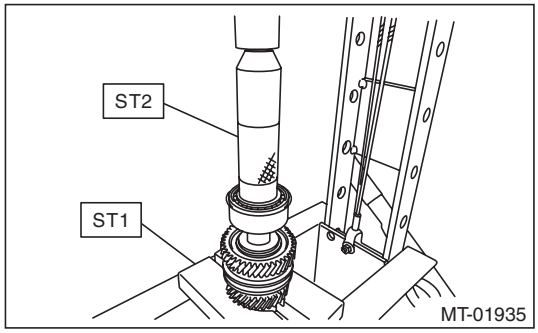

6) Install the 5th needle bearing race into the rear section of transmission main shaft using ST1, ST2 and a press.

CAUTION:
Do not apply a load in excess of 10 kN (1 ton, 1.1 US ton, 1.0 Imp ton).
ST1 899714110 REMOVER
ST2 499877000 RACE 4-5 INSTALLER

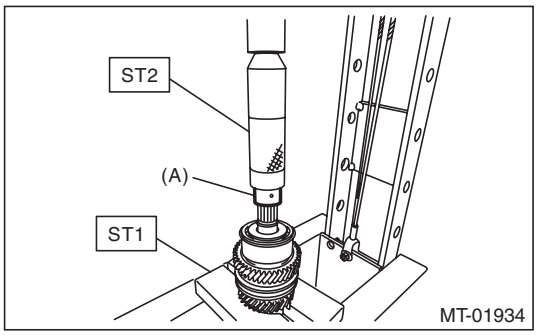

(A) 5th needle bearing race

7) Install the needle bearing, 5th drive gear, 5th baulk ring, and 5th-6th synchronizer hub on the transmission main shaft.

GETtheMANUALS.org

NOTE:
• Align the protruded section of 5th baulk ring with concave section of 5th-6th synchronizer hub.
• Install the 5th-6th synchronizer hub with the groove side facing the 5th drive gear.

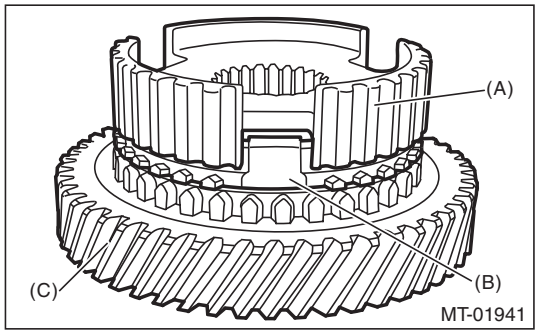

(A) 5th-6th synchronizer hub
(B) 5th baulk ring
(C) 5th drive gear

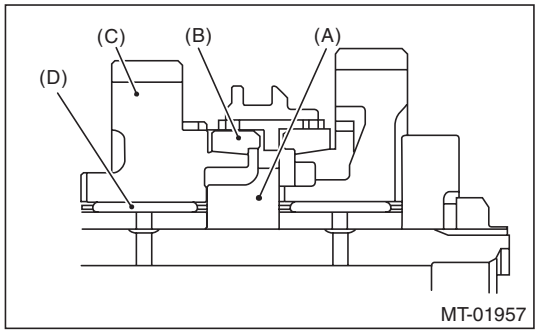

(A) 5th-6th synchronizer hub
(B) 5th baulk ring
(C) 5th drive gear
(D) 5th needle bearing (cage: black)

8) Install the 6th needle bearing race onto transmission main shaft using ST1, ST2 and a press.

CAUTION:
Do not apply a load in excess of 10 kN (1 ton, 1.1 US ton, 1.0 Imp ton).
ST1 899714110 REMOVER
ST2 499877000 RACE 4-5 INSTALLER

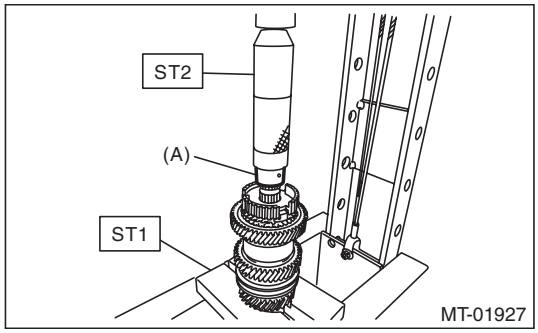

(A) 6th needle bearing race

9) Install the 5th-6th coupling sleeve, 6th baulk ring, 6th drive gear and needle bearing on the transmission main shaft.

NOTE:
Install the 5th-6th coupling sleeve with the short flange side facing the 5th drive gear.

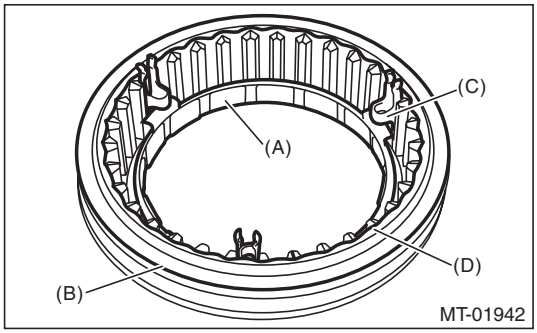

(A) 6th baulk ring
(B) 5th-6th coupling sleeve
(C) 5th-6th shifting insert key
(D) Face this side to 5th gear (short flange side)

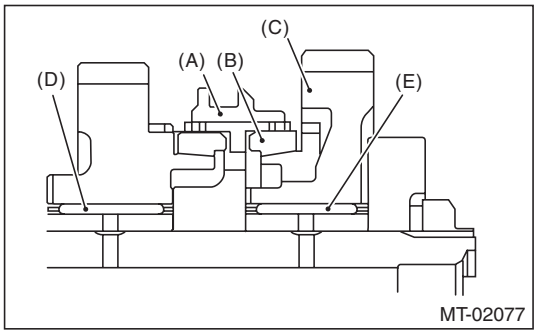

(A) 5th-6th coupling sleeve
(B) 6th baulk ring
(C) 6th drive gear
(D) 5th needle bearing (cage: black)
(E) 6th needle bearing (cage: silver)

GETtheMANUALS.org

10) Install the ball bearing onto transmission main shaft using ST2 and a press.

CAUTION:
Do not apply a load in excess of 10 kN (1 ton, 1.1 US ton, 1.0 Imp ton).

NOTE:
Install the ball bearing with the side which does not have lock nut mounting dent facing 6th drive gear.

ST1 899714110 REMOVER
ST2 899754112 PRESS

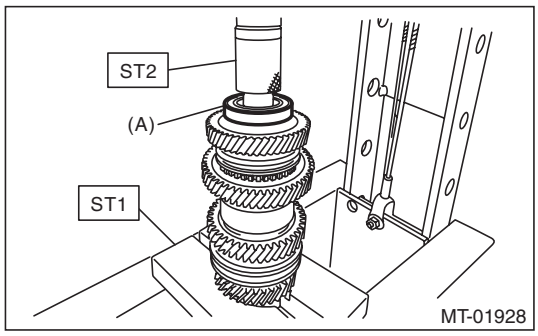

(A) Ball bearing

11) Tighten the lock nuts to the specified torque using ST1 and ST2.

NOTE:
Lock nuts and lock washers must be replaced with new parts.

Tightening torque:
160 N·m (16.3 kgf-m, 118.0 ft-lb)

ST1 499987003 SOCKET WRENCH (35)
ST2 498937000 TRANSMISSION HOLDER

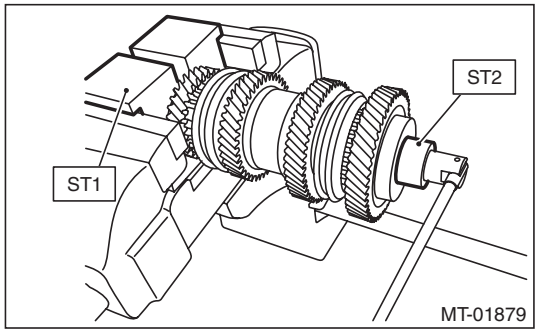

12) Crimp lock nuts in two locations after tightening.

E: INSPECTION

Disassembled parts should be washed with cleaning solvent first, then inspected carefully.

1) Bearing
Replace the bearings in the following cases.
- When the bearing balls, outer races and inner races are broken or rusty.
- When the bearing is worn.
- When the bearings fail to turn smoothly or emit noise in rotation after gear oil lubrication.
- When bearing has other defects.

2) Bushing (each gear)
Replace the bushing in following cases.
- When the sliding surface is damaged or abnormally worn.
- When the inner wall is abnormally worn.

3) Gear
Replace gears in the following cases.
- Replace the gear with new part if its tooth surfaces are broken, damaged or excessively worn.
- Correct or replace if the cone that contacts the baulk ring is rough or damaged.
- Repair or replace if the inner surface or end face is damaged.

4) Baulk ring
Replace the baulk ring in the following cases.
- When the inner surface or end face is damaged.
- When the ring inner surface is abnormally or partially worn down.
- When the contact surface of the synchronizer ring insert section is cracked or abnormally worn.
- If the gap between the end faces of the ring and the gear splined part is excessively small, check the clearance (A) while pressing the ring against the cone.

Clearance (A):
0.5 mm (0.020 in) or more

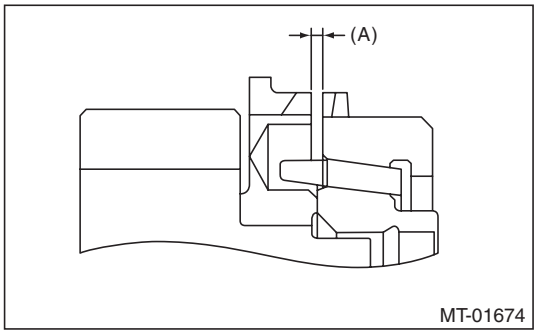

GETtheMANUALS.org

• Apply gear oil to the corn of the gear and while press-fitting the synchronizer ring, check there is no rotation in the circumferential direction.

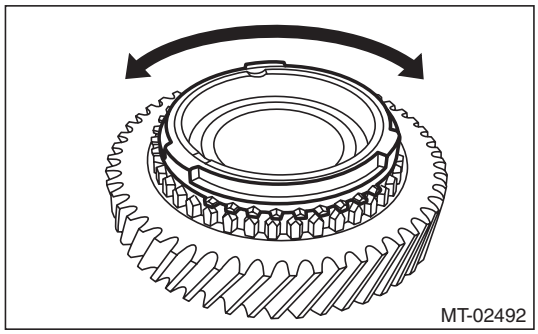

5) Shifting insert key
Replace the insert key if deformed, excessively worn or defective in any way.

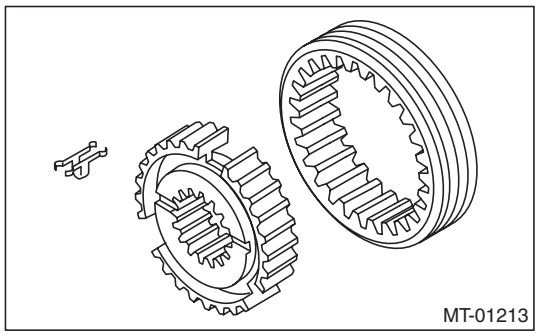

6) Coupling sleeve and synchronizer hub
• Check the slipping condition of the coupling sleeve.
• Check the splines on the coupling sleeve and synchronizer hub for wear.
7) Oil seal
Replace the oil seal if the lip is deformed, hardened, worn or defective in any way.
8) Gearshift mechanism
Repair or replace the gearshift mechanism if excessively worn, bent or defective in any way.

F: ADJUSTMENT

Selection of main shaft rear plate:
Measure the protrusion amount (A) of ball bearing from transmission main case surface, and select a suitable plate in the following table.

NOTE:
Before measuring, tap the end of main shaft with a plastic hammer lightly in order to make the clearance zero between the main case surface and moving flange of bearing.
ST 498147001 DEPTH GAUGE

Dimension (A) mm (in)	Part No.	Mark
4.00 — 4.13 (0.1575 — 0.1626)	32294AA041	1
3.87 — 4.00 (0.1524 — 0.1575)	32294AA051	2

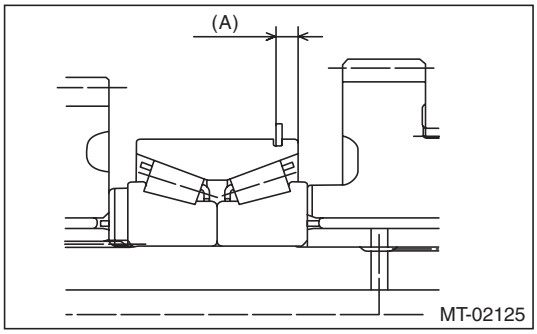

GETtheMANUALS.org

16. Drive Pinion Shaft Assembly

A: REMOVAL

1) Remove the manual transmission assembly from the vehicle. <Ref. to 6MT-25, REMOVAL, Manual Transmission Assembly.>
2) Remove the transfer case together with the extension case assembly. <Ref. to 6MT-40, REMOVAL, Transfer Case and Extension Case Assembly.>
3) Remove the transmission case. <Ref. to 6MT-57, REMOVAL, Transmission Case.>
4) Remove the drive pinion shaft assembly.

NOTE:
Use a hammer handle, etc. to remove if too tight.

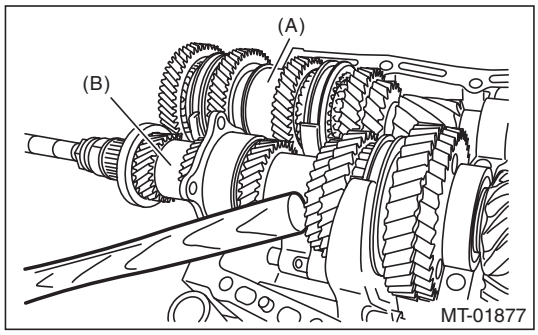

(A) Main shaft ASSY for single-range
(B) Drive pinion shaft ASSY

B: INSTALLATION

1) Remove the front differential assembly.
2) Hypoid gear set match mark/No.: The number (A) on top of the drive pinion, and the number on the hypoid driven gear are set numbers for the two gears. Use a pair having the same numbers.
The figure (B) below shows a number for shim adjustment. If no number is shown, the value is zero.

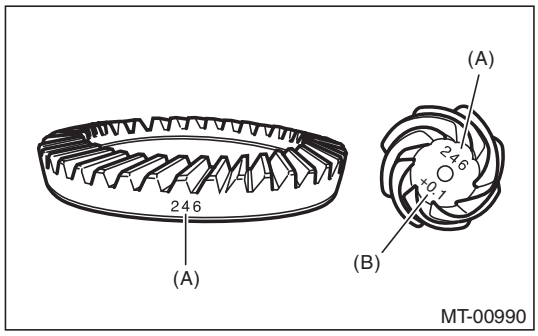

(A) Set number
(B) Number for shim adjustment

3) Place the drive pinion shaft assembly on transmission main case RH without shim and tighten the bearing mounting bolts.

4) Check and adjust the ST.

NOTE:
- Loosen the two bolts and adjust so that the scale indicates 0.5 correctly when the plate end and the scale end are on the same level.
- Tighten the two bolts.

ST 499917500 DRIVE PINION GAUGE ASSY

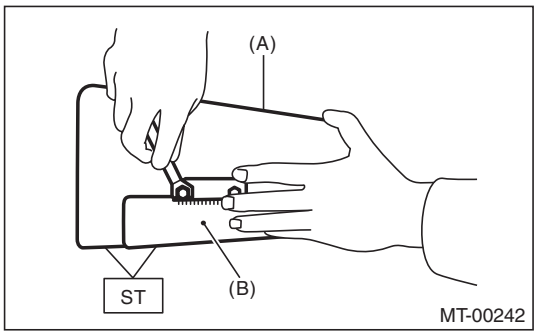

(A) Plate
(B) Scale

5) Position the ST by inserting the knock pin of ST into the knock hole of transmission case.

ST 499917500 DRIVE PINION GAUGE ASSY

6) Slide the drive pinion gauge scale with finger tip and read the value at the point where it matches with the end face of drive pinion.

ST 499917500 DRIVE PINION GAUGE ASSY

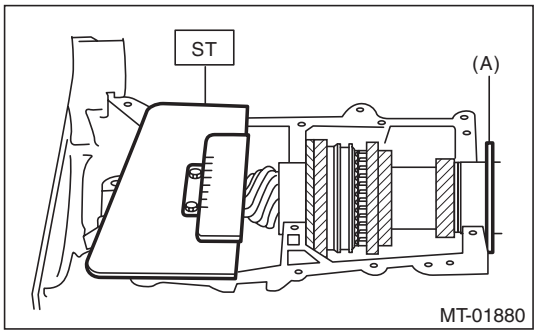

(A) Adjust the clearance to zero without shim.

7) The thickness of shim shall be determined by adding the value indicated on drive pinion to the value indicated on the ST. (Add if the number on drive pinion is prefixed by +, and subtract if the number is prefixed by –.)

ST 499917500 DRIVE PINION GAUGE ASSY

GETtheMANUALS.org

8) Select one to three shims in the following table for the value determined as described above, and take the shim(s) which thickness is closest to the said value.

NOTE:
Install the shim with it's cut in facing the shifter fork & rod side.

Drive pinion shim	
Part No.	Thickness mm (in)
32295AA031	0.150 (0.0059)
32295AA041	0.175 (0.0069)
32295AA051	0.200 (0.0079)
32295AA061	0.225 (0.0089)
32295AA071	0.250 (0.0098)
32295AA081	0.275 (0.0108)
32295AA091	0.300 (0.0118)
32295AA101	0.500 (0.0197)

9) Install the front differential assembly. <Ref. to 6MT-77, INSTALLATION, Front Differential Assembly.>
10) Fit the transmission case knock pin to the knock pin hole of the roller bearing and install the drive pinion shaft assembly.
11) Install the main shaft assembly for single-range. <Ref. to 6MT-60, INSTALLATION, Main Shaft Assembly for Single-Range.>
12) Check each shifter fork. <Ref. to 6MT-92, INSPECTION, Shifter Fork and Rod.>
13) Install the transmission case. <Ref. to 6MT-58, INSTALLATION, Transmission Case.>
14) Install the transfer case together with the extension case assembly. <Ref. to 6MT-40, INSTALLATION, Transfer Case and Extension Case Assembly.>
15) Install the manual transmission assembly to the vehicle. <Ref. to 6MT-29, INSTALLATION, Manual Transmission Assembly.>

C: DISASSEMBLY

NOTE:
• Attach a cloth to the end of driven shaft (on the frictional side of the thrust needle bearing) to prevent damage during disassembly or reassembly.
• If necessary, use a new gear and hub assembly as a set, when replacing the gear or hub. Because these must engage at the specified point, avoid disassembly as much as possible. If it must be disassembled, mark the engaging point on the spline beforehand.

1) Flatten the tab of the lock nut. Remove the lock nut with ST1, ST2 and ST3.
ST1 18680AA020 HOLDER
ST2 18667AA020 HOLDER
ST3 18662AA010 SOCKET WRENCH (27)

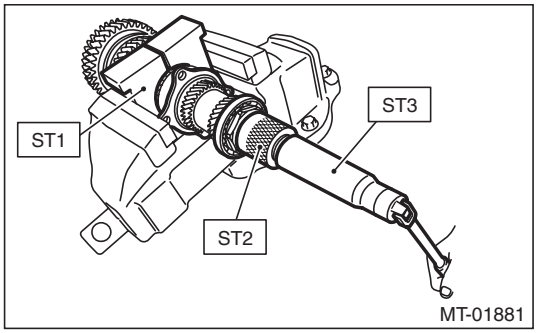

2) Draw out the drive pinion from driven shaft. Remove the differential bevel gear sleeve, adjusting washer No. 1, adjusting washer No. 2, thrust bearing, needle bearing and drive pinion collar.

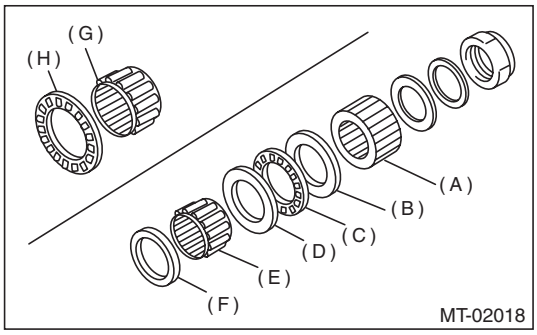

(A) Differential bevel gear sleeve
(B) Adjusting washer No. 1 (25 × 36 × t)
(C) Thrust bearing (25 × 36 × 2)
(D) Adjusting washer No. 2 (25 × 36 × t)
(E) Needle bearing (25 × 30 × 20)
(F) Drive pinion collar
(G) Needle bearing (30 × 37 × 23)
(H) Thrust bearing (33 × 50 × 3)

GETtheMANUALS.org

3) Remove the roller bearing and washer using ST and a press.

NOTE:
Do not reuse the roller bearing.
ST 498077000 REMOVER

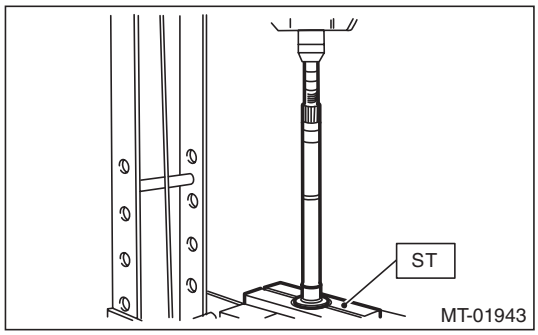

4) Flatten the tab of the lock nut. Remove the lock nut using ST1 and ST2.
ST1 499987300 SOCKET WRENCH (50)
ST2 18680AA020 HOLDER

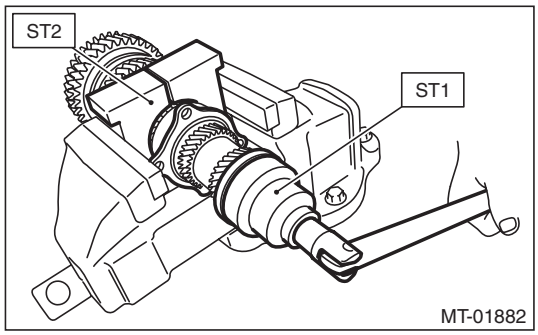

5) Remove the ball bearing, 6th driven gear and drive pinion spacer using the ST1, ST2 and a press.
ST1 899754112 PRESS
ST2 899714110 REMOVER

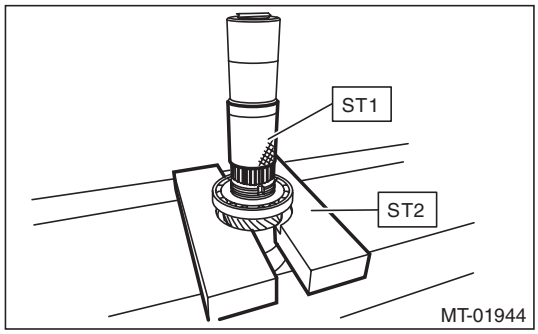

6) Remove the taper roller bearing and 3rd-4th driven gear using ST1, ST2 and a press.
ST1 899754112 PRESS
ST2 899714110 REMOVER

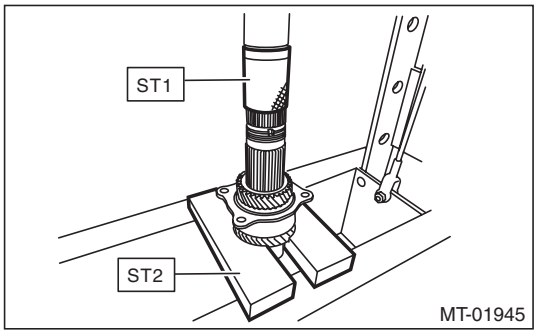

7) Remove the key.
8) Remove the 2nd driven gear, inner baulk ring, synchro cone, outer baulk ring and 1st-2nd coupling sleeve.
9) Remove the 1st driven gear, inner baulk ring, synchro cone, outer baulk ring, 2nd gear bushing and 1st-2nd synchronizer hub using ST and a press.
ST 18762AA000 COMPRESSOR SPECIAL TOOL

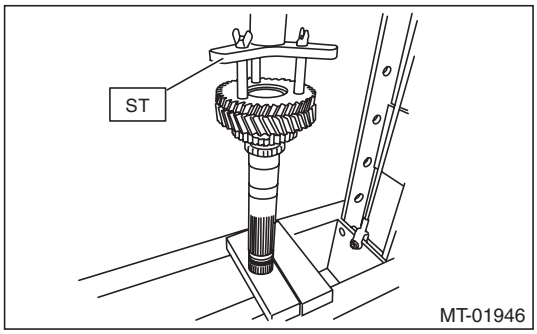

GETtheMANUALS.org

D: ASSEMBLY

1) Install the sleeve and the gear and hub assembly by matching the alignment marks.

NOTE:
- Position the open ends of the spring 120° apart.
- Use the new gear & hub assembly, if replacing the gear or hub.

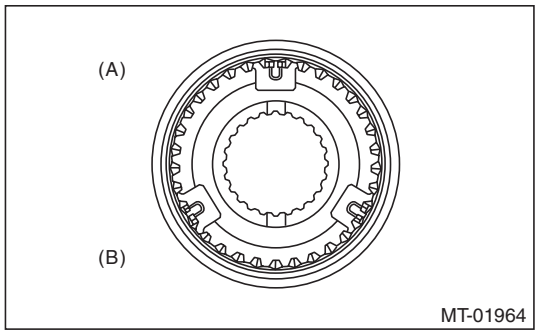

(A) 1st-2nd sleeve & hub ASSY
(B) 1st gear side

2) Install the 1st driven gear, inner baulk ring, synchro cone and outer baulk ring and 1st-2nd synchronizer hub onto driven shaft.

NOTE:
- Install the gear & hub assembly in the proper position while paying attention to the installing direction.
- Align the baulk ring and gear & hub assembly with the key groove.

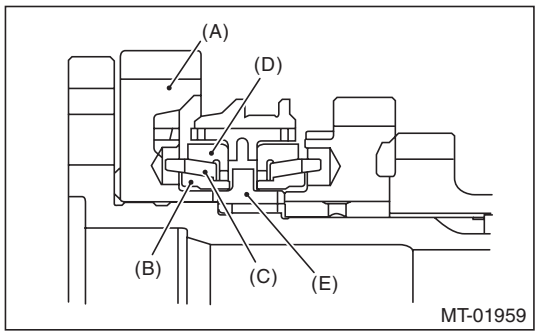

(A) 1st driven gear
(B) Inner baulk ring
(C) Synchro cone
(D) Outer baulk ring
(E) 1st-2nd synchronizer hub

3) Install the 2nd driven gear bushing onto driven shaft using ST and a press.

CAUTION:
Do not apply a load in excess of 10 kN (1 ton, 1.1 US ton, 1.0 Imp ton).

NOTE:
- Attach a cloth to the end of the driven shaft to prevent damage.
- When press fitting, align the oil holes of the shaft and bushing

ST 18654AA000 INSTALLER

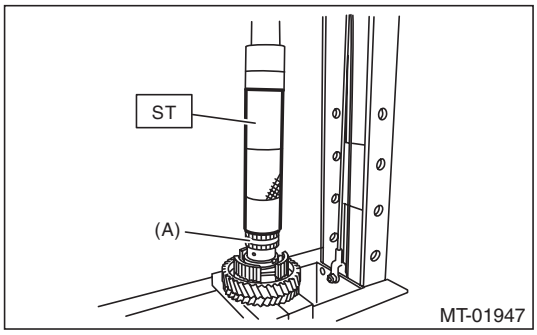

(A) 2nd driven gear bushing

4) Attach the 1st-2nd coupling sleeve and 1st-2nd shifting insert key to the driven shaft.

NOTE:
- Install the 1st-2nd coupling sleeve with the long flange side facing the 1st driven gear.
- Install the 1st-2nd shifting insert keys at 120° interval positions.

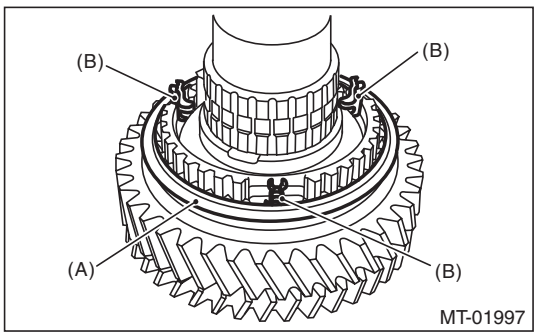

(A) 1st-2nd coupling sleeve
(B) 1st-2nd shifting insert key (three positions)

GETtheMANUALS.org

5) Install the outer baulk ring, synchro cone, inner baulk ring and 2nd driven gear to driven shaft.

NOTE:
Align the groove in baulk ring with the insert.

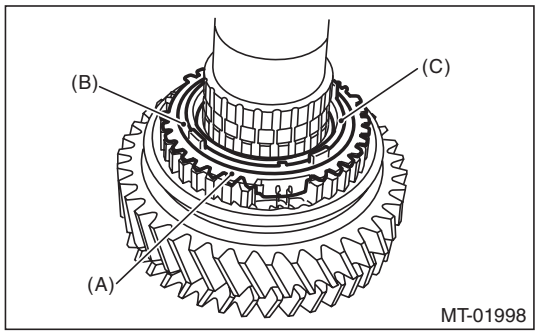

(A) Outer baulk ring
(B) Synchro cone
(C) Inner baulk ring

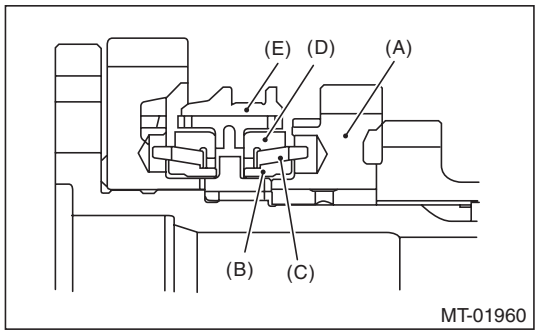

(A) 2nd driven gear
(B) Inner baulk ring
(C) Synchro cone
(D) Outer baulk ring
(E) 1st-2nd coupling sleeve

6) After installing key on driven shaft, install the 3rd-4th driven gear using a ST and a press.

CAUTION:
Do not apply a load in excess of 10 kN (1 ton, 1.1 US ton, 1.0 Imp ton).
ST 499277200 INSTALLER

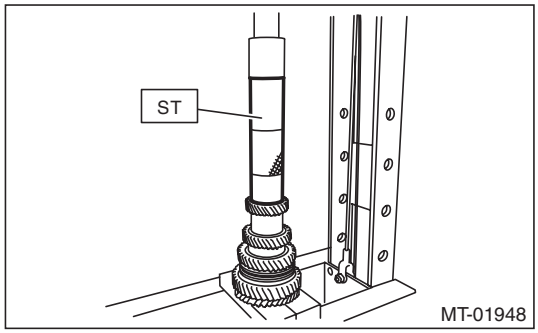

7) Install a set of roller bearings onto the driven shaft using ST and a press.

CAUTION:
Do not apply a load in excess of 10 kN (1 ton, 1.1 US ton, 1.0 Imp ton).
ST 499277200 INSTALLER

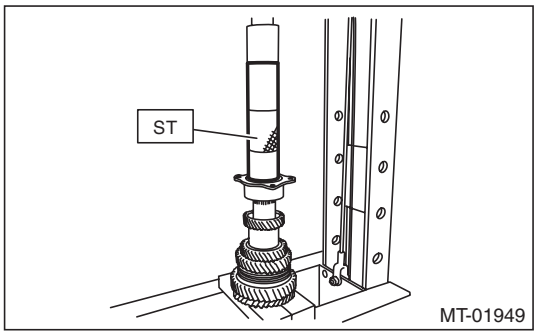

8) Install the 5th driven gear onto driven shaft using ST and a press.

CAUTION:
Do not apply a load in excess of 10 kN (1 ton, 1.1 US ton, 1.0 Imp ton).

NOTE:
Install the 5th driven gear with the groove side facing the 6th driven gear.
ST 499277200 INSTALLER

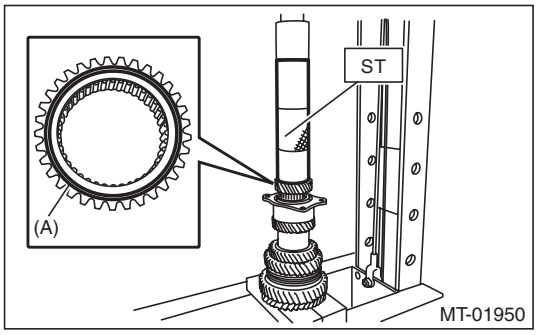

(A) Install with the groove side facing the 6th driven gear.

9) Install the drive pinion spacer to driven shaft, then install the 6th driven gear to driven shaft using the ST and a press.

CAUTION:
Do not apply a load in excess of 10 kN (1 ton, 1.1 US ton, 1.0 Imp ton).

GETtheMANUALS.org

NOTE:
Install the 6th driven gear with the stepped side facing the 5th driven gear.
ST 499277200 INSTALLER

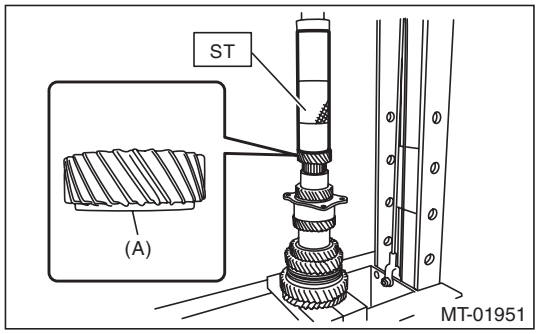

(A) Install with the stepped side facing the 5th driven gear.

10) Install the ball bearing onto driven shaft using ST and a press.

CAUTION:
Do not apply a load in excess of 10 kN (1 ton, 1.1 US ton, 1.0 Imp ton).
ST 499277200 INSTALLER

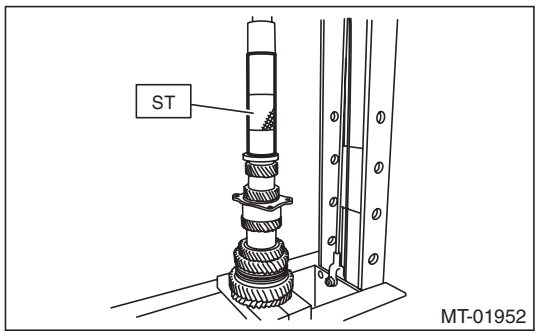

11) Tighten the lock nuts to the specified torque using ST1 and ST2.

NOTE:
Use a new lock nut.

Tightening torque:
440 N·m (44.9 kgf-m, 324.5 ft-lb)
ST1 499987300 SOCKET WRENCH (50)
ST2 18680AA020 HOLDER

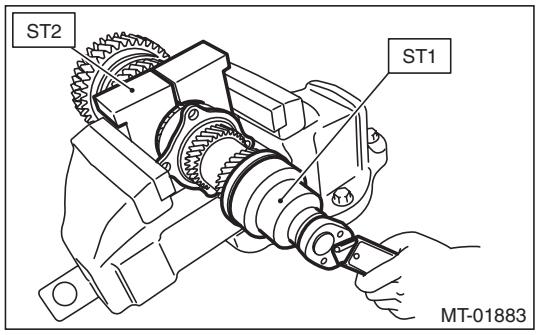

12) Using a spring scale, check that starting torque of the roller bearing is 0.1 to 1.5 N (0.01 to 0.15 kgf, 0.02 to 0.34 lbf).

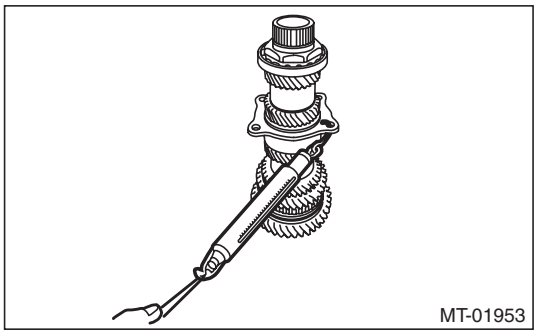

13) Crimp the locknut in 2 locations.
14) Install the roller bearing onto drive pinion.

NOTE:
When installing the roller bearing, direct the knock pin hole of outer race toward rear.

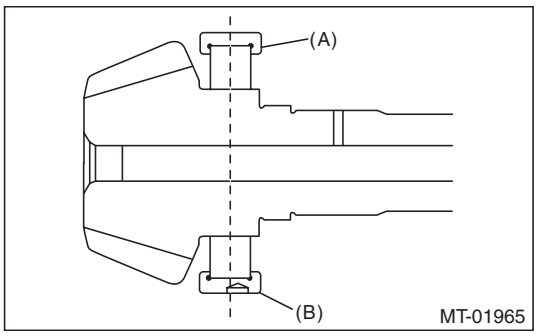

(A) Roller bearing
(B) Knock pin hole

15) Install the washer using ST1, ST2 and a press.

CAUTION:
Do not apply a load in excess of 10 kN (1 ton, 1.1 US ton, 1.0 Imp ton).
ST1 499277100 BUSHING 1-2 INSTALLER
ST2 499277200 INSTALLER

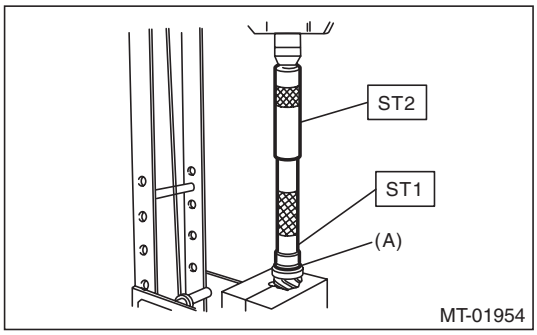

(A) Washer

GETtheMANUALS.org

16) Install the thrust bearing and needle bearing. Install the driven shaft assembly.

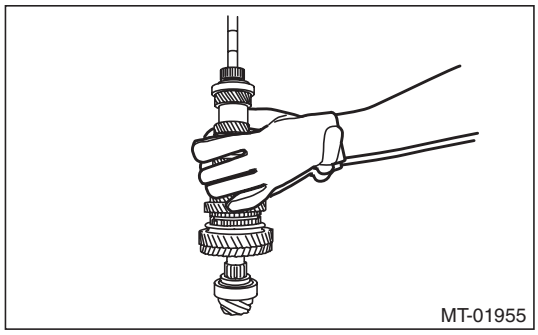

17) Install the drive pinion collar, needle bearing, adjusting washer No. 2, thrust bearing, adjusting washer No. 1 and differential bevel gear sleeve in this order.

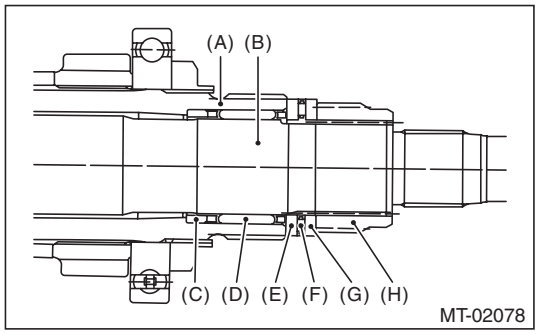

(A) Driven shaft
(B) Drive pinion shaft
(C) Drive pinion collar
(D) Needle bearing (25 × 30 × 20)
(E) Adjusting washer No. 2 (25 × 36 × t)
(F) Thrust bearing (25 × 36 × 2)
(G) Adjusting washer No. 1 (25 × 36 × t)
(H) Differential bevel gear sleeve

18) Adjust the thrust bearing preload. <Ref. to 6MT-74, THRUST BEARING PRELOAD, ADJUSTMENT, Drive Pinion Shaft Assembly.>

E: INSPECTION

Disassembled parts should be washed with cleaning solvent first, then inspected carefully.

1) Bearing

Replace the bearings in the following cases.

- When the bearing balls, outer races and inner races are broken or rusty.
- When the bearing is worn.
- When the bearings fail to turn smoothly or emit noise in rotation after gear oil lubrication.
- The ball bearing on the rear side of the drive pinion shaft should be checked for smooth rotation before the drive pinion assembly is disassembled. In this case, because a preload is working on the bearing, its rotation feels like it is slightly dragging unlike other bearings.

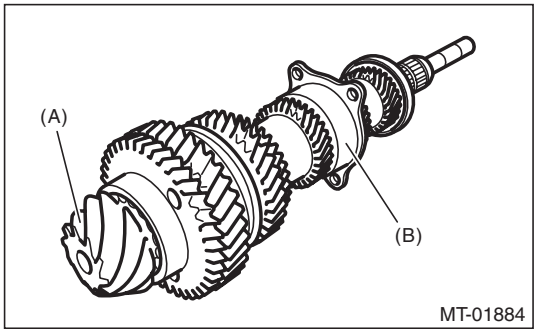

(A) Drive pinion shaft
(B) Ball bearing

- When bearing has other defects.

2) Bushing (each gear)

Replace the bushing in following cases.

- When the sliding surface is damaged or abnormally worn.
- When the inner wall is abnormally worn.

3) Gear

Replace gears in the following cases.

- Replace the gear with new part if its tooth surfaces are broken, damaged or excessively worn.
- Correct or replace if the cone that contacts the baulk ring is rough or damaged.
- Correct or replace if the inner surface or end face is damaged.

4) Baulk ring, synchro cone

Replace the baulk ring and synchro cone in the following cases.

- When the inner surface or end face is damaged.
- When the baulk ring inner surface is abnormally or partially worn down.
- If the gap between the end faces of the baulk ring and the gear splined part is excessively small, check the clearance (A) while pressing the ring against the cone.

GETtheMANUALS.org

Clearance (A):
0.5 mm (0.020 in) or more

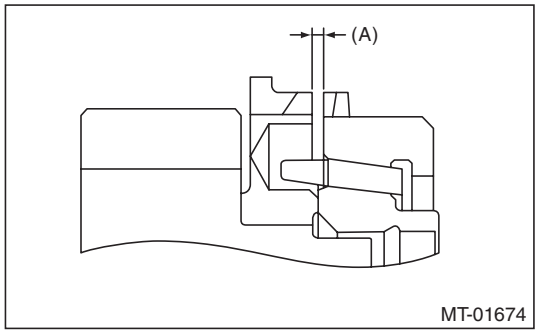

• When the contact surface of the synchronizer ring insert section is scratched or abnormally worn.
• Apply gear oil to the corn of the gear and while press-fitting the synchronizer ring, check there is no rotation in the circumferential direction.

5) Coupling sleeve and synchronizer hub
• Check the slipping condition of the coupling sleeve.
• Check the splines on the coupling sleeve and synchronizer hub for wear.

6) Shifting insert key
Replace the shifting insert key if deformed, excessively worn or defective in any way.

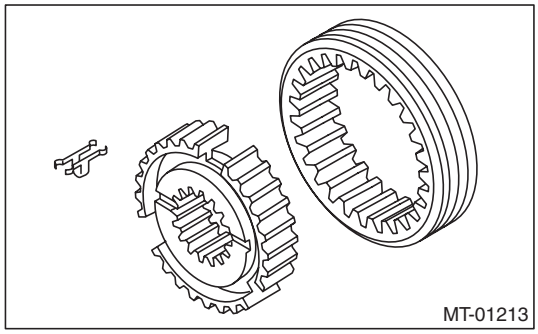

F: ADJUSTMENT

1. THRUST BEARING PRELOAD

1) Select a suitable adjusting washer No. 1 so that dimension (H) will be zero in a visual check. Position the washer (20 × 31 × 4) and lock washer (20 × 31 × 2.3) and attach the lock nut.

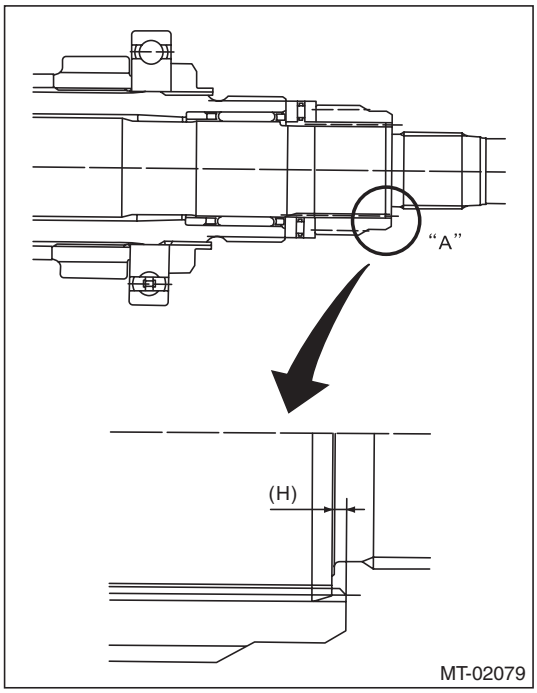

2) Using the ST1, ST2 and ST3, tighten the lock nut to the specified torque.

NOTE:
• Use new lock nuts and lock washers.
• Make sure the lock washer is installed in the proper direction.

GETtheMANUALS.org

Tightening torque:
126 N·m (12.8 kgf-m, 92.9 ft-lb)

ST1 18680AA020 HOLDER
ST2 18667AA020 HOLDER
ST3 18662AA010 SOCKET (27)

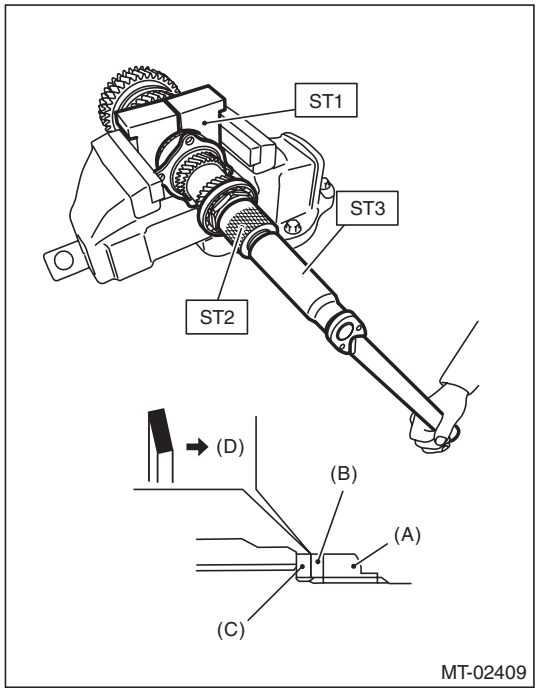

(A) Nut
(B) Lock washer
(C) Washer
(D) Nut side

3) After removing the ST2 used in step 2), measure the starting torque using torque driver.

Starting torque:
0.3 — 0.8 N·m (0.03 — 0.08 kgf-m, 0.2 — 0.6 ft-lb)

ST1 18680AA020 HOLDER
ST3 18662AA010 SOCKET (27)

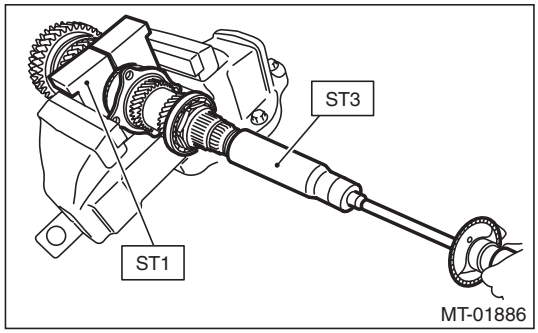

4) If the starting torque is not within the specified limit, select new adjusting washer No. 1 and re-check starting torque.

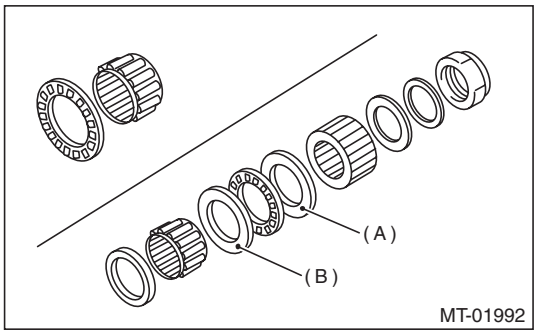

(A) Adjusting washer No. 1
(B) Adjusting washer No. 2

Adjusting washer No. 1	
Part No.	Thickness mm (in)
803025071	2.925 (0.1152)
803025072	2.950 (0.1161)
803025073	2.975 (0.1171)
803025074	3.000 (0.1181)
803025075	3.025 (0.1191)
803025076	3.050 (0.1201)
803025077	3.075 (0.1211)

5) If the specified starting torque cannot be obtained by the selection of adjusting washer No. 1, select adjusting washer No. 2 from the list below. Repeat steps 1) through 4) to adjust starting torque.

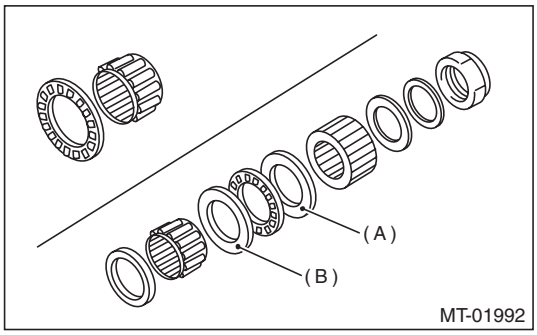

(A) Adjusting washer No. 1
(B) Adjusting washer No. 2

GETtheMANUALS.org

Starting torque	Dimension H	Adjusting washer No. 2
Low	Small	Select thicker one.
High	Large	Select thinner one.

Adjusting washer No. 2	
Part No.	Thickness mm (in)
803025070	2.850 (0.1122)
803025074	3.000 (0.1181)
803025078	3.150 (0.1240)

6) Recheck that the starting torque is within the specified range, then crimp the lock nut at four positions.

GETtheMANUALS.org

17. Front Differential Assembly

A: REMOVAL

1) Remove the manual transmission assembly from the vehicle. <Ref. to 6MT-25, REMOVAL, Manual Transmission Assembly.>
2) Remove the transfer case together with the extension case assembly. <Ref. to 6MT-40, REMOVAL, Transfer Case and Extension Case Assembly.>
3) Remove the transmission case. <Ref. to 6MT-57, REMOVAL, Transmission Case.>
4) Remove the drive pinion shaft assembly. <Ref. to 6MT-67, REMOVAL, Drive Pinion Shaft Assembly.>
5) Remove the main shaft assembly for single-range. <Ref. to 6MT-60, REMOVAL, Main Shaft Assembly for Single-Range.>
6) Remove the front differential assembly.

NOTE:
- Do not confuse the right and left roller bearing outer races.
- Be careful not to damage the oil seal of retainer.

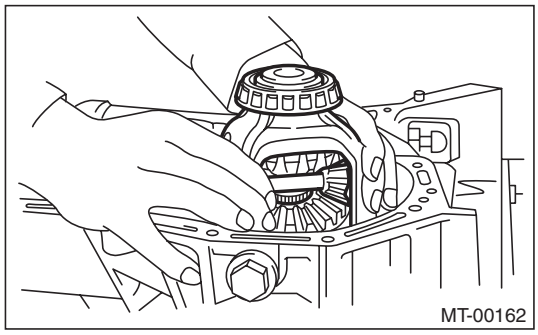

7) Remove the differential side retainers using ST.
ST 18658AA020 WRENCH COMPL RETAINER

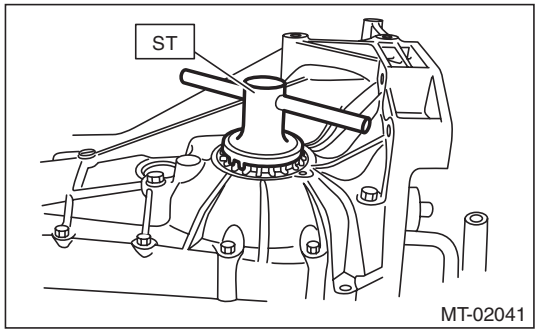

8) Remove the bearing outer race from the transmission case.
ST 398527700 PULLER ASSY

B: INSTALLATION

1) Install the differential side retainers using ST.
ST 18658AA020 WRENCH COMPL RETAINER
2) Install the bearing outer race to the transmission case.
3) Install the front differential assembly.

NOTE:
Be careful not to fold the sealing lip of oil seal.

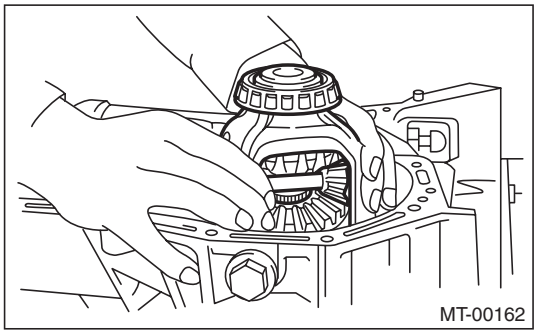

4) Install the main shaft assembly for single-range. <Ref. to 6MT-60, INSTALLATION, Main Shaft Assembly for Single-Range.>
5) Install the drive pinion shaft assembly. <Ref. to 6MT-67, INSTALLATION, Drive Pinion Shaft Assembly.>
6) Install the transmission case. <Ref. to 6MT-58, INSTALLATION, Transmission Case.>
7) Install the transfer case together with the extension case assembly. <Ref. to 6MT-40, INSTALLATION, Transfer Case and Extension Case Assembly.>
8) Install the manual transmission assembly to the vehicle. <Ref. to 6MT-29, INSTALLATION, Manual Transmission Assembly.>

GETtheMANUALS.org

C: DISASSEMBLY

1. DIFFERENTIAL CASE ASSY

1) Loosen the twelve bolts and remove hypoid driven gear.

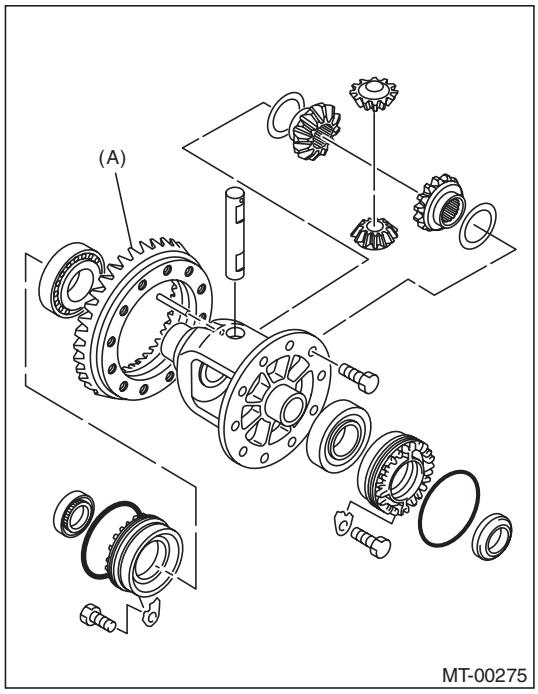

(A) Hypoid driven gear

2) Drive out the straight pin from differential assembly toward hypoid driven gear side.
ST 899904100 STRAIGHT PIN REMOVER

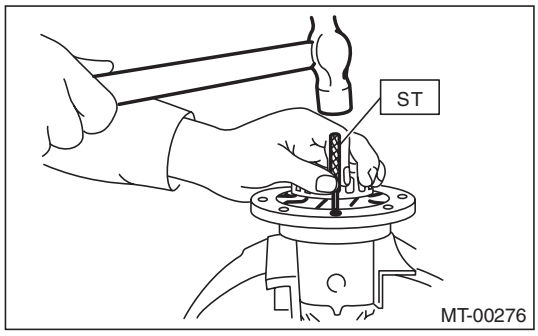

3) Pull out the pinion shaft, and remove the differential bevel pinion, differential bevel gear and washer.

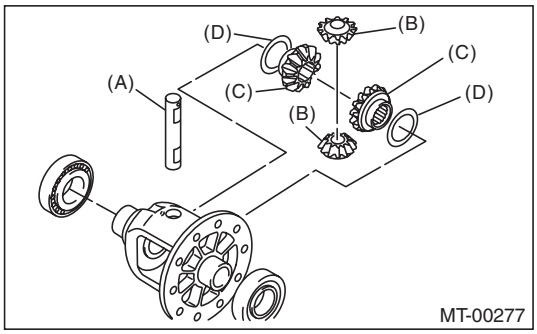

(A) Pinion shaft
(B) Differential bevel pinion
(C) Differential bevel gear
(D) Washer

4) Using the ST, remove the roller bearing.
ST 899524100 PULLER SET

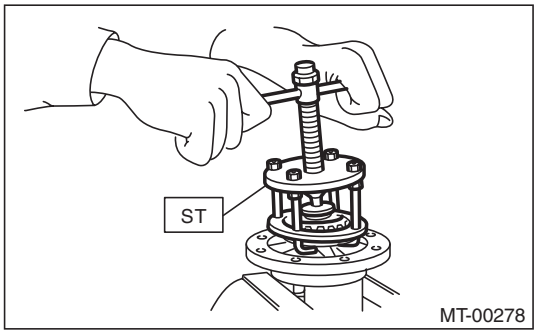

2. SIDE RETAINER

1) Remove the O-ring.

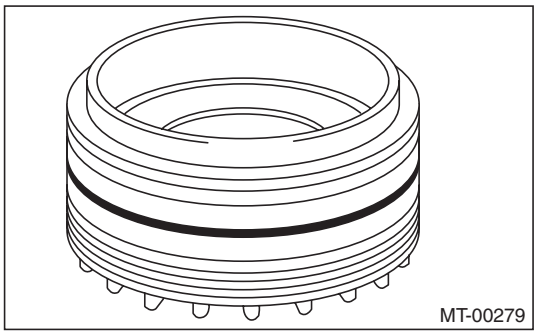

GETtheMANUALS.org

2) Remove the oil seal.

NOTE:
- Remove it by using flat tip screwdriver.
- Do not reuse the oil seal. Replace the oil seal with a new part.

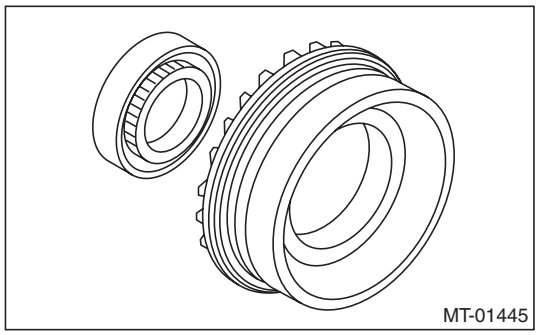

D: ASSEMBLY

1. DIFFERENTIAL CASE ASSY

1) Install the differential bevel gear and differential bevel pinion together with washer, and insert the pinion shaft.

NOTE:
Face the chamfered side of washer toward gear.

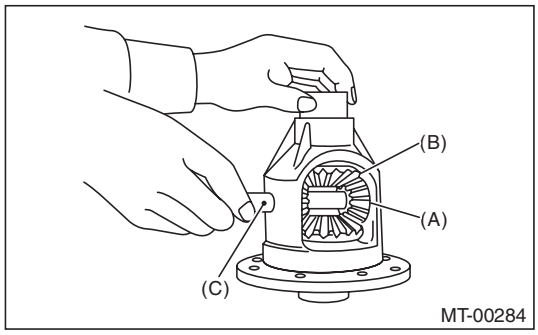

(A) Differential bevel pinion
(B) Differential bevel gear
(C) Pinion shaft

2) Measure the backlash between the differential bevel gear and differential bevel pinion. If backlash is out of specifications, install a suitable washer to adjust. <Ref. to 6MT-81, BEVEL PINION GEAR BACKLASH, INSPECTION, Front Differential Assembly.>

NOTE:
Be sure the pinion gear teeth contacts adjacent gear teeth during measurement.

Standard backlash
0.13 — 0.18 mm (0.0051 — 0.0071 in)

ST1 498247001 MAGNET BASE
ST2 498247100 DIAL GAUGE

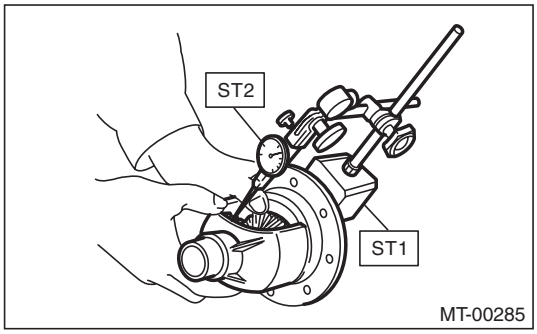

3) Align the pinion shaft and differential case with each hole, and drive the straight pin into the holes from the hypoid driven gear side using the ST.

NOTE:
Use a new straight pin.

ST 899904100 STRAIGHT PIN REMOVER

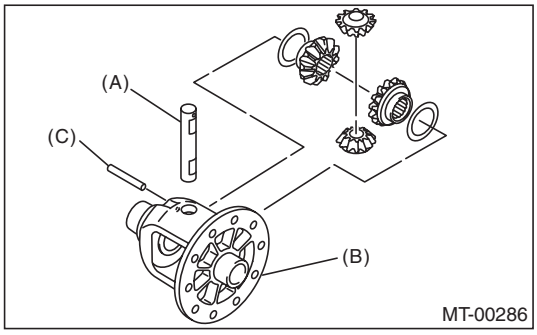

(A) Pinion shaft
(B) Differential case
(C) Straight pin

GETtheMANUALS.org

4) Install the roller bearing to differential case.

CAUTION:
Do not apply a load in excess of 10 kN (1 ton, 1.1 US ton, 1.0 Imp ton).

NOTE:
Be careful because the roller bearing outer races are used as a set.

ST1 499277100 BUSHING 1-2 INSTALLER
ST2 398497701 ADAPTER

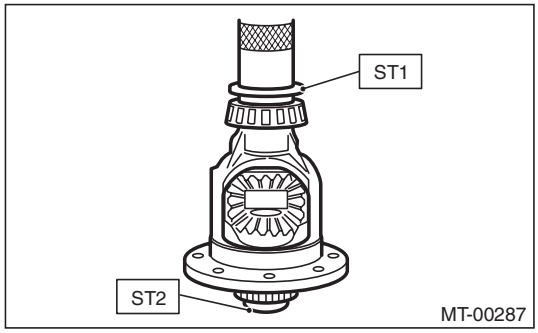

5) Install the hypoid driven gear to the differential case using twelve bolts.

Tightening torque:
T: 62 N·m (6.3 kgf-m, 45.7 ft-lb)

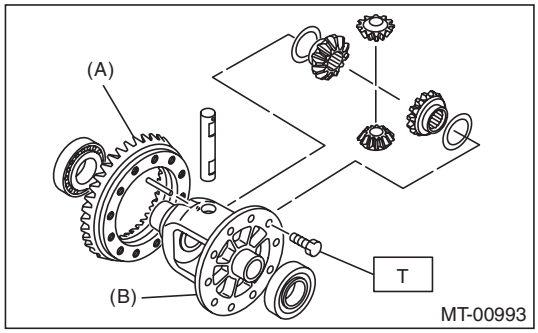

(A) Hypoid driven gear
(B) Differential case

2. SIDE RETAINER

1) Using the ST, install the oil seal by lightly tapping with a plastic hammer.

NOTE:
- Use a new oil seal.
- Apply transmission gear oil to the oil seal lips, and install the oil seal while being careful not to deform the lip.
- Check the identification marks (L, R), attach the oil seal RH and LH.

ST 18675AA000 DIFFERENTIAL SIDE OIL SEAL INSTALLER

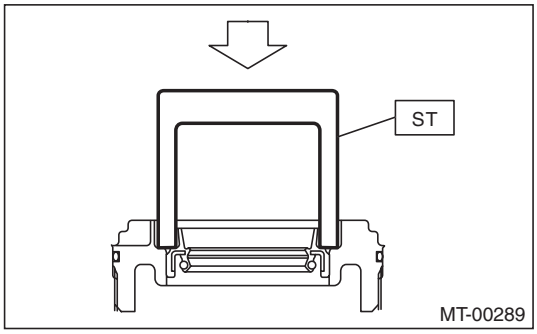

2) Install the O-ring.

NOTE:
- Use new O-rings.
- Apply gear oil to O-ring.
- Do not stretch or damage the O-ring.

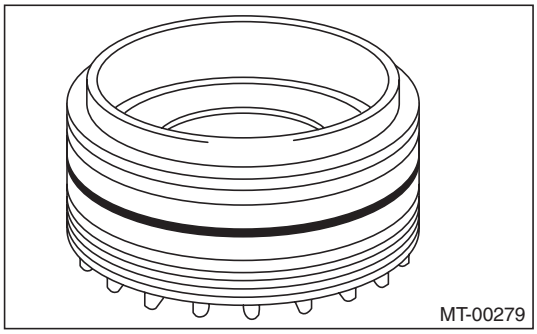

GETtheMANUALS.org

E: INSPECTION

Repair or replace the differential gear in the following cases:

• When the hypoid drive gear and drive pinion shaft tooth surfaces are damaged, excessively worn, or seized.

• When the roller bearing on the drive pinion shaft has a worn or damaged roller path.

• When there is damage, wear or seizure of the differential bevel pinion, differential bevel gear, washer, pinion shaft or straight pin.

• When the differential case sliding surfaces are worn or damaged.

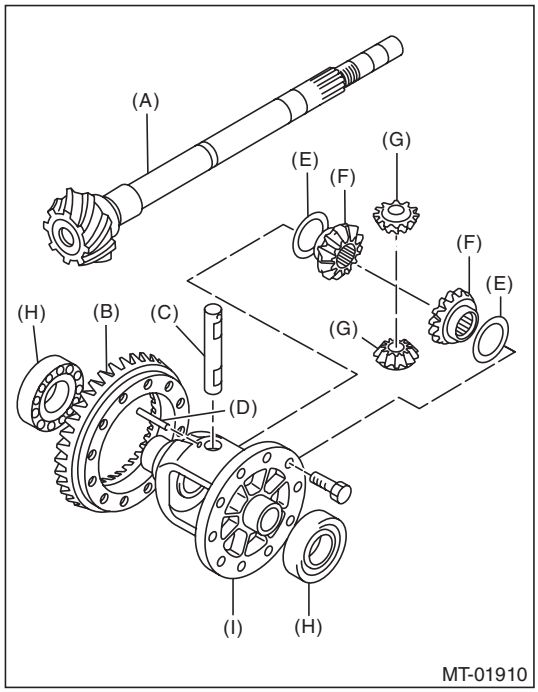

(A) Drive pinion shaft
(B) Hypoid driven gear
(C) Pinion shaft
(D) Straight pin
(E) Washer
(F) Differential bevel gear
(G) Differential bevel pinion
(H) Roller bearing
(I) Differential case

1. BEVEL PINION GEAR BACKLASH

Measure the backlash between the differential bevel gear and differential bevel pinion. If backlash is out of specifications, install a suitable washer to adjust. <Ref. to 6MT-82, ADJUSTMENT, Front Differential Assembly.>

Standard backlash

0.13 — 0.18 mm (0.0051 — 0.0071 in)

ST1 498247001 MAGNET BASE
ST2 498247100 DIAL GAUGE

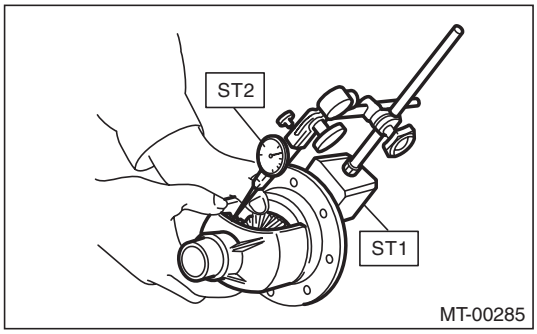

2. HYPOID GEAR BACKLASH

1) Set the ST1, ST2 and ST3. Insert the needle through drain plug hole so that the needle comes in contact with the tooth surface on the right corner, and check the backlash.

ST1 498247001 MAGNET BASE
ST2 498247100 DIAL GAUGE
ST3 498255400 PLATE

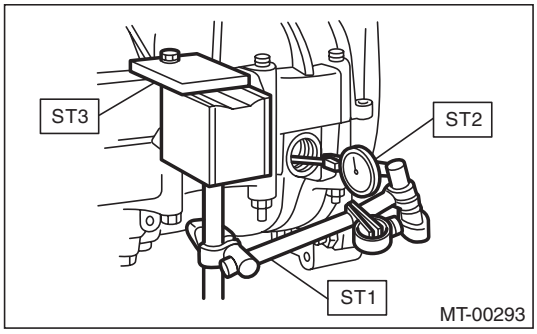

2) Secure the drive pinion shaft using the ST, install SUBARU genuine axle shafts to both sides, rotate in the both directions so that the gauge contacts the tooth surface, and read the dial gauge.

NOTE:
If the backlash is outside the specified range, adjust it by turning the side retainer in the right side case.

Backlash

0.13 — 0.18 mm (0.0051 — 0.0071 in)

ST 18667AA020 HOLDER
Part No. 38415AA100 Axle shaft

GETtheMANUALS.org

3. TOOTH CONTACT OF HYPOID GEAR

Check tooth contact of hypoid gear as follows: Apply a thin uniform coat of red lead on both teeth surfaces on 3 or 4 teeth of the hypoid gear. Move the hypoid gear back and forth by turning the transmission main shaft until a definite contact pattern is developed on the hypoid gear, and judge whether face contact is correct. When the contact pattern is not correct, adjust. <Ref. to 6MT-82, ADJUSTMENT, Front Differential Assembly.>

- Tooth contact is correct.

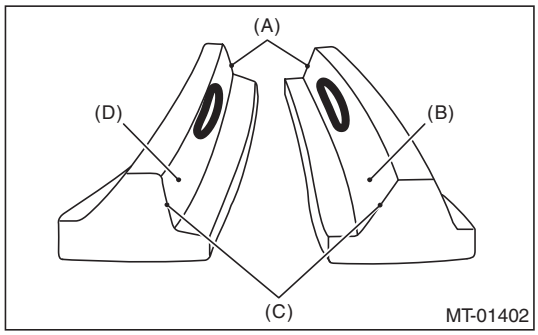

(A) Toe
(B) Coast side
(C) Heel
(D) Drive side

F: ADJUSTMENT

1. BEVEL PINION GEAR BACKLASH

1) Disassemble the front differential assembly. <Ref. to 6MT-78, DISASSEMBLY, Front Differential Assembly.>
2) Select a suitable washer for the differential bevel gear from the table and install.

Washer	
Part No.	Thickness mm (in)
803038021	0.925 — 0.950 (0.0364 — 0.0374)
803038022	0.975 — 1.000 (0.0384 — 0.0394)
803038023	1.025 — 1.050 (0.0404 — 0.0413)

3) Adjust until the standard value is obtained.

Backlash:
Standard
0.13 — 0.18 mm (0.0051 — 0.0071 in)

2. HYPOID GEAR BACKLASH

Adjust the backlash by turning the side retainer in the RH side case.

ST 18658AA020 WRENCH COMPL RETAINER

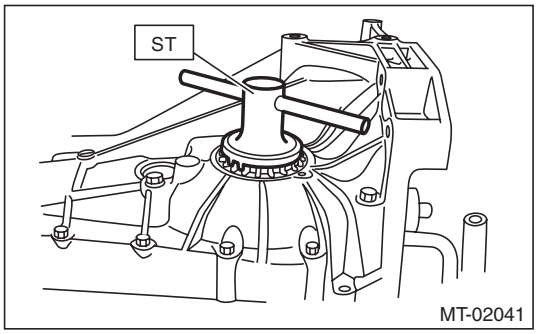

NOTE:
Each time the side retainer rotates by one notch (A), the backlash changes by 0.05 mm (0.0020 in).

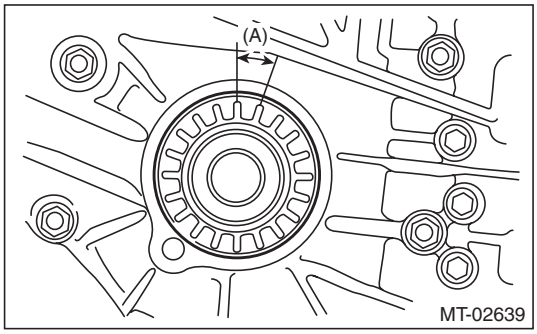

GETtheMANUALS.org

3. TOOTH CONTACT OF HYPOID GEAR

1) Adjust until correct teeth contact is obtained.
2) Check tooth contact, and perform the adjustment as follows.

- Tooth contact

Check item: Tooth contact surface is slightly shifted toward the toe side under a no-load condition. (When driving, it moves towards the heel side.

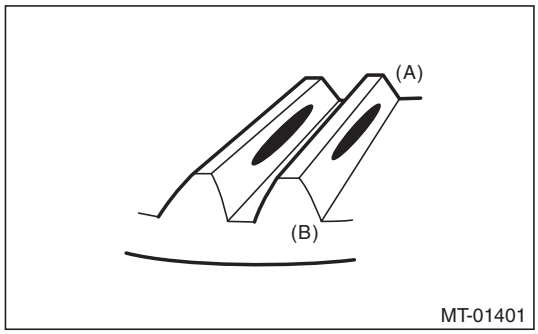

(A) Toe side
(B) Heel side

- Face contact

Check item: Backlash is too large.
Contact pattern

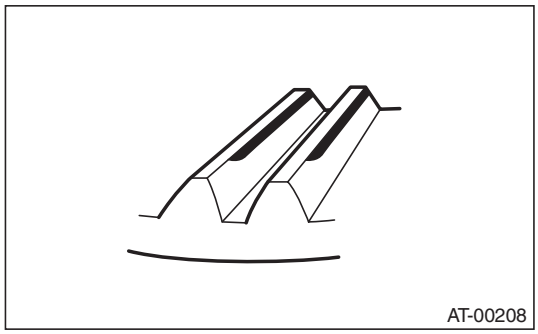

Corrective action: Tighten the side retainer to move the driven gear closer to the drive pinion.

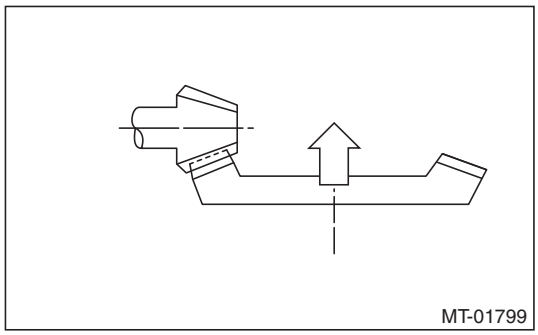

- Flank contact

Check item: Backlash is too small.
Contact pattern

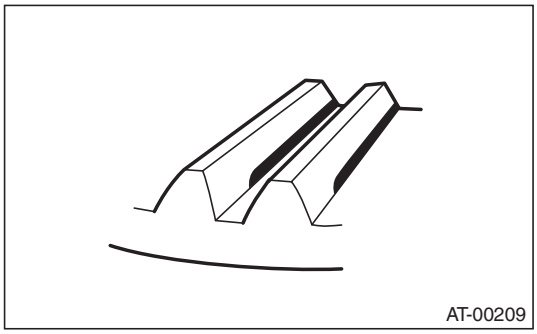

Corrective action: Loosen the side retainer to move the driven gear away from the drive pinion.

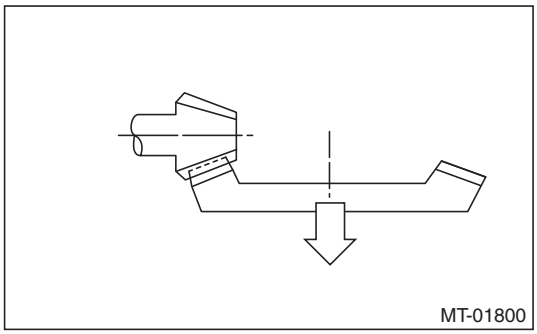

- Toe contact (inside contact)

Check item: Teeth contact area is too small.
Contact pattern

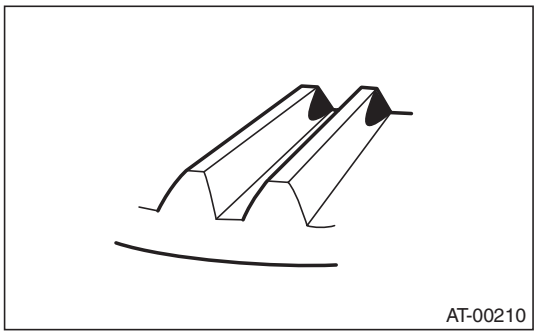

Corrective action: Increase thickness of the drive pinion shim according to the procedures for moving the drive pinion shaft away from the driven gear. Also tighten the side retainer to move the driven gear closer to the drive pinion shaft.

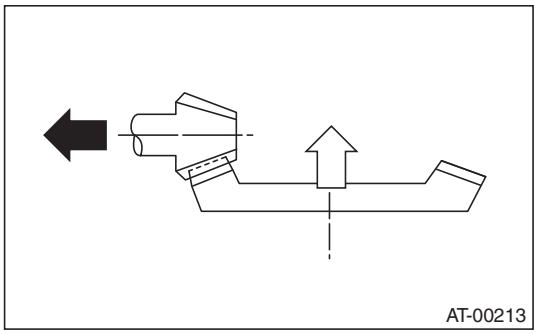

GETtheMANUALS.org

- Heel contact (outside end contact)

Check item: Teeth contact area is too small.

Contact pattern

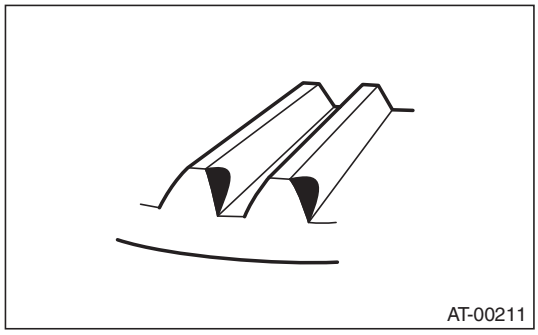

Corrective action: Reduce thickness of the drive pinion shim according to the procedures for moving the drive pinion shaft closer to driven gear. Also loosen the side retainer to move the driven gear away from the drive pinion.

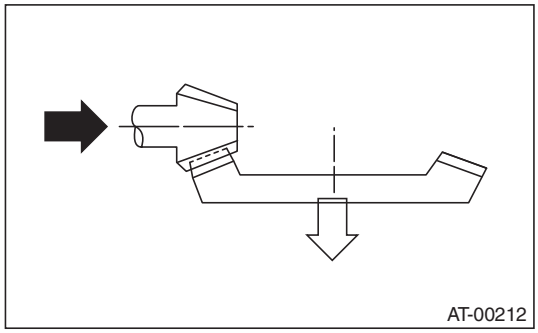

GETtheMANUALS.org

18. Reverse Idler Gear

A: REMOVAL

1) Remove the manual transmission assembly from the vehicle. <Ref. to 6MT-25, REMOVAL, Manual Transmission Assembly.>
2) Remove the back-up light switch neutral position switch. <Ref. to 6MT-37, REMOVAL, Switches and Harness.>
3) Remove the transfer case together with the extension case assembly. <Ref. to 6MT-40, REMOVAL, Transfer Case and Extension Case Assembly.>
4) Remove the transmission case. <Ref. to 6MT-57, REMOVAL, Transmission Case.>
5) Remove the drive pinion shaft assembly. <Ref. to 6MT-67, REMOVAL, Drive Pinion Shaft Assembly.>
6) Remove the main shaft assembly for single-range. <Ref. to 6MT-60, REMOVAL, Main Shaft Assembly for Single-Range.>
7) Remove the front differential assembly. <Ref. to 6MT-77, REMOVAL, Front Differential Assembly.>
8) Remove the shifter forks and rods. <Ref. to 6MT-90, REMOVAL, Shifter Fork and Rod.>
9) Remove the snap ring and bolt. Remove the reverse idler gear bushing and drive out the spring pin by tapping it.

NOTE:
When driving out the spring pin, rotate the reverse idler gear shaft to prevent it from contacting the case and remove the spring pin into the case inside.

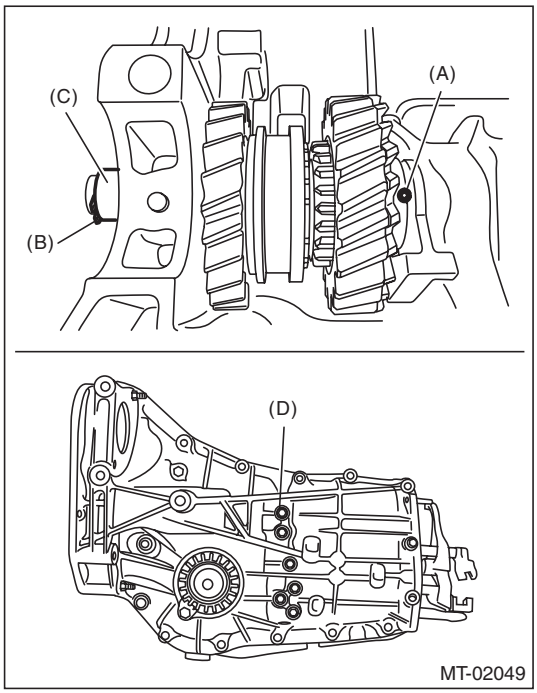

(A) Spring pin
(B) Snap ring
(C) Reverse idler gear bushing
(D) Bolt

10) Pull out the reverse idler gear shaft toward the rear side and remove all parts.

NOTE:
When pulling out the reverse idler gear shaft, remove the reverse idler gear assembly as a unit while supporting it from the bottom by hand to prevent the parts to scatter in the transmission case.

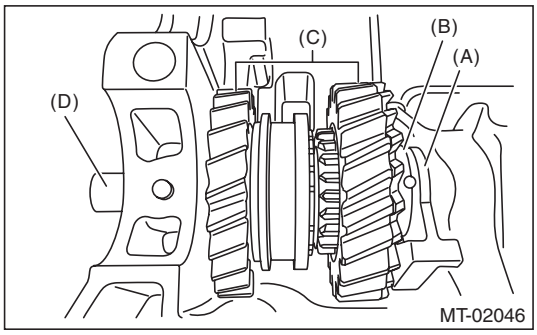

(A) Oil case guide
(B) Washer
(C) Reverse idler gear ASSY
(D) Reverse idler gear shaft

GETtheMANUALS.org

B: INSTALLATION

NOTE:
Rotate the reverse idler sub gear by two teeth from free status in the direction of the arrow to make it engage with the reverse gear of the main shaft and install the main shaft assembly.

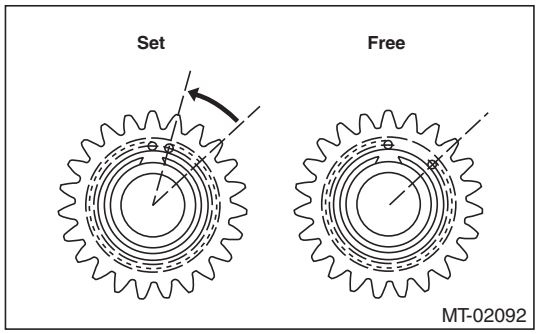

1) Insert the reverse idler gear shaft into the transmission case, then install the oil case guide, washer and reverse idler gear assembly as a single unit.

NOTE:
- Be sure to install the reverse idler gear shaft from rear side.

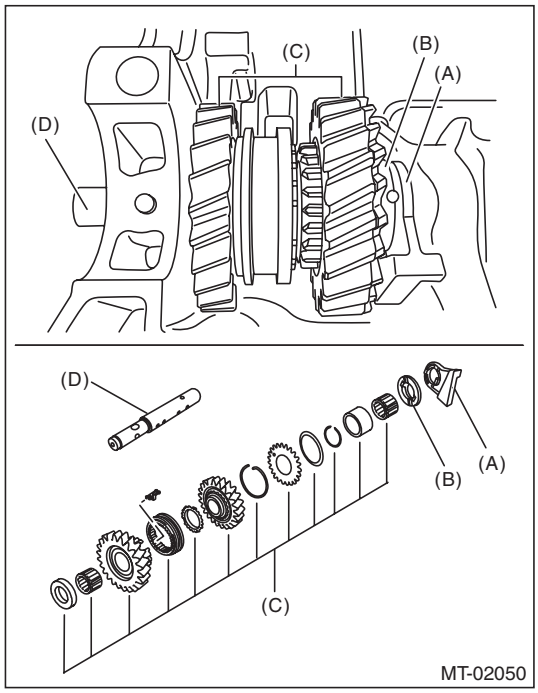

(A) Oil case guide
(B) Washer
(C) Reverse idler gear ASSY
(D) Reverse idler gear shaft

- Direction of the reverse idler gear shaft cutout can be either LH side or RH side of the transmission case.

2) Insert the reverse idler gear bushing into reverse idler gear shaft, install the snap ring, and then drive in the spring pin to fix.

NOTE:
- Use new spring pin.

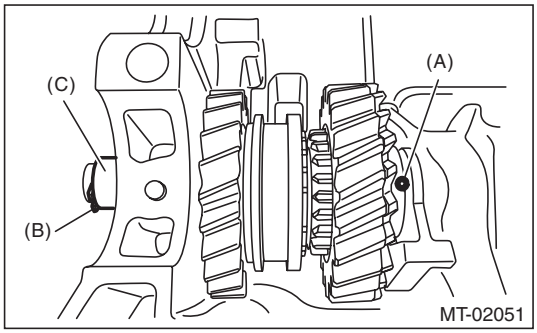

(A) Spring pin
(B) Snap ring
(C) Reverse idler gear bushing

- After installation of snap ring, rotate the snap ring 360° to confirm that it is fitted in the groove completely.

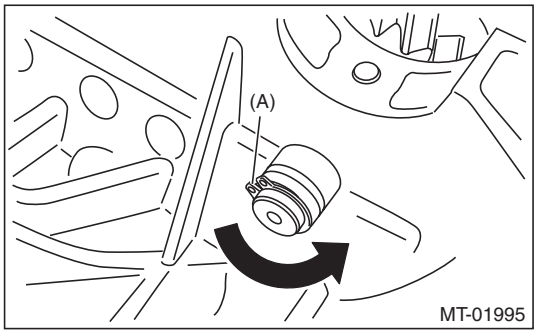

(A) Snap ring

3) Install the reverse idler gear shaft securing bolt.

NOTE:
Use a new gasket.

Tightening torque:
25 N·m (2.5 kgf-m, 18.4 ft-lb)

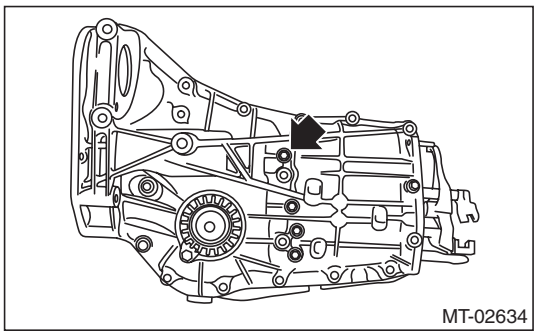

GETtheMANUALS.org

4) Check and adjust clearance between the reverse idler gear No. 2 and transmission case wall, and the reverse idler gear and reverse idler gear washer. <Ref. to 6MT-88, INSPECTION, Reverse Idler Gear.> <Ref. to 6MT-89, ADJUSTMENT, Reverse Idler Gear.>
5) Install the shifter forks and rods. <Ref. to 6MT-91, INSTALLATION, Shifter Fork and Rod.>
6) Install the front differential assembly. <Ref. to 6MT-77, INSTALLATION, Front Differential Assembly.>
7) Install the main shaft assembly for single-range. <Ref. to 6MT-60, INSTALLATION, Main Shaft Assembly for Single-Range.>
8) Install the drive pinion shaft assembly. <Ref. to 6MT-67, INSTALLATION, Drive Pinion Shaft Assembly.>
9) Install the transmission case. <Ref. to 6MT-58, INSTALLATION, Transmission Case.>
10) Install the transfer case together with the extension case assembly. <Ref. to 6MT-40, INSTALLATION, Transfer Case and Extension Case Assembly.>
11) Install the back-up light switch and the neutral position switch. <Ref. to 6MT-37, INSTALLATION, Switches and Harness.>
12) Install the manual transmission assembly to the vehicle. <Ref. to 6MT-29, INSTALLATION, Manual Transmission Assembly.>

C: DISASSEMBLY

1) Remove the snap ring from the reverse idler gear assembly.

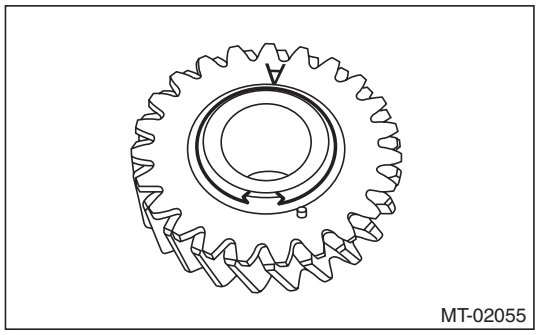

2) Remove the friction plate, reverse idler sub gear and reverse idler spring.

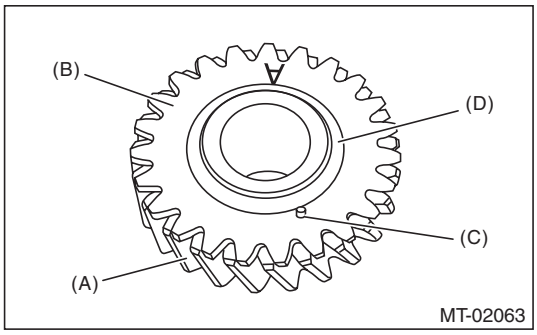

(A) Reverse idler gear
(B) Reverse idler sub gear
(C) Reverse idler spring
(D) Friction plate

D: ASSEMBLY

1) Insert the reverse idler spring into the holes on reverse idler gear and reverse idler sub gear to install.

NOTE:
Install the reverse idler sub gear with the side with the mark on it facing outside.

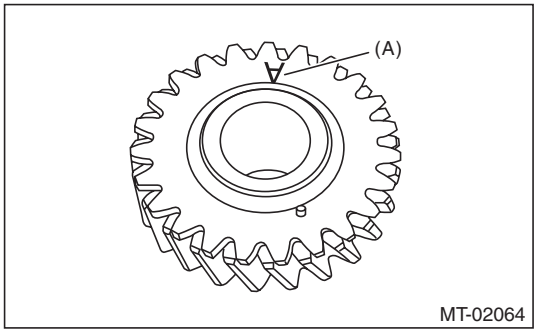

(A) Side with the mark facing outside

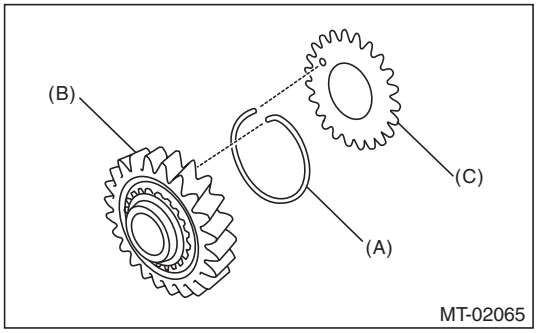

(A) Reverse idler spring
(B) Reverse idler gear
(C) Reverse idler sub gear

GETtheMANUALS.org

2) Install the friction plate, and then secure with the snap ring.

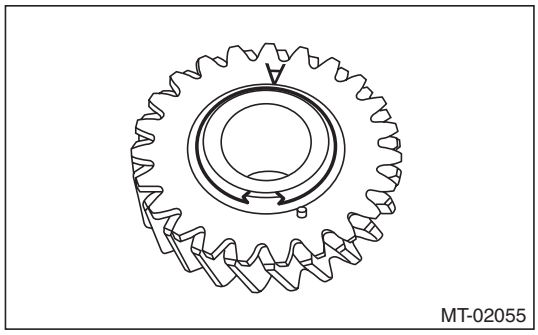

E: INSPECTION

1) Move the reverse shifter rod toward the reverse side. Check the clearance between the reverse idler gear and reverse coupling sleeve. If out of specification, select the appropriate reverse shifter fork and adjust.

Clearance (a):
0.50 — 0.85 mm (0.020 — 0.033 in)

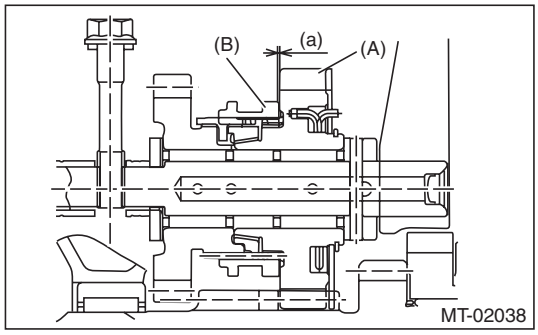

(A) Reverse idler gear
(B) Reverse coupling sleeve

2) After installing a suitable reverse shifter fork, shift into neutral. Check the clearance between the reverse idler gear and reverse idler gear washer. If out of specification, select the appropriate reverse idler gear bushing and adjust.

NOTE:
In clearance check, be sure to insert a thickness gauge vertically.

Clearance (a):
0.1 — 0.3 mm (0.004 — 0.012 in)

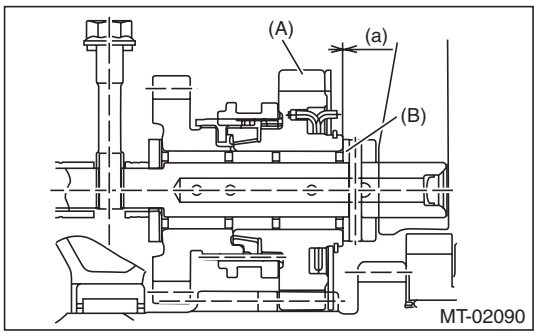

(A) Reverse idler gear
(B) Reverse idler gear washer

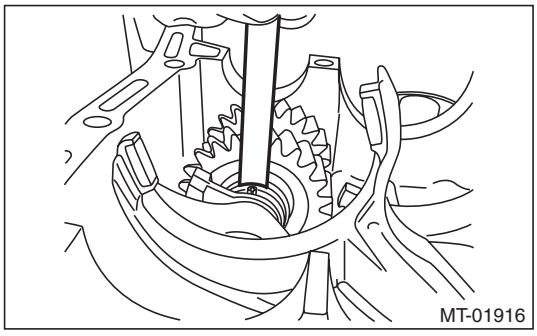

3) Check the reverse idler gear and shaft for damage. Replace if it is damaged.

GETtheMANUALS.org

F: ADJUSTMENT

1) Select the appropriate reverse shifter fork from the table below, and adjust until the clearance between the reverse idler gear and reverse coupling sleeve is within specification.

Clearance (a):
0.50 — 0.85 mm (0.020 — 0.033 in)

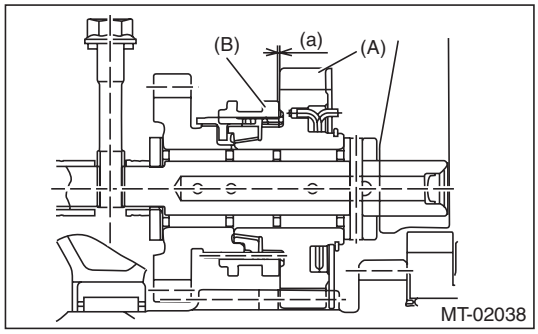

(A) Reverse idler gear
(B) Reverse coupling sleeve

Reverse shifter fork		
Part number	Mark	Content
32941AA020	2	Approaches reverse idler gear by 0.3 mm (0.012 in).
32941AA030	No mark	Standard
32941AA040	1	Approaches reverse idler gear No. 2 by 0.3 mm (0.012 in).

2) Select the appropriate reverse idler gear bushing from the table below, and adjust until the clearance between the reverse idler gear and reverse idler gear washer is within specification.

NOTE:
In clearance check, be sure to insert a thickness gauge vertically.

Clearance (a):
0.1 — 0.3 mm (0.004 — 0.012 in)

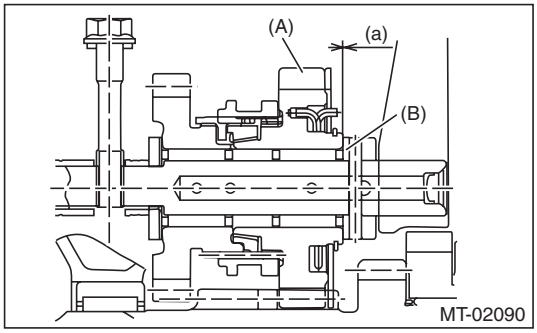

(A) Reverse idler gear
(B) Reverse idler gear washer

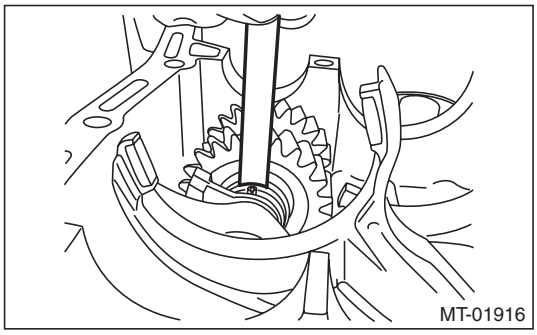

Reverse idler gear bushing		
Part number	Length mm (in)	Groove for identification
32289AA010	38.0 (1.496)	No
32289AA020	38.1 (1.500)	1
32289AA030	38.2 (1.504)	2
32289AA040	38.3 (1.508)	3
32289AA050	38.4 (1.512)	4
32289AA060	38.5 (1.516)	5
32289AA070	38.6 (1.520)	6

GETtheMANUALS.org

19.Shifter Fork and Rod

A: REMOVAL

1) Remove the manual transmission assembly from the vehicle. <Ref. to 6MT-25, REMOVAL, Manual Transmission Assembly.>
2) Remove the back-up light switch and the neutral position switch. <Ref. to 6MT-37, REMOVAL, Switches and Harness.>
3) Remove the transfer case together with the extension case assembly. <Ref. to 6MT-40, REMOVAL, Transfer Case and Extension Case Assembly.>
4) Remove the transmission case. <Ref. to 6MT-57, REMOVAL, Transmission Case.>
5) Remove the drive pinion shaft assembly. <Ref. to 6MT-67, REMOVAL, Drive Pinion Shaft Assembly.>
6) Remove the main shaft assembly for single-range. <Ref. to 6MT-60, REMOVAL, Main Shaft Assembly for Single-Range.>
7) Remove the front differential assembly. <Ref. to 6MT-77, REMOVAL, Front Differential Assembly.>
8) Remove the check ball plugs, gasket, check ball springs and check balls.

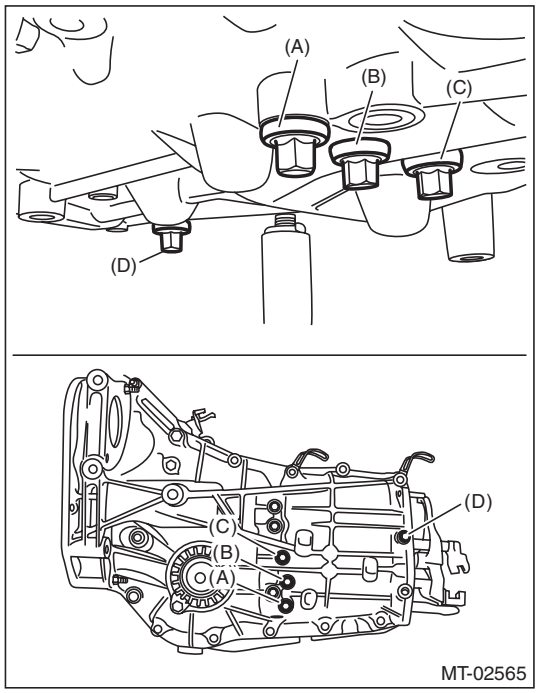

(A) 1st-2nd
(B) 3rd-4th
(C) 5th-6th
(D) Rev.

9) Use the ST to push out the spring pin of 5th-6th shifter fork and reverse shifter fork, and remove the 5th-6th shifter fork, reverse shifter fork, 5th-6th fork rod and reverse fork rod.

NOTE:
Tap out the reverse shifter fork spring pin, after setting the gear into reverse position. In the neutral position, removing is impossible because the clearance between transmission case is narrow.
ST 398791700 SPRING PIN REMOVER 2

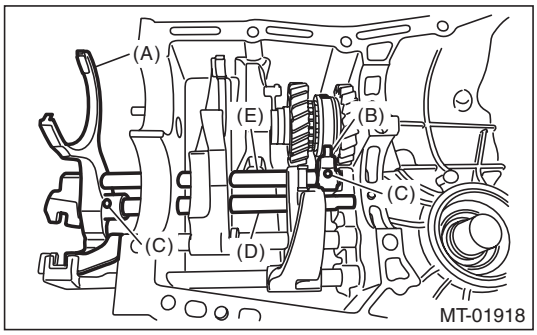

(A) 5th-6th shifter fork
(B) Reverse shifter fork
(C) Spring pin
(D) 5th-6th fork rod
(E) Reverse fork rod

10) Drive out the spring pin tapping by the ST, and remove the 3rd-4th shifter fork and fork rod.

NOTE:
When removing the rod, keep other rods in neutral.
ST 398791700 SPRING PIN REMOVER 2

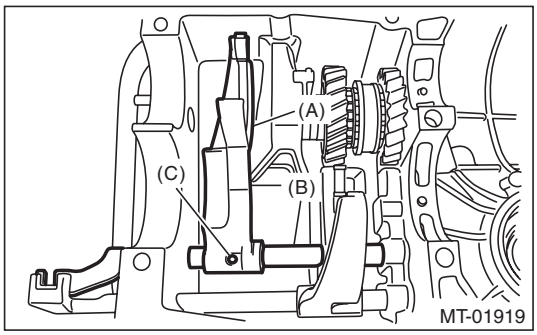

(A) 3rd-4th shifter fork
(B) 3rd-4th fork rod
(C) Spring pin

GETtheMANUALS.org

11) Drive out the spring pin tapping by the ST, and remove the 1st-2nd shifter fork and fork rod.
ST 398791700 SPRING PIN REMOVER 2

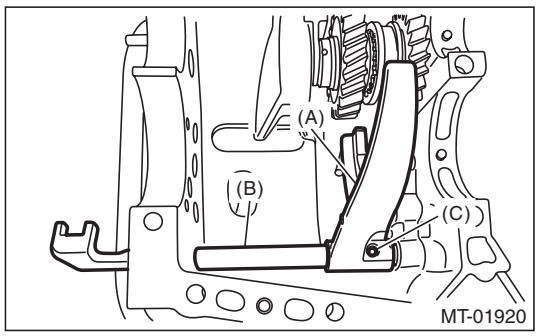

(A) 1st-2nd shifter fork
(B) 1st-2nd fork rod
(C) Spring pin

B: INSTALLATION

1) Install the 1st-2nd fork rod to the 1st-2nd shifter fork through the hole on the rear of the transmission case.
2) Align the holes in the rod and the fork, and drive the spring pin into these holes using the ST to fix.

NOTE:
Use new spring pin.
ST 398791700 SPRING PIN REMOVER 2

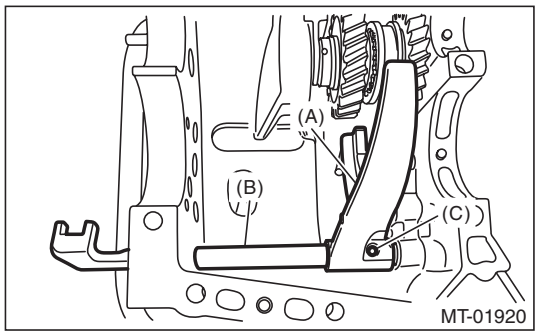

(A) 1st-2nd shifter fork
(B) 1st-2nd fork rod
(C) Spring pin

3) Install the 3rd-4th fork rod to the 3rd-4th shifter fork through the hole on the rear of the transmission case.

4) Align the holes in the rod and the fork, and drive the spring pin into these holes using the ST to fix.

NOTE:
- Use new spring pin.
- Set other rods to neutral.
- Check that the positions of interlock plunger is correct.

ST 398791700 SPRING PIN REMOVER 2

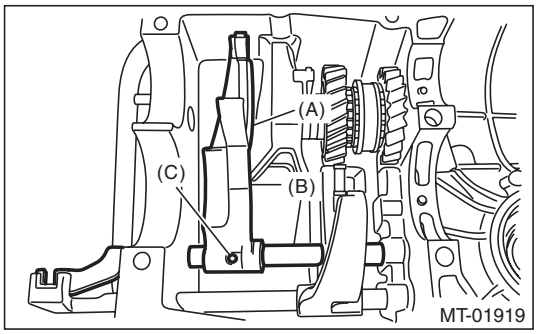

(A) 3rd-4th shifter fork
(B) 3rd-4th fork rod
(C) Spring pin

5) Install the 5th-6th fork rod into 5th-6th shifter fork, then insert through the hole on the rear of transmission case. Align the hole of the 5th-6th shifter fork with the hole on the transmission case, then insert the reverse fork rod to install the reverse shifter fork.
6) Align the holes in the rod and the fork, and drive the spring pin into these holes using the ST to fix.

NOTE:
- Use new spring pin.
- Set other rods to neutral.
- Check that the positions of interlock plunger is correct.

ST 398791700 SPRING PIN REMOVER 2

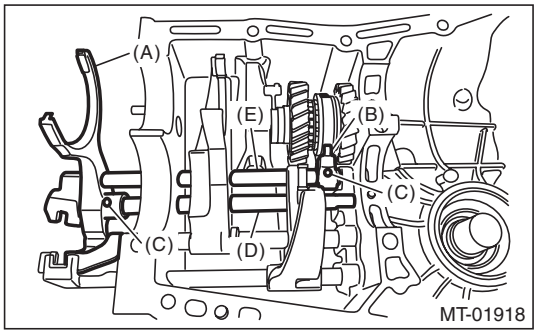

(A) 5th-6th shifter fork
(B) Reverse shifter fork
(C) Spring pin
(D) 5th-6th fork rod
(E) Reverse fork rod

GETtheMANUALS.org

7) Install the check ball plugs, gaskets, check ball springs and check balls.

NOTE:
Use a new gasket.

Tightening torque:
20 N·m (2.0 kgf-m, 14.8 ft-lb)

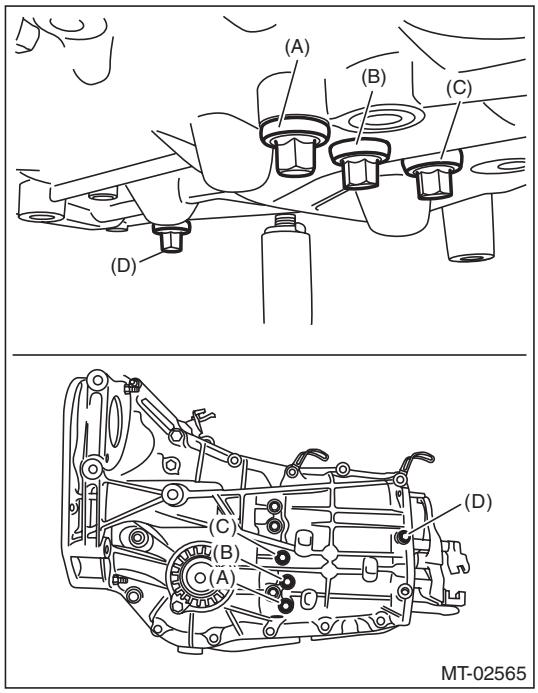

(A) 1st-2nd
(B) 3rd-4th
(C) 5th-6th
(D) Rev.

8) Install the front differential assembly. <Ref. to 6MT-77, INSTALLATION, Front Differential Assembly.>
9) Install the main shaft assembly for single-range. <Ref. to 6MT-60, INSTALLATION, Main Shaft Assembly for Single-Range.>
10) Install the drive pinion shaft assembly. <Ref. to 6MT-67, INSTALLATION, Drive Pinion Shaft Assembly.>
11) Install the transmission case. <Ref. to 6MT-58, INSTALLATION, Transmission Case.>
12) Install the transfer case together with the extension case assembly. <Ref. to 6MT-40, INSTALLATION, Transfer Case and Extension Case Assembly.>
13) Install the back-up light switch and the neutral position switch. <Ref. to 6MT-37, INSTALLATION, Switches and Harness.>
14) Install the manual transmission assembly to the vehicle. <Ref. to 6MT-29, INSTALLATION, Manual Transmission Assembly.>

C: INSPECTION

1) Check the fork and rod for damage. Replace if it is damaged.
2) Gearshift mechanism
Repair or replace the gearshift mechanism if excessively worn, bent or defective in any way.
3) Inspect the clearance between 2nd driven gear and coupling sleeve. If any clearance is not within specifications, replace the shifter fork as required.

Clearance (a):
9.4 — 10.0 mm (0.370 — 0.394 in)

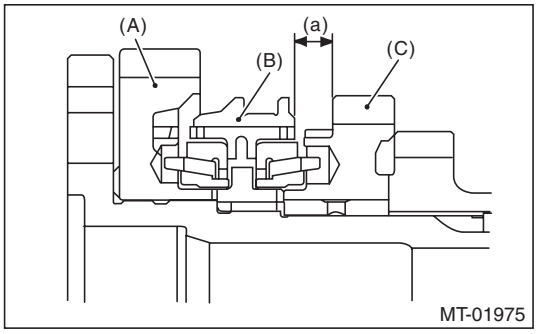

(A) 1st driven gear
(B) Coupling sleeve
(C) 2nd driven gear

1st-2nd shifter fork		
Part No.	Mark	Description
32804AA120	1	Approaches 1st gear by 0.2 mm (0.008 in).
32804AA130	No mark	Standard
32804AA140	3	Approaches 2nd gear by 0.2 mm (0.008 in)

GETtheMANUALS.org

4) Inspect the clearance between the 3rd, 4th drive gear and the coupling sleeve. If any clearance is not within specifications, replace the shifter fork as required.

Clearance (a):
7.4 mm (0.291 in)

Clearance (b):
9.3 mm (0.366 in)

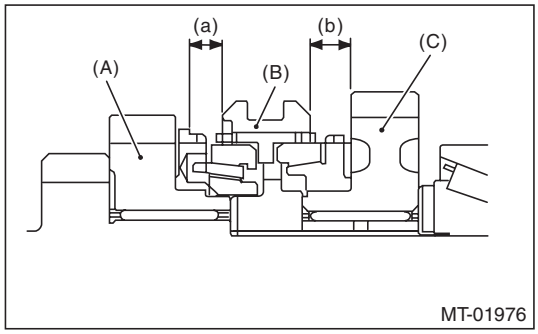

(A) 3rd drive gear
(B) Coupling sleeve
(C) 4th drive gear

3rd-4th shifter fork		
Part No.	Mark	Description
32810AA061	1	Approaches 4th gear by 0.2 mm (0.008 in).
32810AA071	No mark	Standard
32810AA101	3	Approaches 3rd gear by 0.2 mm (0.008 in)

5) Inspect the clearance between 5th, 6th drive gear and coupling sleeve. If any clearance is not within specifications, replace the shifter fork as required.

Clearance (a):
8.8 mm (0.346 in)

Clearance (b):
9.4 mm (0.370 in)

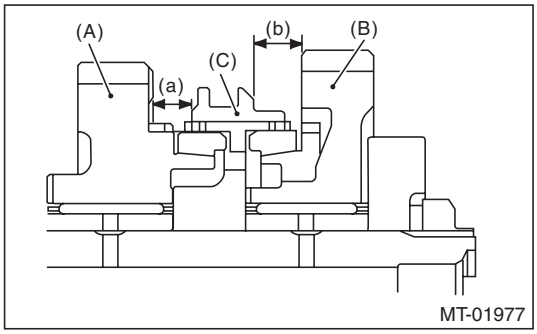

(A) 5th drive gear
(B) Coupling sleeve
(C) 6th drive gear

5th-6th shifter fork		
Part No.	Mark	Description
32940AA020	1	Approaches 5th gear by 0.2 mm (0.008 in).
32940AA030	No mark	Standard
32940AA040	2	Approaches 6th gear by 0.2 mm (0.008 in).

GETtheMANUALS.org

6) Check the clearance between the reverse idler gear and reverse coupling sleeve. If any clearance is not within specifications, replace the shifter fork as required.

Clearance (a):
0.50 — 0.85 mm (0.020 — 0.033 in)

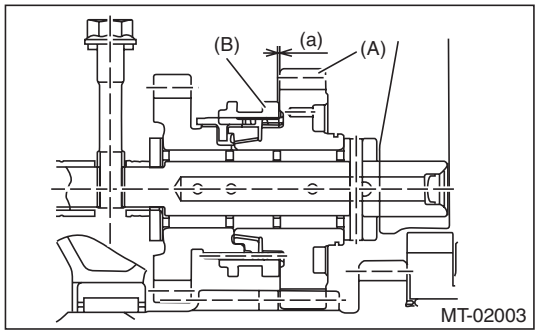

(A) Reverse idler gear
(B) Reverse coupling sleeve

Reverse shifter fork		
Part No.	Mark	Description
32941AA020	2	Approaches reverse idler gear by 0.3 mm (0.012 in).
32941AA030	No mark	Standard
32941AA040	1	Approaches reverse idler gear No. 2 by 0.3 mm (0.012 in).

7) Inspect the rod end clearances (A) and (B). If any clearance is not within specifications, replace the rod or fork as required.

Clearance (A):
1st-2nd — 3rd-4th
0.1 — 0.9 mm (0.004 — 0.035 in)

Clearance (B):
3rd-4th — 5th-6th
0.2 — 1.0 mm (0.008 — 0.039 in)

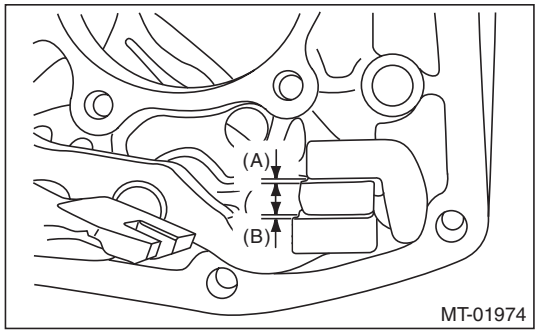

GETtheMANUALS.org

20. General Diagnostic Table

A: INSPECTION

1. MANUAL TRANSMISSION

Symptoms	Possible cause	Corrective action
1. Gears are difficult to intermesh. NOTE: The cause for difficulty in shifting gears can be classified into two types: One is a defective gear shift system and the other is defective transmission. However, if the operation is heavy and engagement of the gears is difficult, a defective clutch disengagement may also be responsible. Check whether the clutch is correctly functioning, before checking the gear shift system and transmission.	(a) Worn, damaged or burred chamfer at internal spline of the sleeve	Replace.
	(b) Gear spline wear, damage, dents	Replace.
	(c) Worn or scratched bushings	Replace.
	(d) Incorrect contact or wear between synchronizer ring and gear cone	Repair or replace.
2. Gear slip-out • Gear slips out when coasting on rough road. • Gear slips out during acceleration.	(a) Loose engine mounting bolts	Tighten or replace.
	(b) Worn fork shifter or broken check ball spring	Replace.
	(c) Worn or damaged ball bearing	Replace.
	(d) Excessive clearance between splines of synchronizer hub and synchronizer sleeve	Replace.
	(e) Synchronizer hub tooth step wear	Replace.
	(f) Worn 1st driven gear and driven shaft	Replace.
	(g) Worn 2nd driven gear and bushing	Replace.
	(h) Worn 3rd drive gear and needle bearing	Replace.
	(i) Worn 4th drive gear and needle bearing	Replace.
	(j) Worn 5th drive gear and needle bearing	Replace.
	(k) Worn 6th drive gear and needle bearing	Replace.
	(l) Worn reverse idler gear and needle bearing	Replace.
3. Noise emitted from transmission NOTE: If a noise is heard when the vehicle is parked with its engine idling and if a noise ceases when the clutch is disengaged, it may be considered that the noise is coming from the transmission.	(a) Insufficient or improper lubrication	Lubricate with recommended oil or replace.
	(b) Worn or damaged gears and bearings NOTE: If the trouble is only wear of the gear teeth surfaces, only a high whirring noise will occur at high speeds, but if any part is broken, rhythmical clicking sounds will be heard even at low speeds.	Replace.

GETtheMANUALS.org

2. DIFFERENTIAL

Symptoms	Possible cause	Corrective action
1. Broken differential (case, gear, bearing, etc.) NOTE: Noise will occur, and eventually the differential will not be able to operate due to broken pieces obstructing the gear revolution.	(a) Insufficient or improper oil	Disassemble the differential and replace broken components. At the same time check other components for any trouble, and replace if necessary.
	(b) Use of vehicle under severe conditions such as excessive load or improper use of the clutch	Readjust the preload and backlash of the bearing, and the contact surface of gear.
	(c) Improper adjustment of taper roller bearing	Adjust.
	(d) Improper adjustment of the drive pinion and the hypoid driven gear	Adjust.
	(e) Excessive backlash of a vehicle under severe operating conditions due to worn differential side gear, washer or differential pinion.	Add recommended oil to the specified level. Do not use vehicle under severe operating conditions.
	(f) Loose hypoid driven gear clamping bolts	Tighten.
2. Differential and hypoid gear noises Troubles of the differential and hypoid gear always appear as noise problems. Therefore noise is the first indication of trouble. However, noises from the engine, muffler, tire, exhaust gas, bearing, body, etc. are easily mistaken for the differential noise. Pay special attention to the hypoid gear noise because it is easily confused with other gear noises. There are the following four kinds of noises. • Gear noise when driving: If noise increases as the vehicle speed increases, it may be due to insufficient gear oil, incorrect gear engagement, damaged gears, etc. • Gear noise when coasting: Damaged gears due to misadjusted bearings and incorrect shim adjustment. • Bearing noise when driving or coasting: Cracked, broken or damaged bearings • Noise mainly when turning: Noise from differential side gear, differential pinion or differential pinion shaft, etc.	(a) Insufficient oil	Add recommended oil to the specified level.
	(b) Improper adjustment of hypoid driven gear and drive pinion	Check the tooth contact.
	(c) Worn teeth of hypoid driven gear and drive pinion	Replace as a set. Readjust the bearing preload.
	(d) Loose roller bearing	Readjust the backlash of the hypoid driven gear to drive pinion, and check the tooth contact.
	(e) Distorted hypoid driven gear or differential case	Replace.
	(f) Worn washer and differential pinion shaft	Replace.

GETtheMANUALS.org

CLUTCH SYSTEM

CL

		Page
1.	General Description	2
2.	Clutch Disc and Cover	11
3.	Flywheel	14
4.	Release Bearing and Lever	15
5.	Operating Cylinder	18
6.	Master Cylinder	20
7.	Clutch Pipe and Hose	22
8.	Clutch Fluid	24
9.	Clutch Fluid Air Bleeding	25
10.	Clutch Pedal	26
11.	Clutch Switch	31
12.	General Diagnostic Table	34

GETtheMANUALS.org

1. General Description

A: SPECIFICATION

Model			2.5 L non-turbo	2.5 L turbo
Transmission type			6MT	
Clutch cover	Type		Push type	
	Diaphragm set load N (kgf, lbf)		5,688 (580, 1,279)	7,450 (760, 1,675)
Clutch disc	Facing material		Woven (Non-asbestos)	
	O.D. × I.D. × thickness mm (in)	Flywheel side	230 × 155 × 3.2 (9.06 × 6.10 × 0.126)	
		Clutch cover side	230 × 155 × 3.5 (9.06 × 6.10 × 0.138)	
	Spline outer diameter mm (in)		25.2 (0.992), (Number of teeth: 24)	
	Depth of rivet head mm (in)	Flywheel side	1.35 — 1.95 (0.053 — 0.077)	
		Clutch cover side	1.65 — 2.25 (0.065 — 0.089)	
		Limit of sinking	0.3 (0.012)	
	Deflection limit mm (in)		0.7 (0.028) at R = 110 (4.33)	
Clutch release lever ratio			1.6	
Release bearing			Grease-packed self-aligning	
Clutch pedal	Full stroke mm (in)		130 — 135 (5.12 — 5.31)	135 — 140 (5.31 — 5.51)
	Free play mm (in)		4 — 11 (0.16 — 0.43)	
Flywheel	Type		Flexible	

GETtheMANUALS.org

B: COMPONENT

1. CLUTCH ASSEMBLY

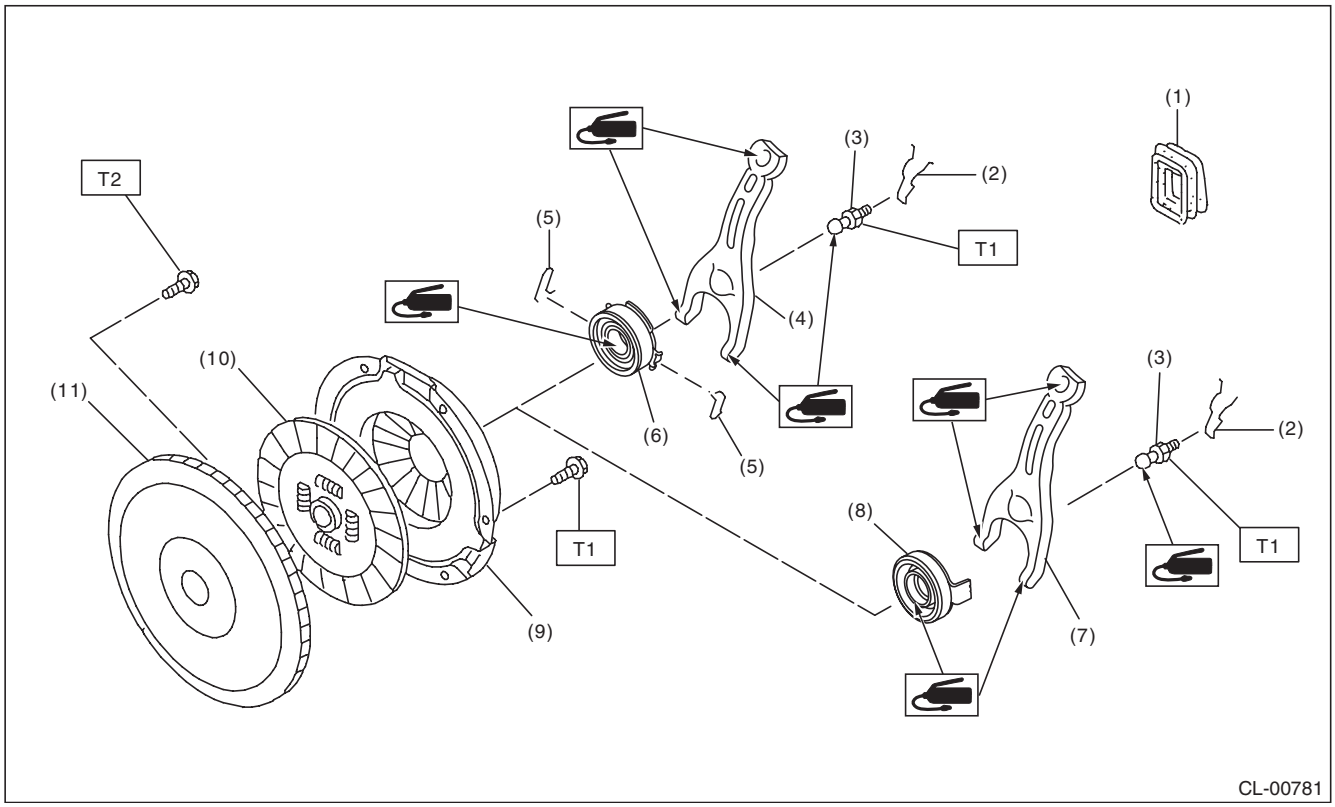

(1)	Dust cover	(6)	Release bearing (non-turbo model)	(11)	Flexible flywheel
(2)	Lever spring	(7)	Release lever (turbo model)		
(3)	Pivot	(8)	Release bearing (turbo model)	***Tightening torque:N·m (kgf-m, ft-lb)***	
(4)	Release lever (non-turbo model)	(9)	Clutch cover	***T1:***	***16 (1.6, 11.8)***
(5)	Clip (non-turbo model)	(10)	Clutch disc	***T2:***	***75 (7.6, 55.3)***

GETtheMANUALS.org

2. CLUTCH PIPE AND HOSE

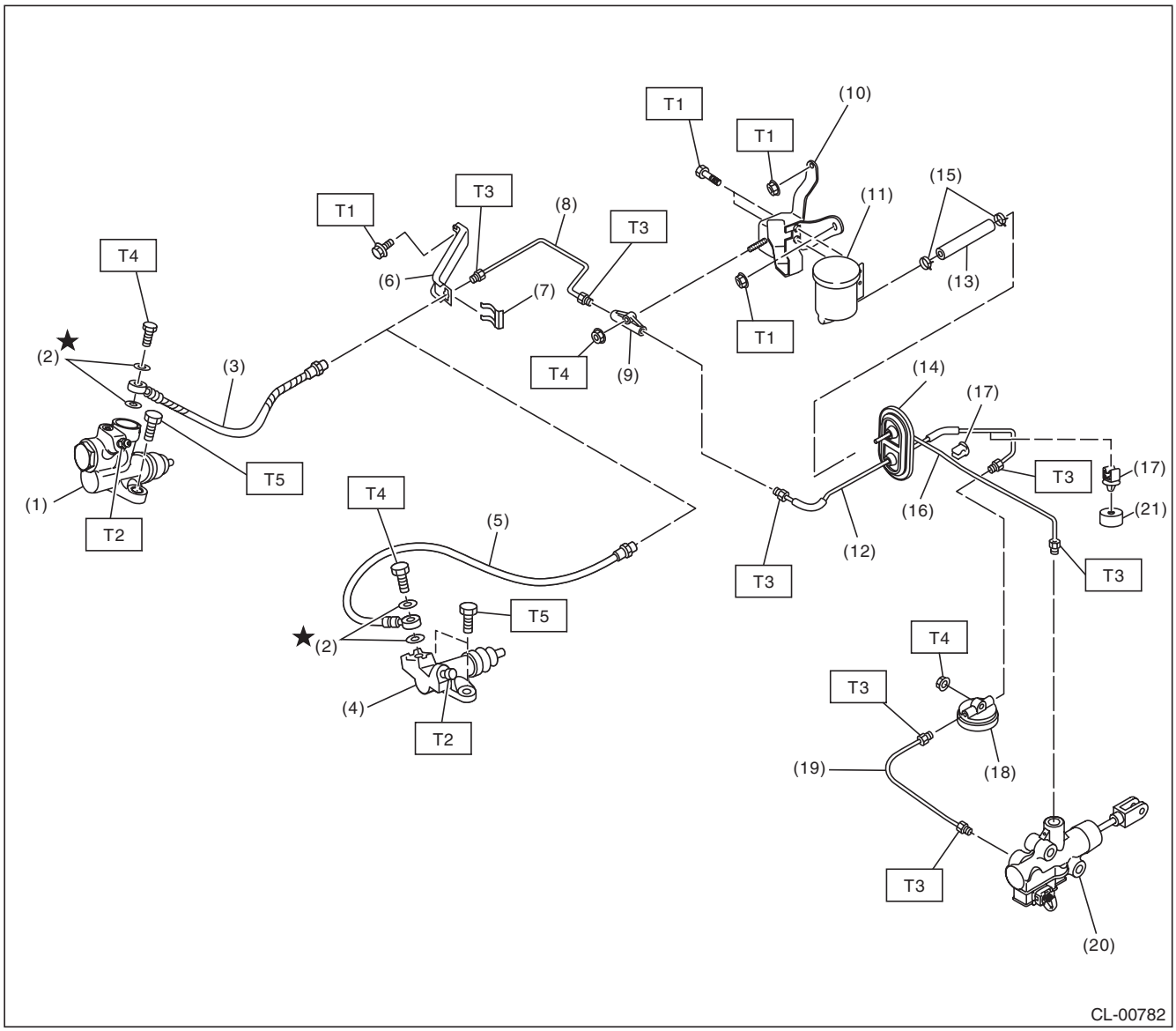

(1)	Operating cylinder (turbo model)	(11)	Reservoir tank	(21)	Mass damper
(2)	Washer	(12)	Clutch pipe		
(3)	Clutch hose (turbo model)	(13)	Reservoir tank hose		
(4)	Operating cylinder (non-turbo model)	(14)	Clutch pipe grommet		
(5)	Clutch hose (non-turbo model)	(15)	Clamp		
(6)	Clutch hose bracket	(16)	Clutch pipe		
(7)	Clamp	(17)	Clamp		
(8)	Clutch pipe	(18)	Clutch damper		
(9)	Connector	(19)	Clutch pipe		
(10)	Reservoir tank bracket	(20)	Master cylinder ASSY		

Tightening torque:N·m (kgf-m, ft-lb)

T1: 7.5 (0.8, 5.5)

T2: 7.8 (0.8, 5.8)

T3: 15 (1.5, 11.1)

T4: 18 (1.8, 13.3)

T5: 37 (3.8, 27.3)

GETtheMANUALS.org

3. MASTER CYLINDER

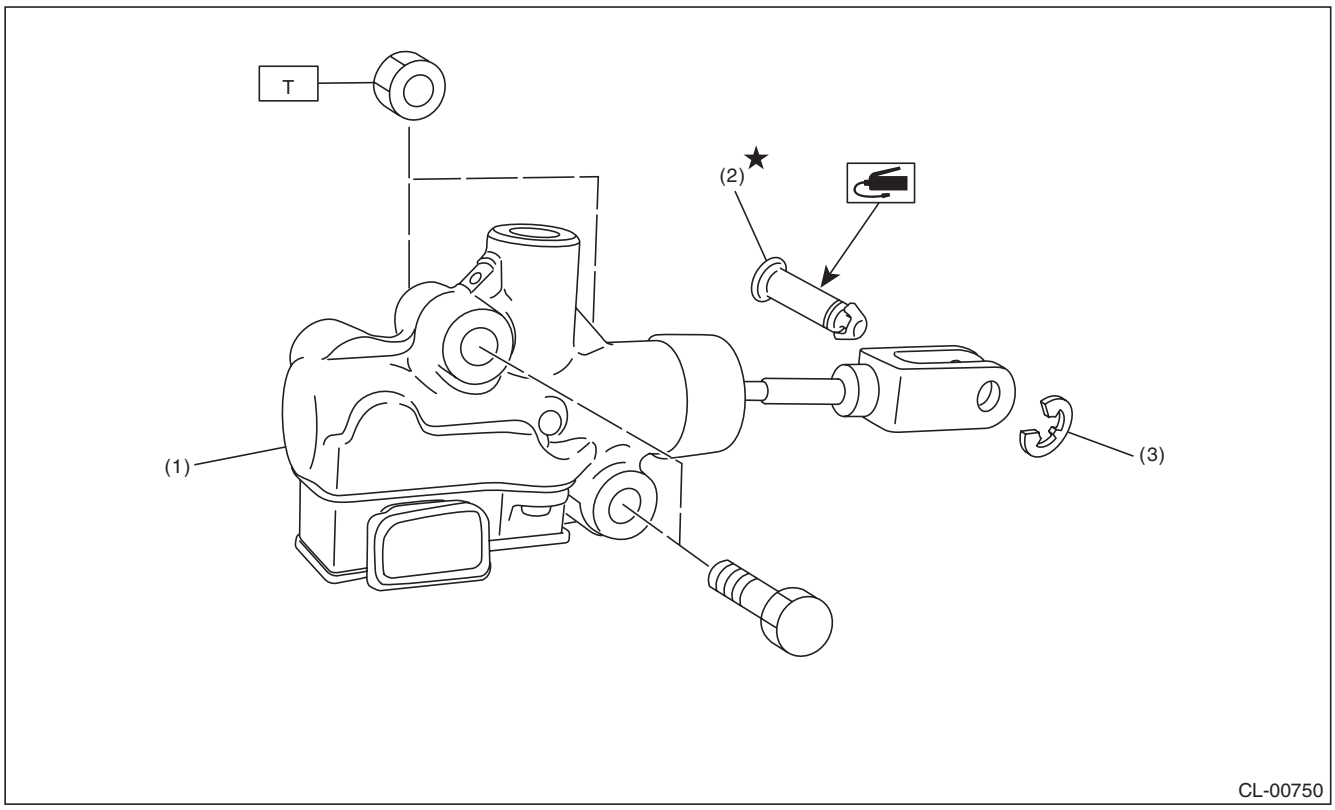

(1) Master cylinder ASSY
(2) Clevis pin
(3) Clip

Tightening torque:N·m (kgf-m, ft-lb)
T: 18 (1.8, 13.3)

GETtheMANUALS.org

4. OPERATING CYLINDER

- Non-turbo model

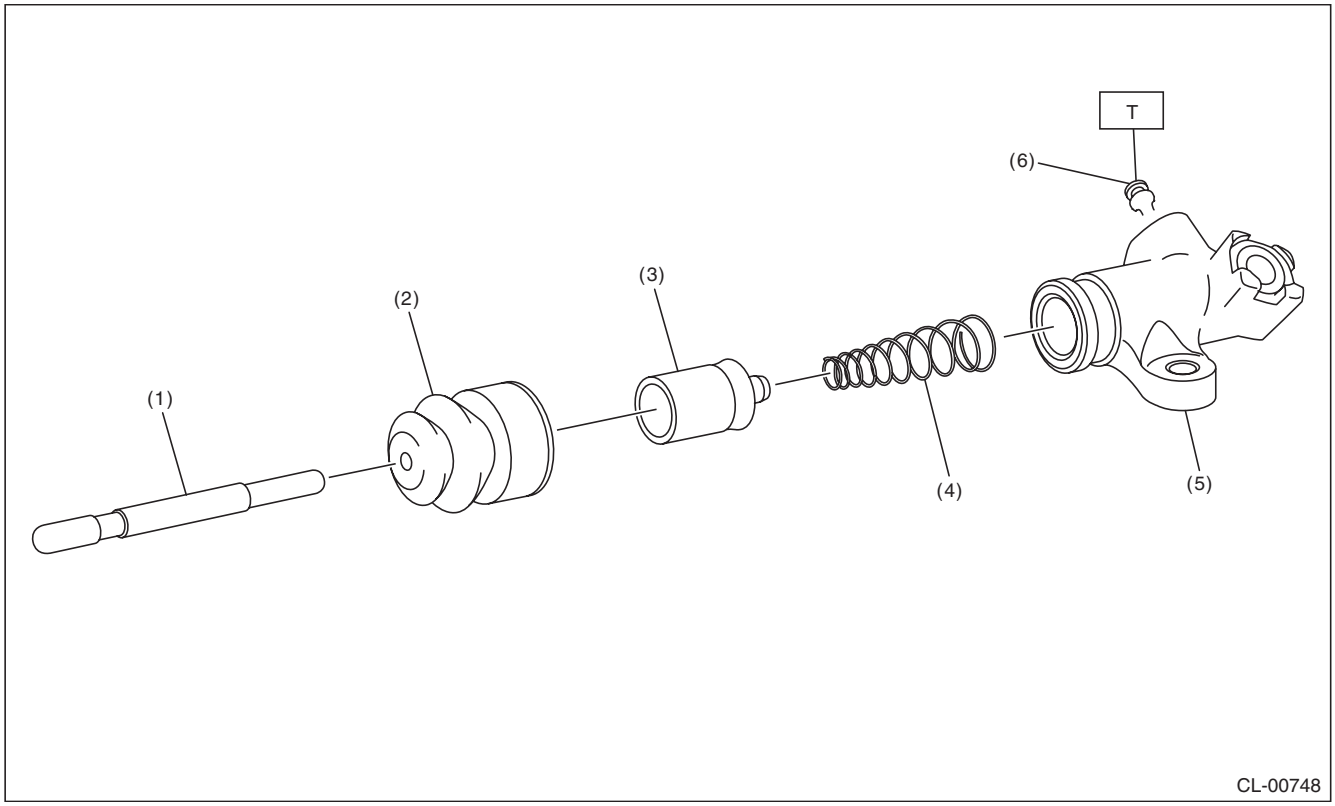

(1)	Push rod	(4)	Piston spring
(2)	Boot	(5)	Operating cylinder
(3)	Piston	(6)	Breather screw

Tightening torque:N·m (kgf-m, ft-lb)
T: 7.8 (0.8, 5.8)

GETtheMANUALS.org

- Turbo model

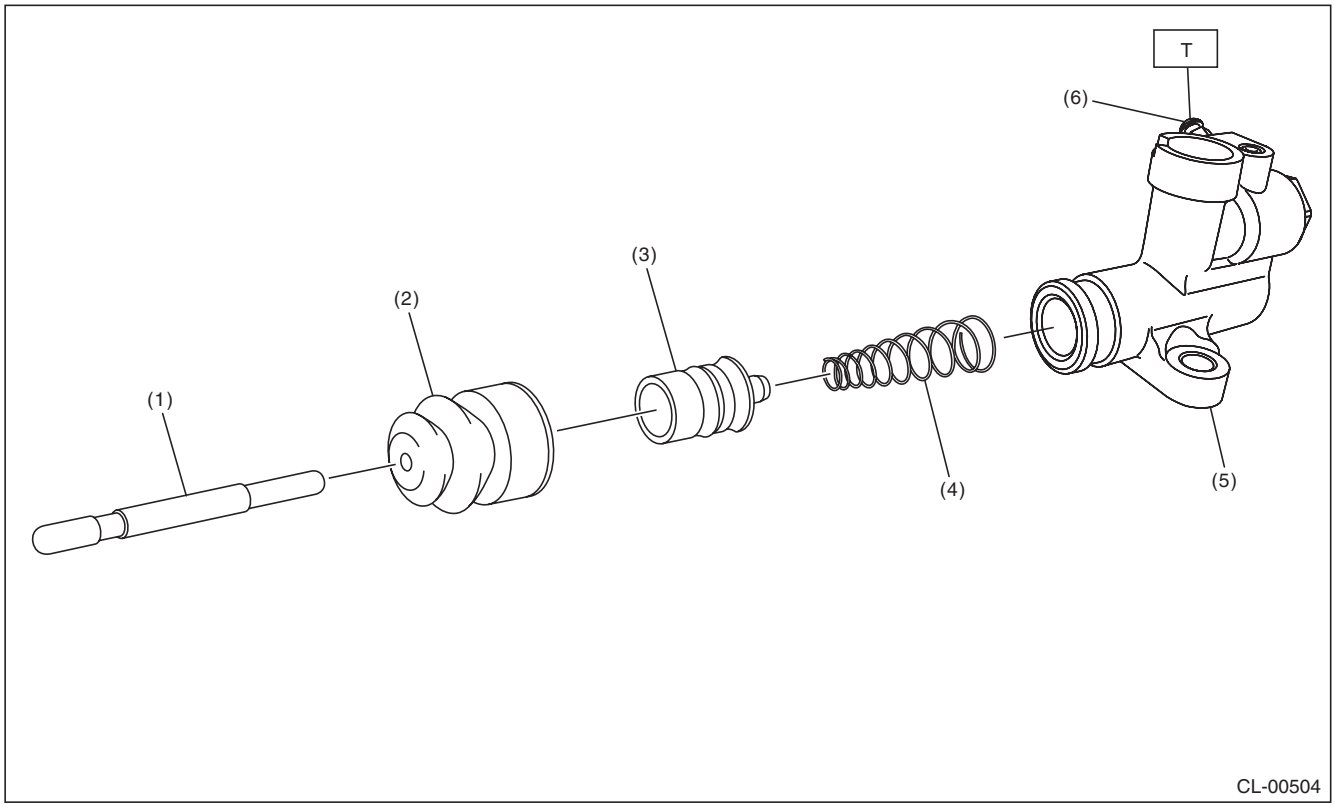

(1)	Push rod	(4)	Piston spring
(2)	Boot	(5)	Operating cylinder
(3)	Piston	(6)	Breather screw

Tightening torque:N·m (kgf-m, ft-lb)
T: 7.8 (0.8, 5.8)

GETtheMANUALS.org

5. CLUTCH PEDAL ASSEMBLY

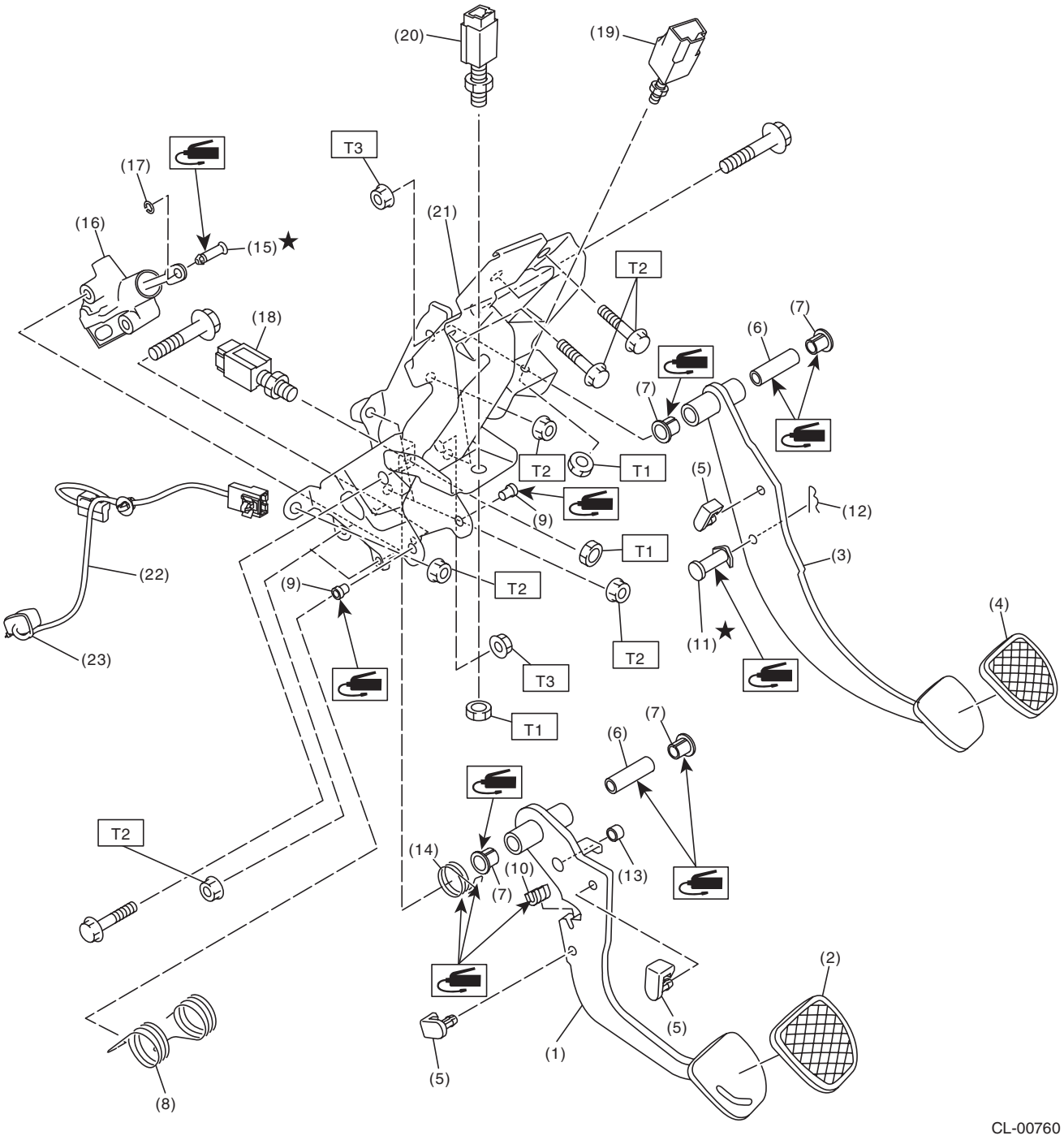

GETtheMANUALS.org

(1) Clutch pedal
(2) Clutch pedal pad
(3) Brake pedal
(4) Brake pedal pad
(5) Stopper
(6) Spacer
(7) Bushing
(8) Torsion spring
(9) Assist bushing
(10) Torsion spring bushing
(11) Clevis pin
(12) Snap pin
(13) Bushing A
(14) Assist spring (turbo model)
(15) Clevis pin
(16) Master cylinder ASSY
(17) Clip
(18) Clutch start switch
(19) Stop & brake switch
(20) Clutch switch
(21) Pedal bracket
(22) Sensor harness
(23) Band

Tightening torque:N·m (kgf-m, ft-lb)	
T1:	***8 (0.8, 5.9)***
T2:	***18 (1.8, 13.3)***
T3:	***30 (3.1, 22.1)***

GETtheMANUALS.org

C: CAUTION

- Wear appropriate work clothing, including a cap, protective goggles and protective shoes when performing any work.
- Remove contamination including dirt and corrosion before removal, installation or disassembly.
- Keep the disassembled parts in order and protect them from dust and dirt.
- Before removal, installation or disassembly, be sure to clarify the failure. Avoid unnecessary removal, installation, disassembly and replacement.
- Vehicle components are extremely hot after driving. Be wary of receiving burns from heated parts.
- Use SUBARU genuine fluid, grease etc. or equivalent. Do not mix fluid, grease, etc. of different grades or manufacturers.
- Be sure to tighten fasteners including bolts and nuts to the specified torque.
- Place shop jacks or rigid racks at the specified points.
- Apply grease onto sliding or revolving surfaces before installation.
- Before installing O-rings or snap rings, apply sufficient amount of fluid to avoid damage and deformation.
- Before securing a part in a vise, place cushioning material such as wood blocks, aluminum plate or cloth between the part and the vise.
- Keep fluids away from the vehicle body. If any fluid contacts the vehicle body, immediately flush the area with water.

D: PREPARATION TOOL

1. SPECIAL TOOL

ILLUSTRATION	TOOL NUMBER	DESCRIPTION	REMARKS
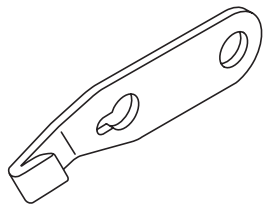 ST-498497100	498497100	CRANKSHAFT STOPPER	Used for stopping rotation of the flywheel.
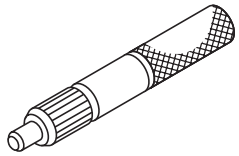 ST-499747100	499747100	CLUTCH DISC GUIDE	Used for installing the clutch disc to the flywheel.

2. GENERAL TOOL

TOOL NAME	REMARKS
Circuit tester	Used for measuring resistance, voltage and ampere.
Dial gauge	Used for measuring clutch disc run-out.
Depth gauge	Used for measuring clutch disc wear.

GETtheMANUALS.org

2. Clutch Disc and Cover

A: REMOVAL

1) Remove the transmission assembly from vehicle body. <Ref. to 6MT-25, REMOVAL, Manual Transmission Assembly.>
2) Attach the ST to the flywheel.
ST 499747100 CLUTCH DISC GUIDE

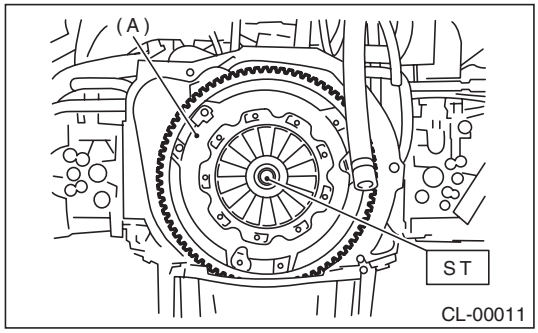

(A) Clutch cover

3) Remove the clutch cover and clutch disc.

NOTE:
- Take care not to allow oil to touch the clutch disc face.
- Do not disassemble the clutch cover or clutch disc.

B: INSTALLATION

1) Insert the ST into the clutch disc and attach to the flywheel by inserting the ST end into pilot bearing.

NOTE:
When installing the clutch disc, be careful to attach in the correct direction.
ST 499747100 CLUTCH DISC GUIDE

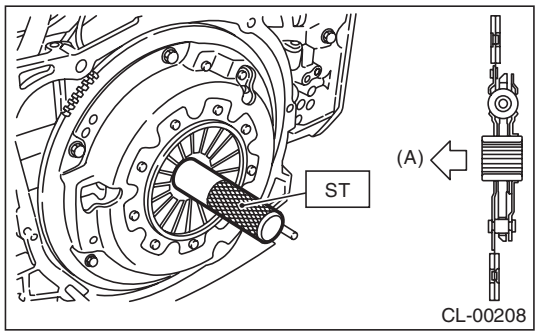

(A) Flywheel side

2) Install the clutch cover to the flywheel and tighten the bolts to the specified torque.

NOTE:
- When installing a clutch cover to the flywheel, position the clutch cover so that the spacing between the unbalance marks (paint mark) on the flywheel and clutch cover is 120° or more apart. (The unbalance mark indicates the direction of residual unbalance.)
- Note the front and rear of the clutch disc when installing.
- Temporarily tighten the bolts by hand. Each bolt should be tightened to the specified torque in a crisscross order.

Tightening torque:
16 N·m (1.6 kgf-m, 11.8 ft-lb)

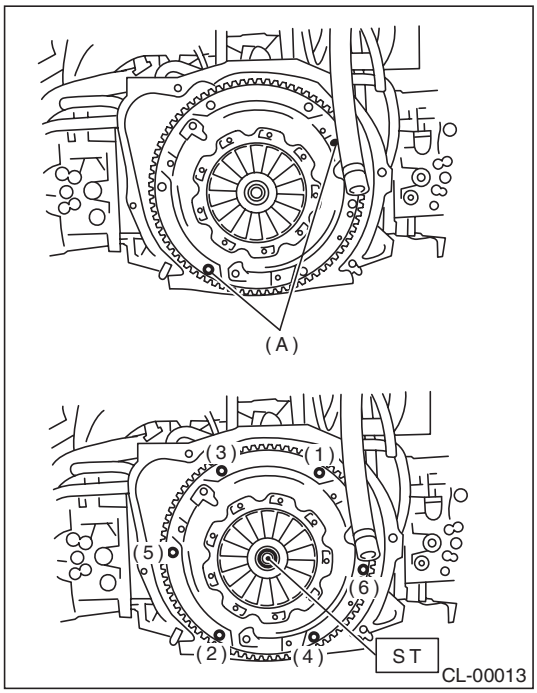

(A) Unbalance mark (paint)

3) Remove the ST.
4) Install the transmission assembly. <Ref. to 6MT-29, INSTALLATION, Manual Transmission Assembly.>
5) When the clutch disc has been replaced, perform the clutch sensor calibration mode. <Ref. to PB(diag)-20, CLUTCH SENSOR CALIBRATION MODE, OPERATION, Subaru Select Monitor.>

NOTE:
If necessary, perform the clutch meet position setting. <Ref. to PB(diag)-20, CLUTCH ENGAGEMENT POSITION SETTING, OPERATION, Subaru Select Monitor.>

GETtheMANUALS.org

C: INSPECTION

1. CLUTCH DISC

1) Facing wear
Measure the depth from the facing surface to the rivet head. Replace if the face is worn locally or worn down to less than the specified value.

Depth to rivet head:
Limit of sinking
0.3 mm (0.012 in)

NOTE:
Do not wash the clutch disc with any type of cleaning fluid.

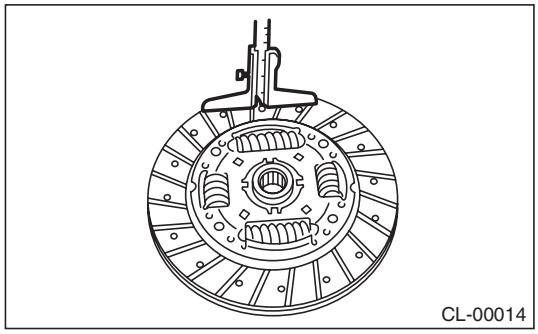

2) Hardened facing
Replace the clutch disc.
3) Oil soakage on facing
Replace the clutch disc and inspect the transmission front oil seal, transmission case mating surface, engine rear oil seal and other locations for oil leakage.

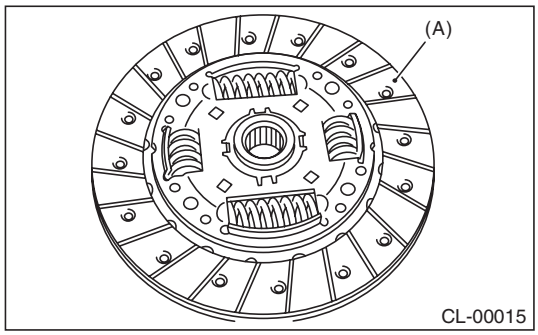

(A) Clutch facing

4) Deflection on facing
If deflection exceeds the specified value at the outer circumference of the facing, replace the clutch disc.

Limit for deflection:
0.7 mm (0.028 in) at R = 110 mm (4.33 in)
ST 499747100 CLUTCH DISC GUIDE

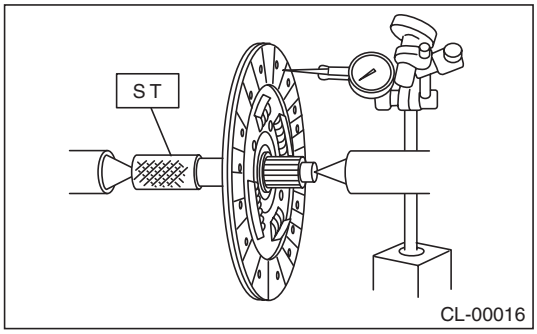

5) If there is spline wear, loose rivets, failed damper springs, etc., replace the clutch disc.

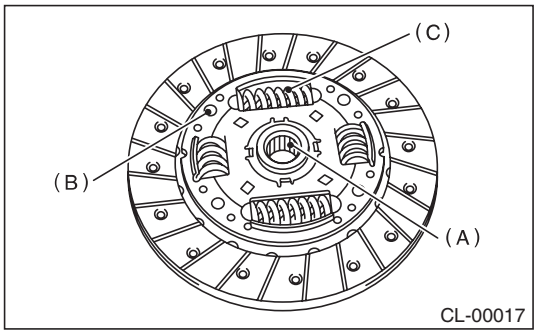

(A) Spline
(B) Rivet
(C) Damper spring

2. CLUTCH COVER

NOTE:
Visually check the following items without disassembling, and replace or repair if defective.
1) Loose thrust rivet
2) Damaged or worn bearing contact area at the center of diaphragm spring

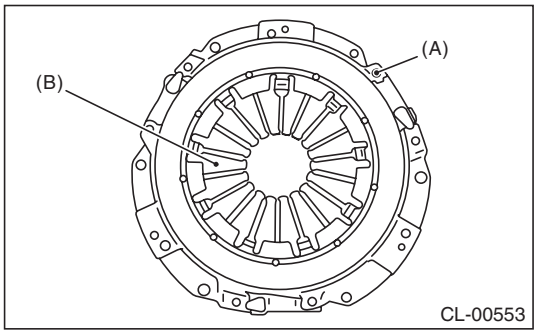

(A) Thrust rivet
(B) Diaphragm spring

GETtheMANUALS.org

3) Damaged and worn disc contact surface of the pressure plate
4) Loose strap plate installation area
5) Worn sliding area of diaphragm spring

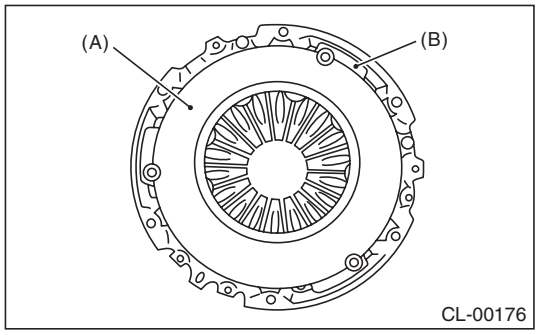

(A) Pressure plate
(B) Strap plate

GETtheMANUALS.org

3. Flywheel

A: REMOVAL

1) Remove the transmission assembly. <Ref. to 6MT-25, REMOVAL, Manual Transmission Assembly.>
2) Remove the clutch cover and clutch disc. <Ref. to CL-11, REMOVAL, Clutch Disc and Cover.>
3) Using the ST, remove the flywheel.
ST 498497100 CRANKSHAFT STOPPER

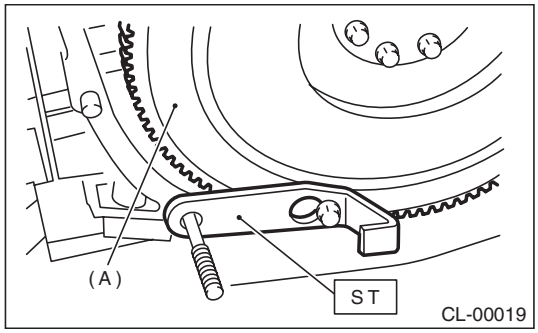

(A) Flywheel

B: INSTALLATION

1) Temporarily tighten the flywheel, and attach the ST.
ST 498497100 CRANKSHAFT STOPPER

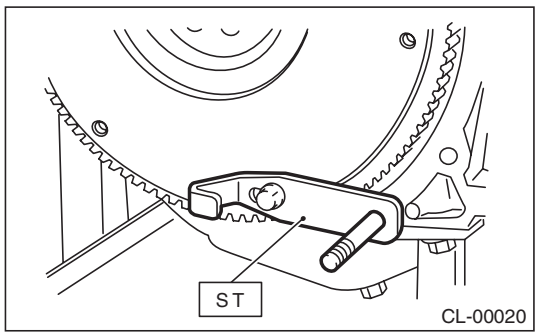

2) Tighten the flywheel mounting bolts to the specified torque.

NOTE:
Tighten the flywheel attachment bolts gradually. Each bolt should be tightened to the specified torque in crisscross order.

Tightening torque:
75 N·m (7.6 kgf-m, 55.3 ft-lb)

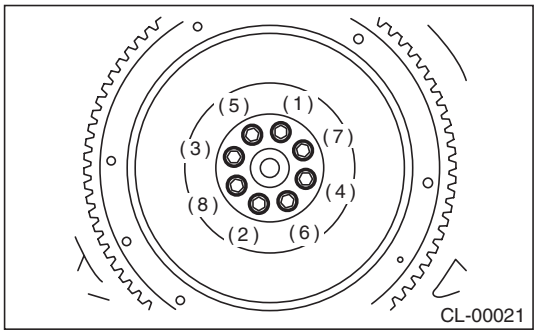

3) Install the clutch disc and cover. <Ref. to CL-11, INSTALLATION, Clutch Disc and Cover.>
4) Install the transmission assembly. <Ref. to 6MT-29, INSTALLATION, Manual Transmission Assembly.>

C: INSPECTION

CAUTION:
Because the center bearing is grease-sealed and is a non-lubrication type, do not wash with gasoline or solvents.
1) If there is damage or defectiveness in the facing sliding surface or ring gear, replace the flywheel.

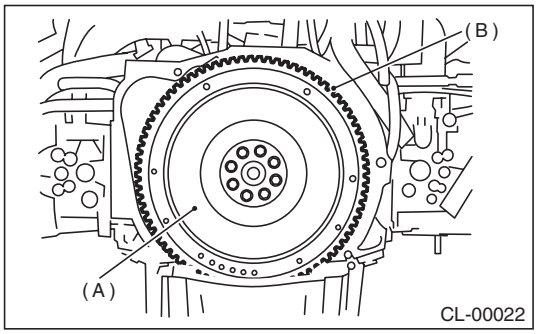

(A) Flywheel
(B) Ring gear

2) Smoothness of rotation
Rotate the ball bearing while applying pressure in the thrust direction.
3) If noise or excessive play is noted, replace the flywheel.

GETtheMANUALS.org

4. Release Bearing and Lever

A: REMOVAL

1) Remove the transmission assembly from vehicle body. <Ref. to 6MT-25, REMOVAL, Manual Transmission Assembly.>
2) Remove the two clips from the clutch release lever. (non-turbo model)

CAUTION:
Be careful not to deform the clips.

3) Remove the release bearing. (non-turbo model)
4) Remove the dust cover.

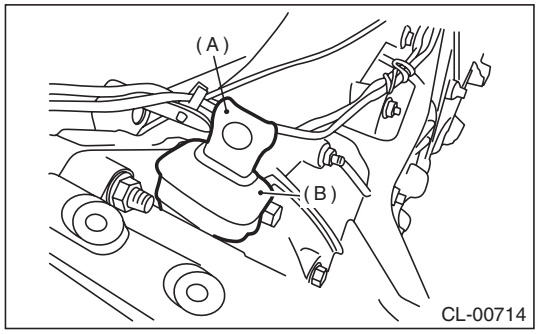

(A) Release lever
(B) Dust cover

5) Remove the lever spring from the pivot with a screwdriver by accessing it through the clutch housing release lever hole. Then remove the release lever. (non-turbo model)

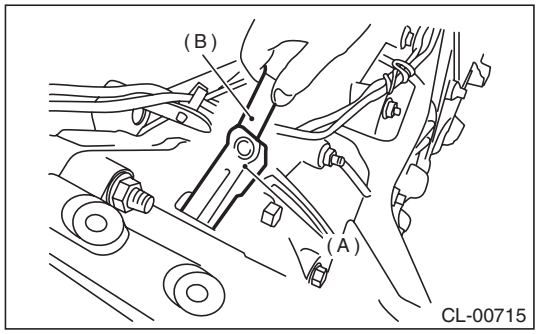

(A) Release lever
(B) Screwdriver

6) Remove the lever spring from the pivot with a screwdriver by accessing it through the clutch housing release lever hole. Then remove the release lever and release bearing as a unit. (turbo model)

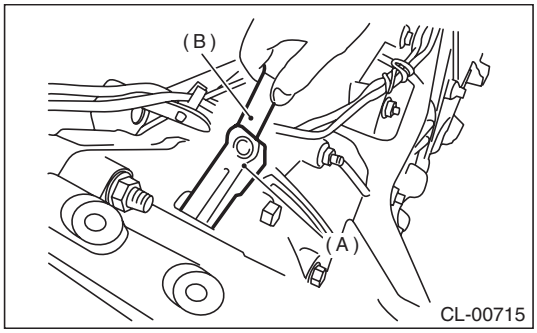

(A) Release lever
(B) Screwdriver

GETtheMANUALS.org

B: INSTALLATION

NOTE:
Apply the specified grease to lubricate to the following points before installation.
- Contact surface of lever and pivot
- Contact surface of lever and bearing
- Transmission main shaft spline

Grease
NICHIMOLY N-130 or equivalent

1) Temporarily assemble the release bearing to the release lever. (turbo model)
2) While pushing the release lever to the pivot and twisting it to both sides, fit the lever spring onto the raised portion of the pivot. (non-turbo model)

NOTE:
Observing from the main case hole, check that the lever spring is installed securely.

3) Install the release bearing by inserting the release lever into the clutch housing release lever hole. Then, fit the lever spring onto the raised portion of the pivot by pushing the release lever to the pivot and twisting it to both sides. (turbo model)
4) Install the release bearing and fasten it with two clips. (non-turbo model)
5) Install the dust cover.

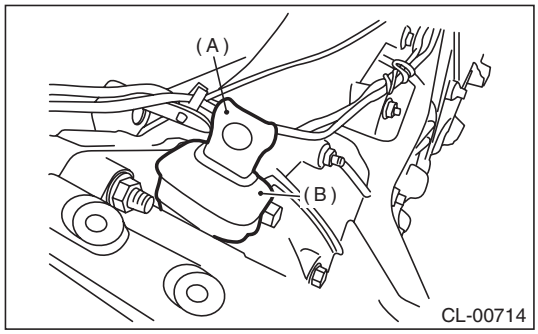

(A) Release lever
(B) Dust cover

6) Check the bearing for smooth movement by operating the release lever.
7) Apply grease to the contact point of the release lever and operating cylinder.

Grease
NICHIMOLY N-130 or equivalent

8) Install the transmission assembly. <Ref. to 6MT-29, INSTALLATION, Manual Transmission Assembly.>

C: INSPECTION

1. RELEASE BEARING

CAUTION:
Because this bearing is grease-sealed and is a non-lubrication type, do not wash with gasoline or solvents when servicing the clutch.

1) Check the bearing for smooth movement by applying force to the bearing in the radial direction.

Radial direction stroke:
1.6 mm (0.063 in)

- Non-turbo model

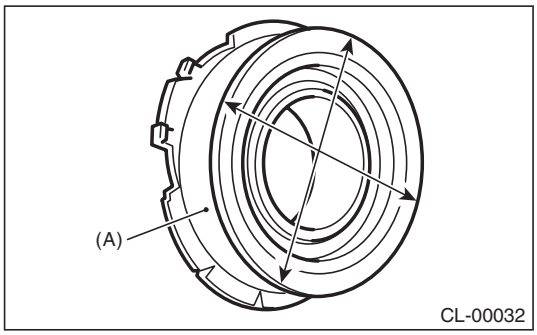

(A) Bearing case

- Turbo model

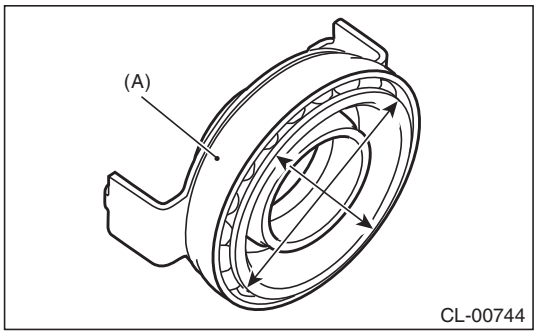

(A) Bearing case

2) While applying force to the bearing in the rotational direction, check the bearing for smooth rotation.

- Non-turbo model

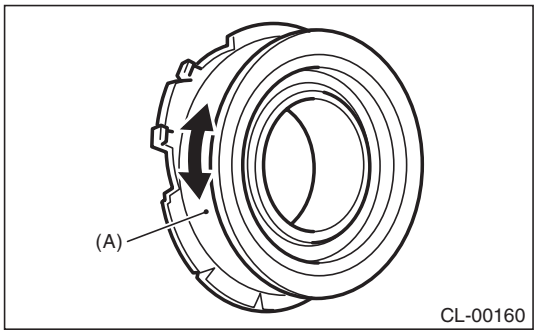

(A) Bearing case

GETtheMANUALS.org

- Turbo model

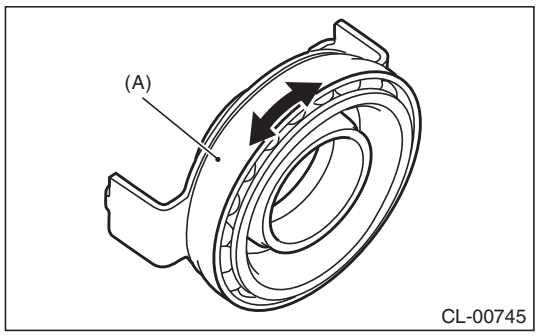

(A) Bearing case

3) Check for wear or damage at the bearing case surface in contact with the lever.

2. RELEASE LEVER

Check the pivot portion of the lever and the contact area with the release bearing case for wear.

- Non-turbo model

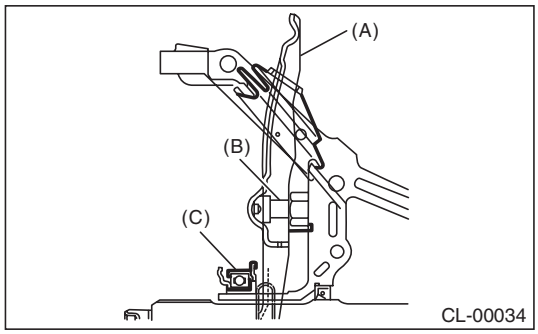

(A) Release lever
(B) Pivot
(C) Release bearing

- Turbo model

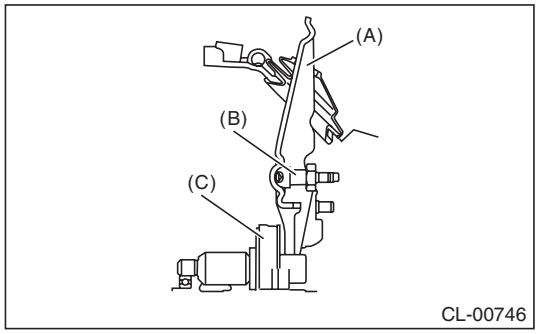

(A) Release lever
(B) Pivot
(C) Release bearing

GETtheMANUALS.org

5. Operating Cylinder

A: REMOVAL

NOTE:
The illustration below is suitable for every model. Perform the same procedures for the other models.
1) Remove the collector cover. (turbo model)
2) Remove the air intake boot assembly. (non-turbo model) <Ref. to IN(H4SO)-8, REMOVAL, Air Intake Boot.>
3) Remove the intercooler. (turbo model) <Ref. to IN(H4DOTC)-17, REMOVAL, Intercooler.>
4) Disconnect the clutch hose from the operating cylinder.

CAUTION:
- **Cover the hose joint to prevent the clutch fluid from flowing out.**
- **Do not loosen or remove the cap bolt at the rear end of operating cylinder. (turbo model)**

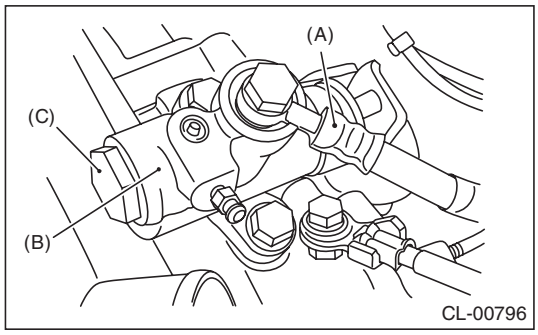

(A) Clutch hose
(B) Operating cylinder
(C) Cap bolt

5) Remove the operating cylinder from the transmission.

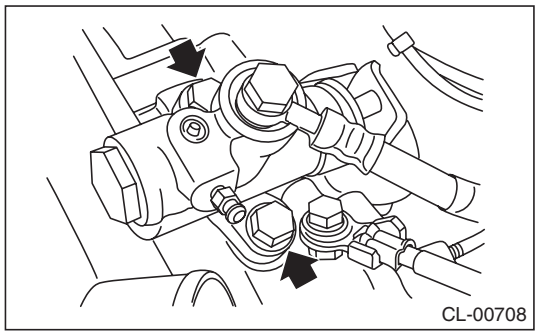

B: INSTALLATION

NOTE:
- The illustration below is suitable for every model. Perform the same procedures for the other models.
- Use a new gasket.
- Be sure to install the clutch hose with the mark side facing upward.
- Be careful not to twist the clutch hose during installation.
- Before installing the operating cylinder, apply grease to the contact point of the release lever and operating cylinder.

Grease
NICHIMOLY N-130 or equivalent

1) Install in the reverse order of removal.

Tightening torque:
T1: 18 N·m (1.8 kgf-m, 13.3 ft-lb)
T2: 37 N·m (3.8 kgf-m, 27.3 ft-lb)

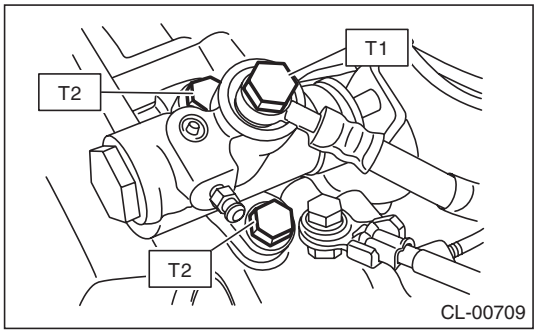

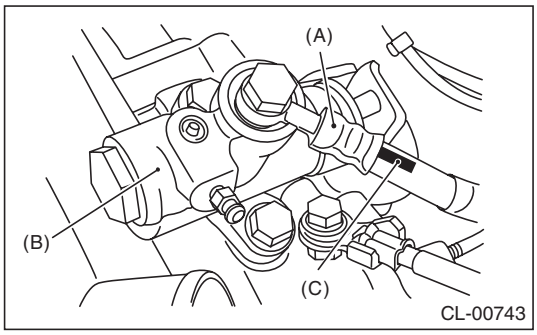

(A) Clutch hose
(B) Operating cylinder
(C) Mark

2) After bleeding air from the operating cylinder, ensure that the clutch operates properly. <Ref. to CL-25, PROCEDURE, Clutch Fluid Air Bleeding.>
3) When the operating cylinder has been replaced or removed, perform the clutch sensor calibration mode. <Ref. to PB(diag)-20, CLUTCH SENSOR CALIBRATION MODE, OPERATION, Subaru Select Monitor.>

NOTE:
If necessary, perform the clutch meet position setting. <Ref. to PB(diag)-20, CLUTCH ENGAGEMENT POSITION SETTING, OPERATION, Subaru Select Monitor.>

GETtheMANUALS.org

C: DISASSEMBLY

NOTE:
The illustration shows a representing model. Perform the same procedures for the other models.
1) Remove the boot and push rod.

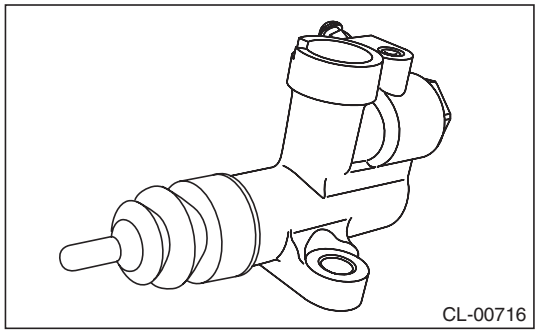

2) Apply compressed air through clutch hose attachment hole.

NOTE:
Face the piston hole down and place a piece of wood underneath to prevent the piston from popping out.
3) Separate the piston and piston spring.

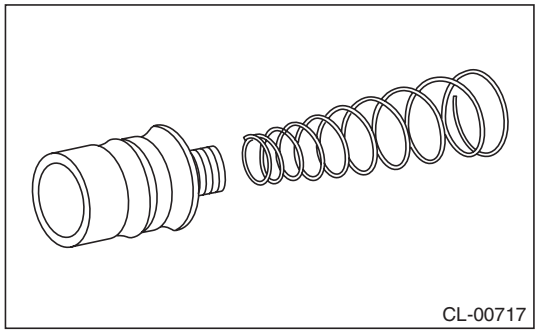

D: ASSEMBLY

NOTE:
- The illustration shows a representing model. Perform the same procedures for the other models.
- During assembly, apply hydraulic oil to all parts.

Recommended clutch fluid:
New FMVSS No. 116 DOT3

1) Install the piston spring onto the piston.

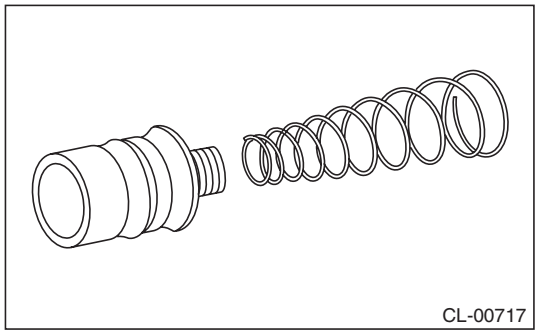

2) Insert piston to the operating cylinder.
3) Install push rod to the boot.
4) Install boot and push rod to the operating cylinder.

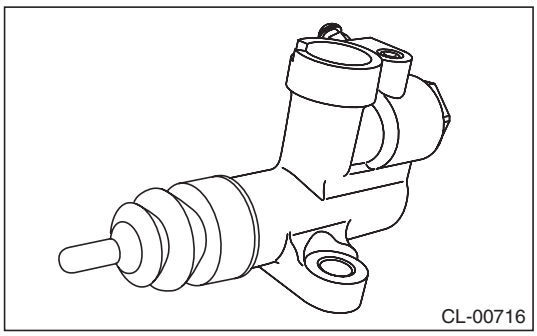

E: INSPECTION

1) Check that the operating cylinder is not damaged. Replace the operating cylinder if it is damaged.
2) Check the clutch fluid leakage on the operating cylinder or the boot for damage. Replace the operating cylinder if clutch fluid leaks or boot damages are noted.

GETtheMANUALS.org

6. Master Cylinder

A: REMOVAL

1) Disconnect the ground cable from battery.
2) Remove the collector cover. (turbo model)
3) Thoroughly drain the clutch fluid from the reservoir tank.
4) Remove the instrument panel lower cover. <Ref. to EI-64, REMOVAL, Instrument Panel Lower Cover.>
5) Remove the pedal assembly. <Ref. to CL-26, REMOVAL, Clutch Pedal.>
6) Remove the clip and clevis pin, and then separate the push rod of the master cylinder from clutch pedal.

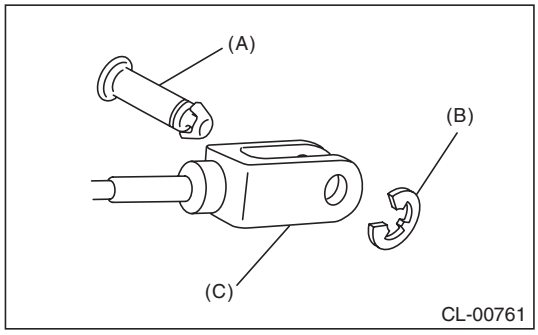

(A) Clevis pin
(B) Clip
(C) Push rod

7) Disconnect the clutch stroke sensor connector.
8) Remove the clutch pipe from the master cylinder.

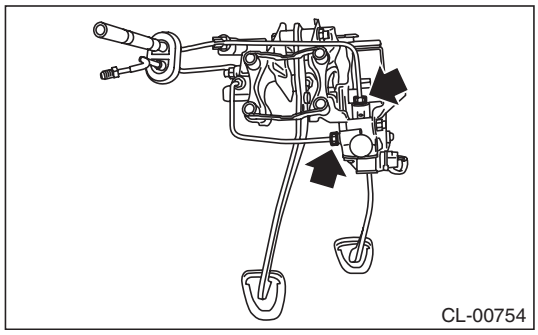

9) Remove the master cylinder from the pedal bracket.

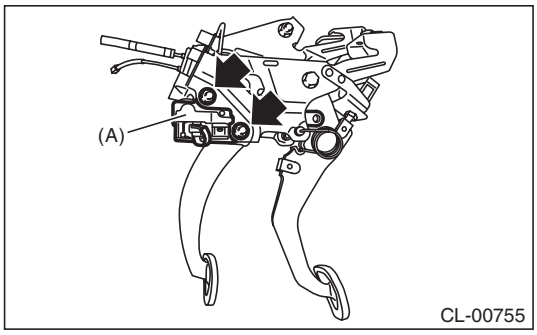

(A) Master cylinder

B: INSTALLATION

1) Install the master cylinder to the pedal assembly.

Tightening torque:
18 N·m (1.8 kgf-m, 13.3 ft-lb)

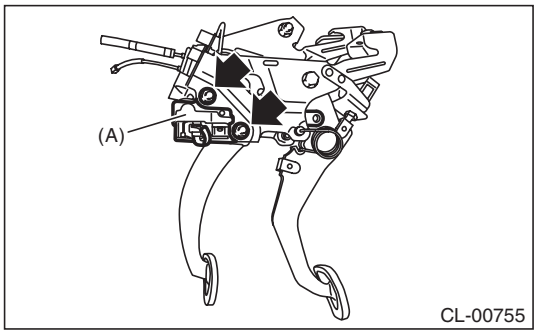

(A) Master cylinder

2) Connect the clutch pipes to the master cylinder.

Tightening torque:
15 N·m (1.5 kgf-m, 11.1 ft-lb)

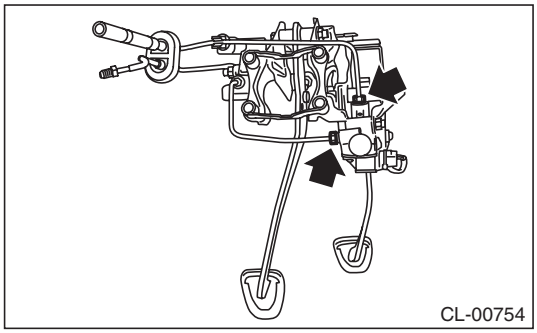

3) Connect the clutch stroke sensor connector.

GETtheMANUALS.org

4) Connect the push rod of the master cylinder to the clutch pedal, and install the clevis pin and clip.

CAUTION:
Always use a new clevis pin.

NOTE:
Apply grease to the clevis pin.

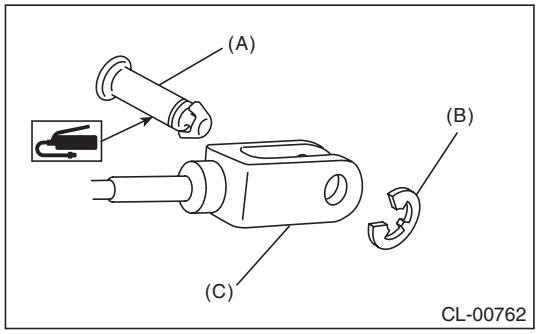

(A) Clevis pin
(B) Clip
(C) Push rod

5) Install the pedal assembly. <Ref. to CL-26, INSTALLATION, Clutch Pedal.>
6) Install the instrument panel lower cover. <Ref. to EI-65, INSTALLATION, Instrument Panel Lower Cover.>
7) Connect the battery ground terminal.
8) Fill the recommended clutch fluid. <Ref. to CL-24, Clutch Fluid.>
9) After bleeding air from the clutch system, ensure that the clutch operates properly. <Ref. to CL-25, Clutch Fluid Air Bleeding.>
10) Install the collector cover. (turbo model)
11) When the clutch master cylinder assembly has been replaced, perform the clutch sensor calibration mode. <Ref. to PB(diag)-20, CLUTCH SENSOR CALIBRATION MODE, OPERATION, Subaru Select Monitor.>

NOTE:
If necessary, perform the clutch meet position setting. <Ref. to PB(diag)-20, CLUTCH ENGAGEMENT POSITION SETTING, OPERATION, Subaru Select Monitor.>

C: INSPECTION

If any damage, deformation, wear, swelling, rust or other faults are found on the master cylinder assembly, reservoir tank, clutch damper, clutch pipe and clutch hose, replace the faulty part.

GETtheMANUALS.org

7. Clutch Pipe and Hose

A: REMOVAL

1) Disconnect the ground cable from battery.
2) Remove the collector cover. (turbo model)
3) Remove the air intake boot assembly. (non-turbo model) <Ref. to IN(H4SO)-8, REMOVAL, Air Intake Boot.>
4) Remove the intercooler. (turbo model) <Ref. to IN(H4DOTC)-17, REMOVAL, Intercooler.>
5) Thoroughly drain the clutch fluid from the reservoir tank.
6) Disconnect the clutch pipe from the clutch hose and connector. Disconnect the reservoir tank hose from the reservoir tank.

CAUTION:
Be careful not to spill the clutch fluid. Clutch fluid spilled on the vehicle body will harm the paint surface; wash it off with water and wipe clean quickly if spilled.

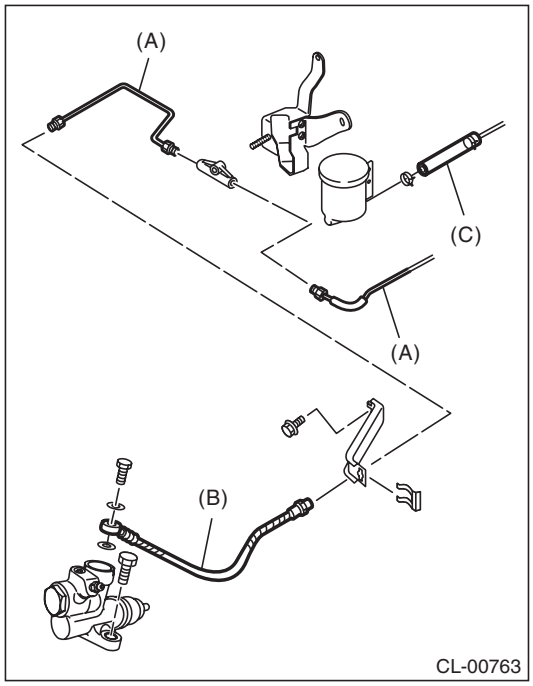

(A) Clutch pipe
(B) Clutch hose
(C) Reservoir tank hose

7) Pull out the clamp, then remove the clutch hose from the clutch bracket.

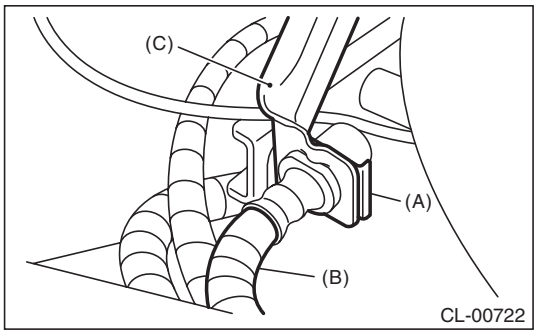

(A) Clamp
(B) Clutch hose
(C) Clutch bracket

8) Disconnect the clutch hose from operating cylinder.
9) Remove the clutch bracket.
10) Remove the instrument panel lower cover. <Ref. to EI-64, REMOVAL, Instrument Panel Lower Cover.>
11) Remove the pedal assembly. <Ref. to CL-26, REMOVAL, Clutch Pedal.>
12) Remove the clutch pipe from the reservoir tank hose, mass damper, clutch damper, master cylinder and clutch pipe grommet.

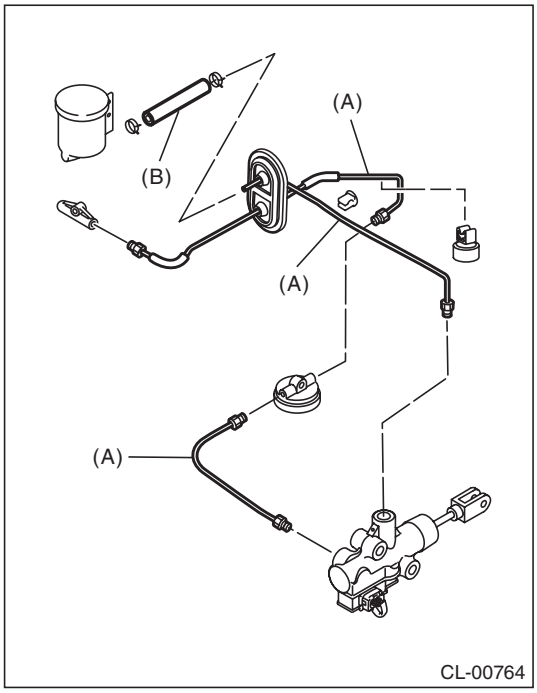

(A) Clutch pipe
(B) Reservoir tank hose

GETtheMANUALS.org

B: INSTALLATION

Install in the reverse order of removal.

NOTE:
After bleeding air from the clutch fluid, ensure that the clutch operates properly. <Ref. to CL-25, Clutch Fluid Air Bleeding.>

Tightening torque:
T: 15 N·m (1.5 kgf-m, 11.1 ft-lb)

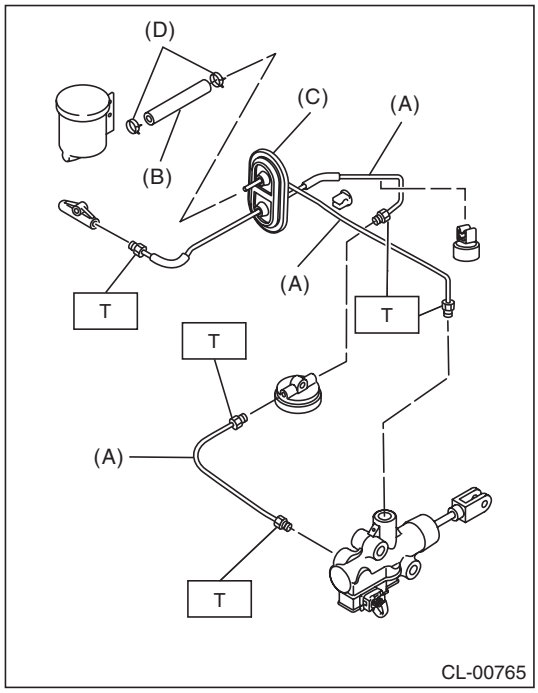

(A) Clutch pipe
(B) Reservoir tank hose
(C) Clutch pipe grommet
(D) Clamp

Tightening torque:
T1: 7.5 N·m (0.8 kgf-m, 5.5 ft-lb)
T2: 15 N·m (1.5 kgf-m, 11.1 ft-lb)
T3: 18 N·m (1.8 kgf-m, 13.3 ft-lb)

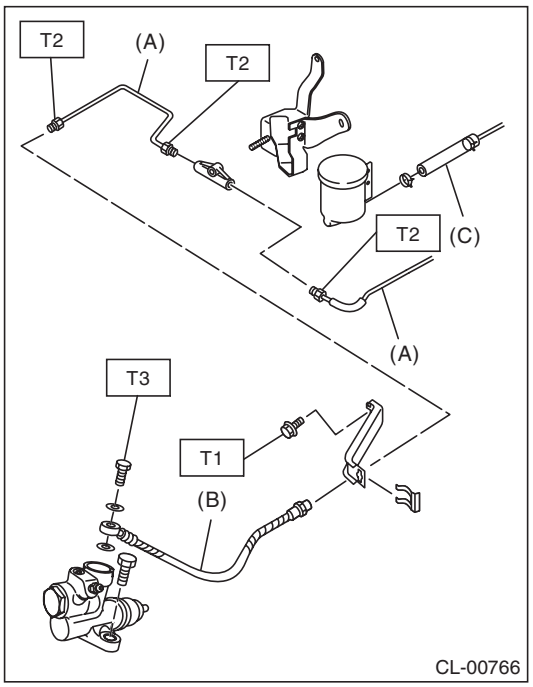

(A) Clutch pipe
(B) Clutch hose
(C) Reservoir tank hose

C: INSPECTION

Check the clutch pipe, reservoir tank hose and clutch hose for crack, breaks or damage. Check the joint for clutch fluid leakage. If crack, breakage, damage or leakage is found, repair or replace the faulty clutch pipe, reservoir tank hose or clutch hose.

GETtheMANUALS.org

8. Clutch Fluid

A: INSPECTION

1) Park the vehicle on a level surface.
2) Check the clutch fluid level using the scale on the outside of the reservoir tank. If the clutch fluid level is below “MIN”, fill the clutch fluid up to “MAX” level, and make sure that there is no leakage.

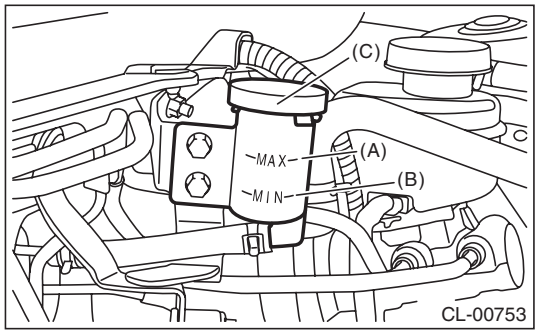

(A) MAX. level
(B) MIN. level
(C) Reservoir tank

B: REPLACEMENT

CAUTION:
- **Use new FMVSS No. 116 DOT3.**
- **Cover the air breather with cloth to prevent clutch fluid from being splashed on surrounding parts when loosening the breather.**
- **Avoid mixing clutch fluid of different brands to prevent fluid performance from degrading.**
- **Be careful not to allow dirt or dust to enter the reservoir tank.**

NOTE:
- During bleeding operation, keep the clutch reservoir tank filled with clutch fluid to prevent entry of air.
- Clutch pedal must be operated very slowly.
- Bleed air from the oil line with help of a co-worker.
- The amount of clutch fluid required is approximately 70 mℓ (2.4 US fl oz, 2.5 Imp fl oz) for total clutch system.

1) Remove the collector cover. (turbo model)
2) Remove the air intake boot assembly. (non-turbo model) <Ref. to IN(H4SO)-8, REMOVAL, Air Intake Boot.>
3) Remove the intercooler. (turbo model) <Ref. to IN(H4DOTC)-17, REMOVAL, Intercooler.>
4) Thoroughly drain the clutch fluid from the reservoir tank.
5) Refill the reservoir tank with recommended clutch fluid.

Recommended clutch fluid:
New FMVSS No. 116 DOT3

6) Bleed air from the clutch fluid. <Ref. to CL-25, Clutch Fluid Air Bleeding.>
7) Install the air intake boot assembly. (non-turbo model) <Ref. to IN(H4SO)-8, INSTALLATION, Air Intake Boot.>
8) Install the intercooler. (turbo model) <Ref. to IN(H4DOTC)-18, INSTALLATION, Intercooler.>
9) Install the collector cover. (turbo model)

GETtheMANUALS.org

9. Clutch Fluid Air Bleeding

A: PROCEDURE

NOTE:
- The illustration below is suitable for every model. Perform the same procedures for the other models.
- Bleed air from the oil line with help of a co-worker.

1) Remove the collector cover.
2) Remove the air intake boot assembly. (non-turbo model) <Ref. to IN(H4SO)-8, REMOVAL, Air Intake Boot.>
3) Remove the intercooler. (turbo model) <Ref. to IN(H4DOTC)-17, REMOVAL, Intercooler.>
4) Fit one end of a vinyl tube into the air breather of the operating cylinder, and put the other end into a clutch fluid container.

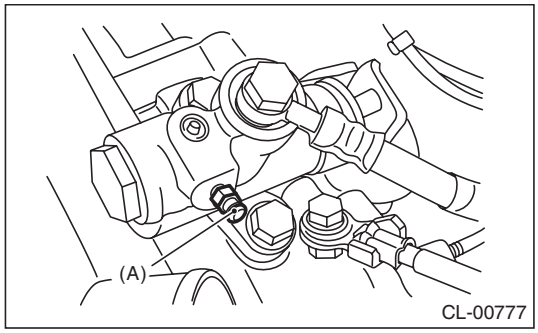

(A) Air breather

5) Slowly depress the clutch pedal several times and keep it depressed. Open the air breather to discharge air together with the clutch fluid. Release the air breather for 1 or 2 seconds. Next, close the air breather, and slowly release the clutch pedal.

CAUTION:
Cover the air breather with cloth to prevent clutch fluid from being splashed on surrounding parts when loosening the breather.

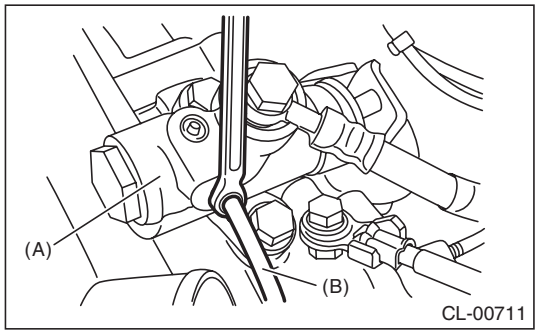

(A) Operating cylinder
(B) Vinyl tube

6) Repeat procedure 5), until there are no more air bubbles appearing from the air breather.

7) Tighten the air breather.

Tightening torque:
T: 7.8 N·m (0.8 kgf-m, 5.8 ft-lb)

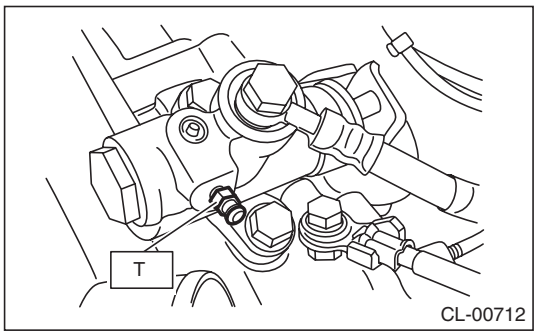

8) After stepping on the clutch pedal, make sure that there are no leaks evident in the entire clutch system.
9) After bleeding the air from clutch system, ensure that the clutch operates properly.
10) Install the air intake boot assembly. (non-turbo model) <Ref. to IN(H4SO)-8, INSTALLATION, Air Intake Boot.>
11) Install the intercooler. (turbo model) <Ref. to IN(H4DOTC)-18, INSTALLATION, Intercooler.>
12) Install the collector cover. (turbo model)

GETtheMANUALS.org

10. Clutch Pedal

A: REMOVAL

1) Disconnect the ground cable from battery.
2) Remove the collector cover. (turbo model)
3) Remove the air intake boot assembly. (non-turbo model) <Ref. to IN(H4SO)-8, INSTALLATION, Air Intake Boot.>
4) Remove the intercooler. (turbo model) <Ref. to IN(H4DOTC)-17, REMOVAL, Intercooler.>
5) Drain the clutch fluid from the reservoir tank.
6) Disconnect the clutch pipe from the connector.

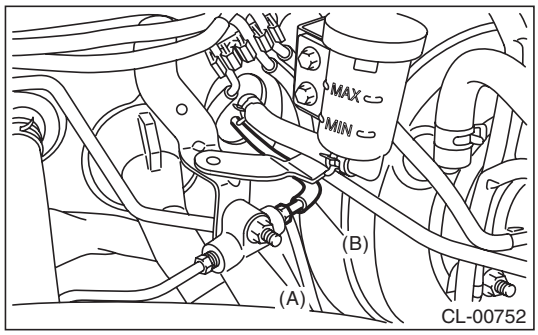

(A) Connector
(B) Clutch pipe

7) Disconnect the reservoir tank hose from the reservoir tank.

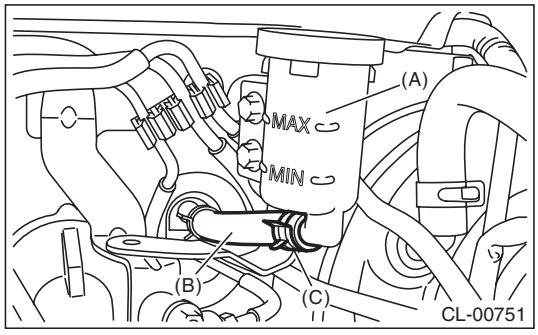

(A) Reservoir tank
(B) Reservoir tank hose
(C) Clamp

8) Remove the instrument panel lower cover. <Ref. to EI-64, REMOVAL, Instrument Panel Lower Cover.>
9) Remove the body integrated unit. <Ref. to SL-71, REMOVAL, Body Integrated Unit.>
10) Disconnect the connector from clutch switch.
11) Disconnect the connector from the brake switch.
12) Remove the snap pin and clevis pin connecting the operating rod and brake pedal.
13) Remove the pedal assembly.

NOTE:
Place vinyl, etc. in order not to drop the clutch fluid to the floor carpet.

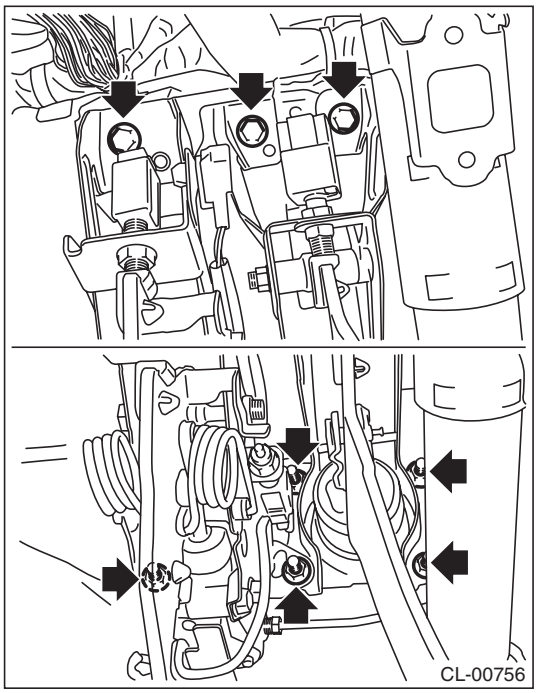

B: INSTALLATION

1) Install in the reverse order of removal.

CAUTION:
Always use a new clevis pin.

Tightening torque:
T: 18 N·m (1.8 kgf-m, 13.3 ft-lb)

2) Fill the recommended clutch fluid. <Ref. to CL-24, Clutch Fluid.>
3) Bleed air from the clutch system. <Ref. to CL-25, PROCEDURE, Clutch Fluid Air Bleeding.>
4) Adjust the clutch pedal. <Ref. to CL-29, ADJUSTMENT, Clutch Pedal.>
5) When the clutch pedal has been replaced, perform the clutch sensor calibration mode. <Ref. to PB(diag)-20, CLUTCH SENSOR CALIBRATION MODE, OPERATION, Subaru Select Monitor.>

NOTE:
If necessary, perform the clutch meet position setting. <Ref. to PB(diag)-20, CLUTCH ENGAGEMENT POSITION SETTING, OPERATION, Subaru Select Monitor.>

6) Install the collector cover.

GETtheMANUALS.org

C: DISASSEMBLY

1) Disconnect the clutch pipe from the master cylinder.

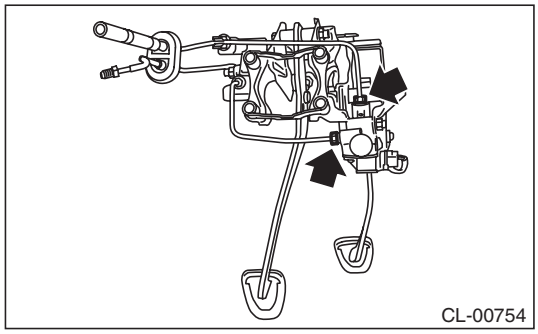

2) Remove the clutch damper mounting nut from the pedal assembly, and disconnect the clutch pipe from the clamp.

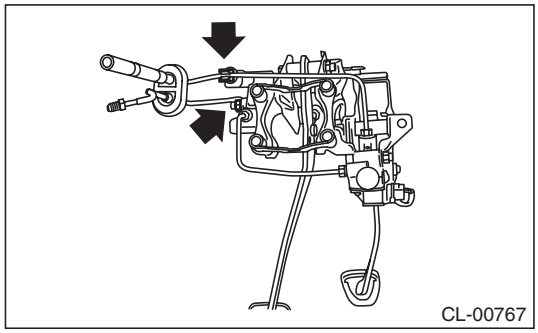

3) Remove the clutch switches.
4) Remove the clip and pull out the clevis pin.

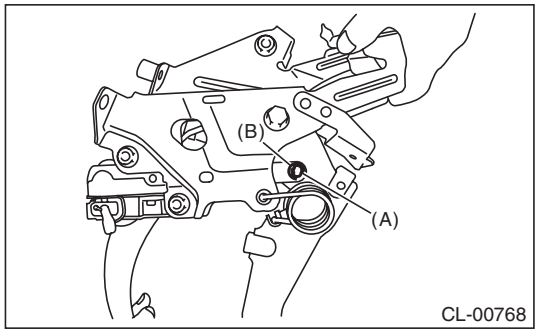

(A) Clevis pin
(B) Clip

5) Disconnect the connector from the clutch stroke sensor, and then remove the sensor harness.

6) Remove the master cylinder from the pedal assembly.

NOTE:
Secure the push rod with a tape, etc. to prevent it from falling off.

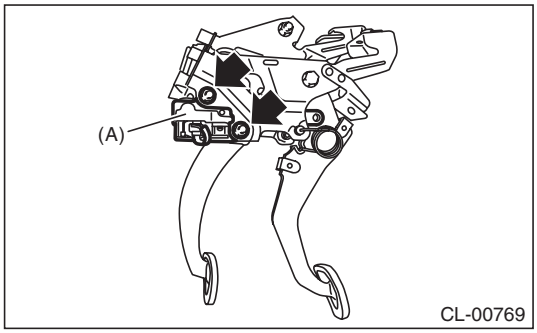

(A) Master cylinder

7) Remove the torsion spring and assist bushing from the pedal assembly.

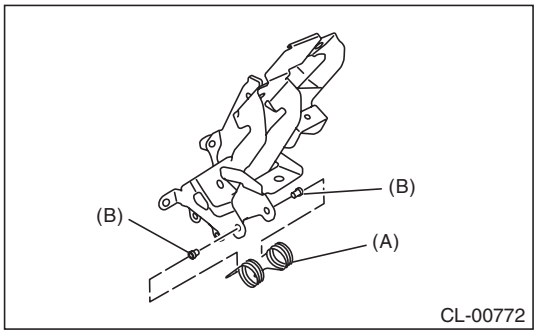

(A) Torsion spring
(B) Assist bushing

8) Remove the clutch pedal from the pedal bracket.

NOTE:
Before removing the clutch pedal mounting bolt, remove the hook of the assist spring from the pedal bracket. (turbo model)

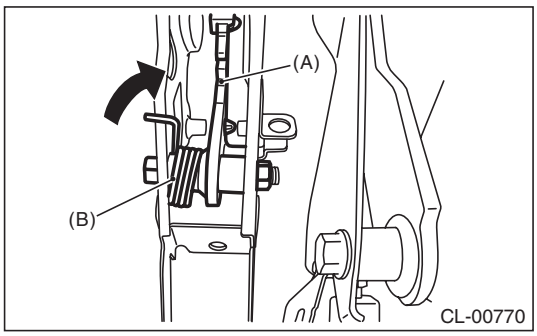

(A) Clutch pedal
(B) Assist spring (turbo model)

GETtheMANUALS.org

9) Remove the assist spring (turbo model), bushing, spacer, bushing A, stopper, torsion spring bushing and clutch pedal pad from the clutch pedal.

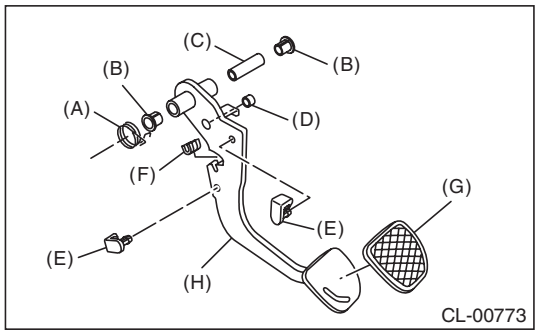

(A) Assist spring (turbo model)
(B) Bushing
(C) Spacer
(D) Bushing A
(E) Stopper
(F) Torsion spring bushing
(G) Clutch pedal pad
(H) Clutch pedal

D: ASSEMBLY

1) Clean the holes in the sliding surface between the clutch pedal and pedal bushing, and apply grease.
2) Attach the pedal pad, stopper, assist spring (turbo model), bushing A, torsion spring bushing, spacer and bushing to the clutch pedal.

NOTE:
Before installing the spacer, clean the inside of the pedal bushings and apply grease.
3) Attach the clutch pedal to the pedal bracket.

NOTE:
• Before installing the assist spring, apply grease to the coil part of the assist spring. (turbo model)
• Hang hook of the assist spring on the pedal bracket. (turbo model)

Tightening torque:
T: 30 N·m (3.1 kgf-m, 22.1 ft-lb)

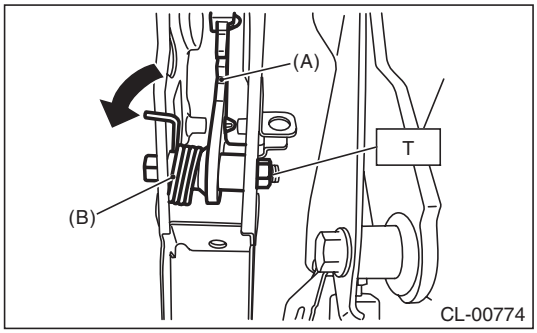

(A) Clutch pedal
(B) Assist spring (turbo model)

4) Install the assist bushing and torsion spring to the pedal assembly.

NOTE:
Before installing the torsion spring, apply grease to the assist bushing and torsion spring bushing.
5) Install the master cylinder to the pedal assembly.

NOTE:
Secure the push rod with a tape, etc. to prevent it from falling off.

Tightening torque:
T: 18 N·m (1.8 kgf-m, 13.3 ft-lb)

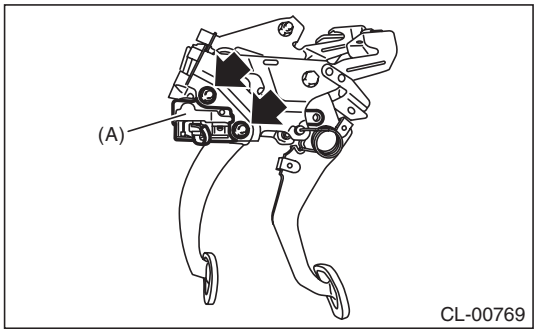

(A) Master cylinder

GETtheMANUALS.org

6) Secure the clevis pin with mounting clip.

CAUTION:
Always use a new clevis pin.

NOTE:
Before installing the clevis pin, apply grease.

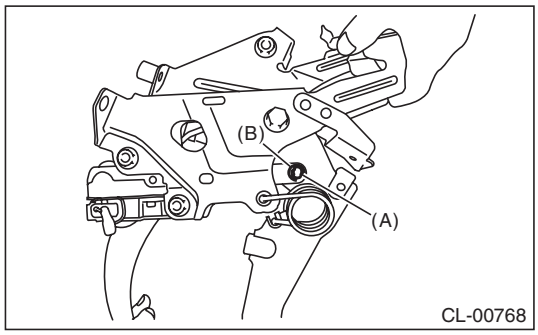

(A) Clevis pin
(B) Clip

7) Attach the sensor harness, and connect the connector to the clutch stroke sensor.
8) Install the clutch switch.
9) Install the clutch damper to the pedal assembly, and connect the clutch pipe to the master cylinder.

Tightening torque:
T1: 15 N·m (1.5 kgf-m, 11.1 ft-lb)
T2: 18 N·m (1.8 kgf-m, 13.3 ft-lb)

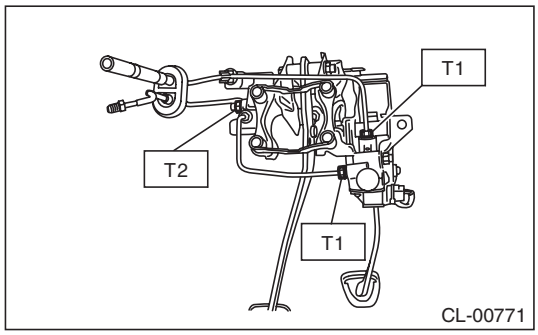

E: INSPECTION

1. CLUTCH PEDAL

Move the clutch pedal in the lateral direction with a force of approximately 10 N (1 kgf, 2 lbf) to check that the clutch pedal deflection is within the service limit.

CAUTION:
If the deflection exceeds the service limit, replace with a new clutch pedal assembly.

Deflection of the clutch pedal:
Service limit
4.0 mm (0.157 in) or less

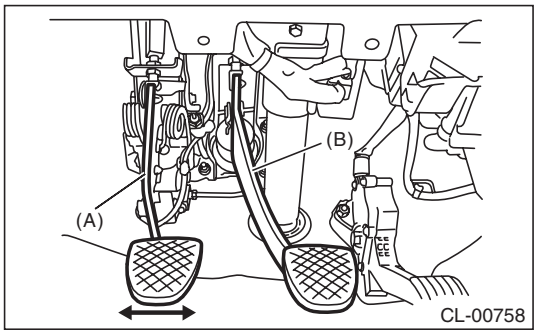

(A) Clutch pedal
(B) Brake pedal

F: ADJUSTMENT

1) If the full stroke of the clutch pedal is not within the specified value, loosen the lock nuts of the clutch switch and adjust the full stroke of the clutch pedal with the clutch switch.

CAUTION:
When adjusting the full stroke of clutch pedal, do not turn the clutch switch.

Clutch pedal full stroke A:
130 — 135 mm (5.12 — 5.31 in) (non-turbo model)
135 — 140 mm (5.31 — 5.51 in) (turbo model)

Tightening torque:
T: 8 N·m (0.8 kgf-m, 5.9 ft-lb)

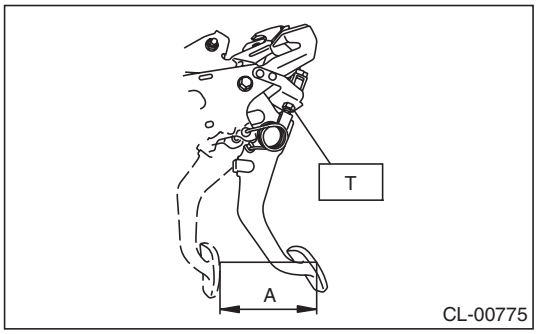

GETtheMANUALS.org

2) Depress and release the clutch pedal two or three times to ensure that the clutch pedal and release lever operate smoothly. If the clutch pedal and release lever do not operate smoothly, bleed air from the clutch hydraulic system. <Ref. to CL-25, Clutch Fluid Air Bleeding.>
3) Measure the clutch pedal full stroke length again to ensure that it is within specifications. If it is not within specifications, repeat adjustment procedures again from the beginning.

Clutch pedal full stroke:
130 — 135 mm (5.12 — 5.31 in) (non-turbo model)
135 — 140 mm (5.31 — 5.51 in) (turbo model)

4) Push the release lever until the operating cylinder push rod retracts. Make sure that the clutch fluid level in the reservoir tank increases. If the clutch fluid level increases, the hydraulic clutch is properly adjusted; If the clutch fluid level does not increase or the push rod does not retract, replace the master cylinder with a new part. <Ref. to CL-20, Master Cylinder.>

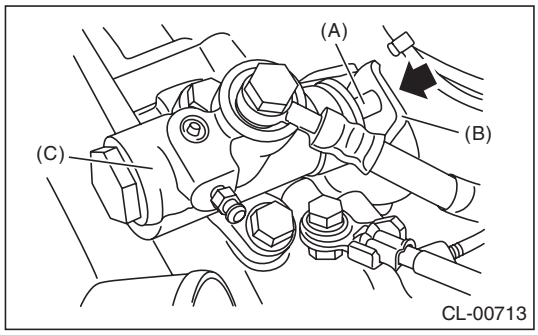

(A) Push rod
(B) Release lever
(C) Operating cylinder

5) Push the release lever until the operating cylinder push rod retracts. Check that the clutch fluid level in the reservoir tank increases.

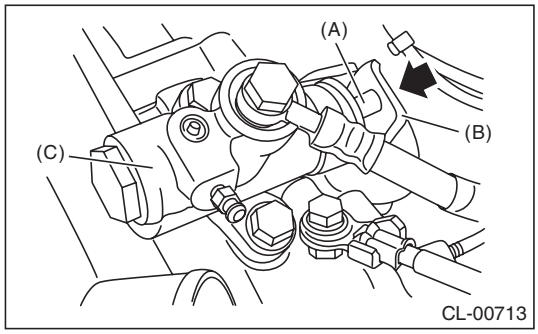

(A) Push rod
(B) Release lever
(C) Operating cylinder

6) If the clutch fluid level increases, hydraulic clutch play is correct.
7) If the clutch fluid level does not increase or push rod does not retract, readjust the clutch pedal.
8) Check the clutch fluid level using the scale on the outside of the reservoir tank. If the clutch fluid level is below “MIN”, fill the clutch fluid up to “MAX” level.

Recommended clutch fluid:
New FMVSS No. 116 DOT3

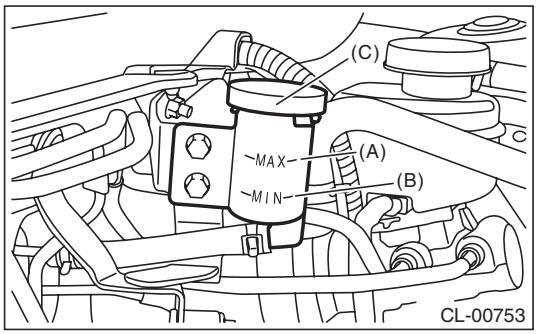

(A) MAX. level
(B) MIN. level
(C) Reservoir tank

GETtheMANUALS.org

11.Clutch Switch

A: REMOVAL

1) Disconnect the ground cable from battery.
2) Remove the instrument panel lower cover. <Ref. to EI-64, REMOVAL, Instrument Panel Lower Cover.>
3) Disconnect the connector from clutch switch.
4) Remove the clutch switches.

B: INSTALLATION

1. CLUTCH SWITCH

1) Move the clevis pin of push rod to left and right, retain it at the position where it moves smoothly, and measure the clutch pedal stroke.

Clutch pedal full stroke A:
130 — 135 mm (5.12 — 5.31 in) (non-turbo model)
135 — 140 mm (5.31 — 5.51 in) (turbo model)

Tightening torque:
T: 8 N·m (0.8 kgf-m, 5.9 ft-lb)

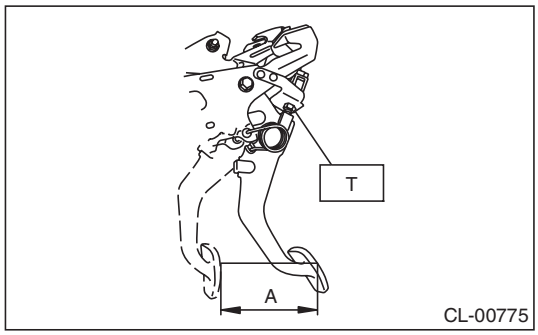

2) If the clutch pedal stroke is out of specification, adjust the stroke. <Ref. to CL-29, ADJUSTMENT, Clutch Pedal.>
3) Connect the connector to the clutch switch.

2. CLUTCH START SWITCH

1) Fully depress the clutch pedal and hold it.
2) Install so that gap (A) of the clutch pedal plate and clutch start switch is 2.9 mm (0.11 in), and tighten the lock nut.

Tightening torque:
8 N·m (0.8 kgf-m, 5.9 ft-lb)

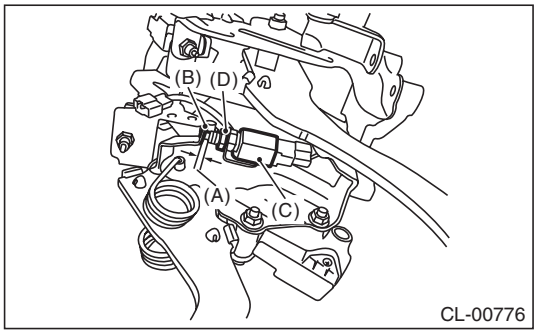

(A) 2.9 mm (0.11 in)
(B) Clutch pedal plate
(C) Clutch start switch
(D) Lock nut

3) Connect the connector to the clutch start switch.
4) Make sure that engine does not start with clutch pedal not depressed.
5) Make sure that engine starts with clutch pedal fully depressed.

C: INSPECTION

1. CLUTCH START SWITCH

1) Perform the following inspections. If the clutch start switch does not operate normally, adjust the switch, and check it again. <Ref. to CL-33, ADJUSTMENT, Clutch Switch.>
• Make sure that engine does not start with clutch pedal not depressed.
• Make sure that engine starts with clutch pedal fully depressed.
2) When the clutch start switch does not operate normally even if it is adjusted, check the clutch start switch for continuity.
(1) Remove the clutch start switch. <Ref. to CL-31, REMOVAL, Clutch Switch.>

GETtheMANUALS.org

(2) Measure the resistance between terminal 1 and 2 of the switch. If the resistance is not at the standard value, replace the switch.

Condition	Terminal No.	Specified resistance
ON	No. 1 — No. 2	Less than 1 Ω
OFF	No. 1 — No. 2	1 MΩ or more

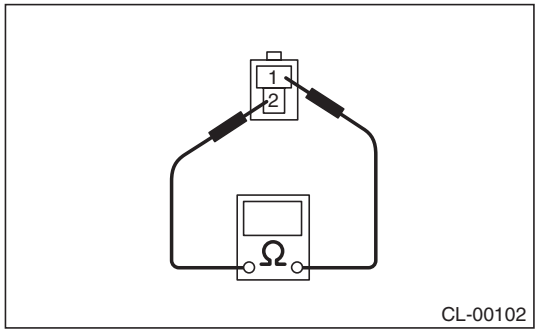

(3) Check that the switch is turned on and off in Dimension L.

Dimension L:
4 — 5.5 mm (0.16 — 0.22 in)

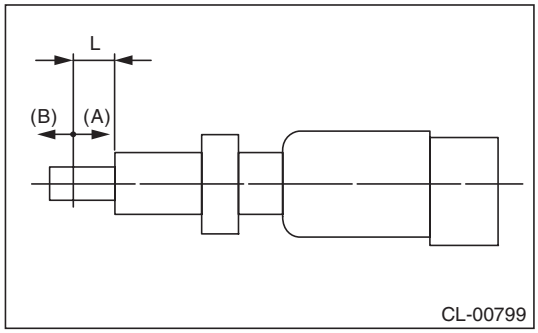

(A) ON
(B) OFF

2. CLUTCH SWITCH

1) Check the clutch switch for continuity.
(1) Disconnect the connector of clutch switch.
(2) Measure the resistance between terminal 1 and 2 of the switch. If the resistance is not within the specification, check the clutch stroke and installation condition, and check the clutch switch again.

Condition	Terminal No.	Specified resistance
When clutch pedal is depressed	No. 1 — No. 2	1 MΩ or more
When the clutch pedal is not depressed	No. 1 — No. 2	Less than 1 Ω

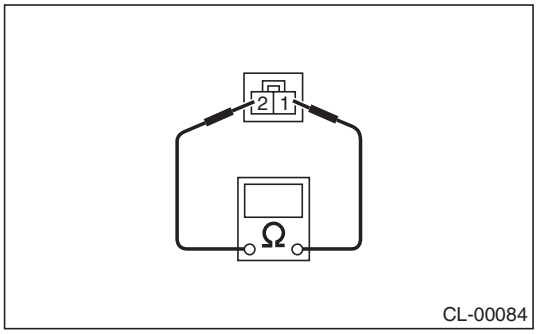

2) When the clutch switch does not operate normally even if the clutch stroke and installation condition are normal, check the clutch switch for continuity.
(1) Remove the clutch switches. <Ref. to CL-31, REMOVAL, Clutch Switch.>
(2) Measure the resistance between terminal 1 and 2 of the switch. If the resistance is not at the standard value, replace the switch.

Condition	Terminal No.	Specified resistance
ON	No. 1 — No. 2	Less than 1 Ω
OFF	No. 1 — No. 2	1 MΩ or more

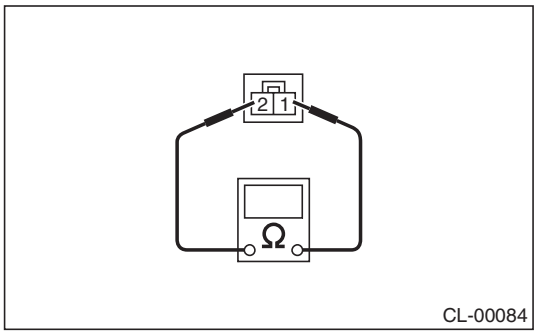

GETtheMANUALS.org

(3) Check that the switch is turned on and off in Dimension L.

Dimension L:
5 — 6.5 mm (0.2 — 0.26 in)

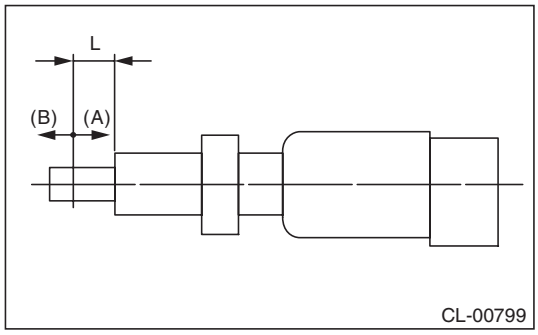

(A) ON
(B) OFF

D: ADJUSTMENT

1) Loosen the lock nut of the clutch start switch.
2) Fully depress the clutch pedal and hold it.
3) Adjust the gap (A) of the clutch pedal plate and the clutch start switch to be 2.9 mm (0.11 in).

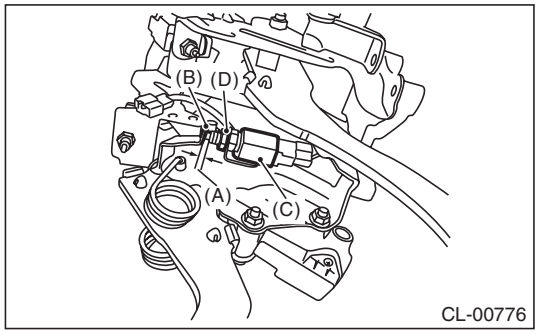

(A) 2.9 mm (0.11 in)
(B) Clutch pedal plate
(C) Clutch start switch
(D) Lock nut

4) Tighten the lock nut.

Tightening torque:
8 N·m (0.8 kgf-m, 5.9 ft-lb)

GETtheMANUALS.org

12. General Diagnostic Table

A: INSPECTION

1. CLUTCH

Symptoms	Possible cause	Corrective action
1. Clutch slippage. It is hard to perceive clutch slippage in the early stage, but pay attention to the following symptoms. • Engine speeds up when shifting. • High-speed driving is not possible; especially rapid acceleration is not possible and vehicle speed does not increase in proportion to the increase in engine speed. • Power drops particularly when ascending a slope, and there is a burning smell of the clutch plate. • Method of testing: Park the vehicle and fully apply the parking brake. Disengage the clutch and shift the transmission gear into the 1st. Gradually increase the engine speed while gradually allowing the clutch to engage. The clutch function is satisfactory if the engine stalls. However, the clutch is slipping if the vehicle does not move forward and the engine does not stall.	(a) Oil on the clutch face	Replace.
	(b) Worn clutch face	Replace.
	(c) Deteriorated diaphragm spring	Replace.
	(d) Warped pressure plate or flywheel	Repair or replace.
	(e) Defective release bearing holder	Repair or replace.
2. Clutch drags. As a symptom of this trouble, a harsh scratching noise occurs and control becomes difficult when shifting gears. The symptom becomes more apparent when shifting into the 1st gear. However, because most trouble of this sort is due to a defective synchronization mechanism, perform the following tests. • Method of testing: <Ref. to CL-35, DIAGNOSTIC DIAGRAM OF CLUTCH DRAG, INSPECTION, General Diagnostic Table.> The problem is caused by insufficient disengagement of the clutch if an abnormal noise occurs during this test.	(a) Worn or rusty clutch disc hub spline	Replace the clutch disc.
	(b) Excessive deflection of clutch disc face	Repair or replace.
	(c) Crankshaft pilot needle bearing sticking	Replace.
	(d) Cracked clutch disc face	Replace.
	(e) Stuck clutch disc (smeared by oil or water)	Replace.
3. Clutch chatters. Clutch chattering is an unpleasant vibration to the whole vehicle when the vehicle is just started with clutch partially engaged.	(a) Adhesion of oil on the clutch face	Replace the clutch disc.
	(b) Weak or broken damper spring	Replace the clutch disc.
	(c) Poor contact of the disc surface or excessively worn disc	Replace the faulty clutch disc.
	(d) Warped pressure plate or flywheel	Repair or replace.
	(e) Loose disc rivets	Replace the clutch disc.
	(f) Loose engine mounting	Retighten or replace mounting.
4. Noisy clutch Examine whether the noise is generated when the clutch is disengaged, engaged, or partially engaged.	(a) Broken, worn or insufficiently lubricated release bearing	Replace the release bearing.
	(b) Insufficient lubrication of the pilot bearing	Replace the pilot bearing.
	(c) Loose clutch disc hub	Replace the clutch disc.
	(d) Loose damper spring retainer	Replace the clutch disc.
	(e) Deteriorated or broken damper spring	Replace the clutch disc.

GETtheMANUALS.org

Symptoms	Possible cause	Corrective action
5. Clutch grabs suddenly. When starting the vehicle with the clutch partially engaged, the clutch engages suddenly and the vehicle jumps instead of making a smooth start.	(a) Grease or oil on facing	Replace the clutch disc.
	(b) Deteriorated cushioning spring	Replace the clutch disc.
	(c) Worn or rusted spline of clutch disc or main shaft	Take off rust, apply grease or replace clutch disc or main shaft.
	(d) Deteriorated or broken damper spring	Replace the clutch disc.
	(e) Loose engine mounting	Retighten or replace mounting.
	(f) Deteriorated diaphragm spring	Replace.

2. CLUTCH PEDAL

Symptoms	Corrective action
Insufficient clutch pedal play	Adjust the pedal play.
Excessive wear and damage of pedal shaft or busing	Replace the busing or shaft with a new part.

3. DIAGNOSTIC DIAGRAM OF CLUTCH DRAG

Step		Check	Yes	No
1	**CHECK GEAR NOISE.** 1) Start the engine. 2) While idling the engine, step on the clutch pedal and quickly shift from neutral to reverse.	Is there any abnormal noise from the transmission gear?	Go to step **2**.	Clutch is normal.
2	**CHECK GEAR NOISE.** Step on the clutch pedal at idle and shift from neutral to reverse within 0.5 — 1.0 second.	Is there any abnormal noise from the transmission gear?	Go to step **3**.	Defective transmission or excessive clutch drag torque. Inspect pilot bearing, clutch disc, transmission and clutch disc hub spline.
3	**CHECK GEAR NOISE.** 1) Step on the clutch pedal at idle and shift from neutral to reverse within 0.5 — 1.0 second. 2) While stepping on the clutch pedal, shift from neutral to reverse, reverse to neutral several times.	Is there any abnormal noise from the transmission gear?	Inadequate clutch disengage. Inspect the clutch disc, clutch cover, clutch release, and clutch pedal free play.	Clutch and flywheel seizure. Inspect the clutch disc and the spline of the clutch disc hub.

GETtheMANUALS.org

GETtheMANUALS.org