ENGINE 2 SECTION

This service manual has been prepared to provide SUBARU service personnel with the necessary information and data for the correct maintenance and repair of SUBARU vehicles.
This manual includes the procedures for maintenance, disassembling, reassembling, inspection and adjustment of components and diagnostics for guidance of experienced mechanics.
Please peruse and utilize this manual fully to ensure complete repair work for satisfying our customers by keeping their vehicle in optimum condition. When replacement of parts during repair work is needed, be sure to use SUBARU genuine parts.

All information, illustration and specifications contained in this manual are based on the latest product information available at the time of publication approval.

FUJI HEAVY INDUSTRIES LTD.

FUEL INJECTION (FUEL SYSTEMS)	FU(H4DOTC)
EMISSION CONTROL (AUX. EMISSION CONTROL DEVICES)	EC(H4DOTC)
INTAKE (INDUCTION)	IN(H4DOTC)
MECHANICAL	ME(H4DOTC)
EXHAUST	EX(H4DOTC)
COOLING	CO(H4DOTC)
LUBRICATION	LU(H4DOTC)
SPEED CONTROL SYSTEMS	SP(H4DOTC)
IGNITION	IG(H4DOTC)
STARTING/CHARGING SYSTEMS	SC(H4DOTC)
ENGINE (DIAGNOSTICS)	EN(H4DOTC) (diag)
GENERAL DESCRIPTION	GD(H4DOTC)

G2480BE3

GETtheMANUALS.org

FUEL INJECTION (FUEL SYSTEMS)

FU(H4DOTC)

		Page
1.	General Description	2
2.	Throttle Body	15
3.	Intake Manifold	18
4.	Engine Coolant Temperature Sensor	34
5.	Crankshaft Position Sensor	35
6.	Camshaft Position Sensor	37
7.	Knock Sensor	39
8.	Throttle Position Sensor	41
9.	Mass Air Flow and Intake Air Temperature Sensor	42
10.	Manifold Absolute Pressure Sensor	43
11.	Fuel Injector	45
12.	Tumble Generator Valve Assembly	48
13.	Tumble Generator Valve Actuator	49
14.	Oil Flow Control Solenoid Valve	50
15.	Wastegate Control Solenoid Valve	52
16.	Front Oxygen (A/F) Sensor	54
17.	Rear Oxygen Sensor	56
18.	Engine Control Module (ECM)	58
19.	Main Relay	59
20.	Fuel Pump Relay	61
21.	Electronic Throttle Control Relay	63
22.	Fuel Pump Control Unit	65
23.	Fuel	66
24.	Fuel Tank	68
25.	Fuel Filler Pipe	75
26.	Fuel Pump	79
27.	Fuel Level Sensor	81
28.	Fuel Sub Level Sensor	83
29.	Fuel Filter	85
30.	Fuel Damper	87
31.	Fuel Delivery, Return and Evaporation Lines	88
32.	Fuel System Trouble in General	94

GETtheMANUALS.org

1. General Description

A: SPECIFICATION

Fuel tank	Capacity	70 ℓ (18.5 US gal, 15.4 Imp gal)
	Install locations	Under rear seat
Fuel pump	Type	Impeller
	Shutoff discharge pressure	850 kPa (8.67 kgf/cm^2, 123.3 psi) or less
	Discharge rate	175 ℓ (46.2 US gal, 38.5 Imp gal)/h or more. [12 V at 300 kPa (3.06 kgf/cm^2, 43.5 psi)]
Fuel filter		In-tank type

GETtheMANUALS.org

B: COMPONENT

1. INTAKE MANIFOLD 1

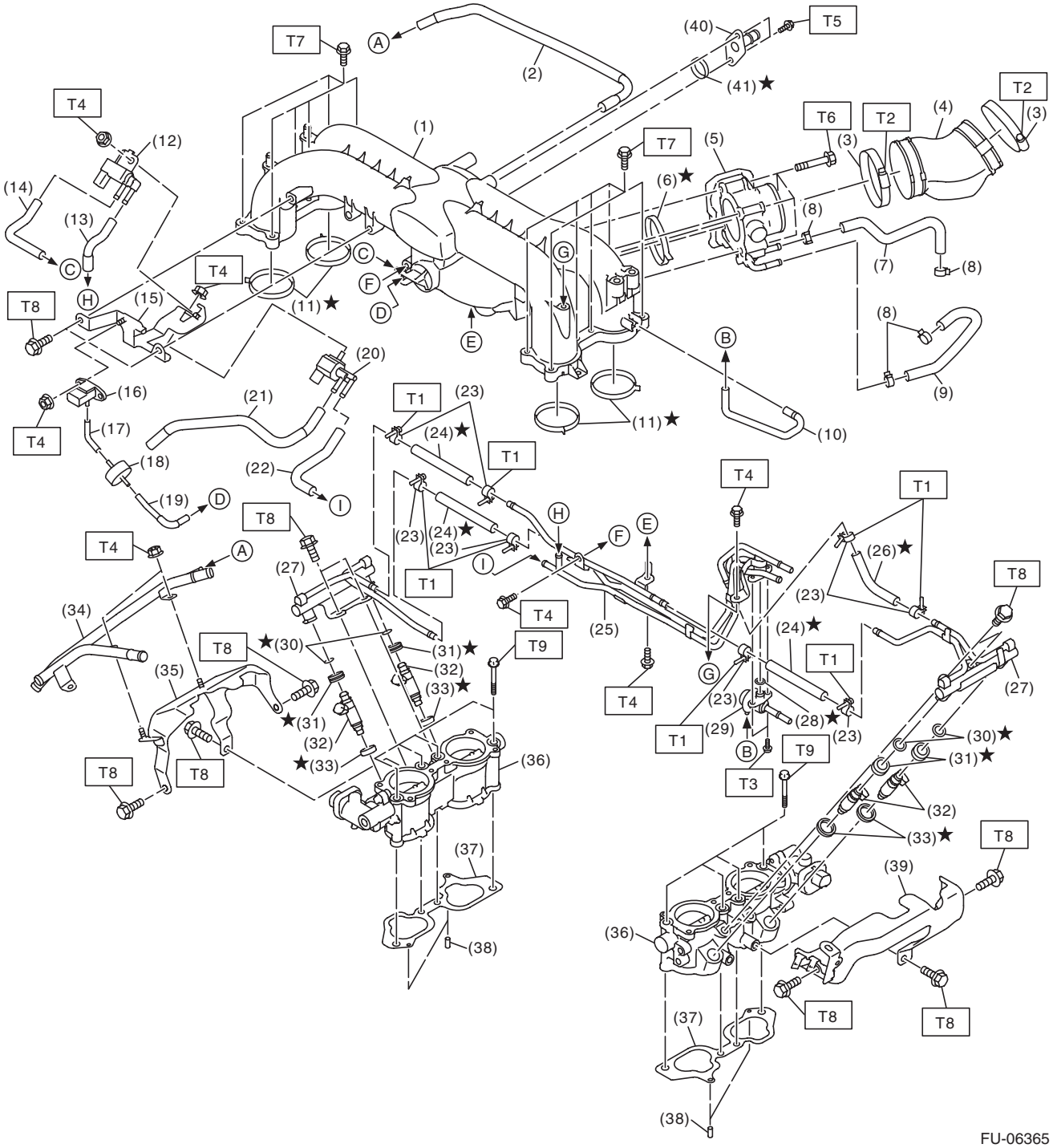

GETthemANUALS.org

(1) Intake manifold
(2) Vacuum control hose
(3) Clamp
(4) Intake duct
(5) Throttle body
(6) O-ring
(7) Preheater hose A
(8) Clip
(9) Preheater hose B
(10) Pressure regulator vacuum hose
(11) O-ring
(12) Purge control solenoid valve 1
(13) Vacuum hose A
(14) Vacuum hose B
(15) Solenoid valve bracket
(16) Manifold absolute pressure sensor
(17) Vacuum hose C
(18) Filter
(19) Vacuum hose D
(20) Purge control solenoid valve 2
(21) Vacuum hose E
(22) Vacuum hose F
(23) Clamp
(24) Fuel hose A
(25) Fuel delivery pipe
(26) Fuel hose B
(27) Fuel pipe
(28) O-ring
(29) Pressure regulator
(30) O-ring
(31) Grommet
(32) Fuel injector
(33) Seal ring
(34) PCV pipe
(35) Intake manifold protector RH
(36) Tumble generator valve ASSY
(37) Gasket
(38) Knock pin
(39) Intake manifold protector LH
(40) Nipple
(41) O-ring

Tightening torque:N·m (kgf-m, ft-lb)	
T1:	***1.25 (0.1, 0.9)***
T2:	***3 (0.3, 2.2)***
T3:	***3.45 (0.4, 2.5)***
T4:	***6.4 (0.7, 4.7)***
T5:	***7.8 (0.8, 5.8)***
T6:	***8 (0.8, 5.9)***
T7:	***8.3 (0.8, 6.1)***
T8:	***19 (1.9, 14.0)***
T9:	***25 (2.5, 18.4)***

GETtheMANUALS.org

2. INTAKE MANIFOLD 2

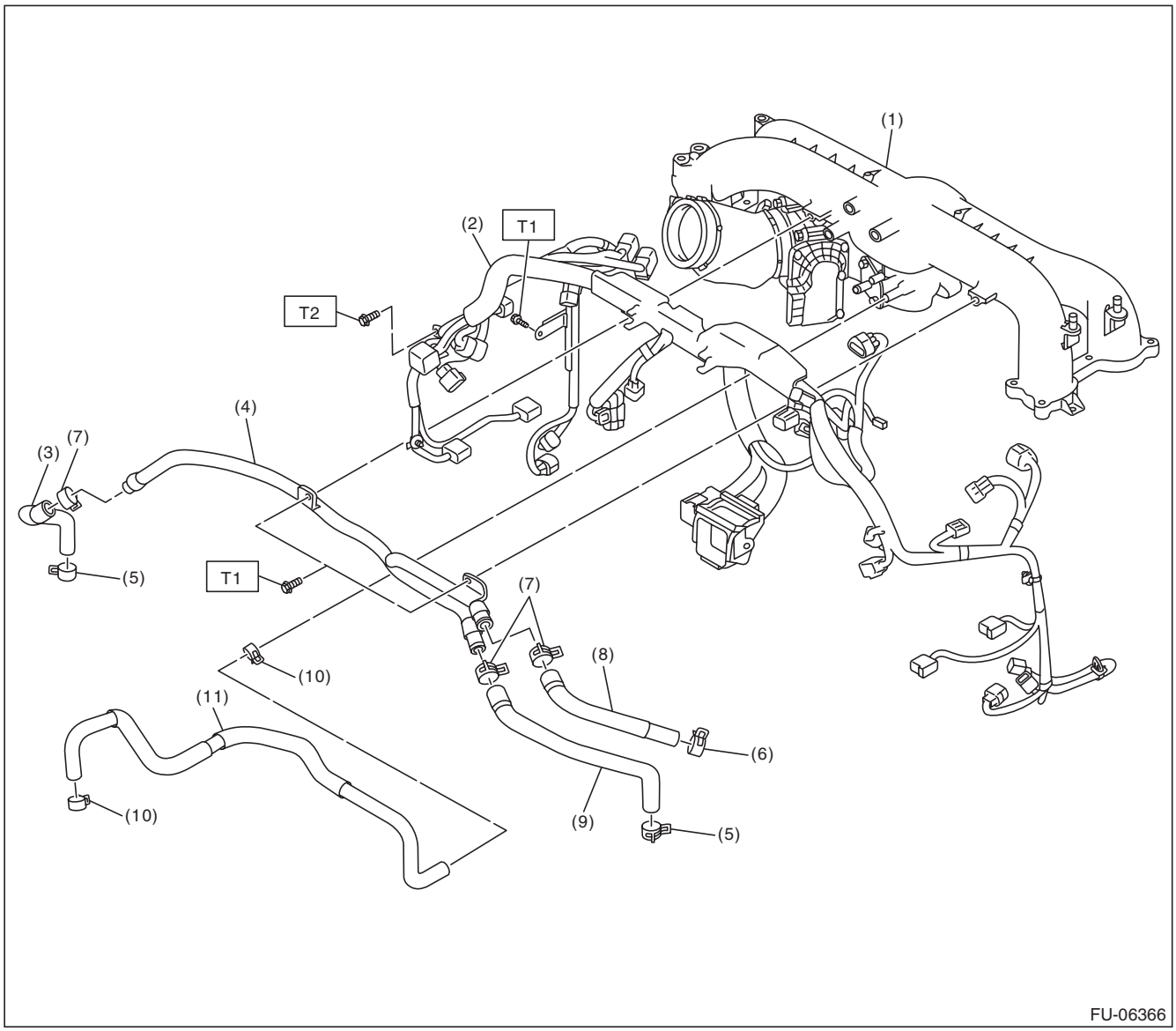

(1)	Intake manifold	(6)	Clip	(11)	Brake booster vacuum hose
(2)	Engine harness	(7)	Clip		
(3)	Vacuum hose A	(8)	Vacuum hose B		
(4)	PCV pipe	(9)	Vacuum hose C		
(5)	Clip	(10)	Clip		

Tightening torque:N·m (kgf-m, ft-lb)
T1: 6.4 (0.7, 4.7)
T2: 19 (1.9, 14.0)

GETthemANUALS.org

3. CRANKSHAFT POSITION, CAMSHAFT POSITION AND KNOCK SENSORS

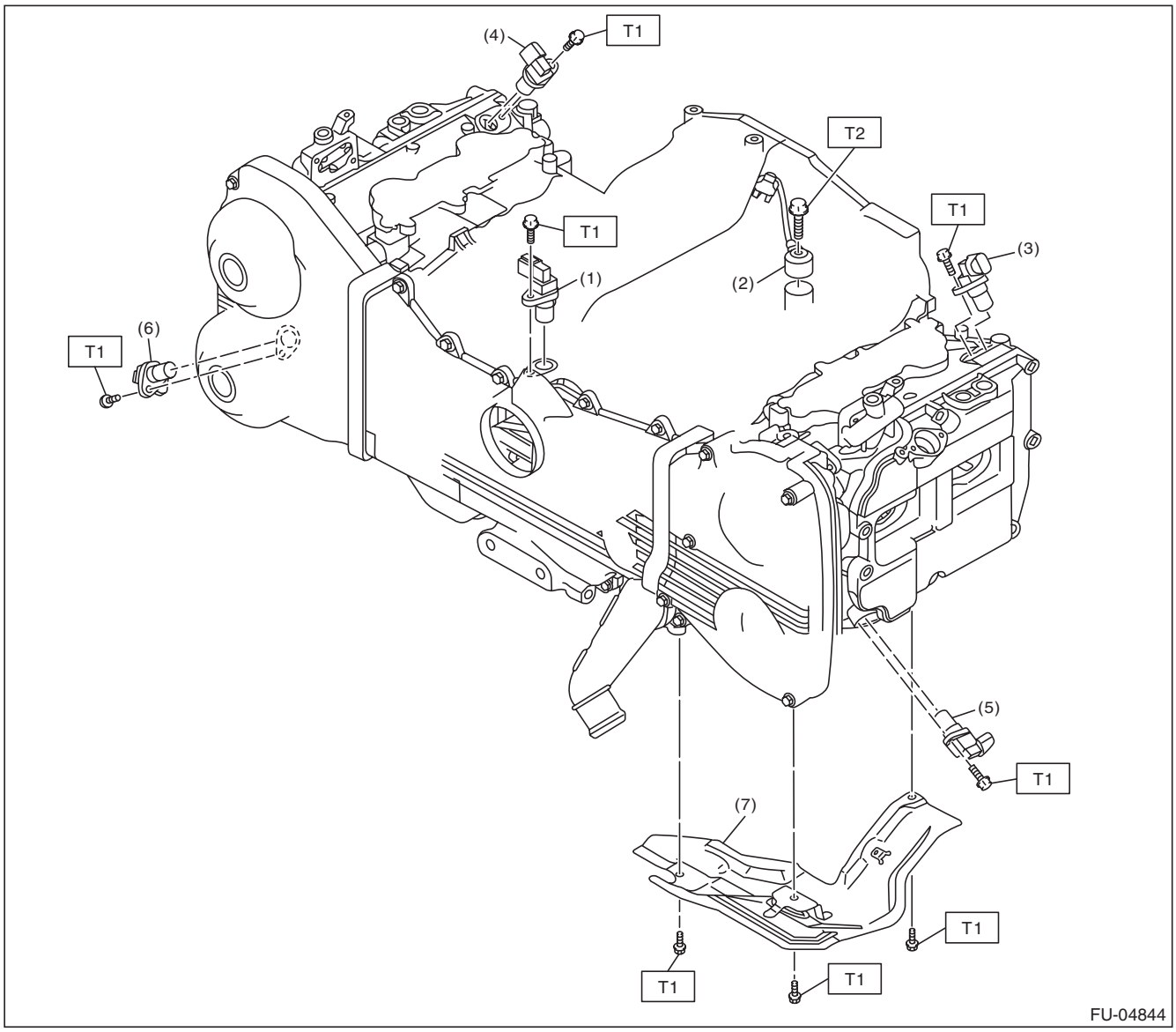

(1)	Crankshaft position sensor	(5)	Exhaust camshaft position sensor LH	***Tightening torque:N·m (kgf-m, ft-lb)***
(2)	Knock sensor	(6)	Exhaust camshaft position sensor RH	***T1: 6.4 (0.7, 4.7)***
(3)	Intake camshaft position sensor LH	(7)	Engine harness cover	***T2: 24 (2.4, 17.7)***
(4)	Intake camshaft position sensor RH			

GETtheMANUALS.org

4. FUEL TANK

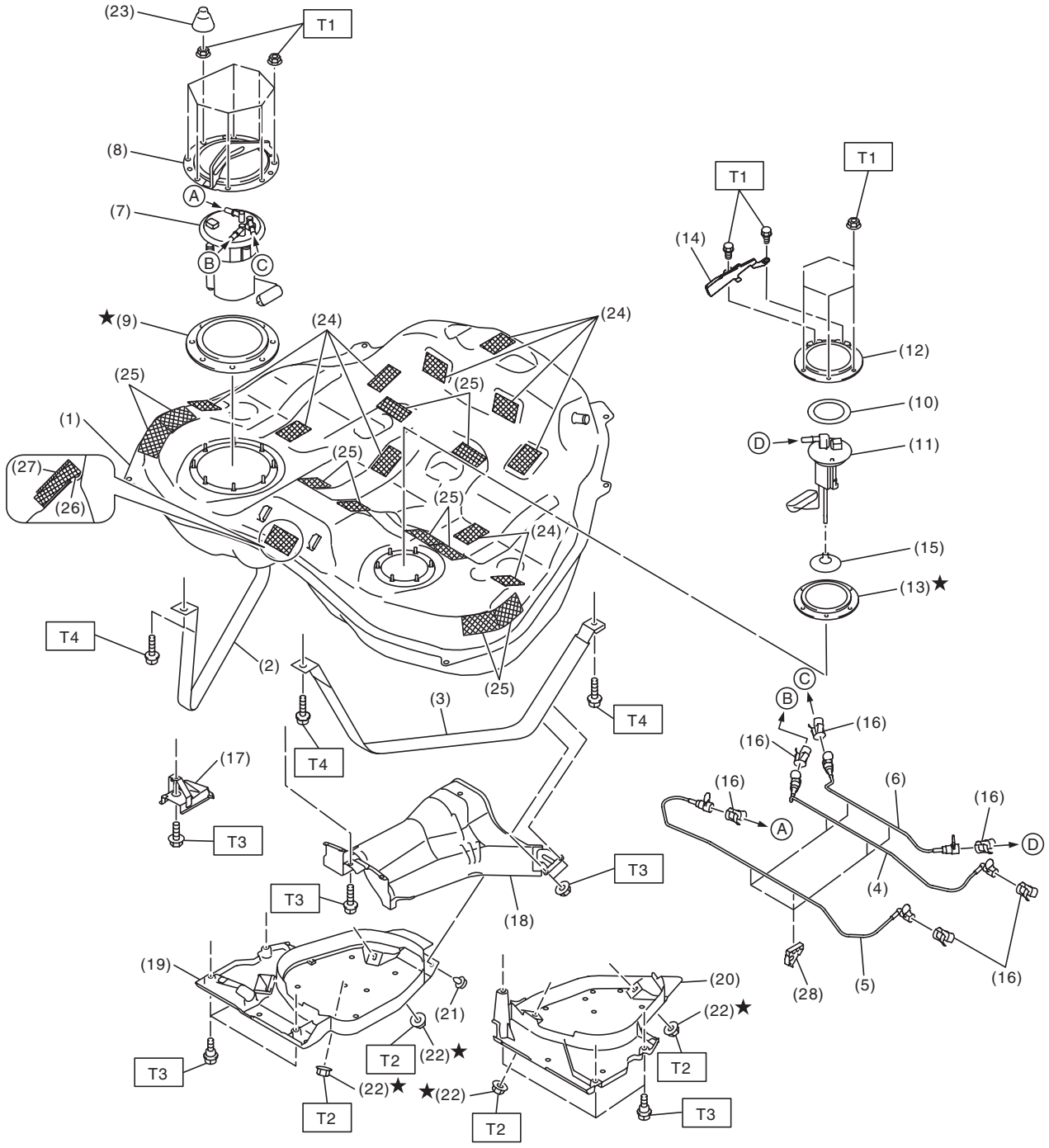

FU-06367

GETtheMANUALS.org

(1) Fuel tank
(2) Fuel tank band RH
(3) Fuel tank band LH
(4) Fuel delivery tube
(5) Fuel return tube
(6) Fuel sub delivery tube
(7) Fuel pump assembly
(8) Fuel pump upper plate
(9) Fuel pump gasket
(10) Fuel sub level sensor upper plate cushion
(11) Fuel sub level sensor
(12) Fuel sub level sensor upper plate
(13) Fuel sub level sensor gasket
(14) Fuel sub level sensor protector
(15) Fuel sub level sensor filter
(16) Retainer
(17) Stopper
(18) Heat shield cover
(19) Fuel tank protector RH
(20) Fuel tank protector LH
(21) Clip
(22) Self-locking nut
(23) Rubber cap
(24) Cushion
(25) Cushion
(26) Cushion
(27) Cushion
(28) Tube clamp

Tightening torque:N·m (kgf-m, ft-lb)

T1: 4.4 (0.4, 3.2)
T2: 9 (0.9, 6.6)
T3: 18 (1.8, 13.3)
T4: 33 (3.4, 24.3)

GETtheMANUALS.org

5. FUEL LINE

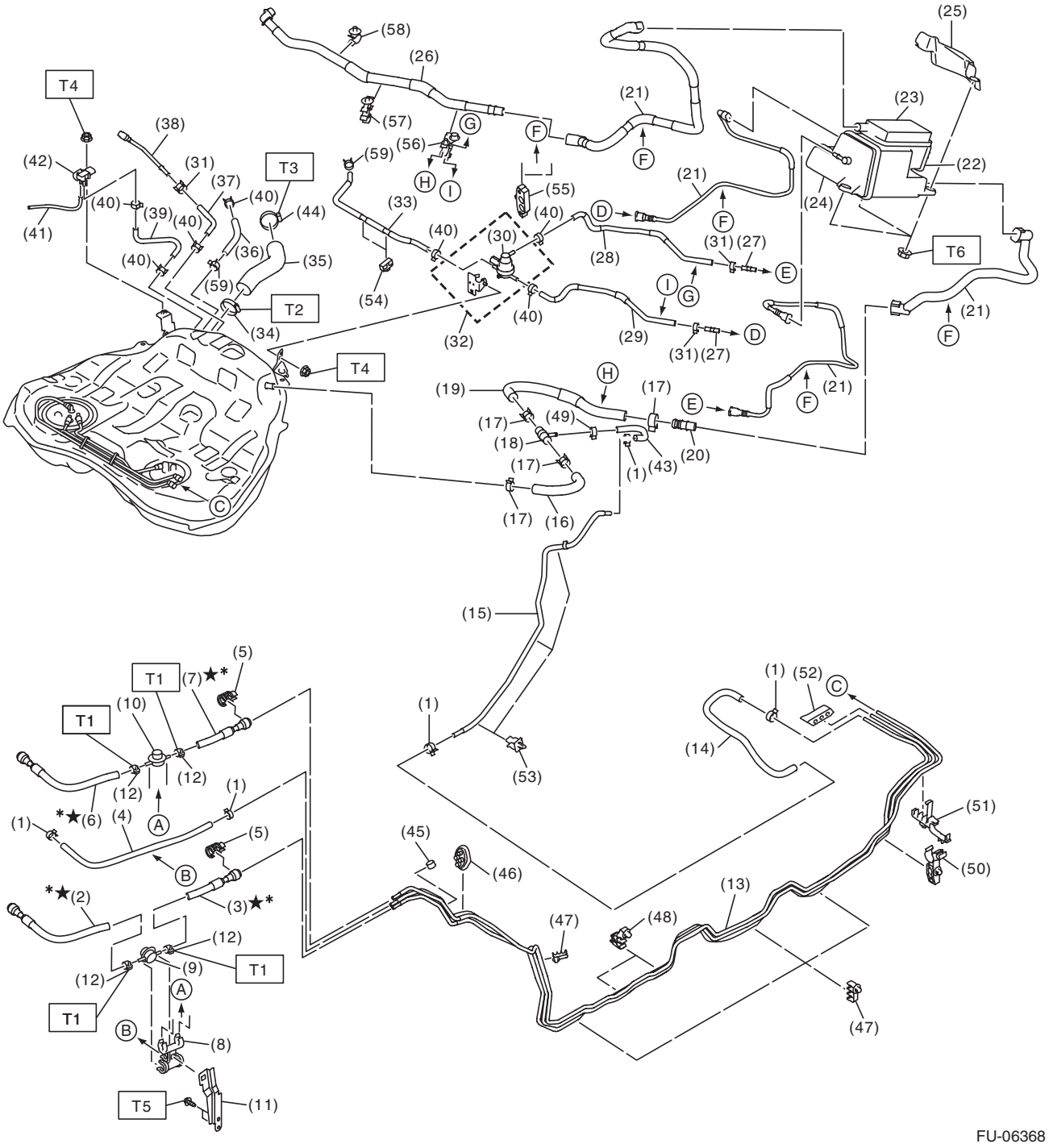

GETtheMANUALS.org

(1) Clip
(2) Fuel return hose A
(3) Fuel return hose B
(4) Evaporation hose
(5) Connect check cover
(6) Fuel delivery hose A
(7) Fuel delivery hose B
(8) Fuel damper holder
(9) Fuel damper
(10) Fuel damper
(11) Fuel damper bracket
(12) Clamp
(13) Fuel pipe ASSY
(14) Purge hose A
(15) Purge pipe
(16) Air vent hose A
(17) Clip
(18) Connector
(19) Air vent hose B
(20) Connector
(21) Canister tube ASSY
(22) Drain valve
(23) Drain filter
(24) Canister
(25) Canister protector
(26) Drain tube ASSY
(27) Connector
(28) PCV drain hose
(29) PCV outlet hose
(30) Pressure control solenoid valve
(31) Clip
(32) Pressure control solenoid valve ASSY
(33) PCV inlet hose
(34) Clamp
(35) Fuel filler hose
(36) Charge hose
(37) Circulate hose
(38) Circulate tube
(39) Pressure hose
(40) Clip
(41) Vacuum hose
(42) Fuel tank pressure sensor
(43) Purge hose B
(44) Clamp
(45) Bushing
(46) Fuel pipe front grommet
(47) Pipe clamp
(48) Pipe clamp
(49) Clip
(50) Pipe clamp
(51) Pipe clamp
(52) Fuel pipe rear grommet
(53) Pipe clamp
(54) Hose clamp
(55) Tube clamp
(56) Tube clamp
(57) Tube clamp
(58) Tube clamp
(59) Clip

Tightening torque:N·m (kgf-m, ft-lb)	
T1:	***1.25 (0.1, 0.9)***
T2:	***2.0 (0.2, 1.5)***
T3:	***2.5 (0.3, 1.8)***
T4:	***7.35 (0.7, 5.4)***
T5:	***7.5 (0.8, 5.5)***
T6:	***8 (0.8, 5.9)***

* It can be reused if the quick connector side is disconnected.

GETtheMANUALS.org

6. FUEL FILLER PIPE

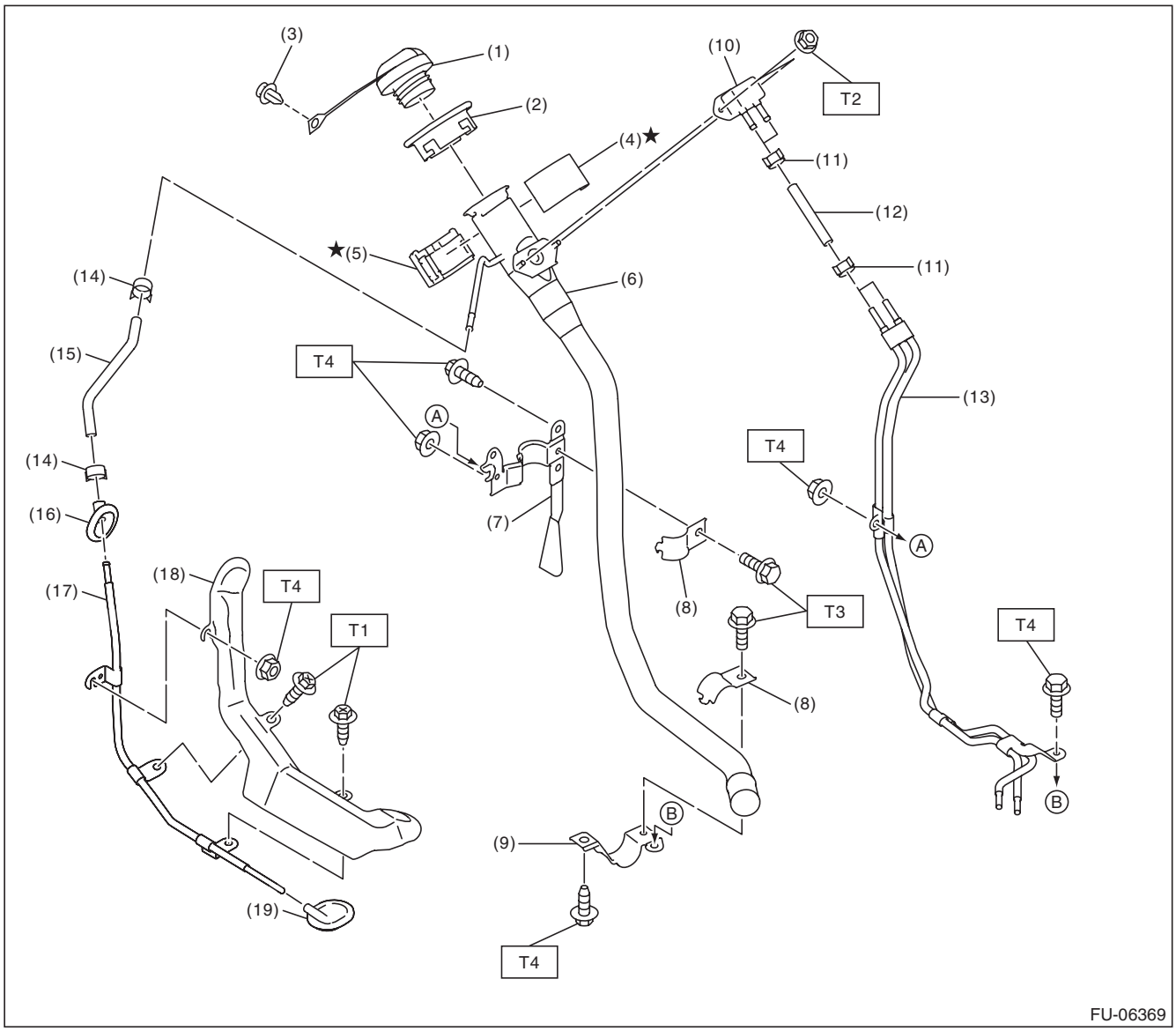

(1)	Fuel filler cap	(10)	Shut valve	(19)	Grommet
(2)	Fuel filler pipe protector	(11)	Clip		
(3)	Clip	(12)	Evaporation hose A		
(4)	Neck holder A	(13)	Evaporation pipe A		
(5)	Neck holder B	(14)	Clip		
(6)	Fuel filler pipe	(15)	Evaporation hose B		
(7)	Fuel filler pipe bracket A	(16)	Grommet		
(8)	Fuel filler pipe bracket B	(17)	Evaporation pipe B		
(9)	Fuel filler pipe bracket C	(18)	Evaporation pipe protector		

Tightening torque:N·m (kgf-m, ft-lb)

T1: 1 (0.1, 0.7)
T2: 4.5 (0.5, 3.3)
T3: 7.35 (0.7, 5.4)
T4: 7.5 (0.8, 5.5)

GETtheMANUALS.org

7. FUEL PUMP

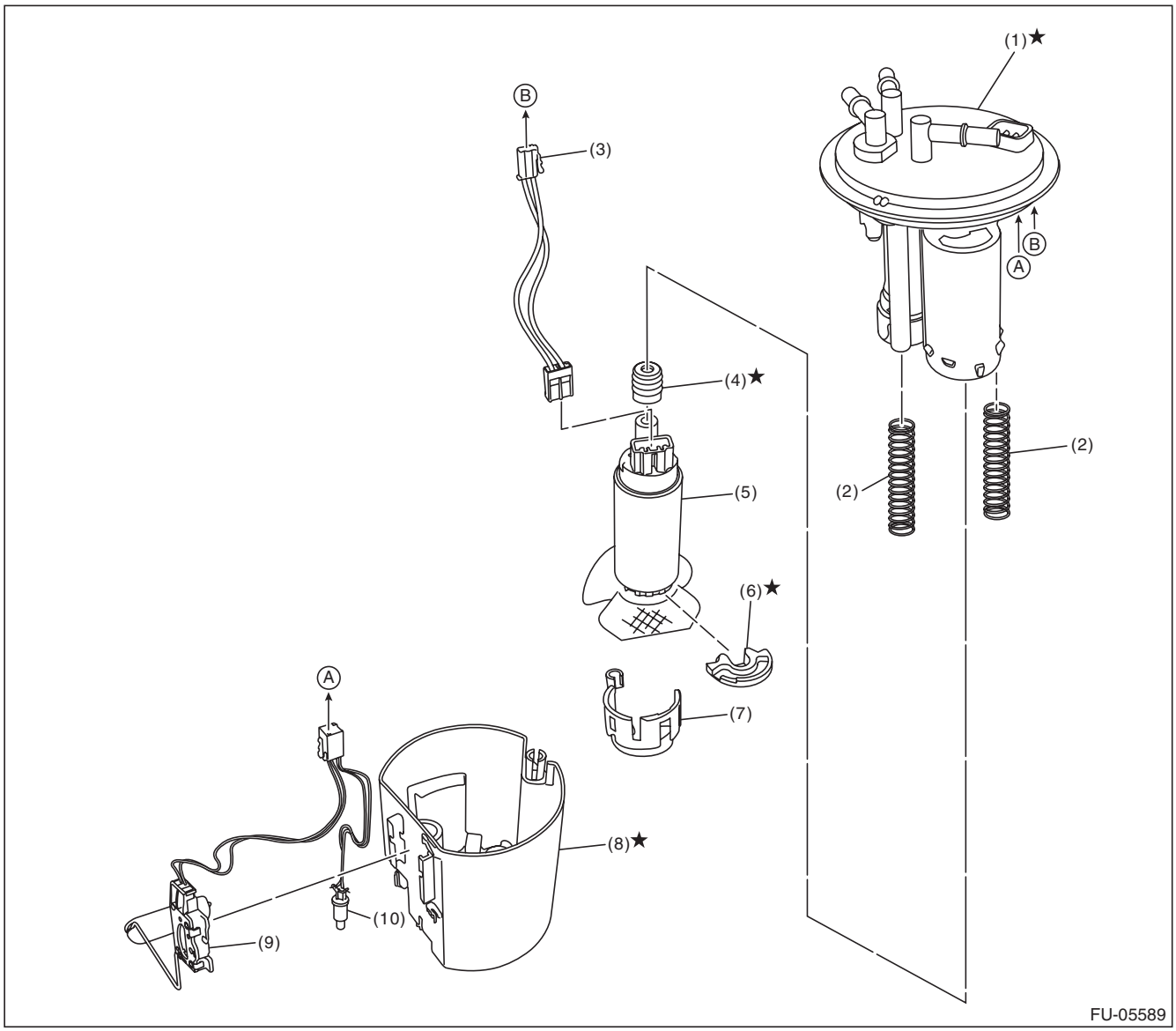

(1)	Fuel filter ASSY	(5)	Fuel pump	(9)	Fuel level sensor
(2)	Pump module spring	(6)	Support rubber cushion	(10)	Fuel temperature sensor
(3)	Fuel pump harness	(7)	Fuel pump holder		
(4)	Gasket spacer	(8)	Fuel chamber ASSY		

GETtheMANUALS.org

C: CAUTION

- Wear appropriate work clothing, including a cap, protective goggles and protective shoes when performing any work.
- Remove contamination including dirt and corrosion before removal, installation or disassembly.
- Keep the disassembled parts in order and protect them from dust and dirt.
- Before removal, installation or disassembly, be sure to clarify the failure. Avoid unnecessary removal, installation, disassembly and replacement.
- Vehicle components are extremely hot after driving. Be wary of receiving burns from heated parts.
- Be sure to tighten fasteners including bolts and nuts to the specified torque.
- Place shop jacks or rigid racks at the specified points.
- Before disconnecting connectors of sensors or units, be sure to disconnect the ground cable from the battery.
- Place “NO OPEN FLAMES” signs near the working area.
- Prepare a container and cloth to prevent scattering of fuels when performing work where fuels can be spilled. If the fuel spills, wipe it off immediately to prevent from penetrating into floor or flowing out for environmental protection.
- Follow all government and local regulations concerning disposal of refuse when disposing fuel.

D: PREPARATION TOOL

1. SPECIAL TOOL

ILLUSTRATION	TOOL NUMBER	DESCRIPTION	REMARKS
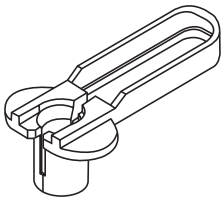 ST18371AA000	18371AA000	CONNECTOR REMOVER	Used for disconnecting the quick connector on the fuel return hose side of the engine compartment (intake manifold).
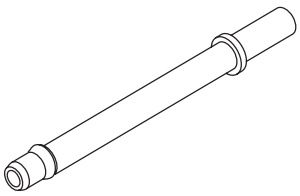 ST18471AA000	18471AA000	FUEL PIPE ADAPTER	Used for draining fuel.
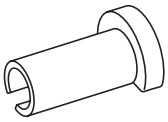 ST42099AE000	42099AE000	QUICK CONNECTOR RELEASE	Used for removing the quick connector.

GETtheMANUALS.org

ILLUSTRATION	TOOL NUMBER	DESCRIPTION	REMARKS
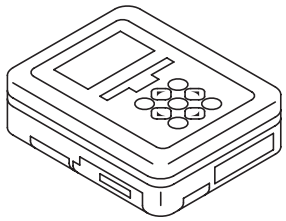 ST1B022XU0	1B022XU0	SUBARU SELECT MONITOR III KIT	Used for draining fuel and each inspection.

2. GENERAL TOOL

TOOL NAME	REMARKS
Circuit tester	Used for measuring resistance and voltage.
Oscilloscope	Used for inspecting the waveform of each sensor.
Sensor socket	Used for removing and installing the front oxygen (A/F) sensor and rear oxygen sensor.

GETmyMANUALS.org

2. Throttle Body

A: REMOVAL

1) Remove the collector cover.
2) Disconnect the ground cable from battery.

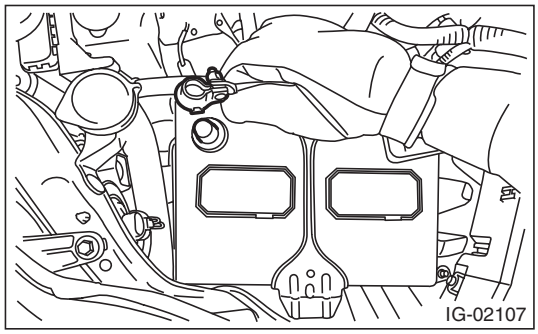

3) Lift up the vehicle.
4) Remove the under cover. <Ref. to EI-35, REMOVAL, Front Under Cover.>
5) Drain approximately 2.0 ℓ (2.1 US qt, 1.8 Imp qt) of coolant. <Ref. to CO(H4DOTC)-14, DRAINING OF ENGINE COOLANT, REPLACEMENT, Engine Coolant.>
6) Remove the intercooler. <Ref. to IN(H4DOTC)-17, REMOVAL, Intercooler.>
7) Remove the bolts which secure the engine harness and PCV pipe to the intake manifold, and remove the intake duct from the throttle body.

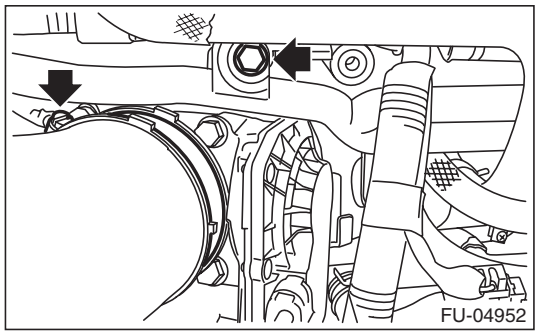

8) Disconnect the connector from the throttle position sensor, and disconnect the preheater hose from the throttle body.

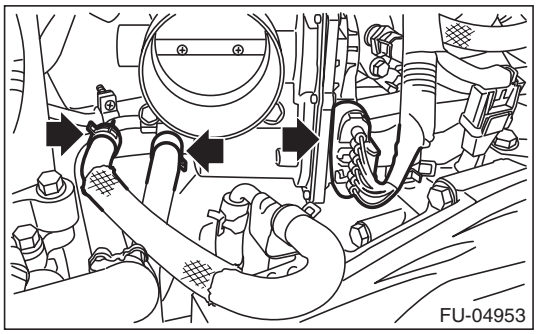

9) Remove the bolts which secure the throttle body to the intake manifold and remove the throttle body.

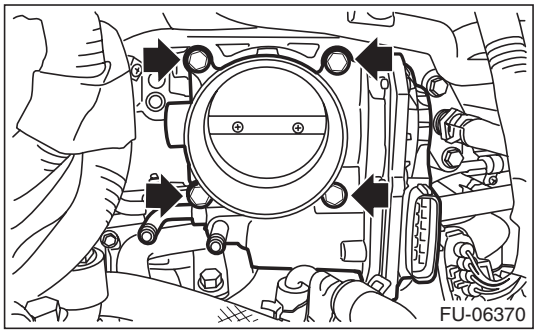

GETmyMANUALS.org

B: INSTALLATION

Install in the reverse order of removal.

NOTE:
- Use new O-rings.
- When installing the intake duct to the throttle body, align the protrusion (a) on the intake duct to the installation position mark (b) on the throttle body to install.

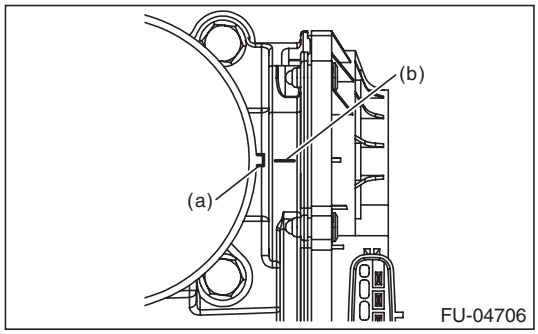

Tightening torque:
8 N·m (0.8 kgf-m, 5.9 ft-lb)

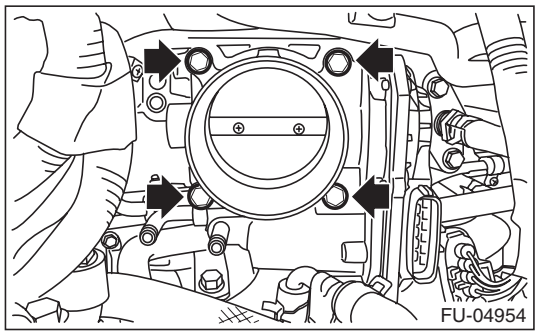

Tightening torque:
T1: 3 N·m (0.3 kgf-m, 2.2 ft-lb)
T2: 6.4 N·m (0.7 kgf-m, 4.7 ft-lb)

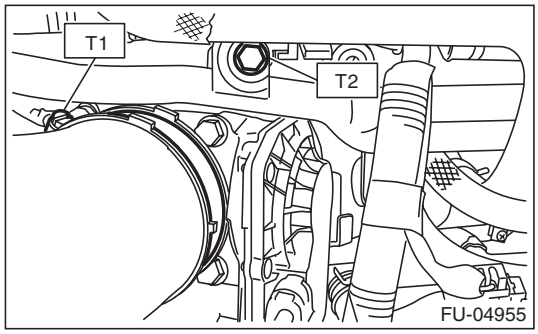

C: INSPECTION

1. THROTTLE SENSOR INSPECTION (METHOD WITH CIRCUIT TESTER)

1) Remove the glove box lid assembly. <Ref. to EI-66, REMOVAL, Glove Box.>
2) Turn the ignition switch to ON. (engine OFF)
3) Check the voltage between ECM connector terminals.

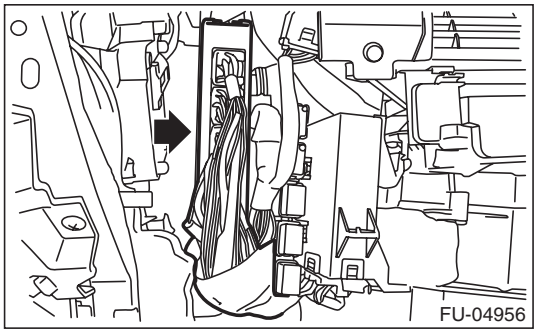

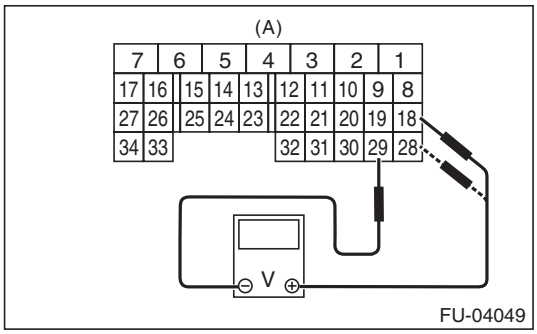

(A) To ECM connector

Throttle sensor	Accelerator pedal	Terminal No.	Standard
Main	Not depressed (Full closed)	18 (+) and 29 (–)	Approx. 0.6 V
	Depressed (Full opened)		Approx. 4.04 V
Sub	Not depressed (Full closed)	28 (+) and 29 (–)	Approx. 1.48 V
	Depressed (Full opened)		Approx. 4.23 V

GETthemANUALS.org

2. THROTTLE SENSOR INSPECTION (METHOD WITH SUBARU SELECT MONITOR)

1) Turn the ignition switch to ON. (engine OFF)
2) Read the throttle opening angle signal and voltage of throttle sensor using Subaru Select Monitor. <Ref. to EN(H4DOTC)(diag)-34, READ CURRENT DATA FOR ENGINE (NORMAL MODE), OPERATION, Subaru Select Monitor.>

Throttle sensor	Throttle opening angle signal	Standard
Main	0.0%	Approx. 0.6 V
	100.0%	Approx. 4.04 V
Sub	0.0%	Approx. 1.48 V
	100.0%	Approx. 4.23 V

3. OTHER INSPECTIONS

1) Check that the throttle body has no deformation, cracks or other damages.
2) Check that the preheater hose has no cracks, damage or loose part.

GETtheMANUALS.org

3. Intake Manifold

A: REMOVAL

1) Remove the collector cover.
2) Collect the refrigerant from A/C system. <Ref. to AC-24, PROCEDURE, Refrigerant Recovery Procedure.>
3) Release the fuel pressure. <Ref. to FU(H4DOTC)-66, RELEASING OF FUEL PRESSURE, PROCEDURE, Fuel.>
4) Disconnect the ground cable from battery.

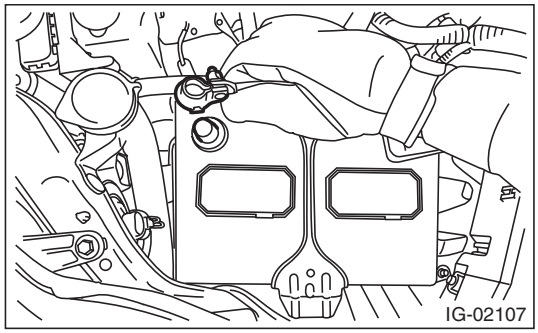

5) Open the fuel filler lid and remove the fuel filler cap.
6) Lift up the vehicle.
7) Remove the under cover. <Ref. to EI-35, REMOVAL, Front Under Cover.>
8) Drain approximately 2.0 ℓ (2.1 US qt, 1.8 Imp qt) of coolant. <Ref. to CO(H4DOTC)-14, DRAINING OF ENGINE COOLANT, REPLACEMENT, Engine Coolant.>
9) Disconnect the connector (A) from the exhaust camshaft position sensor and the connector (B) form the exhaust oil flow control solenoid valve.

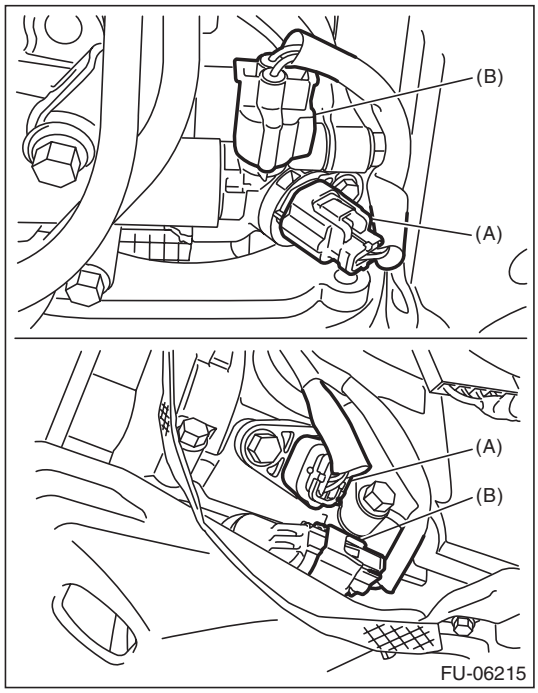

10) Disconnect the connectors from wastegate control solenoid valve, and remove the clip (A) which secure the engine harness.

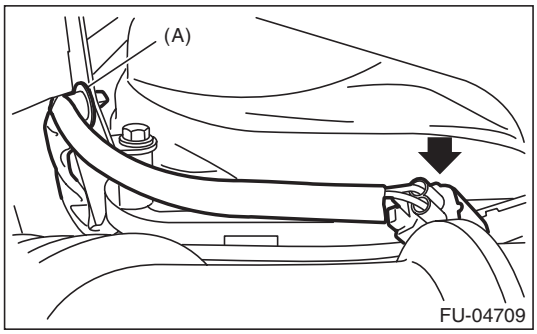

11) Lower the vehicle.
12) Remove the air intake duct. <Ref. to IN(H4DOTC)-12, REMOVAL, Air Intake Duct.>
13) Remove the intercooler. <Ref. to IN(H4DOTC)-17, REMOVAL, Intercooler.>
14) Disconnect the A/C pressure hoses from A/C compressor. <Ref. to AC-76, REMOVAL, Hose and Pipe.>
15) Disconnect the brake booster vacuum hose.

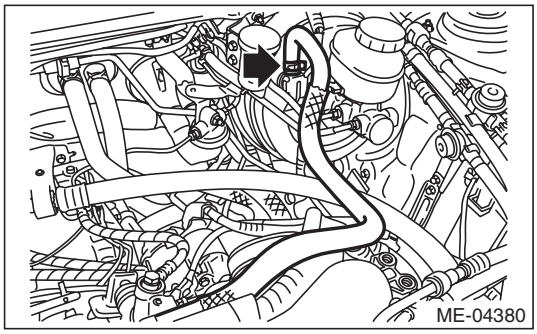

16) Remove the brake booster vacuum hose from the clip (A).
17) Remove the bolts (B) which secure the engine harness and PCV pipe to the intake manifold, and remove the intake duct from the throttle body.

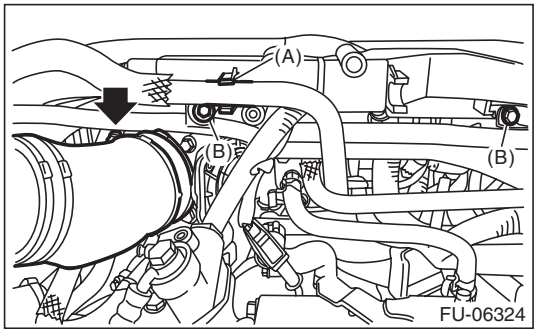

GETtheMANUALS.org

18) Disconnect the connector from the throttle position sensor, and disconnect the preheater hose from the throttle body.

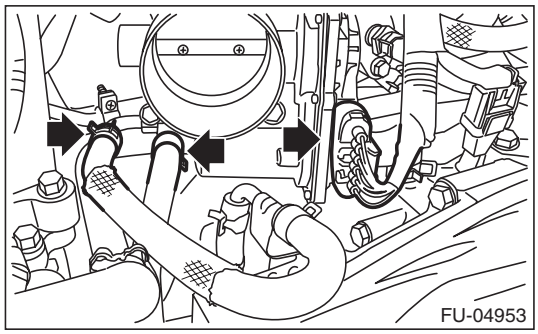

19) Disconnect the vacuum hose from the PCV valve.

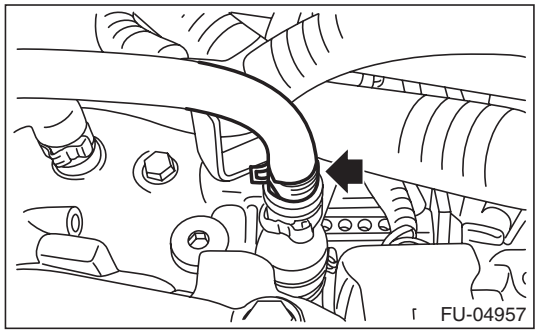

20) Disconnect the vacuum hose from blow-by pipe, and remove the bolt securing the blow-by pipe to the PCV pipe.

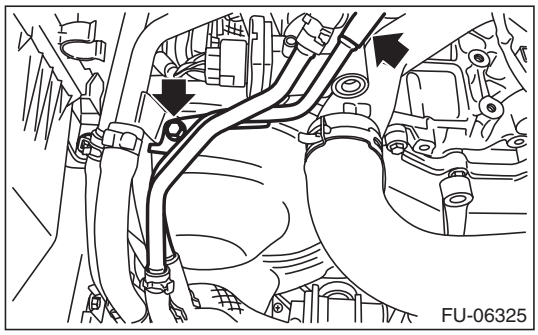

21) Disconnect the vacuum control hose (A) from PCV pipe, and remove the PCV pipe from the intake manifold protector RH.

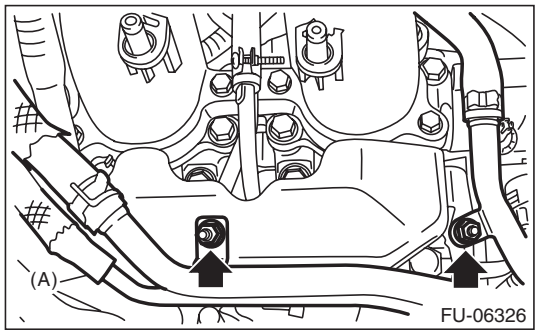

22) Disconnect the bulkhead harness connector from the engine harness connector (brown).

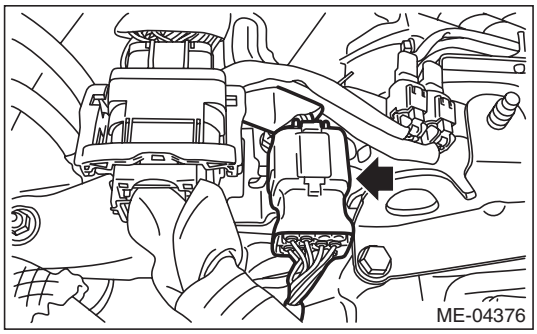

23) Remove the bolt securing the bulkhead harness connector bracket, and disconnect the bulkhead harness connector from the engine harness connector (black).

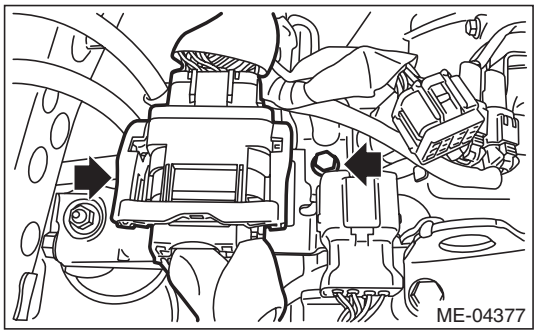

24) Remove the engine harness connector from the engine rear hanger.

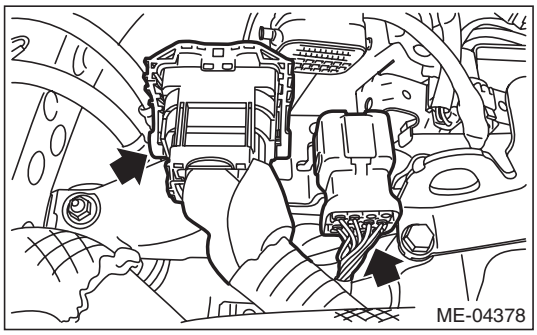

25) Disconnect the connector (A) from the engine coolant temperature sensor, connector (B) from the oil pressure switch, and connector (C) from the crankshaft position sensor.

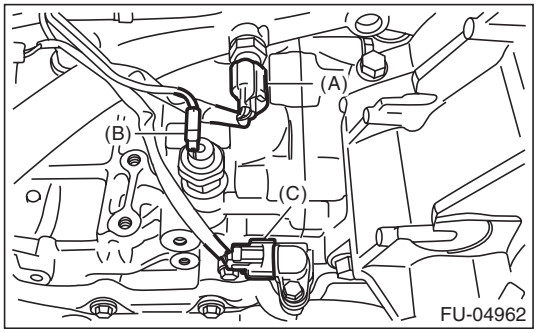

GETtheMANUALS.org

26) Disconnect the connector (A) from front oxygen (A/F) sensor and the connector (B) from the rear oxygen sensor.

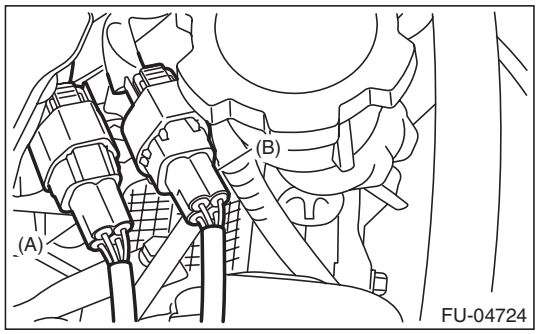

27) Remove the clip which secure the generator cord to the intake manifold protector LH.

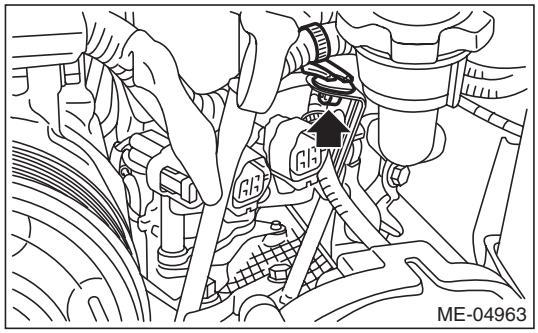

28) Disconnect the connector from the knock sensor.

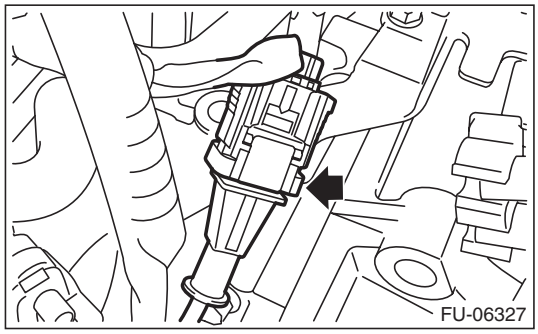

29) Disconnect the connector from the intake camshaft position sensor.

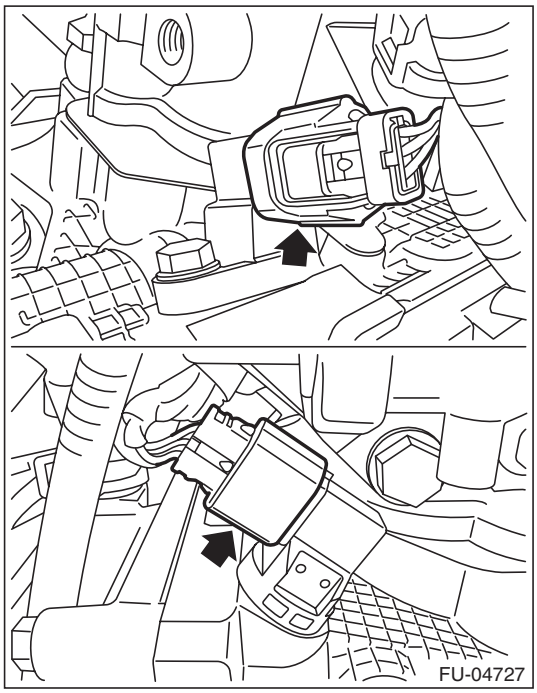

30) Disconnect the connector from the intake oil flow control solenoid valve.

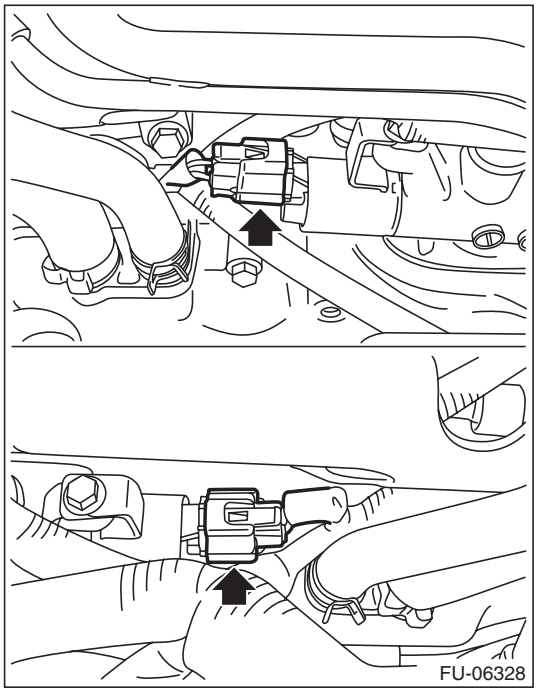

31) Disconnect the connector (A) from oil level switch.

GETtheMANUALS.org

32) Disconnect the connector (B) from ignition coil, and remove the clips (C) and bolt (D) securing the engine harness or oil level switch harness to the rocker cover.

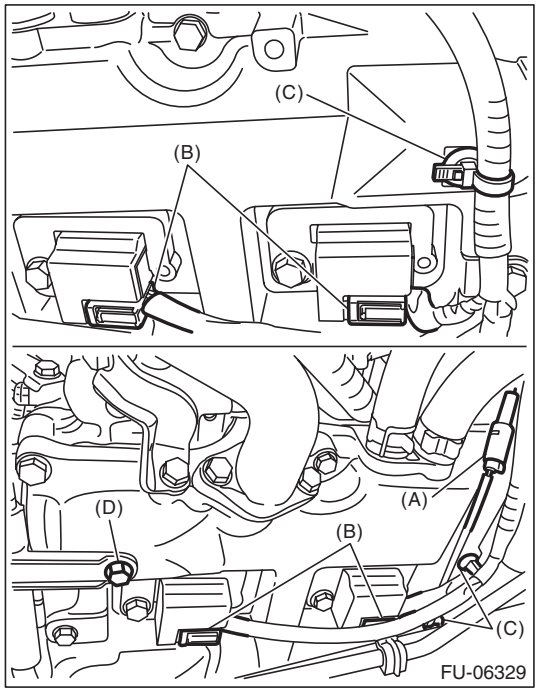

33) Attach ST to the fuel delivery pipe and push ST in the direction of arrow mark to disconnect the fuel delivery hose.

ST 42099AE000 QUICK CONNECTOR RELEASE

CAUTION:
- **Be careful not to spill fuel.**
- **Catch the fuel from hoses using a container or cloth.**

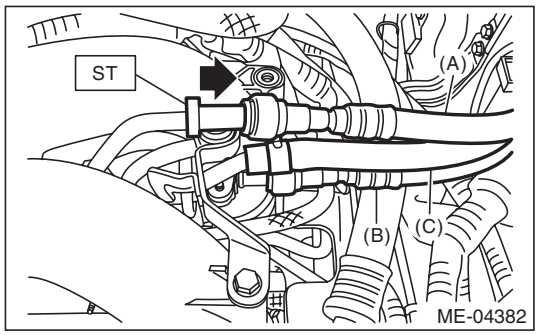

(A) Fuel delivery hose
(B) Fuel return hose
(C) Evaporation hose

34) Disconnect the fuel return hose using the ST.

ST 18371AA000 CONNECTOR REMOVER

CAUTION:
- **Be careful not to spill fuel.**
- **Catch the fuel from hoses using a container or cloth.**

(1) Attach ST to the fuel return pipe as shown in the figure.

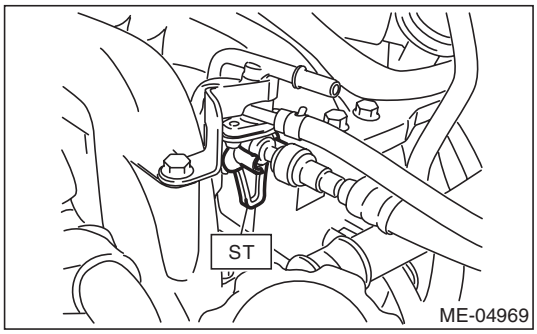

(2) Insert the front side of ST into the quick connector.

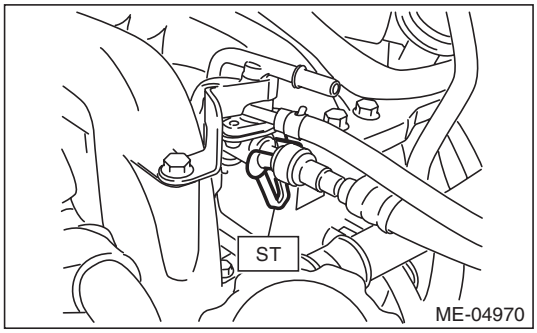

(3) Insert the back side of ST into the quick connector and push ST in the direction of arrow mark to disconnect the fuel return hose.

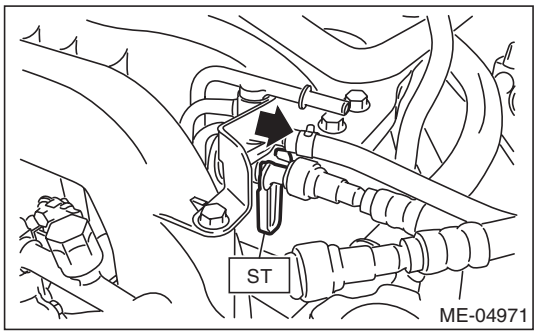

GETtheMANUALS.org

35) Remove the clip and disconnect the evaporation hose from the fuel pipe.

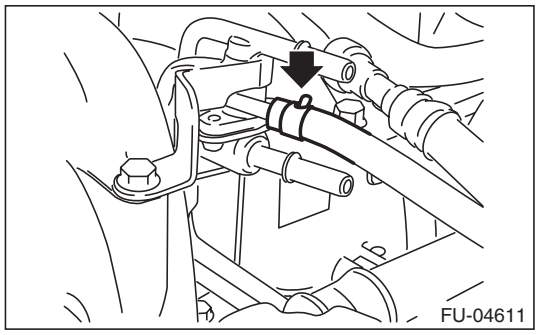

36) Remove the intake manifold from cylinder head.

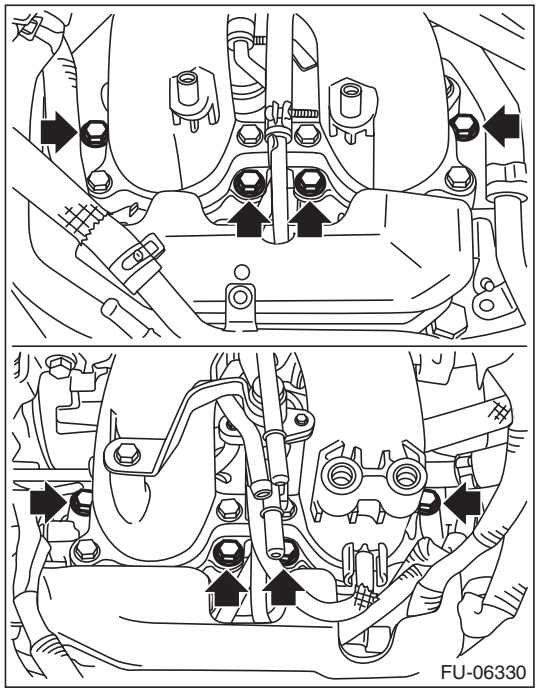

B: INSTALLATION

1) Install the intake manifold onto cylinder heads.

NOTE:
Use a new gasket.

Tightening torque:
25 N·m (2.5 kgf-m, 18.4 ft-lb)

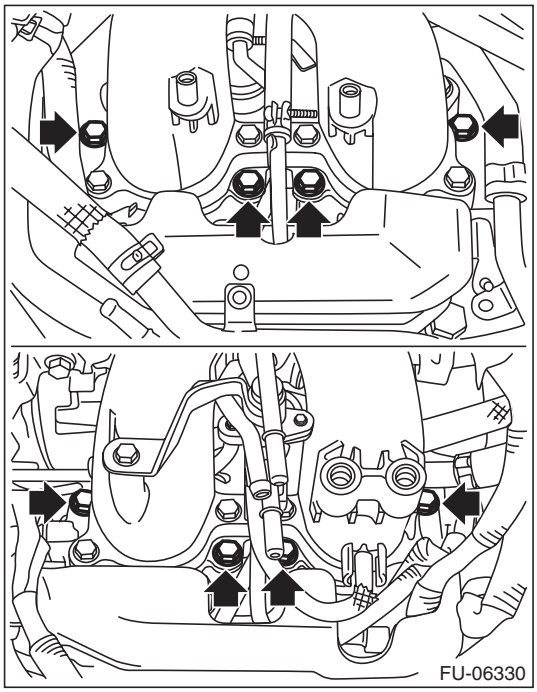

2) Connect the fuel delivery hose, fuel return hose, and evaporation hose.

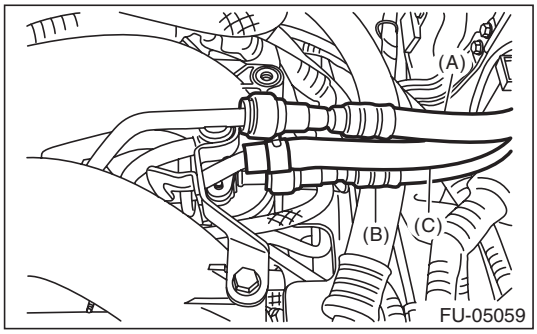

(A) Fuel delivery hose
(B) Fuel return hose
(C) Evaporation hose

3) Connect the connector (A) to the oil level switch.

GETmyMANUALS.org

4) Connect the connector (B) to ignition coil, and secure the engine harness or oil level switch harness to the rocker cover with clips (C) and bolt (D).

Tightening torque:
6.4 N·m (0.7 kgf-m, 4.7 ft-lb)

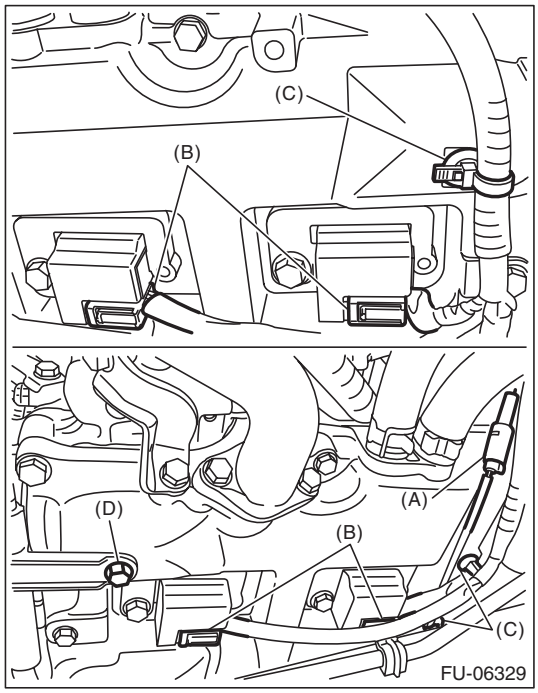

5) Connect the connector to the intake oil flow control solenoid valve.

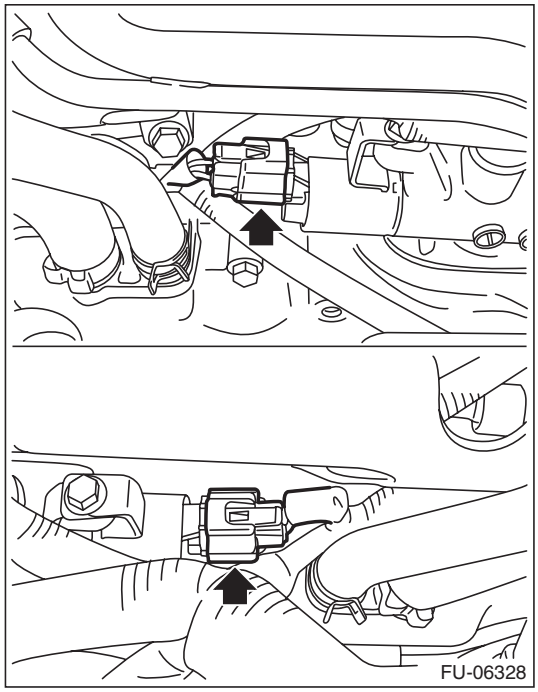

6) Connect the connector to the intake camshaft position sensor.

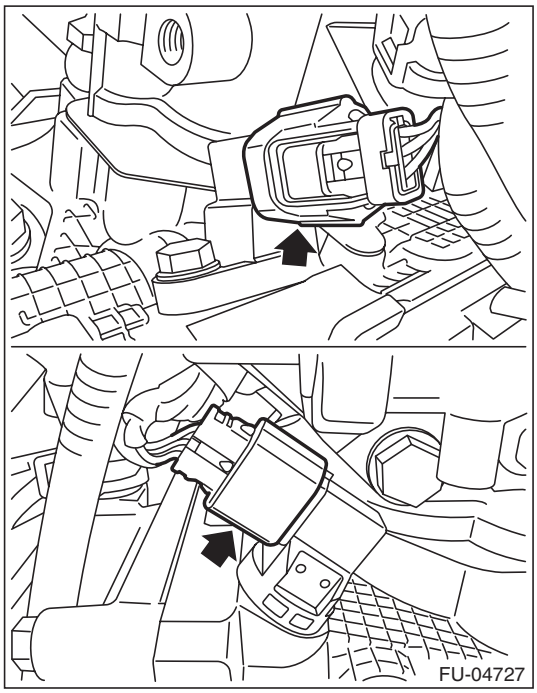

7) Connect the connector to the knock sensor.

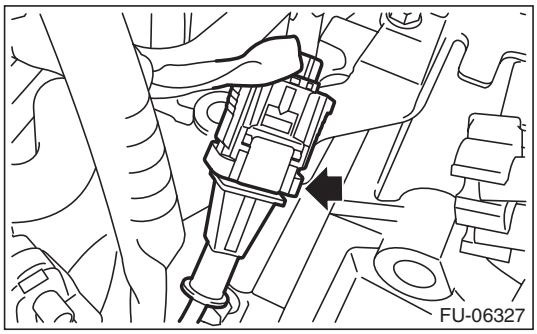

8) Secure the generator cord to the intake manifold protector LH with a clip.

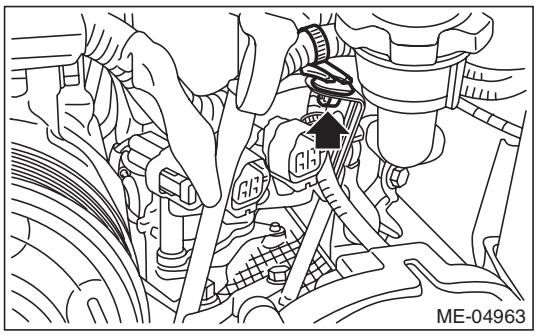

GETtheMANUALS.org

9) Connect the connector (A) to the front oxygen (A/F) sensor and the connector (B) from to the rear oxygen sensor.

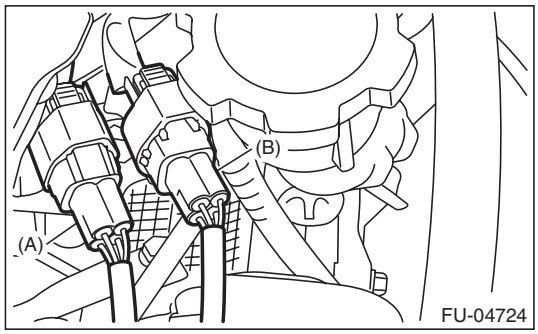

10) Connect the connector (A) to the engine coolant temperature sensor, connector (B) to the oil pressure switch, and the connector (C) to the crankshaft position sensor.

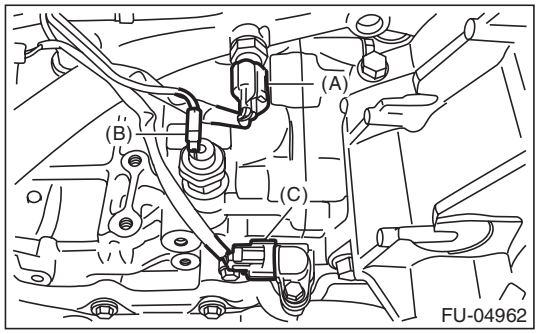

11) Install the engine harness connector to the engine rear hanger.

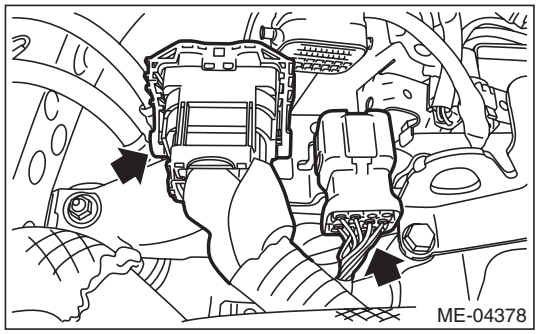

12) Connect the bulkhead harness connector to the engine harness connector (black), and install the bolt securing the bulkhead harness connector bracket.

Tightening torque:
6.4 N·m (0.7 kgf-m, 4.7 ft-lb)

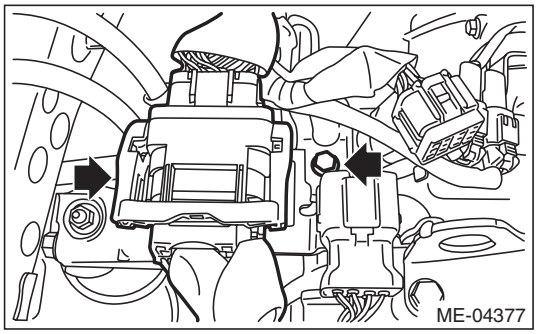

13) Connect the bulkhead harness connector to the engine harness connector (brown).

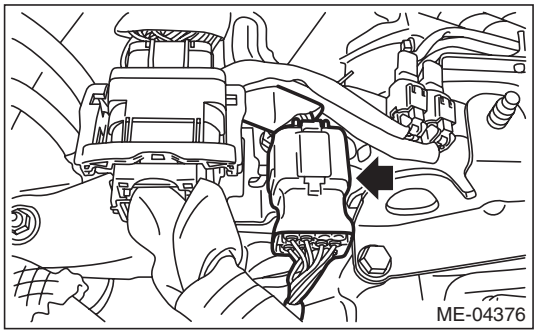

14) Install the PCV pipe to the intake manifold protector RH, and connect vacuum control hose (A) to the PCV pipe.

Tightening torque:
6.4 N·m (0.7 kgf-m, 4.7 ft-lb)

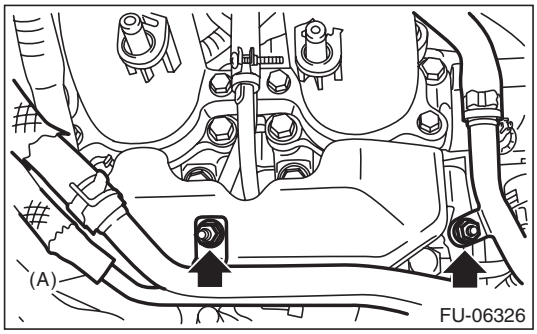

GETtheMANUALS.org

15) Install the blow-by pipe to the PCV pipe, and connect vacuum hose to the blow-by pipe.

Tightening torque:
6.4 N·m (0.7 kgf-m, 4.7 ft-lb)

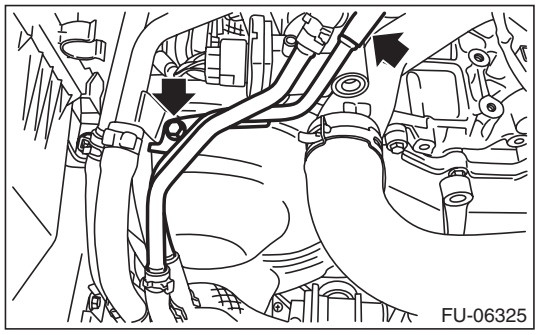

16) Connect the vacuum hose to PCV valve.

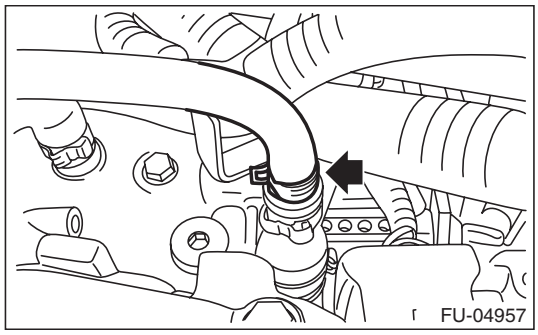

17) Connect the preheater hose to the throttle body, and connect the connector to the throttle position sensor.

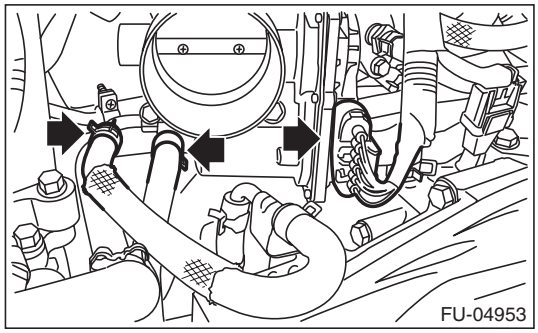

18) Install the intake duct to the throttle body.

NOTE:
When installing the intake duct to the throttle body, align the protrusion (a) on the intake duct to the installation position mark (b) on the throttle body to install.

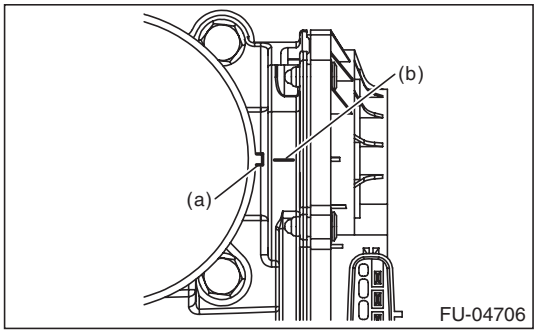

Tightening torque:
3 N·m (0.3 kgf-m, 2.2 ft-lb)

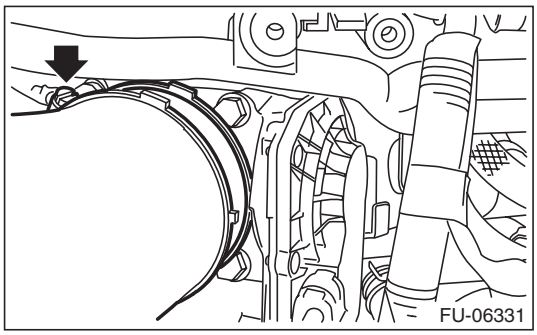

19) Install the bolts which secure the engine harness and PCV pipe to the intake manifold, and install the brake booster vacuum hose to the clip (A).

Tightening torque:
6.4 N·m (0.7 kgf-m, 4.7 ft-lb)

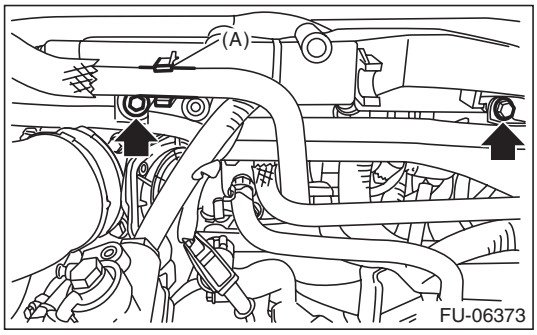

GETtheMANUALS.org

20) Connect the brake booster vacuum hose.

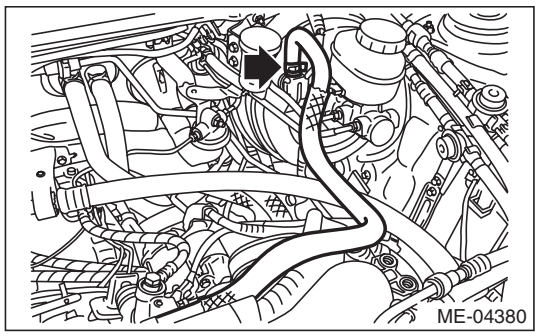

21) Install the A/C pressure hoses to A/C compressor. <Ref. to AC-76, INSTALLATION, Hose and Pipe.>
22) Install the intercooler. <Ref. to IN(H4DOTC)-18, INSTALLATION, Intercooler.>
23) Install the air intake duct. <Ref. to IN(H4DOTC)-12, INSTALLATION, Air Intake Duct.>
24) Lift up the vehicle.
25) Connect the connectors to the wastegate control solenoid valve, and secure the engine harness with clip (A).

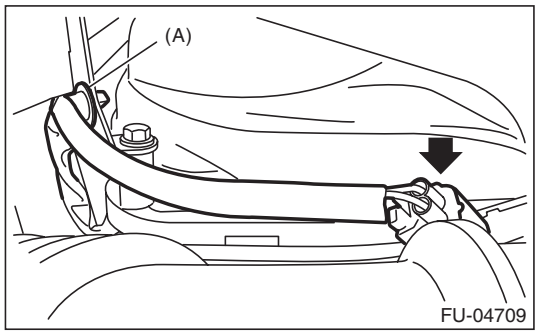

26) Connect the connector (A) to the exhaust camshaft position sensor and the connector (B) to the exhaust oil flow control solenoid valve.

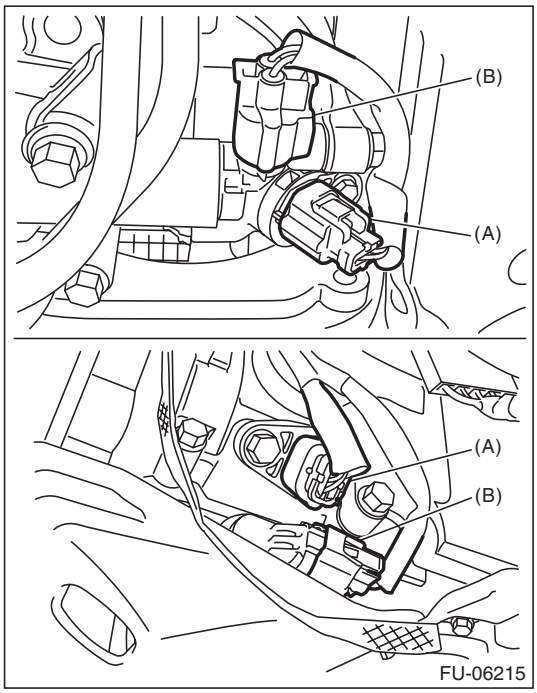

27) Install the under cover. <Ref. to EI-35, INSTALLATION, Front Under Cover.>
28) Lower the vehicle.
29) Connect the battery ground terminal.

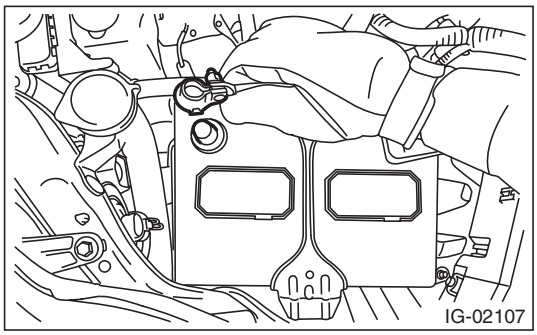

30) Fill engine coolant. <Ref. to CO(H4DOTC)-14, FILLING OF ENGINE COOLANT, REPLACEMENT, Engine Coolant.>
31) Charge the A/C system with refrigerant. <Ref. to AC-25, PROCEDURE, Refrigerant Charging Procedure.>
32) Install the collector cover.

GETtheMANUALS.org

C: DISASSEMBLY

1) Remove the intake manifold protector RH from intake manifold.

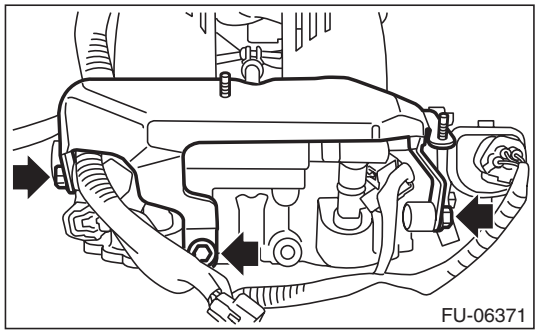

2) Remove the gray connector (A), the black connector (B), and the clip (C) which holds the engine harness from the intake manifold protector LH.

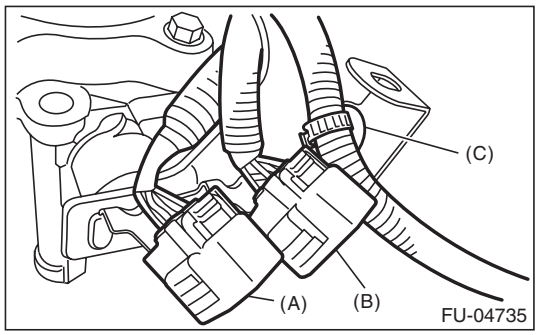

3) Remove the engine ground terminal from the intake manifold protector LH, and remove the intake manifold protector LH from the intake manifold.

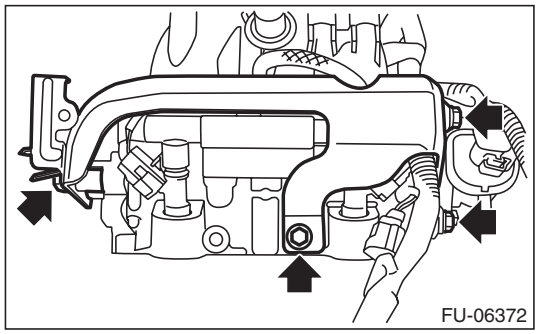

4) Remove the filter assembly.

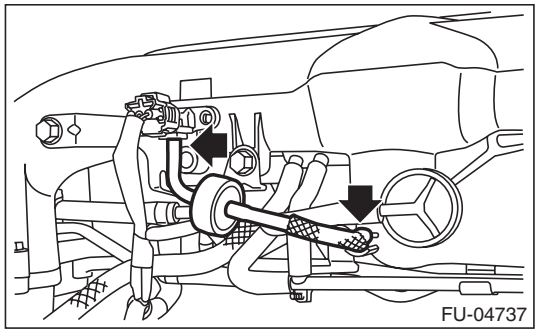

5) Disconnect the vacuum hose from the intake manifold and fuel delivery pipe.

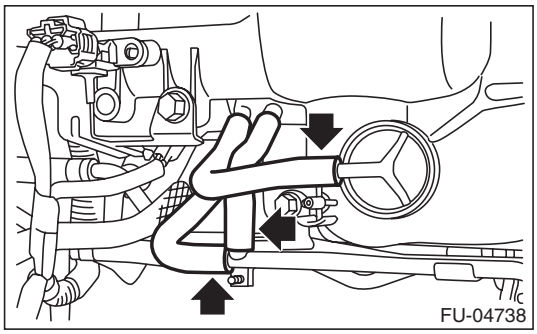

6) Disconnect the connector from the manifold absolute pressure sensor, and remove the solenoid valve bracket assembly from the intake manifold.

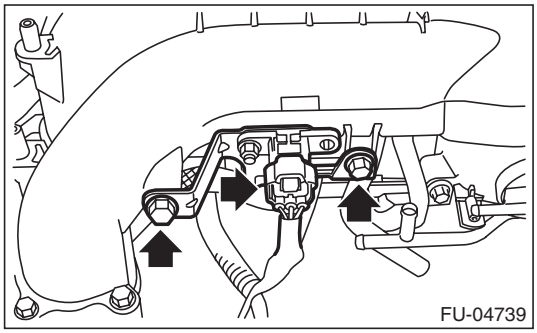

7) Disconnect the connectors from the purge control solenoid valves 1 and 2.

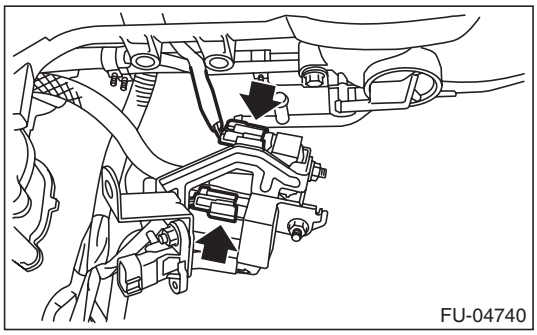

8) Remove the throttle body from the intake manifold.

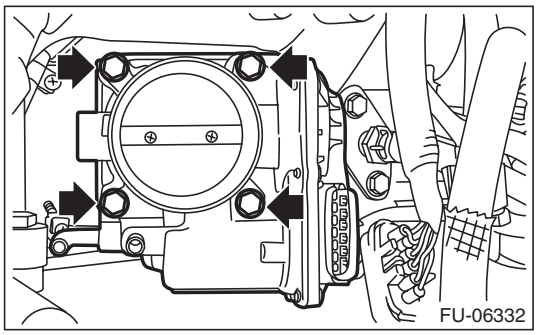

GETmyMANUALS.org

9) Disconnect the connector from the fuel injector and tumble generator valve assembly, and remove the engine harness from the intake manifold.

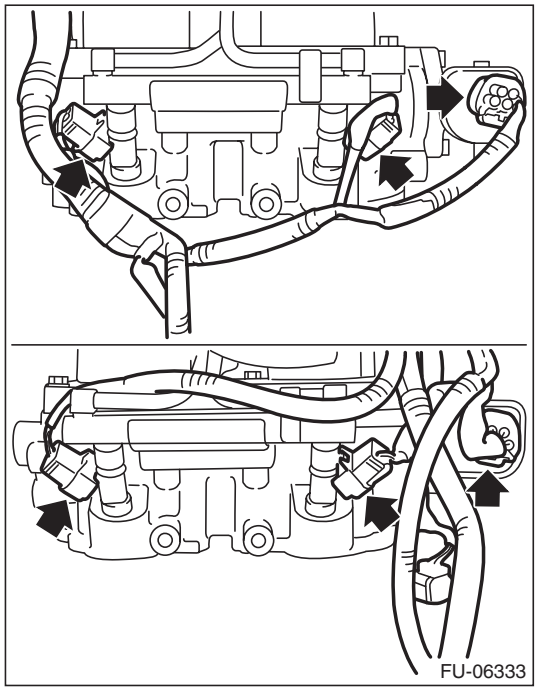

10) Remove the bolts which secure the fuel delivery pipe assembly to the intake manifold, and disconnect the pressure regulator vacuum hose from the intake manifold.

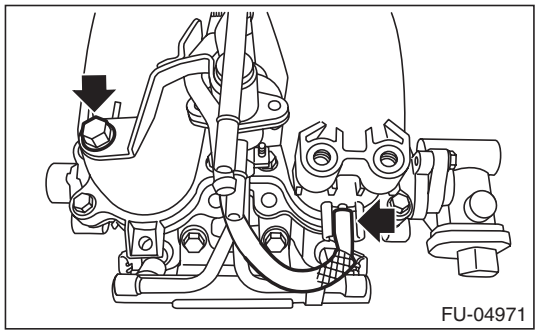

11) Remove the bolts which hold fuel pipe onto intake manifold.

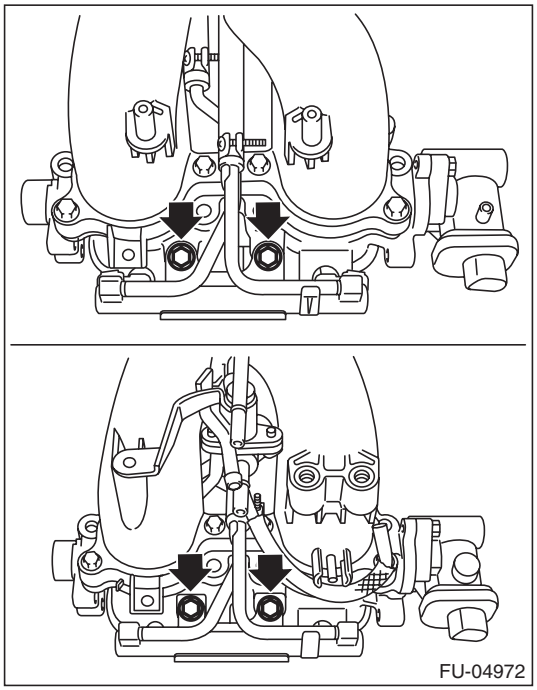

12) Remove the fuel injector.

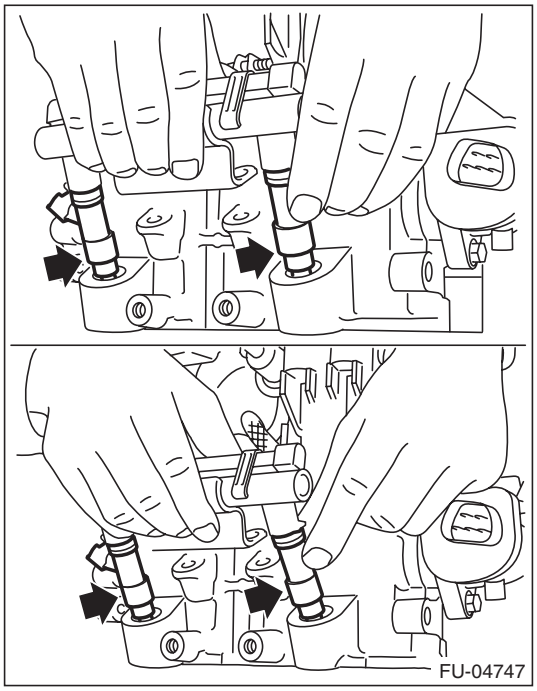

GETtheMANUALS.org

13) Disconnect vacuum hose (A), vacuum control hose (B) and brake booster vacuum hose (C) from the intake manifold.

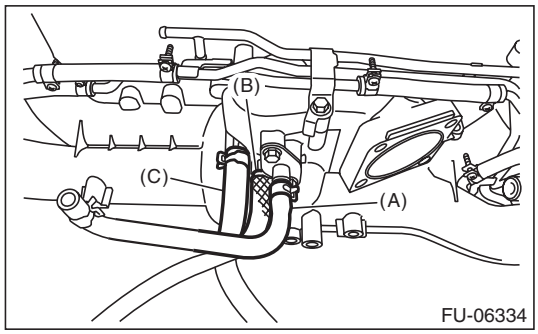

14) Remove the bolts which secure the fuel delivery pipe to the intake manifold, loosen the clamps which hold the fuel hose to the fuel delivery pipe, and remove the fuel delivery pipe and fuel pipe.

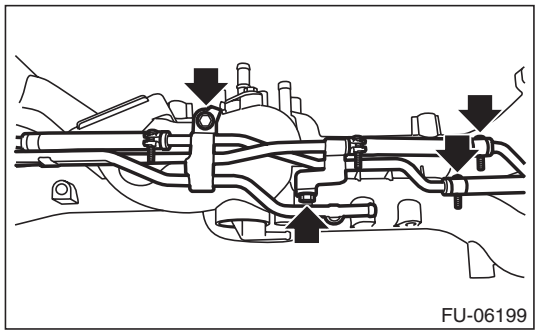

15) Remove the nipple from the intake manifold.

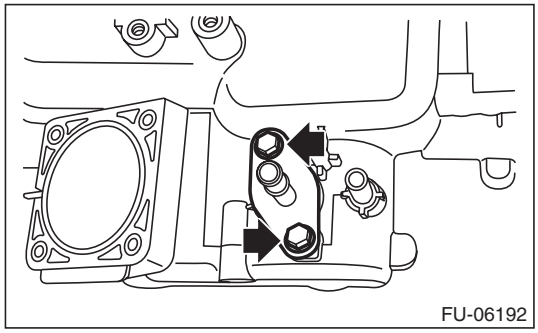

16) Remove the tumble generator valve assembly from the intake manifold.

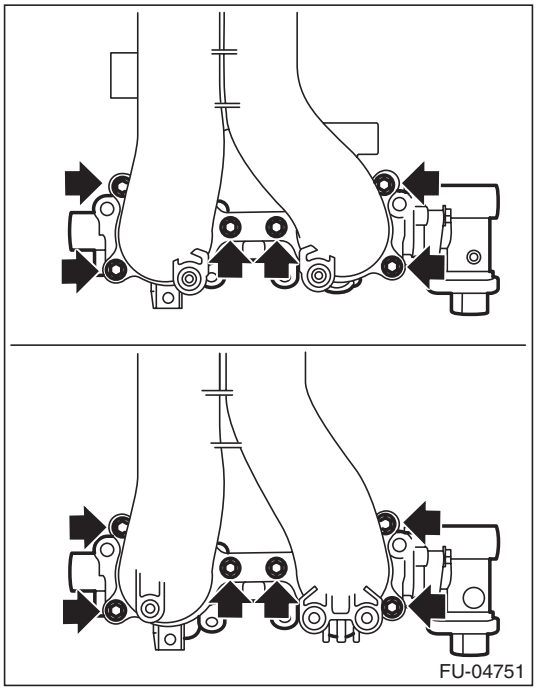

D: ASSEMBLY

1) Install the tumble generator valve assembly onto intake manifold.

NOTE:
Use new O-rings.

Tightening torque:
8.3 N·m (0.8 kgf-m, 6.1 ft-lb)

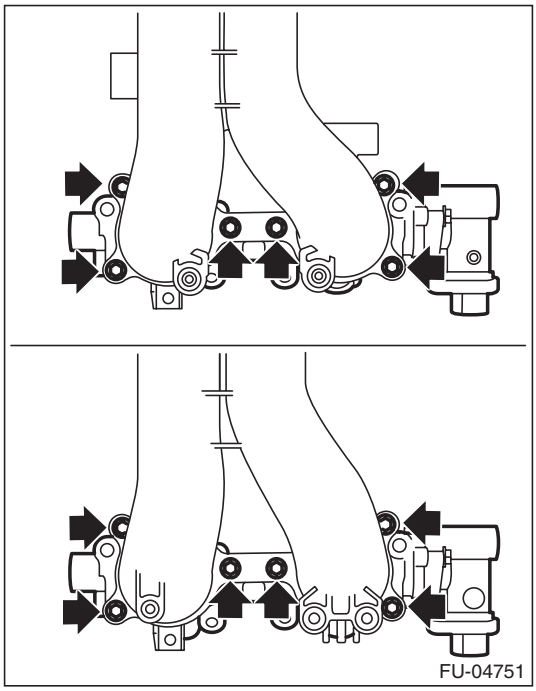

GETmyMANUALS.org

2) Install the nipple to the intake manifold.

NOTE:
Use new O-rings.

Tightening torque:
7.8 N·m (0.8 kgf-m, 5.8 ft-lb)

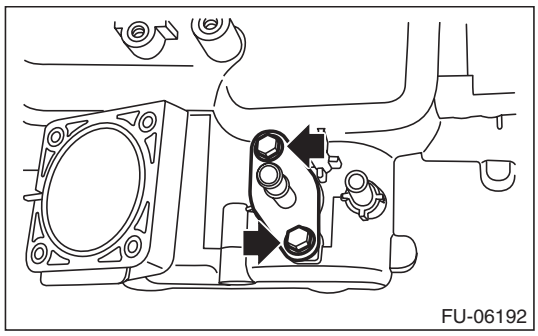

3) Set the fuel delivery pipe and fuel pipe, and connect the fuel hose to the fuel delivery pipe. <Ref. to FU(H4DOTC)-93, CONNECTING THE FUEL DELIVERY HOSE, FUEL RETURN HOSE AND FUEL HOSE, INSTALLATION, Fuel Delivery, Return and Evaporation Lines.>

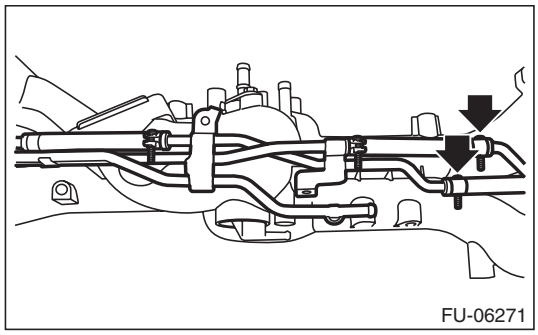

4) Install the fuel delivery pipe to the intake manifold.

Tightening torque:
6.4 N·m (0.7 kgf-m, 4.7 ft-lb)

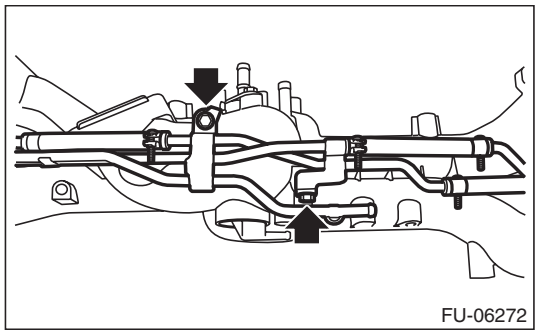

5) Connect vacuum hose (A), vacuum control hose (B) and brake booster vacuum hose (C) to the intake manifold.

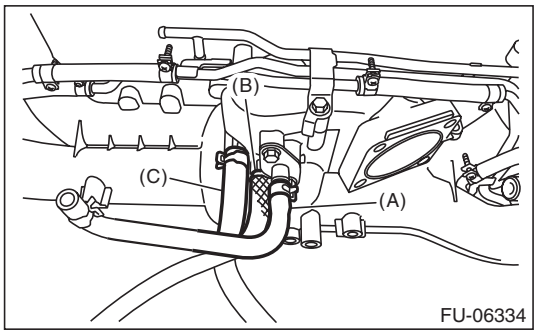

6) Install the fuel injector.

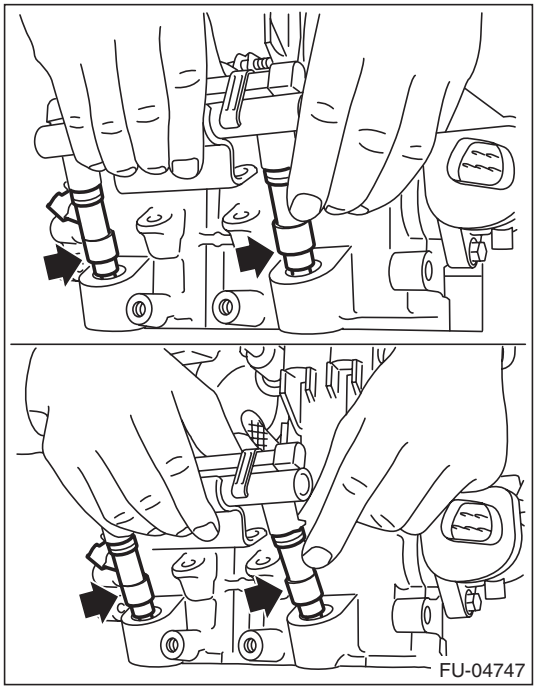

GETtheMANUALS.org

7) Install the bolts which secure fuel pipe to the intake manifold.

Tightening torque:
19 N·m (1.9 kgf-m, 14.0 ft-lb)

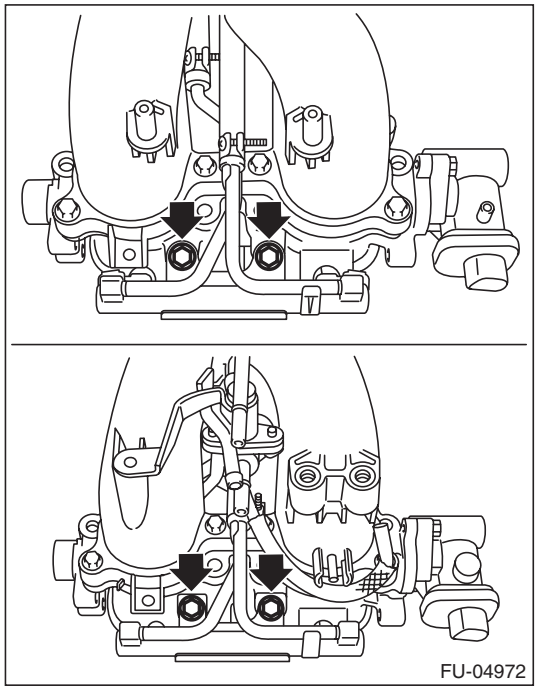

8) Install the bolts which secure fuel delivery pipe to the intake manifold, and connect the pressure regulator vacuum hose to the intake manifold.

Tightening torque:
6.4 N·m (0.7 kgf-m, 4.7 ft-lb)

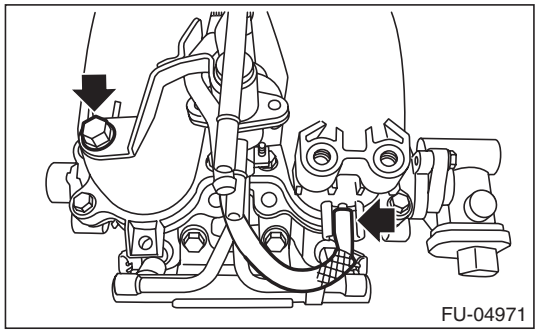

9) Set the engine harness to the intake manifold, and connect the connector to the fuel injector and tumble generator valve assembly.

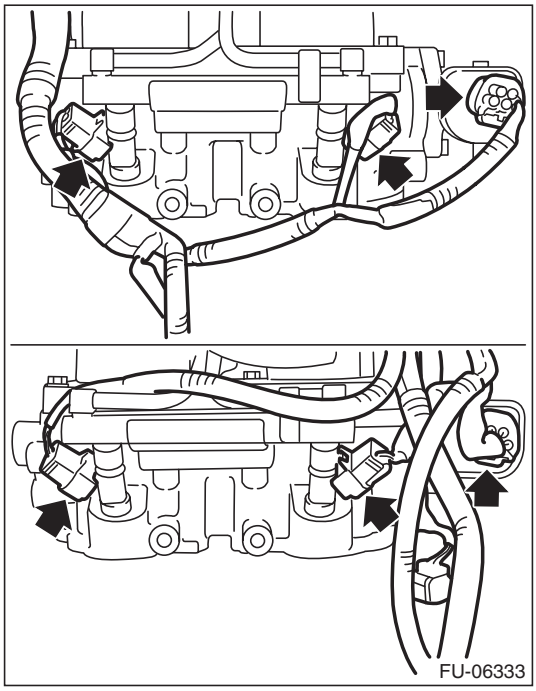

10) Install the throttle body to the intake manifold.

NOTE:
Use new O-rings.

Tightening torque:
8 N·m (0.8 kgf-m, 5.9 ft-lb)

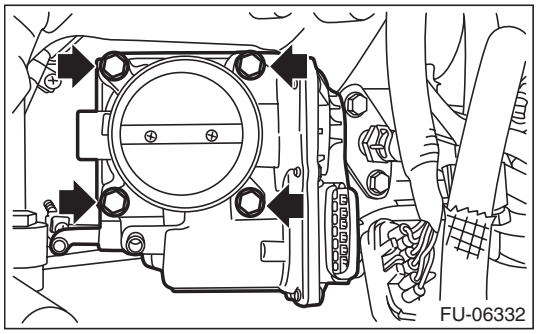

11) Connect the connectors to the purge control solenoid valves 1 and 2.

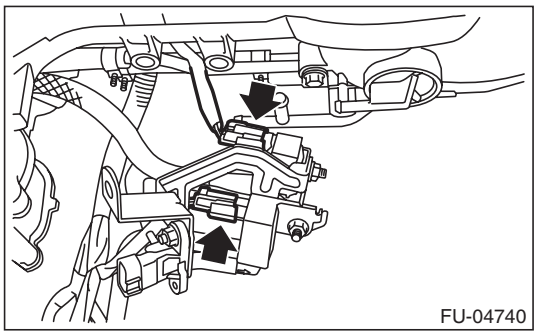

GETmyMANUALS.org

12) Install the solenoid valve bracket assembly to the intake manifold, and connect the connector to the manifold absolute pressure sensor.

Tightening torque:
19 N·m (1.9 kgf-m, 14.0 ft-lb)

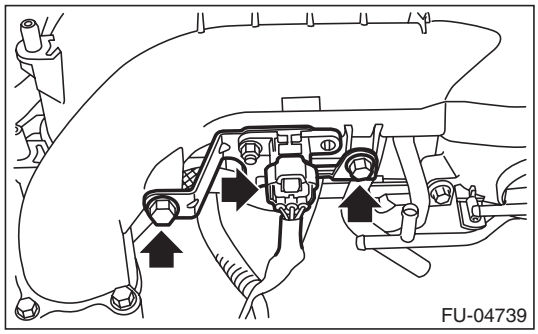

13) Connect the vacuum hose to the intake manifold and fuel delivery pipe.

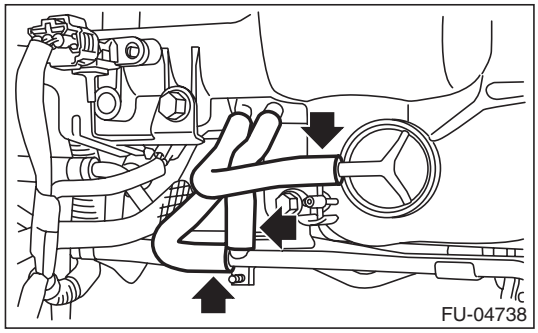

14) Install the filter assembly.

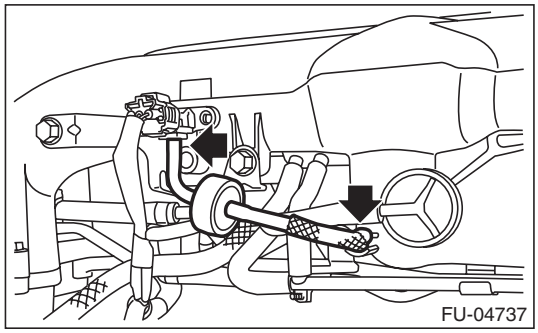

15) Install the intake manifold protector LH to the intake manifold, and install the engine ground terminal to the intake manifold protector.

NOTE:
Route the gray connector and black connector under the intake manifold protector as shown in the figure.

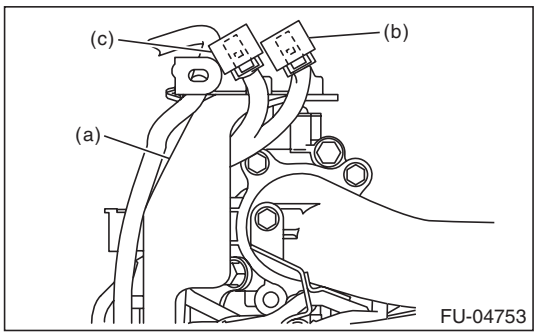

(a) Intake manifold protector
(b) Gray connector
(c) Black connector

Tightening torque:
19 N·m (1.9 kgf-m, 14.0 ft-lb)

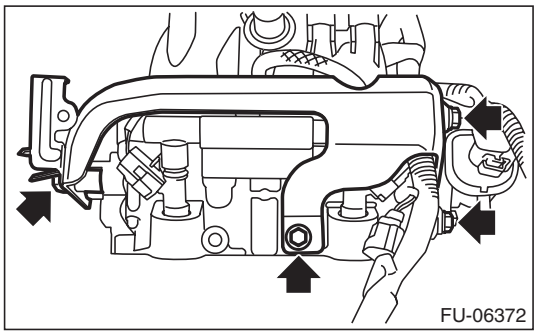

16) Install the gray connector (A), the black connector (B), and the clip (C) which holds the engine harness to the intake manifold protector LH.

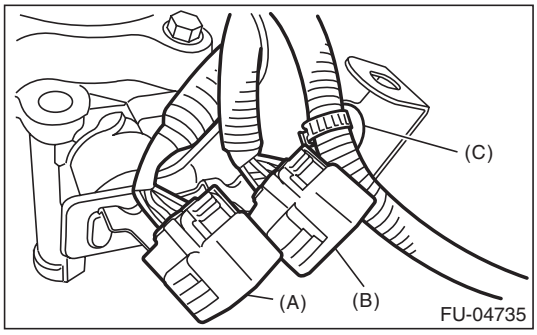

GETmyMANUALS.org

17) Install the intake manifold protector RH to the intake manifold.

Tightening torque:
19 N·m (1.9 kgf-m, 14.0 ft-lb)

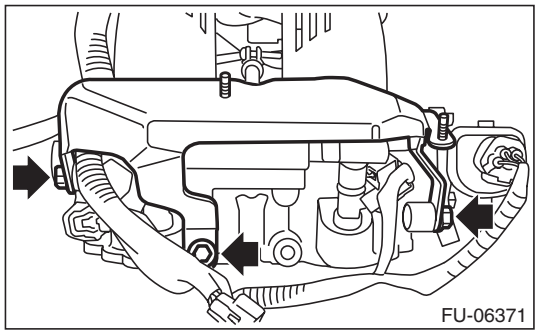

E: INSPECTION

1) Check that the intake manifold and fuel pipe have no deformation, cracks and other damages.
2) Check that the hose has no cracks, damage or loose part.

GETmyMANUALS.org

4. Engine Coolant Temperature Sensor

A: REMOVAL

1) Remove the collector cover.
2) Disconnect the ground cable from battery.

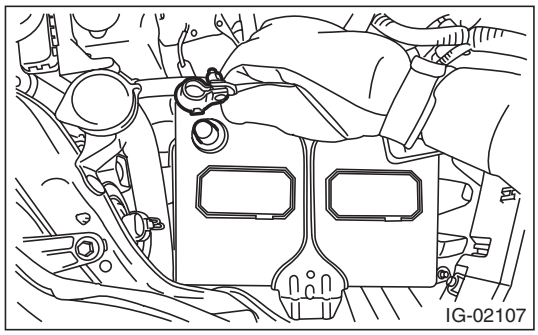

3) Remove the generator. <Ref. to SC(H4SO)-18, REMOVAL, Generator.>
4) Drain engine coolant. <Ref. to CO(H4DOTC)-14, DRAINING OF ENGINE COOLANT, REPLACEMENT, Engine Coolant.>
5) Disconnect the connector (A) from the engine coolant temperature sensor, and remove the engine coolant temperature sensor.

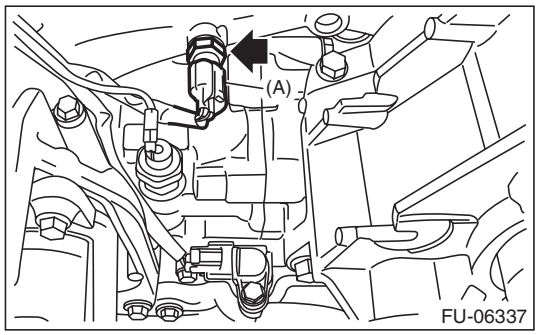

B: INSTALLATION

Install in the reverse order of removal.

NOTE:
Use a new gasket.

Tightening torque:
18 N·m (1.8 kgf-m, 13.3 ft-lb)

C: INSPECTION

1) Check that the engine coolant temperature sensor has no deformation, cracks or other damages.

2) Immerse the engine coolant temperature sensor and a thermometer in water.

CAUTION:
Take care not to allow water to get into the engine coolant temperature sensor connector. Completely remove any water inside.

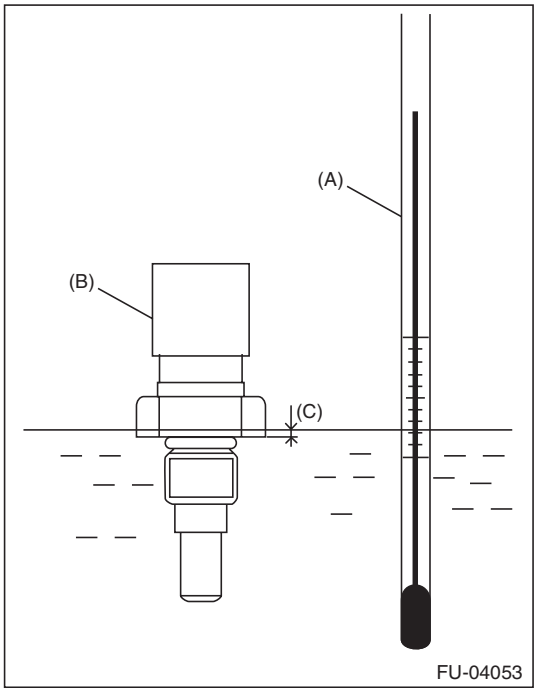

(A) Thermometer
(B) Engine coolant temperature sensor
(C) Hexagonal part height: To approx. $^1/_3$

3) Raise water temperature gradually, measure the resistance between the engine coolant temperature sensor terminals when the temperature is 20°C (68°F) and 80°C (176°F).

NOTE:
Agitate the water for even temperature distribution.

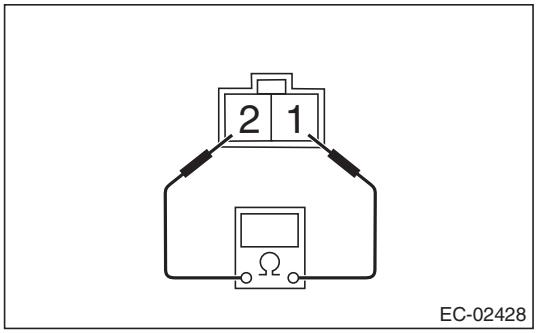

Water temperature	Terminal No.	Standard
20°C (68°F)	1 and 2	2.45±0.2 kΩ
80°C (176°F)		0.318±0.013 kΩ

GETtheMANUALS.org

5. Crankshaft Position Sensor

A: REMOVAL

1) Remove the collector cover.
2) Disconnect the ground cable from battery.

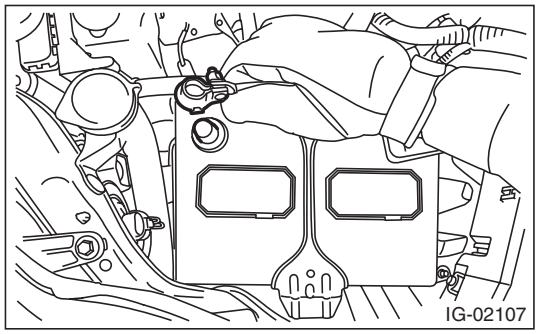

3) Remove the bolt which secures crankshaft position sensor to oil pump.

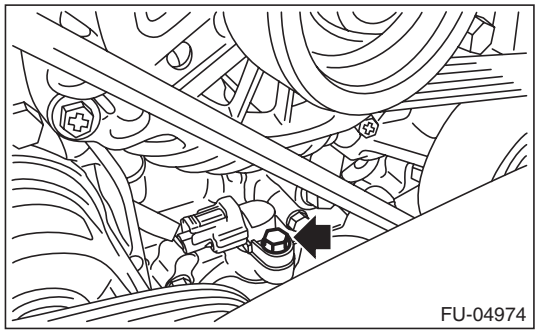

4) Remove the crankshaft position sensor, and disconnect the connector from the crankshaft position sensor.

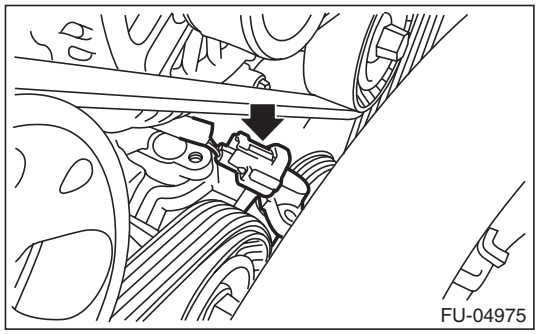

B: INSTALLATION

Install in the reverse order of removal.

Tightening torque:
6.4 N·m (0.7 kgf-m, 4.7 ft-lb)

C: INSPECTION

1. CRANKSHAFT POSITION SENSOR (METHOD WITH CIRCUIT TESTER)

1) Measure the resistance between crankshaft position sensor terminals.

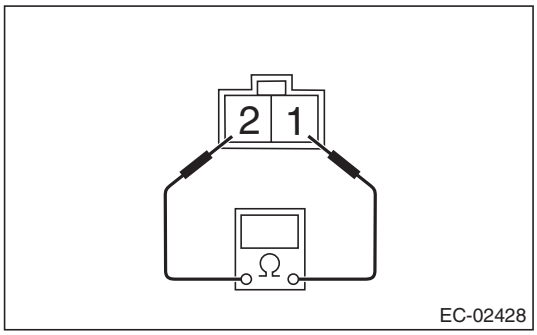

Terminal No.	Standard
1 and 2	2.04±0.204 kΩ

2. CRANKSHAFT POSITION SENSOR (METHOD WITH OSCILLOSCOPE)

1) Prepare an oscilloscope.
2) Remove the glove box lid assembly. <Ref. to EI-66, REMOVAL, Glove Box.>
3) Connect the probe to ECM connector.

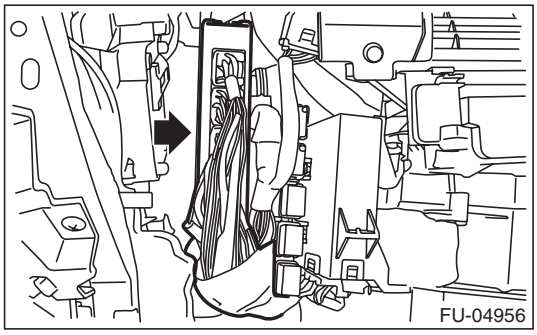

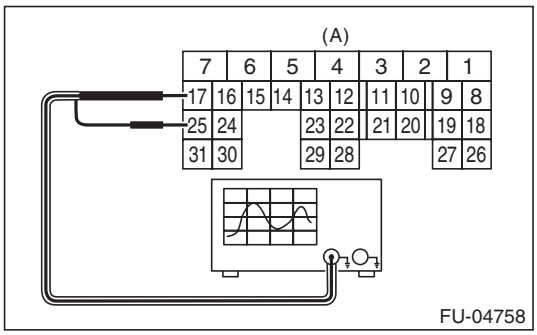

(A) To ECM connector

Terminal No.	Probe
17	+
25	–

4) Start the engine and let it idle.

GETthemANUALS.org

5) Check that the pattern is the same as the waveform and voltage shown below.

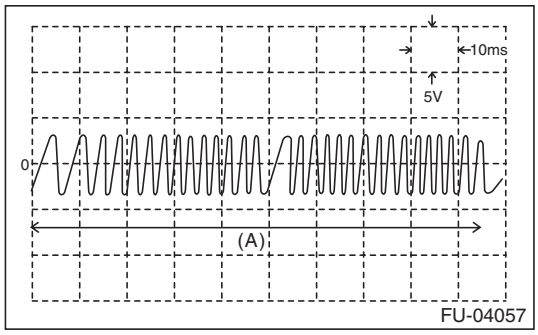

(A) One crankshaft rotation

6) After inspection, install the related parts in the reverse order of removal.

3. OTHER INSPECTIONS

Check that the crankshaft position sensor has no deformation, cracks or other damages.

GETthemANUALS.org

6. Camshaft Position Sensor

A: REMOVAL

1. INTAKE SIDE

- **Camshaft position sensor RH**

1) Disconnect the ground cable from battery.

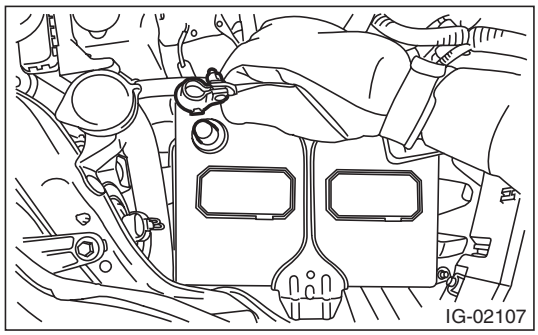

2) Disconnect the connector (A) from the camshaft position sensor RH, and remove the camshaft position sensor RH.

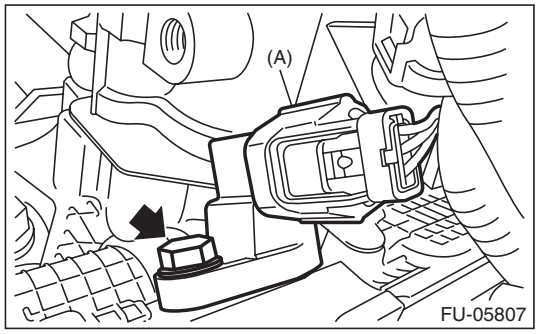

- **Camshaft position sensor LH**

1) Disconnect the ground cable from battery.

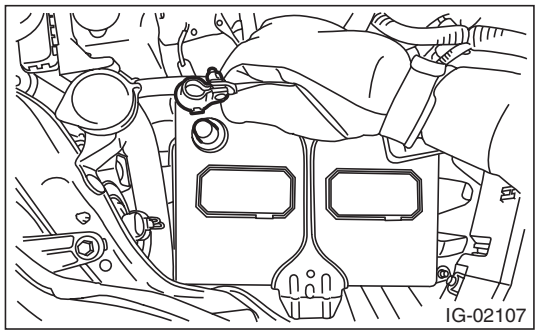

2) Remove the intake manifold. <Ref. to FU(H4DOTC)-18, REMOVAL, Intake Manifold.>

3) Remove the camshaft position sensor LH.

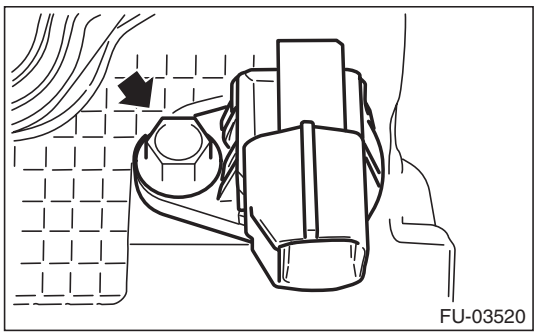

2. EXHAUST SIDE

1) Disconnect the ground cable from battery.

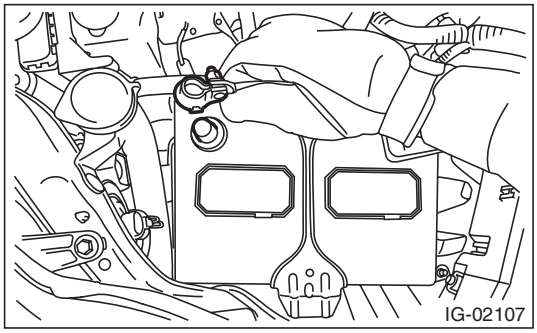

2) Lift up the vehicle.
3) Remove the under cover. <Ref. to EI-35, REMOVAL, Front Under Cover.>
4) Disconnect the connector (A) from the camshaft position sensor, and remove the camshaft position sensor.

- RH side

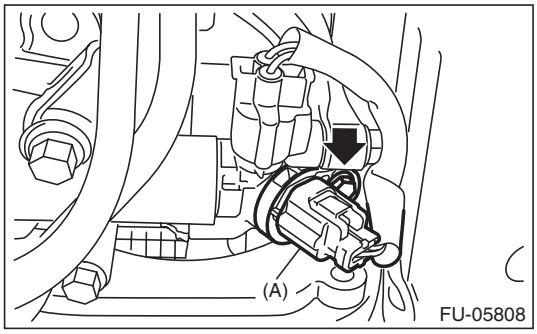

- LH side

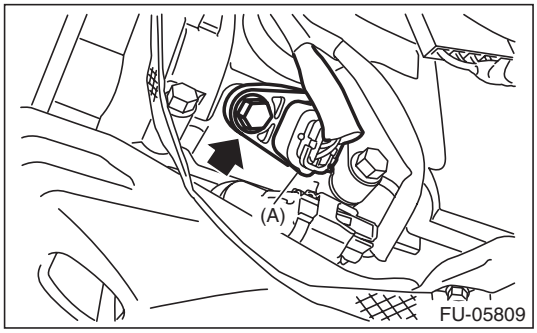

GETtheMANUALS.org

B: INSTALLATION

1. INTAKE SIDE

Install in the reverse order of removal.

Tightening torque:
6.4 N·m (0.7 kgf-m, 4.7 ft-lb)

2. EXHAUST SIDE

Install in the reverse order of removal.

Tightening torque:
6.4 N·m (0.7 kgf-m, 4.7 ft-lb)

C: INSPECTION

1. CAMSHAFT POSITION SENSOR (METHOD WITH OSCILLOSCOPE)

1) Prepare an oscilloscope.
2) Remove the glove box lid assembly. <Ref. to EI-66, REMOVAL, Glove Box.>
3) Connect the probe to ECM connector.

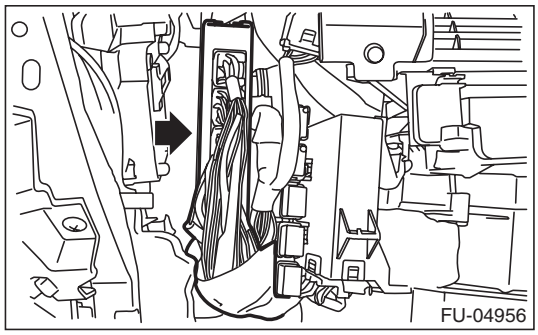

- Intake camshaft position sensor

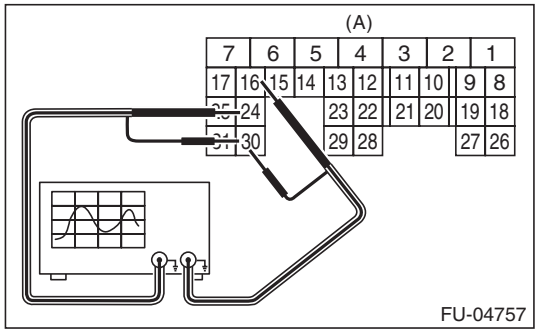

(A) To ECM connector

- Exhaust camshaft position sensor

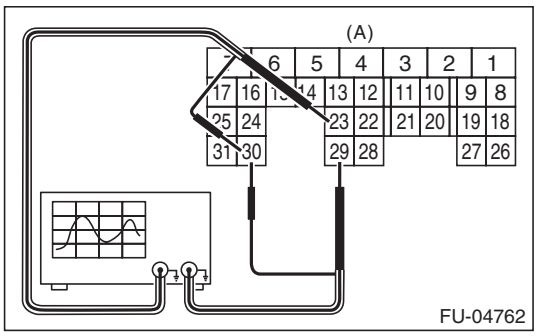

(A) To ECM connector

Camshaft position sensor		Terminal No.	Probe
Intake	RH	24	+
	LH	16	+
Exhaust	RH	23	+
	LH	29	+
RH and LH		30	–

4) Start the engine and let it idle.
5) Check that the pattern is the same as the waveform and voltage shown below.

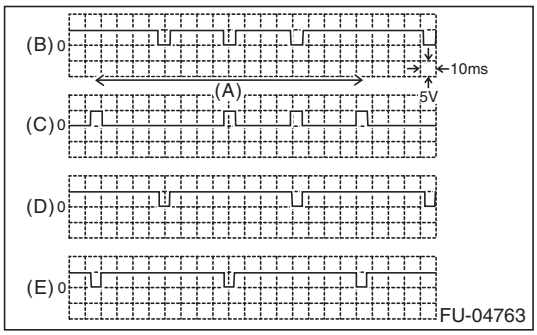

(A) One camshaft rotation
(B) Intake camshaft position sensor RH
(C) Intake camshaft position sensor LH
(D) Exhaust camshaft position sensor RH
(E) Exhaust camshaft position sensor LH

6) After inspection, install the related parts in the reverse order of removal.

2. OTHER INSPECTIONS

Check that the camshaft position sensor has no deformation, cracks or other damages.

GETthemANUALS.org

7. Knock Sensor

A: REMOVAL

1) Remove the collector cover.
2) Disconnect the ground cable from battery.

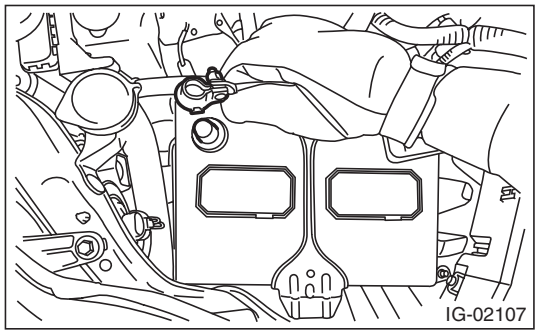

3) Remove the intercooler. <Ref. to IN(H4DOTC)-17, REMOVAL, Intercooler.>
4) Disconnect the connector from the knock sensor.

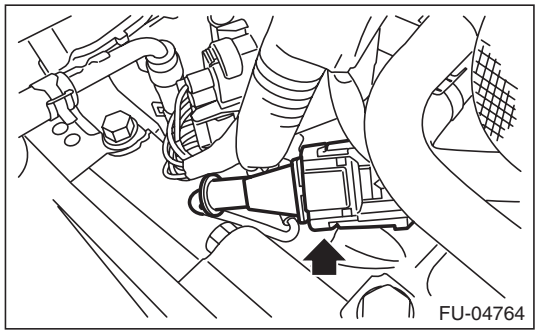

5) Remove the knock sensor from cylinder block.

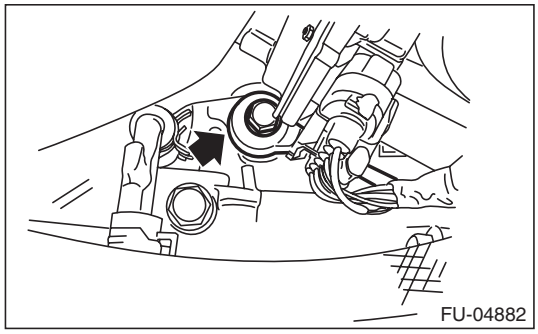

B: INSTALLATION

1) Install the knock sensor to the cylinder block.

NOTE:
The portion of the knock sensor cord that is pulled out must be positioned at a 60° angle relative to the engine rear.

Tightening torque:
24 N·m (2.4 kgf-m, 17.7 ft-lb)

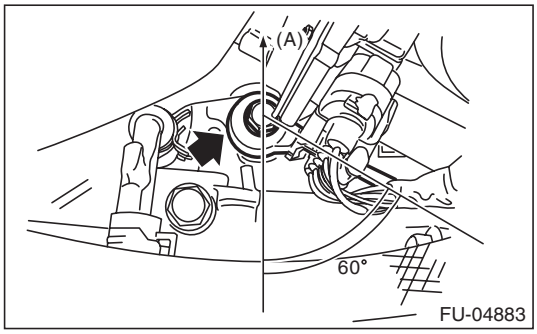

(A) Front side of vehicle

2) Connect the connector to the knock sensor.

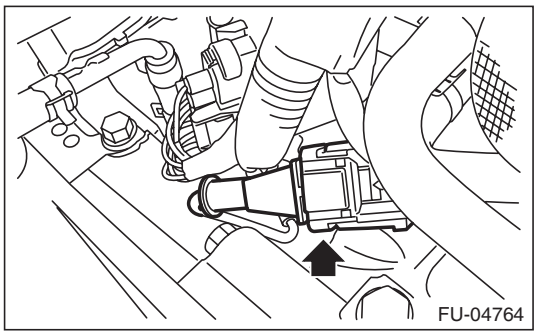

3) Install the intercooler. <Ref. to IN(H4DOTC)-18, INSTALLATION, Intercooler.>
4) Connect the ground cable to battery.

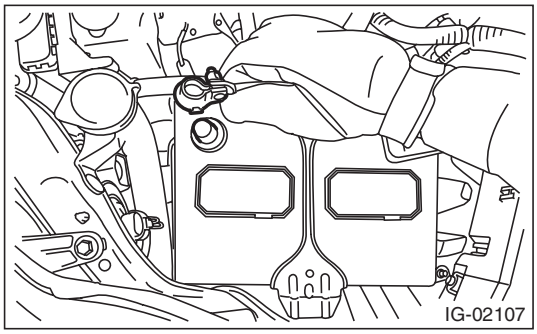

5) Install the collector cover.

GETthemANUALS.org

C: INSPECTION

1) Check that the knock sensor has no deformation, cracks or other damages.
2) Measure the resistance between knock sensor terminals.

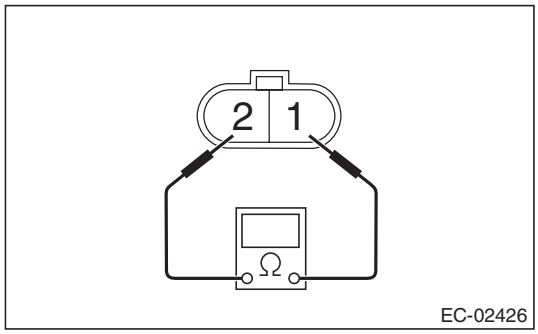

Terminal No.	Standard
1 and 2	560±28 kΩ

GETmyMANUALS.org

8. Throttle Position Sensor

A: SPECIFICATION

Throttle body is a non-disassembled part, so do not remove the throttle position sensor from throttle body.
Refer to “Throttle Body” for removal and installation procedure. <Ref. to FU(H4DOTC)-15, REMOVAL, Throttle Body.> <Ref. to FU(H4DOTC)-16, INSTALLATION, Throttle Body.>

GETmyMANUALS.org

9. Mass Air Flow and Intake Air Temperature Sensor

A: REMOVAL

1) Disconnect the ground cable from battery.

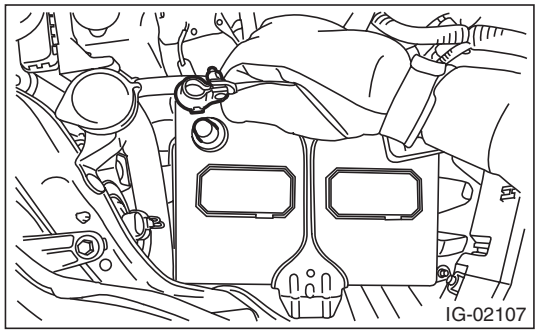

2) Disconnect the connector (A) from the mass air flow and intake air temperature sensor, and remove the mass air flow and intake air temperature sensor.

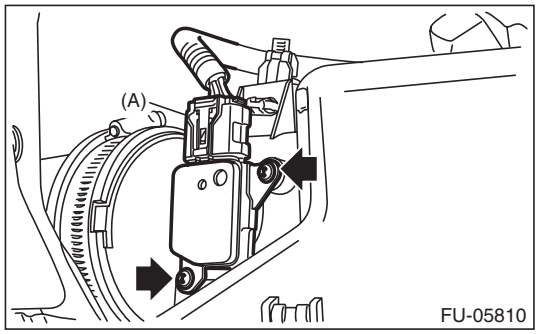

B: INSTALLATION

Install in the reverse order of removal.

Tightening torque:
1 N·m (0.1 kgf-m, 0.7 ft-lb)

C: INSPECTION

1. CHECK MASS AIR FLOW SENSOR UNIT

1) Connect battery positive terminal to terminal No. 3 and battery ground terminal to terminal No. 4, circuit tester positive terminal to terminal No. 5 and the circuit tester negative terminal to terminal No. 4.

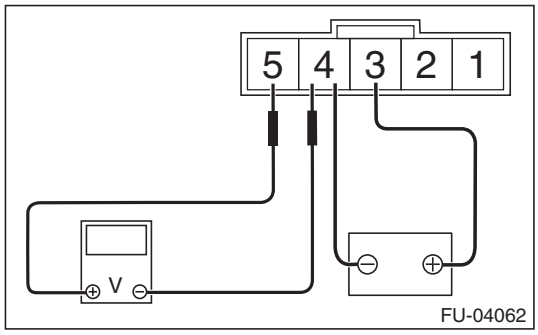

2) Check that the voltage changes when air is blown to the mass air flow sensor unit from arrow direction.

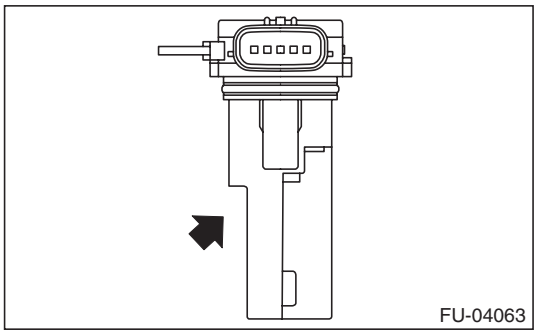

2. CHECK INTAKE AIR TEMPERATURE SENSOR UNIT

Measure the resistance between intake air temperature sensor terminals.

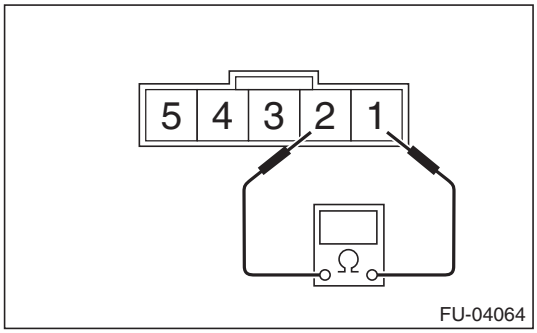

Temperature	Terminal No.	Standard
–20°C (–4°F)	1 and 2	16.0±2.4 kΩ
20°C (68°F)		2.45±0.24 kΩ
60°C (140°F)		0.580±0.087 kΩ

3. OTHER INSPECTIONS

1) Check that the mass air flow and intake air temperature sensor has no deformation, cracks or other damages.
2) Check that the mass air flow and intake air temperature sensor has no dirt.

GETmyMANUALS.org

10. Manifold Absolute Pressure Sensor

A: REMOVAL

1) Remove the collector cover.
2) Disconnect the ground cable from battery.

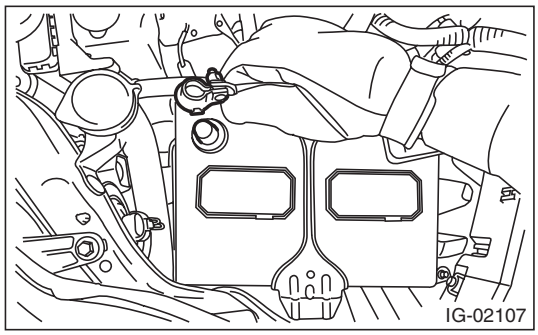

3) Disconnect the connector (A) from manifold absolute pressure sensor, and remove the filter assembly (B) from intake manifold.
4) Remove the manifold absolute pressure sensor from the solenoid valve bracket.

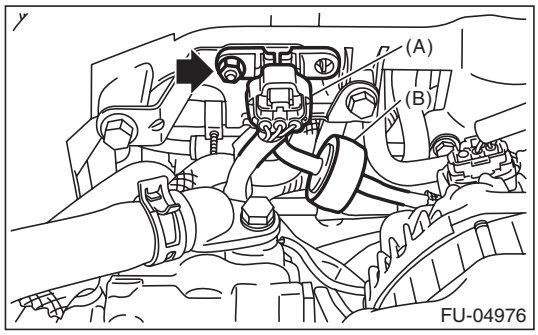

B: INSTALLATION

Install in the reverse order of removal.

Tightening torque:
6.4 N·m (0.7 kgf-m, 4.7 ft-lb)

C: INSPECTION

1) Check that the manifold absolute pressure sensor has no deformation, cracks or other damages.
2) Connect dry-cell battery positive terminal to terminal No. 3 and dry-cell battery ground terminal to terminal No. 1, circuit tester positive terminal to terminal No. 2 and the circuit tester negative terminal to terminal No. 1.

NOTE:
- Use new dry-cell batteries.
- Using circuit tester, check the voltage of a single dry-cell battery is 1.6 V or more. And also check the voltage of three batteries in series is between 4.8 V and 5.2 V.

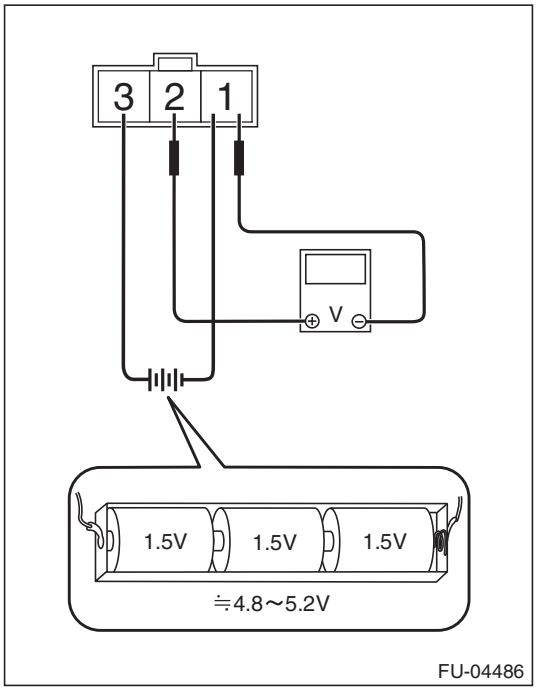

3) Check the voltage at a normal atmospheric pressure.

NOTE:
The atmospheric pressure at higher altitude is lower than normal. Therefore, the voltage is lower than the standard value.

Terminal No.	Standard
2 (+) and 1 (–)	Approx. 2.2 V (when 25°C (77°F))

GETtheMANUALS.org

4) Connect the Mighty Vac to the pressure port (A) of manifold absolute pressure sensor.

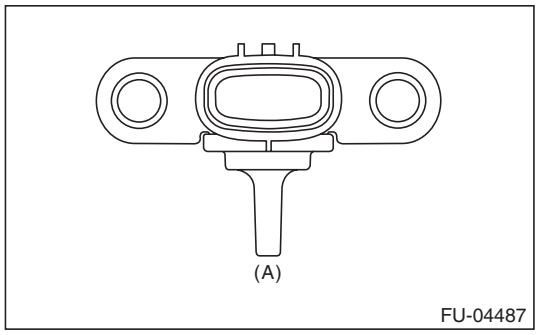

5) Check the voltage when generating vacuum and positive pressure using Mighty Vac.

CAUTION:
Do not apply vacuum of less than –88 — 200 kPa (–0.9 — 2.04 kgf/cm^2, –12.8 — 29.0 psi). Doing so may damage the manifold absolute pressure sensor.

NOTE:
When vacuum occurs at the pressure port of manifold absolute pressure sensor, the voltage will drop from the value as in step 3). When positive pressure occurs, on the other hand, the voltage will rise.

Pressure	Terminal No.	Standard
–88 kPa (–0.9 kgf/cm^2, –12.8 psi)	2 (+) and 1 (–)	Approx. 1.0 V (when 25°C (77°F))
152 kPa (1.55 kgf/cm^2, 22.0 psi)		Approx. 4.5 V (when 25°C (77°F))

GETtheMANUALS.org

11. Fuel Injector

A: REMOVAL

1. RH SIDE

1) Release the fuel pressure. <Ref. to FU(H4DOTC)-66, RELEASING OF FUEL PRESSURE, PROCEDURE, Fuel.>
2) Remove the collector cover.
3) Disconnect the ground cable from battery.

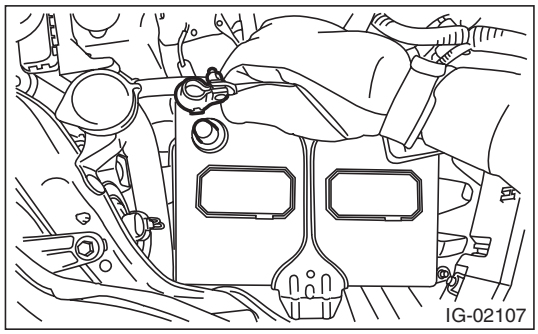

4) Open the fuel filler lid and remove the fuel filler cap.
5) Remove the intake manifold. <Ref. to FU(H4DOTC)-18, REMOVAL, Intake Manifold.>
6) Remove the intake manifold protector RH from intake manifold.

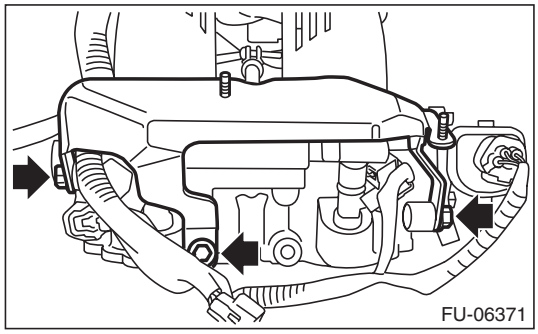

7) Disconnect the connector from the fuel injector and tumble generator valve assembly.

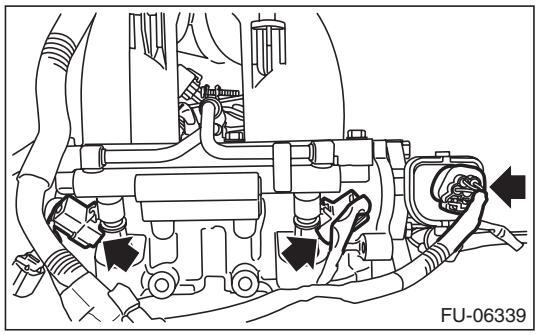

8) Remove the bolts which hold fuel pipe onto intake manifold.

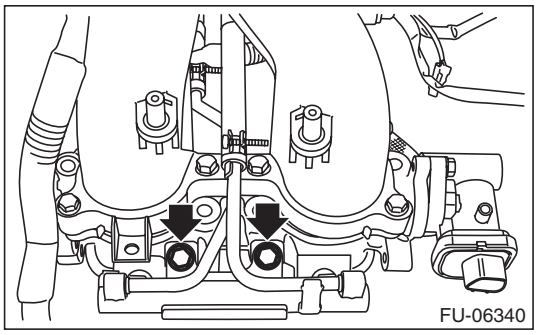

9) Remove the fuel injector.

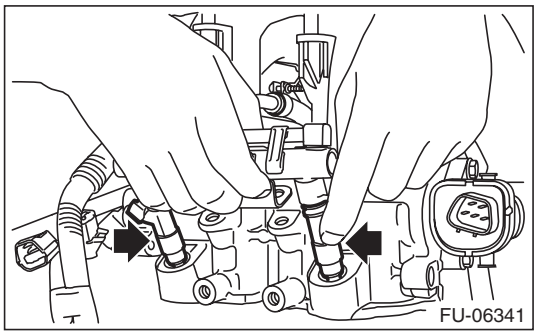

2. LH SIDE

1) Release the fuel pressure. <Ref. to FU(H4DOTC)-66, RELEASING OF FUEL PRESSURE, PROCEDURE, Fuel.>
2) Remove the collector cover.
3) Disconnect the ground cable from battery.

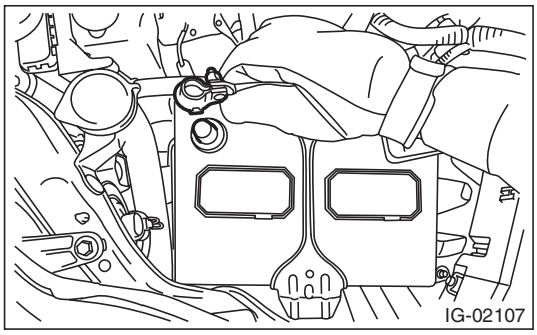

4) Open the fuel filler lid and remove the fuel filler cap.
5) Remove the intake manifold. <Ref. to FU(H4DOTC)-18, REMOVAL, Intake Manifold.>

GETtheMANUALS.org

6) Remove the gray connector (A), the black connector (B), and the clip (C) which holds the engine harness from the intake manifold protector LH.

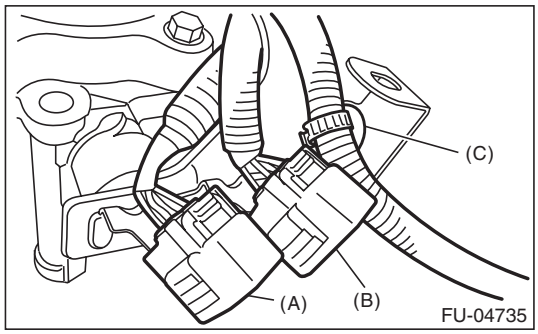

7) Remove the engine ground terminal from the intake manifold protector LH, and remove the intake manifold protector LH from the intake manifold.

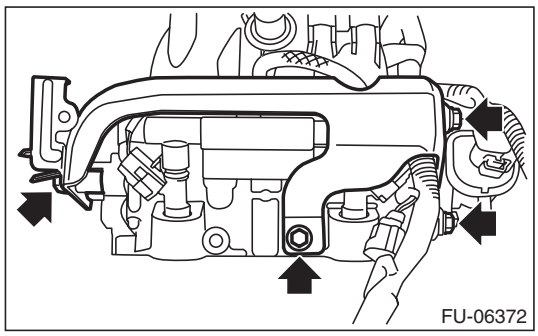

8) Disconnect the connector from fuel injector.

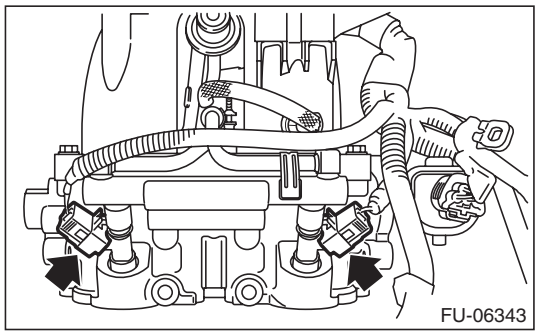

9) Remove the bolt which secures the fuel delivery pipe to the intake manifold.

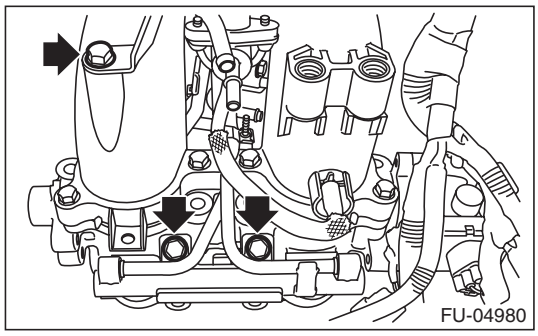

10) Remove the fuel injector.

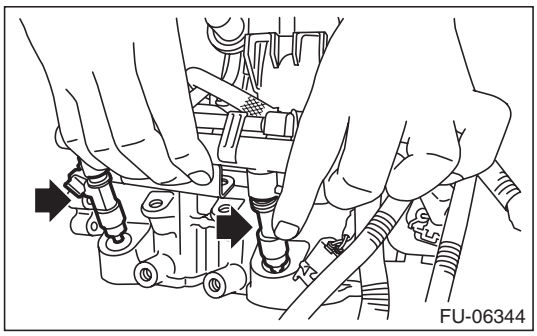

B: INSTALLATION

1. RH SIDE

Install in the reverse order of removal.

NOTE:
Use new O-rings, grommets, and seal rings.

Tightening torque:
19 N·m (1.9 kgf-m, 14.0 ft-lb)

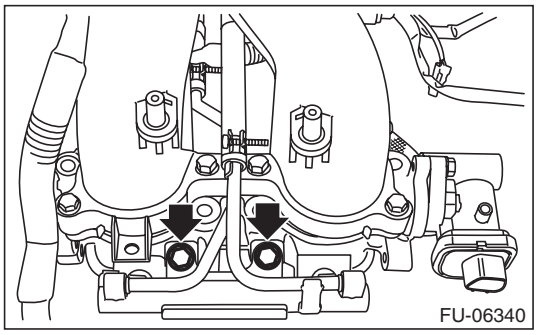

Tightening torque:
19 N·m (1.9 kgf-m, 14.0 ft-lb)

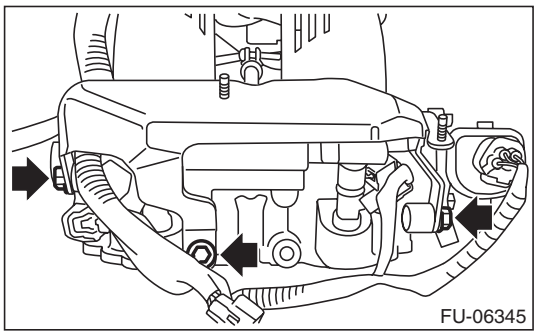

GETtheMANUALS.org

2. LH SIDE

Install in the reverse order of removal.

NOTE:
Use new O-rings, grommets, and seal rings.

Tightening torque:
T1: 6.4 N·m (0.7 kgf-m, 4.7 ft-lb)
T2: 19 N·m (1.9 kgf-m, 14.0 ft-lb)

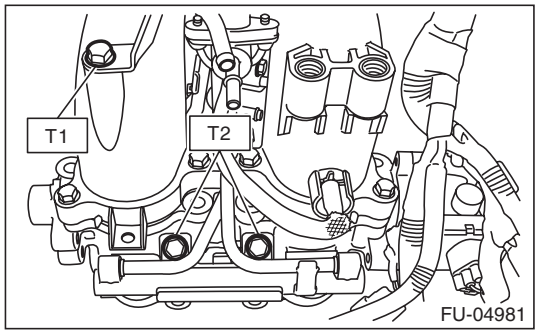

Tightening torque:
19 N·m (1.9 kgf-m, 14.0 ft-lb)

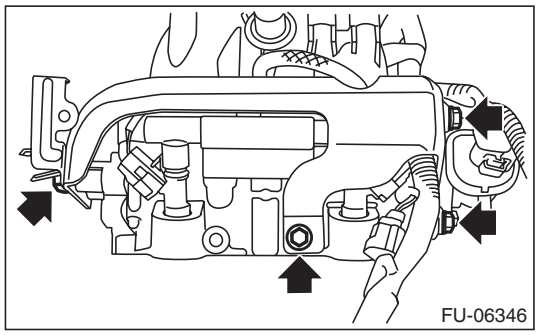

C: INSPECTION

1) Check that the fuel injector has no deformation, cracks or other damages.
2) Measure the resistance between fuel injector terminals.

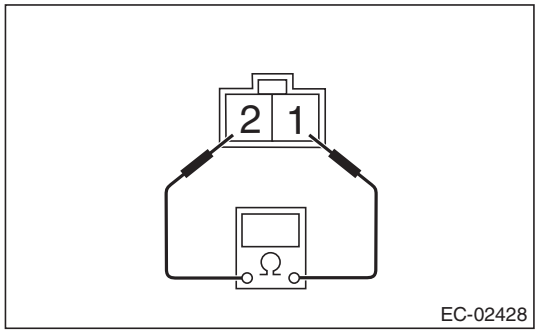

Terminal No.	Standard
1 and 2	Approx. 12.0 Ω (when 20°C (68°F))

GETtheMANUALS.org

12. Tumble Generator Valve Assembly

A: REMOVAL

1) Release the fuel pressure. <Ref. to FU(H4DOTC)-66, RELEASING OF FUEL PRESSURE, PROCEDURE, Fuel.>
2) Remove the collector cover.
3) Disconnect the ground cable from battery.

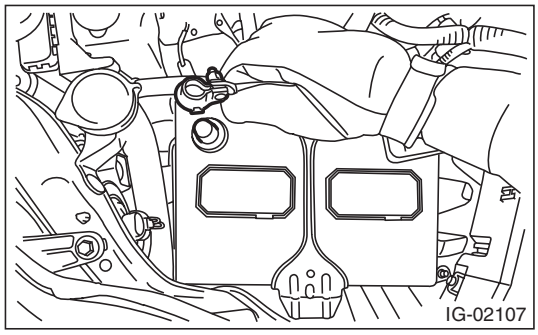

4) Open the fuel filler lid and remove the fuel filler cap.
5) Remove the intake manifold. <Ref. to FU(H4DOTC)-18, REMOVAL, Intake Manifold.>
6) Disconnect the connector from the tumble generator valve assembly.

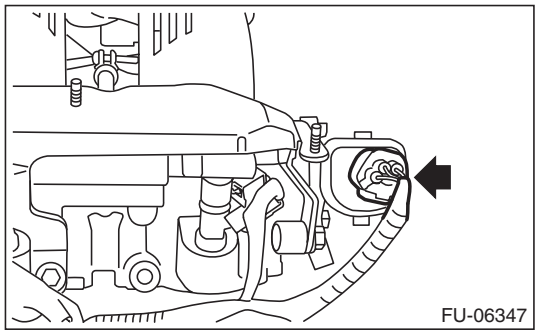

7) Remove the fuel injector. <Ref. to FU(H4DOTC)-45, REMOVAL, Fuel Injector.>
8) Remove the tumble generator valve assembly from the intake manifold.

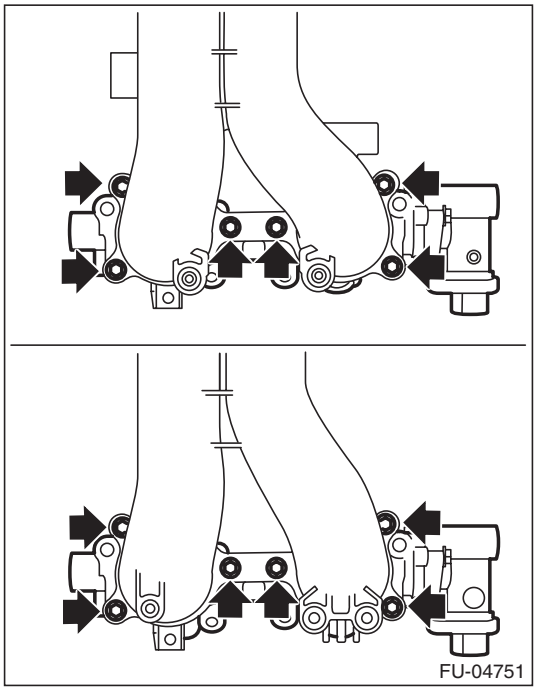

B: INSTALLATION

Install in the reverse order of removal.

NOTE:
Use a new gasket.

Tightening torque:
8.3 N·m (0.8 kgf-m, 6.1 ft-lb)

C: INSPECTION

1) Check that the tumble generator valve assembly has no deformation, cracks or other damages.
2) Check tumble generator valve for contamination or clogging.

GETtheMANUALS.org

13. Tumble Generator Valve Actuator

A: SPECIFICATION

The tumble generator valve assembly cannot be disassembled.
Refer to “Tumble Generator Valve Assembly” for removal and installation procedures. <Ref. to FU(H4DOTC)-48, REMOVAL, Tumble Generator Valve Assembly.> <Ref. to FU(H4DOTC)-48, INSTALLATION, Tumble Generator Valve Assembly.>

GETmyMANUALS.org

14. Oil Flow Control Solenoid Valve

A: REMOVAL

1. INTAKE SIDE

Oil flow control solenoid valve is a unit with front camshaft cap.
Refer to “Camshaft” for the removal procedure. <Ref. to ME(H4DOTC)-63, REMOVAL, Camshaft.>

2. EXHAUST SIDE

1) Disconnect the ground cable from battery.

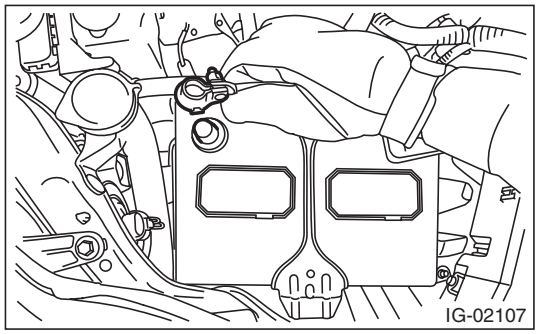

2) Lift up the vehicle.
3) Remove the under cover. <Ref. to EI-35, REMOVAL, Front Under Cover.>
4) Remove the center exhaust pipe. (LH side only) <Ref. to EX(H4DOTC)-12, REMOVAL, Center Exhaust Pipe.>
5) Remove ground cable (A) from the engine harness cover, and remove the engine harness cover from the engine. (LH side only)

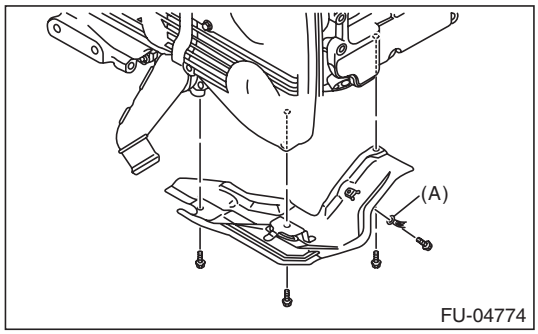

6) Disconnect the connector (A) from the oil flow control solenoid valve, and remove the oil flow control solenoid valve from the cylinder head.

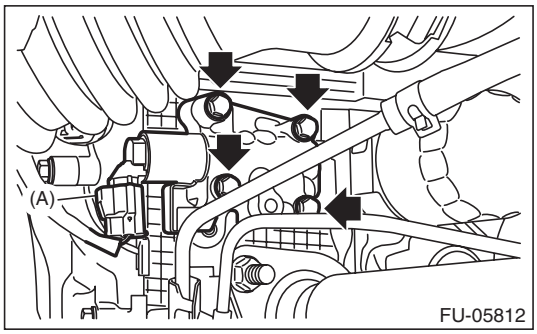

B: INSTALLATION

1. INTAKE SIDE

Refer to “Camshaft” for installation procedure. <Ref. to ME(H4DOTC)-66, INSTALLATION, Camshaft.>

2. EXHAUST SIDE

Install in the reverse order of removal.

NOTE:
Use a new gasket.

Tightening torque:
10 N·m (1.0 kgf-m, 7.4 ft-lb)

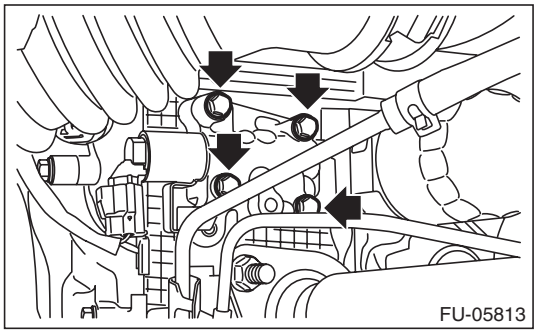

Tightening torque:
T1: 6.4 N·m (0.7 kgf-m, 4.7 ft-lb)
T2: 7 N·m (0.7 kgf-m, 5.2 ft-lb)

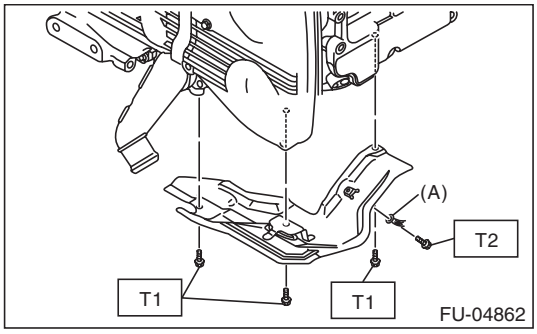

GETthemANUALS.org

C: DISASSEMBLY

1. INTAKE SIDE

1) Remove the two mounting bolts securing oil return cover, and remove the oil return cover and gasket.
2) Remove the bolt securing oil flow control solenoid valve, and remove the oil flow control solenoid valve.

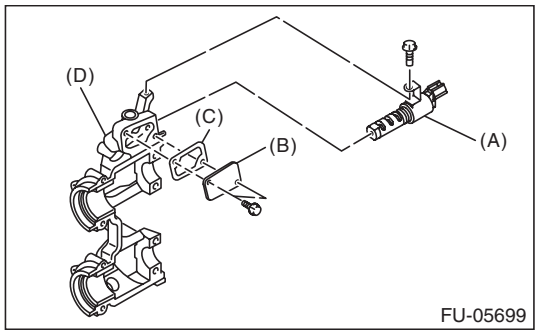

(A) Oil flow control solenoid valve
(B) Oil return cover
(C) Gasket
(D) Front camshaft cap

2. EXHAUST SIDE

The oil flow control solenoid valve on exhaust side cannot be disassembled.

D: ASSEMBLY

1. INTAKE SIDE

1) Install the oil flow control solenoid valve.

Tightening torque:
6.4 N·m (0.7 kgf-m, 4.7 ft-lb)

2) Apply liquid gasket to the two bolts securing oil return cover.

Liquid gasket:
THREE BOND 1324 (Part No. 004403042) or equivalent

3) Attach the oil return cover and gasket.

NOTE:
Use a new gasket.

Tightening torque:
9 N·m (0.9 kgf-m, 6.6 ft-lb)

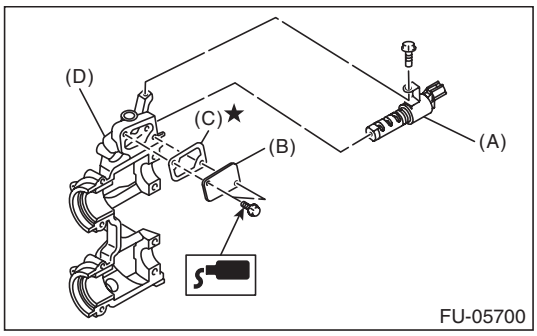

(A) Oil flow control solenoid valve
(B) Oil return cover
(C) Gasket
(D) Front camshaft cap

2. EXHAUST SIDE

The oil flow control solenoid valve on exhaust side cannot be disassembled.

E: INSPECTION

1) Check that the oil flow control solenoid valve has no deformation, cracks or other damages.
2) Measure the resistance between the oil flow control solenoid valve terminals.

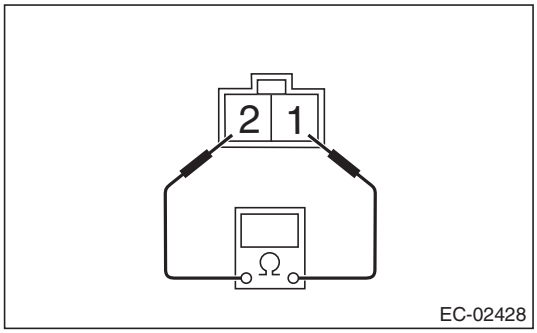

Terminal No.	Standard
1 and 2	7.4±0.5 Ω (when 20°C (68°F))

GETtheMANUALS.org

15. Wastegate Control Solenoid Valve

A: REMOVAL

1) Disconnect the ground cable from battery.

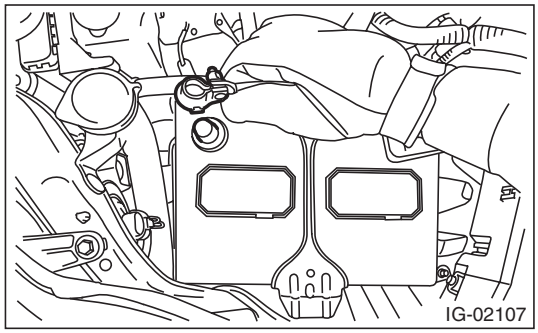

2) Remove the radiator sub fan motor assembly. <Ref. to CO(H4DOTC)-27, REMOVAL, Radiator Sub Fan and Fan Motor.>
3) Remove the screws which hold the wastegate control solenoid valve to the intake duct.

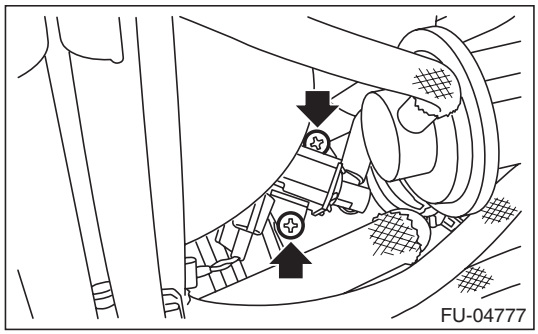

4) Lift up the vehicle.
5) Remove the under cover. <Ref. to EI-35, REMOVAL, Front Under Cover.>
6) Disconnect the connector and air control hose from the wastegate control solenoid valve, and remove the wastegate control solenoid valve from the intake duct.

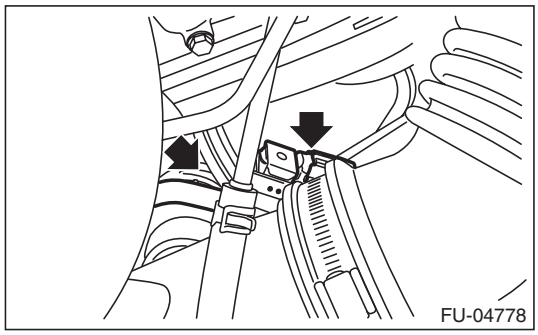

B: INSTALLATION

Install in the reverse order of removal.

NOTE:
- Use new O-rings.
- When tightening the boost control solenoid valve, check that it is securely seated.

Tightening torque:
4 N·m (0.4 kgf-m, 3.0 ft-lb)

C: INSPECTION

1. WASTEGATE CONTROL SOLENOID VALVE

1) Check that the wastegate control solenoid valve has no deformation, cracks or other damages.
2) Check the resistance between the wastegate control solenoid valve terminals.

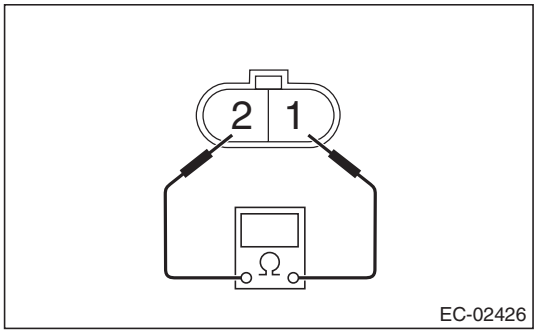

Terminal No.	Standard
1 and 2	24±3 Ω (when 20°C (68°F))

3) Check that air does not come out from (B) when air is blown into (A).

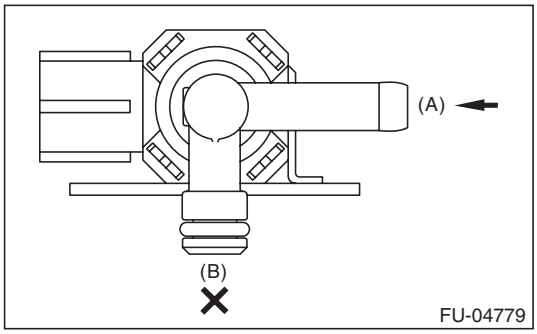

GETtheMANUALS.org

4) Connect the battery positive terminal to the terminal No. 1 and the battery negative terminal to the terminal No. 2. Check that air is discharged from (B), when supplying air to (A).

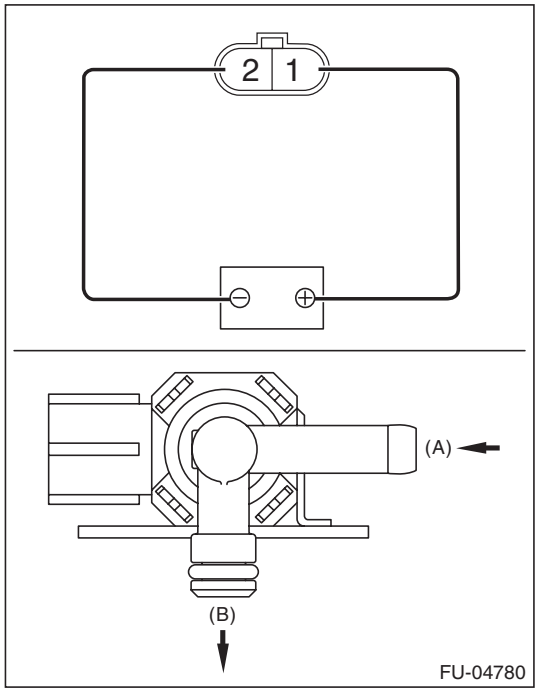

2. OTHER INSPECTIONS

Check that the air control hose has no cracks, damage or loose part.

GETtheMANUALS.org

16. Front Oxygen (A/F) Sensor

A: REMOVAL

1) Disconnect the ground cable from battery.

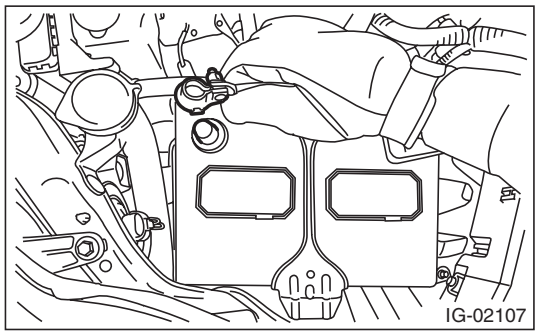

2) Remove the radiator main fan motor assembly. <Ref. to CO(H4DOTC)-27, REMOVAL, Radiator Sub Fan and Fan Motor.>
3) Disconnect the connector from the front oxygen (A/F) sensor, and remove the clip (A) holding the front oxygen (A/F) sensor harness.

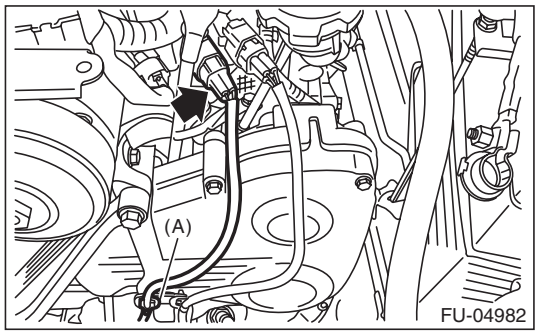

4) Apply spray-type lubricant to the threaded portion of front oxygen (A/F) sensor, and leave it for one minute or more.
5) Remove the front oxygen (A/F) sensor by using a sensor socket.

CAUTION:
When removing the front oxygen (A/F) sensor, wait until exhaust pipe cools, otherwise it will damage the exhaust pipe.

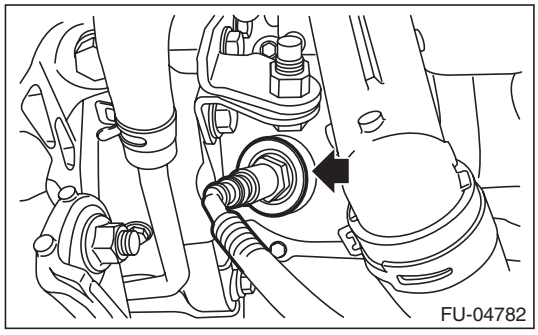

B: INSTALLATION

CAUTION:
If lubricant is spilt over the exhaust pipe, wipe it off with cloth to avoid emission of smoke or causing a fire.
1) Before installing front oxygen (A/F) sensor, apply anti-seize compound only to the threaded portion of front oxygen (A/F) sensor to make the next removal easier.

CAUTION:
Never apply anti-seize compound to the protector of front oxygen (A/F) sensor.

Anti-seize compound:
NEVER-SEEZ NSN, JET LUBE SS-30 or equivalent
2) Install the front oxygen (A/F) sensor.

Tightening torque:
30 N·m (3.1 kgf-m, 22.1 ft-lb)

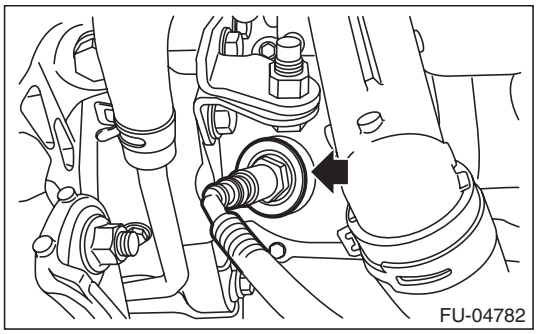

3) Connect the front oxygen (A/F) sensor connector, and secure the front oxygen (A/F) sensor harness by using the clip (A).

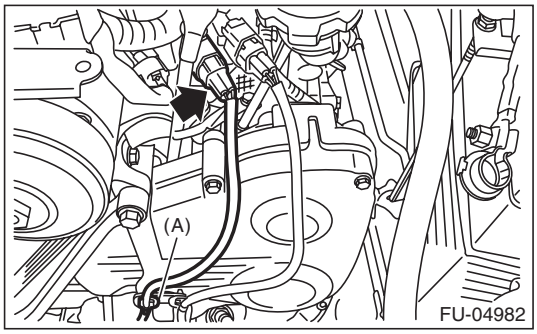

4) Install the radiator main fan motor assembly. <Ref. to CO(H4DOTC)-27, INSTALLATION, Radiator Sub Fan and Fan Motor.>

GETmyMANUALS.org

5) Connect the ground cable to battery.

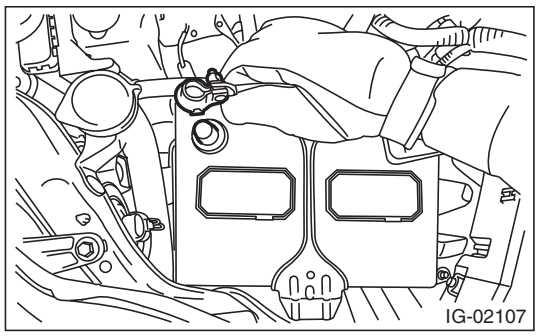

C: INSPECTION

1) Check that the front oxygen (A/F) sensor has no deformation, cracks or other damages.
2) Measure the resistance between front oxygen (A/F) sensor terminals.

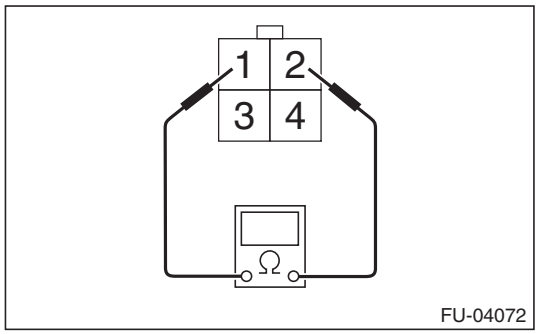

Terminal No.	Standard
1 and 2	2.4±0.24 Ω (when 20°C (68°F))

GETtheMANUALS.org

17. Rear Oxygen Sensor

A: REMOVAL

1) Disconnect the ground cable from battery.

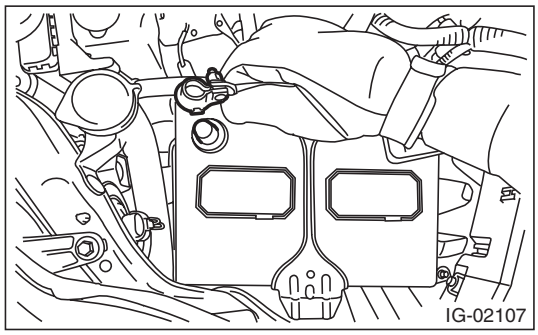

2) Remove the radiator main fan motor assembly. <Ref. to CO(H4DOTC)-27, REMOVAL, Radiator Sub Fan and Fan Motor.>

3) Disconnect the connector from the rear oxygen sensor, and remove the clip (A) holding the rear oxygen sensor harness.

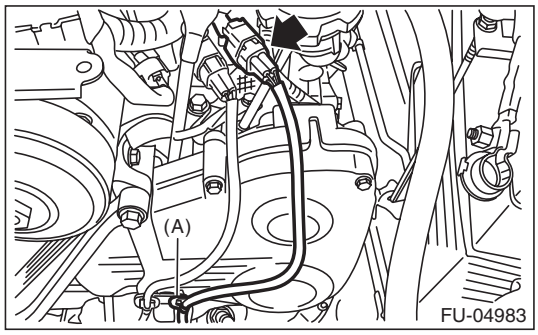

4) Apply spray-type lubricant to the threaded portion of rear oxygen sensor, and leave it for one minute or more.

5) Remove the rear oxygen (A/F) sensor by using a sensor socket.

CAUTION:
When removing the rear oxygen sensor, wait until exhaust pipe cools, otherwise it will damage the exhaust pipe.

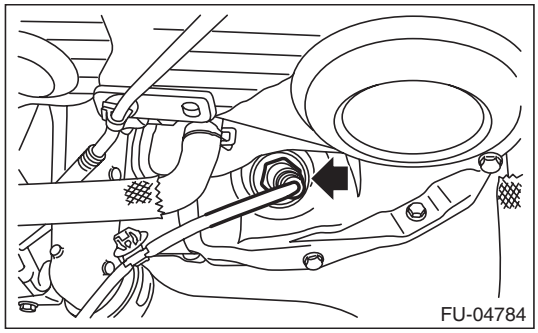

B: INSTALLATION

CAUTION:
If lubricant is spilt over the exhaust pipe, wipe it off with cloth to avoid emission of smoke or causing a fire.

1) Before installing rear oxygen sensor, apply the anti-seize compound only to the threaded portion of rear oxygen sensor to make the next removal easier.

CAUTION:
Never apply anti-seize compound to the protector of rear oxygen sensor.

Anti-seize compound:
NEVER-SEEZ NSN, JET LUBE SS-30 or equivalent

2) Install the rear oxygen sensor.

Tightening torque:
30 N·m (3.1 kgf-m, 22.1 ft-lb)

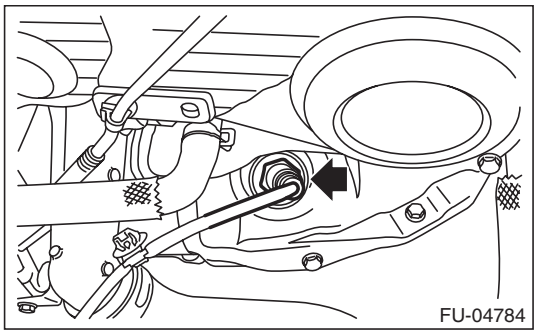

3) Connect the connector to the rear oxygen sensor, and hold the rear oxygen sensor harness with clip (A).

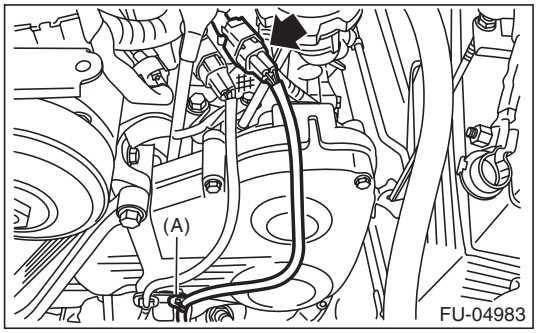

4) Install the radiator main fan motor assembly. <Ref. to CO(H4DOTC)-27, INSTALLATION, Radiator Sub Fan and Fan Motor.>

GETthemANUALS.org

5) Connect the ground cable to battery.

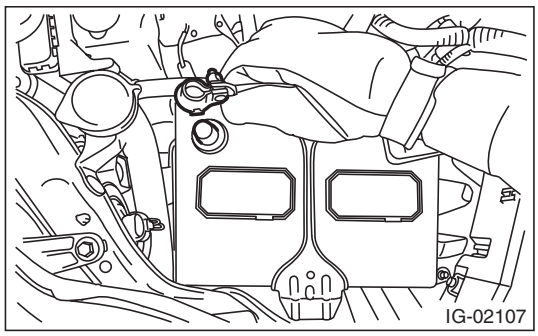

C: INSPECTION

1) Check that the rear oxygen sensor has no deformation, cracks or other damages.
2) Measure the resistance between rear oxygen sensor terminals.

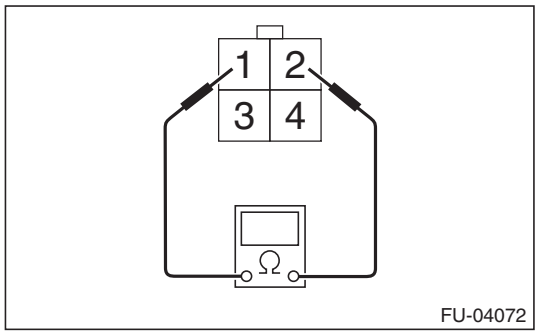

Terminal No.	Standard
1 and 2	$5.6^{+0.8}_{-0.6}$ Ω (when 20°C (68°F))

GETtheMANUALS.org

18. Engine Control Module (ECM)

A: REMOVAL

1) Disconnect the ground cable from battery.

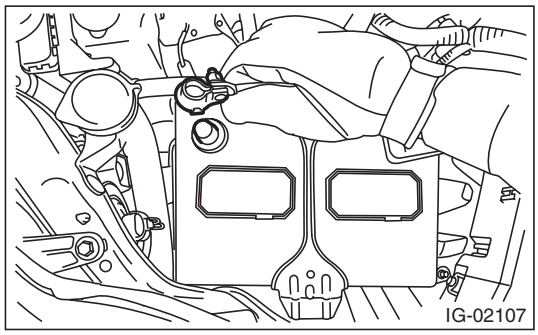

2) Remove the glove box lid assembly. <Ref. to EI-66, REMOVAL, Glove Box.>
3) Remove the connectors from ECM.

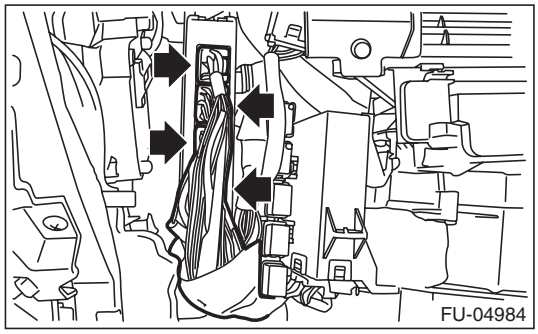

4) Remove the ECM from vehicle.

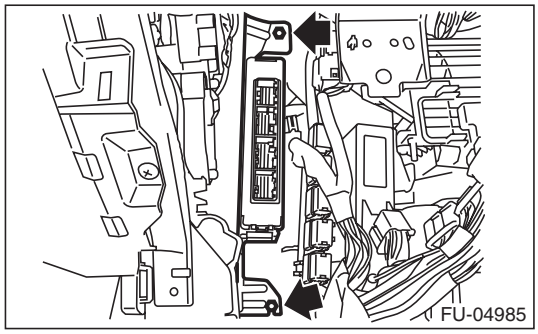

B: INSTALLATION

Install in the reverse order of removal.

CAUTION:
- **When the ECM of model with immobilizer has been replaced, be sure to perform the registration of immobilizer system. (Refer to "PC application help for Subaru Select Monitor".)**
- **If replacing ECM or the bracket, replace both parts with new parts at a time.**
- **After installing the bracket to ECM, do not separate the bracket.**
- **If the bracket has been installed to ECM in the wrong direction, replace both parts to new parts.**

NOTE:
When replacing the ECM, be careful not to use the wrong spec. ECM to avoid any damage on the fuel injection system.

Tightening torque:
7.5 N·m (0.8 kgf-m, 5.5 ft-lb)

C: INSPECTION

Check that the ECM has no deformation, cracks or other damages.

GETthemANUALS.org

19.Main Relay

A: REMOVAL

1) Disconnect the ground cable from battery.

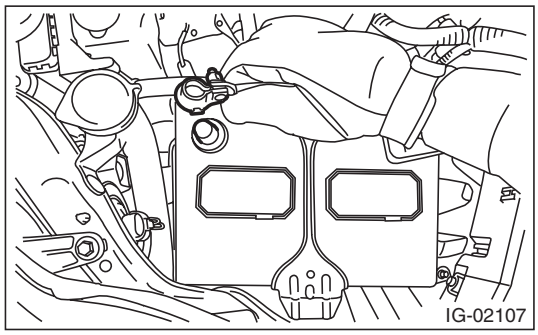

2) Remove the glove box lid assembly. <Ref. to EI-66, REMOVAL, Glove Box.>
3) Remove the main relay from the relay holder.

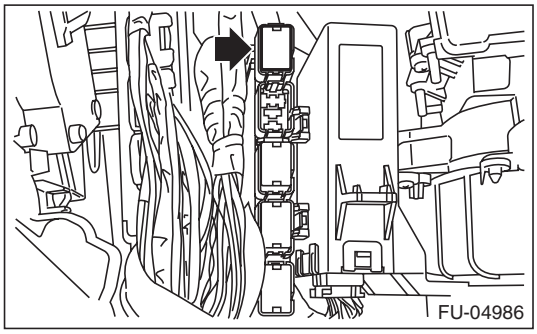

B: INSTALLATION

Install in the reverse order of removal.

C: INSPECTION

1) Check that the main relay has no deformation, cracks or other damages.
2) Measure the resistance between main relay terminals.

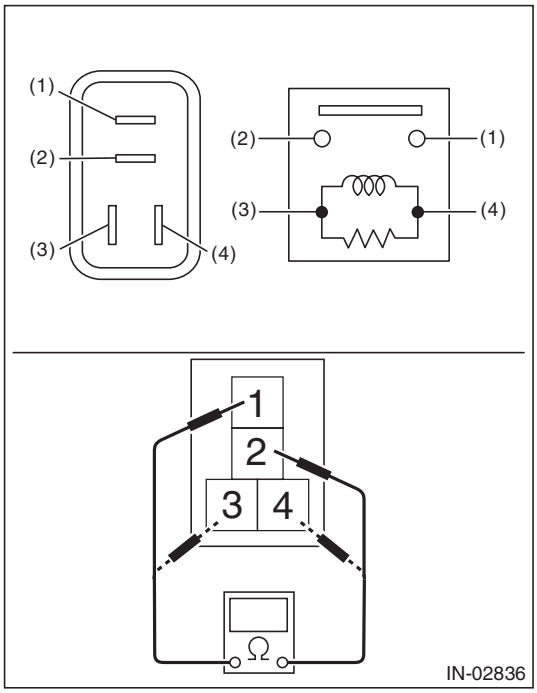

Terminal No.	Standard
1 and 2	1 MΩ or more
3 and 4	130.4 — 230.8 Ω (when 20°C (68°F))

GETthemANUALS.org

3) Connect battery positive terminal to terminal No. 3 and battery ground terminal to terminal No. 4, and measure the resistance between the main relay terminals.

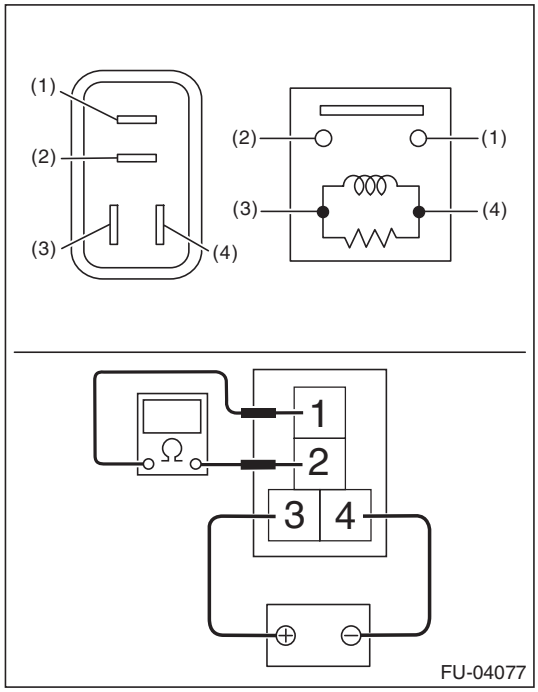

Terminal No.	Standard
1 and 2	Less than 1 Ω

GETmyMANUALS.org

20. Fuel Pump Relay

A: REMOVAL

1) Disconnect the ground cable from battery.

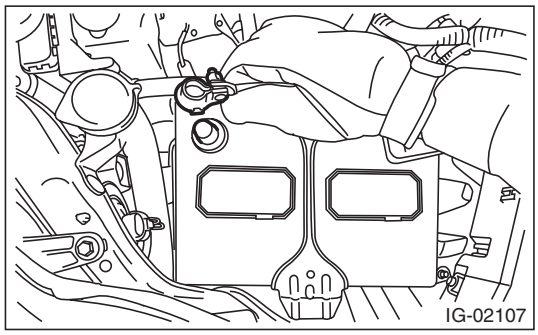

2) Remove the glove box lid assembly. <Ref. to EI-66, REMOVAL, Glove Box.>
3) Remove the fuel pump relay from the relay holder.

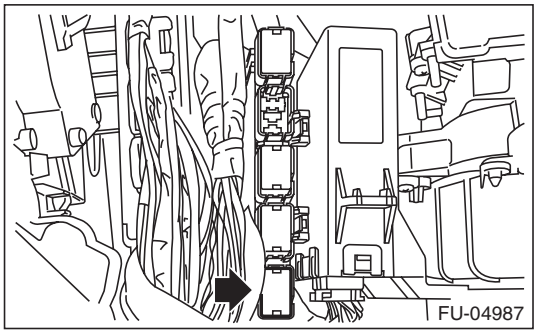

B: INSTALLATION

Install in the reverse order of removal.

C: INSPECTION

1) Check that the fuel pump relay has no deformation, cracks or other damages.
2) Measure the resistance between fuel pump relay terminals.

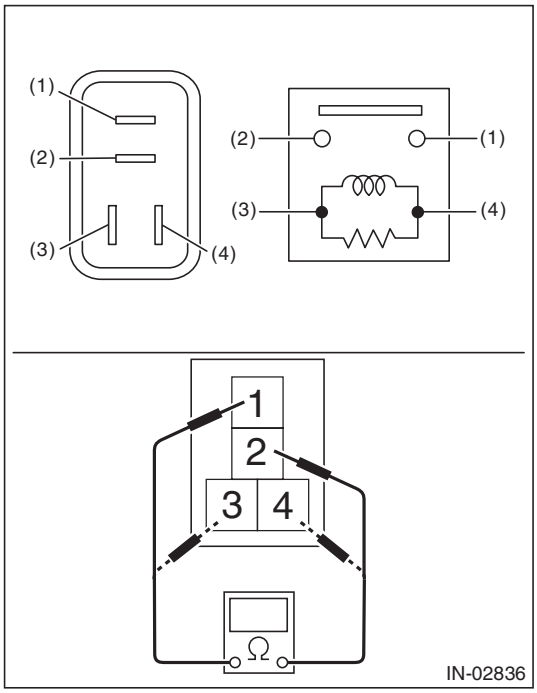

Terminal No.	Standard
1 and 2	1 MΩ or more
3 and 4	93.8 — 136.4 Ω (when 20°C (68°F))

GETthemANUALS.org

3) Connect battery positive terminal to terminal No. 3 and battery ground terminal to terminal No. 4, and measure the resistance between the fuel pump relay terminals.

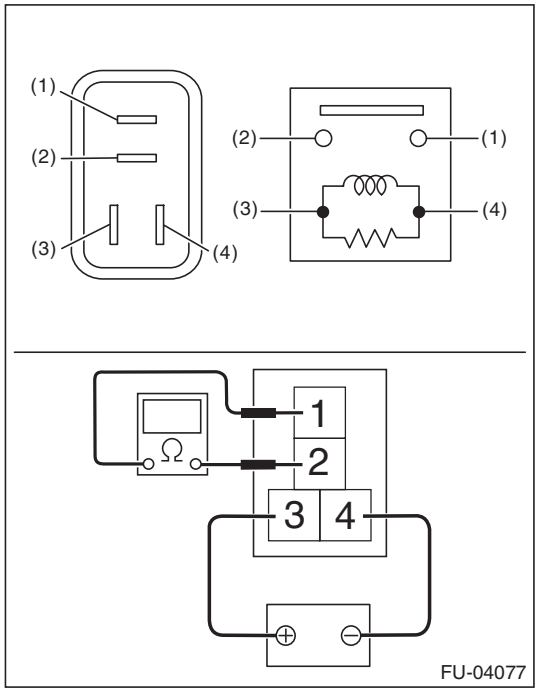

Terminal No.	Standard
1 and 2	Less than 1 Ω

GETmyMANUALS.org

21. Electronic Throttle Control Relay

A: REMOVAL

1) Disconnect the ground cable from battery.

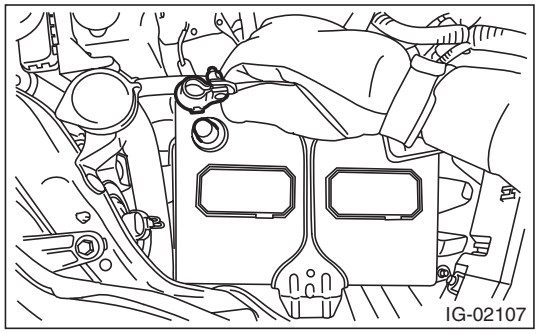

2) Remove the glove box lid assembly. <Ref. to EI-66, REMOVAL, Glove Box.>
3) Remove the electronic throttle control relay from the relay holder.

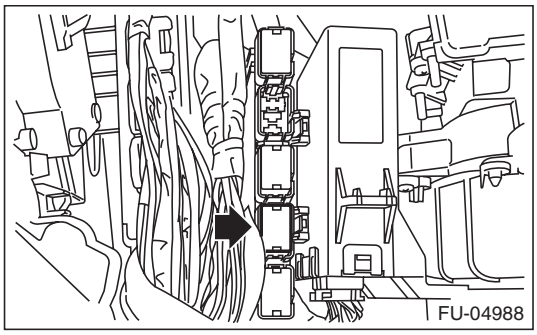

B: INSTALLATION

Install in the reverse order of removal.

C: INSPECTION

1) Check that the electronic throttle control relay has no deformation, cracks or other damages.
2) Measure the resistance between electronic throttle control relay terminals.

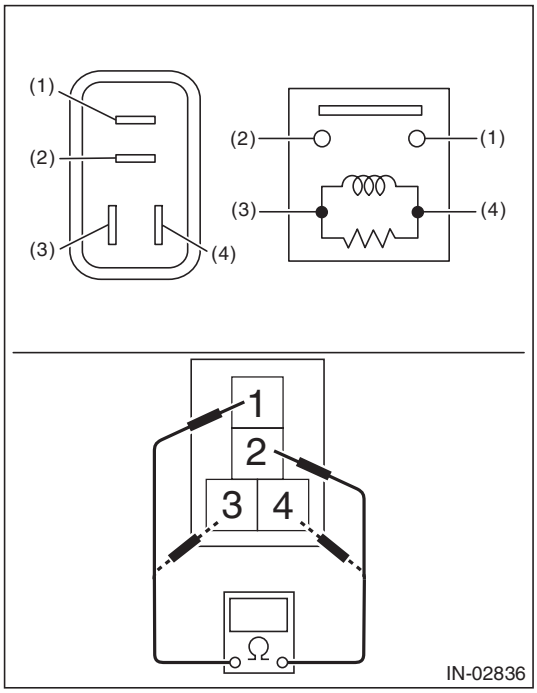

Terminal No.	Standard
1 and 2	1 MΩ or more
3 and 4	93.8 — 136.4 Ω (when 20°C (68°F))

GETthemANUALS.org

3) Connect battery positive terminal to terminal No. 3 and battery ground terminal to terminal No. 4, and measure the resistance between the electronic throttle control relay terminals.

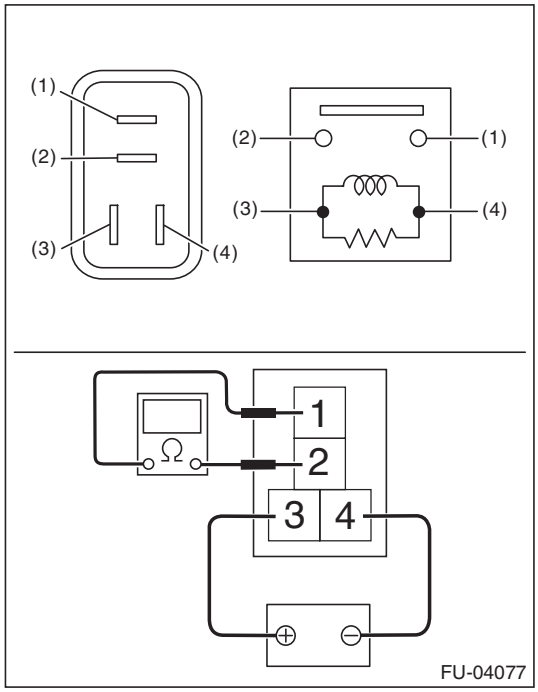

Terminal No.	Standard
1 and 2	Less than 1 Ω

GETtheMANUALS.org

22. Fuel Pump Control Unit

A: REMOVAL

1) Disconnect the ground cable from battery.

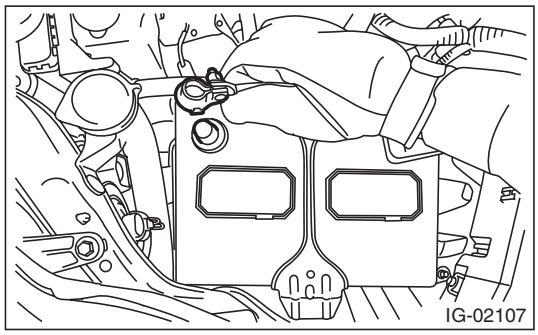

2) Remove the trunk trim panel assembly - side on the RH side. <Ref. to EI-110, REMOVAL, Rear Quarter Trim.>

3) Remove the fuel pump control unit.

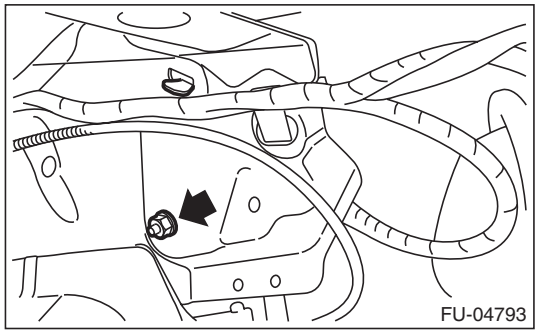

4) Disconnect the connector from fuel pump control unit.

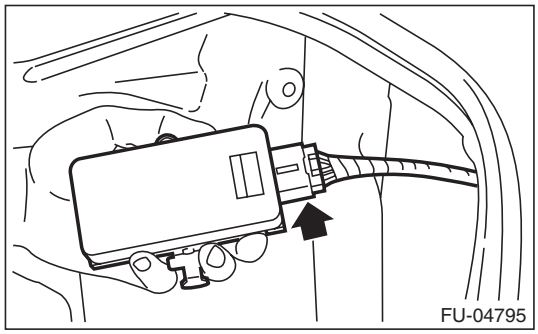

B: INSTALLATION

Install in the reverse order of removal.

Tightening torque:
5 N·m (0.5 kgf-m, 3.7 ft-lb)

C: INSPECTION

Check that the fuel pump control unit has no deformation, cracks or other damages.

GETtheMANUALS.org

23. Fuel

A: PROCEDURE

1. RELEASING OF FUEL PRESSURE

WARNING:
Place "NO OPEN FLAMES" signs near the working area.

CAUTION:
Be careful not to spill fuel.

1) Remove the fuse of fuel pump from main fuse box.

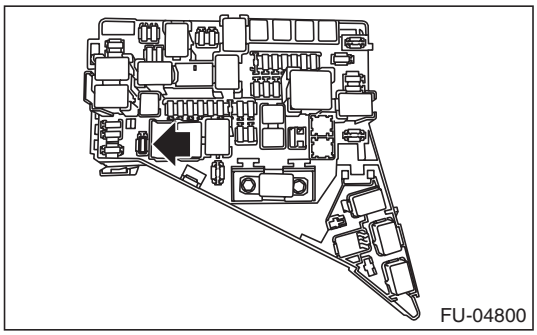

2) Start the engine and run it until it stalls.
3) After the engine stalls, crank it for five more seconds.
4) Turn the ignition switch to OFF.
5) Install the fuse of fuel pump to the main fuse box.

2. DRAINING FUEL (WITH SUBARU SELECT MONITOR)

WARNING:
Place "NO OPEN FLAMES" signs near the working area.

CAUTION:
Be careful not to spill fuel.

NOTE:
- If the fuel pump cannot be driven, refer to the procedures for draining from the fuel filler hose. <Ref. to FU(H4DOTC)-67, DRAINING FUEL (THROUGH THE FUEL FILLER HOSE), PROCEDURE, Fuel.>
- Be careful not to let the battery run-out.

1) Release the fuel pressure. <Ref. to FU(H4DOTC)-66, RELEASING OF FUEL PRESSURE, PROCEDURE, Fuel.>
2) Attach ST to the fuel delivery pipe and push ST in the direction of arrow mark to disconnect the fuel delivery hose.
ST 42099AE000 QUICK CONNECTOR RELEASE

CAUTION:
- **Be careful not to spill fuel.**
- **Catch the fuel from hoses using a container or cloth.**

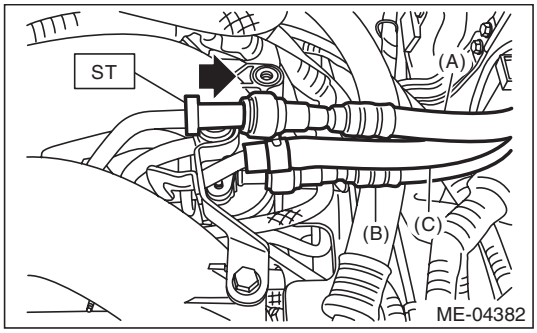

(A) Fuel delivery hose
(B) Fuel return hose
(C) Evaporation hose

3) Connect ST to the fuel delivery hose.
ST 18471AA000 FUEL PIPE ADAPTER
4) Connect the gasoline proof hose to ST and put the end of the hose in the container.
5) Drive the fuel pump and drain the fuel using Subaru Select Monitor. (Refer to "PC application help for Subaru Select Monitor".)

CAUTION:
Be careful not to spill fuel.

6) Install the related parts in the reverse order after draining the fuel.

GETtheMANUALS.org

3. DRAINING FUEL (THROUGH THE FUEL FILLER HOSE)

WARNING:
Place "NO OPEN FLAMES" signs near the working area.

CAUTION:
- **Be careful not to spill fuel.**
- **Fuel may remain in the fuel filler pipe. Draining the fuel from the fuel filler pipe through the fill opening using the gasoline proof pump and the gasoline proof hose (ø10 or less) before the operation.**

1) Lift up the vehicle.
2) Remove the rear exhaust pipe and muffler. <Ref. to EX(H4DOTC)-15, REMOVAL, Rear Exhaust Pipe.> <Ref. to EX(H4DOTC)-17, REMOVAL, Muffler.>
3) Remove the rear sub frame. <Ref. to RS-16, REMOVAL, Rear Sub Frame.>
4) Open the fuel filler lid and remove the fuel filler cap.
5) Drain the fuel from the fuel filler pipe through the filler opening using the gasoline proof pump and the gasoline proof hose (ø10 or less).
6) Disconnect the fuel filler hose from the fuel filler pipe assembly.

CAUTION:
- **Be careful not to spill fuel.**
- **Catch the fuel from hoses using a container or cloth.**

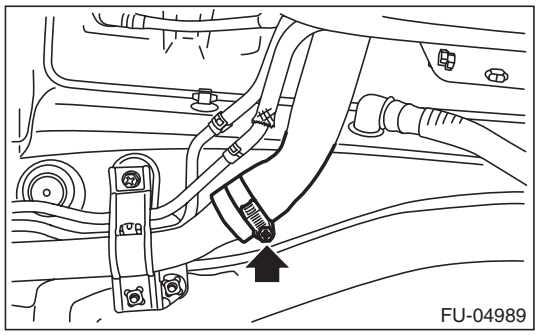

7) Set the container under the vehicle and insert the gasoline proof hose (ø10 or less) into the fuel filler hose to drain the fuel.

CAUTION:
Be careful not to spill fuel.

8) Install the related parts in the reverse order after draining the fuel.

NOTE:
Correctly insert the fuel filler hose to the spool, and then install the clamp as shown.

Tightening torque:
2.5 N·m (0.3 kgf-m, 1.8 ft-lb)

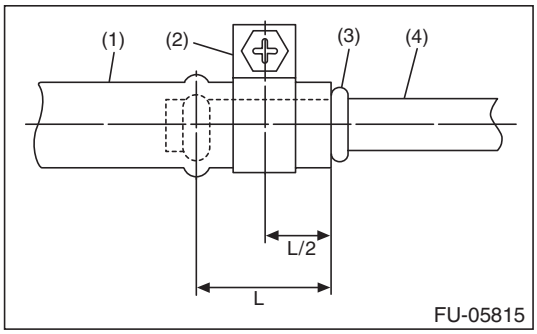

(1) Fuel filler hose
(2) Clamp
(3) Spool
(4) Fuel filler pipe

GETtheMANUALS.org

24. Fuel Tank

A: REMOVAL

WARNING:
Place "NO OPEN FLAMES" signs near the working area.

CAUTION:
Be careful not to spill fuel.

1) Release the fuel pressure. <Ref. to FU(H4DOTC)-66, RELEASING OF FUEL PRESSURE, PROCEDURE, Fuel.>
2) Drain fuel. <Ref. to FU(H4DOTC)-66, DRAINING FUEL (WITH SUBARU SELECT MONITOR), PROCEDURE, Fuel.>
3) Disconnect the ground cable from battery.

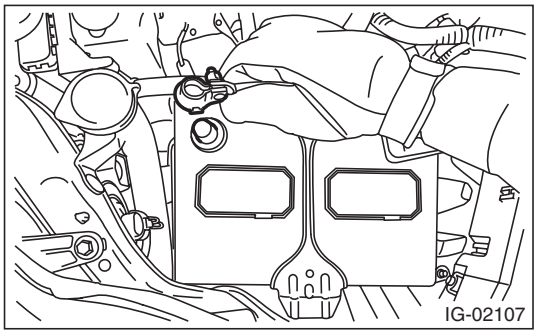

4) Remove the rear seat cushion. <Ref. to SE-34, REMOVAL, Rear Seat.>
5) Remove the clips (A) and seat cushion hooks (B), and turn over the floor mat (C).

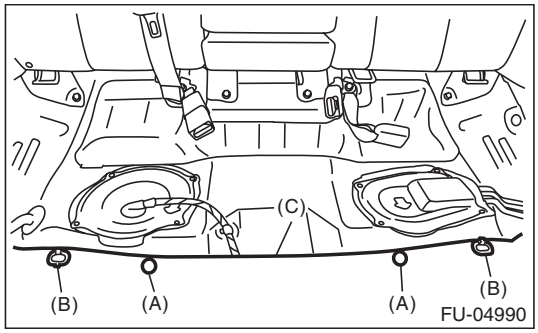

6) Remove the service hole cover of fuel pump.
   (1) Disconnect the fuel cord connector (A), and remove the clip (B).
   (2) Remove the screw (C).
   (3) Push the grommet (D) down and remove the service hole cover.

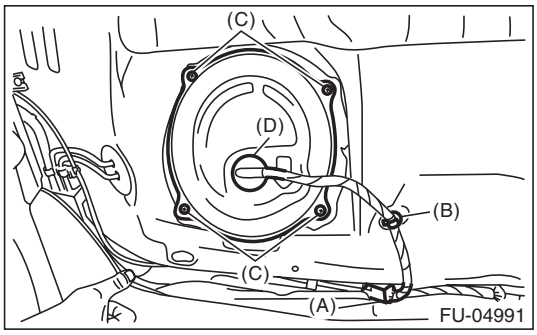

7) Remove the service hole cover of fuel sub level sensor.

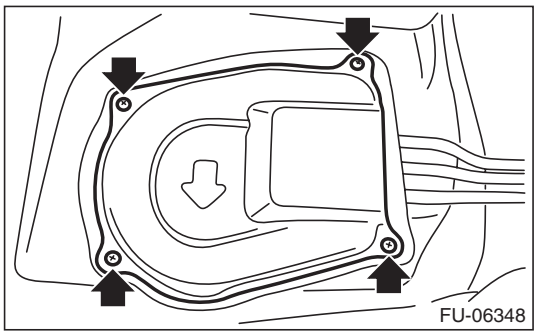

8) Disconnect the quick connector of fuel delivery tube (A) and fuel return tube (B). <Ref. to FU(H4DOTC)-88, REMOVAL, Fuel Delivery, Return and Evaporation Lines.>

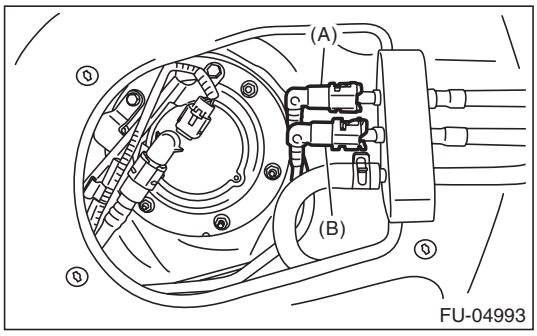

9) Remove the rear wheels.
10) Lift up the vehicle.
11) Remove the rear ABS wheel speed sensor from the rear housing.

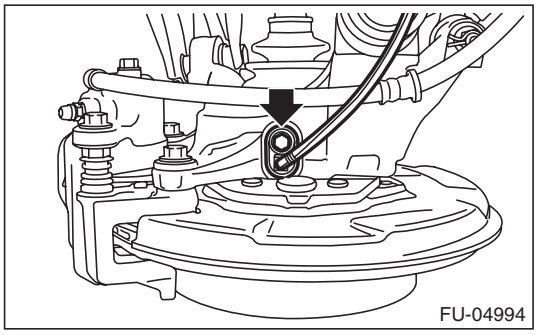

GETtheMANUALS.org

12) Remove the rear ABS wheel speed sensor harness bracket from the upper arm.

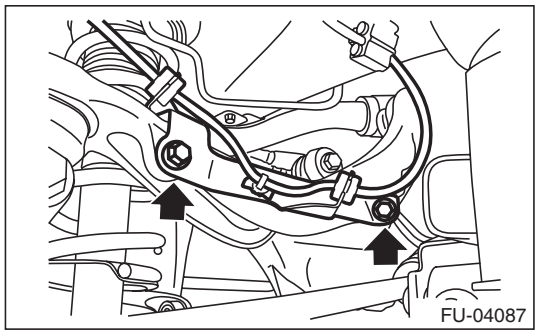

13) Remove the rear brake hose bracket from rear housing.

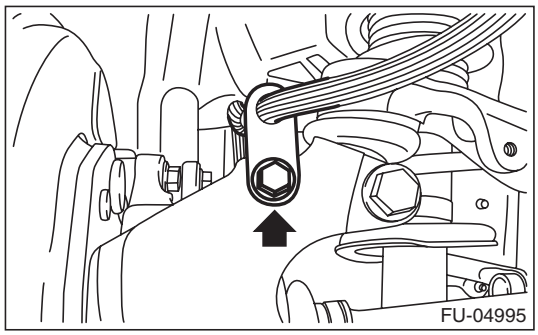

14) Remove the rear disc brake assembly and tie it to the body side of the vehicle.

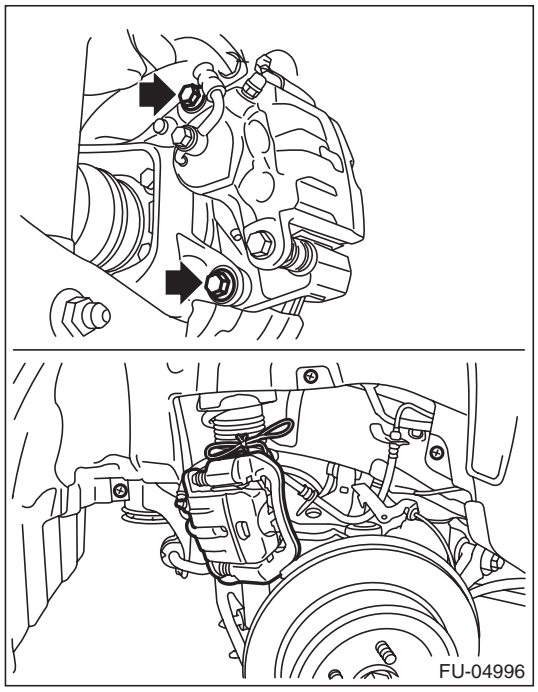

15) Remove the parking brake cable from parking brake assembly. <Ref. to PB-10, REMOVAL, Parking Brake Assembly (Rear Disc Brake).>

16) Remove the rear exhaust pipe and muffler. <Ref. to EX(H4DOTC)-15, REMOVAL, Rear Exhaust Pipe.> <Ref. to EX(H4DOTC)-17, REMOVAL, Muffler.>

17) Remove the propeller shaft. <Ref. to DS-10, REMOVAL, Propeller Shaft.>

18) Remove the clip (A) securing the fuel tank protector and heat shield cover.

19) Remove the bolts (B) and nuts (C) securing the fuel tank protector, and remove the fuel tank protector.

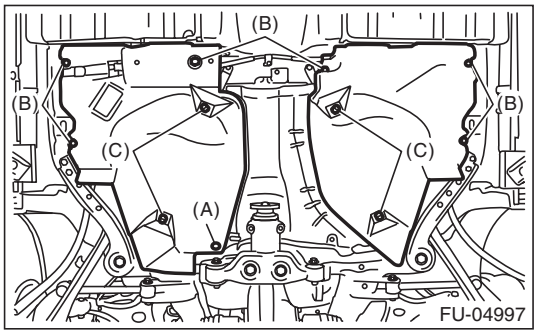

20) Remove the bolts and nuts securing the heat shield cover and remove the heat shield cover.

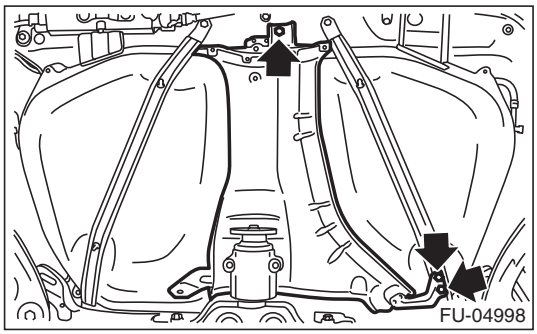

21) Remove the rear suspension assembly.

WARNING:
A helper is required to perform this work.

(1) Support the rear differential with the transmission jack.

(2) Remove the bolt and nut which secures rear shock absorber to rear suspension arm.

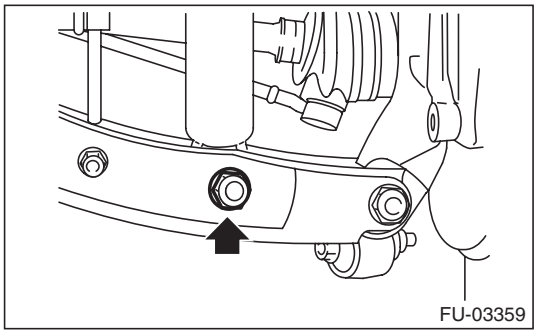

GETtheMANUALS.org

(3) Remove the bolts which secure the rear suspension assembly to the body.

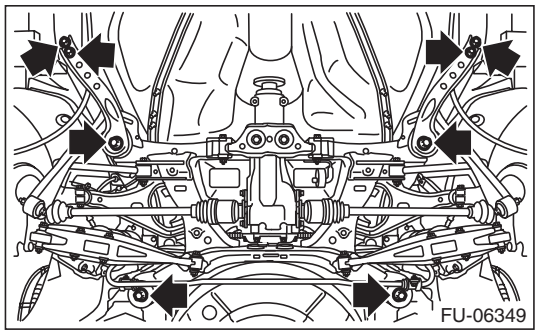

(4) Remove the rear suspension assembly.

22) Disconnect the PCV drain hose (A) and PCV outlet hose (B) from the pressure control solenoid valve.

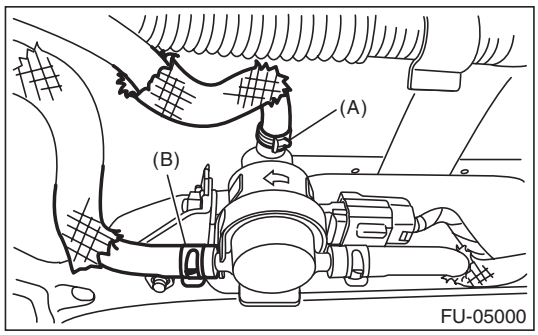

23) Disconnect the air vent hose from the fuel tank.

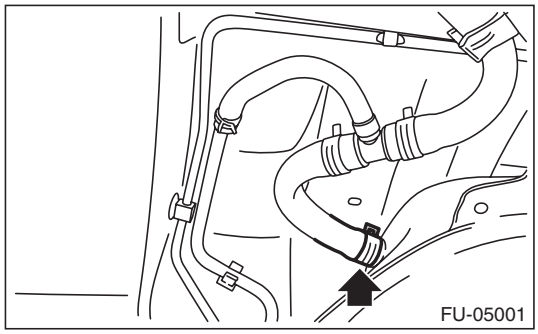

24) Disconnect the quick connector of the circulate tube from evaporation pipe.

NOTE:
Disconnect the quick connector as shown in the figure.

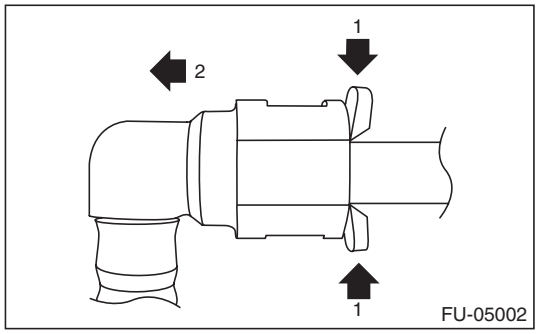

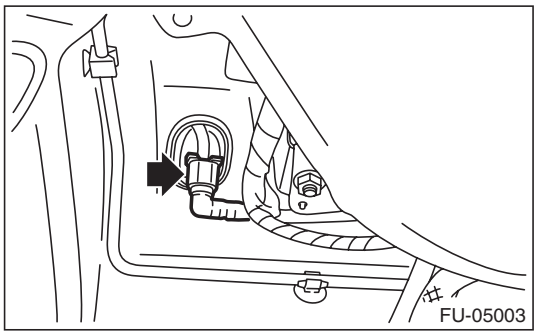

25) Disconnect the fuel filler hose (A), PCV inlet hose (B) and circulate hose (C) from the fuel filler pipe assembly.

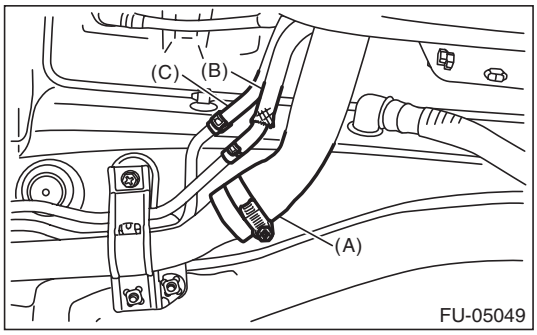

26) Support the fuel tank with a transmission jack, remove the fuel tank band, and remove the fuel tank from the vehicle.

WARNING:
- **A helper is required to perform this work.**
- **Fuel may remain in the fuel tank. This will cause the left and right sides to be unbalanced. Be careful not to drop the fuel tank.**

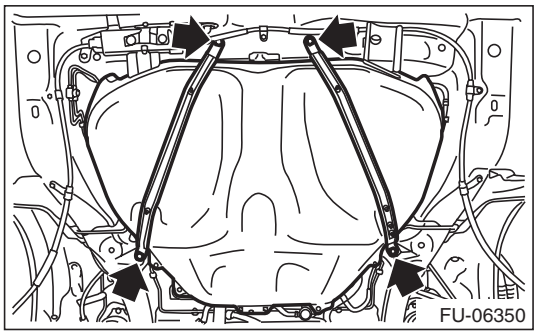

GETtheMANUALS.org

B: INSTALLATION

1) Support the fuel tank with a transmission jack, set the fuel tank and the fuel tank band in place, and temporarily tighten the bolts of the fuel tank band.

WARNING:
A helper is required to perform this work.

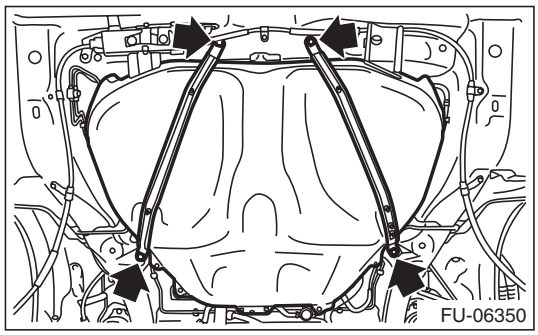

2) Securely insert the fuel filler hose (A), PCV inlet hose (B) and circulate hose (C) to the spool or stopper, then attach the clamp or clip as shown in the figure.

Tightening torque:
2.5 N·m (0.3 kgf-m, 1.8 ft-lb)

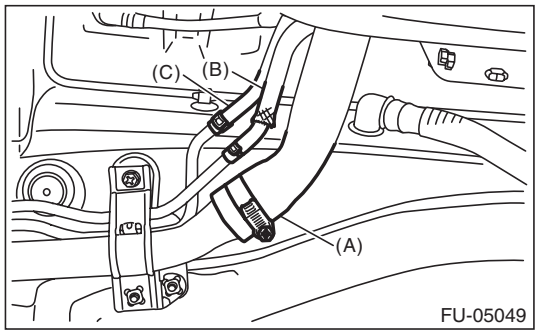

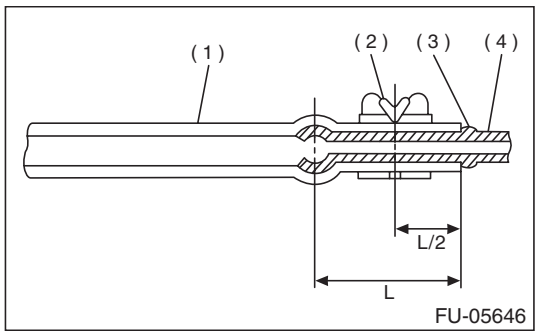

(1) Hose
(2) Clamp or clip
(3) Spool or bump
(4) Pipe

3) Connect the quick connector of the circulate tube to the evaporation pipe as shown in the figure.

CAUTION:
- **Check that there is no damage or dust on the quick connector. If necessary, clean the seal surface of the pipe.**
- **Make sure that the quick connector is securely connected.**

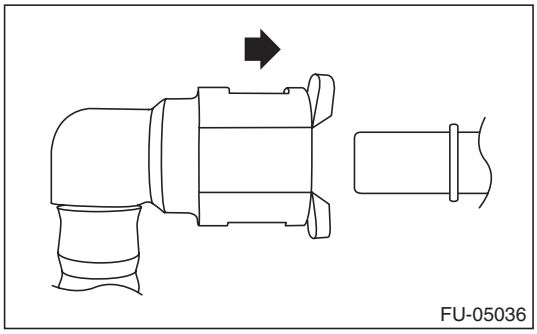

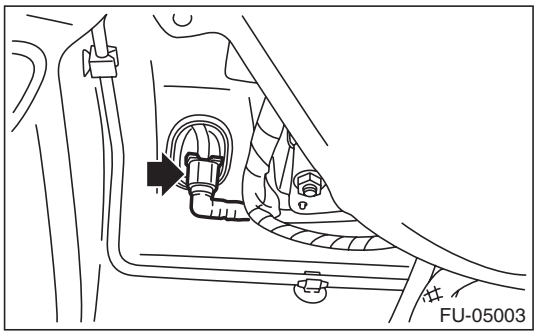

4) Connect the air vent hose to fuel tank.

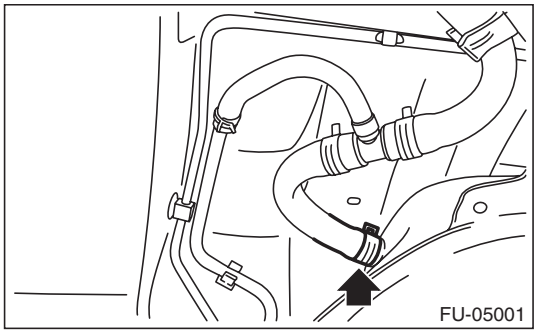

5) Connect the PCV drain hose (A) and PCV outlet hose (B) to the pressure control solenoid valve.

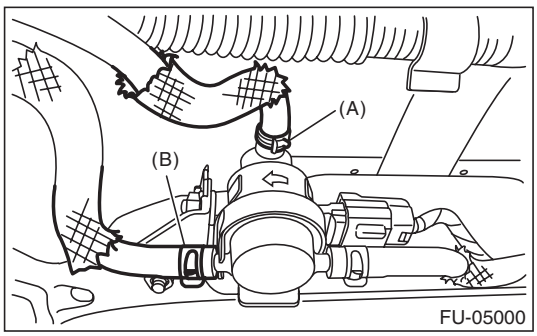

GETtheMANUALS.org

6) Move the fuel tank so that the distance between the center of the positioning hole for the body (A) and the front end of the fuel tank flange (B) becomes L, and tighten the bolts of the fuel tank bands in the sequence shown in the figure.

CAUTION:
To prevent the fuel tank from damage, after tightening the bolts of the fuel tank bands, make sure that the distance between the center of the positioning hole for the body (A) and the front end of the fuel tank flange (B) is L.

Distance L: Center of the positioning hole for the body (A) — Front end of the fuel tank flange (B)
14.5 mm (0.571 in) or less

Tightening torque:
33 N·m (3.4 kgf-m, 24.3 ft-lb)

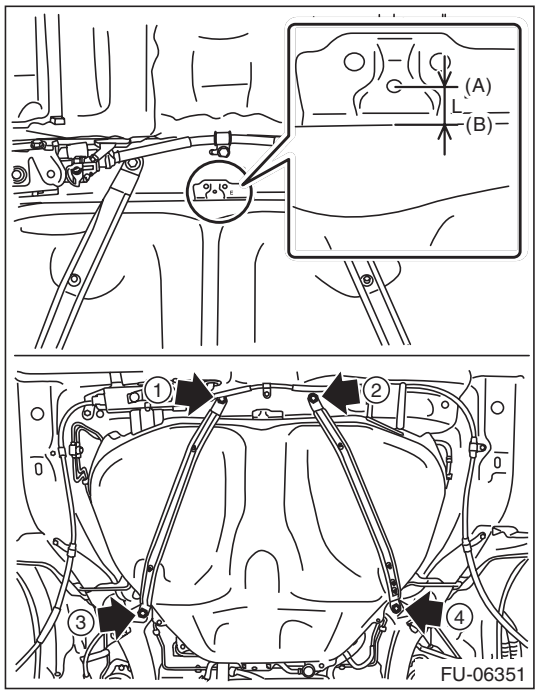

7) Install the rear suspension assembly.

WARNING:
A helper is required to perform this work.

(1) Support the rear differential with the transmission jack.
(2) Support the rear suspension assembly and install the rear suspension assembly to the body.

Tightening torque:
T1: 70 N·m (7.1 kgf-m, 51.6 ft-lb)
T2: 200 N·m (20.4 kgf-m, 147.5 ft-lb)

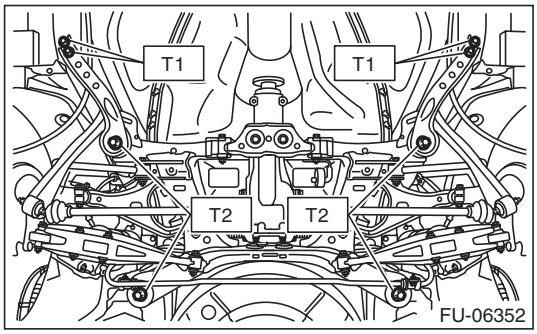

(3) Install the rear shock absorber to the rear suspension arm.

NOTE:
Use a new self-locking nut.

Tightening torque:
120 N·m (12.2 kgf-m, 88.5 ft-lb)

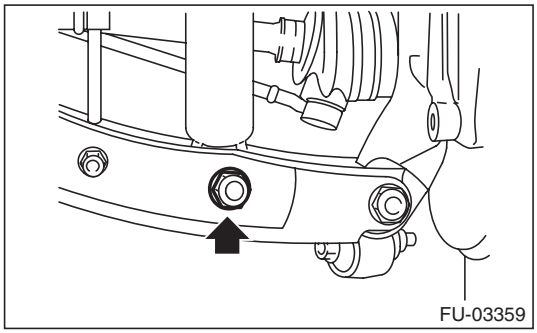

8) Install the heat shield cover.

Tightening torque:
18 N·m (1.8 kgf-m, 13.3 ft-lb)

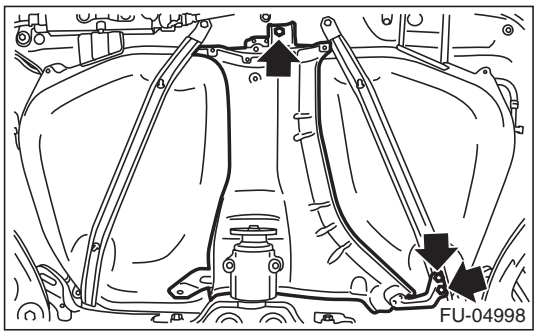

GETtheMANUALS.org

9) Install the bolts (B) and nuts (C) securing the fuel tank protector and install the clip (A) securing the fuel tank protector and heat shield cover.

Tightening torque:
Nut (C): 9 N·m (0.9 kgf-m, 6.6 ft-lb)
Bolt (B): 18 N·m (1.8 kgf-m, 13.3 ft-lb)

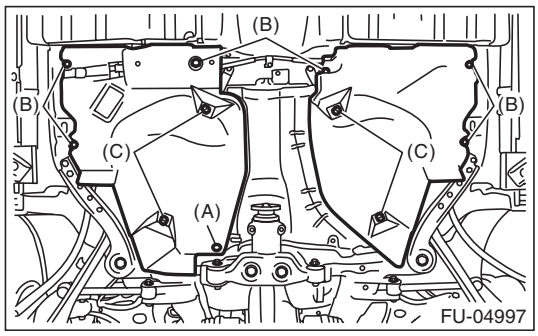

10) Install the propeller shaft. <Ref. to DS-11, INSTALLATION, Propeller Shaft.>
11) Install the rear exhaust pipe and muffler. <Ref. to EX(H4DOTC)-15, INSTALLATION, Rear Exhaust Pipe.> <Ref. to EX(H4DOTC)-17, INSTALLATION, Muffler.>
12) Lower the vehicle.
13) Connect the parking brake cable to the parking brake assembly. <Ref. to PB-14, INSTALLATION, Parking Brake Assembly (Rear Disc Brake).>
14) Install the rear disc brake assembly.

Tightening torque:
66 N·m (6.7 kgf-m, 48.7 ft-lb)

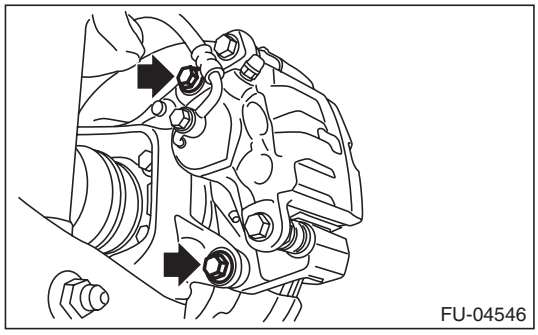

15) Install the rear brake hose bracket to the rear housing.

Tightening torque:
33 N·m (3.4 kgf-m, 24.3 ft-lb)

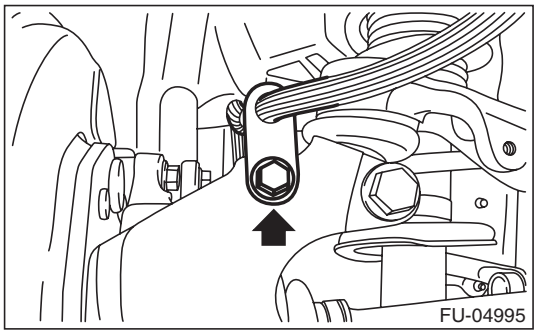

16) Install the rear ABS wheel speed sensor harness bracket to the upper arm.

NOTE:
Prevent the harness identification (line) from being twisted when installing. <Ref. to VDC-2, SPECIFICATION, General Description.>

Tightening torque:
7.5 N·m (0.8 kgf-m, 5.5 ft-lb)

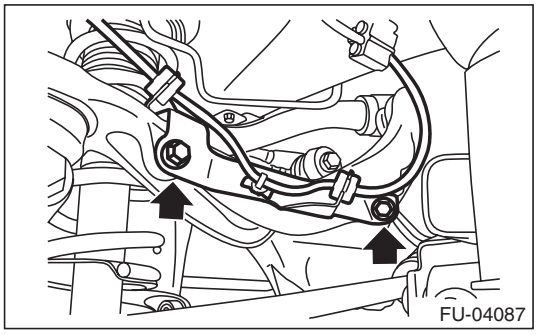

17) Attach the rear ABS wheel speed sensor to the rear housing.

NOTE:
Prevent the harness identification (line) from being twisted when installing. <Ref. to VDC-2, SPECIFICATION, General Description.>

Tightening torque:
7.5 N·m (0.8 kgf-m, 5.5 ft-lb)

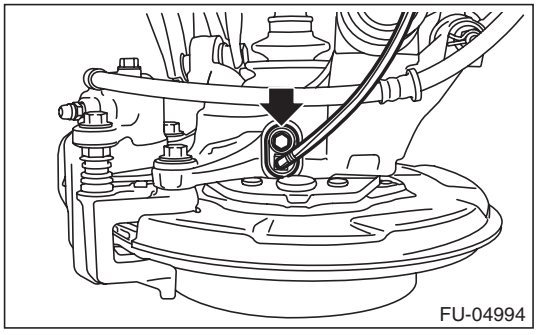

GETtheMANUALS.org

18) Install the rear wheels.

Tightening torque:
120 N·m (12.2 kgf-m, 88.5 ft-lb)

19) Connect the quick connector of fuel delivery tube (A) and fuel return tube (B). <Ref. to FU(H4DOTC)-91, INSTALLATION, Fuel Delivery, Return and Evaporation Lines.>

NOTE:
When connecting, be careful not to reverse the delivery side and return side.

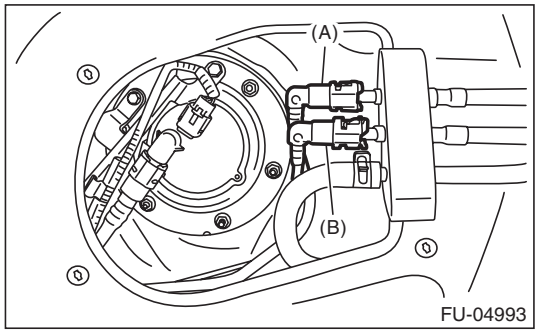

20) Install the service hole cover of fuel sub level sensor.

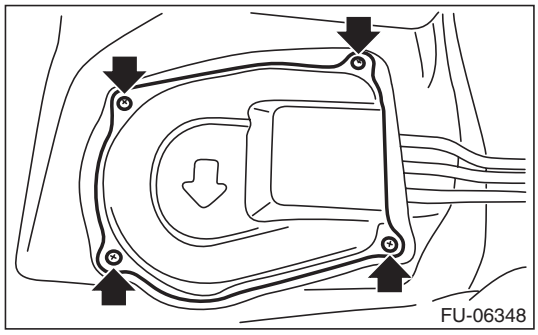

21) Attach the service hole cover of the fuel pump, and attach the connector and clip.

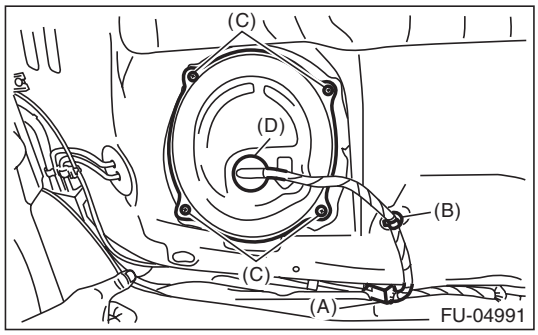

(A) Connector
(B) Clip
(C) Screw
(D) Grommet

22) Set the floor mat (C), and install clips (A) and seat cushion hooks (B).

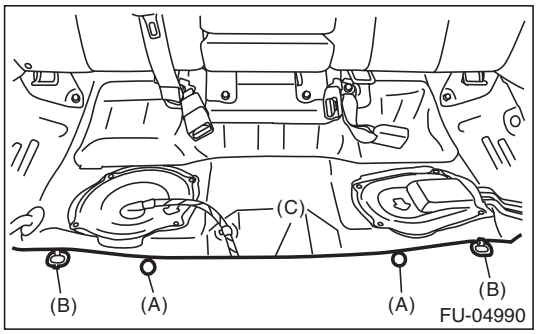

23) Install the rear seat cushion. <Ref. to SE-49, INSTALLATION, Rear Seat.>

24) Connect the battery ground terminal.

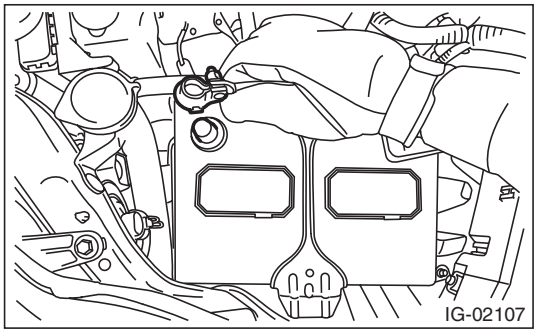

25) Inspect the wheel alignment and adjust if necessary.

C: INSPECTION

1) Check that the fuel tank and fuel pipe have no deformation, cracks and other damages.
2) Check that the fuel hose has no cracks, damage or loose part.

GETtheMANUALS.org

25. Fuel Filler Pipe

A: REMOVAL

WARNING:
Place "NO OPEN FLAMES" signs near the working area.

CAUTION:
Be careful not to spill fuel.

1) Release the fuel pressure. <Ref. to FU(H4DOTC)-66, RELEASING OF FUEL PRESSURE, PROCEDURE, Fuel.>
2) Drain fuel. <Ref. to FU(H4DOTC)-66, DRAINING FUEL (WITH SUBARU SELECT MONITOR), PROCEDURE, Fuel.>
3) Disconnect the ground cable from battery.

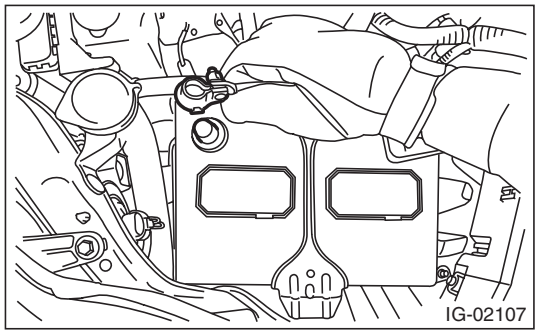

4) Open the fuel filler lid, and remove the filler cap.
5) Turn the fuel filler pipe protector in the direction of the arrow to unlock and remove it.

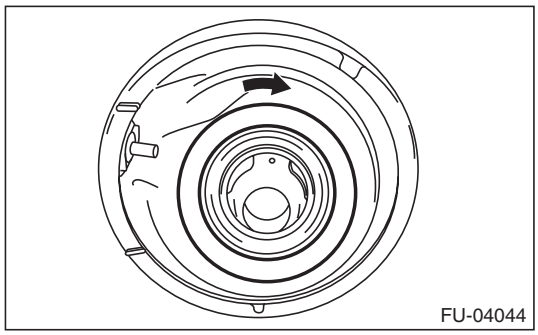

6) Remove the rear wheel RH.
7) Lift up the vehicle.
8) Remove the rear mud guard RH. <Ref. to EI-38, REMOVAL, Mud Guard.>
9) Remove the rear sub frame. <Ref. to RS-16, REMOVAL, Rear Sub Frame.>
10) Disconnect the fuel filler hose (A), PCV inlet hose (B) and circulate hose (C) from the fuel filler pipe assembly.

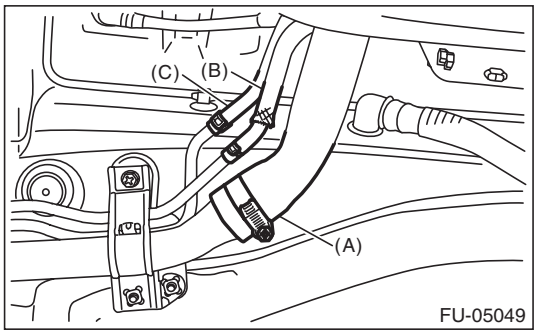

11) Disconnect the evaporation hose (A) from fuel filler pipe assembly and remove the bolts and nuts securing the fuel filler pipe assembly to the vehicle body.

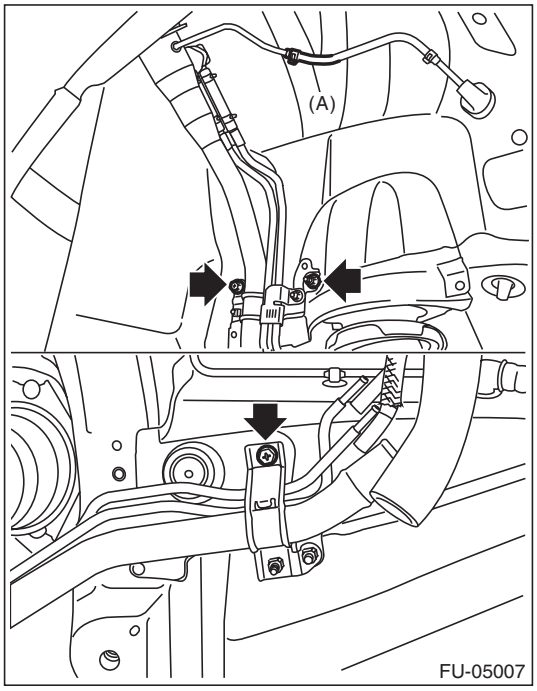

12) Remove the fuel filler pipe assembly from the underside of the vehicle.

GETthemANUALS.org

B: INSTALLATION

1) Open the fuel filler lid.
2) Insert the fuel filler pipe assembly into the rubber saucer from inside of the rear fender.
3) Install the fuel filler pipe assembly to the vehicle body and connect the evaporation hose (A) to the fuel filler pipe assembly.

Tightening torque:
7.5 N·m (0.8 kgf-m, 5.5 ft-lb)

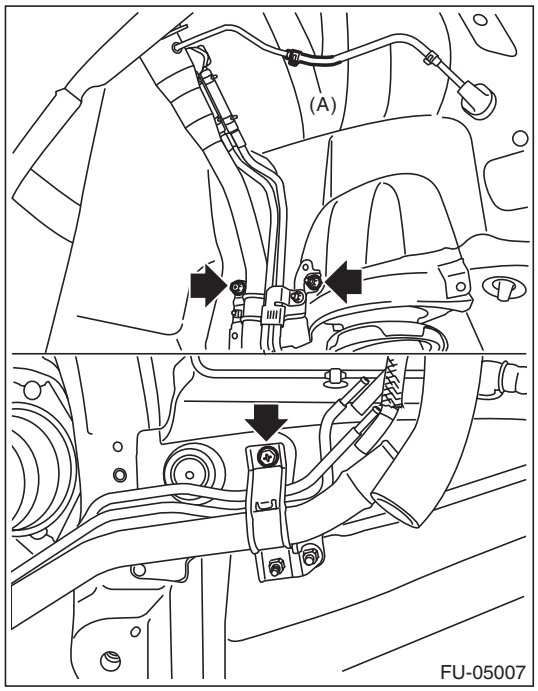

4) Align the cutout on the fuel filler pipe protector and the protrusion of the neck holder and insert them all the way, and then turn the fuel filler pipe protector in the direction of the arrow until it is locked.

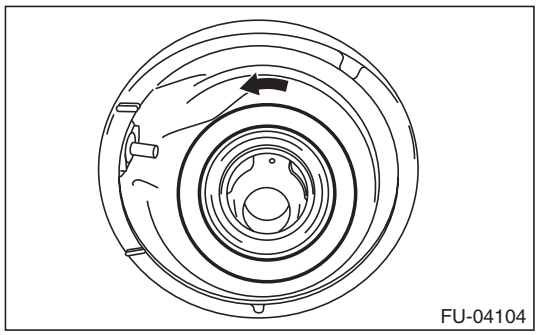

5) Securely insert the fuel filler hose (A), PCV inlet hose (B) and circulate hose (C) to the spool or stopper, then attach the clamp or clip as shown in the figure.

Tightening torque:
2.5 N·m (0.3 kgf-m, 1.8 ft-lb)

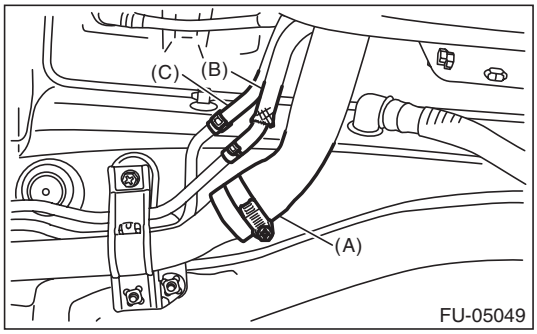

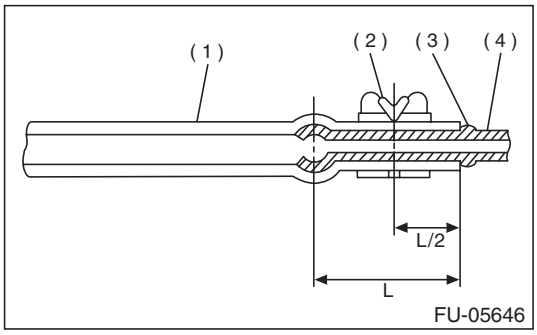

(1) Hose
(2) Clamp or clip
(3) Spool or bump
(4) Pipe

6) Install the rear sub frame. <Ref. to RS-18, INSTALLATION, Rear Sub Frame.>
7) Install the rear mud guard RH. <Ref. to EI-38, INSTALLATION, Mud Guard.>
8) Lower the vehicle.
9) Install the rear wheel RH.

Tightening torque:
120 N·m (12.2 kgf-m, 88.5 ft-lb)

10) Connect the battery ground terminal.

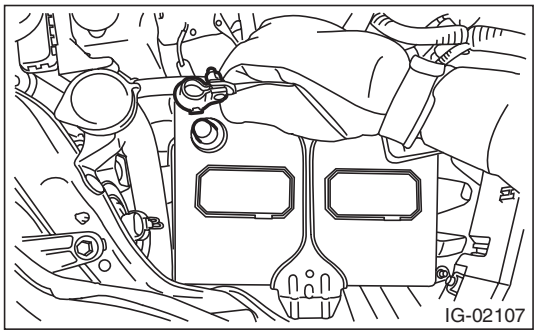

11) Inspect the wheel alignment and adjust if necessary.

GETtheMANUALS.org

C: DISASSEMBLY

1) Remove the shut valve from the fuel filler pipe. <Ref. to EC(H4DOTC)-21, REMOVAL, Shut Valve.>
2) Remove the evaporation pipe from the fuel filler pipe.

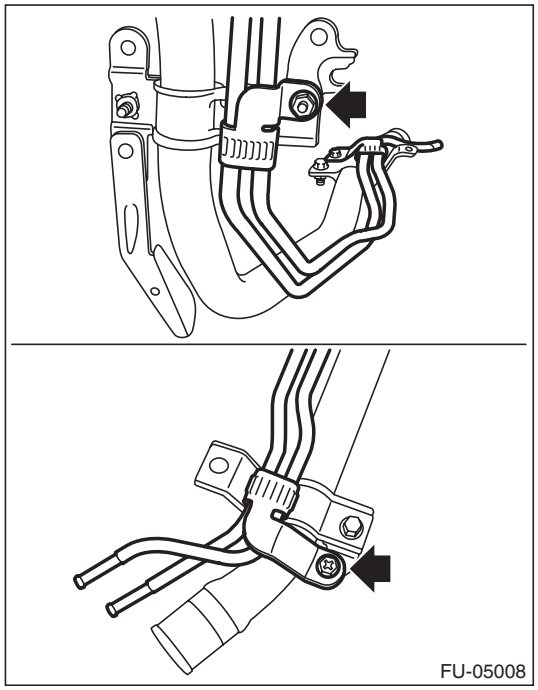

3) Remove the fuel filler pipe bracket from the fuel filler pipe.

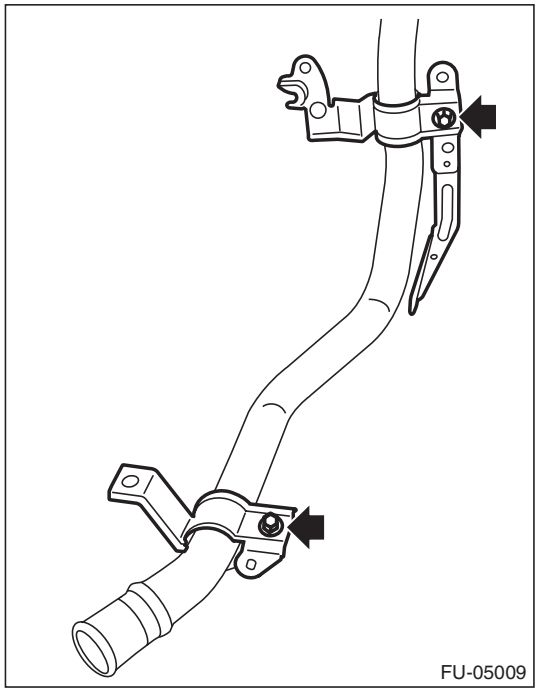

D: ASSEMBLY

1) Temporarily tighten the bolts securing the fuel filler pipe bracket to the fuel filler pipe.

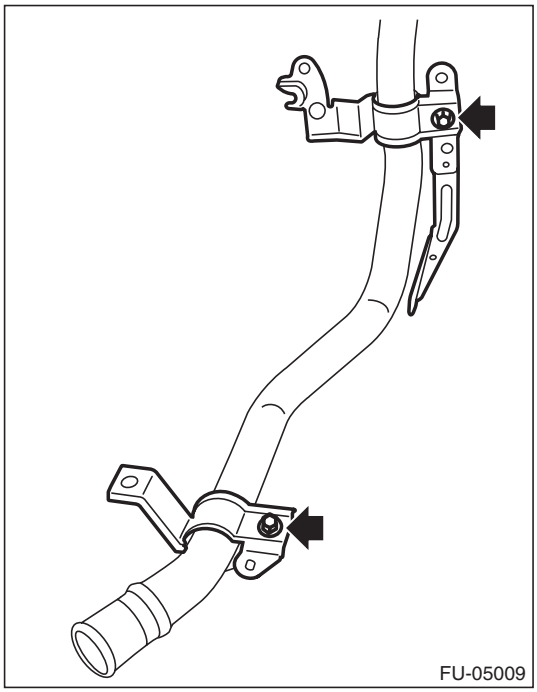

2) Install the evaporation pipe to the fuel filler pipe.

Tightening torque:
7.5 N·m (0.8 kgf-m, 5.5 ft-lb)

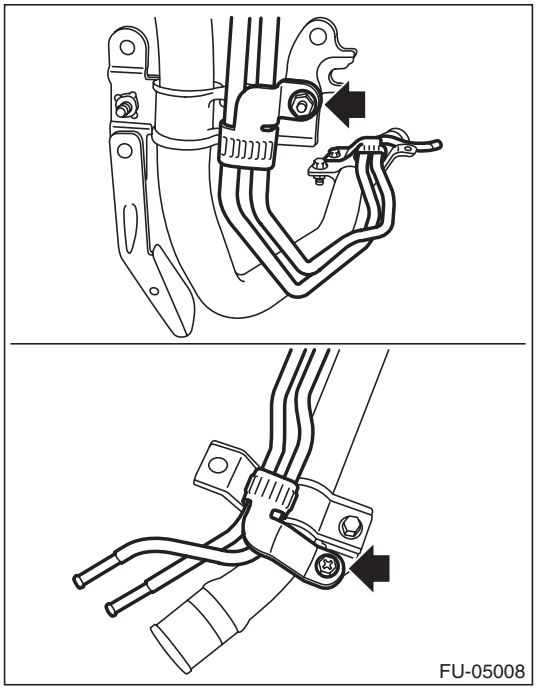

GETtheMANUALS.org

3) Tighten the bolts securing the fuel filler pipe bracket to the fuel filler pipe.

Tightening torque:
7.35 N·m (0.7 kgf-m, 5.4 ft-lb)

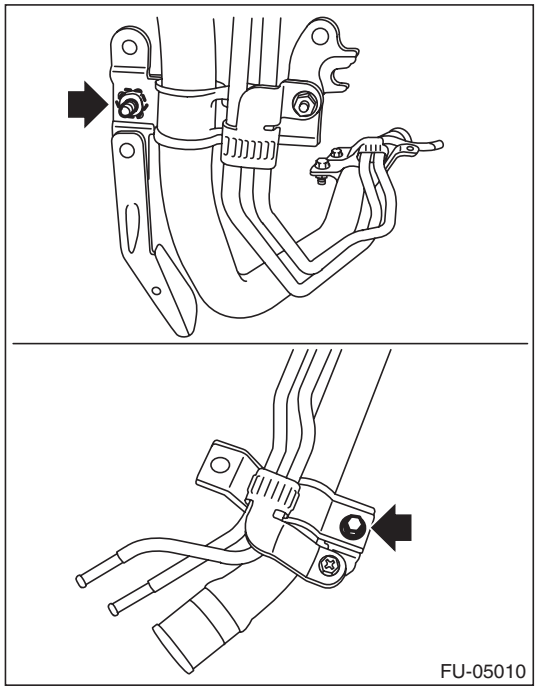

4) Install the shut valve to the fuel filler pipe. <Ref. to EC(H4DOTC)-21, INSTALLATION, Shut Valve.>

E: INSPECTION

1) Check that the fuel filler pipe and evaporation pipe do not have deformation, cracks or other damages.
2) Check that the hose has no cracks, damage or loose part.

GETtheMANUALS.org

26. Fuel Pump

A: REMOVAL

WARNING:
Place "NO OPEN FLAMES" signs near the working area.

CAUTION:
- **Be careful not to spill fuel.**
- **If the fuel gauge indicates that two thirds or more of the fuel is remaining, be sure to drain fuel before starting work to avoid the fuel to spill.**

NOTE:
Fuel pump assembly consists of fuel pump, fuel filter, fuel chamber and fuel level sensor.

1) Release the fuel pressure. <Ref. to FU(H4DOTC)-66, RELEASING OF FUEL PRESSURE, PROCEDURE, Fuel.>
2) Drain fuel. <Ref. to FU(H4DOTC)-66, DRAINING FUEL (WITH SUBARU SELECT MONITOR), PROCEDURE, Fuel.>
3) Disconnect the ground cable from battery.

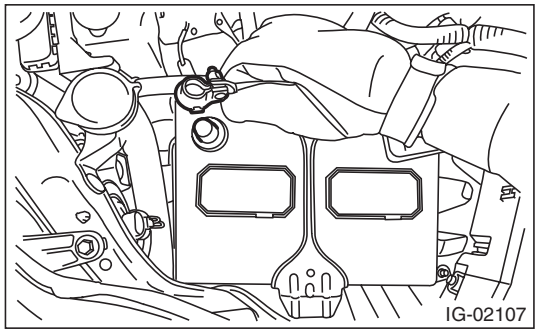

4) Remove the rear seat cushion. <Ref. to SE-34, REMOVAL, Rear Seat.>
5) Remove the clips (A) and seat cushion hooks (B), and turn over the floor mat (C).

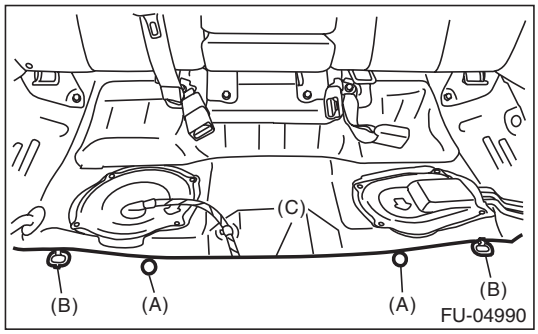

6) Remove the service hole cover.
   (1) Disconnect the fuel cord connector (A), and remove the clip (B).
   (2) Remove the screw (C).
   (3) Push the grommet (D) down and remove the service hole cover.

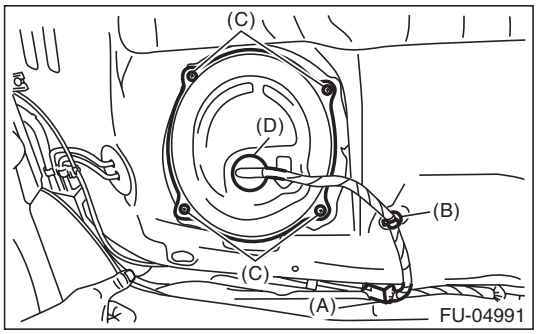

7) Disconnect the connector (A) from fuel pump, and remove the clip (B) securing the harness.
8) Disconnect the quick connector of fuel delivery tube (C), fuel return tube (D) and fuel sub delivery tube (E). <Ref. to FU(H4DOTC)-88, REMOVAL, Fuel Delivery, Return and Evaporation Lines.>
9) Remove the rubber cap (F) from nut.

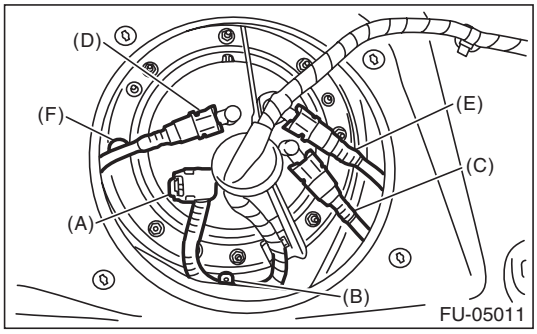

10) Remove the nuts securing the fuel pump upper plate to the fuel tank and remove the fuel pump upper plate.

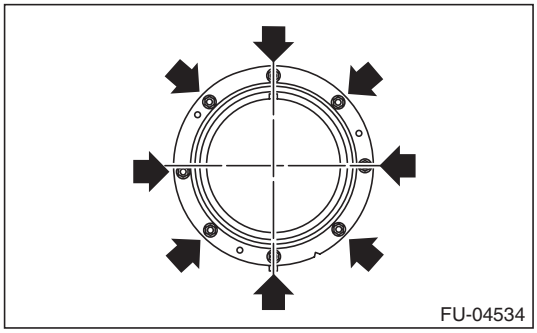

11) Remove the fuel pump assembly from the fuel tank.

GETtheMANUALS.org

B: INSTALLATION

Install in the reverse order of removal while being careful of the following.

- Make sure the sealing portion is free from fuel or foreign matter before installation.
- Align protrusion (A) of the gasket to the position shown in the figure.
- Insert the protrusion (B) of gasket to the fuel pump upper plate. (3 places)
- Align the protrusion (C) of fuel pump assembly with the cutout on the fuel pump upper plate.
- Tighten the nuts to the specified torque in the order as shown in the figure.
- After assembly, install the rubber cap (D) to the position shown in the figure.

NOTE:

- Use a new gasket.
- Do not forget to install the rubber cap (D).

Tightening torque:
4.4 N·m (0.4 kgf-m, 3.2 ft-lb)

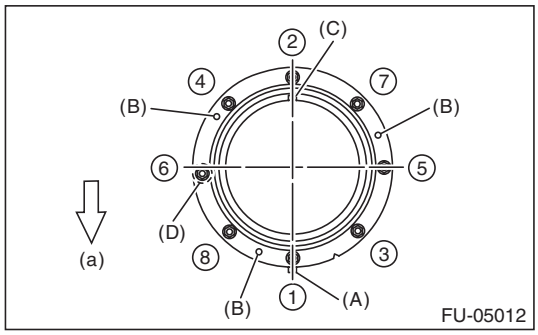

(a) Front side of vehicle

C: INSPECTION

1) Check that the fuel pump has no deformation, cracks or other damages.
2) Connect battery positive terminal to terminal No. 5 and battery ground terminal to terminal No. 6, and inspect the fuel pump operation.

WARNING:

- **Wipe off fuel completely.**
- **Keep the battery as far apart from fuel pump as possible.**
- **Do not run the fuel pump for a long time under non-load condition.**

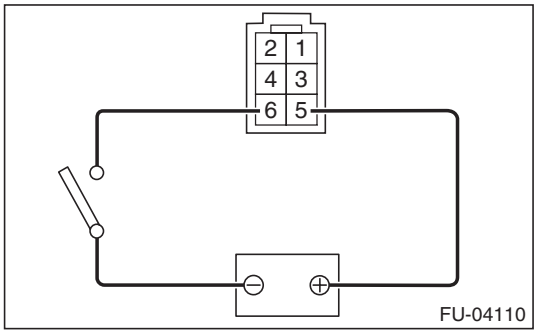

GETtheMANUALS.org

27. Fuel Level Sensor

A: REMOVAL

WARNING:
Place "NO OPEN FLAMES" signs near the working area.

CAUTION:
- **Be careful not to spill fuel.**
- **If the fuel gauge indicates that two thirds or more of the fuel is remaining, be sure to drain fuel before starting work to avoid the fuel to spill.**

NOTE:
The fuel level sensor is built in fuel pump assembly.

1) Remove the fuel pump assembly. <Ref. to FU(H4DOTC)-79, REMOVAL, Fuel Pump.>
2) Disconnect the connector from the fuel filter assembly.

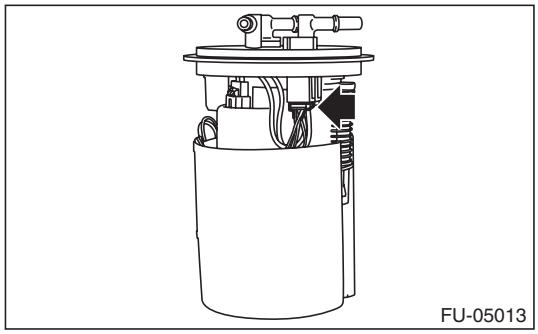

3) Remove the harness from the hooks (A) on the fuel chamber assembly and remove the fuel temperature sensor (B) from fuel chamber assembly.

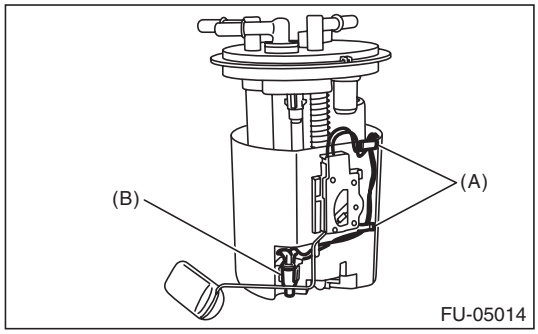

4) Press two claws (A) of the fuel level sensor, and slide the fuel level sensor in the direction of the arrow to remove the fuel level sensor.

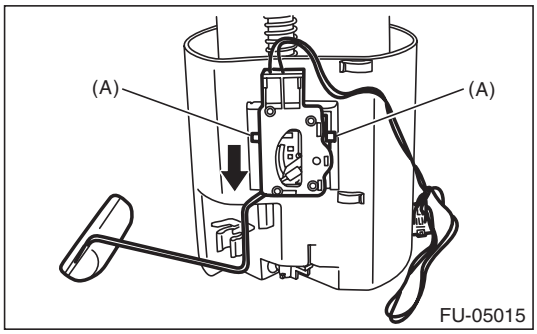

B: INSTALLATION

Install in the reverse order of removal.

C: INSPECTION

1) Check that the fuel level sensor has no damage.
2) Measure the fuel level sensor float position.

NOTE:
When inspecting the fuel level sensor, perform the work with the sensor installed to the fuel pump.

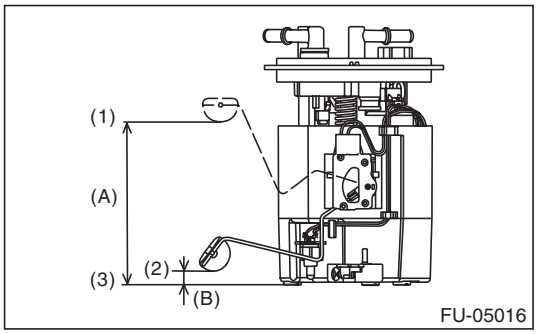

(1) FULL
(2) EMPTY
(3) Fuel tank seating surface

Float position	Standard
FULL to Fuel tank seating surface (A)	126.4±4 mm (4.976±0.157 in)
EMPTY to Fuel tank seating surface (B)	11.0±4 mm (0.433±0.157 in)

GETtheMANUALS.org

3) Measure the resistance between fuel level sensor terminals.

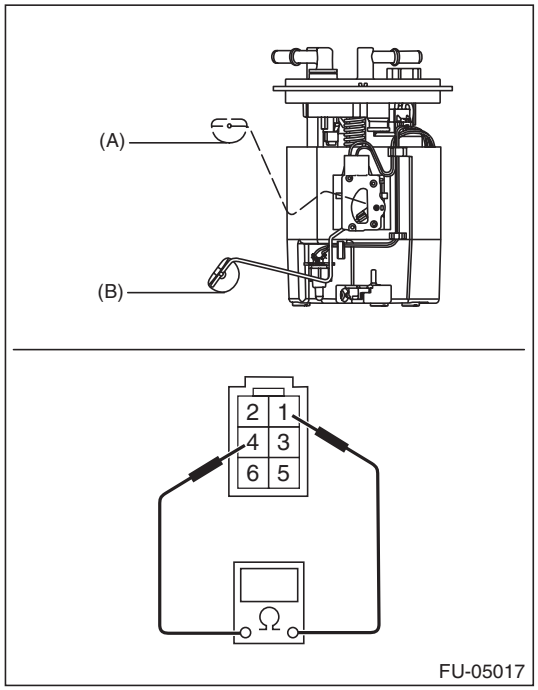

Float position	Terminal No.	Standard
FULL (A)	1 and 4	8.7±1.0 Ω
EMPTY (B)		139.1±2.0 Ω

GETthemANUALS.org

28. Fuel Sub Level Sensor

A: REMOVAL

WARNING:
Place "NO OPEN FLAMES" signs near the working area.

CAUTION:
- **Be careful not to spill fuel.**
- **If the fuel gauge indicates that two thirds or more of the fuel is remaining, be sure to drain fuel before starting work to avoid the fuel to spill.**

1) Release the fuel pressure. <Ref. to FU(H4DOTC)-66, RELEASING OF FUEL PRESSURE, PROCEDURE, Fuel.>
2) Drain fuel. <Ref. to FU(H4DOTC)-66, DRAINING FUEL (WITH SUBARU SELECT MONITOR), PROCEDURE, Fuel.>
3) Disconnect the ground cable from battery.

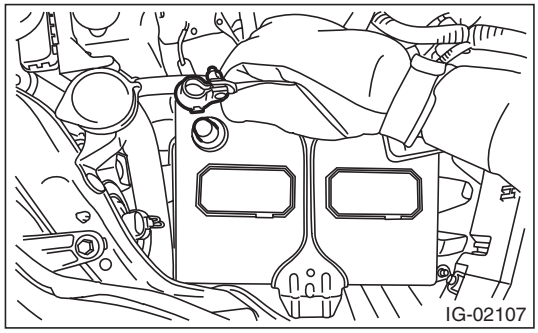

4) Remove the rear seat cushion. <Ref. to SE-34, REMOVAL, Rear Seat.>
5) Remove the service hole cover.

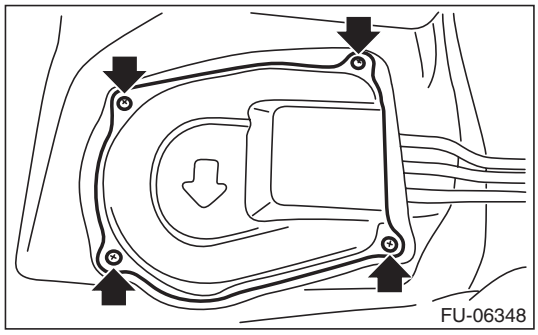

6) Disconnect the connector (A) from fuel sub level sensor, and remove the clip (B) securing the fuel cord from fuel sub level sensor protector.

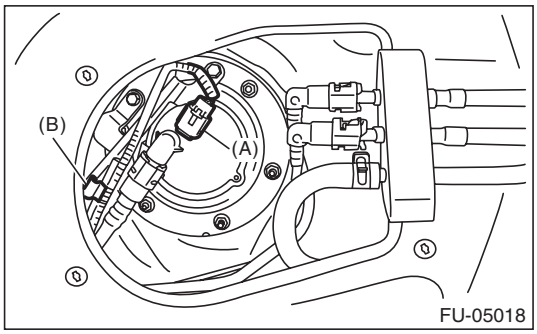

7) Remove the bolts (A) securing the fuel sub level sensor protector to the fuel sub level sensor upper plate, and remove the fuel sub level sensor protector.
8) Disconnect the quick connector on the fuel sub delivery tube (B). <Ref. to FU(H4DOTC)-88, REMOVAL, Fuel Delivery, Return and Evaporation Lines.>

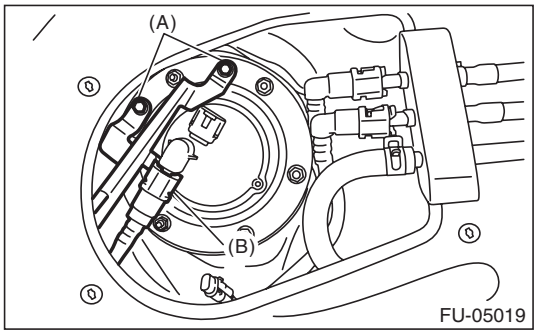

9) Remove the nuts securing the fuel sub level sensor upper plate to the fuel tank and remove the fuel sub level sensor upper plate.

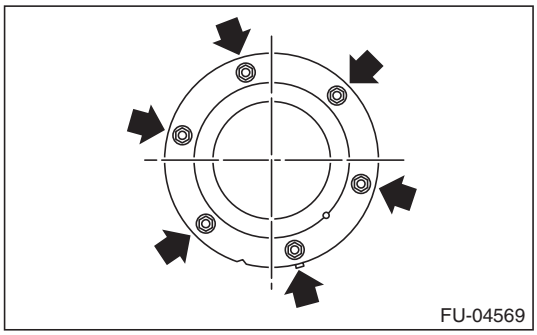

10) Remove the fuel sub level sensor from the fuel tank.

GETtheMANUALS.org

B: INSTALLATION

Install in the reverse order of removal while being careful of the following.

- Make sure the sealing portion is free from fuel or foreign matter before installation.
- Align protrusion (A) of the gasket to the position shown in the figure.
- Align protrusion (B) of the fuel sub level sensor to the cutout in the fuel sub level sensor upper plate.
- After tightening the bolts to the specified torque in the order indicated in the figure, install the fuel sub level sensor protector.

NOTE:
Use a new gasket.

Tightening torque:
4.4 N·m (0.4 kgf-m, 3.2 ft-lb)

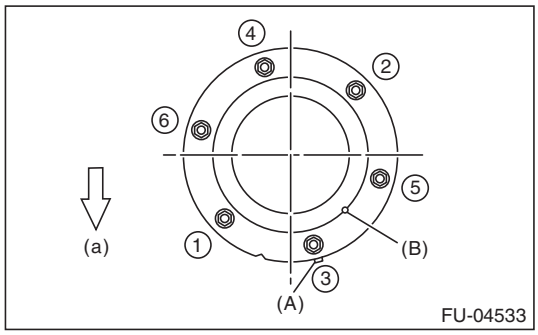

(a) Front side of vehicle

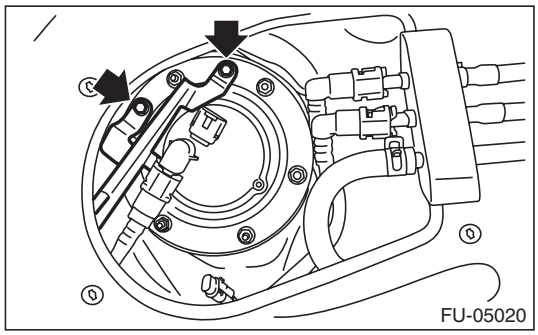

C: INSPECTION

1) Check that the fuel sub level sensor has no damage.
2) Measure the fuel sub level sensor float position.

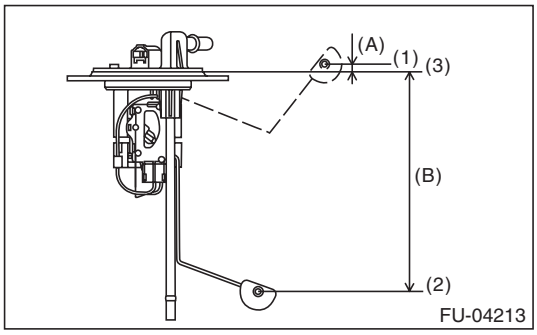

(1) FULL
(2) EMPTY
(3) Datum points

Float position	Standard
FULL to Datum point (A)	6.4±3.5 mm (0.252±0.138 in)
EMPTY to Datum point (B)	163.3±3.5 mm (6.429±0.138 in)

3) Measure the resistance between fuel sub level sensor terminals.

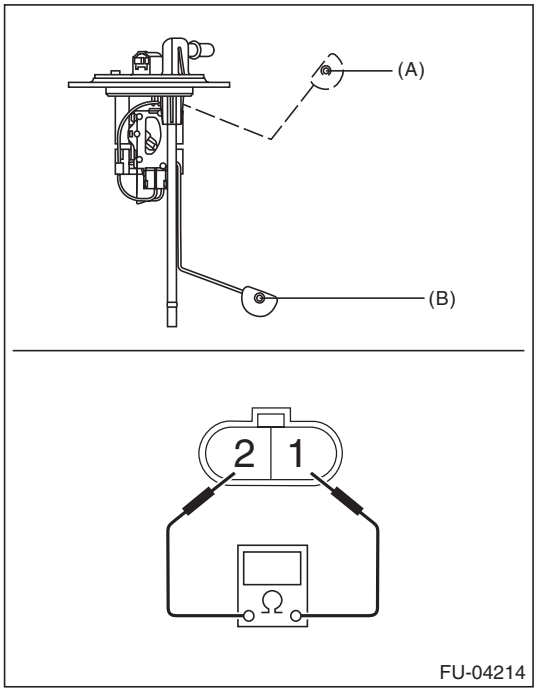

Float position	Terminal No.	Standard
FULL (A)	1 and 2	8.7±1.0 Ω
EMPTY (B)		270.9±4.0 Ω

GETtheMANUALS.org

29. Fuel Filter

A: REMOVAL

WARNING:
Place "NO OPEN FLAMES" signs near the working area.

CAUTION:
- **Be careful not to spill fuel.**
- **If the fuel gauge indicates that two thirds or more of the fuel is remaining, be sure to drain fuel before starting work to avoid the fuel to spill.**
- **Be careful not to drop or apply any impact to the fuel pump during work. This may deteriorate its performance.**

NOTE:
The fuel filter is built in fuel pump assembly.

1) Remove the fuel pump assembly. <Ref. to FU(H4DOTC)-79, REMOVAL, Fuel Pump.>
2) Remove the fuel level sensor and fuel temperature sensor. <Ref. to FU(H4DOTC)-81, REMOVAL, Fuel Level Sensor.>
3) Disconnect the connector from the fuel filter assembly.

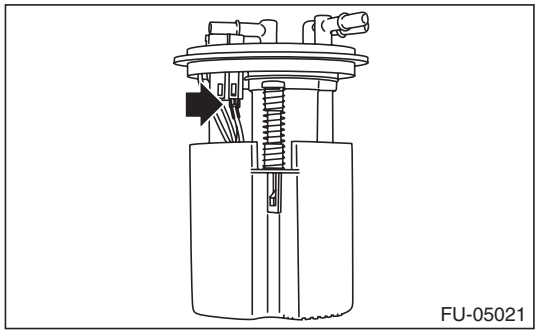
FU-05021

4) Disengage the claw connecting the fuel filter assembly and fuel chamber assembly, and separate fuel filter assembly and fuel chamber assembly.

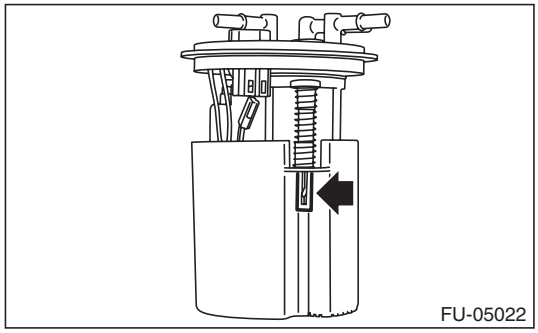
FU-05022

5) Remove the fuel pump holder from the fuel filter assembly.

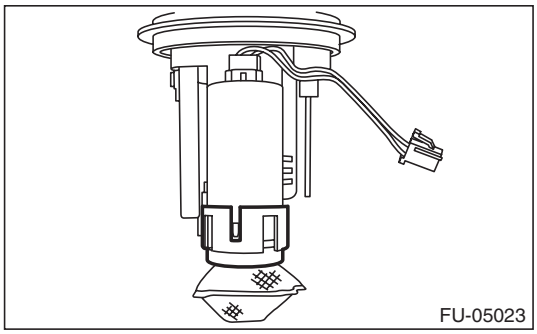
FU-05023

6) Remove the fuel pump from the fuel filter assembly.

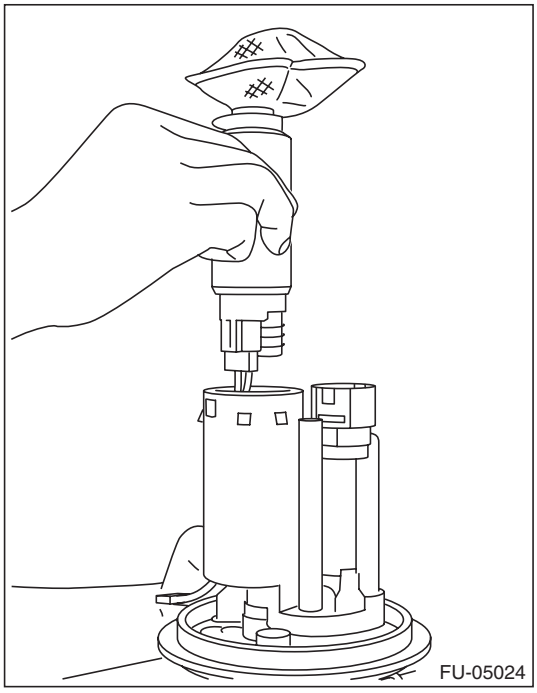
FU-05024

GETtheMANUALS.org

B: INSTALLATION

1) Assemble the gasket spacer (A) and support rubber cushion (B) to the fuel pump, and install the fuel pump to the fuel filter assembly.

NOTE:
- Use a new gasket spacer.
- Use a new support rubber cushion.
- Apply gasoline to the surface of gasket spacer and support rubber cushion.

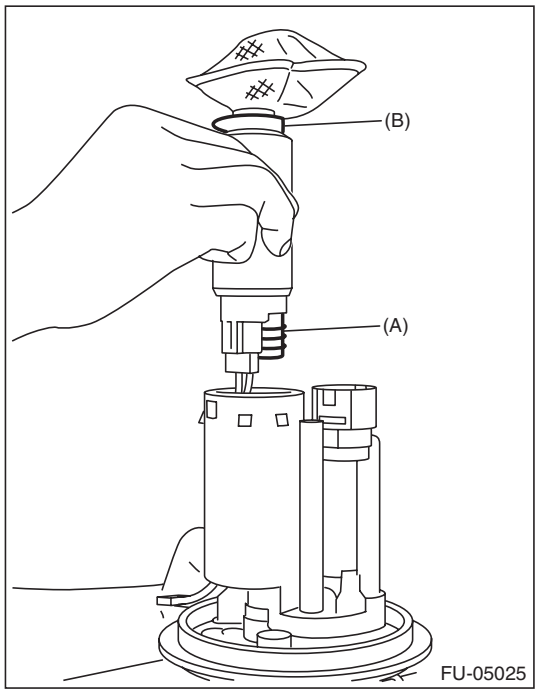

2) Install the fuel pump holder to the fuel filter assembly.

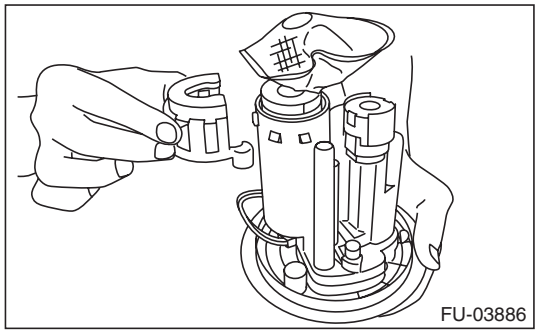

3) Install the pump module spring (A) to fuel filter assembly, and install the fuel chamber assembly (B).

NOTE:
- Use a new fuel chamber assembly.
- Check that the claw connecting the fuel filter assembly and fuel chamber assembly is securely fastened.

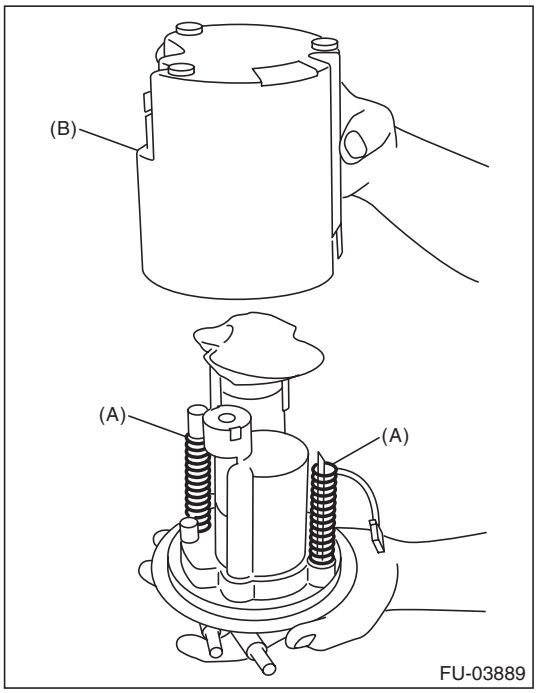

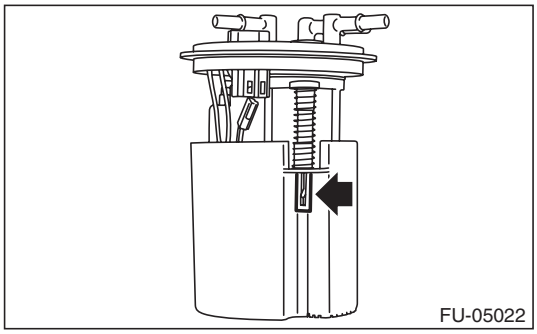

4) Connect the fuel pump connector.

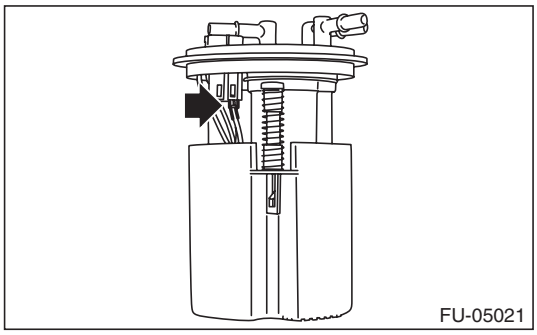

5) Install the fuel level sensor and fuel temperature sensor. <Ref. to FU(H4DOTC)-81, INSTALLATION, Fuel Level Sensor.>

6) Inspect the fuel level sensor. <Ref. to FU(H4DOTC)-81, INSPECTION, Fuel Level Sensor.>

7) Install the fuel pump assembly. <Ref. to FU(H4DOTC)-80, INSTALLATION, Fuel Pump.>

GETmyMANUALS.org

30. Fuel Damper

A: REMOVAL

WARNING:
Place "NO OPEN FLAMES" signs near the working area.

CAUTION:
- **Be careful not to spill fuel.**
- **Catch the fuel from hoses using a container or cloth.**

1) Release the fuel pressure. <Ref. to FU(H4DOTC)-66, RELEASING OF FUEL PRESSURE, PROCEDURE, Fuel.>
2) Disconnect the fuel delivery hose (A) and fuel return hose (B) from the fuel damper, and remove the fuel damper.

NOTE:
Be careful not to confuse the delivery side with the return side of the fuel damper.

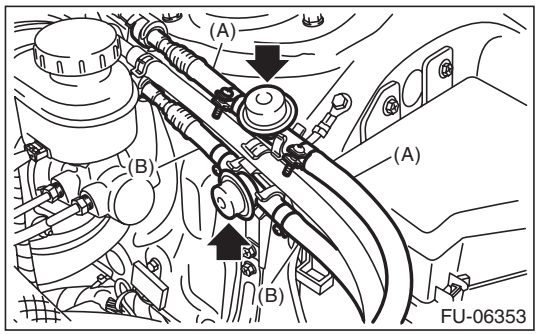

B: INSTALLATION

Install in the reverse order of removal.

NOTE:
- Be careful not to confuse the delivery side with the return side of the fuel damper.
- For information about connecting fuel delivery hose and fuel return hose, refer to "Fuel Delivery, Return & Evaporation Lines". <Ref. to FU(H4DOTC)-93, CONNECTING THE FUEL DELIVERY HOSE, FUEL RETURN HOSE AND FUEL HOSE, INSTALLATION, Fuel Delivery, Return and Evaporation Lines.>

C: INSPECTION

1) Check that the fuel damper has no deformation, cracks or other damages.
2) Check that the fuel hose has no cracks, damage or loose part.

GETtheMANUALS.org

31. Fuel Delivery, Return and Evaporation Lines

A: REMOVAL

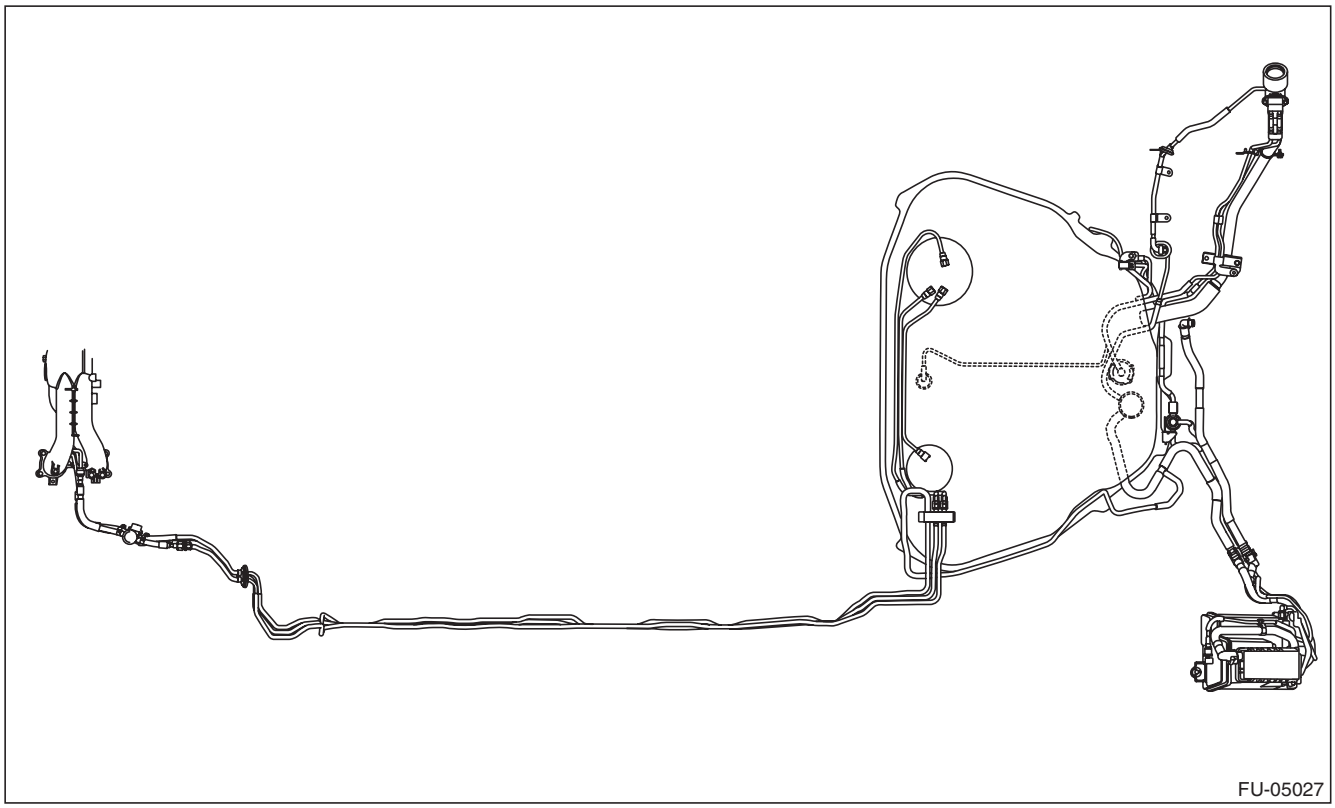

WARNING:
Place "NO OPEN FLAMES" signs near the working area.

CAUTION:
Be careful not to spill fuel.

1) Release the fuel pressure. <Ref. to FU(H4DOTC)-66, RELEASING OF FUEL PRESSURE, PROCEDURE, Fuel.>
2) Open the fuel filler lid and remove the fuel filler cap.
3) Remove the floor mat. <Ref. to EI-162, REMOVAL, Floor Mat.>
4) In the engine compartment, disconnect the fuel delivery hoses, fuel return hoses and evaporation hoses.

CAUTION:
- **Be careful not to spill fuel.**
- **Catch the fuel from hoses using a container or cloth.**

(1) Remove the connect check cover from the fuel delivery hose and fuel return hose.

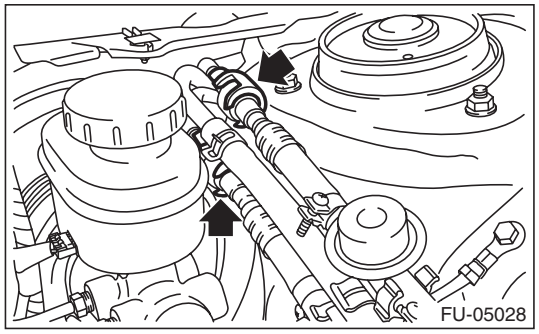

(2) Set the ST to the fuel pipe.

ST 42099AE000 QUICK CONNECTOR RELEASE

GETtheMANUALS.org

(3) Disconnect the quick connector of the fuel delivery hose and fuel return hose by pushing the ST in the direction of the arrow.
(4) Remove the clip and disconnect the evaporation hose from the fuel pipe.

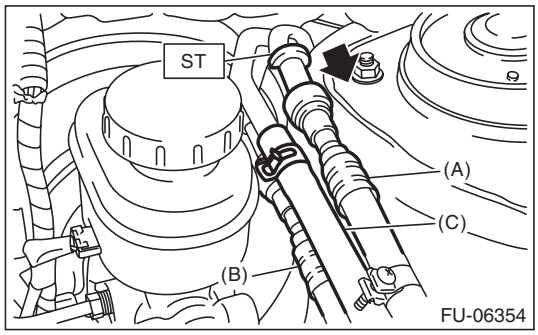

(A) Fuel delivery hose
(B) Fuel return hose
(C) Evaporation hose

5) Remove the fuel tank. <Ref. to FU(H4DOTC)-68, REMOVAL, Fuel Tank.>
6) Remove the rear mud guard LH. <Ref. to EI-38, REMOVAL, Mud Guard.>
7) Remove the purge hose (A), purge pipe (B), air vent hose (C), PCV outlet hose (D), PCV drain hose (E) and drain tube assembly (F).

NOTE:
Disconnect the quick connector as shown in the figure.

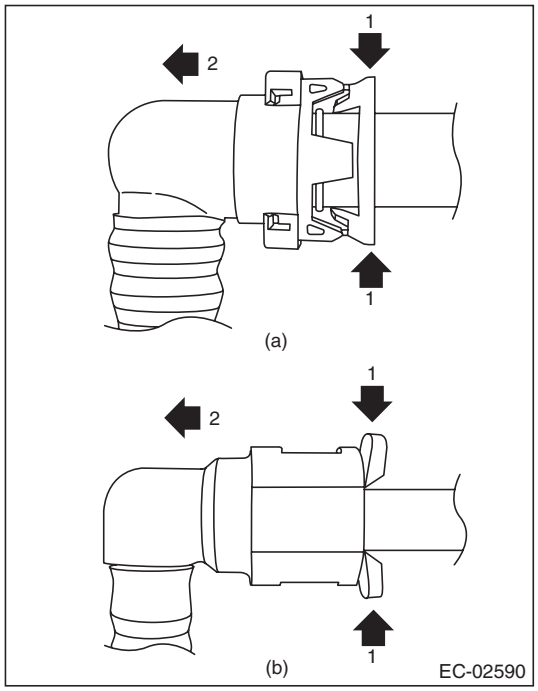

(a) Air vent hose (C), drain tube ASSY (F)
(b) PCV outlet hose (D), PCV drain hose (E)

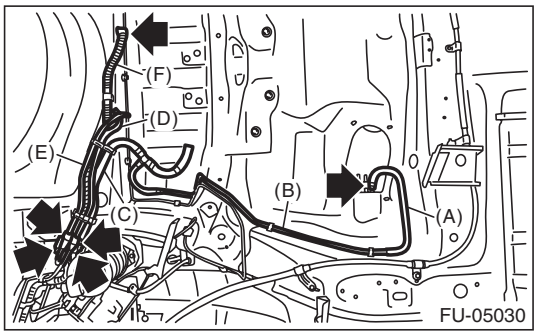

8) Remove the fuel pipe assembly from vehicle.
9) Disconnect the quick connector, then disconnect the fuel delivery tube, fuel return tube and fuel sub delivery tube.

- When using ST

1. Attach ST to the pipe and push ST in the direction of arrow mark to disconnect the quick connector.

ST 42099AE000 QUICK CONNECTOR RELEASE

CAUTION:
- **Be careful not to spill fuel.**
- **Catch the fuel from hoses using a container or cloth.**
- **To disconnect the connector, hold (C) shown in the figure and pull in axial direction.**
- **If the connector and pipe are sticking to each other, push and pull the connector with ST pushed, and then pull the connector after it starts moving freely.**
- **When disconnecting the connector, do not bend or twist the tube forcibly. If the tube is bent, replace with a new part.**

NOTE:
Clean the pipe and quick connector, if they are covered with dust.

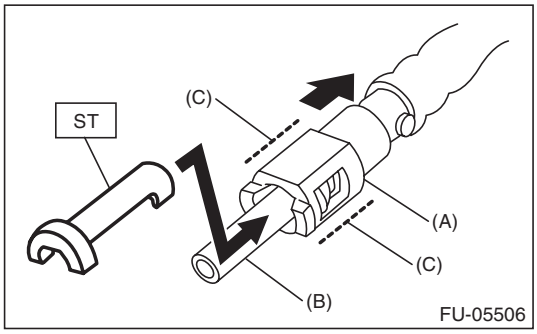

(A) Quick connector
(B) Pipe
(C) Connector holding position

GETmeMANUALS.org

2. To prevent from damaging or entering foreign matter, wrap the pipes and quick connectors with plastic bag etc.

CAUTION:
When reusing the retainer, do not disconnect the retainer from the connector.

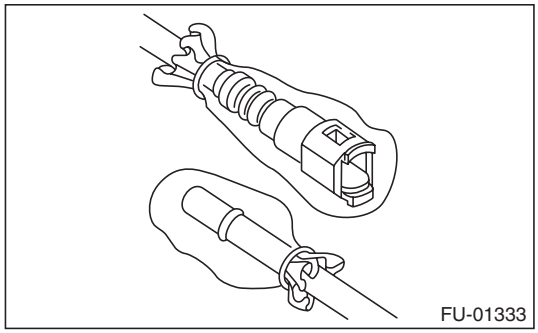

- When not using ST

1. Push the retainer in the direction of the arrow, disconnect the quick connector from pipe.

CAUTION:
- **Be careful not to spill fuel.**
- **Catch the fuel from hoses using a container or cloth.**
- **To disconnect the connector, hold (D) shown in the figure and pull in axial direction.**
- **If the connector and pipe are sticking to each other, push and pull the connector with the retainer pushed in the direction of the arrow, and then pull the connector after it starts moving freely.**
- **When disconnecting the connector, do not bend or twist the tube forcibly. If the tube is bent, replace with a new part.**

NOTE:
Clean the pipe and quick connector, if they are covered with dust.

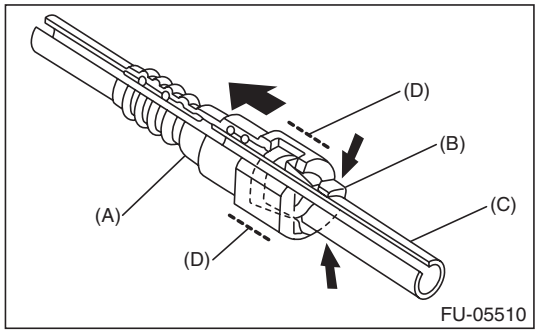

(A) Quick connector
(B) Retainer
(C) Pipe
(D) Connector holding position

2. To prevent from damaging or entering foreign matter, wrap the pipes and quick connectors with plastic bag etc.

CAUTION:
When reusing the retainer, do not disconnect the retainer from the pipe.

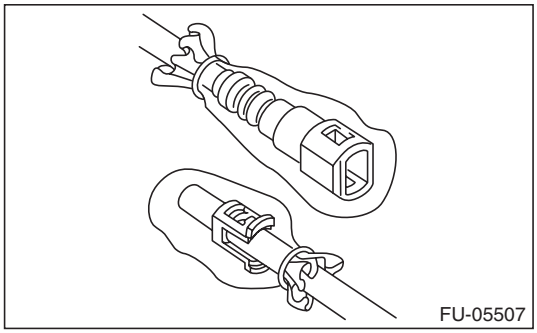

10) Remove the evaporation pipe.
(1) Remove the rear mud guard RH. <Ref. to EI-38, REMOVAL, Mud Guard.>
(2) Remove the evaporation hose.

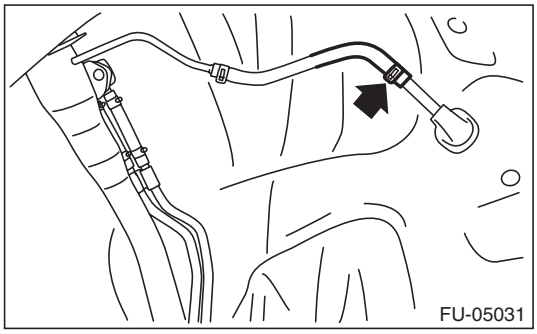

(3) Remove the trunk side trim panel assembly - side on the RH side. <Ref. to EI-110, REMOVAL, Rear Quarter Trim.>
(4) Remove the evaporation pipe protector.

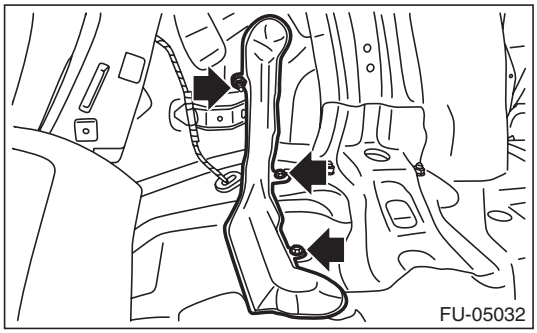

GETtheMANUALS.org

(5) Remove the evaporation pipe from vehicle.

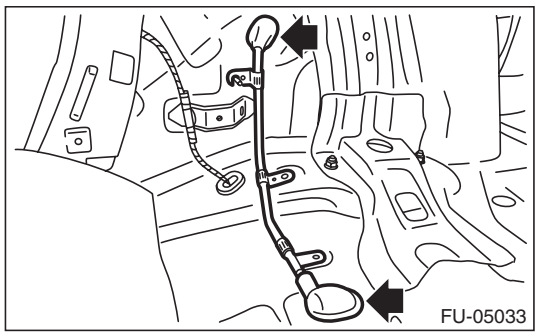

B: INSTALLATION

Install in the reverse order of removal while being careful of the following.

1. INSTALLATION OF EVAPORATION PIPE

1) Install the evaporation pipe to the vehicle.

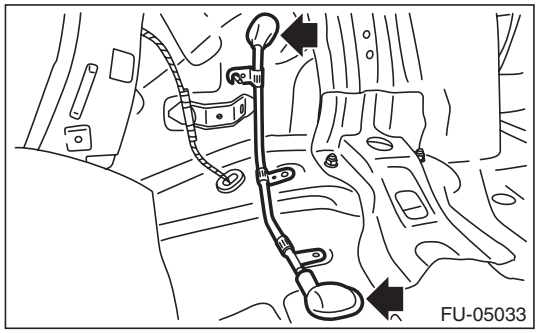

2) Install the evaporation pipe protector.

Tightening torque:
T1: 1 N·m (0.1 kgf-m, 0.7 ft-lb)
T2: 7.5 N·m (0.7 kgf-m, 5.4 ft-lb)

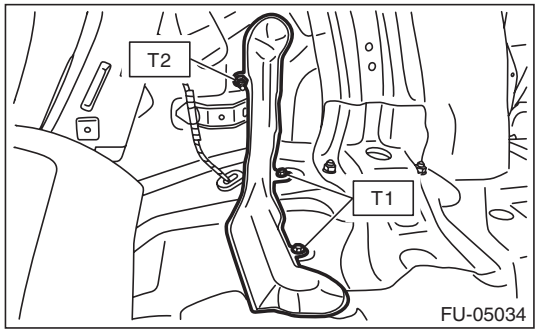

3) Install the trunk side trim panel assembly - side on RH side. <Ref. to EI-119, INSTALLATION, Rear Quarter Trim.>

4) Install the evaporation hose.

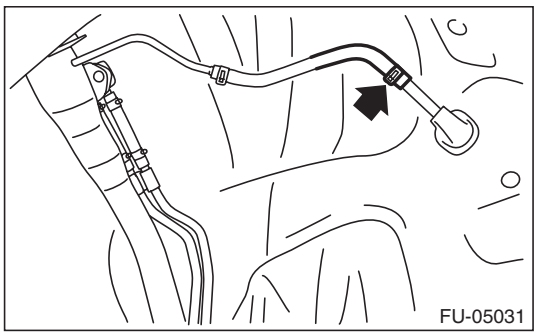

5) Install the rear mud guard RH. <Ref. to EI-38, INSTALLATION, Mud Guard.>

2. CONNECTING THE FUEL LINE QUICK CONNECTOR

CAUTION:

- **Make sure there are no damage or dust on connections. If necessary, clean seal surface of pipe.**

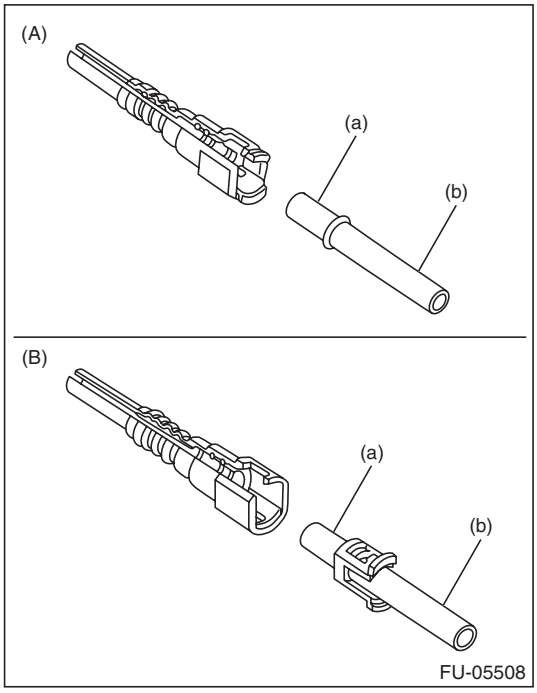

(A) When removed using ST
(B) When removed without using ST
(a) Seal surface
(b) Pipe

- **When reusing the retainer, make sure that neither scratches nor deformation exist on the retainer. If it is faulty, use a new part.**

GETtheMANUALS.org

1) Connect the quick connector to pipe.

CAUTION:

- **Make sure that the quick connector is securely connected.**

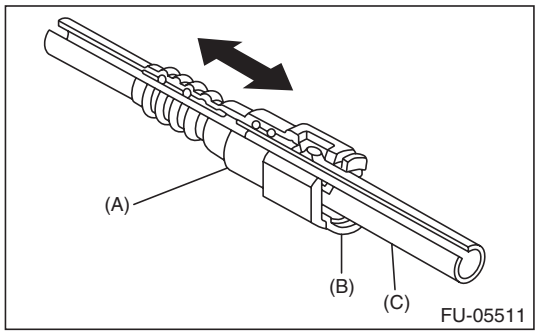

(A) Quick connector
(B) Retainer
(C) Pipe

- **Make sure the two retainer pawls are engaged in their mating positions in the quick connector.**
- **Be sure to inspect tubes and their connections for any leakage of fuel.**
- **To connect the connector, hold (d) shown in the figure and push in axial direction.**
- **When connecting the connector, do not bend or twist the tube forcibly. If the tube is bent, replace with a new part.**

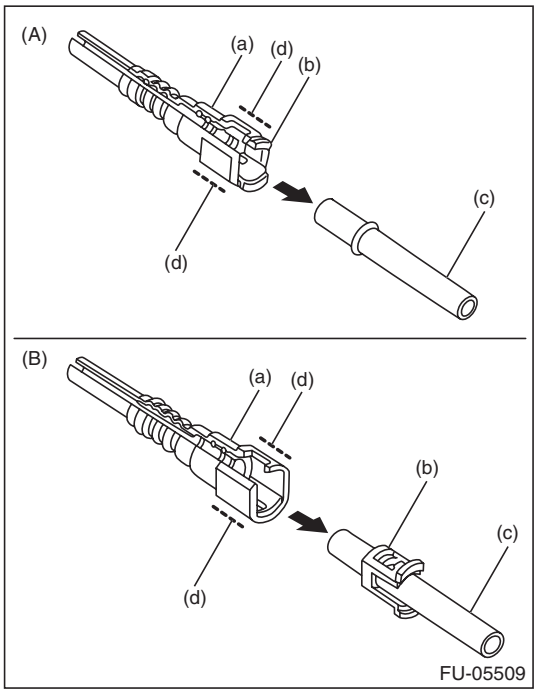

(A) When removed using ST
(B) When removed without using ST
(a) Quick connector
(b) Retainer
(c) Pipe
(d) Connector holding position

GETtheMANUALS.org

3. CONNECTING THE FUEL DELIVERY HOSE, FUEL RETURN HOSE AND FUEL HOSE

Connect the fuel delivery hose, fuel return hose, and fuel hose as shown in the figure.

CAUTION:
- **If the connection portion has a spool or stopper, do not allow the end of the hose to bend or ride over by inserting the hose too deep.**
- **Be sure to inspect hoses and their connections for any leakage of fuel.**

NOTE:
Use new fuel delivery hose, fuel return hose, and fuel hose.

Tightening torque:
1.25 N·m (0.1 kgf-m, 0.9 ft-lb)

L1: 2.5±1.5 mm (0.098±0.059 in)

L2: 22.5±2.5 mm (0.886±0.098 in)

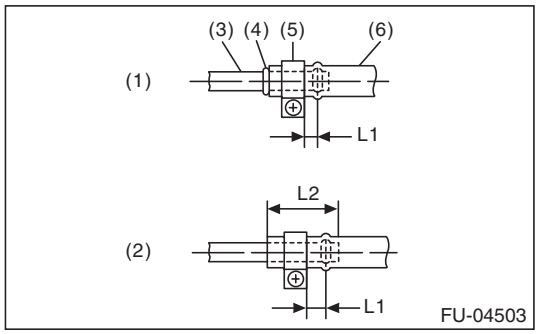

(1) When there is a spool or bump
(2) When there is no spool or bump
(3) Pipe
(4) Spool or bump
(5) Clamp
(6) Hose

4. EVAPORATION HOSE CONNECTION

Connect the evaporation hose to the pipe with an overlap of 15 to 20 mm (0.59 to 0.79 in).

L = 17.5±2.5 mm (0.689±0.098 in)

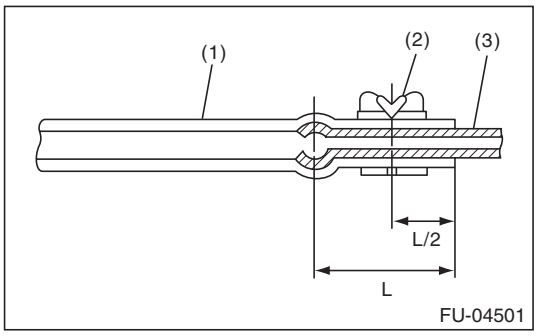

(1) Hose
(2) Clip
(3) Pipe

5. CONNECTING THE EVAPORATION LINE QUICK CONNECTOR

CAUTION:
- **Make sure there are no damage or dust on connections. If necessary, clean the seal surface of the pipe.**
- **Make sure that the quick connector is securely connected.**

Connect the quick connector as shown in the figure.

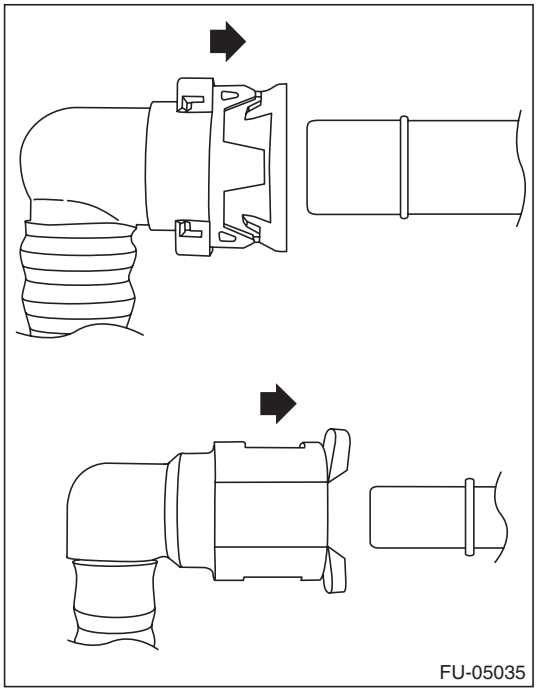

C: INSPECTION

1) Check that the fuel pipe has no deformation, cracks or other damages.
2) Check that the hose and tube have no cracks, damage or loose part.

GETtheMANUALS.org

32. Fuel System Trouble in General

A: INSPECTION

Trouble	Possible cause	Corrective action
Insufficient fuel supply to injector	a. Fuel pump does not operate.	
	❍ Defective terminal contact	Inspect contact, especially ground, and tighten it securely.
	❍ Trouble in electromagnetic or electronic circuit parts	Replace the faulty parts.
	b. Decline of fuel pump function	Replace the fuel pump.
	c. Clogged fuel filter	Replace the fuel filter. Clean or replace the fuel tank if necessary.
	d. Clogged or bent pipe, hose or tube of fuel line	Clean, correct or replace the pipe, hose or tube of the fuel line.
	e. Air is mixed in fuel system.	Check the fuel line connections, and repair or replace the defective part.
	f. Damaged diaphragm of pressure regulator	Replace the pressure regulator.
Leakage or run-out of fuel	a. Loose connection in pipe, hose or tube of fuel line	Check the fuel line connections, and repair or replace the defective part.
	b. Cracks in pipe, hose or tube of fuel line	Replace the pipe, hose or tube of the fuel line.
	c. Cracks or defective welded part of fuel tank	Replace the fuel tank.
	d. Clogged or bent pipe, hose or tube of fuel line	Clean, correct or replace the pipe, hose or tube of the fuel line.
Gasoline smell inside of compartment	a. Loose connection in pipe, hose or tube of fuel line	Check the fuel line connections, and repair or replace the defective part.
	b. Improper installation of rubber saucer	Correct or replace the rubber saucer.
	c. Defective canister	Replace the canister.
Defective fuel gauge	a. Defective operation of fuel level sensor	Replace the fuel level sensor.
	b. Defective operation of combination meter	Replace the combination meter.
Noise	a. Big operation noise or vibration from fuel pump	Replace the fuel pump.

NOTE:
- When the vehicle is left unattended for an extended period of time, water may accumulate in the fuel tank. Fill fuel fully to prevent the problem.
- In snow-covered areas, mountainous areas, skiing areas, etc. where ambient temperatures drop to 0°C (32°F) or less throughout the winter season, use a water removing agent in the fuel system to prevent freezing fuel system and accumulating water.
- When water is accumulated in fuel filter, fill the water removing agent in the fuel tank.
- Before using water removing agent, follow the cautions noted on the bottle.

GETtheMANUALS.org

EMISSION CONTROL (AUX. EMISSION CONTROL DEVICES)

EC(H4DOTC)

Page

1. General Description 2
2. Front Catalytic Converter 3
3. Rear Catalytic Converter 4
4. Canister 5
5. Purge Control Solenoid Valve 9
6. Fuel Level Sensor 14
7. Fuel Temperature Sensor 15
8. Fuel Sub Level Sensor 16
9. Fuel Tank Pressure Sensor 17
10. Pressure Control Solenoid Valve Assembly 19
11. Drain Filter 20
12. Shut Valve 21
13. Drain Valve 22
14. PCV Hose Assembly 23
15. PCV Valve 24

GETtheMANUALS.org

1. General Description

A: CAUTION

- Wear appropriate work clothing, including a cap, protective goggles and protective shoes when performing any work.
- Remove contamination including dirt and corrosion before removal, installation or disassembly.
- Keep the disassembled parts in order and protect them from dust and dirt.
- Before removal, installation or disassembly, be sure to clarify the failure. Avoid unnecessary removal, installation, disassembly and replacement.
- Vehicle components are extremely hot after driving. Be wary of receiving burns from heated parts.
- Be sure to tighten fasteners including bolts and nuts to the specified torque.
- Place shop jacks or rigid racks at the specified points.
- Before disconnecting connectors of sensors or units, be sure to disconnect the ground cable from the battery.

B: PREPARATION TOOL

1. SPECIAL TOOL

ILLUSTRATION	TOOL NUMBER	DESCRIPTION	REMARKS
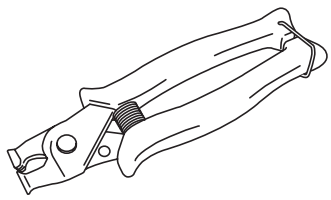 ST18353AA000	18353AA000	CLAMP PLIERS	• Used for removing and installing the PCV hose. • This tool is made by the French company CAILLAU. (code) 54.0.000.205 To make it easier to obtain, it has been provided with a tool number.

2. GENERAL TOOL

TOOL NAME	REMARKS
Circuit tester	Used for measuring resistance and voltage.
Mighty Vac	Used for inspecting the fuel tank pressure sensor.

GETtheMANUALS.org

2. Front Catalytic Converter

A: REMOVAL

The front catalytic converter is integrated into the center exhaust pipe (front). Refer to “Center Exhaust Pipe” for removal procedures. <Ref. to EX(H4DOTC)-12, REMOVAL, Center Exhaust Pipe.>

B: INSTALLATION

The front catalytic converter is integrated into the center exhaust pipe (front). Refer to “Center Exhaust Pipe” for installation procedures. <Ref. to EX(H4DOTC)-13, INSTALLATION, Center Exhaust Pipe.>

C: INSPECTION

1) Check the connections and welds for exhaust leaks.
2) Make sure there are no holes or rusting.

GETthemANUALS.org

3. Rear Catalytic Converter

A: REMOVAL

The rear catalytic converter is integrated into the center exhaust pipe (front). Refer to “Center Exhaust Pipe” for removal procedures. <Ref. to EX(H4DOTC)-12, REMOVAL, Center Exhaust Pipe.>

B: INSTALLATION

The rear catalytic converter is integrated into the center exhaust pipe (front). Refer to “Center Exhaust Pipe” for installation procedures. <Ref. to EX(H4DOTC)-13, INSTALLATION, Center Exhaust Pipe.>

C: INSPECTION

1) Check the connections and welds for exhaust leaks.
2) Make sure there are no holes or rusting.

GETtheMANUALS.org

4. Canister

A: REMOVAL

1) Remove the rear wheel LH.
2) Lift up the vehicle.
3) Remove the rear mud guard LH. <Ref. to EI-38, REMOVAL, Mud Guard.>
4) Disconnect the quick connectors of the vent tube (A), canister drain tube (B), charge tube (C) and PCV drain tube (D), and remove the tubes from tube clamp (E).

NOTE:
Disconnect the quick connector as shown in the figure.

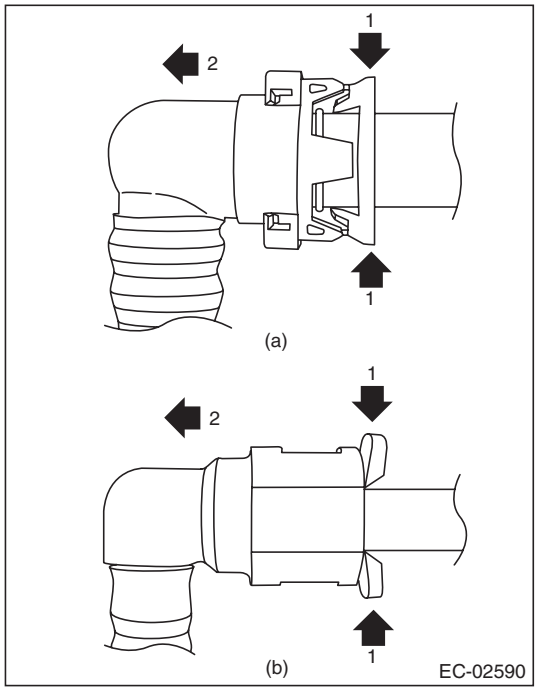

(a) Vent tube (A) and canister drain tube (B)
(b) Charge tube (C) and PCV drain tube (D)

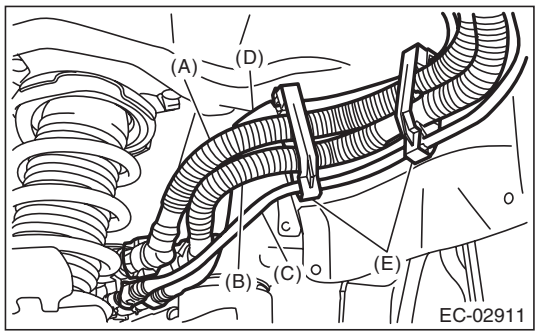

5) Remove the clip holding the rear wiring harness.

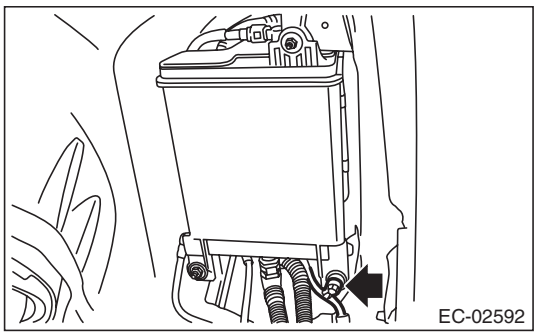

6) Remove the canister from vehicle.

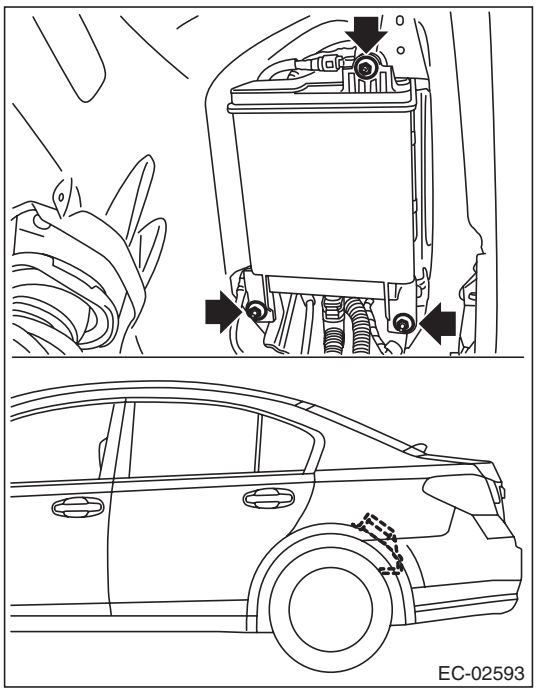

7) Disconnect the connector from drain valve.

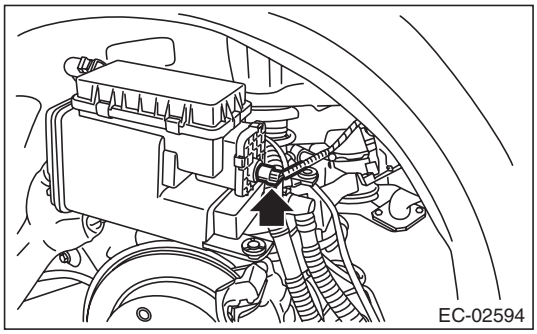

GETtheMANUALS.org

8) Disconnect the vent tube (A), canister drain tube (B), charge tube (C) and PCV drain tube (D) from canister, and remove the canister drain tube (B) and PCV drain tube (D) from canister clip (E).

NOTE:
Disconnect the quick connector as shown in the figure.

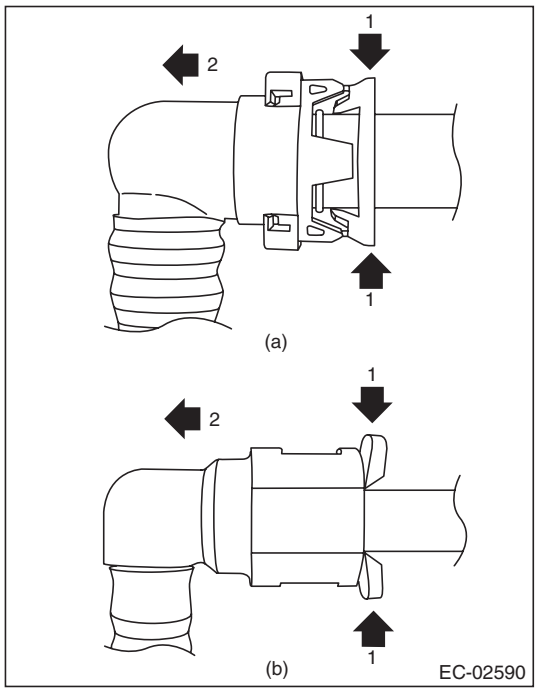

(a) Vent tube (A) and canister drain tube (B)
(b) Charge tube (C) and PCV drain tube (D)

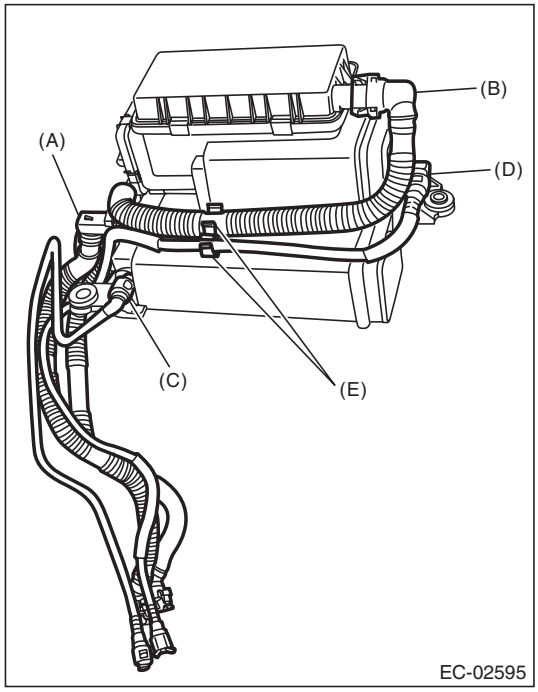

B: INSTALLATION

1) Connect the vent tube (A), canister drain tube (B), charge tube (C) and PCV drain tube (D) to canister, and install the canister drain tube (B) and PCV drain tube (D) to canister clip (E).

CAUTION:
- **Make sure there are no damage or dust on connections. If necessary, clean the seal surface of the pipe.**
- **Make sure that the quick connector is securely connected.**

NOTE:
Connect the quick connector as shown in the figure.

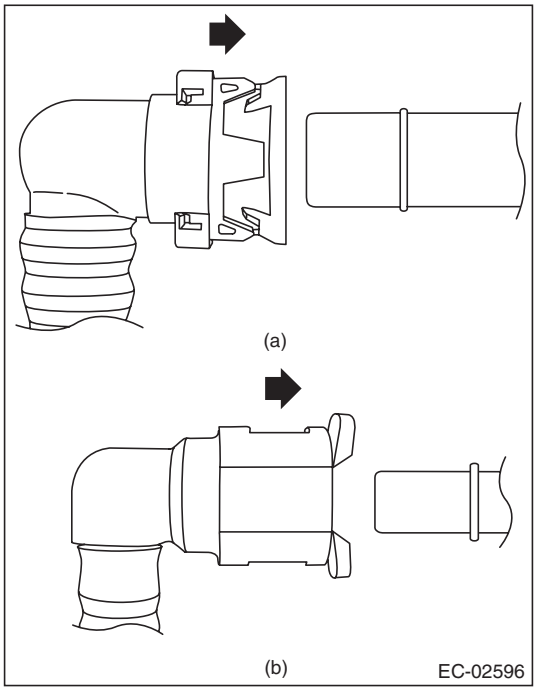

(a) Vent tube (A) and canister drain tube (B)
(b) Charge tube (C) and PCV drain tube (D)

GETthemANUALS.org

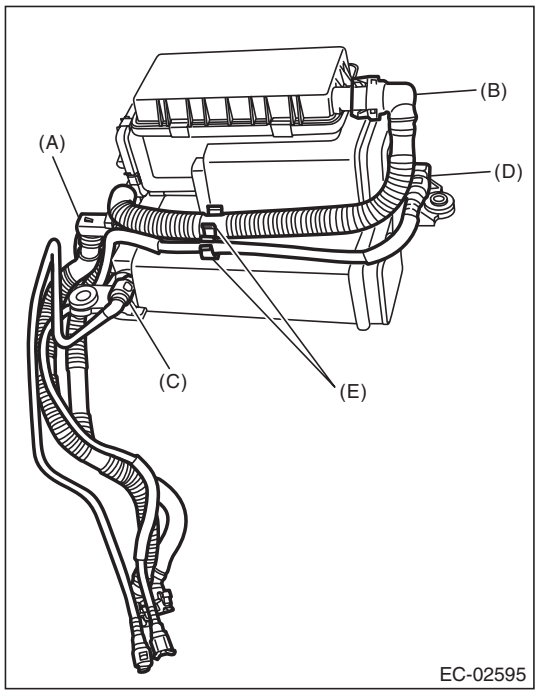

2) Connect the connector to the drain valve.

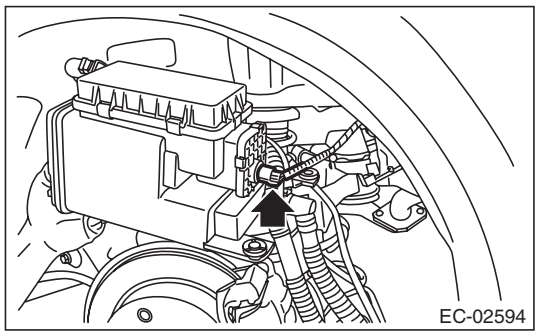

3) Install the canister to the vehicle.

Tightening torque:
8 N·m (0.8 kgf-m, 5.9 ft-lb)

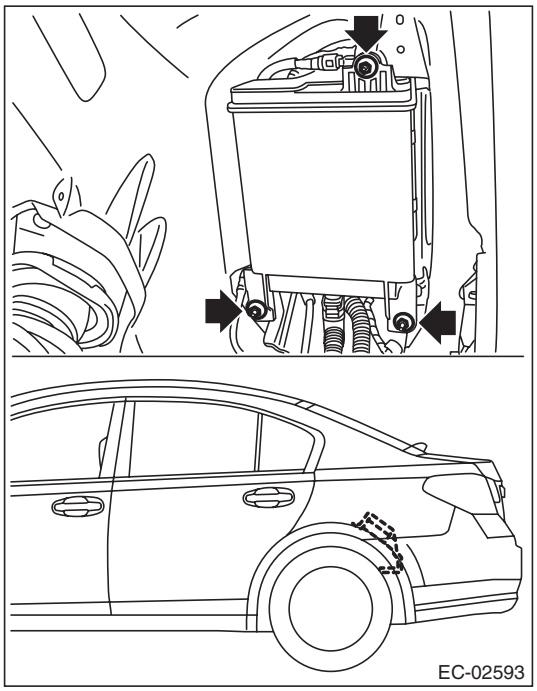

4) Secure the rear wiring harness with clip.

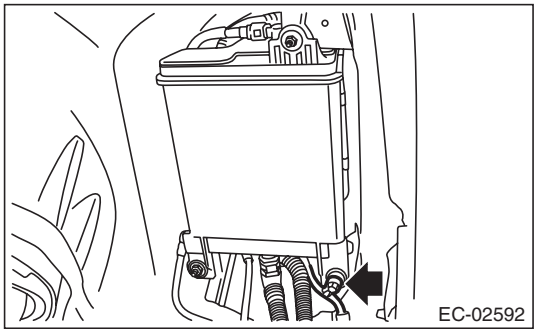

GETtheMANUALS.org

5) Attach all tubes to tube clamp (E), and connect the quick connectors of the vent tube (A), canister drain tube (B), charge tube (C) and PCV drain tube (D).

CAUTION:
- **Make sure there are no damage or dust on connections. If necessary, clean the seal surface of the pipe.**
- **Make sure that the quick connector is securely connected.**

NOTE:
Connect the quick connector as shown in the figure.

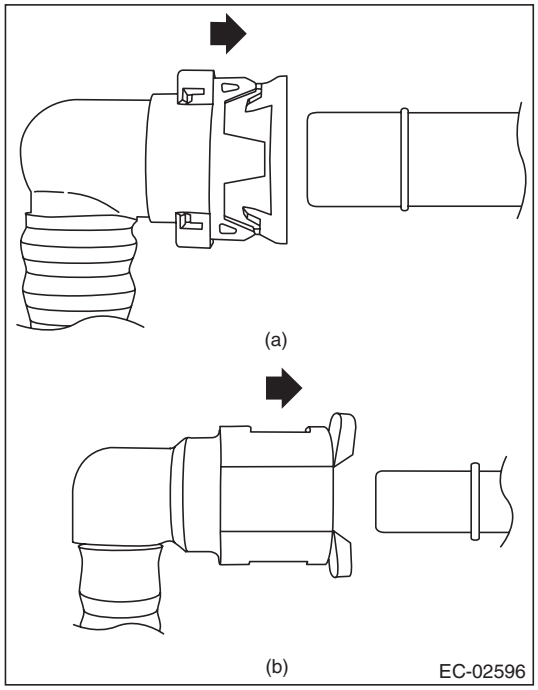

(a) Vent tube (A) and canister drain tube (B)
(b) Charge tube (C) and PCV drain tube (D)

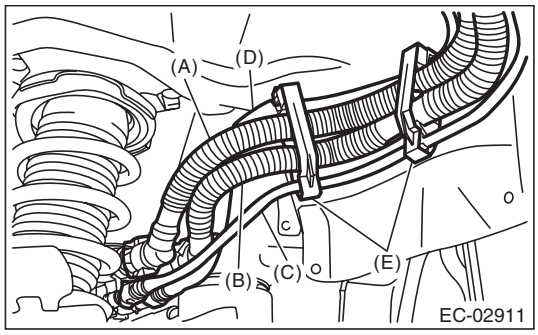

6) Install the rear mud guard LH. <Ref. to EI-38, INSTALLATION, Mud Guard.>
7) Lower the vehicle.
8) Install the rear wheel LH.

Tightening torque:
120 N·m (12.2 kgf-m, 88.5 ft-lb)

C: INSPECTION

1) Check that the canister has no deformation, cracks or other damages.
2) Check that the tube has no cracks, damage or loose part.

GETthemANUALS.org

5. Purge Control Solenoid Valve

A: REMOVAL

1. PURGE CONTROL SOLENOID VALVE 1

1) Remove the collector cover.
2) Disconnect the ground cable from battery.

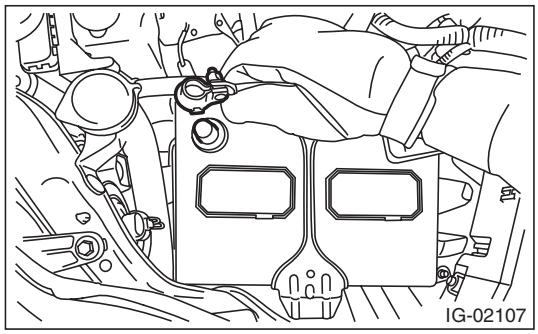

3) Remove the intercooler. <Ref. to IN(H4DOTC)-17, REMOVAL, Intercooler.>
4) Remove the bolt securing the solenoid valve bracket assembly from intake manifold.

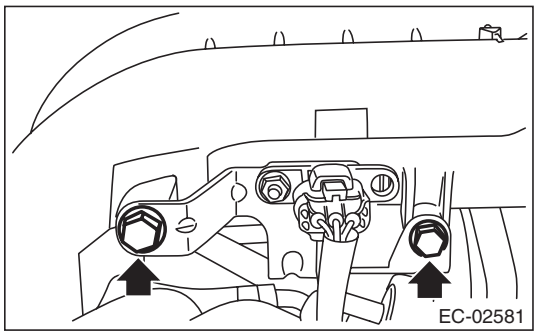

5) Remove the bolts securing the PCV pipe and engine harness from intake manifold.

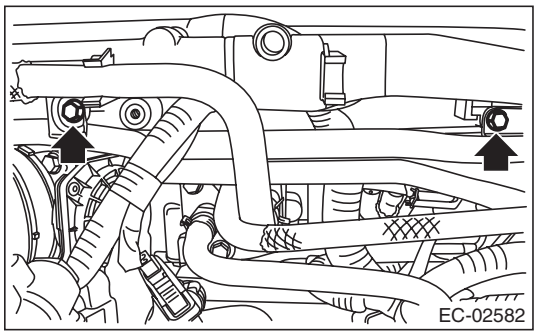

6) Remove the nut securing the purge control solenoid valve 1 to the solenoid valve bracket assembly.

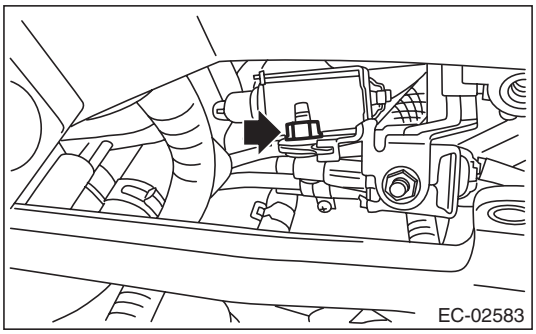

7) Disconnect the connector (A) and vacuum hose (B) from the purge control solenoid valve 1, and remove the purge control solenoid valve 1.

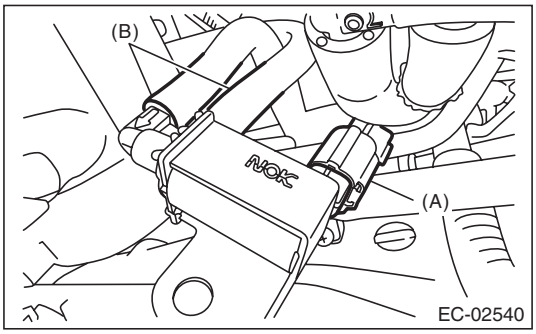

2. PURGE CONTROL SOLENOID VALVE 2

1) Remove the collector cover.
2) Disconnect the ground cable from battery.

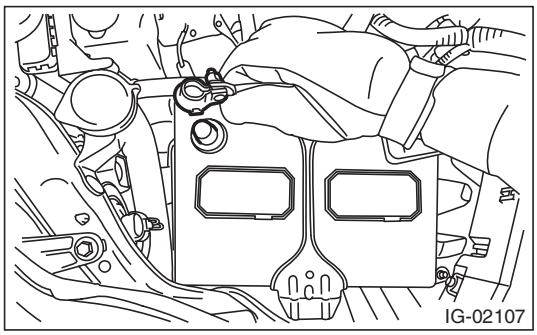

3) Remove the intercooler. <Ref. to IN(H4DOTC)-17, REMOVAL, Intercooler.>

GETtheMANUALS.org

4) Remove the bolt securing the solenoid valve bracket assembly from intake manifold.

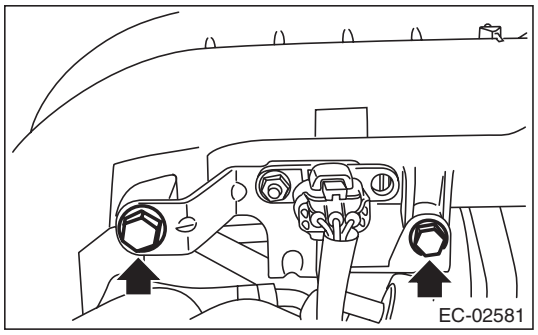

5) Remove the bolts securing the PCV pipe and engine harness from intake manifold.

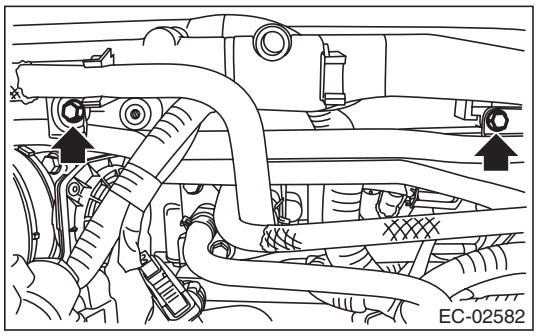

6) Remove the nut securing the purge control solenoid valve 2 to the solenoid valve bracket assembly.

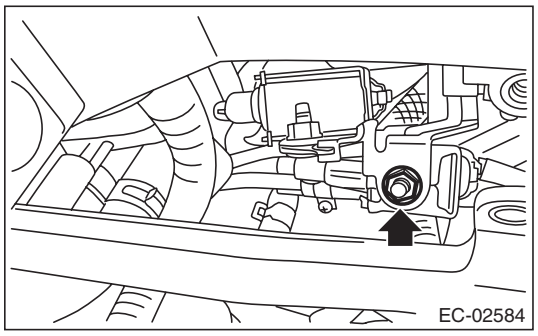

7) Disconnect the connector (A) and vacuum hose (B) from the purge control solenoid valve 2, and remove the purge control solenoid valve 2.

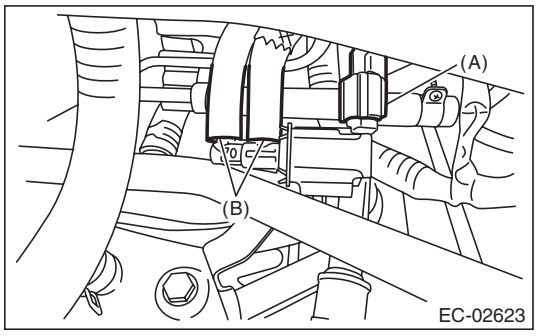

B: INSTALLATION

1. PURGE CONTROL SOLENOID VALVE 1

Install in the reverse order of removal.

NOTE:
Connect the vacuum hose as shown in the figure.

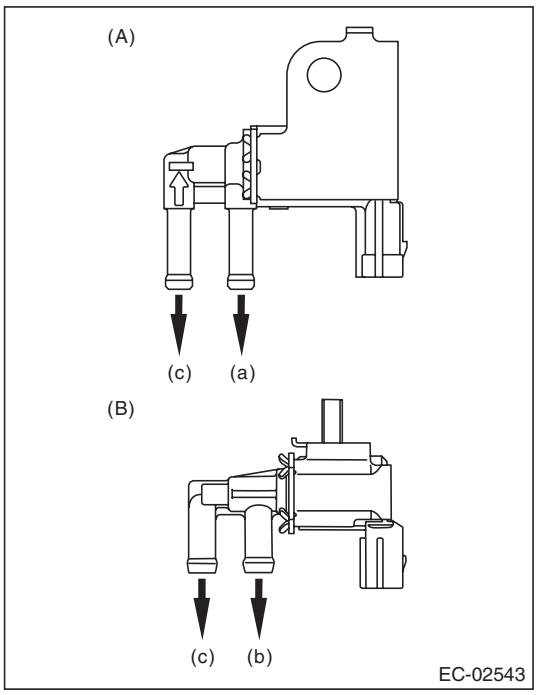

(A) Purge control solenoid valve 1
(B) Purge control solenoid valve 2
(a) To intake manifold
(b) To intake duct
(c) To fuel pipe

GETMANUALS.org

Tightening torque:
6.4 N·m (0.7 kgf-m, 4.7 ft-lb)

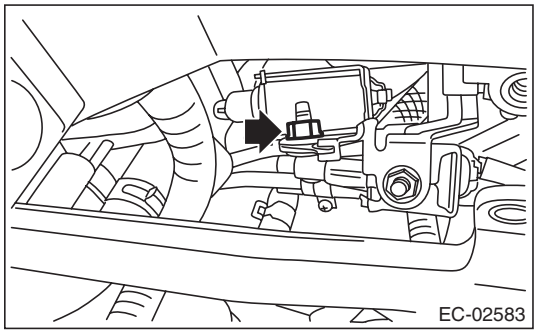

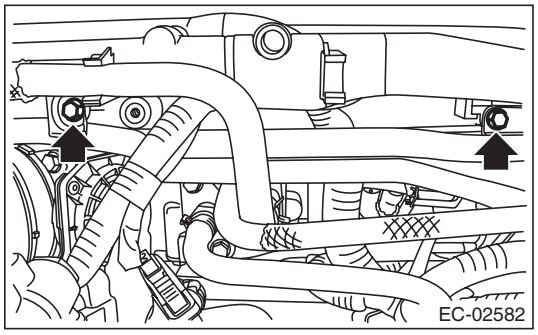

Tightening torque:
19 N·m (1.9 kgf-m, 14.0 ft-lb)

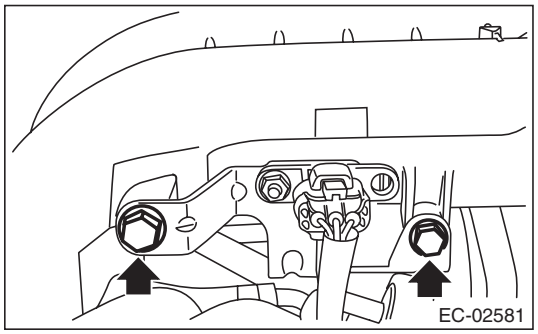

2. PURGE CONTROL SOLENOID VALVE 2

Install in the reverse order of removal.

NOTE:
Connect the vacuum hose as shown in the figure.

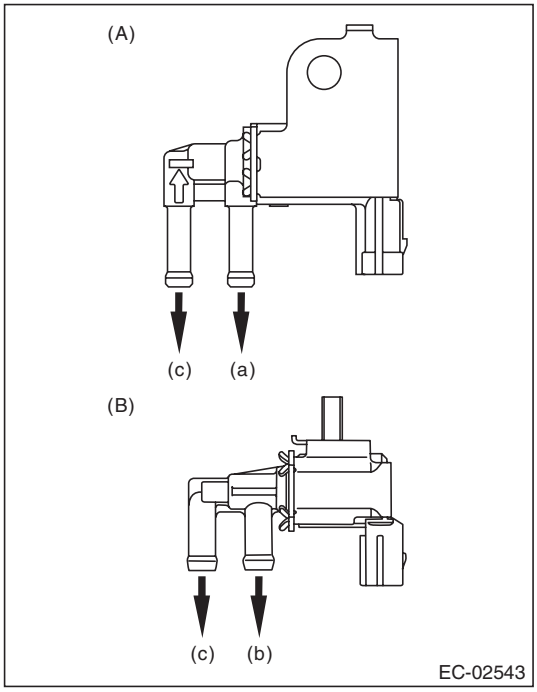

(A) Purge control solenoid valve 1
(B) Purge control solenoid valve 2
(a) To intake manifold
(b) To intake duct
(c) To fuel pipe

GETMANUALS.org

Tightening torque:
6.4 N·m (0.7 kgf-m, 4.7 ft-lb)

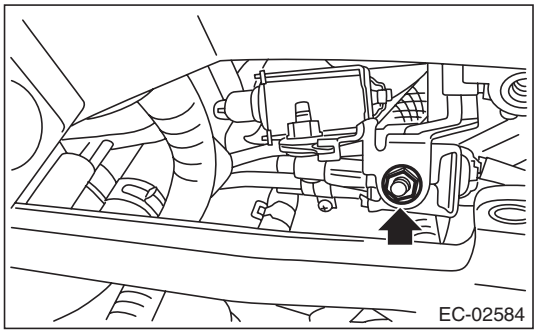

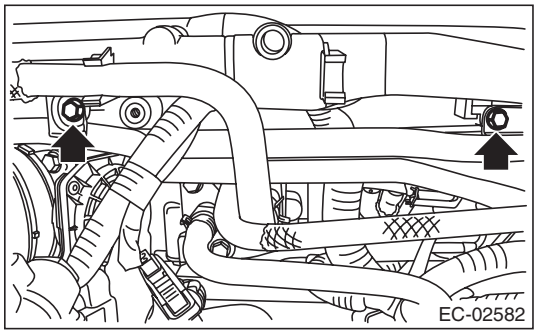

Tightening torque:
19 N·m (1.9 kgf-m, 14.0 ft-lb)

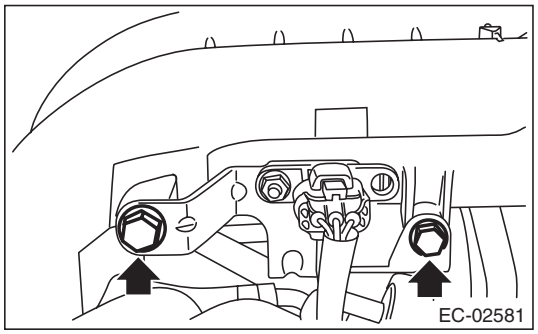

C: INSPECTION

1. PURGE CONTROL SOLENOID VALVE

1) Check that the purge control solenoid valve has no deformation, cracks or other damages.
2) Measure the resistance between the purge control solenoid valve terminals.

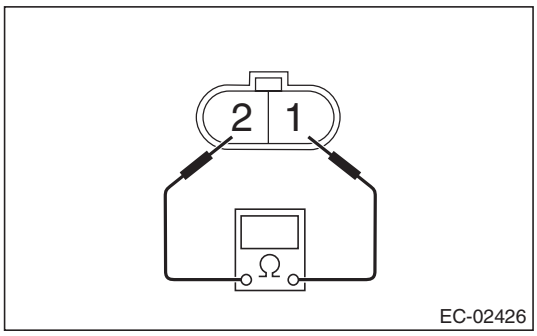

	Terminal No.	Standard
Purge control solenoid valve 1	1 and 2	32 ±2 Ω (when 20°C (68°F))
Purge control solenoid valve 2		24 ±3 Ω (when 20°C (68°F))

3) Check that air does not come out from (B) when air is blown into (A).

- Purge control solenoid valve 1

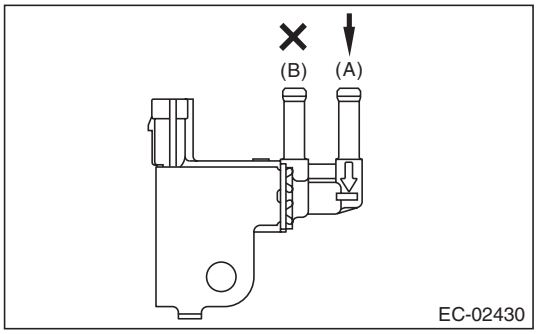

- Purge control solenoid valve 2

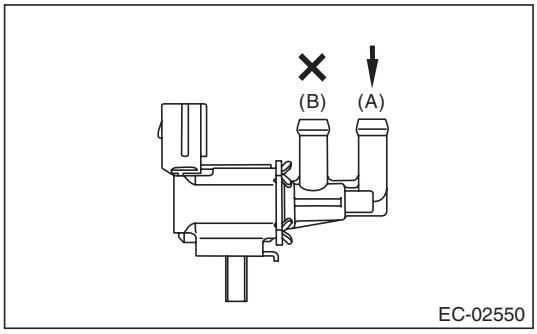

GETTHEMANUALS.org

4) With terminal No. 1 connected to the battery positive terminal and terminal No. 2 to the battery ground terminal, check that air comes out from (B) when air is blown into (A).

- Purge control solenoid valve 1

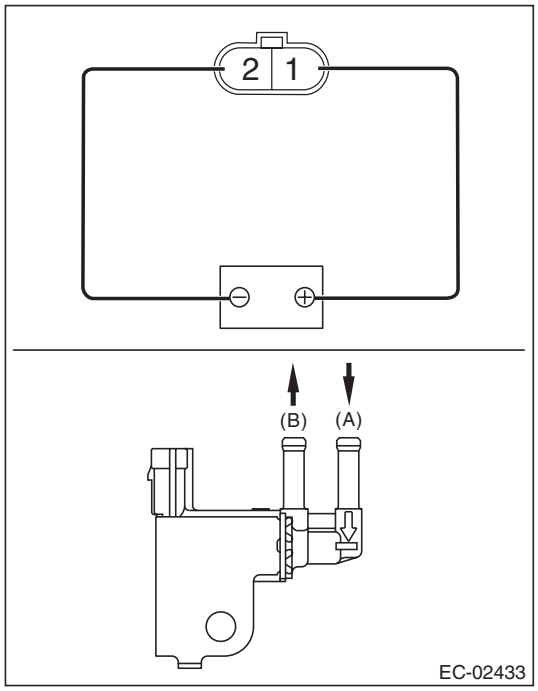

- Purge control solenoid valve 2

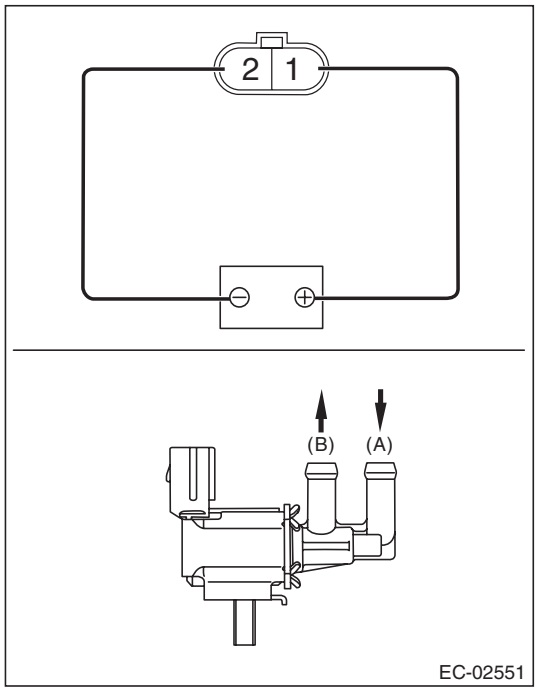

2. OTHER INSPECTIONS

Check the vacuum hose for cracks, damage or looseness.

GETTHEMANUALS.org

6. Fuel Level Sensor

A: REMOVAL

For removal procedures, refer to the “FU (H4DOTC)” section. <Ref. to FU(H4DOTC)-81, REMOVAL, Fuel Level Sensor.>

B: INSTALLATION

For installation procedures, refer to the “FU (H4DOTC)” section. <Ref. to FU(H4DOTC)-81, INSTALLATION, Fuel Level Sensor.>

C: INSPECTION

For inspection procedures, refer to the “FU(H4DOTC)” section. <Ref. to FU(H4DOTC)-81, INSPECTION, Fuel Level Sensor.>

GETTHEMANUALS.org

7. Fuel Temperature Sensor

A: REMOVAL

Fuel temperature sensor is integrated with the fuel level sensor. Refer to “Fuel Level Sensor” for removal procedure. <Ref. to FU(H4DOTC)-81, REMOVAL, Fuel Level Sensor.>

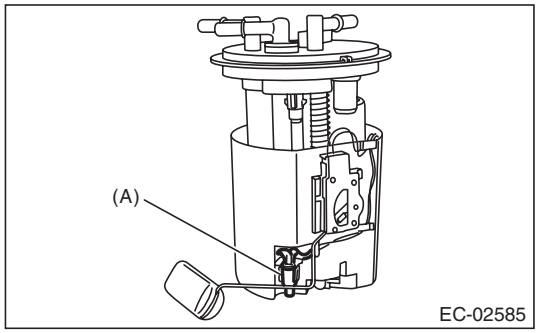

(A) Fuel temperature sensor

B: INSTALLATION

Refer to “Fuel Level Sensor” for the installation procedure. <Ref. to FU(H4DOTC)-81, INSTALLATION, Fuel Level Sensor.>

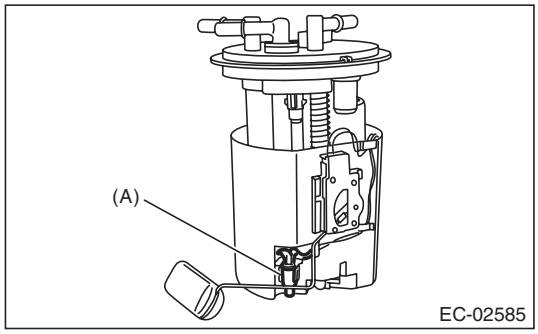

(A) Fuel temperature sensor

C: INSPECTION

1) Check that the fuel temperature sensor has no deformation, cracks or other damages.
2) Check the resistance between the fuel temperature sensor terminals.

CAUTION:
When measuring the resistance, check the circuit tester specification and be careful not to turn on electricity 3 V or more to prevent damaging the fuel temperature sensor.

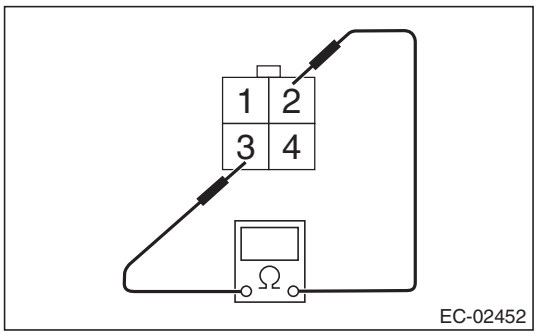

Temperature	Terminal No.	Standard
–10°C (14°F)	2 and 3	9.2±2.2 kΩ (when the measured current is 0.5 mA)
20°C (68°F)		2.5±0.2 kΩ (when the measured current is 1.0 mA)
50°C (122°F)		$0.84^{+0.06}_{-0.05}$ kΩ (when the measured current is 1.0 mA)

GETTHEMANUALS.org

8. Fuel Sub Level Sensor

A: REMOVAL

For removal procedures, refer to the “FU (H4DOTC)” section. <Ref. to FU(H4DOTC)-83, REMOVAL, Fuel Sub Level Sensor.>

B: INSTALLATION

For installation procedures, refer to the “FU(H4DOTC)” section. <Ref. to FU(H4DOTC)-84, INSTALLATION, Fuel Sub Level Sensor.>

C: INSPECTION

For inspection procedures, refer to the “FU(H4DOTC)” section. <Ref. to FU(H4DOTC)-84, INSPECTION, Fuel Sub Level Sensor.>

GETTHEMANUALS.org

9. Fuel Tank Pressure Sensor

A: REMOVAL

WARNING:
Place "NO OPEN FLAMES" signs near the working area.

1) Disconnect the ground cable from battery.

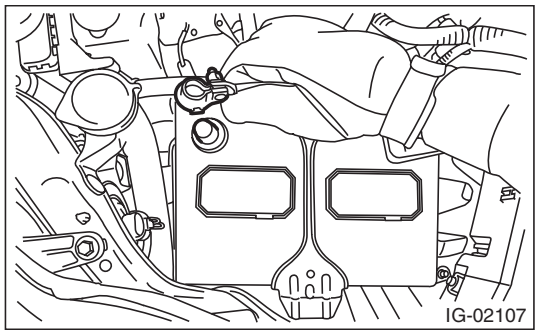

2) Open the fuel filler lid and remove the fuel filler cap.
3) Lift up the vehicle.
4) Disconnect connector (A) from fuel tank pressure sensor.
5) Pull out the vacuum hose (B) from vehicle.
6) Remove the fuel tank pressure sensor from the bracket.

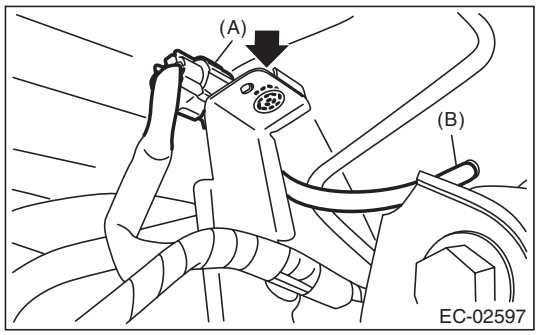

7) Disconnect the pressure hose from fuel tank pressure sensor and remove the fuel tank pressure sensor.

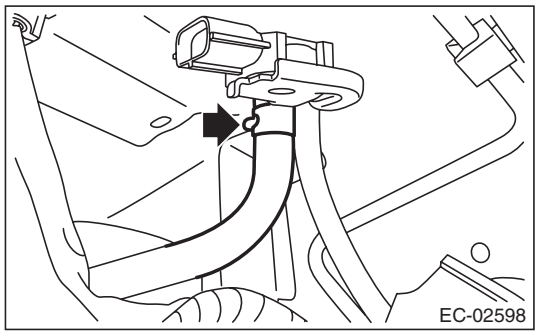

B: INSTALLATION

Install in the reverse order of removal.

Tightening torque:
7.35 N·m (0.7 kgf-m, 5.4 ft-lb)

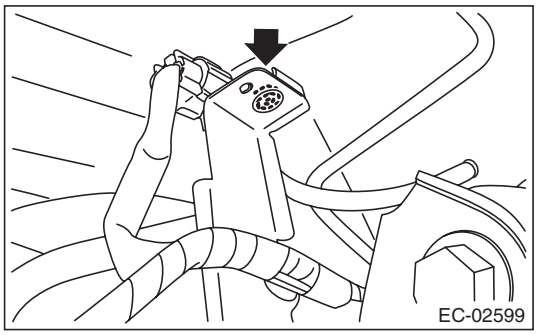

C: INSPECTION

1. FUEL TANK PRESSURE SENSOR

1) Check that the fuel tank pressure sensor does not have deformation, cracks or other damages.
2) Connect dry-cell battery positive terminal to terminal No. 3 and dry-cell battery ground terminal to terminal No. 1, circuit tester positive terminal to terminal No. 2 and the circuit tester negative terminal to terminal No. 1.

NOTE:
- Use new dry-cell batteries.
- Using circuit tester, check the voltage of a single dry-cell battery is 1.6 V or more. And also check the voltage of three batteries in series is between 4.8 V and 5.2 V.

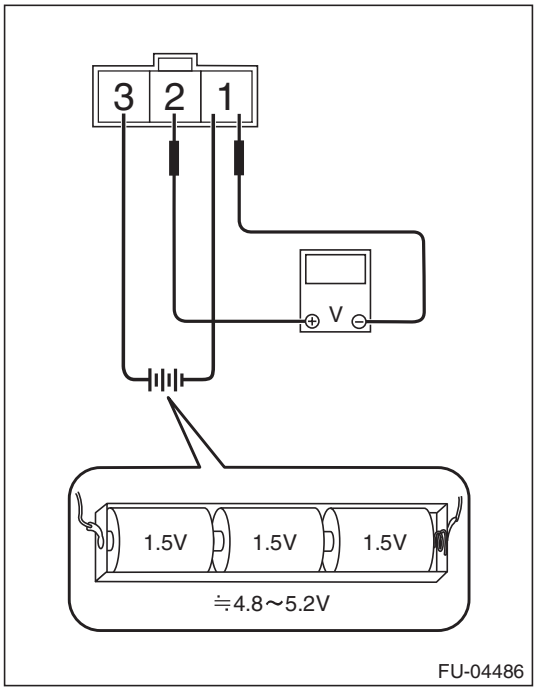

GETMANUALS.org

3) Check the voltage at a normal atmospheric pressure.

NOTE:
The atmospheric pressure at higher altitude is lower than normal. Therefore, the voltage is lower than the standard value.

Terminal No.	Standard
2 (+) and 1 (–)	Approx. 2.5 V (when 25°C (77°F))

4) Connect the Mighty Vac to the pressure port (A) on the fuel tank pressure sensor.

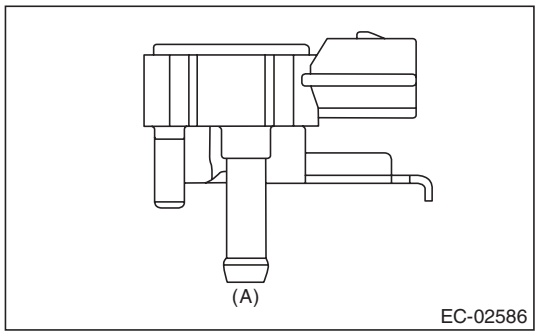

5) Check the voltage when generating vacuum and positive pressure using Mighty Vac.

CAUTION:
Be sure to apply pressure within a range of –10 — 20 kPa (–0.1 — 0.2 kgf/cm^2, –1.45 — 2.90 psi). Otherwise the fuel tank pressure sensor will be damaged.

Pressure	Terminal No.	Standard
–6.67 kPa (–0.07 kgf/cm^2, –0.97 psi)	2 (+) and 1 (–)	Approx. 0.5 V (when 25°C (77°F))
6.67 kPa (0.07 kgf/cm^2, 0.97 psi)		Approx. 4.5 V (when 25°C (77°F))

2. OTHER INSPECTIONS

Check that the hose has no cracks, damage or loose part.

GETMANUALS.org

10. Pressure Control Solenoid Valve Assembly

A: REMOVAL

1) Disconnect the ground cable from battery.

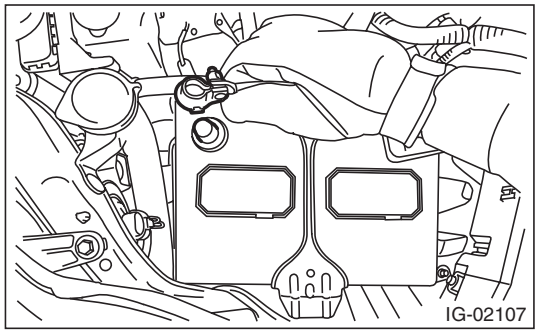

2) Lift up the vehicle.
3) Disconnect connector (A) from the pressure control solenoid valve assembly.
4) Disconnect the PCV drain hose (B), PCV inlet hose (C) and PCV outlet hose (D) from the pressure control solenoid valve assembly.
5) Remove the nut (E) securing the bracket to the fuel tank and remove the pressure control solenoid valve assembly.

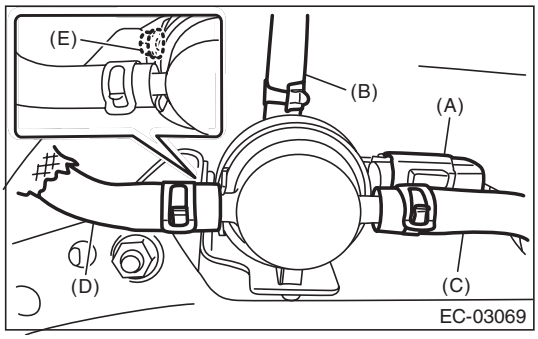

6) Remove the pressure control solenoid valve from the bracket.

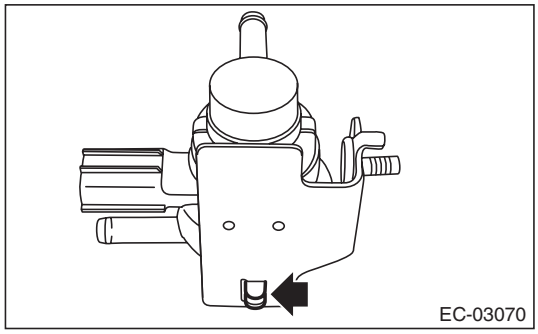

B: INSTALLATION

Install in the reverse order of removal.

Tightening torque:
2.5 N·m (0.3 kgf-m, 1.8 ft-lb)

C: INSPECTION

1. PRESSURE CONTROL SOLENOID VALVE ASSEMBLY

1) Check that the pressure control solenoid valve assembly has no deformation, cracks or other damages.
2) Check the resistance between the pressure control solenoid valve assembly terminals.

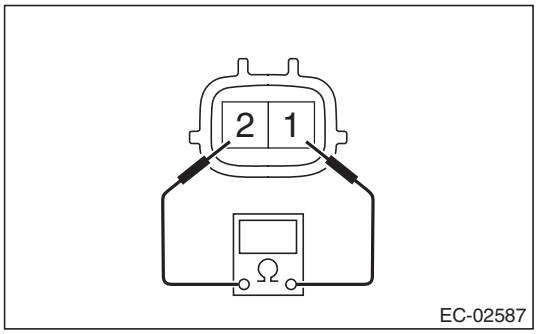

Terminal No.	Standard
1 and 2	20 — 30 Ω

2. OTHER INSPECTIONS

Check that the hose has no cracks, damage or loose part.

GETMANUALS.org

11. Drain Filter

A: SPECIFICATION

Drain valve is a non-disassembled part, so do not remove the drain filter from drain valve. Refer to “Canister” for removal and installation procedures.
<Ref. to EC(H4DOTC)-5, REMOVAL, Canister.>
<Ref. to EC(H4DOTC)-6, INSTALLATION, Canister.>

GETTHEMANUALS.org

12.Shut Valve

A: REMOVAL

WARNING:
Place "NO OPEN FLAMES" signs near the working area.

CAUTION:
Be careful not to spill fuel.

1) Remove the fuel filler pipe. <Ref. to FU(H4DOTC)-75, REMOVAL, Fuel Filler Pipe.>
2) Remove the shut valve from the fuel filler pipe.

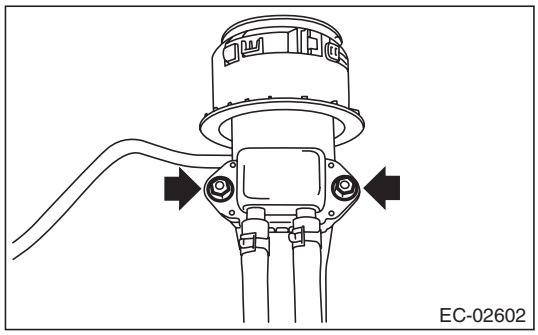

3) Disconnect the evaporation hose from shut valve and remove the shut valve.

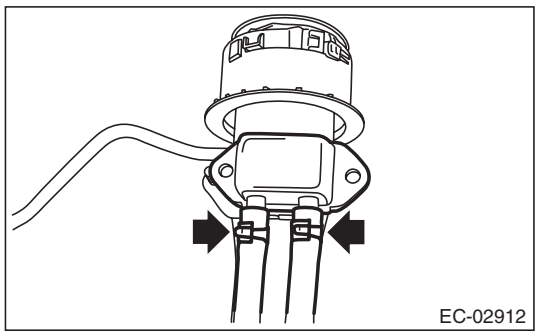

B: INSTALLATION

Install in the reverse order of removal.

Tightening torque:
4.5 N·m (0.5 kgf-m, 3.3 ft-lb)

C: INSPECTION

1) Check that the shut valve does not have deformation, cracks or other damages.
2) Check that the evaporation hose has no cracks, damage or loose part.

GETTHEMANUALS.org

13. Drain Valve

A: REMOVAL

Drain valve is integrated with canister. Refer to “Canister” for removal procedure. <Ref. to EC(H4DOTC)-5, REMOVAL, Canister.>

B: INSTALLATION

Refer to “Canister” for the installation procedure. <Ref. to EC(H4DOTC)-6, INSTALLATION, Canister.>

C: INSPECTION

Check the resistance between drain valve terminals.

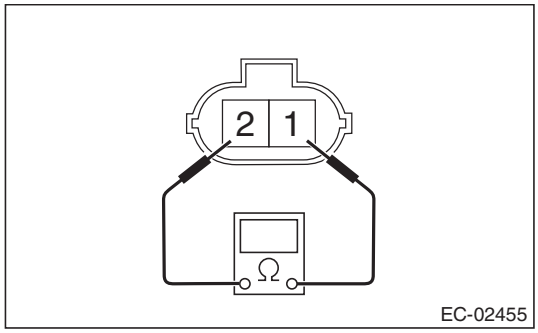

Terminal No.	Standard
1 and 2	20 — 30 Ω

GETTHEMANUALS.org

14.PCV Hose Assembly

A: REMOVAL

CAUTION:
Do not remove except when the hose is broken.
1) Remove the collector cover.
2) Remove the intercooler. <Ref. to IN(H4DOTC)-17, REMOVAL, Intercooler.>
3) Disconnect the vacuum hose from intake manifold and remove the PCV hose assembly from cylinder block RH and blow-by pipe assembly.

NOTE:
Pinch the clamp of the PCV hose assembly by fitting the cut out in the ST with the protrusion on the clamp as shown in the figure, and unlock the clamp.
ST 18353AA000 CLAMP PLIERS

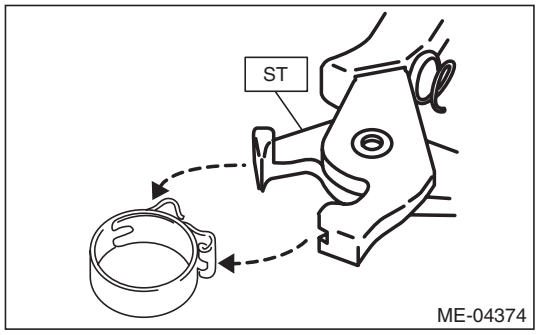

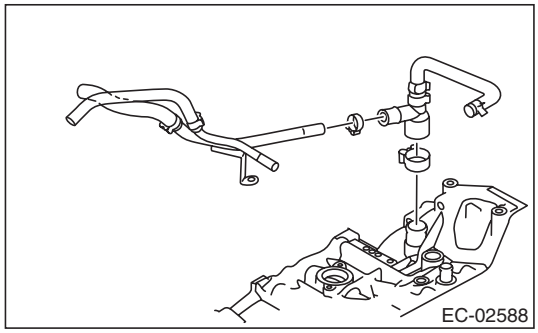

B: INSTALLATION

1) Install the PCV hose assembly to the cylinder block RH and blow-by pipe assembly and connect the vacuum hose to the intake manifold.

NOTE:
Use a new clamp for the PCV hose assembly, fit the cut out in the ST with the protrusion on the clamp as shown in the figure, and lock the clamp.
ST 18353AA000 CLAMP PLIERS

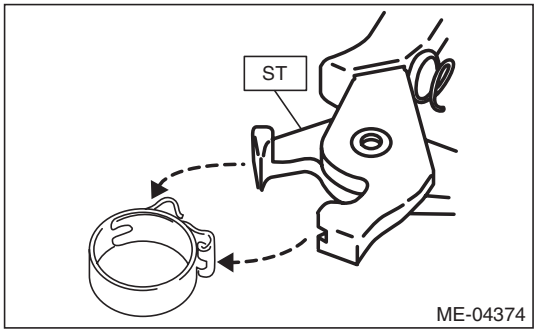

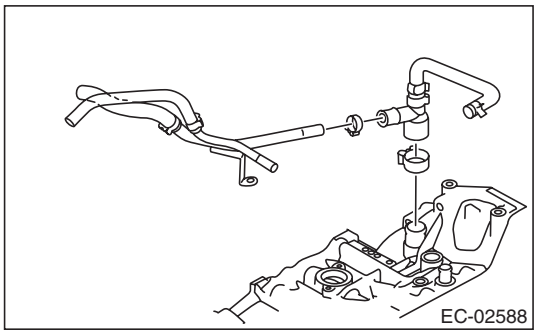

2) Install the intercooler. <Ref. to IN(H4DOTC)-18, INSTALLATION, Intercooler.>
3) Install the collector cover.

C: INSPECTION

Check the PCV hose assembly for cracks, damage or looseness.

GETTHEMANUALS.org

15.PCV Valve

A: REMOVAL

CAUTION:
Do not remove unless the PCV valve is broken.
1) Remove the collector cover.
2) Remove the intercooler. <Ref. to IN(H4DOTC)-17, REMOVAL, Intercooler.>
3) Disconnect the vacuum hose (A) and vacuum hose (B) from the PCV valve and remove the PCV valve.

NOTE:
Pinch the clamp of the vacuum hose (B) by fitting the cut out in the ST with the protrusion on the clamp as shown in the figure, and unlock the clamp.
ST 18353AA000 CLAMP PLIERS

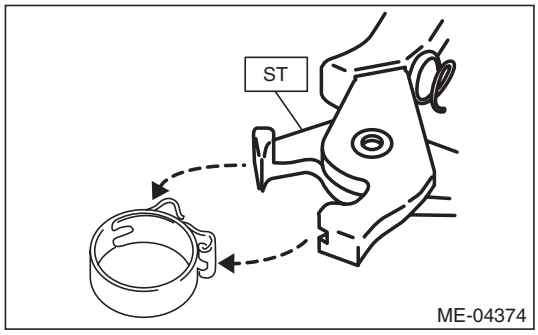

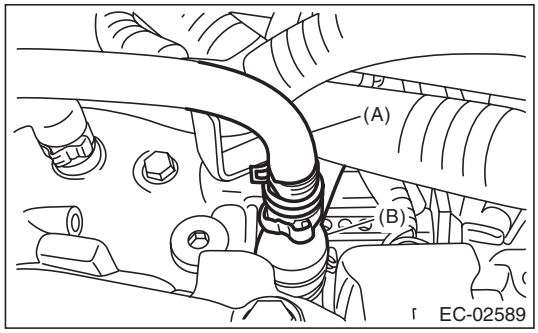

B: INSTALLATION

1) Connect the vacuum hose (A) and vacuum hose (B) to the PCV valve.

NOTE:
Use a new clamp for the vacuum hose (B), fit the cut out in the ST with the protrusion on the clamp as shown in the figure, and lock the clamp.
ST 18353AA000 CLAMP PLIERS

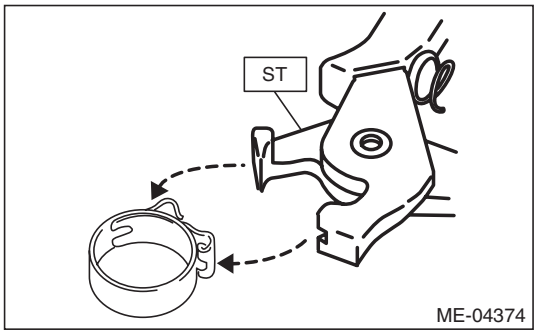

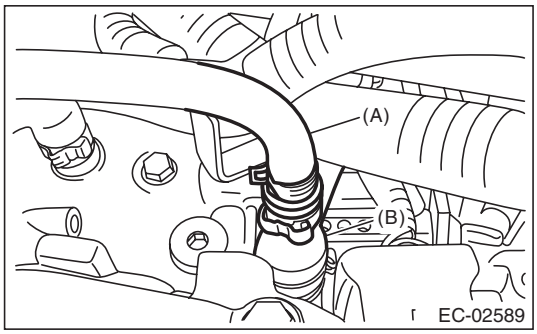

2) Install the intercooler. <Ref. to IN(H4DOTC)-18, INSTALLATION, Intercooler.>
3) Install the collector cover.

C: INSPECTION

1. PCV VALVE

1) Check that the PCV valve has no deformation, cracks or other damages.
2) Check that air is discharged from (B) when air is blown into (A).

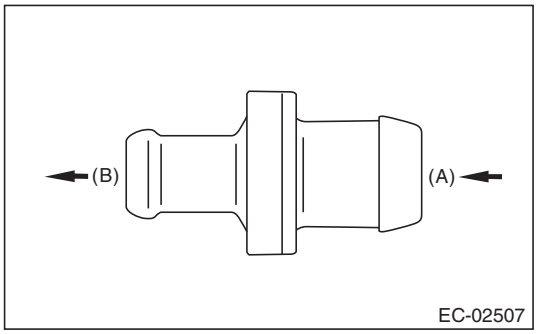

GETTHEMANUALS.org

3) Check that air does not come out from (B) when air is blown into (A).

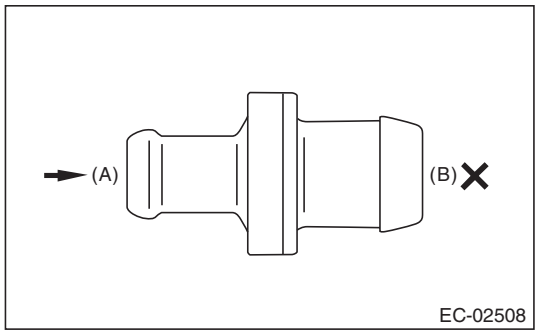

2. OTHER INSPECTIONS

Check the vacuum hose for cracks, damage or looseness.

GETTHEMANUALS.org

GETTHEMANUALS.org

INTAKE (INDUCTION)

IN(H4DOTC)

		Page
1.	General Description	2
2.	Air Cleaner Element	7
3.	Air Cleaner Case	8
4.	Air Intake Boot	10
5.	Air Intake Duct	12
6.	Intake Duct	13
7.	Intercooler	17
8.	Turbocharger	20
9.	Oil Catch Tank	23
10.	Scavenge Pump	25
11.	Air By-pass Valve	26
12.	Resonator Chamber	28

GETtheMANUALS.org

1. General Description

A: COMPONENT

1. AIR CLEANER

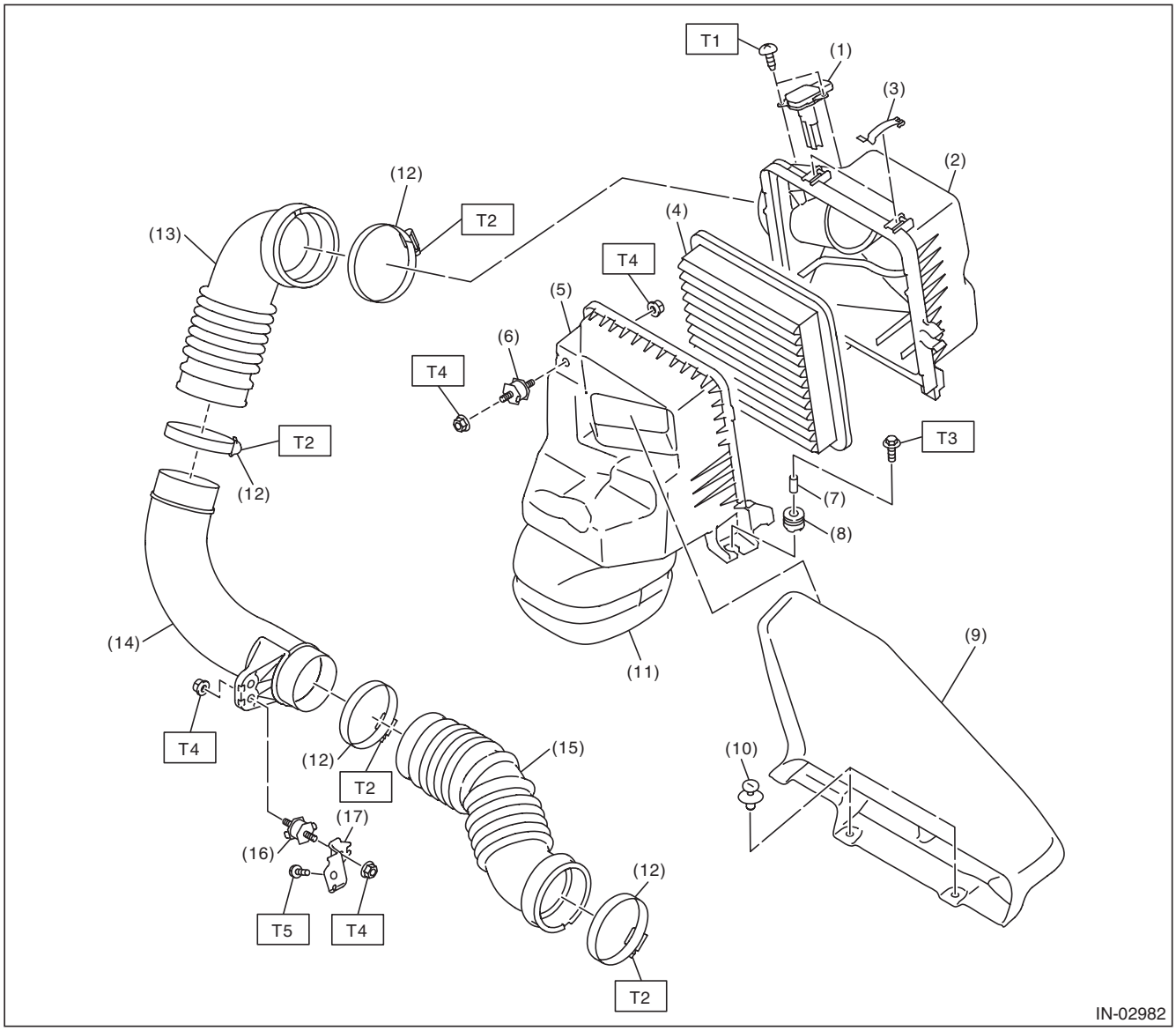

(1)	Mass air flow and intake air temperature sensor	(9)	Air intake duct	(17)	Duct bracket
(2)	Air cleaner case (rear)	(10)	Clip		
(3)	Clip	(11)	Resonator chamber		
(4)	Air cleaner element	(12)	Clamp		
(5)	Air cleaner case (front)	(13)	Air intake boot A		
(6)	Cushion	(14)	Turbo duct		
(7)	Spacer	(15)	Air intake boot B		
(8)	Cushion	(16)	Cushion		

Tightening torque:N·m (kgf-m, ft-lb)	
T1:	*1 (0.1, 0.7)*
T2:	*2.5 (0.3, 1.8)*
T3:	*6 (0.6, 4.4)*
T4:	*7.5 (0.8, 5.5)*
T5:	*33 (3.4, 24.3)*

GETtheMANUALS.org

2. INTAKE DUCT

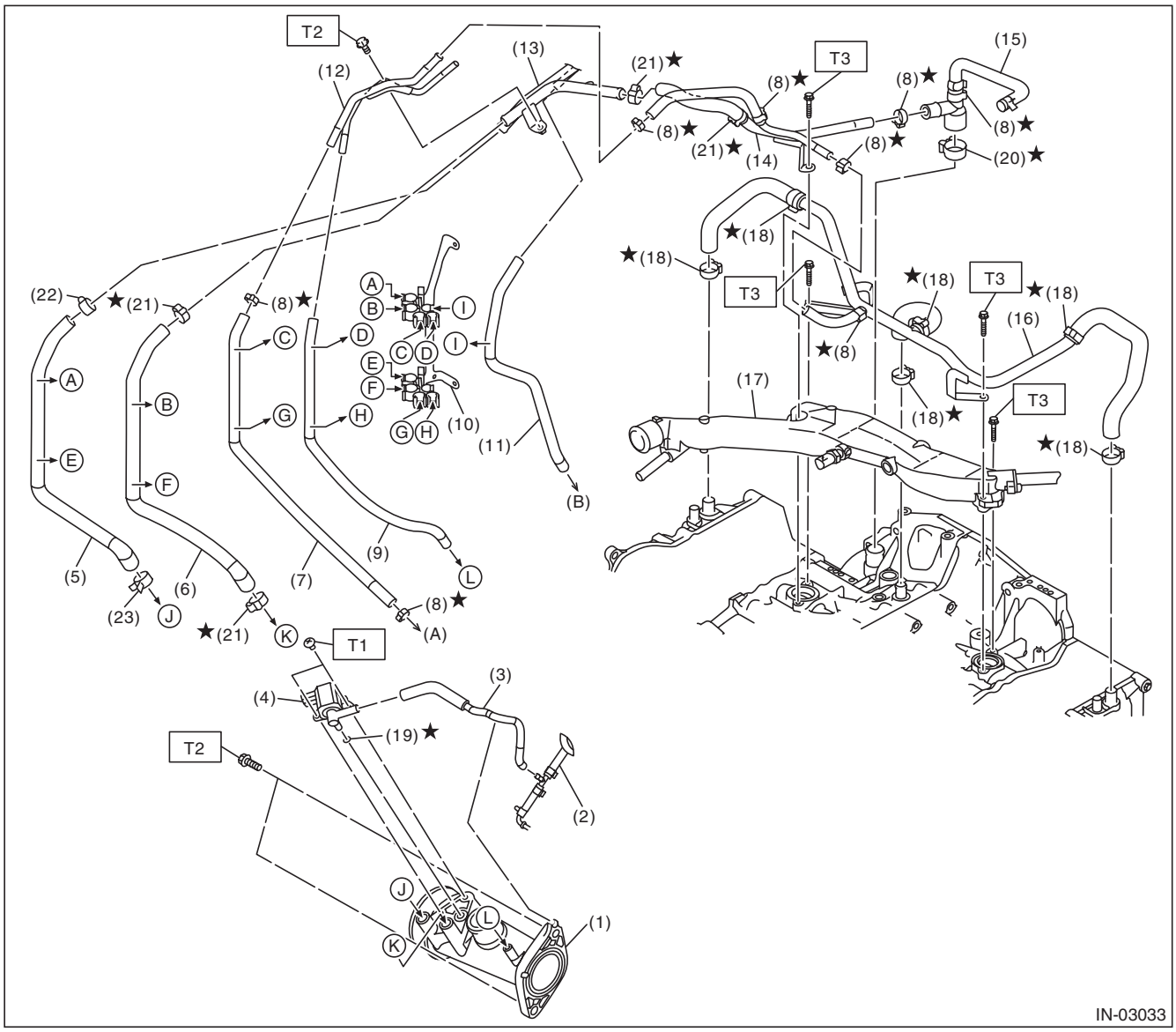

(A)	To oil catch tank	(B)	To air by-pass valve		
(1)	Intake duct	(11)	Vacuum control hose	(21)	Clamp
(2)	Boost hose ASSY	(12)	Blow-by pipe	(22)	Clip
(3)	Air control hose	(13)	PCV pipe	(23)	Clip
(4)	Wastegate control solenoid valve	(14)	Blow-by pipe ASSY A		
(5)	Vacuum hose A	(15)	PCV hose ASSY		
(6)	Vacuum hose B	(16)	Blow-by pipe ASSY B		
(7)	Vacuum hose C	(17)	Water pipe ASSY		
(8)	Clamp	(18)	Clamp		
(9)	Vacuum hose D	(19)	O-ring		
(10)	Hose clip stay ASSY	(20)	Clamp		

Tightening torque:N·m (kgf-m, ft-lb)

T1: 4 (0.4, 3.0)

T2: 6.4 (0.7, 4.7)

T3: 6.5 (0.7, 4.8)

GETthemanuals.org

3. INTERCOOLER

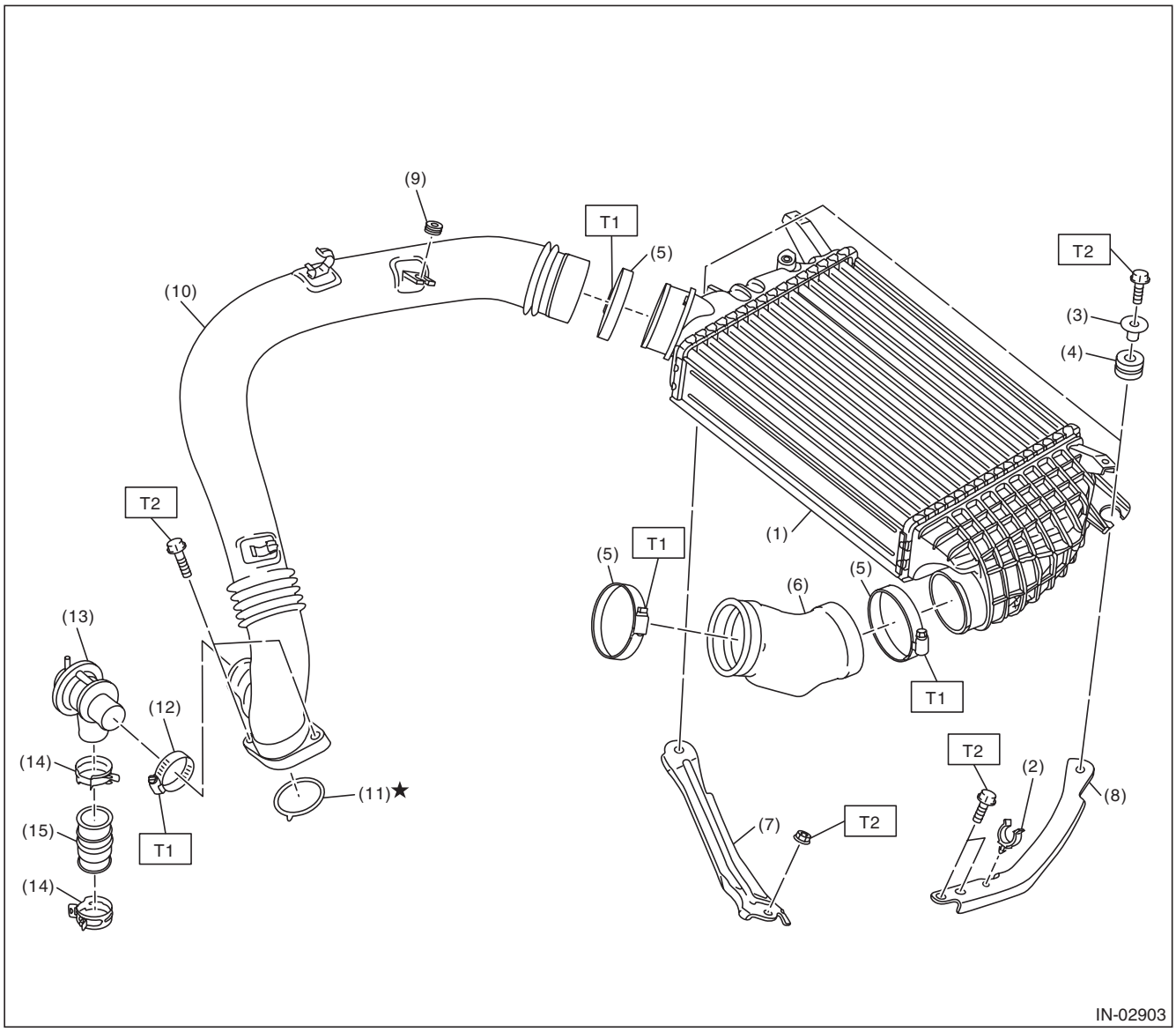

(1)	Intercooler	(8)	Intercooler stay LH	(15)	Intake boot
(2)	Clip	(9)	Cushion		
(3)	Spacer	(10)	Intake duct B		
(4)	Cushion	(11)	O-ring		
(5)	Clamp	(12)	Clamp		
(6)	Intake duct A	(13)	Air by-pass valve		
(7)	Intercooler stay RH	(14)	Clip		

Tightening torque:N·m (kgf-m, ft-lb)
T1: 3 (0.3, 2.2)
T2: 16 (1.6, 11.8)

GETthemANUALS.org

4. TURBOCHARGER

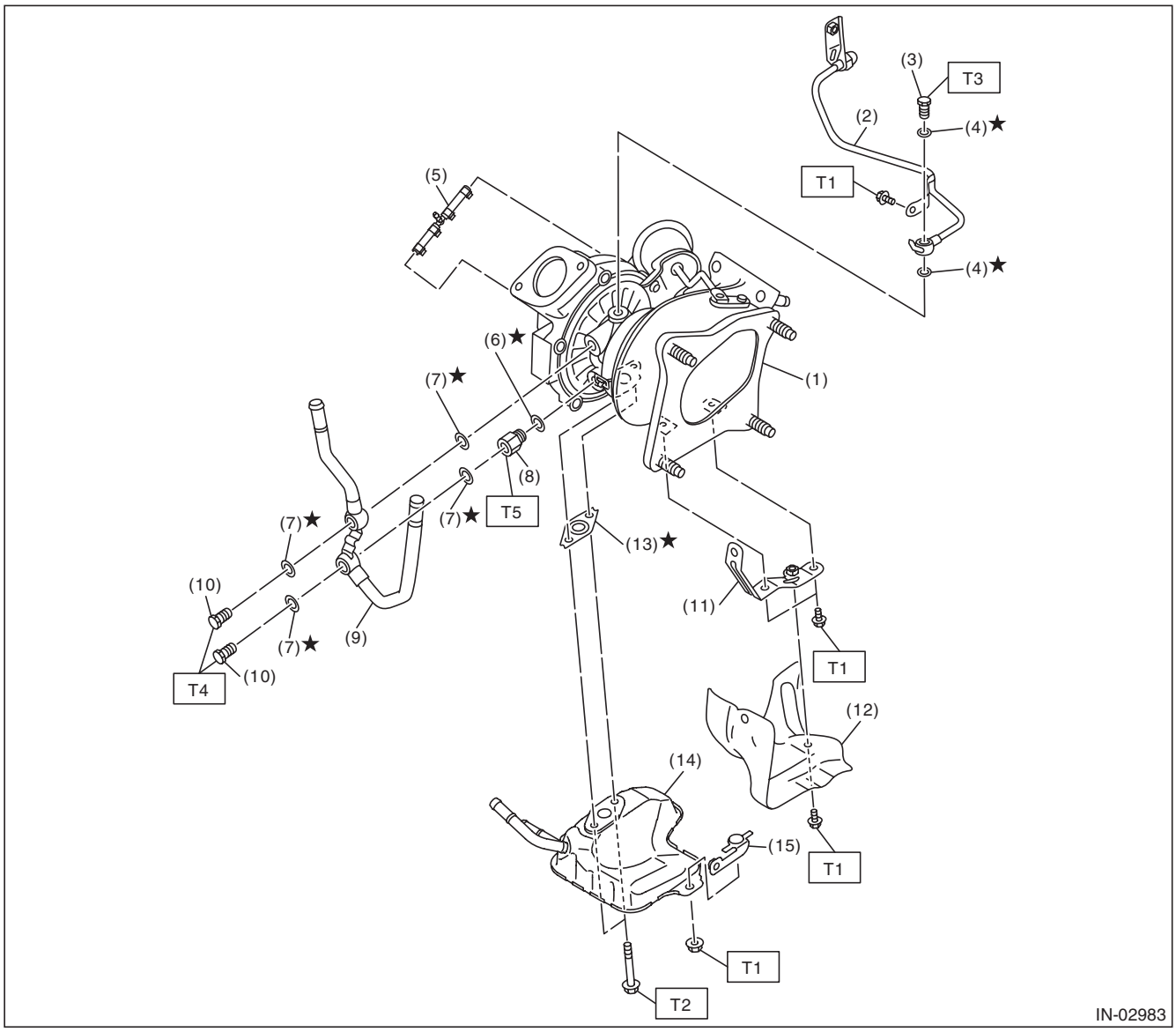

(1)	Turbocharger	(9)	Water pipe
(2)	Oil inlet pipe	(10)	Union bolt
(3)	Union bolt	(11)	Exhaust stay
(4)	Gasket	(12)	Exhaust cover
(5)	Boost hose ASSY	(13)	Gasket
(6)	Gasket	(14)	Oil catch tank
(7)	Gasket	(15)	Oil catch tank stay
(8)	Water pipe connector		

Tightening torque:N·m (kgf-m, ft-lb)

T1: 6.4 (0.7, 4.7)
T2: 10.5 (1.1, 7.7)
T3: 16 (1.6, 11.8)
T4: 31.5 (3.2, 23.2)
T5: 36.5 (3.7, 26.9)

GETtheMANUALS.org

B: CAUTION

- Wear appropriate work clothing, including a cap, protective goggles and protective shoes when performing any work.
- Remove contamination including dirt and corrosion before removal, installation or disassembly.
- Keep the disassembled parts in order and protect them from dust and dirt.
- Before removal, installation or disassembly, be sure to clarify the failure. Avoid unnecessary removal, installation, disassembly and replacement.
- Vehicle components are extremely hot after driving. Be wary of receiving burns from heated parts.
- Be sure to tighten fasteners including bolts and nuts to the specified torque.
- Place shop jacks or rigid racks at the specified points.
- Before disconnecting connectors of sensors or units, be sure to disconnect the ground cable from the battery.

C: PREPARATION TOOL

1. SPECIAL TOOL

ILLUSTRATION	TOOL NUMBER	DESCRIPTION	REMARKS
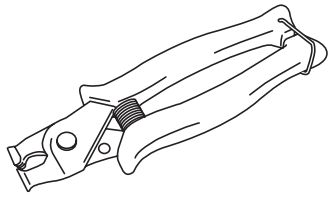 ST18353AA000	18353AA000	CLAMP PLIERS	• Used for removing and installing the PCV hose. • This tool is made by the French company CAILLAU. (code) 54.0.000.205 To make it easier to obtain, it has been provided with a tool number.

2. GENERAL TOOL

TOOL NAME	REMARKS
Mighty Vac	Used for checking waste gate actuator and air by-pass valve.

GETthemanuals.org

2. Air Cleaner Element

A: REMOVAL

1) Remove the suction hose from intake duct and air cleaner case (rear).

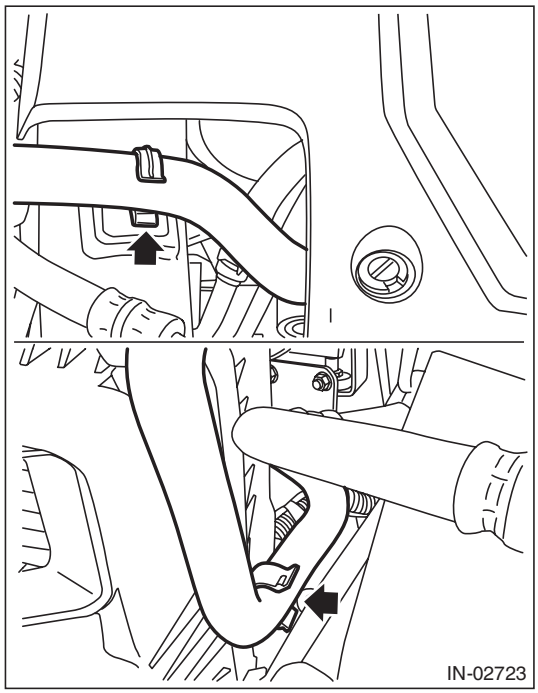

2) Remove the clip (A) from the air cleaner case (front).

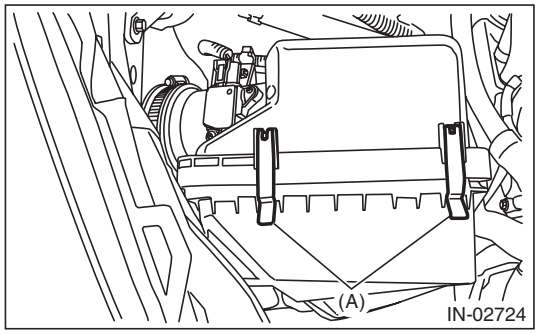

3) Open the air cleaner case to remove the air cleaner element.

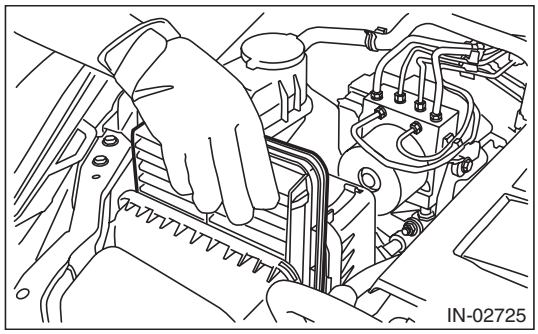

B: INSTALLATION

Install in the reverse order of removal.

CAUTION:
Be sure to use SUBARU genuine air cleaner element depending on the engine type when replacing the air cleaner elements. Using other air cleaner element may affect the engine performance.

NOTE:
- Check that there are no foreign objects in the air cleaner case.
- If the protrusion of the air cleaner case (rear) is removed when removing the air cleaner element, align the protrusion of the air cleaner case (rear) to the hole on the air cleaner case (front) to install.

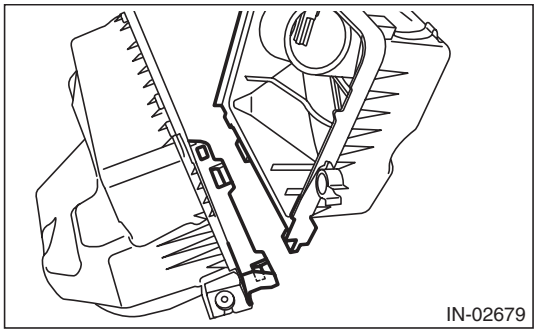

C: INSPECTION

1) Check that the air cleaner element has no deformation, cracks or other damages.
2) Check the air cleaner element for excessive dirt.

GETthemANUALS.org

3. Air Cleaner Case

A: REMOVAL

1) Disconnect the ground cable from battery.

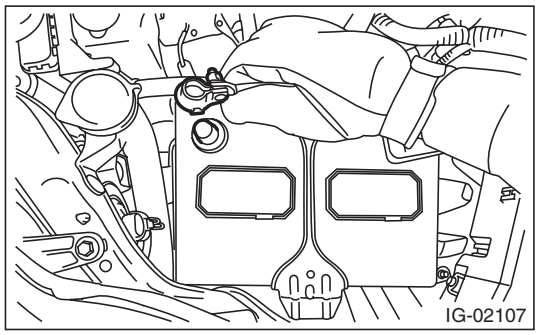

2) Remove the air intake duct. <Ref. to IN(H4DOTC)-12, REMOVAL, Air Intake Duct.>
3) Remove the suction hose from intake duct and air cleaner case (rear).

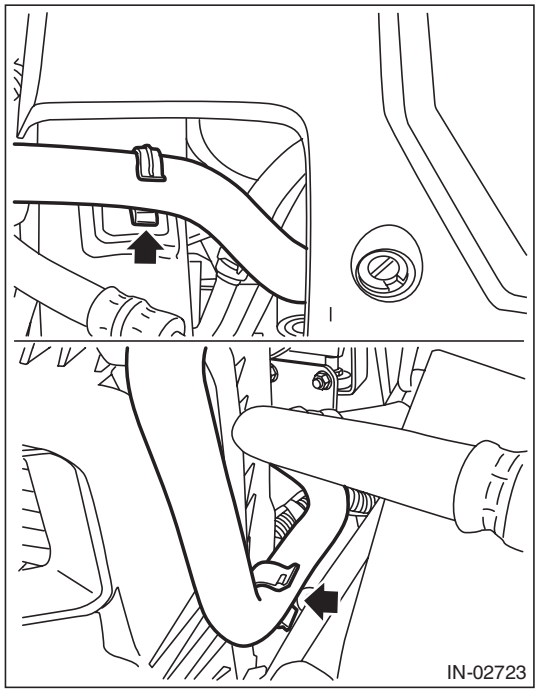

4) Disconnect the connector (A) from the mass air flow and intake air temperature sensor, and remove the clip (B) which holds the mass air flow and intake air temperature sensor harness.

5) Loosen the clamp (C) securing the air intake boot, and remove the clip (D) from the air cleaner case (front).

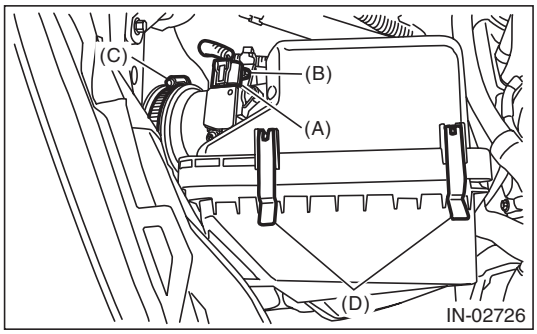

6) Remove the air cleaner case (rear) and air cleaner element.
7) Remove bolts (A) and nuts (B) which secure the air cleaner case (front) to the body, and remove the air cleaner case (front).

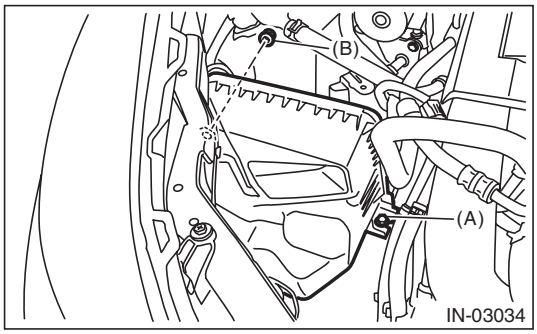

B: INSTALLATION

1) Install the bolt (A) and nut (B) which secure the air cleaner case (front) to the body.

Tightening torque:
Bolt (A)
6 N·m (0.6 kgf-m, 4.4 ft-lb)
Nut (B)
7.5 N·m (0.8 kgf-m, 5.5 ft-lb)

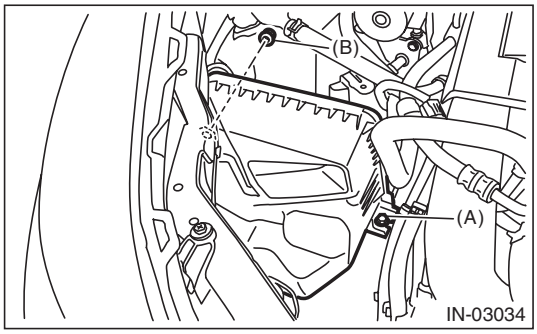

GETthemANUALS.org

2) Set the air cleaner element to the air cleaner case (front), and install the air cleaner case (rear).

NOTE:
When installing the air cleaner case (rear), align the protrusion of the air cleaner case (rear) to the hole on the air cleaner case (front) to install.

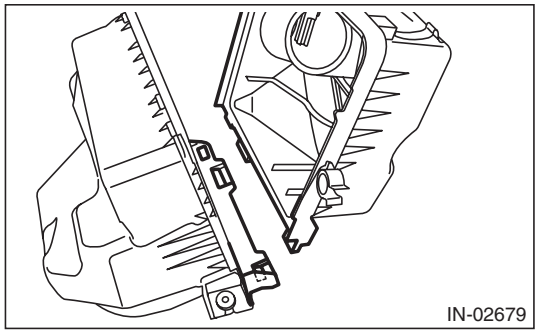

3) Install the clip (A) to the air cleaner case (front).
4) Hold the mass air flow and intake air temperature sensor harness with the clip (B), and connect the connector (C) to the mass air flow and intake air temperature sensor.

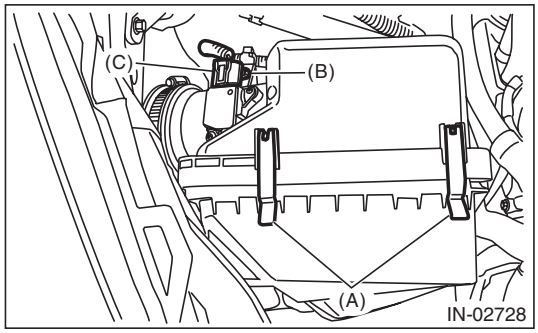

5) Tighten the clamp which secures the air intake boot.

Tightening torque:
2.5 N·m (0.3 kgf-m, 1.8 ft-lb)

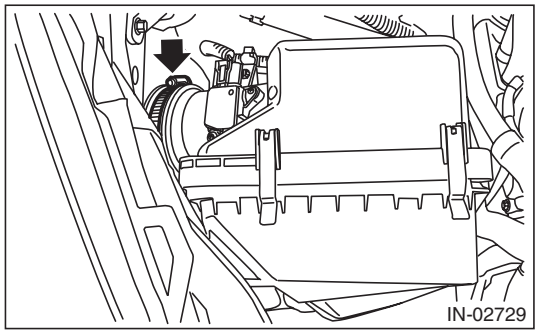

6) Install the suction hose to intake duct and air cleaner case (rear).

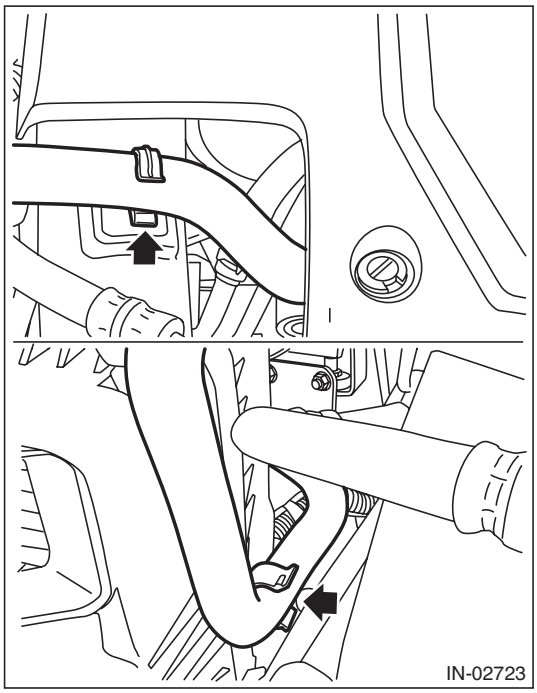

7) Install the air intake duct. <Ref. to IN(H4DOTC)-12, INSTALLATION, Air Intake Duct.>
8) Connect the battery ground terminal.

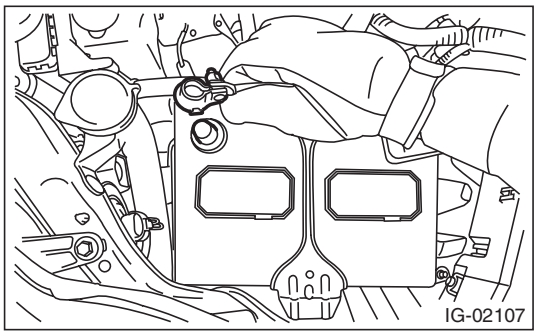

C: INSPECTION

Check that the air cleaner case has no deformation, cracks or other damages.

GETthemanuals.org

4. Air Intake Boot

A: REMOVAL

1) Disconnect the ground cable from battery.

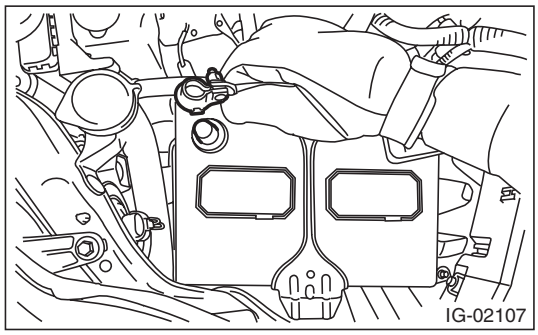

2) Remove the air intake duct. <Ref. to IN(H4DOTC)-12, REMOVAL, Air Intake Duct.>
3) Remove the air cleaner case. <Ref. to IN(H4DOTC)-8, REMOVAL, Air Cleaner Case.>
4) Lift up the vehicle.
5) Remove the under cover. <Ref. to EI-35, REMOVAL, Front Under Cover.>
6) Remove the air intake boot from the intake duct.

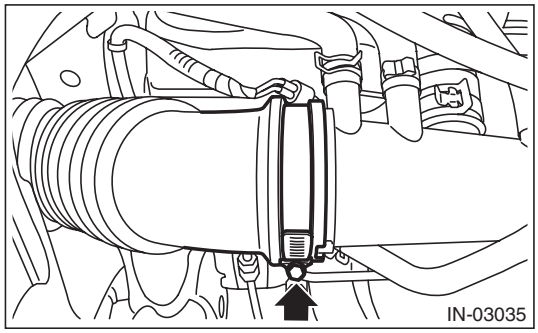

7) Lower the vehicle.
8) Remove the nuts which secure the air intake boot to the vehicle, and remove the air intake boot from the upper side of the vehicle.

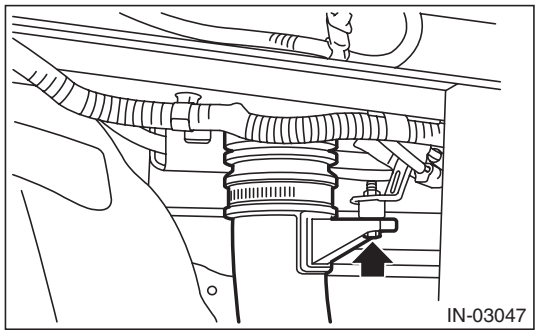

B: INSTALLATION

Install in the reverse order of removal.

NOTE:
When installing the air intake boot to the vehicle, pay attention to the mounting hole position, and align the protrusion for stopping rotation of cushion to the cutout portion on the turbo duct.

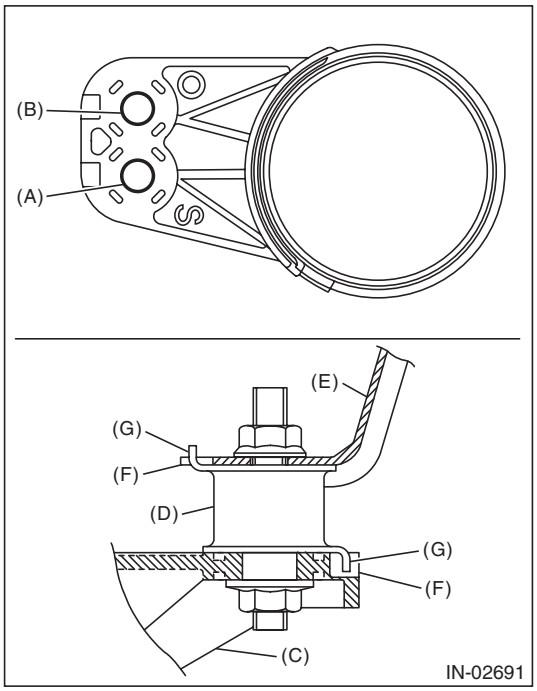

(A) Attachment hole
(B) Not used
(C) Turbo duct
(D) Cushion
(E) Duct bracket
(F) Cutout portion
(G) Protrusion portion

Tightening torque:
7.5 N·m (0.8 kgf-m, 5.5 ft-lb)

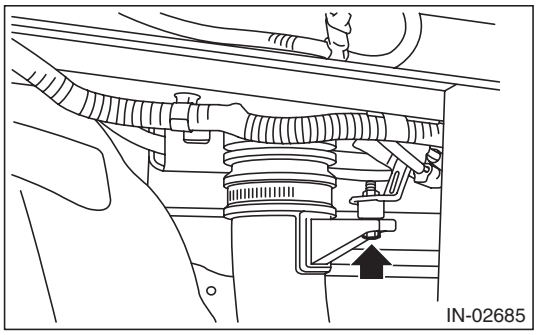

GETthemANUALS.org

Tightening torque:
2.5 N·m (0.3 kgf-m, 1.8 ft-lb)

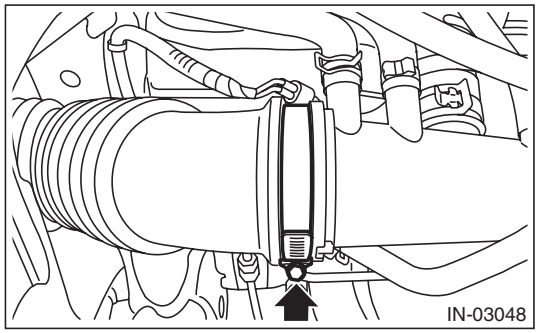

C: DISASSEMBLY

Remove the air intake boot from the turbo duct.

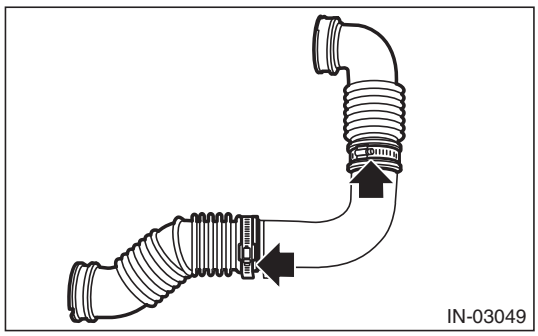

D: ASSEMBLY

Assemble in the reverse order of disassembly.

Tightening torque:
2.5 N·m (0.3 kgf-m, 1.8 ft-lb)

E: INSPECTION

Check that the air intake boot and turbo duct have no cracks, damage or loose part.

GETtheMANUALS.org

5. Air Intake Duct

A: REMOVAL

Remove the clip which secures air intake duct then remove the air intake duct.

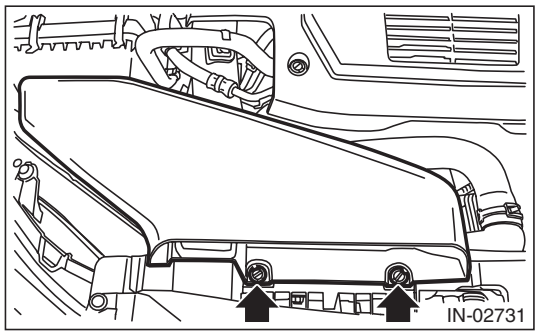

B: INSTALLATION

Install in the reverse order of removal.

C: INSPECTION

1) Check that the air intake duct has no deformation, cracks or other damages.
2) Inspect that no foreign objects are mixed in the air intake duct.

GETtheMANUALS.org

6. Intake Duct

A: REMOVAL

CAUTION:
Do not remove except when the intake duct is broken.

1) Remove the collector cover.
2) Disconnect the ground cable from battery.

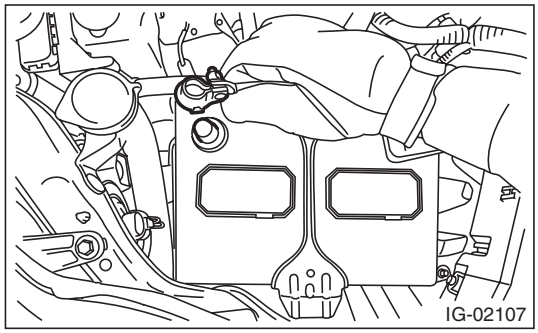

3) Disconnect the vacuum hose from PCV pipe.

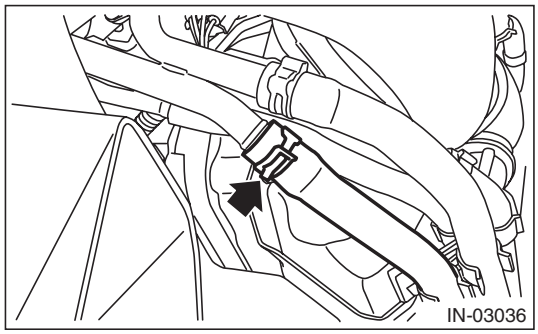

4) Disconnect the vacuum hose (A) from blow-by pipe and remove the vacuum hose (A) and vacuum hose (C) from clip (B).

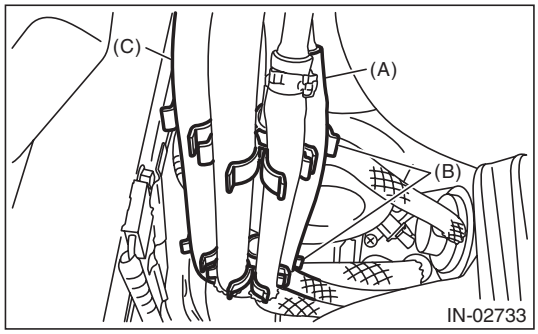

5) Lift up the vehicle.
6) Remove the under cover. <Ref. to EI-35, REMOVAL, Front Under Cover.>
7) Disconnect the connector from the wastegate control solenoid valve.

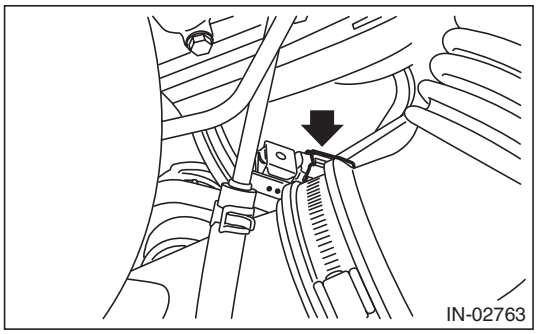

8) Loosen the clamp securing the air intake boot (A) to the intake duct, and remove the air intake boot (A) from intake duct.
9) Disconnect the vacuum hose (B) from intake duct, and unlock the clip securing the air by-pass valve (C) to the intake duct.

NOTE:
Pinch the clamp of the vacuum hose (B) by fitting the cut out in the ST with the protrusion on the clamp as shown in the figure, and unlock the clamp.
ST 18353AA000 CLAMP PLIERS

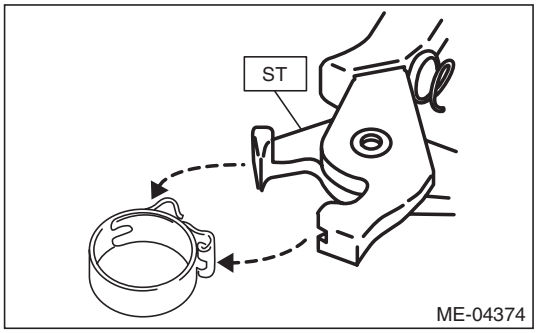

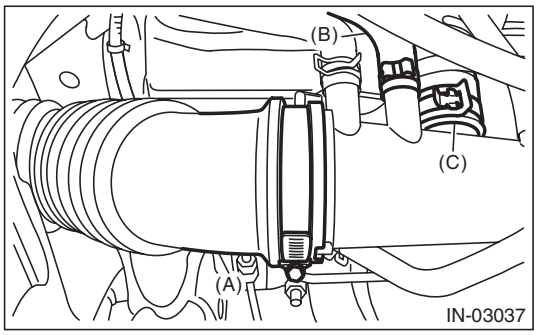

10) Disconnect the air control hose (A).

GETtheMANUALS.org

11) Remove the bolts which secure the intake duct to the turbocharger, and remove the intake duct.

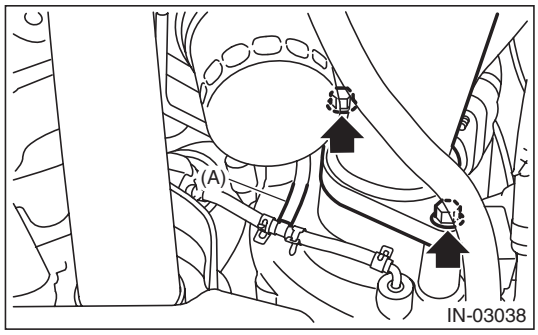

B: INSTALLATION

1) Install the bolts which secure the intake duct to the turbocharger, and connect the air control hose (A).

NOTE:
- Use new O-rings.
- Be careful not to pinch the O-ring.

Tightening torque:
6.4 N·m (0.7 kgf-m, 4.7 ft-lb)

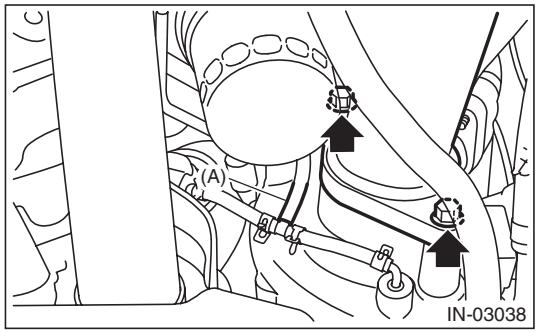

2) Install the air by-pass valve (C) and air intake boot (A) to the intake duct, and connect the vacuum hose (B) to the intake duct.

NOTE:
Use a new clamp for the vacuum hose (B), fit the cut out in the ST with the protrusion on the clamp as shown in the figure, and lock the clamp.
ST 18353AA000 CLAMP PLIERS

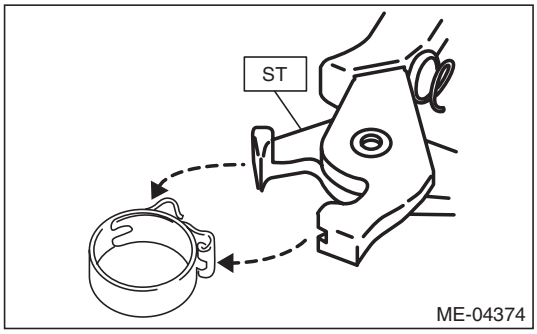

Tightening torque:
2.5 N·m (0.3 kgf-m, 1.8 ft-lb)

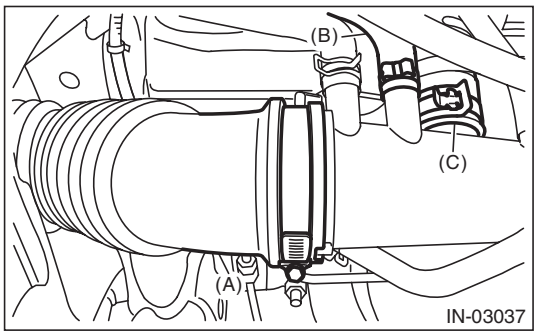

3) Connect the connector to the wastegate control solenoid valve.

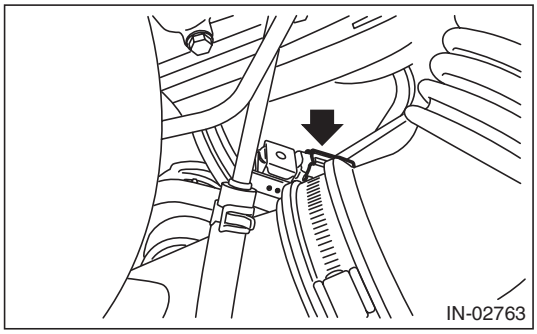

4) Install the under cover. <Ref. to EI-35, INSTALLATION, Front Under Cover.>
5) Lower the vehicle.

GETthemANUALS.org

6) Install the vacuum hose (A) and vacuum hose (C) to the clip (B), and connect the vacuum hose (A) to the blow-by pipe.

NOTE:
Install the vacuum hose as shown in the figure.

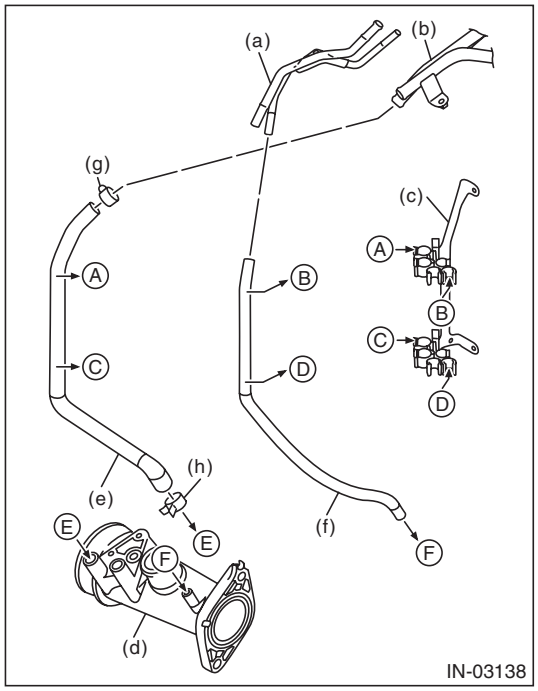

(a) Blow-by pipe
(b) PCV pipe
(c) Hose clip stay ASSY
(d) Intake duct
(e) Vacuum hose (C)
(f) Vacuum hose (A)
(g) Clip
(h) Clip

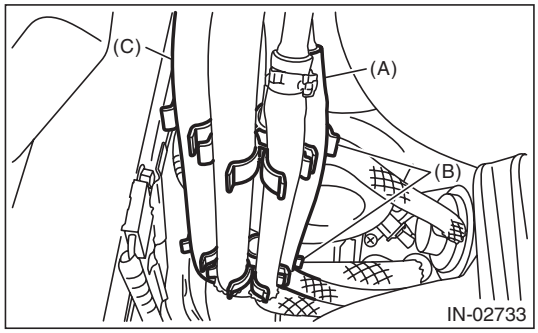

7) Connect the vacuum hose to PCV pipe.

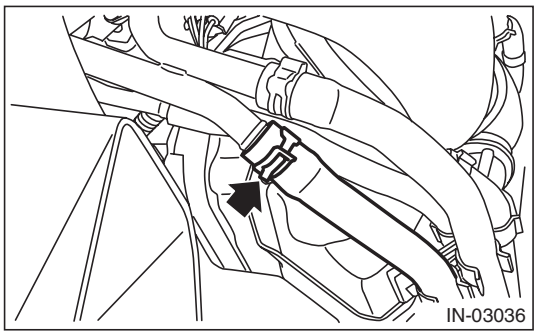

8) Connect the battery ground terminal.

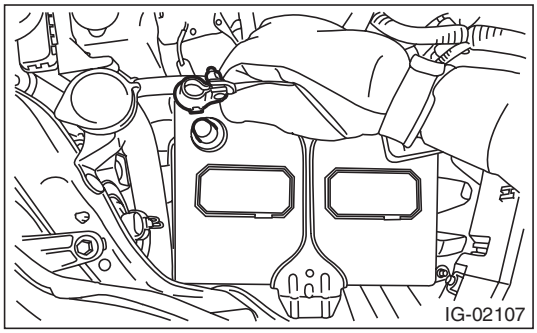

9) Install the collector cover.

C: DISASSEMBLY

1) Remove the vacuum hose (A) and vacuum hose (B) from intake duct.

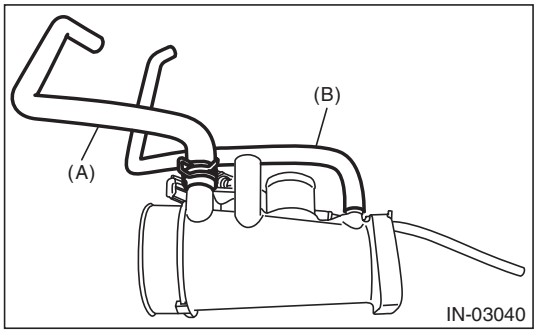

2) Remove the wastegate control solenoid valve and air control hose from the intake duct.

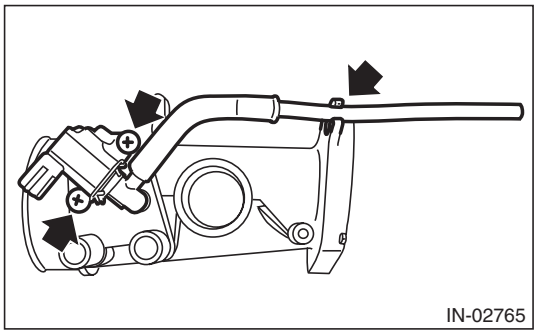

GETtheMANUALS.org

D: ASSEMBLY

1) Install the wastegate control solenoid valve and air control hose to the intake duct.
- Use new O-rings.
- When tightening the boost control solenoid valve, check that it is securely seated.

Tightening torque:
4 N·m (0.4 kgf-m, 3.0 ft-lb)

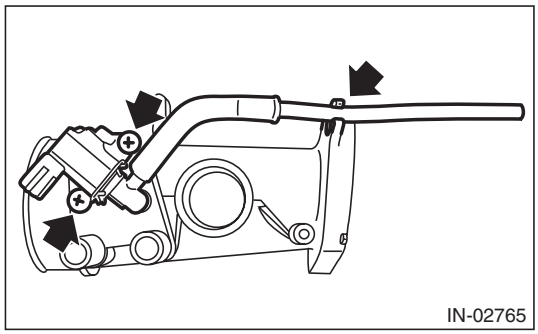

2) Install the vacuum hose (A) and vacuum hose (B) from intake duct.

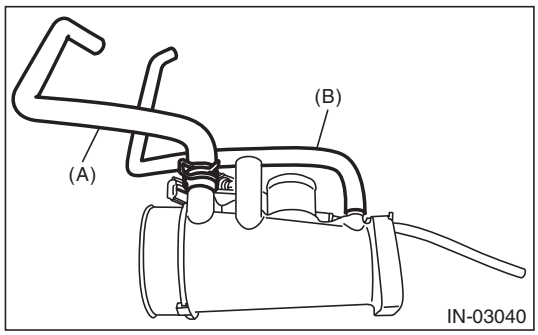

E: INSPECTION

1) Check that the intake duct, PCV pipe and blow-by pipe have no deformation, cracks or other damages.
2) Check that the vacuum hose and air control hose have no cracks, damage or loose part.

GETthemANUALS.org

7. Intercooler

A: REMOVAL

1) Remove the collector cover.
2) Remove the clamp (A) which holds the intake duct to the intercooler, and remove bolts which secure the intercooler to the intercooler stay LH.

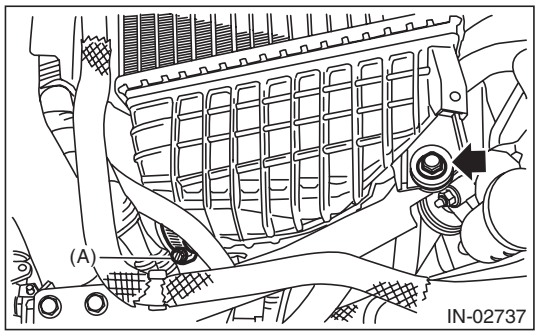

3) Loosen the clamp (A) securing the intake duct to the intercooler, and remove the bolt securing the intercooler to the intercooler stay RH to remove the intercooler.

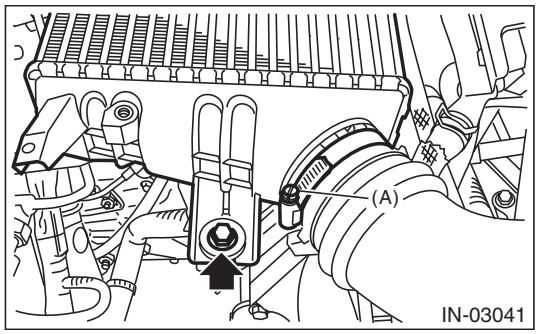

4) Remove the brake booster vacuum hose from the clip (A), and remove the intercooler stay RH and intercooler stay LH.

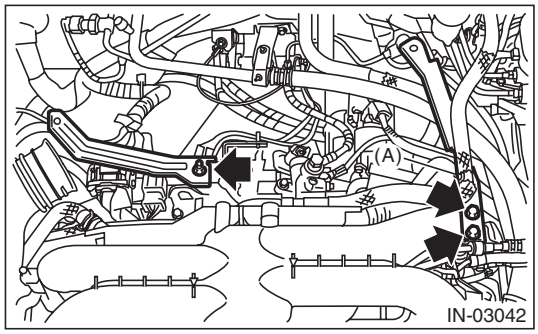

5) Remove the V-belts. <Ref. to ME(H4DOTC)-42, REMOVAL, V-belt.>
6) Remove the generator. <Ref. to SC(H4SO)-18, REMOVAL, Generator.>
7) Remove the power steering pump.

(1) Remove the suction hose from intake duct.

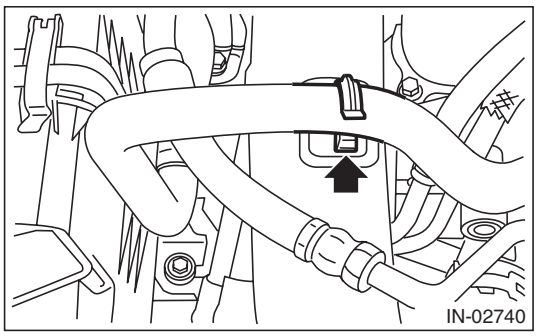

(2) Disconnect the connector (A) from power steering pump, and remove the power steering pump together with the power steering pump bracket from engine and stopper rod.

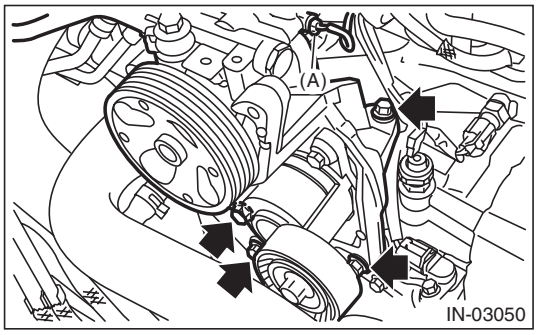

(3) Mount the power steering pump together with the power steering pump bracket on RH side wheel apron.

8) Remove the radiator sub fan motor assembly. <Ref. to CO(H4DOTC)-27, REMOVAL, Radiator Sub Fan and Fan Motor.>
9) Remove the engine coolant hose from the clip (A).
10) Remove the bolts which secure the intake duct to the turbocharger, and remove the air by-pass valve from the intake duct.

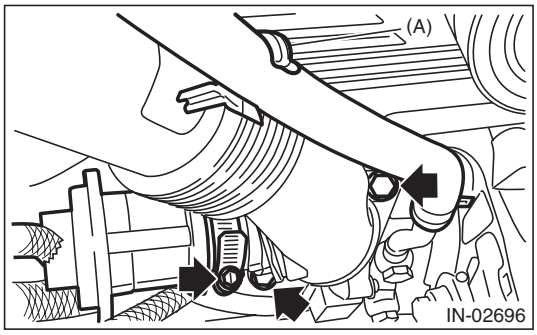

GETtheMANUALS.org

11) Remove the intake duct from intake manifold.

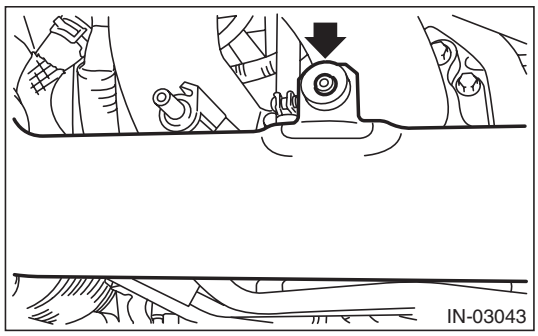

B: INSTALLATION

1) Install the intake duct to the intake manifold.

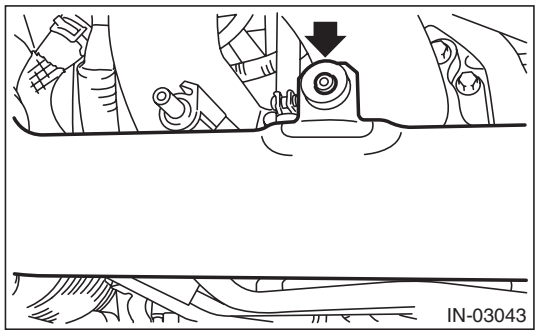

2) Attach the engine coolant hose to the clip (A).
3) Install the air by-pass valve to the intake duct, and install the bolts which secure the intake duct to the turbocharger.

NOTE:
- Use new O-rings.
- Be careful not to pinch the O-ring.

Tightening torque:
T1: 3 N·m (0.3 kgf-m, 2.2 ft-lb)
T2: 16 N·m (1.6 kgf-m, 11.8 ft-lb)

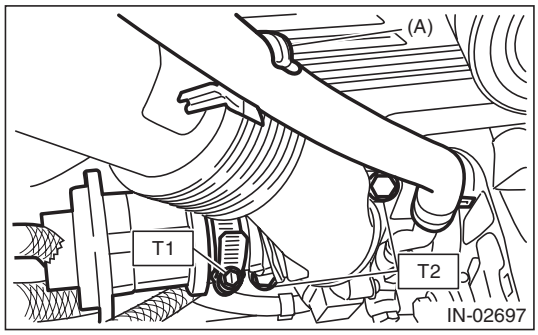

4) Install the radiator sub fan motor assembly. <Ref. to CO(H4DOTC)-27, INSTALLATION, Radiator Sub Fan and Fan Motor.>

5) Install the power steering pump.
(1) Install the power steering pump together with the power steering pump bracket to engine and stopper rod, and connect the connector (A) to the power steering pump.

Tightening torque:
Refer to "COMPONENT" of "STARTING/CHARGING SYSTEMS" for the tightening torque. <Ref. to SC(H4SO)-7, GENERATOR BRACKET, COMPONENT, General Description.>

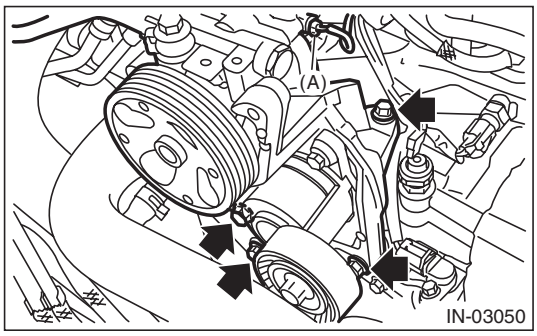

(2) Install the suction hose to the intake duct.

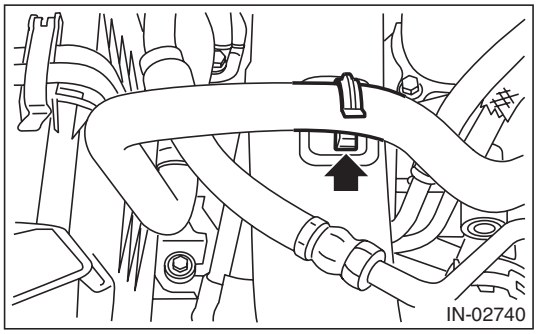

6) Install the generator. <Ref. to SC(H4SO)-18, INSTALLATION, Generator.>
7) Install the V-belts. <Ref. to ME(H4DOTC)-42, INSTALLATION, V-belt.>
8) Install the intercooler stay RH and intercooler stay LH, and install the brake booster vacuum hose to the clip (A).

Tightening torque:
16 N·m (1.6 kgf-m, 11.8 ft-lb)

GETtheMANUALS.org

9) Place the intercooler and attach the bolt to secure the intercooler to the intercooler stay RH. And tighten the clamp to secure the intake duct to the intercooler.

Tightening torque:
T1: 3 N·m (0.3 kgf-m, 2.2 ft-lb)
T2: 16 N·m (1.6 kgf-m, 11.8 ft-lb)

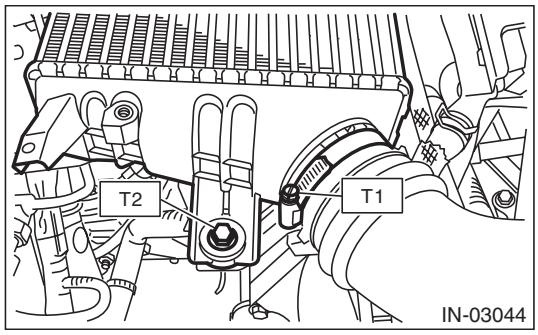

10) Install the bolts which secure the intercooler to the intercooler stay LH, and tighten the clamp which holds the intake duct to the intercooler.

Tightening torque:
T1: 3 N·m (0.3 kgf-m, 2.2 ft-lb)
T2: 16 N·m (1.6 kgf-m, 11.8 ft-lb)

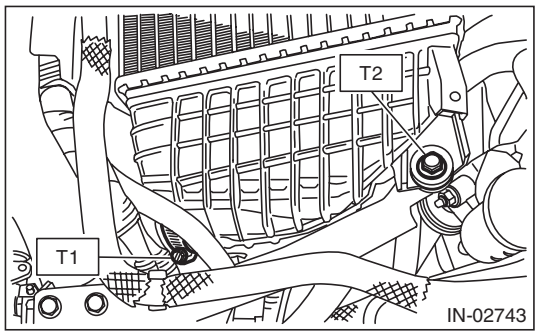

11) Install the collector cover.

C: INSPECTION

1) Check that the intercooler and intercooler stay have no deformation, cracks or other damages.
2) Check that the intake duct has no cracks, damage or loose part.

GETtheMANUALS.org

8. Turbocharger

A: REMOVAL

Remove the turbo charger and front exhaust pipe as a unit. Refer to “Front Exhaust Pipe” for the removal procedure. <Ref. to EX(H4DOTC)-5, REMOVAL, Front Exhaust Pipe.> <Ref. to EX(H4DOTC)-10, DISASSEMBLY, Front Exhaust Pipe.>

B: INSTALLATION

Refer to “Front Exhaust Pipe” for the installation procedure. <Ref. to EX(H4DOTC)-7, INSTALLATION, Front Exhaust Pipe.> <Ref. to EX(H4DOTC)-11, ASSEMBLY, Front Exhaust Pipe.>

C: DISASSEMBLY

1) Remove the oil inlet pipe from the turbocharger.

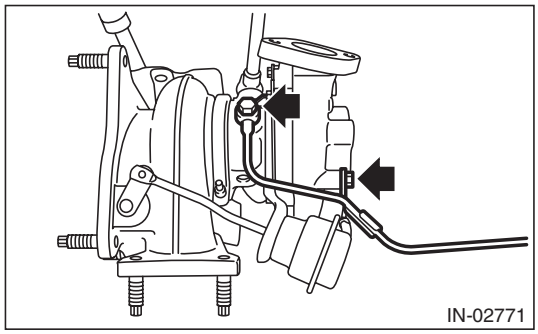

2) Remove the water pipe from the turbocharger.

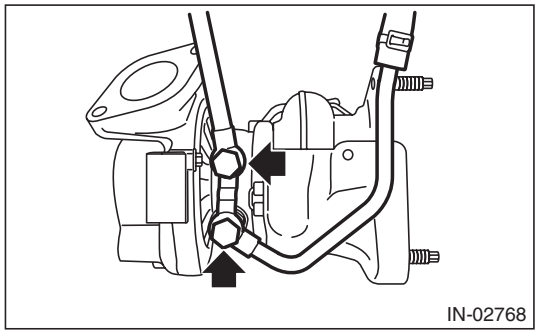

3) Remove the water pipe connector from the turbocharger.

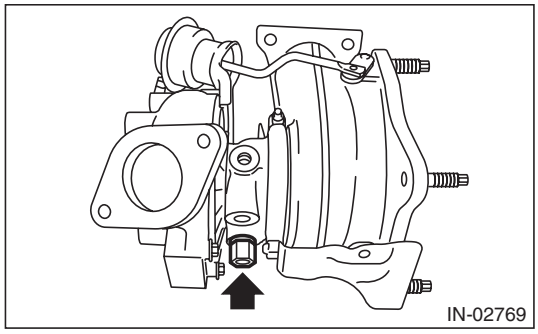

4) Remove the exhaust cover from the turbocharger.

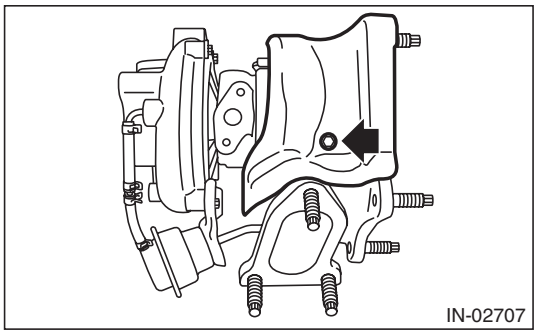

5) Remove the exhaust stay from the turbocharger.

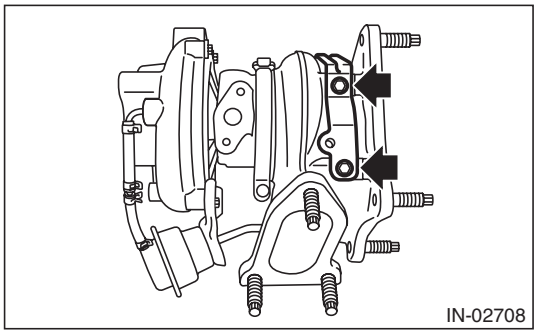

D: ASSEMBLY

1) Install the exhaust stay to the turbocharger.

Tightening torque:
6.4 N·m (0.7 kgf-m, 4.7 ft-lb)

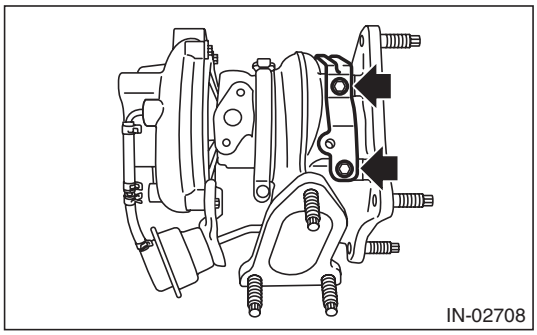

2) Install the exhaust cover to the turbocharger.

Tightening torque:
6.4 N·m (0.7 kgf-m, 4.7 ft-lb)

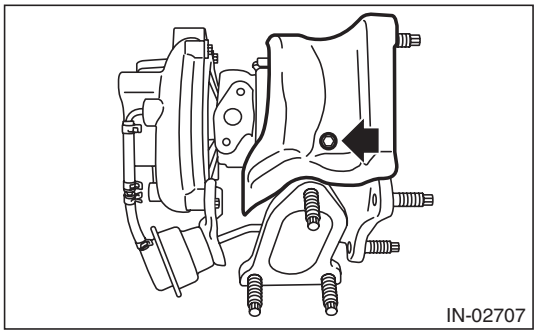

GETtheMANUALS.org

3) Install the water pipe connector to the turbocharger.

NOTE:
Use a new gasket.

Tightening torque:
36.5 N·m (3.7 kgf-m, 26.9 ft-lb)

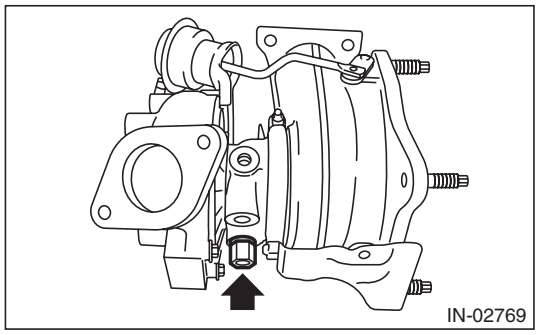

4) Install the water pipe to the turbocharger.

NOTE:
Use a new gasket.

Tightening torque:
31.5 N·m (3.2 kgf-m, 23.2 ft-lb)

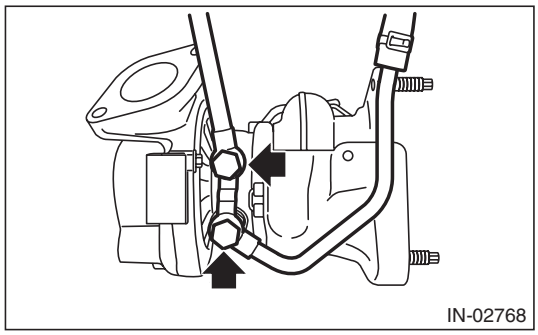

5) Install the oil inlet pipe to the turbocharger.

NOTE:
Use a new gasket.

Tightening torque:
T1: 6.4 N·m (0.7 kgf-m, 4.7 ft-lb)
T2: 16 N·m (1.6 kgf-m, 11.8 ft-lb)

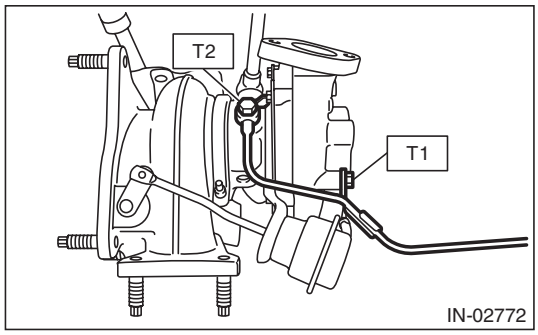

E: INSPECTION

1. WASTE GATE ACTUATOR

1) Remove the collector cover.
2) Remove the front exhaust pipe. <Ref. to EX(H4DOTC)-5, REMOVAL, Front Exhaust Pipe.>
3) Remove the exhaust pipe cover.

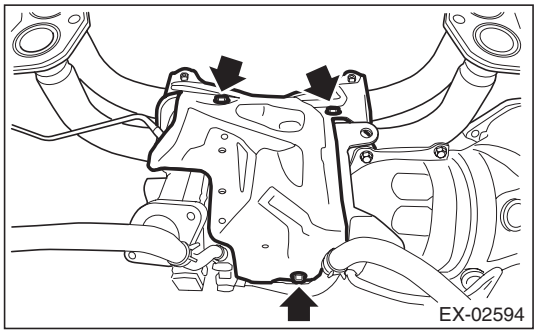

4) Remove the boost hose (B) from the waste gate actuator (A) of the turbocharger, and connect the Mighty Vac to the waste gate actuator (A).

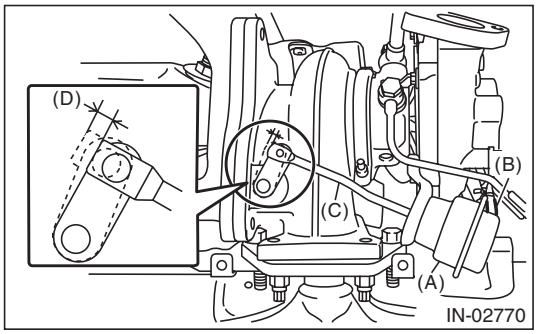

(A) Waste gate actuator
(B) Boost hose
(C) Control rod
(D) Control rod stroke

5) Pressurize slowly with the Mighty Vac, and check the pressure when the control rod stroke (D) becomes 2 mm (0.08 in). If it is not within the standard, replace the turbocharger assembly.

CAUTION:
Do not pressurize over 85.2 kPa (0.87 kgf/cm^2, 12.35 psi) to prevent damaging the waste gate actuator.

Operating pressure (control rod stroke 2 mm (0.08 in)):
Standard
70.8 — 76.7 kPa (0.72 — 0.78 kgf/cm^2, 10.27 — 11.12 psi)

GETtheMANUALS.org

6) After inspection, install the related parts in the reverse order of removal.

Tightening torque:
6.4 N·m (0.7 kgf-m, 4.7 ft-lb)

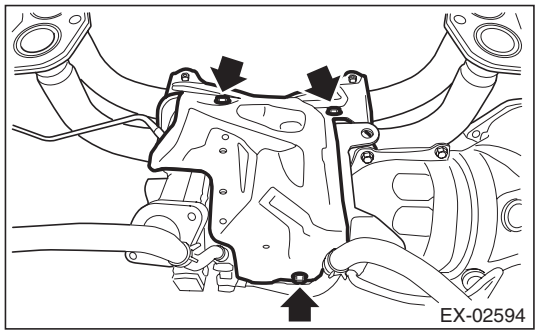

2. OTHER INSPECTIONS

1) Check that the turbocharger and pipe have no deformation, cracks or other damages.
2) Check that the hose has no cracks, damage or loose part.
3) Check that there are no oil leaks or water leaks from the pipe attachment section.

GETtheMANUALS.org

9. Oil Catch Tank

A: REMOVAL

CAUTION:
Do not remove except when the oil catch tank is broken.

1) Lift up the vehicle.
2) Remove the under cover. <Ref. to EI-35, REMOVAL, Front Under Cover.>
3) Remove the engine cover.

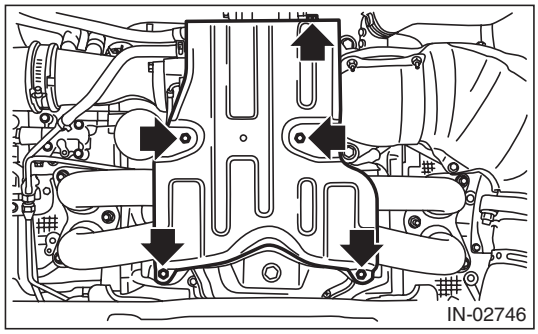

4) Disconnect vacuum hose (A) and oil outlet hose (B) from the oil catch tank.

NOTE:
Pinch the clamp of the vacuum hose (A) by fitting the cut out in the ST with the protrusion on the clamp as shown in the figure, and unlock the clamp.
ST 18353AA000 CLAMP PLIERS

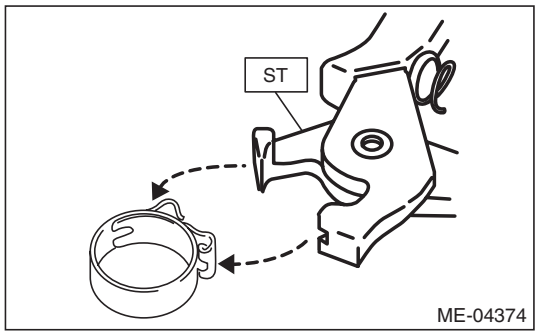

5) Remove bolts and nuts which secure the oil catch tank to the turbocharger and oil catch tank stay, and remove the oil catch tank.

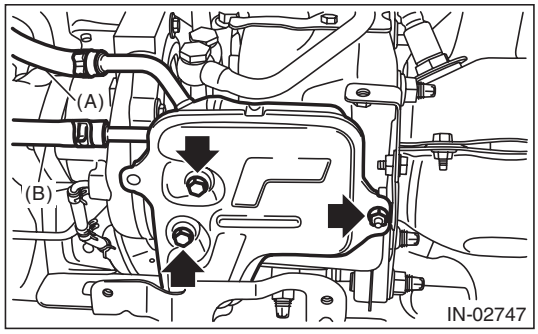

B: INSTALLATION

Install in the reverse order of removal.

NOTE:
- Use a new gasket.
- When installing the oil catch tank, tighten to the specified torque in the alphabetical order shown in the figure.

Tightening torque:
T1: 6.4 N·m (0.7 kgf-m, 4.7 ft-lb)
T2: 10.5 N·m (1.1 kgf-m, 7.7 ft-lb)

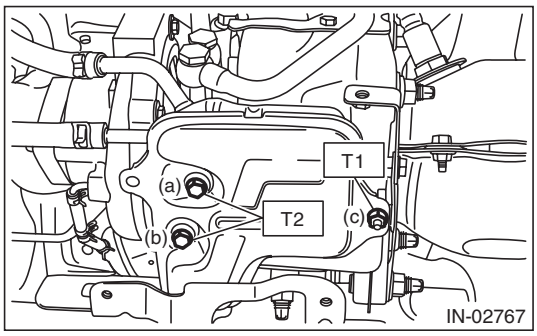

- Use a new clamp for the vacuum hose, fit the cut out in the ST with the protrusion on the clamp as shown in the figure, and lock the clamp.

ST 18353AA000 CLAMP PLIERS

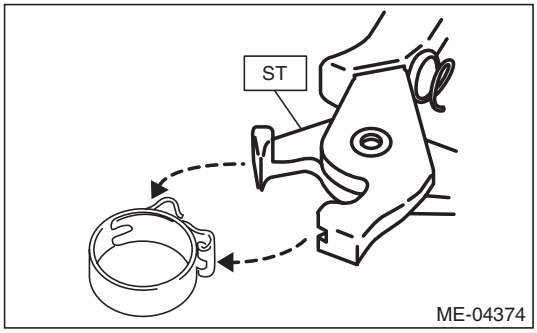

- After installing, check the engine oil level and replenish it if necessary. <Ref. to LU(H4SO)-13, INSPECTION, Engine Oil.>

Tightening torque:
6.4 N·m (0.7 kgf-m, 4.7 ft-lb)

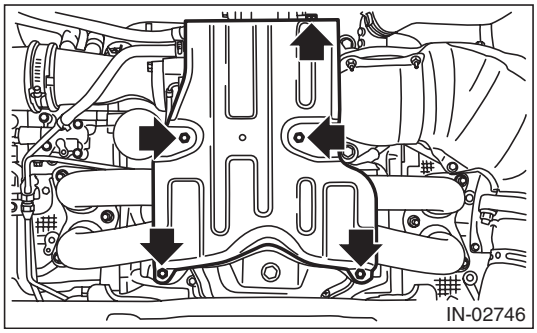

GETtheMANUALS.org

C: INSPECTION

1) Check that the oil catch tank does not have deformation, cracks or damage.
2) Check that the vacuum hose and oil outlet hose have no cracks, damage or loose part.

GETtheMANUALS.org

10.Scavenge Pump

A: REMOVAL

For removal procedures, refer to LU (H4SO) section. <Ref. to LU(H4SO)-30, REMOVAL, Scavenge Pump.>

B: INSTALLATION

For installation procedures, refer to LU (H4SO) section. <Ref. to LU(H4SO)-30, INSTALLATION, Scavenge Pump.>

C: INSPECTION

Refer to LU (H4SO) for inspection procedures. <Ref. to LU(H4SO)-30, INSPECTION, Scavenge Pump.>

GETtheMANUALS.org

11. Air By-pass Valve

A: REMOVAL

1) Remove the collector cover.
2) Disconnect the vacuum control hose from the PCV pipe, and remove the vacuum control hose from the clip (A).

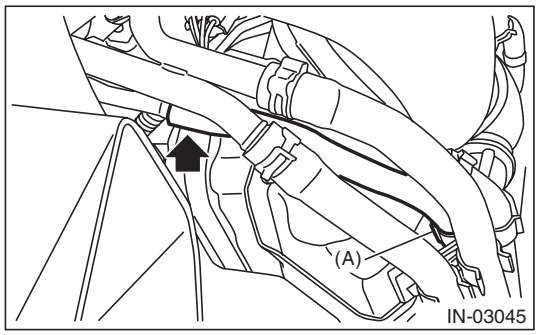

3) Loosen the clamp which holds the air by-pass valve to the intake duct.

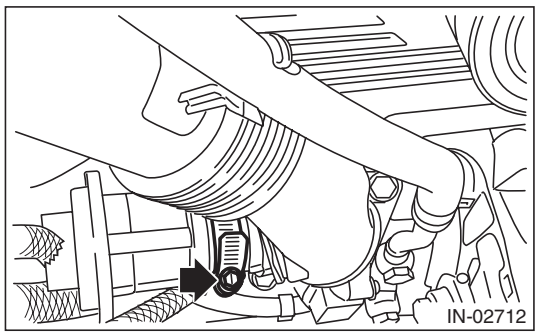

4) Lift up the vehicle.
5) Remove the under cover. <Ref. to EI-35, REMOVAL, Front Under Cover.>
6) Remove the air by-pass valve from the intake duct.

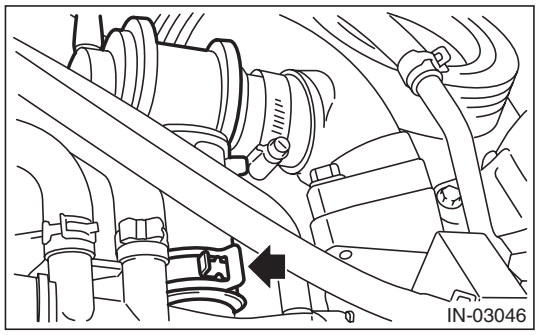

B: INSTALLATION

Install in the reverse order of removal.

Tightening torque:
3 N·m (0.3 kgf-m, 2.2 ft-lb)

C: INSPECTION

1. AIR BY-PASS VALVE

1) Check that the air by-pass valve has no deformation, cracks or other damages.
2) Connect the Mighty Vac to the nipple (A) of the air by-pass valve.

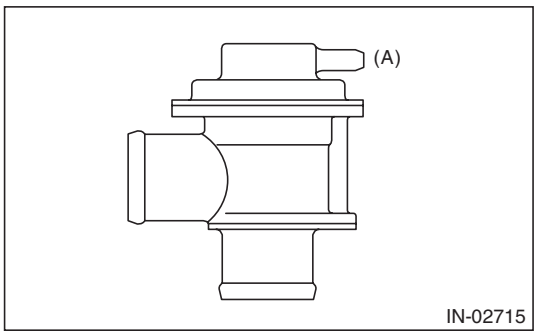

3) Using the Mighty Vac, generate the negative pressure to –93.3 kPa (–0.95 kgf/cm^2, –13.5 psi). Check that the Mighty Vac gauge needle holds 10 seconds without falling by –92.6 kPa (–0.94 kgf/cm^2, –13.4 psi).
4) Set a dial gauge to the end of valve rod of the air by-pass valve.

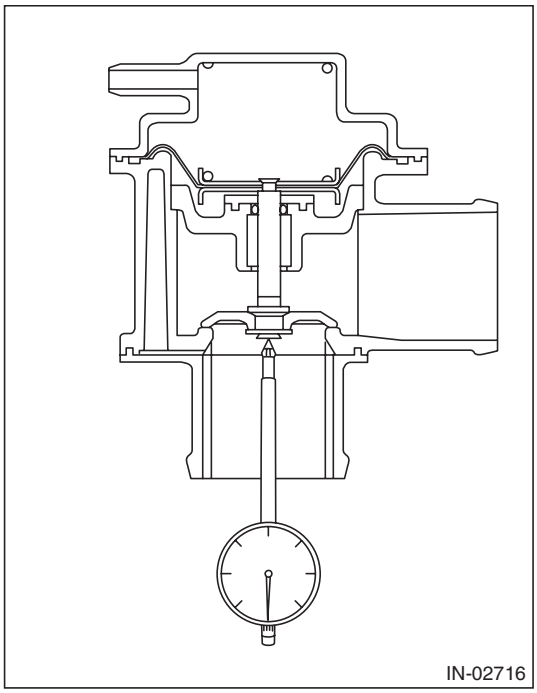

GETtheMANUALS.org

5) Using the Mighty Vac, generate the negative pressure, and check the pressure when dial gauge needle (valve stroke) shows 0.5 mm (0.02 in). If it is not within the standard, replace the air by-pass valve.

Opening pressure (valve stroke 0.5 mm (0.02 in)):

Standard

–49.3 — –57.3 kPa (–0.50 — –0.58 kgf/cm^2, –7.15 — –8.31 psi)

2. OTHER INSPECTIONS

Check that the vacuum hose and air by-pass pipe have no cracks, damage or loose part.

GETtheMANUALS.org

12. Resonator Chamber

A: REMOVAL

The resonator chamber and air cleaner case are integrated into one unit; therefore, refer to “Air Cleaner Case” for removal procedure. <Ref. to IN(H4DOTC)-8, REMOVAL, Air Cleaner Case.>

B: INSTALLATION

The resonator chamber and air cleaner case are integrated into one unit; therefore, refer to “Air Cleaner Case” for installation procedure. <Ref. to IN(H4DOTC)-8, INSTALLATION, Air Cleaner Case.>

C: INSPECTION

Check that the resonator chamber has no deformation, cracks or other damages.

GETtheMANUALS.org

MECHANICAL

ME(H4DOTC)

		Page
1.	General Description	2
2.	Compression	21
3.	Idle Speed	22
4.	Ignition Timing	23
5.	Intake Manifold Vacuum	24
6.	Engine Oil Pressure	25
7.	Fuel Pressure	26
8.	Valve Clearance	27
9.	Engine Assembly	31
10.	Engine Mounting	38
11.	Preparation for Overhaul	41
12.	V-belt	42
13.	Crank Pulley	44
14.	Timing Belt Cover	46
15.	Timing Belt	52
16.	Cam Sprocket	61
17.	Crank Sprocket	62
18.	Camshaft	63
19.	Cylinder Head	74
20.	Cylinder Block	83
21.	Intake and Exhaust Valve	107
22.	Piston	108
23.	Connecting Rod	109
24.	Crankshaft	110
25.	Engine Trouble in General	111
26.	Engine Noise	117

GETtheMANUALS.org

1. General Description

A: SPECIFICATION

Engine	Model				2.5 L
	Cylinder arrangement				Horizontally opposed, liquid cooled, 4-cylinder, 4-stroke gasoline engine
	Valve system mechanism				Belt driven, double overhead camshaft, 4-valve/cylinder
	Bore × Stroke	mm (in)			99.5 × 79.0 (3.92 × 3.11)
	Displacement	cm^3 (cu in)			2,457 (149.94)
	Compression ratio				9.5
	Compression pressure (at 200 — 300 rpm)	kPa (kg/cm^2, psi)		Standard	981 — 1,177 (10 — 12, 142 — 171)
	Number of piston rings				Pressure ring: 2, Oil ring: 1
	Intake valve timing		Open	Max. retard	ATDC 5°
				Min. advance	BTDC 35°
			Close	Max. retard	ABDC 65°
				Min. advance	ABDC 25°
	Exhaust valve timing		Open	Max. retard	BBDC 24°
				Min. advance	BBDC 64°
			Close	Max. retard	ATDC 26°
				Min. advance	BTDC 14°
	Valve clearance	mm (in)	Inspection value	Intake	$0.20^{+0.04}_{-0.06}$ ($0.0079^{+0.0016}_{-0.0024}$)
				Exhaust	0.35±0.05 (0.0138±0.0020)
			Adjustment value	Intake	$0.20^{+0.01}_{-0.03}$ ($0.0079^{+0.0004}_{-0.0012}$)
				Exhaust	0.35±0.02 (0.0138±0.0008)
	Idle speed (gear shift lever in neutral position)	rpm	No load	Standard	700±100
			A/C ON	Standard	700 — 850±100
	Ignition order				1 → 3 → 2 → 4
	Ignition timing	BTDC/rpm		Standard	15°±10°/700

GETthemANUALS.org

NOTE:
OS: Oversize US: Undersize

Belt tension adjuster	Adjuster rod protrusion amount mm (in)			5.2 — 6.2 (0.205 — 0.244)
Camshaft	Bending limit mm (in)			0.020 (0.00079)
	Cam lobe height mm (in)	Intake	Standard	46.55 — 46.65 (1.833 — 1.837)
		Exhaust	Standard	45.85 — 45.95 (1.805 — 1.809)
	Cam base circle diameter mm (in)		Standard	37.0 (1.457)
	Journal O.D. mm (in)	Front	Standard	37.946 — 37.963 (1.4939 — 1.4946)
		Center, rear	Standard	29.946 — 29.963 (1.1790 — 1.1796)
	Oil clearance mm (in)		Standard	0.037 — 0.072 (0.0015 — 0.0028)
	Thrust clearance mm (in)		Standard	0.068 — 0.116 (0.0027 — 0.0047)
Cylinder head	Warping limit (mating surface with cylinder block) mm (in)			0.035 (0.0014)
	Grinding limit mm (in)			0.3 (0.012)
	Standard height mm (in)			127.5 (5.02)
Valve seat	Seating angle between valve and valve seat			90°
	Contacting width between valve and valve seat mm (in)	Intake	Standard	0.6 — 1.4 (0.024 — 0.055)
		Exhaust	Standard	1.2 — 1.8 (0.047 — 0.071)
Valve guide	Clearance between the valve guide and valve stem mm (in)	Intake	Standard	0.030 — 0.057 (0.0012 — 0.0022)
		Exhaust	Standard	0.040 — 0.067 (0.0016 — 0.0026)
	Inside diameter mm (in)			6.000 — 6.012 (0.2362 — 0.2367)
	Valve stem outer diameters mm (in)	Intake		5.955 — 5.970 (0.2344 — 0.2350)
		Exhaust		5.945 — 5.960 (0.2341 — 0.2346)
	Valve guide protrusion amount mm (in)			15.8 — 16.2 (0.622 — 0.638)
Valve	Head edge thickness mm (in)	Intake	Standard	1.0 — 1.4 (0.039 — 0.055)
		Exhaust	Standard	1.3 — 1.7 (0.051 — 0.067)
	Overall length mm (in)	Intake		104.4 (4.110)
		Exhaust		104.65 (4.1201)
Valve spring	Free length mm (in)			47.32 (1.863)
	Tension/spring height N (kgf, lb)/mm (in)		Set	205 — 235 (20.90 — 23.96, 46.09 — 52.84)/36.0 (1.417)
			Lift	426 — 490 (43.44 — 49.96, 95.78 — 110.17)/26.5 (1.043)
	Squareness			2.5°, 2.1 mm (0.083 in) or less
Valve lifter	Outer diameter mm (in)		Standard	34.959 — 34.975 (1.3763 — 1.3770)
	Valve lifter mating surface inner diameter mm (in)		Standard	34.994 — 35.016 (1.3777 — 1.3786)
	Valve lifter and valve lifter mating surface clearance mm (in)		Standard	0.019 — 0.057 (0.0007 — 0.0022)
Cylinder block	Warping limit (mating surface with cylinder head) mm (in)			0.025 (0.0098)
	Grinding limit mm (in)			0.1 (0.004)
	Standard height mm (in)			201.0 (7.91)
	Cylindricality mm (in)		Limit	0.015 (0.0006)
	Out-of-roundness mm (in)		Limit	0.010 (0.0004)
	Clearance between cylinder and piston at 20°C (68°F) mm (in)		Standard	–0.010 — 0.010 (–0.00039 — 0.00039)
	Cylinder inner diameter boring limit (diameter) mm (in)			To 100.005 (3.9372)

GETthemANUALS.org

Piston	Piston grade point mm (in)			38.2 (1.50)
	Outer diameter mm (in)	Standard	A	99.505 — 99.515 (3.9175 — 3.9179)
			B	99.495 — 99.505 (3.9171 — 3.9175)
		0.25 (0.0098) OS		99.745 — 99.765 (3.9270 — 3.9278)
		0.50 (0.0197) OS		99.995 — 100.015 (3.9368 — 3.9376)
Piston pin	Degree of fit			Piston pin must be fitted into position with thumb at 20°C (68°F).
	Clearance between piston pin hole and piston pin mm (in)		Standard	0.004 — 0.008 (0.0002 — 0.0003)
Piston ring	Piston ring gap mm (in)	Top ring	Standard	0.20 — 0.25 (0.0079 — 0.0098)
		Second ring	Standard	0.37 — 0.52 (0.015 — 0.0203)
		Oil ring	Standard	0.20 — 0.50 (0.0079 — 0.0197)
	Clearance between piston ring and piston ring groove mm (in)	Top ring	Standard	0.040 — 0.080 (0.0016 — 0.0031)
		Second ring	Standard	0.030 — 0.070 (0.0012 — 0.0028)
Connecting rod and connecting rod bearing	Bend or twist per 100 mm (3.94 in) in length mm (in)		Limit	0.1 (0.0039)
	Thrust clearance mm (in)		Standard	0.070 — 0.330 (0.0028 — 0.0130)
	Oil clearance mm (in)		Standard	0.017 — 0.045 (0.0007 — 0.0018)
	Bearing size (Thickness at center) mm (in)	Standard		1.490 — 1.506 (0.0587 — 0.0593)
		0.03 (0.0012) US		1.504 — 1.512 (0.0592 — 0.0595)
		0.05 (0.0020) US		1.514 — 1.522 (0.0596 — 0.0599)
		0.25 (0.0098) US		1.614 — 1.622 (0.0635 — 0.0639)
Bushing of small end	Clearance between piston pin and bushing mm (in)		Standard	0 — 0.022 (0 — 0.0009)
Crankshaft and crankshaft bearing	Bending limit mm (in)			0.035 (0.0014)
	Crank pin	Cylindricality mm (in)	Limit	0.004 (0.0002)
		Out-of-roundness mm (in)	Limit	0.003 (0.0001)
		Grinding limit (dia.) mm (in)		To 51.750 (2.0374)
	Crank journal	Cylindricality mm (in)	Limit	0.006 (0.0002)
		Out-of-roundness mm (in)	Limit	0.005 (0.0002)
		Grinding limit (dia.) mm (in)		To 59.758 (2.3527)
	Crank pin outer diameter mm (in)	Standard		51.976 — 52.000 (2.0463 — 2.0472)
		0.03 (0.0012) US		51.954 — 51.970 (2.0454 — 2.0461)
		0.05 (0.0020) US		51.934 — 51.950 (2.0447 — 2.0453)
		0.25 (0.0098) US		51.734 — 51.750 (2.0368 — 2.0374)
	Crank journal outer diameter mm (in)	Standard		59.984 — 60.008 (2.3616 — 2.3625)
		0.03 (0.0012) US		59.962 — 59.978 (2.3607 — 2.3613)
		0.05 (0.0020) US		59.942 — 59.958 (2.3599 — 2.3605)
		0.25 (0.0098) US		59.742 — 59.758 (2.3520 — 2.3527)
	Bearing size (Thickness at center) mm (in)	#1, #3	Standard	1.998 — 2.015 (0.0787 — 0.0793)
			0.03 (0.0012) US	2.017 — 2.020 (0.0794 — 0.0795)
			0.05 (0.0020) US	2.027 — 2.030 (0.0798 — 0.0799)
			0.25 (0.0098) US	2.127 — 2.130 (0.0837 — 0.0839)
		#2, #4, #5	Standard	2.000 — 2.017 (0.0787 — 0.0794)
			0.03 (0.0012) US	2.019 — 2.022 (0.0795 — 0.0796)
			0.05 (0.0020) US	2.029 — 2.032 (0.0799 — 0.0800)
			0.25 (0.0098) US	2.129 — 2.132 (0.0838 — 0.0839)
	Thrust clearance mm (in)		Standard	0.030 — 0.115 (0.0012 — 0.0045)
	Oil clearance mm (in)		Standard	0.010 — 0.030 (0.00039 — 0.0012)

GETthemANUALS.org

B: COMPONENT

1. V-BELT

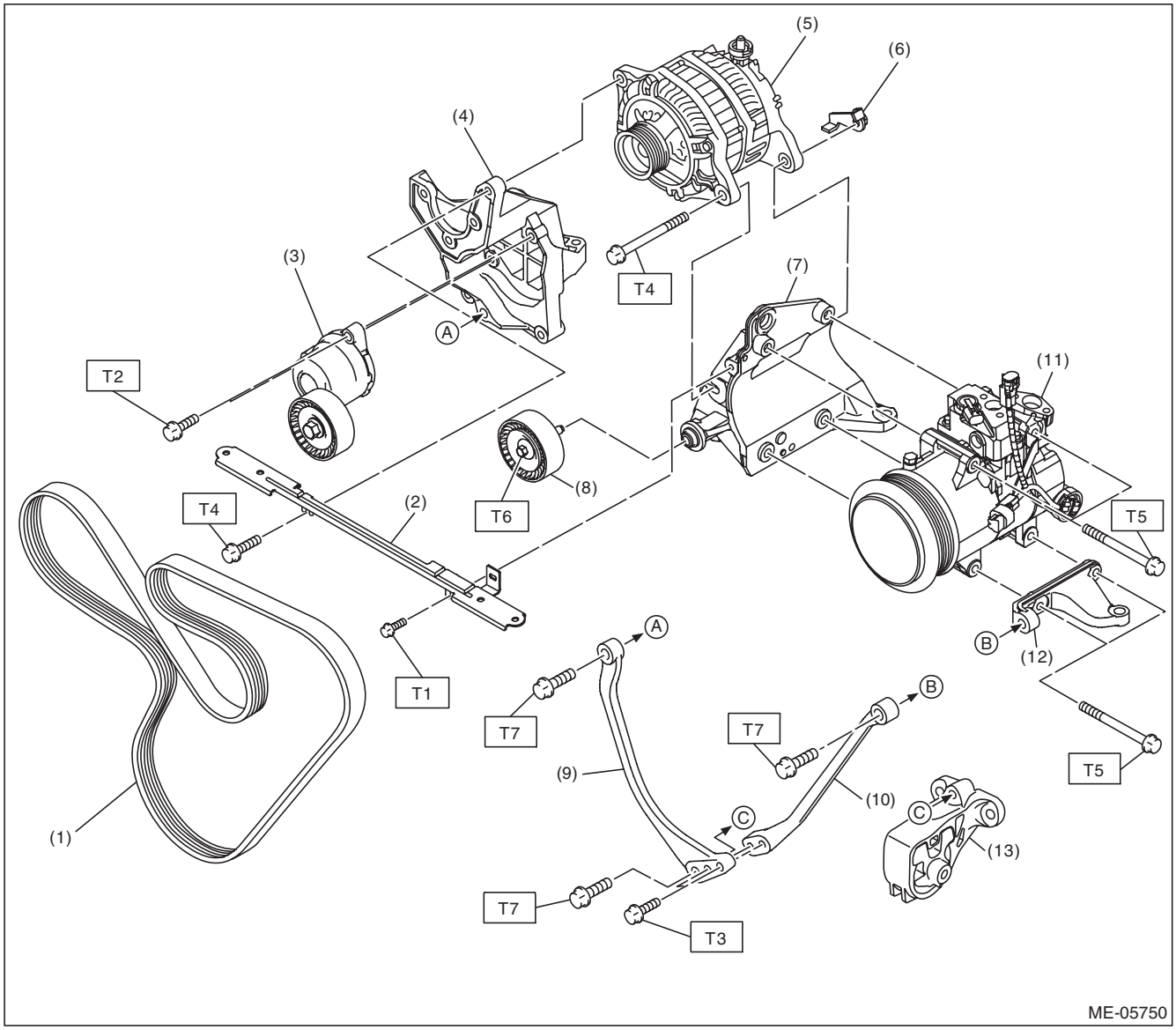

(1)	V-belt	(8)	Idler pulley ASSY
(2)	Collector cover bracket	(9)	Stopper rod RH
(3)	V-belt tensioner ASSY	(10)	Stopper rod LH
(4)	Power steering pump bracket	(11)	A/C compressor
(5)	Generator	(12)	A/C compressor bracket B
(6)	Generator plate	(13)	Front cushion rubber
(7)	A/C compressor bracket A		

Tightening torque:N·m (kgf-m, ft-lb)

T1: 6.4 (0.7, 4.7)
T2: 20 (2.0, 14.8)
T3: 22 (2.2, 16.2)
T4: 25 (2.5, 18.4)
T5: 26.5 (2.7, 19.5)
T6: 33 (3.4, 24.3)
T7: 36 (3.7, 26.6)

GETthemANUALS.org

2. TIMING BELT

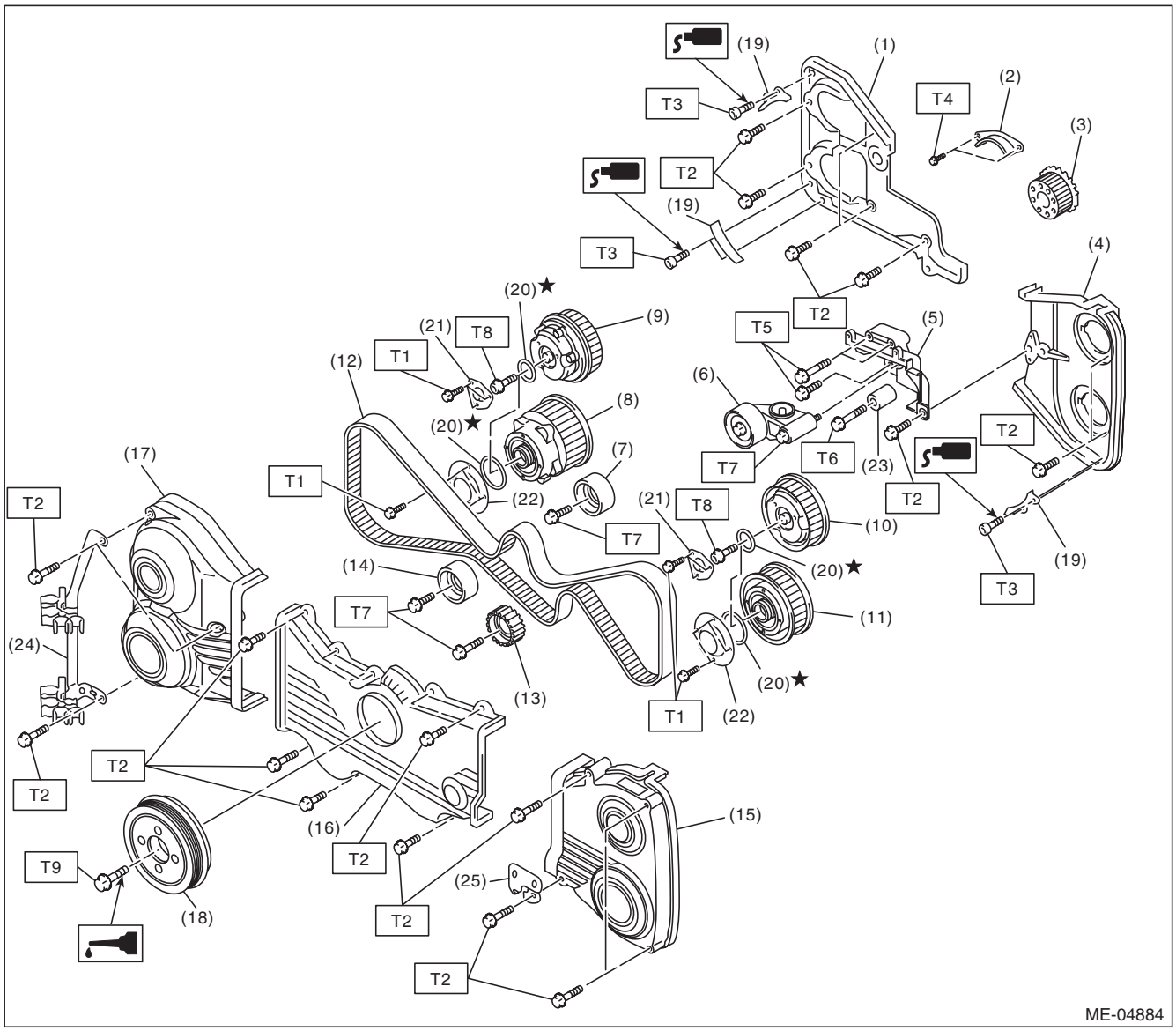

(1)	Timing belt cover No. 2 RH	(13)	Belt idler No. 2	(25)	Oxygen sensor bracket
(2)	Timing belt guide	(14)	Belt idler		
(3)	Crank sprocket	(15)	Timing belt cover LH		***Tightening torque:N·m (kgf-m, ft-lb)***
(4)	Timing belt cover No. 2 LH	(16)	Front belt cover		***T1: 3.4 (0.3, 2.5)***
(5)	Tensioner bracket	(17)	Timing belt cover RH		***T2: 5 (0.5, 3.7)***
(6)	Automatic belt tension adjuster ASSY	(18)	Crank pulley		***T3: 6.4 (0.7, 4.7)***
(7)	Belt idler	(19)	Timing belt guide		***T4: 9.75 (1.0, 7.2)***
(8)	Exhaust cam sprocket RH	(20)	O-ring		***T5: 24.5 (2.5, 18.1)***
(9)	Intake cam sprocket RH	(21)	Intake actuator cover		***T6: 25 (2.5, 18.4)***
(10)	Intake cam sprocket LH	(22)	Exhaust actuator cover		***T7: 39 (4.0, 28.8)***
(11)	Exhaust cam sprocket LH	(23)	Belt idler		***T8: <Ref. to ME(H4DOTC)-61, INSTALLATION, Cam Sprocket.>***
(12)	Timing belt	(24)	Hose clip stay ASSY		***T9: <Ref. to ME(H4DOTC)-44, INSTALLATION, Crank Pulley.>***

GETthemANUALS.org

3. CYLINDER HEAD AND CAMSHAFT

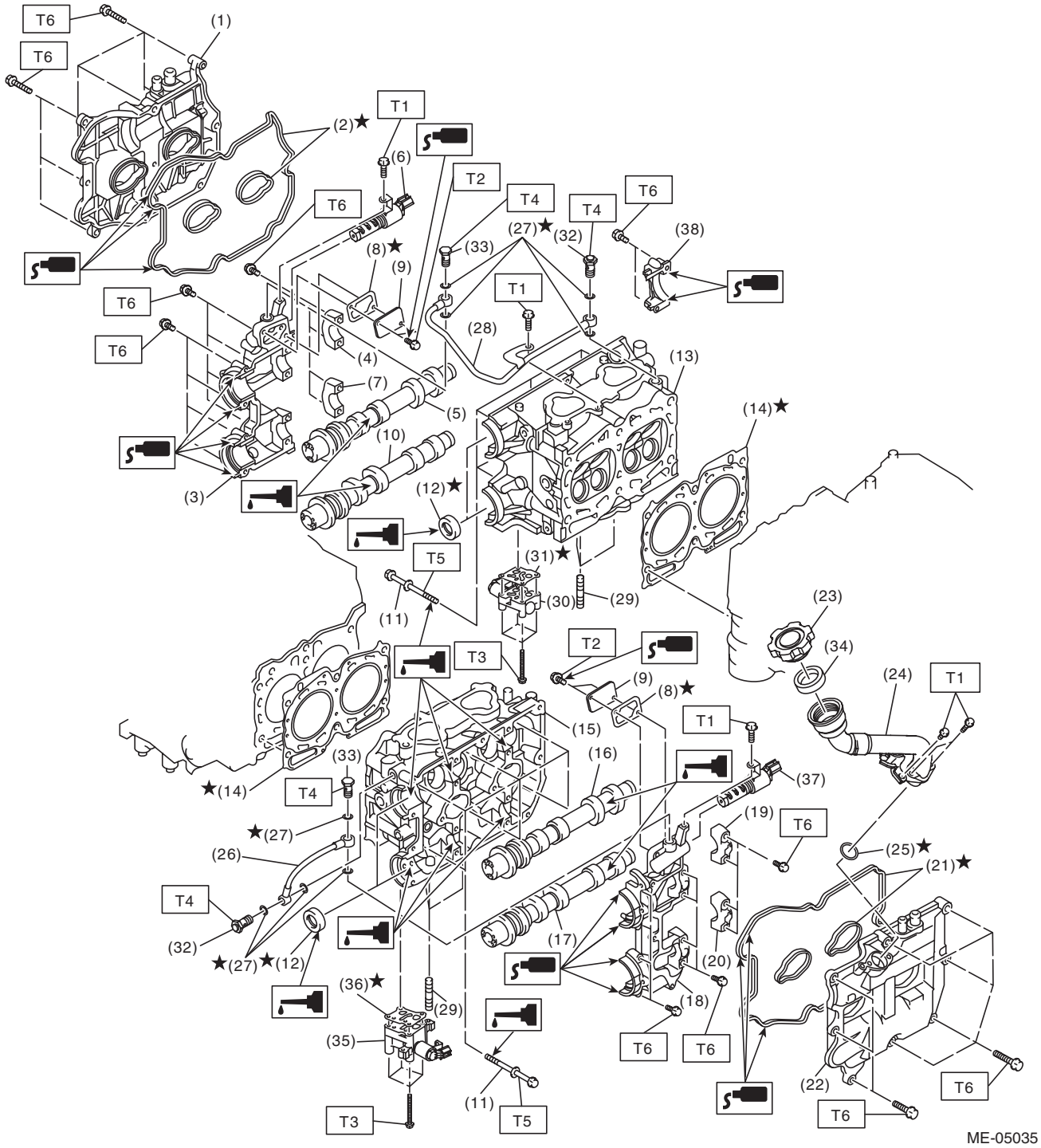

GETthemANUALS.org

(1) Rocker cover RH
(2) Rocker cover gasket RH
(3) Front camshaft cap RH
(4) Intake camshaft cap RH
(5) Intake camshaft RH
(6) Intake oil flow control solenoid valve RH
(7) Exhaust camshaft cap RH
(8) Gasket
(9) Oil return cover
(10) Exhaust camshaft RH
(11) Cylinder head bolt
(12) Oil seal
(13) Cylinder head RH
(14) Cylinder head gasket
(15) Cylinder head LH
(16) Intake camshaft LH
(17) Exhaust camshaft LH
(18) Front camshaft cap LH
(19) Intake camshaft cap LH
(20) Exhaust camshaft cap LH
(21) Rocker cover gasket LH
(22) Rocker cover LH
(23) Oil filler cap
(24) Oil filler duct
(25) O-ring
(26) Oil pipe LH
(27) Gasket
(28) Oil pipe RH
(29) Stud bolt
(30) Exhaust oil flow control solenoid valve RH
(31) Gasket RH
(32) Union bolt with filter (with protrusion)
(33) Union bolt without filter (without protrusion)
(34) Gasket
(35) Exhaust oil flow control solenoid valve LH
(36) Gasket LH
(37) Intake oil flow control solenoid valve LH
(38) Rear camshaft cap

Tightening torque:N·m (kgf-m, ft-lb)	
T1:	***6.4 (0.7, 4.7)***
T2:	***9 (0.9, 6.6)***
T3:	***10 (1.0, 7.4)***
T4:	***29 (3.0, 21.4)***
T5:	***<Ref. to ME(H4DOTC)-75, INSTALLATION, Cylinder Head.>***
T6:	***<Ref. to ME(H4DOTC)-66, INSTALLATION, Camshaft.>***

GETthemANUALS.org

4. CYLINDER HEAD AND VALVE ASSEMBLY

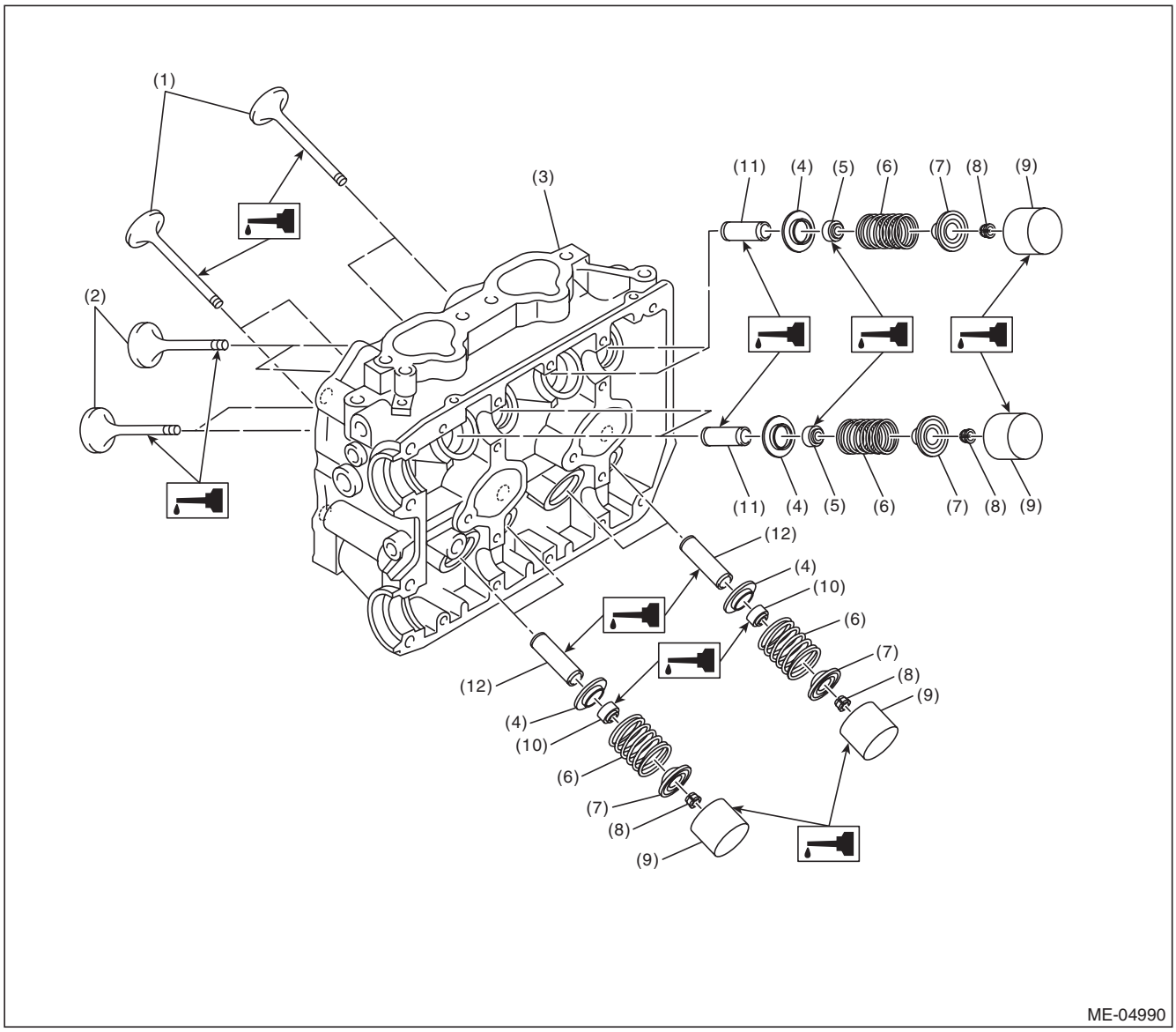

(1)	Exhaust valve	(5)	Intake valve oil seal	(9)	Valve lifter
(2)	Intake valve	(6)	Valve spring	(10)	Exhaust valve oil seal
(3)	Cylinder head	(7)	Valve spring retainer	(11)	Intake valve guide
(4)	Valve spring seat	(8)	Valve spring retainer key	(12)	Exhaust valve guide

GETthemANUALS.org

5. CYLINDER BLOCK

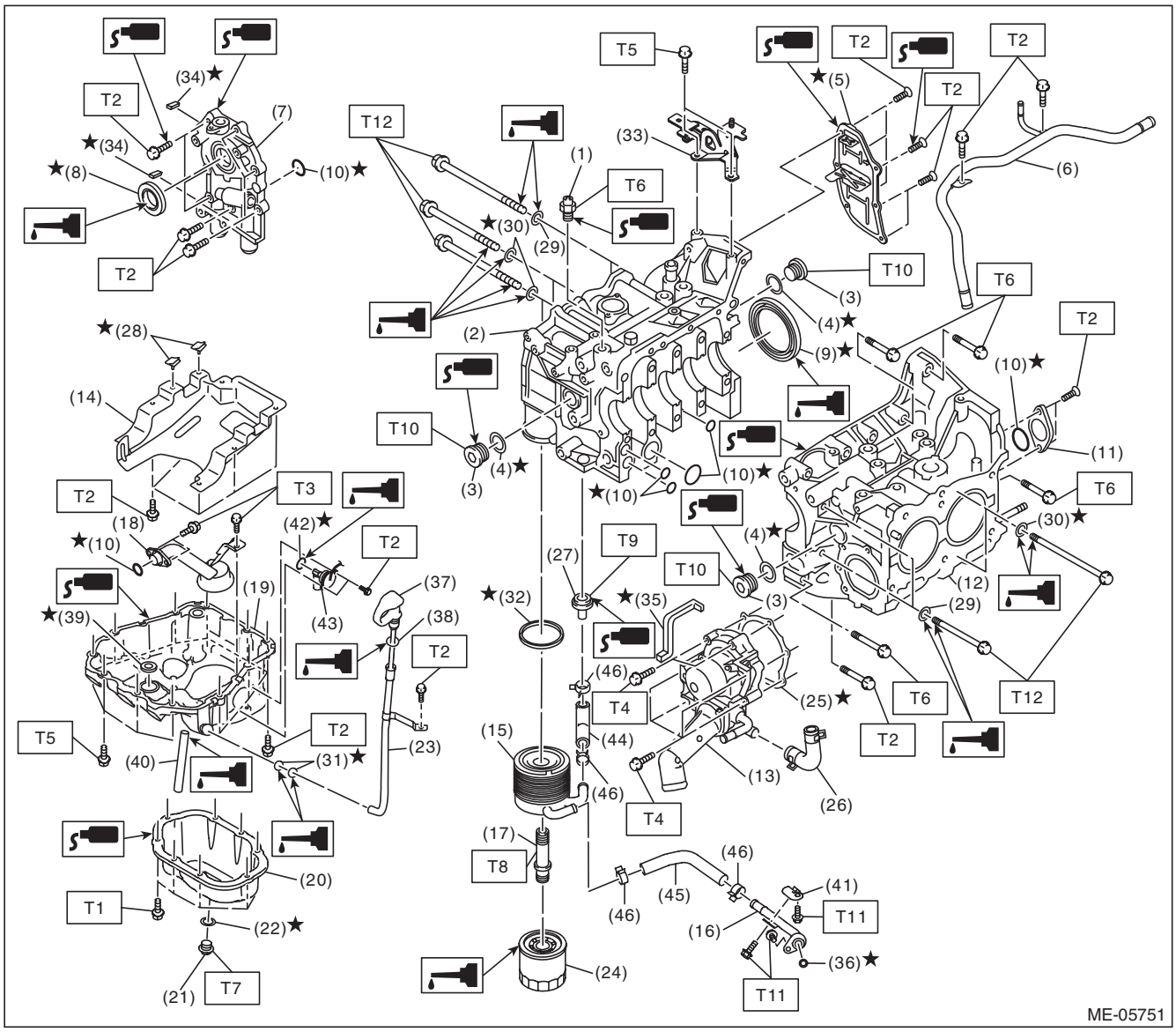

GETmyMANUALS.org

(1) Oil pressure switch
(2) Cylinder block RH
(3) Service hole plug
(4) Gasket
(5) Oil separator cover
(6) Water by-pass pipe
(7) Oil pump
(8) Front oil seal
(9) Rear oil seal
(10) O-ring
(11) Service hole cover
(12) Cylinder block LH
(13) Water pump
(14) Baffle plate
(15) Oil cooler
(16) Oil cooler pipe
(17) Connector
(18) Oil strainer
(19) Cylinder block lower
(20) Oil pan
(21) Drain plug
(22) Drain plug gasket
(23) Oil level gauge guide
(24) Oil filter
(25) Gasket
(26) Water pump hose
(27) Nipple
(28) Seal
(29) Washer
(30) Seal washer
(31) O-ring
(32) Gasket
(33) Engine rear hanger
(34) Oil pump seal
(35) Water pump sealing
(36) O-ring
(37) Oil level gauge
(38) O-ring
(39) O-ring
(40) Oil drain pipe
(41) Oil cooler pipe stay
(42) O-ring
(43) Oil level switch
(44) Oil cooler hose A
(45) Oil cooler hose B
(46) Clip

Tightening torque:N·m (kgf-m, ft-lb)	
T1:	***5 (0.5, 3.7)***
T2:	***6.4 (0.7, 4.7)***
T3:	***10 (1.0, 7.4)***
T4:	***First 12 (1.2, 8.9)***
	Second 12 (1.2, 8.9)
T5:	***16 (1.6, 11.8)***
T6:	***25 (2.5, 18.4)***
T7:	***41.7 (4.3, 30.8)***
T8:	***54 (5.5, 39.8)***
T9:	***69 (7.0, 50.9)***
T10:	***70 (7.1, 51.6)***
T11:	***<Ref. to LU(H4SO)-28, INSTALLATION, Engine Oil Cooler.>***
T12:	***<Ref. to ME(H4DOTC)-87, INSTALLATION, Cylinder Block.>***

GETTHEMANUALS.org

6. CRANKSHAFT AND PISTON

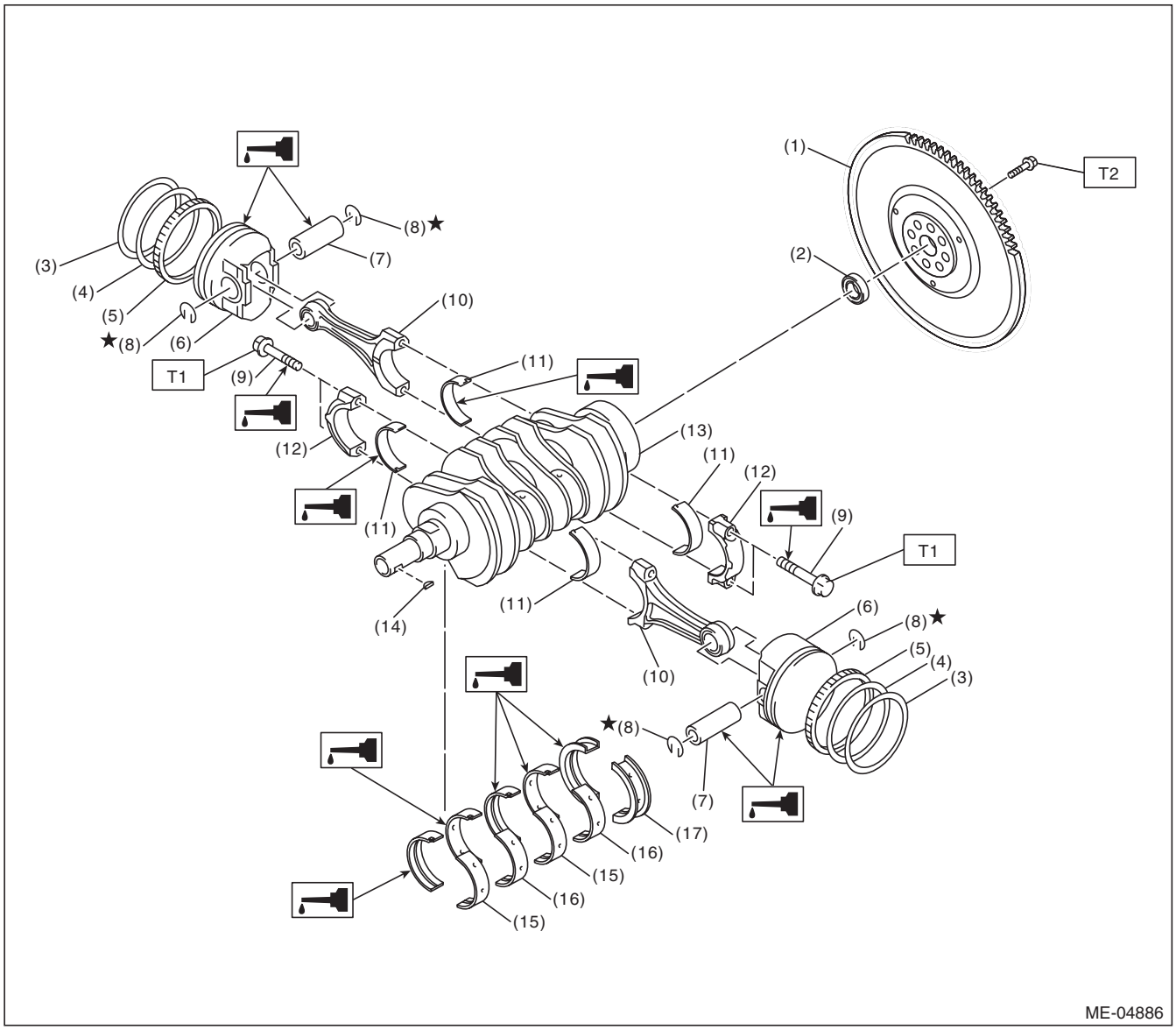

(1)	Flywheel	(8)	Snap ring	(15)	Crankshaft bearing #1, #3
(2)	Ball bearing	(9)	Connecting rod bolt	(16)	Crankshaft bearing #2, #4
(3)	Top ring	(10)	Connecting rod	(17)	Crankshaft bearing #5
(4)	Second ring	(11)	Connecting rod bearing		
(5)	Oil ring	(12)	Connecting rod cap		
(6)	Piston	(13)	Crankshaft		
(7)	Piston pin	(14)	Woodruff key		

Tightening torque:N·m (kgf-m, ft-lb)

T1: 52 (5.3, 38.4)

T2: <Ref. to CL-14, INSTALLATION, Flywheel.>

GETTHEMANUALS.org

7. ENGINE MOUNTING

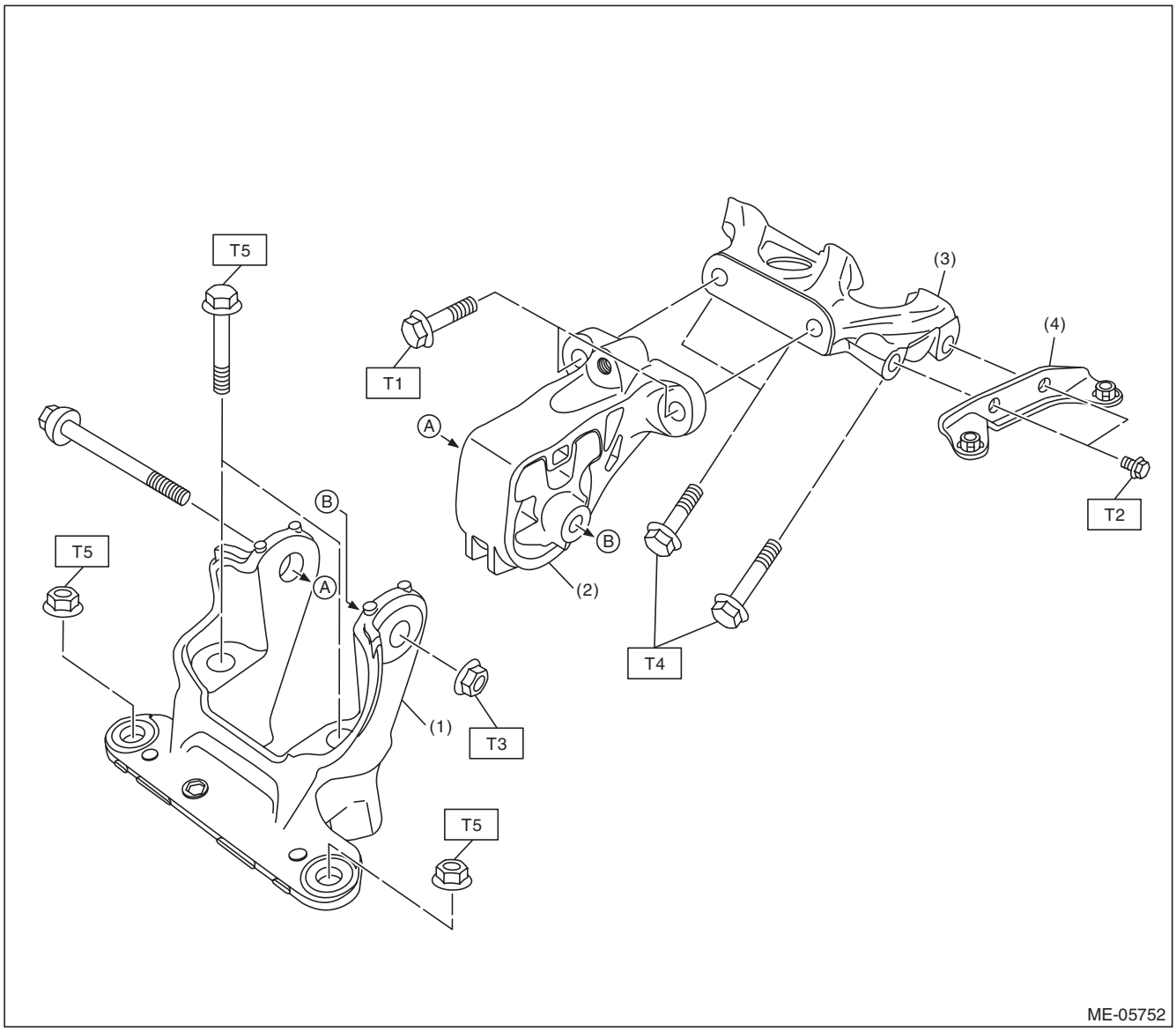

(1)	Front mounting bracket	(3)	Engine mounting bracket
(2)	Front cushion rubber	(4)	Turbocharger upper stay

Tightening torque:N·m (kgf-m, ft-lb)

T1: 25 (2.5, 18.4)
T2: 33 (3.4, 24.3)
T3: 45 (4.6, 33.2)
T4: 58 (5.9, 42.8)
T5: 60 (6.1, 44.3)

GETTHEMANUALS.org

C: CAUTION

- Wear appropriate work clothing, including a cap, protective goggles and protective shoes when performing any work.
- Remove contamination including dirt and corrosion before removal, installation or disassembly.
- Keep the disassembled parts in order and protect them from dust and dirt.
- Before removal, installation or disassembly, be sure to clarify the failure. Avoid unnecessary removal, installation, disassembly and replacement.
- Vehicle components are extremely hot after driving. Be wary of receiving burns from heated parts.
- Be sure to tighten fasteners including bolts and nuts to the specified torque.
- Place shop jacks or rigid racks at the specified points.
- Before disconnecting connectors of sensors or units, be sure to disconnect the ground cable from the battery.
- All parts should be thoroughly cleaned, paying special attention to engine oil passages, pistons and bearings.
- Rotating parts and sliding parts such as piston, bearing and gear should be coated with oil prior to assembly.
- Be careful not to let oil, grease or engine coolant contact the timing belt, clutch disc and flywheel.
- All removed parts, if to be reused, should be reinstalled in the original positions and directions.
- Bolts, nuts and washers should be replaced with new parts as required.
- Even if necessary inspections have been made in advance, proceed with assembly work while making rechecks.
- Remove or install the engine in an area where chain hoists, lifting devices, etc. are available for ready use.
- Be sure not to damage coated surfaces of body panels with tools, or not to stain seats and windows with coolant or oil. Place a cover over fender, as required, for protection.
- Prior to starting work, prepare the following:

Service tools, clean cloth, containers to catch coolant and oil, wire ropes, chain hoist, transmission jacks, etc.

- Lift up or lower the vehicle when necessary. Make sure to support the correct positions.

D: PREPARATION TOOL

1. SPECIAL TOOL

ILLUSTRATION	TOOL NUMBER	DESCRIPTION	REMARKS
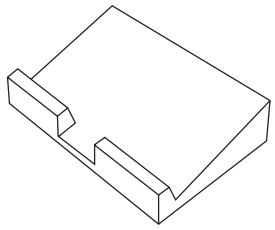 ST-498267600	498267600	CYLINDER HEAD TABLE	• Used for replacing valve guides. • Used for removing and installing valve spring.
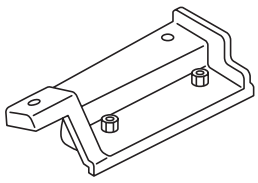 ST-498457000	498457000	ENGINE STAND ADAPTER RH	Used together with ENGINE STAND (499817100).

GETTHEMANUALS.org

ILLUSTRATION	TOOL NUMBER	DESCRIPTION	REMARKS
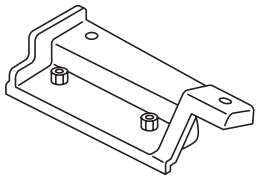 ST-498457100	498457100	ENGINE STAND ADAPTER LH	Used together with ENGINE STAND (499817100).
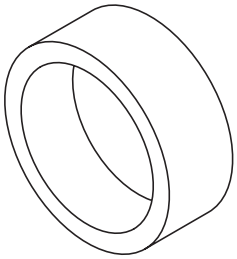 ST-498747300	498747300	PISTON GUIDE	Used for installing the piston into the cylinder.
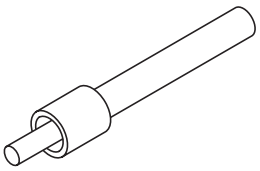 ST-498857100	498857100	VALVE OIL SEAL GUIDE	Used for press-fitting of intake valve guide oil seals and exhaust valve guide oil seals.
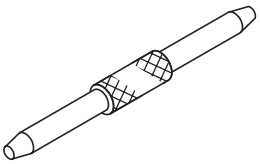 ST-499017100	499017100	PISTON PIN GUIDE	Used for installing piston pin, piston and connecting rod.
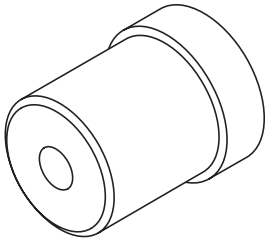 ST-499587100	499587100	OIL SEAL INSTALLER	Used for installing oil pump oil seal.

GETTHEMANUALS.org

ILLUSTRATION	TOOL NUMBER	DESCRIPTION	REMARKS
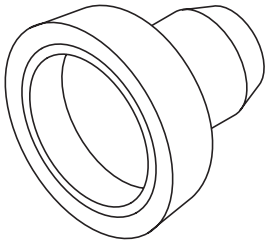 ST-499587200	499587200	CRANKSHAFT OIL SEAL INSTALLER	• Used for installing crankshaft oil seal. • Used together with CRANKSHAFT OIL SEAL GUIDE (499597100).
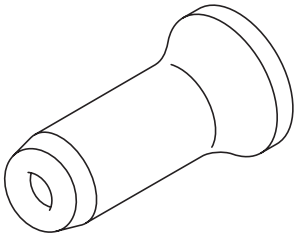 ST-499587600	499587600	OIL SEAL INSTALLER	Used for installing the camshaft oil seal.
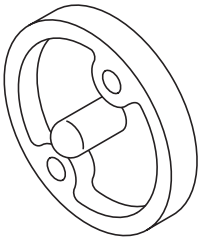 ST-499597100	499597100	CRANKSHAFT OIL SEAL GUIDE	• Used for installing crankshaft oil seal. • Used together with CRANKSHAFT OIL SEAL INSTALLER (499587200).
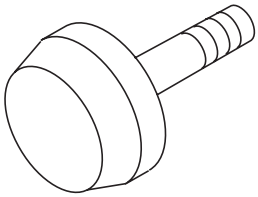 ST-499597200	499597200	OIL SEAL GUIDE	• Used for installing the camshaft oil seal. • Used together with OIL SEAL INSTALLER (499587600).
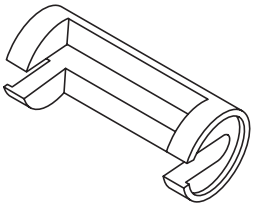 ST-499718000	499718000	VALVE SPRING REMOVER	Used for removing and installing valve spring.

GETTHEMANUALS.org

ILLUSTRATION	TOOL NUMBER	DESCRIPTION	REMARKS
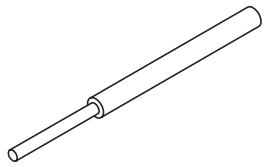 ST-499767200	499767200	VALVE GUIDE REMOVER	Used for removing valve guides.
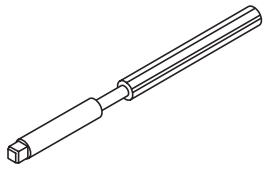 ST-499767400	499767400	VALVE GUIDE REAMER	Used for reaming valve guides.
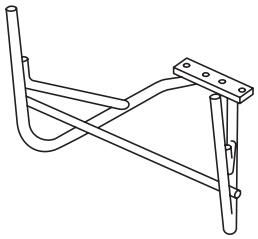 ST-499817100	499817100	ENGINE STAND	• Used for disassembling and assembling engine. • Used together with ENGINE STAND ADAPTER RH (498457000) & LH (498457100).
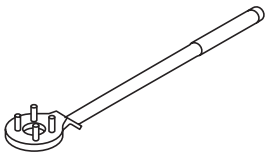 ST-499977100	499977100	CRANK PULLEY WRENCH	Used for removing and installing the crank pulley.
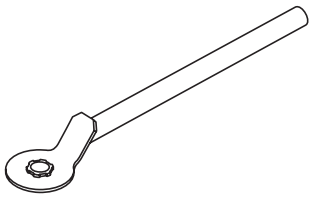 ST-499977500	499977500	CAM SPROCKET WRENCH	Used for removing and installing intake cam sprocket and exhaust cam sprocket.

GETTHEMANUALS.org

ILLUSTRATION	TOOL NUMBER	DESCRIPTION	REMARKS
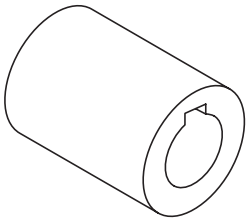 ST-499987500	499987500	CRANKSHAFT SOCKET	Used for rotating crankshaft.
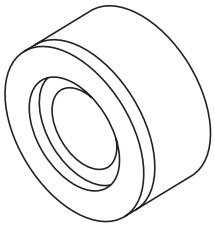 ST18251AA020	18251AA020	VALVE GUIDE ADJUSTER	Used for installing intake valve guides and exhaust valve guides.
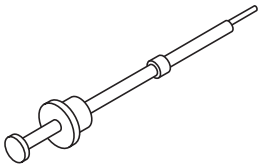 ST-499097700	499097700	PISTON PIN REMOVER ASSY	Used for removing piston pin.
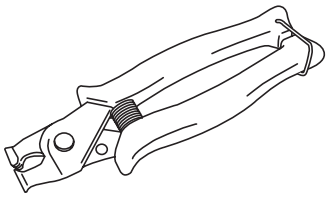 ST18353AA000	18353AA000	CLAMP PLIERS	• Used for removing and installing the PCV hose. • This tool is made by the French company CAILLAU. (code) 54.0.000.205 To make it easier to obtain, it has been provided with a tool number.
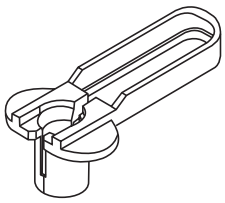 ST18371AA000	18371AA000	CONNECTOR REMOVER	Used for disconnecting the quick connector on the fuel return hose side of the engine compartment (intake manifold).

GETTHEMANUALS.org

ILLUSTRATION	TOOL NUMBER	DESCRIPTION	REMARKS
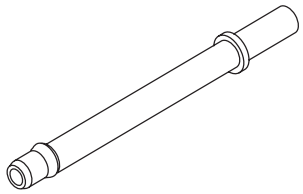 ST18471AA000	18471AA000	FUEL PIPE ADAPTER	Used for inspecting the fuel pressure.
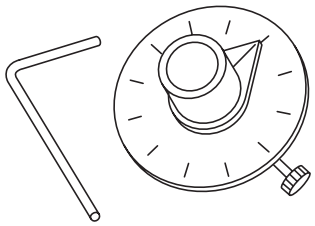 ST18854AA000	18854AA000	ANGLE GAUGE	Used for installing the crank pulley.
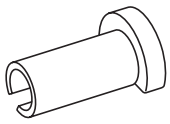 ST42099AE000	42099AE000	QUICK CONNECTOR RELEASE	Used for removing the quick connector.
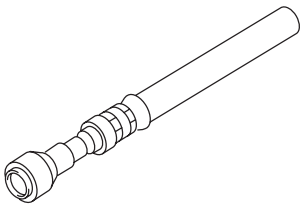 ST42075AG690	42075AG690	FUEL HOSE	Used for inspecting the fuel pressure. NOTE: This is the SUBARU genuine part.
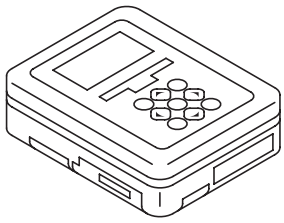 ST1B022XU0	1B022XU0	SUBARU SELECT MONITOR III KIT	Used for various inspections.

GETTHEMANUALS.org

2. GENERAL TOOL

TOOL NAME	REMARKS
Compression gauge	Used for measuring compression.
Vacuum gauge	Used for measuring intake manifold vacuum.
Oil pressure gauge	Used for measuring engine oil pressure.
Fuel pressure gauge	Used for measuring fuel pressure.

GETTHEMANUALS.org

2. Compression

A: INSPECTION

CAUTION:
After warming-up, engine becomes very hot. Be careful not to burn yourself during measurement.

1) Remove the collector cover.
2) After warming-up the engine, turn the ignition switch to OFF.
3) Make sure that the battery is fully charged.
4) Remove the fuse of fuel pump from main fuse box.

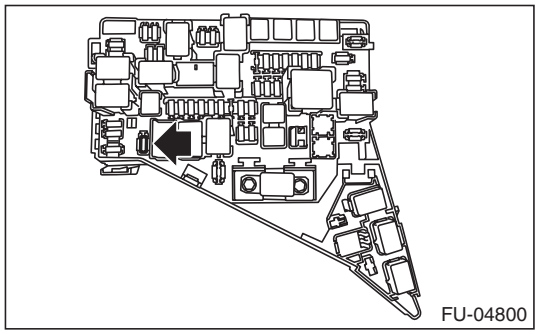

5) Start the engine and run it until it stalls.
6) After the engine stalls, crank it for five more seconds.
7) Turn the ignition switch to OFF.
8) Remove all spark plugs. <Ref. to IG(H4DOTC)-4, REMOVAL, Spark Plug.>
9) Fully open the throttle valve.
10) Check the starter motor for satisfactory performance and operation.
11) Install the compression gauge to the spark plug hole.

NOTE:
When using a screw-in type compression gauge, the screw should be less than 18 mm (0.71 in) long.

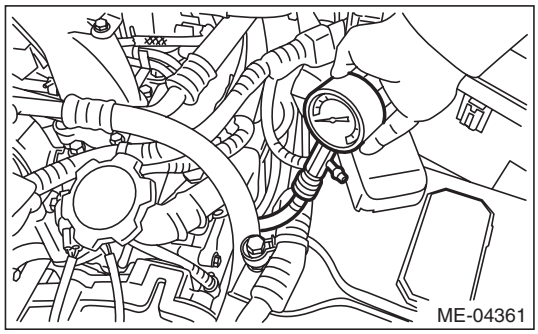

12) Crank the engine by starter motor and read the value when the needle of the compression gauge becomes stable.

NOTE:
- Perform at least two measurements per cylinder, and make sure that the values are correct.
- If the compression pressure is out of standard, check or adjust the pistons, valves and cylinders.

Compression (fully open throttle):
Standard
981 — 1,177 kPa (10 — 12 kgf/cm^2, 142 — 171 psi)
Difference between cylinders
49 kPa (0.5 kgf/cm^2, 7 psi) or less

13) After inspection, install the related parts in the reverse order of removal.

GETTHEMANUALS.org

3. Idle Speed

A: INSPECTION

1) Before checking the idle speed, check the following item:
   (1) Check the air cleaner element is free from clogging, ignition timing is correct, spark plugs are in good condition, and hoses are connected properly.
   (2) Check the malfunction indicator light does not illuminate.
2) Warm up the engine.
3) Read the engine idle speed using Subaru Select Monitor. <Ref. to EN(H4DOTC)(diag)-34, READ CURRENT DATA FOR ENGINE (NORMAL MODE), OPERATION, Subaru Select Monitor.>

NOTE:
- Idle speed cannot be adjusted manually, because the idle speed is automatically adjusted.
- If idle speed is out of standard, refer to the General Diagnosis Table under “Engine Control System”. <Ref. to EN(H4DOTC)(diag)-2, Basic Diagnostic Procedure.>

   (1) Check the idle speed when no-loaded. (Headlight, heater fan, rear defroster, radiator fan, A/C and etc. are OFF)

Idle speed (No load and gear shift lever in neutral position):
Standard
700±100 rpm

   (2) Check the idle speed when loaded. (Turn the A/C switch to “ON” and operate the compressor for at least one minute before measurement.)

Idle speed (A/C ON and gear shift lever in neutral position):
Standard
700 — 850±100 rpm

GETTHEMANUALS.org

4. Ignition Timing

A: INSPECTION

CAUTION:
After warming-up, engine becomes very hot. Be careful not to burn yourself at measurement.

1) Before checking the ignition timing, check the following item:
   (1) Check the air cleaner element is free from clogging, spark plugs are in good condition, and hoses are connected properly.
   (2) Check the malfunction indicator light does not illuminate.
2) Warm up the engine.
3) Read the ignition timing using Subaru Select Monitor. <Ref. to EN(H4DOTC)(diag)-34, READ CURRENT DATA FOR ENGINE (NORMAL MODE), OPERATION, Subaru Select Monitor.>

NOTE:
If ignition timing is out of standard, check the ignition control system. Refer to “Engine Control System”. <Ref. to EN(H4DOTC)(diag)-2, Basic Diagnostic Procedure.>

Ignition timing [BTDC/rpm]:
Standard
15°±10°/700

GETTHEMANUALS.org

5. Intake Manifold Vacuum

A: INSPECTION

1) Warm up the engine.
2) Remove the collector cover.
3) Remove the intercooler. <Ref. to IN(H4DOTC)-17, REMOVAL, Intercooler.>
4) Disconnect the brake booster vacuum hose from the intake manifold, and attach the vacuum gauge.

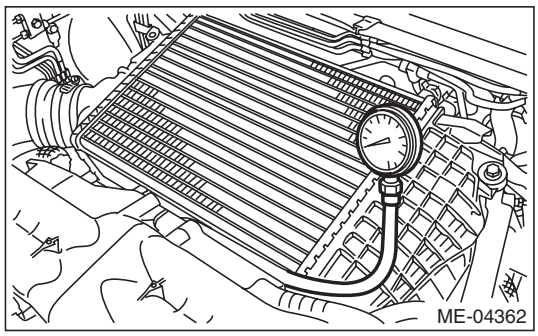

5) Install the intercooler. <Ref. to IN(H4DOTC)-18, INSTALLATION, Intercooler.>
6) Keep the engine at idle speed and read the vacuum gauge indication.

NOTE:
Condition of engine inside can be diagnosed by observing the behavior of the vacuum gauge needle as described in table below.

Intake manifold vacuum (at idling, A/C OFF):
Standard
–66.7 kPa (–500 mmHg, –19.70 inHg) or more

7) After inspection, install the related parts in the reverse order of removal.

Diagnosis of engine condition by inspection of intake manifold vacuum	
Vacuum gauge needle behavior	Possible engine condition
1. Needle is steady but lower than standard value. This tendency becomes more evident as engine temperature rises.	Leakage around intake manifold gasket, disconnection or damage of vacuum hose
2. Needle intermittently drops to position lower than standard value.	Leakage around cylinder
3. Needle drops suddenly and intermittently from standard value.	Sticky valve
4. When engine speed is gradually increased, needle begins to vibrate rapidly at certain speed, and then vibration increases as engine speed increases.	Weak or broken valve springs
5. Needle vibrates above and below standard value in narrow range.	Defective ignition system

GETTHEMANUALS.org

6. Engine Oil Pressure

A: INSPECTION

1) Remove the collector cover.
2) Disconnect the ground cable from battery.

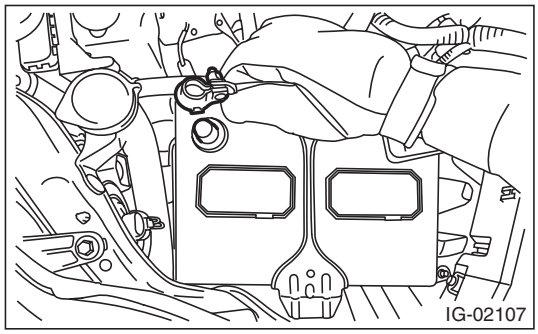

3) Remove the oil pressure switch. <Ref. to LU(H4SO)-25, REMOVAL, Oil Pressure Switch.>
4) Install the oil pressure gauge to cylinder block.

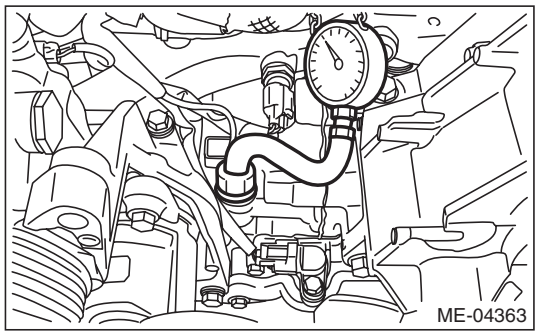

5) Connect the battery ground terminal.

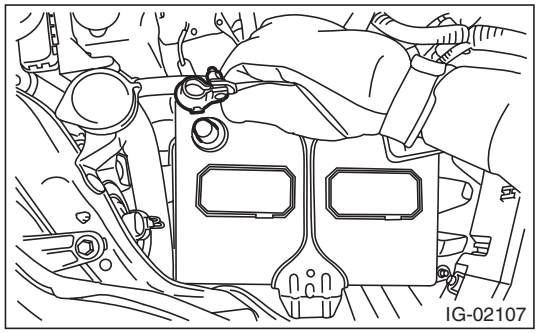

6) Start the engine, and check the oil pressure.

NOTE:
- Standard value is based on an engine oil temperature of 80°C (176°F).
- If the oil pressure is out of specification, check oil pump, oil filter and lubrication line. <Ref. to LU(H4SO)-45, INSPECTION, Engine Lubrication System Trouble in General.>
- If the oil pressure warning light is ON and oil pressure is within specification, check the oil pressure switch. <Ref. to LU(H4SO)-45, INSPECTION, Engine Lubrication System Trouble in General.>

Engine oil pressure:
Standard
98 kPa (1.0 kgf/cm^2, 14 psi) or more (at 600 rpm)
392 kPa (4.0 kgf/cm^2, 57 psi) or more (at 6,000 rpm)

7) After inspection, install the related parts in the reverse order of removal.

GETTHEMANUALS.org

7. Fuel Pressure

A: INSPECTION

CAUTION:
- **Before removing the fuel pressure gauge, release the fuel pressure.**
- **Be careful not to spill fuel.**
- **Catch the fuel from hoses using a container or cloth.**

1) Remove the collector cover.
2) Release the fuel pressure. <Ref. to FU(H4DOTC)-66, RELEASING OF FUEL PRESSURE, PROCEDURE, Fuel.>
3) Open the fuel filler lid and remove the fuel filler cap.
4) Disconnect the fuel delivery hose from the fuel delivery pipe, and connect the fuel pressure gauge.

CAUTION:
- **Be careful not to spill fuel.**
- **Catch the fuel from hoses using a container or cloth.**

(1) Attach ST to the fuel delivery pipe and push ST in the direction of arrow mark to disconnect the quick connector of the fuel delivery hose.

ST 42099AE000 QUICK CONNECTOR RELEASE

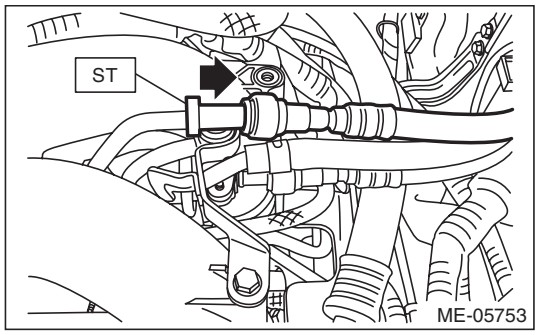

(2) Connect the fuel pressure gauge with ST1 and ST2.

NOTE:
ST1 is a SUBARU genuine part.
ST1 42075AG690 FUEL HOSE
ST2 18471AA000 FUEL PIPE ADAPTER

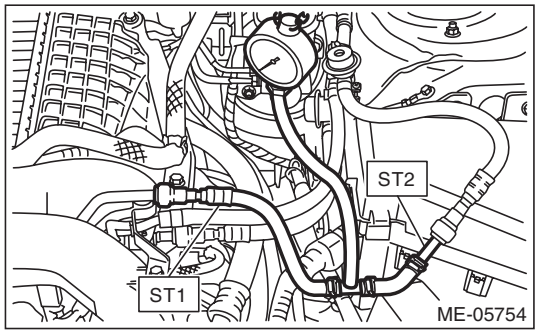

5) Start the engine.
6) Check the fuel pressure while disconnecting pressure regulator vacuum hose from intake manifold.

NOTE:
- The fuel pressure gauge registers 10 to 20 kPa (0.1 to 0.2 kgf/cm^2, 1 to 3 psi) higher than standard values during high-altitude operations.
- If the fuel pressure is out of specification, check or replace the fuel pump, fuel line, pressure regulator and pressure regulator vacuum hose.

Fuel pressure:
Standard
328 — 358 kPa (3.3 — 3.7 kgf/cm^2, 48 — 52 psi)

7) After connecting the vacuum hose to the pressure regulator, check the fuel pressure again.

NOTE:
- The fuel pressure gauge registers 10 to 20 kPa (0.1 to 0.2 kgf/cm^2, 1 to 3 psi) higher than standard values during high-altitude operations.
- If the fuel pressure is out of specification, check or replace the fuel pump, fuel line, pressure regulator and pressure regulator vacuum hose.

Fuel pressure:
Standard
274 — 304 kPa (2.8 — 3.1 kgf/cm^2, 40 — 44 psi)

8) After inspection, install the related parts in the reverse order of removal.

GETTHEMANUALS.org

8. Valve Clearance

A: INSPECTION

1) Remove the engine from the vehicle. <Ref. to ME(H4DOTC)-31, REMOVAL, Engine Assembly.>
2) When inspecting #1 and #3 cylinders
   (1) Remove the timing belt cover RH. <Ref. to ME(H4DOTC)-52, TIMING BELT, REMOVAL, Timing Belt.>
   (2) Disconnect the connector (A) from the exhaust camshaft position sensor RH and the connector (B) form the exhaust oil flow control solenoid valve RH.

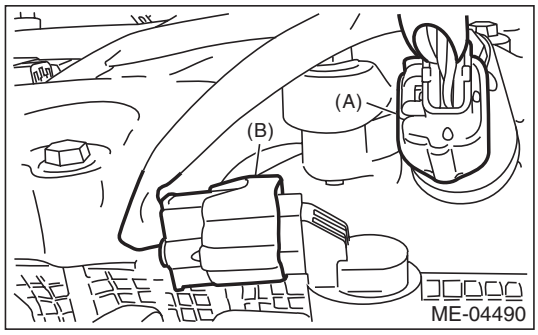

   (3) Remove the clip which holds the engine harness to the rocker cover.

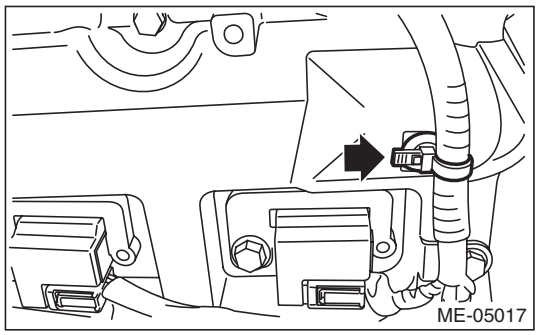

   (4) Remove the ignition coil. <Ref. to IG(H4DOTC)-6, REMOVAL, Ignition Coil.>
   (5) Disconnect PCV hose (A) and vacuum hose (B) from the rocker cover RH.

NOTE:
Pinch the clamp of the PCV hose (A) by fitting the cut out in the ST with the protrusion on the clamp as shown in the figure, and unlock the clamp.
ST 18353AA000 CLAMP PLIERS

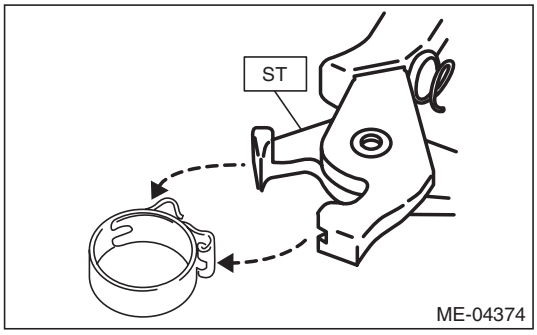

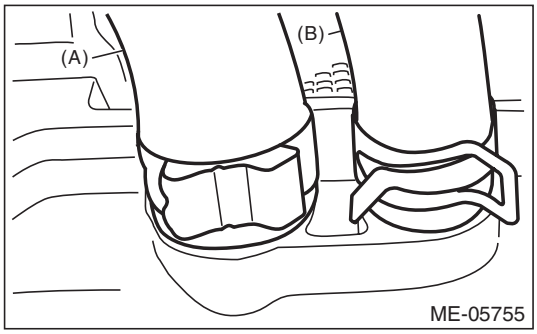

   (6) Remove the rocker cover RH.

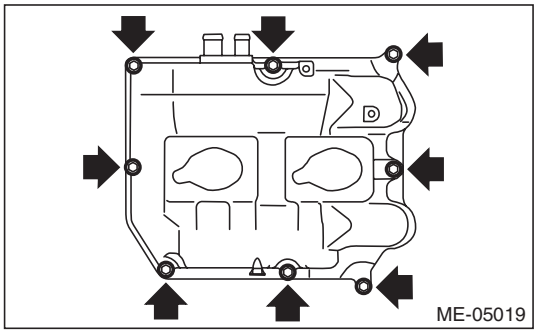

GETmyMANUALS.org

3) When inspecting #2 and #4 cylinders
(1) Remove the timing belt cover RH. <Ref. to ME(H4DOTC)-52, REMOVAL, Timing Belt.>
(2) Disconnect the connector (A) from the exhaust camshaft position sensor LH and the connector (B) form the exhaust oil flow control solenoid valve LH.

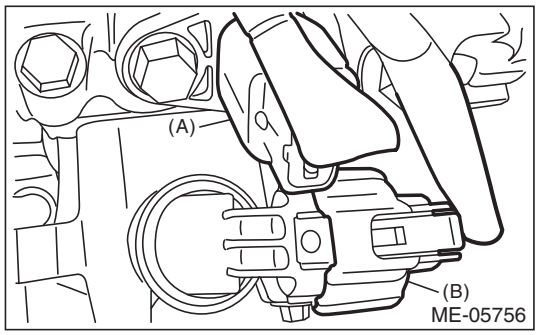

(3) Disconnect the oil level switch connector.

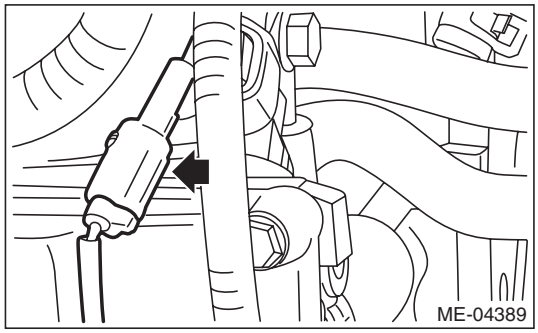

(4) Remove the clip (A) and bolt (B) securing the engine harness or oil level switch harness to the rocker cover LH.

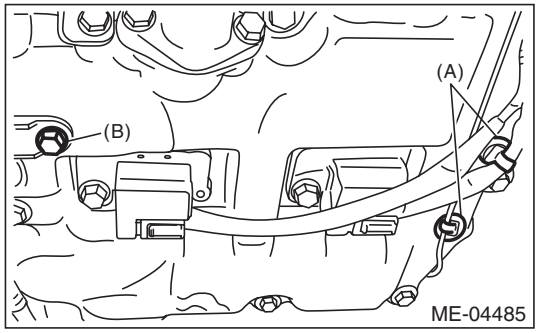

(5) Remove the ignition coil. <Ref. to IG(H4DOTC)-6, REMOVAL, Ignition Coil.>

(6) Disconnect PCV hose (A) and vacuum hose (B) from the rocker cover LH.

NOTE:
Pinch the clamp of the PCV hose (A) by fitting the cut out in the ST with the protrusion on the clamp as shown in the figure, and unlock the clamp.
ST 18353AA000 CLAMP PLIERS

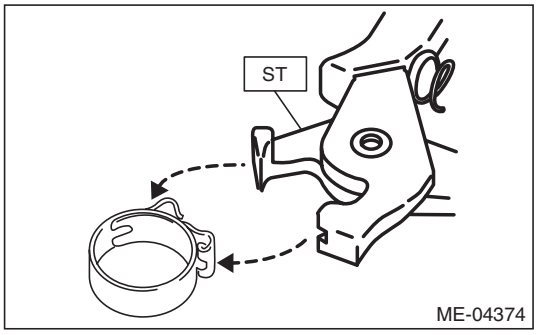

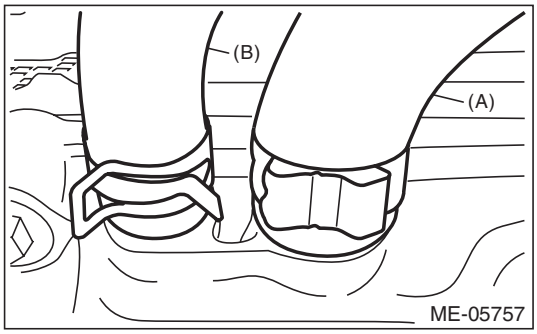

(7) Remove the rocker cover LH.

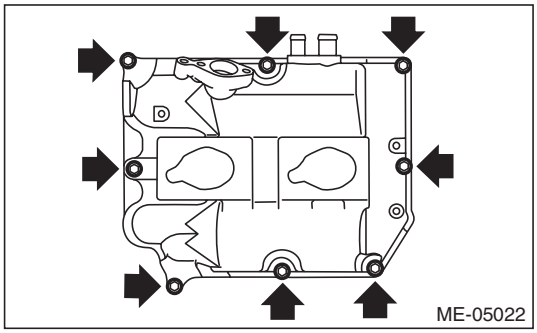

GETTHEMANUALS.org

4) Turn the crank pulley clockwise until the round mark on the camshaft sprocket is set to position shown in the figure.

NOTE:
Turn the crank pulley using a socket wrench.

• Measurement of clearance of #1 cylinder intake valve and #3 cylinder exhaust valve

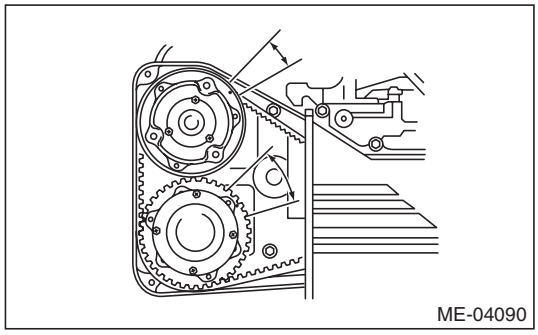

• Measurement of clearance of #2 cylinder exhaust valve and #3 cylinder intake valve

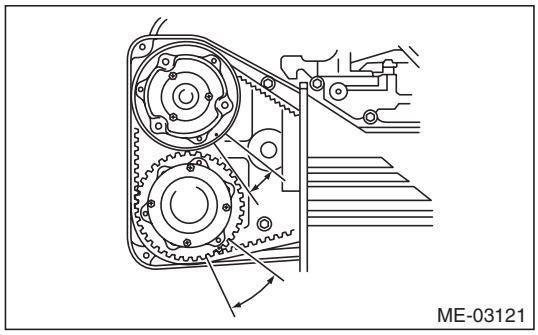

• Measurement of clearance of #2 cylinder intake valve and #4 cylinder exhaust valve

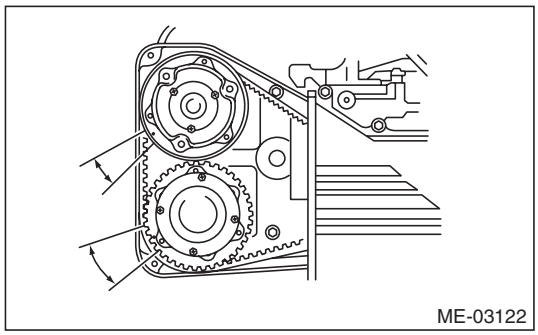

• Measurement of clearance of #1 cylinder exhaust valve and #4 cylinder intake valve

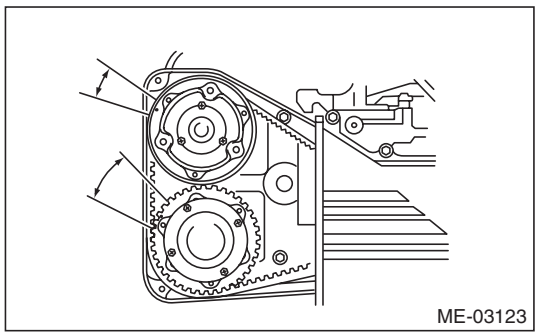

5) Measure the clearance of intake valve and exhaust valve using thickness gauge (A).

NOTE:
• Insert a thickness gauge in a direction as horizontal as possible with respect to the valve lifter.
• Lift up the vehicle, and then measure the exhaust valve clearances.
• If the measured value is not within the inspection value, take notes of the value in order to adjust the valve clearance later on.

Valve clearance (inspection value):
Intake
$0.20^{+0.04}_{-0.06}$ mm ($0.0079^{+0.0016}_{-0.0024}$ in)
Exhaust
0.35±0.05 mm (0.0138±0.0020 in)

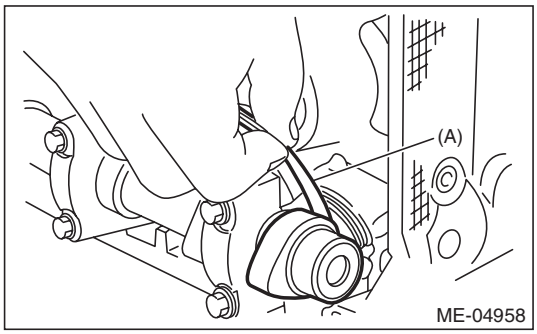

6) If necessary, adjust the valve clearance. <Ref. to ME(H4DOTC)-30, ADJUSTMENT, Valve Clearance.>

GETTHEMANUALS.org

7) After inspection, install the related parts in the reverse order of removal.

NOTE:
• Refer to “Camshaft” when installing the rocker cover. <Ref. to ME(H4DOTC)-66, INSTALLATION, Camshaft.>
• Use a new clamp for the PCV hose clamp, fit the cut out in the ST with the protrusion on the clamp as shown in the figure, and lock the clamp.
ST 18353AA000 CLAMP PLIERS

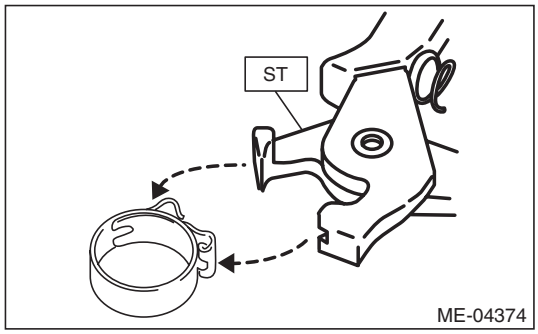

Tightening torque:
6.4 N·m (0.7 kgf-m, 4.7 ft-lb)

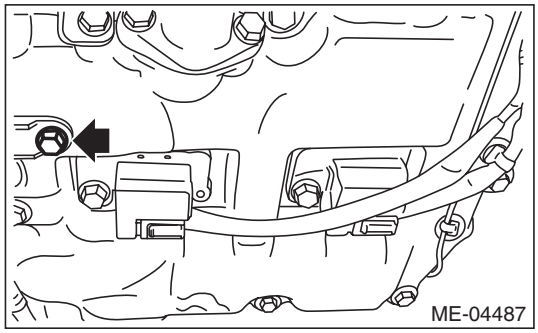

B: ADJUSTMENT

1) Measure all the valve clearances. <Ref. to ME(H4DOTC)-27, INSPECTION, Valve Clearance.>

NOTE:
Record the measured value of each valve clearance.

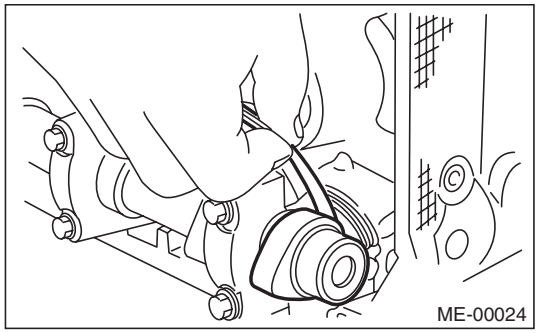

2) Remove the camshaft. <Ref. to ME(H4DOTC)-63, REMOVAL, Camshaft.>
3) Remove the valve lifter.
4) Measure the thickness of valve lifter using micrometer.

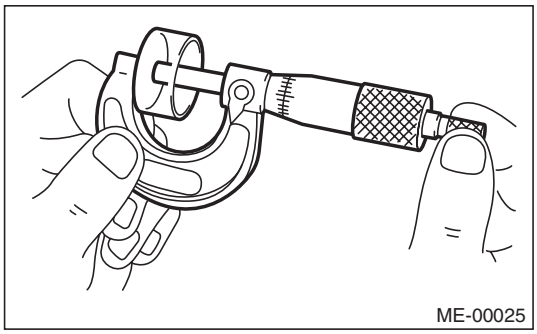

5) Select a valve lifter of suitable thickness using the measured valve clearance and valve lifter thickness, and install it.

NOTE:
Use a new valve lifter.

Unit: mm (in)
Intake valve: S = (V + T) – 0.19 (0.0075) Exhaust valve: S = (V + T) – 0.35 (0.0138)
S: Valve lifter thickness required V: Measured valve clearance T: Valve lifter thickness to be used

6) Install the camshaft. <Ref. to ME(H4DOTC)-66, INSTALLATION, Camshaft.>
7) Install the cam sprocket. <Ref. to ME(H4DOTC)-61, INSTALLATION, Cam Sprocket.>
8) Install the timing belt. <Ref. to ME(H4DOTC)-55, TIMING BELT, INSTALLATION, Timing Belt.>
9) Measure all valves for valve clearance again at this time. If the valve clearance is not within the adjustment value, repeat the procedure over again from the first step.

Valve clearance (adjustment value):
Intake
$0.20^{+0.01}_{-0.03}$ ***mm*** $(0.0079^{+0.0004}_{-0.0012}$ ***in)***
Exhaust
0.35±0.02 mm (0.0138±0.0008 in)

10) After adjustment, install the related parts in the reverse order of removal.

GETTHEMANUALS.org

9. Engine Assembly

A: REMOVAL

1) Change the front hood damper mounting position from (A) to (B), and completely open the front hood.

Tightening torque:
20 N·m (2.0 kgf-m, 14.8 ft-lb)

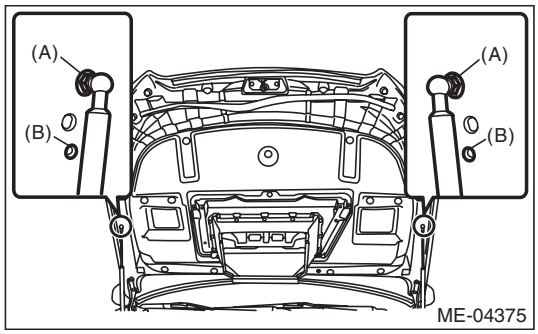

2) Remove the collector cover.
3) Collect the refrigerant from A/C system. <Ref. to AC-24, Refrigerant Recovery Procedure.>
4) Release the fuel pressure. <Ref. to FU(H4DOTC)-66, RELEASING OF FUEL PRESSURE, PROCEDURE, Fuel.>
5) Disconnect the ground cable from battery.

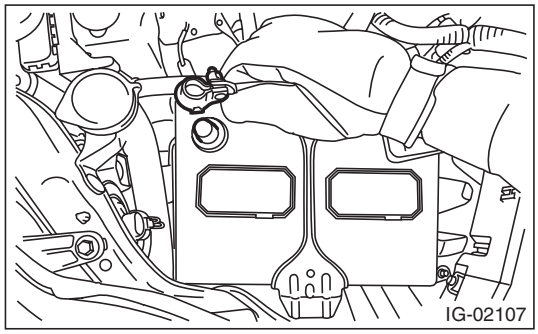

6) Open the fuel filler lid and remove the fuel filler cap.
7) Remove the air intake duct. <Ref. to IN(H4DOTC)-12, REMOVAL, Air Intake Duct.>
8) Remove the intercooler. <Ref. to IN(H4DOTC)-17, REMOVAL, Intercooler.>
9) Remove the air by-pass valve. <Ref. to IN(H4DOTC)-26, REMOVAL, Air By-pass Valve.>
10) Remove the radiator. <Ref. to CO(H4DOTC)-21, REMOVAL, Radiator.>
11) Remove the front exhaust pipe. <Ref. to EX(H4DOTC)-5, REMOVAL, Front Exhaust Pipe.>
12) Lower the vehicle.
13) Disconnect the bulkhead harness connector from the engine harness connector (brown).

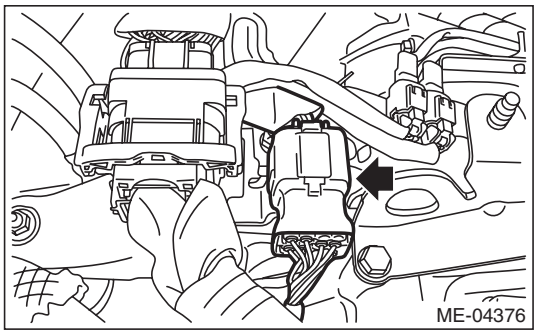

14) Remove the bolt securing the bulkhead harness connector bracket, and disconnect the bulkhead harness connector from the engine harness connector (black).

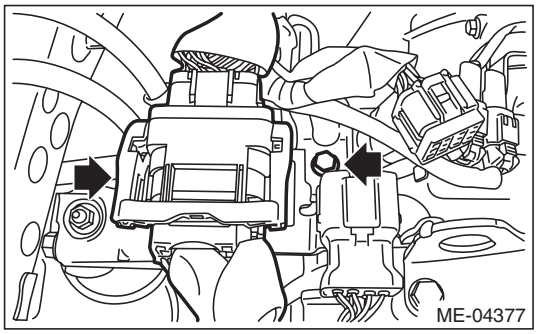

15) Disconnect the connector (A) and connector (B) from A/C compressor, and remove the clip (C) securing the generator cord to the intake manifold protector LH.

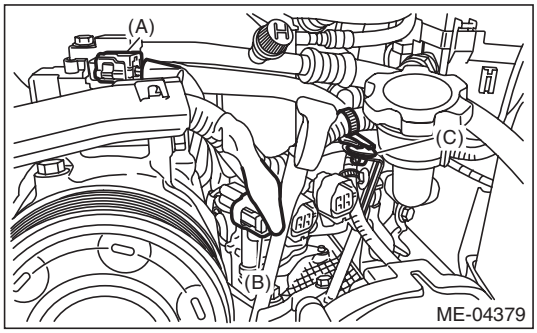

GETTHEMANUALS.org

16) Disconnect the following hoses.
(1) A/C pressure hose <Ref. to AC-76, REMOVAL, Hose and Pipe.>
(2) Brake booster vacuum hose

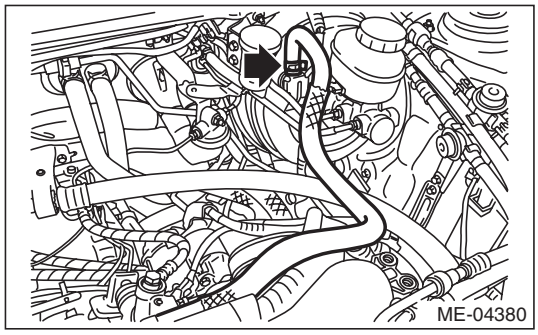

(3) Heater inlet hose and heater outlet hose

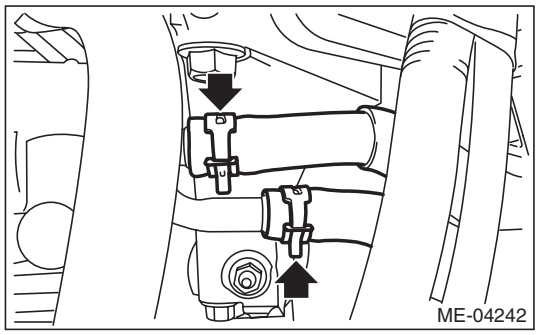

17) Lift up the vehicle.
18) Remove the air intake boot from the intake duct.

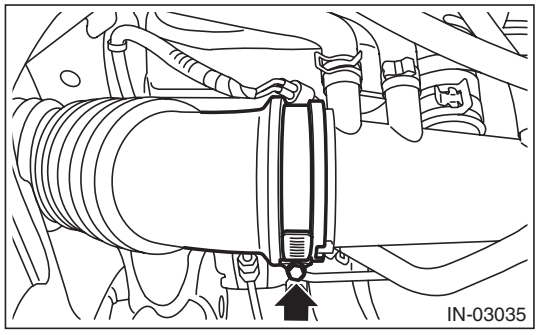

19) Disconnect the ground cable on the engine side, and remove the engine harness cover.

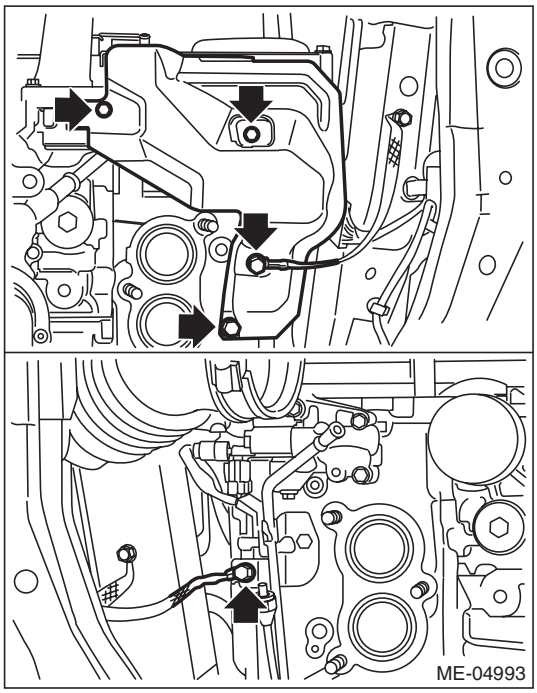

20) Lower the vehicle.
21) Attach ST to the fuel delivery pipe and push ST in the direction of arrow mark to disconnect the fuel delivery hose.

ST	42099AE000	QUICK CONNECTOR RELEASE

CAUTION:
- **Be careful not to spill fuel.**
- **Catch the fuel from hoses using a container or cloth.**

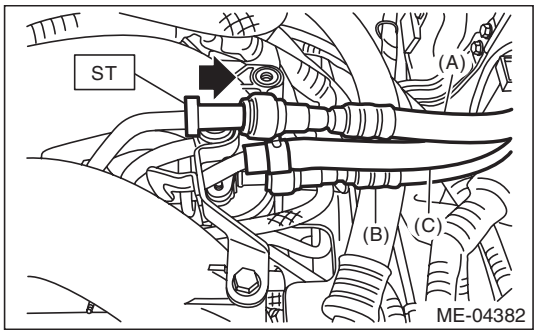

(A) Fuel delivery hose
(B) Fuel return hose
(C) Evaporation hose

GETTHEMANUALS.org

22) Disconnect the fuel return hose using the ST.
ST 18371AA000 CONNECTOR REMOVER

CAUTION:
- **Be careful not to spill fuel.**
- **Catch the fuel from hoses using a container or cloth.**

(1) Attach ST to the fuel return pipe as shown in the figure.

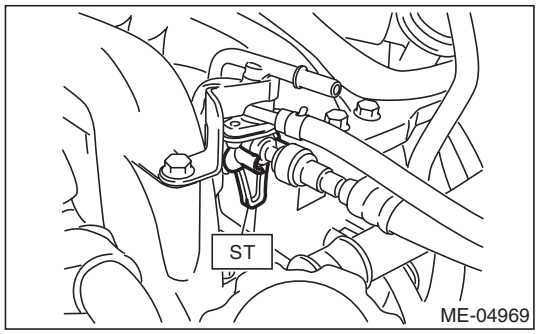

(2) Insert the front side of ST into the quick connector.

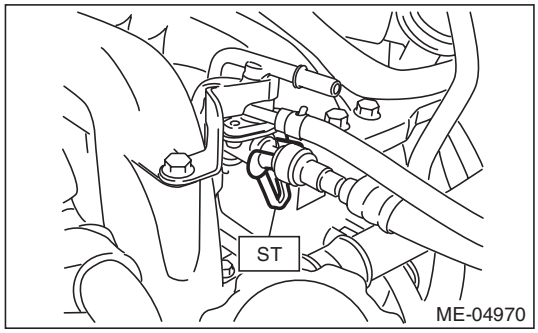

(3) Insert the back side of ST into the quick connector and push ST in the direction of arrow mark to disconnect the fuel return hose.

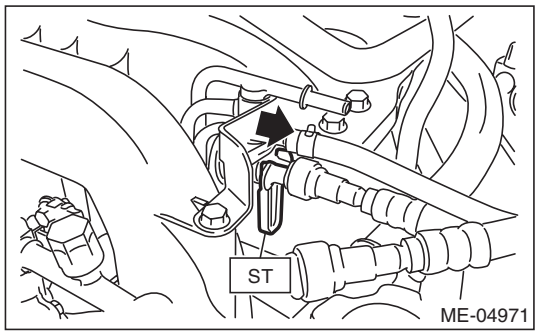

23) Remove the clip and disconnect the evaporation hose from the fuel pipe.

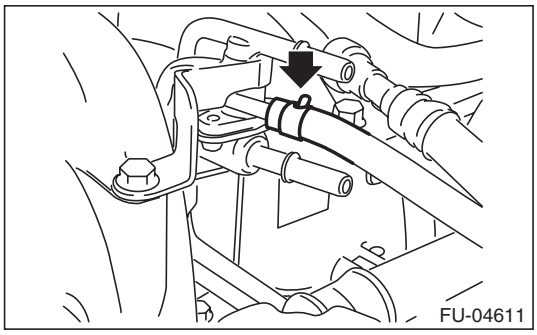

24) Support the engine with a lifting device and wire ropes.

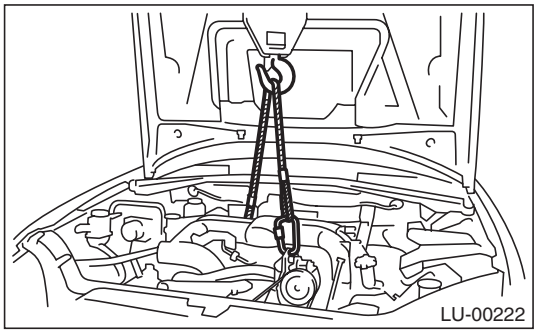

25) Remove the stopper rod.

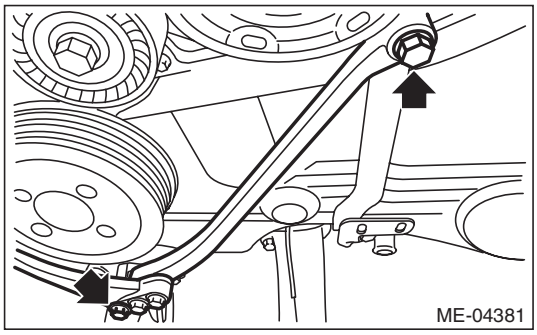

26) Remove the bolt and nut which secure engine mounting to the cradle.

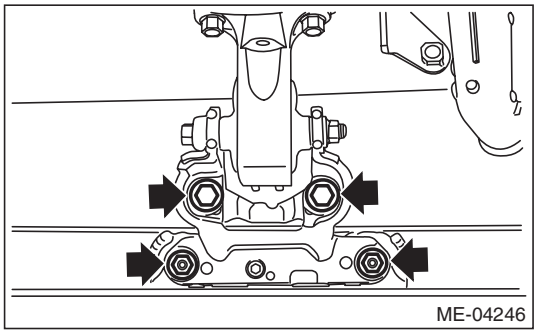

27) Lift up the vehicle.

CAUTION:
When lifting up the vehicle, raise up wire ropes at the same time.

GETTHEMANUALS.org

28) Remove the bolts which secure the engine mounting onto the engine, and remove the engine mounting.

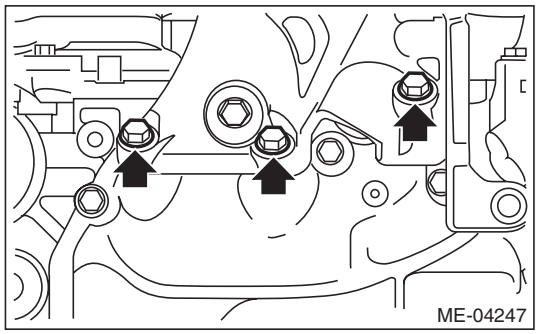

29) Remove the bolts and nuts which hold the lower side of transmission to the engine.

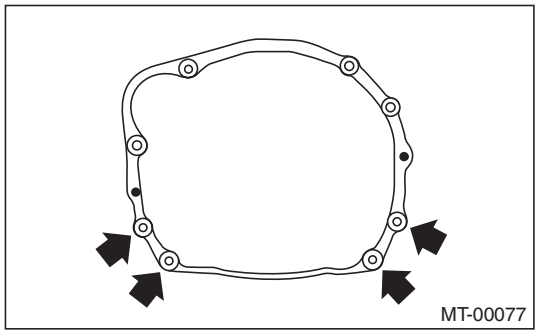

30) Lower the vehicle.

CAUTION:
When lifting down the vehicle, lower wire ropes at the same time.

31) Support the transmission with a garage jack.

NOTE:
Fine adjustment of the transmission height can be performed with this operation.

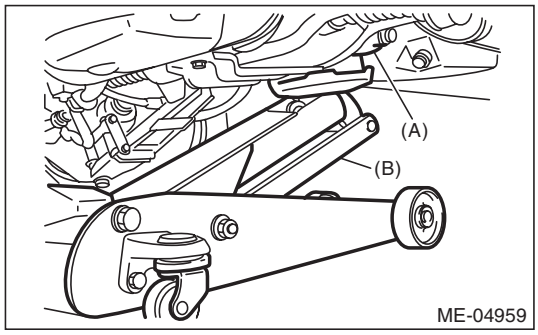

(A) Transmission
(B) Garage jack

32) Separation of engine and transmission

CAUTION:
Before removing the engine away from transmission, check to be sure no work has been overlooked.

(1) Remove the starter. <Ref. to SC(H4SO)-9, REMOVAL, Starter.>
(2) Remove the bolts which hold the upper side of the transmission to the engine.

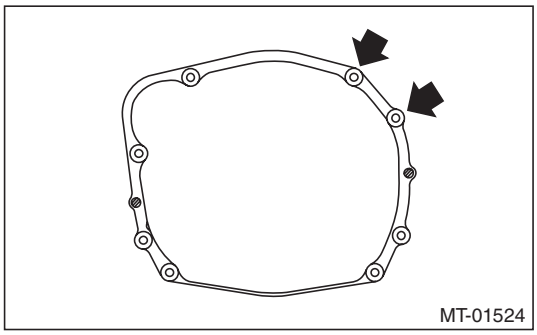

33) Remove the engine from the vehicle.

NOTE:
Be careful not to damage adjacent parts or body panels with crank pulley, oil level gauge, etc.

(1) Slightly raise the engine.
(2) Adjust the height of the transmission with garage jack.
(3) Move the engine horizontally until main shaft is withdrawn from clutch cover.
(4) Slowly move the engine away from engine compartment.

B: INSTALLATION

1) Apply a small amount of grease to splines of main shaft.

Grease:
NICHIMOLY N-130 or equivalent

2) Position the engine in engine compartment and align it with transmission.

NOTE:
Be careful not to damage adjacent parts or body panels with crank pulley, oil level gauge, etc.

3) Tighten the bolts which hold upper side of transmission to engine.

Tightening torque:
50 N·m (5.1 kgf-m, 36.9 ft-lb)

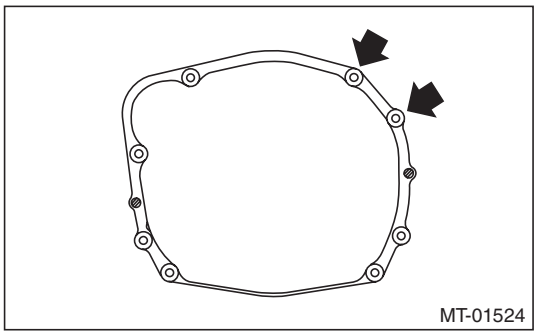

4) Remove the garage jack.
5) Install the starter. <Ref. to SC(H4SO)-10, INSTALLATION, Starter.>

GETTHEMANUALS.org

6) Lift up the vehicle.

CAUTION:
When lifting up the vehicle, raise up wire ropes at the same time.

7) Attach the bolts and nuts which hold lower side of the transmission to engine.

Tightening torque:
50 N·m (5.1 kgf-m, 36.9 ft-lb)

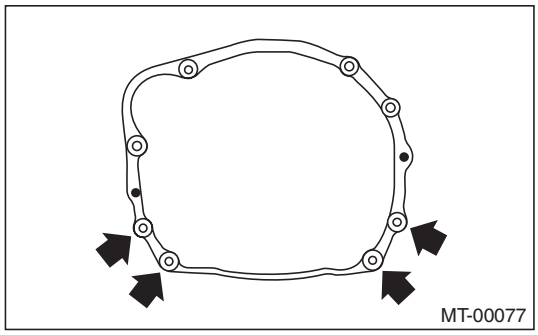

8) Set the engine mounting, and tighten the bolts which hold engine mounting to the engine.

Tightening torque:
58 N·m (5.9 kgf-m, 42.8 ft-lb)

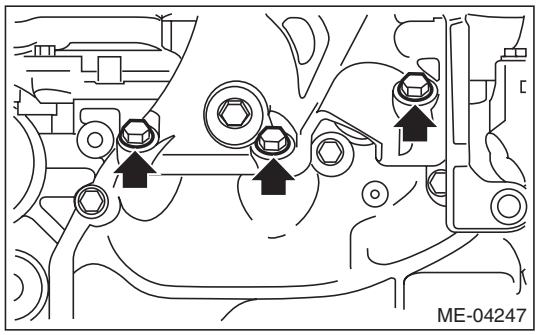

9) Lower the vehicle.

CAUTION:
When lifting down the vehicle, lower wire ropes at the same time.

10) Attach the bolts and nuts which secure engine mounting to the cradle.

Tightening torque:
60 N·m (6.1 kgf-m, 44.3 ft-lb)

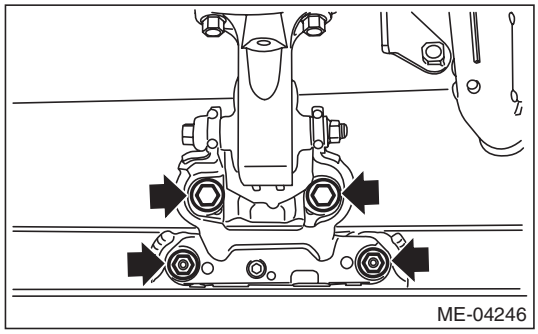

11) Install the stopper rod.

Tightening torque:
36 N·m (3.7 kgf-m, 26.6 ft-lb)

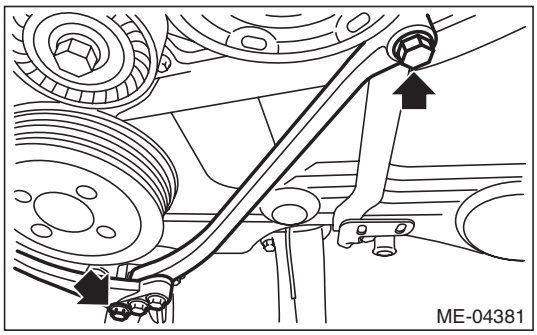

12) Remove the lifting device and wire ropes.

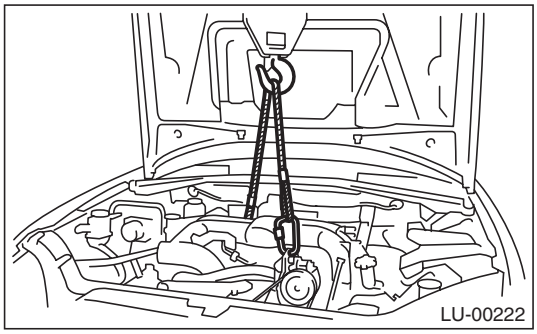

13) Lift up the vehicle.
14) Install the air intake boot to the intake duct.

Tightening torque:
2.5 N·m (0.3 kgf-m, 1.8 ft-lb)

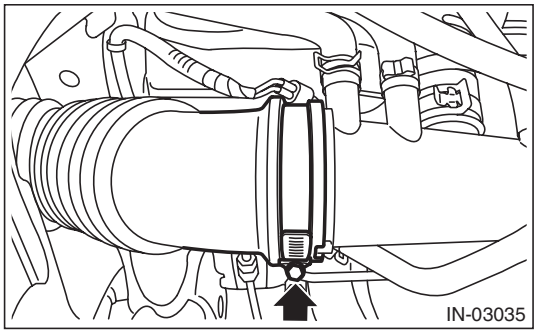

GETTHEMANUALS.org

15) Install the engine harness cover, and connect the ground cable.

Tightening torque:
T1: 6.4 N·m (0.7 kgf-m, 4.7 ft-lb)
T2: 7 N·m (0.7 kgf-m, 5.2 ft-lb)

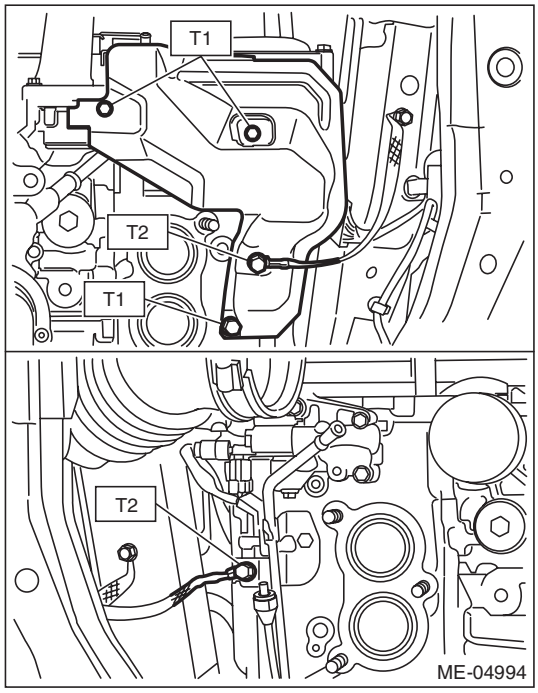

16) Lower the vehicle.
17) Connect the following hoses.
(1) Fuel delivery hose, fuel return hose and evaporation hose
(2) Heater inlet hose and heater outlet hose
(3) Brake booster vacuum hose
(4) A/C pressure hose <Ref. to AC-76, INSTALLATION, Hose and Pipe.>
18) Install the clip (C) securing the generator cord to the intake manifold protector LH, and connect the connector (A) and connector (B) to the A/C compressor.

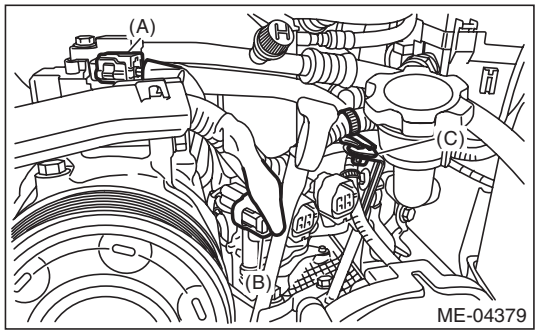

19) Connect the bulkhead harness connector to the engine harness connector (black), and install the bolt securing the bulkhead harness connector bracket.

Tightening torque:
6.4 N·m (0.7 kgf-m, 4.7 ft-lb)

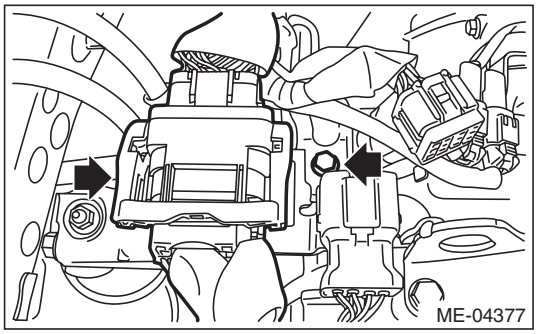

20) Connect the bulkhead harness connector to the engine harness connector (brown).

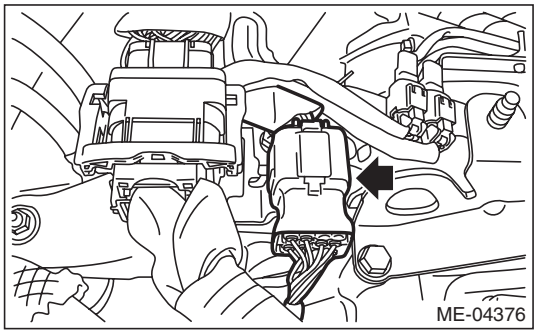

21) Install the front exhaust pipe. <Ref. to EX(H4DOTC)-7, INSTALLATION, Front Exhaust Pipe.>
22) Install the radiator. <Ref. to CO(H4DOTC)-22, INSTALLATION, Radiator.>
23) Install the air by-pass valve. <Ref. to IN(H4DOTC)-26, INSTALLATION, Air By-pass Valve.>
24) Install the intercooler. <Ref. to IN(H4DOTC)-18, INSTALLATION, Intercooler.>
25) Install the air intake duct. <Ref. to IN(H4DOTC)-12, INSTALLATION, Air Intake Duct.>
26) Connect the battery ground terminal.

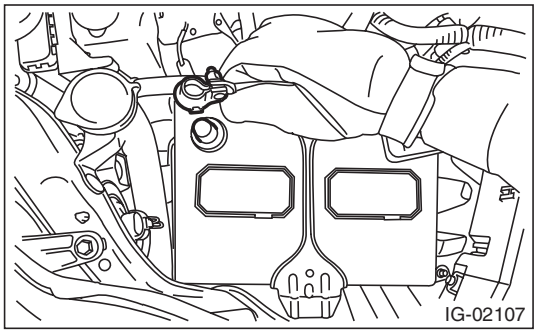

GETTHEMANUALS.org

27) Fill engine coolant. <Ref. to CO(H4DOTC)-14, FILLING OF ENGINE COOLANT, REPLACEMENT, Engine Coolant.>
28) Charge the A/C system with refrigerant. <Ref. to AC-25, PROCEDURE, Refrigerant Charging Procedure.>
29) Install the collector cover.
30) Change the front hood damper mounting position from (B) to (A), and close the front hood.

Tightening torque:
20 N·m (2.0 kgf-m, 14.8 ft-lb)

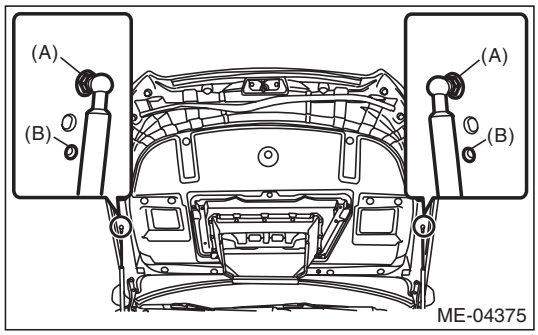

C: INSPECTION

1) Check that the pipes, hoses, connectors and clamps are securely connected.
2) Check that the engine coolant is up to specified level.
3) Start the engine and check for exhaust gas leakage, engine coolant leakage, fuel leakage, noise or vibration.

GETTHEMANUALS.org

10. Engine Mounting

A: REMOVAL

1) Change the front hood damper mounting position from (A) to (B), and completely open the front hood.

Tightening torque:
20 N·m (2.0 kgf-m, 14.8 ft-lb)

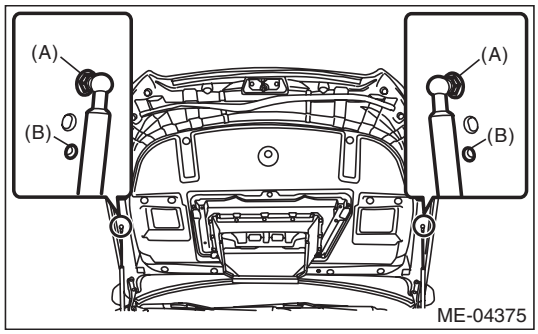

2) Remove the collector cover.
3) Disconnect the ground cable from battery.

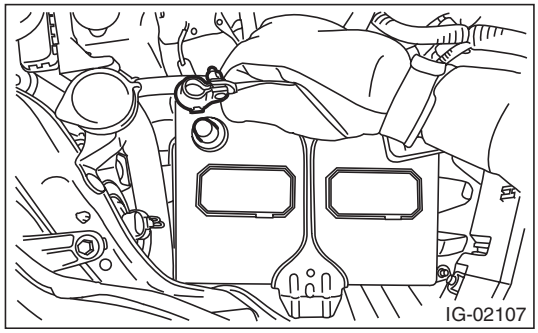

4) Remove the intercooler. <Ref. to IN(H4DOTC)-17, REMOVAL, Intercooler.>
5) Remove the radiator main fan motor assembly and radiator sub fan motor assembly. <Ref. to CO(H4DOTC)-25, REMOVAL, Radiator Main Fan and Fan Motor.> <Ref. to CO(H4DOTC)-27, REMOVAL, Radiator Sub Fan and Fan Motor.>
6) Lift up the vehicle.
7) Remove the under cover. <Ref. to EI-35, REMOVAL, Front Under Cover.>
8) Remove the front exhaust pipe. <Ref. to EX(H4DOTC)-5, REMOVAL, Front Exhaust Pipe.>
9) Lower the vehicle.
10) Support the engine with a lifting device and wire ropes.

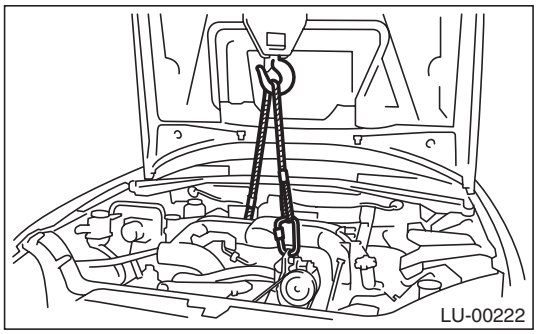

11) Remove the stopper rod.

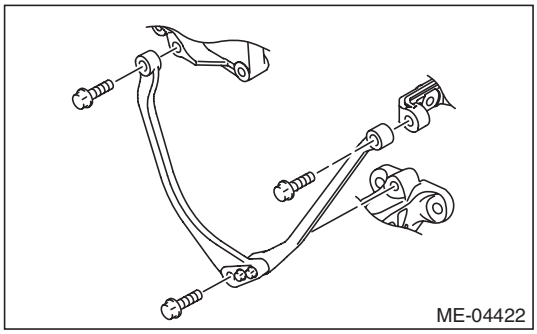

12) Remove the bolt and nut which secure engine mounting to the cradle.

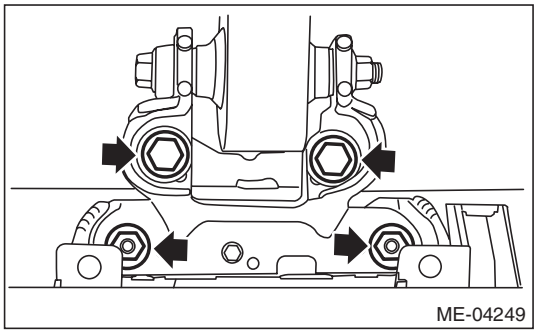

13) Lift up the vehicle.

CAUTION:
When lifting up the vehicle, raise up wire ropes at the same time.

14) Remove the bolts which secure the engine mounting onto the engine, and remove the engine mounting.

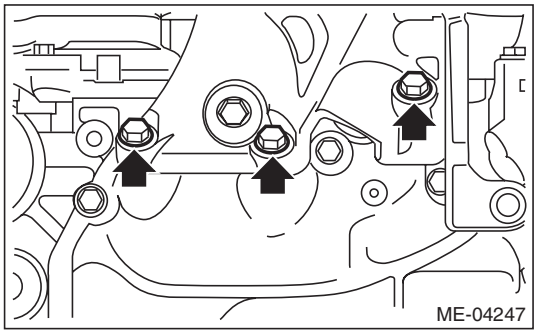

GETTHEMANUALS.org

B: INSTALLATION

1) Set the engine mounting, and tighten the bolts which hold engine mounting to the engine.

Tightening torque:
58 N·m (5.9 kgf-m, 42.8 ft-lb)

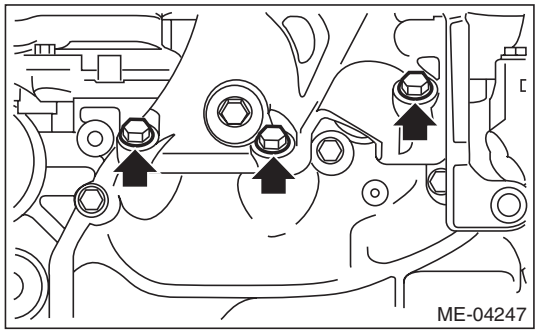

2) Lower the vehicle.

CAUTION:
When lifting down the vehicle, lower wire ropes at the same time.

3) Attach the bolts and nuts which secure engine mounting to the cradle.

Tightening torque:
60 N·m (6.1 kgf-m, 44.3 ft-lb)

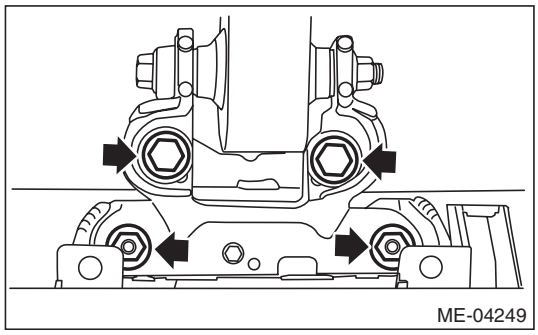

4) Install the stopper rod.

Tightening torque:
36 N·m (3.7 kgf-m, 26.6 ft-lb)

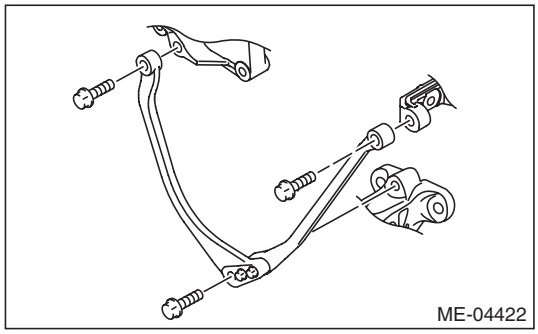

5) Remove the lifting device and wire ropes.

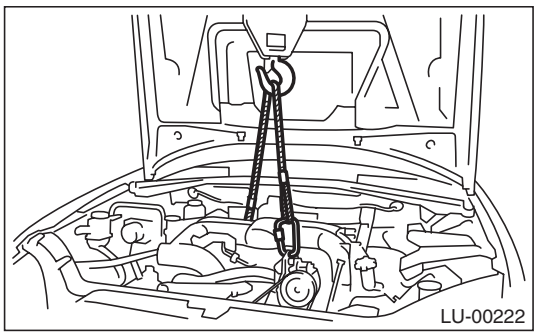

6) Lift up the vehicle.
7) Install the front exhaust pipe. <Ref. to EX(H4DOTC)-7, INSTALLATION, Front Exhaust Pipe.>
8) Install the under cover. <Ref. to EI-35, INSTALLATION, Front Under Cover.>
9) Lower the vehicle.
10) Install the radiator main fan motor assembly and radiator sub fan motor assembly. <Ref. to CO(H4DOTC)-25, INSTALLATION, Radiator Main Fan and Fan Motor.> <Ref. to CO(H4DOTC)-27, INSTALLATION, Radiator Sub Fan and Fan Motor.>
11) Install the intercooler. <Ref. to IN(H4DOTC)-18, INSTALLATION, Intercooler.>
12) Connect the ground cable to battery.

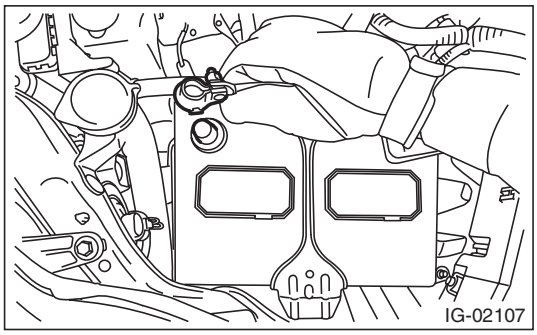

13) Install the collector cover.
14) Change the front hood damper mounting position from (B) to (A), and close the front hood.

Tightening torque:
20 N·m (2.0 kgf-m, 14.8 ft-lb)

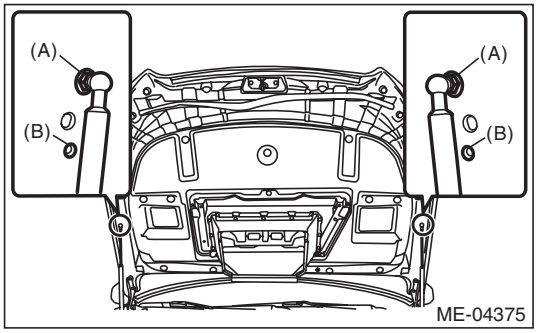

GETTHEMANUALS.org

C: DISASSEMBLY

1) Remove the turbocharger upper stay from the engine mounting bracket.

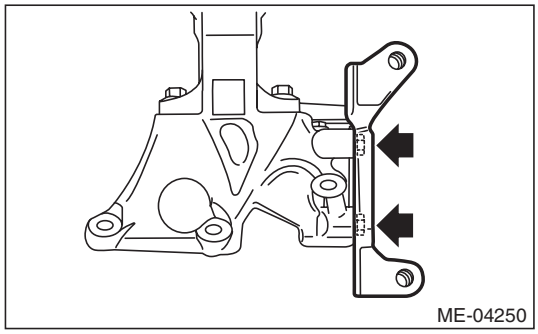

2) Remove the front cushion rubber from the engine mounting bracket.

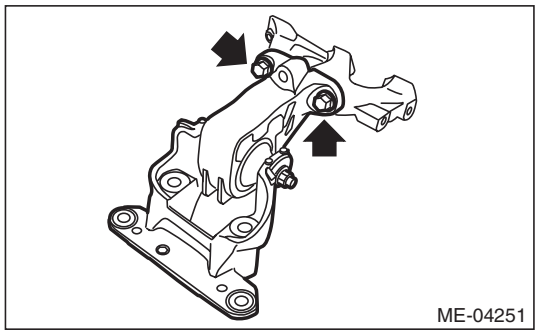

3) Remove the front cushion rubber from the front mounting bracket.

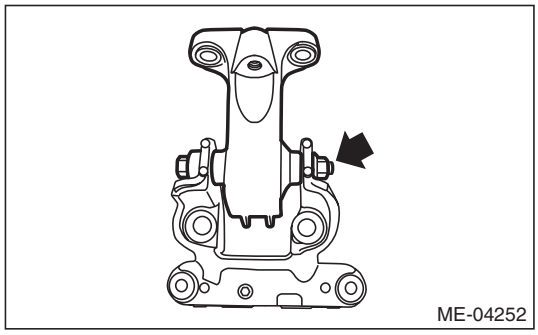

D: ASSEMBLY

1) Install the front cushion rubber to the front mounting bracket.

Tightening torque:
45 N·m (4.6 kgf-m, 33.2 ft-lb)

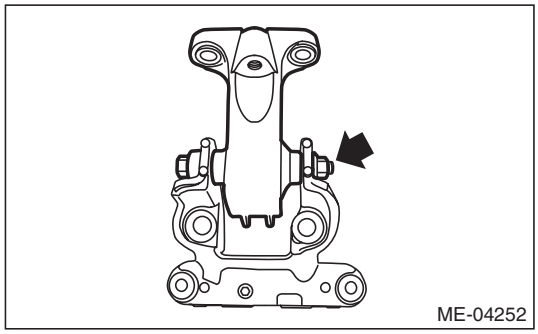

2) Install the front cushion rubber to the engine mounting bracket.

Tightening torque:
25 N·m (2.5 kgf-m, 18.4 ft-lb)

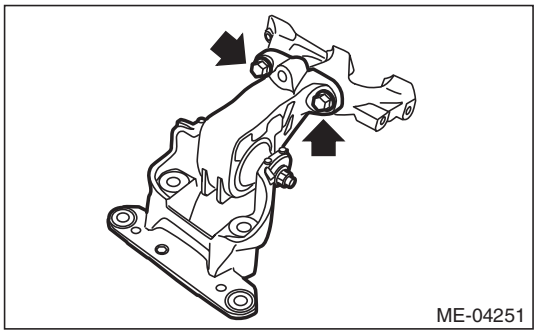

3) Install the turbocharger upper stay to the engine mounting bracket.

Tightening torque:
33 N·m (3.4 kgf-m, 24.3 ft-lb)

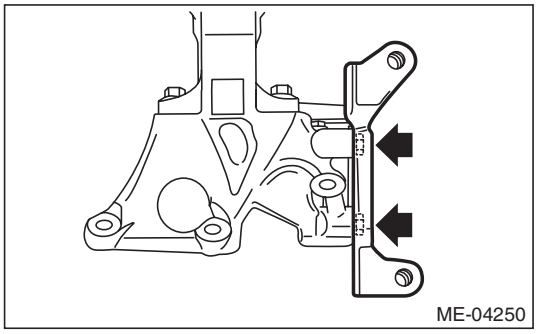

E: INSPECTION

Check that the engine mounting does not have deformation, cracks and any other damage.

GETTHEMANUALS.org

11. Preparation for Overhaul

A: PROCEDURE

1) After removing the engine from vehicle body, attach the ST to the engine as shown in the figure.

ST1	498457000	ENGINE STAND ADAPTER RH
ST2	498457100	ENGINE STAND ADAPTER LH
ST3	499817100	ENGINE STAND

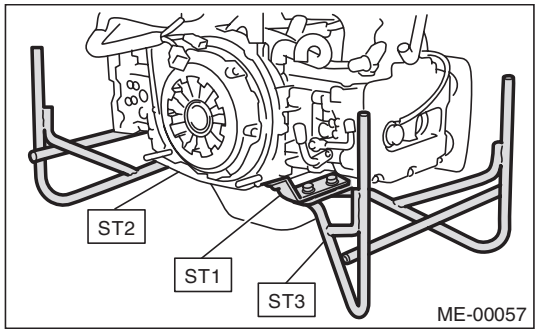

2) In this section the procedures described under each index are all connected and stated in order. Engine overhaul will be completed when you go through all steps in the procedure.
Therefore, in this section, to conduct the particular procedure within the flow of a section, you need to go back and conduct the procedure described previously in order to do that particular procedure.

GETTHEMANUALS.org

12. V-belt

A: REMOVAL

NOTE:
When replacing a single part, perform the work with the engine assembly installed to body.

1. V-BELT

1) Remove the collector cover.
2) Remove the air intake duct. <Ref. to IN(H4DOTC)-12, REMOVAL, Air Intake Duct.>
3) Attach the tool to the V-belt tensioner assembly, and rotate the tool clockwise to loosen and remove the V-belt.

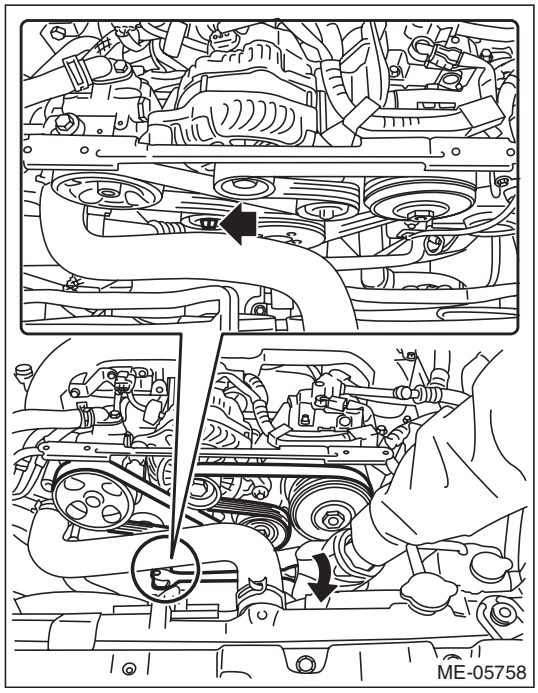

2. V-BELT TENSIONER ASSEMBLY AND IDLER PULLEY

1) Remove the V-belts. <Ref. to ME(H4DOTC)-42, V-BELT, REMOVAL, V-belt.>
2) Remove the bolt securing the V-belt tensioner assembly to the power steering pump bracket, and remove the V-belt tensioner assembly.

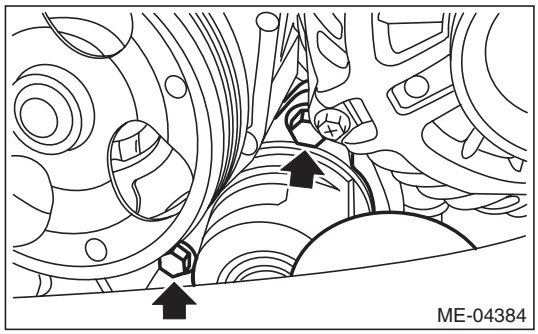

3) Remove the bolt securing the idler pulley to the A/C compressor bracket, and remove the idler pulley.

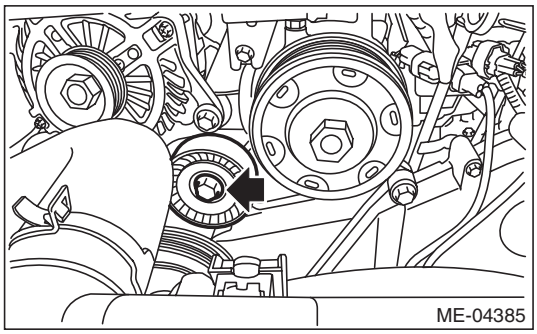

B: INSTALLATION

1. V-BELT

Install in the reverse order of removal.

CAUTION:
- **When reusing the V-belt, wipe off dust and water with cloth.**
- **Do not use the V-belt if there is any oil, grease or coolant on the belt.**
- **Be careful not to rub the V-belt end surface with bare hands; exposed core may cause injury.**
- **Wipe off any dust, oil and water on the groove of each pulley with cloth.**

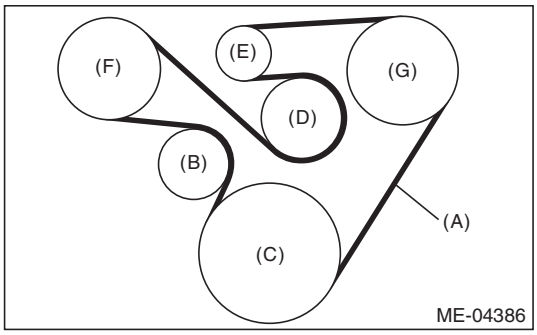

(A) V-belt
(B) V-belt tensioner ASSY
(C) Crank pulley
(D) Idler pulley
(E) Generator pulley
(F) Power steering pump pulley
(G) A/C compressor pulley

GETTHEMANUALS.org

2. V-BELT TENSIONER ASSEMBLY AND IDLER PULLEY

Install in the reverse order of removal.

Tightening torque:
33 N·m (3.4 kgf-m, 24.3 ft-lb)

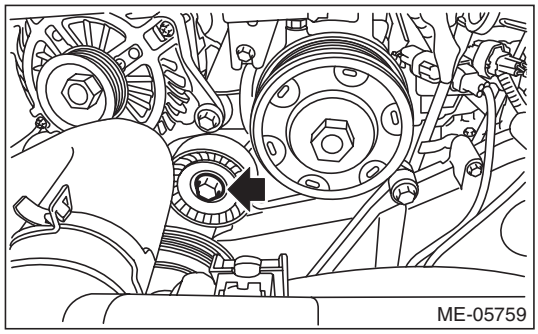

Tightening torque:
20 N·m (2.0 kgf-m, 14.8 ft-lb)

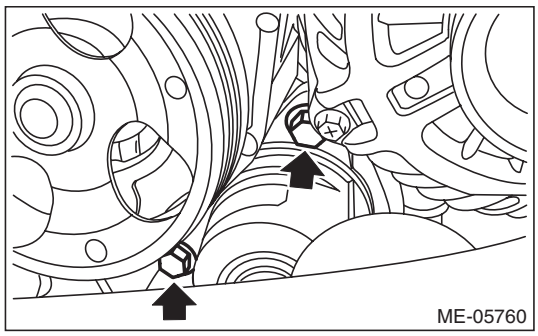

C: INSPECTION

1) Check the V-belt for cracks, tear or wear.
2) Remove the air intake duct. <Ref. to IN(H4DOTC)-12, REMOVAL, Air Intake Duct.>
3) Check that the V-belt tensioner assembly and idler pulley do not have deformation, cracks or other damages.
4) Check the V-belt tension indicator (A) shows within the limit (B).

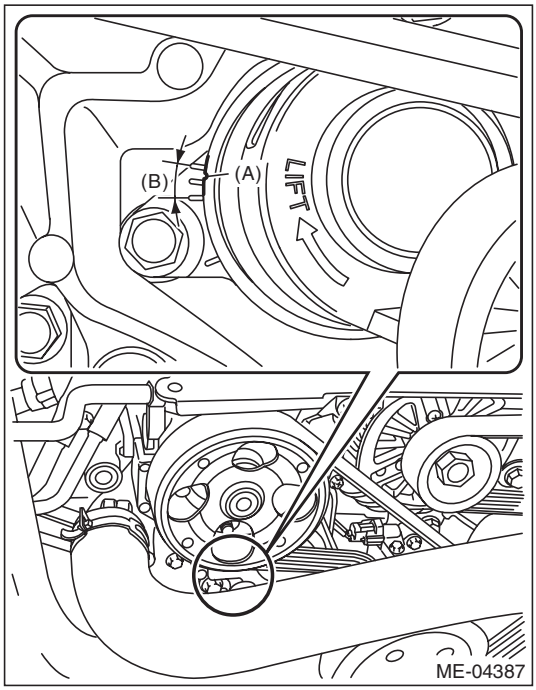

GETTHEMANUALS.org

13. Crank Pulley

A: REMOVAL

NOTE:
When replacing a single part, perform the work with the engine assembly installed to body.
1) Remove the V-belts. <Ref. to ME(H4DOTC)-42, REMOVAL, V-belt.>
2) Use the ST to lock the crank pulley, and remove the crank pulley bolt.
ST 499977100 CRANK PULLEY WRENCH

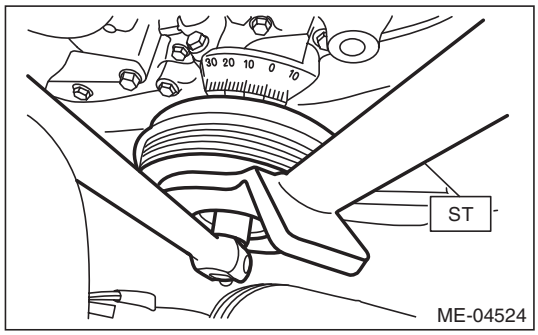

3) Remove the crank pulley.

B: INSTALLATION

1. METHOD WITHOUT ANGLE GAUGE

1) Clean the crankshaft thread using compressed air.
2) Install the crank pulley.
3) Apply engine oil to the crank pulley bolt seat and thread.
4) Tighten the crank pulley bolts.
(1) Use the ST to lock the crank pulley, and temporarily tighten the crank pulley bolt.
ST 499977100 CRANK PULLEY WRENCH

Tightening torque:
47 N·m (4.8 kgf-m, 34.7 ft-lb)

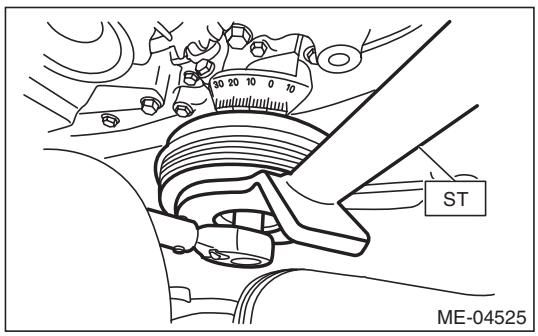

(2) Draw reference lines (A) and (B) using a marker to set the socket to the crank pulley bolt as shown in the figure.

NOTE:
Set the socket onto the crank pulley bolt so that reference lines (A) and (B) is visible.
ST 499977100 CRANK PULLEY WRENCH

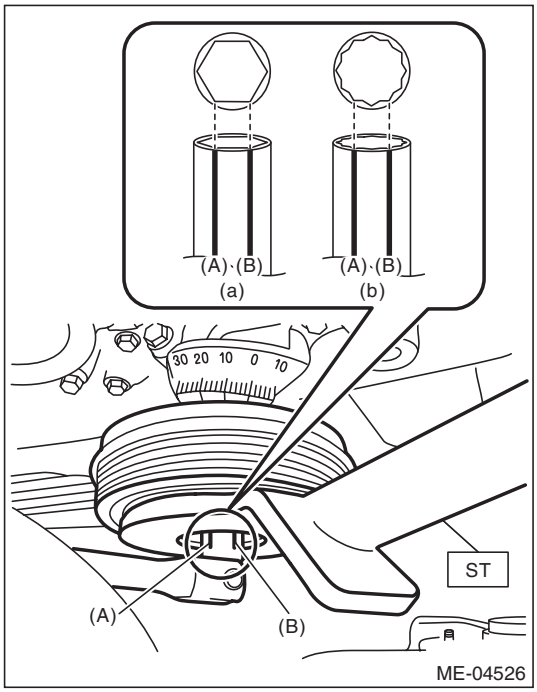

(a) When using 6-point socket
(b) When using 12-point socket

(3) Draw end line (C) on ST using a marker at the same position as reference line (B) drawn on the socket in step (2).
ST 499977100 CRANK PULLEY WRENCH

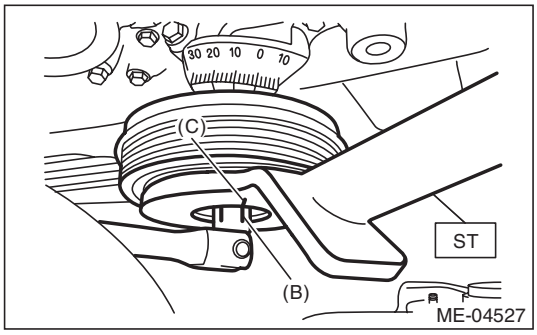

GETTHEMANUALS.org

(4) Use the ST to lock the crank pulley, and tighten the crank pulley bolt to the angle where reference line (A) and end line (C) are aligned.

NOTE:
It should be approx. 60° when reference line (A) and end line (C) are aligned.
ST 499977100 CRANK PULLEY WRENCH

Tightening angle:
60°±5°

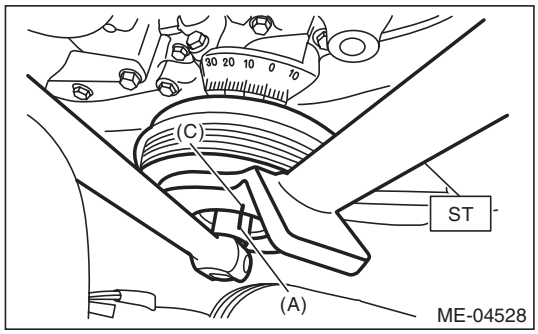

5) Install the V-belts. <Ref. to ME(H4DOTC)-42, INSTALLATION, V-belt.>

2. METHOD WITH ANGLE GAUGE

1) Clean the crankshaft thread using compressed air.
2) Install the crank pulley.
3) Apply engine oil to the crank pulley bolt seat and thread.
4) Tighten the crank pulley bolts.
(1) Remove the radiator main fan motor assembly and radiator sub fan motor assembly. <Ref. to CO(H4DOTC)-25, REMOVAL, Radiator Main Fan and Fan Motor.> <Ref. to CO(H4DOTC)-27, REMOVAL, Radiator Sub Fan and Fan Motor.>
(2) Use the ST1 to lock the crank pulley, and temporarily tighten the crank pulley bolt.
ST1 499977100 CRANK PULLEY WRENCH

Tightening torque:
47 N·m (4.8 kgf-m, 34.7 ft-lb)

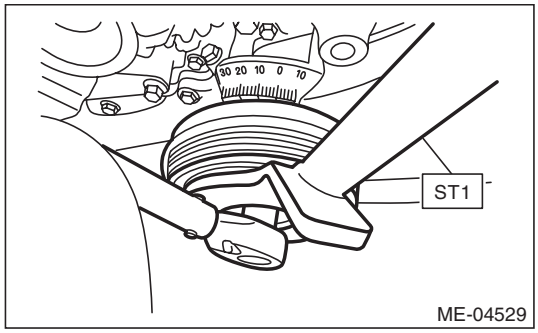

(3) Set the ST2, use the ST1 to lock the crank pulley, and tighten the crank pulley bolt to the specified angle.

NOTE:
Attach the magnet used for securing the ST2 (ANGLE GAUGE) to ST1.
ST1 499977100 CRANK PULLEY WRENCH
ST2 18854AA000 ANGLE GAUGE

Tightening angle:
60°±5°

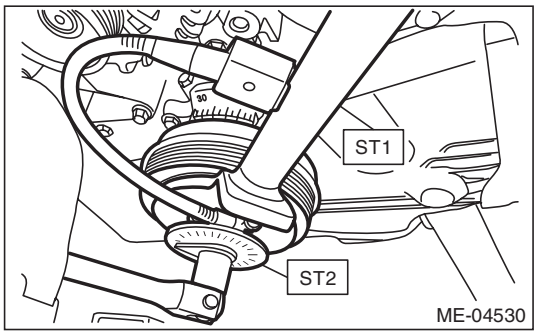

(4) Install the radiator main fan motor assembly and radiator sub fan motor assembly. <Ref. to CO(H4DOTC)-25, INSTALLATION, Radiator Main Fan and Fan Motor.> <Ref. to CO(H4DOTC)-27, INSTALLATION, Radiator Sub Fan and Fan Motor.>

5) Install the V-belts. <Ref. to ME(H4DOTC)-42, INSTALLATION, V-belt.>

C: INSPECTION

Check that the crank pulley has no deformation, cracks or other damages.

GETTHEMANUALS.org

14. Timing Belt Cover

A: REMOVAL

1. WORK ON THE VEHICLE

1) Remove the collector cover.
2) Disconnect the ground cable from battery.

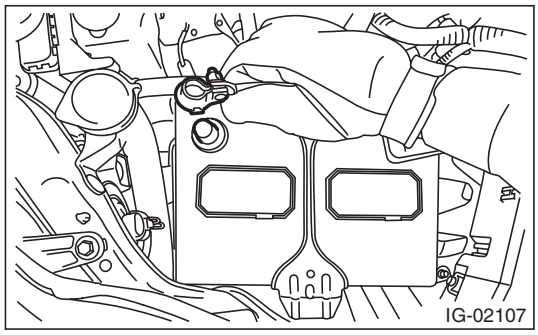

3) When removing the timing belt cover RH
   (1) Remove the air intake duct. <Ref. to IN(H4DOTC)-12, REMOVAL, Air Intake Duct.>
   (2) Loosen the clamp which holds the intake duct to intercooler.

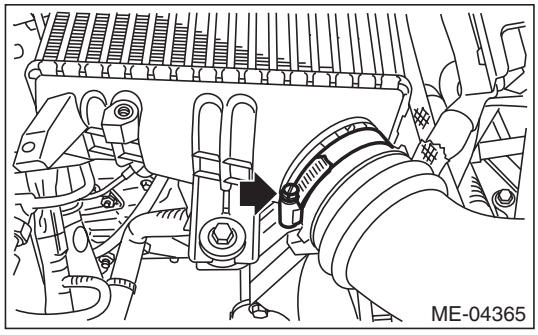

   (3) Remove the V-belts. <Ref. to ME(H4DOTC)-42, REMOVAL, V-belt.>
   (4) Remove the generator. <Ref. to SC(H4SO)-18, REMOVAL, Generator.>
   (5) Remove the suction hose from intake duct.

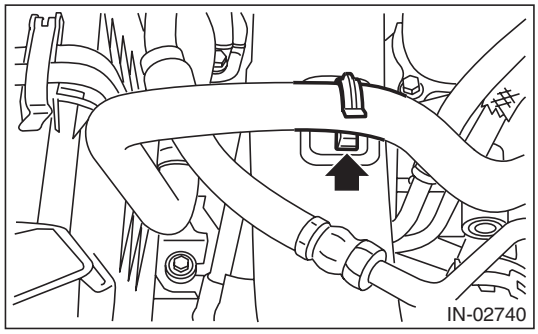

   (6) Disconnect the connector (A) from power steering pump, and remove the power steering pump together with the power steering pump bracket from engine and rod stopper.

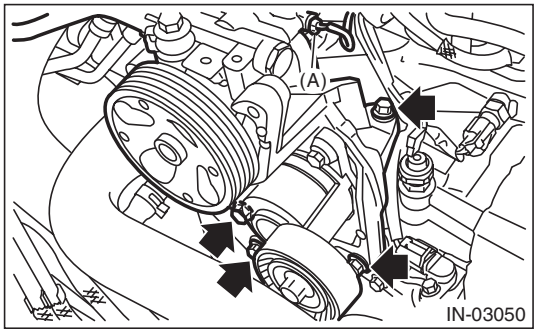

   (7) Mount the power steering pump together with the power steering pump bracket on RH side wheel apron.
   (8) Remove the radiator sub fan motor assembly. <Ref. to CO(H4DOTC)-27, REMOVAL, Radiator Sub Fan and Fan Motor.>
   (9) Remove the engine coolant hose from the clip (A).
   (10) Remove the bolts which secure the intake duct to the turbocharger, and remove the air bypass valve from the intake duct.

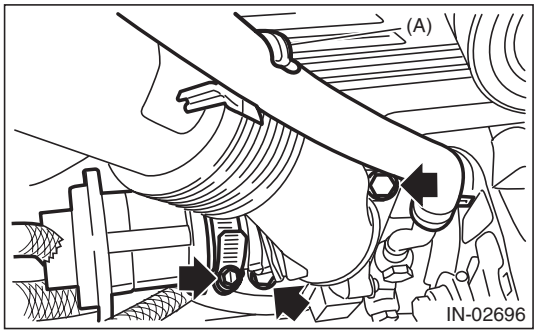

   (11) Remove the intake duct from intake manifold.

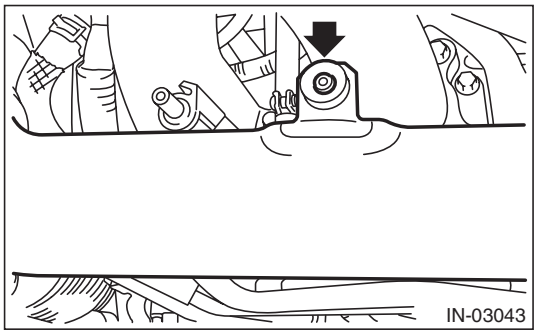

GETTHEMANUALS.org

(12) Disconnect the vacuum hose from blow-by pipe, and remove the bolt securing the blow-by pipe from the PCV pipe.

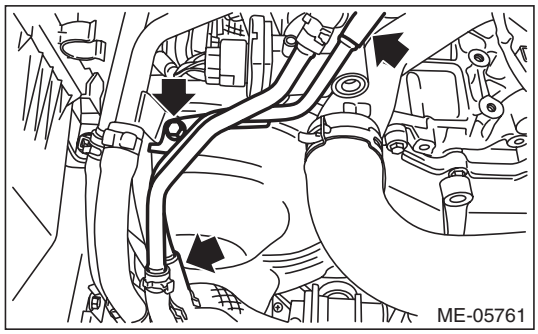

(13) Disconnect the vacuum hose from PCV pipe.

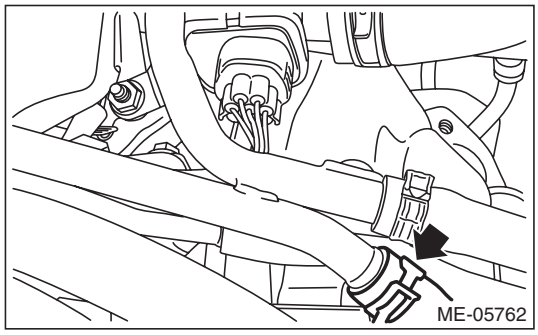

(14) Remove vacuum hose (B), vacuum hose (C), vacuum hose (D) and vacuum hose (E) from the clip (A).

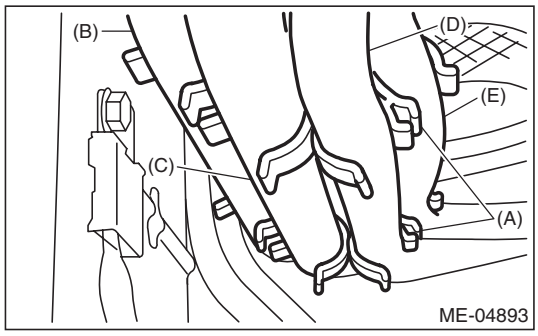

(15) Remove the bolts which secure the upper side of the timing belt cover RH.
(16) Lift up the vehicle.
(17) Remove the under cover. <Ref. to EI-35, REMOVAL, Front Under Cover.>
(18) Remove the air by-pass valve. <Ref. to IN(H4DOTC)-26, REMOVAL, Air By-pass Valve.>

(19) Remove the clip holding the engine harness.

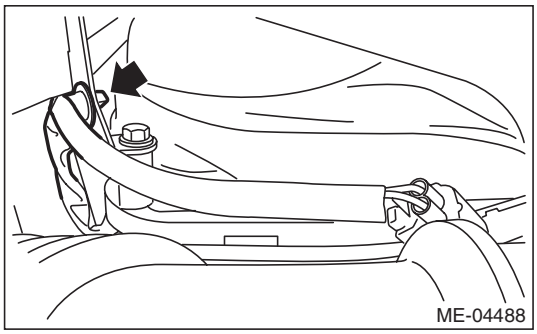

(20) Remove the remaining bolts which secure timing belt cover RH, and remove the timing belt cover RH together with the hose clip stay assembly (A).

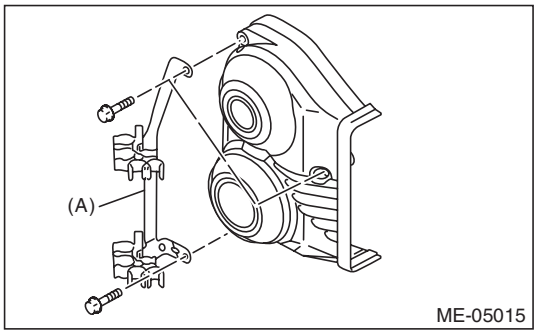

4) When removing the timing belt cover LH
(1) Disconnect the connectors from front oxygen (A/F) sensor and rear oxygen sensor, and remove the clip (A) securing the front oxygen (A/F) sensor harness and rear oxygen sensor harness.

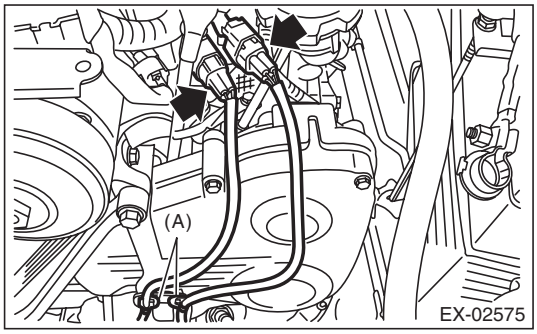

(2) Remove the bolts which secure the upper side of the timing belt cover LH.
(3) Lift up the vehicle.
(4) Remove the under cover. <Ref. to EI-35, REMOVAL, Front Under Cover.>

GETmyMANUALS.org

(5) Loosen the remaining bolts which secure timing belt cover LH, and remove the timing belt cover LH together with the oxygen sensor bracket (A).

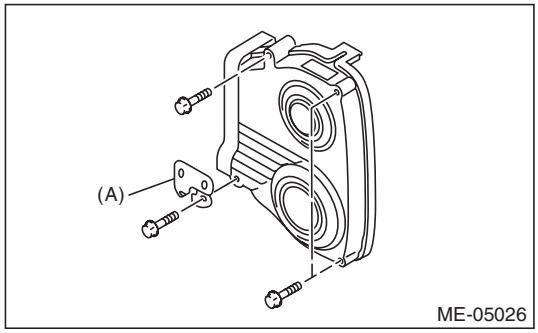

5) When removing the front timing belt cover

(1) Remove the stopper rod.

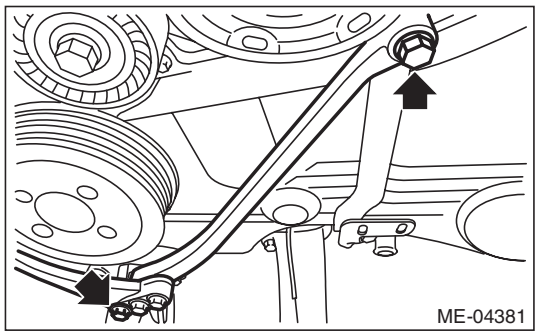

(2) Remove the crank pulley. <Ref. to ME(H4DOTC)-44, REMOVAL, Crank Pulley.>

(3) Remove the timing belt cover RH and timing belt cover LH. Refer to step 3) and step 4) for removal procedures.

(4) Remove the bolts securing the front timing belt cover, and remove the front timing belt cover.

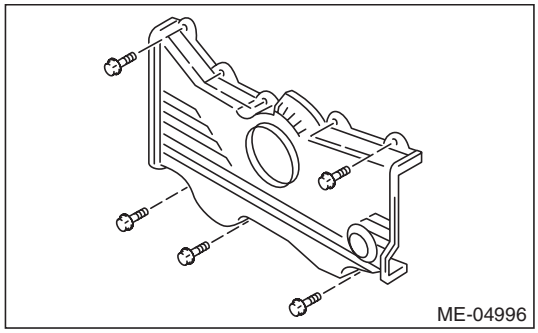

2. WORK ON THE ENGINE UNIT ONLY

1) Remove the crank pulley. <Ref. to ME(H4DOTC)-44, REMOVAL, Crank Pulley.>

2) Remove the blow-by pipe from the PCV pipe.

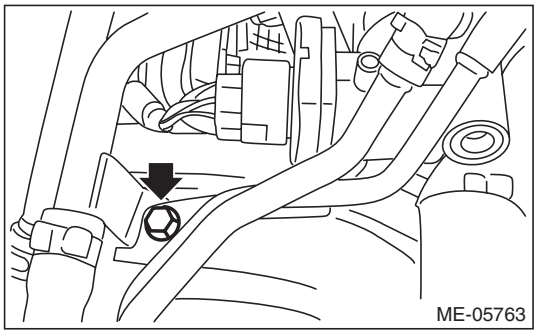

3) Remove vacuum hose (B), vacuum hose (C), vacuum hose (D) and vacuum hose (E) from the clip (A).

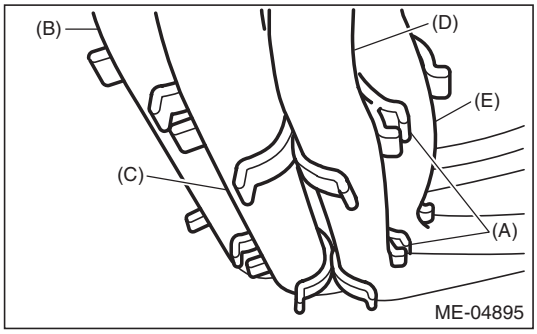

4) Remove the clip which holds the engine harness to the hose clip stay assembly.

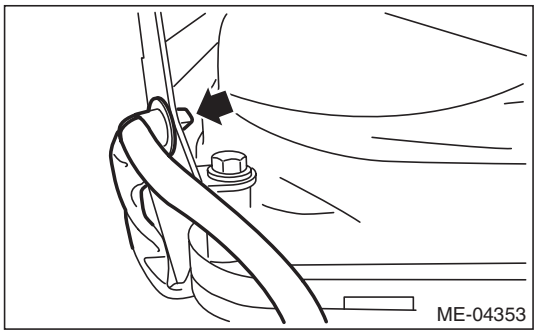

5) Remove timing belt cover RH (B) together with the hose clip stay assembly (A).

6) Remove timing belt cover (LH) (D) together with the oxygen (A/F) sensor bracket (C).

GETTHEMANUALS.org

7) Remove front timing belt cover (E).

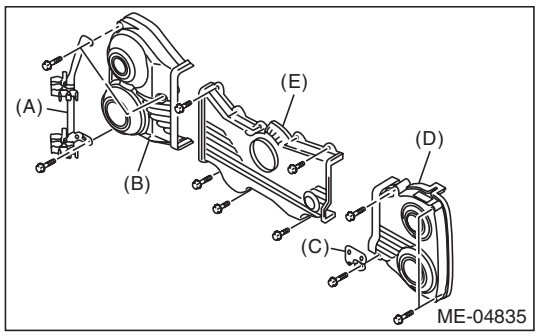

B: INSTALLATION

1. WORK ON THE VEHICLE

Install in the reverse order of removal.

NOTE:
Install the vacuum hose as shown in the figure.

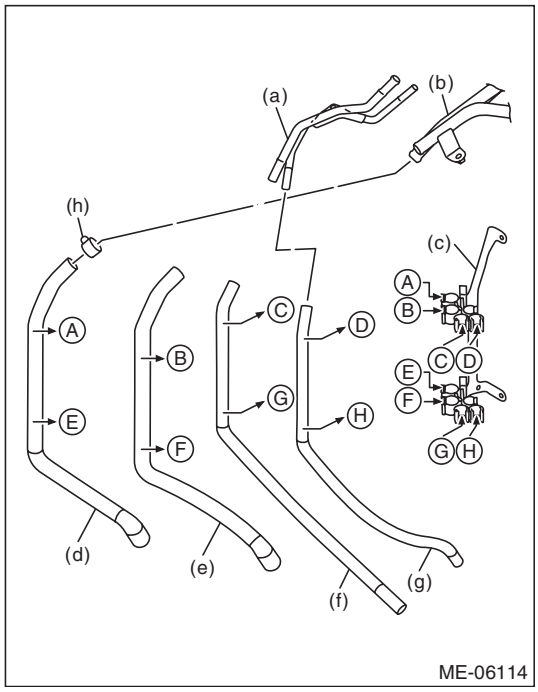

(a) Blow-by pipe
(b) PCV pipe
(c) Hose clip stay ASSY
(d) Vacuum hose (A)
(e) Vacuum hose (B)
(f) Vacuum hose (C)
(g) Vacuum hose (D)
(h) Clip

Tightening torque:
5 N·m (0.5 kgf-m, 3.7 ft-lb)

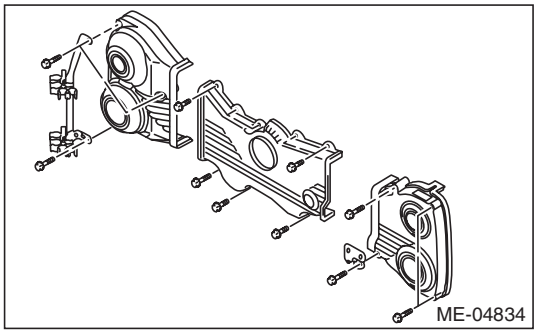

Tightening torque:
6.4 N·m (0.7 kgf-m, 4.7 ft-lb)

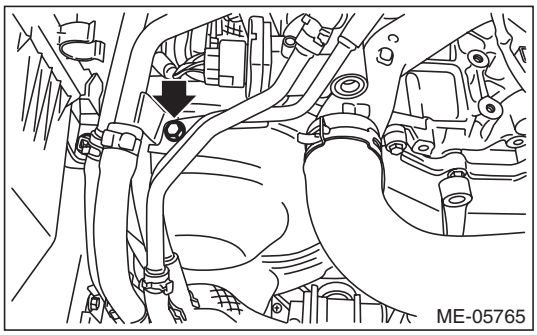

Tightening torque:
T1: 3 N·m (0.3 kgf-m, 2.2 ft-lb)
T2: 16 N·m (1.6 kgf-m, 11.8 ft-lb)

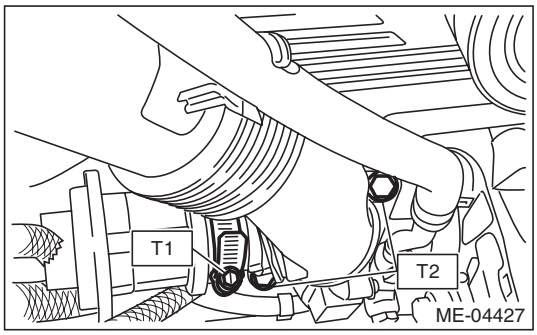

Tightening torque:
Refer to "COMPONENT" of "STARTING/ CHARGING SYSTEMS" for the tightening torque. <Ref. to SC(H4SO)-5, GENERATOR, COMPONENT, General Description.>

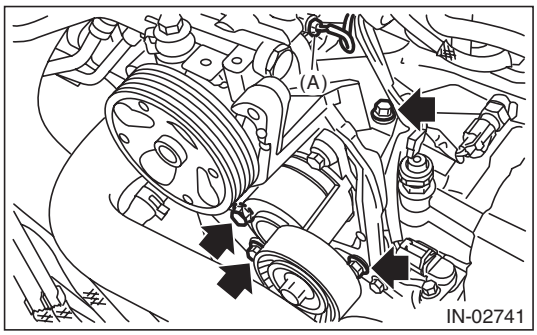

GETmyMANUALS.org

Tightening torque:
3 N·m (0.3 kgf-m, 2.2 ft-lb)

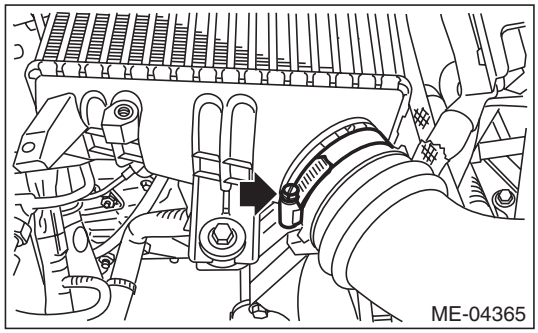

Tightening torque:
36 N·m (3.7 kgf-m, 26.6 ft-lb)

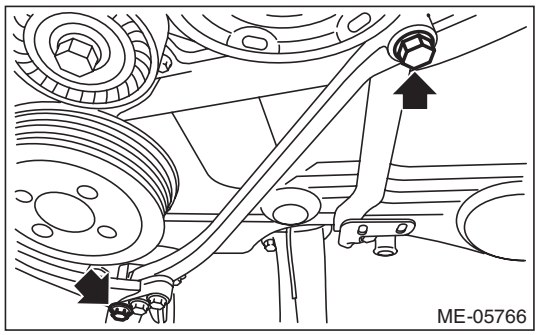

2. WORK ON THE ENGINE UNIT ONLY

Install in the reverse order of removal.

NOTE:
Install the vacuum hose as shown in the figure.

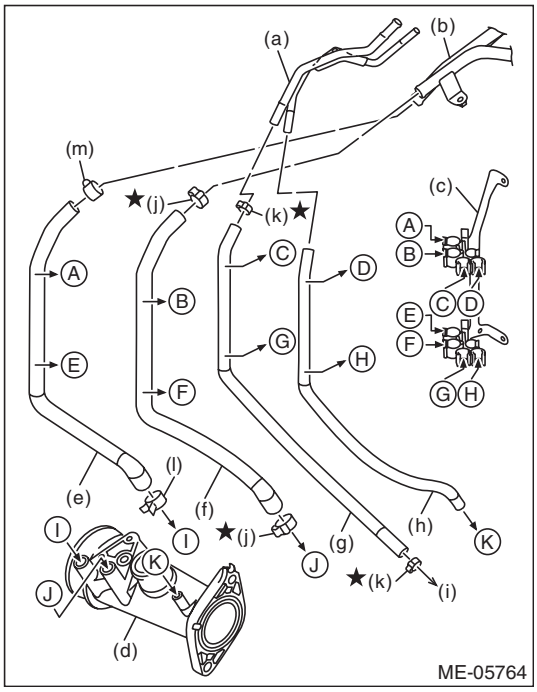

(a) Blow-by pipe
(b) PCV pipe
(c) Hose clip stay ASSY
(d) Intake duct
(e) Vacuum hose (A)
(f) Vacuum hose (B)
(g) Vacuum hose (C)
(h) Vacuum hose (D)
(i) To oil catch tank
(j) Clamp
(k) Clamp
(l) Clip
(m) Clip

Tightening torque:
5 N·m (0.5 kgf-m, 3.7 ft-lb)

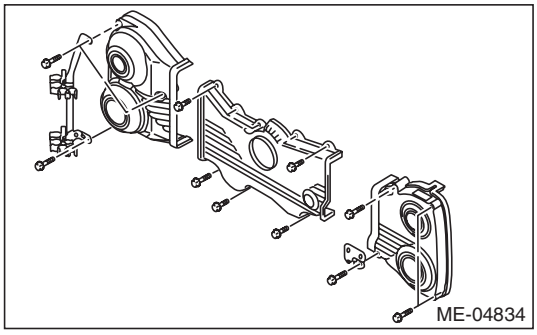

GETMANUALS.org

Tightening torque:
6.4 N·m (0.7 kgf-m, 4.7 ft-lb)

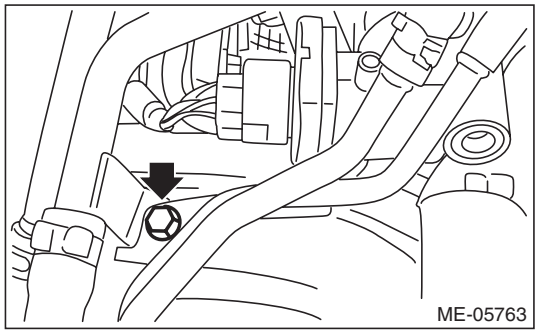

C: INSPECTION

Check that the timing belt cover does not have deformation, cracks and any other damage.

GETmyMANUALS.org

15. Timing Belt

A: REMOVAL

NOTE:
- When replacing a single part, perform the work with the engine assembly installed to body.
- When performing the work with the engine installed to body, the following parts must also be removed/installed.
  - Radiator main fan motor assembly <Ref. to CO(H4DOTC)-25, REMOVAL, Radiator Main Fan and Fan Motor.> <Ref. to CO(H4DOTC)-25, INSTALLATION, Radiator Main Fan and Fan Motor.>
  - Radiator sub fan motor assembly <Ref. to CO(H4DOTC)-27, REMOVAL, Radiator Sub Fan and Fan Motor.> <Ref. to CO(H4DOTC)-27, INSTALLATION, Radiator Sub Fan and Fan Motor.>
- When performing the work with the engine installed to body, protect the radiator with cardboards or blankets.

1. TIMING BELT

1) Remove the crank pulley. <Ref. to ME(H4DOTC)-44, REMOVAL, Crank Pulley.>
2) Remove the timing belt cover. <Ref. to ME(H4DOTC)-46, REMOVAL, Timing Belt Cover.>
3) Remove the timing belt guide.

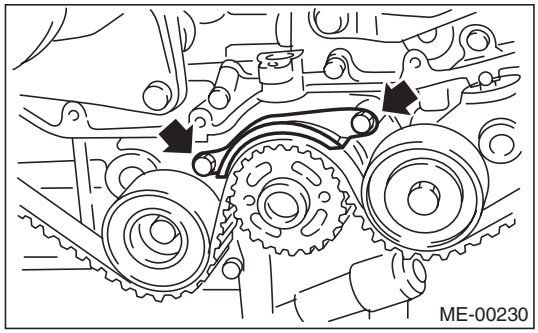

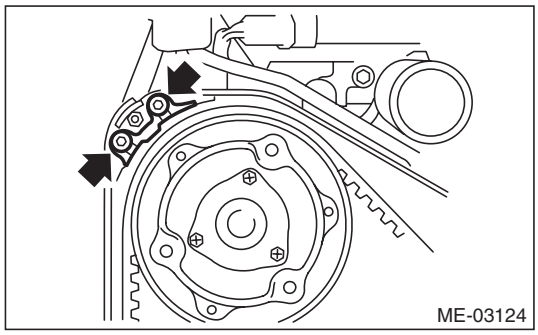

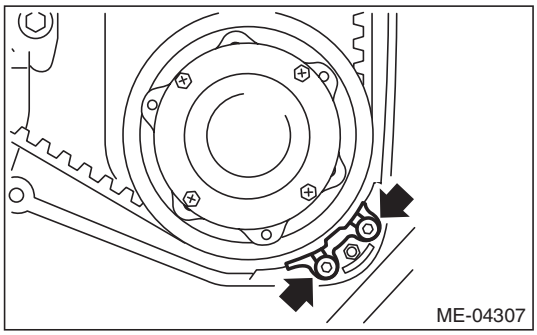

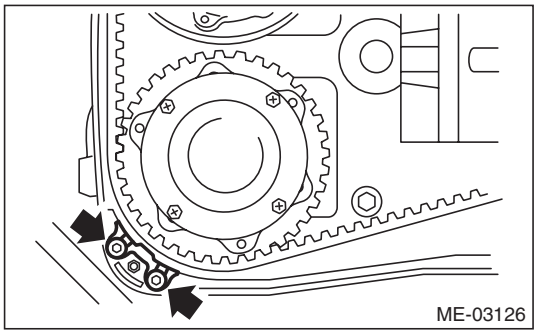

4) If the alignment mark or arrow mark (which indicates the direction of rotation) on timing belt fade away, put new marks before removing the timing belt as shown in procedures below.
   (1) Turn the crankshaft using ST, and align the alignment marks on crank sprocket, intake cam sprocket LH, exhaust cam sprocket LH, intake cam sprocket RH and exhaust cam sprocket RH with marks on oil pump and notches of timing belt cover.

ST 499987500 CRANKSHAFT SOCKET

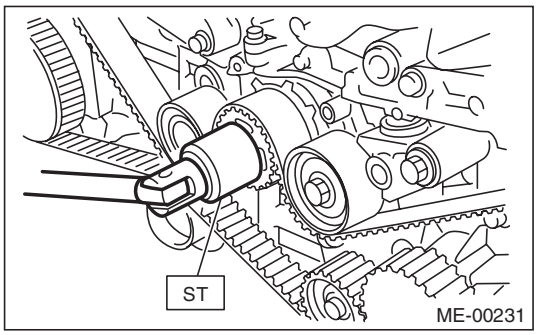

GETTHEMANUALS.org

(2) Using white paint, put an alignment mark or an arrow mark on timing belts in relation to the crank sprocket and cam sprockets.

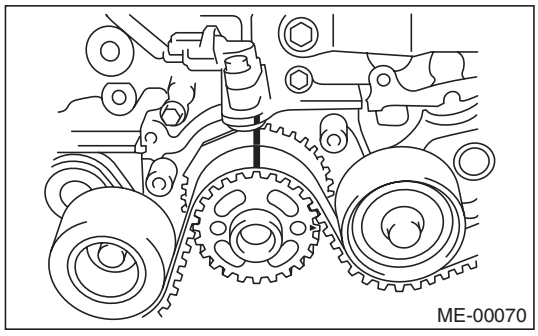

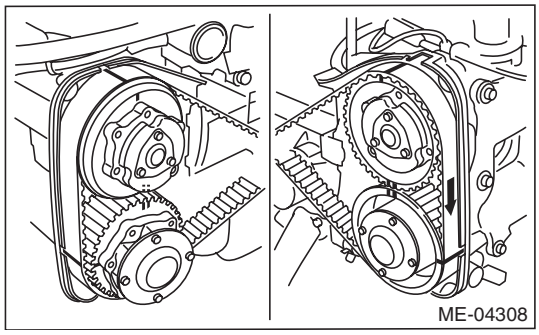

Z_1: 54.5 teeth
Z_2: 51 teeth
Z_3: 28 teeth

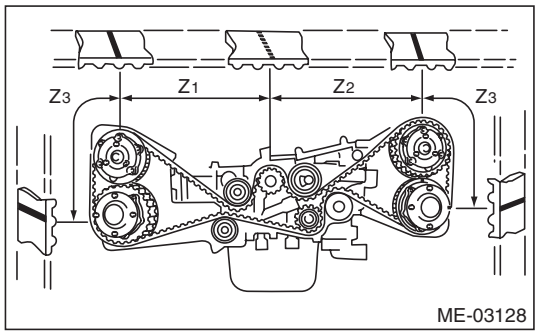

5) Remove the belt idler (A).

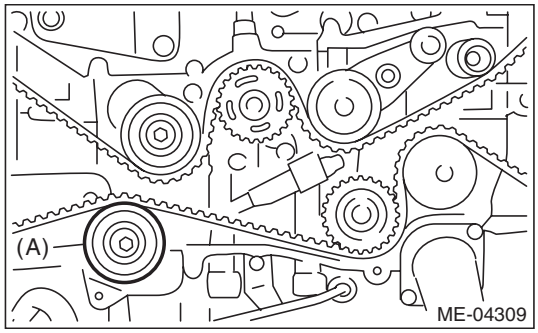

6) Remove the timing belt.

CAUTION:
After the timing belt has been removed, never rotate the intake and exhaust cam sprocket. If the cam sprocket is rotated, the intake and exhaust valve heads strike together and valve stems are bent.

2. AUTOMATIC BELT TENSION ADJUSTER ASSEMBLY AND BELT IDLER

1) Remove the belt idler (A) and (B).

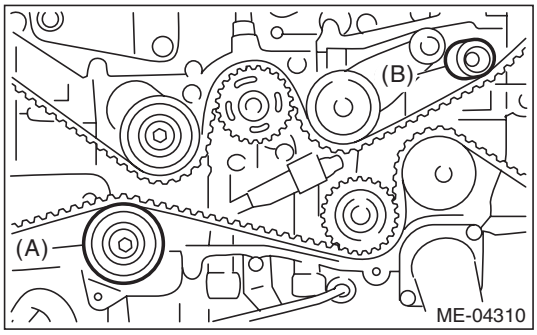

2) Remove the belt idler No. 2.

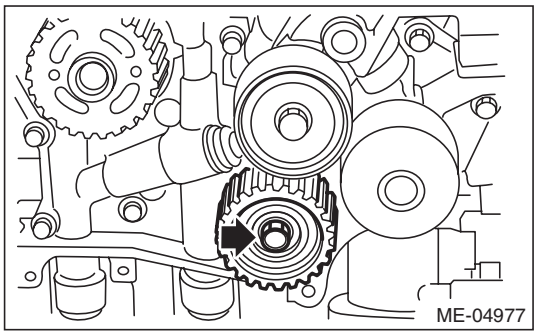

3) Remove the automatic belt tension adjuster assembly.

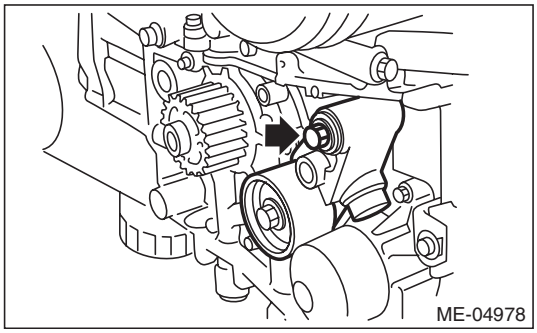

GETTHEMANUALS.org

B: INSTALLATION

1. AUTOMATIC BELT TENSION ADJUSTER ASSEMBLY AND BELT IDLER

1) Prepare for installation of the automatic belt tension adjuster assembly.

CAUTION:
- **Always use a vertical type pressing tool to move the adjuster rod down.**
- **Do not use a lateral type vise.**
- **Push the adjuster rod vertically.**
- **Press-in the push adjuster rod gradually taking three minutes or more.**
- **Do not allow press pressure to exceed 9,807 N (1,000 kgf, 2,205 lbf).**
- **Push in the adjuster rod to the end face of the cylinder. However, do not press the adjuster rod below the end face of the cylinder. Doing so may damage the cylinder.**
- **Do not release the press pressure until stopper pin is completely inserted.**

(1) Attach the automatic belt tension adjuster assembly to vertical pressing tool.

(2) Slowly push in the adjuster rod with a pressure of 165 N (16.8 kgf, 37.1 lbf) or more until the adjuster rod is aligned with the stopper pin hole in the cylinder.

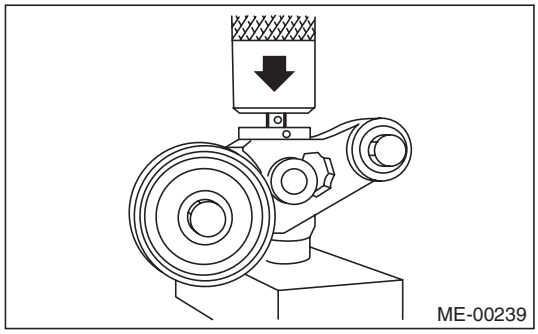

(3) With a 2 mm (0.08 in) dia. stopper pin or a 2 mm (nominal) dia. hex wrench inserted into the stopper pin hole in cylinder, secure the adjuster rod.

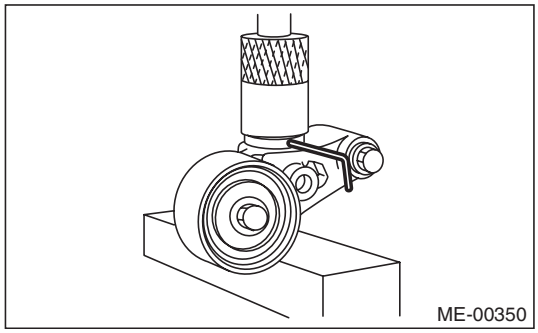

2) Install the automatic belt tension adjuster assembly.

Tightening torque:
39 N·m (4.0 kgf-m, 28.8 ft-lb)

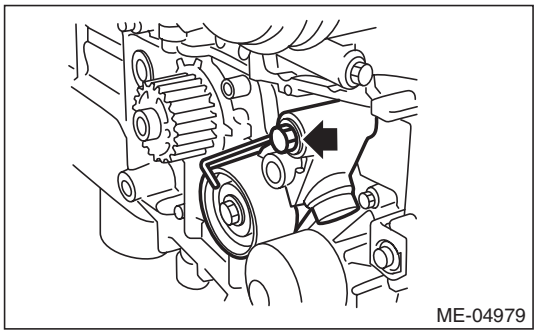

3) Install the belt idler No. 2.

Tightening torque:
39 N·m (4.0 kgf-m, 28.8 ft-lb)

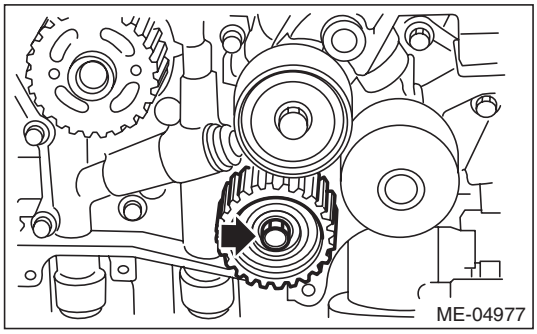

4) Install the belt idlers.

Tightening torque:
39 N·m (4.0 kgf-m, 28.8 ft-lb)

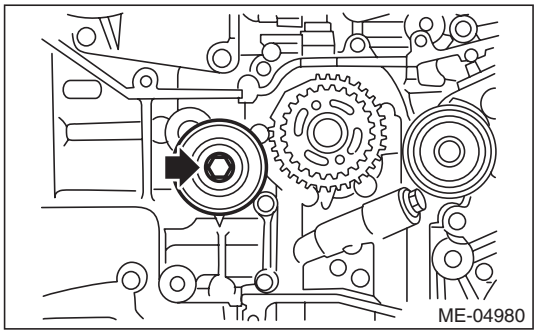

GETTHEMANUALS.org

Tightening torque:
25 N·m (2.5 kgf-m, 18.4 ft-lb)

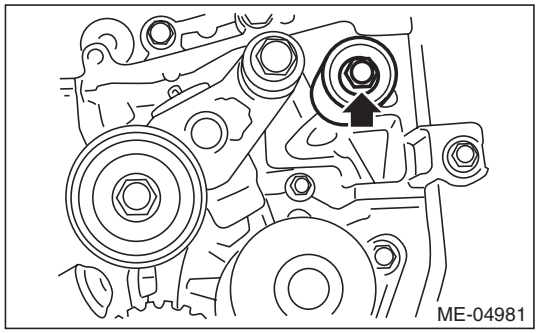

2. TIMING BELT

1) Prepare for installation of the automatic belt tension adjuster assembly. <Ref. to ME(H4DOTC)-54, AUTOMATIC BELT TENSION ADJUSTER ASSEMBLY AND BELT IDLER, INSTALLATION, Timing Belt.>

2) Align the mark (B) on crank sprocket with the mark (A) on oil pump.

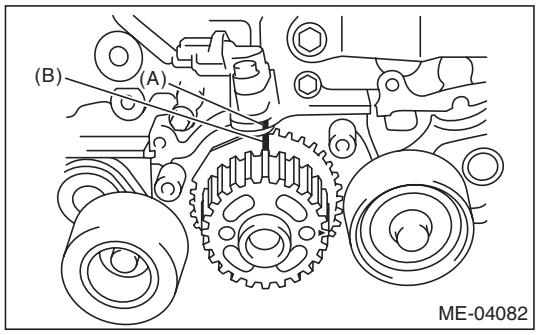

3) Align the single line mark (B) on the exhaust cam sprocket RH with notch (A) on the timing belt cover.

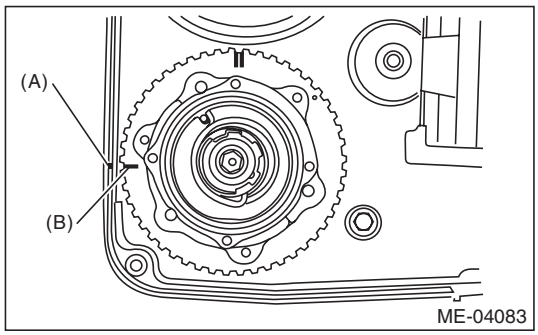

4) Align the single line mark (B) on the intake cam sprocket RH with notch (A) on the timing belt cover. Make sure that the double line marks (C) on intake and exhaust cam sprockets are aligned.

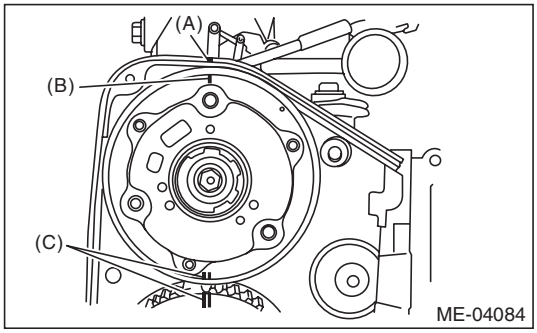

5) Align the single line mark (B) on exhaust cam sprocket LH with notch (A) on the timing belt cover by turning the sprocket counterclockwise (as viewed from front of engine).

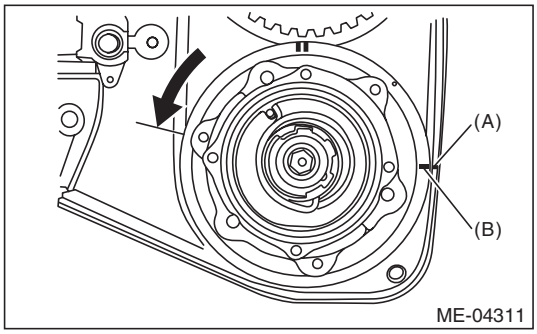

6) Align the single line mark (B) on intake cam sprocket LH with notch (A) on the timing belt cover by turning the sprocket clockwise (as viewed from front of engine). Make sure the double line marks (C) on the intake and exhaust cam sprockets are aligned.

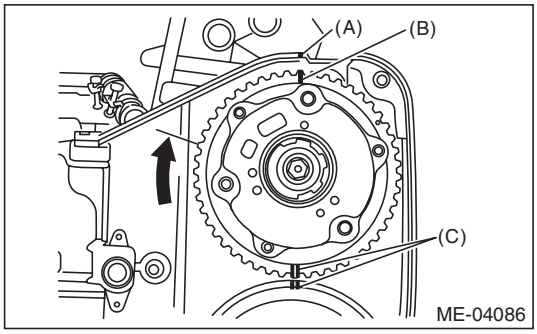

GETTHEMANUALS.org

7) Make sure that the cam and crank sprockets are positioned properly.

CAUTION:

• Intake and exhaust camshafts for this DOHC engine can be independently rotated with the timing belts removed. As can be seen from the figure, if the intake and exhaust valves are lifted simultaneously, heads will interfere with each other, resulting in bent valves.

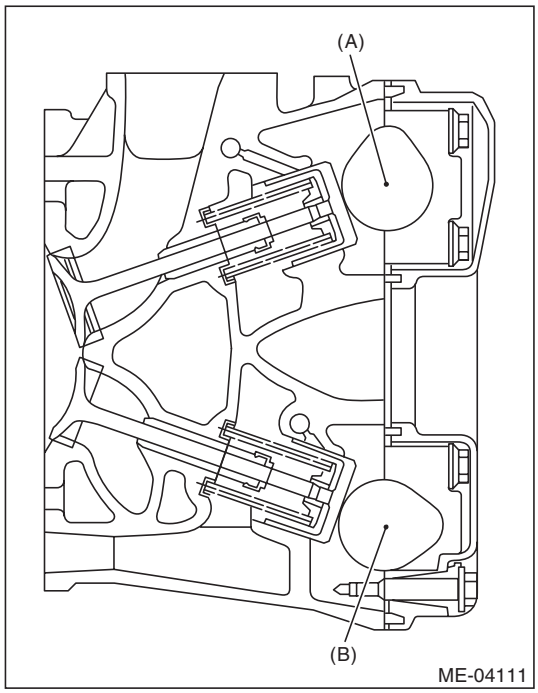

(A) Intake camshaft
(B) Exhaust camshaft

• When the timing belts are not installed, four camshafts are held at the "zero-lift" position, where all cams on camshafts are not pushing down on the intake and exhaust valves. (Under this condition, all valves remain unlifted.)

• When the camshafts are rotated to install the timing belts, #2 intake and #4 exhaust cam of camshaft LH are held, pushing their corresponding valves down. (Under this condition, these valves are held lifted.) Camshaft RH are held so that their cams do not push the valves down.

• Camshafts LH must be rotated from the zero-lift position to the position where the timing belt is to be installed with the smallest possible angle, in order to prevent mutual interference of intake and exhaust valve heads.

• Do not allow the camshafts to rotate in the direction shown in the upper figure. Doing this may cause both the intake and exhaust valves to lift simultaneously, resulting in mutual interference of valve heads.

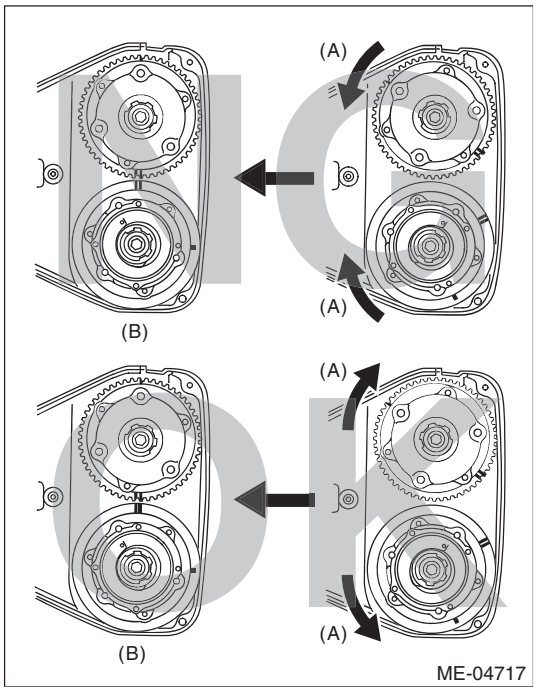

(A) Direction of rotation
(B) Timing belt installation position

GETTHEMANUALS.org

8) Align the alignment mark on the timing belt with marks on the sprockets in the alphabetical order shown in the figure. While aligning marks, position the timing belt properly, and install the timing belt.

CAUTION:
- **If the timing belt slips by 1 or more teeth, the valve and piston may hit each other.**
- **Make sure that the direction of belt rotation is correct.**

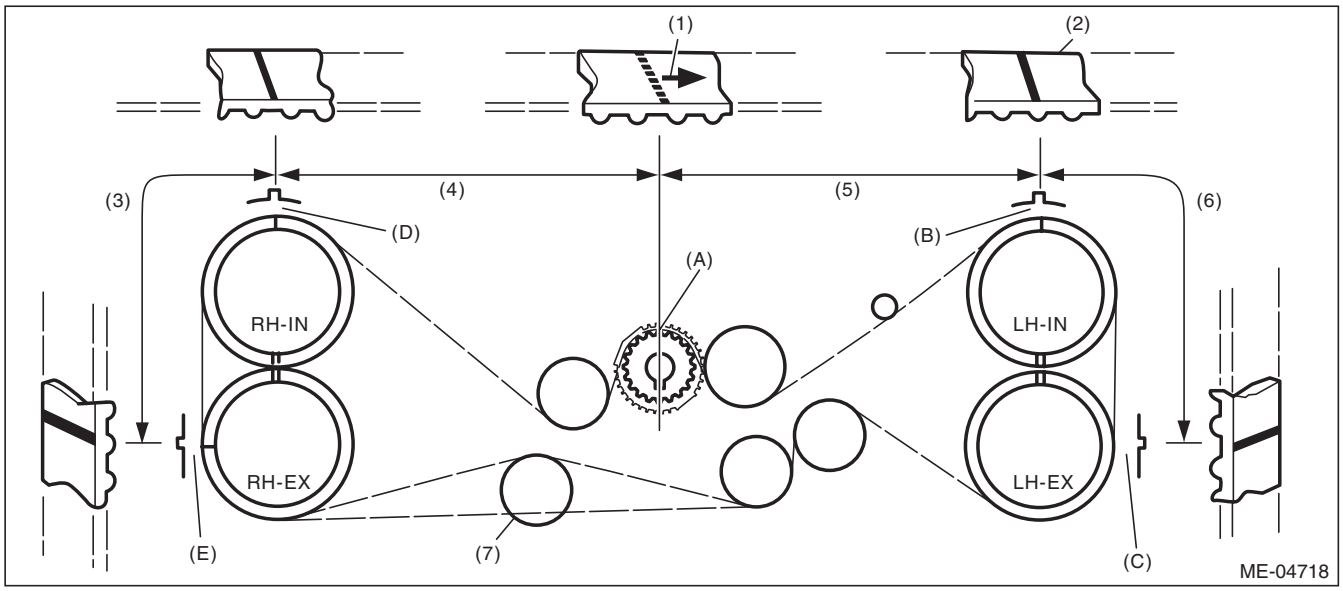

(1)	Arrow mark	(4)	54.5 teeth	(6)	28 teeth
(2)	Timing belt	(5)	51 teeth	(7)	Install it in the end
(3)	28 teeth				

9) Install the belt idlers.

Tightening torque:
39 N·m (4.0 kgf-m, 28.8 ft-lb)

NOTE:
Make sure that the marks on the timing belt and sprockets are aligned.

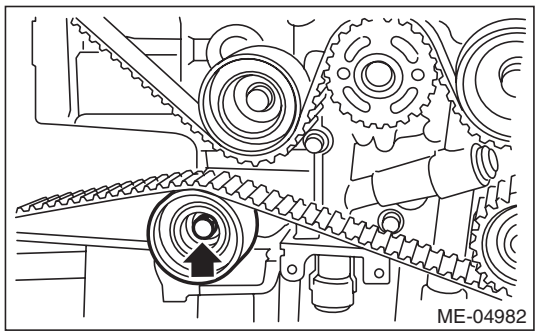

GETTHEMANUALS.org

10) After ensuring that the marks on the timing belt and sprockets are aligned, remove the stopper pin from tensioner adjuster.

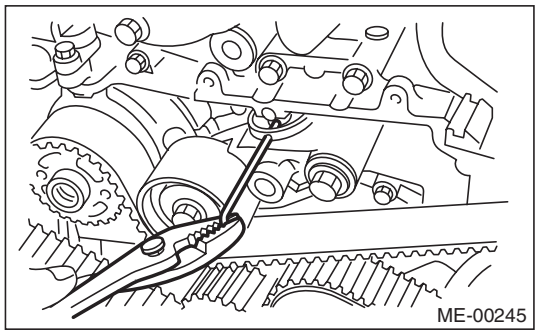

11) Install the timing belt guide.
(1) Temporarily tighten the bolts mounting the timing belt guide.

NOTE:
- Before installing the timing belt guide, clean the timing belt guide mounting bolt holes of the timing belt cover No. 2.
- Apply liquid gasket to the thread of the timing belt guide mounting bolt on the cam sprocket section. (when reusing bolts)

Liquid gasket:
THREE BOND 1324 (Part No. 004403042) or equivalent

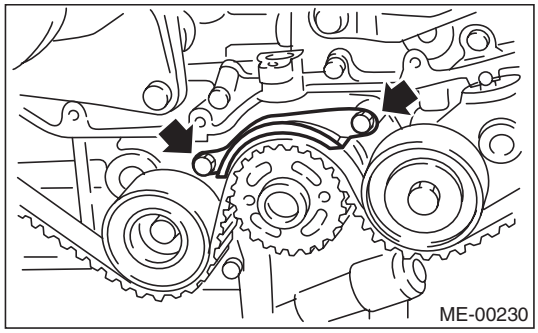

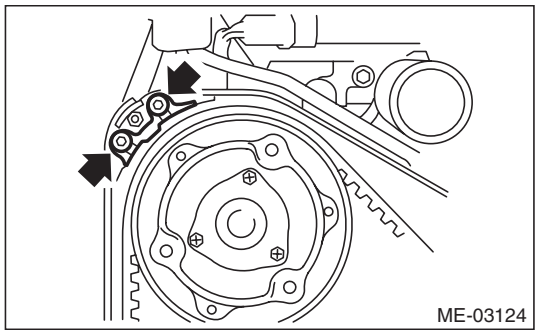

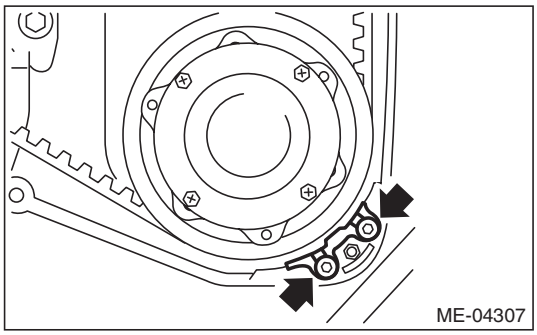

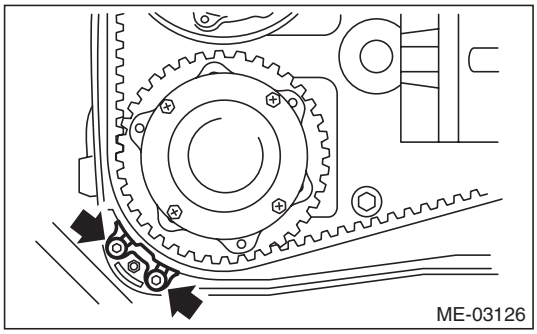

(2) Adjust the clearance between timing belt and timing belt guide using a thickness gauge and tighten.

Clearance:
1.0±0.5 mm (0.039±0.020 in)

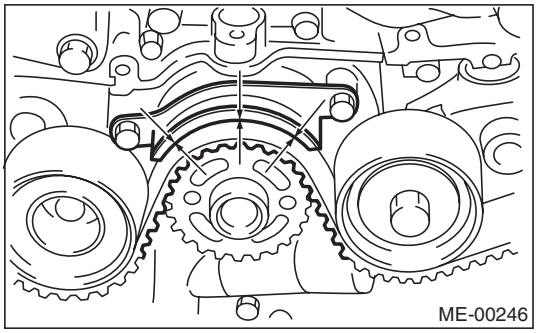

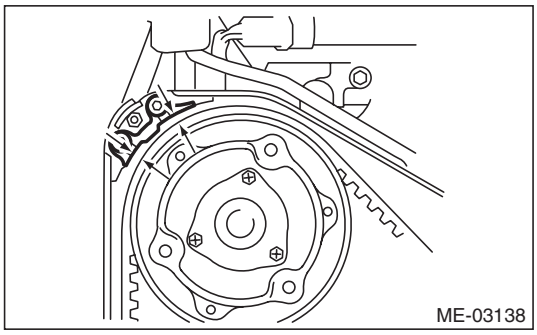

GETTHEMANUALS.org

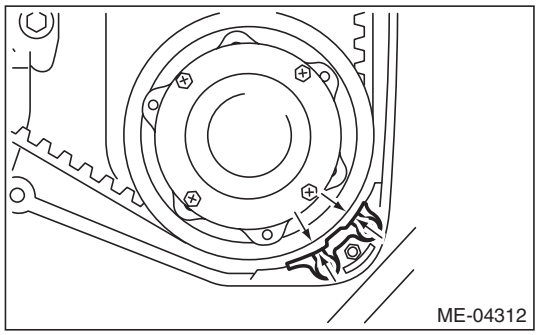

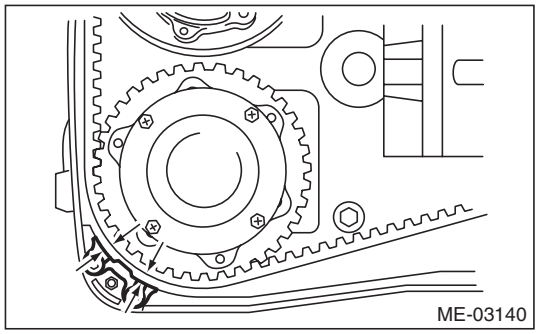

Tightening torque:
9.75 N·m (1.0 kgf-m, 7.2 ft-lb)

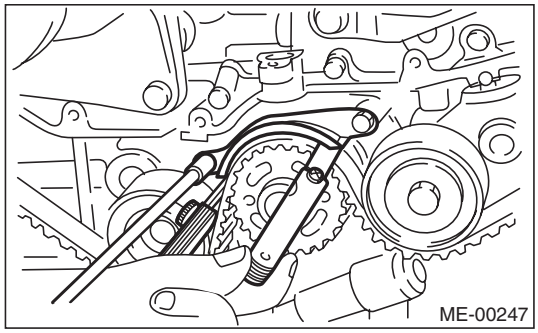

Tightening torque:
6.4 N·m (0.7 kgf-m, 4.7 ft-lb)

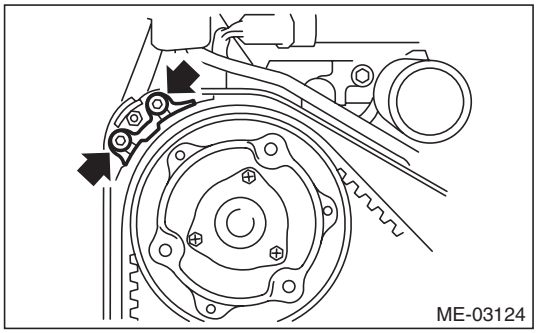

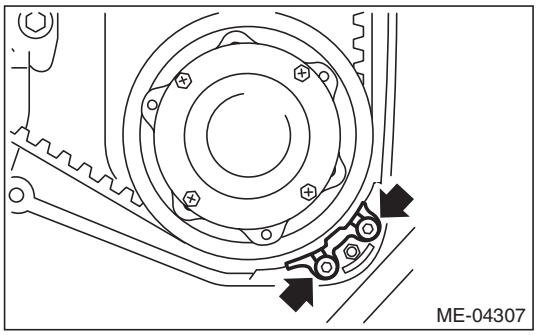

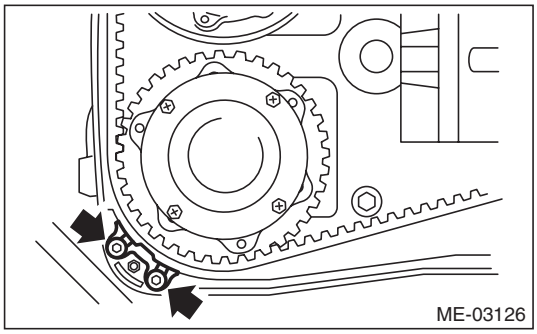

12) Install the timing belt cover. <Ref. to ME(H4DOTC)-49, INSTALLATION, Timing Belt Cover.>
13) Install the crank pulley. <Ref. to ME(H4DOTC)-44, INSTALLATION, Crank Pulley.>

GETTHEMANUALS.org

C: INSPECTION

1. TIMING BELT

1) Check the timing belt teeth for breaks, cracks or wear. If any fault is found, replace the timing belt.
2) Check the condition on the back surface of the timing belt. If cracks are found, replace the timing belt.

CAUTION:
- **Be careful not to let oil, grease or coolant contact the timing belt. Remove quickly and thoroughly if this happens.**
- **Do not bend the timing belt sharply.**

In radial diameter h:
60 mm (2.36 in) or more

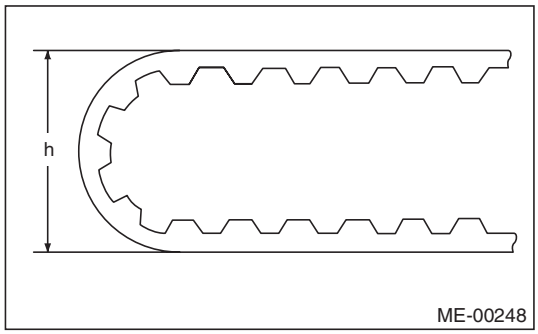

2. AUTOMATIC BELT TENSION ADJUSTER

1) Visually check the oil seals for leaks, and rod ends for abnormal wear and scratches. If necessary, replace the automatic belt tension adjuster assembly.

NOTE:
Slight traces of oil on the oil seal of the rod does not indicate a problem.
2) Check that the adjuster rod does not move when a pressure of 165 N (16.8 kgf, 37.1 lbf) is applied to it. This is to check adjuster rod stiffness.
3) If the adjuster rod is not stiff enough and moves freely when applying 165 N (16.8 kgf, 37.1 lbf), check it using the following procedures:
(1) Slowly press the adjuster rod down to the end surface of cylinder. Repeat this operation two to three times.
(2) With the adjuster rod moved all the way up, apply a pressure of 165 N (16.8 kgf, 37.1 lbf) to it, and check the adjuster rod stiffness.
(3) If the adjuster rod is not stiff and moves down, replace the automatic belt tension adjuster assembly with a new part.

CAUTION:
- **Always use a vertical type pressing tool to move the adjuster rod down.**
- **Do not use a lateral type vise.**
- **Push the adjuster rod vertically.**
- **Press-in the push adjuster rod gradually taking three minutes or more.**
- **Do not allow press pressure to exceed 9,807 N (1,000 kgf, 2,205 lbf).**
- **Push in the adjuster rod to the end face of the cylinder. However, do not press the adjuster rod below the end face of the cylinder. Doing so may damage the cylinder.**

4) Measure the amount of adjuster rod protrusion “L” from the end surface of the cylinder. If it is not within specifications, replace the automatic belt tension adjuster assembly with a new part.

Protrusion amount of adjuster rod L:
5.2 — 6.2 mm (0.205 — 0.244 in)

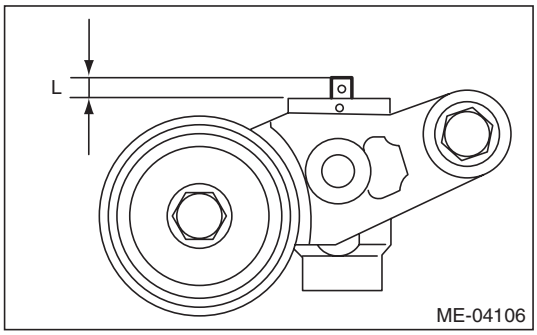

3. BELT TENSION PULLEY

1) Check the mating surfaces of timing belt and contact point of adjuster rod for abnormal wear or scratches. Replace the automatic belt tension adjuster assembly with a new part if faulty.
2) Check the belt tension pulley for smooth rotation. Replace the automatic belt tension adjuster assembly with a new part if abnormal noise or excessive play occurs.
3) Check the belt tension pulley for grease leakage.

4. BELT IDLER

1) Check the belt idler for smooth rotation. Replace if noise or excessive play occurs.
2) Check the outer contacting surfaces of idler pulley for abnormal wear and scratches.
3) Check the belt idler for grease leakage.

GETTHEMANUALS.org

16. Cam Sprocket

A: REMOVAL

NOTE:
When replacing a single part, perform the work with the engine assembly installed to body.

1) Remove the crank pulley. <Ref. to ME(H4DOTC)-44, REMOVAL, Crank Pulley.>
2) Remove the timing belt cover. <Ref. to ME(H4DOTC)-46, REMOVAL, Timing Belt Cover.>
3) Remove the timing belt. <Ref. to ME(H4DOTC)-52, REMOVAL, Timing Belt.>
4) Remove the actuator covers of the intake and exhaust cam sprockets.
5) Use the ST to lock the cam sprocket, and remove the cam sprocket bolt.

ST 499977500 CAM SPROCKET WRENCH

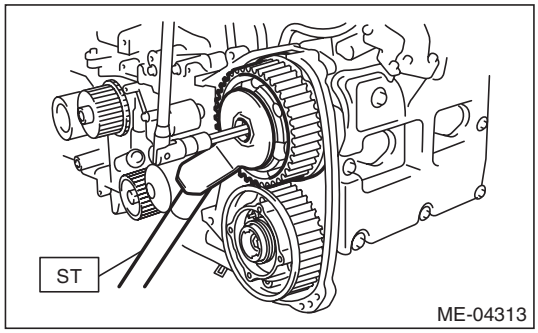

6) Remove the cam sprocket.

B: INSTALLATION

1) Install the cam sprocket.
2) Use the ST to lock the cam sprocket, and install the cam sprocket bolt.

NOTE:
Do not confuse cam sprockets (LH) and (RH) or (INT) and (EXH) during installation.

ST 499977500 CAM SPROCKET WRENCH

Tightening torque:
Tighten to 30 N·m (3.1 kgf-m, 22.1 ft-lb) of torque, and then tighten further by 45°.

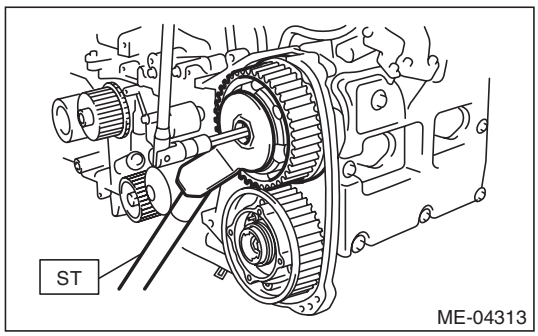

3) Install the actuator covers of intake cam sprocket and exhaust cam sprocket.

NOTE:
Use new O-rings.

Tightening torque:
3.4 N·m (0.3 kgf-m, 2.5 ft-lb)

4) Install the timing belt. <Ref. to ME(H4DOTC)-54, INSTALLATION, Timing Belt.>
5) Install the timing belt cover. <Ref. to ME(H4DOTC)-49, INSTALLATION, Timing Belt Cover.>
6) Install the crank pulley. <Ref. to ME(H4DOTC)-44, INSTALLATION, Crank Pulley.>

C: INSPECTION

1) Check the cam sprocket teeth for abnormal wear and scratches.
2) Make sure there is no free play between cam sprocket and key.

GETTHEMANUALS.org

17. Crank Sprocket

A: REMOVAL

NOTE:
When replacing a single part, perform the work with the engine assembly installed to body.

1) Remove the crank pulley. <Ref. to ME(H4DOTC)-44, REMOVAL, Crank Pulley.>
2) Remove the timing belt cover. <Ref. to ME(H4DOTC)-46, REMOVAL, Timing Belt Cover.>
3) Remove the timing belt. <Ref. to ME(H4DOTC)-52, REMOVAL, Timing Belt.>
4) Remove the crank sprocket.

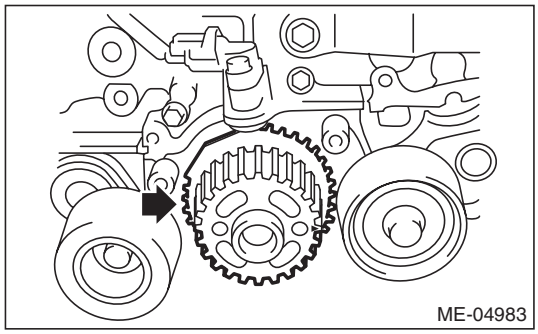

B: INSTALLATION

1) Install the crank sprocket.

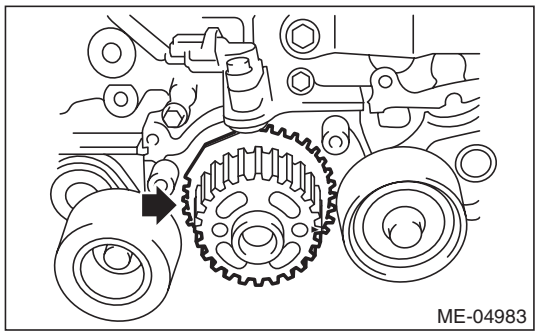

2) Install the timing belt. <Ref. to ME(H4DOTC)-54, INSTALLATION, Timing Belt.>
3) Install the timing belt cover. <Ref. to ME(H4DOTC)-49, INSTALLATION, Timing Belt Cover.>
4) Install the crank pulley. <Ref. to ME(H4DOTC)-44, INSTALLATION, Crank Pulley.>

C: INSPECTION

1) Check the crank sprocket teeth for abnormal wear and scratches.
2) Make sure there is no free play between crank sprocket and key.
3) Check the crank sprocket protrusion used for sensor for damage and contamination of foreign matter.

GETTHEMANUALS.org

18. Camshaft

A: REMOVAL

1) Remove the engine from the vehicle. <Ref. to ME(H4DOTC)-31, REMOVAL, Engine Assembly.>
2) Remove the crank pulley. <Ref. to ME(H4DOTC)-44, REMOVAL, Crank Pulley.>
3) Remove the timing belt cover. <Ref. to ME(H4DOTC)-46, REMOVAL, Timing Belt Cover.>
4) Remove the timing belt. <Ref. to ME(H4DOTC)-52, REMOVAL, Timing Belt.>
5) Remove the cam sprocket. <Ref. to ME(H4DOTC)-61, REMOVAL, Cam Sprocket.>
6) Disconnect the connector of the intake oil flow control solenoid valve.

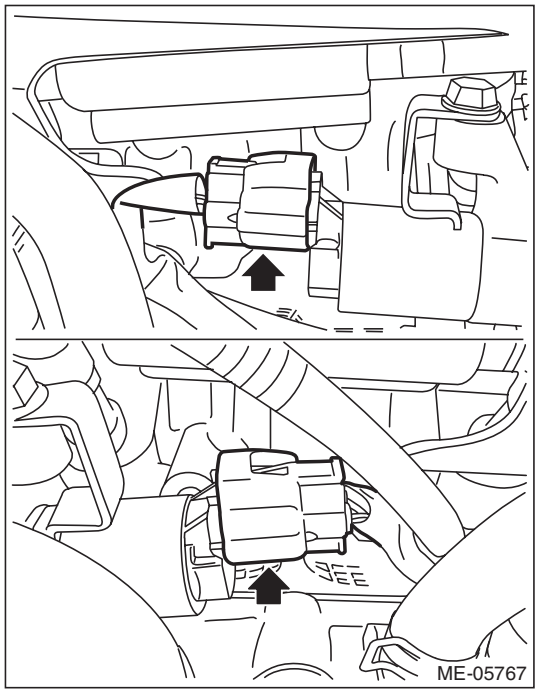

7) Disconnect the connector (A) from the exhaust camshaft position sensor and the connector (B) form the exhaust oil flow control solenoid valve.

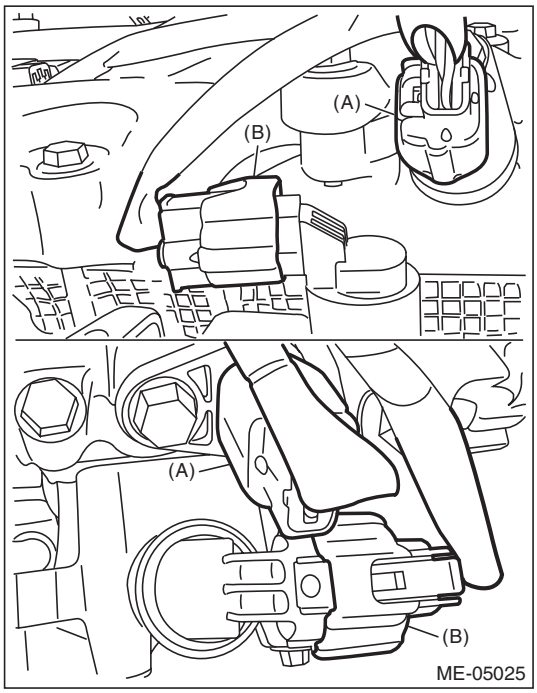

8) Remove the timing belt cover No. 2 RH (A) and timing belt cover No. 2 LH (B).

NOTE:
Do not damage or lose the seal rubber when removing the timing belt covers.

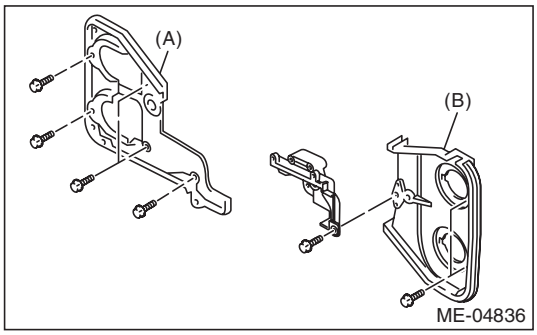

9) Remove the tensioner bracket.

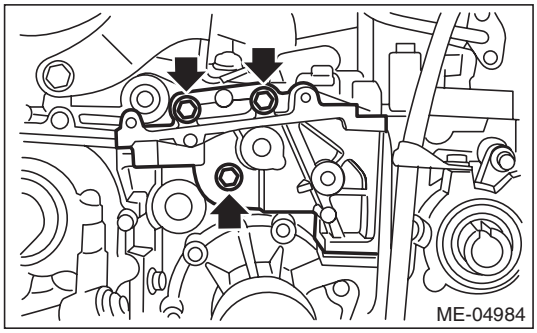

GETTHEMANUALS.org

10) Disconnect the oil level switch connector.

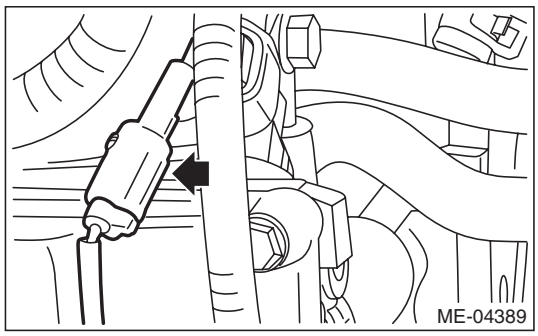

11) Remove the clip (A) and bolt (B) securing the engine harness or oil level switch harness to the rocker cover.

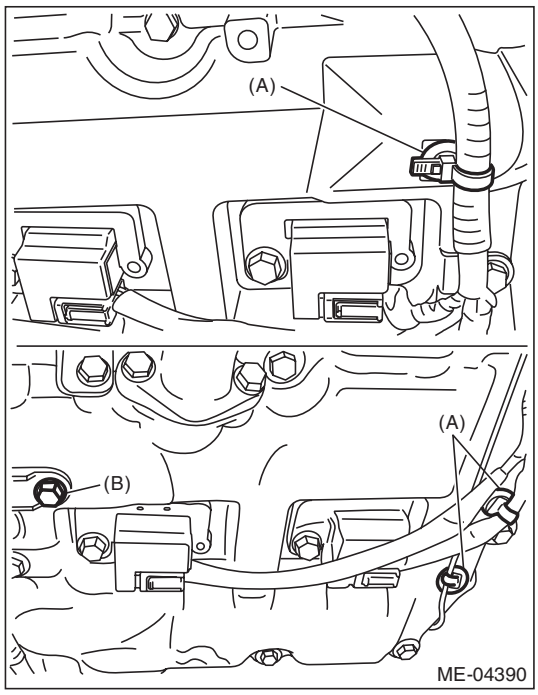

12) Remove the ignition coil. <Ref. to IG(H4DOTC)-6, REMOVAL, Ignition Coil.>

13) Remove the scavenge pump. (RH side only) <Ref. to LU(H4SO)-30, REMOVAL, Scavenge Pump.>

14) Disconnect PCV hose (A) and vacuum hose (B) from the rocker cover.

NOTE:
Pinch the clamp of the PCV hose (A) by fitting the cut out in the ST with the protrusion on the clamp as shown in the figure, and unlock the clamp.
ST 18353AA000 CLAMP PLIERS

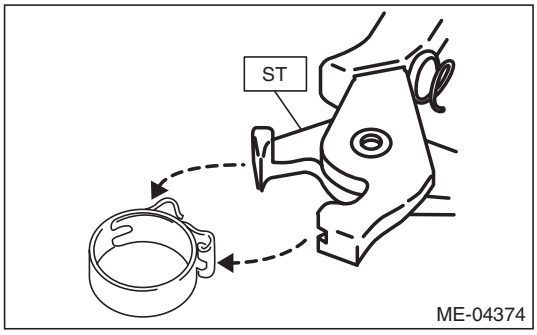

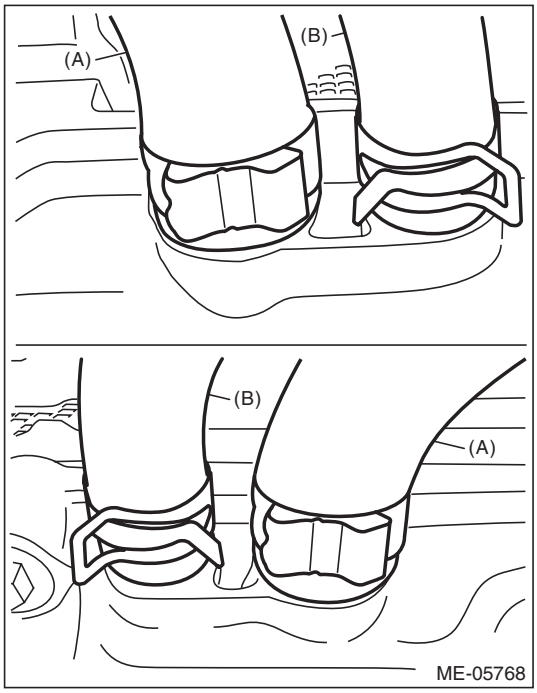

GETTHEMANUALS.org

15) Remove the rocker cover.

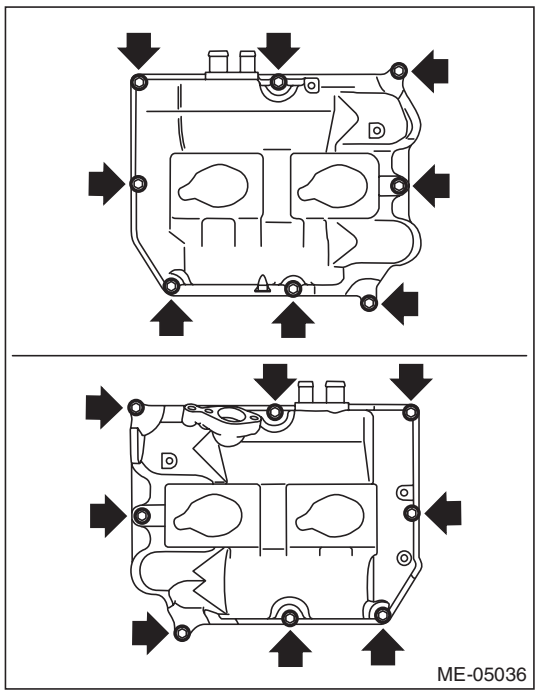

16) Remove the union bolt without filter (without protrusion) which secures the oil pipe to the front camshaft cap.

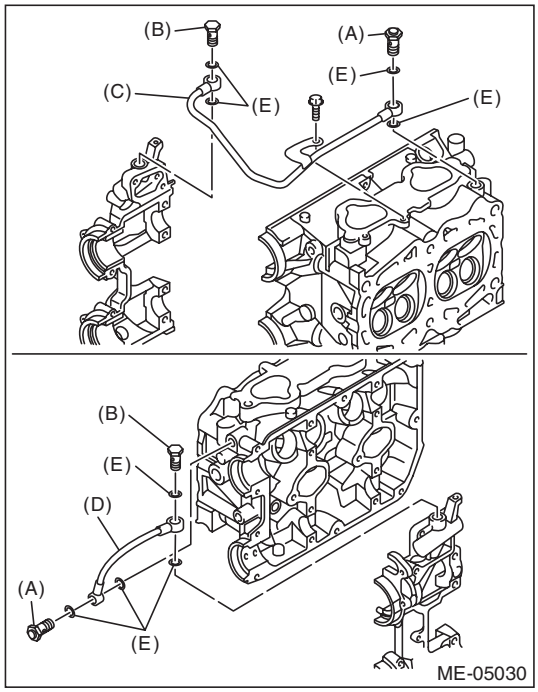

(A) Union bolt with filter (with protrusion)
(B) Union bolt without filter (without protrusion)
(C) Oil pipe RH
(D) Oil pipe LH
(E) Gasket

17) Loosen the bolts located on the upper side of the front camshaft cap, intake camshaft cap and rear camshaft cap (RH side only) equally, a little at a time in alphabetical order, as shown in the figure.

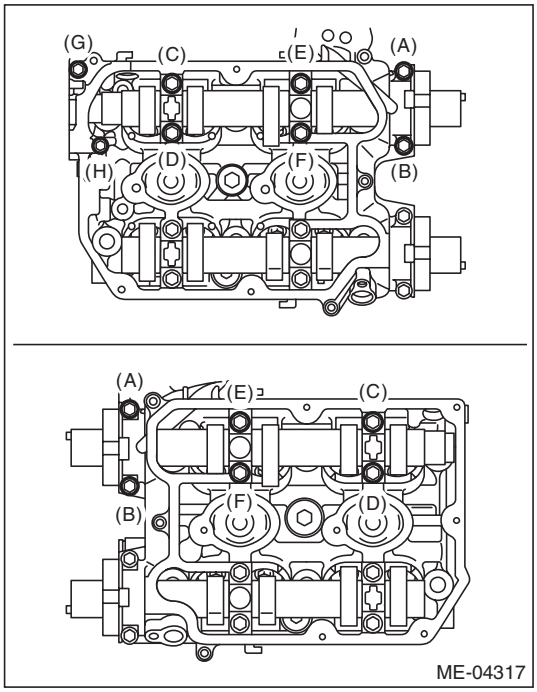

18) Loosen the lower side of the front camshaft cap and the exhaust camshaft cap bolts equally, a little at a time in alphabetical sequence shown in the figure.

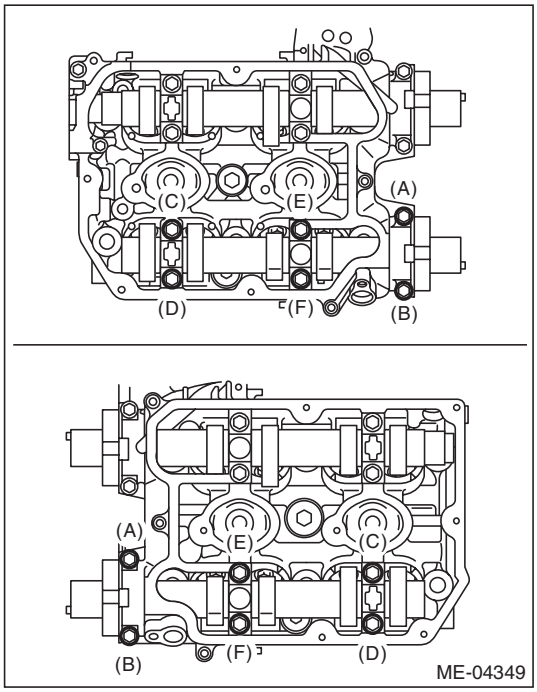

19) Remove the front camshaft cap.
20) Remove the intake camshaft caps, intake camshaft and rear camshaft caps (RH side only).

GETmyMANUALS.org

21) Remove the exhaust camshaft caps and exhaust camshaft.

NOTE:
Arrange camshaft caps in order so that they can be installed in their original positions.
22) Remove the oil seal.

CAUTION:
Do not scratch the journal surface when removing the oil seal.
23) Similarly, remove the camshaft RH and related parts.

B: INSTALLATION

1) Install the camshaft.
Apply engine oil to the cylinder head at camshaft journal installation location before installing the camshaft. Install the camshaft so that each valve is close to or in contact with base circle of the cam lobe.

NOTE:
- Set the camshaft to the position shown in the figure.
- When set at the position shown in the figure, it is not necessary to rotate the camshaft RH when installing the timing belt, but it is necessary to rotate the camshaft LH slightly.

Intake camshaft LH:
Rotate 80° clockwise.

Exhaust camshaft LH:
Rotate 45° counterclockwise.

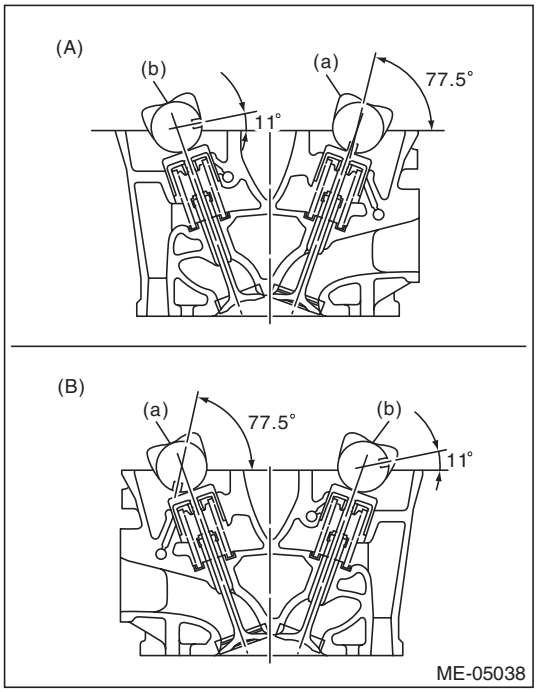

(A) Cylinder head RH
(B) Cylinder head LH
(a) Intake camshaft
(b) Exhaust camshaft

GETTHEMANUALS.org

2) Install the camshaft cap.
(1) Apply small amount of liquid gasket to the mating surface of front camshaft cap.

NOTE:
- Install within 5 min. after applying liquid gasket.
- Do not apply liquid gasket excessively. Applying excessively may cause excess gasket to come out and flow toward oil seal, resulting in oil leak.

Liquid gasket:
THREE BOND 1217G (Part No. K0877Y0100) or equivalent

Liquid gasket applying diameter:
Mating surfaces other than ranges A and B
2±0.5 mm (0.0787±0.0197 in)
Mating surfaces of ranges A and B
3±1 mm (0.1181±0.0394 in)

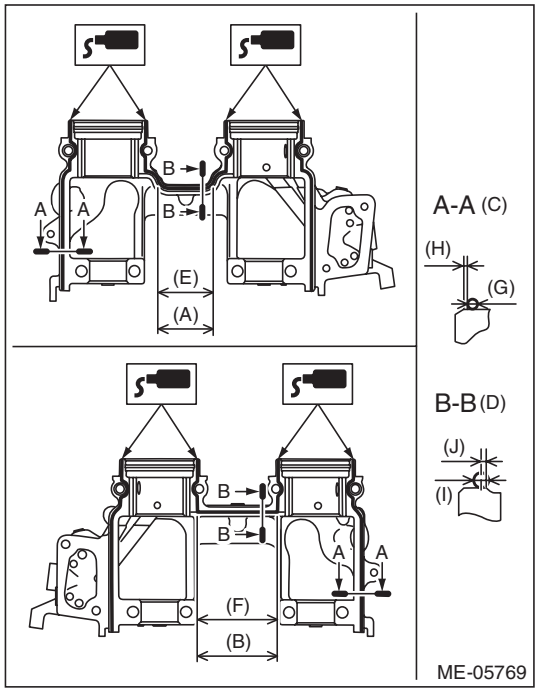

(A) Range A
(B) Range B
(C) Liquid gasket applying position of mating surfaces of ranges other than A and B
(D) Liquid gasket applying position of mating surfaces of ranges A and B
(E) 44.8 mm (1.7638 in)
(F) 65 mm (2.5591 in)
(G) ϕ2±0.5 mm (0.0787±0.0197 in)
(H) 0.5±0.5 mm (0.0197±0.0197 in)
(I) ϕ3±1 mm (0.1181±0.0394 in)
(J) 1 mm (0.0394 in) or less

(2) Apply small amount of liquid gasket to the mating surface of rear camshaft cap (RH side only).

NOTE:
- Install within 5 min. after applying liquid gasket.
- Do not apply liquid gasket excessively. Applying excessively may cause excess gasket to come out and flow toward oil seal, resulting in oil leak.

Liquid gasket:
THREE BOND 1217G (Part No. K0877Y0100) or equivalent

Liquid gasket applying diameter:
2±0.5 mm (0.0787±0.0197 in)

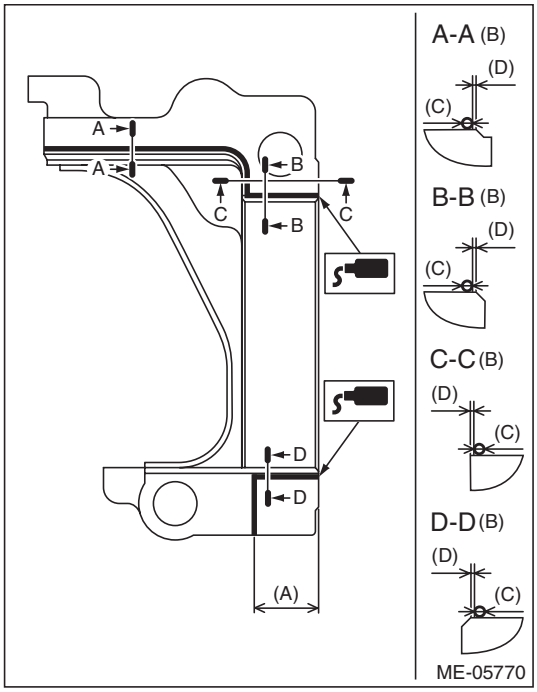

(A) 12.5±1.0 mm (0.4921±0.0394 in)
(B) Liquid gasket applying position
(C) ϕ2±0.5 mm (0.0787±0.0197 in)
(D) 0.5±0.5 mm (0.0197±0.0197 in)

(3) Apply a thin coat of engine oil to the cap journal surface, and install the camshaft cap to the camshaft.

GETMANUALS.org

(4) Gradually tighten the camshaft cap in at least two steps, in alphabetical order shown in the figure, and then tighten to the specified torque.

Tightening torque:
T1: 9.75 N·m (1.0 kgf-m, 7.2 ft-lb)
T2: 20 N·m (2.0 kgf-m, 14.8 ft-lb)

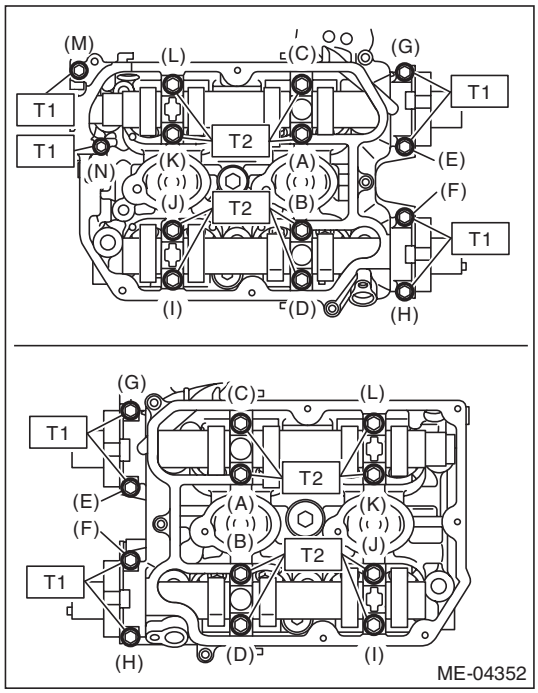

(5) After tightening the camshaft cap, ensure the camshaft rotates only slightly while holding it at base circle.

3) Apply a thin coat of engine oil to the periphery of the camshaft oil seal and oil seal lip, and install the oil seal on the camshaft using ST1 and ST2.

NOTE:
Use a new oil seal.

ST1	499587600	OIL SEAL INSTALLER
ST2	499597200	OIL SEAL GUIDE

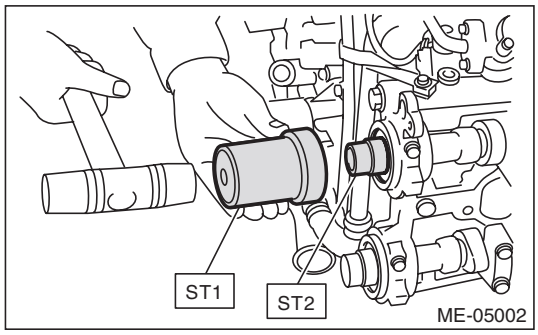

4) Install the oil pipe to the front camshaft cap using the union bolt without filter (without protrusion).

NOTE:
Use a new gasket.

Tightening torque:
29 N·m (3.0 kgf-m, 21.4 ft-lb)

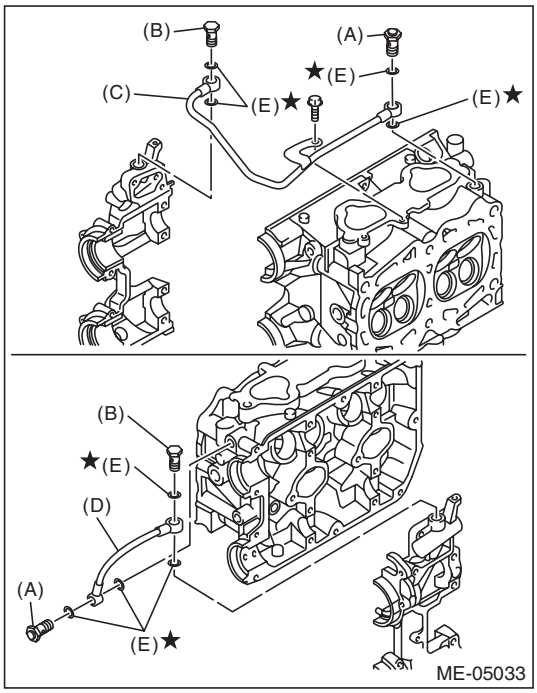

(A) Union bolt with filter (with protrusion)
(B) Union bolt without filter (without protrusion)
(C) Oil pipe RH
(D) Oil pipe LH
(E) Gasket

5) Install the tensioner bracket.

Tightening torque:
24.5 N·m (2.5 kgf-m, 18.1 ft-lb)

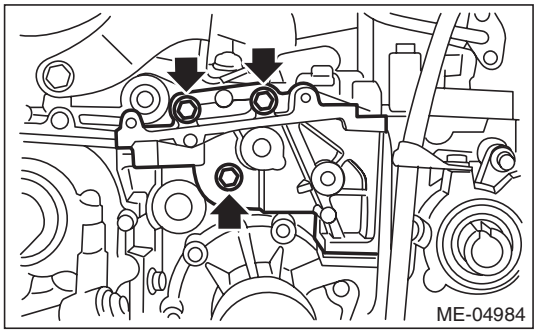

GETTHEMANUALS.org

6) Install the timing belt cover No. 2 RH (A) and timing belt cover No. 2 LH (B).

Tightening torque:
5 N·m (0.5 kgf-m, 3.7 ft-lb)

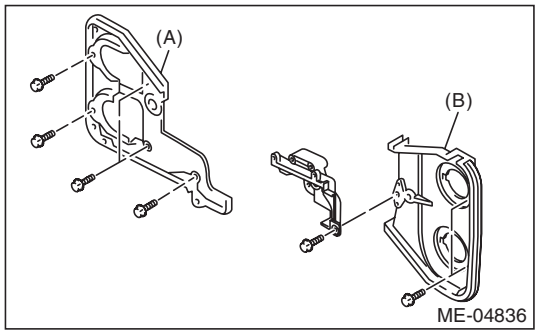

7) Install the cam sprocket. <Ref. to ME(H4DOTC)-61, INSTALLATION, Cam Sprocket.>
8) Install the timing belt. <Ref. to ME(H4DOTC)-54, INSTALLATION, Timing Belt.>
9) Adjust the valve clearance. <Ref. to ME(H4DOTC)-30, ADJUSTMENT, Valve Clearance.>
10) Install the rocker cover.
(1) Install the rocker cover gasket to the rocker cover. (outer section and ignition coil section)

NOTE:
Use a new rocker cover gasket.

(2) Apply liquid gasket to the specified point of the cylinder head.

NOTE:
Install within 5 min. after applying liquid gasket.

Liquid gasket:
THREE BOND 1217G (Part No. K0877Y0100) or equivalent

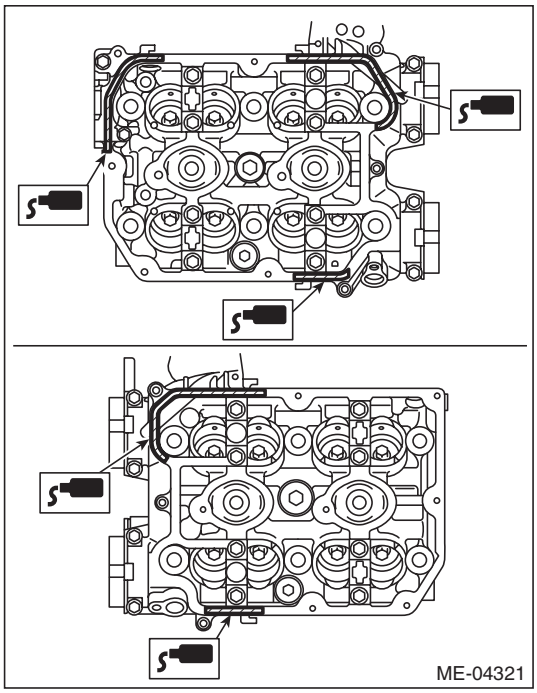

(3) Install the rocker cover onto cylinder heads. Ensure the gasket is properly positioned during installation.

GETTHEMANUALS.org

(4) Temporarily tighten the rocker cover bolts in alphabetical order shown in the figure, and then tighten to specified torque in alphabetical order.

Tightening torque:
6.4 N·m (0.7 kgf-m, 4.7 ft-lb)

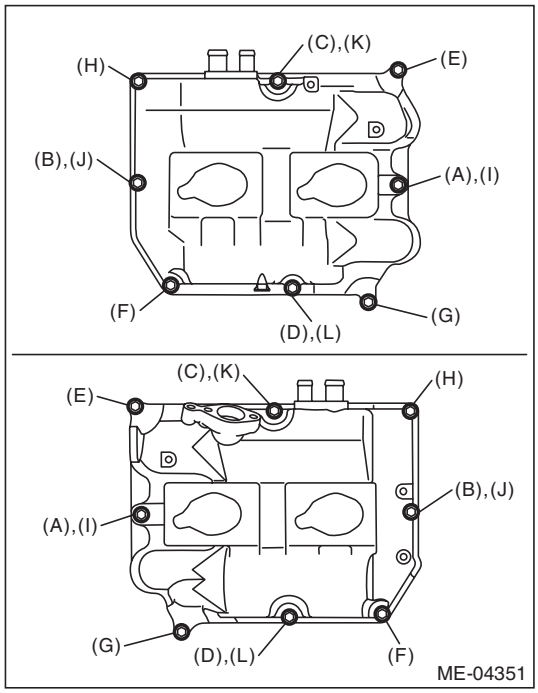

11) Install the scavenge pump. <Ref. to LU(H4SO)-30, INSTALLATION, Scavenge Pump.>
12) Connect the PCV hose (A) and vacuum hose (B) to the rocker cover.

NOTE:
Use a new clamp for the PCV hose (A), fit the cut out in the ST with the protrusion on the clamp as shown in the figure, and lock the clamp.
ST 18353AA000 CLAMP PLIERS

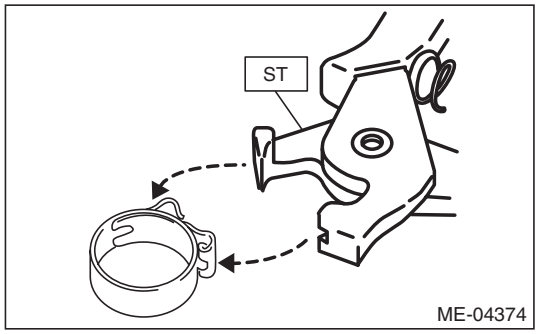

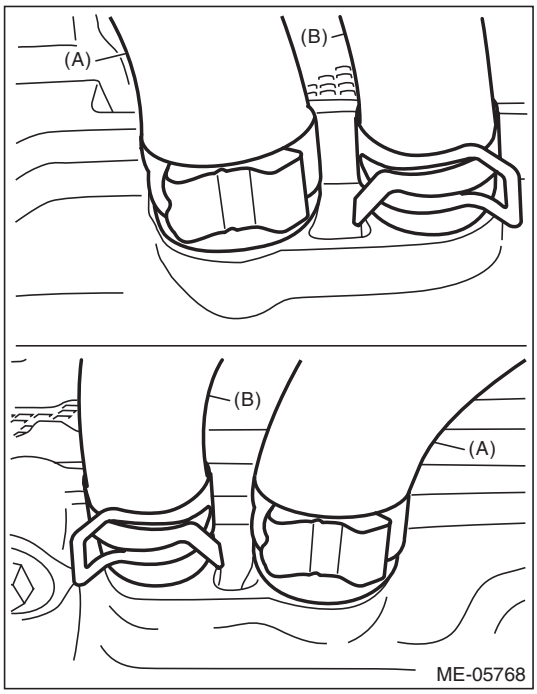

13) Install the ignition coil. <Ref. to IG(H4DOTC)-6, INSTALLATION, Ignition Coil.>
14) Secure the engine harness or oil level switch harness to the rocker cover with the clip (A) and bolt (B).

Tightening torque:
6.4 N·m (0.7 kgf-m, 4.7 ft-lb)

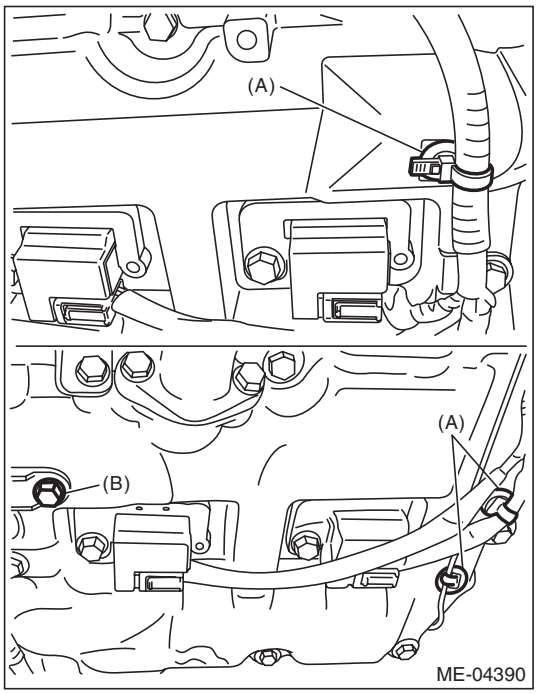

GETTHEMANUALS.org

15) Connect the connector to the oil level switch.

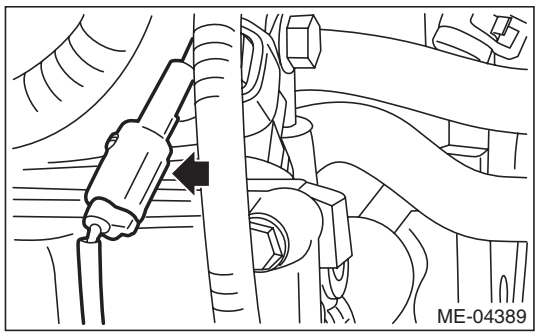

16) Connect the connector to the intake oil flow control solenoid valve.

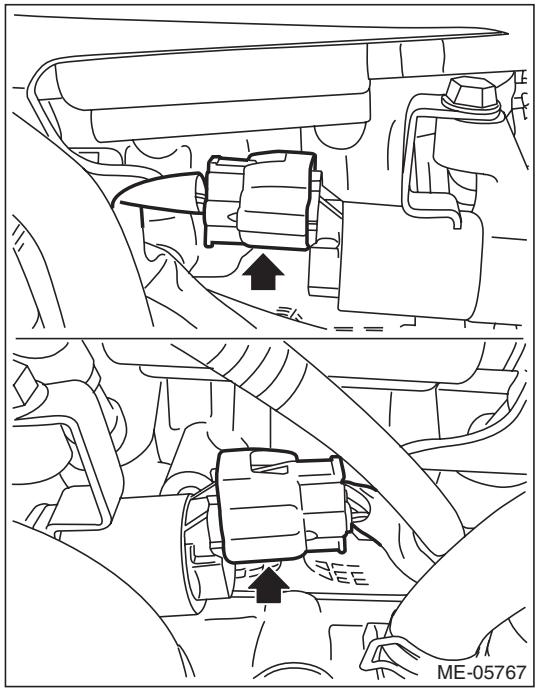

17) Connect the connector (A) from the exhaust camshaft position sensor and the connector (B) to the exhaust oil flow control solenoid valve.

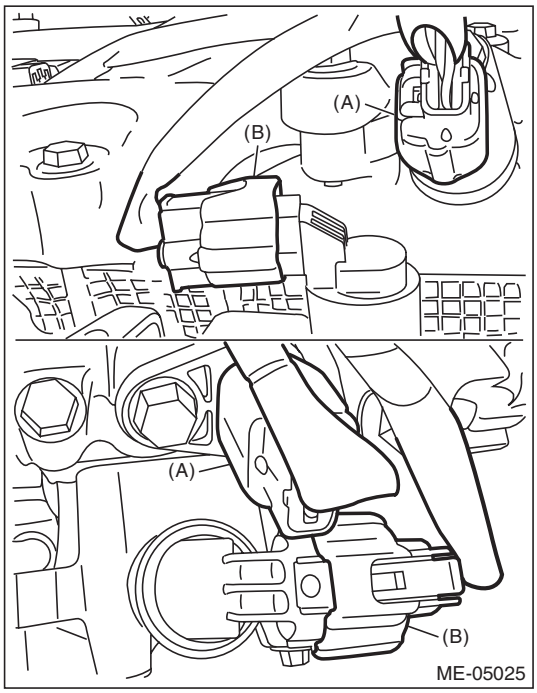

18) Install the timing belt cover. <Ref. to ME(H4DOTC)-49, INSTALLATION, Timing Belt Cover.>

19) Install the crank pulley. <Ref. to ME(H4DOTC)-44, INSTALLATION, Crank Pulley.>

20) Install the engine to the vehicle. <Ref. to ME(H4DOTC)-34, INSTALLATION, Engine Assembly.>

GETTHEMANUALS.org

C: INSPECTION

1) Measure the bend, and repair or replace if necessary.

Camshaft bend limit:
0.020 mm (0.00079 in)

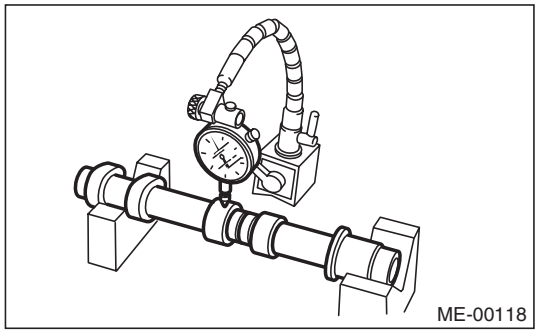

2) Check the journal for damage and wear. Replace if faulty.
3) Check the cutout portion used for camshaft sensor for damage. Replace if faulty.
4) Check the cam face condition, and remove the minor faults by grinding with oil stone. Replace if there is uneven wear or others.
5) Measure the cam lobe height “H” and cam base circle diameter “A”. If it exceeds the standard or offset wear occurs, replace it.

Cam lobe height H:

Standard
Intake
46.55 — 46.65 mm (1.833 — 1.837 in)
Exhaust
45.85 — 45.95 mm (1.805 — 1.809 in)

Cam base circle diameter A:
Standard
37.0 mm (1.457 in)

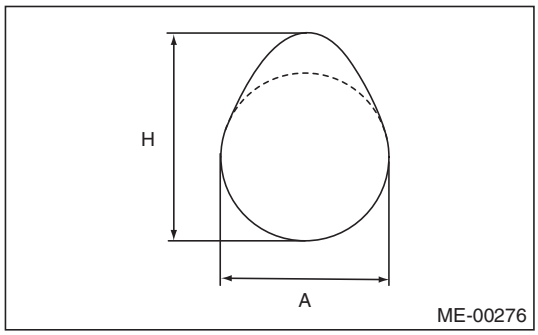

6) Measure the outside diameter of camshaft journal. If the journal diameter is not within specification, check the oil clearance.

	Camshaft journal	
	Front	Center, rear
Standard mm (in)	37.946 — 37.963 (1.4939 — 1.4946)	29.946 — 29.963 (1.1790 — 1.1796)

7) Measure the oil clearance of camshaft journal.
(1) Clean the camshaft cap and cylinder head camshaft journal.
(2) Place the camshaft on cylinder head. (Without installing the valve lifter)
(3) Place a plastigauge across each camshaft journals.
(4) Gradually tighten the camshaft cap in at least two steps, in alphabetical order shown in the figure, and then tighten to the specified torque. Do not turn the camshaft.

Tightening torque:
T1: 9.75 N·m (1.0 kgf-m, 7.2 ft-lb)
T2: 20 N·m (2.0 kgf-m, 14.8 ft-lb)

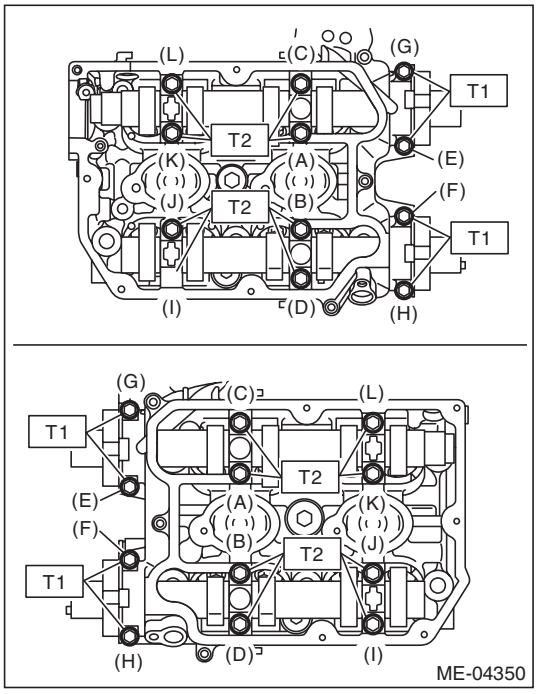

(5) Remove the camshaft cap.

GETmanuals.org

(6) Measure the widest point of the plastigauge on each journal. If oil clearance exceeds the standard, replace the camshaft. If necessary, replace the camshaft caps and cylinder head as a set.

Camshaft oil clearance:
Standard
0.037 — 0.072 mm (0.0015 — 0.0028 in)

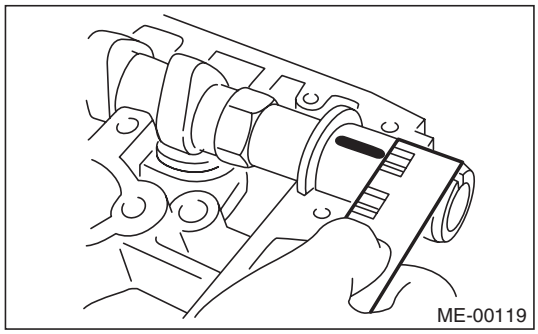

(7) Completely remove the plastigauge.

8) Measure the thrust clearance of camshaft with the dial gauge set at end of camshaft. If the thrust clearance is not within the standard or there is off-set wear, replace the camshaft caps and cylinder head as a set. If necessary replace the camshaft.

Camshaft thrust clearance:
Standard
0.068 — 0.116 mm (0.0027 — 0.0047 in)

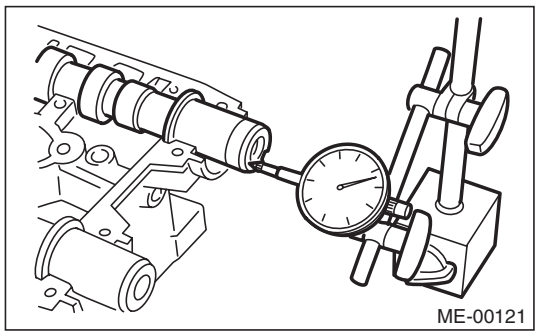

GETTHEMANUALS.org

19. Cylinder Head

A: REMOVAL

1) Remove the engine from the vehicle. <Ref. to ME(H4DOTC)-31, REMOVAL, Engine Assembly.>
2) Remove the intake manifold. <Ref. to FU(H4DOTC)-18, REMOVAL, Intake Manifold.>
3) Remove the crank pulley. <Ref. to ME(H4DOTC)-44, REMOVAL, Crank Pulley.>
4) Remove the timing belt cover. <Ref. to ME(H4DOTC)-46, REMOVAL, Timing Belt Cover.>
5) Remove the timing belt. <Ref. to ME(H4DOTC)-52, REMOVAL, Timing Belt.>
6) Remove the cam sprocket. <Ref. to ME(H4DOTC)-61, REMOVAL, Cam Sprocket.>
7) Remove the bolts which secure A/C compressor bracket to cylinder head. (LH side only)
8) Remove the oil pipe. <Ref. to LU(H4SO)-31, REMOVAL, Oil Pipe.>
9) Remove the clip stay.

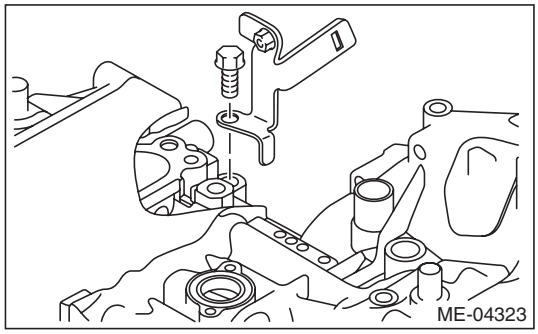

10) Remove the camshaft. <Ref. to ME(H4DOTC)-63, REMOVAL, Camshaft.>
11) Remove the oil level gauge guide. (LH side only)
12) Remove the cylinder head bolts in alphabetical order shown in the figure.

NOTE:
Leave the bolts (A) and (D) engaged by three or four threads to prevent the cylinder head from falling.

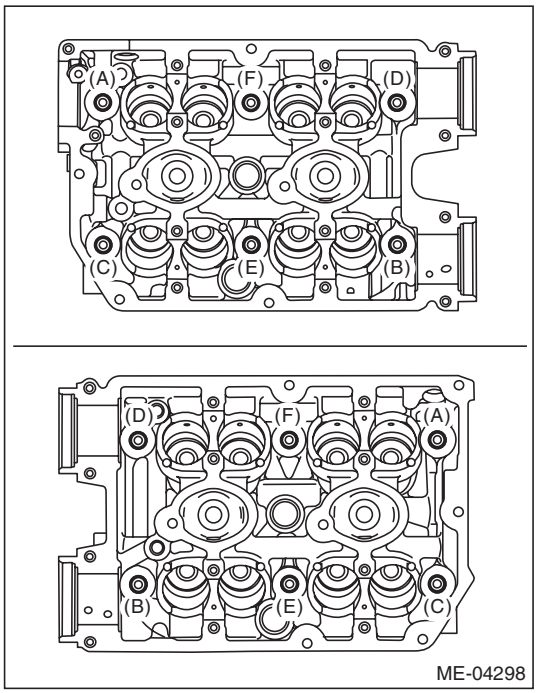

13) While tapping the cylinder head with a plastic hammer, separate it from cylinder block. Remove the bolts (A) and (D) to remove cylinder head.

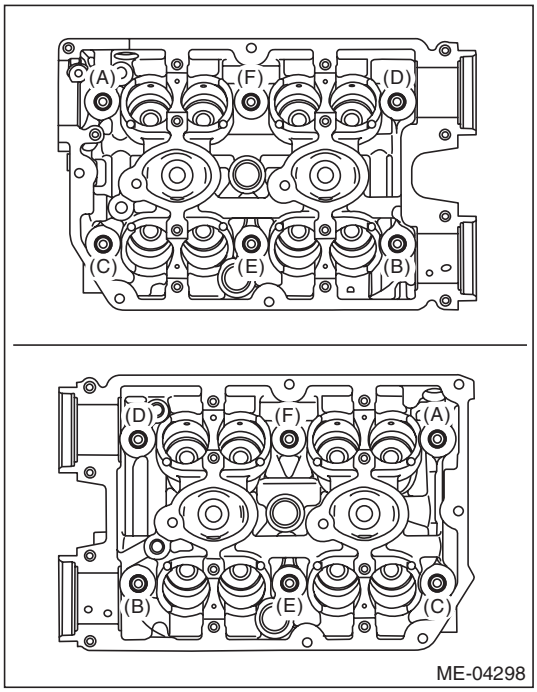

14) Remove the cylinder head gasket.

CAUTION:
Be careful not to scratch the mating surface of cylinder head and cylinder block.

GETTHEMANUALS.org

B: INSTALLATION

1) Install the cylinder head to the cylinder block.

CAUTION:
Be careful not to scratch the mating surface of cylinder head and cylinder block.

NOTE:
Use a new cylinder head gasket.

(1) Clean the bolt threads and the bolt holes in the cylinder block

CAUTION:
To avoid erroneous tightening of the bolts, clean out the bolt holes sufficiently by blowing with compressed air to eliminate engine coolant etc.

(2) Apply a sufficient coat of engine oil to the washer and bolt thread.
(3) Tighten all bolts to 40 N·m (4.1 kgf-m, 29.5 ft-lb) in alphabetical order.
(4) Retighten all bolts to 95 N·m (9.7 kgf-m, 70.1 ft-lb) in alphabetical order.

CAUTION:
If the bolt makes stick-slip sound during tightening, repeat the procedure from step (1). In this case, the cylinder head gasket can be reused.

(5) Loosen all the bolts by 180° in the reverse order of installing, and loosen them further by 180°.
(6) Tighten all bolts to 10 N·m (1.0 kgf-m, 7.4 ft-lb) in alphabetical order.
(7) Retighten all bolts to 30 N·m (3.1 kgf-m, 22.1 ft-lb) in alphabetical order.
(8) Retighten all bolts to 70 N·m (7.1 kgf-m, 51.6 ft-lb) in alphabetical order.
(9) Retighten all bolts by 80 — 90° in alphabetical order.
(10) Retighten all bolts by 40 — 45° in alphabetical order.

CAUTION:
The tightening angle of the bolt should not exceed 45°.

(11) Retighten bolts (A) and (B) by 40 — 45°.

CAUTION:
Make sure the total "tightening angle" of steps (10) and (11) does not exceed 90°.

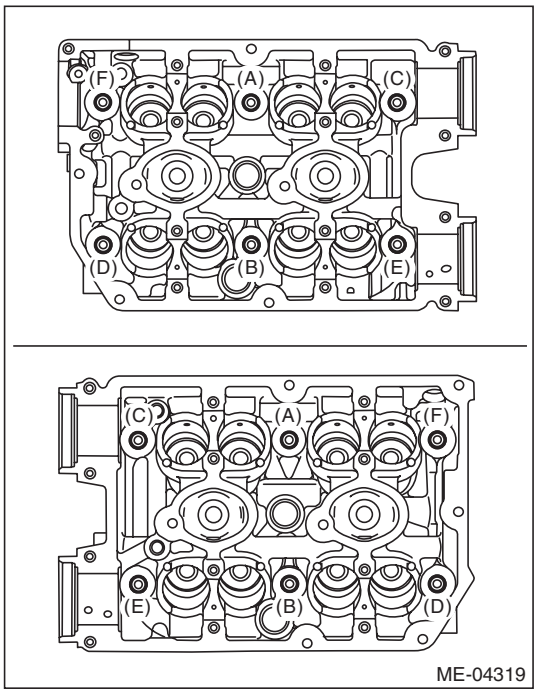

2) Install the oil level gauge guide. (LH side only)

Tightening torque:
6.4 N·m (0.7 kgf-m, 4.7 ft-lb)

3) Install the camshaft. <Ref. to ME(H4DOTC)-66, INSTALLATION, Camshaft.>
4) Install the clip stay.

Tightening torque:
36 N·m (3.7 kgf-m, 26.6 ft-lb)

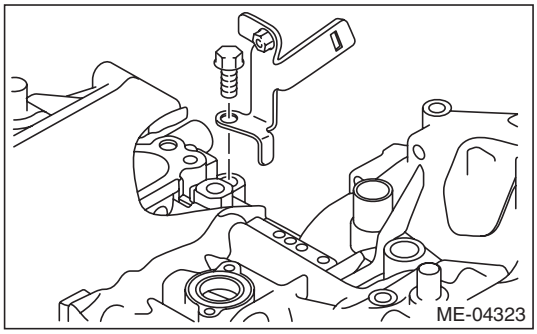

5) Install the oil pipe. <Ref. to LU(H4SO)-33, INSTALLATION, Oil Pipe.>
6) Install the A/C compressor bracket on cylinder head. (LH side only)

Tightening torque:
36 N·m (3.7 kgf-m, 26.6 ft-lb)

7) Install the cam sprocket. <Ref. to ME(H4DOTC)-61, INSTALLATION, Cam Sprocket.>

GETTHEMANUALS.org

8) Install the timing belt. <Ref. to ME(H4DOTC)-54, INSTALLATION, Timing Belt.>
9) Adjust the valve clearance. <Ref. to ME(H4DOTC)-30, ADJUSTMENT, Valve Clearance.>
10) Install the rocker cover.
(1) Install the rocker cover gasket to the rocker cover. (outer section and ignition coil section)

NOTE:
Use a new rocker cover gasket.

(2) Apply liquid gasket to the specified point of the cylinder head.

NOTE:
Install within 5 min. after applying liquid gasket.

Liquid gasket:
THREE BOND 1217G (Part No. K0877Y0100) or equivalent

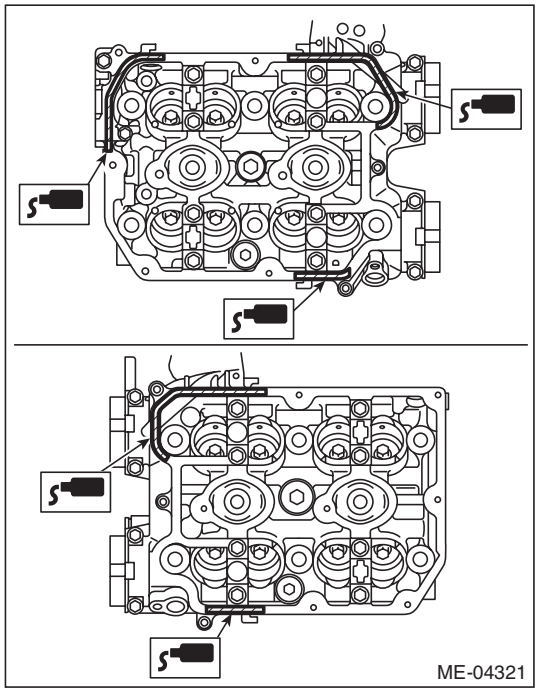

(3) Install the rocker cover onto cylinder heads. Ensure the gasket is properly positioned during installation.

(4) Temporarily tighten the rocker cover bolts in alphabetical order shown in the figure, and then tighten to specified torque in alphabetical order.

Tightening torque:
6.4 N·m (0.7 kgf-m, 4.7 ft-lb)

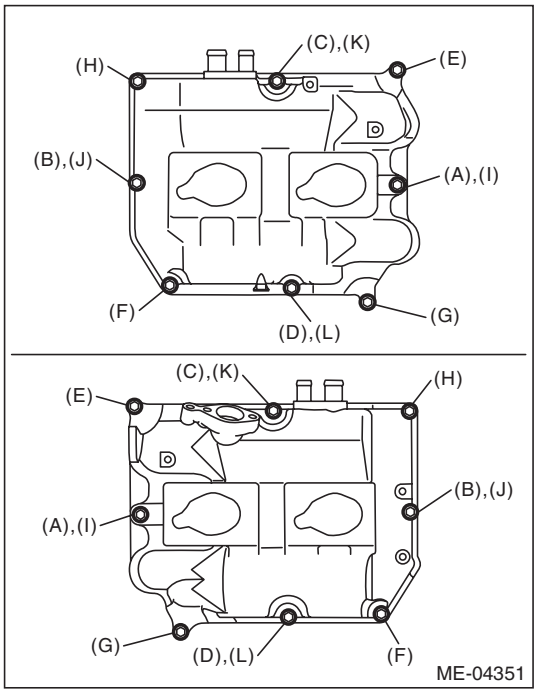

11) Connect the PCV hose to the rocker cover.
12) Install the timing belt cover. <Ref. to ME(H4DOTC)-49, INSTALLATION, Timing Belt Cover.>
13) Install the crank pulley. <Ref. to ME(H4DOTC)-44, INSTALLATION, Crank Pulley.>
14) Install the intake manifold. <Ref. to FU(H4DOTC)-22, INSTALLATION, Intake Manifold.>
15) Install the engine to the vehicle. <Ref. to ME(H4DOTC)-34, INSTALLATION, Engine Assembly.>

GETTHEMANUALS.org

C: DISASSEMBLY

1) Remove the valve lifter.
2) Place the cylinder head on ST1.
ST1 498267600 CYLINDER HEAD TABLE
3) Using ST2, compress the valve spring and remove the valve spring retainer key. Remove each valve and valve spring.
ST2 499718000 VALVE SPRING REMOVER

NOTE:
- Mark each valve to prevent confusion.
- Pay careful attention not to damage the lips of intake valve oil seals and exhaust valve oil seals.
- Keep all the removed parts in order for re-installing in their original positions.
- For removal and installation procedures of the valve guide, intake valve oil seal and exhaust valve oil seal, refer to “INSPECTION”. <Ref. to ME(H4DOTC)-79, VALVE GUIDE, INSPECTION, Cylinder Head.> <Ref. to ME(H4DOTC)-81, INTAKE AND EXHAUST VALVE OIL SEAL, INSPECTION, Cylinder Head.>

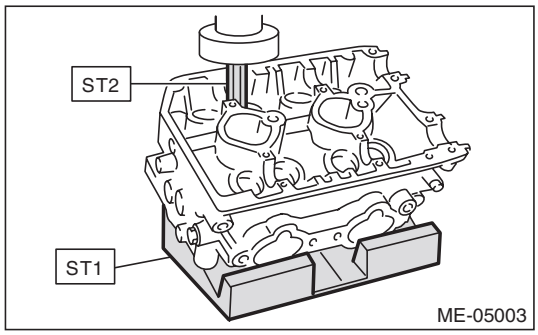

GETTHEMANUALS.org

D: ASSEMBLY

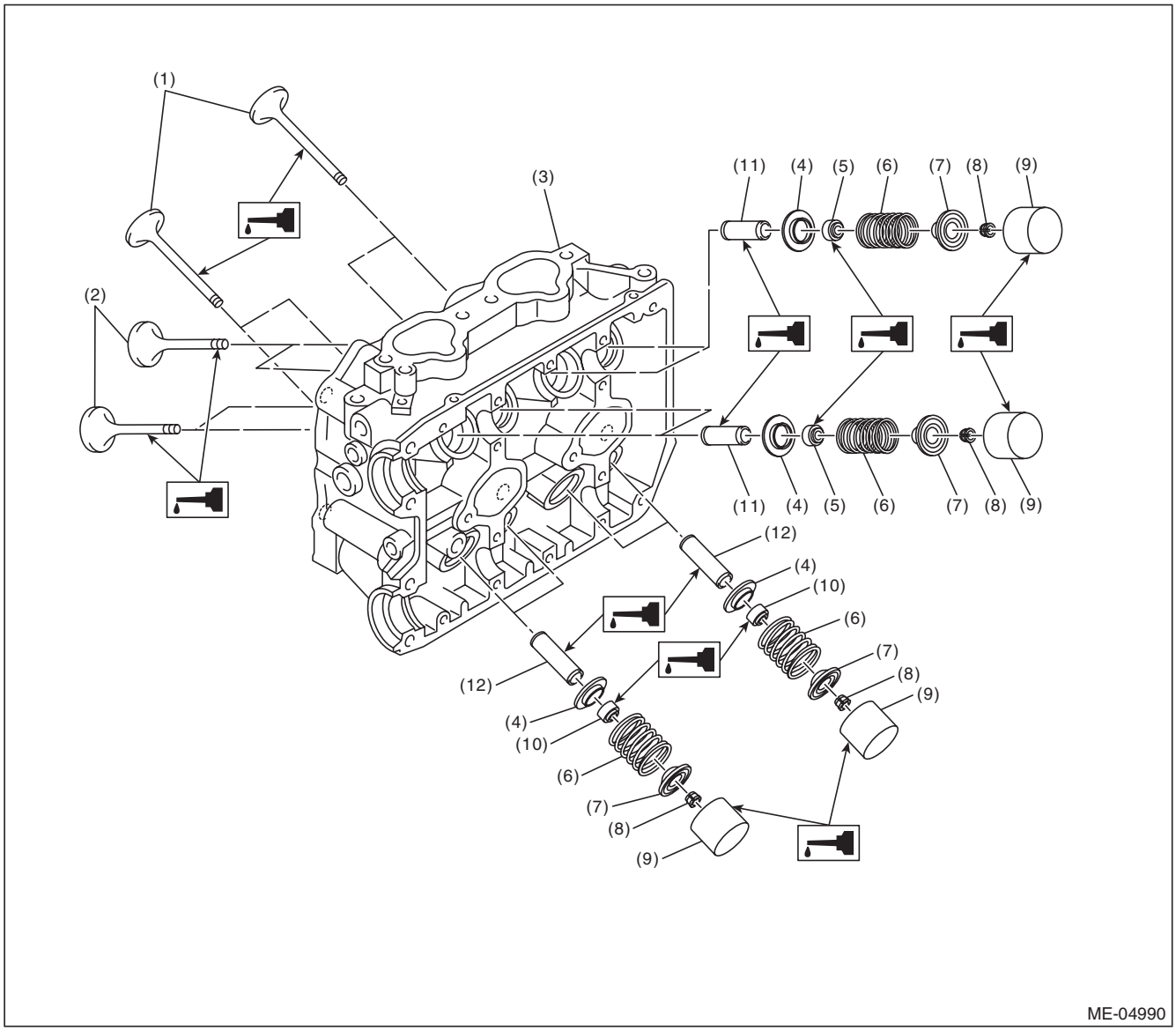

(1)	Exhaust valve	(5)	Intake valve oil seal	(9)	Valve lifter
(2)	Intake valve	(6)	Valve spring	(10)	Exhaust valve oil seal
(3)	Cylinder head	(7)	Valve spring retainer	(11)	Intake valve guide
(4)	Valve spring seat	(8)	Valve spring retainer key	(12)	Exhaust valve guide

1) Install the valve spring and valve.
   (1) Coat the valve stem of each valve with engine oil and insert the valve into valve guide.

NOTE:
When inserting the valve into valve guide, use special care not to damage the oil seal lip.
   (2) Set the cylinder head on ST1.

ST1 498267600 CYLINDER HEAD TABLE
   (3) Install the valve spring and valve spring retainer.

NOTE:
Be sure to install the valve spring with its close-coiled end facing the cylinder head side.

GETmyMANUALS.org

(4) Set the ST2 on valve spring.

ST2 499718000 VALVE SPRING REMOVER

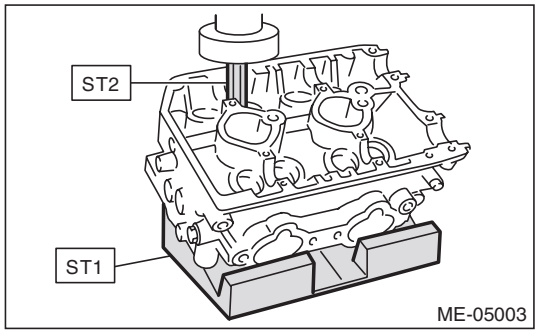

(5) Compress the valve spring and fit the valve spring retainer key.

(6) After installing, tap the valve spring retainers lightly with a plastic hammer for better seating.

2) Apply oil to the surface of valve lifter.

3) Install the valve lifter.

E: INSPECTION

1. CYLINDER HEAD

1) Check for cracks or damage. Use liquid penetrant tester on the important sections to check for fissures. Check that there are no marks of gas leaking or water leaking on gasket installing surface.

2) Measure the warping of the cylinder head surface that mates with cylinder block using a straight edge (A) and thickness gauge (B).

If the warping exceeds the limit, correct the surface by grinding it with a surface grinder.

Warping limit:
0.035 mm (0.0014 in)

Grinding limit:
0.3 mm (0.012 in)

Standard height of cylinder head:
127.5 mm (5.02 in)

NOTE:
Uneven torque for the cylinder head bolts can cause warping. When reinstalling, pay special attention to the torque so as to tighten evenly.

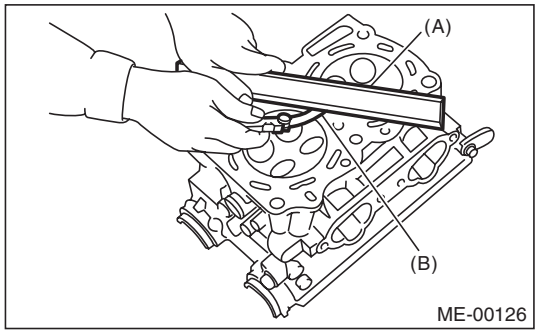

2. VALVE SEAT

Inspect the intake and exhaust valve seats, and correct the contact surfaces with a valve seat cutter if they are defective or when valve guides are replaced.

Contacting width W between valve and valve seat:

Standard
Intake
0.6 — 1.4 mm (0.024 — 0.055 in)
Exhaust
1.2 — 1.8 mm (0.047 — 0.071 in)

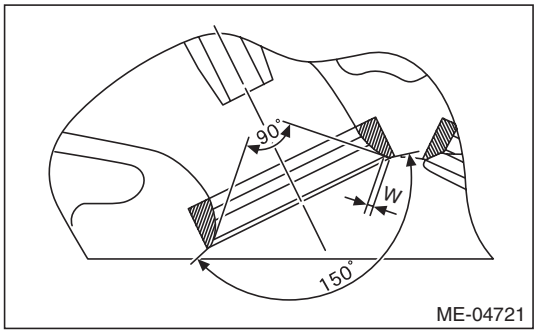

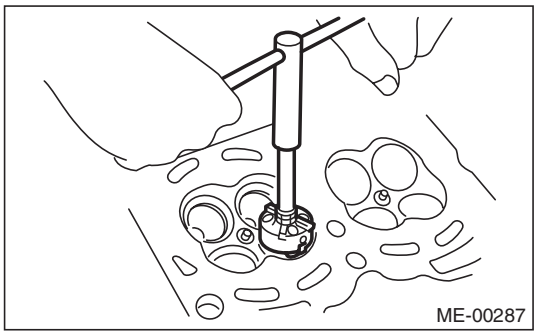

3. VALVE GUIDE

1) Check the clearance between valve guide and valve stem. The clearance can be checked by measuring the outer diameter of valve stem with a micrometer and the inner diameter of valve guide with a caliper gauge respectively.

Clearance between the valve guide and valve stem:

Standard
Intake
0.030 — 0.057 mm (0.0012 — 0.0022 in)
Exhaust
0.040 — 0.067 mm (0.0016 — 0.0026 in)

GETTHEMANUALS.org

2) If the clearance between valve guide and valve stem exceeds the standard, replace the valve guide or valve itself, whichever shows the greater amount of wear or damage. See the following procedure for valve guide replacement.

Valve guide inner diameter:
6.000 — 6.012 mm (0.2362 — 0.2367 in)

Valve stem outer diameters:
Intake
5.955 — 5.970 mm (0.2344 — 0.2350 in)
Exhaust
5.945 — 5.960 mm (0.2341 — 0.2346 in)

(1) Place the cylinder head on ST1 with the combustion chamber upward so that valve guides fit the holes in ST1.

(2) Insert the ST2 into valve guide and press it down to remove the valve guide.

ST1 498267600 CYLINDER HEAD TABLE
ST2 499767200 VALVE GUIDE REMOVER

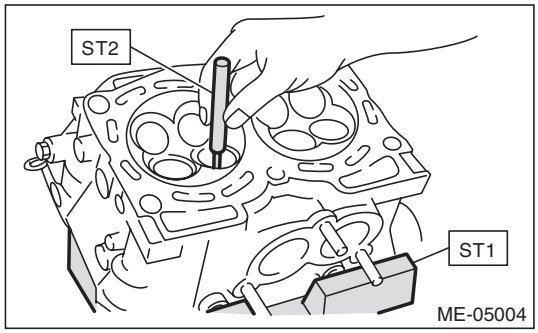

(3) Turn the cylinder head upside down and place the ST as shown in the figure.

ST 18251AA020 VALVE GUIDE ADJUSTER

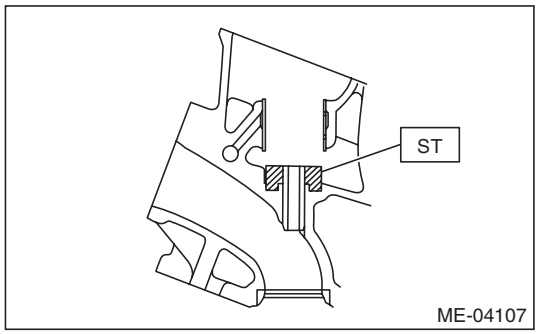

(4) Before installing a new valve guide, make sure that neither scratches nor damages exist on the inner surface of valve guide holes in cylinder head.

(5) Put a new valve guide, coated with sufficient oil, in the cylinder head, and insert the ST1 into valve guide. Press in until the valve guide upper end is flush with the upper surface of ST2.

ST1 499767200 VALVE GUIDE REMOVER
ST2 18251AA020 VALVE GUIDE ADJUSTER

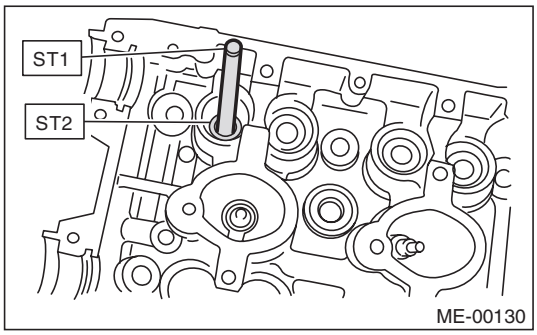

(6) Check the valve guide protrusion amount "L".

Valve guide protrusion amount L:
15.8 — 16.2 mm (0.622 — 0.638 in)

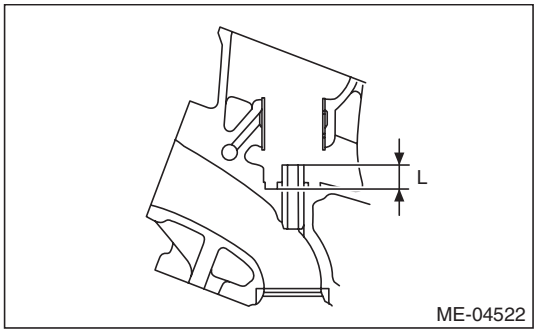

(7) Ream the inside of valve guide using ST. Put the ST in valve guide, and rotate the ST slowly clockwise while pushing it lightly. Bring the ST back while rotating it clockwise.

NOTE:
- Apply engine oil to the ST when reaming.
- If the inner surface of valve guide is damaged, the edge of ST should be slightly ground with oil stone.
- If the inner surface of valve guide becomes lustrous and the ST does not chip, use a new ST or remedy the ST.

ST 499767400 VALVE GUIDE REAMER

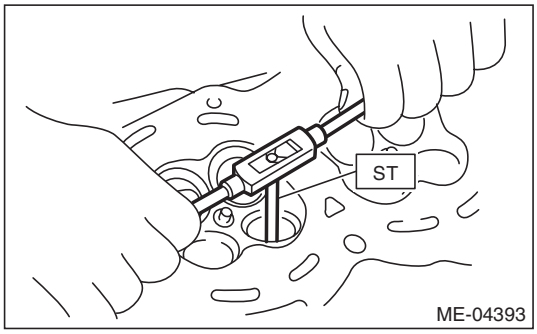

GETTHEMANUALS.org

(8) After reaming, clean the valve guide to remove chips.
(9) Recheck the contact condition between valve and valve seat after replacing the valve guide.

4. INTAKE AND EXHAUST VALVE

1) Inspect the flange of valve and valve stem, and replace the valve with a new part if damaged, worn, deformed, or if dimension “H” in the figure is outside of the specified limit.

Head edge thickness H:

Standard
Intake (A)
1.0 — 1.4 mm (0.039 — 0.055 in)
Exhaust (B)
1.3 — 1.7 mm (0.051 — 0.067 in)

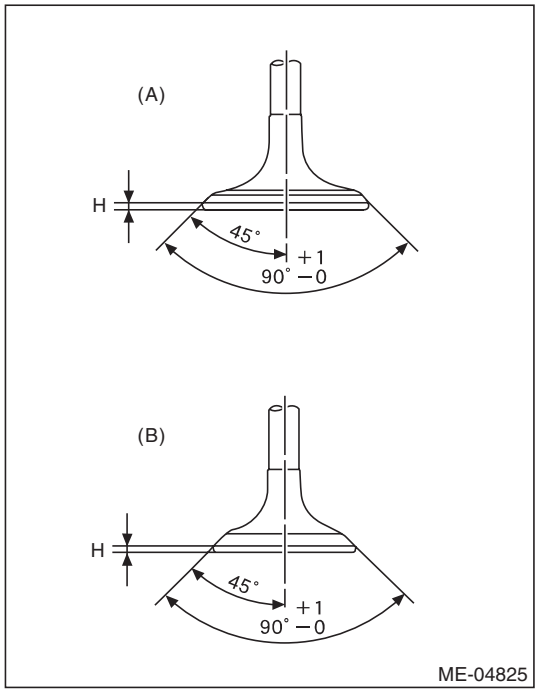

2) Put a small amount of grinding compound on the valve seat surface, and lap the valve and valve seat surface. Replace with a new valve oil seal after lapping.

NOTE:
It is possible to differentiate between the intake valve and the exhaust valve by their overall length.

Valve overall length:
Intake
104.4 mm (4.110 in)
Exhaust
104.65 mm (4.1201 in)

5. VALVE SPRING

1) Check the valve springs for damage, free length, and tension. Replace the valve spring if it is not within the standard value presented in the table.
2) To measure the squareness of the valve spring, stand the valve spring on a surface plate and measure its deflection at the top of valve spring using a right angle gauge.

Free length mm (in)		47.32 (1.863)
Tension/spring height N (kgf, lbf)/mm (in)	Set	205 — 235 (20.90 — 23.96, 46.09 — 52.84)/36.0 (1.417)
	Lift	426 — 490 (43.44 — 49.96, 95.78 — 110.17)/26.5 (1.043)
Squareness		2.5°, 2.1 mm (0.083 in) or less

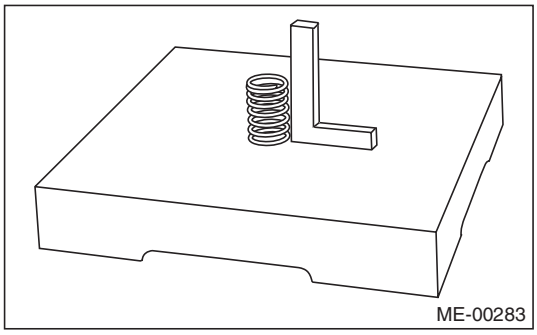

6. INTAKE AND EXHAUST VALVE OIL SEAL

1) For the following, replace the oil seal with a new part. See the procedure 2) and subsequent for replacement procedures.
- When the lip is damaged.
- When the spring is out of the specified position.
- When readjusting the surfaces of valve and valve seat.
- When replacing the valve guide.

GETTHEMANUALS.org

2) Place the cylinder head on ST1, and use ST2 to press-fit the oil seal.

ST1 498267600 CYLINDER HEAD TABLE
ST2 498857100 VALVE OIL SEAL GUIDE

NOTE:
- Apply engine oil to oil seal before press-fitting.
- When press-fitting the oil seal, do not use a hammer or strike in.
- The intake valve oil seals and exhaust valve oil seals are distinguished by their colors.

Color of rubber part:
Intake [Gray]
Exhaust [Green]

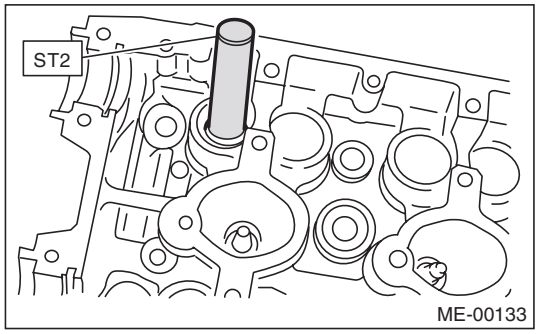

7. VALVE LIFTER

1) Check the valve lifter visually.
2) Measure the outer diameter of valve lifter.

Outer diameter of valve lifter:
Standard
34.959 — 34.975 mm (1.3763 — 1.3770 in)

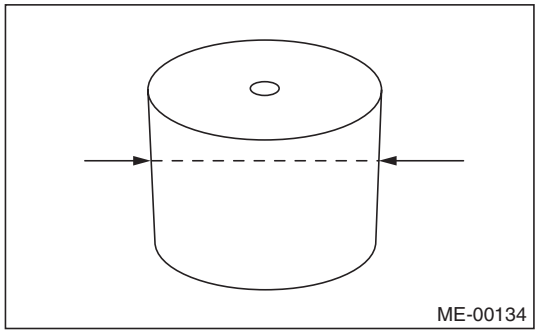

3) Measure the inner diameter of valve lifter mating surface on cylinder head.

Valve lifter mating surface inner diameter:
Standard
34.994 — 35.016 mm (1.3777 — 1.3786 in)

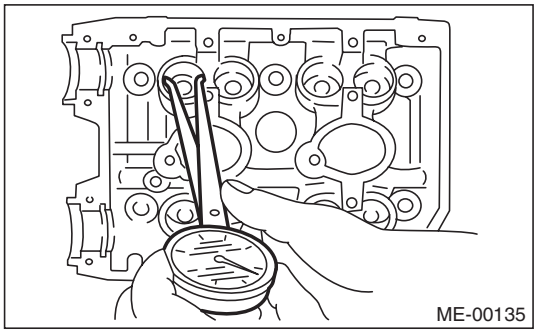

4) Check the clearance between valve lifter and valve lifter mating surface. The clearance can be checked by measuring the outer diameter of valve lifter and the inner diameter of valve lifter. If it exceeds the standard or offset wear occurs, replace the cylinder head.

Valve lifter and valve lifter mating surface clearance:
Standard
0.019 — 0.057 mm (0.0007 — 0.0022 in)

GETTHEMANUALS.org

20. Cylinder Block

A: REMOVAL

NOTE:
Before conducting this procedure, drain the engine oil completely.

1) Remove the engine from the vehicle. <Ref. to ME(H4DOTC)-31, REMOVAL, Engine Assembly.>
2) Remove the intake manifold. <Ref. to FU(H4DOTC)-18, REMOVAL, Intake Manifold.>
3) Remove the crank pulley. <Ref. to ME(H4DOTC)-44, REMOVAL, Crank Pulley.>
4) Remove the timing belt cover. <Ref. to ME(H4DOTC)-46, REMOVAL, Timing Belt Cover.>
5) Remove the timing belt. <Ref. to ME(H4DOTC)-52, REMOVAL, Timing Belt.>
6) Remove the cam sprocket. <Ref. to ME(H4DOTC)-61, REMOVAL, Cam Sprocket.>
7) Remove the crank sprocket. <Ref. to ME(H4DOTC)-62, REMOVAL, Crank Sprocket.>
8) Remove the A/C compressor together with the bracket.
9) Remove the camshaft. <Ref. to ME(H4DOTC)-63, REMOVAL, Camshaft.>
10) Remove the cylinder head. <Ref. to ME(H4DOTC)-74, REMOVAL, Cylinder Head.>
11) Remove the clutch disc and cover. <Ref. to CL-11, REMOVAL, Clutch Disc and Cover.>
12) Remove the flywheel. <Ref. to CL-14, REMOVAL, Flywheel.>
13) Remove the oil separator cover.
14) Remove the oil filter. <Ref. to LU(H4SO)-36, REMOVAL, Engine Oil Filter.>
15) Remove the oil cooler. <Ref. to LU(H4SO)-27, REMOVAL, Engine Oil Cooler.>
16) Remove the water pump. <Ref. to CO(H4DOTC)-16, REMOVAL, Water Pump.>
17) Remove the bolts which secure oil pump to cylinder block.

NOTE:
When disassembling and checking the oil pump, loosen the relief valve plug before removing the oil pump.

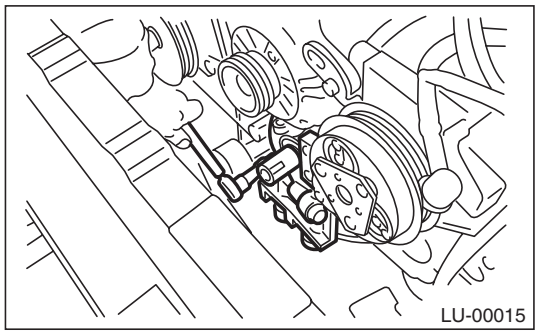

18) Remove the oil pump from cylinder block using a flat tip screwdriver.

CAUTION:
Be careful not to scratch the mating surface of the cylinder block and oil pump.

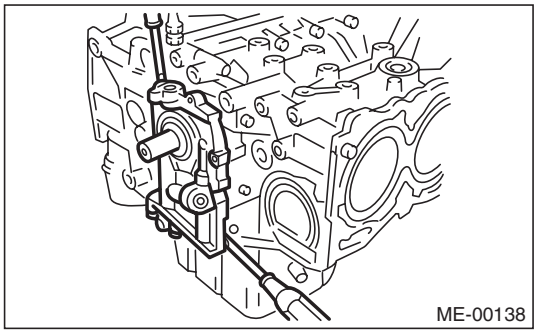

19) Remove the front oil seal from the oil pump.
20) Remove the clip holding the oil level switch harness from cylinder block.

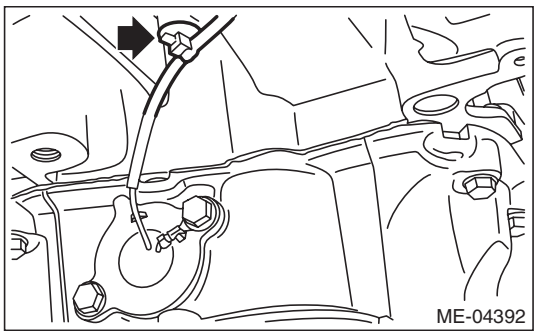

21) Remove the oil pan and cylinder block lower.
    (1) Set the part so that the cylinder block LH is on the upper side.
    (2) Remove the bolts which secure the oil pan to the cylinder block lower.
    (3) Insert an oil pan cutter blade into the gap between cylinder block lower and oil pan, and remove the oil pan.

CAUTION:
Do not use a screwdriver or similar tools in place of oil pan cutter.

GETTHEMANUALS.org

(4) Remove the bolts which secure the cylinder block lower to the cylinder block, and remove the cylinder block lower by using flat tip screwdriver.

CAUTION:
Insert the flat tip screwdriver at the position shown in the figure, and avoid scratching the mating surface of the cylinder block and cylinder block lower.

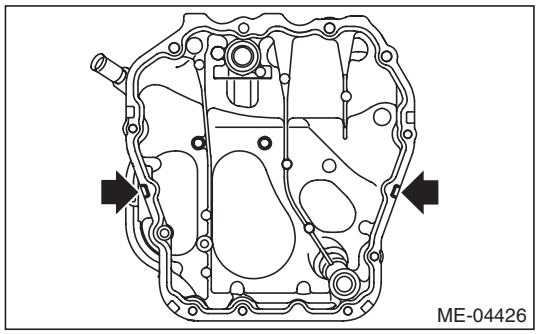

22) Remove the baffle plate.
23) Remove blow-by pipe assembly (A), blow-by pipe (B), PCV hose assembly (C) and water pipe assembly (D).

NOTE:
To unlock the clamp of the blow-by pipe assembly (A), blow-by pipe (B) and PCV hose assembly (C), pinch the clamp by fitting the cut out in the ST with the protrusion on the clamp as shown in the figure.
ST 18353AA000 CLAMP PLIERS

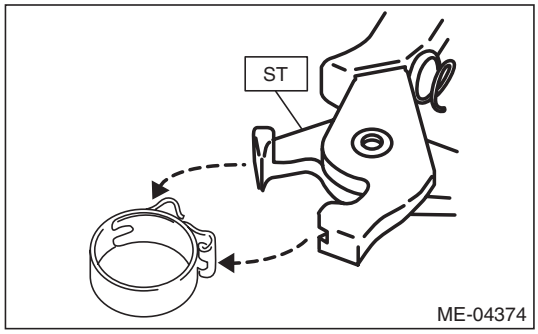

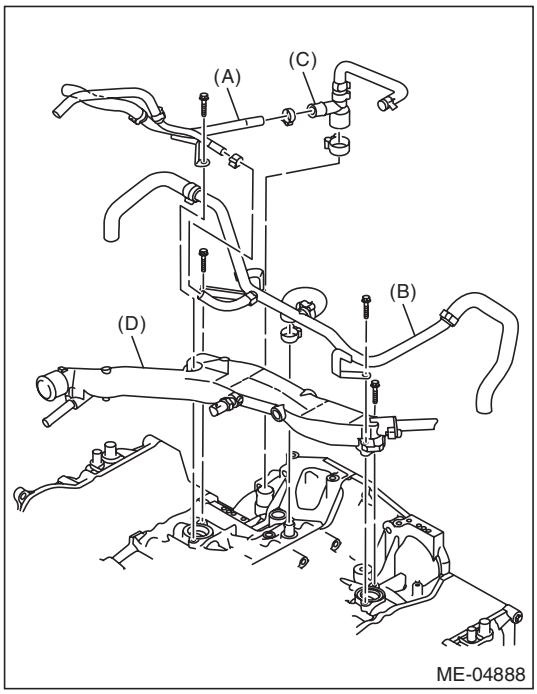

24) Remove the water by-pass pipe.

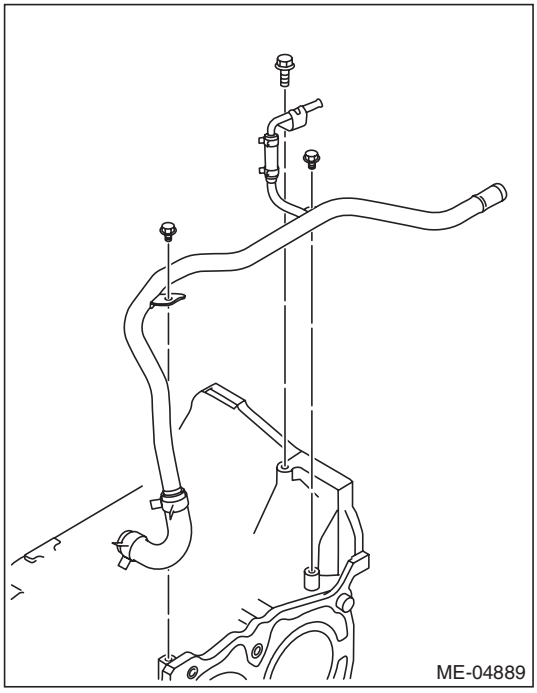

GETTHEMANUALS.org

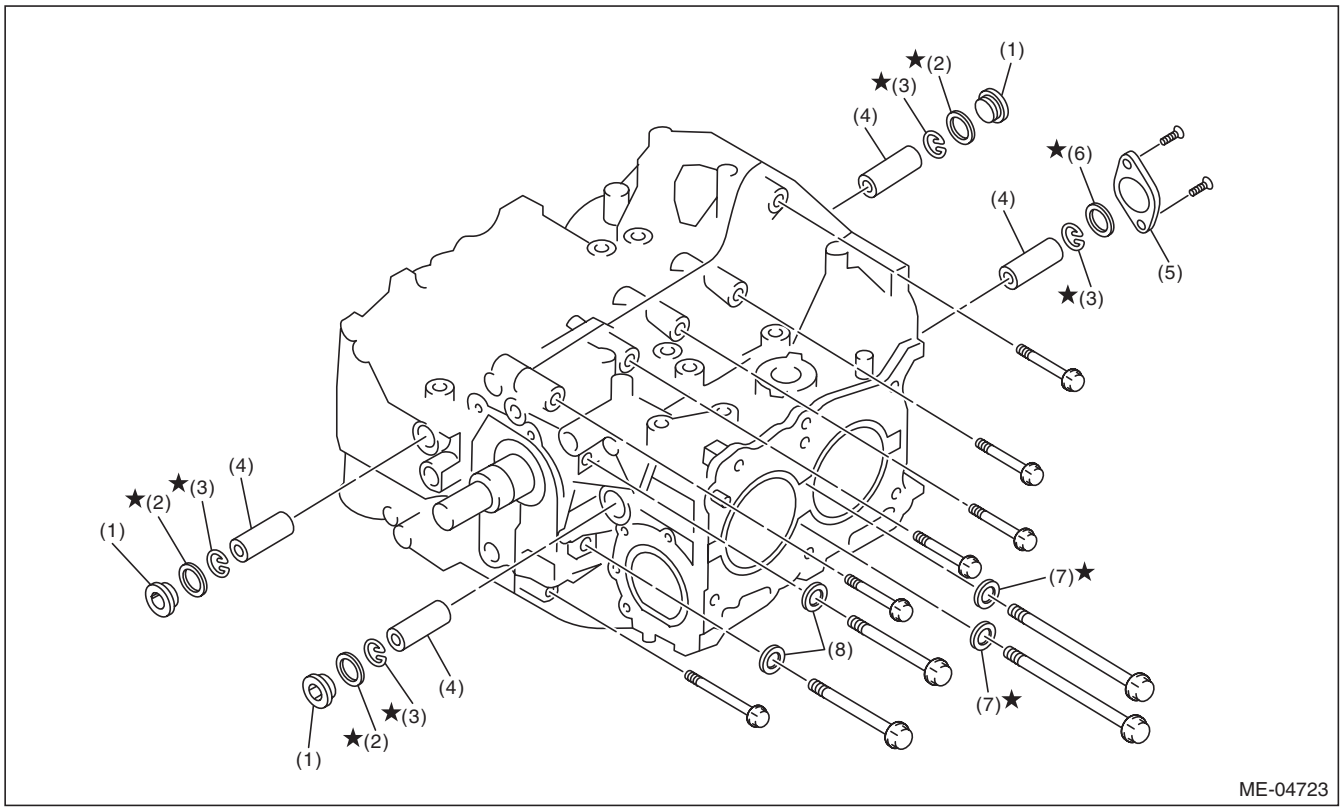

(1)	Service hole plug	(4)	Piston pin	(7)	Seal washer
(2)	Gasket	(5)	Service hole cover	(8)	Washer
(3)	Snap ring	(6)	O-ring		

25) Remove the service hole plugs using a hexagon wrench [14 mm].

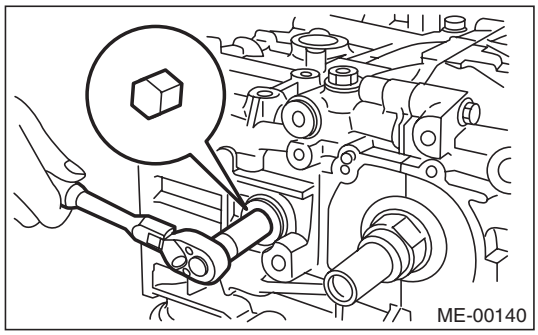

26) Remove the service hole cover.
27) Rotate the crankshaft to bring #1 and #2 pistons to bottom dead center position, then remove the piston snap ring through service hole of #1 and #2 cylinders.

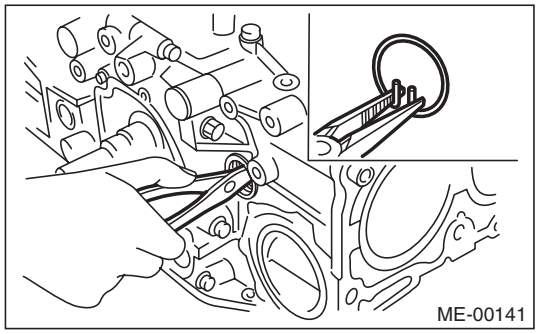

GETmyMANUALS.org

28) Draw out the piston pin from #1 and #2 pistons using ST.
ST 499097700 PISTON PIN REMOVER ASSY

NOTE:
Be careful not to confuse the original combination of piston, piston pin and cylinder.

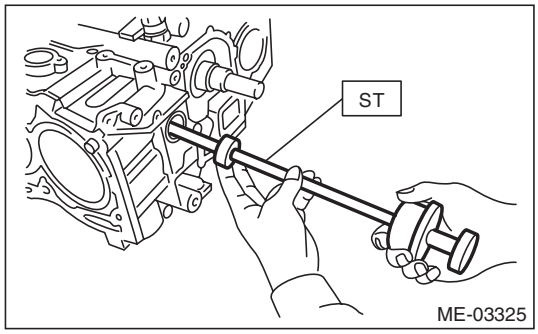

29) Similarly draw out the piston pins from #3 and #4 pistons.
30) Remove the cylinder block connecting bolt on the RH side.
31) Loosen the cylinder block connecting bolt on the LH side by 2 to 3 turns.
32) Set the part so that the cylinder block LH is on the upper side, and remove the cylinder block connecting bolt.
33) Separate the cylinder block LH and RH.

NOTE:
When separating the cylinder block, do not allow the connecting rod to fall or damage the cylinder block.

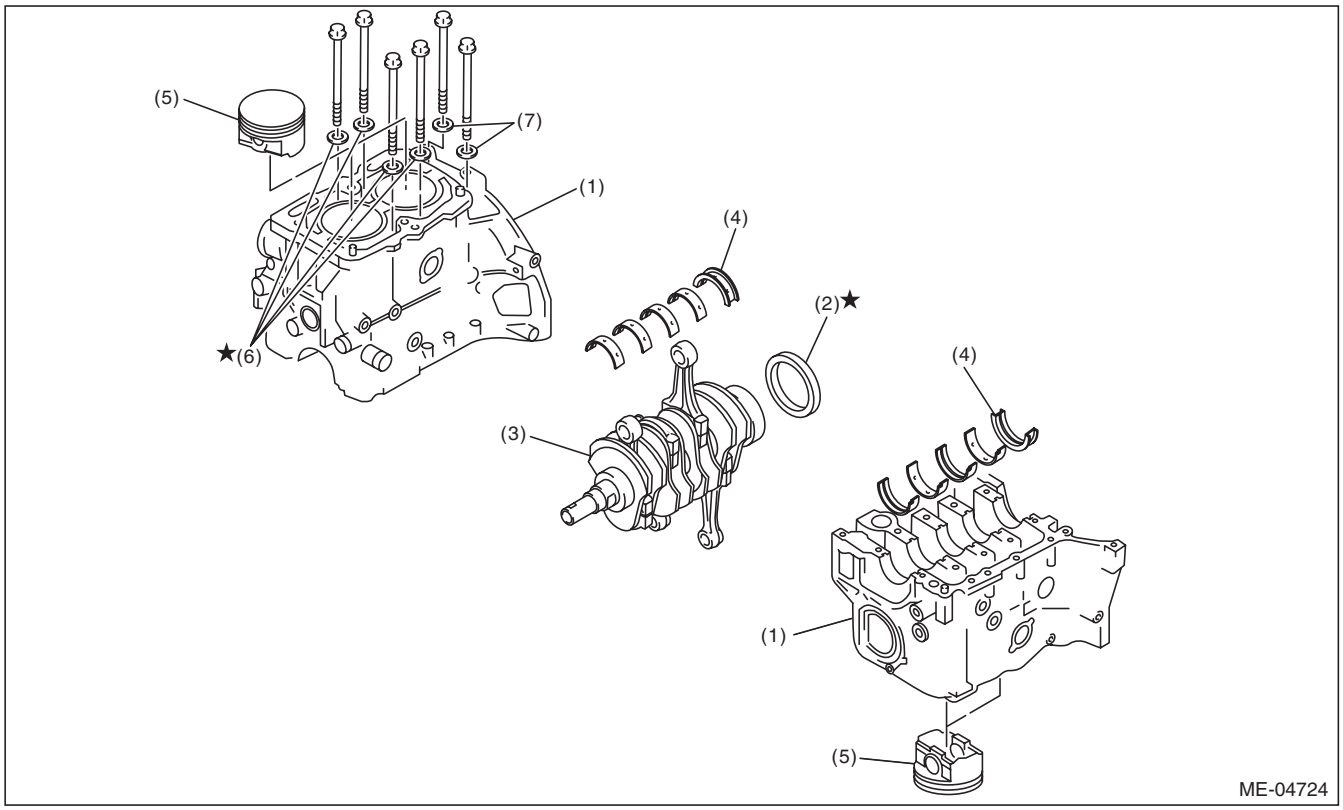

(1)	Cylinder block	(4)	Crankshaft bearing	(6)	Seal washer
(2)	Rear oil seal	(5)	Piston	(7)	Washer
(3)	Crankshaft				

GETTHEMANUALS.org

34) Remove the rear oil seal.
35) Remove the crankshaft together with connecting rod.
36) Remove the crankshaft bearings from cylinder block using a hammer handle.

NOTE:
- Press the crankshaft bearing at the end opposite to locking lip to remove.
- Be careful not to confuse the crankshaft bearing combination.

37) Remove each piston from the cylinder block using a wooden bar or hammer handle.

NOTE:
Be careful not to confuse the original combination of piston and cylinder.

B: INSTALLATION

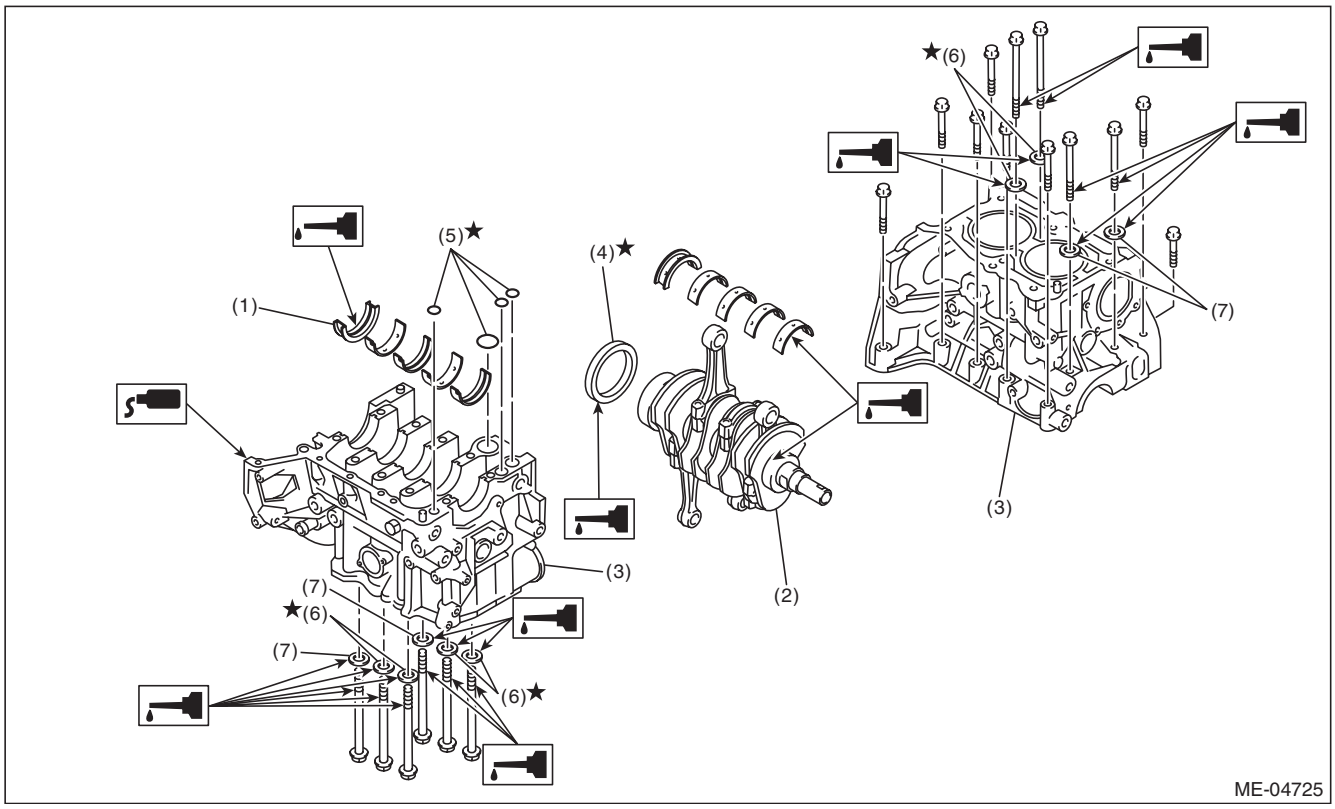

(1)	Crankshaft bearing	(4)	Rear oil seal	(6)	Seal washer
(2)	Crankshaft	(5)	O-ring	(7)	Washer
(3)	Cylinder block				

1) Remove oil on the mating surface of cylinder block before installation. Apply a coat of engine oil to the bearing and crankshaft journal.
2) Position the crankshaft and O-ring on cylinder block RH.

NOTE:
Use new O-rings.

GETTHEMANUALS.org

3) Apply liquid gasket to the mating surfaces of cylinder block RH, and position cylinder block LH.

NOTE:
- Install within 5 min. after applying liquid gasket.
- Do not allow liquid gasket to jut into O-ring grooves, oil passages, bearing grooves, etc.

Liquid gasket:
THREE BOND 1217G (Part No. K0877Y0100) or equivalent

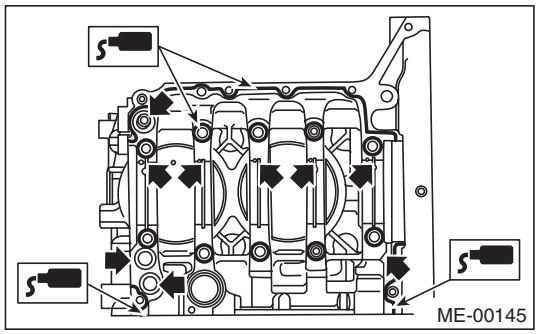

4) Apply a coat of engine oil to the washer and bolt thread.

NOTE:
Use a new seal washer.

5) Tighten the 10 mm cylinder block connecting bolts on the LH side (A — D) in alphabetical order.

Tightening torque:
10 N·m (1.0 kgf-m, 7.4 ft-lb)

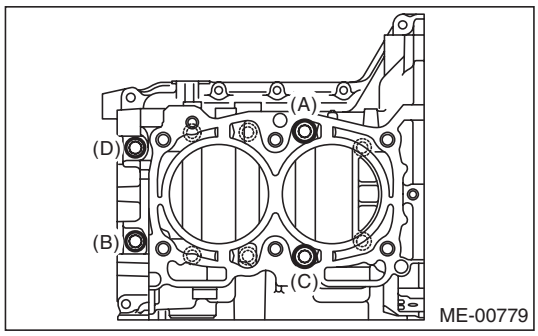

6) Tighten the 10 mm cylinder block connecting bolts on the RH side (E — J) in alphabetical order.

Tightening torque:
10 N·m (1.0 kgf-m, 7.4 ft-lb)

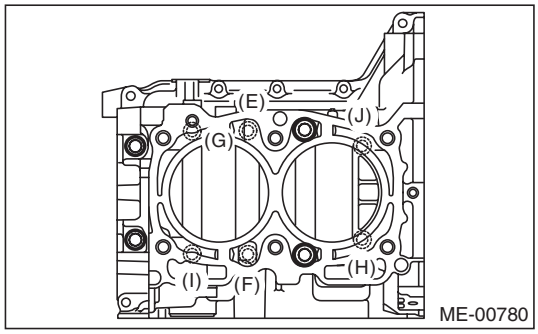

7) Tighten the LH side cylinder block connecting bolts (A — D) further in alphabetical order.

Tightening torque:
18 N·m (1.8 kgf-m, 13.3 ft-lb)

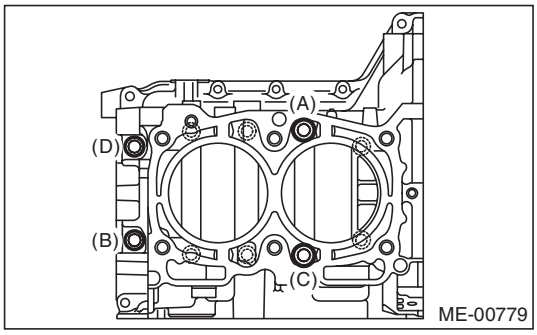

8) Tighten the RH side cylinder block connecting bolts (E — J) further in alphabetical order.

Tightening torque:
18 N·m (1.8 kgf-m, 13.3 ft-lb)

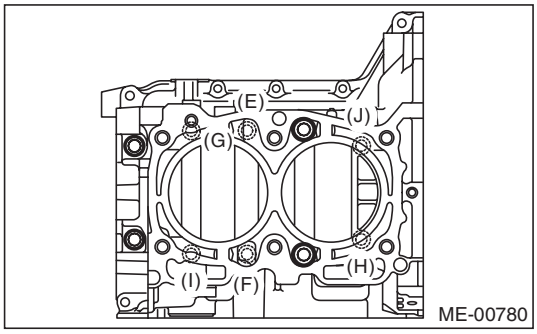

9) Tighten the LH side cylinder block connecting bolts (A — D) further in alphabetical order.
- (A), (C): Angle tightening

Tightening angle:
90°
- (B), (D): Torque tightening

Tightening torque:
40 N·m (4.1 kgf-m, 29.5 ft-lb)

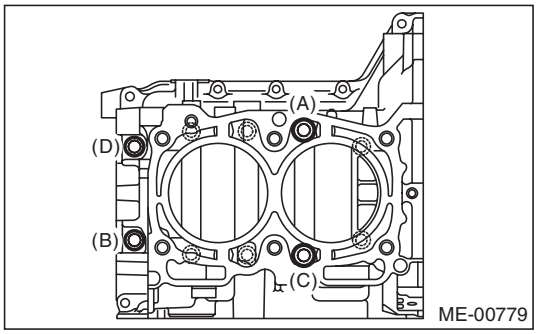

GETTHEMANUALS.org

10) Tighten the RH side cylinder block connecting bolts (E — J) further in alphabetical order.

Tightening angle:
90°

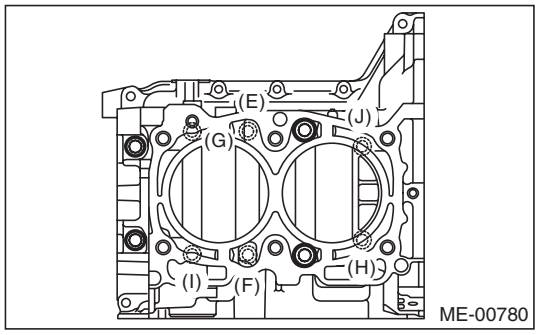

11) Tighten the 8 mm and 6 mm cylinder block connecting bolts on the LH side (A — H) in alphabetical order.

Tightening torque:
(A) — (G): 25 N·m (2.5 kgf-m, 18.4 ft-lb)
(H): 6.4 N·m (0.7 kgf-m, 4.7 ft-lb)

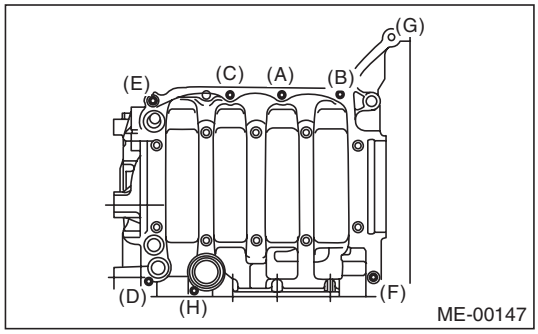

12) Apply a coat of engine oil to the oil seal inner periphery and outer periphery, and install the rear oil seal using ST1 and ST2.

NOTE:
Use a new rear oil seal.

ST1	499597100	CRANKSHAFT OIL SEAL GUIDE
ST2	499587200	CRANKSHAFT OIL SEAL INSTALLER

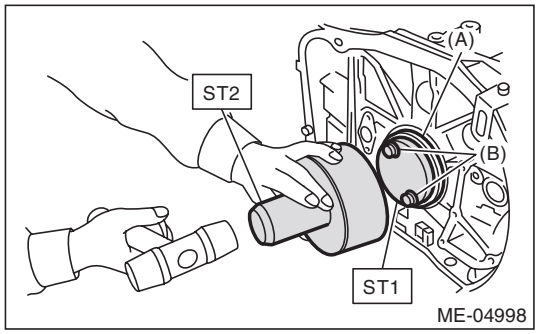

(A) Rear oil seal
(B) Flywheel attachment bolt

13) Position the top ring gap at (A) or (B) in the figure.
14) Position the second ring gap at 180° on the reverse side the top ring gap.

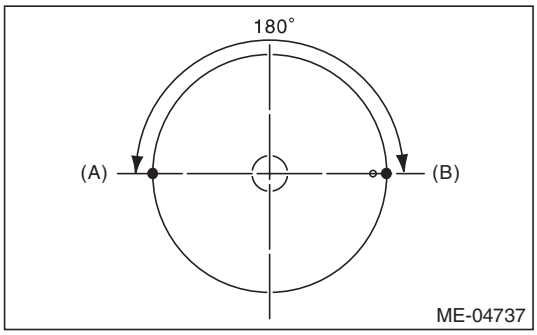

15) Position the upper rail gap at (C) in the figure.

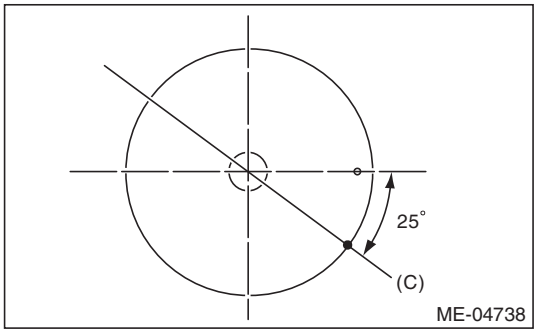

16) Align the upper rail spin stopper (E) to the side hole (D) on the piston.

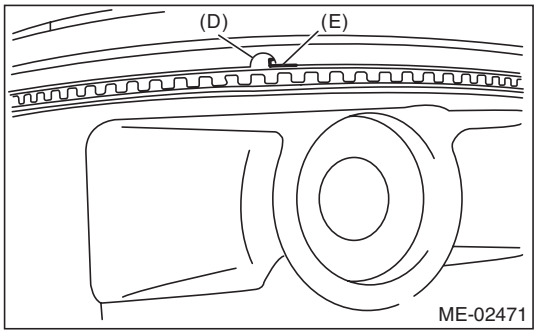

17) Position the expander gap at (F) in the figure on the 180° opposite direction of (C).

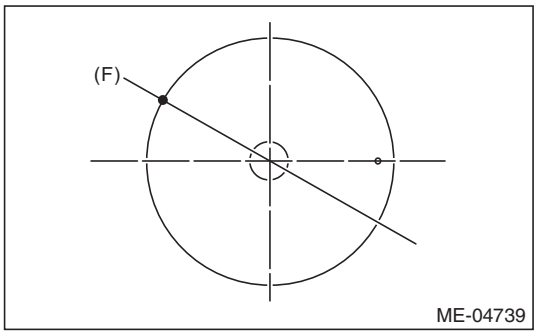

GETMANUALS.org

18) Set the lower rail gap at position (G), located 120° clockwise from (C) in the figure.

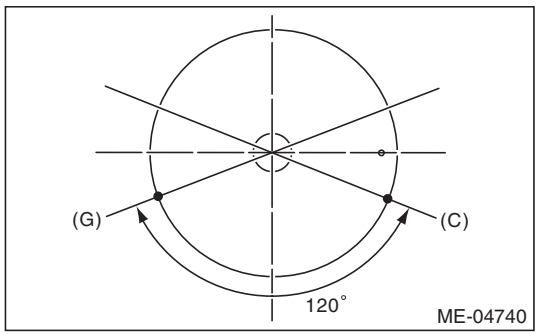

NOTE:
- Make sure ring gaps do not face the same direction.
- Make sure ring gaps are not within the piston skirt area.

19) Install the snap ring.
Before positioning the piston on the cylinder block, attach the snap ring in the service hole of the cylinder block, and the piston hole on the opposite side.

NOTE:
Use new snap rings.

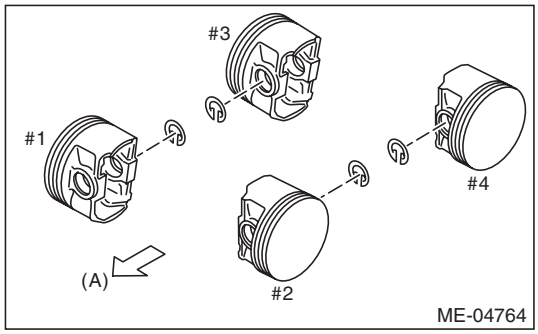

(A) Front side

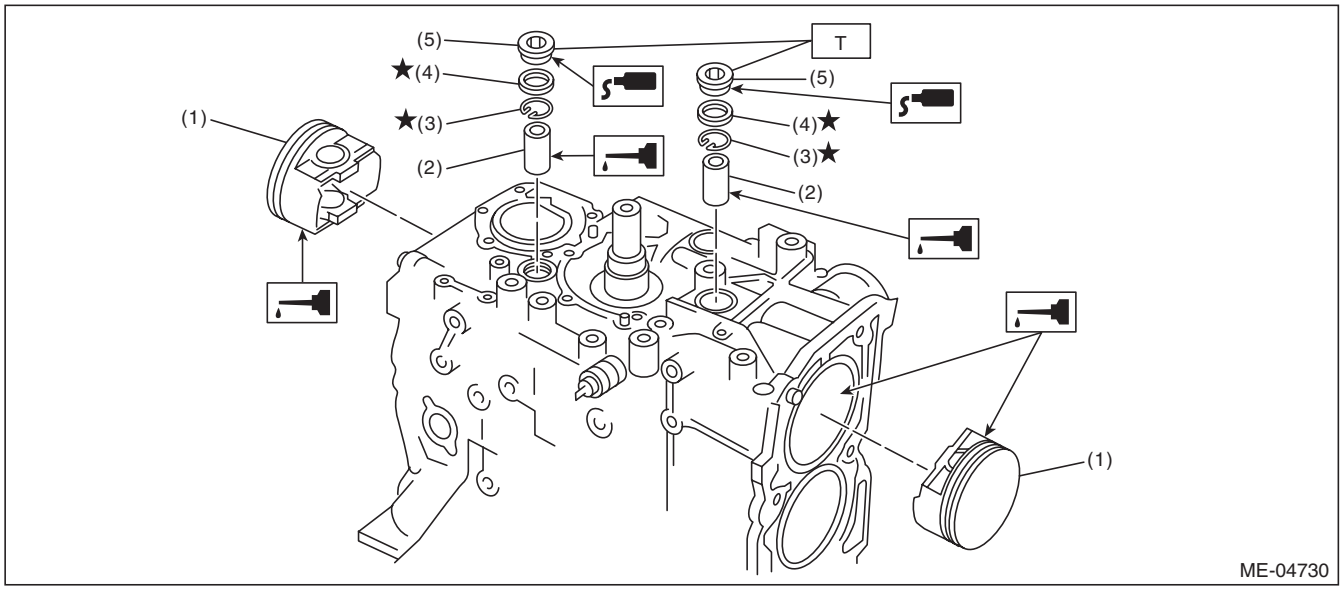

(1) Piston
(2) Piston pin
(3) Snap ring
(4) Gasket
(5) Service hole plug

Tightening torque:N·m (kgf-m, ft-lb)
T: 70 (7.1, 51.6)

GETTHEMANUALS.org

20) Install the piston.
(1) Set the parts so that the #1 and #2 cylinders are on the upper side.
(2) Using the ST1, turn the crankshaft so that #1 and #2 connecting rods are set at bottom dead center.

ST1 499987500 CRANKSHAFT SOCKET

(3) Apply a coat of engine oil to the pistons and cylinders and insert pistons in their cylinders using ST2.

ST2 498747300 PISTON GUIDE

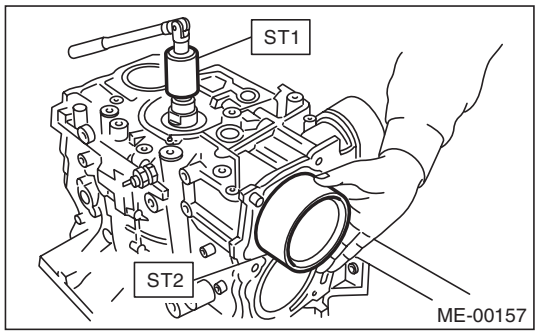

NOTE:
Face the piston front mark towards the front of the engine.

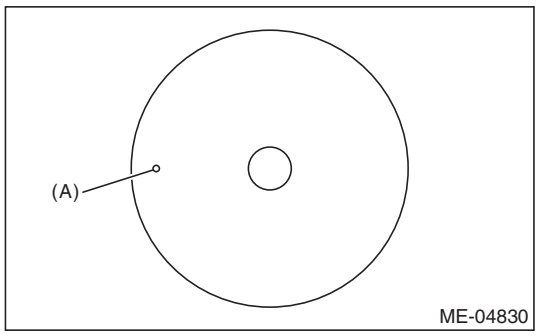

(A) Front mark

21) Install the piston pin.
(1) Apply a coat of engine oil to ST3.
(2) Insert ST3 into the service hole to align the piston pin hole and the connecting rod small end.

ST3 499017100 PISTON PIN GUIDE

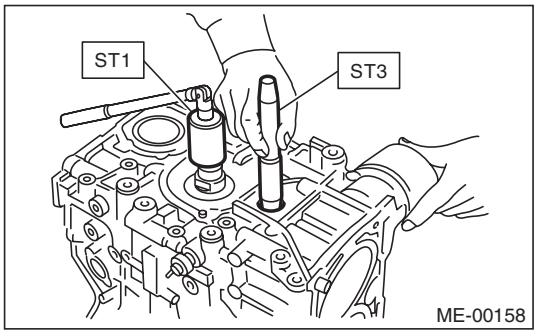

(3) Apply a thin coat of engine oil to piston pin, and insert the piston pin into piston and connecting rod through service hole.
(4) Install the snap ring.

NOTE:
Use new snap rings.

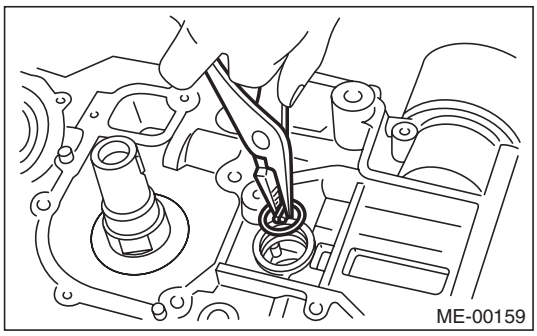

(5) Apply liquid gasket to the threaded portion of the service hole plug.

Liquid gasket:
THREE BOND 1105 (Part No. 004403010) or equivalent

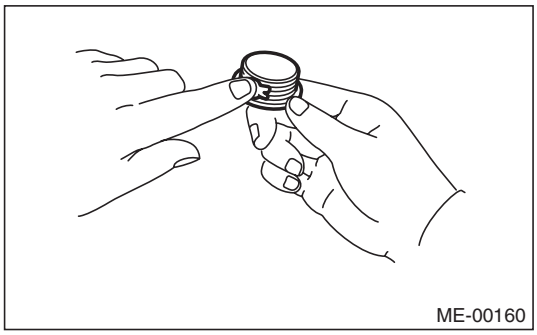

GETTHEMANUALS.org

(6) Install the service hole plug and gasket.

NOTE:
Use a new gasket.

Tightening torque:
70 N·m (7.1 kgf-m, 51.6 ft-lb)

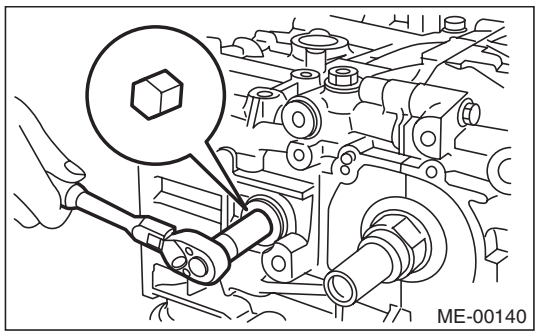

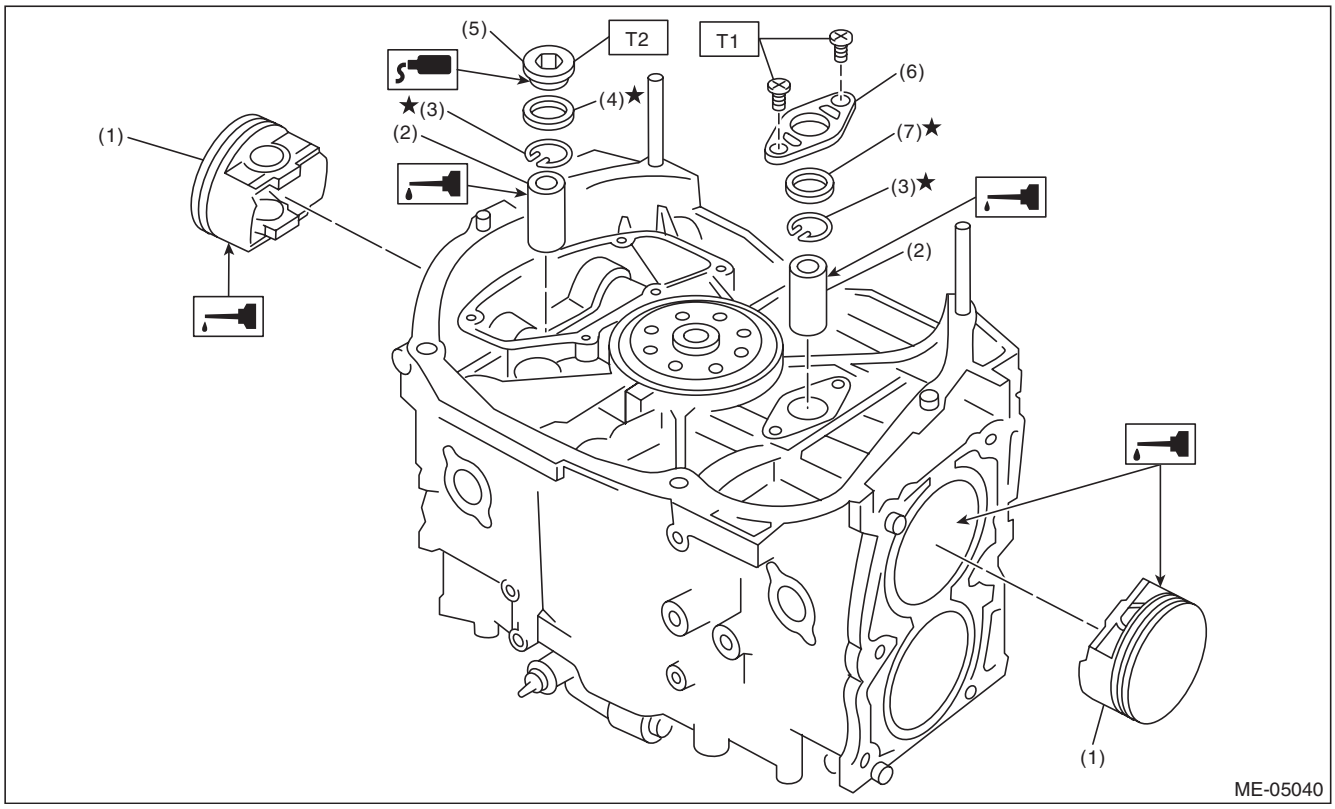

(1)	Piston	(5)	Service hole plug	***Tightening torque:N·m (kgf-m, ft-lb)***
(2)	Piston pin	(6)	Service hole cover	***T1: 6.4 (0.7, 4.7)***
(3)	Snap ring	(7)	O-ring	***T2: 70 (7.1, 51.6)***
(4)	Gasket			

(7) Set the parts so that the #3 and #4 cylinders are on the upper side. Following the same procedures as used for #1 and #2 cylinders, install the pistons and piston pins.
(8) Install the service hole cover.

NOTE:
Use new O-rings.

Tightening torque:
6.4 N·m (0.7 kgf-m, 4.7 ft-lb)

GETthemanuals.org

22) Install the water by-pass pipe.

Tightening torque:
T1: 6.4 N·m (0.7 kgf-m, 4.7 ft-lb)
T2: 16 N·m (1.6 kgf-m, 11.8 ft-lb)

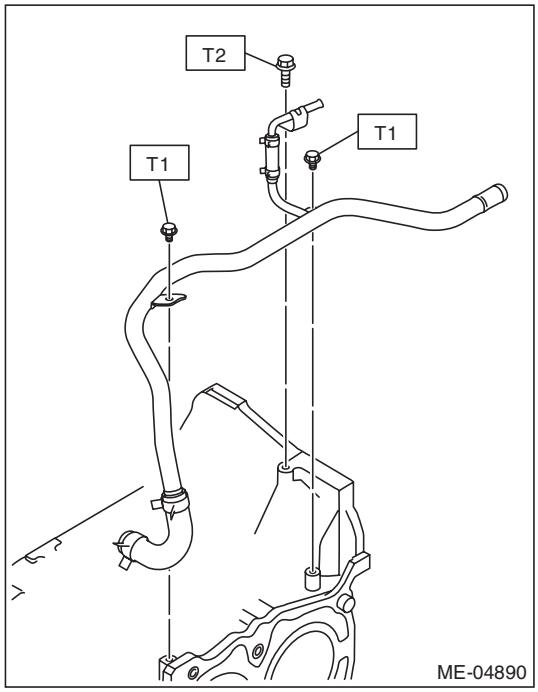

23) Install blow-by pipe assembly (A), blow-by pipe (B), PCV hose assembly (C) and water pipe assembly (D).

NOTE:
For the blow-by pipe assembly (A), blow-by pipe (B) and PCV hose assembly (C), use a new clamp, fit the cut out in the ST with the protrusion on the clamp as shown in the figure, and lock the clamp.
ST 18353AA000 CLAMP PLIERS

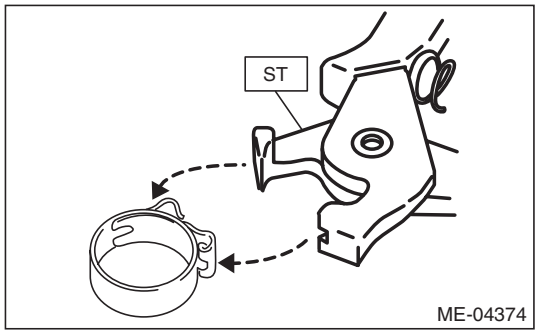

Tightening torque:
6.5 N·m (0.7 kgf-m, 4.8 ft-lb)

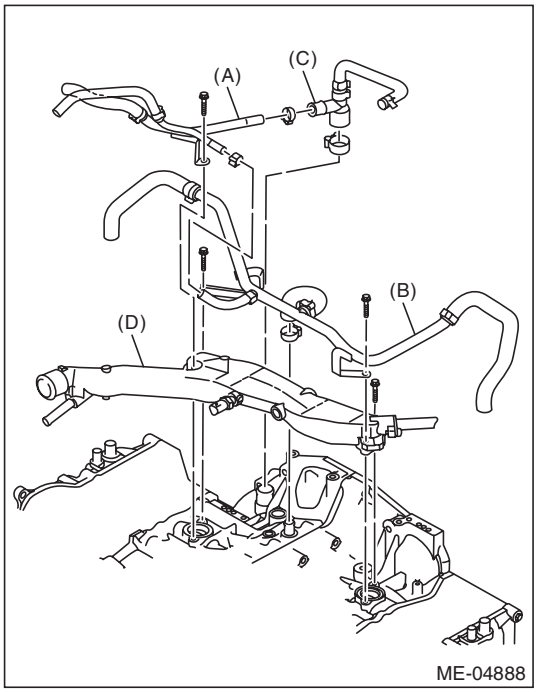

24) Install the baffle plate.

NOTE:
- Use a new seal.
- Make sure that the seals (A) are installed securely on the baffle plate in a direction as shown in the figure below.

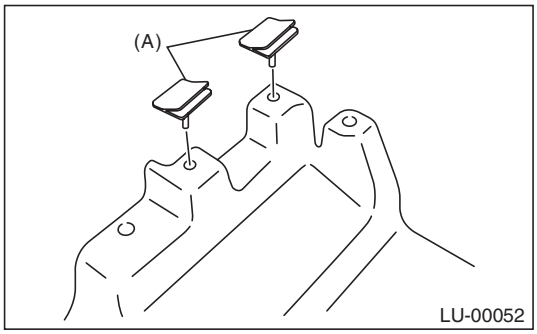

Tightening torque:
6.4 N·m (0.7 kgf-m, 4.7 ft-lb)

GETmyMANUALS.org

25) Apply liquid gasket to the mating surfaces of cylinder block lower, and install the cylinder block lower.

CAUTION:
Be careful not to apply any liquid gasket to the O-ring attachment section.

NOTE:
- Use new O-rings.
- Before installing the cylinder block lower, clean the mating surface of cylinder block lower and cylinder block.
- Install within 5 min. after applying liquid gasket.

Liquid gasket:
THREE BOND 1217G (Part No. K0877Y0100) or equivalent

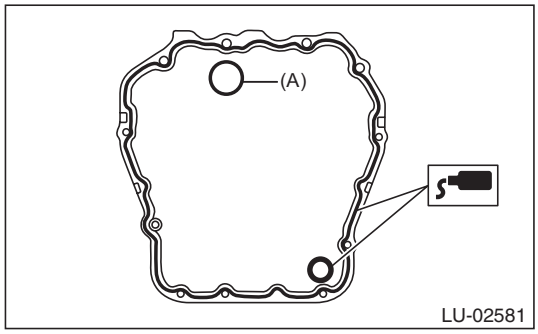

(A) O-ring

Tightening torque:
T1: 6.4 N·m (0.7 kgf-m, 4.7 ft-lb)
T2: 16 N·m (1.6 kgf-m, 11.8 ft-lb)

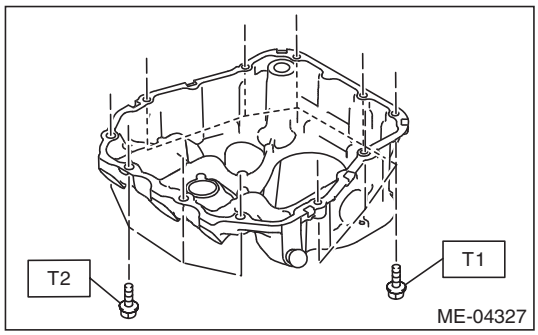

26) Apply liquid gasket to the mating surfaces of oil pan, and install the oil pan.

NOTE:
- Before installing the oil pan, clean the mating surface of oil pan and cylinder block.
- Install within 5 min. after applying liquid gasket.

Liquid gasket:
THREE BOND 1217G (Part No. K0877Y0100) or equivalent

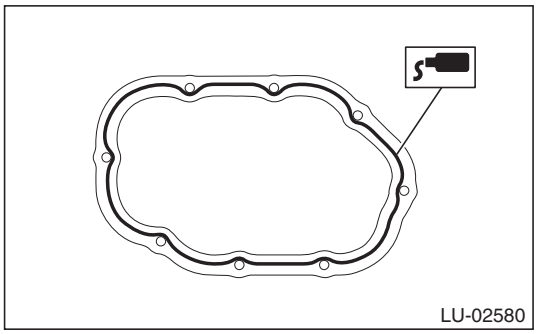

Tightening torque:
5 N·m (0.5 kgf-m, 3.7 ft-lb)

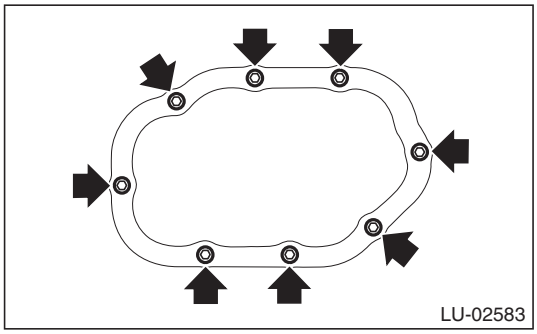

27) Secure the oil level switch harness to the cylinder block with clip.

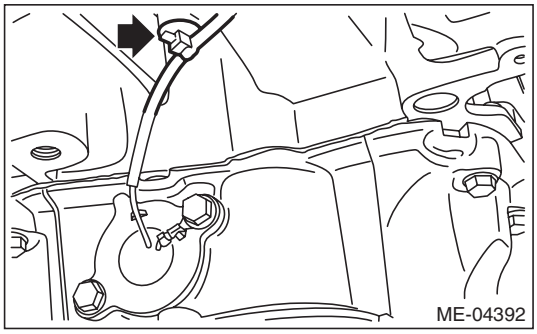

GETTHEMANUALS.org

28) Apply liquid gasket to the mating surface of oil separator cover and the threaded portion of bolt (A) shown in the figure (when reusing the bolt), and then install the oil separator cover.

NOTE:
- Install within 5 min. after applying liquid gasket.
- Use new oil separator cover.

Liquid gasket:
Mating surface
THREE BOND 1217G (Part No. K0877Y0100) or equivalent
Bolt thread (A) (when reusing the bolt)
THREE BOND 1324 (Part No. 004403042) or equivalent

Tightening torque:
6.4 N·m (0.65 kgf-m, 4.7 ft-lb)

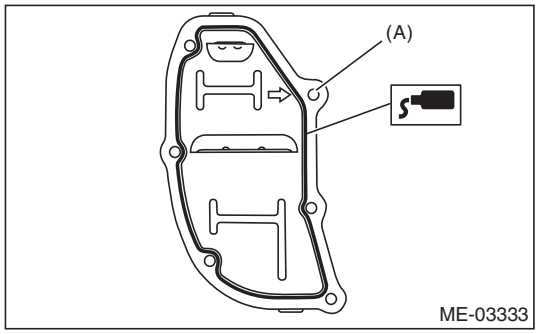

29) Install the flywheel. <Ref. to CL-14, INSTALLATION, Flywheel.>
30) Install the clutch disc and cover. <Ref. to CL-11, INSTALLATION, Clutch Disc and Cover.>
31) Install the oil pump.
(1) Using the ST, install the front oil seal.
ST 499587100 OIL SEAL INSTALLER

NOTE:
Use a new front oil seal.

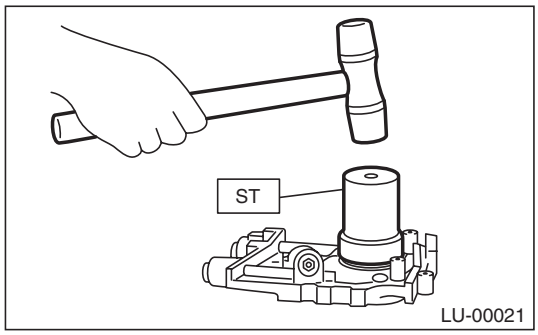

(2) Apply liquid gasket to the mating surfaces of oil pump.

NOTE:
Install within 5 min. after applying liquid gasket.

Liquid gasket:
THREE BOND 1217G (Part No. K0877Y0100) or equivalent

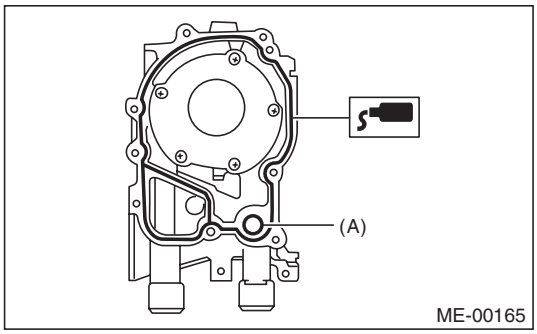

(A) O-ring

(3) Apply a thin coat of engine oil to the inside of front oil seal.

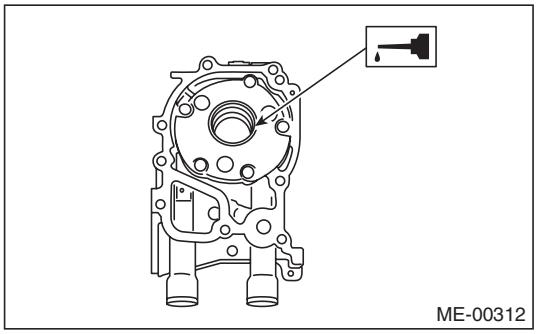

(4) Install the oil pump to cylinder block.

CAUTION:
- **Be careful not to damage the front oil seal during installation.**
- **Make sure the front oil seal lip is not folded.**

NOTE:
- Align the flat surface of oil pump's inner rotor with that of crankshaft before installation.
- Use new O-rings.
- Do not forget to assemble O-rings.

GETTHEMANUALS.org

(5) Apply liquid gasket to the three bolts thread shown in figure. (when reusing bolts)

Liquid gasket:
THREE BOND 1324 (Part No. 004403042) or equivalent

Tightening torque:
6.4 N·m (0.7 kgf-m, 4.7 ft-lb)

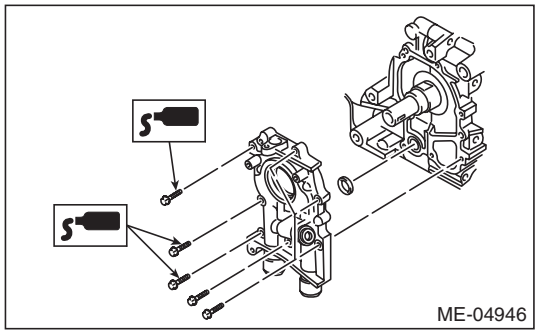

32) Install the water pump and gasket.

NOTE:
- When installing the water pump, tighten bolts in two stages in alphabetical order as shown in the figure.
- Use a new gasket.
- Use new water pump sealing.

Tightening torque:
First:
12 N·m (1.2 kgf-m, 8.9 ft-lb)
Second:
12 N·m (1.2 kgf-m, 8.9 ft-lb)

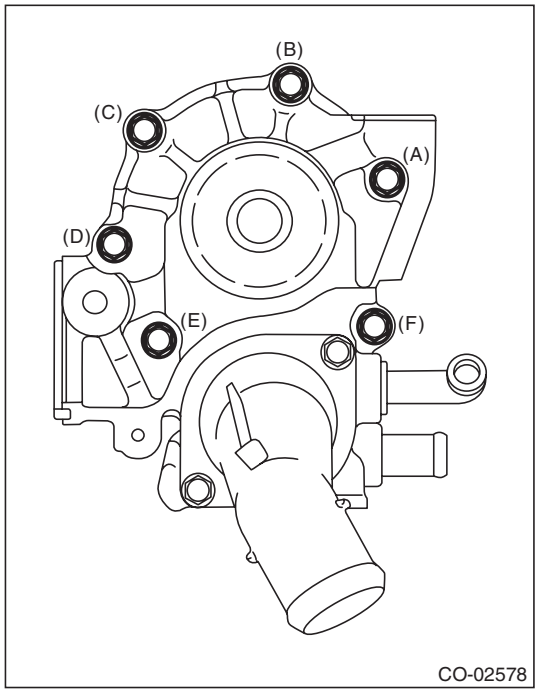

33) Install the hose to water pump.

34) Install the oil cooler. (MT model) <Ref. to LU(H4SO)-28, INSTALLATION, Engine Oil Cooler.>
35) Install the oil filter. <Ref. to LU(H4SO)-36, INSTALLATION, Engine Oil Filter.>
36) Install the cylinder head. <Ref. to ME(H4DOTC)-75, INSTALLATION, Cylinder Head.>
37) Install the camshaft. <Ref. to ME(H4DOTC)-66, INSTALLATION, Camshaft.>
38) Install the A/C compressor together with the bracket.

Tightening torque:
36 N·m (3.7 kgf-m, 26.6 ft-lb)

39) Install the crank sprocket. <Ref. to ME(H4DOTC)-62, INSTALLATION, Crank Sprocket.>
40) Install the cam sprocket. <Ref. to ME(H4DOTC)-61, INSTALLATION, Cam Sprocket.>
41) Install the timing belt. <Ref. to ME(H4DOTC)-54, INSTALLATION, Timing Belt.>
42) Adjust the valve clearance. <Ref. to ME(H4DOTC)-30, ADJUSTMENT, Valve Clearance.>
43) Install the rocker cover.
(1) Install the rocker cover gasket to the rocker cover. (outer section and ignition coil section)

NOTE:
Use a new rocker cover gasket.

GETTHEMANUALS.org

(2) Apply liquid gasket to the specified point of the cylinder head.

NOTE:
Install within 5 min. after applying liquid gasket.

Liquid gasket:
THREE BOND 1217G (Part No. K0877Y0100) or equivalent

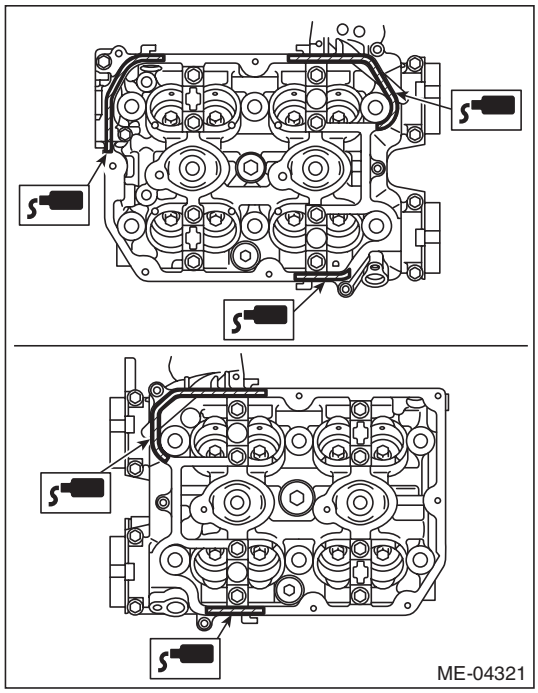

(3) Install the rocker cover onto cylinder heads. Ensure the gasket is properly positioned during installation.

(4) Temporarily tighten the rocker cover bolts in alphabetical order shown in the figure, and then tighten to specified torque in alphabetical order.

Tightening torque:
6.4 N·m (0.7 kgf-m, 4.7 ft-lb)

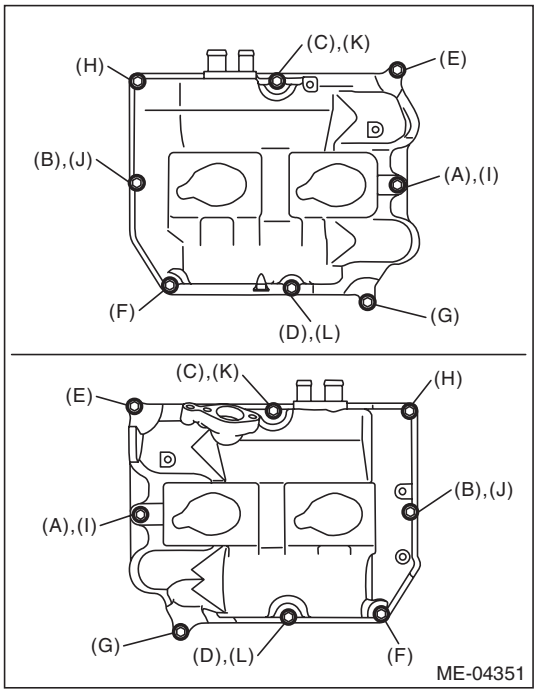

44) Connect the PCV hose to the rocker cover.
45) Install the timing belt cover. <Ref. to ME(H4DOTC)-49, INSTALLATION, Timing Belt Cover.>
46) Install the crank pulley. <Ref. to ME(H4DOTC)-44, INSTALLATION, Crank Pulley.>
47) Install the intake manifold. <Ref. to FU(H4DOTC)-22, INSTALLATION, Intake Manifold.>
48) Install the engine to the vehicle. <Ref. to ME(H4DOTC)-34, INSTALLATION, Engine Assembly.>

GETTHEMANUALS.org

C: DISASSEMBLY

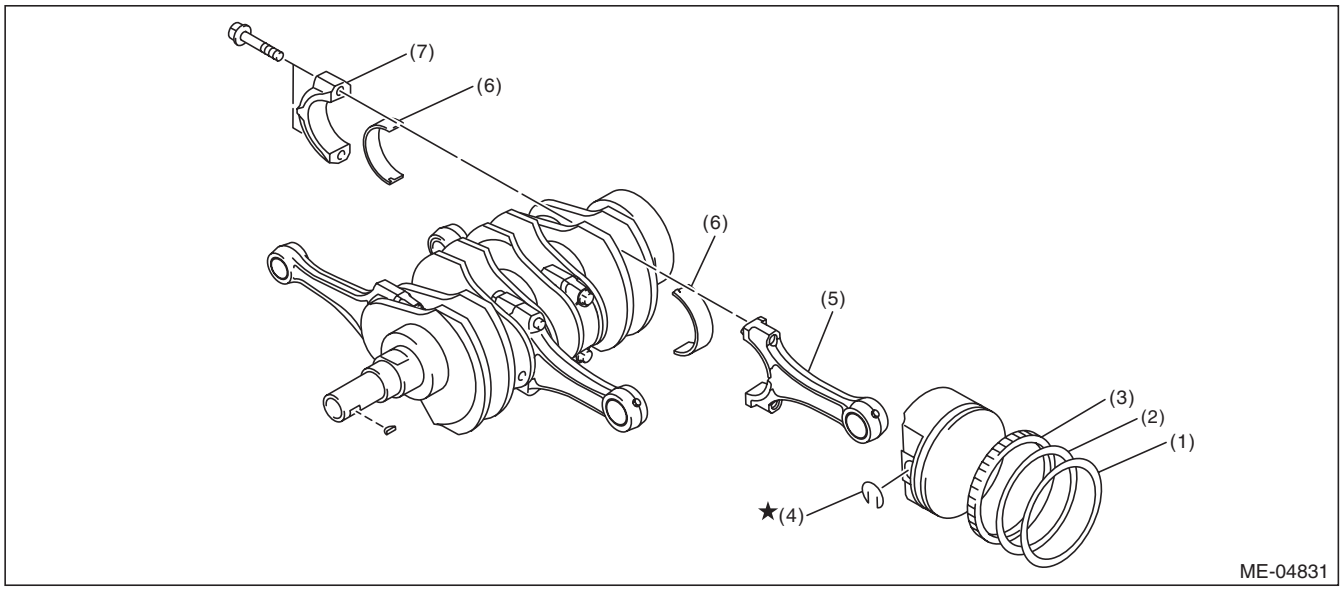

(1)	Top ring	(4)	Snap ring	(6)	Connecting rod bearing
(2)	Second ring	(5)	Connecting rod	(7)	Connecting rod cap
(3)	Oil ring				

1) Remove the connecting rod cap.
2) Remove the connecting rod bearing.

NOTE:
Keep the removed connecting rods, connecting rod caps and bearings in order so that they are kept in their original combinations/groups, and not mixed together.
3) Remove the piston rings using piston ring expander.
4) Remove the oil ring by hand.

NOTE:
Arrange the removed piston rings in proper order, to prevent confusion.
5) Remove the snap ring.

GETTHEMANUALS.org

D: ASSEMBLY

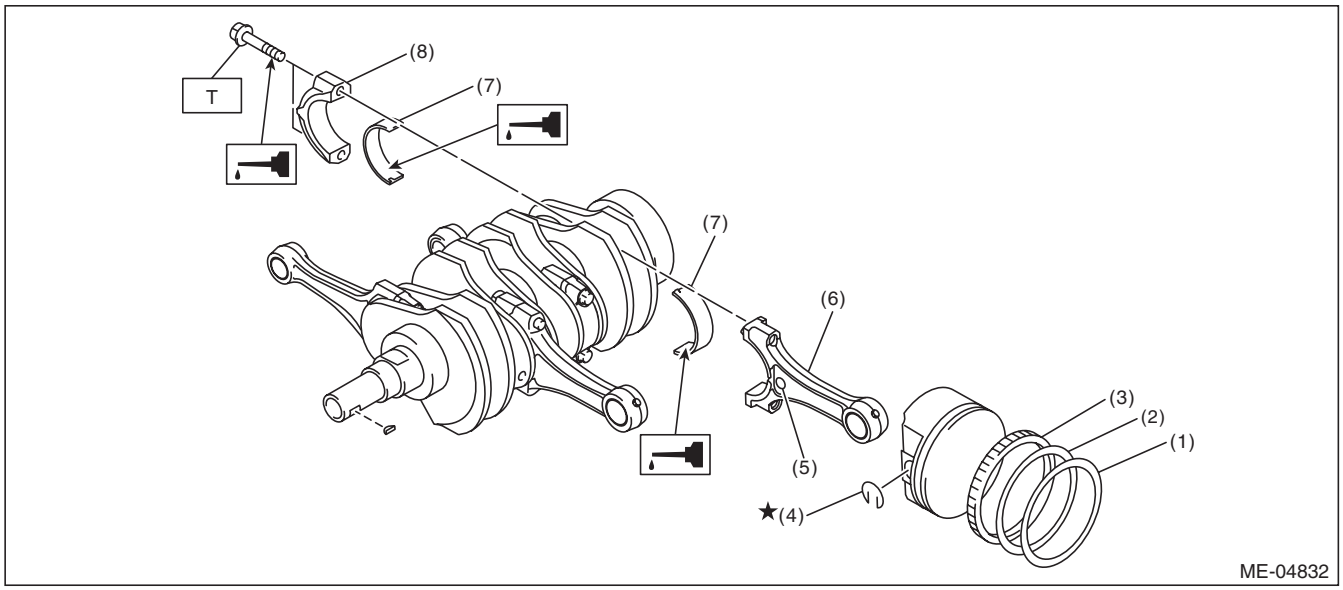

(1)	Top ring	(5)	Side mark	***Tightening torque:N·m (kgf-m, ft-lb)***
(2)	Second ring	(6)	Connecting rod	***T: 52 (5.3, 38.4)***
(3)	Oil ring	(7)	Connecting rod bearing	
(4)	Snap ring	(8)	Connecting rod cap	

1) Apply engine oil to the surface of the connecting rod bearings, and install the connecting rod bearings on connecting rods and connecting rod caps.
2) Position each connecting rod with the side with a side mark facing forward, and install it.
3) Attach the connecting rod cap and tighten it with connecting rod bolt. Make sure the arrow on connecting rod cap faces the front during installation.

NOTE:
- Each connecting rod has its own mating cap. Make sure that they are assembled correctly by checking their matching number.
- When tightening the connecting rod bolts, apply oil on the threads.

Tightening torque:
52 N·m (5.3 kgf-m, 38.4 ft-lb)

4) Install the oil ring upper rail, expander and lower rail by hand.
5) Install the second ring and top ring using piston ring expander.

NOTE:
Assemble so that the piston ring mark “R” faces the top side of the piston.

GETTHEMANUALS.org

E: INSPECTION

1. CYLINDER BLOCK

1) Check for cracks or damage. Use liquid penetrant tester on the important sections to check for fissures. Check that there are no marks of gas leaking or water leaking on gasket installing surface.
2) Check the oil passages for clogging.
3) Inspect the cylinder block surface that mates with cylinder head for warping by using a straight edge, and correct by grinding if necessary.

Warping limit:
0.025 mm (0.00098 in)

Grinding limit:
0.1 mm (0.004 in)

Standard height of cylinder block:
201.0 mm (7.91 in)

2. CYLINDER AND PISTON

1) The cylinder bore size is stamped on the front upper face of the cylinder block.

NOTE:
- Measurement should be performed at a temperature of 20°C (68°F).
- Standard sized pistons are classified into two grades, “A” and “B”. These grades should be used as guide lines in selecting a standard piston.

Standard diameter:
A: 99.505 — 99.515 mm (3.9175 — 3.9179 in)
B: 99.495 — 99.505 mm (3.9171 — 3.9175 in)

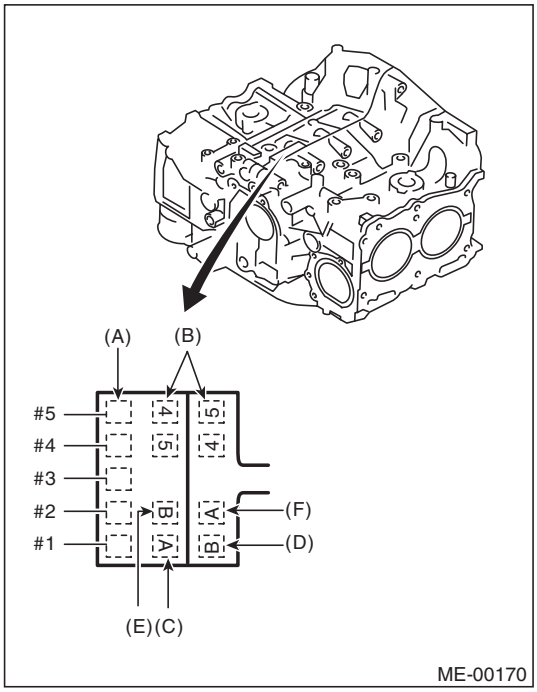

(A) Main journal size mark
(B) Cylinder block (RH) – (LH) combination mark
(C) #1 cylinder bore size mark
(D) #2 cylinder bore size mark
(E) #3 cylinder bore size mark
(F) #4 cylinder bore size mark

GETtheMANUALS.org

2) Measure inner diameter of each cylinder.
Measure the inner diameter of each cylinder in both the thrust and piston pin directions at the heights as shown in the figure, using a cylinder bore gauge.

NOTE:
Measurement should be performed at a temperature of 20°C (68°F).

Cylindricality:
Limit
0.015 mm (0.0006 in)

Out-of-roundness:
Limit
0.010 mm (0.0004 in)

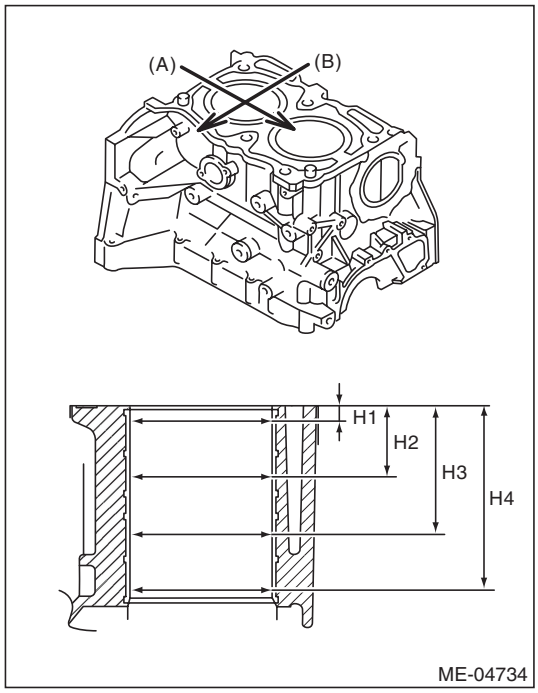

(A) Piston pin direction
(B) Thrust direction
H1: 10 mm (0.39 in)
H2: 45 mm (1.77 in)
H3: 80 mm (3.15 in)
H4: 115 mm (4.53 in)

3) When the piston is to be replaced due to general or cylinder wear, select a suitable sized piston by measuring the piston clearance.

4) Measure outer diameter of each piston.
Measure the outer diameter of each piston at the height as shown in the figure. (Thrust direction)

NOTE:
Measurement should be performed at a temperature of 20°C (68°F).

Piston grade point H:
38.2 mm (1.50 in)

Piston outer diameter:

Standard
A: 99.505 — 99.515 mm (3.9175 — 3.9179 in)
B: 99.495 — 99.505 mm (3.9171 — 3.9175 in)
0.25 mm (0.0098 in) oversize
99.745 — 99.765 mm (3.9270 — 3.9278 in)
0.50 mm (0.0197 in) oversize
99.995 — 100.015 mm (3.9368 — 3.9376 in)

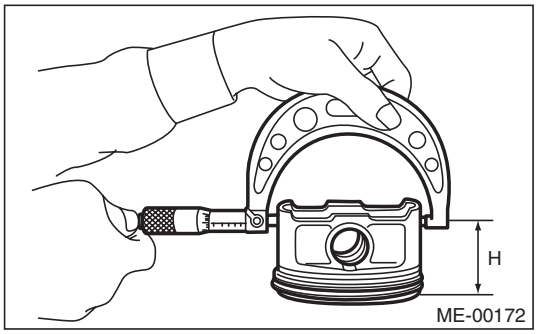

5) Calculate the clearance between cylinder and piston.

NOTE:
Measurement should be performed at a temperature of 20°C (68°F).

Clearance between cylinder and piston at 20°C (68°F):
Standard
–0.010 — 0.010 mm (–0.00039 — 0.00039 in)

6) Boring and honing
(1) If any of the measured value of cylindricality, out-of-roundness or cylinder-to-piston clearance is out of standard or if there is any damage on the cylinder wall, rebore it to replace with an oversize piston.

CAUTION:
When any of the cylinders needs reboring, all other cylinders must be bored at the same time, and replaced with oversize pistons.

GETtheMANUALS.org

(2) If the cylinder inner diameter exceeds the limit after boring and honing, replace the cylinder block.

NOTE:
Immediately after reboring, the cylinder diameter may differ from its real diameter due to temperature rise. Thus, when measuring the cylinder diameter, wait until it has cooled to room temperature.

Cylinder inner diameter boring limit (diameter):
To 100.005 mm (3.9372 in)

3. PISTON AND PISTON PIN

1) Check the piston and piston pin for damage, cracks or wear. Replace if faulty.
2) Check the piston ring groove for wear or damage. Replace if faulty.
3) Make sure that the piston pin can be inserted into the piston pin hole with a thumb at 20°C (68°F). Replace if faulty.

Clearance between piston pin hole and piston pin:
Standard
0.004 — 0.008 mm (0.0002 — 0.0003 in)

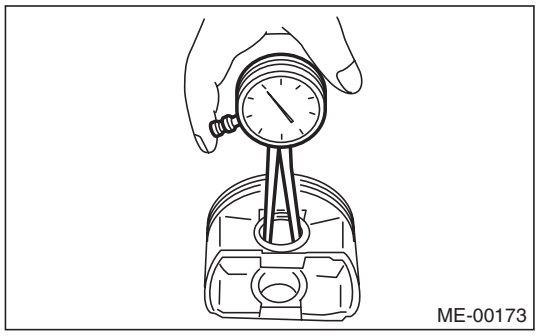
ME-00173

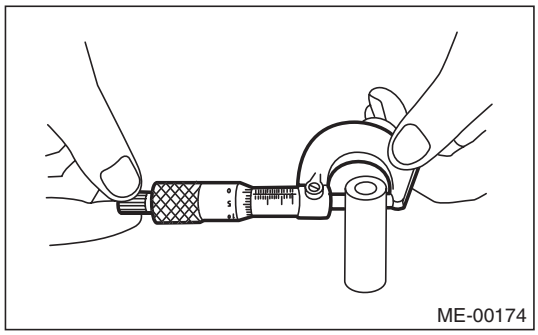
ME-00174

4) Check the snap ring installation groove (A) on the piston for burr. If necessary, remove burr from the groove so that the piston pin can lightly move.

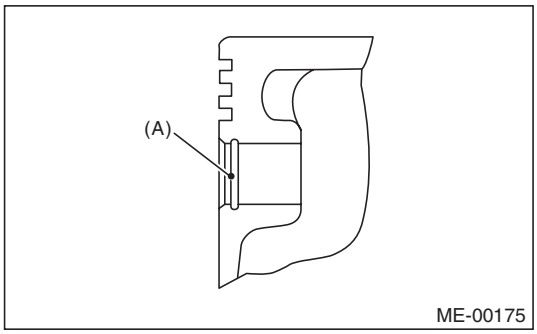

ME-00175

5) Check the snap ring for distortion, cracks and wear.

4. PISTON RING

1) If the piston ring is broken, damaged or worn, or if its tension is insufficient, or when the piston is replaced, replace the piston ring with a new part of the same size as piston.

NOTE:
• The top ring and second ring have the mark to determine the direction for installing. When installing the ring to piston, face marks to the top side.
• Oil ring consists of the upper rail, expander and lower rail. When installing oil ring on piston, be careful of the direction of each rail.

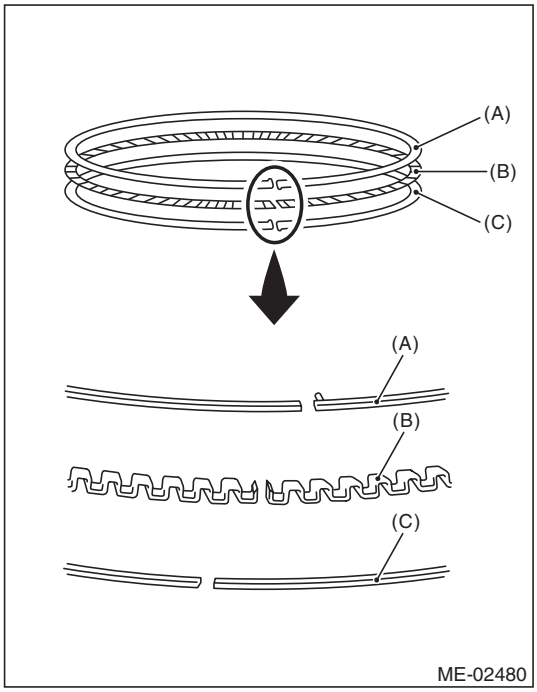

ME-02480

(A) Upper rail
(B) Expander
(C) Lower rail

GETthemANUALS.org

2) Using the piston, insert the piston ring and oil ring into the cylinder block so that they are perpendicular to the cylinder wall, and measure the piston ring gap using a thickness gauge.

		Standard mm (in)
Piston ring gap	Top ring	0.20 — 0.25 (0.0079 — 0.0098)
	Second ring	0.37 — 0.52 (0.015 — 0.020)
	Oil ring rail	0.20 — 0.50 (0.0079 — 0.0197)

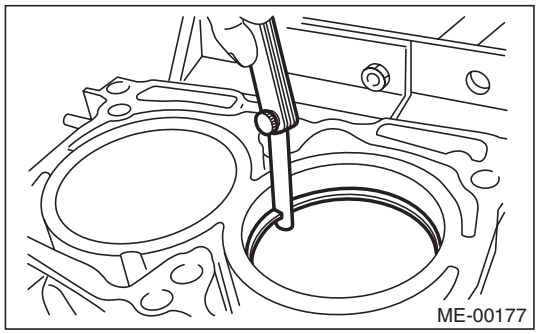
ME-00177

3) Fit the piston ring straight into the piston ring groove, then measure the clearance between piston ring and piston ring groove with a thickness gauge.

NOTE:
Before measuring the clearance, clean the piston ring groove and piston ring.

		Standard mm (in)
Clearance between piston ring and piston ring groove	Top ring	0.040 — 0.080 (0.0016 — 0.0031)
	Second ring	0.030 — 0.070 (0.0012 — 0.0028)

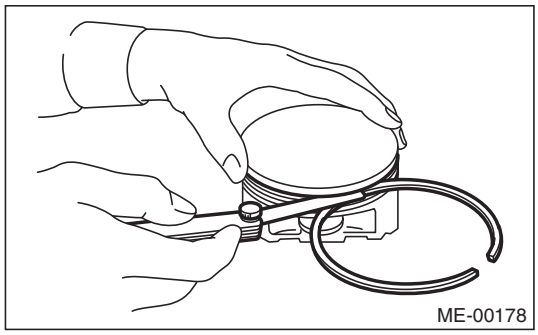
ME-00178

5. CONNECTING ROD

1) Replace the connecting rod, if the large or small end thrust surface is damaged.
2) Check for bend or twist using a connecting rod aligner. Replace the connecting rod if the bend or twist exceeds the limit.

Limit of bend or twist per 100 mm (3.94 in) in length:
0.10 mm (0.0039 in)

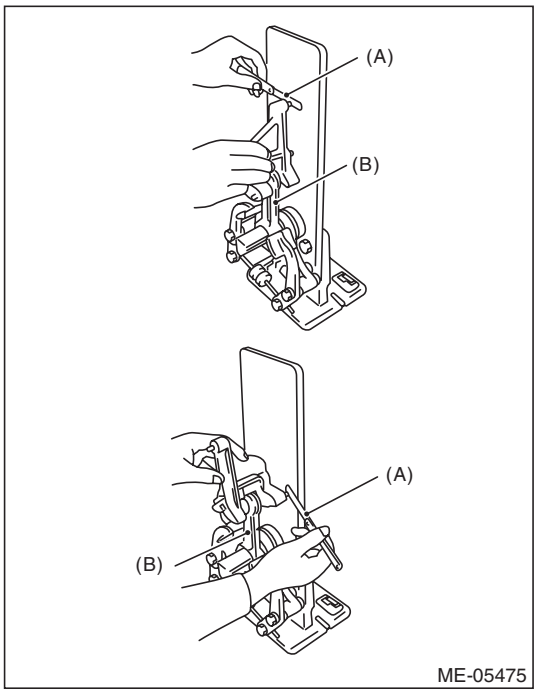

ME-05475

(A) Thickness gauge
(B) Connecting rod

3) Install the connecting rod with bearings attached to the crankshaft, and using a thickness gauge, measure the thrust clearance. If the thrust clearance exceeds the standard or uneven wear is found, replace the connecting rod.

Connecting rod thrust clearance:
Standard
0.070 — 0.330 mm (0.0028 — 0.0130 in)

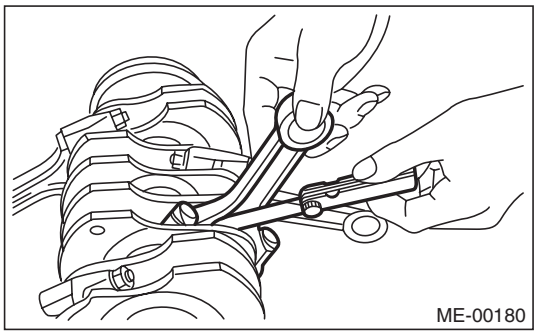
ME-00180

4) Inspect the connecting rod bearing for scar, peeling, seizure, melting, wear, etc.

GETthemANUALS.org

5) Measure the oil clearance on each connecting rod bearing using plastigauge. If any oil clearance is not within the standard, replace the defective bearing with a new part of standard size or undersize as necessary.

Connecting rod oil clearance:
Standard
0.017 — 0.045 mm (0.0007 — 0.0018 in)

Unit: mm (in)

Bearing	Bearing size (Thickness at center)	Outer diameter of crank pin
Standard	1.490 — 1.506 (0.0587 — 0.0593)	51.976 — 52.000 (2.0463 — 2.0472)
0.03 (0.0012) Undersize	1.504 — 1.512 (0.0592 — 0.0595)	51.954 — 51.970 (2.0454 — 2.0461)
0.05 (0.0020) Undersize	1.514 — 1.522 (0.0596 — 0.0599)	51.934 — 51.950 (2.0447 — 2.0453)
0.25 (0.0098) Undersize	1.614 — 1.622 (0.0635 — 0.0639)	51.734 — 51.750 (2.0368 — 2.0374)

6) Inspect the bushing at connecting rod small end, and replace the connecting rod if it is worn or damaged.
7) Measure the piston pin clearance at connecting rod small end. If the measured value is not within the standard, replace the connecting rod and piston pin as a set.

Clearance between piston pin and bushing:
Standard
0 — 0.022 mm (0 — 0.0009 in)

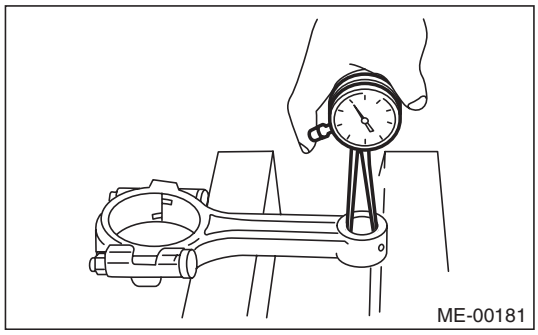
ME-00181

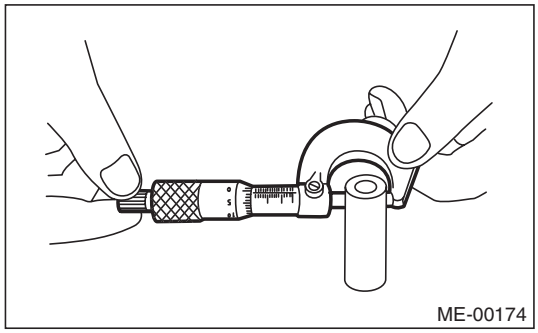
ME-00174

6. CRANKSHAFT AND CRANKSHAFT BEARING

1) Clean the crankshaft completely, and check it for cracks using liquid penetrant tester. If defective, replace the crankshaft.
2) Measure warping of the crankshaft. If it exceeds the limit, correct or replace it.

NOTE:
If a suitable V-block is not available, using just the #1 and #5 crankshaft bearings on cylinder block, position the crankshaft on cylinder block. Then, measure the crankshaft bend using a dial gauge.

Crankshaft bend limit:
0.035 mm (0.0014 in)

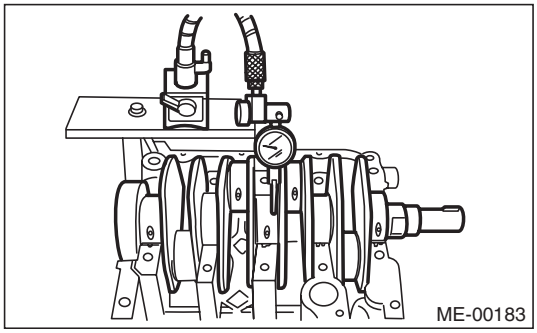
ME-00183

GETtheMANUALS.org

3) Inspect the crank journal and crank pin for wear. If they are not within the standard, replace the bearing with a suitable (undersize) one, and replace or grind to correct the crankshaft as necessary. When grinding the crank journal or crank pin, finish them to the specified dimensions according to the undersize bearing to be used.

Crank pin:
- ***Cylindricality***
  - ***Limit***
  - ***0.004 mm (0.0002 in)***
- ***Out-of-roundness***
  - ***Limit***
  - ***0.003 mm (0.0001 in)***
- ***Grinding limit (dia.)***
  - ***To 51.750 mm (2.0374 in)***

Crank journal:
- ***Cylindricality***
  - ***Limit***
  - ***0.006 mm (0.0002 in)***
- ***Out-of-roundness***
  - ***Limit***
  - ***0.005 mm (0.0002 in)***
- ***Grinding limit (dia.)***
  - ***To 59.758 mm (2.3527 in)***

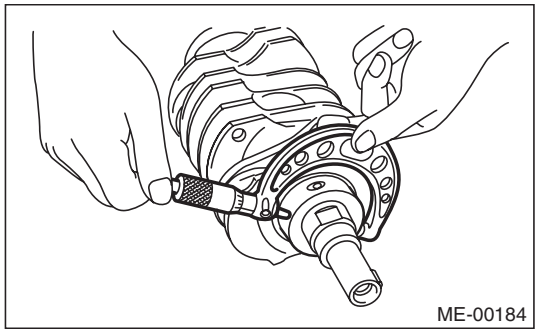

Unit: mm (in)

		Crank journal diameter		Crank pin outer diameter
		#1, #3	#2, #4, #5	
Standard	Journal O.D.	59.984 — 60.008 (2.3616 — 2.3625)	59.984 — 60.008 (2.3616 — 2.3625)	51.976 — 52.000 (2.0463 — 2.0472)
	Bearing size (Thickness at center)	1.998 — 2.015 (0.0787 — 0.0793)	2.000 — 2.017 (0.0787 — 0.0794)	1.490 — 1.506 (0.0587 — 0.0593)
0.03 (0.0012) Undersize	Journal O.D.	59.962 — 59.978 (2.3607 — 2.3613)	59.962 — 59.978 (2.3607 — 2.3613)	51.954 — 51.970 (2.0454 — 2.0461)
	Bearing size (Thickness at center)	2.017 — 2.020 (0.0794 — 0.0795)	2.019 — 2.022 (0.0795 — 0.0796)	1.504 — 1.512 (0.0592 — 0.0595)
0.05 (0.0020) Undersize	Journal O.D.	59.942 — 59.958 (2.3599 — 2.3605)	59.942 — 59.958 (2.3599 — 2.3605)	51.934 — 51.950 (2.0447 — 2.0453)
	Bearing size (Thickness at center)	2.027 — 2.030 (0.0798 — 0.0799)	2.029 — 2.032 (0.0799 — 0.0800)	1.514 — 1.522 (0.0596 — 0.0599)
0.25 (0.0098) Undersize	Journal O.D.	59.742 — 59.758 (2.3520 — 2.3527)	59.742 — 59.758 (2.3520 — 2.3527)	51.734 — 51.750 (2.0368 — 2.0374)
	Bearing size (Thickness at center)	2.127 — 2.130 (0.0837 — 0.0839)	2.129 — 2.132 (0.0838 — 0.0839)	1.614 — 1.622 (0.0635 — 0.0639)

GETtheMANUALS.org

4) Use a thickness gauge to measure the thrust clearance of crankshaft at #5 crank journal bearing. If clearance exceeds the standard, replace the bearing.

Crankshaft thrust clearance:
Standard
0.030 — 0.115 mm (0.0012 — 0.0045 in)

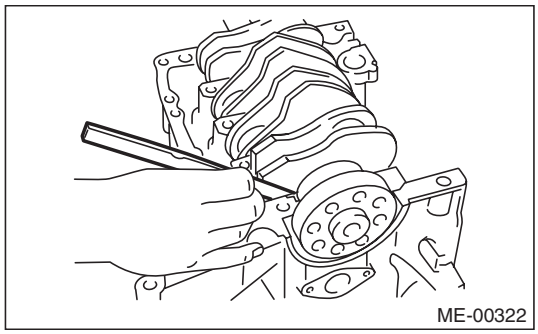

5) Inspect individual crankshaft bearings for signs of flaking, seizure, melting and wear.
6) Measure the oil clearance on each crankshaft bearing using plastigauge. If the measured value is out of standard, replace the defective bearing with an undersize one, and replace or grind to correct the crankshaft as necessary.

Crankshaft oil clearance:
Standard
0.010 — 0.030 mm (0.00039 — 0.0012 in)

GETtheMANUALS.org

21.Intake and Exhaust Valve

A: SPECIFICATION

Refer to “Cylinder Head” for removal and installation procedures of the intake and exhaust valves. <Ref. to ME(H4DOTC)-74, REMOVAL, Cylinder Head.> <Ref. to ME(H4DOTC)-75, INSTALLATION, Cylinder Head.>

GETtheMANUALS.org

22. Piston

A: SPECIFICATION

Refer to “Cylinder Block” for removal and installation procedures of pistons. <Ref. to ME(H4DOTC)-83, REMOVAL, Cylinder Block.> <Ref. to ME(H4DOTC)-87, INSTALLATION, Cylinder Block.>

GETtheMANUALS.org

23. Connecting Rod

A: SPECIFICATION

Refer to “Cylinder Block” for removal and installation procedures of connecting rod. <Ref. to ME(H4DOTC)-83, REMOVAL, Cylinder Block.> <Ref. to ME(H4DOTC)-87, INSTALLATION, Cylinder Block.>

GETtheMANUALS.org

24. Crankshaft

A: SPECIFICATION

Refer to “Cylinder Block” for removal and installation procedures of the crankshaft. <Ref. to ME(H4DOTC)-83, REMOVAL, Cylinder Block.> <Ref. to ME(H4DOTC)-87, INSTALLATION, Cylinder Block.>

GETthemANUALS.org

25. Engine Trouble in General

A: INSPECTION

NOTE:
The “RANK” shown in the chart shows the possibilities of the cause of trouble in order from “Very often” to “Rarely”.
A — Very often
B — Sometimes
C — Rarely

Symptoms	Problem parts etc.	Possible cause	RANK
1. Engine does not start.			
1) Starter does not turn.	Starter	Defective battery-to-starter harness	B
		Defective starter switch	C
		Defective starter	B
	Battery	Improper connection of terminal	A
		Run-down battery	A
		Defective charging system	B
	Friction	Seizure of crankshaft and connecting rod bearing	C
		Seized camshaft	C
		Seized or stuck piston and cylinder	C
	Immobilizer system <Ref. to IM(diag)-2, Basic Diagnostic Procedure.>		A
2) Initial combustion does not occur.	Starter	Defective starter	C
	Engine control system <Ref. to EN(H4DOTC)(diag)-2, Basic Diagnostic Procedure.>		A
	Fuel line	Defective fuel pump and relay	A
		Clogged fuel line	C
		Lack of fuel or insufficient fuel	B
	Timing belt	Degradation, etc.	B
		Defective timing	B
	Compression	Incorrect valve clearance	C
		Loosened spark plug or defective gasket	C
		Loosened cylinder head bolt or defective cylinder head gasket	C
		Improper valve sealing	C
		Defective valve stem	C
		Worn or broken valve spring	B
		Worn or stuck piston rings, cylinder and piston	C
		Incorrect valve timing	B
		Improper engine oil (low viscosity)	B

GETtheMANUALS.org

Symptoms	Problem parts etc.	Possible cause	RANK
3) Initial combustion occurs.	Engine control system <Ref. to EN(H4DOTC)(diag)-2, Basic Diagnostic Procedure.>		A
	Intake system	Defective intake manifold gasket	B
		Defective throttle body gasket	B
	Fuel line	Defective fuel pump and relay	C
		Clogged fuel line	C
		Lack of fuel or insufficient fuel	B
	Timing belt	Degradation, etc.	B
		Defective timing	B
	Compression	Incorrect valve clearance	C
		Loosened spark plug or defective gasket	C
		Loosened cylinder head bolt or defective cylinder head gasket	C
		Improper valve sealing	C
		Defective valve stem	C
		Worn or broken valve spring	B
		Worn or stuck piston rings, cylinder and piston	C
		Incorrect valve timing	B
		Improper engine oil (low viscosity)	B
4) Engine stalls after initial combustion.	Engine control system <Ref. to EN(H4DOTC)(diag)-2, Basic Diagnostic Procedure.>		A
	Intake system	Loosened or cracked intake duct	B
		Loosened or cracked PCV hose	C
		Loosened or cracked vacuum hose	C
		Defective intake manifold gasket	B
		Defective throttle body gasket	B
		Dirty air cleaner element	C
	Fuel line	Clogged fuel line	C
		Lack of fuel or insufficient fuel	B
	Timing belt	Degradation, etc.	B
		Defective timing	B
	Compression	Incorrect valve clearance	C
		Loosened spark plug or defective gasket	C
		Loosened cylinder head bolt or defective cylinder head gasket	C
		Improper valve sealing	C
		Defective valve stem	C
		Worn or broken valve spring	B
		Worn or stuck piston rings, cylinder and piston	C
		Incorrect valve timing	B
		Improper engine oil (low viscosity)	B

GETtheMANUALS.org

Symptoms	Problem parts etc.	Possible cause	RANK
2. Rough idle and engine stall	Engine control system <Ref. to EN(H4DOTC)(diag)-2, Basic Diagnostic Procedure.>		A
	Intake system	Loosened or cracked intake duct	A
		Loosened or cracked PCV hose	A
		Loosened or cracked vacuum hose	A
		Defective intake manifold gasket	B
		Defective throttle body gasket	B
		Defective PCV valve	C
		Loosened oil filler cap	B
		Dirty air cleaner element	C
	Fuel line	Defective fuel pump and relay	C
		Clogged fuel line	C
		Lack of fuel or insufficient fuel	B
	Timing belt	Defective timing	C
	Compression	Incorrect valve clearance	B
		Loosened spark plug or defective gasket	B
		Loosened cylinder head bolt or defective cylinder head gasket	B
		Improper valve sealing	B
		Defective valve stem	C
		Worn or broken valve spring	B
		Worn or stuck piston rings, cylinder and piston	B
		Incorrect valve timing	A
		Improper engine oil (low viscosity)	B
	Lubrication system	Incorrect oil pressure	B
		Defective rocker cover gasket	C
	Cooling system	Over-heating	C
	Others	Evaporative emission control system malfunction	A
		Stuck or damaged throttle valve	B

GETtheMANUALS.org

Symptoms	Problem parts etc.	Possible cause	RANK
3. Low output, hesitation and poor acceleration	Engine control system <Ref. to EN(H4DOTC)(diag)-2, Basic Diagnostic Procedure.>		A
	Intake system	Loosened or cracked intake duct	A
		Loosened or cracked PCV hose	A
		Loosened or cracked vacuum hose	B
		Defective intake manifold gasket	B
		Defective throttle body gasket	B
		Defective PCV valve	B
		Loosened oil filler cap	B
		Dirty air cleaner element	A
	Fuel line	Defective fuel pump and relay	B
		Clogged fuel line	B
		Lack of fuel or insufficient fuel	C
	Timing belt	Defective timing	B
	Compression	Incorrect valve clearance	B
		Loosened spark plug or defective gasket	B
		Loosened cylinder head bolt or defective cylinder head gasket	B
		Improper valve sealing	B
		Defective valve stem	C
		Worn or broken valve spring	B
		Worn or stuck piston rings, cylinder and piston	C
		Incorrect valve timing	A
		Improper engine oil (low viscosity)	B
	Lubrication system	Incorrect oil pressure	B
	Cooling system	Over-heating	C
		Over-cooling	C
	Others	Evaporative emission control system malfunction	A

GETtheMANUALS.org

Symptoms	Problem parts etc.	Possible cause	RANK
4. Surging	Engine control system <Ref. to EN(H4DOTC)(diag)-2, Basic Diagnostic Procedure.>		A
	Intake system	Loosened or cracked intake duct	A
		Loosened or cracked PCV hose	A
		Loosened or cracked vacuum hose	A
		Defective intake manifold gasket	B
		Defective throttle body gasket	B
		Defective PCV valve	B
		Loosened oil filler cap	B
		Dirty air cleaner element	B
	Fuel line	Defective fuel pump and relay	B
		Clogged fuel line	B
		Lack of fuel or insufficient fuel	C
	Timing belt	Defective timing	B
	Compression	Incorrect valve clearance	B
		Loosened spark plug or defective gasket	C
		Loosened cylinder head bolt or defective cylinder head gasket	C
		Improper valve sealing	C
		Defective valve stem	C
		Worn or broken valve spring	C
		Worn or stuck piston rings, cylinder and piston	C
		Incorrect valve timing	A
		Improper engine oil (low viscosity)	B
	Cooling system	Over-heating	B
	Others	Evaporative emission control system malfunction	C
5. Engine does not return to idle.	Engine control system <Ref. to EN(H4DOTC)(diag)-2, Basic Diagnostic Procedure.>		A
	Intake system	Loosened or cracked vacuum hose	A
	Others	Stuck or damaged throttle valve	A
6. Dieseling (Run-on)	Engine control system <Ref. to EN(H4DOTC)(diag)-2, Basic Diagnostic Procedure.>		A
	Cooling system	Over-heating	B
	Others	Evaporative emission control system malfunction	B
7. After burning in exhaust system	Engine control system <Ref. to EN(H4DOTC)(diag)-2, Basic Diagnostic Procedure.>		A
	Intake system	Loosened or cracked intake duct	C
		Loosened or cracked PCV hose	C
		Loosened or cracked vacuum hose	B
		Defective PCV valve	B
		Loosened oil filler cap	C
	Timing belt	Defective timing	B
	Compression	Incorrect valve clearance	B
		Loosened spark plug or defective gasket	C
		Loosened cylinder head bolt or defective cylinder head gasket	C
		Improper valve sealing	B
		Defective valve stem	C
		Worn or broken valve spring	C
		Worn or stuck piston rings, cylinder and piston	C
		Incorrect valve timing	A
	Lubrication system	Incorrect oil pressure	C
	Cooling system	Over-cooling	C
	Others	Evaporative emission control system malfunction	C

GETthemANUALS.org

Symptoms	Problem parts etc.	Possible cause	RANK
8. Knocking	Engine control system <Ref. to EN(H4DOTC)(diag)-2, Basic Diagnostic Procedure.>		A
	Intake system	Loosened oil filler cap	B
	Timing belt	Defective timing	B
	Compression	Incorrect valve clearance	C
		Incorrect valve timing	B
	Cooling system	Over-heating	A
9. Excessive engine oil consumption	Intake system	Loosened or cracked PCV hose	A
		Defective PCV valve	B
		Loosened oil filler cap	C
	Compression	Defective valve stem	A
		Worn or stuck piston rings, cylinder and piston	A
	Lubrication system	Loosened oil pump attaching bolts and defective gasket	B
		Defective oil filter gasket	B
		Defective crankshaft oil seal	B
		Defective rocker cover gasket	B
		Loosened oil drain plug or defective gasket	B
		Loosened oil pan fitting bolts or defective oil pan	B
10. Excessive fuel consumption	Engine control system <Ref. to EN(H4DOTC)(diag)-2, Basic Diagnostic Procedure.>		A
	Intake system	Dirty air cleaner element	A
	Timing belt	Defective timing	B
	Compression	Incorrect valve clearance	B
		Loosened spark plug or defective gasket	C
		Loosened cylinder head bolt or defective cylinder head gasket	C
		Improper valve sealing	B
		Defective valve stem	C
		Worn or broken valve spring	C
		Worn or stuck piston rings, cylinder and piston	B
		Incorrect valve timing	B
	Lubrication system	Incorrect oil pressure	C
	Cooling system	Over-cooling	C

GETtheMANUALS.org

26. Engine Noise

A: INSPECTION

Type of sound	Condition	Possible cause
Regular clicking sound	Sound increases as engine speed increases.	• Valve mechanism is defective. • Incorrect valve clearance • Worn camshaft • Broken valve spring
Heavy and dull clank	Oil pressure is low.	• Worn crankshaft main bearing • Worn connecting rod bearing (large end)
	Oil pressure is normal.	• Loosened flywheel mounting bolt • Damaged engine mounting
High-pitched clank	Sound is noticeable when accelerating with an overload condition.	• Ignition timing advanced • Accumulation of carbon inside combustion chamber • Wrong heat range of spark plug • Improper octane value gasoline
Clank when engine speed is between 1,000 and 2,000 rpms.	Sound is reduced when the fuel injector connector of the noisy cylinder is disconnected. *	• Worn crankshaft main bearing • Worn connecting rod bearing (large end)
Knocking sound when engine is operating under idling speed and engine is warm	Sound is reduced when the fuel injector connector of the noisy cylinder is disconnected. *	• Worn cylinder liner and piston ring • Broken or stuck piston ring • Worn piston pin and hole at piston end of connecting rod
	Sound is not reduced if each fuel injector connector is disconnected in turn. *	• Unusually worn valve lifter • Worn cam sprocket • Worn camshaft journal bore in cylinder head
Squeaky sound	—	• Insufficient generator lubrication
Rubbing sound	—	• Poor contact of generator brush and rotor
Gear scream when starting engine	—	• Defective ignition starter switch • Worn gear and starter pinion
Sound like polishing glass with a dry cloth	—	• Loose V-belt • Defective water pump shaft
Hissing sound	—	• Insufficient compression • Air leakage in air intake system, hose, connection or manifold
Timing belt noise	—	• Loose timing belt • Timing belt contacting with adjacent part
Valve noise	—	• Incorrect valve clearance

* When disconnecting the fuel injector connector, the malfunction indicator light illuminates and DTC is stored in ECM memory. Therefore, perform the Clear Memory Mode <Ref. to EN(H4DOTC)(diag)-53, OPERATION, Clear Memory Mode.> and Inspection Mode <Ref. to EN(H4DOTC)(diag)-41, PROCEDURE, Inspection Mode.> after connecting the fuel injector connector.

GETtheMANUALS.org

GETtheMANUALS.org

EXHAUST

EX(H4DOTC)

Page

1. General Description 2
2. Front Exhaust Pipe 5
3. Center Exhaust Pipe 12
4. Rear Exhaust Pipe 15
5. Muffler 17

GETtheMANUALS.org

1. General Description

A: COMPONENT

1. FRONT EXHAUST PIPE

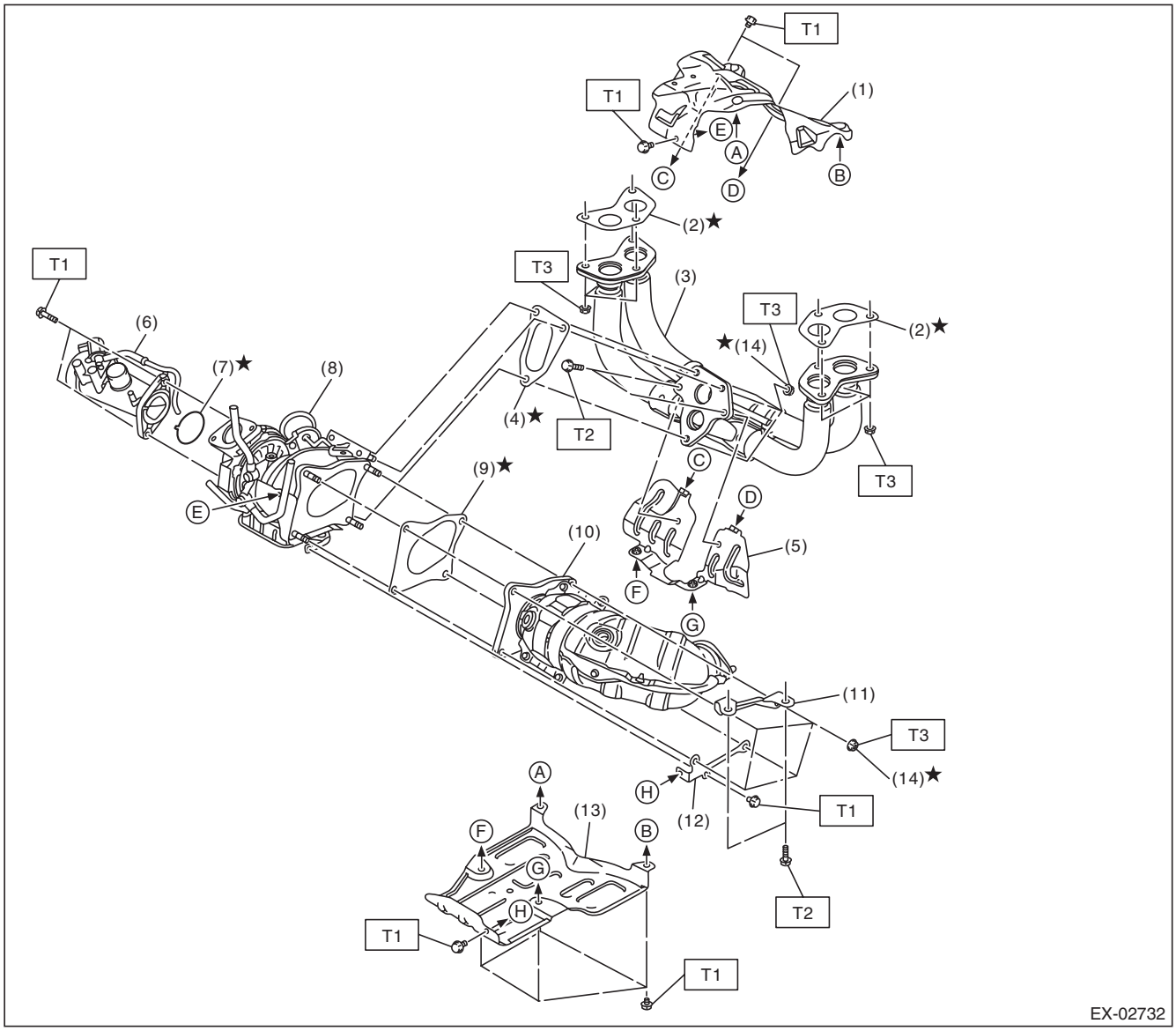

(1)	Exhaust pipe cover	(8)	Turbocharger
(2)	Gasket	(9)	Gasket
(3)	Front exhaust pipe	(10)	Center exhaust pipe (front)
(4)	Gasket	(11)	Turbocharger upper stay
(5)	Exhaust pipe stay	(12)	Turbocharger lower stay
(6)	Intake duct	(13)	Engine cover
(7)	O-ring	(14)	Self-locking nut

Tightening torque:N·m (kgf-m, ft-lb)
T1: 6.4 (0.7, 4.7)
T2: 33 (3.4, 24.3)
T3: 42.5 (4.3, 31.3)

GETthemANUALS.org

2. CENTER AND REAR EXHAUST PIPE, AND MUFFLER

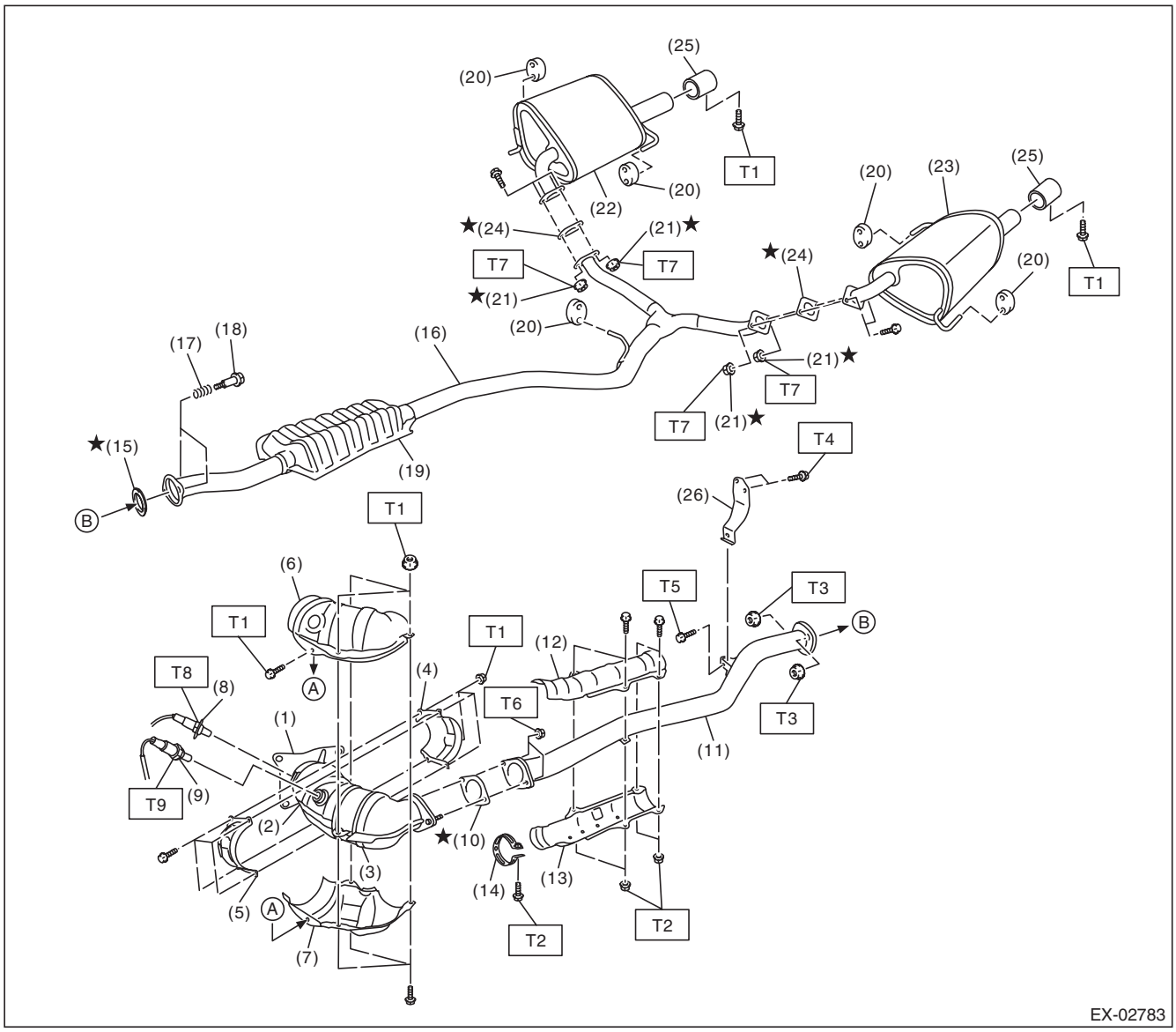

GETthemANUALS.org

(1)	Center exhaust pipe (front)	(14)	Center exhaust pipe band
(2)	Front catalytic converter	(15)	Gasket
(3)	Rear catalytic converter	(16)	Rear exhaust pipe
(4)	Center exhaust pipe inner cover (front)	(17)	Spring
(5)	Center exhaust pipe outer cover (front)	(18)	Bolt
(6)	Center exhaust pipe upper cover (front)	(19)	Chamber
(7)	Center exhaust pipe lower cover (front)	(20)	Cushion rubber
(8)	Front oxygen (A/F) sensor	(21)	Self-locking nut
(9)	Rear oxygen sensor	(22)	Muffler RH
(10)	Gasket	(23)	Muffler LH
(11)	Center exhaust pipe (rear)	(24)	Gasket
(12)	Center exhaust pipe upper cover (rear)	(25)	Muffler cutter
(13)	Center exhaust pipe lower cover (rear)	(26)	Hanger bracket

Tightening torque:N·m (kgf-m, ft-lb)	
T1:	***7.5 (0.8, 5.5)***
T2:	***13 (1.3, 9.6)***
T3:	***18 (1.8, 13.3)***
T4:	***23 (2.3, 17.0)***
T5:	***35 (3.6, 25.8)***
T6:	***42.5 (4.3, 31.3)***
T7:	***48 (4.9, 35.4)***
T8:	***<Ref. to FU(H4DOTC)-54, INSTALLATION, Front Oxygen (A/F) Sensor.>***
T9:	***<Ref. to FU(H4DOTC)-56, INSTALLATION, Rear Oxygen Sensor.>***

B: CAUTION

- Wear appropriate work clothing, including a cap, protective goggles and protective shoes when performing any work.
- Remove contamination including dirt and corrosion before removal, installation or disassembly.
- Keep the disassembled parts in order and protect them from dust and dirt.
- Before removal, installation or disassembly, be sure to clarify the failure. Avoid unnecessary removal, installation, disassembly and replacement.
- Vehicle components are extremely hot after driving. Be wary of receiving burns from heated parts.
- Be sure to tighten fasteners including bolts and nuts to the specified torque.
- Place shop jacks or rigid racks at the specified points.
- Before disconnecting connectors of sensors or units, be sure to disconnect the ground cable from the battery.
- If any fat adheres to the exhaust pipe, wipe it off. Otherwise a fire may happen.

C: PREPARATION TOOL

1. GENERAL TOOL

TOOL NAME	REMARKS
TORX® socket E10	Used for removing and installing center exhaust pipe (front).

GETthemANUALS.org

2. Front Exhaust Pipe

A: REMOVAL

CAUTION:
Vehicle components are extremely hot after driving. Be wary of receiving burns from heated parts.

1) Remove the collector cover.
2) Disconnect the ground cable from battery.

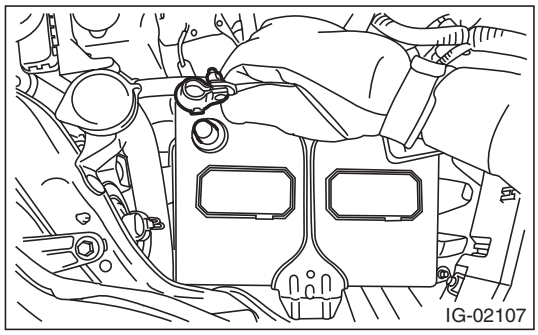

3) Remove the air intake duct. <Ref. to IN(H4DOTC)-12, REMOVAL, Air Intake Duct.>
4) Lift up the vehicle.
5) Remove the under cover. <Ref. to EI-35, REMOVAL, Front Under Cover.>
6) Drain engine coolant. <Ref. to CO(H4DOTC)-14, DRAINING OF ENGINE COOLANT, REPLACEMENT, Engine Coolant.>
7) Lower the vehicle.
8) Disconnect connectors from the front oxygen (A/F) sensor and rear oxygen sensor, and remove the clip (A) fastening the front oxygen (A/F) sensor harness and rear oxygen sensor harness.

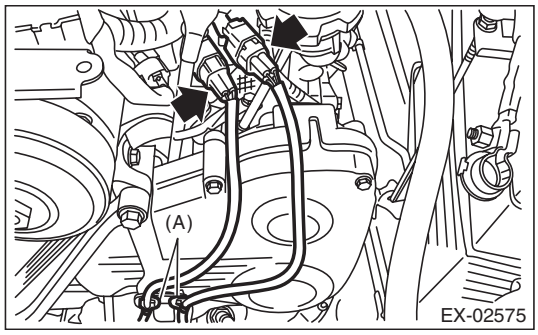

9) Disconnect the engine coolant hose from the water tank pipe and water pump.

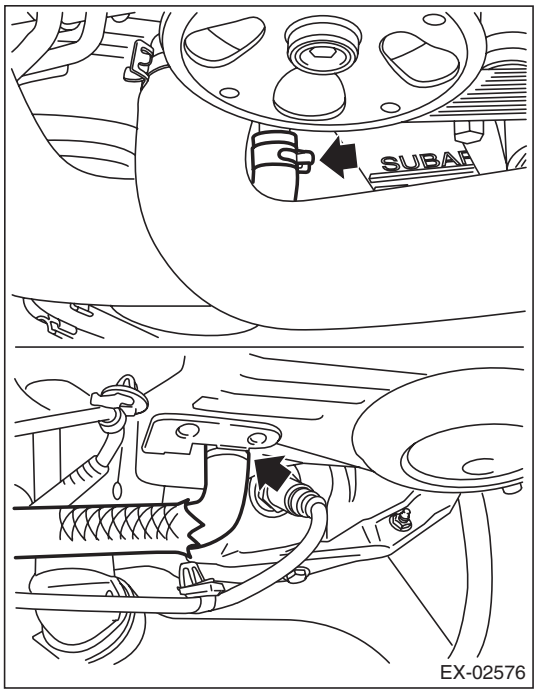

10) Remove the radiator sub fan motor assembly. <Ref. to CO(H4DOTC)-27, REMOVAL, Radiator Sub Fan and Fan Motor.>
11) Remove the engine coolant hose from clip (A), and remove the bolts which secure the intake duct to the turbocharger.

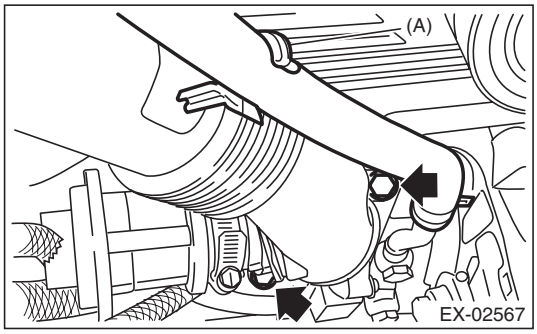

12) Lift up the vehicle.

GETtheMANUALS.org

13) Remove oil inlet pipe B (B) from oil inlet pipe A (A), and remove the bolt which holds oil outlet pipe C (C) and oil inlet pipe A (A).

CAUTION:
In order to prevent damaging the oil inlet pipe, fix the section (a) shown in the figure when loosing the oil inlet pipe flare nut, and avoid the part from rotating together while loosening the nut.

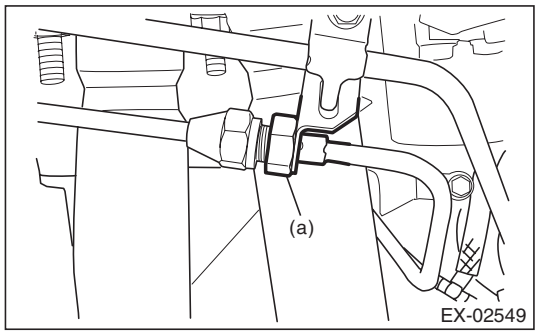

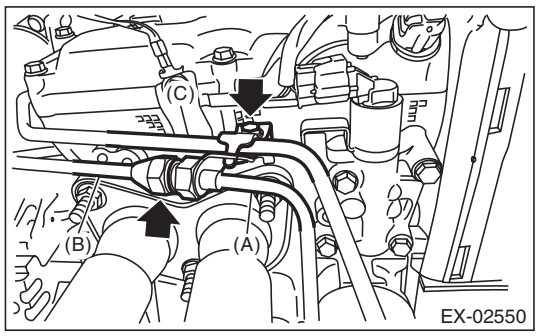

14) Disconnect the air control hose (A), and loosen the bolts which secure the intake duct to the turbocharger.

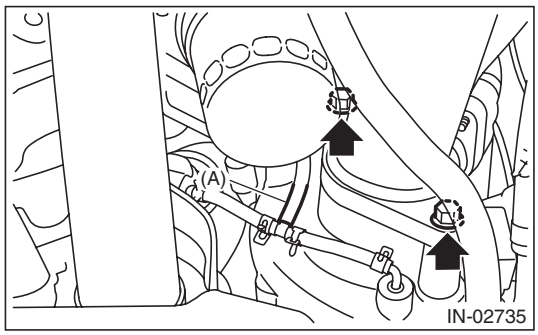

15) Remove the center exhaust pipe (rear) from the center exhaust pipe (front).

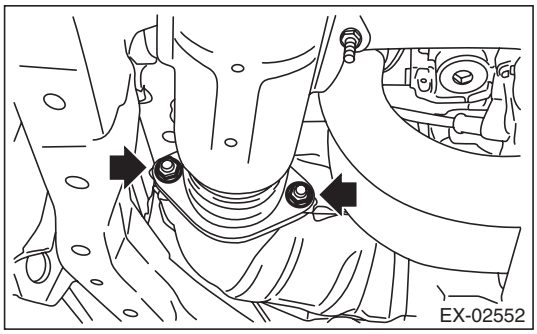

16) Remove the rear exhaust pipe from the center exhaust pipe (rear).

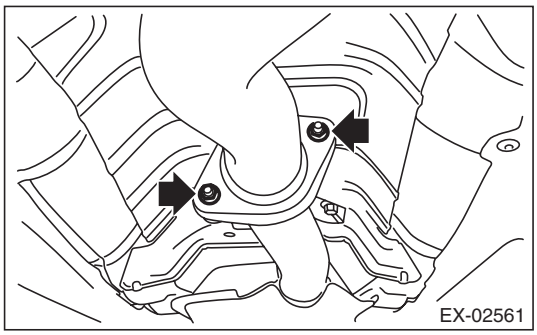

17) Remove the bolt which holds center exhaust pipe (rear) to the hanger bracket, and remove the center exhaust pipe (rear).

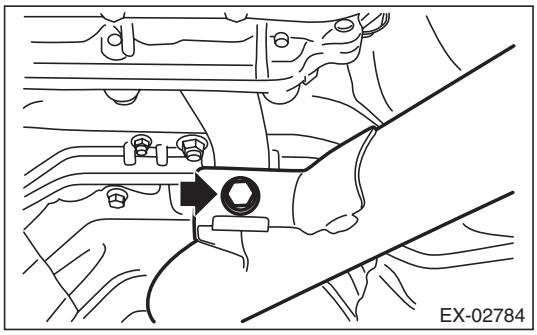

18) Remove the engine cover.

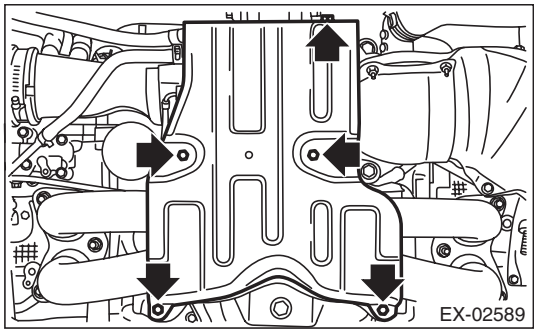

GETthemANUALS.org

19) Remove bolts and nuts which secure the oil catch tank to the turbocharger and oil catch tank stay, and remove the oil catch tank from the turbocharger.

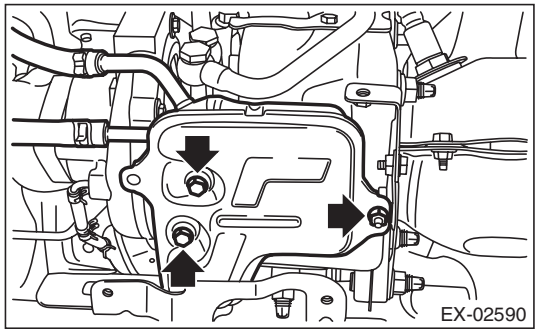

20) Remove the bolts which secure the turbocharger stay.

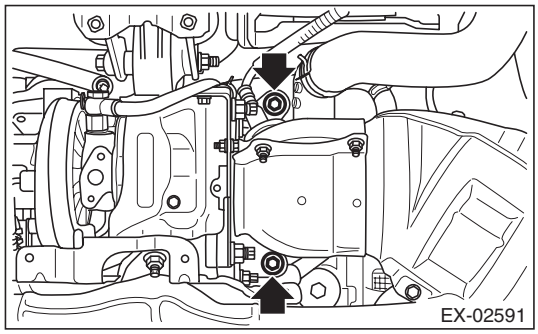

21) While holding the front exhaust pipe with transmission jack, remove the nuts which hold the front exhaust pipe to the cylinder head exhaust port, and remove the front exhaust pipe.

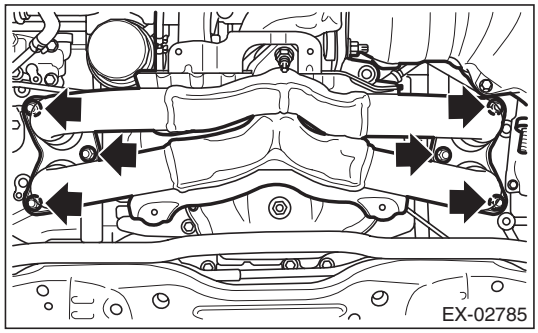

B: INSTALLATION

1) While holding the front exhaust pipe with transmission jack, set the front exhaust pipe, and install the nuts which hold the front exhaust pipe to the cylinder head exhaust port.

NOTE:
Use a new gasket.

Tightening torque:
42.5 N·m (4.3 kgf-m, 31.3 ft-lb)

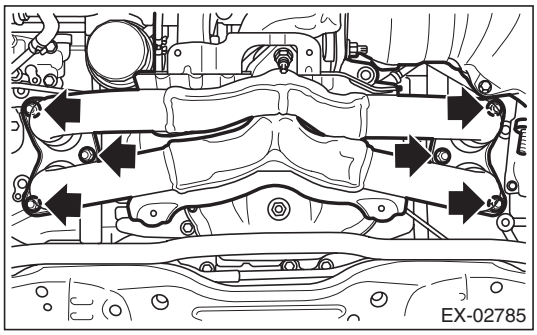

2) Attach the bolt which holds the turbocharger stay.

Tightening torque:
33 N·m (3.4 kgf-m, 24.3 ft-lb)

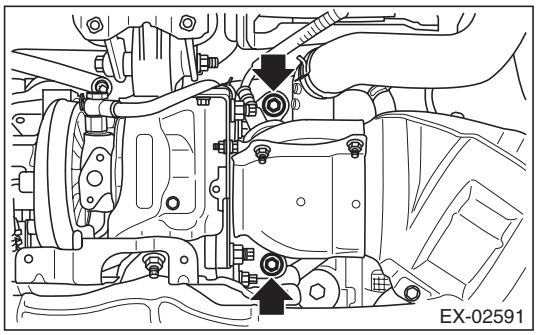

GETthemANUALS.org

3) Set the oil catch tank to the turbocharger, and attach the bolt and nut which secure the oil catch tank to the turbocharger and oil catch tank stay.

NOTE:
- Use a new gasket.
- When installing the oil catch tank, tighten to the specified torque in the alphabetical order shown in the figure.

Tightening torque:
T1: 6.4 N·m (0.7 kgf-m, 4.7 ft-lb)
T2: 10.5 N·m (1.1 kgf-m, 7.7 ft-lb)

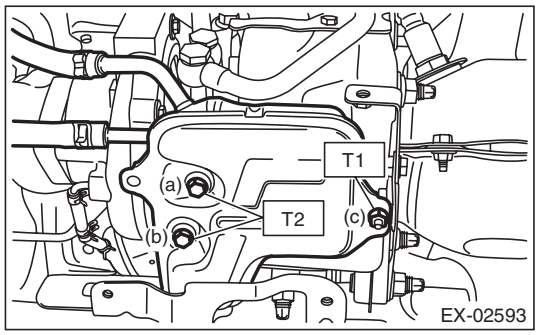

4) Install the engine cover.

Tightening torque:
6.4 N·m (0.7 kgf-m, 4.7 ft-lb)

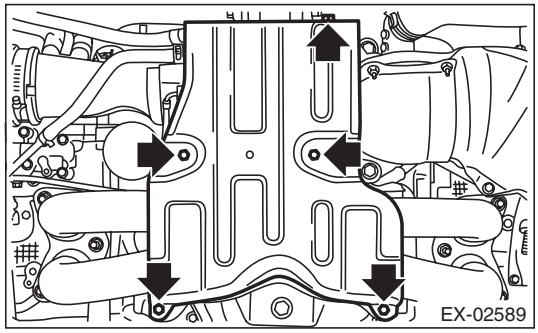

5) Install the center exhaust pipe (rear) and temporarily tighten the bolt which holds center exhaust pipe (rear) to the hanger bracket.

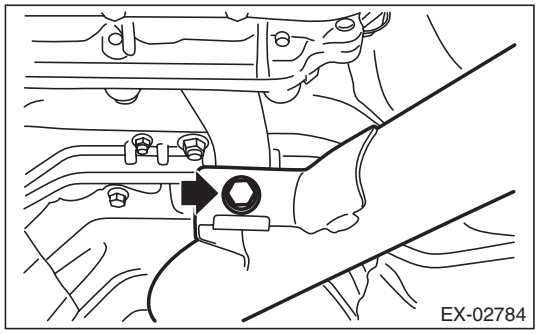

6) Install the rear exhaust pipe to the center exhaust pipe (rear).

NOTE:
Use a new gasket.

Tightening torque:
18 N·m (1.8 kgf-m, 13.3 ft-lb)

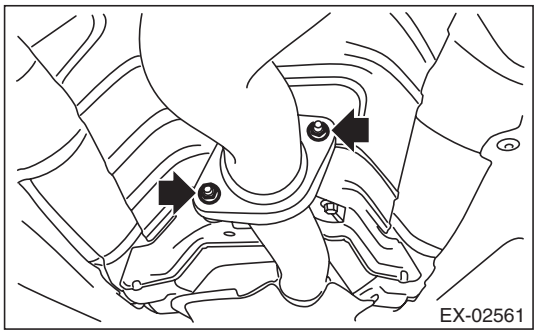

7) Assemble the center exhaust pipe (rear) to the center exhaust pipe (front).

NOTE:
Use a new gasket.

Tightening torque:
42.5 N·m (4.3 kgf-m, 31.3 ft-lb)

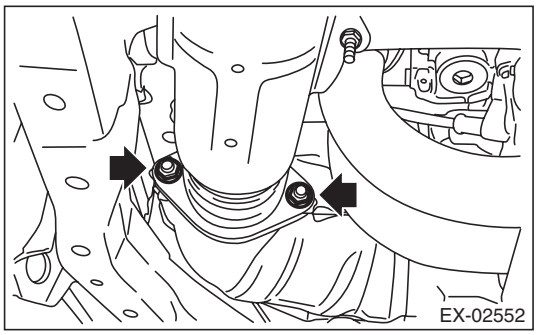

8) Tighten the bolts which hold center exhaust pipe (rear) to the hanger bracket.

Tightening torque:
35 N·m (3.6 kgf-m, 25.8 ft-lb)

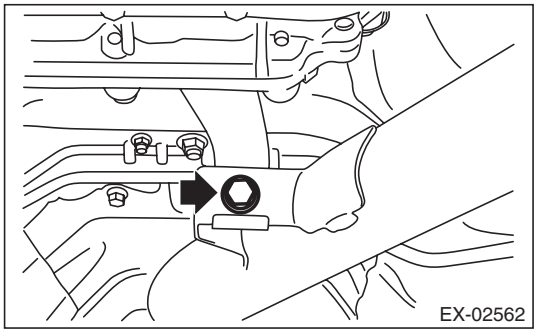

GETthemANUALS.org

9) Install the bolts which secure the intake duct to the turbocharger, and connect the air control hose (A).

NOTE:
- Use new O-rings.
- Be careful not to pinch the O-ring.

Tightening torque:
6.4 N·m (0.7 kgf-m, 4.7 ft-lb)

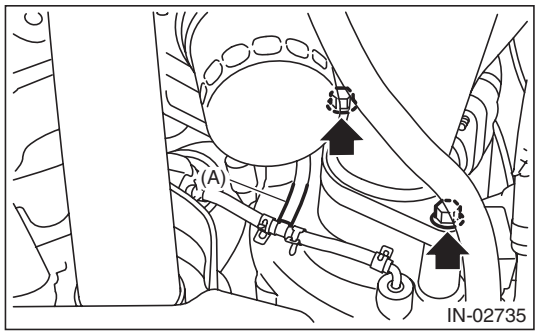

10) Install the bolt which holds oil outlet pipe (C) and oil inlet pipe A (A), and install oil inlet pipe B (B) to oil inlet pipe A (A).

CAUTION:
In order to prevent damaging the oil inlet pipe, fix the section (a) shown in the figure when tightening the oil inlet pipe flare nut, and avoid the part from rotating together while tightening the nut.

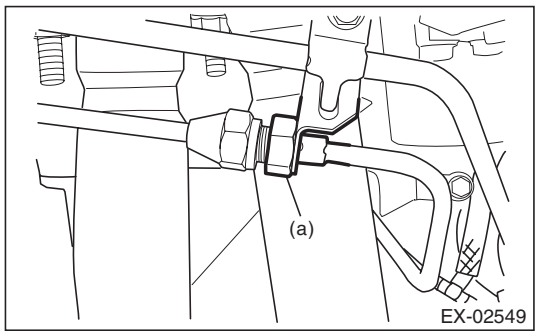

Tightening torque:
T1: 6.4 N·m (0.7 kgf-m, 4.7 ft-lb)
T2: 20 N·m (2.0 kgf-m, 14.8 ft-lb)

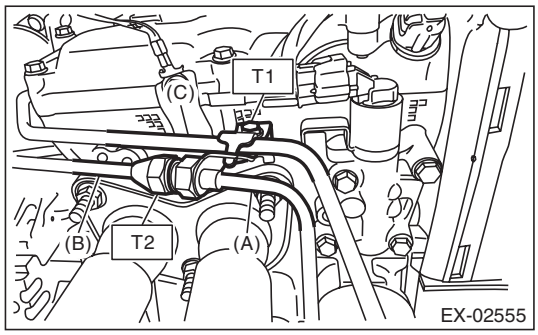

11) Install the under cover. <Ref. to EI-35, INSTALLATION, Front Under Cover.>

12) Lower the vehicle.
13) Install the engine coolant hose to the clip (A), and install the bolts which secure the intake duct to the turbocharger.

Tightening torque:
16 N·m (1.6 kgf-m, 11.8 ft-lb)

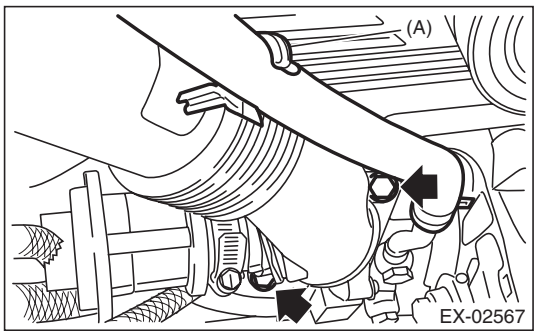

14) Install the radiator sub fan motor assembly. <Ref. to CO(H4DOTC)-27, INSTALLATION, Radiator Sub Fan and Fan Motor.>
15) Connect the engine coolant hoses to the water tank pipe and water pump.

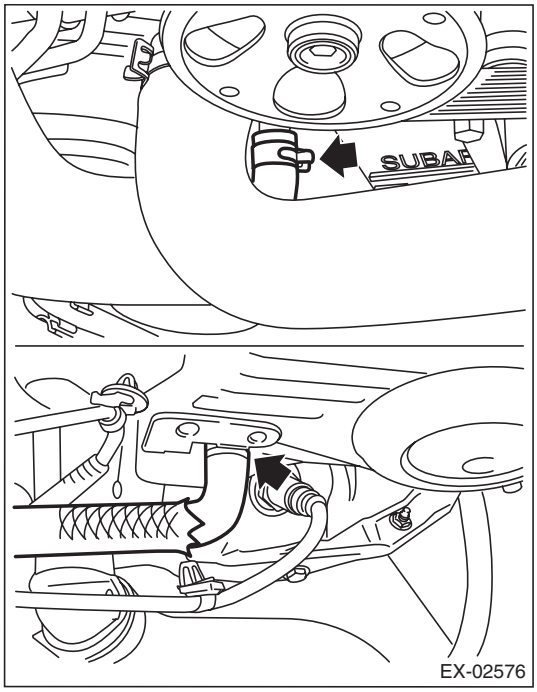

GETthemANUALS.org

16) Connect connectors to the front oxygen (A/F) sensor and rear oxygen sensor, and secure the front oxygen (A/F) sensor harness and rear oxygen sensor harness with the clip (A).

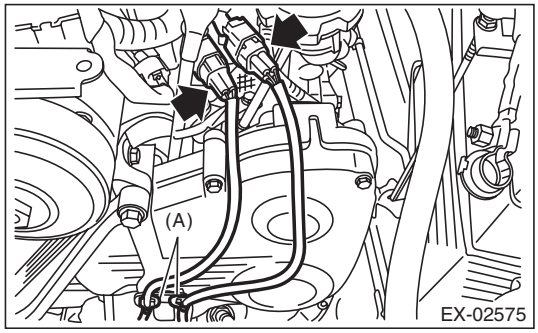

17) Install the air intake duct. <Ref. to IN(H4DOTC)-12, INSTALLATION, Air Intake Duct.>
18) Connect the battery ground terminal.

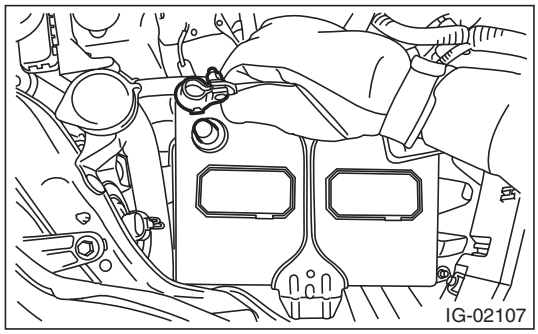

19) Fill engine coolant. <Ref. to CO(H4DOTC)-14, FILLING OF ENGINE COOLANT, REPLACEMENT, Engine Coolant.>
20) Check the engine oil level and replenish the engine oil if necessary. <Ref. to LU(H4SO)-13, INSPECTION, Engine Oil.>
21) Install the collector cover.

C: DISASSEMBLY

1) Remove the exhaust pipe cover.

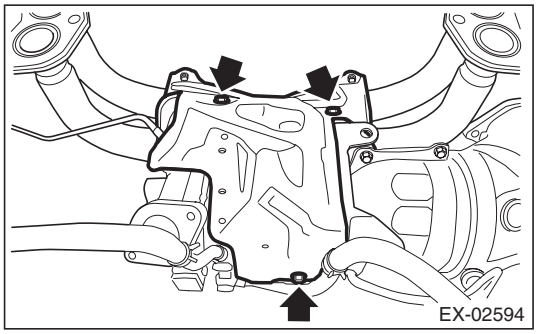

2) Remove nuts which secure the center exhaust pipe (front) to the turbocharger, and remove the center exhaust pipe (front) together with turbocharger upper stay (A) and turbocharger lower stay (B).

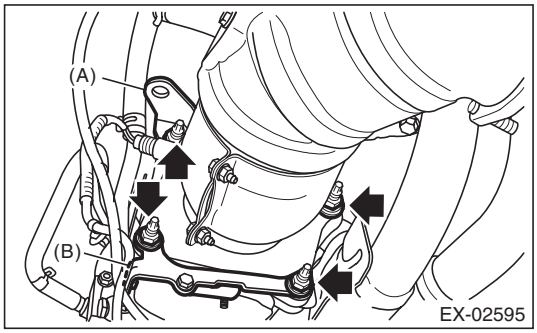

3) Remove the turbocharger from the front exhaust pipe.

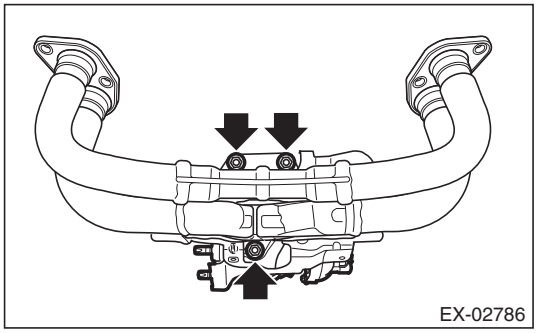

4) Remove the exhaust pipe stay from the front exhaust pipe.

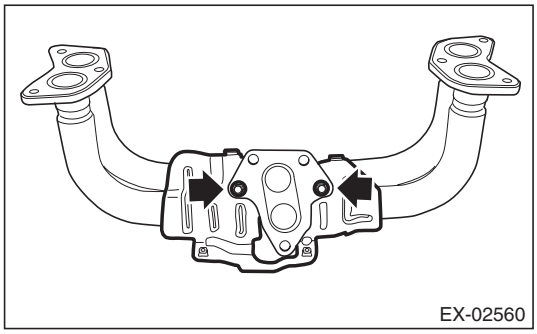

GETTHEMANUALS.org

D: ASSEMBLY

1) Install the exhaust pipe stay to the front exhaust pipe.

Tightening torque:
33 N·m (3.4 kgf-m, 24.3 ft-lb)

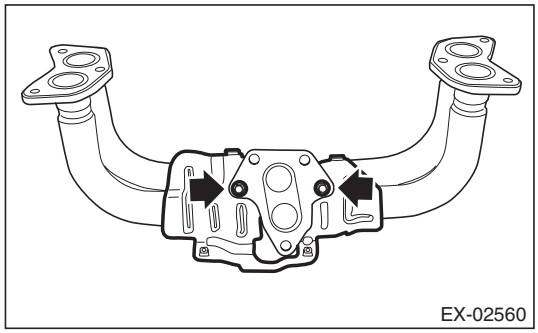

2) Install the turbocharger to the front exhaust pipe.

NOTE:
Use a new gasket and self-locking nut.

Tightening torque:
42.5 N·m (4.3 kgf-m, 31.3 ft-lb)

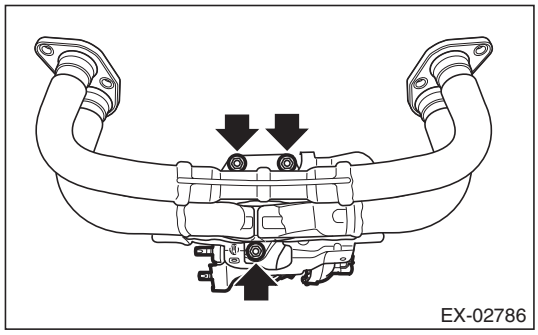

3) Install the center exhaust pipe (front) to the turbocharger together with turbocharger upper stay (A) and turbocharger lower stay (B).

NOTE:
Use a new gasket and self-locking nut.

Tightening torque:
42.5 N·m (4.3 kgf-m, 31.3 ft-lb)

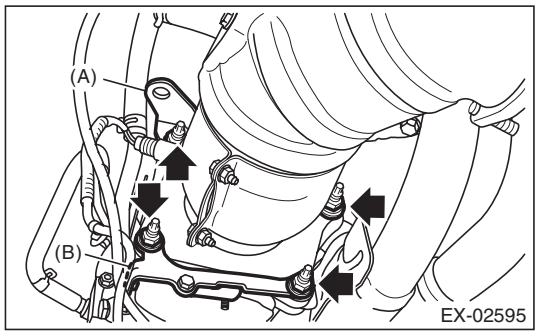

4) Install the exhaust pipe cover.

Tightening torque:
6.4 N·m (0.7 kgf-m, 4.7 ft-lb)

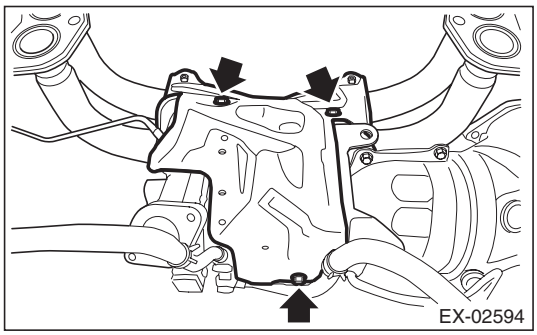

E: INSPECTION

1) Check the connections and welds for exhaust leaks.
2) Make sure there are no holes or rusting.

GETTHEMANUALS.org

3. Center Exhaust Pipe

A: REMOVAL

1) Remove the collector cover.
2) Disconnect the ground cable from battery.

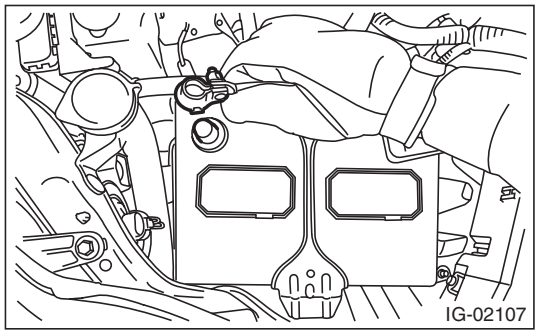

3) Disconnect connectors from the front oxygen (A/F) sensor and rear oxygen sensor, and remove the clip (A) fastening the front oxygen (A/F) sensor harness and rear oxygen sensor harness.

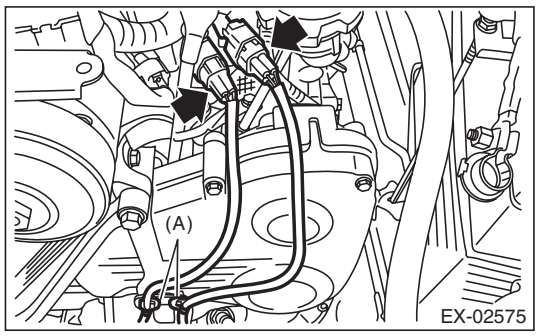

4) Lift up the vehicle.
5) Remove the under cover. <Ref. to EI-35, REMOVAL, Front Under Cover.>
6) Remove the center exhaust pipe (front) from the center exhaust pipe (rear).

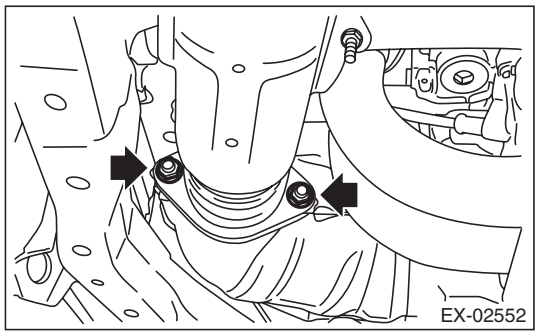

7) Remove the rear exhaust pipe from the center exhaust pipe (rear).

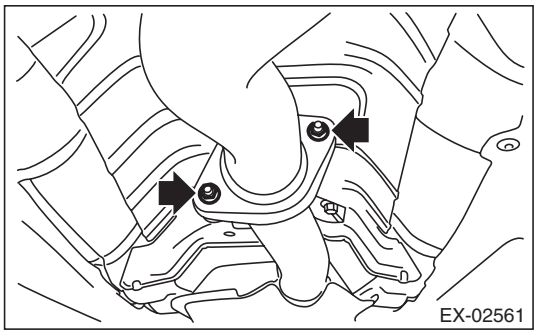

8) Remove the bolt which holds center exhaust pipe (rear) to the hanger bracket, and remove the center exhaust pipe (rear).

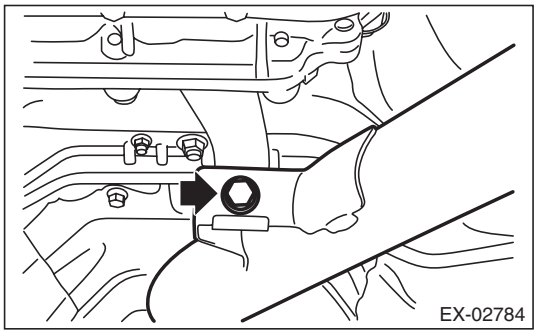

9) Remove the bolts which secure the turbocharger stay.

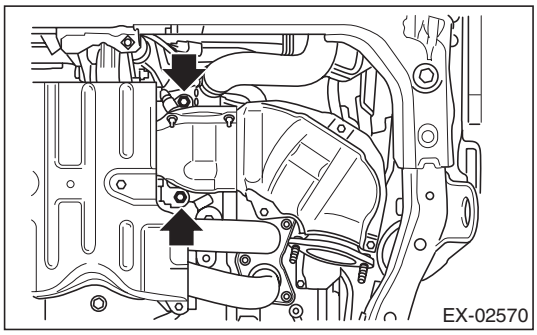

10) Remove the bolts which hold the oil catch tank stay and engine cover to the turbocharger lower stay.

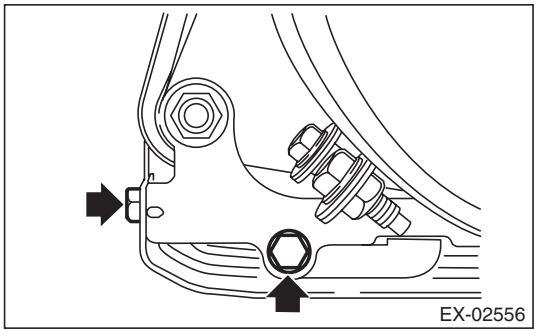

GETMANUALS.org

11) Remove nuts which hold center exhaust pipe (front) to the turbocharger, and remove the turbocharger lower stay (A).

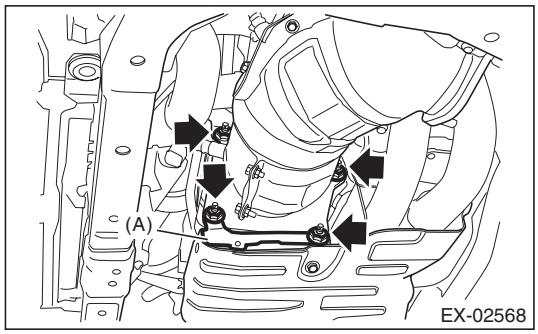

12) Using the TORX® socket E10, remove bolts from the turbocharger, and remove the center exhaust pipe (front) together with turbocharger upper stay (A).

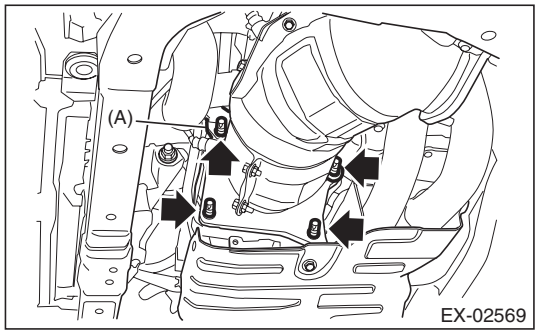

B: INSTALLATION

1) Set the center exhaust pipe (front) together with turbocharger upper stay (A), and install stud bolts to the turbocharger by using the TORX® socket E10.

NOTE:
Use a new gasket.

Tightening torque:
14.7 N·m (1.5 kgf-m, 10.8 ft-lb)

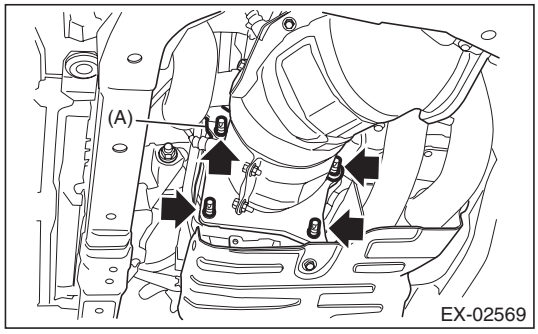

2) Install the center exhaust pipe (front) to the turbocharger together with turbocharger upper stay (A) and turbocharger lower stay (B).

NOTE:
Use a new self-locking nut.

Tightening torque:
42.5 N·m (4.3 kgf-m, 31.3 ft-lb)

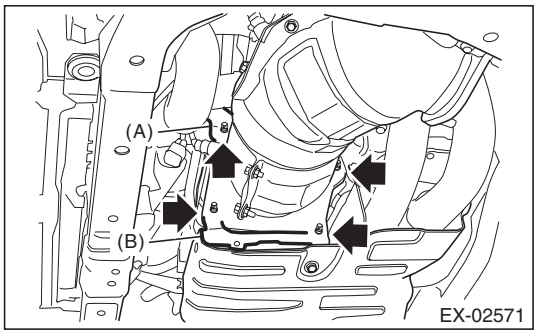

3) Install bolts which hold the oil catch tank stay and engine cover to the turbocharger lower stay.

Tightening torque:
6.4 N·m (0.7 kgf-m, 4.7 ft-lb)

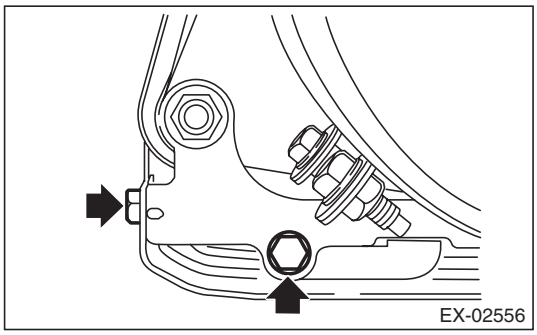

4) Attach the bolt which holds the turbocharger stay.

Tightening torque:
33 N·m (3.4 kgf-m, 24.3 ft-lb)

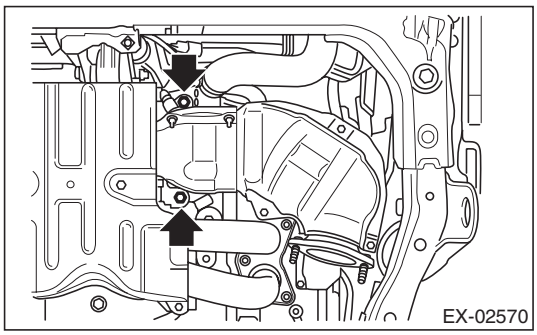

GETTHEMANUALS.org

5) Install the center exhaust pipe (rear) and temporarily tighten the bolt which holds center exhaust pipe (rear) to the hanger bracket.

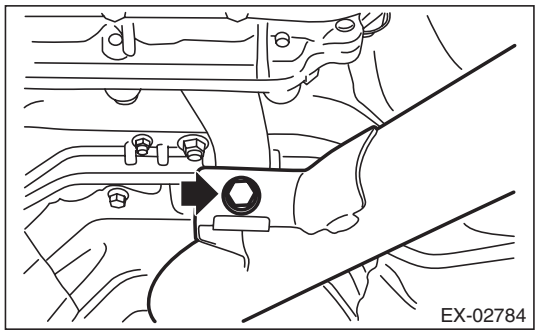

6) Install the rear exhaust pipe to the center exhaust pipe (rear).

NOTE:
Use a new gasket.

Tightening torque:
18 N·m (1.8 kgf-m, 13.3 ft-lb)

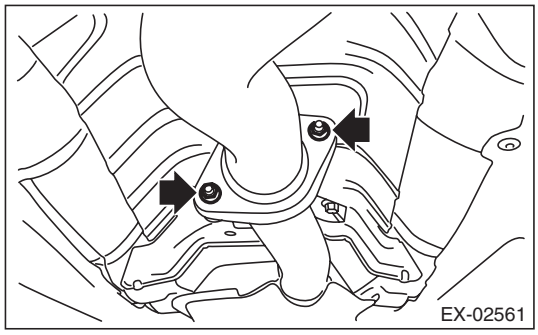

7) Install the center exhaust pipe (front) to the center exhaust pipe (rear).

NOTE:
Use a new gasket.

Tightening torque:
42.5 N·m (4.3 kgf-m, 31.3 ft-lb)

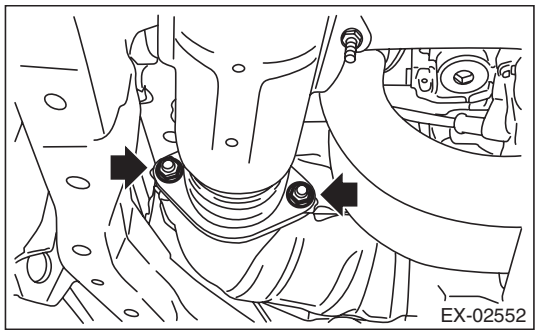

8) Tighten the bolts which hold center exhaust pipe (rear) to the hanger bracket.

Tightening torque:
35 N·m (3.6 kgf-m, 25.8 ft-lb)

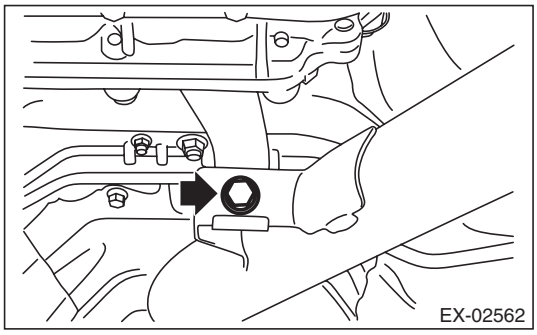

9) Install the under cover. <Ref. to EI-35, INSTALLATION, Front Under Cover.>
10) Lower the vehicle.
11) Connect connectors to the front oxygen (A/F) sensor and rear oxygen sensor, and secure the front oxygen (A/F) sensor harness and rear oxygen sensor harness with the clip (A).

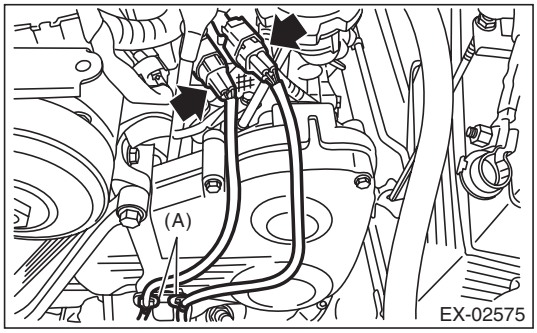

12) Connect the battery ground terminal.

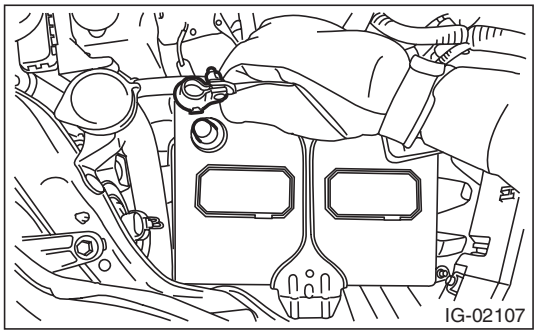

13) Install the collector cover.

C: INSPECTION

1) Check the connections and welds for exhaust leaks.
2) Make sure there are no holes or rusting.

GETTHEMANUALS.org

4. Rear Exhaust Pipe

A: REMOVAL

CAUTION:
Vehicle components are extremely hot after driving. Be wary of receiving burns from heated parts.

1) Lift up the vehicle.
2) Remove the center exhaust pipe (rear) from the rear exhaust pipe.

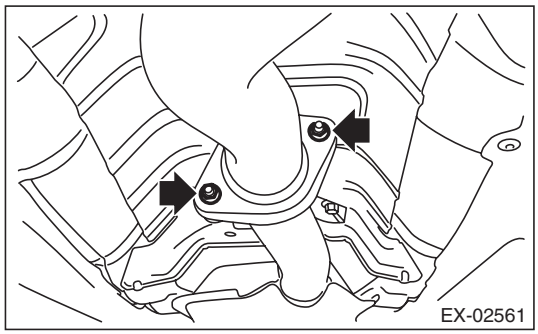

3) Remove the muffler from rear exhaust pipe.

CAUTION:
Be careful not to drop the rear exhaust pipe.

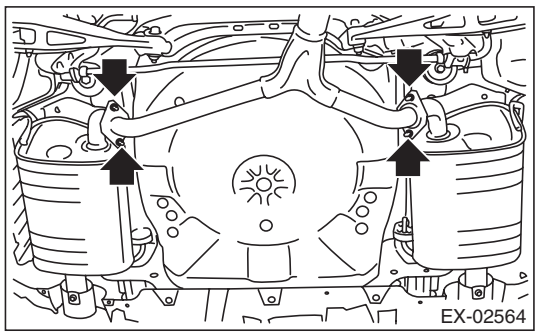

4) Apply a coat of spray type lubricant to the mating area of cushion rubber.
5) Remove the rear exhaust pipe from the cushion rubber.

CAUTION:
Be careful not to let the muffler contact the rear bumper.

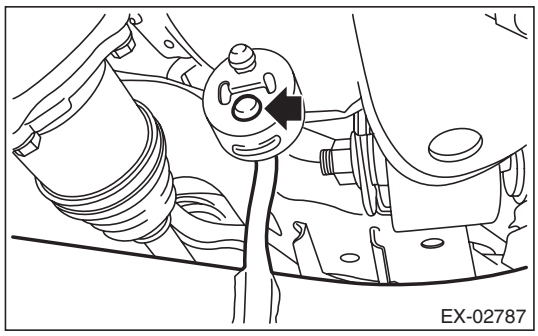

B: INSTALLATION

1) Apply a coat of spray type lubricant to the mating area of cushion rubber.
2) Install the rear exhaust pipe to cushion rubber.

NOTE:
After assembling, degrease the lubricant which was applied to the cushion rubber while removing/installing.

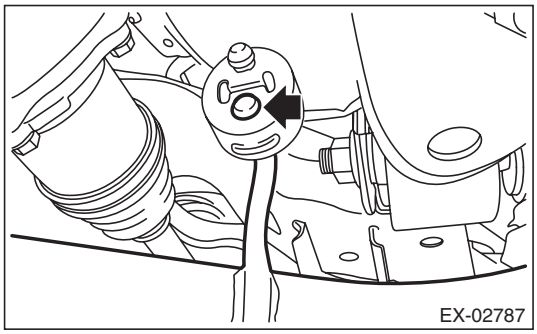

3) Install the rear exhaust pipe to the muffler.

NOTE:
Use a new gasket and self-locking nut.

Tightening torque:
48 N·m (4.9 kgf-m, 35.4 ft-lb)

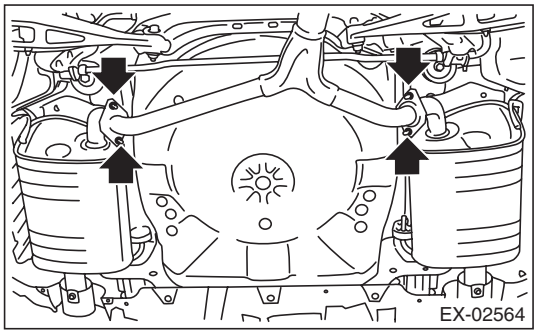

4) Install the center exhaust pipe (rear) to the rear exhaust pipe.

NOTE:
Use a new gasket.

Tightening torque:
18 N·m (1.8 kgf-m, 13.3 ft-lb)

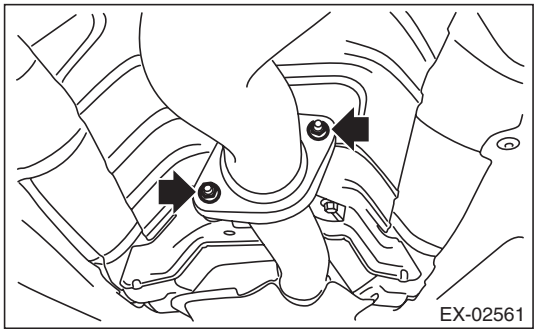

5) Lower the vehicle.

GETTHEMANUALS.org

C: INSPECTION

1) Check the connections and welds for exhaust leaks.
2) Make sure there are no holes or rusting.
3) Check the cushion rubber for wear or crack.

GETMANUALS.org

5. Muffler

A: REMOVAL

CAUTION:
Vehicle components are extremely hot after driving. Be wary of receiving burns from heated parts.

1) Lift up the vehicle.
2) Remove the rear exhaust pipe from the muffler.

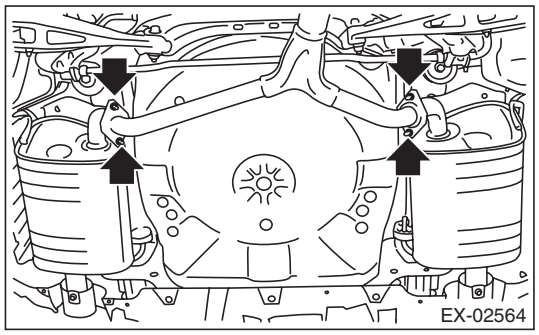

3) Apply a coat of spray type lubricant to the mating area of cushion rubber.
4) Remove the muffler from the cushion rubber.

CAUTION:
Be careful not to drop the muffler during removal.

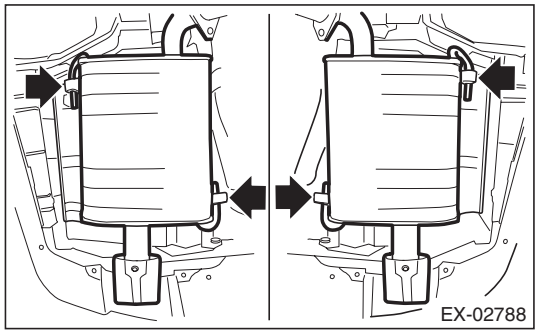

B: INSTALLATION

Install in the reverse order of removal.

NOTE:
- Use a new gasket and self-locking nut.
- After assembling, degrease the lubricant which was applied to the cushion rubber while removing/installing.

Tightening torque:
48 N·m (4.9 kgf-m, 35.4 ft-lb)

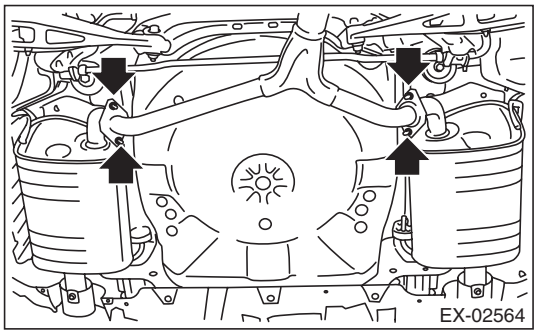

C: INSPECTION

1) Check the connections and welds for exhaust leaks.
2) Make sure there are no holes or rusting.
3) Check the cushion rubber for wear or crack.

GETMANUALS.org

GETTHEMANUALS.org

COOLING

CO(H4DOTC)

		Page
1.	General Description	2
2.	Radiator Fan System	7
3.	Engine Coolant	14
4.	Water Pump	16
5.	Thermostat	19
6.	Radiator	21
7.	Radiator Cap	24
8.	Radiator Main Fan and Fan Motor	25
9.	Radiator Sub Fan and Fan Motor	27
10.	Reservoir Tank	29
11.	Engine Cooling System Trouble in General	30

GETtheMANUALS.org

1. General Description

A: SPECIFICATION

Cooling system				Electric fan + Forced engine coolant circulation system
Total engine coolant capacity			ℓ (US qt, Imp qt)	Approx. 6.5 (6.9, 5.7)
Water pump	Type			Centrifugal impeller type
	Discharge performance	Discharge rate	ℓ (US gal, Imp gal) /min.	200 (52.8, 44.0)
		Pump speed — Discharge pressure		6,000 rpm — 225.4 kPa (23.0 mAq)
		Engine coolant temperature		80°C (176°F)
	Impeller diameter		mm (in)	76 (2.99)
	Number of impeller vanes			8
	Pump pulley diameter		mm (in)	60 (2.36)
	Clearance between impeller and pump case		mm (in) Standard	0.5 — 1.5 (0.020 — 0.059)
Thermostat	Type			Wax pellet type
	Starting temperature to open			82 — 86°C (180 — 187°F)
	Fully opens			91°C (196°F)
	Valve lift		mm (in)	9.0 (0.354) or more
	Valve bore		mm (in)	35 (1.38)
Radiator fan	Motor input	Main fan	W	120
		Sub fan	W	120
	Fan diameter / Blade	Main fan		320 mm (12.6 in)/5
		Sub fan		320 mm (12.6 in)/7
Radiator	Type			Down flow
	Core dimensions	Width × Height × Thickness	mm (in)	687.4 × 340 × 16 (27.06 × 13.39 × 0.63)
	Pressure range in which cap valve is open	kPa (kg/cm^2, psi)	Positive pressure side Standard	93 — 123 (0.95 — 1.25, 14 — 18)
			Positive pressure side Limit	83 (0.85, 12)
			Negative pressure side Standard	–1.0 — –4.9 (–0.01 — –0.05, –0.1 — –0.7)
	Fins			Corrugated fin type
Reservoir tank	Capacity		ℓ (US qt, Imp qt)	0.45 (0.48, 0.40)

	Recommended materials	Item number	Alternative
Coolant	SUBARU SUPER COOLANT (Concentrated type)	—	—
	SUBARU SUPER COOLANT (Diluted type)	K0670Y0001	
Water for dilution	Distilled water	—	Soft water or tap water
Cooling system protective agent	Cooling system conditioner	SOA345001	—

GETthemANUALS.org

B: COMPONENT

1. WATER PUMP

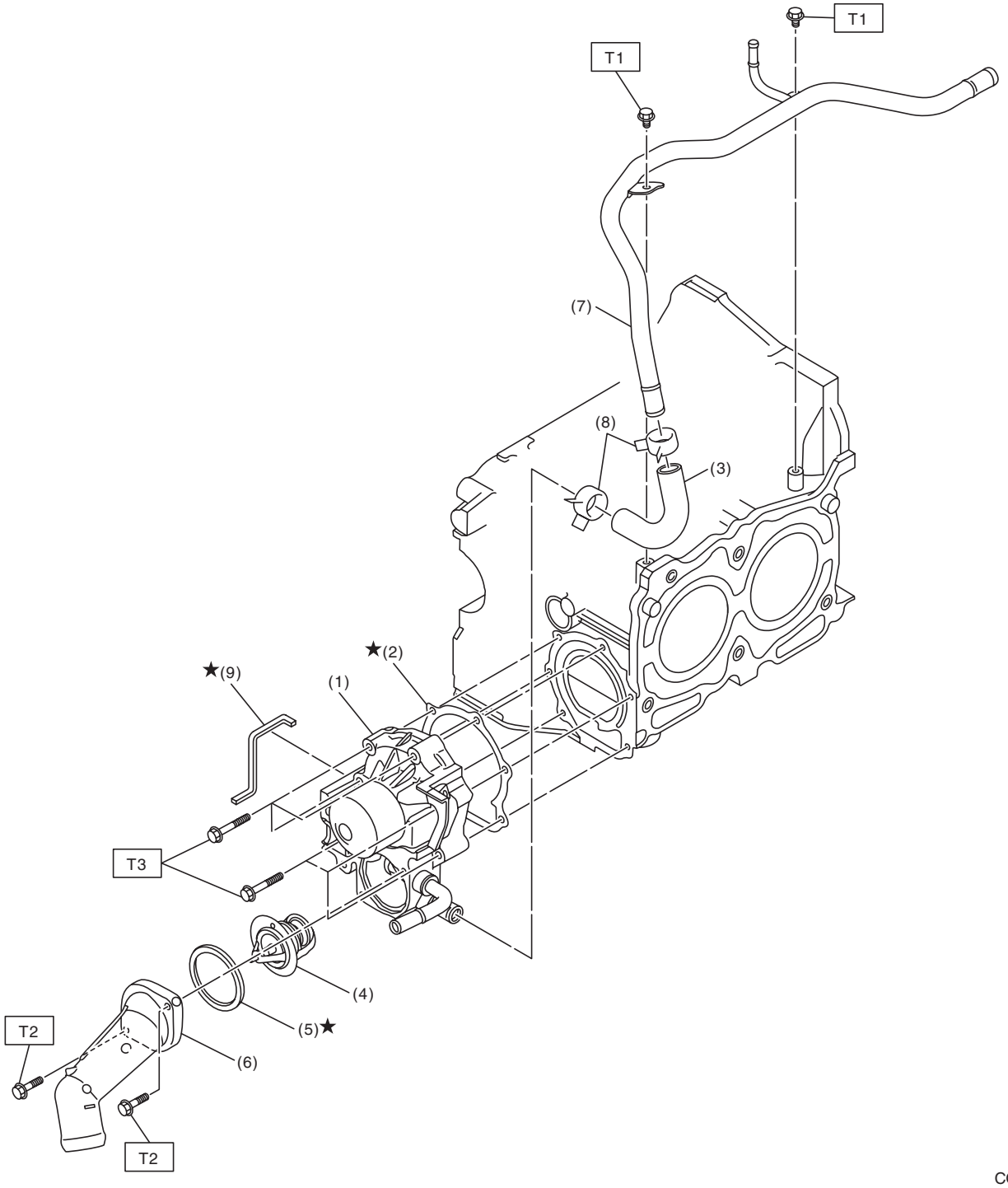

(1)	Water pump ASSY	(6)	Thermostat cover	***Tightening torque:N·m (kgf-m, ft-lb)***
(2)	Gasket	(7)	Water by-pass pipe	***T1: 6.4 (0.7, 4.7)***
(3)	Heater by-pass hose	(8)	Clip	***T2: 9 (0.9, 6.6)***
(4)	Thermostat	(9)	Water pump sealing	***T3: First 12 (1.2, 8.9)***
				Second 12 (1.2, 8.9)
(5)	Gasket			

GETtheMANUALS.org

2. RADIATOR AND RADIATOR FAN

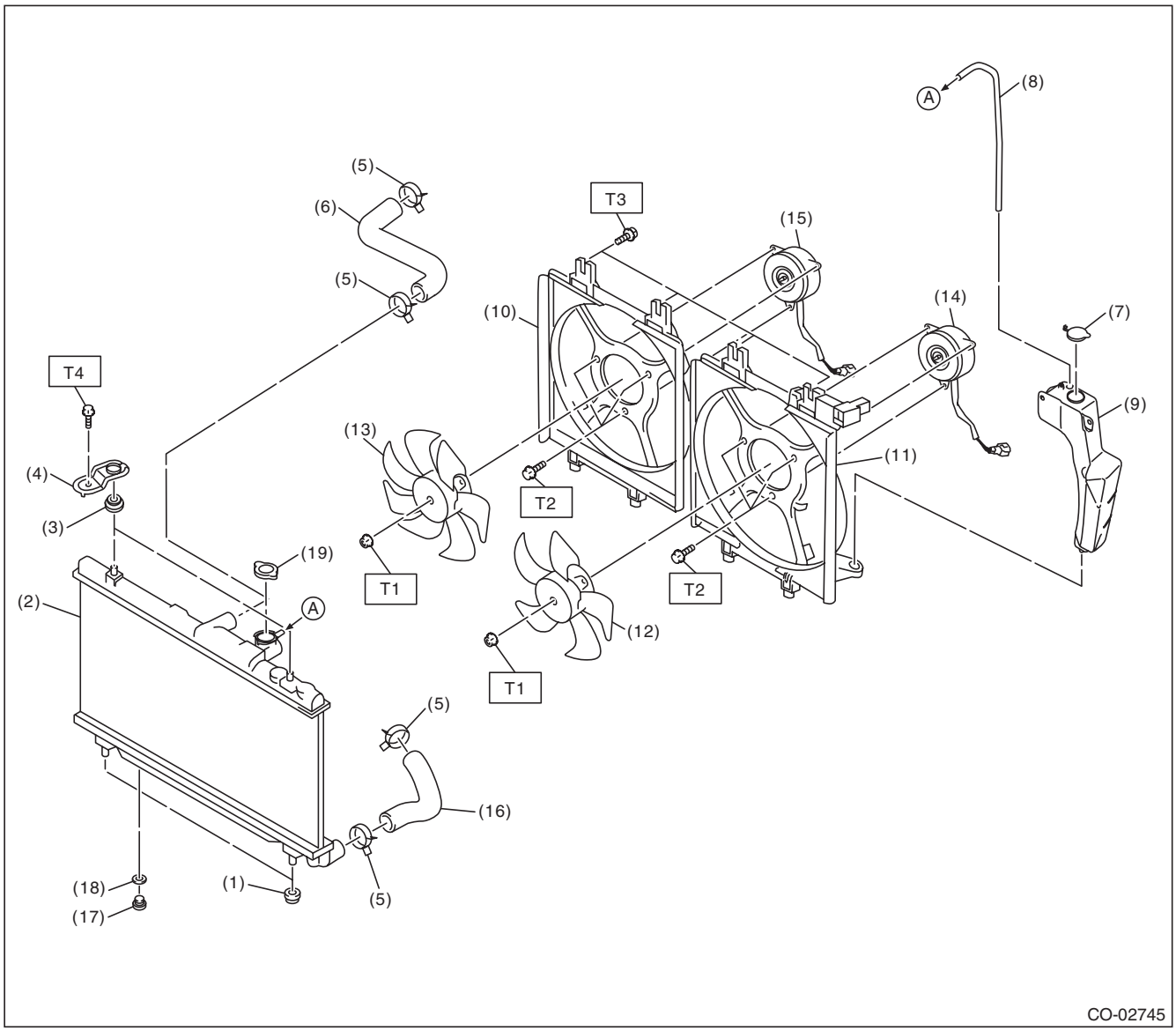

(1)	Radiator lower cushion	(10)	Radiator sub fan shroud	(19)	Radiator cap
(2)	Radiator	(11)	Radiator main fan shroud		
(3)	Radiator upper cushion	(12)	Radiator main fan		
(4)	Radiator upper bracket	(13)	Radiator sub fan		
(5)	Clip	(14)	Main fan motor		
(6)	Radiator inlet hose	(15)	Sub fan motor		
(7)	Engine coolant reservoir tank cap	(16)	Radiator outlet hose		
(8)	Over flow hose	(17)	Radiator drain plug		
(9)	Engine coolant reservoir tank	(18)	O-ring		

Tightening torque:N·m (kgf-m, ft-lb)
T1: 3.4 (0.3, 2.5)
T2: 5 (0.5, 3.7)
T3: 7.5 (0.8, 5.5)
T4: 12 (1.2, 8.9)

GETthemANUALS.org

C: CAUTION

- Wear appropriate work clothing, including a cap, protective goggles and protective shoes when performing any work.
- Remove contamination including dirt and corrosion before removal, installation or disassembly.
- Keep the disassembled parts in order and protect them from dust and dirt.
- Before removal, installation or disassembly, be sure to clarify the failure. Avoid unnecessary removal, installation, disassembly and replacement.
- Vehicle components are extremely hot after driving. Be wary of receiving burns from heated parts.
- Be sure to tighten fasteners including bolts and nuts to the specified torque.
- Place shop jacks or rigid racks at the specified points.
- Before disconnecting connectors of sensors or units, be sure to disconnect the ground cable from battery.
- Prepare a container and cloth to prevent scattering of engine coolant when performing work where engine coolant can be spilled. If the fuel spills, wipe it off immediately to prevent from penetrating into floor or flowing out for environmental protection.
- Follow all government and local regulations concerning disposal of refuse when disposing engine coolant.

D: PREPARATION TOOL

1. SPECIAL TOOL

ILLUSTRATION	TOOL NUMBER	DESCRIPTION	REMARKS
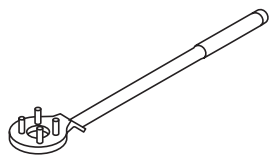 ST-499977100	499977100	CRANK PULLEY WRENCH	Used for removing and installing the crank pulley.
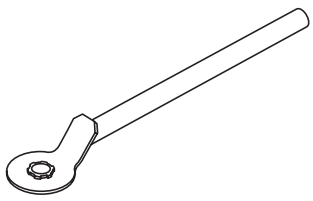 ST-499977500	499977500	CAM SPROCKET WRENCH	Used for removing and installing intake cam sprocket and exhaust cam sprocket.
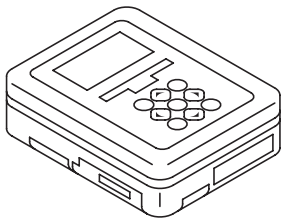 ST1B022XU0	1B022XU0	SUBARU SELECT MONITOR III KIT	Used for troubleshooting the electrical system.

GETthemANUALS.org

2. GENERAL TOOL

TOOL NAME	REMARKS
Circuit tester	Used for measuring resistance and voltage.
Radiator cap tester	Used for checking radiator and radiator cap.

GETthemANUALS.org

2. Radiator Fan System

A: WIRING DIAGRAM

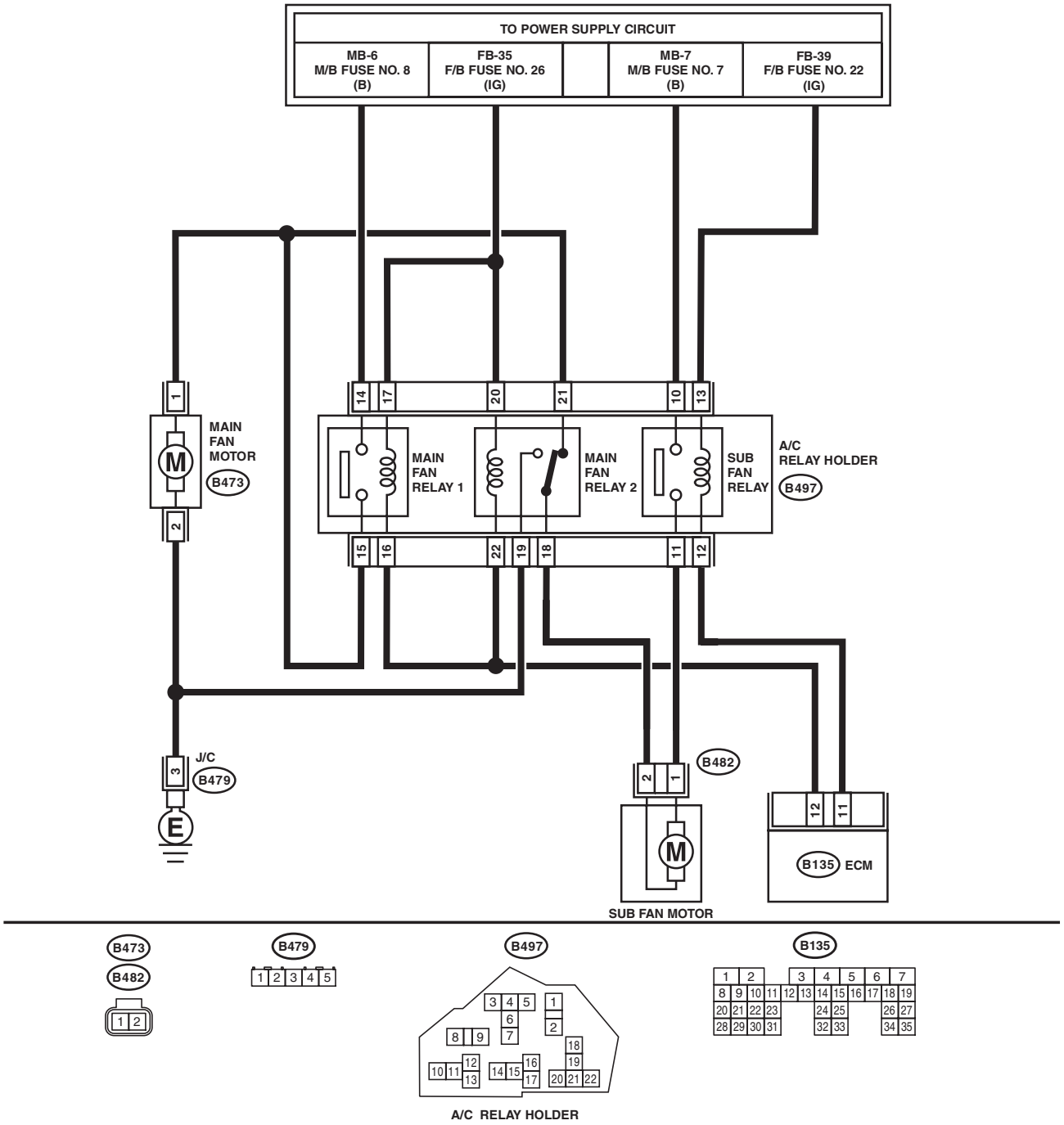

CO-02631

GETtheMANUALS.org

B: INSPECTION

OPERATING CONDITION:

Radiator fan operates depending on the radiator fan operation mode related to engine coolant temperature or the radiator fan operation mode related to A/C compressor load, whichever is higher as an operation mode.

- Radiator fan operation mode related to engine coolant temperature

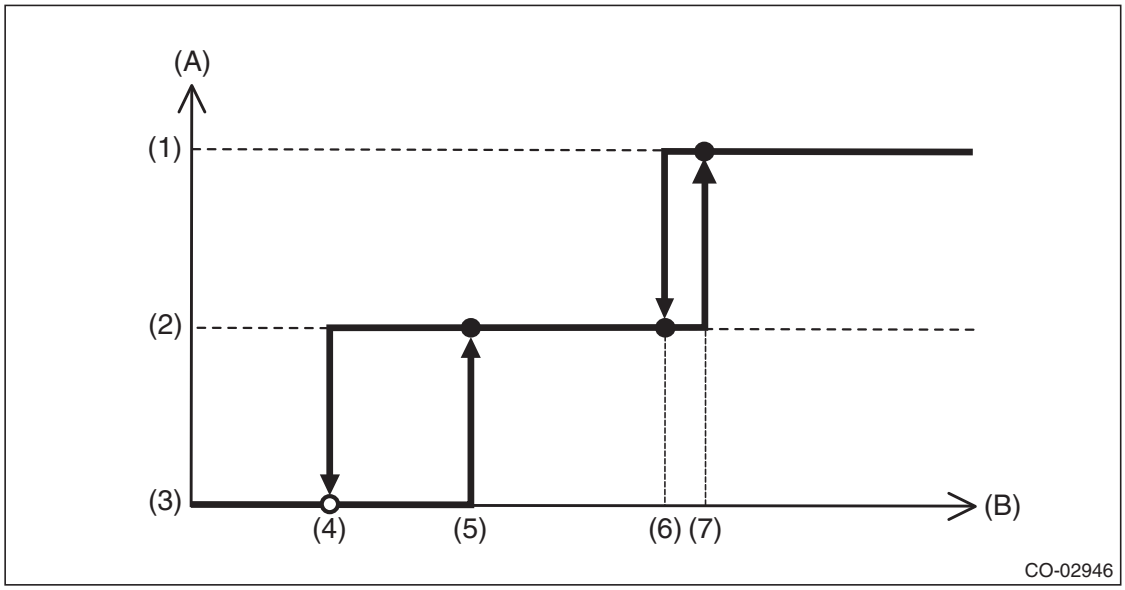

(A)	Radiator fan operation mode	(B)	Engine coolant temperature		
(1)	High-Speed	(4)	96°C (205°F)	(7)	101°C (214°F)
(2)	Low-Speed	(5)	98°C (208°F)		
(3)	OFF	(6)	100°C (212°F)		

GETthemANUALS.org

- Radiator fan operation mode related to A/C compressor load

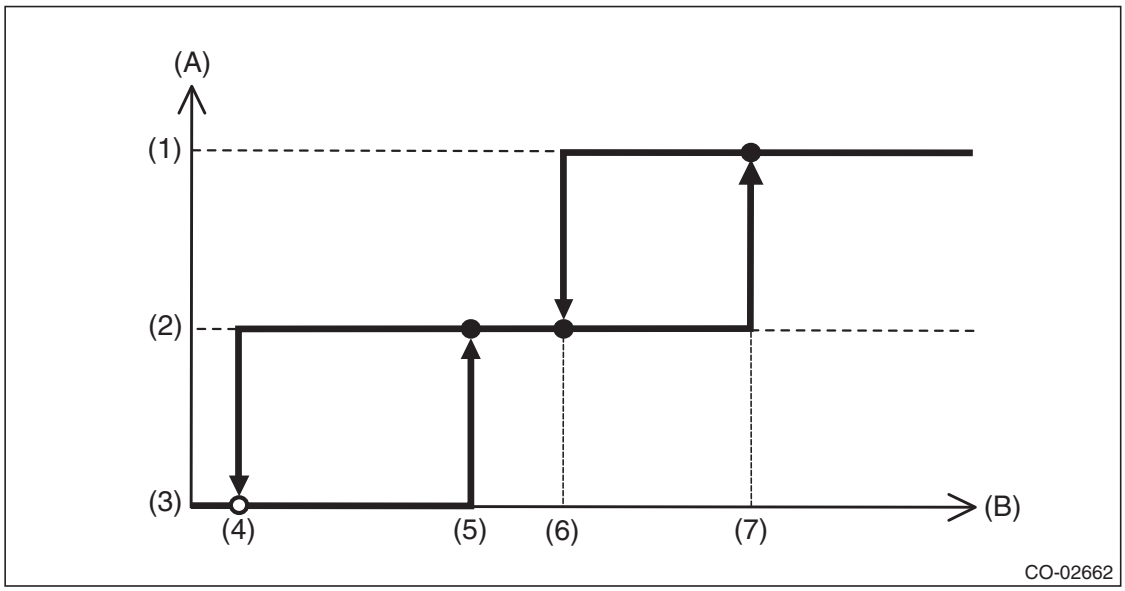

(A)	Radiator fan operation mode	(B)	A/C compressor refrigerant pressure		
(1)	High-Speed	(4)	0.8 MPa (8.16 kgf/cm^2, 116 psi)	(7)	1.5 MPa (15.30 kgf/cm^2, 218 psi)
(2)	Low-Speed	(5)	1.125 MPa (11.47 kgf/cm^2, 163 psi)		
(3)	OFF	(6)	1.25 MPa (12.75 kgf/cm^2, 181 psi)		

GETtheMANUALS.org

DIAGNOSIS:
Radiator main fan and radiator sub fans do not rotate under the above operating conditions.

	Step	Check	Yes	No
1	**CHECK OPERATION OF RADIATOR FAN.** 1) Connect the delivery mode fuse. 2) Turn the ignition switch to ON. 3) Perform the compulsory operation check for the radiator fan relay using Subaru Select Monitor. NOTE: • When performing a forced operation radiator fan relay check using the Subaru Select Monitor, the radiator main fan and radiator sub fan will repeat low speed revolution → high speed revolution → OFF in this order. • Subaru Select Monitor For detailed operation procedures, refer to "PC application help for Subaru Select Monitor".	Do the radiator main fans and radiator sub fans rotate at low speed?	Go to step **2**.	Go to step **3**.
2	**CHECK OPERATION OF RADIATOR FAN.** 1) Connect the delivery mode fuse. 2) Turn the ignition switch to ON. 3) Perform the compulsory operation check for the radiator fan relay using Subaru Select Monitor. NOTE: • When performing a forced operation radiator fan relay check using the Subaru Select Monitor, the radiator main fan and radiator sub fan will repeat low speed revolution → high speed revolution → OFF in this order. • Subaru Select Monitor For detailed operation procedures, refer to "PC application help for Subaru Select Monitor".	Do the radiator main fans and radiator sub fans rotate at high speed?	Radiator main fan system is normal.	Go to step **27**.
3	**CHECK POWER SUPPLY TO SUB FAN RELAY.** 1) Turn the ignition switch to OFF. 2) Remove the sub fan relay from A/C relay holder. 3) Measure the voltage between sub fan relay connector and chassis ground. ***Connector & terminal*** ***(B497) No. 10 (+) — Chassis ground (–):***	Is the voltage 10 V or more?	Go to step **4**.	Go to step **5**.
4	**CHECK POWER SUPPLY TO SUB FAN RELAY.** 1) Turn the ignition switch to ON. 2) Measure the voltage between sub fan relay connector and chassis ground. ***Connector & terminal*** ***(B497) No. 13 (+) — Chassis ground (–):***	Is the voltage 10 V or more?	Go to step **7**.	Go to step **6**.
5	**CHECK FUSE.** 1) Turn the ignition switch to OFF. 2) Remove the fuse No. 7. 3) Check the condition of fuse.	Is the fuse blown out?	Replace the fuse.	Repair the power supply line.
6	**CHECK FUSE.** 1) Turn the ignition switch to OFF. 2) Remove the fuse No. 22. 3) Check the condition of fuse.	Is the fuse blown out?	Replace the fuse.	Repair the power supply line.

GETmyMANUALS.org

Step		Check	Yes	No
7	**CHECK SUB FAN RELAY.** 1) Turn the ignition switch to OFF. 2) Measure the resistance between sub fan relay terminals. ***Terminals*** ***No. 10 — No. 11:***	Is the resistance 1 MΩ or more?	Go to step **8**.	Replace the sub fan relay.
8	**CHECK SUB FAN RELAY.** 1) Connect the battery to terminals No. 12 and No. 13 of the sub fan relay. 2) Measure the resistance between sub fan relay terminals. ***Terminals*** ***No. 10 — No. 11:***	Is the resistance less than 1 Ω?	Go to step **9**.	Replace the sub fan relay.
9	**CHECK HARNESS BETWEEN SUB FAN RELAY CONNECTOR AND SUB FAN MOTOR CONNECTOR.** 1) Disconnect the connector from the sub fan motor. 2) Measure the resistance of harness between sub fan relay connector and sub fan motor connector. ***Connector & terminal*** ***(B482) No. 1 — (B497) No. 11:***	Is the resistance less than 1 Ω?	Go to step **10**.	Repair the open circuit of harness between sub fan relay connector and sub fan motor connector.
10	**CHECK HARNESS BETWEEN SUB FAN MOTOR CONNECTOR AND MAIN FAN RELAY 2 CONNECTOR.** 1) Remove the main fan relay 2 from A/C relay holder. 2) Measure the resistance of harness between sub fan motor connector and main fan relay 2 connector. ***Connector & terminal*** ***(B482) No. 2 — (B497) No. 18:***	Is the resistance less than 1 Ω?	Go to step **11**.	Repair the open circuit of the harness between sub fan motor connector and main fan relay 2 connector.
11	**CHECK FOR POOR CONTACT.** Check poor contact of sub fan motor connector.	Is there poor contact of the sub fan motor connector?	Repair the poor contact of sub fan motor connector.	Go to step **12**.
12	**CHECK SUB FAN MOTOR.** Connect the battery positive (+) terminal to terminal No. 1 of the sub fan motor, and the ground (–) terminal to terminal No. 2.	Does the radiator sub fan rotate?	Go to step **13**.	Replace the sub fan motor.
13	**CHECK MAIN FAN RELAY 2.** Measure the resistance between main fan relay 2 terminals. ***Terminals*** ***No. 21 — No. 18:***	Is the resistance less than 1 Ω?	Go to step **14**.	Replace the main fan relay 2.
14	**CHECK HARNESS BETWEEN MAIN FAN RELAY 2 CONNECTOR AND MAIN FAN MOTOR CONNECTOR.** 1) Disconnect the connector from the main fan motor. 2) Measure the resistance of the harness between main fan relay 2 connector and main fan motor connector. ***Connector & terminal*** ***(B473) No. 1 — (B497) No. 21:***	Is the resistance less than 1 Ω?	Go to step **15**.	Repair the open circuit of the harness between main fan relay 2 connector and main fan motor connector.

GETMANUALS.org

Step		Check	Yes	No
15	**CHECK GROUND CIRCUIT OF MAIN FAN MOTOR.** Measure the resistance between main fan motor connector and chassis ground. ***Connector & terminal*** ***(B473) No. 2 — Chassis ground:***	Is the resistance less than 5 Ω?	Go to step **16**.	Repair the open circuit of the harness between the main fan motor connector and chassis ground or poor contact of the joint connector.
16	**CHECK FOR POOR CONTACT.** Check poor contact of main fan motor connector.	Is there poor contact of the main fan motor connector?	Repair the poor contact of main fan motor connector.	Go to step **17**.
17	**CHECK MAIN FAN MOTOR.** Connect the battery positive (+) terminal to terminal No. 1 of the main fan motor, and the ground (–) terminal to terminal No. 2.	Does the radiator main fan rotate?	Go to step **18**.	Replace the main fan motor.
18	**CHECK HARNESS BETWEEN SUB FAN RELAY CONNECTOR AND ECM.** 1) Disconnect the connector from ECM. 2) Measure the resistance between the sub fan relay connector and ECM connector. ***Connector & terminal*** ***(B135) No. 11 — (B497) No. 12:***	Is the resistance less than 1 Ω?	Go to step **19**.	Repair the open circuit of harness between sub fan relay connector and ECM.
19	**CHECK FOR POOR CONTACT.** Check for poor contact of ECM connector.	Is there poor contact of ECM connector?	Repair the poor contact of ECM connector.	Check the DTC. Repair the trouble cause. <Ref. to EN(H4DOTC)(diag)-40, Read Diagnostic Trouble Code (DTC).>
20	**CHECK MAIN FAN RELAY 1.** 1) Turn the ignition switch to OFF. 2) Remove the main fan relay 1 from A/C relay holder. 3) Measure the resistance between main fan relay 1 terminals. ***Terminals*** ***No. 14 — No. 15:***	Is the resistance 1 MΩ or more?	Go to step **21**.	Replace the main fan relay 1.
21	**CHECK MAIN FAN RELAY 1.** 1) Connect terminals No. 17 and No. 16 of the main fan relay 1 to the battery. 2) Measure the resistance between main fan relay 1 terminals. ***Terminals*** ***No. 14 — No. 15:***	Is the resistance less than 1 Ω?	Go to step **22**.	Replace the main fan relay 1.
22	**CHECK HARNESS BETWEEN MAIN FAN RELAY 1 CONNECTOR AND MAIN FAN MOTOR CONNECTOR.** 1) Disconnect the connector from the main fan motor. 2) Measure the resistance of the harness between main fan relay 1 connector and main fan motor connector. ***Connector & terminal*** ***(B473) No. 1 — (B497) No. 15:***	Is the resistance less than 1 Ω?	Go to step **23**.	Repair the open circuit of the harness between main fan relay 1 connector and main fan motor connector.

GETMANUALS.org

	Step	Check	Yes	No
23	**CHECK HARNESS BETWEEN MAIN FAN RELAY 1 CONNECTOR AND ECM.** 1) Disconnect the connector from ECM. 2) Measure the resistance between the main fan relay 1 connector and ECM connector. ***Connector & terminal*** ***(B135) No. 12 — (B497) No. 16:***	Is the resistance less than 1 Ω?	Go to step **24**.	Repair the open circuit of the harness between main fan relay 1 connector and ECM.
24	**CHECK HARNESS BETWEEN MAIN FAN RELAY 2 CONNECTOR AND ECM.** Measure the resistance between the main fan relay 2 connector and ECM connector. ***Connector & terminal*** ***(B135) No. 12 — (B497) No. 22:***	Is the resistance less than 1 Ω?	Go to step **25**.	Repair the open circuit of the harness between main fan relay 2 connector and ECM.
25	**CHECK FUSE.** 1) Turn the ignition switch to OFF. 2) Remove the fuse No. 8 and No. 26. 3) Check the condition of fuse.	Is the fuse blown out?	Replace the fuse.	Go to step **26**.
26	**CHECK FOR POOR CONTACT.** Check for poor contact of ECM connector.	Is there poor contact of ECM connector?	Repair the poor contact of ECM connector.	Repair the power supply circuit to the main fuse box.
27	**CHECK OPERATION OF RADIATOR FAN.** If the both fans do not rotate at high speed in the condition of step 2, check whether the radiator sub fan is rotating.	Does the radiator sub fan rotate?	Go to step **20**.	Go to step **28**.
28	**CHECK GROUND CIRCUIT OF MAIN FAN RELAY 2.** 1) Remove the main fan relay 2 from A/C relay holder. 2) Measure the resistance between main fan relay 2 connector and chassis ground. ***Connector & terminal*** ***(B497) No. 19 — Chassis ground:***	Is the resistance less than 1 Ω?	Go to step **29**.	Repair the open circuit of the harness between main fan relay 2 connector and chassis ground or poor contact of the joint connector.
29	**CHECK POWER SUPPLY TO MAIN FAN RELAY 2.** 1) Turn the ignition switch to ON. 2) Measure the voltage between main fan relay 2 connector and chassis ground. ***Connector & terminal*** ***(B497) No. 20 (+) — Chassis ground (–):***	Is the voltage 10 V or more?	Go to step **30**.	Repair the power supply line.
30	**CHECK MAIN FAN RELAY 2.** 1) Turn the ignition switch to OFF. 2) Remove the main fan relay 2. 3) Measure the resistance between main fan relay 2 terminals. ***Terminals*** ***No. 18 — No. 19:***	Is the resistance 1 MΩ or more?	Go to step **31**.	Replace the main fan relay 2.
31	**CHECK MAIN FAN RELAY 2.** 1) Connect the battery to terminals No. 20 and No. 22 of the main fan relay 2. 2) Measure the resistance between main fan relay 2 terminals. ***Terminals*** ***No. 18 — No. 19:***	Is the resistance less than 1 Ω?	Go to step **23**.	Replace the main fan relay 2.

GETMANUALS.org

3. Engine Coolant

A: REPLACEMENT

1. DRAINING OF ENGINE COOLANT

1) Lift up the vehicle.
2) Remove the under cover. <Ref. to EI-35, REMOVAL, Front Under Cover.>
3) Remove the drain plug to drain engine coolant into container.

NOTE:
Remove the radiator cap so that engine coolant will drain faster.

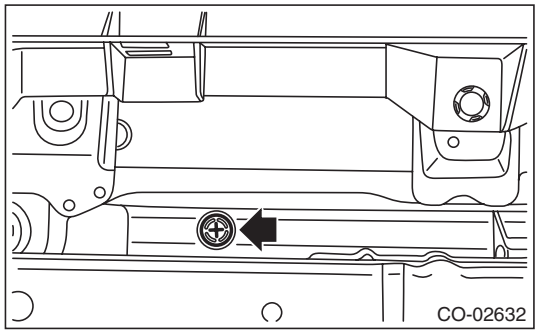

4) Install the drain plug.
5) Install the under cover. <Ref. to EI-35, INSTALLATION, Front Under Cover.>

2. FILLING OF ENGINE COOLANT

1) Pour cooling system conditioner from the filler neck of the radiator.

Cooling system protective agent:
Refer to "SPECIFICATION" for cooling system protective agent. <Ref. to CO(H4DOTC)-2, SPECIFICATION, General Description.>

2) Pour engine coolant into the radiator up to the filler neck position.

Recommended engine coolant:
Refer to "SPECIFICATION" for recommended engine coolant. <Ref. to CO(H4DOTC)-2, SPECIFICATION, General Description.>

Engine coolant level:
Refer to "SPECIFICATION" for engine coolant level. <Ref. to CO(H4DOTC)-2, SPECIFICATION, General Description.>

Engine coolant concentration:
Refer to "ADJUSTMENT" for the recommended engine coolant concentration. <Ref. to CO(H4DOTC)-15, ADJUSTMENT, Engine Coolant.>

NOTE:
The SUBARU Super Coolant contains anti-freeze and anti-rust agents, and is especially made for Subaru engines with an aluminum cylinder block. Be sure to use SUBARU Super Coolant, since other coolant may cause corrosion.

3) Fill engine coolant into the reservoir tank up to "FULL" level.

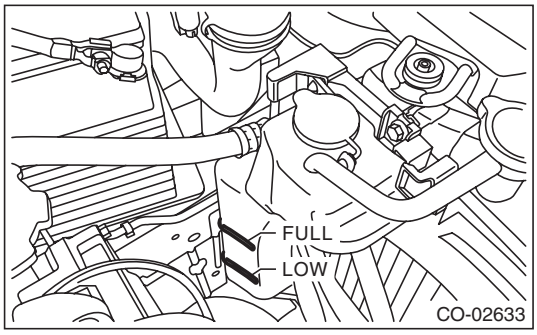

4) Close the radiator cap and start the engine. Race 5 to 6 times at 3,000 rpm or less, then stop the engine. (Complete this operation within 40 seconds.)
5) Wait for one minute after the engine stops, and open the radiator cap. If the engine coolant level drops, add engine coolant into radiator up to the filler neck position.
6) Perform the procedures 4) and 5) again.
7) Attach the radiator cap and reservoir tank cap properly.
8) Start the engine and operate the heater at maximum hot position and the blower speed setting to "LO".
9) Run the engine at 2,000 rpm or less until radiator fan starts and stops.

NOTE:
Be careful with the engine coolant temperature to prevent overheating.

10) Stop the engine and wait until the engine coolant temperature lowers to 30°C (86°F) or less.
11) Open the radiator cap. If the engine coolant level drops, add engine coolant into radiator up to the filler neck position and reservoir tank to the "FULL" level.
12) Attach the radiator cap and reservoir tank cap properly.
13) Set the heater setting to maximum hot position and the blower speed setting to "LO" and start the engine. Perform racing at 3,000 rpm or less. If the flowing sound is heard from the heater core, repeat the procedures from step 9).

GETmyMANUALS.org

B: ADJUSTMENT

1. PROCEDURE TO ADJUST THE SUBARU SUPER COOLANT CONCENTRATION

CAUTION:
SUBARU Super Coolant concentration must be used from 50 to 60% to assure the best performance of the anti-freeze and anti-rust agents.
To adjust the concentration of SUBARU Super Coolant according to temperature, find the proper SUBARU Super Coolant concentration in the table, and add diluting water to the SUBARU Super Coolant (concentrated type) until it reaches the proper dilution.

Relationship of SUBARU Super Coolant concentration and freezing temperature			
SUBARU Super Coolant concentration	50%	55%	60%
Freezing temperature	–36°C (–33°F)	–41°C (–42°F)	–50°C (–58°F)

Recommended engine coolant and water for dilution:
Refer to "SPECIFICATION" for the recommended engine coolant and diluting water. <Ref. to CO(H4DOTC)-2, SPECIFICATION, General Description.>

GETMANUALS.org

4. Water Pump

A: REMOVAL

1) Remove the collector cover.
2) Remove the radiator. <Ref. to CO(H4DOTC)-21, REMOVAL, Radiator.>
3) Remove the V-belts. <Ref. to ME(H4DOTC)-42, REMOVAL, V-belt.>
4) Remove the crank pulley. <Ref. to ME(H4DOTC)-44, REMOVAL, Crank Pulley.>
5) Remove the timing belt cover. <Ref. to ME(H4DOTC)-46, REMOVAL, Timing Belt Cover.>
6) Remove the timing belt. <Ref. to ME(H4DOTC)-52, REMOVAL, Timing Belt.>
7) Remove the automatic belt tension adjuster (A).
8) Remove the belt idler (B).
9) Remove the belt idler No. 2 (C).

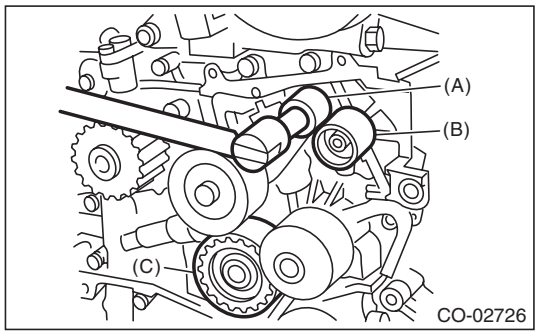

10) Remove the cam sprocket LH. <Ref. to ME(H4DOTC)-61, REMOVAL, Cam Sprocket.>
11) Remove the belt cover No. 2 LH.

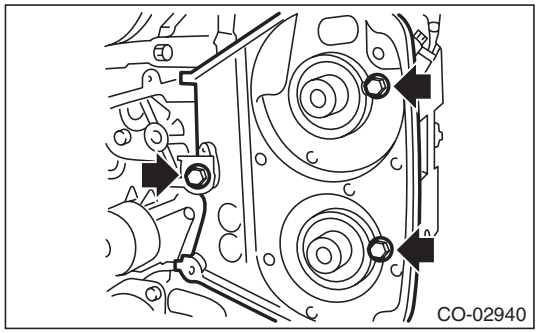

12) Remove the tensioner bracket.

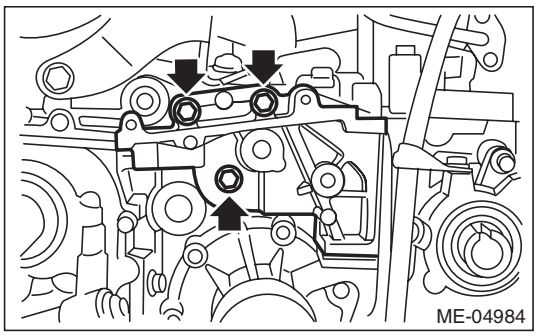

13) Disconnect the hose from water pump.
14) Remove the water pump.

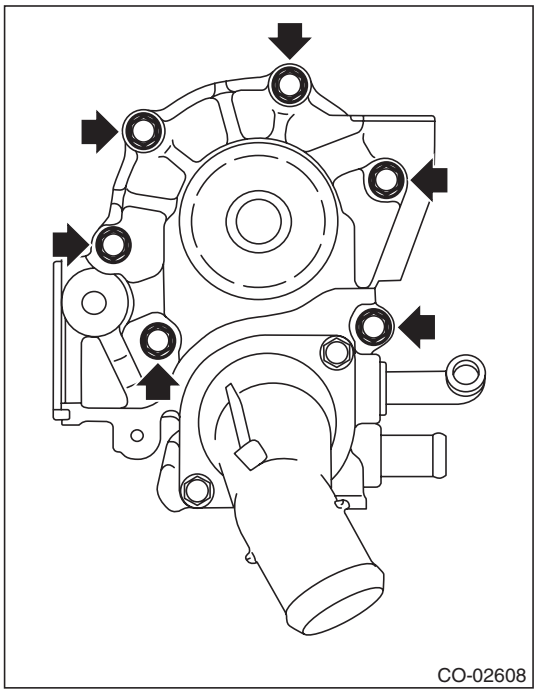

GETMANUALS.org

B: INSTALLATION

1) Install the water pump onto cylinder block LH.

NOTE:
- Use a new gasket.
- Use new water pump sealing.
- When installing the water pump, tighten the bolts in two stages in alphabetical sequence as shown in figure.

Tightening torque:
First:
12 N·m (1.2 kgf-m, 8.9 ft-lb)
Second:
12 N·m (1.2 kgf-m, 8.9 ft-lb)

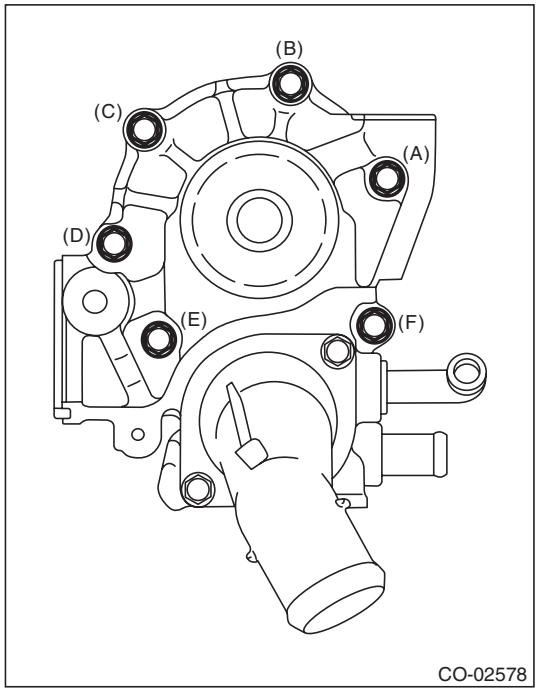

2) Install the hose to water pump.
3) Install the tensioner bracket.

Tightening torque:
24.5 N·m (2.5 kgf-m, 18.1 ft-lb)

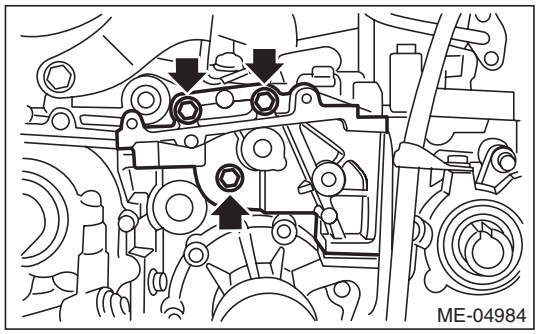

4) Install the belt cover No. 2 LH.

Tightening torque:
5 N·m (0.5 kgf-m, 3.7 ft-lb)

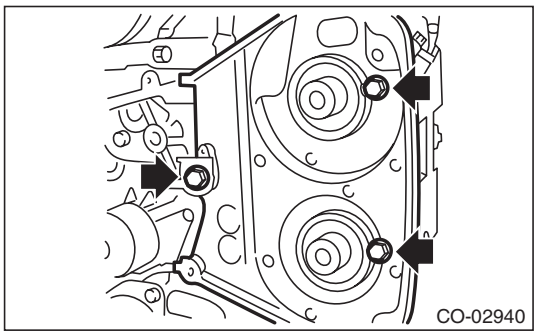

5) Install the cam sprocket LH. <Ref. to ME(H4DOTC)-61, INSTALLATION, Cam Sprocket.>
6) Install the belt idler No. 2 (C).

Tightening torque:
39 N·m (4.0 kgf-m, 28.8 ft-lb)

7) Install the belt idler (B).

Tightening torque:
25 N·m (2.5 kgf-m, 18.4 ft-lb)

8) Install the automatic belt tension adjuster (A) with the tension rod held by a pin. <Ref. to ME(H4DOTC)-54, AUTOMATIC BELT TENSION ADJUSTER ASSEMBLY AND BELT IDLER, INSTALLATION, Timing Belt.>

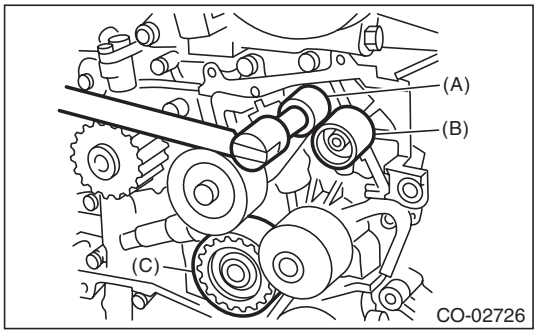

9) Install the timing belt. <Ref. to ME(H4DOTC)-55, TIMING BELT, INSTALLATION, Timing Belt.>
10) Install the timing belt cover. <Ref. to ME(H4DOTC)-49, INSTALLATION, Timing Belt Cover.>
11) Install the crank pulley. <Ref. to ME(H4DOTC)-44, INSTALLATION, Crank Pulley.>
12) Install the V-belts. <Ref. to ME(H4DOTC)-42, INSTALLATION, V-belt.>
13) Install the radiator. <Ref. to CO(H4DOTC)-22, INSTALLATION, Radiator.>
14) Install the collector cover.

GETmyMANUALS.org

C: INSPECTION

1) Check the water pump bearing for smooth rotation.
2) Check the water pump pulley for abnormalities.
3) Make sure the impeller is not abnormally deformed or damaged.
4) Inspect the clearance between impeller and pump case.

Clearance between impeller and pump case:
Standard
0.5 — 1.5 mm (0.020 — 0.059 in)

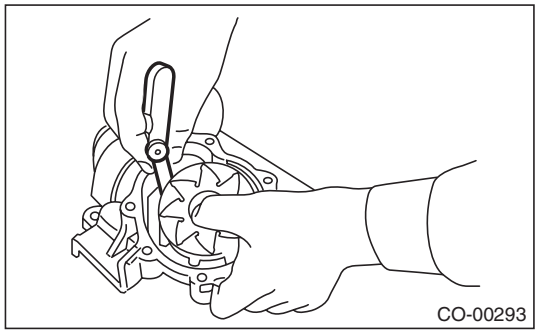

5) After water pump installation, check pulley shaft for engine coolant leaks or noise. If leaks or noise are noted, replace the water pump assembly.

GETMANUALS.org

5. Thermostat

A: REMOVAL

1) Lift up the vehicle.
2) Remove the under cover. <Ref. to EI-35, REMOVAL, Front Under Cover.>
3) Drain engine coolant. <Ref. to CO(H4DOTC)-14, DRAINING OF ENGINE COOLANT, REPLACEMENT, Engine Coolant.>
4) Disconnect the radiator outlet hose from thermostat cover.

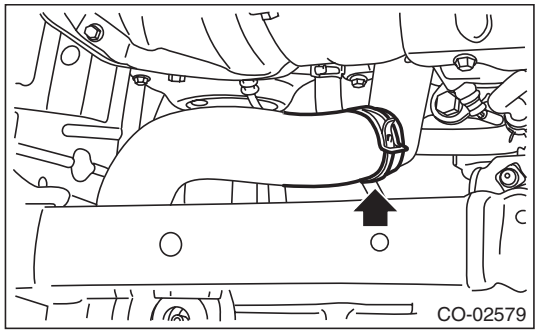

5) Remove the thermostat cover, and then remove the gasket and thermostat.

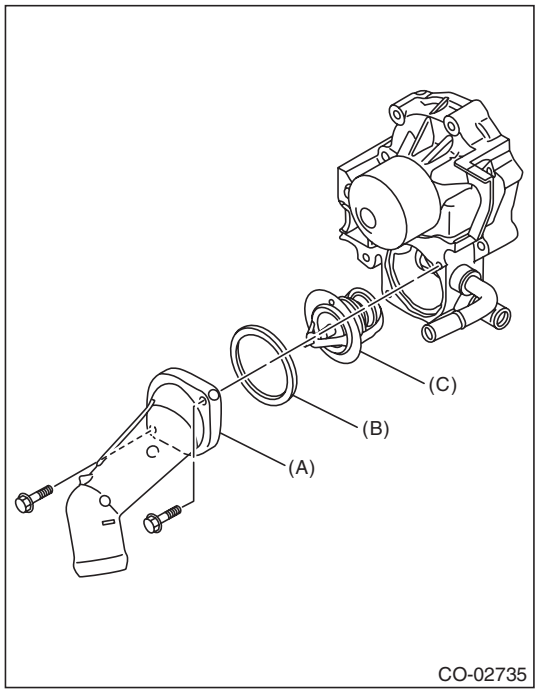

(A) Thermostat cover
(B) Gasket
(C) Thermostat

B: INSTALLATION

1) Install a gasket to thermostat.

NOTE:
Use a new gasket.
2) Install the thermostat and thermostat cover.

NOTE:
Install the parts with the jiggle pin facing upward.

Tightening torque:
9 N·m (0.9 kgf-m, 6.6 ft-lb)

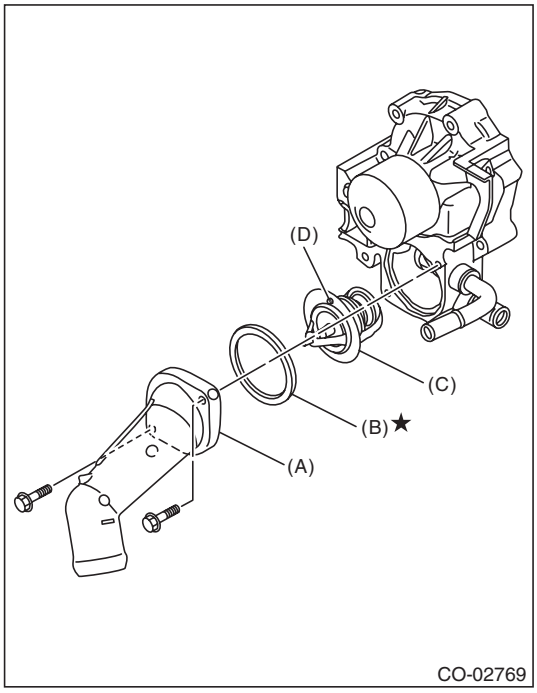

(A) Thermostat cover
(B) Gasket
(C) Thermostat
(D) Jiggle pin

3) Connect the radiator outlet hose to thermostat cover.
4) Install the under cover. <Ref. to EI-35, INSTALLATION, Front Under Cover.>
5) Lower the vehicle.
6) Fill engine coolant. <Ref. to CO(H4DOTC)-14, FILLING OF ENGINE COOLANT, REPLACEMENT, Engine Coolant.>

GETMANUALS.org

C: INSPECTION

1) Check that the thermostat does not have deformation, cracks or damage.
2) Check that the thermostat valve closes completely at an ambient temperature.
3) Immerse the thermostat and a thermometer in water. Raise water temperature gradually, and check the temperature and valve lift when the valve begins to open and when the valve is fully opened. Replace the thermostat if faulty.

NOTE:
- During the test, agitate the water for even temperature distribution.
- Leave the thermostat in the boiling water for five minutes or more before measuring the valve lift.
- Hold the thermostat with a wire or the like to avoid contacting the container.

Starting temperature to open:
82 — 86°C (180 — 187°F)

Full open temperature:
91°C (196°F)

Total valve lift:
9.0 mm (0.354 in) or more

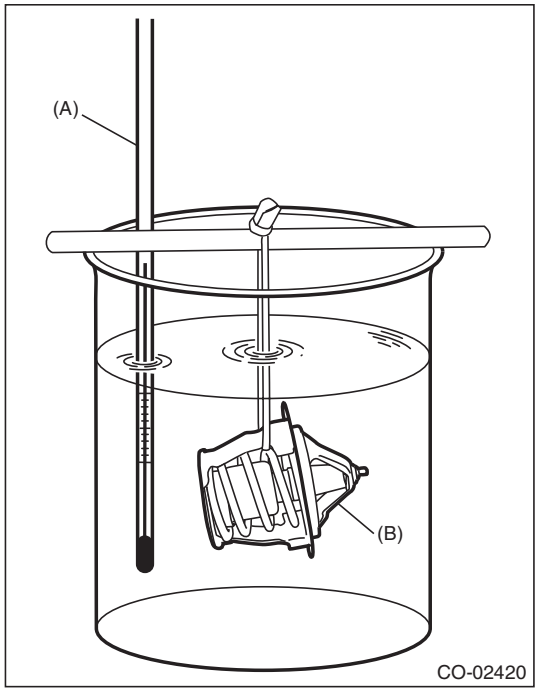

(A) Thermometer
(B) Thermostat

GETMANUALS.org

6. Radiator

A: REMOVAL

CAUTION:
The radiator is pressurized when the engine and radiator are hot. Wait until engine and radiator cool down before working on the radiator.

1) Remove the collector cover.
2) Disconnect the ground cable from battery.

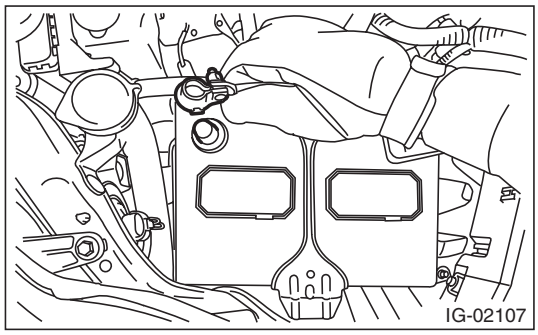

3) Lift up the vehicle.
4) Remove the under cover. <Ref. to EI-35, REMOVAL, Front Under Cover.>
5) Drain engine coolant. <Ref. to CO(H4DOTC)-14, DRAINING OF ENGINE COOLANT, REPLACEMENT, Engine Coolant.>
6) Disconnect the radiator outlet hose from thermostat cover.

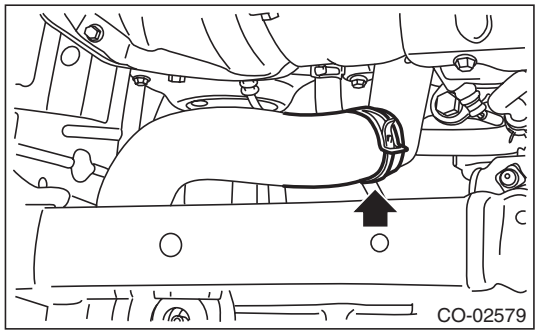

7) Lower the vehicle.
8) Remove the air intake duct. <Ref. to IN(H4DOTC)-12, REMOVAL, Air Intake Duct.>
9) Remove the reservoir tank. <Ref. to CO(H4DOTC)-29, REMOVAL, Reservoir Tank.>
10) Disconnect the connector (A) from the main fan motor and the connector (B) from the sub fan motor.

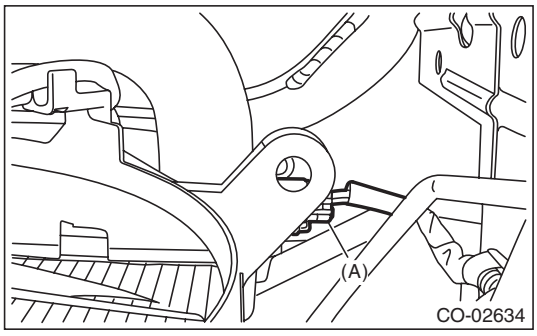

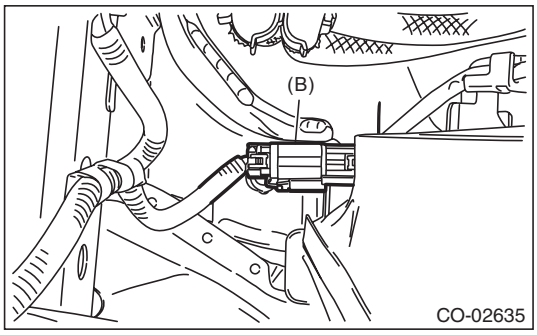

11) Disconnect the radiator inlet hose from the water tank pipe.

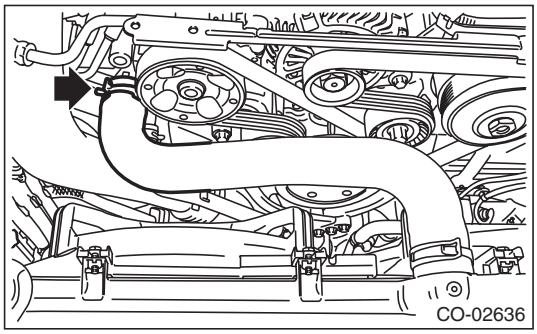

12) Remove the grille bracket.

NOTE:
Remove ten clips when removing the grille bracket.

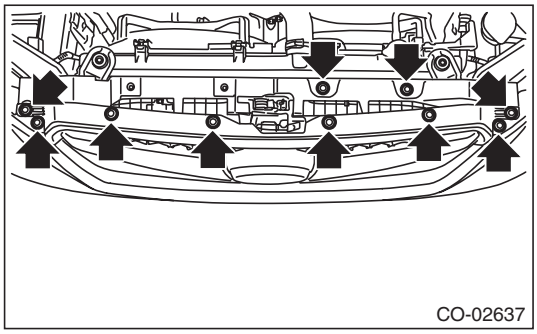

GETTHEMANUALS.org

13) Remove the radiator upper brackets.

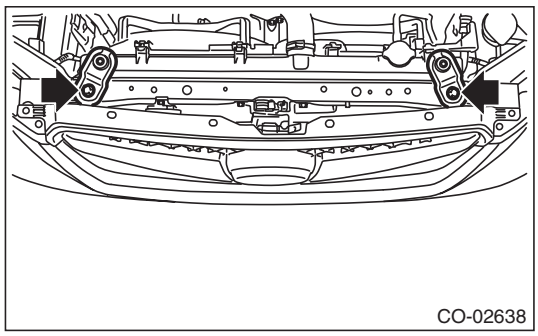

14) Lift the radiator up and remove the radiator from vehicle.
15) Remove the radiator lower cushion from the vehicle body.

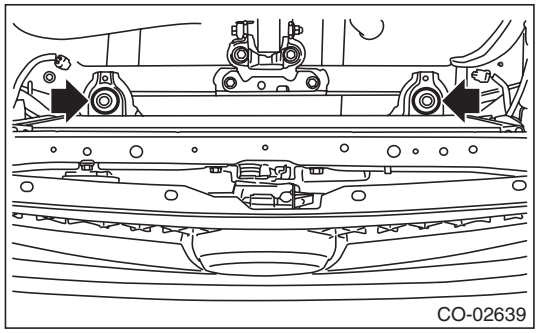

B: INSTALLATION

1) Install the radiator lower cushion to the vehicle body.

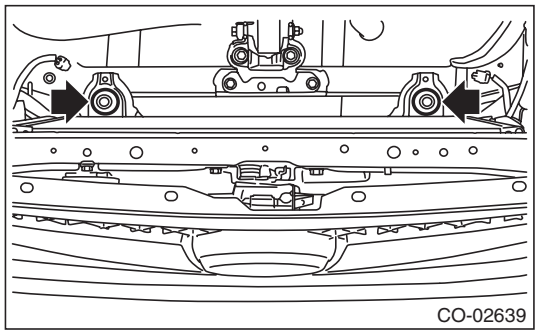

2) Install the radiator to vehicle.

NOTE:
Make pins on the lower side of radiator be fitted into the radiator lower cushions.

3) Install the radiator upper brackets.

Tightening torque:
12 N·m (1.2 kgf-m, 8.9 ft-lb)

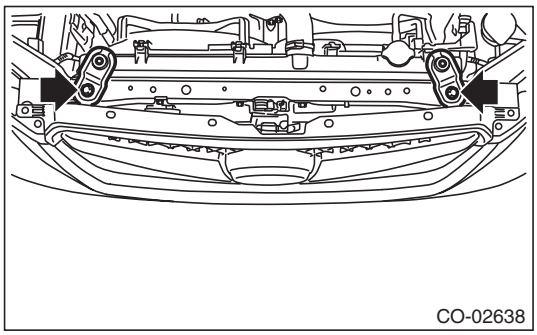

4) Attach the grille bracket.

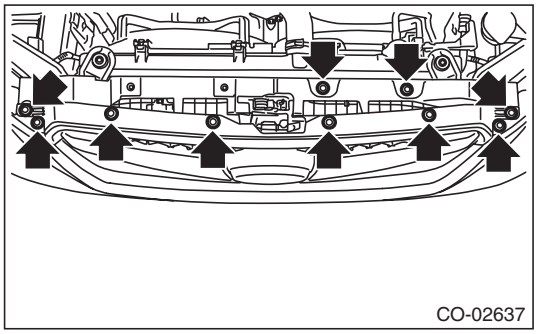

5) Connect the radiator inlet hose.

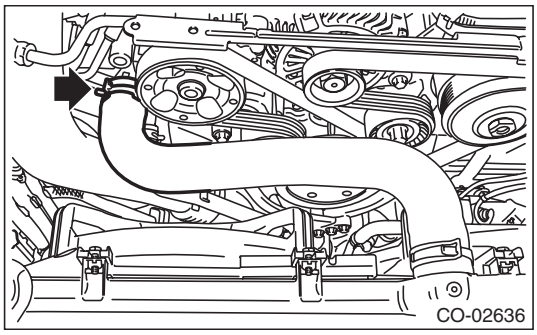

GETmyMANUALs.org

6) Connect the connector (A) to the main fan motor and the connector (B) to the sub fan motor.

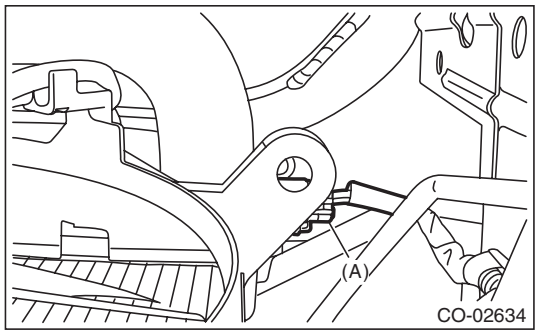

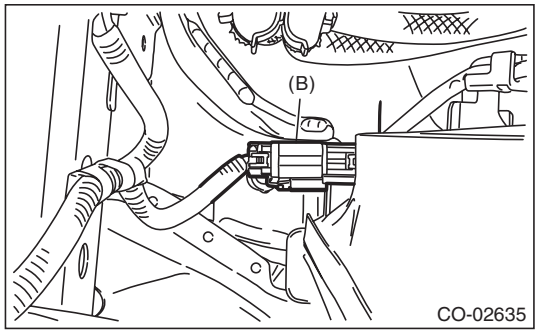

7) Install the reservoir tank. <Ref. to CO(H4DOTC)-29, INSTALLATION, Reservoir Tank.>
8) Install the air intake duct. <Ref. to IN(H4DOTC)-12, INSTALLATION, Air Intake Duct.>
9) Lift up the vehicle.
10) Connect the radiator outlet hose.

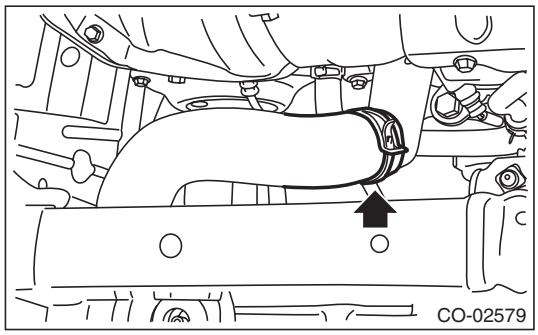

11) Install the under cover. <Ref. to EI-35, INSTALLATION, Front Under Cover.>
12) Lower the vehicle.
13) Connect the battery ground terminal.

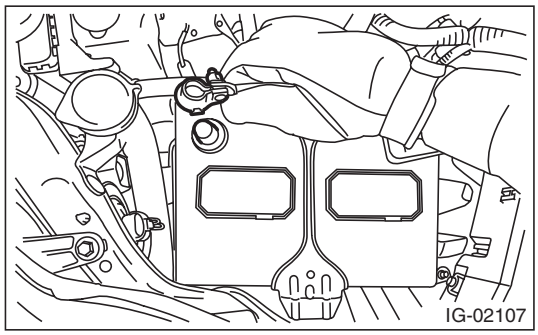

14) Fill engine coolant. <Ref. to CO(H4DOTC)-14, FILLING OF ENGINE COOLANT, REPLACEMENT, Engine Coolant.>
15) Install the collector cover.

C: INSPECTION

1) Check that the radiator does not have deformation, cracks or damage.
2) Check that the hose has no cracks, damage or loose part.
3) Remove the radiator cap, fill the radiator with engine coolant, and then install the radiator cap tester to the filler neck of radiator.

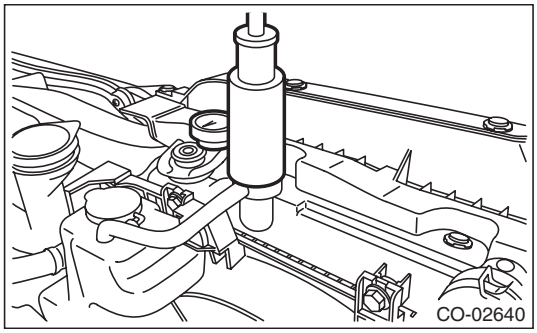

4) Apply a pressure of 157 kPa (1.6 kg/cm^2, 23 psi) to the radiator and check the following points:
- Leakage from the radiator or its vicinity
- Leakage from the hose or its connections

CAUTION:
- **Engine should be turned off.**
- **Wipe engine coolant from check points in advance.**
- **Be careful not to deform the filler neck of the radiator when installing and removing the radiator cap tester.**
- **Be careful of engine coolant from spurting out when removing the radiator cap tester.**

GETmyMANUALS.org

7. Radiator Cap

A: INSPECTION

1) Check that the radiator cap does not have deformation, cracks or damage.
2) Attach the radiator cap tester to radiator cap.

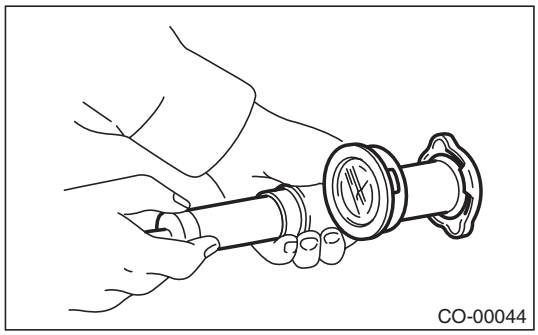

3) Increase pressure until the radiator cap tester gauge needle stops. Radiator cap is functioning properly if it holds the service limit pressure for 5 — 6 seconds. Replace the radiator cap if its valve opens at less than the service limit.

Standard:
93 — 123 kPa (0.95 — 1.25 kgf/cm^2, 14 — 18 psi)

Service limit:
83 kPa (0.85 kgf/cm^2, 12 psi)

CAUTION:
Be sure to remove foreign matter and rust from the cap in advance. Otherwise, results of pressure test will be incorrect.

GETmyMANUALS.org

8. Radiator Main Fan and Fan Motor

A: REMOVAL

1) Remove the collector cover.
2) Disconnect the ground cable from battery.

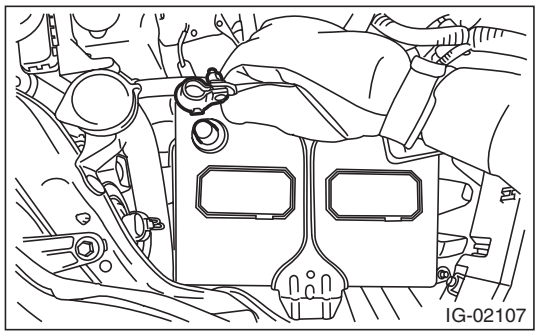

3) Remove the reservoir tank. <Ref. to CO(H4DOTC)-29, REMOVAL, Reservoir Tank.>
4) Disconnect the connector from the main fan motor.

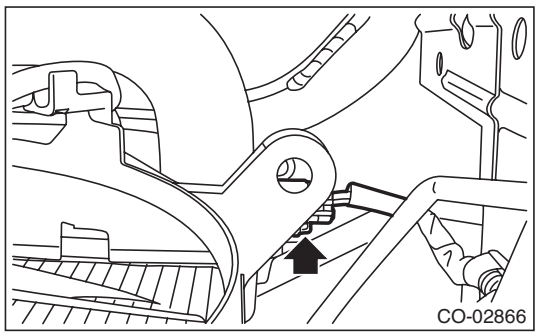

5) Remove the bolts that secure the radiator main fan motor assembly.

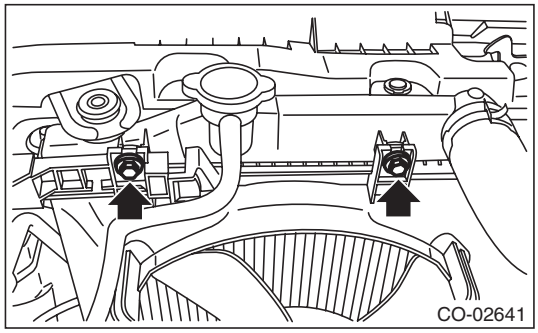

6) Remove the radiator main fan motor assembly from the upper side of the vehicle.

B: INSTALLATION

Install in the reverse order of removal.

CAUTION:
Confirm that the radiator hose is securely connected.

Tightening torque:
7.5 N·m (0.8 kgf-m, 5.5 ft-lb)

C: DISASSEMBLY

1) Remove the main fan motor connector and main fan motor harness from the radiator main fan shroud.
2) Remove the radiator main fan from the main fan motor.

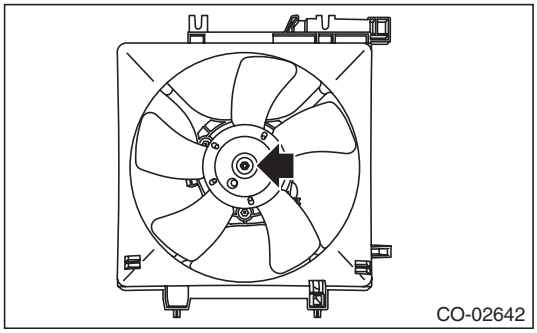

3) Remove the main fan motor from the radiator main fan shroud.

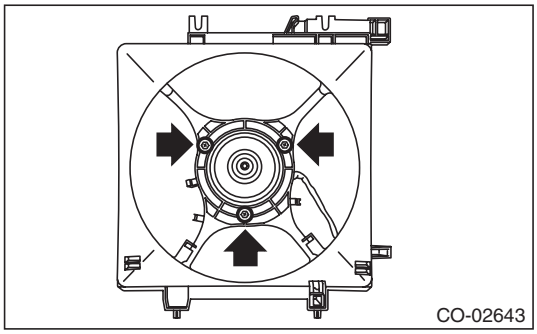

GETMANUALS.org

D: ASSEMBLY

Assemble in the reverse order of disassembly.

Tightening torque:
5 N·m (0.5 kgf-m, 3.7 ft-lb)

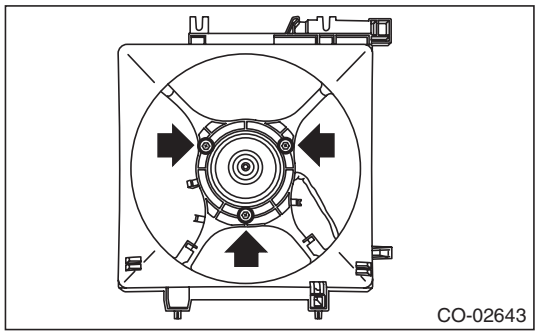

Tightening torque:
3.4 N·m (0.3 kgf-m, 2.5 ft-lb)

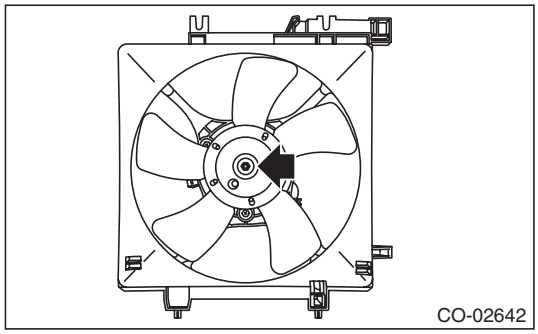

E: INSPECTION

Check that the radiator main fan, radiator main fan shroud and main fan motor do not have deformation, cracks or damage.

GETmyMANUALS.org

9. Radiator Sub Fan and Fan Motor

A: REMOVAL

1) Remove the collector cover.
2) Disconnect the ground cable from battery.

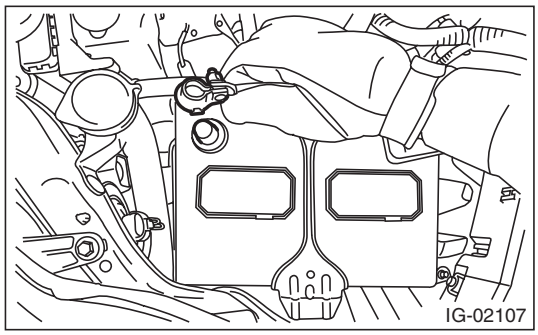

3) Remove the air intake duct. <Ref. to IN(H4DOTC)-12, REMOVAL, Air Intake Duct.>
4) Disconnect the connector from the sub fan motor.

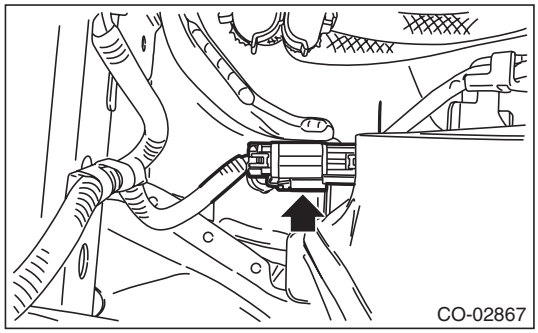

5) Remove the bolts that secure the radiator sub fan motor assembly.

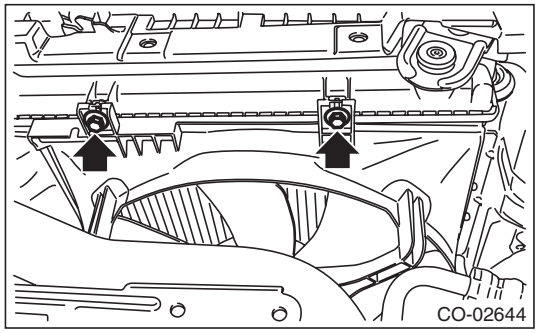

6) Remove the radiator sub fan motor assembly from the upper side of the vehicle.

B: INSTALLATION

Install in the reverse order of removal.

CAUTION:
Confirm that the radiator hose is securely connected.

Tightening torque:
7.5 N·m (0.8 kgf-m, 5.5 ft-lb)

C: DISASSEMBLY

1) Remove the sub fan motor connector and sub fan motor harness from the radiator sub fan shroud.
2) Remove the radiator sub fan from the sub fan motor.

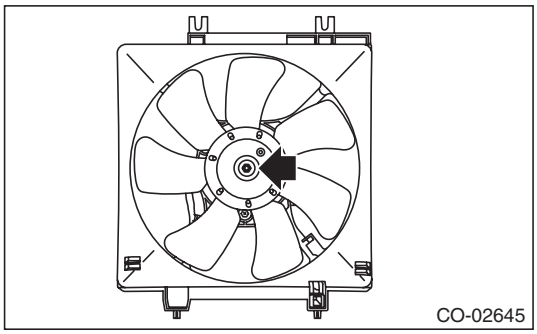

3) Remove the sub fan motor from the radiator sub fan shroud.

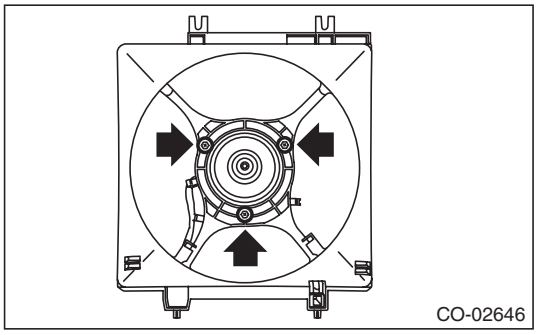

GETmyMANUALS.org

D: ASSEMBLY

Assemble in the reverse order of disassembly.

Tightening torque:
5 N·m (0.5 kgf-m, 3.7 ft-lb)

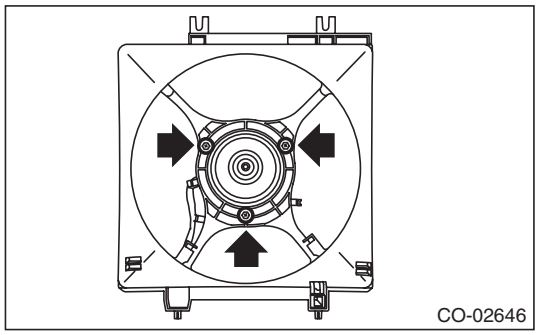

Tightening torque:
3.4 N·m (0.3 kgf-m, 2.5 ft-lb)

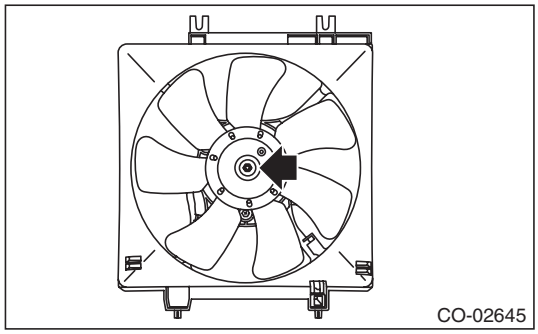

E: INSPECTION

Check that the radiator sub fan, radiator sub fan shroud and sub fan motor do not have deformation, cracks or damage.

GETmyMANUALS.org

10. Reservoir Tank

A: REMOVAL

1) Pull out the over flow hose (A).
2) Pull out the reservoir tank to the arrow direction while pushing the claw (B).

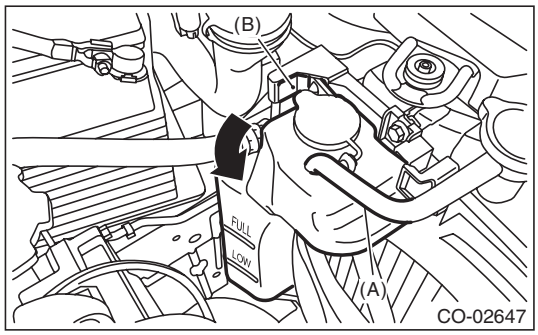

B: INSTALLATION

Install in the reverse order of removal.

C: INSPECTION

1) Check that the reservoir tank does not have deformation, cracks or damage.
2) Check the over flow hose for cracks or damage.
3) Make sure the engine coolant level is between “FULL” and “LOW”.

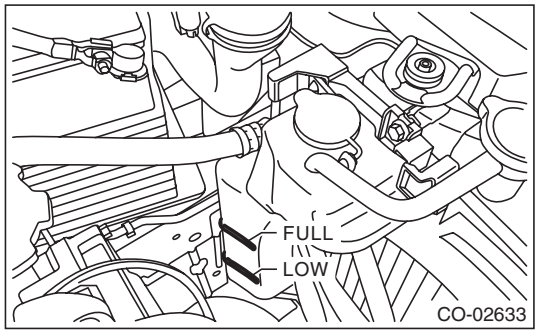

GETMANUALS.org

11.Engine Cooling System Trouble in General

A: INSPECTION

Trouble	Possible cause	Corrective action
Over-heating	a. Insufficient engine coolant	Replenish engine coolant, inspect for leakage, and repair it if necessary.
	b. Loose timing belt	Repair or replace timing belt tensioner.
	c. Oil on timing belt	Replace.
	d. Malfunction of thermostat	Replace.
	e. Malfunction of water pump	Replace.
	f. Clogged engine coolant passage	Clean.
	g. Improper ignition timing	Inspect and repair ignition control system. <Ref. to EN(H4DOTC)(diag)-2, PROCEDURE, Basic Diagnostic Procedure.>
	h. Clogged or leaking radiator	Clean, repair or replace.
	i. Defective radiator fan	Replace.
	j. Improper engine oil in engine coolant	Replace the engine coolant. If ineffective, check, repair or replace engine components.
	k. Air/fuel mixture ratio too lean	Inspect and repair the fuel injection system. <Ref. to EN(H4DOTC)(diag)-2, PROCEDURE, Basic Diagnostic Procedure.>
	l. Excessive back pressure in exhaust system	Clean or replace.
	m. Insufficient clearance between piston and cylinder	Adjust or replace.
	n. Slipping clutch	Repair or replace.
	o. Dragging brake	Adjust.
	p. Defective radiator fan	Inspect the radiator fan relay, engine coolant temperature sensor or fan motor and replace them.
Over-cooling	a. Ambient temperature extremely low	Partly cover radiator front area.
	b. Defective thermostat	Replace.
Engine coolant leaks	a. Loosened or damaged connecting units on hoses	Repair or replace.
	b. Leakage from water pump	Replace.
	c. Leakage from water pipe	Repair or replace.
	d. Leakage around cylinder head gasket	Retighten cylinder head bolts or replace cylinder head gasket.
	e. Damaged or cracked cylinder head and cylinder block	Repair or replace.
	f. Damaged or cracked thermostat cover	Repair or replace.
	g. Leakage from radiator	Repair or replace.
Noise	a. Timing belt problem	Replace.
	b. Defective radiator fan	Replace.
	c. Defective water pump bearing	Replace water pump.
	d. Defective water pump mechanical seal	Replace water pump.

GETmyMANUALS.org

LUBRICATION

LU(H4DOTC)

Page
1. General Description 2

GETtheMANUALS.org

1. General Description

A: SPECIFICATION

Specifications for the turbo model are included in the LU (H4SO) section. <Ref. to LU(H4SO)-2, General Description.>

GETtheMANUALS.org

SPEED CONTROL SYSTEMS

SP(H4DOTC)

Page

1. General Description 2

GETtheMANUALS.org

1. General Description

A: SPECIFICATION

Specifications for the turbo model are the same as the non-turbo model. <Ref. to SP(H4SO)-2, General Description.>

GETtheMANUALS.org

IGNITION

IG(H4DOTC)

Page

1. General Description 2
2. Spark Plug 4
3. Ignition Coil 6

GETtheMANUALS.org

1. General Description

A: SPECIFICATION

Item			Specifications
Ignition coil	Type		FK0368
	Ignition system		Independent ignition coil
	Manufacturer		Diamond Electric
Spark plug	Manufacturer and type		NGK: SILFR6B8
	Thread size (diameter, pitch, length) mm		14, 1.25, 26.5
	Spark plug gap mm (in)	Standard	0.7 — 0.8 (0.028 — 0.031)
	Electrode		Iridium

B: COMPONENT

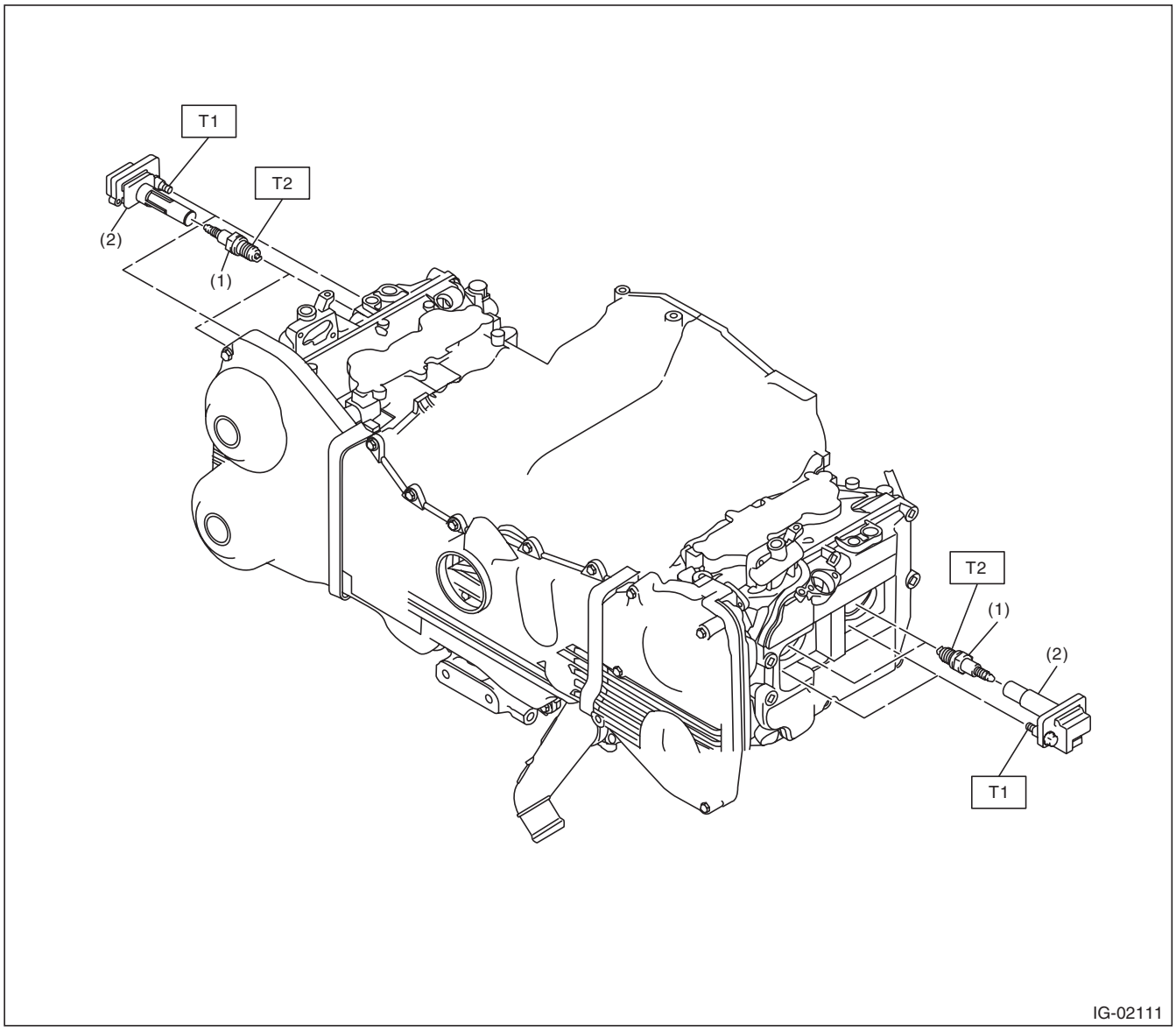

(1) Spark plug
(2) Ignition coil

Tightening torque:N·m (kgf-m, ft-lb)
T1: 16 (1.6, 11.8)
T2: 21 (2.1, 15.5)

GETtheMANUALS.org

C: CAUTION

- Wear appropriate work clothing, including a cap, protective goggles and protective shoes when performing any work.
- Remove contamination including dirt and corrosion before removal, installation or disassembly.
- Keep the disassembled parts in order and protect them from dust and dirt.
- Before removal, installation or disassembly, be sure to clarify the failure. Avoid unnecessary removal, installation, disassembly and replacement.
- Vehicle components are extremely hot after driving. Be wary of receiving burns from heated parts.
- Be sure to tighten fasteners including bolts and nuts to the specified torque.
- Place shop jacks or rigid racks at the specified points.
- Before disconnecting connectors of sensors or units, be sure to disconnect the ground cable from the battery.

GETtheMANUALS.org

2. Spark Plug

A: REMOVAL

Spark plug:
Refer to "SPECIFICATION" for the spark plug. <Ref. to IG(H4DOTC)-2, SPECIFICATION, General Description.>

1. RH SIDE

1) Disconnect the ground cable from battery.

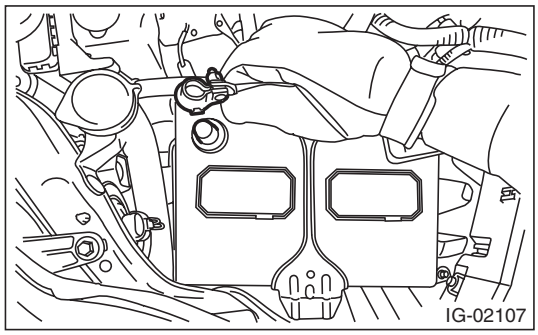

2) Remove the air cleaner case. <Ref. to IN(H4DOTC)-8, REMOVAL, Air Cleaner Case.>
3) Disconnect the connector from ignition coil.
4) Remove the ignition coil.

NOTE:
Turn #3 ignition coil by 180 degrees to remove it.

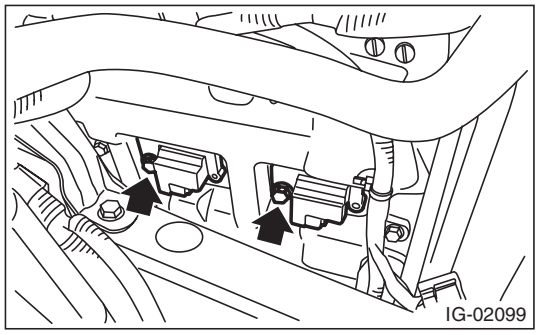

5) Remove the spark plug with a spark plug socket.

2. LH SIDE

1) Remove the battery. <Ref. to SC(H4SO)-28, REMOVAL, Battery.>
2) Disconnect the connector from ignition coil.
3) Remove the ignition coil.

NOTE:
Turn #4 ignition coil by 180 degrees to remove it.

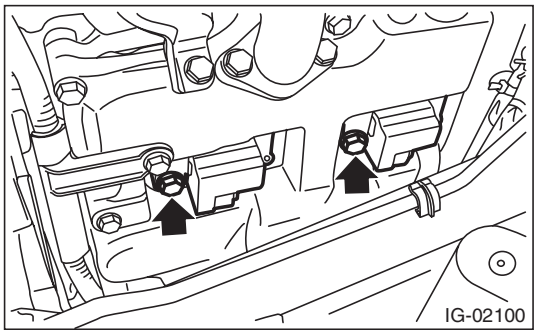

4) Remove the spark plug with a spark plug socket.

B: INSTALLATION

1. RH SIDE

Install in the reverse order of removal.

Tightening torque (Spark plug):
21 N·m (2.1 kgf-m, 15.5 ft-lb)

Tightening torque (Ignition coil):
16 N·m (1.6 kgf-m, 11.8 ft-lb)

2. LH SIDE

Install in the reverse order of removal.

Tightening torque (Spark plug):
21 N·m (2.1 kgf-m, 15.5 ft-lb)

Tightening torque (Ignition coil):
16 N·m (1.6 kgf-m, 11.8 ft-lb)

C: INSPECTION

1) Check the spark plug for abnormalities. If defective, replace the spark plug.

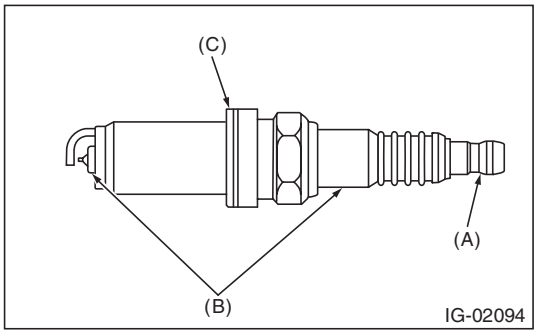

(A) Terminal damage
(B) Crack or damage in insulator
(C) Damaged gasket

GETthemANUALS.org

2) Check the spark plug electrode and condition of the insulator. If abnormal, check and repair the cause and replace the spark plug.

(1) Normal:
Brown to grayish-tan deposits and slight electrode wear indicate correct spark plug heat range.

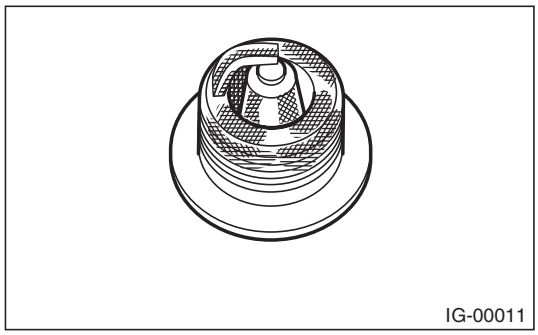

(2) Carbon fouled:
Dry fluffy carbon deposits on insulator and electrode are mostly caused by slow speed driving in the city, weak ignition, too rich fuel mixture, etc.

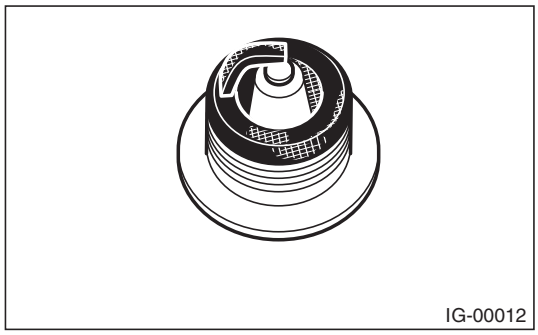

(3) Oil fouled:
Wet black deposits show oil entrance into combustion chamber through worn piston rings or increased clearance between valve guides and valve stems.

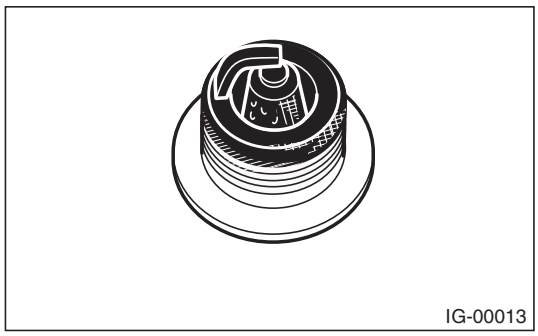

(4) Overheating:
White or light gray insulator with black or brown spots and bluish burnt electrodes indicate engine overheating, wrong selection of fuel, or loose spark plugs.

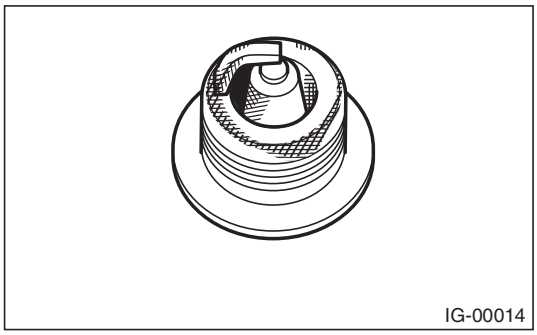

3) Using a nylon brush, etc., clean and remove the carbon or oxide deposits from the spark plug. If deposits are too stubborn, replace the spark plugs. After cleaning the spark plugs, check the spark plug gap “L” using a gap gauge. If it is not within the standard, replace the spark plug.

NOTE:
- Never use a plug cleaner.
- Do not use a metal brush as it may damage the electrode area.

Spark plug gap L:
Standard
0.7 — 0.8 mm (0.028 — 0.031 in)

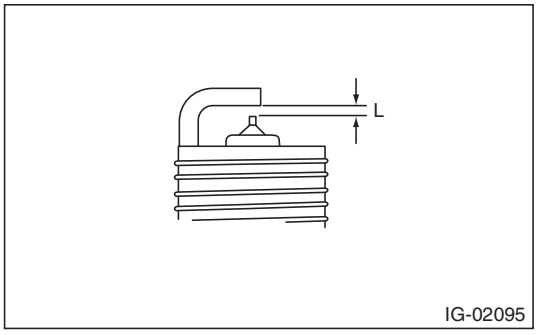

GETtheMANUALS.org

3. Ignition Coil

A: REMOVAL

Direct ignition type is adopted. Refer to “Spark Plug” for removal procedure. <Ref. to IG(H4DOTC)-4, REMOVAL, Spark Plug.>

B: INSTALLATION

Install in the reverse order of removal.

Tightening torque:
16 N·m (1.6 kgf-m, 11.8 ft-lb)

C: INSPECTION

For inspection procedure, refer to “Diagnostics for Engine Starting Failure”. <Ref. to EN(H4DOTC)(diag)-68, IGNITION CONTROL SYSTEM, Diagnostics for Engine Starting Failure.>

GETtheMANUALS.org

STARTING/CHARGING SYSTEMS

SC(H4DOTC)

Page

1. General Description 2

GETtheMANUALS.org

1. General Description

A: SPECIFICATION

Specifications for the turbo model are included in the SC(H4SO) section. <Ref. to SC(H4SO)-2, General Description.>

GETtheMANUALS.org

ENGINE (DIAGNOSTICS)

EN(H4DOTC)(diag)

		Page
1.	Basic Diagnostic Procedure	2
2.	Check List for Interview	4
3.	General Description	6
4.	Electrical Component Location	9
5.	Engine Control Module (ECM) I/O Signal	18
6.	Engine Condition Data	28
7.	Data Link Connector	29
8.	General Scan Tool	30
9.	Subaru Select Monitor	34
10.	Read Diagnostic Trouble Code (DTC)	40
11.	Inspection Mode	41
12.	Drive Cycle	47
13.	Clear Memory Mode	53
14.	System Operation Check Mode	54
15.	Malfunction Indicator Light	55
16.	Diagnostics for Engine Starting Failure	62
17.	Diagnostic Procedure for Subaru Select Monitor Communication	73
18.	List of Diagnostic Trouble Code (DTC)	75
19.	Diagnostic Procedure with Diagnostic Trouble Code (DTC)	84
20.	General Diagnostic Table	339

GETtheMANUALS.org

1. Basic Diagnostic Procedure

A: PROCEDURE

1. ENGINE

Step		Check	Yes	No
1	**CHECK ENGINE START FAILURE.** 1) Ask the customer when and how the trouble occurred using the interview check list. <Ref. to EN(H4DOTC)(diag)-4, CHECK, Check List for Interview.> 2) Start the engine.	Does the engine start?	Go to step **2**.	Inspection using “Diagnostics for Engine Start Failure”. <Ref. to EN(H4DOTC)(diag)-62, Diagnostics for Engine Starting Failure.>
2	**CHECK ILLUMINATION OF MALFUNCTION INDICATOR LIGHT.**	Does the malfunction indicator light illuminate?	Go to step **3**.	Inspection using “General Diagnostic Table”. <Ref. to EN(H4DOTC)(diag)-339, General Diagnostic Table.>
3	**CHECK COMMUNICATION STATUS.** 1) Turn the ignition switch to OFF. 2) Connect the Subaru Select Monitor or general scan tool to the data link connector. 3) Turn the ignition switch to ON, and run the Subaru Select Monitor or general scan tool. NOTE: • Subaru Select Monitor For detailed procedures, refer to “Subaru Select Monitor”. <Ref. to EN(H4DOTC)(diag)-34, Subaru Select Monitor.> • General scan tool For detailed operation procedures, refer to the general scan tool operation manual.	Does Subaru Select Monitor or general scan tool communicate with vehicle normally?	Go to step **4**.	Inspection using “Diagnostics Procedure for Subaru Select Monitor Communication”. <Ref. to EN(H4DOTC)(diag)-73, Diagnostic Procedure for Subaru Select Monitor Communication.>
4	**CHECK DTC.** Read DTC using Subaru Select Monitor or general scan tool. NOTE: • Subaru Select Monitor Refer to “Read Diagnostic Trouble Code” for detailed operation procedure. <Ref. to EN(H4DOTC)(diag)-40, Read Diagnostic Trouble Code (DTC).> • General scan tool For detailed operation procedures, refer to the general scan tool operation manual.	Is DTC displayed on Subaru Select Monitor or general scan tool?	Record the DTC. Repair the trouble cause. <Ref. to EN(H4DOTC)(diag)-75, List of Diagnostic Trouble Code (DTC).> Go to step **5**.	Repair the related parts. NOTE: If DTC is not shown on display although the malfunction indicator light illuminates, perform the diagnosis of malfunction indicator light circuit or combination meter. <Ref. to EN(H4DOTC)(diag)-55, Malfunction Indicator Light.>

GET MANUALS.org

Step		Check	Yes	No
5	**CHECK FREEZE FRAME DATA.** Check the freeze frame data using the Subaru Select Monitor or general scan tool. NOTE: • Subaru Select Monitor For detailed procedures, refer to “Subaru Select Monitor”. <Ref. to EN(H4DOTC)(diag)-34, Subaru Select Monitor.> • General scan tool For detailed operation procedures, refer to the general scan tool operation manual.	Is freeze frame data displayed on Subaru Select Monitor or general scan tool?	Record the freeze frame data. Repair the cause of fault, and go to the next step. Go to step **6**.	Go to step **6**.
6	**PERFORM DIAGNOSIS.** 1) Perform the Clear Memory Mode. <Ref. to EN(H4DOTC)(diag)-53, Clear Memory Mode.> 2) Perform the Inspection Mode or Drive Cycle. <Ref. to EN(H4DOTC)(diag)-41, Inspection Mode.> <Ref. to EN(H4DOTC)(diag)-47, Drive Cycle.>	Is DTC displayed on Subaru Select Monitor or general scan tool?	Inspect using “Diagnostic Procedure with Diagnostic Trouble Code (DTC)”. <Ref. to EN(H4DOTC)(diag)-84, Diagnostic Procedure with Diagnostic Trouble Code (DTC).>	Finish the diagnosis.

GET THE MANUALS.org

2. Check List for Interview

A: CHECK

1. CHECK LIST NO. 1

Check the following item when problem has occurred.

NOTE:
Use copies of this page for interviewing customers.

Customer's name		Engine No.	
Date of purchase		Fuel type	
Date of repair		Odometer reading	km
V.I.N.			miles
Weather	❑ Fine ❑ Cloudy ❑ Rainy ❑ Snowy ❑ Various/Others:		
Ambient air temperature	°C (°F)		
	❑ Hot ❑ Warm ❑ Cool ❑ Cold		
Place	❑ Highway ❑ Suburbs ❑ Inner city ❑ Uphill ❑ Downhill ❑ Rough road ❑ Others:		
Engine temperature	❑ Cold ❑ Warming-up ❑ After warming-up ❑ Any temperature ❑ Others:		
Engine speed	rpm		
Vehicle speed	km/h (MPH)		
Driving conditions	❑ Not affected ❑ At starting ❑ While idling ❑ At racing ❑ While accelerating ❑ While cruising ❑ While decelerating ❑ While turning (RH/LH)		
Headlight	❑ ON/❑ OFF	Rear defogger	❑ ON/❑ OFF
Blower	❑ ON/❑ OFF	Audio	❑ ON/❑ OFF
A/C compressor	❑ ON/❑ OFF	Rear entertainment system	❑ ON/❑ OFF
Radiator fan	❑ ON/❑ OFF	Car phone	❑ ON/❑ OFF
Front wiper	❑ ON/❑ OFF	Wireless device	❑ ON/❑ OFF
Rear wiper	❑ ON/❑ OFF		

GET MANUAL.org

2. CHECK LIST NO. 2

Check the following item about the vehicle's state when the malfunction indicator light turns on.

NOTE:
Use copies of this page for interviewing customers.

a) Other warning lights or indicators illuminate: ❑ Yes / ❑ No
❑ Fuel level warning light ❑ Charge warning light ❑ Engine coolant temperature warning light ❑ Oil pressure warning light ❑ ATF temperature warning light or SPORT indicator light ❑ Driver's control center differential indicator light ❑ ABS warning light ❑ VDC warning light ❑ Cruise indicator light ❑ SI-CRUISE warning light ❑ Immobilizer indicator light ❑ STEERING warning light ❑ Glow indicator light ❑ Sedimenter warning light ❑ Others:
b) Fuel level
• Lack of fuel: ❑ Yes / ❑ No • Indicator position of fuel gauge: • Experienced running out of fuel: ❑ Yes / ❑ No
c) Intentional connecting or disconnecting of harness connectors or spark plug cords: ❑ Yes / ❑ No
• What:
d) Intentional connecting or disconnecting of hoses: ❑ Yes / ❑ No
• What:
e) Installing of other parts except genuine parts: ❑ Yes / ❑ No
• What: • Where:
f) Occurrence of noise: ❑ Yes / ❑ No
• From where: • What kind:
g) Occurrence of smell: ❑ Yes / ❑ No
• From where: • What kind:
h) Intrusion of water into engine compartment or passenger compartment: ❑ Yes / ❑ No
i) Troubles occurred
❑ Engine does not start. ❑ Engine stalls during idling. ❑ Engine stalls while driving. ❑ Engine speed decreases. ❑ Engine speed does not decrease. ❑ Rough idling ❑ Poor acceleration ❑ Back fire ❑ After fire ❑ Does not shift. ❑ Excessive shift shock

GET MANUAL.org

3. General Description

A: CAUTION

1) Airbag system wiring harness is routed near the ECM, main relay and fuel pump relay.

CAUTION:
- **Do not use electrical test equipment on the airbag system circuit.**
- **Be careful not to damage the airbag system wiring harness when servicing the ECM, TCM, main relay and fuel pump relay.**

2) Never connect the battery in reverse polarity. Doing so will damage the ECM instantly, and other parts will also be damaged.
3) Do not disconnect the battery terminals while the engine is running. A large counter electromotive force will be generated in the generator, and this voltage may damage electronic parts such as ECM etc.
4) Before disconnecting the connectors of each sensor and ECM, be sure to turn the ignition switch to OFF. Perform the Clear Memory Mode after connecting the connectors. <Ref. to EN(H4DOTC)(diag)-53, Clear Memory Mode.>
5) When measuring the voltage or resistance of individual sensor or all electrical control modules, use a tapered pin with a diameter of less than 0.6 mm (0.024 in). Do not insert the pin 4 mm (0.16 in) or more into the part.

CAUTION:
When replacing the ECM, be careful not to use the wrong spec. ECM to avoid any damage on the fuel injection system.

NOTE:
When replacing the ECM of the models with Immobilizer, immobilizer system must be registered. To do so, all ignition keys and ID cards need to be prepared. For detailed operation procedures, refer to “PC application help for Subaru Select Monitor”.
6) Take care not to allow water to get into the connectors when servicing or washing the vehicle in rainy weather. Avoid exposure to water even if the connectors are waterproof.
7) Use ECM mounting stud bolts at the body side grounding point when measuring voltage and resistance inside the passenger compartment.

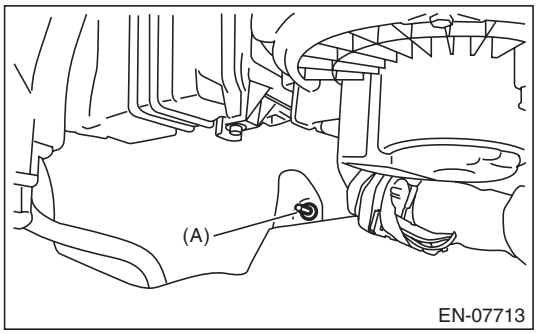

(A) Stud bolt

8) Use the engine ground terminal or engine assembly as the grounding point to chassis when measuring the voltage and resistance in engine compartment.

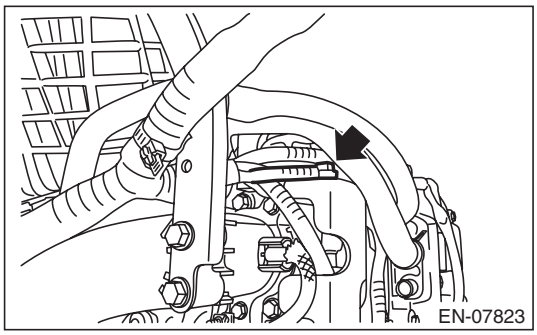

9) Every MFI-related part is a precision part. Do not drop them.
10) Observe the following cautions when installing a radio in vehicle.

CAUTION:
- **The antenna must be kept as far apart as possible from control module. (ECM is installed at the back of the glove box.)**
- **The antenna feeder must be placed as far apart as possible from the ECM and engine control system harness.**
- **Carefully adjust the antenna for correct matching.**
- **When mounting a large power type radio, pay special attention to the three items mentioned above.**
- **Incorrect installation of the radio may affect the operation of ECM.**

11) When disconnecting the fuel hose, release the fuel pressure. <Ref. to FU(H4DOTC)-66, RELEASING OF FUEL PRESSURE, PROCEDURE, Fuel.>

GET MANUALS.org

12) For the model with ABS, the ABS warning light may illuminate when performing driving test with jacked-up or lifted-up condition, but this is not a system malfunction. The reason for this is the speed difference between the front and rear wheels. When engine control system diagnosis is finished, perform the VDC memory clearance procedure of self-diagnosis function. <Ref. to VDC(diag)-25, Clear Memory Mode.>

B: INSPECTION

Before performing diagnostics, check the following item which might affect engine problems.

1. BATTERY

1) Measure the battery voltage and specific gravity of the electrolyte.

Standard voltage: 12 V

Specific gravity: 1.260 or more

2) Check the condition of the main and other fuses, and harnesses and connectors. Also check for proper grounding.

2. ENGINE GROUND

Make sure that the engine ground terminal is properly connected to the engine.

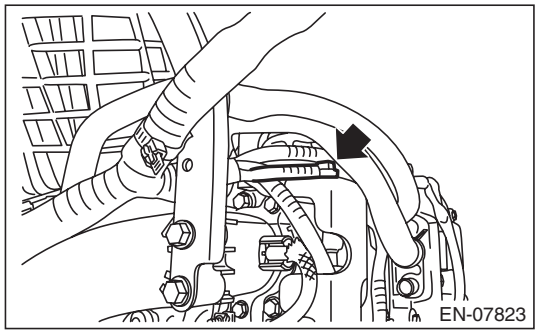

C: NOTE

- The on-board diagnostic (OBD) system detects and indicates a fault in various inputs and outputs of the complex electronic control. Malfunction indicator light in the combination meter indicates occurrence of a fault or trouble.
- Further, against such a failure of sensors as may disable the drive, the fail-safe function is provided to ensure the minimal drivability.
- The OBD system incorporated with the vehicles within this type of engine complies with OBD-II regulations. The OBD system monitors the components and the system malfunction listed in “Engine Section” which affects on emissions.
- When the system decides that a malfunction occurs, malfunction indicator light illuminates. At the same time of the malfunction indicator light illumination or blinking, a DTC and a freeze frame engine conditions are stored into on-board computer.
- The OBD system stores freeze frame engine condition data (engine load, engine coolant temperature, fuel trim, engine speed and vehicle speed, etc.) into on-board computer when it detects a malfunction.
- Freeze frame engine condition data are stored until the DTCs are cleared. However when such malfunctions as fuel trim fault and misfire are detected with the freeze frame engine condition data stored, they are rewritten into those related to the fuel trim fault and misfire.
- When the malfunction does not occur again for three consecutive driving cycles*, malfunction indicator light is turned off, but DTC remains at on-board computer.

*: One driving cycle means the period between the ignition switch ON and the ignition switch OFF after driving.

- When performing diagnosis, connect the Subaru Select Monitor or general scan tool to the vehicle.

GET MANUALS.org

D: PREPARATION TOOL

ILLUSTRATION	TOOL NUMBER	DESCRIPTION	REMARKS
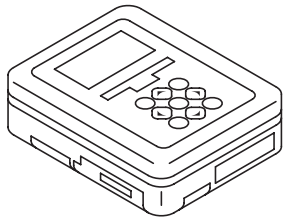 ST1B022XU0	1B022XU0	SUBARU SELECT MONITOR III KIT	Used for troubleshooting the electrical system.
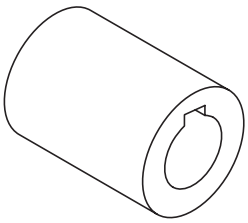 ST-499987500	499987500	CRANKSHAFT SOCKET	Used for rotating crankshaft.

GET MANUAL.org

4. Electrical Component Location

A: LOCATION

1. CONTROL MODULE

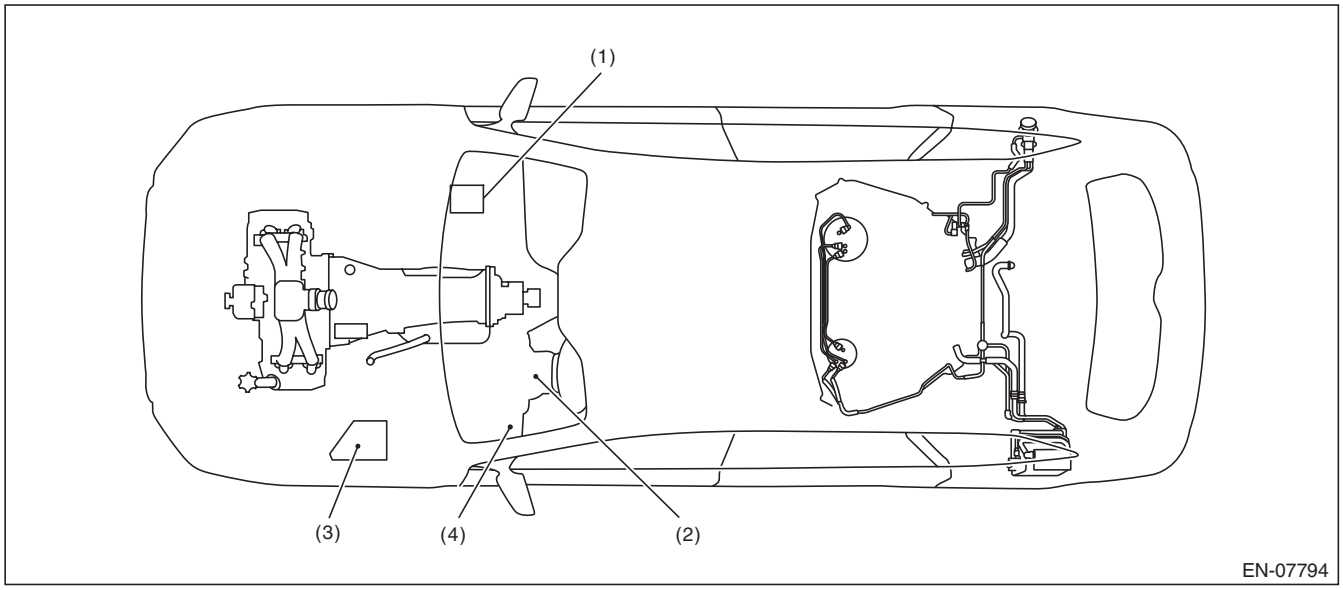

(1) Engine control module (ECM)
(2) Malfunction indicator light
(3) Delivery (test) mode fuse
(4) Data link connector

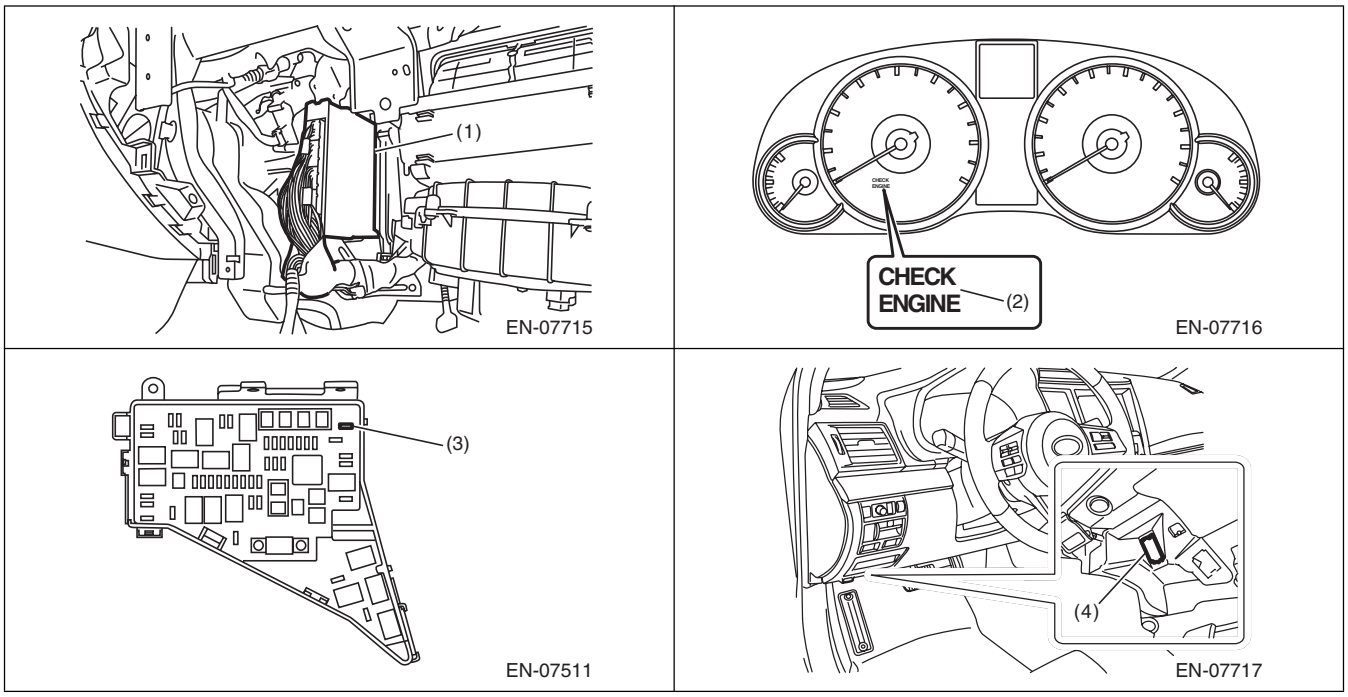

GET MANUALS.org

2. SENSOR

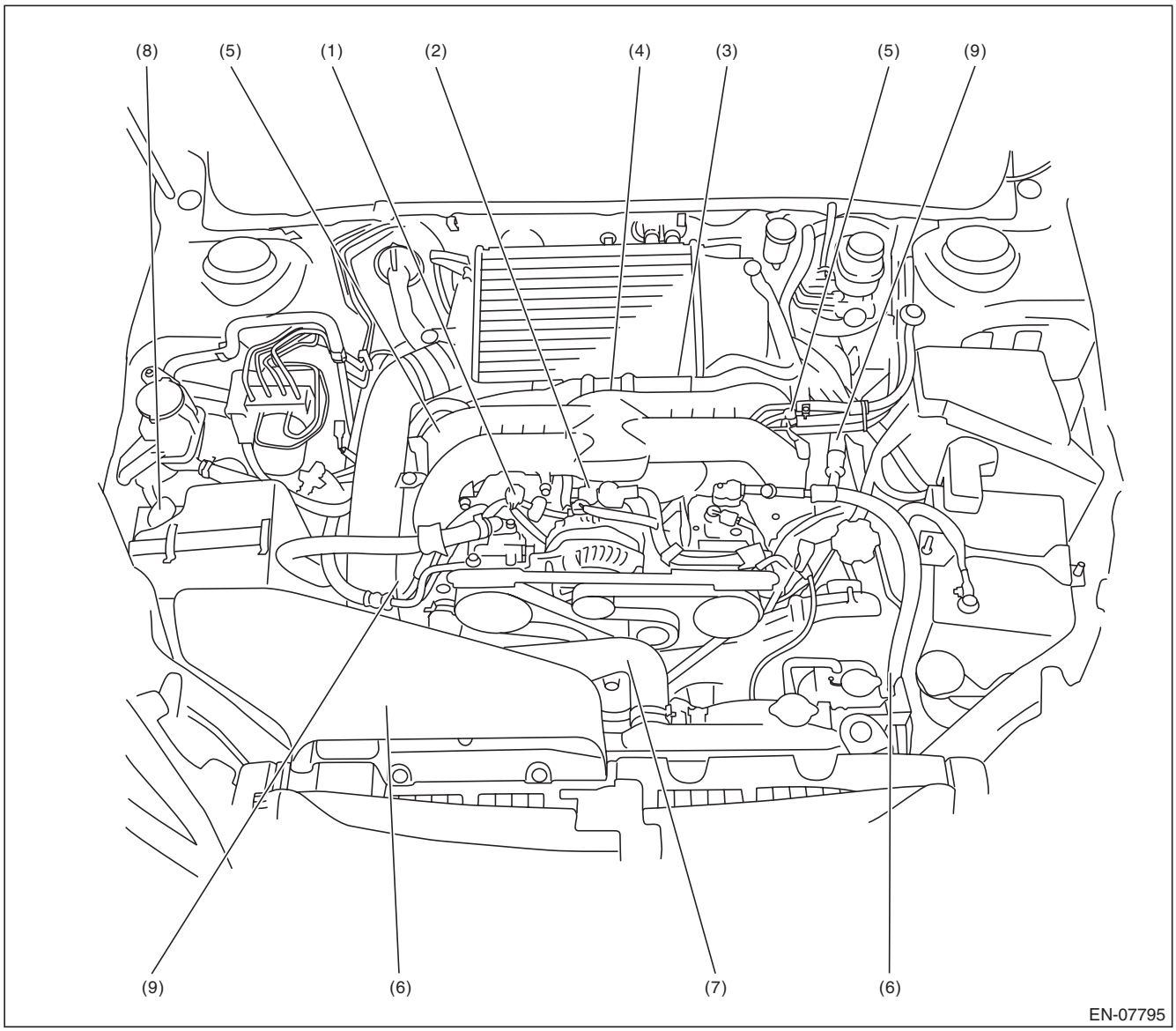

(1)	Manifold absolute pressure sensor	(4)	Knock sensor	(7)	Crankshaft position sensor
(2)	Engine coolant temperature sensor	(5)	Intake camshaft position sensor	(8)	Mass air flow and intake air temperature sensor
(3)	Electronic throttle control	(6)	Exhaust camshaft position sensor	(9)	Tumble generator valve ASSY

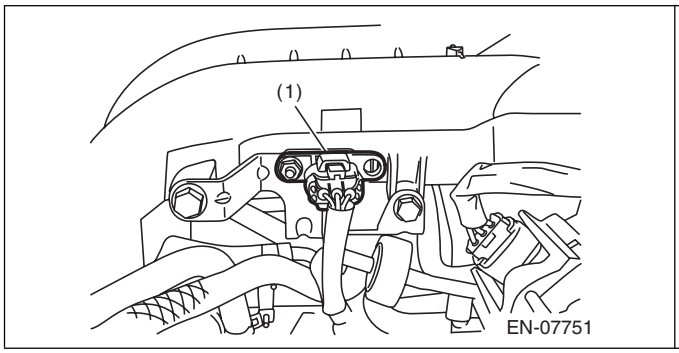

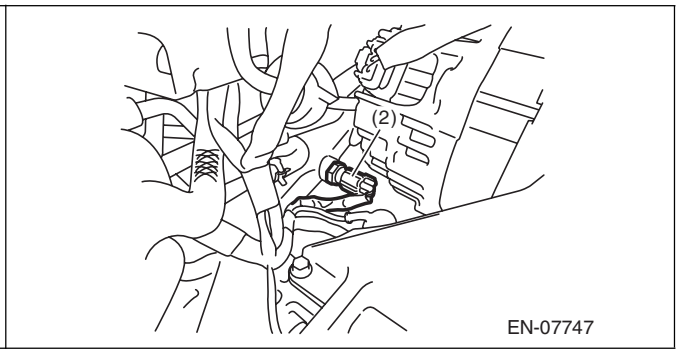

GET the MANUALS.org

Electrical Component Location

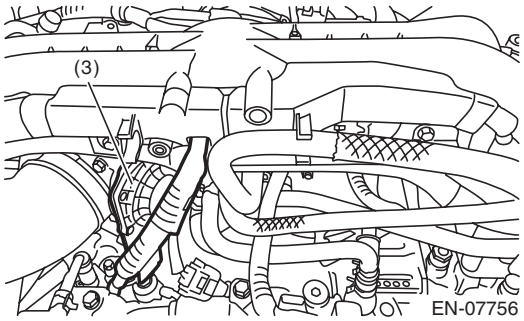

EN-07756

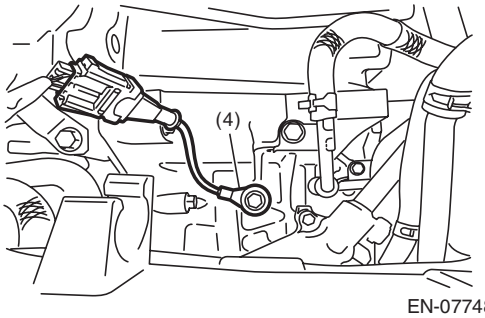

EN-07748

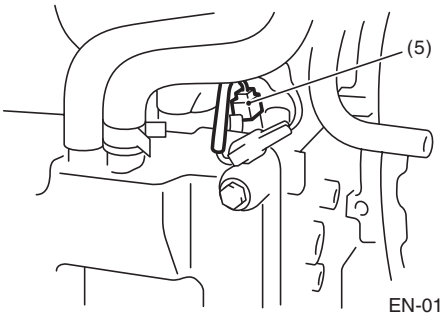

EN-01798

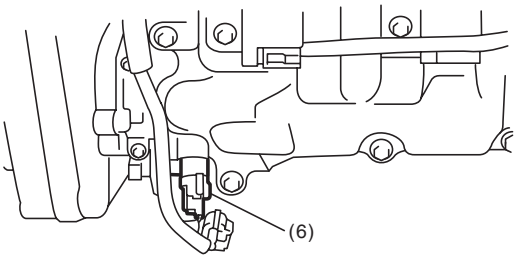

EN-01929

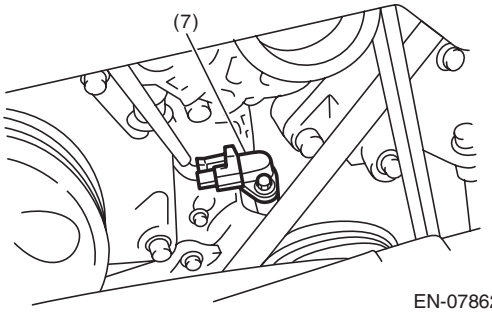

EN-07862

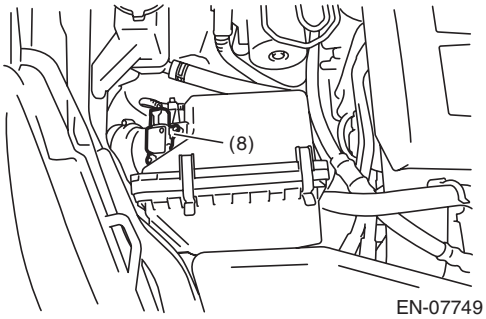

EN-07749

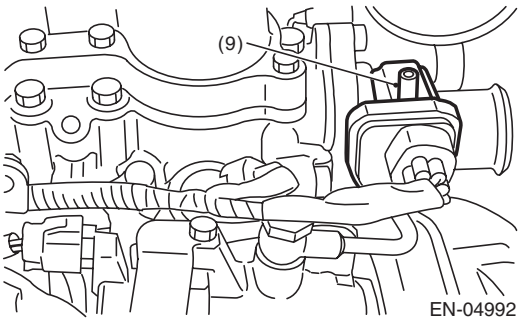

EN-04992

SUBARU.

GET the MANUALS.org

Electrical Component Location

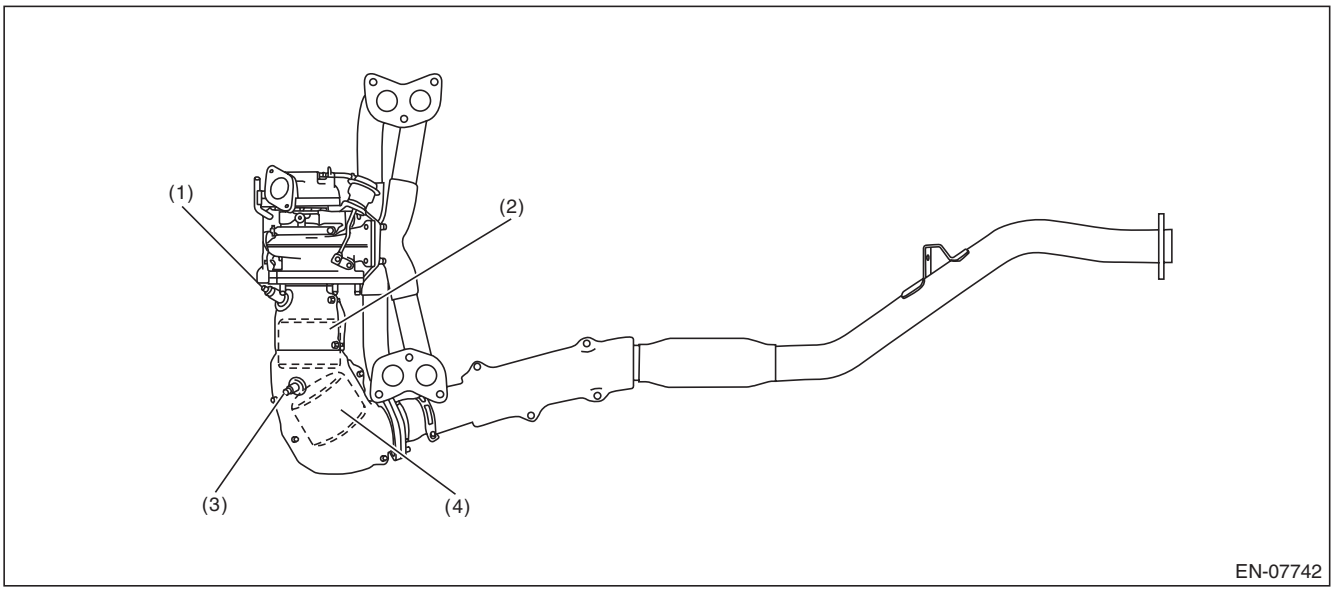

(1) Front oxygen (A/F) sensor
(2) Front catalytic converter
(3) Rear oxygen sensor
(4) Rear catalytic converter

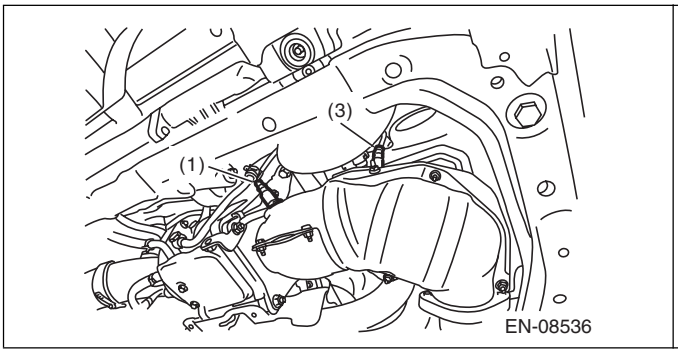

SUBARU.

GET the MANUALS.org

Electrical Component Location

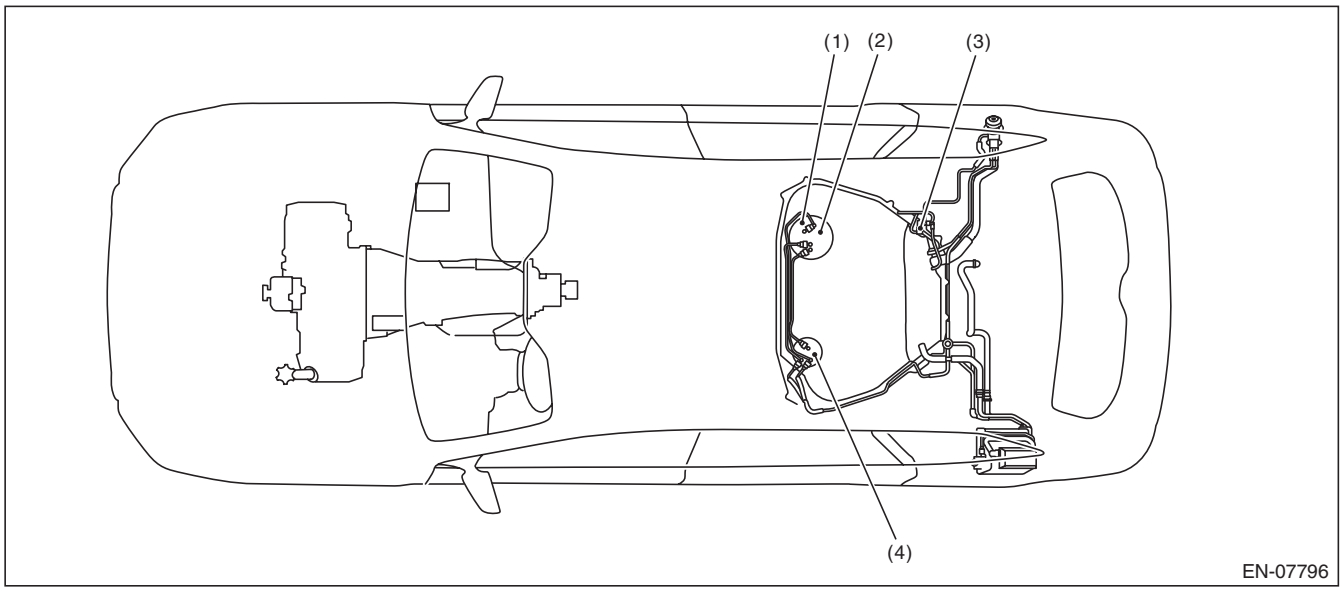

(1) Fuel level sensor
(2) Fuel temperature sensor
(3) Fuel tank pressure sensor
(4) Fuel sub level sensor

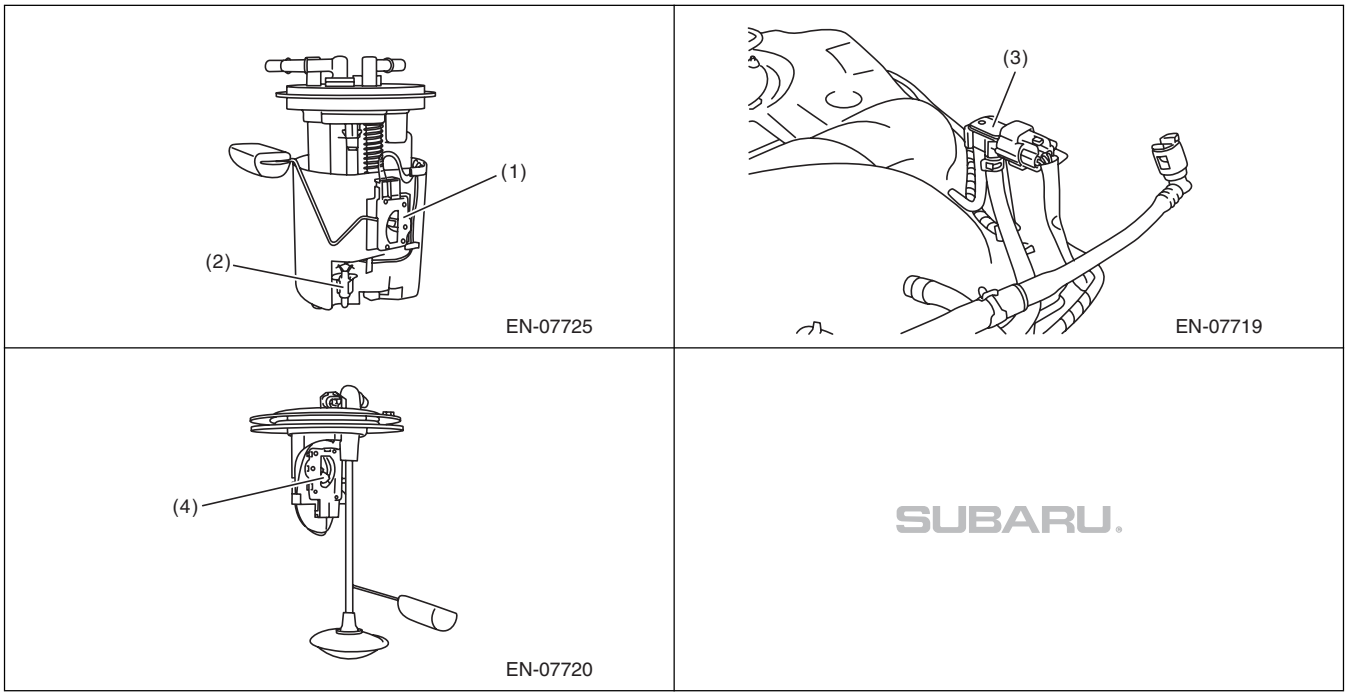

GET the MANUALS.org

3. SOLENOID VALVE, ACTUATOR, EMISSION CONTROL SYSTEM PARTS AND IGNITION SYSTEM PARTS

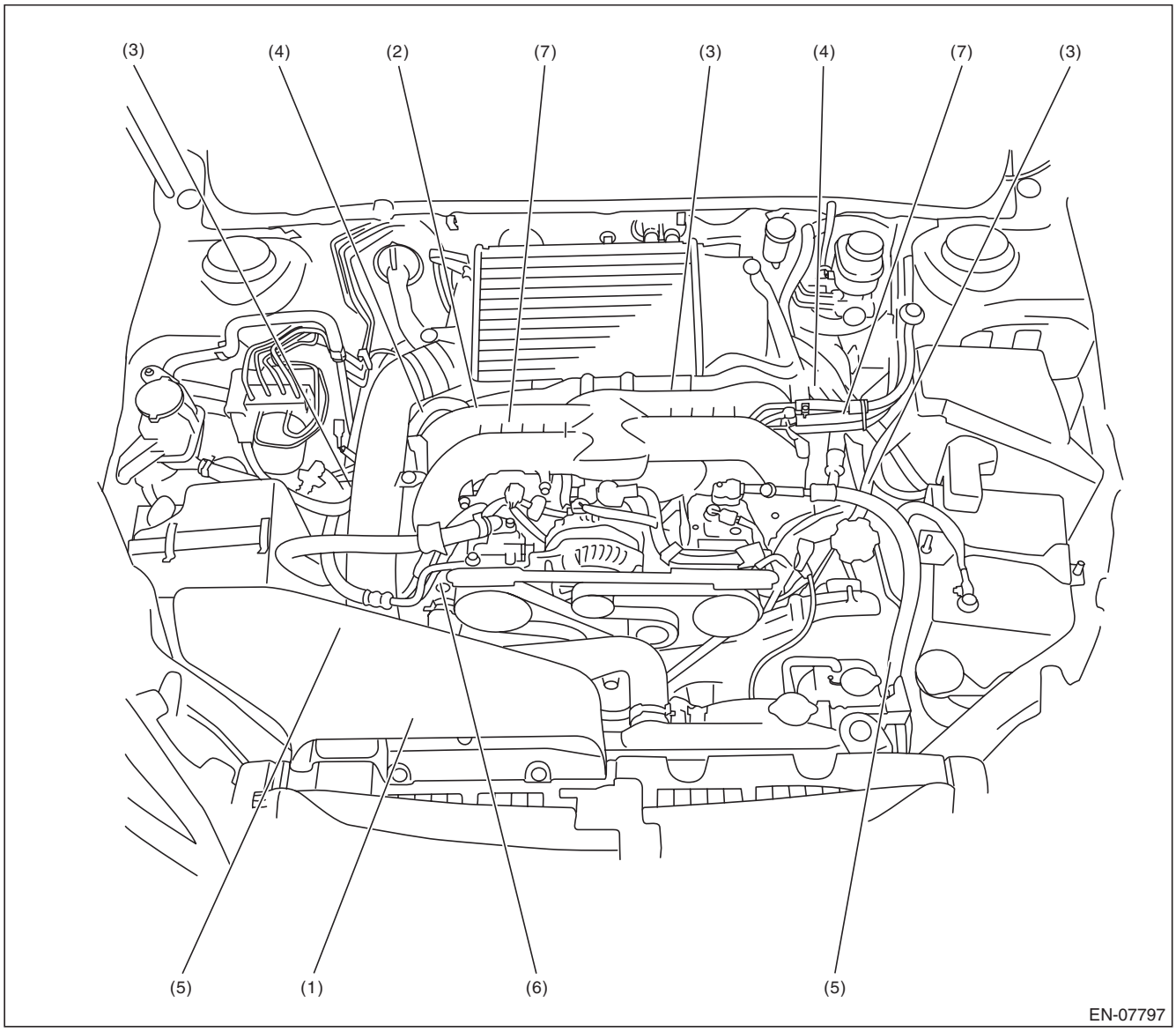

(1)	Wastegate control solenoid valve	(4)	Intake oil flow control solenoid valve	(6)	Tumble generator valve ASSY
(2)	Purge control solenoid valve 1	(5)	Exhaust oil flow control solenoid valve	(7)	Purge control solenoid valve 2
(3)	Ignition coil				

GET the MANUALS.org

Electrical Component Location

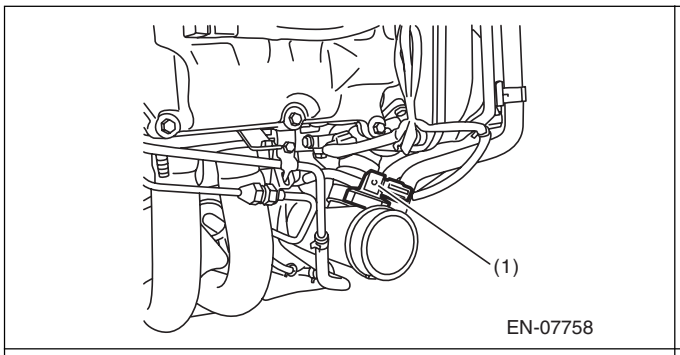

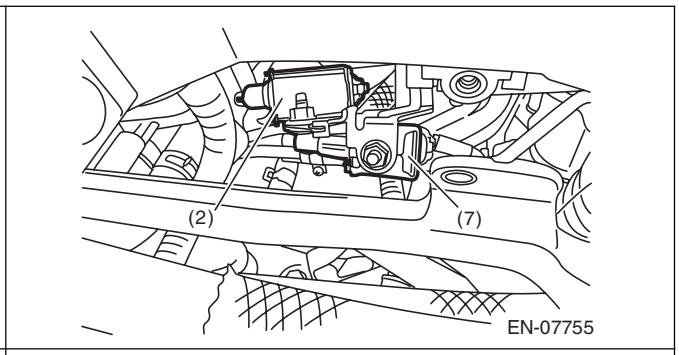

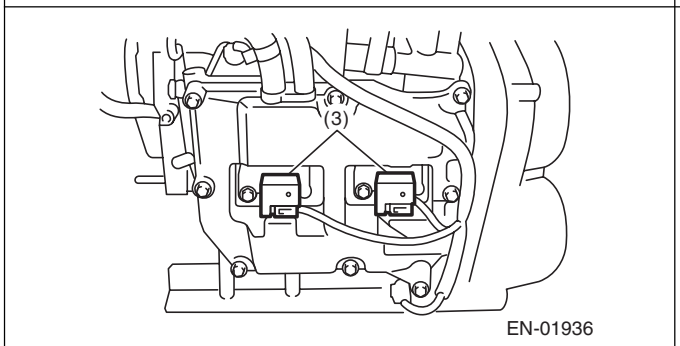

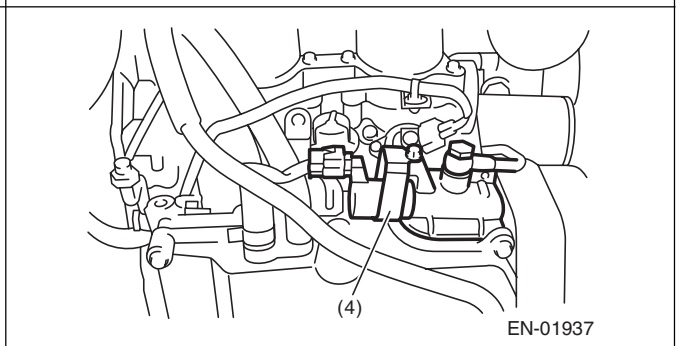

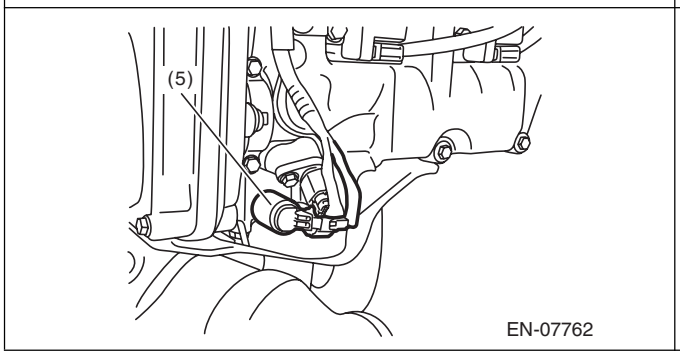

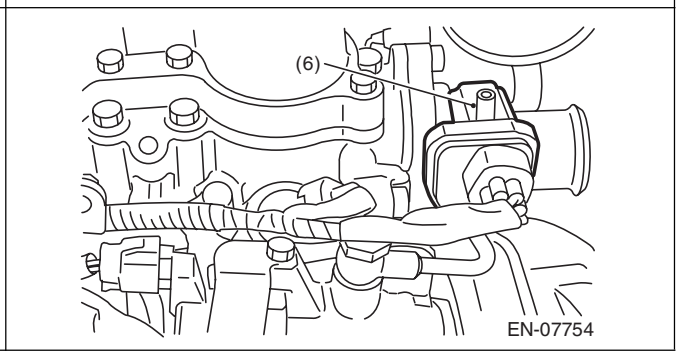

GET the MANUALS.org

Electrical Component Location

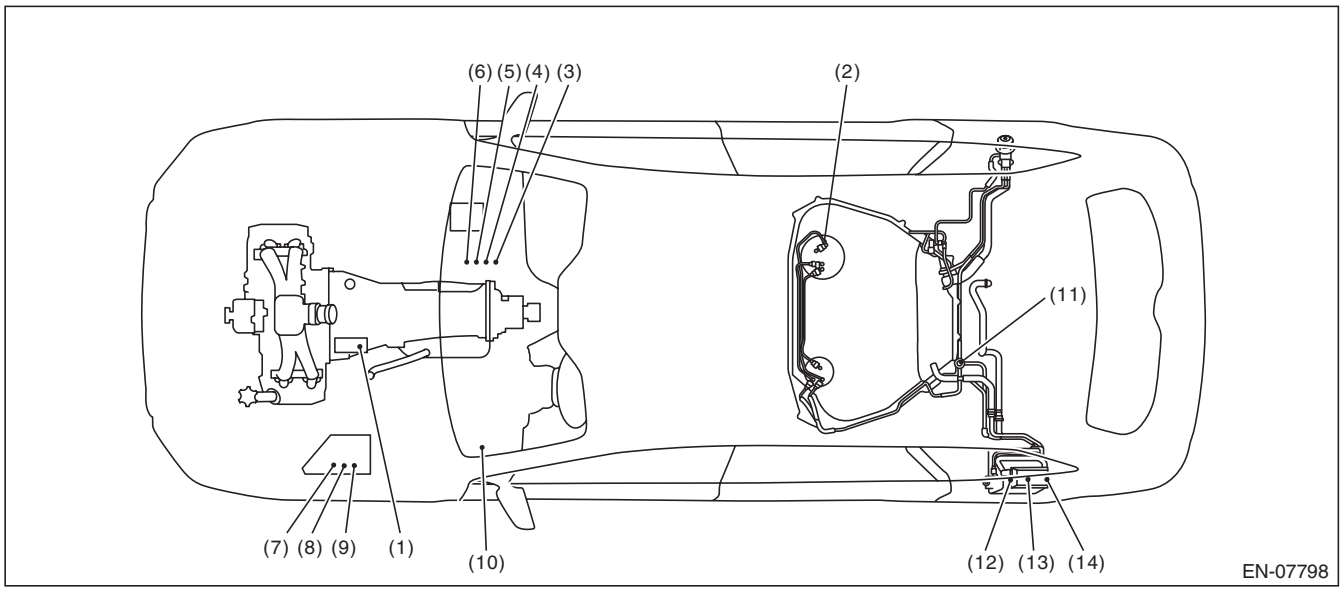

(1)	Starter	(6)	Fuel pump relay	(11)	Pressure control solenoid valve
(2)	Fuel pump	(7)	Radiator main fan relay 1	(12)	Canister
(3)	Main relay	(8)	Radiator main fan relay 2	(13)	Drain valve
(4)	A/F, oxygen sensor relay	(9)	Radiator sub fan relay	(14)	Drain filter
(5)	Electronic throttle control relay	(10)	Starter relay		

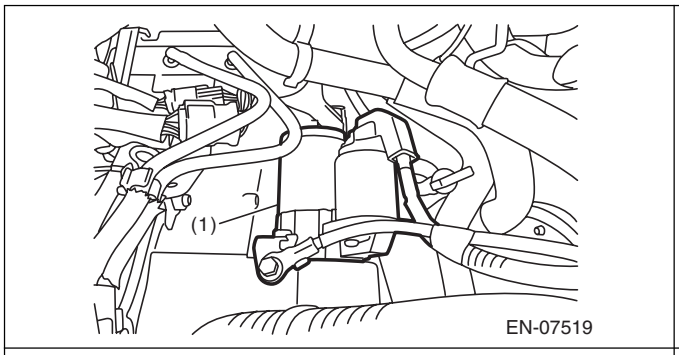

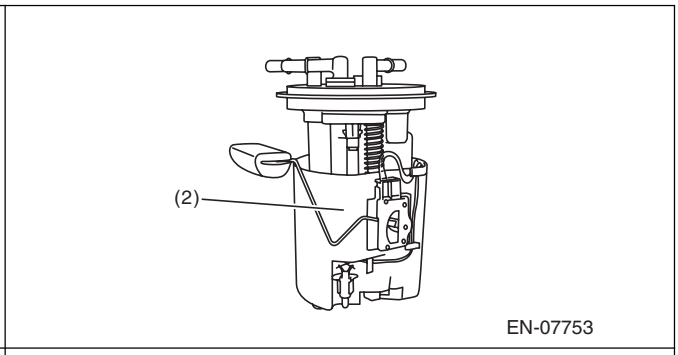

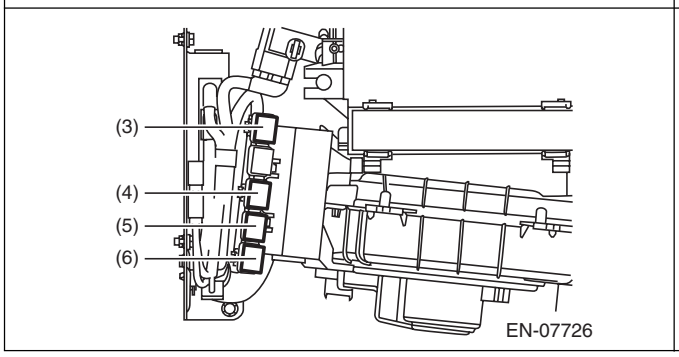

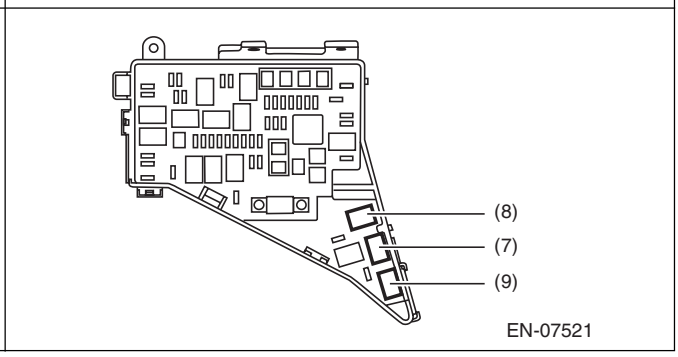

GET the MANUALS.org

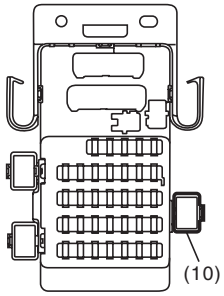

EN-07727

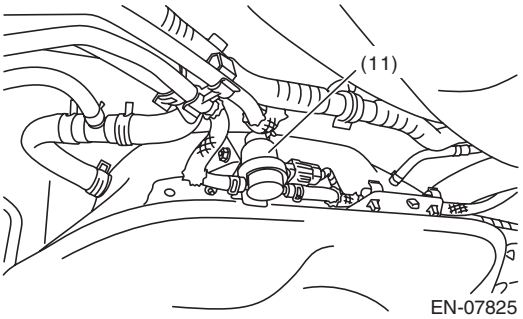

EN-07825

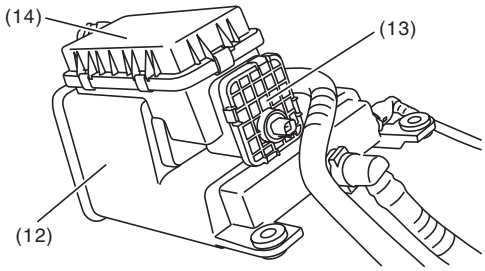

EN-07723

4. TRANSMISSION

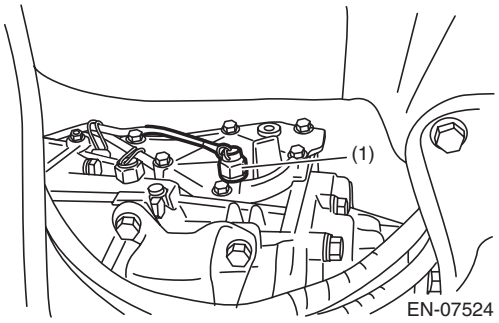

EN-07524

(1) Neutral position switch

GET the MANUALS.org

5. Engine Control Module (ECM) I/O Signal

A: ELECTRICAL SPECIFICATION

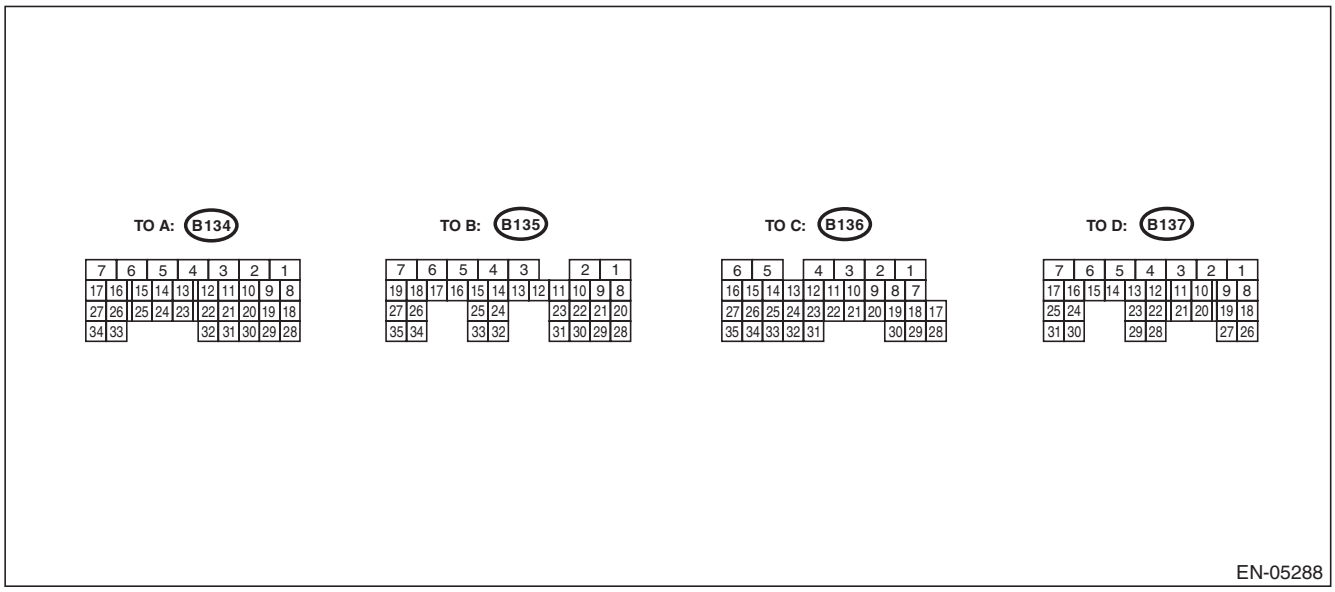

Description		Connector No.	Terminal No.	Signal (V)		Note
				Ignition SW ON (engine OFF)	Engine ON (idling)	
Crankshaft position sensor	Signal (+)	B137	17	0	–7 — +7	Waveform
	Signal (–)	B137	25	0	0	—
	Shield	B137	31	0	0	—
Front oxygen (A/F) sensor	Signal (+)	B136	19	2.8 — 3.2	2.8 — 3.2	—
	Signal (–)	B136	18	2.4 — 2.7	2.4 — 2.7	—
	Shield	B136	9	0	0	—
Rear oxygen sensor	Signal	B136	20	0	0 — 0.9	—
	Shield	B136	9	0	0	—
	Ground (sensor)	B135	30	0	0	—
Front oxygen (A/F) sensor heater	Signal 1	B136	6	—	—	Waveform
	Signal 2	B136	5	—	—	Waveform
Rear oxygen sensor heater signal		B135	6	0 — 13	—	Waveform
Engine coolant temperature sensor	Signal	B137	22	1.0 — 1.4	1.0 — 1.4	After engine is warmed up.
	Ground (sensor)	B134	29	0	0	After engine is warmed up.
Air flow sensor	Signal	B136	22	—	0.3 — 4.5	—
	Shield	B136	10	0	0	—
	Ground	B136	11	0	0	—
Intake air temperature sensor signal		B136	31	0.3 — 4.6	0.3 — 4.6	—
Wastegate control solenoid valve		B134	33	0 or 10 — 13	0 or 12 — 14	Waveform
Starter switch		B136	16	0	0	Cranking: 8 — 14
Ignition switch		B136	30	10 — 13	12 — 14	—

GET the MANUALS.org

Engine Control Module (ECM) I/O Signal

Description		Connector No.	Terminal No.	Signal (V)		Note
				Ignition SW ON (engine OFF)	Engine ON (idling)	
Neutral position switch		B136	35	ON: 0 OFF: 10 — 13	ON: 0 OFF: 12 — 14	—
Delivery (test) mode switch		B136	34	10 — 13	12 — 14	When fuse is installed: 0
Knock sensor	Signal	B137	2	2.8	2.8	—
	Shield	B137	8	0	0	—
Back-up power supply		B136	2	10 — 13	12 — 14	Ignition switch “OFF”: 10 — 13
Control module power supply		B137	7	10 — 13	12 — 14	—
		B136	1	10 — 13	12 — 14	—
Sensor power supply		B134	19	5	5	—
		B135	22	5	5	—
Ignition control	#1	B134	21	0	0 or 5	Waveform
	#2	B134	22	0	0 or 5	Waveform
	#3	B134	31	0	0 or 5	Waveform
	#4	B134	32	0	0 or 5	Waveform
Fuel injector	#1	B134	10	10 — 13	1 — 14	Waveform
	#2	B134	11	10 — 13	1 — 14	Waveform
	#3	B134	12	10 — 13	1 — 14	Waveform
	#4	B134	13	10 — 13	1 — 14	Waveform
Fuel pump control unit	Control	B136	33	0 or 5	0 or 5	Waveform
	Diagnostic signal	B135	10	0 or 10 — 13	12 — 14	—
Main fan relay control		B135	12	ON: 0.5 or less OFF: 10 — 13	ON: 0.5 or less OFF: 12 — 14	—
Sub fan relay control		B135	11	ON: 0.5 or less OFF: 10 — 13	ON: 0.5 or less OFF: 12 — 14	—
Engine speed output		B135	15	—	0 — 13 or more	Waveform
Purge control solenoid valve 1		B137	6	ON: 1 or less OFF: 10 — 13	ON: 1 or less OFF: 12 — 14	Waveform
Purge control solenoid valve 2		B137	15	ON: 1 or less OFF: 10 — 13	ON: 1 or less OFF: 12 — 14	Waveform
Manifold absolute pressure sensor	Signal	B137	20	1.7 — 2.4	1.1 — 1.6	—
	Power supply	B134	19	5	5	
	Ground (sensor)	B134	29	0	0	
SSM communication		B135	14	1 or less ←→ 4 or more	1 or less ←→ 4 or more	—
Electronic Throttle	Main	B134	18	Approx. 0.9 (After engine is warmed up.)	Approx. 0.6 — 0.7 (After engine is warmed up.)	Fully closed: Approx. 0.6 Fully open: Approx. 4.0
	Sub	B134	28	Approx. 1.7 (After engine is warmed up.)	Approx. 1.5 — 1.6 (After engine is warmed up.)	Fully closed: Approx. 1.5 Fully open: Approx. 4.2
	Power supply	B134	19	5	5	—
	Ground (sensor)	B134	29	0	0	—
Electronic throttle control motor (+)		B134	2	Duty waveform	Duty waveform	Drive frequency: 500 Hz

GET the MANUALS.org

Engine Control Module (ECM) I/O Signal

Description		Connector No.	Terminal No.	Signal (V)		Note
				Ignition SW ON (engine OFF)	Engine ON (idling)	
Electronic throttle control motor (–)		B134	1	Duty waveform	Duty waveform	Drive frequency: 500 Hz
Electronic throttle control motor power supply		B135	7	10 — 13	12 — 14	—
Electronic throttle control motor relay		B135	17	ON: 0 OFF: 10 — 13	ON: 0 OFF: 12 — 14	When ignition switch is turned to ON: ON
Intake oil flow control solenoid valve (LH)	Signal (+)	B134	17	ON: 10 — 13 OFF: 0	ON: 12 — 14 OFF: 0	—
	Signal (–)	B134	16	0	0	—
Intake oil flow control solenoid valve (RH)	Signal (+)	B134	34	ON: 10 — 13 OFF: 0	ON: 12 — 14 OFF: 0	—
	Signal (–)	B134	27	0	0	—
Exhaust oil flow control solenoid valve (LH)	Signal (+)	B134	5	ON: 10 — 13 OFF: 0	ON: 12 — 14 OFF: 0	—
	Signal (–)	B134	14	0	0	—
Exhaust oil flow control solenoid valve (RH)	Signal (+)	B134	7	ON: 10 — 13 OFF: 0	ON: 12 — 14 OFF: 0	—
	Signal (–)	B134	15	0	0	—
Intake camshaft position sensor (LH)		B137	16	0 or 5	0 or 5	Waveform
Intake camshaft position sensor (RH)		B137	24	0 or 5	0 or 5	Waveform
Exhaust camshaft position sensor (LH)		B137	29	0 or 5	0 or 5	Waveform
Exhaust camshaft position sensor (RH)		B137	23	0 or 5	0 or 5	Waveform
Camshaft position sensor ground		B137	30	0	0	—
Accelerator pedal position sensor	Main sensor signal	B135	23	Fully closed: 1 Fully opened: 3.3	Fully closed: 1 Fully opened: 3.3	—
	Shield	B136	4	0	0	—
	Main power supply	B135	21	5	5	—
	Ground (main sensor)	B135	29	0	0	—
	Sub signal sensor	B135	31	Fully closed: 1 Fully opened: 3.3	Fully closed: 1 Fully opened: 3.3	—
	Sub power supply	B135	22	5	5	—
	Ground (sub sensor)	B135	30	0	0	—
Starter relay		B135	26	ON: 0 OFF: 10 — 13	ON: 0 OFF: 12 — 14	ON: cranking
Clutch switch		B135	9	When clutch pedal is depressed: 0 When clutch pedal is released: 10 — 13	When clutch pedal is depressed: 0 When clutch pedal is released: 12 — 14	—
Brake switch 1 (brake switch)		B136	15	When brake pedal is depressed: 0 When brake pedal is released: 10 — 13	When brake pedal is depressed: 0 When brake pedal is released: 12 — 14	—

GET the MANUALS.org

Description		Connector No.	Terminal No.	Signal (V)		Note
				Ignition SW ON (engine OFF)	Engine ON (idling)	
Brake switch 2 (stop light switch)		B136	3	When brake pedal is depressed: 10 — 13 When brake pedal is released: 0	When brake pedal is depressed: 12 — 14 When brake pedal is released: 0	—
Cruise control command switch		B136	12	When operating nothing: 3.5 — 4.5 When operating RES/ACC: 2.5 — 3.5 When operating vehicle distance setting: 1.5 — 2.5 When operating SET/COAST: 0.5 — 1.5 When operating CANCEL: 0 — 0.5	When operating nothing: 3.5 — 4.5 When operating RES/ACC: 2.5 — 3.5 When operating vehicle distance setting: 1.5 — 2.5 When operating SET/COAST: 0.5 — 1.5 When operating CANCEL: 0 — 0.5	—
Cruise control main switch		B136	13	ON: 0 OFF: 5	ON: 0 OFF: 5	—
CAN communication	(Hi)	B136	17	—	—	—
	(Lo)	B136	28	—	—	—
Self-shutoff control		B135	13	0	0	—
Power steering oil pressure switch		B137	28	10 — 13	ON: 0 OFF: 12 — 14	—
Oil level switch		B136	26	0	0	Oil level LOW: 10 — 14
Tumble generator valve position sensor signal (RH)		B137	11	Fully closed: 0.43 — 1.19 Fully opened: 2.83 — 4.69	Fully closed: 0.43 — 1.19 Fully opened: 2.83 — 4.69	—
Tumble generator valve position sensor signal (LH)		B137	10	Fully closed: 0.43 — 1.19 Fully opened: 2.83 — 4.69	Fully closed: 0.43 — 1.19 Fully opened: 2.83 — 4.69	—
Tumble generator valve (RH closed)		B134	26	0 or 10 — 13	0 or 12 — 14	—
Tumble generator valve (LH closed)		B134	24	0 or 10 — 13	0 or 12 — 14	—
Tumble generator valve (RH open)		B134	25	0 or 10 — 13	0 or 12 — 14	—
Tumble generator valve (LH open)		B134	23	0 or 10 — 13	0 or 12 — 14	—
Immobilizer communication		B135	25	—	—	—
Fuel tank pressure sensor		B136	21	2.3 — 2.7	2.3 — 2.7	—
Pressure control solenoid valve		B135	3	ON: 1 or less OFF: 10 — 13	ON: 1 or less OFF: 12 — 14	—
Drain valve		B135	4	ON: 1 or less OFF: 10 — 13	ON: 1 or less OFF: 12 — 14	—
Fuel temperature sensor		B136	23	2.5 — 3.8	2.5 — 3.8	Ambient temperature: 25°C (77°F)

GET THE MANUALS.org

Engine Control Module (ECM) I/O Signal

Description		Connector No.	Terminal No.	Signal (V)		Note
				Ignition SW ON (engine OFF)	Engine ON (idling)	
Ground	Sensor	B134	29	0	0	—
		B135	30	0	0	—
	Engine 1	B134	6	0	0	—
	Engine 2	B134	4	0	0	—
	Engine 3	B134	3	0	0	—
	Engine 4	B137	1	0	0	—
	Engine 5	B137	3	0	0	—
	Body	B136	4	0	0	—

GET the MANUALS.org

Engine Control Module (ECM) I/O Signal

Input/output name:
- Crankshaft position sensor
- Intake camshaft position sensor RH
- Intake camshaft position sensor LH
- Exhaust camshaft position sensor RH
- Exhaust camshaft position sensor LH

Measuring condition:
- After warming-up
- At idling

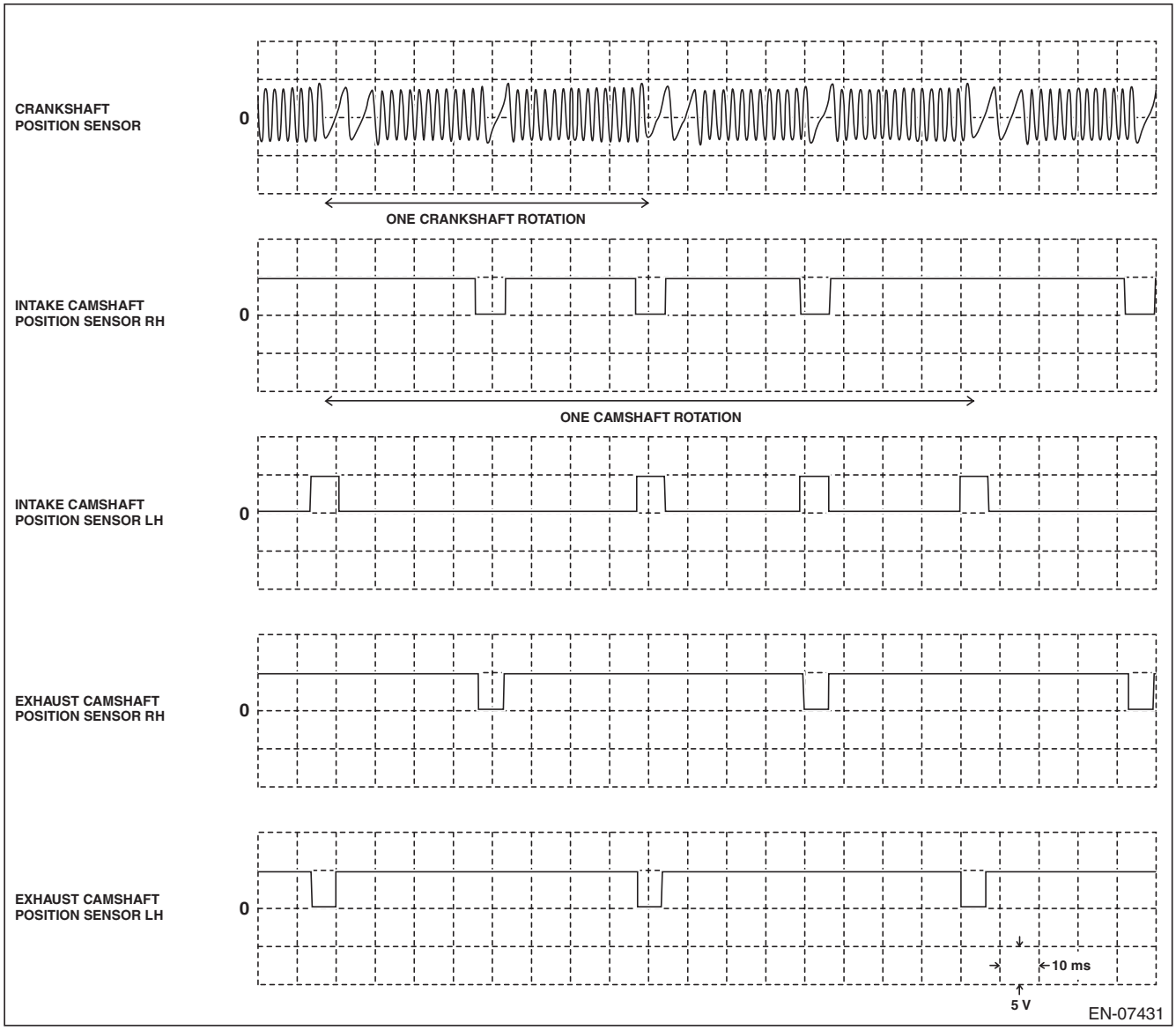

GET the MANUALS.org

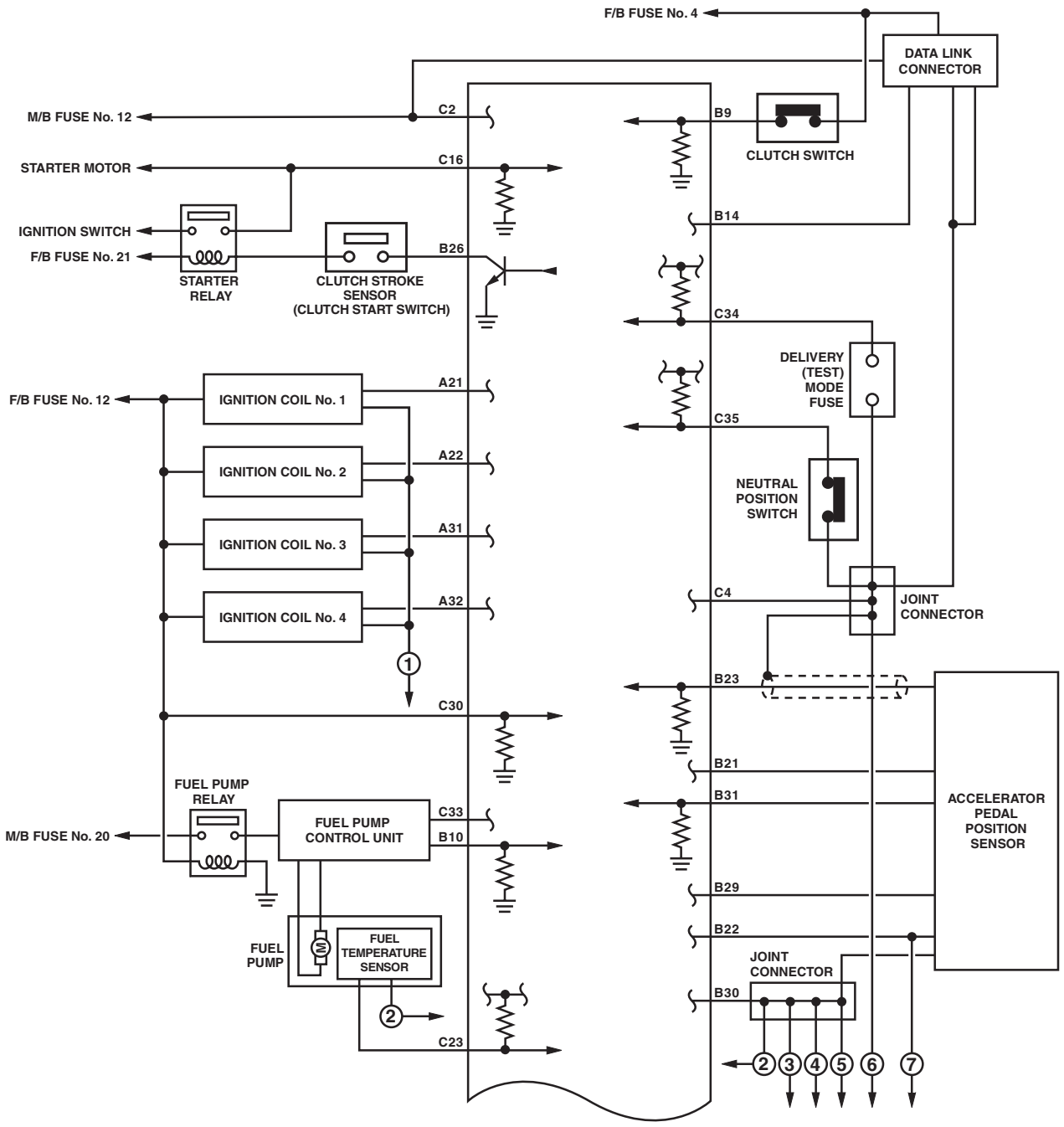

EN-09184

GET the MANUALS.org

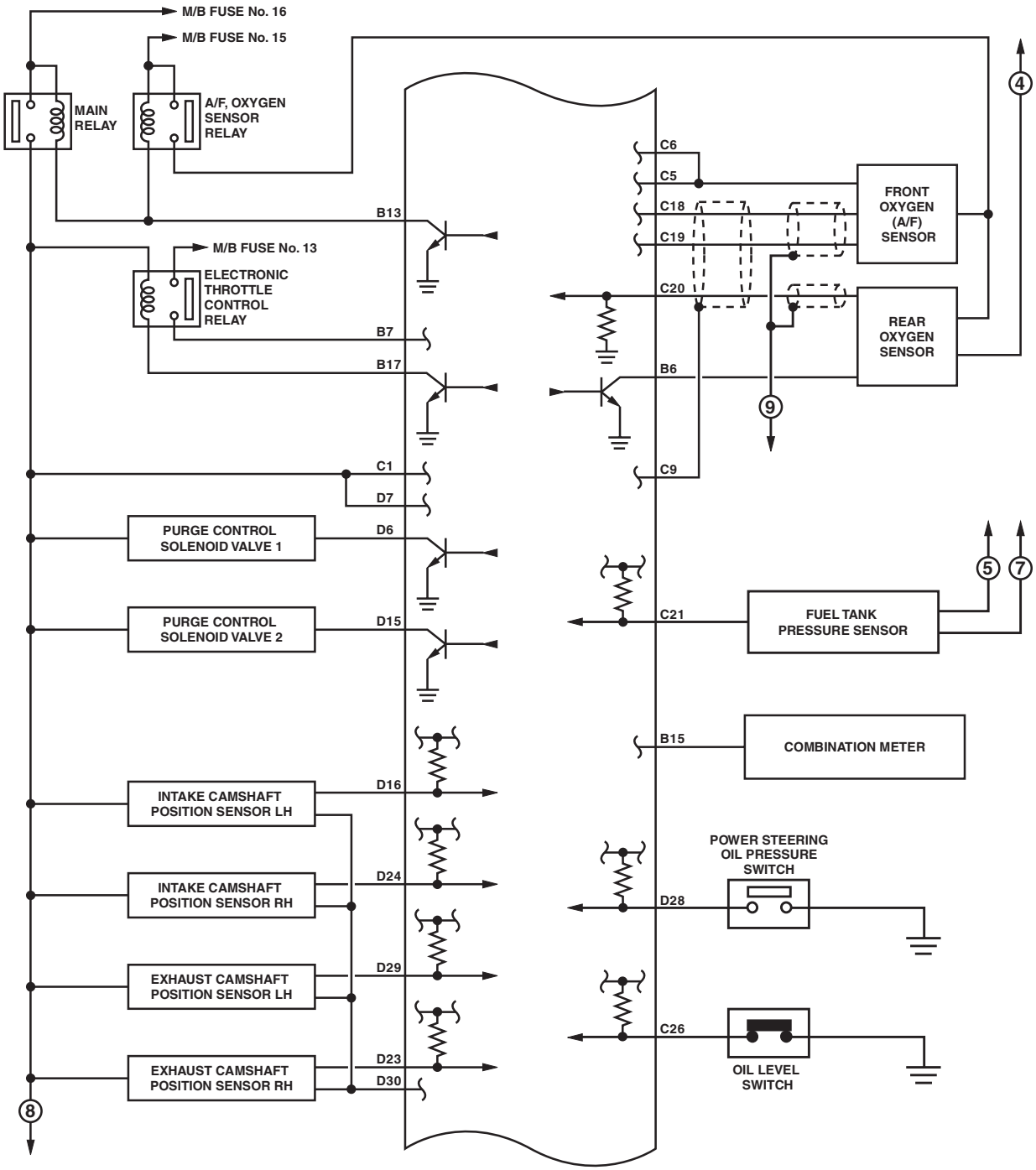

EN-09185

GET the MANUALS.org

Engine Control Module (ECM) I/O Signal

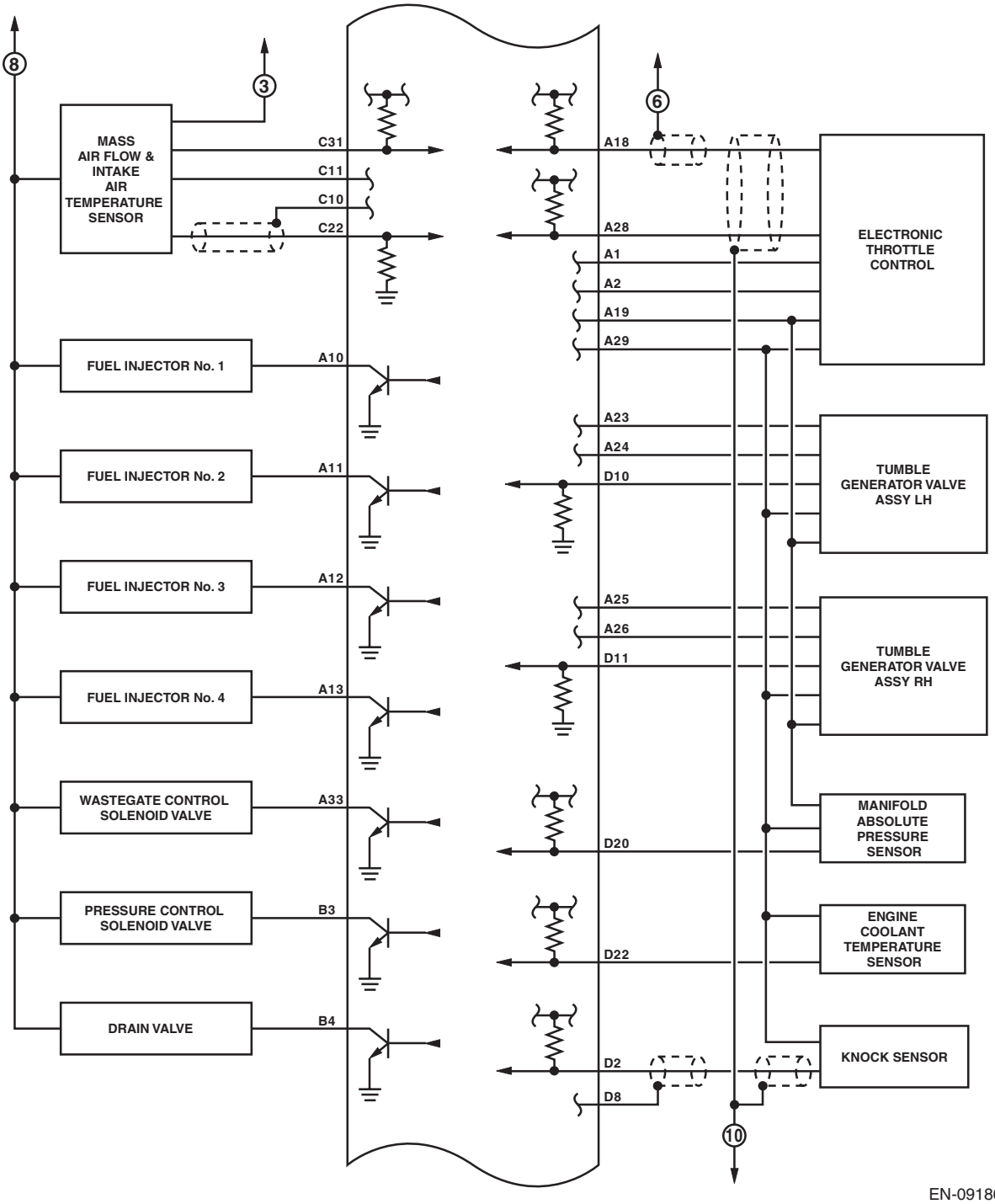

GET THE MANUALS.org

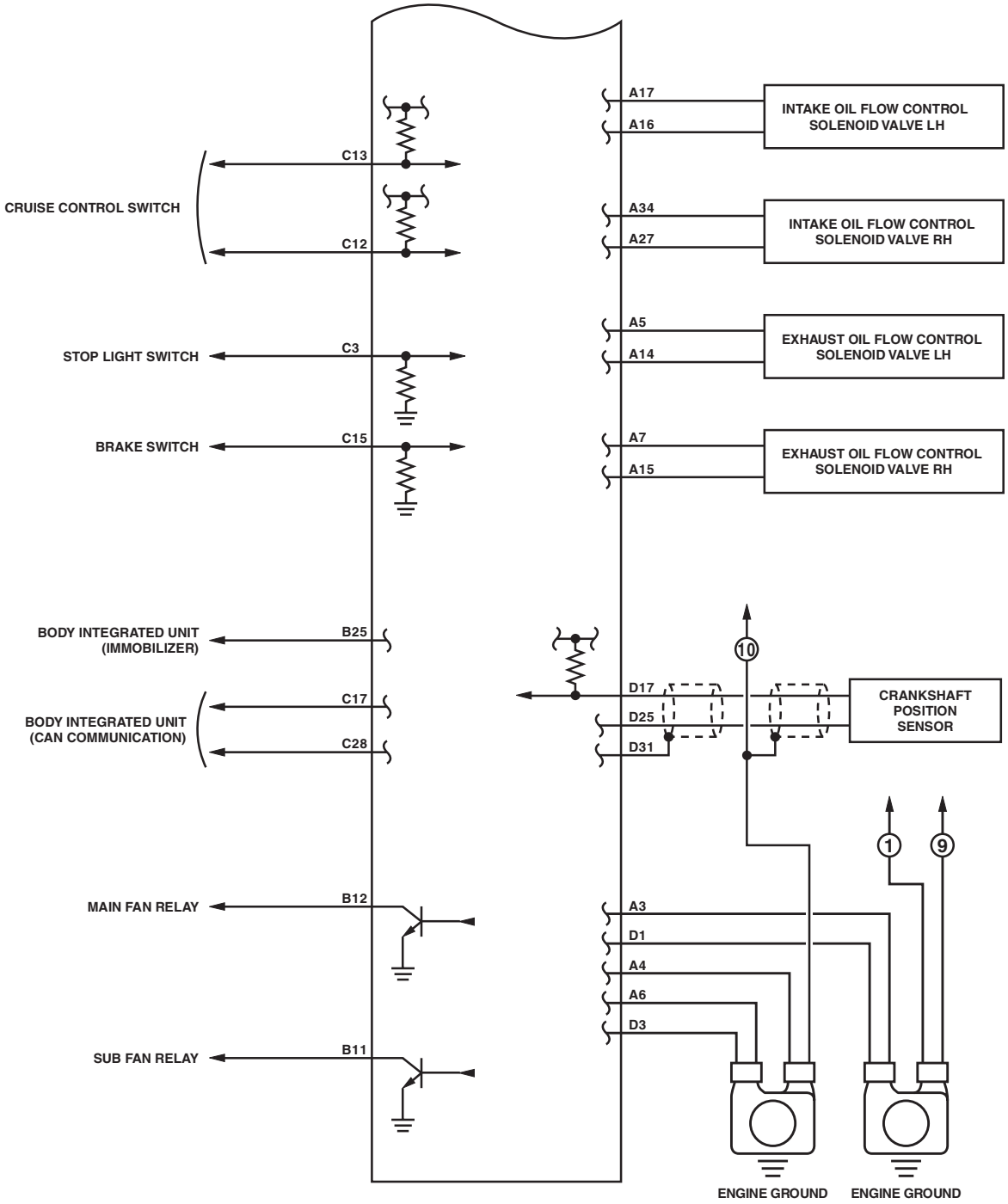

EN-09187

GET THE MANUALS.org

6. Engine Condition Data

A: ELECTRICAL SPECIFICATION

Remarks	Specification
Engine load	17.6 — 35.64 (%): Idling
	13.2 — 26.73 (%): 2,500 rpm racing

Measuring condition:
- After engine is warmed up.
- Place the shift lever in neutral position.
- Turn the A/C to OFF.
- Turn all the accessory switches to OFF.

GET the MANUALS.org

7. Data Link Connector

A: NOTE

This connector is used for Subaru Select Monitor.

CAUTION:
Do not connect any scan tools other than Subaru Select Monitor or general scan tool because the circuit for Subaru Select Monitor may be damaged.

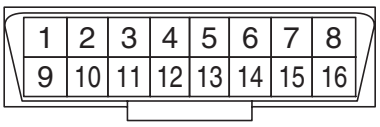

EN-07824

Terminal No.	Contents	Terminal No.	Contents
1	Empty	9	Empty
2	Empty	10	Empty
3	Empty	11	Empty
4	Ground	12	Empty
5	Ground	13	Empty
6	CAN communication (Hi)	14	CAN communication (Lo)
7	Subaru Select Monitor signal	15	Empty
8	Empty	16	Power supply

GET the MANUALS.org

8. General Scan Tool

A: OPERATION

1. HOW TO USE GENERAL SCAN TOOL

1) Prepare a scan tool (general scan tool) required by SAE J1978.
2) Connect the general scan tool to data link connector located in the lower portion of the instrument panel (on the driver's side).

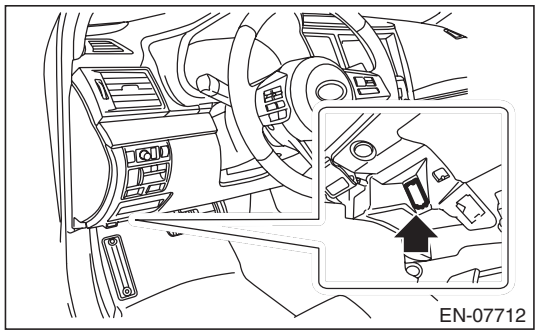

3) Using the general scan tool, call up each data. General scan tool functions consist of:
   (1) MODE $01: Current powertrain diagnostic data
   (2) MODE $02: Powertrain freeze frame data
   (3) MODE $03: Emission-related powertrain DTC
   (4) MODE $04: Clear/Reset emission-related diagnostic information
   (5) MODE $06: Request on-board monitoring test results for intermittently monitored systems
   (6) MODE $07: Request on-board monitoring test results for continuously monitored systems
   (7) MODE $09: Request vehicle information
4) Read out the data according to repair procedures. (For detailed operation procedure, refer to the general scan tool operation manual.)

NOTE:
For details concerning DTC, refer to "List of Diagnostic Trouble Code (DTC)". <Ref. to EN(H4DOTC)(diag)-75, List of Diagnostic Trouble Code (DTC).>

2. MODE $01 (CURRENT POWERTRAIN DIAGNOSTIC DATA)

Refer to data denoting the current operating condition of analog input/output, digital input/output or the powertrain system.
A list of the support data and PID (Parameter Identification) codes are shown in the following table.

PID	Data	Unit of measure
$01	Number of emission-related powertrain DTC, and malfunction indicator light status and diagnosis support information	—
$03	Fuel system control status	—
$04	Calculated engine load value	%
$05	Engine coolant temperature	°C
$06	Short term fuel trim	%
$07	Long term fuel trim	%
$0B	Intake manifold absolute pressure	kPa
$0C	Engine speed	rpm
$0D	Vehicle speed	MPH
$0E	Ignition timing advance	°
$0F	Intake air temperature	°C
$10	Intake air amount	g/s
$11	Throttle valve opening angle	%
$13	Air fuel ratio sensor	—
$15	Oxygen sensor output voltage and short term fuel trim associated with oxygen sensor	V and %

GET the MANUALS.org

PID	Data	Unit of measure
$1C	Supporting OBD system	—
$1F	Elapsed time after starting the engine	sec
$21	Running distance after MIL turns on	miles
$24	A/F value and A/F sensor output voltage	– and V
$2E	Evaporative purge	%
$2F	Fuel level	%
$30	Number of warm ups after DTC clear	—
$31	Travel distance after DTC clear	miles
$32	Fuel tank pressure	Pa
$33	Barometric pressure	kPa
$34	A/F sensor λ value, current	– and mA
$3C	Catalyst temperature	°C
$41	Diagnostic monitor of each drive cycle	—
$42	ECM power voltage	V
$43	Absolute load	%
$44	A/F target lambda	—
$45	Relative throttle opening angle	%
$46	Ambient temperature	°C
$47	Absolute throttle opening angle 2	%
$49	Absolute accelerator opening angle 1	%
$4A	Absolute accelerator opening angle 2	%
$4C	Target throttle opening angle	%
$4D	Engine operation time during MIL on	min
$4E	Elapsed time after DTC clear	min
$51	Fuel used	—
$5A	Relative accelerator opening angle	%
$65	Neutral status	—

NOTE:
Refer to general scan tool manufacturer's operation manual to access current powertrain diagnostic data (MODE $01).

3. MODE $02 (POWERTRAIN FREEZE FRAME DATA)

Refer to data denoting the operating condition when trouble is sensed by the on-board diagnosis system.
A list of the support data and PID (Parameter Identification) codes are shown in the following table.

PID	Data	Unit of measure
$02	DTC that caused the freeze frame data storage required by CARB	—
$03	Fuel system control status	—
$04	Calculated engine load value	%
$05	Engine coolant temperature	°C
$06	Short term fuel trim	%
$07	Long term fuel trim	%
$0B	Intake manifold absolute pressure	kPa
$0C	Engine speed	rpm
$0D	Vehicle speed	MPH
$0E	Ignition timing advance	°
$0F	Intake air temperature	°C
$10	Intake air amount	g/s
$11	Throttle valve opening angle	%
$13	Air fuel ratio sensor	—
$15	Rear oxygen sensor voltage, compensation value	V and %

GET the MANUALS.org

PID	Data	Unit of measure
$1C	Supporting OBD system	—
$1F	Elapsed time after starting the engine	sec
$2E	Evaporative purge	%
$2F	Fuel level	%
$32	Fuel tank pressure	Pa
$33	Atmospheric pressure	kPa
$42	ECM power voltage	V
$43	Absolute load	%
$44	A/F target lambda	—
$45	Relative throttle opening angle	%
$46	Ambient temperature	°C
$47	Absolute throttle opening angle 2	%
$49	Absolute acceleration opening angle 1	%
$4A	Absolute acceleration opening angle 2	%
$4C	Target throttle opening angle	%
$65	Neutral status	—

NOTE:
Refer to general scan tool manufacturer's operation manual to access freeze frame data (MODE $02).

4. MODE $03 (EMISSION-RELATED POWERTRAIN DTC)

Refer to "List of Diagnostic Trouble Code (DTC)" for information about data denoting emission-related powertrain DTC. <Ref. to EN(H4DOTC)(diag)-75, List of Diagnostic Trouble Code (DTC).>

5. MODE $04 (CLEAR/RESET EMISSION-RELATED DIAGNOSTIC INFORMATION)

Refer to the mode used to clear or reset emission-related diagnostic information (OBD-II trouble diagnostic information).

NOTE:
- Refer to general scan tool manufacturer's instruction manual to clear the emission-related diagnostic information (MODE $04).
- Initial diagnosis of electronic throttle control is performed after memory clearance. Wait for 10 seconds or more after turning the ignition switch to ON, and then start the engine.

6. MODE $06

Refer to diagnostic value of troubleshooting and data of test limit indicated on the support data bit sequence table. A list of the support data is shown in the following table.

OBDMID	TID	SID	Diagnostic item
$01	$84	$1E	A/F sensor range failure (Bank 1 Sensor 1)
	$85	$1E	
	$86	$20	A/F sensor response failure (Bank 1 Sensor 1)
	$91	$20	
	$92	$10	
	$A3	$20	
	$A4	$10	
	$AC	$10	
	$AD	$10	
	$AE	$10	
	$AF	$10	
	$CD	$20	
	$CF	$20	

GET the MANUALS.org

OBDMID	TID	SID	Diagnostic item
$02	$07	$0B	Oxygen sensor drop failure (Bank 1 Sensor 2)
	$08	$0B	
	$A5	$0B	
	$05	$10	Oxygen sensor response failure (Bank 1 Sensor 2)
	$06	$10	
	$D1	$10	Oxygen sensor delay failure (Bank 1 Sensor 2)
	$D2	$01	
$21	$89	$20	Catalyst deterioration diagnosis (Bank 1)
$35	$8B	$9D	VVT monitor (Bank 1)
	$8C	$9D	
	$8D	$9D	
	$8E	$9D	
$36	$8B	$9D	VVT monitor (Bank 2)
	$8C	$9D	
	$8D	$9D	
	$8E	$9D	
$39	$93	$FE	Evaporative emission control system leak detected (Fuel filler cap off)
$3B	$94	$FE	Evaporative emission control system (0.04 inch leak)
	$95	$FE	
	$A6	$FE	
$3C	$96	$FE	Evaporative emission control system (0.02 inch leak)
	$C1	$FE	
	$C2	$FE	
	$C3	$FE	
	$C4	$FE	
	$C5	$FE	
	$C6	$35	
	$C7	$FE	
	$C8	$FE	
	$C9	$FE	
	$CA	$FE	
$3D	$98	$FE	Evaporative emission control system (Purge flow)
$41	$9B	$14	A/F sensor heater characteristics failure (Bank 1 Sensor 1)
$42	$A2	$24	Oxygen sensor heater characteristics failure (Bank 1 Sensor 2)
$A1	$0B	$24	Misfire monitoring (All cylinders)
	$0C	$24	
$A2	$0B	$24	Misfire monitoring (#1 cylinder)
	$0C	$24	
$A3	$0B	$24	Misfire monitoring (#2 cylinder)
	$0C	$24	
$A4	$0B	$24	Misfire monitoring (#3 cylinder)
	$0C	$24	
$A5	$0B	$24	Misfire monitoring (#4 cylinder)
	$0C	$24	

7. MODE $07

Refer to the data of DTC (pending code) for troubleshooting result about emission in the first time.

8. MODE $09

Refer to the data of vehicle specification (V.I.N., calibration ID, etc.).

GET the MANUALS.org

9. Subaru Select Monitor

A: OPERATION

1. HOW TO USE THE SUBARU SELECT MONITOR

NOTE:
For detailed operation procedures, refer to “PC application help for Subaru Select Monitor”.

2. READ CURRENT DATA FOR ENGINE (NORMAL MODE)

NOTE:
- For detailed operation procedures, refer to “PC application help for Subaru Select Monitor”.
- A list of the support data is shown in the following table.
- *: For models without cruise control, the brake switch signal does not change.

Contents	Display	Unit of measure	Note (at idling)
Engine load	Engine Load	%	21.0%
Engine coolant temperature signal	Coolant Temp.	°C or °F	80 — 100°C or 176 — 212°F
A/F correction #1	A/F Correction #1	%	–10 — +10%
A/F learning #1	A/F Learning #1	%	–15 — +15%
Intake manifold absolute pressure	Mani. Absolute Pressure	mmHg, kPa, inHg or psig	220 — 275 mmHg, 29.5 — 37 kPa, 8.7 — 10 inHg or 4.2 — 5.3 psig
Engine speed signal	Engine Speed	rpm	630 — 770 rpm (Agree with the tachometer indication)
Meter vehicle speed signal	Vehicle Speed	km/h or MPH	0 km/h or 0 MPH (at parking)
Ignition timing signal	Ignition Timing	deg	10 — 15 deg
Intake air temperature signal	Intake Air Temp.	°C or °F	20 — 50°C or 68 — 122°F
Intake air amount	Mass Air Flow	g/s or lb/m	2.1 — 3.1 g/s or 0.35 — 0.40 lb/m
Throttle opening angle signal	Throttle Opening Angle	%	2.0 — 2.4%
Rear oxygen sensor voltage	Rear O2 Sensor	V	0 — 1.0 V
Battery voltage	Battery Voltage	V	12 — 15 V
Mass air flow voltage	Air Flow Sensor Voltage	V	1.0 — 1.7 V
Injection 1 pulse width	Fuel Injection #1 Pulse	ms	1.2 — 2.2 ms
Atmospheric pressure	Atmosphere Pressure	mmHg, kPa, inHg or psig	—
Intake manifold relative pressure	Mani. Relative Pressure	mmHg, kPa, inHg or psig	Air intake absolute pressure — Atmospheric pressure
Learned ignition timing	Learned Ignition Timing	deg	0 deg
Acceleration opening angle signal	Accel. Opening Angle	%	0.0%
Fuel temperature signal	Fuel Temp.	°C or °F	+28°C or 82°F
Primary supercharged pressure control signal	Primary Control	%	0.0%
Purge control solenoid duty ratio	CPC Valve Duty Ratio	%	0 — 25%
Tumble generator valve RH opening signal	TGV Position Sensor R	V	0.81 V
Tumble generator valve LH opening signal	TGV Position Sensor L	V	0.81 V
Fuel pump duty ratio	Fuel Pump Duty	%	30 — 40%
AVCS advance angle amount RH	VVT Adv. Ang. Amount R	deg	±5 deg
AVCS advance angle amount LH	VVT Adv. Ang. Amount L	deg	±5 deg
Oil flow control solenoid valve duty ratio RH	OCV Duty R	%	0 — 20%

GET the MANUALS.org

Contents	Display	Unit of measure	Note (at idling)
Oil flow control solenoid valve duty ratio LH	OCV Duty L	%	0 — 20%
Oil flow control solenoid valve current RH	OCV Current R	mA	40 — 100 mA
Oil flow control solenoid valve current LH	OCV Current L	mA	40 — 100 mA
A/F sensor current value 1	A/F Sensor #1 Current	mA	–20 — 20 mA
A/F sensor resistance value 1	A/F Sensor #1 Resistance	Ω	27 — 35 mA
A/F sensor output lambda 1	A/F Sensor #1	—	1.0
A/F correction #3	A/F Correction #3	%	0.00%
A/F learning #3	A/F Learning #3	%	0.00%
Throttle motor duty	Throttle Motor Duty	%	–5%
Throttle motor voltage	Throttle Motor Voltage	V	12 — 15 V
Sub throttle sensor voltage	Sub-Throttle Sensor	V	1.5 V
Main throttle sensor voltage	Main-Throttle Sensor	V	0.6 V
Sub accelerator sensor voltage	Sub-Accelerator Sensor	V	1.1 V
Main acceleration sensor voltage	Main-Accelerator Sensor	V	1.0 V
Memory vehicle speed	Memorized Cruise Speed	km/h or MPH	—
Fuel level sensor resistance	Fuel level resistance	Ω	4 — 96 Ω
Odometer	Odometer	km	—
Exhaust AVCS retard angle amount RH	Exh. VVT Retard Ang. R	deg	±5 deg
Exhaust AVCS retard angle amount LH	Exh. VVT Retard Ang. L	deg	±5 deg
Exhaust oil flow control solenoid valve duty ratio RH	Exh. OCV Duty R	%	0 — 20%
Exhaust oil flow control solenoid valve duty ratio LH	Exh. OCV Duty L	%	0 — 20%
Exhaust oil flow control solenoid valve current value RH	Exh. OCV Current R	mA	40 — 100 mA
Exhaust oil flow control solenoid valve current value LH	Exh. OCV Current L	mA	40 — 100 mA
#1 cylinder roughness monitor	Roughness Monitor #1	—	0
#2 cylinder roughness monitor	Roughness Monitor #2	—	0
#3 cylinder roughness monitor	Roughness Monitor #3	—	0
#4 cylinder roughness monitor	Roughness Monitor #4	—	0
Knock sensor correction	Knocking Correction	deg	0.0 deg
Fuel tank pressure signal	Fuel Tank Pressure	mmHg, kPa, inHg or psig	+8.8 mmHg, +1.2 kPa, +0.4 inHg or 0.2 psig
AT vehicle ID signal	AT Vehicle ID Signal	—	OFF
D-check require Flag	D-check Require Flag	—	OFF
Delivery (test) mode terminal	Delivery Mode Connector (Test Mode Connector)	—	OFF
Neutral position switch signal	Neutral Position Switch	—	ON
Soft idle switch signal	Idle Switch Signal	—	ON
Ignition switch signal	Ignition Switch	—	ON
Power steering switch signal	P/S Switch	—	OFF (when OFF)
Air conditioning switch signal	A/C Switch	—	OFF (when OFF)
Starter switch signal	Starter Switch	—	OFF
Rear oxygen monitor	Rear O2 Rich Signal	—	Rich/Lean
Knocking signal	Knocking Signal	—	OFF
Crankshaft position sensor signal	Crankshaft Position Sig.	—	ON
Camshaft position sensor signal	Camshaft Position Sig.	—	ON
Rear defogger switch signal	Rear Defogger SW	—	OFF (when OFF)
Blower fan switch signal	Blower Fan SW	—	OFF (when OFF)
Light switch signal	Light Switch	—	OFF (when OFF)

GET THE MANUALS.org

Contents	Display	Unit of measure	Note (at idling)
Radiator fan relay 1 signal	Radiator Fan Relay #1	—	OFF (when OFF)
Radiator fan relay 2 signal	Radiator Fan Relay #2	—	OFF (when OFF)
Pressure control solenoid valve signal	PCV Solenoid Valve	—	OFF (when OFF)
Tumble generator valve output signal	TGV Output	—	OFF
Tumble generator valve driving signal	TGV Drive	—	Closing direction
Drain valve signal	Vent. Solenoid Valve	—	OFF (when OFF)
Purge control solenoid valve 2 signal	CPC Solenoid 2	—	OFF (when OFF)
Vehicle dynamics control (VDC) torque down prohibition output	Ban of Torque Down	—	ON
Vehicle dynamics control (VDC) torque down demand	Request Torque Down VDC	—	OFF
ETC motor relay signal	ETC Motor Relay	—	ON
Clutch switch signal	Clutch Switch	—	OFF (when OFF)
Stop light switch signal	Stop Light Switch	—	OFF (when OFF)
SET/COAST switch signal	SET/COAST Switch	—	OFF (when OFF)
RES/ACC switch signal	RESUME/ACCEL Switch	—	OFF (when OFF)
Brake switch signal*	Brake Switch	—	OFF (when OFF)
Main switch signal	Main Switch	—	OFF (when OFF)
Cruise control cancel switch signal	CC Cancel SW	—	OFF (when OFF)
Malfunction indicator light signal	MIL On Flag	—	OFF (when unlit)
Oil level switch signal	Oil level switch	—	HIGH level

3. READ CURRENT DATA FOR ENGINE (OBD MODE)

NOTE:
- For detailed operation procedures, refer to “PC application help for Subaru Select Monitor”.
- A list of the support data is shown in the following table.

Contents	Display	Note (at idling)	Unit of measure
Number of diagnosis code	Number of Diag. Code:	0	—
Condition of malfunction indicator light	MI(MIL)	OFF	—
Monitoring test of misfire	Misfire monitoring (Supp)	YES	—
Monitoring test of misfire	Misfire monitoring (Rdy)	YES	—
Monitoring test of fuel system	Fuel system monitoring (Supp)	YES	—
Monitoring test of fuel system	Fuel system monitoring (Rdy)	YES	—
Monitoring test of comprehensive component	Component monitoring (Supp)	YES	—
Monitoring test of comprehensive component	Component monitoring (Rdy)	YES	—
Test of catalyst	Catalyst Diagnosis (Supp)	YES	—
Test of catalyst	Catalyst Diagnosis (Rdy)	NO	—
Test of heating-type catalyst	Heated catalyst (Supp)	NO	—
Test of heating-type catalyst	Heated catalyst (Rdy)	N/A	—
Test of evaporative emission purge control system	Evaporative purge system (Supp)	YES	—
Test of evaporative emission purge control system	Evaporative purge system (Rdy)	NO	—
Secondary air system test	Secondary air system (Supp)	NO	—

GET the MANUALS.org

Contents	Display	Note (at idling)	Unit of measure
Secondary air system test	Secondary air system (Rdy)	N/A	—
Test of air conditioning system refrigerant	A/C system refrigerant (Supp)	NO	—
Test of air conditioning system refrigerant	A/C system refrigerant (Rdy)	N/A	—
Test of oxygen sensor	Oxygen sensor (Supp)	YES	—
Test of oxygen sensor	Oxygen sensor (Rdy)	NO	—
Test of oxygen sensor heater	O2 Heater Diagnosis (Supp)	YES	—
Test of oxygen sensor heater	O2 Heater Diagnosis (Rdy)	YES	—
Test of EGR system	EGR system (Supp)	YES	—
Test of EGR system	EGR system (Rdy)	NO	—
Air fuel ratio control system for bank 1	Fuel system for Bank 1	Cl_normal	—
Engine load data	Calculated load value	19.2	%
Engine coolant temperature signal	Coolant Temp.	96	°C
Short term fuel trim by front oxygen (A/F) sensor (Bank 1)	Short term fuel trim B1	17.2	%
Long term fuel trim by front oxygen (A/F) sensor (Bank 1)	Long term fuel trim B1	5.5	%
Intake manifold absolute pressure signal	Mani. Absolute Pressure	32	kPa
Engine speed signal	Engine Speed	846	rpm
Vehicle speed signal	Vehicle Speed	0	km/h
#1 Cylinder ignition timing	Ignition timing adv. #1	13.5	°
Intake air temperature signal	Intake Air Temp.	44	°C
Intake air amount	Mass Air Flow	3.6	g/s
Throttle position signal	Throttle Opening Angle	13	%
Oxygen sensor (Bank 1 Sensor 2)	Oxygen sensor #12	0.1 — 0.7	V
A/F correction (Bank 1 Sensor 2)	Short term fuel trim #12	0.0	%
On-board diagnostic system	OBD System	OBD/OBD2	—
Front oxygen (A/F) sensor (Bank 1 Sensor 1)	Oxygen sensor #11	Supported	—
Oxygen sensor (Bank 1 Sensor 2)	Oxygen sensor #12	Supported	—
Elapsed time after engine start	Time Since Engine Start	—	sec
Travel distance after the malfunction indicator light illuminates	Lighted MI lamp history	—	km
A/F lambda signal (Bank 1 Sensor 1)	A/F Sensor #11	0.951	—
A/F sensor output signal (Bank 1 Sensor 1)	A/F Sensor #11	2.468	V
Evaporative purge	Commanded Evap Purge	0	%
Fuel level signal	Fuel Level	—	%
Number of warm ups after DTC clear	Number of warm-ups	—	—
Travel distance after DTC clear	Meter since DTC cleared	—	km
Fuel tank pressure signal	Fuel Tank Pressure	1171.5	Pa
Atmospheric pressure signal	Atmosphere Pressure	Atmospheric pressure	kPa
A/F lambda signal (Bank 1 Sensor 1)	A/F Sensor #11	0.957	—
A/F sensor output signal (Bank 1 Sensor 1)	A/F Sensor #11	–0.18	mA
Catalyst temperature #1	Catalyst Temperature #11	—	°C
Monitoring test of misfire	Misfire monitoring (Enable)	YES	—
Monitoring test of misfire	Misfire monitoring (Comp)	YES	—
Monitoring test of fuel system	Fuel system monitoring (Enable)	YES	—

GET the MANUALS.org

Contents	Display	Note (at idling)	Unit of measure
Monitoring test of fuel system	Fuel system monitoring (Comp)	YES	—
Monitoring test of comprehensive component	Component monitoring (Enable)	NO	—
Monitoring test of comprehensive component	Component monitoring (Comp)	NO	—
Test of catalyst	Catalyst Diagnosis (Enable)	YES	—
Test of catalyst	Catalyst Diagnosis (Comp)	NO	—
Test of heating-type catalyst	Heated catalyst (Enable)	N/A	—
Test of heating-type catalyst	Heated catalyst (Comp)	N/A	—
Test of evaporative emission purge control system	Evaporative purge system (Enable)	NO	—
Test of evaporative emission purge control system	Evaporative purge system (Comp)	NO	—
Secondary air system test	Secondary air system (Enable)	N/A	—
Secondary air system test	Secondary air system (Comp)	N/A	—
Test of air conditioning system refrigerant	A/C system refrigerant (Enable)	N/A	—
Test of air conditioning system refrigerant	A/C system refrigerant (Comp)	N/A	—
Test of oxygen sensor	Oxygen sensor (Enable)	YES	—
Test of oxygen sensor	Oxygen sensor (Comp)	NO	—
Test of oxygen sensor heater	O2 Heater Diagnosis (Enable)	YES	—
Test of oxygen sensor heater	O2 Heater Diagnosis (Comp)	YES	—
Test of EGR system	EGR system (Enable)	YES	—
Test of EGR system	EGR system (Comp)	NO	—
ECM power supply voltage	Control module voltage	13.848	V
Absolute load	Absolute Load Value	21	%
A/F target lambda	Target Equivalence Ratio	0.993	—
Relative throttle opening angle	Relative Throttle Pos.	2	%
Ambient temperature	Ambient Temperature	Ambient temperature	°C
Absolute throttle opening angle 2	Absolute Throttle Pos.#2	31	%
Absolute accelerator opening angle 1	Accelerator Pedal Pos.#1	13	%
Absolute accelerator opening angle 2	Accelerator Pedal Pos.#2	13	%
Target throttle opening angle	Target Throt. Act. Cont.	0	%
Engine operating time while malfunction indicator light lit	Time while MIL lighted	—	min
Elapsed time after DTC clear	Time since DTC cleared	—	min
Type of fuel	Type of fuel	GAS	—
Relative acceleration opening angle	Relative Accelera. Pos.	0	%
Neutral condition	MT gear status	NEUT	—

GET the MANUALS.org

4. READ FREEZE FRAME DATA FOR ENGINE (OBD MODE)

NOTE:
- For detailed operation procedures, refer to “PC application help for Subaru Select Monitor”.
- A list of the support data is shown in the following table.

Contents	Display	Unit of measure
DTC of freeze frame data	Freeze frame data	—
Air fuel ratio control system for bank 1	Fuel system for Bank 1	—
Engine load data	Calculated load value	%
Engine coolant temperature signal	Coolant Temp.	°C or °F
Short term fuel trim by front oxygen (A/F) sensor (Bank 1)	Short term fuel trim B1	%
Long term fuel trim by front oxygen (A/F) sensor (Bank 1)	Long term fuel trim B1	%
Intake manifold absolute pressure signal	Mani. Absolute Pressure	mmHg, kPa, inHg or psi
Engine speed signal	Engine Speed	rpm
Vehicle speed signal	Vehicle Speed	km/h or MPH
Ignition timing adv. #1	Ignition timing adv. #1	°
Intake air temperature	Intake Air Temp.	°C
Amount of intake air	Mass Air Flow	g/s
Throttle valve angle	Throttle Opening Angle	%
Oxygen sensor #12	Oxygen sensor #12	V
A/F correction #12	Short term fuel trim #12	%
OBD system	OBD System	—
Oxygen sensor #11	Oxygen sensor #11	—
Oxygen sensor #12	Oxygen sensor #12	—
Elapsed time after starting engine	Time Since Engine Start	sec
Evaporative purge	Commanded Evap Purge	%
Fuel level	Fuel Level	%
Fuel tank pressure	Fuel Tank Pressure	mmHg, Pa, inHg or psig
Atmospheric pressure	Atmosphere Pressure	mmHg, kPa, inHg or psig
ECM power supply voltage	Control module voltage	V
Absolute load	Absolute Load Value	%
A/F target lambda	Target Equivalence Ratio	—
Relative throttle opening angle	Relative Throttle Pos.	%
Ambient temperature	Ambient Temperature	°C or °F
Absolute throttle opening angle 2	Absolute Throttle Pos.#2	%
Absolute accelerator opening angle 1	Accelerator Pedal Pos.#1	%
Absolute accelerator opening angle 2	Accelerator Pedal Pos.#2	%
Target throttle opening angle	Target Throt. Act. Cont.	%
Neutral condition	MT gear status	—

5. V.I.N. REGISTRATION

1) On «Main Menu» display, select {Each System Check}.
2) On «System Selection Menu» display, select {Engine Control System}.
3) Click the [OK] button after the information of engine type has been displayed.
4) On «Engine Diagnosis» display, select {Entry VIN}.
5) Perform the procedures shown on the display screen.

GET the MANUALS.org

10. Read Diagnostic Trouble Code (DTC)

A: OPERATION

1. SUBARU SELECT MONITOR

NOTE:
- For detailed operation procedures, refer to “PC application help for Subaru Select Monitor”.
- For details concerning DTC, refer to “List of Diagnostic Trouble Code (DTC)”. <Ref. to EN(H4DOTC)(diag)-75, List of Diagnostic Trouble Code (DTC).>

2. GENERAL SCAN TOOL

Refer to data denoting emission-related powertrain DTC.
For details concerning DTC, refer to “List of Diagnostic Trouble Code (DTC)”. <Ref. to EN(H4DOTC)(diag)-75, List of Diagnostic Trouble Code (DTC).>

NOTE:
Refer to general scan tool manufacturer’s instruction manual to access powertrain DTC (MODE $03).

GET the MANUALS.org

11.Inspection Mode

A: PROCEDURE

Perform the diagnosis shown in the following DTC table.
When performing the diagnosis not listed in “List of Diagnostic Trouble Code (DTC)”, refer to the item on the drive cycle. <Ref. to EN(H4DOTC)(diag)-47, Drive Cycle.>

DTC	Item	Condition
P0011	Intake Camshaft Position - Timing Over-Advanced or System Performance (Bank 1)	—
P0014	Exhaust AVCS System 1 (Range/Performance)	—
P0016	Crankshaft Position - Camshaft Position Correlation (Bank1)	—
P0017	Crank and Cam Timing B System Failure (Bank 1)	—
P0018	Crankshaft Position - Camshaft Position Correlation (Bank2)	—
P0019	Crank and Cam Timing B System Failure (Bank 2)	—
P0021	Intake Camshaft Position - Timing Over-Advanced or System Performance (Bank 2)	—
P0024	Exhaust AVCS System 2 (Range/Performance)	—
P0031	HO2S Heater Control Circuit Low (Bank 1 Sensor 1)	—
P0032	HO2S Heater Control Circuit High (Bank 1 Sensor 1)	—
P0037	HO2S Heater Control Circuit Low (Bank 1 Sensor 2)	—
P0038	HO2S Heater Control Circuit High (Bank 1 Sensor 2)	—
P0102	Mass or Volume Air Flow Circuit Low Input	—
P0103	Mass or Volume Air Flow Circuit High Input	—
P0107	Manifold Absolute Pressure/Barometric Pressure Circuit Low Input	—
P0108	Manifold Absolute Pressure/Barometric Pressure Circuit High Input	—
P0112	Intake Air Temperature Sensor 1 Circuit Low	—
P0113	Intake Air Temperature Sensor 1 Circuit High	—
P0117	Engine Coolant Temperature Circuit Low	—
P0118	Engine Coolant Temperature Circuit High	—
P0122	Throttle/Pedal Position Sensor/Switch “A” Circuit Low	—
P0123	Throttle/Pedal Position Sensor/Switch “A” Circuit High	—
P0131	O2 Sensor Circuit Low Voltage (Bank 1 Sensor 1)	—
P0132	O2 Sensor Circuit High Voltage (Bank 1 Sensor 1)	—
P0137	O2 Sensor Circuit Low Voltage (Bank 1 Sensor 2)	—
P0138	O2 Sensor Circuit High Voltage (Bank 1 Sensor 2)	—
P0140	O2 Sensor Circuit No Activity Detected (Bank1 Sensor2)	—
P0182	Fuel Temperature Sensor “A” Circuit Low Input	—
P0183	Fuel Temperature Sensor “A” Circuit High Input	—
P0201	Injector #1	—
P0202	Injector #2	—
P0203	Injector #3	—
P0204	Injector #4	—
P0222	Throttle/Pedal Position Sensor/Switch “B” Circuit Low	—
P0223	Throttle/Pedal Position Sensor/Switch “B” Circuit High	—
P0230	Fuel Pump Primary Circuit	—
P0245	Turbo/Super Charger Wastegate Solenoid “A” Low	—
P0327	Knock Sensor 1 Circuit Low (Bank 1 or Single Sensor)	—
P0328	Knock Sensor 1 Circuit High (Bank 1 or Single Sensor)	—
P0335	Crankshaft Position Sensor “A” Circuit	—
P0336	Crankshaft Position Sensor “A” Circuit Range/Performance	—
P0340	Camshaft Position Sensor “A” Circuit (Bank 1 or Single Sensor)	—

GET the MANUALS.org

DTC	Item	Condition
P0345	Camshaft Position Sensor “A” Circuit (Bank 2)	—
P0351	Ignition Coil A Primary/Secondary Circuit	—
P0352	Ignition Coil B Primary/Secondary Circuit	—
P0353	Ignition Coil C Primary/Secondary Circuit	—
P0354	Ignition Coil D Primary/Secondary Circuit	—
P0365	Camshaft Position Sensor “B” Circuit (Bank 1)	—
P0390	Camshaft Position Sensor “B” Circuit (Bank 2)	—
P0447	Evaporative Emission Control System Vent Control Circuit Open	—
P0448	Evaporative Emission Control System Vent Control Circuit Shorted	—
P0452	Evaporative Emission Control System Pressure Sensor Low Input	—
P0453	Evaporative Emission Control System Pressure Sensor High Input	—
P0458	Evaporative Emission System Purge Control Valve Circuit Low	—
P0462	Fuel Level Sensor “A” Circuit Low	—
P0463	Fuel Level Sensor “A” Circuit High	—
P0500	Vehicle Speed Sensor “A”	—
P0512	Starter Request Circuit	—
P0513	Incorrect Immobilizer Key	—
P0604	Internal Control Module Random Access Memory (RAM) Error	—
P0605	Internal Control Module Read Only Memory (ROM) Error	—
P0607	Throttle Control System Circuit Range/Performance	—
P0638	Throttle Actuator Control Range/Performance (Bank 1)	—
P0851	Park/Neutral Switch Input Circuit Low	—
P0852	Park/Neutral Switch Input Circuit High	—
P1152	O2 Sensor Circuit Range/Performance (Low) (Bank1 Sensor1)	—
P1153	O2 Sensor Circuit Range/Performance (High) (Bank1 Sensor1)	—
P1160	Return Spring Failure	—
P1400	Fuel Tank Pressure Control Solenoid Valve Circuit Low	—
P1420	Fuel Tank Pressure Control Sol. Valve Circuit High	—
P1458	Canister Purge Control Solenoid Valve 2	—
P1459	Canister Purge Control Solenoid Valve 2	—
P1518	Starter Switch Circuit Low Input	—
P1560	Back-Up Voltage Circuit Malfunction	—
P1570	Antenna	—
P1571	Reference Code Incompatibility	—
P1572	IMM Circuit Failure (Except Antenna Circuit)	—
P1574	Key Communication Failure	—
P1576	EGI Control Module EEPROM	—
P1577	IMM Control Module EEPROM	—
P1578	Meter Failure	—
P2006	Intake Manifold Runner Control Stuck Closed (Bank 1)	—
P2007	Intake Manifold Runner Control Stuck Closed (Bank 2)	—
P2008	Intake Manifold Runner Control Circuit / Open (Bank 1)	—
P2009	Intake Manifold Runner Control Circuit Low (Bank 1)	—
P2011	Intake Manifold Runner Control Circuit / Open (Bank 2)	—
P2012	Intake Manifold Runner Control Circuit Low (Bank 2)	—
P2016	Intake Manifold Runner Position Sensor / Switch Circuit Low (Bank 1)	—
P2017	Intake Manifold Runner Position Sensor / Switch Circuit High (Bank 1)	—
P2021	Intake Manifold Runner Position Sensor / Switch Circuit Low (Bank 2)	—
P2022	Intake Manifold Runner Position Sensor / Switch Circuit High (Bank 2)	—
P2088	Intake Camshaft Position Actuator Control Circuit Low (Bank 1)	—

GET the MANUALS.org

DTC	Item	Condition
P2089	Intake Camshaft Position Actuator Control Circuit High (Bank 1)	—
P2090	Exhaust Camshaft Position Actuator Control Circuit Low (Bank 1)	—
P2091	Exhaust Camshaft Position Actuator Control Circuit High (Bank 1)	—
P2092	Intake Camshaft Position Actuator Control Circuit Low (Bank 2)	—
P2093	Intake Camshaft Position Actuator Control Circuit High (Bank 2)	—
P2094	Exhaust Camshaft Position Actuator Control Circuit Low (Bank 2)	—
P2095	Exhaust Camshaft Position Actuator Control Circuit High (Bank 2)	—
P2101	Throttle Actuator Control Motor Circuit Range/Performance	—
P2102	Throttle Actuator Control Motor Circuit Low	—
P2103	Throttle Actuator Control Motor Circuit High	—
P2109	Throttle/Pedal Position Sensor “A” Minimum Stop Performance	—
P2122	Throttle/Pedal Position Sensor/Switch “D” Circuit Low Input	—
P2123	Throttle/Pedal Position Sensor/Switch “D” Circuit High Input	—
P2127	Throttle/Pedal Position Sensor/Switch “E” Circuit Low Input	—
P2128	Throttle/Pedal Position Sensor/Switch “E” Circuit High Input	—
P2135	Throttle/Pedal Position Sensor/Switch “A”/“B” Voltage Correlation	—
P2138	Throttle/Pedal Position Sensor/Switch “D”/“E” Voltage Correlation	—
P2227	Barometric Pressure Circuit Range/Performance	—
P2228	Barometric Pressure Circuit Low	—
P2229	Barometric Pressure Circuit High	—
U0073	CAN Failure, Bus ‘Off’ Detection	—
U0101	CAN (TCU) Data Not Loaded	—
U0122	CAN (VDC) Data Not Loaded	—
U0140	CAN (BCU) Data Not Loaded	—
U0402	CAN (TCU) Data Abnormal	—
U0416	CAN (VDC) Data Abnormal	—
U0422	CAN (BCU) Data Abnormal	—

GET the MANUALS.org

1. PREPARATION FOR THE INSPECTION MODE

1) Check that the battery voltage is 12 V or more and fuel remains approx. half [20 — 40 ℓ (5.3 — 10.6 US gal, 4.4 — 8.8 Imp gal)].
2) Lift up the vehicle using a garage jack and place it on rigid racks, or drive the vehicle onto free rollers.

WARNING:
- **Before lifting up the vehicle, ensure parking brake is applied.**
- **Do not use a pantograph jack in place of a rigid rack.**
- **Secure a rope or wire to the front or rear towing hooks to prevent the lateral runout of front wheels.**
- **Before rotating the wheels, make sure that there is no one in front of the vehicle. Besides while the wheels are rotating, make sure that no one approaches the vehicle front side.**
- **Make sure that there is nothing around the wheels. For AWD model, pay attention to all four wheels.**
- **While servicing, do not depress or release the clutch pedal or accelerator pedal quickly regardless of the engine speed. Quick operation may cause the vehicle to drop off the free roller.**
- **To prevent the vehicle from slipping due to vibration, do not place anything between rigid rack and the vehicle.**

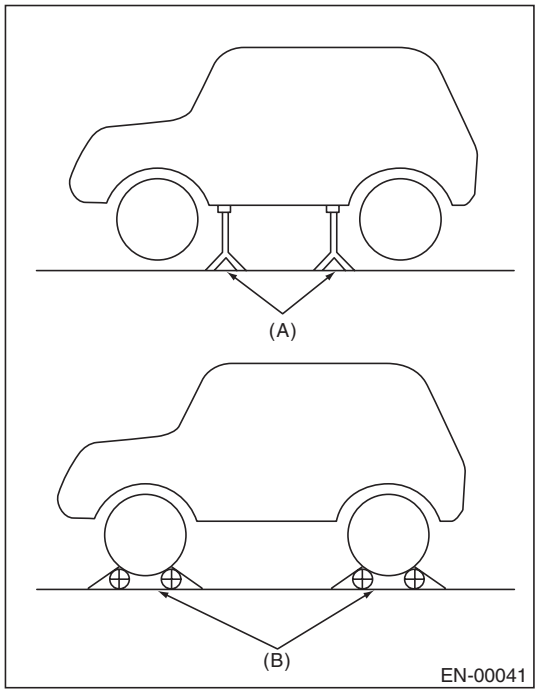

(A) Rigid rack
(B) Free roller

2. SUBARU SELECT MONITOR

1) Check that no DTC remains after clearing memory. <Ref. to EN(H4DOTC)(diag)-53, Clear Memory Mode.>
2) Warm up the engine.
3) Prepare the Subaru Select Monitor kit. <Ref. to EN(H4DOTC)(diag)-8, PREPARATION TOOL, General Description.>

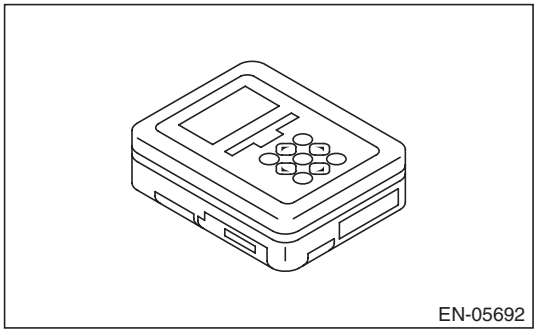

4) Prepare PC with Subaru Select Monitor installed.
5) Connect the USB cable to SDI (Subaru Diagnosis Interface) and USB port on the personal computer (dedicated port for the Subaru Select Monitor).

NOTE:
The dedicated port for the Subaru Select Monitor means the USB port which was used to install the Subaru Select Monitor.
6) Connect the diagnosis cable to SDI.
7) Install the delivery (test) mode fuse (A) of the main fuse box.

CAUTION:
Do not use any fuses that are installed on the vehicle.

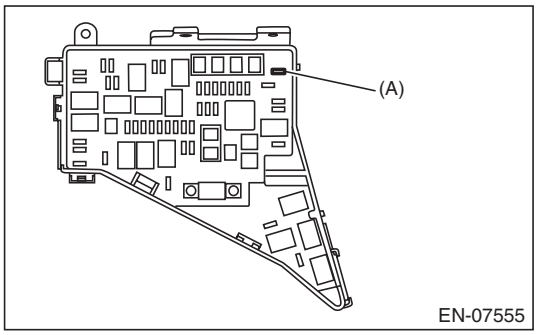

GET the MANUALS.org

8) Connect SDI to data link connector located in the lower portion of the instrument panel (on the driver's side).

CAUTION:
Do not connect the scan tools except for Subaru Select Monitor and general scan tool.

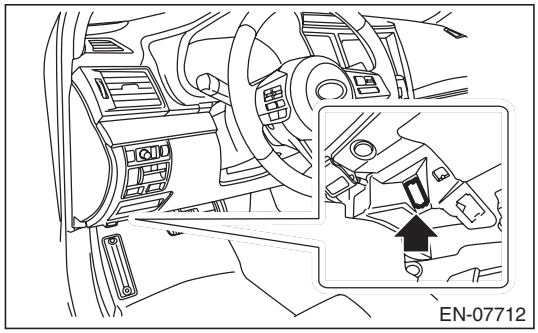

9) Start the PC.
10) Turn the ignition switch to ON (engine OFF) and run the "PC application for Subaru Select Monitor".
11) On «Main Menu» display, select {Each System Check}.
12) On «System Selection Menu» display, select {Engine Control System}.
13) Click the [OK] button after the information of engine type has been displayed.
14) On «Engine Diagnosis» display, select {Dealer Check Mode Procedure}.
15) When the "Perform Inspection (Dealer Check) Mode ?" is shown on the screen, click the [Next] button.
16) Perform subsequent procedures as instructed on the display screen.
• If trouble still remains in the memory, the corresponding DTC appears on the display screen.

NOTE:
• For detailed operation procedures, refer to "PC application help for Subaru Select Monitor".
• For details concerning DTC, refer to "List of Diagnostic Trouble Code (DTC)".
<Ref. to EN(H4DOTC)(diag)-75, List of Diagnostic Trouble Code (DTC).>
• Release the parking brake.
• The speed difference between front and rear wheels may illuminate the ABS warning light, but this does not indicate a malfunction. When engine control system diagnosis is finished, perform the VDC memory clearance procedure of self-diagnosis function. <Ref. to VDC(diag)-25, Clear Memory Mode.>

3. GENERAL SCAN TOOL

1) Check that no DTC remains after clearing memory. <Ref. to EN(H4DOTC)(diag)-32, MODE $04 (CLEAR/RESET EMISSION-RELATED DIAGNOSTIC INFORMATION), OPERATION, General Scan Tool.>
2) Warm up the engine.
3) Install the delivery (test) mode fuse (A) of the main fuse box.

CAUTION:
Do not use any fuses that are installed on the vehicle.

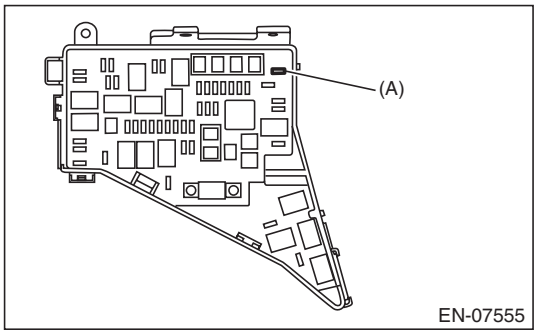

4) Connect the general scan tool to data link connector located in the lower portion of the instrument panel (on the driver's side).

CAUTION:
Do not connect the scan tools except for Subaru Select Monitor and general scan tool.

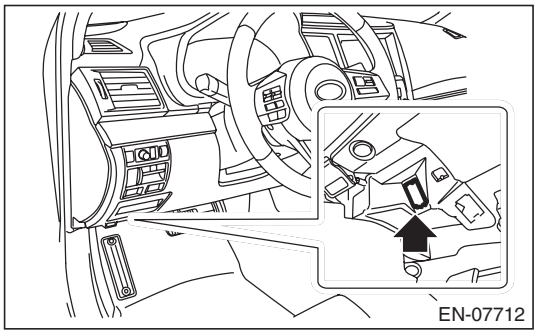

5) Start the engine.

NOTE:
Depress the clutch pedal when starting engine.
6) Turn the neutral position switch to ON by operating shift lever.
7) Keep the engine speed in 2,500 — 3,000 rpm range for 40 seconds.

GET the MANUALS.org

8) Place the shift lever in 1st gear and drive the vehicle at 5 to 10 km/h (3 to 6 MPH).

NOTE:
- For AWD model, release the parking brake.
- The speed difference between front and rear wheels may illuminate the ABS warning light, but this does not indicate a malfunction. When engine control system diagnosis is finished, perform the VDC memory clearance procedure of self-diagnosis function. <Ref. to VDC(diag)-25, Clear Memory Mode.>

9) Using the general scan tool, check for DTC and record the result(s).

NOTE:
- For detailed operation procedures, refer to the general scan tool operation manual.
- For details concerning DTC, refer to “List of Diagnostic Trouble Code (DTC)”.

<Ref. to EN(H4DOTC)(diag)-75, List of Diagnostic Trouble Code (DTC).>

GET the MANUALS.org

12. Drive Cycle

A: PROCEDURE

It is necessary to perform the drive cycle listed below if DTC is not found in the Inspection Mode. It is possible to complete diagnosis of the DTC by performing the indicated drive cycle. After the repair for the DTC, perform a necessary drive cycle and make sure the function recovers and the DTC is recorded.

1. PREPARATION FOR DRIVE CYCLE

1) Check that the battery voltage is 12 V or more and fuel remains approx. half [20 — 40 ℓ (5.3 — 10.6 US gal, 4.4 — 8.8 Imp gal)].
2) After performing the diagnostics and Clear Memory Mode, check that no DTC remains. <Ref. to EN(H4DOTC)(diag)-53, Clear Memory Mode.>
3) Check the delivery (test) mode fuse is removed.

NOTE:
- Perform the drive cycle after warming up the engine except when the engine coolant temperature at engine start is specified.
- Perform the drive cycle twice if the DTC in the list is marked with *. After completing the first drive cycle, stop the engine and perform second diagnosis in same condition.

2. DRIVE CYCLE A

DTC	Item	Condition
*P0125	Insufficient Coolant Temperature for Closed Loop Fuel Control	Engine coolant temperature at engine start is less than 20°C (68°F).
*P0126	Insufficient Engine Coolant Temperature for Stable Operation	—
*P0128	Coolant Thermostat (Engine Coolant Temperature Below Thermostat Regulating Temperature)	Engine coolant temperature at engine start is less than 55°C (131°F).
*P0133	O2 Sensor Circuit Slow Response (Bank 1 Sensor 1)	—
*P0141	O2 Sensor Heater Circuit (Bank1 Sensor2)	—
*P0171	System Too Lean (Bank 1)	Complete diagnosis with drive cycle B or C as well.
*P0172	System Too Rich (Bank 1)	Complete diagnosis with drive cycle B or C as well.
*P0301	Cylinder 1 Misfire Detected	Complete diagnosis with drive cycle B or C as well.
*P0302	Cylinder 2 Misfire Detected	Complete diagnosis with drive cycle B or C as well.
*P0303	Cylinder 3 Misfire Detected	Complete diagnosis with drive cycle B or C as well.
*P0304	Cylinder 4 Misfire Detected	Complete diagnosis with drive cycle B or C as well.
*P0420	Catalyst System Efficiency Below Threshold (Bank 1)	—
*P0442	Evaporative Emission Control System Leak Detected (Small Leak)	Engine coolant temperature at engine start is less than 25°C (77°F).
*P0451	Evaporative Emission Control System Pressure Sensor	—
*P0456	Evaporative Emission Control System Leak Detected (Very Small Leak)	Engine coolant temperature at engine start is less than 25°C (77°F).
*P0457	Evaporative Emission Control System Leak Detected (Fuel Cap Loose/Off)	Engine coolant temperature at engine start is less than 25°C (77°F).
*P0459	Evaporative Emission System Purge Control Valve Circuit High	—
P1443	Vent Control Solenoid Valve Function Problem	—

GET the MANUALS.org

DTC	Item	Condition
*P2096	Post Catalyst Fuel Trim System Too Lean (Bank 1)	Complete diagnosis with drive cycle B or C as well.
*P2097	Post Catalyst Fuel Trim System Too Rich (Bank 1)	Complete diagnosis with drive cycle B or C as well.

Diagnostic procedure:
1) Drive for 20 minutes or more at a constant speed of 80 km/h (50 MPH) or more.
2) Stop the vehicle and idle for one minute.

3. DRIVE CYCLE B

DTC	Item	Condition
*P0171	System Too Lean (Bank 1)	Complete diagnosis with drive cycle A or C as well.
*P0172	System Too Rich (Bank 1)	Complete diagnosis with drive cycle A or C as well.
*P0301	Cylinder 1 Misfire Detected	Complete diagnosis with drive cycle A or C as well.
*P0302	Cylinder 2 Misfire Detected	Complete diagnosis with drive cycle A or C as well.
*P0303	Cylinder 3 Misfire Detected	Complete diagnosis with drive cycle A or C as well.
*P0304	Cylinder 4 Misfire Detected	Complete diagnosis with drive cycle A or C as well.
*P0464	Fuel Level Sensor Circuit Intermittent	—
*P0506	Idle Air Control System RPM Lower Than Expected	—
*P0507	Idle Air Control System RPM Higher Than Expected	—
*P2096	Post Catalyst Fuel Trim System Too Lean (Bank 1)	Complete diagnosis with drive cycle A or C as well.
*P2097	Post Catalyst Fuel Trim System Too Rich (Bank 1)	Complete diagnosis with drive cycle A or C as well.
*P219A	Bank 1 Air-Fuel Ratio Imbalance	Complete diagnosis with drive cycle C as well.

Diagnostic procedure:
1) Drive at 10 km/h (6 MPH) or more.
2) Stop the vehicle and idle for ten minutes.

4. DRIVE CYCLE C

DTC	Item	Condition
*P0030	HO2S Heater Control Circuit (Bank 1 Sensor 1)	—
*P0068	MAP/MAF - Throttle Position Correlation	—
*P0101	Mass or Volume Air Flow Circuit Range/Performance	—
P0134	O2 Sensor Circuit No Activity Detected (Bank 1 Sensor 1)	—
*P013A	O2 Sensor Slow Response - Rich to Lean (Bank 1 Sensor 2)	—
*P013B	O2 Sensor Slow Response - Lean to Rich (Bank 1 Sensor 2)	—
*P013E	O2 Sensor Delayed Response - Rich to Lean (Bank 1 Sensor 2)	—
*P013F	O2 Sensor Delayed Response - Lean to Rich (Bank 1 Sensor 2)	—
*P0171	System Too Lean (Bank 1)	Complete diagnosis with drive cycle A or B as well.
*P0172	System Too Rich (Bank 1)	Complete diagnosis with drive cycle A or B as well.
P0244	Turbo/Super Charger Wastegate Solenoid “A” Range/Performance	—
P0246	Turbo/Super Charger Wastegate Solenoid “A” High	—

GET the MANUALS.org

Drive Cycle

DTC	Item	Condition
*P0301	Cylinder 1 Misfire Detected	Complete diagnosis with drive cycle A or B as well.
*P0302	Cylinder 2 Misfire Detected	Complete diagnosis with drive cycle A or B as well.
*P0303	Cylinder 3 Misfire Detected	Complete diagnosis with drive cycle A or B as well.
*P0304	Cylinder 4 Misfire Detected	Complete diagnosis with drive cycle A or B as well.
P2004	Intake Manifold Runner Control Stuck Open (Bank 1)	—
P2005	Intake Manifold Runner Control Stuck Open (Bank 2)	—
*P2096	Post Catalyst Fuel Trim System Too Lean (Bank 1)	Complete diagnosis with drive cycle A or B as well.
*P2097	Post Catalyst Fuel Trim System Too Rich (Bank 1)	Complete diagnosis with drive cycle A or B as well.
*P219A	Bank 1 Air-Fuel Ratio Imbalance	Complete diagnosis with drive cycle B as well.

Diagnostic procedure:

Drive according to the drive pattern described below.

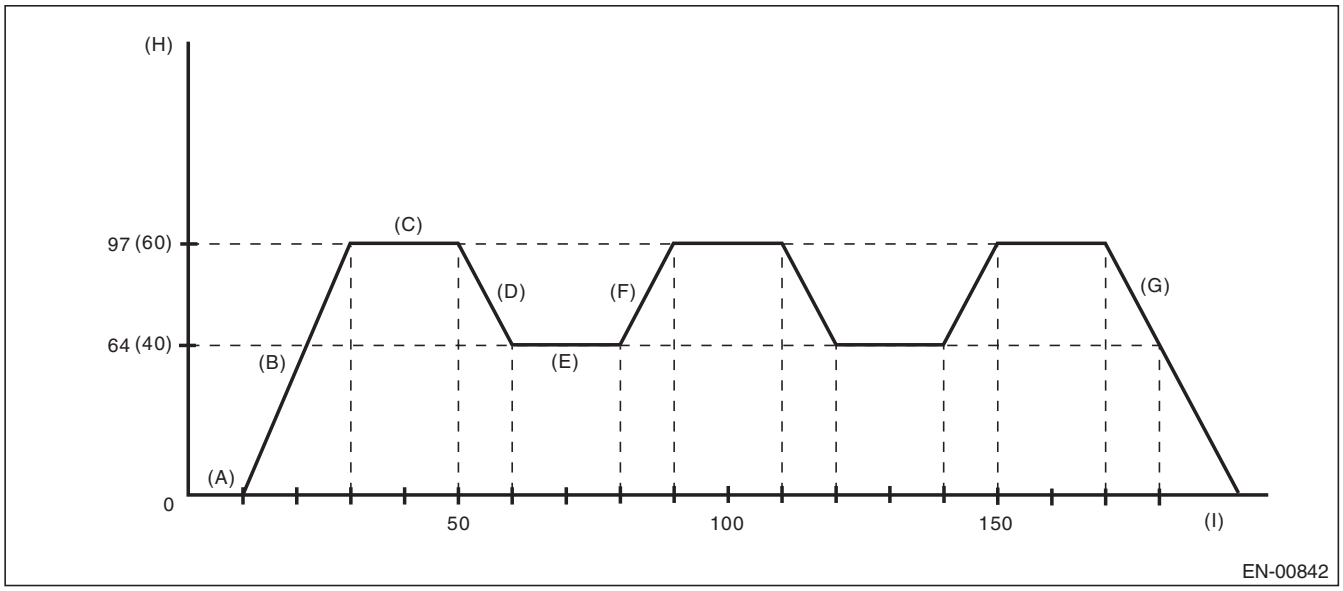

(A) Idle the engine for 10 seconds or more.

(B) Accelerate to 97 km/h (60 MPH) or more within 20 seconds.

(C) Drive for 20 seconds or more at 97 km/h (60 MPH) or more.

(D) Decelerate with fully closed throttle to 64 km/h (40 MPH) or less.

(E) Drive for 20 seconds or more at 64 km/h (40 MPH) or less.

(F) Accelerate to 97 km/h (60 MPH) or more within 10 seconds.

(G) Stop the vehicle with throttle fully closed.

(H) Vehicle speed km/h (MPH)

(I) Sec.

GET the MANUALS.org

5. DRIVE CYCLE D

DTC	Item	Condition
*P0181	Fuel Temperature Sensor “A” Circuit Range/Performance	—

NOTE:
In drive cycle D, one drive cycle will be established when both the drift diagnosis and stuck diagnosis have completed.

Diagnostic procedure:

DRIFT DIAGNOSIS

1) Make sure of the items below before starting the engine.
- Engine coolant temperature is less than 30°C (86°F).
- Remaining fuel is 10 ℓ (2.6 US gal, 2.2 Imp gal) or more.
- Battery voltage is 10.9 V or more.

2) Idle the engine until engine coolant temperature is at least 10°C (18°F) higher than it was when engine started.
3) After the engine has reached the state of procedure 2), idle the engine for another 5 minutes or more.

STUCK DIAGNOSIS

1) Make sure that the battery voltage is 10.9 V or more.
2) Perform the Clear Memory Mode. <Ref. to EN(H4DOTC)(diag)-53, Clear Memory Mode.>
3) Drive the vehicle for the distance equal to the fuel of 50 ℓ (13.2 US gal, 11 Imp gal).

NOTE:
- It is acceptable to drive the vehicle intermittently.
- Do not disconnect the battery terminals during stuck diagnosis. (Data will be cleared by disconnecting the battery terminals.)

6. DRIVE CYCLE E

DTC	Item	Condition
*P0461	Fuel Level Sensor “A” Circuit Range/Performance	—

Diagnostic procedure:
1) Make sure that the battery voltage is 10.9 V or more.
2) Perform the Clear Memory Mode. <Ref. to EN(H4DOTC)(diag)-53, Clear Memory Mode.>
3) Drive the vehicle for the distance equal to the fuel of 30 ℓ (7.9 US gal, 6.6 Imp gal).

NOTE:
- It is acceptable to drive the vehicle intermittently.
- Do not disconnect the battery terminals while diagnosing. (Data will be cleared by disconnecting the battery terminals.)

GET the MANUALS.org

7. DRIVE CYCLE F

DTC	Item	Condition
*P0111	Intake Air Temperature Sensor 1 Circuit Range/Performance	—

Diagnostic procedure:
1) Make sure that the engine coolant temperature is less than 30°C (86°F).
2) Drive according to the drive pattern described below.

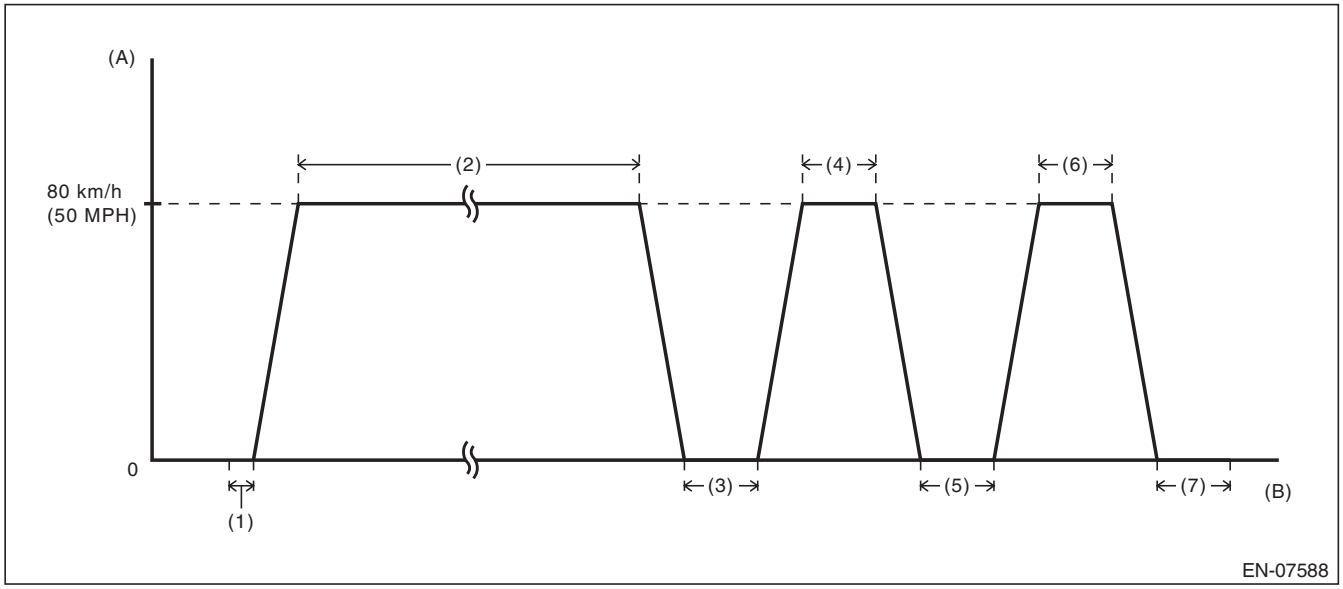

(A) Vehicle speed
(B) Elapsed time

(1) Idle the engine for 10 seconds or more after engine start.
(2) Drive for 8 minutes or more at a constant speed of 80 km/h (50 MPH) or more.
(3) Stop the vehicle and idle for 30 seconds or more.
(4) Drive for 30 seconds or more at a constant speed of 80 km/h (50 MPH) or more.
(5) Stop the vehicle and idle for 30 seconds or more.
(6) Drive for 30 seconds or more at a constant speed of 80 km/h (50 MPH) or more.
(7) Stop the vehicle and idle for 30 seconds.

NOTE:
- There is no given transition time between idling and cruising.
- Driving at constant speed only on a downhill causes smaller engine load and may result in failure to obtain a right diagnostic result.
- When the engine stops while performing drive cycle F, perform it again from the state of procedure 1).

GET the MANUALS.org

8. DRIVE CYCLE H

DTC	Item	Condition
*P050A	Cold Start Idle Air Control System Performance	—
*P050B	Cold Start Ignition Timing Performance	—

Diagnostic procedure:
1) Perform the Clear Memory Mode. <Ref. to EN(H4DOTC)(diag)-53, Clear Memory Mode.>
2) With the ignition switch ON (engine OFF), read the engine coolant temperature, intake air temperature and fuel temperature. <Ref. to EN(H4DOTC)(diag)-34, READ CURRENT DATA FOR ENGINE (NORMAL MODE), OPERATION, Subaru Select Monitor.>
3) If the values from step 2) satisfy the following two conditions, idle the engine for one minute.

Condition:
|Engine coolant temperature — Intake air temperature| ≤ 5°C (9°F)
|Engine coolant temperature — Fuel temperature| ≤ 2°C (3.6°F)

NOTE:
- If the conditions are not satisfied, turn the ignition switch to OFF and wait until the parameters are satisfied.
- Do not move the shift lever from neutral position during idling.

9. DRIVE CYCLE J

DTC	Item	Condition
P2610	ECM/PCM Internal Engine Off Timer Performance	—

1) Idle the engine for 15 minutes or more.
2) Turn the ignition switch to OFF.
3) After 6 hours passed from the start of step 2), read the temporary code using the Subaru Select Monitor. <Ref. to EN(H4DOTC)(diag)-40, OPERATION, Read Diagnostic Trouble Code (DTC).>

GET the MANUALS.org

13. Clear Memory Mode

A: OPERATION

1. SUBARU SELECT MONITOR

NOTE:
- Initial diagnosis of electronic throttle control is performed after memory clearance. Wait for 10 seconds or more after turning the ignition switch to ON, and then start the engine.
- For detailed operation procedures, refer to “PC application help for Subaru Select Monitor”.

2. GENERAL SCAN TOOL

For procedures clearing memory using the general scan tool, refer to the general scan tool operation manual.

NOTE:
Initial diagnosis of electronic throttle control is performed after memory clearance. For this reason, start the engine after 10 seconds or more have elapsed since the ignition switch was turned to ON.

GET the MANUALS.org

14. System Operation Check Mode

A: OPERATION

CAUTION:
After executing the system operation check mode, execute the Clear Memory Mode. <Ref. to EN(H4DOTC)(diag)-53, OPERATION, Clear Memory Mode.>

NOTE:
For detailed operation procedures, refer to “PC application help for Subaru Select Monitor”.

GET the MANUALS.org

15. Malfunction Indicator Light

A: PROCEDURE

1. Activation of malfunction indicator light. <Ref. to EN(H4DOTC)(diag)-55, ACTIVATION OF MALFUNCTION INDICATOR LIGHT, Malfunction Indicator Light.>
↓
2. Malfunction indicator light does not come on. <Ref. to EN(H4DOTC)(diag)-57, MALFUNCTION INDICATOR LIGHT DOES NOT COME ON, Malfunction Indicator Light.>
↓
3. Malfunction indicator light does not go off. <Ref. to EN(H4DOTC)(diag)-57, MALFUNCTION INDICATOR LIGHT DOES NOT GO OFF, Malfunction Indicator Light.>
↓
4. Malfunction indicator light does not blink. <Ref. to EN(H4DOTC)(diag)-58, MALFUNCTION INDICATOR LIGHT DOES NOT BLINK, Malfunction Indicator Light.>
↓
5. Malfunction indicator light remains blinking. <Ref. to EN(H4DOTC)(diag)-60, MALFUNCTION INDICATOR LIGHT REMAINS BLINKING, Malfunction Indicator Light.>

B: ACTIVATION OF MALFUNCTION INDICATOR LIGHT

1) When the ignition switch is turned to ON (engine OFF), the malfunction indicator light (A) in the combination meter illuminates.

NOTE:
If the malfunction indicator light does not illuminate, perform diagnostics of the malfunction indicator light circuit or the combination meter circuit. <Ref. to EN(H4DOTC)(diag)-57, MALFUNCTION INDICATOR LIGHT DOES NOT COME ON, Malfunction Indicator Light.>

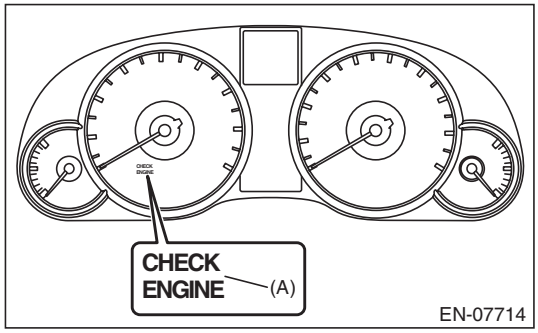

2) After starting the engine, the malfunction indicator light goes out. If it does not go off, any of the engine and emission control system has malfunction.

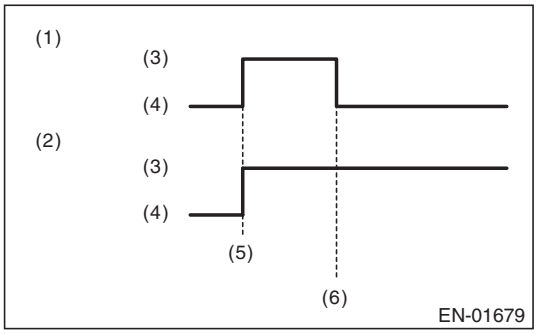

(1) No DTC
(2) Trouble occurs
(3) ON
(4) OFF
(5) Ignition switch ON
(6) Engine start

GET the MANUALS.org

3) If the diagnostic system detects a misfire which could damage the catalyst, the malfunction indicator light will blink at a cycle of 1 Hz.

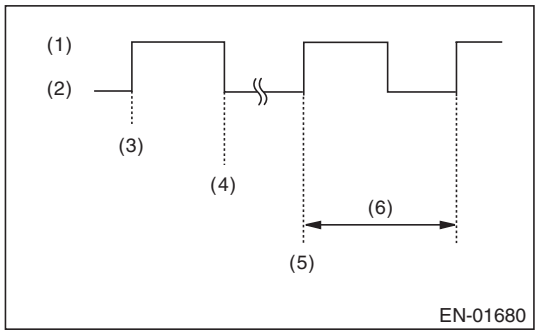

(1) ON
(2) OFF
(3) Ignition switch ON
(4) Engine start
(5) Misfire start
(6) 1 second

4) Install the delivery (test) mode fuse (A) of main fuse box with ignition switch to OFF.

CAUTION:
Do not use any fuses that are installed on the vehicle.

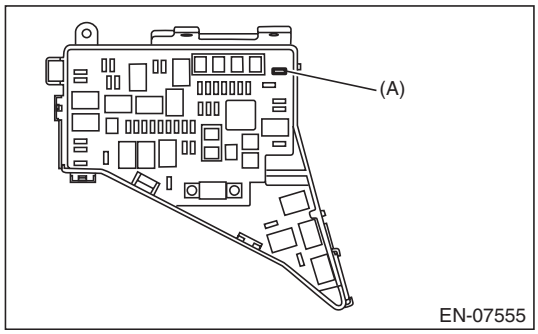

(1) When the ignition switch is turned to ON (engine OFF), the malfunction indicator light illuminates.
(2) After the engine starts, malfunction indicator light blinks in a cycle of 0.5 Hz. (During diagnosis)

(3) Malfunction indicator light blinks at a cycle of 3 Hz after diagnosis if there is no trouble. Malfunction indicator light illuminates if faulty.

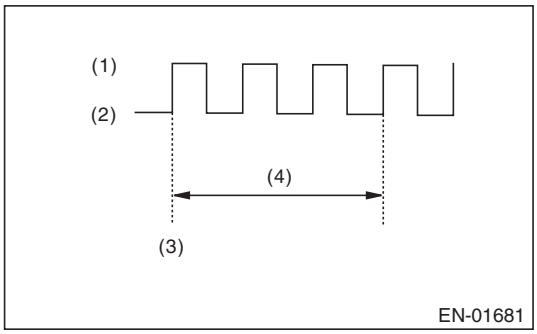

(1) ON
(2) OFF
(3) Ignition switch ON
(4) 1 second

GET the MANUALS.org

C: MALFUNCTION INDICATOR LIGHT DOES NOT COME ON

TROUBLE SYMPTOM:
When the ignition switch is turned to ON (engine OFF), malfunction indicator light does not illuminate.

Step		Check	Yes	No
1	**CHECK DTC.**	Is DTC of LAN system displayed? <Ref. to LAN(diag)-10, OPERATION, Read Diagnostic Trouble Code (DTC).>	Check the appropriate DTC using the “List of Diagnostic Trouble Code (DTC)”. <Ref. to LAN(diag)-32, List of Diagnostic Trouble Code (DTC).>	Replace the meter case assembly of combination meter. <Ref. to IDI-21, Combination Meter.>

D: MALFUNCTION INDICATOR LIGHT DOES NOT GO OFF

TROUBLE SYMPTOM:
Although malfunction indicator light comes on when the engine runs, DTC is not shown on the Subaru Select Monitor or general scan tool display.

Step		Check	Yes	No
1	**CHECK DTC.**	Is DTC of engine or LAN system displayed? <Ref. to EN(H4DOTC)(diag)-40, OPERATION, Read Diagnostic Trouble Code (DTC).>	Check the appropriate DTC using the “List of Diagnostic Trouble Code (DTC)”. <Ref. to EN(H4DOTC)(diag)-75, List of Diagnostic Trouble Code (DTC).> <Ref. to LAN(diag)-32, List of Diagnostic Trouble Code (DTC).>	Go to step **2**.
2	**CHECK COMBINATION METER.** Perform the self-diagnosis for combination meter system. <Ref. to IDI-6, SELF-DIAGNOSIS DISPLAY MODE, OPERATION, Combination Meter System.>	Does the malfunction indicator light illuminate and go off normally?	Replace the ECM. <Ref. to FU(H4DOTC)-58, Engine Control Module (ECM).>	Replace the meter case assembly of combination meter. <Ref. to IDI-21, Combination Meter.>

GET the MANUALS.org

E: MALFUNCTION INDICATOR LIGHT DOES NOT BLINK

DIAGNOSIS:

- The malfunction indicator light circuit is open or shorted.
- The delivery (test) mode fuse circuit is open.

TROUBLE SYMPTOM:

Malfunction indicator light does not blink during Inspection Mode.

WIRING DIAGRAM:

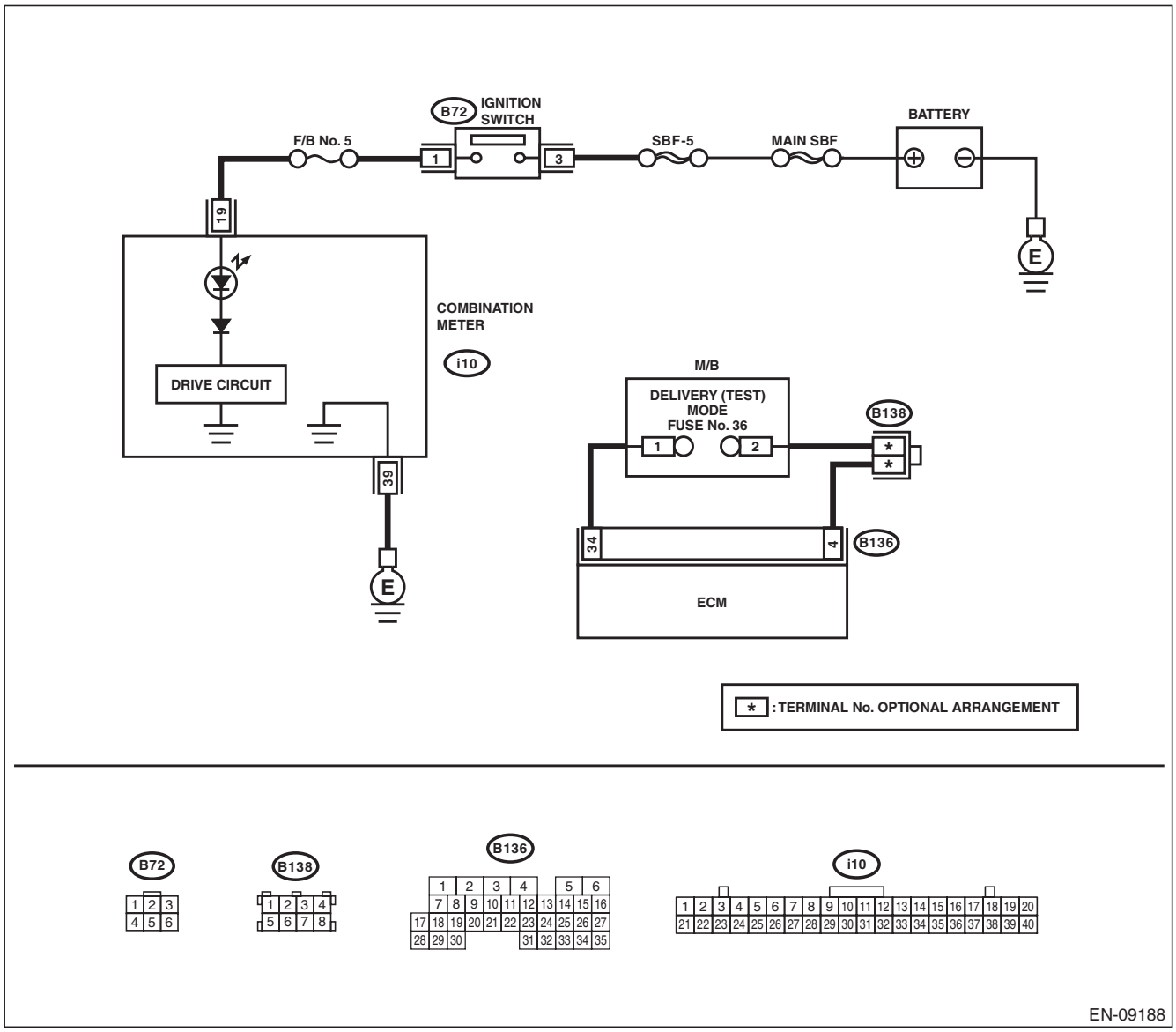

GET the MANUALS.org

	Step	Check	Yes	No
1	**CHECK STATUS OF MALFUNCTION INDICATOR LIGHT.** 1) Turn the ignition switch to OFF. 2) Check the delivery (test) mode fuse is removed. 3) Turn the ignition switch to ON. (engine OFF)	Does the malfunction indicator light illuminate?	Go to step **2**.	Repair the malfunction indicator light circuit. <Ref. to EN(H4DOTC)(diag)-57, MALFUNCTION INDICATOR LIGHT DOES NOT COME ON, Malfunction Indicator Light.>
2	**CHECK HARNESS BETWEEN ECM AND DELIVERY (TEST) MODE FUSE.** 1) Turn the ignition switch to OFF. 2) Disconnect the connector from ECM. 3) Install the delivery (test) mode fuse. **CAUTION:** **Do not use any fuses that are installed on the vehicle.** 4) Measure the resistance of harness between ECM connectors. ***Connector & terminal*** ***(B136) No. 34 — (B136) No. 4:***	Is the resistance less than 1 Ω?	Go to step **3**.	Repair the harness and connector. NOTE: In this case, repair the following item: • Open circuit of harness between ECM and delivery (test) mode fuse • Poor contact of joint connector
3	**CHECK FOR POOR CONTACT.** Check for poor contact of ECM connector.	Is there poor contact of ECM connector?	Repair the poor contact of ECM connector.	Replace the ECM. <Ref. to FU(H4DOTC)-58, Engine Control Module (ECM).>

GET the MANUALS.org

F: MALFUNCTION INDICATOR LIGHT REMAINS BLINKING

DIAGNOSIS:
The delivery (test) mode fuse circuit is short-circuited to ground.
TROUBLE SYMPTOM:
Malfunction indicator light blinks when delivery (test) mode fuse is not connected.
WIRING DIAGRAM:

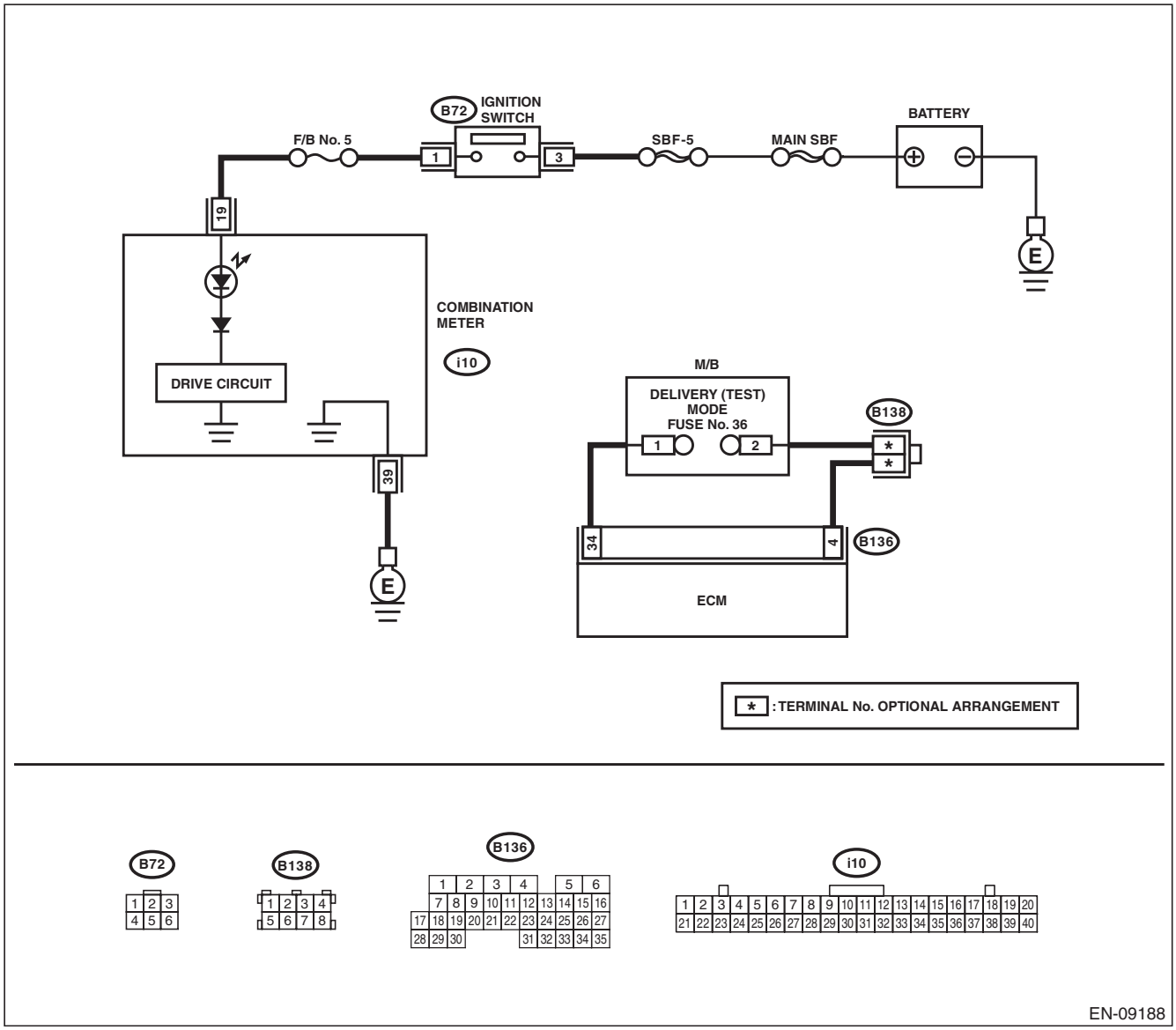

Step		Check	Yes	No
1	**CHECK DELIVERY (TEST) MODE FUSE.** 1) Check the delivery (test) mode fuse is removed. 2) Turn the ignition switch to ON.	Does the malfunction indicator light blink?	Go to step **2**.	System is normal. NOTE: Malfunction indicator light blinks at a cycle of 3 Hz when delivery (test) mode fuse is attached.

GET the MANUALS.org

Step		Check	Yes	No
2	**CHECK HARNESS BETWEEN ECM AND DELIVERY (TEST) MODE FUSE.** 1) Turn the ignition switch to OFF. 2) Disconnect the connector from ECM. 3) Measure the resistance between ECM and chassis ground. ***Connector & terminal*** ***(B136) No. 34 — Chassis ground:***	Is the resistance 1 MΩ or more?	Replace the ECM. <Ref. to FU(H4DOTC)-58, Engine Control Module (ECM).>	Repair the short circuit to ground in harness between ECM and delivery (test) mode fuse.

GET THE MANUALS.org

16. Diagnostics for Engine Starting Failure

A: PROCEDURE

1. Check of the fuel amount
↓
2. Inspection of starter motor circuit. <Ref. to EN(H4DOTC)(diag)-63, STARTER MOTOR CIRCUIT, Diagnostics for Engine Starting Failure.>
↓
3. Inspection of ECM power supply and ground line. <Ref. to EN(H4DOTC)(diag)-66, CHECK POWER SUPPLY AND GROUND LINE OF ENGINE CONTROL MODULE (ECM), Diagnostics for Engine Starting Failure.>
↓
4. Inspection of ignition control system. <Ref. to EN(H4DOTC)(diag)-68, IGNITION CONTROL SYSTEM, Diagnostics for Engine Starting Failure.>
↓
5. Inspection of fuel pump circuit. <Ref. to EN(H4DOTC)(diag)-70, FUEL PUMP CIRCUIT, Diagnostics for Engine Starting Failure.>
↓
6. Inspection of fuel injector circuit. <Ref. to EN(H4DOTC)(diag)-71, FUEL INJECTOR CIRCUIT, Diagnostics for Engine Starting Failure.>

GET the MANUALS.org

B: STARTER MOTOR CIRCUIT

CAUTION:
After servicing or replacing faulty parts, perform Clear Memory Mode <Ref. to EN(H4DOTC)(diag)-53, OPERATION, Clear Memory Mode.>, and Inspection Mode <Ref. to EN(H4DOTC)(diag)-41, PROCEDURE, Inspection Mode.>.
WIRING DIAGRAM:

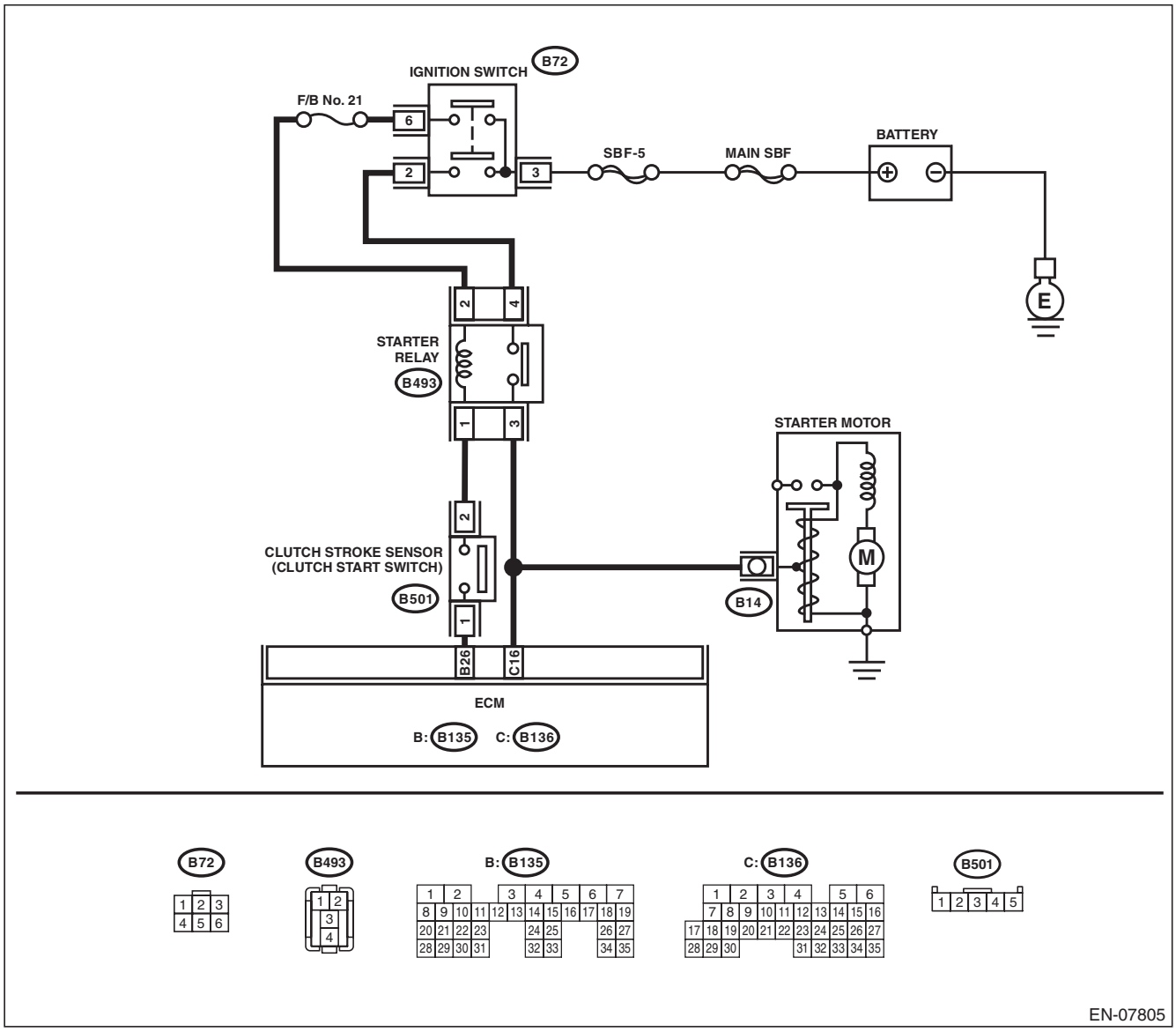

Step		Check	Yes	No
1	**CHECK BATTERY.** Check the battery voltage.	Is the voltage 12 V or more?	Go to step **2**.	Charge or replace the battery.
2	**CHECK OPERATION OF STARTER MOTOR.**	Does the starter motor operate?	Go to step **3**.	Go to step **4**.

GET the MANUALS.org

Step		Check	Yes	No
3	**CHECK DTC.**	Is DTC displayed? <Ref. to EN(H4DOTC)(diag)-40, OPERATION, Read Diagnostic Trouble Code (DTC).>	Check the appropriate DTC using the “List of Diagnostic Trouble Code (DTC)”. <Ref. to EN(H4DOTC)(diag)-75, List of Diagnostic Trouble Code (DTC).>	The circuit has returned to a normal condition at this time. Reproduce the failure, and then perform the diagnosis again. NOTE: In this case, temporary poor contact of connector, temporary open or short circuit of harness may be the cause.
4	**CHECK INPUT SIGNAL FOR STARTER MOTOR.** 1) Turn the ignition switch to OFF. 2) Disconnect the connector from starter motor. 3) Depress the clutch pedal. 4) Turn the ignition switch to START. 5) Measure the voltage between the starter motor connector and the engine ground. ***Connector & terminal*** ***(B14) No. 1 (+) — Engine ground (–):***	Is the voltage 10 V or more?	Check the starter motor. <Ref. to SC(H4SO)-9, Starter.>	Go to step **5**.
5	**CHECK INPUT SIGNAL FOR STARTER MOTOR.** 1) Depress the clutch pedal. 2) Turn the ignition switch to START. 3) Measure the voltage between starter relay connector and chassis ground. ***Connector & terminal*** ***(B493) No. 3 (+) — Chassis ground (–):***	Is the voltage 10 V or more?	Repair the open circuit of the harness between starter relay connector and starter motor.	Go to step **6**.
6	**CHECK HARNESS BETWEEN BATTERY AND IGNITION SWITCH CONNECTOR.** 1) Turn the ignition switch to OFF. 2) Disconnect the connector from ignition switch. 3) Measure the voltage between ignition switch connector and chassis ground. ***Connector & terminal*** ***(B72) No. 3 (+) — Chassis ground (–):***	Is the voltage 10 V or more?	Go to step **7**.	Repair the power supply circuit.
7	**CHECK IGNITION SWITCH.** Measure the resistance between ignition switch terminals after turning the ignition switch to START position. ***Terminals*** ***No. 2 — No. 3:*** ***No. 6 — No. 3:***	Is the resistance less than 1 Ω?	Go to step **8**.	Replace the ignition switch. <Ref. to SL-58, REPLACEMENT, Ignition Key Lock.>

GET THE MANUALS.org

	Step	Check	Yes	No
8	**CHECK INPUT VOLTAGE OF STARTER RELAY.** 1) Remove the starter relay. 2) Connect the connector to ignition switch. 3) Turn the ignition switch to START. 4) Measure the voltage between starter relay connector and chassis ground. ***Connector & terminal*** ***(B493) No. 4 (+) — Chassis ground (–):*** ***(B493) No. 2 (+) — Chassis ground (–):***	Is the voltage 10 V or more?	Go to step **9**.	Check the following item and repair if necessary. • Blown out of fuse (F/B No. 21) • Open or short circuit to ground in harness between starter relay connector and ignition switch connector
9	**CHECK STARTER RELAY.** 1) Connect the battery to starter relay terminals No. 2 and No. 1. 2) Measure the resistance between starter relay terminals. ***Terminals*** ***No. 4 — No. 3:***	Is the resistance less than 1 Ω?	Go to step **10**.	Replace the starter relay. <Ref. to EN(H4DOTC)(diag)-9, Electrical Component Location.>
10	**CHECK HARNESS BETWEEN ECM AND STARTER RELAY CONNECTOR.** 1) Turn the ignition switch to OFF. 2) Disconnect the connectors from ECM. 3) Measure the resistance of harness between ECM and starter relay connector. ***Connector & terminal*** ***(B136) No. 16 — (B493) No. 3:***	Is the resistance less than 1 Ω?	Go to step **11**.	Repair the open circuit of harness between ECM and starter relay connector.
11	**CHECK ECM INPUT VOLTAGE.** 1) Install the starter relay. 2) Depress the clutch pedal. 3) Turn the ignition switch to START. 4) Measure the voltage between ECM connector and chassis ground. ***Connector & terminal*** ***(B135) No. 26 (+) — Chassis ground (–):***	Is the voltage 10 V or more?	Check the ECM power supply and ground line. <Ref. to EN(H4DOTC)(diag)-66, CHECK POWER SUPPLY AND GROUND LINE OF ENGINE CONTROL MODULE (ECM), Diagnostics for Engine Starting Failure.>	Go to step **12**.
12	**CHECK HARNESS BETWEEN ECM AND CLUTCH START SWITCH CONNECTOR.** 1) Turn the ignition switch to OFF. 2) Disconnect the clutch start switch connector. 3) Measure the resistance of harness between ECM and clutch start switch connector. ***Connector & terminal*** ***(B135) No. 26 — (B501) No. 1:***	Is the resistance less than 1 Ω?	Go to step **13**.	Repair the open circuit of harness between ECM and clutch start switch connector.
13	**CHECK INPUT VOLTAGE OF CLUTCH START SWITCH.** 1) Turn the ignition switch to START. 2) Measure the voltage between the clutch start switch connector and chassis ground. ***Connector & terminal*** ***(B501) No. 2 (+) — Chassis ground (–):***	Is the voltage 10 V or more?	Replace the clutch start switch. <Ref. to CL-31, Clutch Switch.>	Repair open or short circuit to ground in harness between starter relay and clutch start switch connector.

GET the MANUALS.org

C: CHECK POWER SUPPLY AND GROUND LINE OF ENGINE CONTROL MODULE (ECM)

CAUTION:
After servicing or replacing faulty parts, perform Clear Memory Mode <Ref. to EN(H4DOTC)(diag)-53, OPERATION, Clear Memory Mode.>, and Inspection Mode <Ref. to EN(H4DOTC)(diag)-41, PROCEDURE, Inspection Mode.>.
WIRING DIAGRAM:

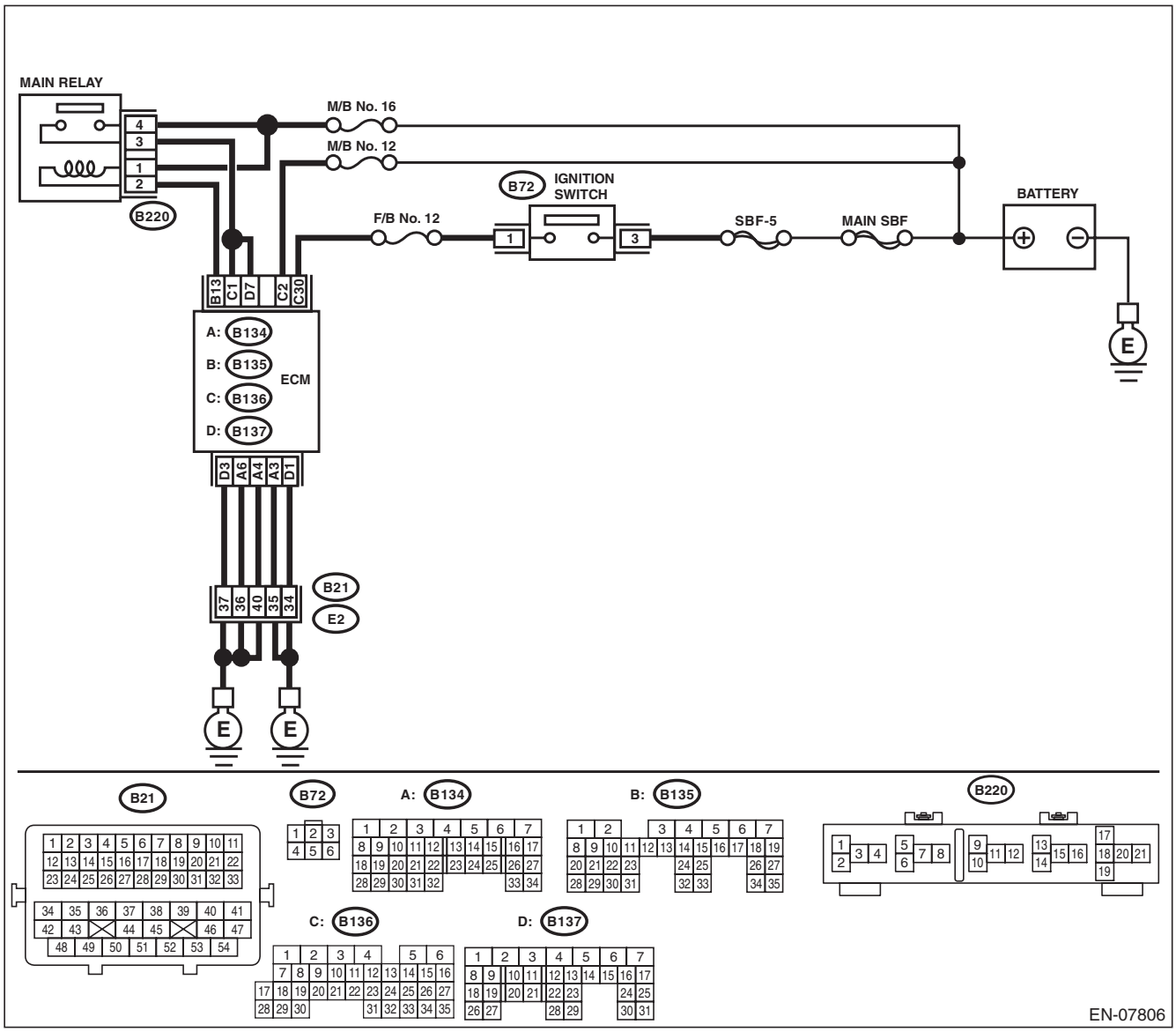

Step	Check	Yes	No
1 **CHECK MAIN RELAY.** 1) Turn the ignition switch to OFF. 2) Remove the main relay. 3) Connect the battery to main relay terminals No. 1 and No. 2. 4) Measure the resistance between main relay terminals. ***Terminals*** ***No. 3 — No. 4:***	Is the resistance less than 1 Ω?	Go to step **2**.	Replace the main relay. <Ref. to EN(H4DOTC)(diag)-9, Electrical Component Location.>

GET THE MANUALS.org

	Step	Check	Yes	No
2	**CHECK GROUND CIRCUIT FOR ECM.** 1) Disconnect the connector from ECM. 2) Measure the resistance of harness between ECM and chassis ground. ***Connector & terminal*** ***(B134) No. 3 — Chassis ground:*** ***(B134) No. 4 — Chassis ground:*** ***(B134) No. 6 — Chassis ground:*** ***(B137) No. 1 — Chassis ground:*** ***(B137) No. 3 — Chassis ground:***	Is the resistance less than 5 Ω?	Go to step **3**.	Repair the harness and connector. NOTE: In this case, repair the following item: • Open circuit in harness between ECM and engine ground terminal • Poor contact of coupling connector
3	**CHECK INPUT VOLTAGE OF ECM.** 1) Turn the ignition switch to ON. 2) Measure the voltage between ECM and chassis ground. ***Connector & terminal*** ***(B136) No. 2 (+) — Chassis ground (–):*** ***(B136) No. 30 (+) — Chassis ground (–):***	Is the voltage 10 V or more?	Go to step **4**.	Repair the open or ground short circuit of harness of power supply circuit.
4	**CHECK INPUT VOLTAGE OF MAIN RELAY.** Measure the voltage between main relay connector and chassis ground. ***Connector & terminal*** ***(B220) No. 1 (+) — Chassis ground (–):*** ***(B220) No. 4 (+) — Chassis ground (–):***	Is the voltage 10 V or more?	Go to step **5**.	Repair the open or ground short circuit of harness of power supply circuit.
5	**CHECK INPUT VOLTAGE OF ECM.** 1) Turn the ignition switch to OFF. 2) Install the main relay. 3) Turn the ignition switch to ON. 4) Measure the voltage between ECM and chassis ground. ***Connector & terminal*** ***(B135) No. 13 (+) — Chassis ground (–):***	Is the voltage 10 V or more?	Go to step **6**.	Repair the open circuit in harness between ECM and main relay connector.
6	**CHECK INPUT VOLTAGE OF ECM.** 1) Turn the ignition switch to OFF. 2) Connect the connector to ECM. 3) Turn the ignition switch to ON. 4) Measure the voltage between ECM and chassis ground. ***Connector & terminal*** ***(B136) No. 1 (+) — Chassis ground (–):*** ***(B137) No. 7 (+) — Chassis ground (–):***	Is the voltage 10 V or more?	Check ignition control system. <Ref. to EN(H4DOTC)(diag)-68, IGNITION CONTROL SYSTEM, Diagnostics for Engine Starting Failure.>	Repair the harness and connector. NOTE: In this case, repair the following item: • Open circuit in harness between ECM and main relay connector • Poor contact of main relay connector • Poor contact of ECM connector

GET THE MANUALS.org

D: IGNITION CONTROL SYSTEM

CAUTION:
After servicing or replacing faulty parts, perform Clear Memory Mode <Ref. to EN(H4DOTC)(diag)-53, OPERATION, Clear Memory Mode.>, and Inspection Mode <Ref. to EN(H4DOTC)(diag)-41, PROCEDURE, Inspection Mode.>.
WIRING DIAGRAM:

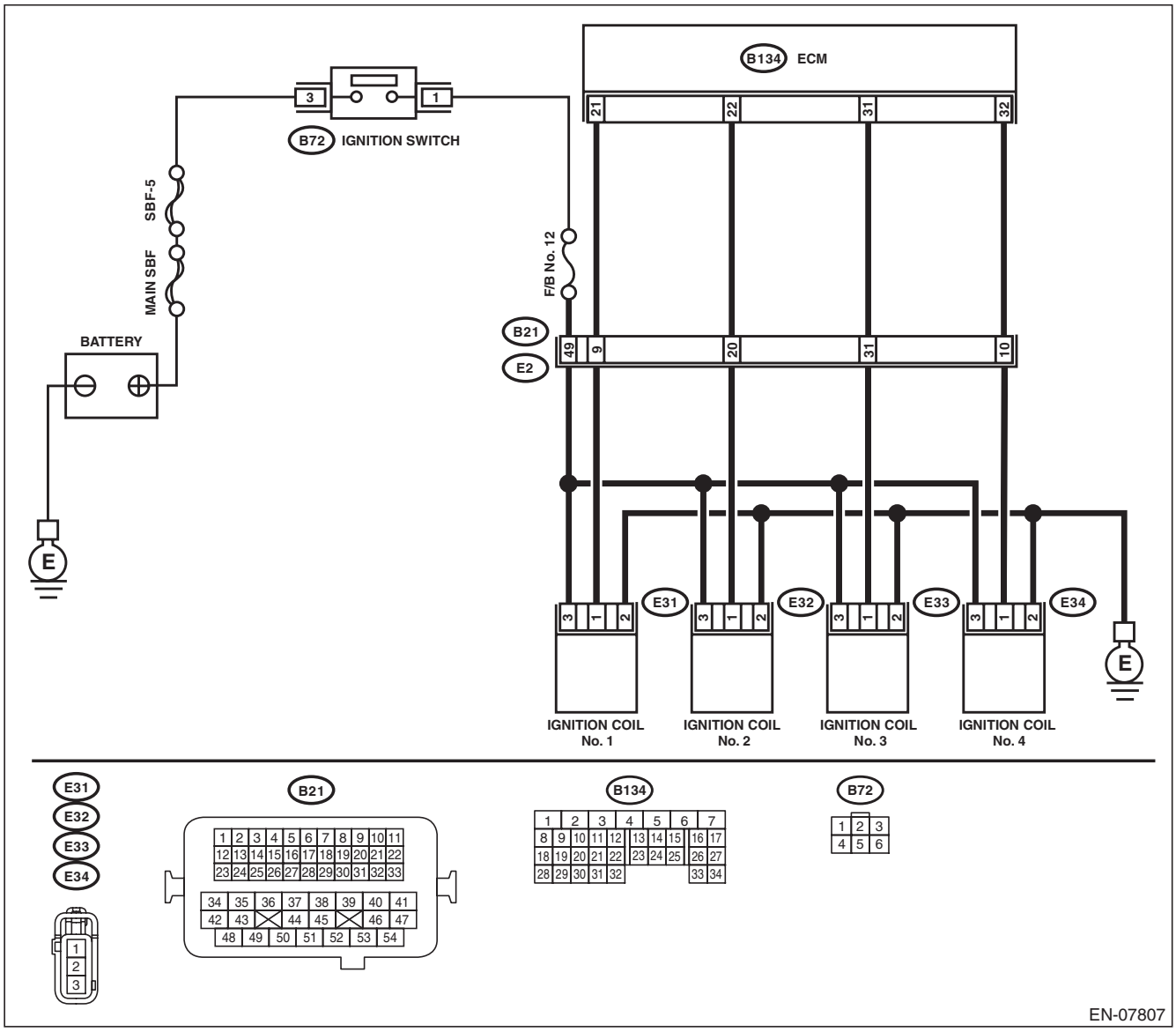

Step		Check	Yes	No
1	**CHECK SPARK PLUG CONDITION.** 1) Remove the spark plug. <Ref. to IG(H4DOTC)-4, REMOVAL, Spark Plug.> 2) Check the spark plug condition. <Ref. to IG(H4DOTC)-4, INSPECTION, Spark Plug.>	Is the spark plug condition normal?	Go to step **2**.	Replace the spark plug. <Ref. to IG(H4DOTC)-4, Spark Plug.>

GET THE MANUALS.org

	Step	Check	Yes	No
2	**CHECK IGNITION SYSTEM FOR SPARKS.** 1) Connect the spark plug to ignition coil. 2) Release the fuel pressure. <Ref. to FU(H4DOTC)-66, RELEASING OF FUEL PRESSURE, PROCEDURE, Fuel.> 3) Contact the spark plug thread portion to engine. 4) While opening the throttle valve fully, crank the engine to check that spark occurs at each cylinder.	Does spark occur at each cylinder?	Check fuel pump system. <Ref. to EN(H4DOTC)(diag)-70, FUEL PUMP CIRCUIT, Diagnostics for Engine Starting Failure.>	Go to step **3**.
3	**CHECK IGNITION COIL POWER SUPPLY CIRCUIT.** 1) Turn the ignition switch to OFF. 2) Disconnect the connector from ignition coil. 3) Turn the ignition switch to ON. 4) Measure the voltage between ignition coil connector and engine ground. ***Connector & terminal*** ***(E31) No. 3 (+) — Engine ground (–):*** ***(E32) No. 3 (+) — Engine ground (–):*** ***(E33) No. 3 (+) — Engine ground (–):*** ***(E34) No. 3 (+) — Engine ground (–):***	Is the voltage 10 V or more?	Go to step **4**.	Repair the harness and connector. NOTE: In this case, repair the following item: • Open circuit or short circuit to ground in power supply circuit • Poor contact of coupling connector • Blown out of fuse (F/B No. 12)
4	**CHECK HARNESS OF IGNITION COIL GROUND CIRCUIT.** 1) Turn the ignition switch to OFF. 2) Measure the resistance of harness between ignition coil connector and engine ground. ***Connector & terminal*** ***(E31) No. 2 — Engine ground:*** ***(E32) No. 2 — Engine ground:*** ***(E33) No. 2 — Engine ground:*** ***(E34) No. 2 — Engine ground:***	Is the resistance less than 5 Ω?	Go to step **5**.	Repair the open circuit in harness between ignition coil connector and engine grounding terminal.
5	**CHECK HARNESS BETWEEN ECM AND IGNITION COIL CONNECTOR.** 1) Disconnect the connectors from ECM. 2) Measure the resistance of harness between ECM and ignition coil connector. ***Connector & terminal*** ***(B134) No. 21 — (E31) No. 1:*** ***(B134) No. 22 — (E32) No. 1:*** ***(B134) No. 31 — (E33) No. 1:*** ***(B134) No. 32 — (E34) No. 1:***	Is the resistance less than 1 Ω?	Go to step **6**.	Repair the harness and connector. NOTE: In this case, repair the following item: • Open circuit of harness between ECM and ignition coil connector • Poor contact of coupling connector
6	**CHECK HARNESS BETWEEN ECM AND IGNITION COIL CONNECTOR.** Measure the resistance of harness between ECM and engine ground. ***Connector & terminal*** ***(B134) No. 21 — Engine ground:*** ***(B134) No. 22 — Engine ground:*** ***(B134) No. 31 — Engine ground:*** ***(B134) No. 32 — Engine ground:***	Is the resistance 1 MΩ or more?	Go to step **7**.	Repair the ground short circuit of harness between ECM and ignition coil connector.
7	**CHECK FOR POOR CONTACT.** Check for poor contact of ECM connector.	Is there poor contact of ECM connector?	Repair the poor contact of ECM connector.	Replace the ignition coil. <Ref. to IG(H4DOTC)-6, Ignition Coil.>

GET the MANUALS.org

E: FUEL PUMP CIRCUIT

CAUTION:
After servicing or replacing faulty parts, perform Clear Memory Mode <Ref. to EN(H4DOTC)(diag)-53, OPERATION, Clear Memory Mode.>, and Inspection Mode <Ref. to EN(H4DOTC)(diag)-41, PROCEDURE, Inspection Mode.>.

Step		Check	Yes	No
1	**CHECK OPERATING SOUND OF FUEL PUMP.** Make sure that the fuel pump operates for two seconds when turning the ignition switch to ON. NOTE: Fuel pump operation can be executed using the Subaru Select Monitor. For detailed procedures, refer to “SYSTEM OPERATION CHECK MODE”. <Ref. to EN(H4DOTC)(diag)-54, System Operation Check Mode.>	Does the fuel pump emit operating sound?	Check the fuel injector circuit. <Ref. to EN(H4DOTC)(diag)-71, FUEL INJECTOR CIRCUIT, Diagnostics for Engine Starting Failure.>	Display the DTC. <Ref. to EN(H4DOTC)(diag)-40, OPERATION, Read Diagnostic Trouble Code (DTC).>

GET THE MANUALS.org

F: FUEL INJECTOR CIRCUIT

CAUTION:
- **Check or repair only faulty parts.**
- **After servicing or replacing faulty parts, perform Clear Memory Mode <Ref. to EN(H4DOTC)(diag)-53, OPERATION, Clear Memory Mode.>, and Inspection Mode <Ref. to EN(H4DOTC)(diag)-41, PROCEDURE, Inspection Mode.>.**

WIRING DIAGRAM:

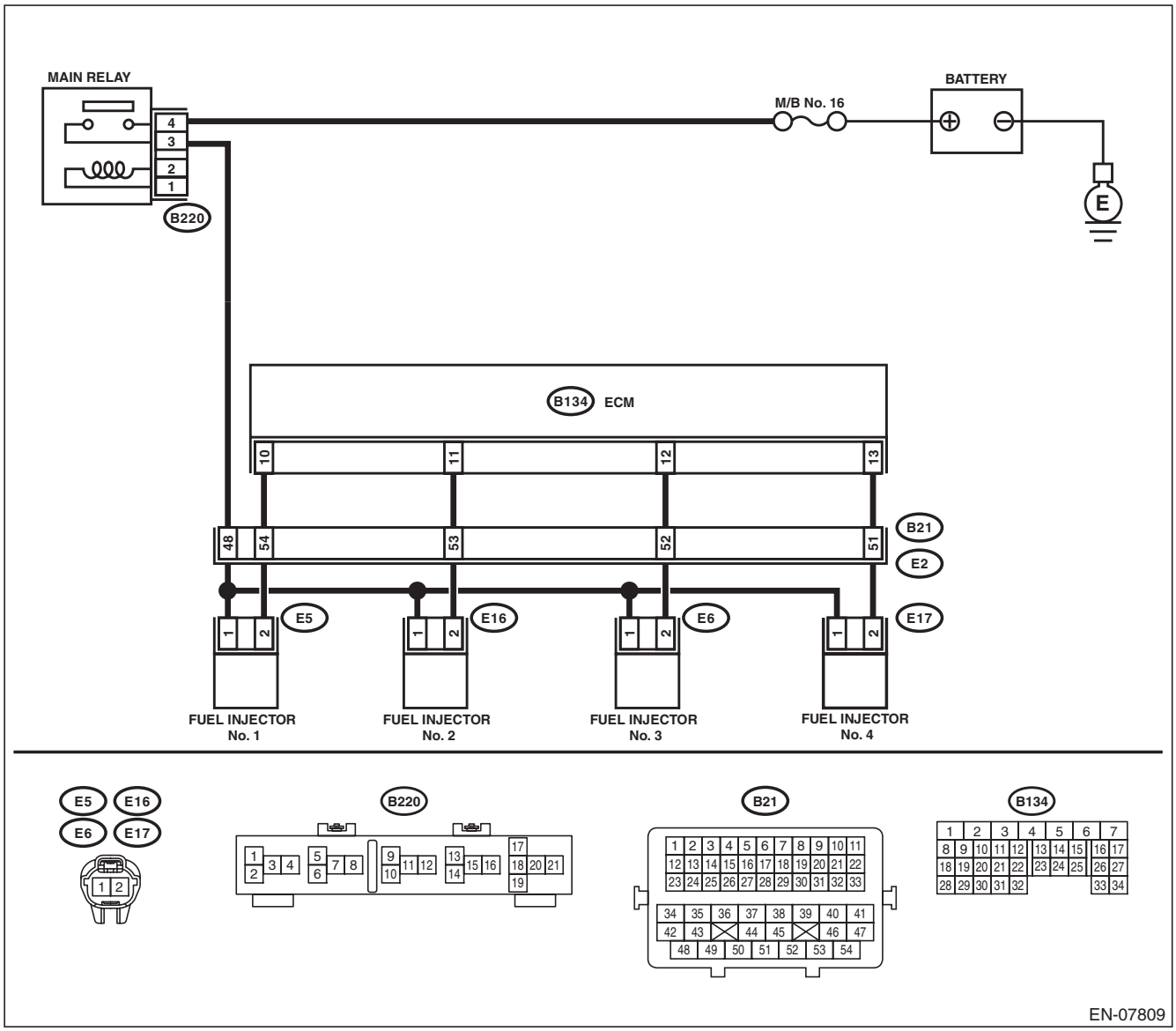

Step		Check	Yes	No
1	**CHECK OPERATION OF EACH FUEL INJECTOR.** While cranking the engine, check each fuel injector emits operating sound. Use a sound scope or attach a screwdriver to the injector for this check.	Does the fuel injector emit operating sound?	Check the fuel pressure. <Ref. to ME(H4DOTC)-26, INSPECTION, Fuel Pressure.>	Go to step **2**.

GET THE MANUALS.org

	Step	Check	Yes	No
2	**CHECK POWER SUPPLY TO EACH FUEL INJECTOR.** 1) Turn the ignition switch to OFF. 2) Disconnect the connector from fuel injector. 3) Turn the ignition switch to ON. 4) Measure the voltage between fuel injector connector and the engine ground. ***Connector & terminal*** ***#1 (E5) No. 1 (+) — Engine ground (–):*** ***#2 (E16) No. 1 (+) — Engine ground (–):*** ***#3 (E6) No. 1 (+) — Engine ground (–):*** ***#4 (E17) No. 1 (+) — Engine ground (–):***	Is the voltage 10 V or more?	Go to step **3**.	Repair the harness and connector. NOTE: In this case, repair the following item: • Open circuit in harness between main relay and fuel injector connector • Poor contact of main relay connector • Poor contact of coupling connector
3	**CHECK HARNESS BETWEEN ECM AND FUEL INJECTOR CONNECTOR.** 1) Turn the ignition switch to OFF. 2) Disconnect the connectors from ECM. 3) Measure the resistance of harness between ECM and fuel injector connector. ***Connector & terminal*** ***#1 (B134) No. 10 — (E5) No. 2:*** ***#2 (B134) No. 11 — (E16) No. 2:*** ***#3 (B134) No. 12 — (E6) No. 2:*** ***#4 (B134) No. 13 — (E17) No. 2:***	Is the resistance less than 1 Ω?	Go to step **4**.	Repair the harness and connector. NOTE: In this case, repair the following item: • Open circuit in harness between ECM and fuel injector connector • Poor contact of coupling connector
4	**CHECK HARNESS BETWEEN ECM AND FUEL INJECTOR CONNECTOR.** Measure the resistance between ECM and chassis ground. ***Connector & terminal*** ***#1 (B134) No. 10 — Chassis ground:*** ***#2 (B134) No. 11 — Chassis ground:*** ***#3 (B134) No. 12 — Chassis ground:*** ***#4 (B134) No. 13 — Chassis ground:***	Is the resistance 1 MΩ or more?	Go to step **5**.	Repair the short circuit to ground in harness between ECM and fuel injector connector.
5	**CHECK EACH FUEL INJECTOR.** Measure the resistance between each fuel injector terminals. ***Terminals*** ***No. 1 — No. 2:***	Is the resistance 5 — 20 Ω?	Go to step **6**.	Replace the faulty fuel injector. <Ref. to FU(H4DOTC)-45, Fuel Injector.>
6	**CHECK FOR POOR CONTACT.** Check for poor contact of ECM connector.	Is there poor contact of ECM connector?	Repair the poor contact of ECM connector.	Inspection using "General Diagnostic Table". <Ref. to EN(H4DOTC)(diag)-339, INSPECTION, General Diagnostic Table.>

GET the MANUALS.org

17. Diagnostic Procedure for Subaru Select Monitor Communication

A: COMMUNICATION FOR INITIALIZING IMPOSSIBLE

DIAGNOSIS:
Open or short circuit in data link connector
TROUBLE SYMPTOM:
Subaru Select Monitor communication failure
WIRING DIAGRAM:

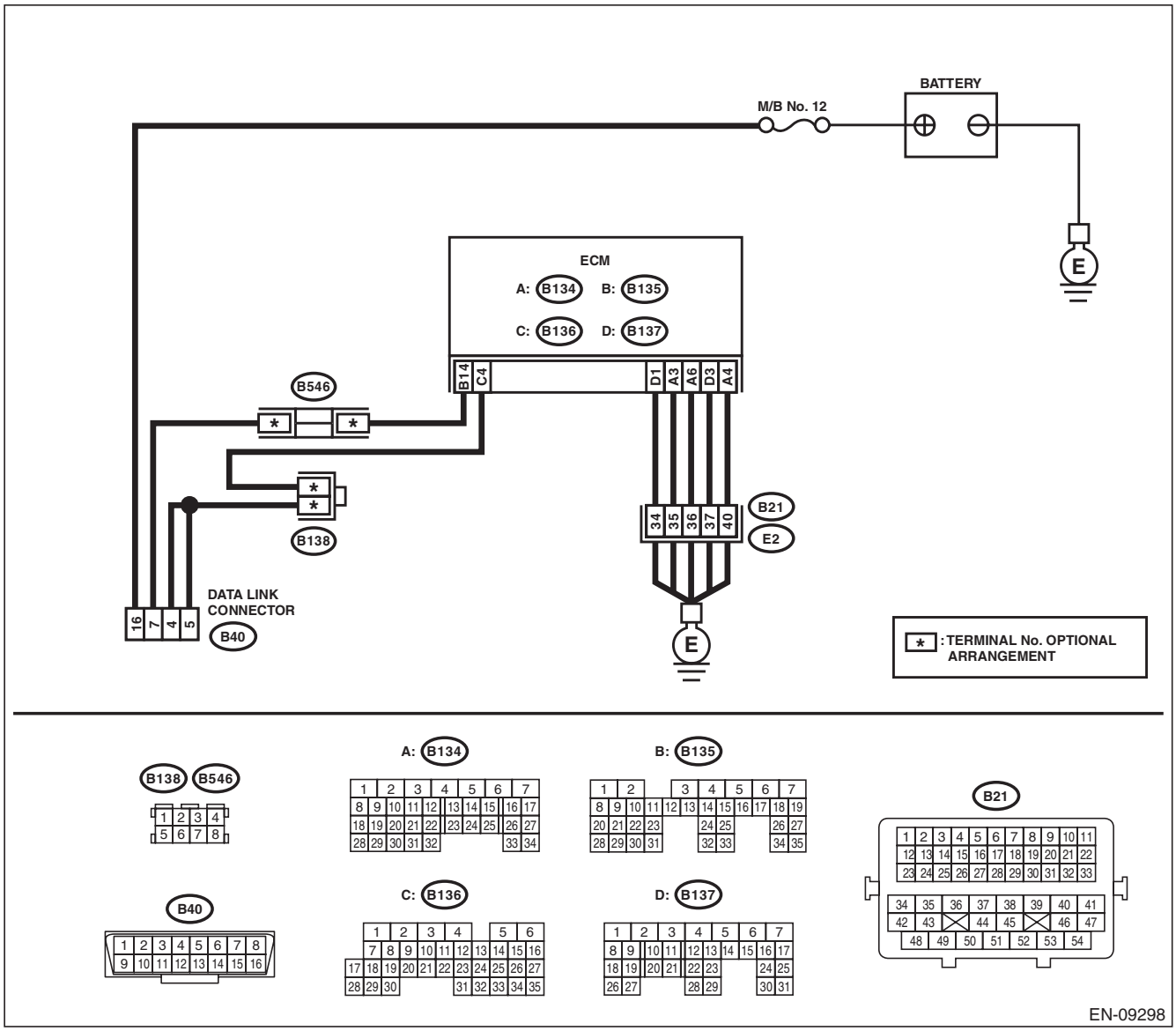

Step		Check	Yes	No
1	**CHECK POWER SUPPLY CIRCUIT.** Connect the SDI (Subaru Diagnosis Interface) or general scan tool to data link connector.	Does SDI or general scan tool turn ON?	Go to step **4**.	Go to step **2**.

GET the MANUALS.org

	Step	Check	Yes	No
2	**CHECK POWER SUPPLY CIRCUIT.** Measure the voltage between data link connector and chassis ground. ***Connector & terminal*** ***(B40) No. 16 (+) — Chassis ground (–):***	Is the voltage 10 V or more?	Go to step **3**.	Repair the power supply circuit. NOTE: In this case, repair the following item: • Open or ground short circuit of harness between battery and data link connector • Blown out of fuse (M/B No. 12)
3	**CHECK HARNESS BETWEEN DATA LINK CONNECTOR AND CHASSIS GROUND.** 1) Turn the ignition switch to OFF. 2) Measure the resistance of harness between data link connector and chassis ground. ***Connector & terminal*** ***(B40) No. 4 — Chassis ground:*** ***(B40) No. 5 — Chassis ground:***	Is the resistance less than 5 Ω?	Repair the poor contact of data link connector.	Repair the harness and connector. NOTE: In this case, repair the following item: • Open circuit of harness between ECM and data link connector • Open circuit of harness between ECM and engine ground • Poor contact of ECM connector • Poor contact of coupling connector
4	**CHECK HARNESS BETWEEN ECM AND DATA LINK CONNECTOR.** 1) Turn the ignition switch to OFF. 2) Disconnect the connector from ECM, TCM, VDC CM, airbag CM and body integrated unit. **CAUTION:** **When disconnecting the connector from airbag CM, always follow the precautions on AB section. <Ref. to AB-9, CAUTION, General Description.>** 3) Measure the resistance of harness between ECM and data link connector. ***Connector & terminal*** ***(B135) No. 14 — (B40) No. 7:***	Is the resistance less than 1 Ω?	Go to step **5**.	Repair the harness and connector. NOTE: In this case, repair the following item: • Open circuit of harness between ECM and data link connector • Poor contact of coupling connector
5	**CHECK HARNESS BETWEEN ECM AND DATA LINK CONNECTOR.** Measure the resistance between data link connector and chassis ground. ***Connector & terminal*** ***(B40) No. 7 — Chassis ground:***	Is the resistance 1 MΩ or more?	Repair the poor contact of the ECM or data link connector.	Repair the ground short circuit of harness between ECM and data link connector.

GET the MANUALS.org

18. List of Diagnostic Trouble Code (DTC)

A: LIST

DTC	Item	Note
P0011	Intake Camshaft Position - Timing Over-Advanced or System Performance (Bank 1)	<Ref. to EN(H4DOTC)(diag)-84, DTC P0011 INTAKE CAMSHAFT POSITION - TIMING OVER-ADVANCED OR SYSTEM PERFORMANCE (BANK 1), Diagnostic Procedure with Diagnostic Trouble Code (DTC).>
P0014	Exhaust AVCS System 1 (Range/ Performance)	<Ref. to EN(H4DOTC)(diag)-85, DTC P0014 EXHAUST AVCS SYSTEM 1 (RANGE/PERFORMANCE), Diagnostic Procedure with Diagnostic Trouble Code (DTC).>
P0016	Crankshaft Position - Camshaft Position Correlation (Bank1)	<Ref. to EN(H4DOTC)(diag)-86, DTC P0016 CRANKSHAFT POSITION - CAMSHAFT POSITION CORRELATION (BANK1), Diagnostic Procedure with Diagnostic Trouble Code (DTC).>
P0017	Crank and Cam Timing B System Failure (Bank 1)	<Ref. to EN(H4DOTC)(diag)-87, DTC P0017 CRANK AND CAM TIMING B SYSTEM FAILURE (BANK 1), Diagnostic Procedure with Diagnostic Trouble Code (DTC).>
P0018	Crankshaft Position - Camshaft Position Correlation (Bank2)	<Ref. to EN(H4DOTC)(diag)-88, DTC P0018 CRANKSHAFT POSITION - CAMSHAFT POSITION CORRELATION (BANK2), Diagnostic Procedure with Diagnostic Trouble Code (DTC).>
P0019	Crank and Cam Timing B System Failure (Bank 2)	<Ref. to EN(H4DOTC)(diag)-89, DTC P0019 CRANK AND CAM TIMING B SYSTEM FAILURE (BANK 2), Diagnostic Procedure with Diagnostic Trouble Code (DTC).>
P0021	Intake Camshaft Position - Timing Over-Advanced or System Performance (Bank 2)	<Ref. to EN(H4DOTC)(diag)-90, DTC P0021 INTAKE CAMSHAFT POSITION - TIMING OVER-ADVANCED OR SYSTEM PERFORMANCE (BANK 2), Diagnostic Procedure with Diagnostic Trouble Code (DTC).>
P0024	Exhaust AVCS System 2 (Range/ Performance)	<Ref. to EN(H4DOTC)(diag)-91, DTC P0024 EXHAUST AVCS SYSTEM 2 (RANGE/PERFORMANCE), Diagnostic Procedure with Diagnostic Trouble Code (DTC).>
P0030	HO2S Heater Control Circuit (Bank 1 Sensor 1)	<Ref. to EN(H4DOTC)(diag)-92, DTC P0030 HO2S HEATER CONTROL CIRCUIT (BANK 1 SENSOR 1), Diagnostic Procedure with Diagnostic Trouble Code (DTC).>
P0031	HO2S Heater Control Circuit Low (Bank 1 Sensor 1)	<Ref. to EN(H4DOTC)(diag)-94, DTC P0031 HO2S HEATER CONTROL CIRCUIT LOW (BANK 1 SENSOR 1), Diagnostic Procedure with Diagnostic Trouble Code (DTC).>
P0032	HO2S Heater Control Circuit High (Bank 1 Sensor 1)	<Ref. to EN(H4DOTC)(diag)-96, DTC P0032 HO2S HEATER CONTROL CIRCUIT HIGH (BANK 1 SENSOR 1), Diagnostic Procedure with Diagnostic Trouble Code (DTC).>
P0037	HO2S Heater Control Circuit Low (Bank 1 Sensor 2)	<Ref. to EN(H4DOTC)(diag)-98, DTC P0037 HO2S HEATER CONTROL CIRCUIT LOW (BANK 1 SENSOR 2), Diagnostic Procedure with Diagnostic Trouble Code (DTC).>
P0038	HO2S Heater Control Circuit High (Bank 1 Sensor 2)	<Ref. to EN(H4DOTC)(diag)-100, DTC P0038 HO2S HEATER CONTROL CIRCUIT HIGH (BANK 1 SENSOR 2), Diagnostic Procedure with Diagnostic Trouble Code (DTC).>
P0068	MAP/MAF - Throttle Position Correlation	<Ref. to EN(H4DOTC)(diag)-102, DTC P0068 MAP/MAF - THROTTLE POSITION CORRELATION, Diagnostic Procedure with Diagnostic Trouble Code (DTC).>
P0101	Mass or Volume Air Flow Circuit Range/Performance	<Ref. to EN(H4DOTC)(diag)-103, DTC P0101 MASS OR VOLUME AIR FLOW CIRCUIT RANGE/PERFORMANCE, Diagnostic Procedure with Diagnostic Trouble Code (DTC).>
P0102	Mass or Volume Air Flow Circuit Low Input	<Ref. to EN(H4DOTC)(diag)-104, DTC P0102 MASS OR VOLUME AIR FLOW CIRCUIT LOW INPUT, Diagnostic Procedure with Diagnostic Trouble Code (DTC).>
P0103	Mass or Volume Air Flow Circuit High Input	<Ref. to EN(H4DOTC)(diag)-106, DTC P0103 MASS OR VOLUME AIR FLOW CIRCUIT HIGH INPUT, Diagnostic Procedure with Diagnostic Trouble Code (DTC).>

GET the MANUALS.org

List of Diagnostic Trouble Code (DTC)

DTC	Item	Note
P0107	Manifold Absolute Pressure/Barometric Pressure Circuit Low Input	<Ref. to EN(H4DOTC)(diag)-108, DTC P0107 MANIFOLD ABSOLUTE PRESSURE/BAROMETRIC PRESSURE CIRCUIT LOW INPUT, Diagnostic Procedure with Diagnostic Trouble Code (DTC).>
P0108	Manifold Absolute Pressure/Barometric Pressure Circuit High Input	<Ref. to EN(H4DOTC)(diag)-110, DTC P0108 MANIFOLD ABSOLUTE PRESSURE/BAROMETRIC PRESSURE CIRCUIT HIGH INPUT, Diagnostic Procedure with Diagnostic Trouble Code (DTC).>
P0111	Intake Air Temperature Sensor 1 Circuit Range/Performance	<Ref. to EN(H4DOTC)(diag)-112, DTC P0111 INTAKE AIR TEMPERATURE SENSOR 1 CIRCUIT RANGE/PERFORMANCE, Diagnostic Procedure with Diagnostic Trouble Code (DTC).>
P0112	Intake Air Temperature Sensor 1 Circuit Low	<Ref. to EN(H4DOTC)(diag)-113, DTC P0112 INTAKE AIR TEMPERATURE SENSOR 1 CIRCUIT LOW, Diagnostic Procedure with Diagnostic Trouble Code (DTC).>
P0113	Intake Air Temperature Sensor 1 Circuit High	<Ref. to EN(H4DOTC)(diag)-115, DTC P0113 INTAKE AIR TEMPERATURE SENSOR 1 CIRCUIT HIGH, Diagnostic Procedure with Diagnostic Trouble Code (DTC).>
P0117	Engine Coolant Temperature Circuit Low	<Ref. to EN(H4DOTC)(diag)-117, DTC P0117 ENGINE COOLANT TEMPERATURE CIRCUIT LOW, Diagnostic Procedure with Diagnostic Trouble Code (DTC).>
P0118	Engine Coolant Temperature Circuit High	<Ref. to EN(H4DOTC)(diag)-119, DTC P0118 ENGINE COOLANT TEMPERATURE CIRCUIT HIGH, Diagnostic Procedure with Diagnostic Trouble Code (DTC).>
P0122	Throttle/Pedal Position Sensor/Switch “A” Circuit Low	<Ref. to EN(H4DOTC)(diag)-121, DTC P0122 THROTTLE/PEDAL POSITION SENSOR/SWITCH “A” CIRCUIT LOW, Diagnostic Procedure with Diagnostic Trouble Code (DTC).>
P0123	Throttle/Pedal Position Sensor/Switch “A” Circuit High	<Ref. to EN(H4DOTC)(diag)-123, DTC P0123 THROTTLE/PEDAL POSITION SENSOR/SWITCH “A” CIRCUIT HIGH, Diagnostic Procedure with Diagnostic Trouble Code (DTC).>
P0125	Insufficient Coolant Temperature for Closed Loop Fuel Control	<Ref. to EN(H4DOTC)(diag)-125, DTC P0125 INSUFFICIENT COOLANT TEMPERATURE FOR CLOSED LOOP FUEL CONTROL, Diagnostic Procedure with Diagnostic Trouble Code (DTC).>
P0126	Insufficient Engine Coolant Temperature for Stable Operation	<Ref. to EN(H4DOTC)(diag)-126, DTC P0126 INSUFFICIENT ENGINE COOLANT TEMPERATURE FOR STABLE OPERATION, Diagnostic Procedure with Diagnostic Trouble Code (DTC).>
P0128	Coolant Thermostat (Engine Coolant Temperature Below Thermostat Regulating Temperature)	<Ref. to EN(H4DOTC)(diag)-127, DTC P0128 COOLANT THERMOSTAT (ENGINE COOLANT TEMPERATURE BELOW THERMOSTAT REGULATING TEMPERATURE), Diagnostic Procedure with Diagnostic Trouble Code (DTC).>
P0131	O2 Sensor Circuit Low Voltage (Bank 1 Sensor 1)	<Ref. to EN(H4DOTC)(diag)-128, DTC P0131 O2 SENSOR CIRCUIT LOW VOLTAGE (BANK 1 SENSOR 1), Diagnostic Procedure with Diagnostic Trouble Code (DTC).>
P0132	O2 Sensor Circuit High Voltage (Bank 1 Sensor 1)	<Ref. to EN(H4DOTC)(diag)-130, DTC P0132 O2 SENSOR CIRCUIT HIGH VOLTAGE (BANK 1 SENSOR 1), Diagnostic Procedure with Diagnostic Trouble Code (DTC).>
P0133	O2 Sensor Circuit Slow Response (Bank 1 Sensor 1)	<Ref. to EN(H4DOTC)(diag)-132, DTC P0133 O2 SENSOR CIRCUIT SLOW RESPONSE (BANK 1 SENSOR 1), Diagnostic Procedure with Diagnostic Trouble Code (DTC).>
P0134	O2 Sensor Circuit No Activity Detected (Bank 1 Sensor 1)	<Ref. to EN(H4DOTC)(diag)-133, DTC P0134 O2 SENSOR CIRCUIT NO ACTIVITY DETECTED (BANK 1 SENSOR 1), Diagnostic Procedure with Diagnostic Trouble Code (DTC).>
P0137	O2 Sensor Circuit Low Voltage (Bank 1 Sensor 2)	<Ref. to EN(H4DOTC)(diag)-135, DTC P0137 O2 SENSOR CIRCUIT LOW VOLTAGE (BANK 1 SENSOR 2), Diagnostic Procedure with Diagnostic Trouble Code (DTC).>
P0138	O2 Sensor Circuit High Voltage (Bank 1 Sensor 2)	<Ref. to EN(H4DOTC)(diag)-137, DTC P0138 O2 SENSOR CIRCUIT HIGH VOLTAGE (BANK 1 SENSOR 2), Diagnostic Procedure with Diagnostic Trouble Code (DTC).>

GET the MANUALS.org

DTC	Item	Note
P013A	O2 Sensor Slow Response - Rich to Lean (Bank 1 Sensor 2)	<Ref. to EN(H4DOTC)(diag)-139, DTC P013A O2 SENSOR SLOW RESPONSE - RICH TO LEAN (BANK 1 SENSOR 2), Diagnostic Procedure with Diagnostic Trouble Code (DTC).>
P013B	O2 Sensor Slow Response - Lean to Rich (Bank 1 Sensor 2)	<Ref. to EN(H4DOTC)(diag)-140, DTC P013B O2 SENSOR SLOW RESPONSE - LEAN TO RICH (BANK 1 SENSOR 2), Diagnostic Procedure with Diagnostic Trouble Code (DTC).>
P013E	O2 Sensor Delayed Response - Rich to Lean (Bank 1 Sensor 2)	<Ref. to EN(H4DOTC)(diag)-140, DTC P013E O2 SENSOR DELAYED RESPONSE - RICH TO LEAN (BANK 1 SENSOR 2), Diagnostic Procedure with Diagnostic Trouble Code (DTC).>
P013F	O2 Sensor Delayed Response - Lean to Rich (Bank 1 Sensor 2)	<Ref. to EN(H4DOTC)(diag)-140, DTC P013F O2 SENSOR DELAYED RESPONSE - LEAN TO RICH (BANK 1 SENSOR 2), Diagnostic Procedure with Diagnostic Trouble Code (DTC).>
P0140	O2 Sensor Circuit No Activity Detected (Bank1 Sensor2)	<Ref. to EN(H4DOTC)(diag)-141, DTC P0140 O2 SENSOR CIRCUIT NO ACTIVITY DETECTED (BANK1 SENSOR2), Diagnostic Procedure with Diagnostic Trouble Code (DTC).>
P0141	O2 Sensor Heater Circuit (Bank1 Sensor2)	<Ref. to EN(H4DOTC)(diag)-143, DTC P0141 O2 SENSOR HEATER CIRCUIT (BANK1 SENSOR2), Diagnostic Procedure with Diagnostic Trouble Code (DTC).>
P0171	System Too Lean (Bank 1)	<Ref. to EN(H4DOTC)(diag)-143, DTC P0171 SYSTEM TOO LEAN (BANK 1), Diagnostic Procedure with Diagnostic Trouble Code (DTC).>
P0172	System Too Rich (Bank 1)	<Ref. to EN(H4DOTC)(diag)-144, DTC P0172 SYSTEM TOO RICH (BANK 1), Diagnostic Procedure with Diagnostic Trouble Code (DTC).>
P0181	Fuel Temperature Sensor “A” Circuit Range/Performance	<Ref. to EN(H4DOTC)(diag)-146, DTC P0181 FUEL TEMPERATURE SENSOR “A” CIRCUIT RANGE/PERFORMANCE, Diagnostic Procedure with Diagnostic Trouble Code (DTC).>
P0182	Fuel Temperature Sensor “A” Circuit Low Input	<Ref. to EN(H4DOTC)(diag)-147, DTC P0182 FUEL TEMPERATURE SENSOR “A” CIRCUIT LOW INPUT, Diagnostic Procedure with Diagnostic Trouble Code (DTC).>
P0183	Fuel Temperature Sensor “A” Circuit High Input	<Ref. to EN(H4DOTC)(diag)-149, DTC P0183 FUEL TEMPERATURE SENSOR “A” CIRCUIT HIGH INPUT, Diagnostic Procedure with Diagnostic Trouble Code (DTC).>
P0201	Injector #1	<Ref. to EN(H4DOTC)(diag)-151, DTC P0201 INJECTOR #1, Diagnostic Procedure with Diagnostic Trouble Code (DTC).>
P0202	Injector #2	<Ref. to EN(H4DOTC)(diag)-153, DTC P0202 INJECTOR #2, Diagnostic Procedure with Diagnostic Trouble Code (DTC).>
P0203	Injector #3	<Ref. to EN(H4DOTC)(diag)-153, DTC P0203 INJECTOR #3, Diagnostic Procedure with Diagnostic Trouble Code (DTC).>
P0204	Injector #4	<Ref. to EN(H4DOTC)(diag)-153, DTC P0204 INJECTOR #4, Diagnostic Procedure with Diagnostic Trouble Code (DTC).>
P0222	Throttle/Pedal Position Sensor/Switch “B” Circuit Low	<Ref. to EN(H4DOTC)(diag)-154, DTC P0222 THROTTLE/PEDAL POSITION SENSOR/SWITCH “B” CIRCUIT LOW, Diagnostic Procedure with Diagnostic Trouble Code (DTC).>
P0223	Throttle/Pedal Position Sensor/Switch “B” Circuit High	<Ref. to EN(H4DOTC)(diag)-156, DTC P0223 THROTTLE/PEDAL POSITION SENSOR/SWITCH “B” CIRCUIT HIGH, Diagnostic Procedure with Diagnostic Trouble Code (DTC).>
P0230	Fuel Pump Primary Circuit	<Ref. to EN(H4DOTC)(diag)-158, DTC P0230 FUEL PUMP PRIMARY CIRCUIT, Diagnostic Procedure with Diagnostic Trouble Code (DTC).>
P0244	Turbo/Super Charger Wastegate Solenoid “A” Range/Performance	<Ref. to EN(H4DOTC)(diag)-161, DTC P0244 TURBO/SUPER CHARGER WASTEGATE SOLENOID “A” RANGE/PERFORMANCE, Diagnostic Procedure with Diagnostic Trouble Code (DTC).>
P0245	Turbo/Super Charger Wastegate Solenoid “A” Low	<Ref. to EN(H4DOTC)(diag)-162, DTC P0245 TURBO/SUPER CHARGER WASTEGATE SOLENOID “A” LOW, Diagnostic Procedure with Diagnostic Trouble Code (DTC).>
P0246	Turbo/Super Charger Wastegate Solenoid “A” High	<Ref. to EN(H4DOTC)(diag)-165, DTC P0246 TURBO/SUPER CHARGER WASTEGATE SOLENOID “A” HIGH, Diagnostic Procedure with Diagnostic Trouble Code (DTC).>

GET the MANUALS.org

List of Diagnostic Trouble Code (DTC)

DTC	Item	Note
P0301	Cylinder 1 Misfire Detected	<Ref. to EN(H4DOTC)(diag)-166, DTC P0301 CYLINDER 1 MISFIRE DETECTED, Diagnostic Procedure with Diagnostic Trouble Code (DTC).>
P0302	Cylinder 2 Misfire Detected	<Ref. to EN(H4DOTC)(diag)-166, DTC P0302 CYLINDER 2 MISFIRE DETECTED, Diagnostic Procedure with Diagnostic Trouble Code (DTC).>
P0303	Cylinder 3 Misfire Detected	<Ref. to EN(H4DOTC)(diag)-166, DTC P0303 CYLINDER 3 MISFIRE DETECTED, Diagnostic Procedure with Diagnostic Trouble Code (DTC).>
P0304	Cylinder 4 Misfire Detected	<Ref. to EN(H4DOTC)(diag)-167, DTC P0304 CYLINDER 4 MISFIRE DETECTED, Diagnostic Procedure with Diagnostic Trouble Code (DTC).>
P0327	Knock Sensor 1 Circuit Low (Bank 1 or Single Sensor)	<Ref. to EN(H4DOTC)(diag)-172, DTC P0327 KNOCK SENSOR 1 CIRCUIT LOW (BANK 1 OR SINGLE SENSOR), Diagnostic Procedure with Diagnostic Trouble Code (DTC).>
P0328	Knock Sensor 1 Circuit High (Bank 1 or Single Sensor)	<Ref. to EN(H4DOTC)(diag)-174, DTC P0328 KNOCK SENSOR 1 CIRCUIT HIGH (BANK 1 OR SINGLE SENSOR), Diagnostic Procedure with Diagnostic Trouble Code (DTC).>
P0335	Crankshaft Position Sensor “A” Circuit	<Ref. to EN(H4DOTC)(diag)-176, DTC P0335 CRANKSHAFT POSITION SENSOR “A” CIRCUIT, Diagnostic Procedure with Diagnostic Trouble Code (DTC).>
P0336	Crankshaft Position Sensor “A” Circuit Range/Performance	<Ref. to EN(H4DOTC)(diag)-178, DTC P0336 CRANKSHAFT POSITION SENSOR “A” CIRCUIT RANGE/PERFORMANCE, Diagnostic Procedure with Diagnostic Trouble Code (DTC).>
P0340	Camshaft Position Sensor “A” Circuit (Bank 1 or Single Sensor)	<Ref. to EN(H4DOTC)(diag)-179, DTC P0340 CAMSHAFT POSITION SENSOR “A” CIRCUIT (BANK 1 OR SINGLE SENSOR), Diagnostic Procedure with Diagnostic Trouble Code (DTC).>
P0345	Camshaft Position Sensor “A” Circuit (Bank 2)	<Ref. to EN(H4DOTC)(diag)-181, DTC P0345 CAMSHAFT POSITION SENSOR “A” CIRCUIT (BANK 2), Diagnostic Procedure with Diagnostic Trouble Code (DTC).>
P0351	Ignition Coil A Primary/Secondary Circuit	<Ref. to EN(H4DOTC)(diag)-183, DTC P0351 IGNITION COIL A PRIMARY/SECONDARY CIRCUIT, Diagnostic Procedure with Diagnostic Trouble Code (DTC).>
P0352	Ignition Coil B Primary/Secondary Circuit	<Ref. to EN(H4DOTC)(diag)-185, DTC P0352 IGNITION COIL B PRIMARY/SECONDARY CIRCUIT, Diagnostic Procedure with Diagnostic Trouble Code (DTC).>
P0353	Ignition Coil C Primary/Secondary Circuit	<Ref. to EN(H4DOTC)(diag)-185, DTC P0353 IGNITION COIL C PRIMARY/SECONDARY CIRCUIT, Diagnostic Procedure with Diagnostic Trouble Code (DTC).>
P0354	Ignition Coil D Primary/Secondary Circuit	<Ref. to EN(H4DOTC)(diag)-185, DTC P0354 IGNITION COIL D PRIMARY/SECONDARY CIRCUIT, Diagnostic Procedure with Diagnostic Trouble Code (DTC).>
P0365	Camshaft Position Sensor “B” Circuit (Bank 1)	<Ref. to EN(H4DOTC)(diag)-186, DTC P0365 CAMSHAFT POSITION SENSOR “B” CIRCUIT (BANK 1), Diagnostic Procedure with Diagnostic Trouble Code (DTC).>
P0390	Camshaft Position Sensor “B” Circuit (Bank 2)	<Ref. to EN(H4DOTC)(diag)-188, DTC P0390 CAMSHAFT POSITION SENSOR “B” CIRCUIT (BANK 2), Diagnostic Procedure with Diagnostic Trouble Code (DTC).>
P0420	Catalyst System Efficiency Below Threshold (Bank 1)	<Ref. to EN(H4DOTC)(diag)-190, DTC P0420 CATALYST SYSTEM EFFICIENCY BELOW THRESHOLD (BANK 1), Diagnostic Procedure with Diagnostic Trouble Code (DTC).>
P0442	Evaporative Emission Control System Leak Detected (Small Leak)	<Ref. to EN(H4DOTC)(diag)-194, DTC P0442 EVAPORATIVE EMISSION CONTROL SYSTEM LEAK DETECTED (SMALL LEAK), Diagnostic Procedure with Diagnostic Trouble Code (DTC).>
P0447	Evaporative Emission Control System Vent Control Circuit Open	<Ref. to EN(H4DOTC)(diag)-196, DTC P0447 EVAPORATIVE EMISSION CONTROL SYSTEM VENT CONTROL CIRCUIT OPEN, Diagnostic Procedure with Diagnostic Trouble Code (DTC).>
P0448	Evaporative Emission Control System Vent Control Circuit Shorted	<Ref. to EN(H4DOTC)(diag)-198, DTC P0448 EVAPORATIVE EMISSION CONTROL SYSTEM VENT CONTROL CIRCUIT SHORTED, Diagnostic Procedure with Diagnostic Trouble Code (DTC).>

GET the MANUALS.org

DTC	Item	Note
P0451	Evaporative Emission Control System Pressure Sensor	<Ref. to EN(H4DOTC)(diag)-200, DTC P0451 EVAPORATIVE EMISSION CONTROL SYSTEM PRESSURE SENSOR, Diagnostic Procedure with Diagnostic Trouble Code (DTC).>
P0452	Evaporative Emission Control System Pressure Sensor Low Input	<Ref. to EN(H4DOTC)(diag)-201, DTC P0452 EVAPORATIVE EMISSION CONTROL SYSTEM PRESSURE SENSOR LOW INPUT, Diagnostic Procedure with Diagnostic Trouble Code (DTC).>
P0453	Evaporative Emission Control System Pressure Sensor High Input	<Ref. to EN(H4DOTC)(diag)-203, DTC P0453 EVAPORATIVE EMISSION CONTROL SYSTEM PRESSURE SENSOR HIGH INPUT, Diagnostic Procedure with Diagnostic Trouble Code (DTC).>
P0456	Evaporative Emission Control System Leak Detected (Very Small Leak)	<Ref. to EN(H4DOTC)(diag)-205, DTC P0456 EVAPORATIVE EMISSION CONTROL SYSTEM LEAK DETECTED (VERY SMALL LEAK), Diagnostic Procedure with Diagnostic Trouble Code (DTC).>
P0457	Evaporative Emission Control System Leak Detected (Fuel Cap Loose/Off)	<Ref. to EN(H4DOTC)(diag)-207, DTC P0457 EVAPORATIVE EMISSION CONTROL SYSTEM LEAK DETECTED (FUEL CAP LOOSE/OFF), Diagnostic Procedure with Diagnostic Trouble Code (DTC).>
P0458	Evaporative Emission System Purge Control Valve Circuit Low	<Ref. to EN(H4DOTC)(diag)-209, DTC P0458 EVAPORATIVE EMISSION SYSTEM PURGE CONTROL VALVE CIRCUIT LOW, Diagnostic Procedure with Diagnostic Trouble Code (DTC).>
P0459	Evaporative Emission System Purge Control Valve Circuit High	<Ref. to EN(H4DOTC)(diag)-211, DTC P0459 EVAPORATIVE EMISSION SYSTEM PURGE CONTROL VALVE CIRCUIT HIGH, Diagnostic Procedure with Diagnostic Trouble Code (DTC).>
P0461	Fuel Level Sensor “A” Circuit Range/Performance	<Ref. to EN(H4DOTC)(diag)-213, DTC P0461 FUEL LEVEL SENSOR “A” CIRCUIT RANGE/PERFORMANCE, Diagnostic Procedure with Diagnostic Trouble Code (DTC).>
P0462	Fuel Level Sensor “A” Circuit Low	<Ref. to EN(H4DOTC)(diag)-213, DTC P0462 FUEL LEVEL SENSOR “A” CIRCUIT LOW, Diagnostic Procedure with Diagnostic Trouble Code (DTC).>
P0463	Fuel Level Sensor “A” Circuit High	<Ref. to EN(H4DOTC)(diag)-214, DTC P0463 FUEL LEVEL SENSOR “A” CIRCUIT HIGH, Diagnostic Procedure with Diagnostic Trouble Code (DTC).>
P0464	Fuel Level Sensor Circuit Intermittent	<Ref. to EN(H4DOTC)(diag)-215, DTC P0464 FUEL LEVEL SENSOR CIRCUIT INTERMITTENT, Diagnostic Procedure with Diagnostic Trouble Code (DTC).>
P0500	Vehicle Speed Sensor “A”	<Ref. to EN(H4DOTC)(diag)-215, DTC P0500 VEHICLE SPEED SENSOR “A”, Diagnostic Procedure with Diagnostic Trouble Code (DTC).>
P0506	Idle Air Control System RPM Lower Than Expected	<Ref. to EN(H4DOTC)(diag)-216, DTC P0506 IDLE AIR CONTROL SYSTEM RPM LOWER THAN EXPECTED, Diagnostic Procedure with Diagnostic Trouble Code (DTC).>
P0507	Idle Air Control System RPM Higher Than Expected	<Ref. to EN(H4DOTC)(diag)-217, DTC P0507 IDLE AIR CONTROL SYSTEM RPM HIGHER THAN EXPECTED, Diagnostic Procedure with Diagnostic Trouble Code (DTC).>
P050A	Cold Start Idle Air Control System Performance	<Ref. to EN(H4DOTC)(diag)-218, DTC P050A COLD START IDLE AIR CONTROL SYSTEM PERFORMANCE, Diagnostic Procedure with Diagnostic Trouble Code (DTC).>
P050B	Cold Start Ignition Timing Performance	<Ref. to EN(H4DOTC)(diag)-226, DTC P050B COLD START IGNITION TIMING PERFORMANCE, Diagnostic Procedure with Diagnostic Trouble Code (DTC).>
P0512	Starter Request Circuit	<Ref. to EN(H4DOTC)(diag)-227, DTC P0512 STARTER REQUEST CIRCUIT, Diagnostic Procedure with Diagnostic Trouble Code (DTC).>
P0513	Incorrect Immobilizer Key	<Ref. to IM(diag)-16, DTC P0513 INCORRECT IMMOBILIZER KEY, Diagnostic Procedure with Diagnostic Trouble Code (DTC).>
P0604	Internal Control Module Random Access Memory (RAM) Error	<Ref. to EN(H4DOTC)(diag)-229, DTC P0604 INTERNAL CONTROL MODULE RANDOM ACCESS MEMORY (RAM) ERROR, Diagnostic Procedure with Diagnostic Trouble Code (DTC).>
P0605	Internal Control Module Read Only Memory (ROM) Error	<Ref. to EN(H4DOTC)(diag)-229, DTC P0605 INTERNAL CONTROL MODULE READ ONLY MEMORY (ROM) ERROR, Diagnostic Procedure with Diagnostic Trouble Code (DTC).>

GET the MANUALS.org

List of Diagnostic Trouble Code (DTC)

DTC	Item	Note
P0607	Throttle Control System Circuit Range/Performance	<Ref. to EN(H4DOTC)(diag)-230, DTC P0607 THROTTLE CONTROL SYSTEM CIRCUIT RANGE/PERFORMANCE, Diagnostic Procedure with Diagnostic Trouble Code (DTC).>
P0638	Throttle Actuator Control Range/ Performance (Bank 1)	<Ref. to EN(H4DOTC)(diag)-231, DTC P0638 THROTTLE ACTUATOR CONTROL RANGE/PERFORMANCE (BANK 1), Diagnostic Procedure with Diagnostic Trouble Code (DTC).>
P0851	Neutral Switch Input Circuit Low (MT Model)	<Ref. to EN(H4DOTC)(diag)-232, DTC P0851 NEUTRAL SWITCH INPUT CIRCUIT LOW (MT MODEL), Diagnostic Procedure with Diagnostic Trouble Code (DTC).>
P0852	Neutral Switch Input Circuit High (MT Model)	<Ref. to EN(H4DOTC)(diag)-234, DTC P0852 NEUTRAL SWITCH INPUT CIRCUIT HIGH (MT MODEL), Diagnostic Procedure with Diagnostic Trouble Code (DTC).>
P1152	O2 Sensor Circuit Range/Performance (Low) (Bank1 Sensor1)	<Ref. to EN(H4DOTC)(diag)-236, DTC P1152 O2 SENSOR CIRCUIT RANGE/PERFORMANCE (LOW) (BANK1 SENSOR1), Diagnostic Procedure with Diagnostic Trouble Code (DTC).>
P1153	O2 Sensor Circuit Range/Performance (High) (Bank1 Sensor1)	<Ref. to EN(H4DOTC)(diag)-238, DTC P1153 O2 SENSOR CIRCUIT RANGE/PERFORMANCE (HIGH) (BANK1 SENSOR1), Diagnostic Procedure with Diagnostic Trouble Code (DTC).>
P1160	Return Spring Failure	<Ref. to EN(H4DOTC)(diag)-239, DTC P1160 RETURN SPRING FAILURE, Diagnostic Procedure with Diagnostic Trouble Code (DTC).>
P1400	Fuel Tank Pressure Control Solenoid Valve Circuit Low	<Ref. to EN(H4DOTC)(diag)-240, DTC P1400 FUEL TANK PRESSURE CONTROL SOLENOID VALVE CIRCUIT LOW, Diagnostic Procedure with Diagnostic Trouble Code (DTC).>
P1420	Fuel Tank Pressure Control Sol. Valve Circuit High	<Ref. to EN(H4DOTC)(diag)-242, DTC P1420 FUEL TANK PRESSURE CONTROL SOL. VALVE CIRCUIT HIGH, Diagnostic Procedure with Diagnostic Trouble Code (DTC).>
P1443	Vent Control Solenoid Valve Function Problem	<Ref. to EN(H4DOTC)(diag)-244, DTC P1443 VENT CONTROL SOLENOID VALVE FUNCTION PROBLEM, Diagnostic Procedure with Diagnostic Trouble Code (DTC).>
P1458	Canister Purge Control Solenoid Valve 2	<Ref. to EN(H4DOTC)(diag)-245, DTC P1458 CANISTER PURGE CONTROL SOLENOID VALVE 2, Diagnostic Procedure with Diagnostic Trouble Code (DTC).>
P1459	Canister Purge Control Solenoid Valve 2	<Ref. to EN(H4DOTC)(diag)-247, DTC P1459 CANISTER PURGE CONTROL SOLENOID VALVE 2, Diagnostic Procedure with Diagnostic Trouble Code (DTC).>
P1518	Starter Switch Circuit Low Input	<Ref. to EN(H4DOTC)(diag)-249, DTC P1518 STARTER SWITCH CIRCUIT LOW INPUT, Diagnostic Procedure with Diagnostic Trouble Code (DTC).>
P1560	Back-Up Voltage Circuit Malfunction	<Ref. to EN(H4DOTC)(diag)-251, DTC P1560 BACK-UP VOLTAGE CIRCUIT MALFUNCTION, Diagnostic Procedure with Diagnostic Trouble Code (DTC).>
P1570	Antenna	<Ref. to IM(diag)-17, DTC P1570 ANTENNA, Diagnostic Procedure with Diagnostic Trouble Code (DTC).>
P1571	Reference Code Incompatibility	<Ref. to IM(diag)-19, DTC P1571 REFERENCE CODE INCOMPATIBILITY, Diagnostic Procedure with Diagnostic Trouble Code (DTC).>
P1572	IMM Circuit Failure (Except Antenna Circuit)	<Ref. to IM(diag)-20, DTC P1572 IMM CIRCUIT FAILURE (EXCEPT ANTENNA CIRCUIT), Diagnostic Procedure with Diagnostic Trouble Code (DTC).>
P1574	Key Communication Failure	<Ref. to IM(diag)-22, DTC P1574 KEY COMMUNICATION FAILURE, Diagnostic Procedure with Diagnostic Trouble Code (DTC).>
P1576	EGI Control Module EEPROM	<Ref. to IM(diag)-22, DTC P1576 EGI CONTROL MODULE EEPROM, Diagnostic Procedure with Diagnostic Trouble Code (DTC).>
P1577	IMM Control Module EEPROM	<Ref. to IM(diag)-23, DTC P1577 IMM CONTROL MODULE EEPROM, Diagnostic Procedure with Diagnostic Trouble Code (DTC).>
P1578	Meter Failure	<Ref. to IM(diag)-24, DTC P1578 METER FAILURE, Diagnostic Procedure with Diagnostic Trouble Code (DTC).>

GET the MANUALS.org

DTC	Item	Note
P2004	Intake Manifold Runner Control Stuck Open (Bank 1)	<Ref. to EN(H4DOTC)(diag)-253, DTC P2004 INTAKE MANIFOLD RUNNER CONTROL STUCK OPEN (BANK 1), Diagnostic Procedure with Diagnostic Trouble Code (DTC).>
P2005	Intake Manifold Runner Control Stuck Open (Bank 2)	<Ref. to EN(H4DOTC)(diag)-254, DTC P2005 INTAKE MANIFOLD RUNNER CONTROL STUCK OPEN (BANK 2), Diagnostic Procedure with Diagnostic Trouble Code (DTC).>
P2006	Intake Manifold Runner Control Stuck Closed (Bank 1)	<Ref. to EN(H4DOTC)(diag)-255, DTC P2006 INTAKE MANIFOLD RUNNER CONTROL STUCK CLOSED (BANK 1), Diagnostic Procedure with Diagnostic Trouble Code (DTC).>
P2007	Intake Manifold Runner Control Stuck Closed (Bank 2)	<Ref. to EN(H4DOTC)(diag)-256, DTC P2007 INTAKE MANIFOLD RUNNER CONTROL STUCK CLOSED (BANK 2), Diagnostic Procedure with Diagnostic Trouble Code (DTC).>
P2008	Intake Manifold Runner Control Circuit / Open (Bank 1)	<Ref. to EN(H4DOTC)(diag)-257, DTC P2008 INTAKE MANIFOLD RUNNER CONTROL CIRCUIT / OPEN (BANK 1), Diagnostic Procedure with Diagnostic Trouble Code (DTC).>
P2009	Intake Manifold Runner Control Circuit Low (Bank 1)	<Ref. to EN(H4DOTC)(diag)-259, DTC P2009 INTAKE MANIFOLD RUNNER CONTROL CIRCUIT LOW (BANK 1), Diagnostic Procedure with Diagnostic Trouble Code (DTC).>
P2011	Intake Manifold Runner Control Circuit / Open (Bank 2)	<Ref. to EN(H4DOTC)(diag)-261, DTC P2011 INTAKE MANIFOLD RUNNER CONTROL CIRCUIT / OPEN (BANK 2), Diagnostic Procedure with Diagnostic Trouble Code (DTC).>
P2012	Intake Manifold Runner Control Circuit Low (Bank 2)	<Ref. to EN(H4DOTC)(diag)-263, DTC P2012 INTAKE MANIFOLD RUNNER CONTROL CIRCUIT LOW (BANK 2), Diagnostic Procedure with Diagnostic Trouble Code (DTC).>
P2016	Intake Manifold Runner Position Sensor / Switch Circuit Low (Bank 1)	<Ref. to EN(H4DOTC)(diag)-265, DTC P2016 INTAKE MANIFOLD RUNNER POSITION SENSOR / SWITCH CIRCUIT LOW (BANK 1), Diagnostic Procedure with Diagnostic Trouble Code (DTC).>
P2017	Intake Manifold Runner Position Sensor / Switch Circuit High (Bank 1)	<Ref. to EN(H4DOTC)(diag)-267, DTC P2017 INTAKE MANIFOLD RUNNER POSITION SENSOR / SWITCH CIRCUIT HIGH (BANK 1), Diagnostic Procedure with Diagnostic Trouble Code (DTC).>
P2021	Intake Manifold Runner Position Sensor / Switch Circuit Low (Bank 2)	<Ref. to EN(H4DOTC)(diag)-269, DTC P2021 INTAKE MANIFOLD RUNNER POSITION SENSOR / SWITCH CIRCUIT LOW (BANK 2), Diagnostic Procedure with Diagnostic Trouble Code (DTC).>
P2022	Intake Manifold Runner Position Sensor / Switch Circuit High (Bank 2)	<Ref. to EN(H4DOTC)(diag)-271, DTC P2022 INTAKE MANIFOLD RUNNER POSITION SENSOR / SWITCH CIRCUIT HIGH (BANK 2), Diagnostic Procedure with Diagnostic Trouble Code (DTC).>
P2088	Intake Camshaft Position Actuator Control Circuit Low (Bank 1)	<Ref. to EN(H4DOTC)(diag)-273, DTC P2088 INTAKE CAMSHAFT POSITION ACTUATOR CONTROL CIRCUIT LOW (BANK 1), Diagnostic Procedure with Diagnostic Trouble Code (DTC).>
P2089	Intake Camshaft Position Actuator Control Circuit High (Bank 1)	<Ref. to EN(H4DOTC)(diag)-275, DTC P2089 INTAKE CAMSHAFT POSITION ACTUATOR CONTROL CIRCUIT HIGH (BANK 1), Diagnostic Procedure with Diagnostic Trouble Code (DTC).>
P2090	Exhaust Camshaft Position Actuator Control Circuit Low (Bank 1)	<Ref. to EN(H4DOTC)(diag)-277, DTC P2090 EXHAUST CAMSHAFT POSITION ACTUATOR CONTROL CIRCUIT LOW (BANK 1), Diagnostic Procedure with Diagnostic Trouble Code (DTC).>
P2091	Exhaust Camshaft Position Actuator Control Circuit High (Bank 1)	<Ref. to EN(H4DOTC)(diag)-279, DTC P2091 EXHAUST CAMSHAFT POSITION ACTUATOR CONTROL CIRCUIT HIGH (BANK 1), Diagnostic Procedure with Diagnostic Trouble Code (DTC).>
P2092	Intake Camshaft Position Actuator Control Circuit Low (Bank 2)	<Ref. to EN(H4DOTC)(diag)-281, DTC P2092 INTAKE CAMSHAFT POSITION ACTUATOR CONTROL CIRCUIT LOW (BANK 2), Diagnostic Procedure with Diagnostic Trouble Code (DTC).>
P2093	Intake Camshaft Position Actuator Control Circuit High (Bank 2)	<Ref. to EN(H4DOTC)(diag)-283, DTC P2093 INTAKE CAMSHAFT POSITION ACTUATOR CONTROL CIRCUIT HIGH (BANK 2), Diagnostic Procedure with Diagnostic Trouble Code (DTC).>
P2094	Exhaust Camshaft Position Actuator Control Circuit Low (Bank 2)	<Ref. to EN(H4DOTC)(diag)-285, DTC P2094 EXHAUST CAMSHAFT POSITION ACTUATOR CONTROL CIRCUIT LOW (BANK 2), Diagnostic Procedure with Diagnostic Trouble Code (DTC).>

GET the MANUALS.org

DTC	Item	Note
P2095	Exhaust Camshaft Position Actuator Control Circuit High (Bank 2)	<Ref. to EN(H4DOTC)(diag)-287, DTC P2095 EXHAUST CAMSHAFT POSITION ACTUATOR CONTROL CIRCUIT HIGH (BANK 2), Diagnostic Procedure with Diagnostic Trouble Code (DTC).>
P2096	Post Catalyst Fuel Trim System Too Lean (Bank 1)	<Ref. to EN(H4DOTC)(diag)-289, DTC P2096 POST CATALYST FUEL TRIM SYSTEM TOO LEAN (BANK 1), Diagnostic Procedure with Diagnostic Trouble Code (DTC).>
P2097	Post Catalyst Fuel Trim System Too Rich (Bank 1)	<Ref. to EN(H4DOTC)(diag)-296, DTC P2097 POST CATALYST FUEL TRIM SYSTEM TOO RICH (BANK 1), Diagnostic Procedure with Diagnostic Trouble Code (DTC).>
P2101	Throttle Actuator Control Motor Circuit Range/Performance	<Ref. to EN(H4DOTC)(diag)-303, DTC P2101 THROTTLE ACTUATOR CONTROL MOTOR CIRCUIT RANGE/PERFORMANCE, Diagnostic Procedure with Diagnostic Trouble Code (DTC).>
P2102	Throttle Actuator Control Motor Circuit Low	<Ref. to EN(H4DOTC)(diag)-308, DTC P2102 THROTTLE ACTUATOR CONTROL MOTOR CIRCUIT LOW, Diagnostic Procedure with Diagnostic Trouble Code (DTC).>
P2103	Throttle Actuator Control Motor Circuit High	<Ref. to EN(H4DOTC)(diag)-310, DTC P2103 THROTTLE ACTUATOR CONTROL MOTOR CIRCUIT HIGH, Diagnostic Procedure with Diagnostic Trouble Code (DTC).>
P2109	Throttle/Pedal Position Sensor “A” Minimum Stop Performance	<Ref. to EN(H4DOTC)(diag)-311, DTC P2109 THROTTLE/PEDAL POSITION SENSOR “A” MINIMUM STOP PERFORMANCE, Diagnostic Procedure with Diagnostic Trouble Code (DTC).>
P2122	Throttle/Pedal Position Sensor/Switch “D” Circuit Low Input	<Ref. to EN(H4DOTC)(diag)-312, DTC P2122 THROTTLE/PEDAL POSITION SENSOR/SWITCH “D” CIRCUIT LOW INPUT, Diagnostic Procedure with Diagnostic Trouble Code (DTC).>
P2123	Throttle/Pedal Position Sensor/Switch “D” Circuit High Input	<Ref. to EN(H4DOTC)(diag)-314, DTC P2123 THROTTLE/PEDAL POSITION SENSOR/SWITCH “D” CIRCUIT HIGH INPUT, Diagnostic Procedure with Diagnostic Trouble Code (DTC).>
P2127	Throttle/Pedal Position Sensor/Switch “E” Circuit Low Input	<Ref. to EN(H4DOTC)(diag)-316, DTC P2127 THROTTLE/PEDAL POSITION SENSOR/SWITCH “E” CIRCUIT LOW INPUT, Diagnostic Procedure with Diagnostic Trouble Code (DTC).>
P2128	Throttle/Pedal Position Sensor/Switch “E” Circuit High Input	<Ref. to EN(H4DOTC)(diag)-318, DTC P2128 THROTTLE/PEDAL POSITION SENSOR/SWITCH “E” CIRCUIT HIGH INPUT, Diagnostic Procedure with Diagnostic Trouble Code (DTC).>
P2135	Throttle/Pedal Position Sensor/Switch “A”/“B” Voltage Correlation	<Ref. to EN(H4DOTC)(diag)-320, DTC P2135 THROTTLE/PEDAL POSITION SENSOR/SWITCH “A”/“B” VOLTAGE CORRELATION, Diagnostic Procedure with Diagnostic Trouble Code (DTC).>
P2138	Throttle/Pedal Position Sensor/Switch “D”/“E” Voltage Correlation	<Ref. to EN(H4DOTC)(diag)-323, DTC P2138 THROTTLE/PEDAL POSITION SENSOR/SWITCH “D”/“E” VOLTAGE CORRELATION, Diagnostic Procedure with Diagnostic Trouble Code (DTC).>
P219A	Bank 1 Air-Fuel Ratio Imbalance	<Ref. to EN(H4DOTC)(diag)-325, DTC P219A BANK 1 AIR-FUEL RATIO IMBALANCE, Diagnostic Procedure with Diagnostic Trouble Code (DTC).>
P2227	Barometric Pressure Circuit Range/Performance	<Ref. to EN(H4DOTC)(diag)-336, DTC P2227 BAROMETRIC PRESSURE CIRCUIT RANGE/PERFORMANCE, Diagnostic Procedure with Diagnostic Trouble Code (DTC).>
P2228	Barometric Pressure Circuit Low	<Ref. to EN(H4DOTC)(diag)-336, DTC P2228 BAROMETRIC PRESSURE CIRCUIT LOW, Diagnostic Procedure with Diagnostic Trouble Code (DTC).>
P2229	Barometric Pressure Circuit High	<Ref. to EN(H4DOTC)(diag)-337, DTC P2229 BAROMETRIC PRESSURE CIRCUIT HIGH, Diagnostic Procedure with Diagnostic Trouble Code (DTC).>
P2610	ECM/PCM Internal Engine Off Timer Performance	<Ref. to EN(H4DOTC)(diag)-337, DTC P2610 ECM/PCM INTERNAL ENGINE OFF TIMER PERFORMANCE, Diagnostic Procedure with Diagnostic Trouble Code (DTC).>
U0073	CAN Failure, Bus ‘Off’ Detection	<Ref. to EN(H4DOTC)(diag)-338, DTC U0073 CAN FAILURE, BUS ‘OFF’ DETECTION, Diagnostic Procedure with Diagnostic Trouble Code (DTC).>
U0101	CAN (TCU) Data Not Loaded	<Ref. to EN(H4DOTC)(diag)-338, DTC U0101 CAN (TCU) DATA NOT LOADED, Diagnostic Procedure with Diagnostic Trouble Code (DTC).>

GET the MANUALS.org

DTC	Item	Note
U0122	CAN (VDC) Data Not Loaded	<Ref. to EN(H4DOTC)(diag)-338, DTC U0122 CAN (VDC) DATA NOT LOADED, Diagnostic Procedure with Diagnostic Trouble Code (DTC).>
U0140	CAN (BCU) Data Not Loaded	<Ref. to EN(H4DOTC)(diag)-338, DTC U0140 CAN (BCU) DATA NOT LOADED, Diagnostic Procedure with Diagnostic Trouble Code (DTC).>
U0402	CAN (TCU) Data Abnormal	<Ref. to EN(H4DOTC)(diag)-338, DTC U0402 CAN (TCU) DATA ABNORMAL, Diagnostic Procedure with Diagnostic Trouble Code (DTC).>
U0416	CAN (VDC) Data Abnormal	<Ref. to EN(H4DOTC)(diag)-338, DTC U0416 CAN (VDC) DATA ABNORMAL, Diagnostic Procedure with Diagnostic Trouble Code (DTC).>
U0422	CAN (BCU) Data Abnormal	<Ref. to EN(H4DOTC)(diag)-338, DTC U0422 CAN (BCU) DATA ABNORMAL, Diagnostic Procedure with Diagnostic Trouble Code (DTC).>

GET the MANUALS.org

19. Diagnostic Procedure with Diagnostic Trouble Code (DTC)

A: DTC P0011 INTAKE CAMSHAFT POSITION - TIMING OVER-ADVANCED OR SYSTEM PERFORMANCE (BANK 1)

DTC DETECTING CONDITION:

- Detected when two consecutive driving cycles with fault occur.
- GENERAL DESCRIPTION <Ref. to GD(H4DOTC)-10, DTC P0011 INTAKE CAMSHAFT POSITION - TIMING OVER-ADVANCED OR SYSTEM PERFORMANCE (BANK 1), Diagnostic Trouble Code (DTC) Detecting Criteria.>

TROUBLE SYMPTOM:

- Engine stalls.
- Improper idling

CAUTION:

After servicing or replacing faulty parts, perform Clear Memory Mode <Ref. to EN(H4DOTC)(diag)-53, OPERATION, Clear Memory Mode.>, and Inspection Mode <Ref. to EN(H4DOTC)(diag)-41, PROCEDURE, Inspection Mode.>.

Step		Check	Yes	No
1	**CHECK CURRENT DATA.** 1) Start the engine and let it idle. 2) Read the value of «VVT Adv. Ang. Amount R» using the Subaru Select Monitor. NOTE: For detailed operation procedures, refer to “READ CURRENT DATA FOR ENGINE”. <Ref. to EN(H4DOTC)(diag)-34, Subaru Select Monitor.>	Is the value of «VVT Adv. Ang. Amount R» approx. 0 deg?	Go to step **2**.	Check the following item and repair or replace if necessary. • Oil pipe (clog) • Oil flow control solenoid valve (clog or dirt of oil routing, setting of spring) • Intake camshaft (dirt, damage of camshaft)
2	**CHECK CURRENT DATA.** 1) Drive with acceleration and deceleration at 80 km/h (50 MPH) or less. NOTE: Drive to an extent that the duty output of oil flow control solenoid valve increases. 2) Read the values of «OCV Duty R» and «VVT Adv. Ang. Amount R» using the Subaru Select Monitor. NOTE: For detailed operation procedures, refer to “READ CURRENT DATA FOR ENGINE”. <Ref. to EN(H4DOTC)(diag)-34, Subaru Select Monitor.>	When the value of «OCV Duty R» increases more than 10%, is the value of «VVT Adv. Ang. Amount R» approx. 0 deg?	Check the following item and repair or replace if necessary. • Oil pipe (clog) • Oil flow control solenoid valve (clog or dirt of oil routing, setting of spring) • Intake camshaft (dirt, damage of camshaft)	Perform the following procedures, and clean the oil routing. Replace the engine oil and idle the engine for 5 minutes, and then replace the oil filter and engine oil. <Ref. to LU(H4SO)-13, REPLACEMENT, Engine Oil.> <Ref. to LU(H4SO)-36, Engine Oil Filter.>

GET the MANUALS.org

B: DTC P0014 EXHAUST AVCS SYSTEM 1 (RANGE/PERFORMANCE)

DTC DETECTING CONDITION:

- Detected when two consecutive driving cycles with fault occur.
- GENERAL DESCRIPTION <Ref. to GD(H4DOTC)-12, DTC P0014 EXHAUST AVCS SYSTEM 1 (RANGE/PERFORMANCE), Diagnostic Trouble Code (DTC) Detecting Criteria.>

TROUBLE SYMPTOM:

- Engine stalls.
- Improper idling

CAUTION:

After servicing or replacing faulty parts, perform Clear Memory Mode <Ref. to EN(H4DOTC)(diag)-53, OPERATION, Clear Memory Mode.>, and Inspection Mode <Ref. to EN(H4DOTC)(diag)-41, PROCEDURE, Inspection Mode.>.

	Step	Check	Yes	No
1	**CHECK CURRENT DATA.** 1) Start the engine and let it idle. 2) Read the value of «Exh. VVT Retard Ang. R» using the Subaru Select Monitor. NOTE: For detailed operation procedures, refer to “READ CURRENT DATA FOR ENGINE”. <Ref. to EN(H4DOTC)(diag)-34, Subaru Select Monitor.>	Is the value of «Exh. VVT Retard Ang. R» approx. 0 deg?	Go to step **2**.	Check the following item and repair or replace if necessary. • Oil pipe (clog) • Oil flow control solenoid valve (clog or dirt of oil routing, setting of spring) • Exhaust camshaft (dirt, damage of camshaft)
2	**CHECK CURRENT DATA.** 1) Drive with acceleration and deceleration at 80 km/h (50 MPH) or less. NOTE: Drive to an extent that the duty output of oil flow control solenoid valve increases. 2) Read the values of «Exh. OCV Duty R» and «Exh. VVT Retard Ang. R» using the Subaru Select Monitor. NOTE: For detailed operation procedures, refer to “READ CURRENT DATA FOR ENGINE”. <Ref. to EN(H4DOTC)(diag)-34, Subaru Select Monitor.>	When the value of «Exh. OCV Duty R» increases more than 10%, is the value of «Exh. VVT Retard Ang. R» approx. 0 deg?	Check the following item and repair or replace if necessary. • Oil pipe (clog) • Oil flow control solenoid valve (clog or dirt of oil routing, setting of spring) • Exhaust camshaft (dirt, damage of camshaft)	Perform the following procedures, and clean the oil routing. Replace the engine oil and idle the engine for 5 minutes, and then replace the oil filter and engine oil. <Ref. to LU(H4SO)-13, REPLACEMENT, Engine Oil.> <Ref. to LU(H4SO)-36, Engine Oil Filter.>

GET the MANUALS.org

C: DTC P0016 CRANKSHAFT POSITION - CAMSHAFT POSITION CORRELATION (BANK1)

DTC DETECTING CONDITION:

- Detected when two consecutive driving cycles with fault occur.
- GENERAL DESCRIPTION <Ref. to GD(H4DOTC)-14, DTC P0016 CRANKSHAFT POSITION - CAMSHAFT POSITION CORRELATION (BANK1), Diagnostic Trouble Code (DTC) Detecting Criteria.>

TROUBLE SYMPTOM:

- Engine stalls.
- Improper idling

CAUTION:

After servicing or replacing faulty parts, perform Clear Memory Mode <Ref. to EN(H4DOTC)(diag)-53, OPERATION, Clear Memory Mode.>, and Inspection Mode <Ref. to EN(H4DOTC)(diag)-41, PROCEDURE, Inspection Mode.>.

	Step	Check	Yes	No
1	**CHECK CURRENT DATA.** 1) Start the engine and let it idle. 2) Read the values of «VVT Adv. Ang. Amount R» and «OCV Duty R» using the Subaru Select Monitor. NOTE: For detailed operation procedures, refer to “READ CURRENT DATA FOR ENGINE”. <Ref. to EN(H4DOTC)(diag)-34, Subaru Select Monitor.>	Is the value of «VVT Adv. Ang. Amount R» approx. 0 deg, and the value of «OCV Duty R» approx. 10%?	Perform the following procedures, and clean the oil routing. Replace the engine oil and idle the engine for 5 minutes, and then replace the oil filter and engine oil. <Ref. to LU(H4SO)-13, REPLACEMENT, Engine Oil.> <Ref. to LU(H4SO)-36, Engine Oil Filter.>	Check the following item and repair or replace if necessary. • Oil pipe (clog) • Oil flow control solenoid valve (clog or dirt of oil routing, setting of spring) • Intake camshaft (dirt, damage of camshaft) • Timing belt (matching of timing mark)

GET the MANUALS.org

D: DTC P0017 CRANK AND CAM TIMING B SYSTEM FAILURE (BANK 1)

DTC DETECTING CONDITION:

- Detected when two consecutive driving cycles with fault occur.
- GENERAL DESCRIPTION <Ref. to GD(H4DOTC)-16, DTC P0017 CRANK AND CAM TIMING B SYSTEM FAILURE (BANK 1), Diagnostic Trouble Code (DTC) Detecting Criteria.>

TROUBLE SYMPTOM:

- Engine stalls.
- Improper idling

CAUTION:

After servicing or replacing faulty parts, perform Clear Memory Mode <Ref. to EN(H4DOTC)(diag)-53, OPERATION, Clear Memory Mode.>, and Inspection Mode <Ref. to EN(H4DOTC)(diag)-41, PROCEDURE, Inspection Mode.>.

	Step	Check	Yes	No
1	**CHECK CURRENT DATA.** 1) Start the engine and let it idle. 2) Read the values of «Exh. VVT Retard Ang. R» and «Exh. OCV Duty R» using the Subaru Select Monitor. NOTE: For detailed operation procedures, refer to “READ CURRENT DATA FOR ENGINE”. <Ref. to EN(H4DOTC)(diag)-34, Subaru Select Monitor.>	Is the value of «Exh. VVT Retard Ang. R» approx. 0 deg, and the value of «Exh. OCV Duty R» approx. 10%?	Perform the following procedures, and clean the oil routing. Replace the engine oil and idle the engine for 5 minutes, and then replace the oil filter and engine oil. <Ref. to LU(H4SO)-13, REPLACEMENT, Engine Oil.> <Ref. to LU(H4SO)-36, Engine Oil Filter.>	Check the following item and repair or replace if necessary. • Oil pipe (clog) • Oil flow control solenoid valve (clog or dirt of oil routing, setting of spring) • Exhaust camshaft (dirt, damage of camshaft) • Timing belt (matching of timing mark)

GET THE MANUALS.org

E: DTC P0018 CRANKSHAFT POSITION - CAMSHAFT POSITION CORRELATION (BANK2)

DTC DETECTING CONDITION:

- Detected when two consecutive driving cycles with fault occur.
- GENERAL DESCRIPTION <Ref. to GD(H4DOTC)-18, DTC P0018 CRANKSHAFT POSITION - CAMSHAFT POSITION CORRELATION (BANK2), Diagnostic Trouble Code (DTC) Detecting Criteria.>

TROUBLE SYMPTOM:

- Engine stalls.
- Improper idling

CAUTION:

After servicing or replacing faulty parts, perform Clear Memory Mode <Ref. to EN(H4DOTC)(diag)-53, OPERATION, Clear Memory Mode.>, and Inspection Mode <Ref. to EN(H4DOTC)(diag)-41, PROCEDURE, Inspection Mode.>.

Step		Check	Yes	No
1	**CHECK CURRENT DATA.** 1) Start the engine and let it idle. 2) Read the values of «VVT Adv. Ang. Amount L» and «OCV Duty L» using the Subaru Select Monitor. NOTE: For detailed operation procedures, refer to “READ CURRENT DATA FOR ENGINE”. <Ref. to EN(H4DOTC)(diag)-34, Subaru Select Monitor.>	Is the value of «VVT Adv. Ang. Amount L» approx. 0 deg, and the value of «OCV Duty L» approx. 10%?	Perform the following procedures, and clean the oil routing. Replace the engine oil and idle the engine for 5 minutes, and then replace the oil filter and engine oil. <Ref. to LU(H4SO)-13, REPLACEMENT, Engine Oil.> <Ref. to LU(H4SO)-36, Engine Oil Filter.>	Check the following item and repair or replace if necessary. • Oil pipe (clog) • Oil flow control solenoid valve (clog or dirt of oil routing, setting of spring) • Intake camshaft (dirt, damage of camshaft) • Timing belt (matching of timing mark)

GET the MANUALS.org

F: DTC P0019 CRANK AND CAM TIMING B SYSTEM FAILURE (BANK 2)

DTC DETECTING CONDITION:

- Detected when two consecutive driving cycles with fault occur.
- GENERAL DESCRIPTION <Ref. to GD(H4DOTC)-18, DTC P0019 CRANK AND CAM TIMING B SYSTEM FAILURE (BANK 2), Diagnostic Trouble Code (DTC) Detecting Criteria.>

TROUBLE SYMPTOM:

- Engine stalls.
- Improper idling

CAUTION:

After servicing or replacing faulty parts, perform Clear Memory Mode <Ref. to EN(H4DOTC)(diag)-53, OPERATION, Clear Memory Mode.>, and Inspection Mode <Ref. to EN(H4DOTC)(diag)-41, PROCEDURE, Inspection Mode.>.

	Step	Check	Yes	No
1	**CHECK CURRENT DATA.** 1) Start the engine and let it idle. 2) Read the values of «Exh. VVT Retard Ang. L» and «Exh. OCV Duty L» using the Subaru Select Monitor. NOTE: For detailed operation procedures, refer to “READ CURRENT DATA FOR ENGINE”. <Ref. to EN(H4DOTC)(diag)-34, Subaru Select Monitor.>	Is the value of «Exh. VVT Retard Ang. L» approx. 0 deg, and the value of «Exh. OCV Duty L» approx. 10%?	Perform the following procedures, and clean the oil routing. Replace the engine oil and idle the engine for 5 minutes, and then replace the oil filter and engine oil. <Ref. to LU(H4SO)-13, REPLACEMENT, Engine Oil.> <Ref. to LU(H4SO)-36, Engine Oil Filter.>	Check the following item and repair or replace if necessary. • Oil pipe (clog) • Oil flow control solenoid valve (clog or dirt of oil routing, setting of spring) • Exhaust camshaft (dirt, damage of camshaft) • Timing belt (matching of timing mark)

GET the MANUALS.org

G: DTC P0021 INTAKE CAMSHAFT POSITION - TIMING OVER-ADVANCED OR SYSTEM PERFORMANCE (BANK 2)

DTC DETECTING CONDITION:

- Detected when two consecutive driving cycles with fault occur.
- GENERAL DESCRIPTION <Ref. to GD(H4DOTC)-18, DTC P0021 INTAKE CAMSHAFT POSITION - TIMING OVER-ADVANCED OR SYSTEM PERFORMANCE (BANK 2), Diagnostic Trouble Code (DTC) Detecting Criteria.>

TROUBLE SYMPTOM:

- Engine stalls.
- Improper idling

CAUTION:

After servicing or replacing faulty parts, perform Clear Memory Mode <Ref. to EN(H4DOTC)(diag)-53, OPERATION, Clear Memory Mode.>, and Inspection Mode <Ref. to EN(H4DOTC)(diag)-41, PROCEDURE, Inspection Mode.>.

	Step	Check	Yes	No
1	**CHECK CURRENT DATA.** 1) Start the engine and let it idle. 2) Read the value of «VVT Adv. Ang. Amount L» using the Subaru Select Monitor. NOTE: For detailed operation procedures, refer to “READ CURRENT DATA FOR ENGINE”. <Ref. to EN(H4DOTC)(diag)-34, Subaru Select Monitor.>	Is the value of «VVT Adv. Ang. Amount L» approx. 0 deg?	Go to step **2**.	Check the following item and repair or replace if necessary. • Oil pipe (clog) • Oil flow control solenoid valve (clog or dirt of oil routing, setting of spring) • Intake camshaft (dirt, damage of camshaft)
2	**CHECK CURRENT DATA.** 1) Drive with acceleration and deceleration at 80 km/h (50 MPH) or less. NOTE: Drive to an extent that the duty output of oil flow control solenoid valve increases. 2) Read the values of «OCV Duty L» and «VVT Adv. Ang. Amount L» using the Subaru Select Monitor. NOTE: For detailed operation procedures, refer to “READ CURRENT DATA FOR ENGINE”. <Ref. to EN(H4DOTC)(diag)-34, Subaru Select Monitor.>	When the value of «OCV Duty L» increases more than 10%, is the value of «VVT Adv. Ang. Amount L» approx. 0 deg?	Check the following item and repair or replace if necessary. • Oil pipe (clog) • Oil flow control solenoid valve (clog or dirt of oil routing, setting of spring) • Intake camshaft (dirt, damage of camshaft)	Perform the following procedures, and clean the oil routing. Replace the engine oil and idle the engine for 5 minutes, and then replace the oil filter and engine oil. <Ref. to LU(H4SO)-13, REPLACEMENT, Engine Oil.> <Ref. to LU(H4SO)-36, Engine Oil Filter.>

GET thesMANUALS.org

H: DTC P0024 EXHAUST AVCS SYSTEM 2 (RANGE/PERFORMANCE)

DTC DETECTING CONDITION:

- Detected when two consecutive driving cycles with fault occur.
- GENERAL DESCRIPTION <Ref. to GD(H4DOTC)-18, DTC P0024 EXHAUST AVCS SYSTEM 2 (RANGE/PERFORMANCE), Diagnostic Trouble Code (DTC) Detecting Criteria.>

TROUBLE SYMPTOM:

- Engine stalls.
- Improper idling

CAUTION:

After servicing or replacing faulty parts, perform Clear Memory Mode <Ref. to EN(H4DOTC)(diag)-53, OPERATION, Clear Memory Mode.>, and Inspection Mode <Ref. to EN(H4DOTC)(diag)-41, PROCEDURE, Inspection Mode.>.

	Step	Check	Yes	No
1	**CHECK CURRENT DATA.** 1) Start the engine and let it idle. 2) Read the value of «Exh. VVT Retard Ang. L» using the Subaru Select Monitor. NOTE: For detailed operation procedures, refer to “READ CURRENT DATA FOR ENGINE”. <Ref. to EN(H4DOTC)(diag)-34, Subaru Select Monitor.>	Is the value of «Exh. VVT Retard Ang. L» approx. 0 deg?	Go to step **2**.	Check the following item and repair or replace if necessary. • Oil pipe (clog) • Oil flow control solenoid valve (clog or dirt of oil routing, setting of spring) • Exhaust camshaft (dirt, damage of camshaft)
2	**CHECK CURRENT DATA.** 1) Drive with acceleration and deceleration at 80 km/h (50 MPH) or less. NOTE: Drive to an extent that the duty output of oil flow control solenoid valve increases. 2) Read the values of «Exh. OCV Duty L» and «Exh. VVT Retard Ang. L» using the Subaru Select Monitor. NOTE: For detailed operation procedures, refer to “READ CURRENT DATA FOR ENGINE”. <Ref. to EN(H4DOTC)(diag)-34, Subaru Select Monitor.>	When the value of «Exh. OCV Duty L» increases more than 10%, is the value of «Exh. VVT Retard Ang. L» approx. 0 deg?	Check the following item and repair or replace if necessary. • Oil pipe (clog) • Oil flow control solenoid valve (clog or dirt of oil routing, setting of spring) • Exhaust camshaft (dirt, damage of camshaft)	Perform the following procedures, and clean the oil routing. Replace the engine oil and idle the engine for 5 minutes, and then replace the oil filter and engine oil. <Ref. to LU(H4SO)-13, REPLACEMENT, Engine Oil.> <Ref. to LU(H4SO)-36, Engine Oil Filter.>

GET the MANUALS.org

I: DTC P0030 HO2S HEATER CONTROL CIRCUIT (BANK 1 SENSOR 1)

DTC DETECTING CONDITION:

- Detected when two consecutive driving cycles with fault occur.
- GENERAL DESCRIPTION <Ref. to GD(H4DOTC)-19, DTC P0030 HO2S HEATER CONTROL CIRCUIT (BANK 1 SENSOR 1), Diagnostic Trouble Code (DTC) Detecting Criteria.>

CAUTION:

After servicing or replacing faulty parts, perform Clear Memory Mode <Ref. to EN(H4DOTC)(diag)-53, OPERATION, Clear Memory Mode.>, and Inspection Mode <Ref. to EN(H4DOTC)(diag)-41, PROCEDURE, Inspection Mode.>.

WIRING DIAGRAM:

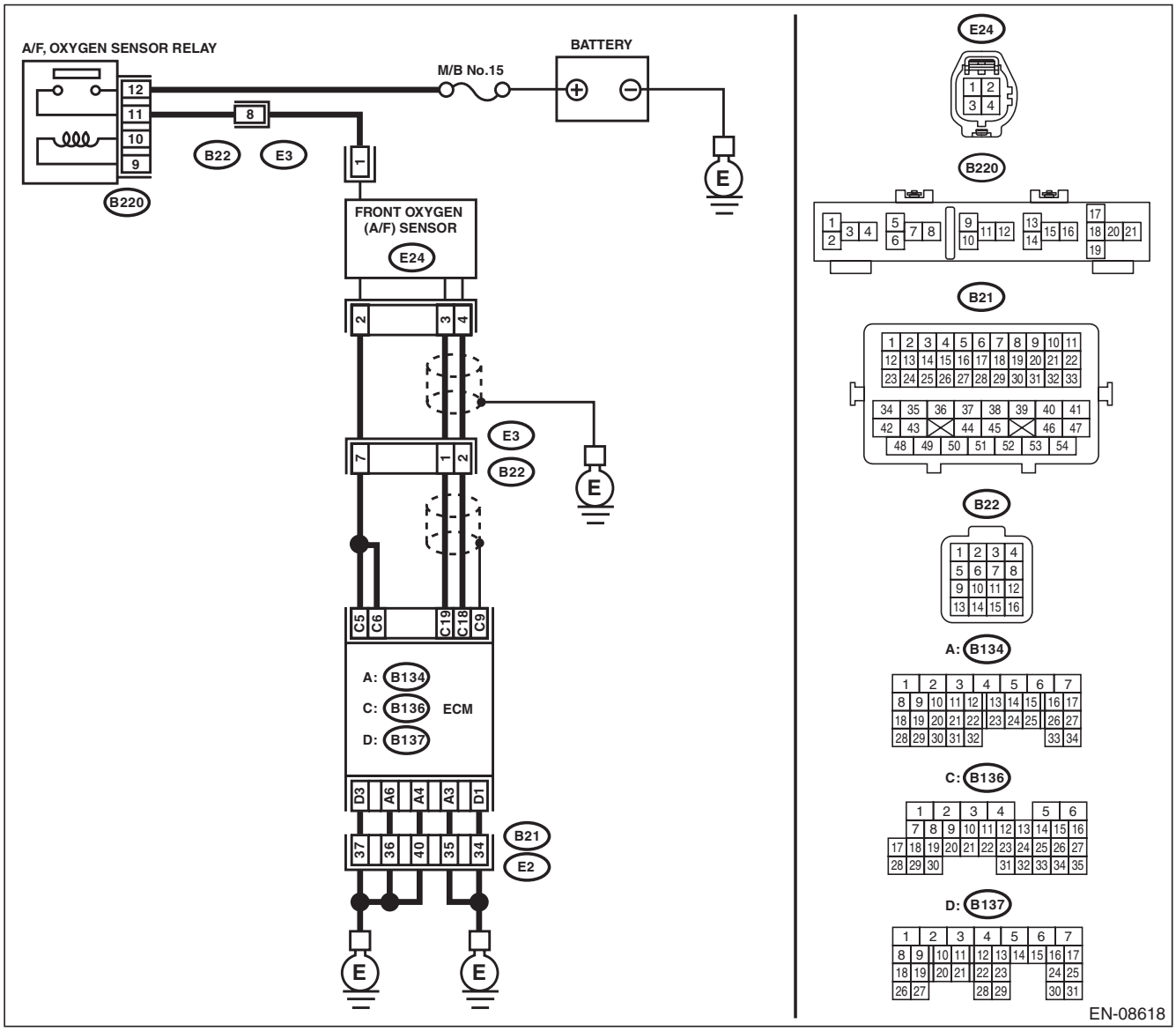

GET THE MANUALS.org

	Step	Check	Yes	No
1	**CHECK HARNESS BETWEEN ECM AND FRONT OXYGEN (A/F) SENSOR CONNECTOR.** 1) Start and warm up the engine. 2) Turn the ignition switch to OFF. 3) Disconnect the connectors from ECM and front oxygen (A/F) sensor. 4) Measure the resistance of harness between ECM and front oxygen (A/F) sensor connector. ***Connector & terminal*** ***(B136) No. 5 — (E24) No. 2:*** ***(B136) No. 6 — (E24) No. 2:*** ***(B136) No. 19 — (E24) No. 3:*** ***(B136) No. 18 — (E24) No. 4:***	Is the resistance less than 1 Ω?	Go to step **2**.	Repair the harness and connector. NOTE: In this case, repair the following item: • Open circuit in harness between ECM and front oxygen (A/F) sensor connector • Poor contact of coupling connector
2	**CHECK FRONT OXYGEN (A/F) SENSOR.** Measure the resistance between front oxygen (A/F) sensor connector terminals. ***Terminals*** ***No. 1 — No. 2:***	Is the resistance less than 2 — 3 Ω?	Go to step **3**.	Replace the front oxygen (A/F) sensor. <Ref. to FU(H4DOTC)-54, Front Oxygen (A/F) Sensor.>
3	**CHECK FOR POOR CONTACT.** Check for poor contact of ECM and front oxygen (A/F) sensor connector.	Is there poor contact of ECM or front oxygen (A/F) sensor connector?	Repair the poor contact of ECM or front oxygen (A/F) sensor connector.	Replace the front oxygen (A/F) sensor. <Ref. to FU(H4DOTC)-54, Front Oxygen (A/F) Sensor.>

GET the MANUALS.org

J: DTC P0031 HO2S HEATER CONTROL CIRCUIT LOW (BANK 1 SENSOR 1)

DTC DETECTING CONDITION:

- Immediately at fault recognition
- GENERAL DESCRIPTION <Ref. to GD(H4DOTC)-21, DTC P0031 HO2S HEATER CONTROL CIRCUIT LOW (BANK 1 SENSOR 1), Diagnostic Trouble Code (DTC) Detecting Criteria.>

CAUTION:

After servicing or replacing faulty parts, perform Clear Memory Mode <Ref. to EN(H4DOTC)(diag)-53, OPERATION, Clear Memory Mode.>, and Inspection Mode <Ref. to EN(H4DOTC)(diag)-41, PROCEDURE, Inspection Mode.>.

WIRING DIAGRAM:

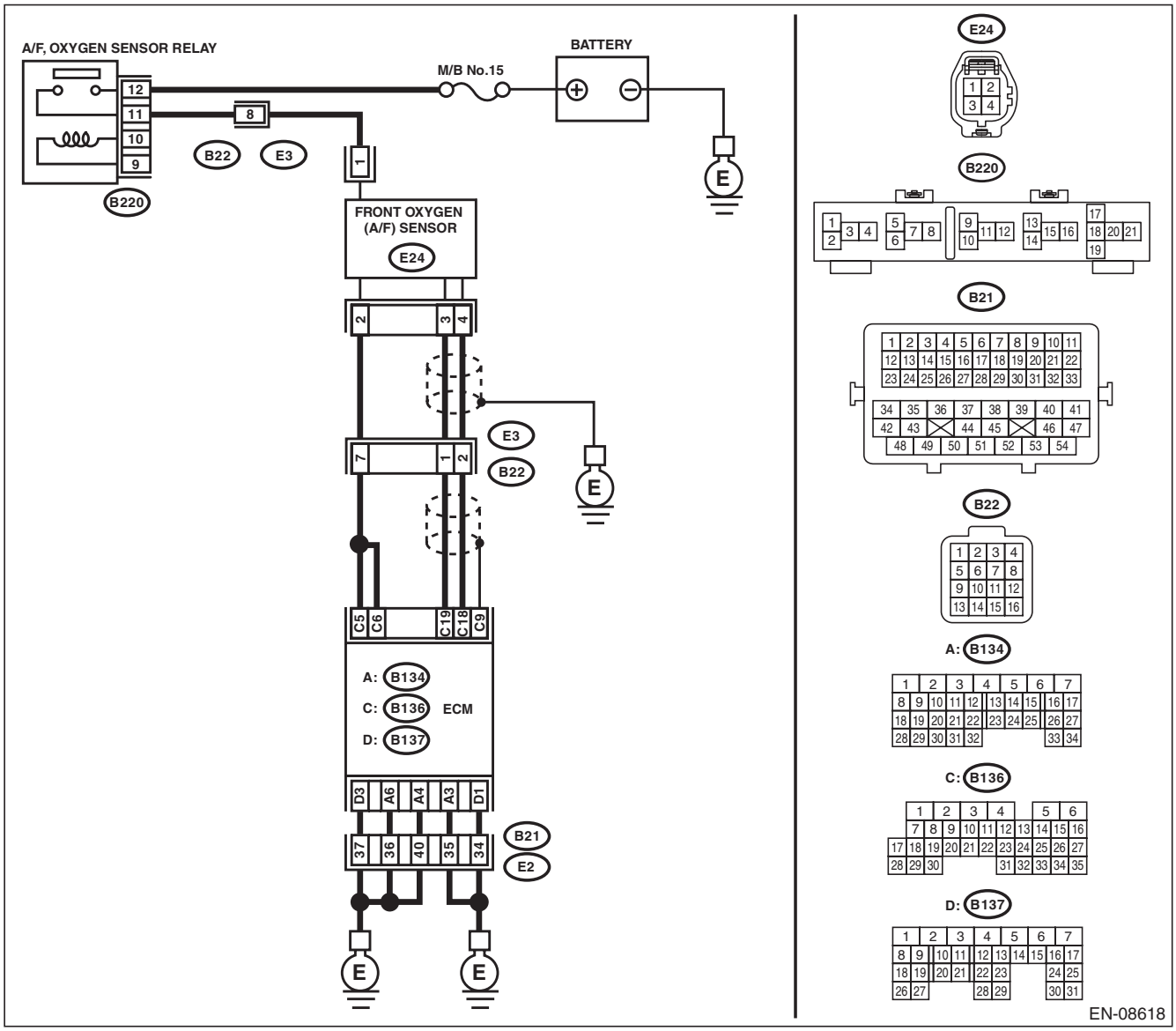

GET THE MANUALS.org

	Step	Check	Yes	No
1	**CHECK POWER SUPPLY TO FRONT OXYGEN (A/F) SENSOR.** 1) Turn the ignition switch to OFF. 2) Disconnect the connectors from front oxygen (A/F) sensor. 3) Turn the ignition switch to ON. 4) Measure the voltage between front oxygen (A/F) sensor connector and engine ground. ***Connector & terminal*** ***(E24) No. 1 (+) — Engine ground (–):***	Is the voltage 10 V or more?	Go to step **2**.	Repair the power supply line. NOTE: In this case, repair the following item: • Open circuit in harness between A/F, oxygen sensor relay and front oxygen (A/F) sensor connector • Poor contact of A/F, oxygen sensor relay connector • Poor contact of coupling connector • Malfunction of A/F, oxygen sensor relay
2	**CHECK HARNESS BETWEEN ECM AND FRONT OXYGEN (A/F) SENSOR CONNECTOR.** 1) Turn the ignition switch to OFF. 2) Disconnect the connector from ECM. 3) Measure the resistance between ECM and front oxygen (A/F) sensor connector. ***Connector & terminal*** ***(B136) No. 5 — (E24) No. 2:*** ***(B136) No. 6 — (E24) No. 2:***	Is the resistance less than 1 Ω?	Go to step **3**.	Repair the harness and connector. NOTE: In this case, repair the following item: • Open circuit in harness between ECM and front oxygen (A/F) sensor connector • Poor contact of coupling connector
3	**CHECK GROUND CIRCUIT FOR ECM.** Measure the resistance of harness between ECM and chassis ground. ***Connector & terminal*** ***(B134) No. 3 — Chassis ground:*** ***(B134) No. 4 — Chassis ground:*** ***(B134) No. 6 — Chassis ground:*** ***(B137) No. 1 — Chassis ground:*** ***(B137) No. 3 — Chassis ground:***	Is the resistance less than 5 Ω?	Go to step **4**.	Repair the harness and connector. NOTE: In this case, repair the following item: • Open circuit of harness between ECM and engine ground • Poor contact of coupling connector
4	**CHECK FRONT OXYGEN (A/F) SENSOR.** Measure the resistance between front oxygen (A/F) sensor terminals. ***Terminals*** ***No. 1 — No. 2:***	Is the resistance 2 — 3 Ω?	Repair the poor contact of ECM connector.	Replace the front oxygen (A/F) sensor. <Ref. to FU(H4DOTC)-54, Front Oxygen (A/F) Sensor.>

GET the MANUALS.org

K: DTC P0032 HO2S HEATER CONTROL CIRCUIT HIGH (BANK 1 SENSOR 1)

DTC DETECTING CONDITION:

- Immediately at fault recognition
- GENERAL DESCRIPTION <Ref. to GD(H4DOTC)-23, DTC P0032 HO2S HEATER CONTROL CIRCUIT HIGH (BANK 1 SENSOR 1), Diagnostic Trouble Code (DTC) Detecting Criteria.>

CAUTION:

After servicing or replacing faulty parts, perform Clear Memory Mode <Ref. to EN(H4DOTC)(diag)-53, OPERATION, Clear Memory Mode.>, and Inspection Mode <Ref. to EN(H4DOTC)(diag)-41, PROCEDURE, Inspection Mode.>.

WIRING DIAGRAM:

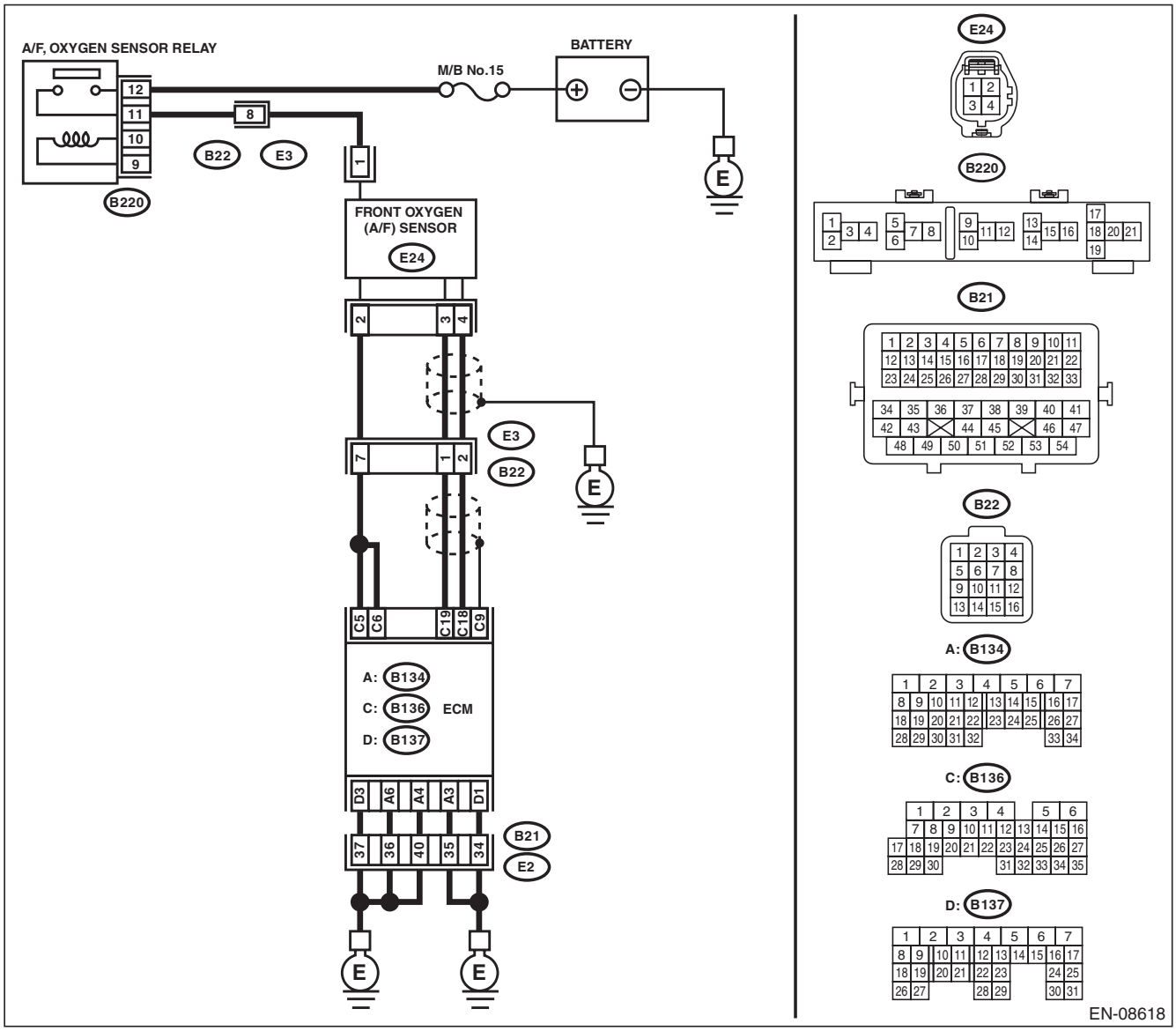

GET THE MANUALS.org

Step		Check	Yes	No
1	**CHECK HARNESS BETWEEN ECM AND FRONT OXYGEN (A/F) SENSOR CONNECTOR.** 1) Turn the ignition switch to OFF. 2) Measure the voltage between ECM and chassis ground. ***Connector & terminal*** ***(B136) No. 5 (+) — Chassis ground (–):*** ***(B136) No. 6 (+) — Chassis ground (–):***	Is the voltage 10 V or more?	Repair the short circuit to power in the harness between ECM and front oxygen (A/F) sensor connector.	Go to step **2**.
2	**CHECK GROUND CIRCUIT FOR ECM.** 1) Disconnect the connectors from ECM. 2) Measure the resistance between ECM and chassis ground. ***Connector & terminal*** ***(B134) No. 3 — Chassis ground:*** ***(B134) No. 4 — Chassis ground:*** ***(B134) No. 6 — Chassis ground:*** ***(B137) No. 1 — Chassis ground:*** ***(B137) No. 3 — Chassis ground:***	Is the resistance less than 5 Ω?	Repair the poor contact of ECM connector.	Repair the harness and connector. NOTE: In this case, repair the following item: • Open circuit of harness between ECM and engine ground • Poor contact of coupling connector

GET the MANUALS.org

L: DTC P0037 HO2S HEATER CONTROL CIRCUIT LOW (BANK 1 SENSOR 2)

DTC DETECTING CONDITION:

- Detected when two consecutive driving cycles with fault occur.
- GENERAL DESCRIPTION <Ref. to GD(H4DOTC)-25, DTC P0037 HO2S HEATER CONTROL CIRCUIT LOW (BANK 1 SENSOR 2), Diagnostic Trouble Code (DTC) Detecting Criteria.>

CAUTION:

After servicing or replacing faulty parts, perform Clear Memory Mode <Ref. to EN(H4DOTC)(diag)-53, OPERATION, Clear Memory Mode.>, and Inspection Mode <Ref. to EN(H4DOTC)(diag)-41, PROCEDURE, Inspection Mode.>.

WIRING DIAGRAM:

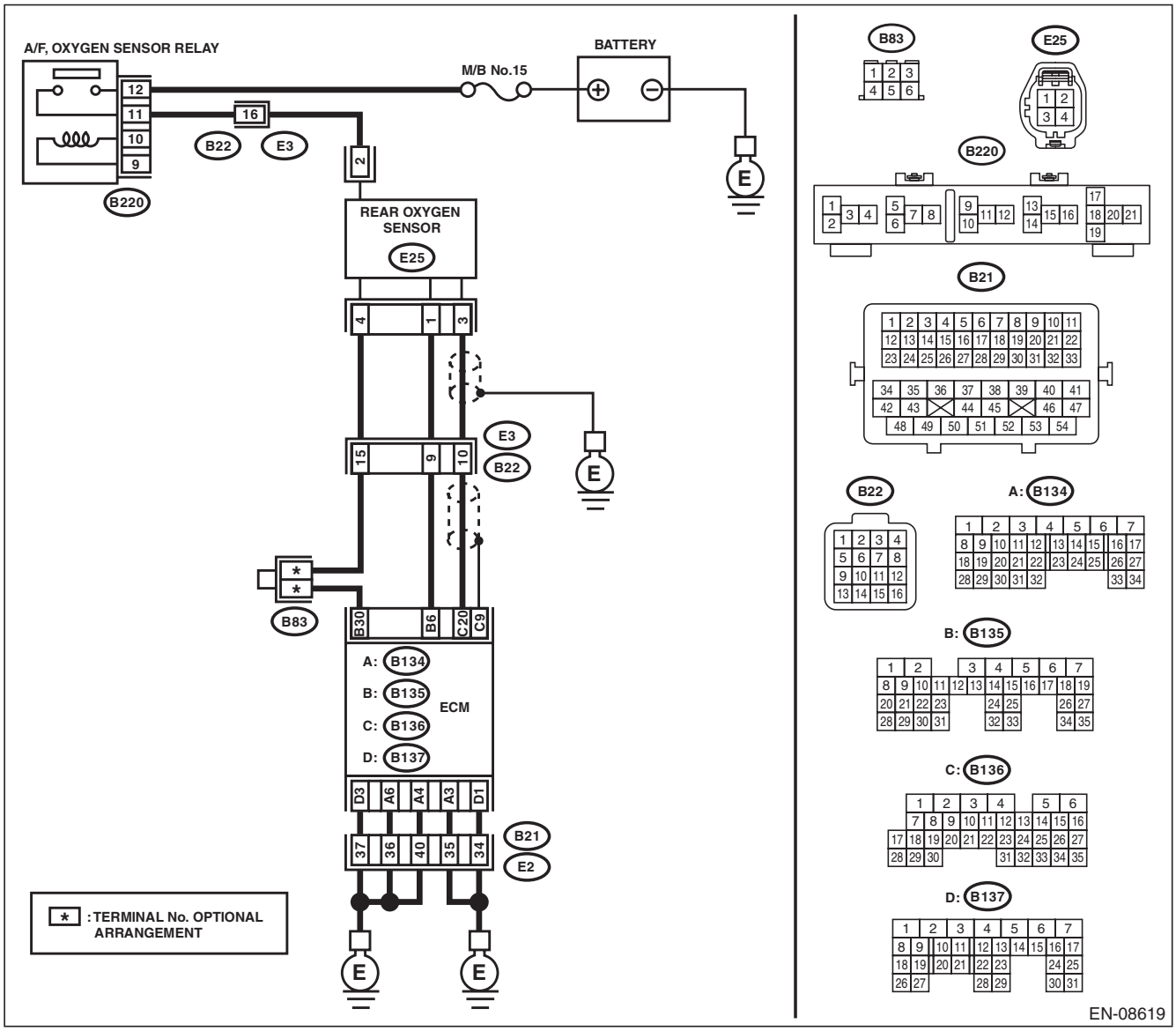

GET THE MANUALS.org

	Step	Check	Yes	No
1	**CHECK POWER SUPPLY TO REAR OXYGEN SENSOR.** 1) Turn the ignition switch to OFF. 2) Disconnect the connector from rear oxygen sensor. 3) Turn the ignition switch to ON. 4) Measure the voltage between rear oxygen sensor connector and engine ground. ***Connector & terminal*** ***(E25) No. 2 (+) — Engine ground (–):***	Is the voltage 10 V or more?	Go to step **2**.	Repair the power supply line. NOTE: In this case, repair the following item: • Open circuit in harness between A/F, oxygen sensor relay and rear oxygen sensor connector • Poor contact of A/F, oxygen sensor relay connector • Poor contact of coupling connector • Malfunction of A/F, oxygen sensor relay
2	**CHECK HARNESS BETWEEN ECM AND REAR OXYGEN SENSOR CONNECTOR.** 1) Turn the ignition switch to OFF. 2) Disconnect the connector from ECM. 3) Measure the resistance between the ECM and rear oxygen sensor connector. ***Connector & terminal*** ***(B135) No. 6 — (E25) No. 1:***	Is the resistance less than 1 Ω?	Go to step **3**.	Repair the harness and connector. NOTE: In this case, repair the following item: • Open circuit in harness between ECM and rear oxygen sensor connector • Poor contact of coupling connector
3	**CHECK GROUND CIRCUIT FOR ECM.** Measure the resistance of harness between ECM and chassis ground. ***Connector & terminal*** ***(B134) No. 3 — Chassis ground:*** ***(B134) No. 4 — Chassis ground:*** ***(B134) No. 6 — Chassis ground:*** ***(B137) No. 1 — Chassis ground:*** ***(B137) No. 3 — Chassis ground:***	Is the resistance less than 5 Ω?	Go to step **4**.	Repair the harness and connector. NOTE: In this case, repair the following item: • Open circuit of harness between ECM and engine ground • Poor contact of coupling connector
4	**CHECK REAR OXYGEN SENSOR.** Measure the resistance between rear oxygen sensor terminals. ***Terminals*** ***No. 1 — No. 2:***	Is the resistance 5 — 7 Ω?	Repair the poor contact of ECM connector.	Replace the rear oxygen sensor. <Ref. to FU(H4DOTC)-56, Rear Oxygen Sensor.>

GET the MANUALS.org

M: DTC P0038 HO2S HEATER CONTROL CIRCUIT HIGH (BANK 1 SENSOR 2)

DTC DETECTING CONDITION:

- Detected when two consecutive driving cycles with fault occur.
- GENERAL DESCRIPTION <Ref. to GD(H4DOTC)-27, DTC P0038 HO2S HEATER CONTROL CIRCUIT HIGH (BANK 1 SENSOR 2), Diagnostic Trouble Code (DTC) Detecting Criteria.>

CAUTION:

After servicing or replacing faulty parts, perform Clear Memory Mode <Ref. to EN(H4DOTC)(diag)-53, OPERATION, Clear Memory Mode.>, and Inspection Mode <Ref. to EN(H4DOTC)(diag)-41, PROCEDURE, Inspection Mode.>.

WIRING DIAGRAM:

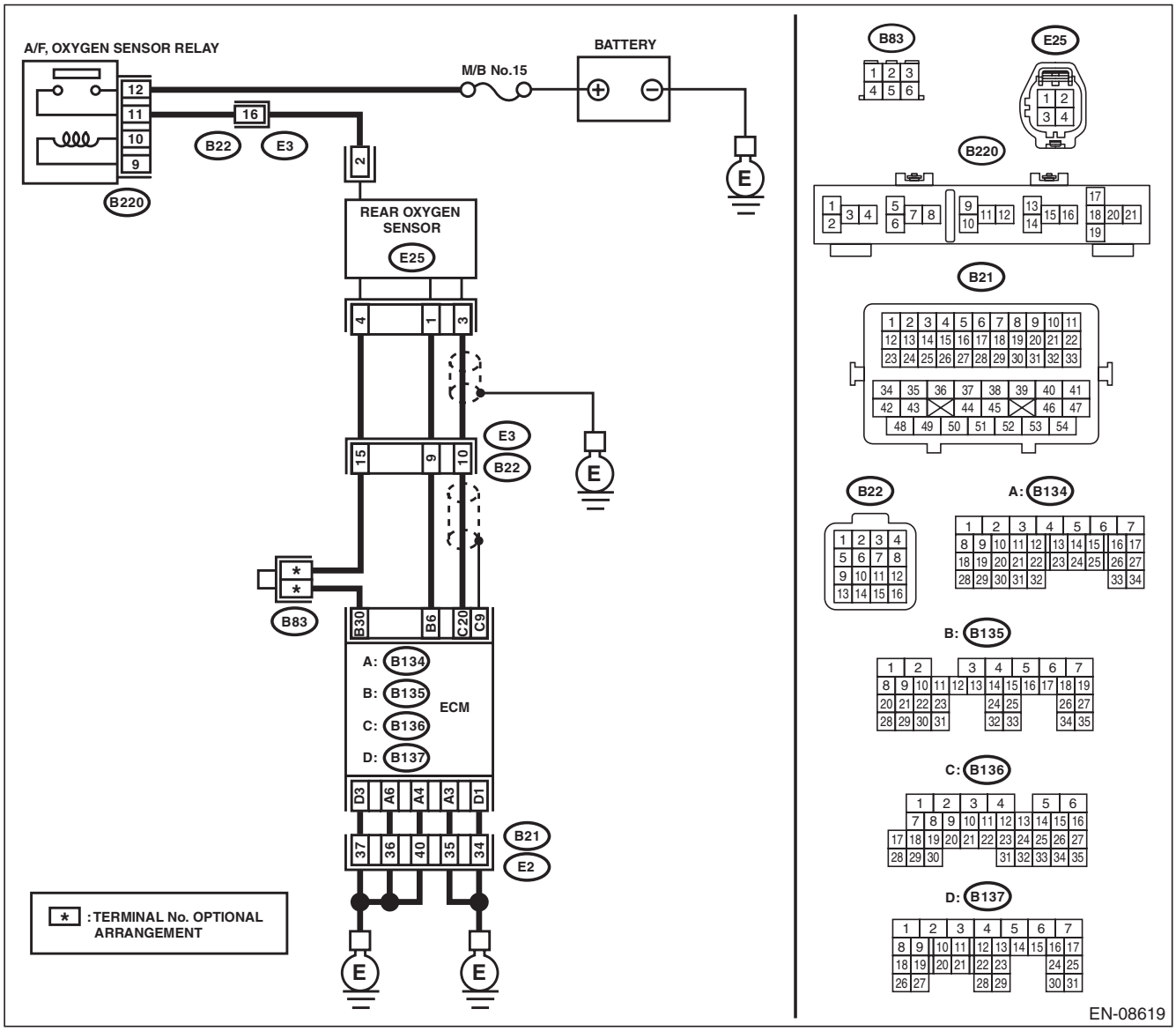

Step		Check	Yes	No
1	**CHECK HARNESS BETWEEN ECM AND REAR OXYGEN SENSOR CONNECTOR.** 1) Turn the ignition switch to OFF. 2) Measure the voltage between ECM and chassis ground. ***Connector & terminal*** ***(B135) No. 6 (+) — Chassis ground (–):***	Is the voltage 10 V or more?	Repair the short circuit to power in the harness between ECM and rear oxygen sensor connector.	Go to step **2**.

GETTHEMANUALS.org

Step		Check	Yes	No
2	**CHECK GROUND CIRCUIT FOR ECM.** 1) Disconnect the connector from ECM. 2) Measure the resistance between ECM and chassis ground. ***Connector & terminal*** ***(B134) No. 3 — Chassis ground:*** ***(B134) No. 4 — Chassis ground:*** ***(B134) No. 6 — Chassis ground:*** ***(B137) No. 1 — Chassis ground:*** ***(B137) No. 3 — Chassis ground:***	Is the resistance less than 5 Ω?	Repair the poor contact of ECM connector.	Repair the harness and connector. NOTE: In this case, repair the following item: • Open circuit of harness between ECM and engine ground • Poor contact of coupling connector

GETtheMANUALS.org

N: DTC P0068 MAP/MAF - THROTTLE POSITION CORRELATION

DTC DETECTING CONDITION:

- Detected when two consecutive driving cycles with fault occur.
- GENERAL DESCRIPTION <Ref. to GD(H4DOTC)-29, DTC P0068 MAP/MAF - THROTTLE POSITION CORRELATION, Diagnostic Trouble Code (DTC) Detecting Criteria.>

CAUTION:

After servicing or replacing faulty parts, perform Clear Memory Mode <Ref. to EN(H4DOTC)(diag)-53, OPERATION, Clear Memory Mode.>, and Inspection Mode <Ref. to EN(H4DOTC)(diag)-41, PROCEDURE, Inspection Mode.>.

Step		Check	Yes	No
1	**CHECK AIR INTAKE SYSTEM.**	Are there holes, loose bolts or disconnection of hose on air intake system?	Repair the air intake system.	Go to step **2**.
2	**CHECK MANIFOLD ABSOLUTE PRESSURE SENSOR.** 1) Start the engine and warm up engine until coolant temperature is higher than 75°C (167°F). 2) Place the shift lever in neutral position. 3) Turn the A/C switch to OFF. 4) Turn all the accessory switches to OFF. 5) Read the value of «Mani. Absolute Pressure» using the Subaru Select Monitor or a general scan tool. NOTE: • Subaru Select Monitor For detailed operation procedures, refer to "READ CURRENT DATA FOR ENGINE". <Ref. to EN(H4DOTC)(diag)-34, Subaru Select Monitor.> • General scan tool For detailed operation procedures, refer to the "General Scan Tool Instruction Manual".	Is the value in «Mani. Absolute Pressure» 73.3 — 106.6 kPa (550 — 800 mmHg, 21.65 — 31.50 inHg) when the ignition is turned ON, and 20.0 — 46.7 kPa (150 — 350 mmHg, 5.91 — 13.78 inHg) during idling?	Go to step **3**.	Replace the manifold absolute pressure sensor. <Ref. to FU(H4DOTC)-43, Manifold Absolute Pressure Sensor.>
3	**CHECK THROTTLE OPENING ANGLE.** Using the Subaru Select Monitor or a general scan tool, read the value in «Throttle Opening Angle». NOTE: • Subaru Select Monitor For detailed operation procedures, refer to "READ CURRENT DATA FOR ENGINE". <Ref. to EN(H4DOTC)(diag)-34, Subaru Select Monitor.> • General scan tool For detailed operation procedures, refer to the "General Scan Tool Instruction Manual".	Is the value in «Throttle Opening Angle» with the throttle fully closed less than 5%?	Go to step **4**.	Replace the electronic throttle control. <Ref. to FU(H4DOTC)-15, Throttle Body.>
4	**CHECK THROTTLE OPENING ANGLE.**	Is the value in «Throttle Opening Angle» with the throttle fully open 85% or more?	Replace the manifold absolute pressure sensor. <Ref. to FU(H4DOTC)-43, Manifold Absolute Pressure Sensor.>	Replace the electronic throttle control. <Ref. to FU(H4DOTC)-15, Throttle Body.>

GETtheMANUALS.org

O: DTC P0101 MASS OR VOLUME AIR FLOW CIRCUIT RANGE/PERFORMANCE

DTC DETECTING CONDITION:
- Detected when two consecutive driving cycles with fault occur.
- GENERAL DESCRIPTION <Ref. to GD(H4DOTC)-31, DTC P0101 MASS OR VOLUME AIR FLOW CIRCUIT RANGE/PERFORMANCE, Diagnostic Trouble Code (DTC) Detecting Criteria.>

TROUBLE SYMPTOM:
- Improper idling
- Engine stalls.
- Poor driving performance

CAUTION:
After servicing or replacing faulty parts, perform Clear Memory Mode <Ref. to EN(H4DOTC)(diag)-53, OPERATION, Clear Memory Mode.>, and Inspection Mode <Ref. to EN(H4DOTC)(diag)-41, PROCEDURE, Inspection Mode.>.

Step	Check	Yes	No
1 CHECK FOR ANY OTHER DTC ON DISPLAY.	Is any other DTC displayed?	Check the appropriate DTC using the “List of Diagnostic Trouble Code (DTC)”. <Ref. to EN(H4DOTC)(diag)-75, List of Diagnostic Trouble Code (DTC).>	Replace the mass air flow and intake air temperature sensor. <Ref. to FU(H4DOTC)-42, Mass Air Flow and Intake Air Temperature Sensor.>

GETHEMANUALS.org

P: DTC P0102 MASS OR VOLUME AIR FLOW CIRCUIT LOW INPUT

DTC DETECTING CONDITION:

- Immediately at fault recognition
- GENERAL DESCRIPTION <Ref. to GD(H4DOTC)-33, DTC P0102 MASS OR VOLUME AIR FLOW CIRCUIT LOW INPUT, Diagnostic Trouble Code (DTC) Detecting Criteria.>

TROUBLE SYMPTOM:

- Improper idling
- Engine stalls.
- Poor driving performance

CAUTION:

After servicing or replacing faulty parts, perform Clear Memory Mode <Ref. to EN(H4DOTC)(diag)-53, OPERATION, Clear Memory Mode.>, and Inspection Mode <Ref. to EN(H4DOTC)(diag)-41, PROCEDURE, Inspection Mode.>.

WIRING DIAGRAM:

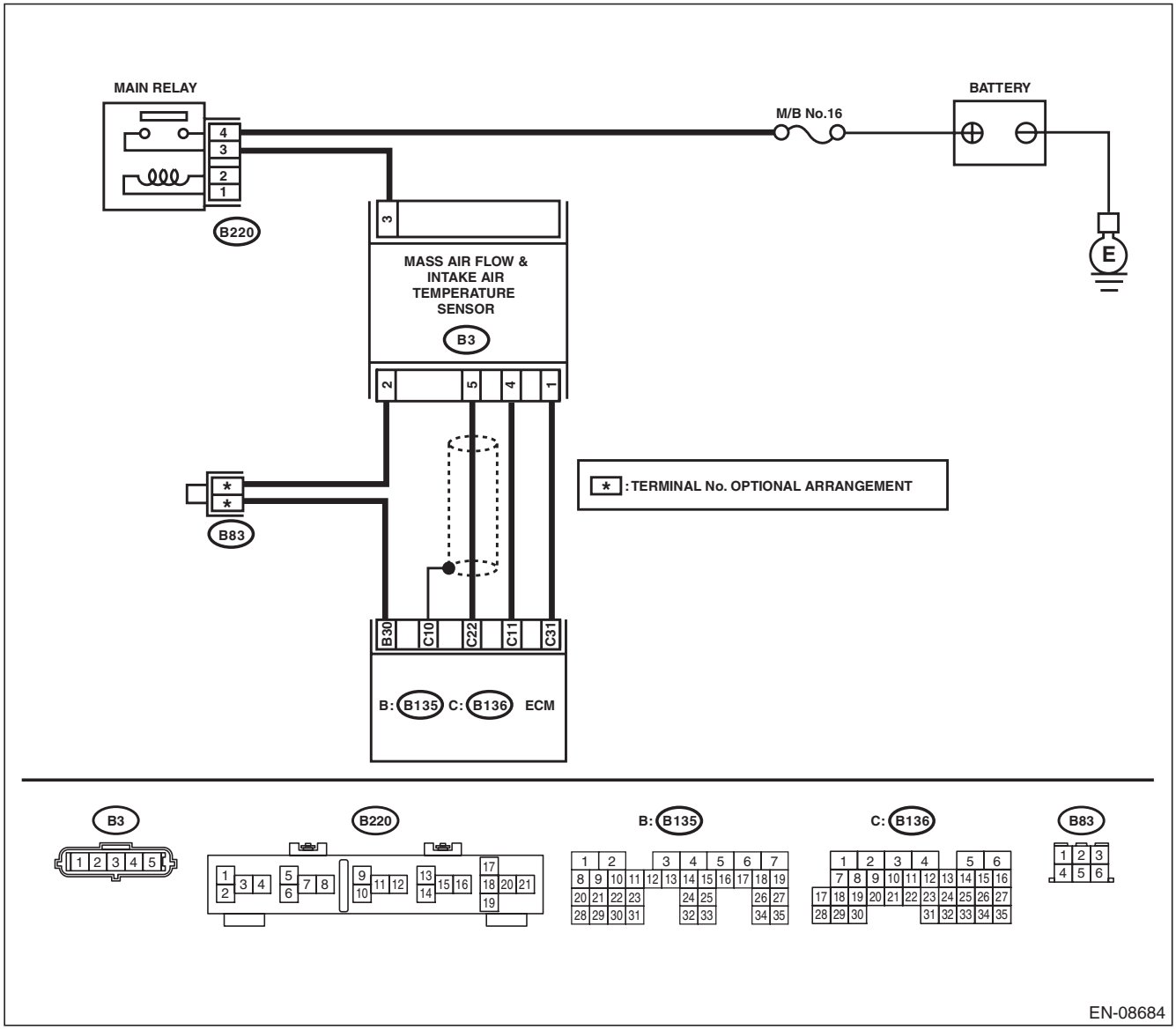

GETTHEMANUALS.org

	Step	Check	Yes	No
1	**CHECK CURRENT DATA.** 1) Start the engine. 2) Read the value of «Air Flow Sensor Voltage» using Subaru Select Monitor. NOTE: For detailed operation procedures, refer to “READ CURRENT DATA FOR ENGINE”. <Ref. to EN(H4DOTC)(diag)-34, Subaru Select Monitor.>	Is the value of «Air Flow Sensor Voltage» less than 0.2 V?	Go to step **2**.	Even if DTC is detected, the circuit has returned to a normal condition at this time. Reproduce the failure, and then perform the diagnosis again. NOTE: In this case, temporary poor contact of connector, temporary open or short circuit of harness may be the cause.
2	**CHECK POWER SUPPLY OF MASS AIR FLOW AND INTAKE AIR TEMPERATURE SENSOR.** 1) Turn the ignition switch to OFF. 2) Disconnect the connectors from the mass air flow and intake air temperature sensor. 3) Turn the ignition switch to ON. 4) Measure the voltage between mass air flow and intake air temperature sensor connector and engine ground. ***Connector & terminal*** ***(B3) No. 3 (+) — Engine ground (–):***	Is the voltage 10 V or more?	Go to step **3**.	Repair the harness and connector. NOTE: In this case, repair the following item: • Open circuit in harness between main relay and mass air flow and intake air temperature sensor connector • Poor contact of main relay connector
3	**CHECK HARNESS BETWEEN ECM AND MASS AIR FLOW AND INTAKE AIR TEMPERATURE SENSOR CONNECTOR.** 1) Turn the ignition switch to OFF. 2) Disconnect the connector from ECM. 3) Measure the resistance of harness between ECM and the mass air flow and intake air temperature sensor connector. ***Connector & terminal*** ***(B136) No. 22 — (B3) No. 5:***	Is the resistance less than 1 Ω?	Go to step **4**.	Repair the open circuit in harness between ECM and the mass air flow and intake air temperature sensor connector.
4	**CHECK HARNESS BETWEEN ECM AND MASS AIR FLOW AND INTAKE AIR TEMPERATURE SENSOR CONNECTOR.** Measure the resistance between ECM and chassis ground. ***Connector & terminal*** ***(B136) No. 22 — Chassis ground:***	Is the resistance 1 MΩ or more?	Go to step **5**.	Repair the short circuit to ground in harness between ECM and mass air flow and intake air temperature sensor connector.
5	**CHECK FOR POOR CONTACT.** Check for poor contact of ECM and mass air flow and intake air temperature sensor connector.	Is there poor contact of ECM or mass air flow and intake air temperature sensor connector?	Repair the poor contact of ECM or mass air flow and intake air temperature sensor connector.	Replace the mass air flow and intake air temperature sensor. <Ref. to FU(H4DOTC)-42, Mass Air Flow and Intake Air Temperature Sensor.>

GETtheMANUALS.org

Q: DTC P0103 MASS OR VOLUME AIR FLOW CIRCUIT HIGH INPUT

DTC DETECTING CONDITION:

- Immediately at fault recognition
- GENERAL DESCRIPTION <Ref. to GD(H4DOTC)-35, DTC P0103 MASS OR VOLUME AIR FLOW CIRCUIT HIGH INPUT, Diagnostic Trouble Code (DTC) Detecting Criteria.>

TROUBLE SYMPTOM:

- Improper idling
- Engine stalls.
- Poor driving performance

CAUTION:

After servicing or replacing faulty parts, perform Clear Memory Mode <Ref. to EN(H4DOTC)(diag)-53, OPERATION, Clear Memory Mode.>, and Inspection Mode <Ref. to EN(H4DOTC)(diag)-41, PROCEDURE, Inspection Mode.>.

WIRING DIAGRAM:

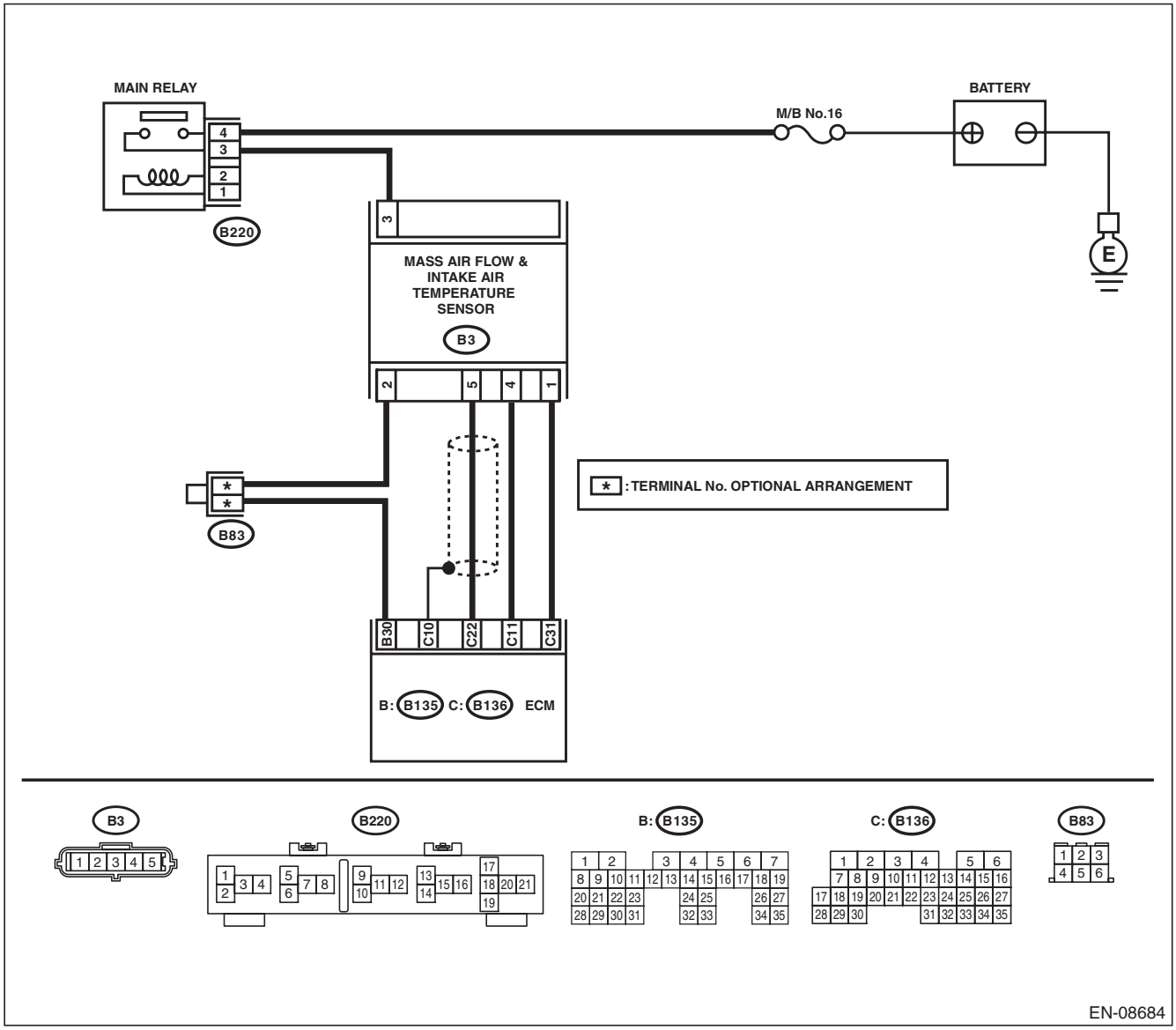

GETTHEMANUALS.org

	Step	Check	Yes	No
1	**CHECK CURRENT DATA.** 1) Start the engine. 2) Read the value of «Air Flow Sensor Voltage» using Subaru Select Monitor. NOTE: For detailed operation procedures, refer to "READ CURRENT DATA FOR ENGINE". <Ref. to EN(H4DOTC)(diag)-34, Subaru Select Monitor.>	Is the value of «Air Flow Sensor Voltage» 5 V or more?	Go to step **2**.	Even if DTC is detected, the circuit has returned to a normal condition at this time. Reproduce the failure, and then perform the diagnosis again. NOTE: In this case, temporary poor contact of connector, temporary open or short circuit of harness may be the cause.
2	**CHECK HARNESS BETWEEN ECM AND MASS AIR FLOW AND INTAKE AIR TEMPERATURE SENSOR CONNECTOR.** 1) Turn the ignition switch to OFF. 2) Disconnect the connectors from the mass air flow and intake air temperature sensor. 3) Start the engine. 4) Read the value of «Air Flow Sensor Voltage» using Subaru Select Monitor. NOTE: For detailed operation procedures, refer to "READ CURRENT DATA FOR ENGINE". <Ref. to EN(H4DOTC)(diag)-34, Subaru Select Monitor.>	Is the value of «Air Flow Sensor Voltage» 5 V or more?	Repair the short circuit of harness to power supply between ECM and mass air flow and intake air temperature sensor connector.	Go to step **3**.
3	**CHECK HARNESS BETWEEN ECM AND MASS AIR FLOW AND INTAKE AIR TEMPERATURE SENSOR CONNECTOR.** 1) Turn the ignition switch to OFF. 2) Measure the resistance of harness between mass air flow and intake air temperature sensor connector and engine ground. ***Connector & terminal*** ***(B3) No. 4 — Engine ground:***	Is the resistance less than 5 Ω?	Go to step **4**.	Repair the harness and connector. NOTE: In this case, repair the following item: • Open circuit in harness between ECM and mass air flow and intake air temperature sensor connector • Poor contact of ECM connector
4	**CHECK FOR POOR CONTACT.** Check for poor contact of mass air flow and intake air temperature sensor connector.	Is there poor contact of mass air flow and intake air temperature sensor connector?	Repair the poor contact of mass air flow and intake air temperature sensor connector.	Replace the mass air flow and intake air temperature sensor. <Ref. to FU(H4DOTC)-42, Mass Air Flow and Intake Air Temperature Sensor.>

GETTHEMANUALS.org

R: DTC P0107 MANIFOLD ABSOLUTE PRESSURE/BAROMETRIC PRESSURE CIRCUIT LOW INPUT

DTC DETECTING CONDITION:

- Immediately at fault recognition
- GENERAL DESCRIPTION <Ref. to GD(H4DOTC)-37, DTC P0107 MANIFOLD ABSOLUTE PRESSURE/ BAROMETRIC PRESSURE CIRCUIT LOW INPUT, Diagnostic Trouble Code (DTC) Detecting Criteria.>

CAUTION:

After servicing or replacing faulty parts, perform Clear Memory Mode <Ref. to EN(H4DOTC)(diag)-53, OPERATION, Clear Memory Mode.>, and Inspection Mode <Ref. to EN(H4DOTC)(diag)-41, PROCEDURE, Inspection Mode.>.

WIRING DIAGRAM:

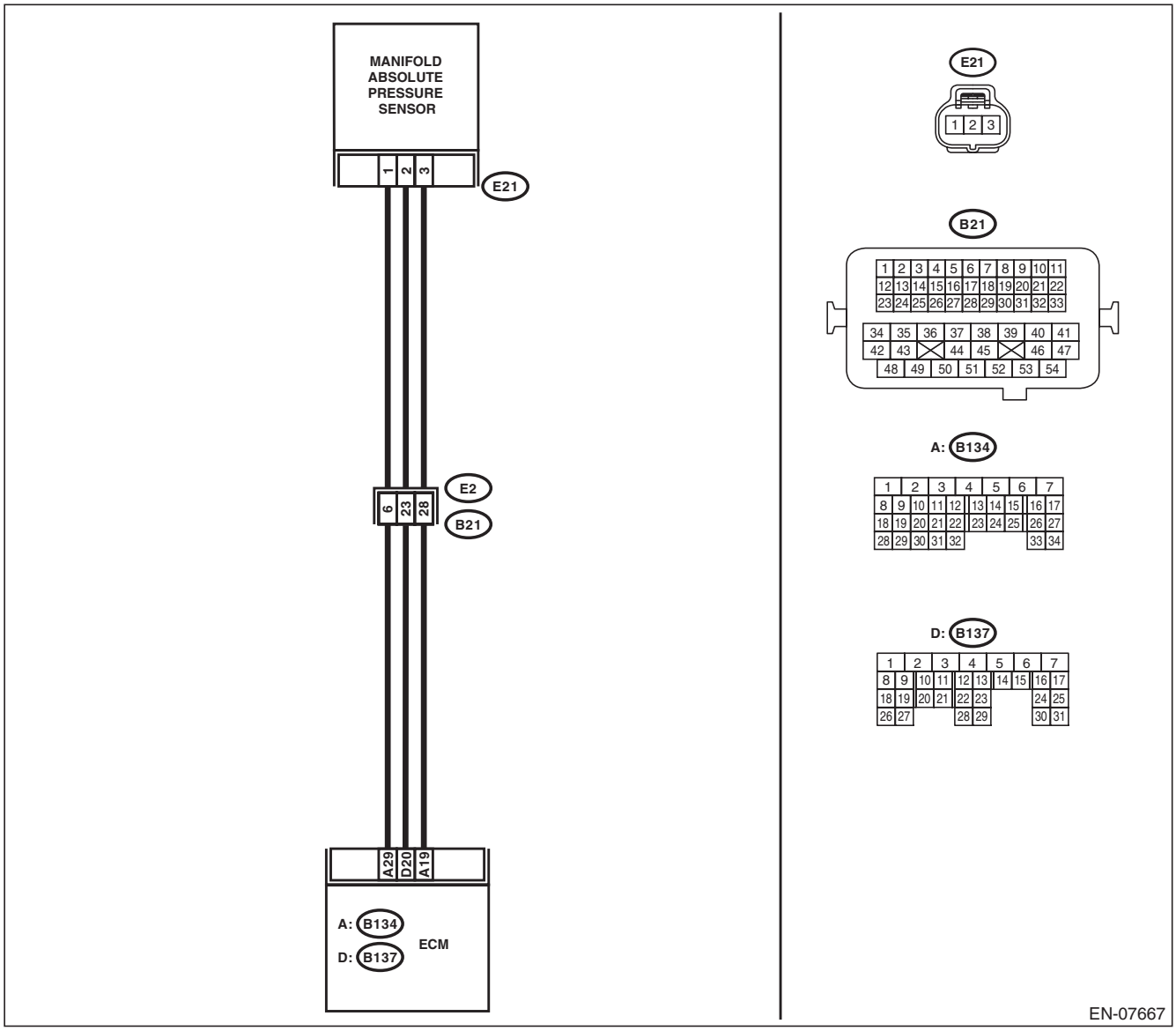

GETtheMANUALS.org

	Step	Check	Yes	No
1	**CHECK CURRENT DATA.** 1) Start the engine. 2) Read the value of «Mani. Absolute Pressure» using the Subaru Select Monitor or a general scan tool. NOTE: • Subaru Select Monitor For detailed operation procedures, refer to "READ CURRENT DATA FOR ENGINE". <Ref. to EN(H4DOTC)(diag)-34, Subaru Select Monitor.> • General scan tool For detailed operation procedures, refer to the general scan tool operation manual.	Is the value of «Mani. Absolute Pressure» less than 13.3 kPa (100 mmHg, 3.94 inHg)?	Go to step **2**.	Even if DTC is detected, the circuit has returned to a normal condition at this time. Reproduce the failure, and then perform the diagnosis again. NOTE: In this case, temporary poor contact of connector, temporary open or short circuit of harness may be the cause.
2	**CHECK POWER SUPPLY OF MANIFOLD ABSOLUTE PRESSURE SENSOR.** 1) Turn the ignition switch to OFF. 2) Disconnect the connector from manifold absolute pressure sensor. 3) Turn the ignition switch to ON. 4) Measure the voltage between manifold absolute pressure sensor connector and engine ground. ***Connector & terminal*** ***(E21) No. 3 (+) — Engine ground (–):***	Is the voltage 4.5 V or more?	Go to step **3**.	Repair the harness and connector. NOTE: In this case, repair the following item: • Open circuit of harness between ECM and manifold absolute pressure sensor connector. • Poor contact of ECM connector • Poor contact of coupling connector
3	**CHECK HARNESS BETWEEN ECM AND MANIFOLD ABSOLUTE PRESSURE SENSOR CONNECTOR.** 1) Turn the ignition switch to OFF. 2) Disconnect the connector from ECM. 3) Measure the resistance of harness between ECM and manifold absolute pressure sensor connector. ***Connector & terminal*** ***(B137) No. 20 — (E21) No. 2:***	Is the resistance less than 1 Ω?	Go to step **4**.	Repair the harness and connector. NOTE: In this case, repair the following item: • Open circuit of harness between ECM and manifold absolute pressure sensor connector. • Poor contact of coupling connector
4	**CHECK HARNESS BETWEEN ECM AND MANIFOLD ABSOLUTE PRESSURE SENSOR CONNECTOR.** Measure the resistance between ECM and chassis ground. ***Connector & terminal*** ***(B137) No. 20 — Chassis ground:***	Is the resistance 1 MΩ or more?	Go to step **5**.	Repair ground short circuit of harness between ECM and manifold absolute pressure sensor connector.
5	**CHECK FOR POOR CONTACT.** Check for poor contact of ECM and manifold absolute pressure sensor connector.	Is there poor contact of ECM or manifold absolute pressure sensor connector?	Repair the poor contact of ECM or manifold absolute pressure sensor connector.	Replace the manifold absolute pressure sensor. <Ref. to FU(H4DOTC)-43, Manifold Absolute Pressure Sensor.>

GETTHEMANUALS.org

S: DTC P0108 MANIFOLD ABSOLUTE PRESSURE/BAROMETRIC PRESSURE CIRCUIT HIGH INPUT

DTC DETECTING CONDITION:

- Immediately at fault recognition
- GENERAL DESCRIPTION <Ref. to GD(H4DOTC)-39, DTC P0108 MANIFOLD ABSOLUTE PRESSURE/ BAROMETRIC PRESSURE CIRCUIT HIGH INPUT, Diagnostic Trouble Code (DTC) Detecting Criteria.>

CAUTION:

After servicing or replacing faulty parts, perform Clear Memory Mode <Ref. to EN(H4DOTC)(diag)-53, OPERATION, Clear Memory Mode.>, and Inspection Mode <Ref. to EN(H4DOTC)(diag)-41, PROCEDURE, Inspection Mode.>.

WIRING DIAGRAM:

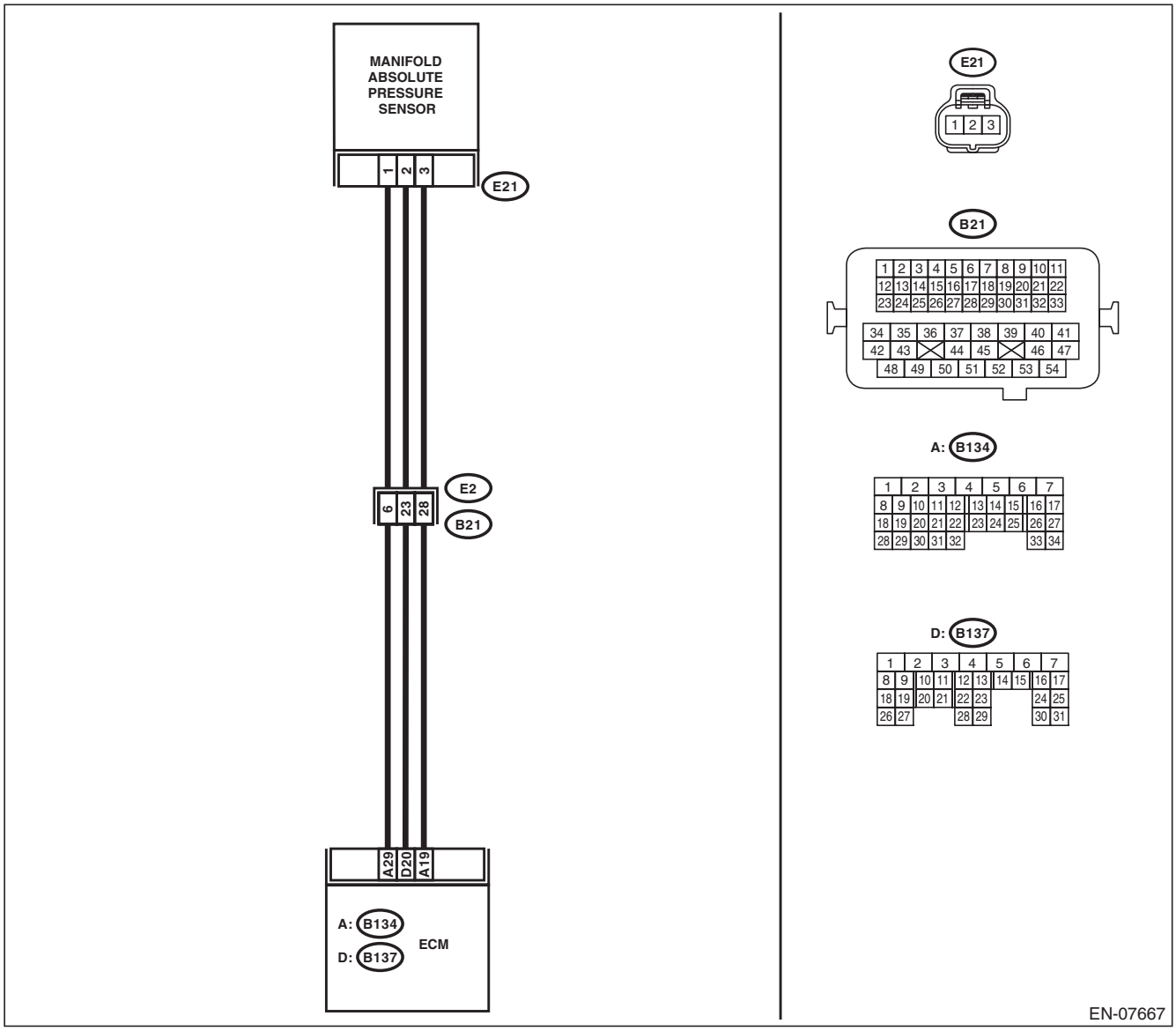

GETtheMANUALS.org

	Step	Check	Yes	No
1	**CHECK CURRENT DATA.** 1) Start the engine. 2) Read the value of «Mani. Absolute Pressure» using the Subaru Select Monitor or a general scan tool. NOTE: • Subaru Select Monitor For detailed operation procedures, refer to "READ CURRENT DATA FOR ENGINE". <Ref. to EN(H4DOTC)(diag)-34, Subaru Select Monitor.> • General scan tool For detailed operation procedures, refer to the general scan tool operation manual.	Is the value of «Mani. Absolute Pressure» 119.5 kPa (896.5 mmHg, 35.29 inHg) or more?	Go to step **2**.	Even if DTC is detected, the circuit has returned to a normal condition at this time. Reproduce the failure, and then perform the diagnosis again. NOTE: In this case, temporary poor contact of connector, temporary open or short circuit of harness may be the cause.
2	**CHECK HARNESS BETWEEN ECM AND MANIFOLD ABSOLUTE PRESSURE SENSOR CONNECTOR.** 1) Turn the ignition switch to OFF. 2) Disconnect the connector from manifold absolute pressure sensor. 3) Start the engine. 4) Read the value of «Mani. Absolute Pressure» using the Subaru Select Monitor or a general scan tool. NOTE: • Subaru Select Monitor For detailed operation procedures, refer to "READ CURRENT DATA FOR ENGINE". <Ref. to EN(H4DOTC)(diag)-34, Subaru Select Monitor.> • General scan tool For detailed operation procedures, refer to the general scan tool operation manual.	Is the value of «Mani. Absolute Pressure» 119.5 kPa (896.5 mmHg, 35.29 inHg) or more?	Repair the short circuit to power in harness between ECM and manifold absolute pressure sensor connector.	Go to step **3**.
3	**CHECK HARNESS BETWEEN ECM AND MANIFOLD ABSOLUTE PRESSURE SENSOR CONNECTOR.** 1) Turn the ignition switch to OFF. 2) Measure the resistance of harness between manifold absolute pressure sensor connector and engine ground. ***Connector & terminal*** ***(E21) No. 1 — Engine ground:***	Is the resistance less than 5 Ω?	Go to step **4**.	Repair the harness and connector. NOTE: In this case, repair the following item: • Open circuit of harness between ECM and manifold absolute pressure sensor connector. • Poor contact of ECM connector • Poor contact of coupling connector
4	**CHECK FOR POOR CONTACT.** Check for poor contact of manifold absolute pressure sensor connector.	Is there poor contact of manifold absolute pressure sensor connector?	Repair the poor contact of manifold absolute pressure sensor connector.	Replace the manifold absolute pressure sensor. <Ref. to FU(H4DOTC)-43, Manifold Absolute Pressure Sensor.>

GETTHEMANUALS.org

T: DTC P0111 INTAKE AIR TEMPERATURE SENSOR 1 CIRCUIT RANGE/PERFORMANCE

DTC DETECTING CONDITION:

- Detected when two consecutive driving cycles with fault occur.
- GENERAL DESCRIPTION <Ref. to GD(H4DOTC)-41, DTC P0111 INTAKE AIR TEMPERATURE SENSOR 1 CIRCUIT RANGE/PERFORMANCE, Diagnostic Trouble Code (DTC) Detecting Criteria.>

TROUBLE SYMPTOM:

- Improper idling
- Poor driving performance

CAUTION:

After servicing or replacing faulty parts, perform Clear Memory Mode <Ref. to EN(H4DOTC)(diag)-53, OPERATION, Clear Memory Mode.>, and Inspection Mode <Ref. to EN(H4DOTC)(diag)-41, PROCEDURE, Inspection Mode.>.

	Step	Check	Yes	No
1	**CHECK ENGINE COOLANT TEMPERATURE.** 1) Start the engine and warm up completely. 2) Read the value of «Coolant Temp.» using the Subaru Select Monitor or a general scan tool. NOTE: • Subaru Select Monitor For detailed operation procedures, refer to “READ CURRENT DATA FOR ENGINE”. <Ref. to EN(H4DOTC)(diag)-34, Subaru Select Monitor.> • General scan tool For detailed operation procedures, refer to the general scan tool operation manual.	Is the value of «Coolant Temp.» 75°C (167°F) or more?	Replace the mass air flow and intake air temperature sensor. <Ref. to FU(H4DOTC)-42, Mass Air Flow and Intake Air Temperature Sensor.>	Go to DTC P0125. <Ref. to EN(H4DOTC)(diag)-125, DTC P0125 INSUFFICIENT COOLANT TEMPERATURE FOR CLOSED LOOP FUEL CONTROL, Diagnostic Procedure with Diagnostic Trouble Code (DTC).>

GETTHEMANUALS.org

U: DTC P0112 INTAKE AIR TEMPERATURE SENSOR 1 CIRCUIT LOW

DTC DETECTING CONDITION:

- Immediately at fault recognition
- GENERAL DESCRIPTION <Ref. to GD(H4DOTC)-43, DTC P0112 INTAKE AIR TEMPERATURE SENSOR 1 CIRCUIT LOW, Diagnostic Trouble Code (DTC) Detecting Criteria.>

TROUBLE SYMPTOM:

- Improper idling
- Poor driving performance

CAUTION:

After servicing or replacing faulty parts, perform Clear Memory Mode <Ref. to EN(H4DOTC)(diag)-53, OPERATION, Clear Memory Mode.>, and Inspection Mode <Ref. to EN(H4DOTC)(diag)-41, PROCEDURE, Inspection Mode.>.

WIRING DIAGRAM:

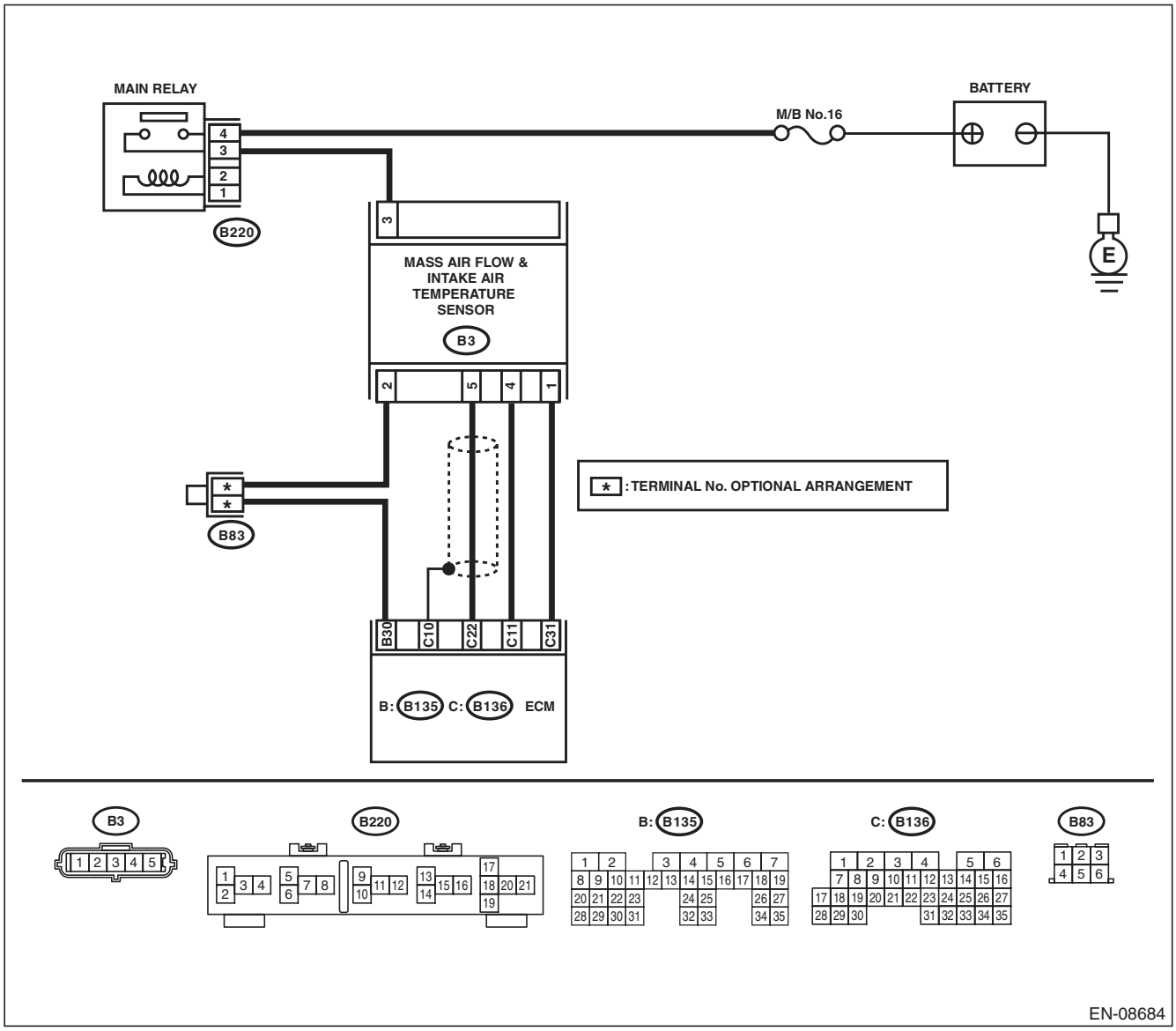

GETHEMANUALS.org

	Step	Check	Yes	No
1	**CHECK CURRENT DATA.** 1) Start the engine. 2) Read the value of «Intake Air Temp.» using the Subaru Select Monitor or a general scan tool. NOTE: • Subaru Select Monitor For detailed operation procedures, refer to "READ CURRENT DATA FOR ENGINE". <Ref. to EN(H4DOTC)(diag)-34, Subaru Select Monitor.> • General scan tool For detailed operation procedures, refer to the general scan tool operation manual.	Is the value of «Intake Air Temp.» 120°C (248°F) or more?	Go to step **2**.	Even if DTC is detected, the circuit has returned to a normal condition at this time. Reproduce the failure, and then perform the diagnosis again. NOTE: In this case, temporary poor contact of connector, temporary open or short circuit of harness may be the cause.
2	**CHECK HARNESS BETWEEN ECM AND MASS AIR FLOW AND INTAKE AIR TEMPERATURE SENSOR CONNECTOR.** 1) Turn the ignition switch to OFF. 2) Disconnect the connector from ECM and the mass air flow and intake air temperature sensor. 3) Measure the resistance between ECM and chassis ground. ***Connector & terminal*** ***(B136) No. 31 — Chassis ground:***	Is the resistance 1 MΩ or more?	Replace the mass air flow and intake air temperature sensor. <Ref. to FU(H4DOTC)-42, Mass Air Flow and Intake Air Temperature Sensor.>	Repair the short circuit to ground in harness between ECM and mass air flow and intake air temperature sensor connector.

GETTHEMANUALS.org

V: DTC P0113 INTAKE AIR TEMPERATURE SENSOR 1 CIRCUIT HIGH

DTC DETECTING CONDITION:

- Immediately at fault recognition
- GENERAL DESCRIPTION <Ref. to GD(H4DOTC)-45, DTC P0113 INTAKE AIR TEMPERATURE SENSOR 1 CIRCUIT HIGH, Diagnostic Trouble Code (DTC) Detecting Criteria.>

TROUBLE SYMPTOM:

- Improper idling
- Poor driving performance

CAUTION:

After servicing or replacing faulty parts, perform Clear Memory Mode <Ref. to EN(H4DOTC)(diag)-53, OPERATION, Clear Memory Mode.>, and Inspection Mode <Ref. to EN(H4DOTC)(diag)-41, PROCEDURE, Inspection Mode.>.

WIRING DIAGRAM:

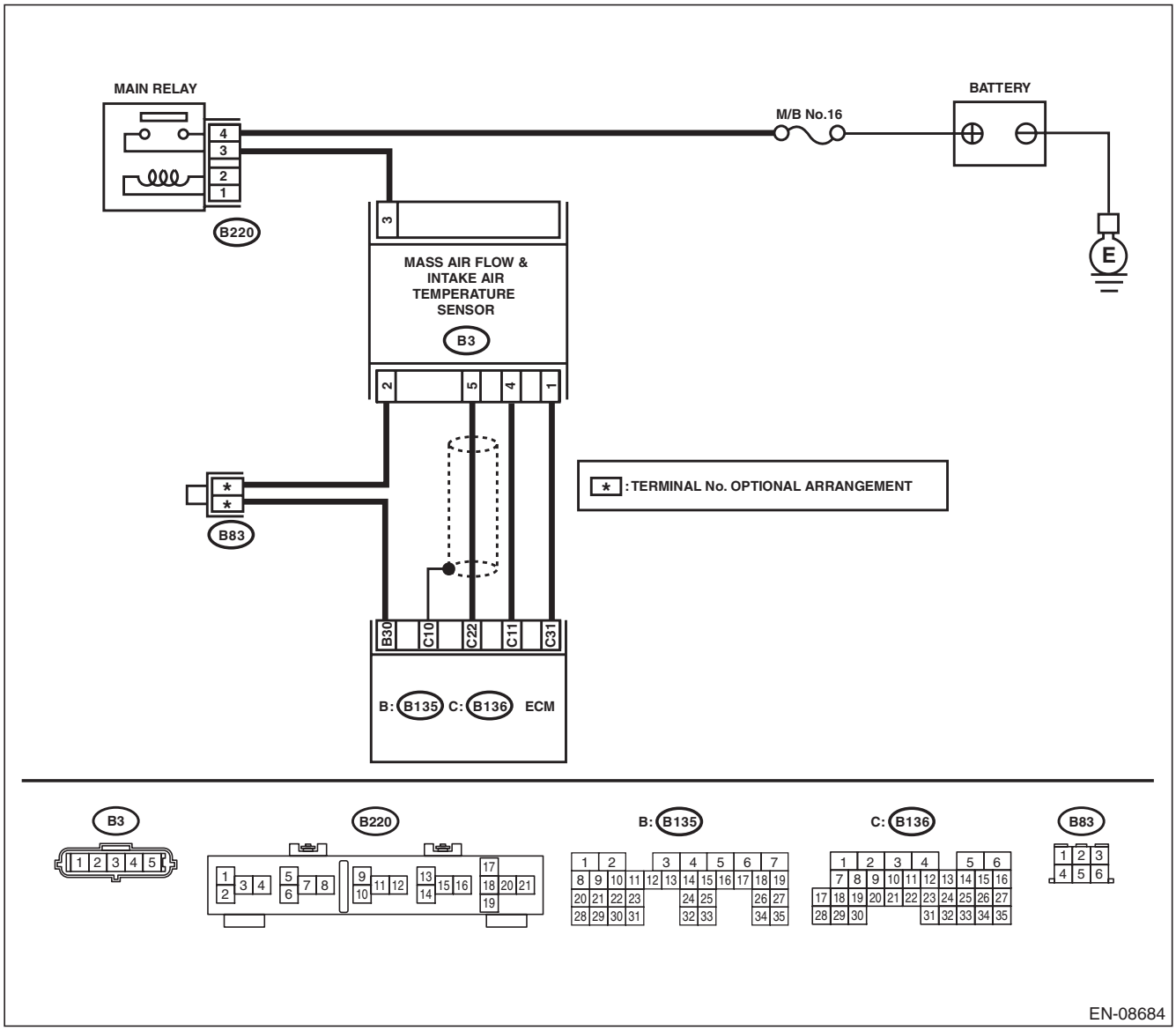

GETTHEMANUALS.org

	Step	Check	Yes	No
1	**CHECK CURRENT DATA.** 1) Start the engine. 2) Read the value of «Intake Air Temp.» using the Subaru Select Monitor or a general scan tool. NOTE: • Subaru Select Monitor For detailed operation procedures, refer to "READ CURRENT DATA FOR ENGINE". <Ref. to EN(H4DOTC)(diag)-34, Subaru Select Monitor.> • General scan tool For detailed operation procedures, refer to the general scan tool operation manual.	Is the value of «Intake Air Temp.» less than –40°C (–40°F)?	Go to step **2**.	Even if DTC is detected, the circuit has returned to a normal condition at this time. Reproduce the failure, and then perform the diagnosis again. NOTE: In this case, temporary poor contact of connector, temporary open or short circuit of harness may be the cause.
2	**CHECK FOR POOR CONTACT.** Check for poor contact of ECM and mass air flow and intake air temperature sensor connector.	Is there poor contact of ECM or mass air flow and intake air temperature sensor connector?	Repair the poor contact of ECM or mass air flow and intake air temperature sensor connector.	Go to step **3**.
3	**CHECK HARNESS BETWEEN ECM AND MASS AIR FLOW AND INTAKE AIR TEMPERATURE SENSOR CONNECTOR.** 1) Turn the ignition switch to OFF. 2) Disconnect the connector from ECM and the mass air flow and intake air temperature sensor. 3) Measure the resistance of harness between ECM and the mass air flow and intake air temperature sensor connector. ***Connector & terminal*** ***(B136) No. 31 — (B3) No. 1:*** ***(B135) No. 30 — (B3) No. 2:***	Is the resistance less than 1 Ω?	Go to step **4**.	Repair the harness and connector. NOTE: In this case, repair the following item: • Open circuit in harness between ECM and mass air flow and intake air temperature sensor connector • Poor contact of coupling connector
4	**CHECK HARNESS BETWEEN ECM AND MASS AIR FLOW AND INTAKE AIR TEMPERATURE SENSOR CONNECTOR.** 1) Connect all connectors. 2) Turn the ignition switch to ON. 3) Measure the voltage between ECM and chassis ground. ***Connector & terminal*** ***(B136) No. 31 (+) — Chassis ground (–):***	Is the voltage 5 V or more?	Repair the short circuit of harness to power supply between ECM and mass air flow and intake air temperature sensor connector.	Replace the mass air flow and intake air temperature sensor. <Ref. to FU(H4DOTC)-42, Mass Air Flow and Intake Air Temperature Sensor.>

GETtheMANUALS.org

W: DTC P0117 ENGINE COOLANT TEMPERATURE CIRCUIT LOW

DTC DETECTING CONDITION:

- Immediately at fault recognition
- GENERAL DESCRIPTION <Ref. to GD(H4DOTC)-47, DTC P0117 ENGINE COOLANT TEMPERATURE CIRCUIT LOW, Diagnostic Trouble Code (DTC) Detecting Criteria.>

TROUBLE SYMPTOM:

- Hard to start
- Improper idling
- Poor driving performance

CAUTION:

After servicing or replacing faulty parts, perform Clear Memory Mode <Ref. to EN(H4DOTC)(diag)-53, OPERATION, Clear Memory Mode.>, and Inspection Mode <Ref. to EN(H4DOTC)(diag)-41, PROCEDURE, Inspection Mode.>.

WIRING DIAGRAM:

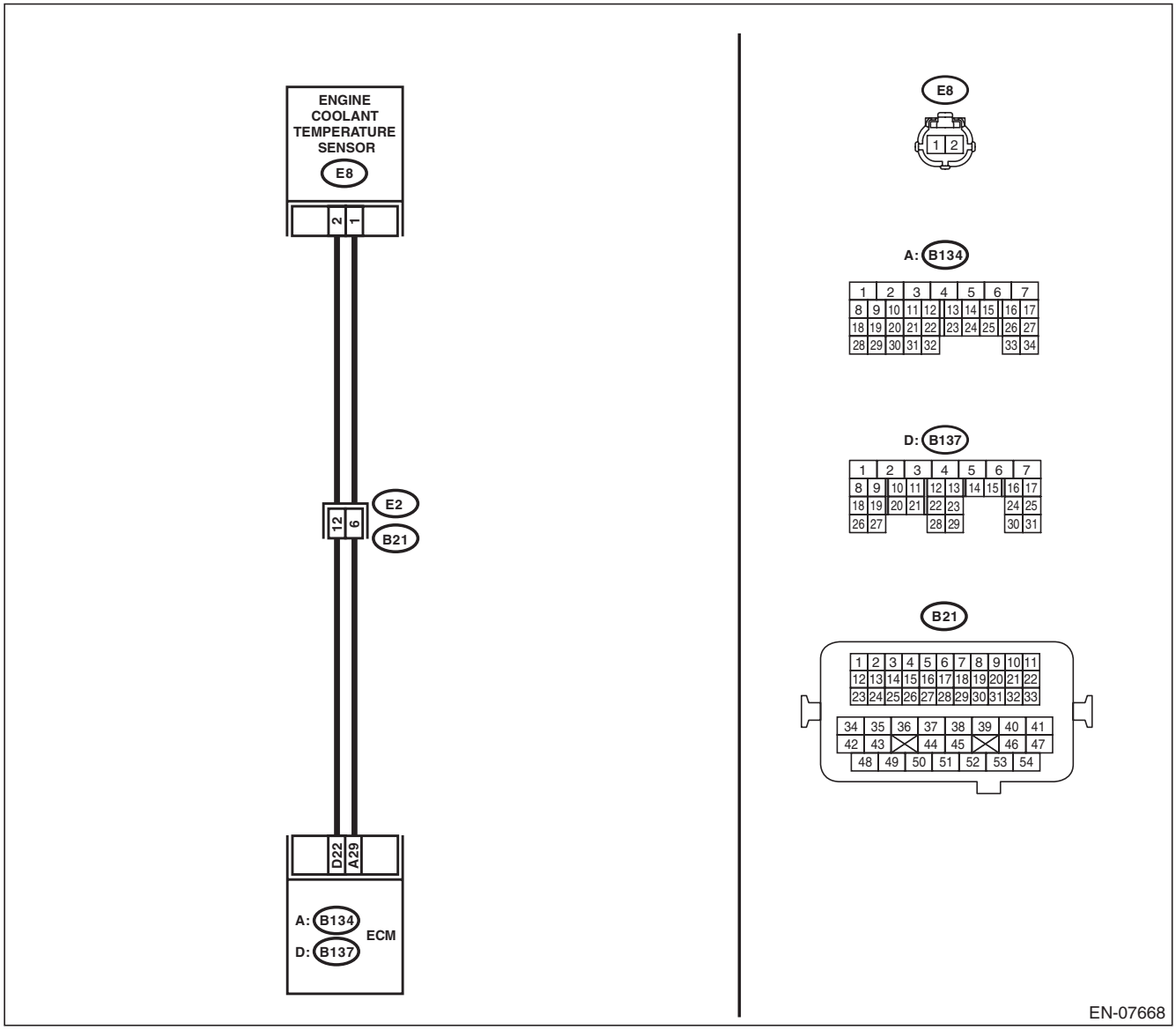

GETHEMANUALS.org

	Step	Check	Yes	No
1	**CHECK CURRENT DATA.** 1) Start the engine. 2) Read the value of «Coolant Temp.» using the Subaru Select Monitor or a general scan tool. NOTE: • Subaru Select Monitor For detailed operation procedures, refer to "READ CURRENT DATA FOR ENGINE". <Ref. to EN(H4DOTC)(diag)-34, Subaru Select Monitor.> • General scan tool For detailed operation procedures, refer to the general scan tool operation manual.	Is the value of «Coolant Temp.» 150°C (302°F) or more?	Go to step **2**.	Even if DTC is detected, the circuit has returned to a normal condition at this time. Reproduce the failure, and then perform the diagnosis again. NOTE: In this case, temporary poor contact of connector, temporary open or short circuit of harness may be the cause.
2	**CHECK HARNESS BETWEEN ECM AND ENGINE COOLANT TEMPERATURE SENSOR CONNECTOR.** 1) Turn the ignition switch to OFF. 2) Disconnect the connectors from ECM and engine coolant temperature sensor. 3) Measure the resistance between ECM and chassis ground. ***Connector & terminal*** ***(B137) No. 22 — Chassis ground:***	Is the resistance 1 MΩ or more?	Replace the engine coolant temperature sensor. <Ref. to FU(H4DOTC)-34, Engine Coolant Temperature Sensor.>	Repair short circuit in harness to ground between ECM and engine coolant temperature sensor connector.

GETTHEMANUALS.org

X: DTC P0118 ENGINE COOLANT TEMPERATURE CIRCUIT HIGH

DTC DETECTING CONDITION:

- Immediately at fault recognition
- GENERAL DESCRIPTION <Ref. to GD(H4DOTC)-49, DTC P0118 ENGINE COOLANT TEMPERATURE CIRCUIT HIGH, Diagnostic Trouble Code (DTC) Detecting Criteria.>

TROUBLE SYMPTOM:

- Hard to start
- Improper idling
- Poor driving performance

CAUTION:

After servicing or replacing faulty parts, perform Clear Memory Mode <Ref. to EN(H4DOTC)(diag)-53, OPERATION, Clear Memory Mode.>, and Inspection Mode <Ref. to EN(H4DOTC)(diag)-41, PROCEDURE, Inspection Mode.>.

WIRING DIAGRAM:

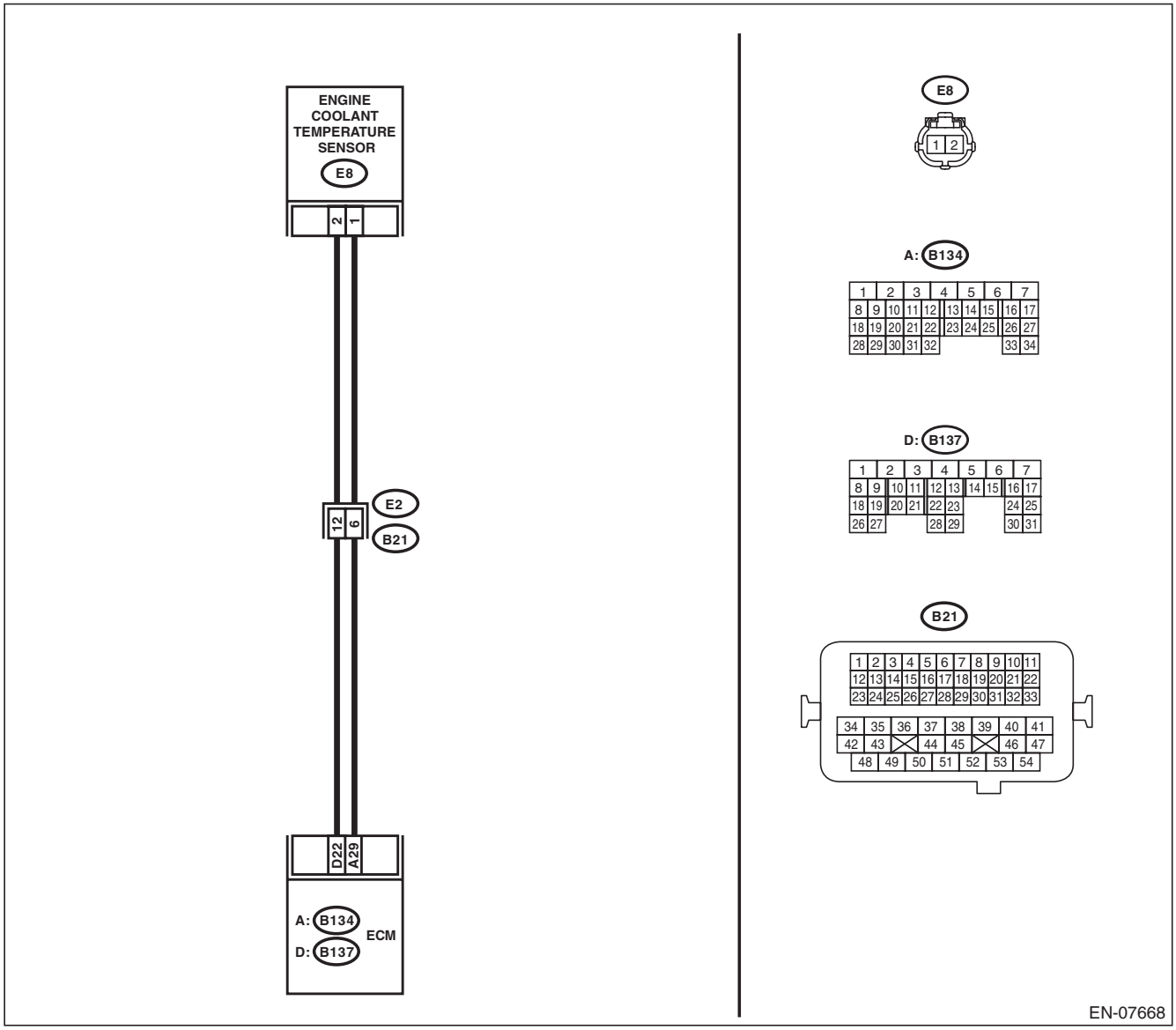

GETHEMANUALS.org

	Step	Check	Yes	No
1	**CHECK CURRENT DATA.** 1) Start the engine. 2) Read the value of «Coolant Temp.» using the Subaru Select Monitor or a general scan tool. NOTE: • Subaru Select Monitor For detailed operation procedures, refer to "READ CURRENT DATA FOR ENGINE". <Ref. to EN(H4DOTC)(diag)-34, Subaru Select Monitor.> • General scan tool For detailed operation procedures, refer to the general scan tool operation manual.	Is the value of «Coolant Temp.» less than –40°C (–40°F)?	Go to step **2**.	Even if DTC is detected, the circuit has returned to a normal condition at this time. Reproduce the failure, and then perform the diagnosis again. NOTE: In this case, temporary poor contact of connector, temporary open or short circuit of harness may be the cause.
2	**CHECK FOR POOR CONTACT.** Check for poor contact of ECM and engine coolant temperature sensor connector.	Is there poor contact of ECM or engine coolant temperature sensor connector?	Repair the poor contact of ECM or engine coolant temperature sensor connector.	Go to step **3**.
3	**CHECK HARNESS BETWEEN ECM AND ENGINE COOLANT TEMPERATURE SENSOR CONNECTOR.** 1) Turn the ignition switch to OFF. 2) Disconnect the connectors from ECM and engine coolant temperature sensor. 3) Measure the resistance of harness between ECM and engine coolant temperature sensor connector. ***Connector & terminal*** ***(B137) No. 22 — (E8) No. 2:*** ***(B134) No. 29 — (E8) No. 1:***	Is the resistance less than 1 Ω?	Go to step **4**.	Repair the harness and connector. NOTE: In this case, repair the following item: • Open circuit in harness between ECM and engine coolant temperature sensor connector • Poor contact of coupling connector
4	**CHECK HARNESS BETWEEN ECM AND ENGINE COOLANT TEMPERATURE SENSOR CONNECTOR.** 1) Connect all connectors. 2) Turn the ignition switch to ON. 3) Measure the voltage between ECM and chassis ground. ***Connector & terminal*** ***(B137) No. 22 (+) — Chassis ground (–):***	Is the voltage 5 V or more?	Repair the short circuit to power in harness between ECM and engine coolant temperature sensor connector.	Replace the engine coolant temperature sensor. <Ref. to FU(H4DOTC)-34, Engine Coolant Temperature Sensor.>

GETTHEMANUALS.org

Y: DTC P0122 THROTTLE/PEDAL POSITION SENSOR/SWITCH “A” CIRCUIT LOW

DTC DETECTING CONDITION:

- Immediately at fault recognition
- GENERAL DESCRIPTION <Ref. to GD(H4DOTC)-51, DTC P0122 THROTTLE/PEDAL POSITION SENSOR/SWITCH “A” CIRCUIT LOW, Diagnostic Trouble Code (DTC) Detecting Criteria.>

TROUBLE SYMPTOM:

- Improper idling
- Engine stalls.
- Poor driving performance

CAUTION:

After servicing or replacing faulty parts, perform Clear Memory Mode <Ref. to EN(H4DOTC)(diag)-53, OPERATION, Clear Memory Mode.>, and Inspection Mode <Ref. to EN(H4DOTC)(diag)-41, PROCEDURE, Inspection Mode.>.

WIRING DIAGRAM:

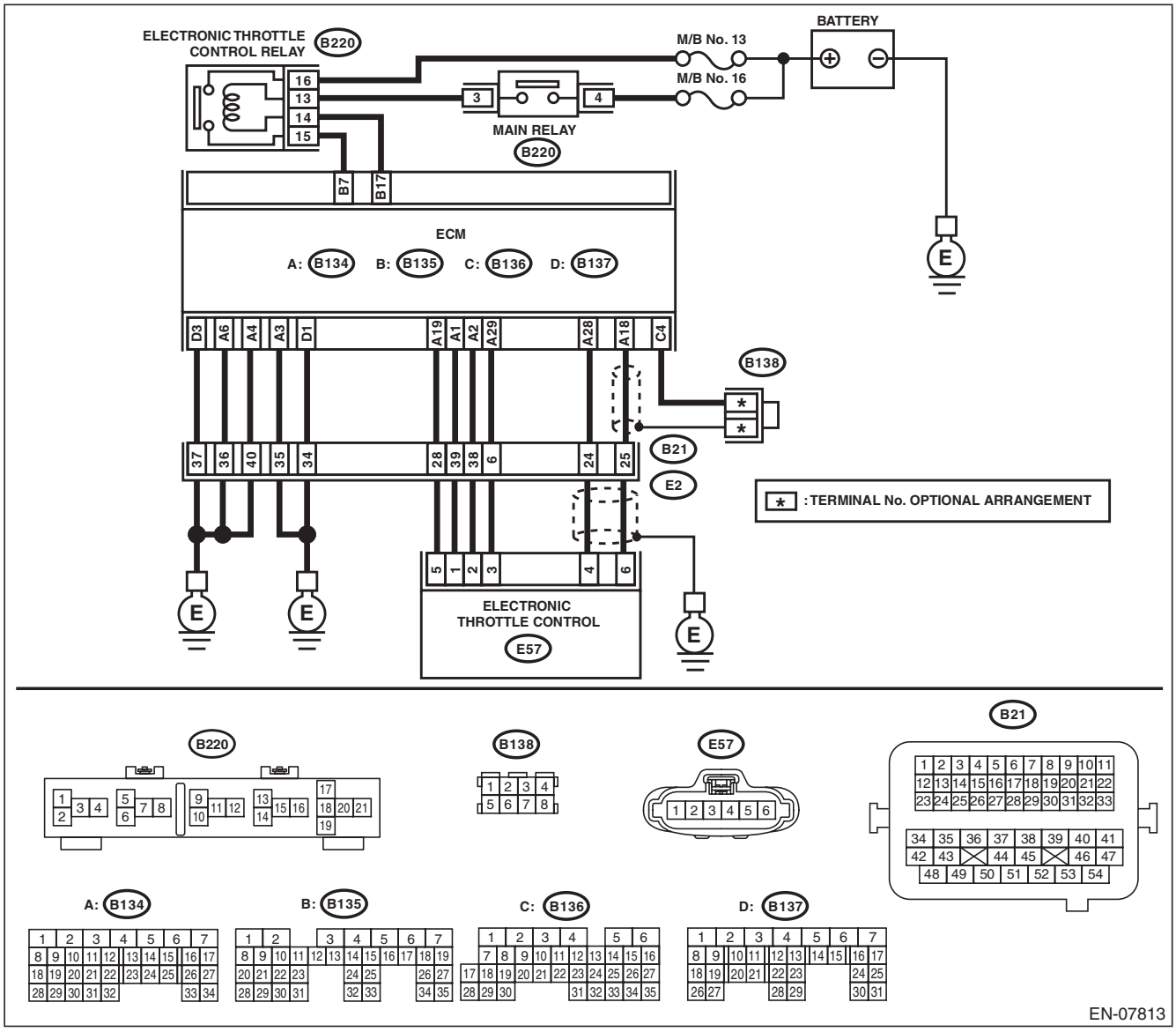

GETHEMANUALS.org

Step		Check	Yes	No
1	**CHECK HARNESS BETWEEN ECM AND ELECTRONIC THROTTLE CONTROL CONNECTOR.** 1) Turn the ignition switch to OFF. 2) Disconnect the connectors from ECM and electronic throttle control. 3) Measure the resistance between ECM and chassis ground. ***Connector & terminal*** ***(B134) No. 19 — Chassis ground:*** ***(B134) No. 18 — Chassis ground:*** ***(B134) No. 18 — (B136) No. 4:***	Is the resistance 1 MΩ or more?	Go to step **2**.	Repair the short circuit to ground in harness between ECM and electronic throttle control connector.
2	**CHECK SHORT CIRCUIT INSIDE THE ECM.** 1) Connect the connector to ECM. 2) Measure the resistance between electronic throttle control connector and engine ground. ***Connector & terminal*** ***(E57) No. 6 — Engine ground:***	Is the resistance 1 MΩ or more?	Replace the electronic throttle control. <Ref. to FU(H4DOTC)-15, Throttle Body.>	Repair the short circuit to ground in harness between ECM and electronic throttle control connector. Replace the ECM if defective. <Ref. to FU(H4DOTC)-58, Engine Control Module (ECM).>

GETTHEMANUALS.org

Z: DTC P0123 THROTTLE/PEDAL POSITION SENSOR/SWITCH “A” CIRCUIT HIGH

DTC DETECTING CONDITION:

- Immediately at fault recognition
- GENERAL DESCRIPTION <Ref. to GD(H4DOTC)-53, DTC P0123 THROTTLE/PEDAL POSITION SENSOR/SWITCH “A” CIRCUIT HIGH, Diagnostic Trouble Code (DTC) Detecting Criteria.>

TROUBLE SYMPTOM:

- Improper idling
- Engine stalls.
- Poor driving performance

CAUTION:

After servicing or replacing faulty parts, perform Clear Memory Mode <Ref. to EN(H4DOTC)(diag)-53, OPERATION, Clear Memory Mode.>, and Inspection Mode <Ref. to EN(H4DOTC)(diag)-41, PROCEDURE, Inspection Mode.>.

WIRING DIAGRAM:

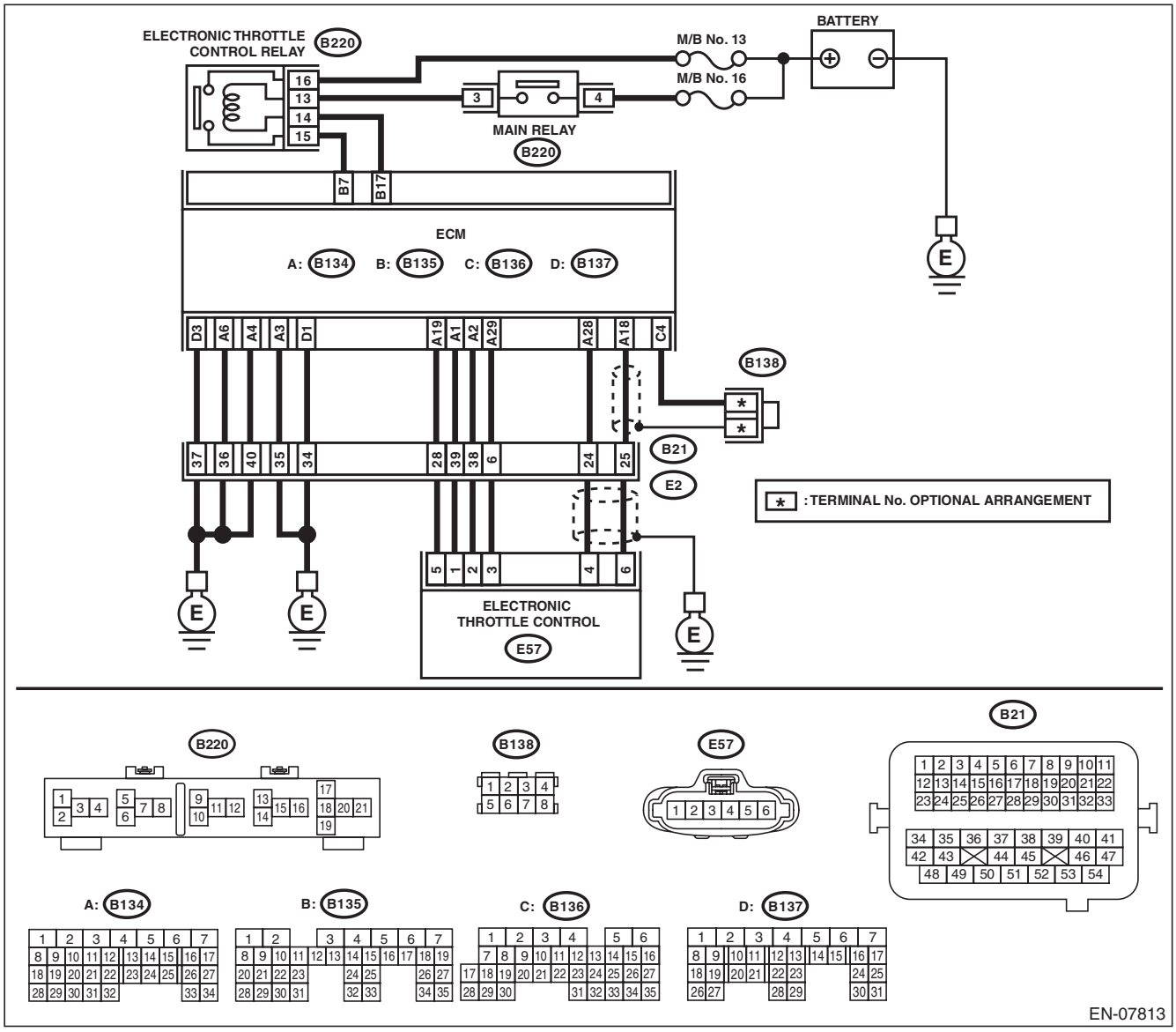

GETHEMANUALS.org

	Step	Check	Yes	No
1	**CHECK HARNESS BETWEEN ECM AND ELECTRONIC THROTTLE CONTROL CONNECTOR.** 1) Turn the ignition switch to OFF. 2) Disconnect the connectors from the ECM and electronic throttle control. 3) Measure the resistance of harness between ECM and electronic throttle control connector. ***Connector & terminal*** ***(B134) No. 18 — (E57) No. 6:*** ***(B134) No. 29 — (E57) No. 3:***	Is the resistance less than 1 Ω?	Go to step **2**.	Repair the harness and connector. NOTE: In this case, repair the following item: • Open circuit in harness between ECM and electronic throttle control connector • Poor contact of coupling connector
2	**CHECK HARNESS BETWEEN ECM AND ELECTRONIC THROTTLE CONTROL CONNECTOR.** 1) Connect the connector to ECM. 2) Measure the resistance between electronic throttle control connector and engine ground. ***Connector & terminal*** ***(E57) No. 3 — Engine ground:***	Is the resistance less than 5 Ω?	Go to step **3**.	Repair the harness and connector. NOTE: In this case, repair the following item: • Open circuit of harness between ECM and engine ground • Poor contact of ECM connector • Poor contact of coupling connector
3	**CHECK HARNESS BETWEEN ECM AND ELECTRONIC THROTTLE CONTROL CONNECTOR.** 1) Turn the ignition switch to ON. 2) Measure the voltage between electronic throttle control connector and engine ground. ***Connector & terminal*** ***(E57) No. 6 (+) — Engine ground (–):***	Is the voltage 5 V or more?	Repair the short circuit of harness to power supply between ECM and electronic throttle control connector.	Go to step **4**.
4	**CHECK HARNESS BETWEEN ECM AND ELECTRONIC THROTTLE CONTROL CONNECTOR.** 1) Turn the ignition switch to OFF. 2) Disconnect the connector from ECM. 3) Measure the resistance between ECM connectors. ***Connector & terminal*** ***(B134) No. 19 — (B134) No. 18:***	Is the resistance 1 MΩ or more?	Repair the poor contact of electronic throttle control connector. Replace the electronic throttle control if defective. <Ref. to FU(H4DOTC)-15, Throttle Body.>	Repair the short circuit of harness to power supply between ECM and electronic throttle control connector.

GETTHEMANUALS.org

AA:DTC P0125 INSUFFICIENT COOLANT TEMPERATURE FOR CLOSED LOOP FUEL CONTROL

DTC DETECTING CONDITION:

- Detected when two consecutive driving cycles with fault occur.
- GENERAL DESCRIPTION <Ref. to GD(H4DOTC)-55, DTC P0125 INSUFFICIENT COOLANT TEMPERATURE FOR CLOSED LOOP FUEL CONTROL, Diagnostic Trouble Code (DTC) Detecting Criteria.>

TROUBLE SYMPTOM:

Engine does not return to idle.

CAUTION:

After servicing or replacing faulty parts, perform Clear Memory Mode <Ref. to EN(H4DOTC)(diag)-53, OPERATION, Clear Memory Mode.>, and Inspection Mode <Ref. to EN(H4DOTC)(diag)-41, PROCEDURE, Inspection Mode.>.

Step		Check	Yes	No
1	**CHECK TIRE SIZE.**	Is the tire size as specified and the same size as three other wheels?	Go to step **2**.	Replace the tire.
2	**CHECK ENGINE COOLANT.** Check the following items: • Amount of engine coolant • Engine coolant freeze • Contamination of engine coolant	Is the engine coolant normal?	Go to step **3**.	Fill or replace the engine coolant. <Ref. to CO(H4DOTC)-14, REPLACEMENT, Engine Coolant.>
3	**CHECK THERMOSTAT.**	Does the thermostat remain opened?	Replace the thermostat. <Ref. to CO(H4DOTC)-19, Thermostat.>	Replace the engine coolant temperature sensor. <Ref. to FU(H4DOTC)-34, Engine Coolant Temperature Sensor.>

GETTHEMANUALS.org

AB:DTC P0126 INSUFFICIENT ENGINE COOLANT TEMPERATURE FOR STABLE OPERATION

DTC DETECTING CONDITION:

- Detected when two consecutive driving cycles with fault occur.
- GENERAL DESCRIPTION <Ref. to GD(H4DOTC)-57, DTC P0126 INSUFFICIENT ENGINE COOLANT TEMPERATURE FOR STABLE OPERATION, Diagnostic Trouble Code (DTC) Detecting Criteria.>

TROUBLE SYMPTOM:

- Hard to start
- Improper idling
- Poor driving performance

CAUTION:

After servicing or replacing faulty parts, perform Clear Memory Mode <Ref. to EN(H4DOTC)(diag)-53, OPERATION, Clear Memory Mode.>, and Inspection Mode <Ref. to EN(H4DOTC)(diag)-41, PROCEDURE, Inspection Mode.>.

	Step	Check	Yes	No
1	**CHECK ENGINE COOLANT TEMPERATURE SENSOR.** 1) Disconnect the connectors from the engine coolant temperature sensor. 2) Measure the resistance between engine coolant temperature sensor terminals when the engine coolant is cold and after warmed up. ***Terminals*** ***No. 1 — No. 2:***	Is the resistance of engine coolant temperature sensor different between when engine coolant is cold and after warmed up?	Repair the poor contact of ECM connector.	Replace the engine coolant temperature sensor. <Ref. to FU(H4DOTC)-34, Engine Coolant Temperature Sensor.>

GETTHEMANUALS.org

AC:DTC P0128 COOLANT THERMOSTAT (ENGINE COOLANT TEMPERATURE BELOW THERMOSTAT REGULATING TEMPERATURE)

DTC DETECTING CONDITION:

- Detected when two consecutive driving cycles with fault occur.
- GENERAL DESCRIPTION <Ref. to GD(H4DOTC)-59, DTC P0128 COOLANT THERMOSTAT (ENGINE COOLANT TEMPERATURE BELOW THERMOSTAT REGULATING TEMPERATURE), Diagnostic Trouble Code (DTC) Detecting Criteria.>

TROUBLE SYMPTOM:

Thermostat remains open.

CAUTION:

After servicing or replacing faulty parts, perform Clear Memory Mode <Ref. to EN(H4DOTC)(diag)-53, OPERATION, Clear Memory Mode.>, and Inspection Mode <Ref. to EN(H4DOTC)(diag)-41, PROCEDURE, Inspection Mode.>.

Step		Check	Yes	No
1	**CHECK ENGINE COOLANT.**	Is the engine coolant amount normal?	Go to step **2**.	Refill the engine coolant. <Ref. to CO(H4DOTC)-14, Engine Coolant.>
2	**CHECK RADIATOR FAN.** 1) Start the engine. 2) Check the radiator fan operation.	Does the radiator fan continuously rotate for 3 minutes or more during idling?	Repair radiator fan circuit. <Ref. to CO(H4DOTC)-25, Radiator Main Fan and Fan Motor.> and <Ref. to CO(H4DOTC)-27, Radiator Sub Fan and Fan Motor.>	Replace the thermostat. <Ref. to CO(H4DOTC)-19, Thermostat.>

GETTHEMANUALS.org

AD:DTC P0131 O2 SENSOR CIRCUIT LOW VOLTAGE (BANK 1 SENSOR 1)

DTC DETECTING CONDITION:

- Immediately at fault recognition
- GENERAL DESCRIPTION <Ref. to GD(H4DOTC)-63, DTC P0131 O2 SENSOR CIRCUIT LOW VOLTAGE (BANK 1 SENSOR 1), Diagnostic Trouble Code (DTC) Detecting Criteria.>

CAUTION:

After servicing or replacing faulty parts, perform Clear Memory Mode <Ref. to EN(H4DOTC)(diag)-53, OPERATION, Clear Memory Mode.>, and Inspection Mode <Ref. to EN(H4DOTC)(diag)-41, PROCEDURE, Inspection Mode.>.

WIRING DIAGRAM:

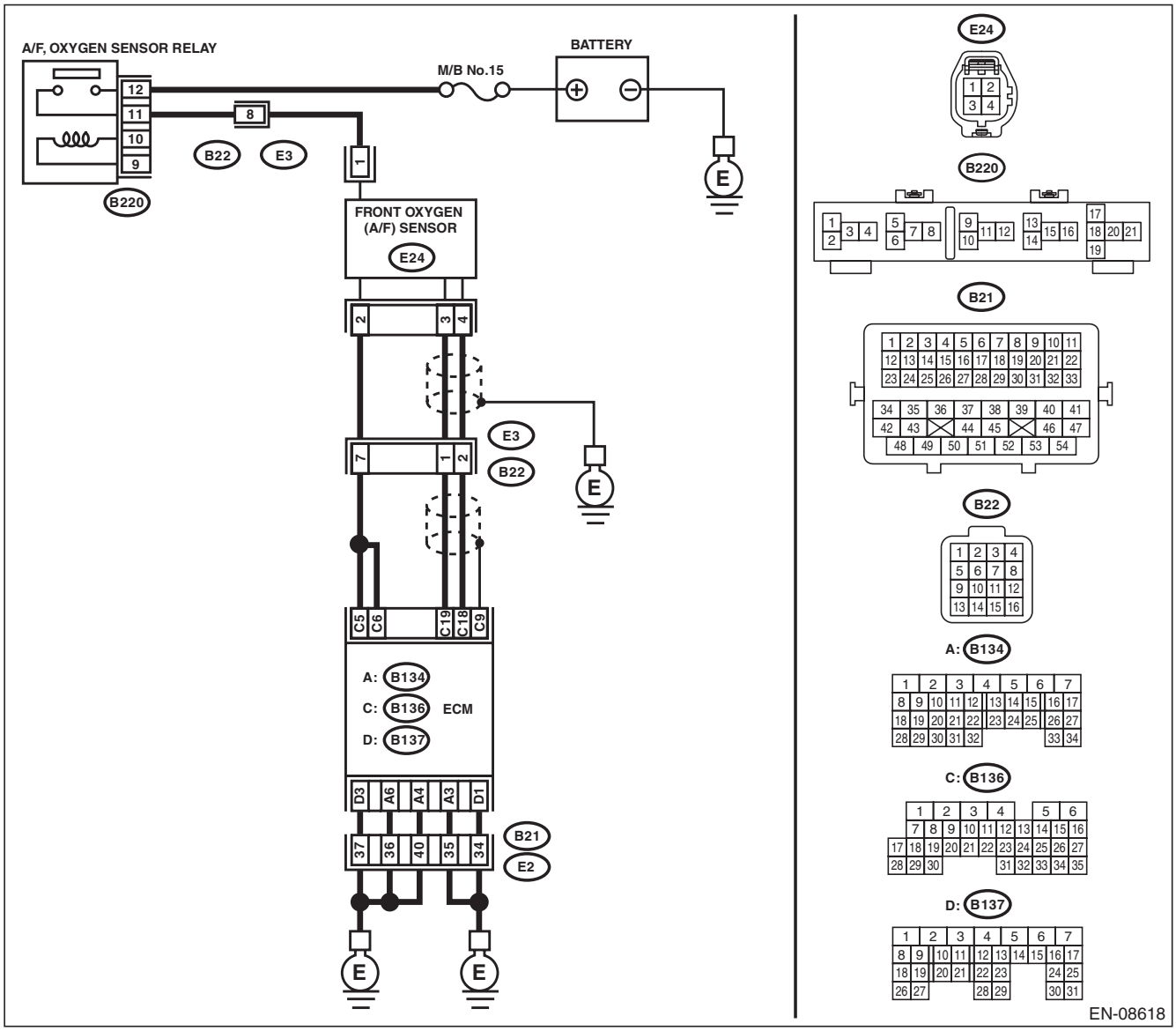

Step		Check	Yes	No
1	**CHECK FRONT OXYGEN (A/F) SENSOR CONNECTOR AND COUPLING CONNECTOR.**	Has water entered the connector?	Completely remove any water inside.	Go to step **2**.

GETTHEMANUALS.org

Step		Check	Yes	No
2	**CHECK HARNESS BETWEEN ECM AND FRONT OXYGEN (A/F) SENSOR CONNECTOR.** 1) Turn the ignition switch to OFF. 2) Disconnect the connectors from ECM and front oxygen (A/F) sensor connector. 3) Measure the resistance between ECM and chassis ground. ***Connector & terminal*** ***(B136) No. 19 — Chassis ground:*** ***(B136) No. 18 — Chassis ground:***	Is the resistance 1 MΩ or more?	Go to step **3**.	Repair the ground short circuit of harness between ECM and front oxygen (A/F) sensor connector.
3	**CHECK FOR POOR CONTACT.** Check for poor contact of the front oxygen (A/F) sensor connector.	Is there poor contact of front oxygen (A/F) sensor connector?	Repair the poor contact of front oxygen (A/F) sensor connector.	Replace the front oxygen (A/F) sensor. <Ref. to FU(H4DOTC)-54, Front Oxygen (A/F) Sensor.>

GETTHEMANUALS.org

AE:DTC P0132 O2 SENSOR CIRCUIT HIGH VOLTAGE (BANK 1 SENSOR 1)

DTC DETECTING CONDITION:

- Immediately at fault recognition
- GENERAL DESCRIPTION <Ref. to GD(H4DOTC)-65, DTC P0132 O2 SENSOR CIRCUIT HIGH VOLTAGE (BANK 1 SENSOR 1), Diagnostic Trouble Code (DTC) Detecting Criteria.>

CAUTION:

After servicing or replacing faulty parts, perform Clear Memory Mode <Ref. to EN(H4DOTC)(diag)-53, OPERATION, Clear Memory Mode.>, and Inspection Mode <Ref. to EN(H4DOTC)(diag)-41, PROCEDURE, Inspection Mode.>.

WIRING DIAGRAM:

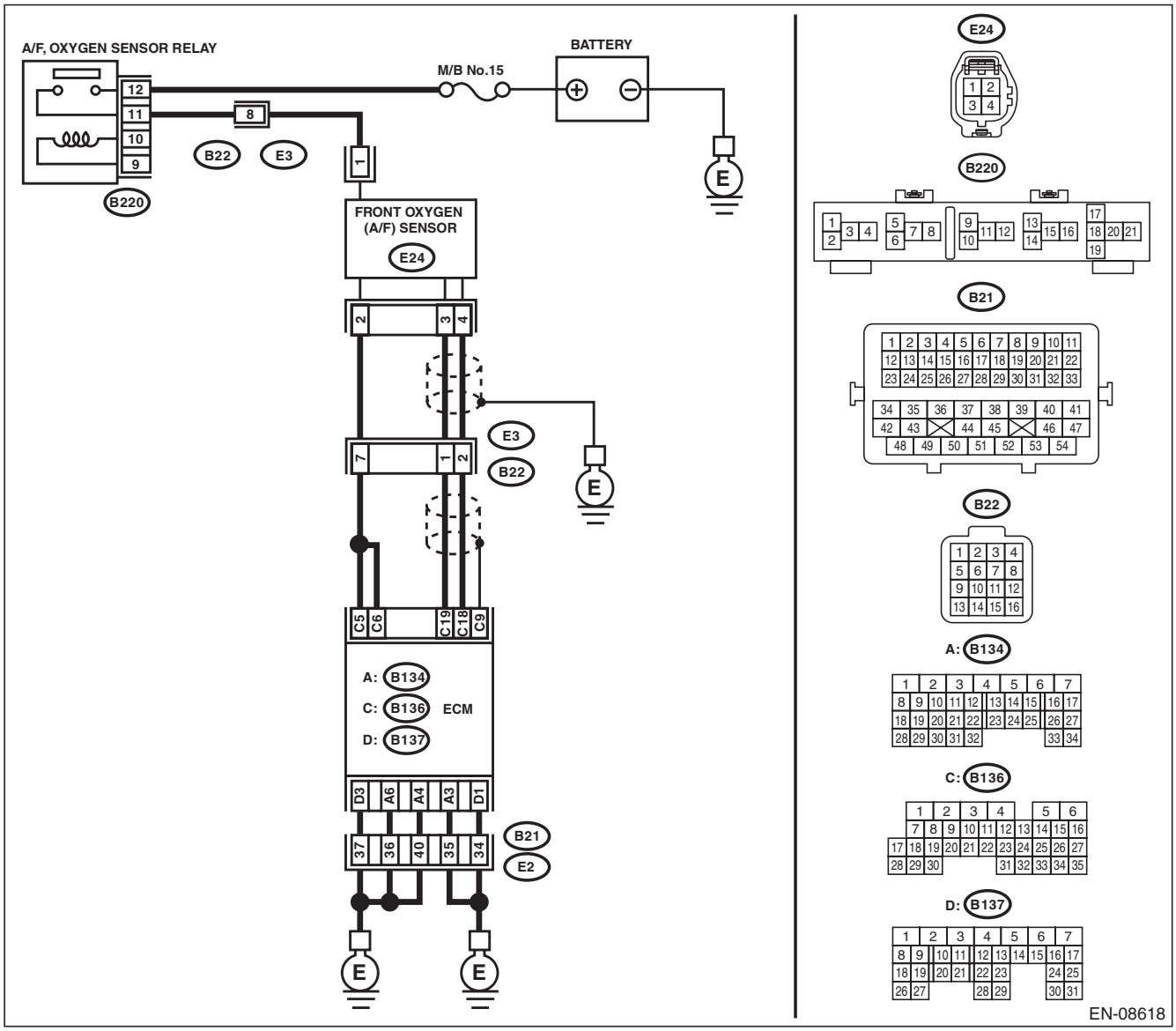

Step		Check	Yes	No
1	**CHECK FRONT OXYGEN (A/F) SENSOR CONNECTOR AND COUPLING CONNECTOR.**	Has water entered the connector?	Completely remove any water inside.	Go to step **2**.

GETTHEMANUALS.org

Step		Check	Yes	No
2	**CHECK HARNESS BETWEEN ECM AND FRONT OXYGEN (A/F) SENSOR CONNECTOR.** 1) Turn the ignition switch to OFF. 2) Disconnect the connectors from front oxygen (A/F) sensor. 3) Turn the ignition switch to ON. 4) Measure the voltage between ECM and chassis ground. ***Connector & terminal*** ***(B136) No. 19 (+) — Chassis ground (–):*** ***(B136) No. 18 (+) — Chassis ground (–):***	Is the voltage 8 V or more?	Repair the short circuit to power in the harness between ECM and front oxygen (A/F) sensor connector.	Replace the front oxygen (A/F) sensor. <Ref. to FU(H4DOTC)-54, Front Oxygen (A/F) Sensor.>

GETtheMANUALS.org

AF:DTC P0133 O2 SENSOR CIRCUIT SLOW RESPONSE (BANK 1 SENSOR 1)

DTC DETECTING CONDITION:

- Detected when two consecutive driving cycles with fault occur.
- GENERAL DESCRIPTION <Ref. to GD(H4DOTC)-67, DTC P0133 O2 SENSOR CIRCUIT SLOW RESPONSE (BANK 1 SENSOR 1), Diagnostic Trouble Code (DTC) Detecting Criteria.>

CAUTION:

After servicing or replacing faulty parts, perform Clear Memory Mode <Ref. to EN(H4DOTC)(diag)-53, OPERATION, Clear Memory Mode.>, and Inspection Mode <Ref. to EN(H4DOTC)(diag)-41, PROCEDURE, Inspection Mode.>.

Step		Check	Yes	No
1	**CHECK EXHAUST SYSTEM.** NOTE: Check the following items. • Loose installation of front portion of exhaust pipe onto cylinder heads • Loose connection between front exhaust pipe and front catalytic converter • Damage of exhaust pipe resulting in a hole	Is there any fault in exhaust system?	Repair the exhaust system.	Replace the front oxygen (A/F) sensor. <Ref. to FU(H4DOTC)-54, Front Oxygen (A/F) Sensor.>

GETTHEMANUALS.org

AG:DTC P0134 O2 SENSOR CIRCUIT NO ACTIVITY DETECTED (BANK 1 SENSOR 1)

DTC DETECTING CONDITION:

- Immediately at fault recognition
- GENERAL DESCRIPTION <Ref. to GD(H4DOTC)-70, DTC P0134 O2 SENSOR CIRCUIT NO ACTIVITY DETECTED (BANK 1 SENSOR 1), Diagnostic Trouble Code (DTC) Detecting Criteria.>

CAUTION:

After servicing or replacing faulty parts, perform Clear Memory Mode <Ref. to EN(H4DOTC)(diag)-53, OPERATION, Clear Memory Mode.>, and Inspection Mode <Ref. to EN(H4DOTC)(diag)-41, PROCEDURE, Inspection Mode.>.

WIRING DIAGRAM:

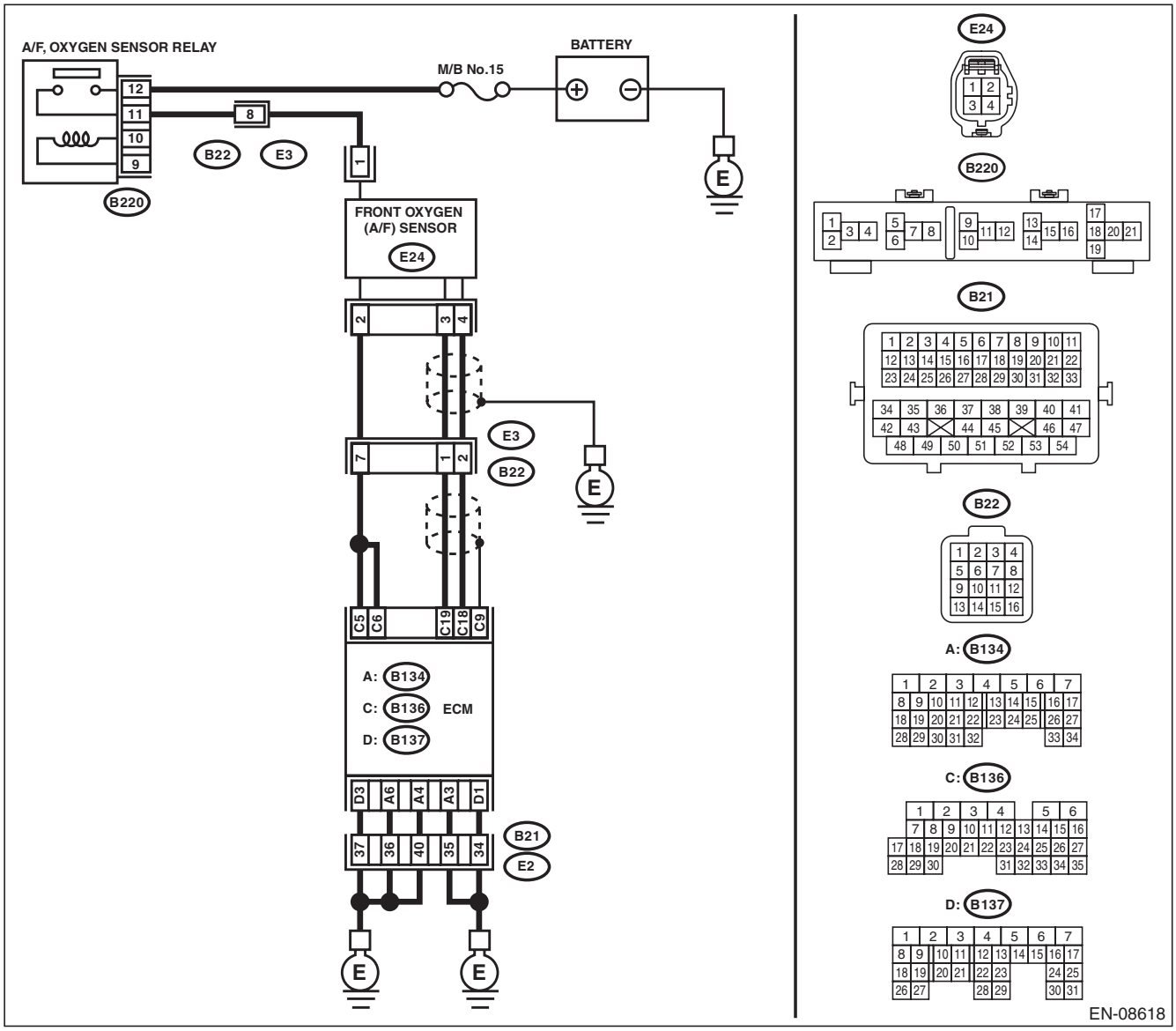

GETHEMANUALS.org

Step		Check	Yes	No
1	**CHECK HARNESS BETWEEN ECM AND FRONT OXYGEN (A/F) SENSOR CONNECTOR.** 1) Turn the ignition switch to OFF. 2) Disconnect the connectors from ECM and front oxygen (A/F) sensor connector. 3) Measure the resistance of harness between ECM and front oxygen (A/F) sensor connector. ***Connector & terminal*** ***(B136) No. 19 — (E24) No. 3:*** ***(B136) No. 18 — (E24) No. 4:***	Is the resistance less than 1 Ω?	Go to step **2**.	Repair the harness and connector. NOTE: In this case, repair the following item: • Open circuit in harness between ECM and front oxygen (A/F) sensor connector • Poor contact of coupling connector
2	**CHECK FOR POOR CONTACT.** Check for poor contact of ECM and front oxygen (A/F) sensor connector.	Is there poor contact of ECM or front oxygen (A/F) sensor connector?	Repair the poor contact of ECM or front oxygen (A/F) sensor connector.	Replace the front oxygen (A/F) sensor. <Ref. to FU(H4DOTC)-54, Front Oxygen (A/F) Sensor.>

GETTHEMANUALS.org

AH:DTC P0137 O2 SENSOR CIRCUIT LOW VOLTAGE (BANK 1 SENSOR 2)

DTC DETECTING CONDITION:

- Detected when two consecutive driving cycles with fault occur.
- GENERAL DESCRIPTION <Ref. to GD(H4DOTC)-72, DTC P0137 O2 SENSOR CIRCUIT LOW VOLTAGE (BANK 1 SENSOR 2), Diagnostic Trouble Code (DTC) Detecting Criteria.>

CAUTION:

After servicing or replacing faulty parts, perform Clear Memory Mode <Ref. to EN(H4DOTC)(diag)-53, OPERATION, Clear Memory Mode.>, and Inspection Mode <Ref. to EN(H4DOTC)(diag)-41, PROCEDURE, Inspection Mode.>.

WIRING DIAGRAM:

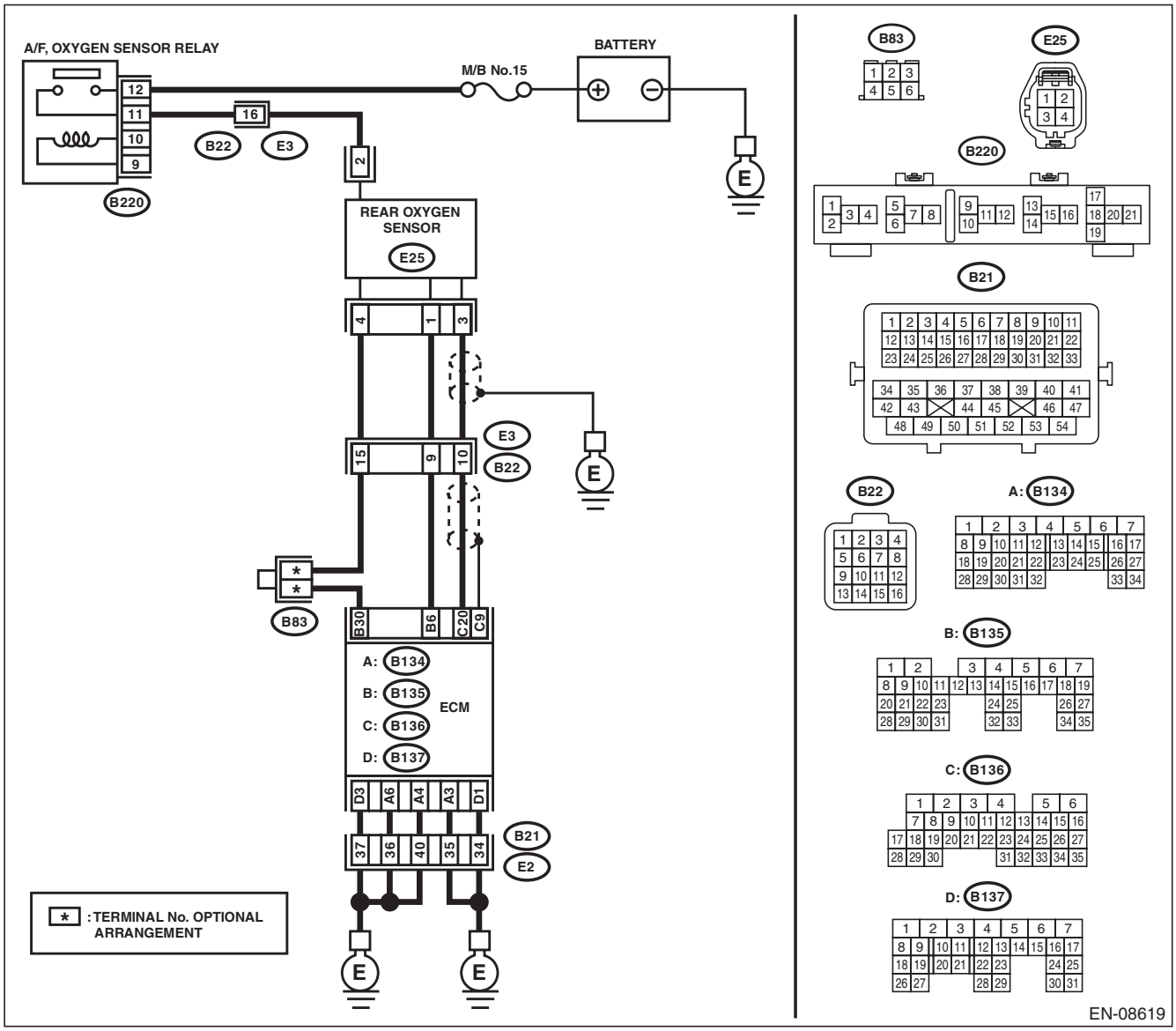

GETHEMANUALS.org

	Step	Check	Yes	No
1	**CHECK REAR OXYGEN SENSOR DATA.** 1) Warm up the engine until engine coolant temperature is higher than 75°C (167°F), and keep the engine speed at 3,000 rpm. (2 minutes maximum) 2) Read the value of «Rear O2 Sensor» using the Subaru Select Monitor or a general scan tool. NOTE: • Subaru Select Monitor For detailed operation procedures, refer to "READ CURRENT DATA FOR ENGINE". <Ref. to EN(H4DOTC)(diag)-34, Subaru Select Monitor.> • General scan tool For detailed operation procedures, refer to the general scan tool operation manual.	Is the value of «Rear O2 Sensor» 0.490 V or more?	Go to step **5**.	Go to step **2**.
2	**CHECK REAR OXYGEN SENSOR CONNECTOR AND COUPLING CONNECTOR.**	Has water entered the connector?	Completely remove any water inside.	Go to step **3**.
3	**CHECK HARNESS BETWEEN ECM AND REAR OXYGEN SENSOR CONNECTOR.** 1) Turn the ignition switch to OFF. 2) Disconnect the connector from ECM and rear oxygen sensor. 3) Measure the resistance of harness between ECM and rear oxygen sensor connector. ***Connector & terminal*** ***(B136) No. 20 — (E25) No. 3:*** ***(B135) No. 30 — (E25) No. 4:***	Is the resistance less than 1 Ω?	Go to step **4**.	Repair the harness and connector. NOTE: In this case, repair the following item: • Open circuit in harness between ECM and rear oxygen sensor connector • Poor contact of coupling connector
4	**CHECK HARNESS BETWEEN ECM AND REAR OXYGEN SENSOR CONNECTOR.** 1) Connect the connector to ECM. 2) Turn the ignition switch to ON. 3) Measure the voltage between rear oxygen sensor connector and chassis ground. ***Connector & terminal*** ***(E25) No. 3 (+) — Chassis ground (–):***	Is the voltage 0.2 — 0.5 V?	Replace the rear oxygen sensor. <Ref. to FU(H4DOTC)-56, Rear Oxygen Sensor.>	Repair the harness and connector. NOTE: In this case, repair the following item: • Open circuit in harness between ECM and rear oxygen sensor connector • Poor contact of ECM connector • Poor contact of coupling connector
5	**CHECK EXHAUST SYSTEM.** Check exhaust system parts. NOTE: Check the following items. • Looseness and improper fitting of exhaust system parts • Damage (crack, hole etc.) of parts • Damage (crack, hole etc.) between front oxygen (A/F) sensor and rear oxygen sensor	Is there any fault in exhaust system?	Repair or replace faulty parts.	Replace the rear oxygen sensor. <Ref. to FU(H4DOTC)-56, Rear Oxygen Sensor.>

GETTHEMANUALS.org

AI: DTC P0138 O2 SENSOR CIRCUIT HIGH VOLTAGE (BANK 1 SENSOR 2)

DTC DETECTING CONDITION:

- Detected when two consecutive driving cycles with fault occur.
- GENERAL DESCRIPTION <Ref. to GD(H4DOTC)-74, DTC P0138 O2 SENSOR CIRCUIT HIGH VOLTAGE (BANK 1 SENSOR 2), Diagnostic Trouble Code (DTC) Detecting Criteria.>

CAUTION:

After servicing or replacing faulty parts, perform Clear Memory Mode <Ref. to EN(H4DOTC)(diag)-53, OPERATION, Clear Memory Mode.>, and Inspection Mode <Ref. to EN(H4DOTC)(diag)-41, PROCEDURE, Inspection Mode.>.

WIRING DIAGRAM:

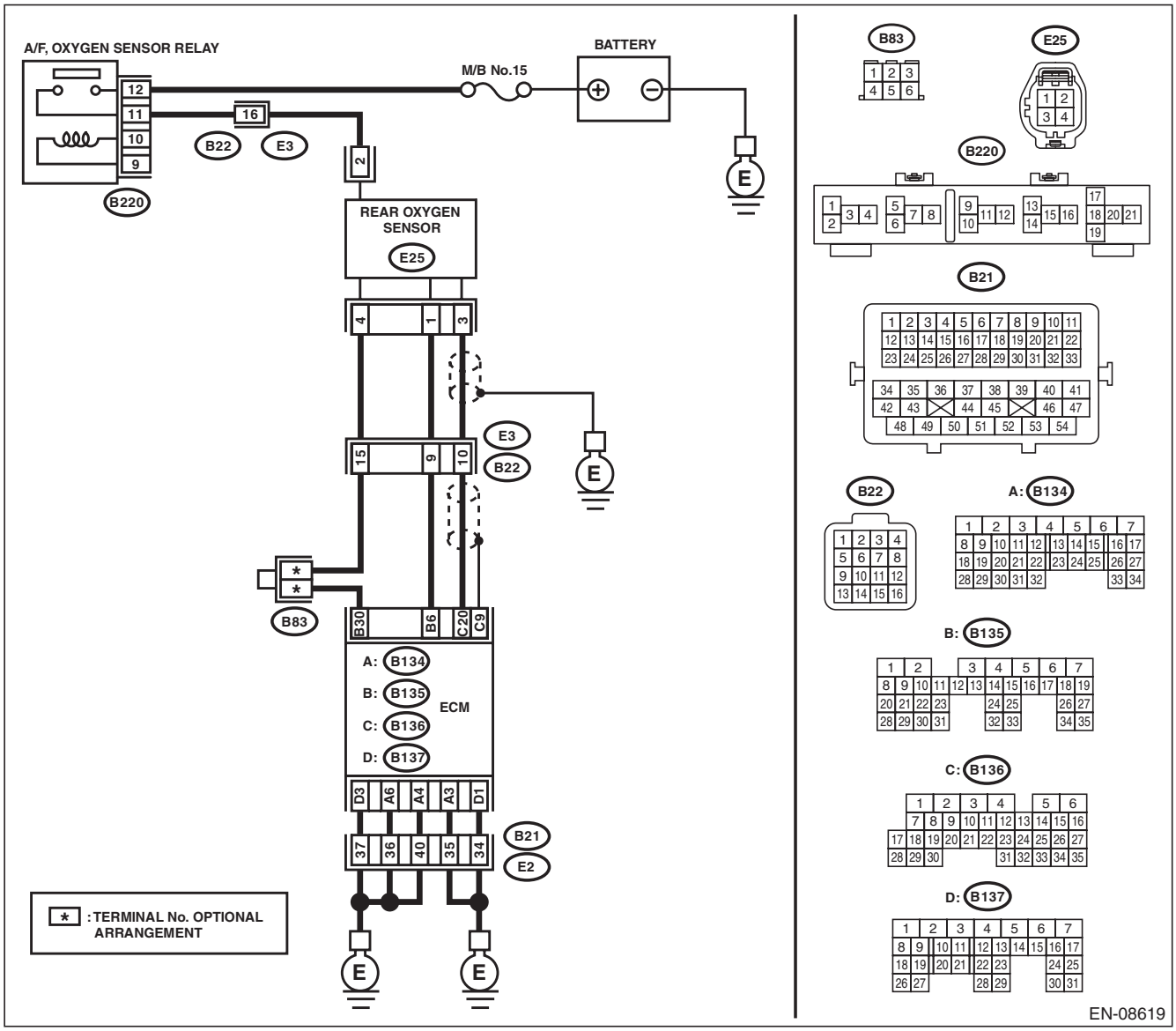

GETTHEMANUALS.org

	Step	Check	Yes	No
1	**CHECK REAR OXYGEN SENSOR DATA.** 1) Warm up the engine until engine coolant temperature is higher than 75°C (167°F), and rapidly reduce the engine speed from 3,000 rpm. 2) Read the value of «Rear O2 Sensor» using the Subaru Select Monitor or a general scan tool. NOTE: • Subaru Select Monitor For detailed operation procedures, refer to "READ CURRENT DATA FOR ENGINE". <Ref. to EN(H4DOTC)(diag)-34, Subaru Select Monitor.> • General scan tool For detailed operation procedures, refer to the general scan tool operation manual.	Is the value of «Rear O2 Sensor» 0.250 V or less?	Go to step **5**.	Go to step **2**.
2	**CHECK REAR OXYGEN SENSOR CONNECTOR AND COUPLING CONNECTOR.**	Has water entered the connector?	Completely remove any water inside.	Go to step **3**.
3	**CHECK HARNESS BETWEEN ECM AND REAR OXYGEN SENSOR CONNECTOR.** 1) Turn the ignition switch to OFF. 2) Disconnect the connector from ECM and rear oxygen sensor. 3) Measure the resistance of harness between ECM and rear oxygen sensor connector. ***Connector & terminal*** ***(B136) No. 20 — (E25) No. 3:*** ***(B135) No. 30 — (E25) No. 4:***	Is the resistance less than 1 Ω?	Go to step **4**.	Repair the harness and connector. NOTE: In this case, repair the following item: • Open circuit in harness between ECM and rear oxygen sensor connector • Poor contact of coupling connector
4	**CHECK HARNESS BETWEEN ECM AND REAR OXYGEN SENSOR CONNECTOR.** 1) Connect the connector to ECM. 2) Turn the ignition switch to ON. 3) Measure the voltage between rear oxygen sensor connector and chassis ground. ***Connector & terminal*** ***(E25) No. 3 (+) — Chassis ground (–):***	Is the voltage 0.2 — 0.5 V?	Replace the rear oxygen sensor. <Ref. to FU(H4DOTC)-56, Rear Oxygen Sensor.>	Repair the harness and connector. NOTE: In this case, repair the following item: • Open circuit in harness between ECM and rear oxygen sensor connector • Poor contact of ECM connector • Poor contact of coupling connector
5	**CHECK EXHAUST SYSTEM.** Check exhaust system parts. NOTE: Check the following items. • Looseness and improper fitting of exhaust system parts • Damage (crack, hole etc.) of parts • Damage (crack, hole etc.) between front oxygen (A/F) sensor and rear oxygen sensor	Is there any fault in exhaust system?	Repair or replace faulty parts.	Replace the rear oxygen sensor. <Ref. to FU(H4DOTC)-56, Rear Oxygen Sensor.>

GETTHEMANUALS.org

AJ:DTC P013A O2 SENSOR SLOW RESPONSE - RICH TO LEAN (BANK 1 SENSOR 2)

DTC DETECTING CONDITION:

- Detected when two consecutive driving cycles with fault occur.
- GENERAL DESCRIPTION <Ref. to GD(H4DOTC)-75, DTC P013A O2 SENSOR SLOW RESPONSE - RICH TO LEAN (BANK 1 SENSOR 2), Diagnostic Trouble Code (DTC) Detecting Criteria.>

CAUTION:

After servicing or replacing faulty parts, perform Clear Memory Mode <Ref. to EN(H4DOTC)(diag)-53, OPERATION, Clear Memory Mode.>, and Inspection Mode <Ref. to EN(H4DOTC)(diag)-41, PROCEDURE, Inspection Mode.>.

WIRING DIAGRAM:

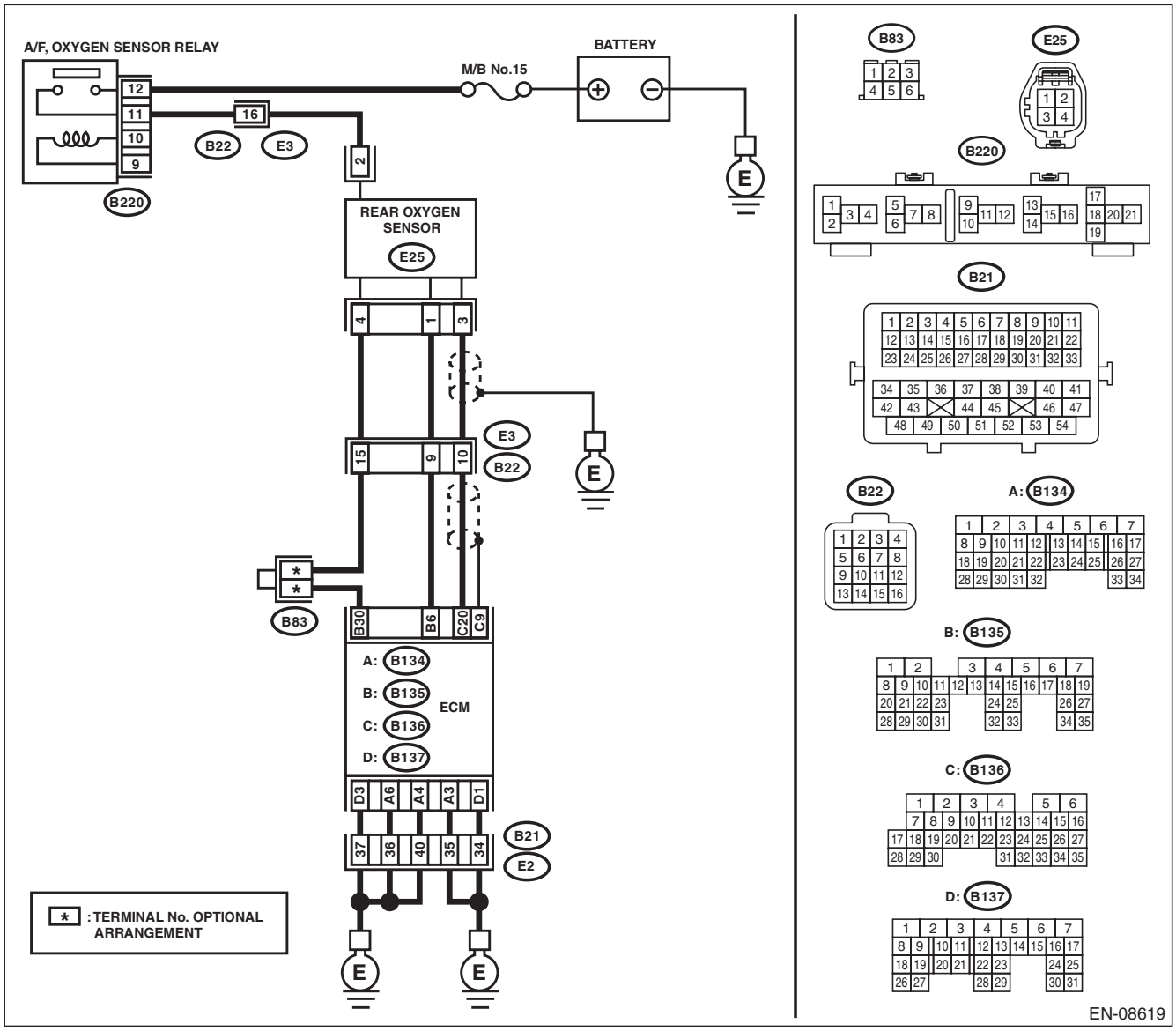

GETHEMANUALS.org

Step		Check	Yes	No
1	**CHECK HARNESS BETWEEN ECM AND REAR OXYGEN SENSOR CONNECTOR.** 1) Turn the ignition switch to OFF. 2) Disconnect the connector from ECM and rear oxygen sensor. 3) Measure the resistance of harness between ECM and rear oxygen sensor connector. ***Connector & terminal*** ***(B136) No. 20 — (E25) No. 3:***	Is the resistance less than 1 Ω?	Go to step **2**.	Repair the harness and connector. NOTE: In this case, repair the following item: • Open circuit in harness between ECM and rear oxygen sensor connector • Poor contact of coupling connector
2	**CHECK HARNESS BETWEEN ECM AND REAR OXYGEN SENSOR CONNECTOR.** Measure the resistance between rear oxygen sensor connector and chassis ground. ***Connector & terminal*** ***(E25) No. 3 — Chassis ground:***	Is the resistance 1 MΩ or more?	Go to step **3**.	Repair the ground short circuit of harness between ECM and rear oxygen sensor connector.
3	**CHECK REAR OXYGEN SENSOR.** Measure the resistance between rear oxygen sensor terminals. ***Terminals*** ***No. 3 — No. 4***	Is the resistance less than 1 Ω?	Replace the rear oxygen sensor. <Ref. to FU(H4DOTC)-56, Rear Oxygen Sensor.>	Even if DTC is detected, the circuit has returned to a normal condition at this time. Reproduce the failure, and then perform the diagnosis again. NOTE: In this case, temporary poor contact of connector, temporary open or short circuit of harness may be the cause.

AK:DTC P013B O2 SENSOR SLOW RESPONSE - LEAN TO RICH (BANK 1 SENSOR 2)

NOTE:
For the diagnostic procedure, refer to DTC P013A. <Ref. to EN(H4DOTC)(diag)-139, DTC P013A O2 SENSOR SLOW RESPONSE - RICH TO LEAN (BANK 1 SENSOR 2), Diagnostic Procedure with Diagnostic Trouble Code (DTC).>

AL:DTC P013E O2 SENSOR DELAYED RESPONSE - RICH TO LEAN (BANK 1 SENSOR 2)

NOTE:
For the diagnostic procedure, refer to DTC P013A. <Ref. to EN(H4DOTC)(diag)-139, DTC P013A O2 SENSOR SLOW RESPONSE - RICH TO LEAN (BANK 1 SENSOR 2), Diagnostic Procedure with Diagnostic Trouble Code (DTC).>

AM:DTC P013F O2 SENSOR DELAYED RESPONSE - LEAN TO RICH (BANK 1 SENSOR 2)

NOTE:
For the diagnostic procedure, refer to DTC P013A. <Ref. to EN(H4DOTC)(diag)-139, DTC P013A O2 SENSOR SLOW RESPONSE - RICH TO LEAN (BANK 1 SENSOR 2), Diagnostic Procedure with Diagnostic Trouble Code (DTC).>

GETTHEMANUALS.org

AN:DTC P0140 O2 SENSOR CIRCUIT NO ACTIVITY DETECTED (BANK1 SENSOR2)

DTC DETECTING CONDITION:

- Detected when two consecutive driving cycles with fault occur.
- GENERAL DESCRIPTION <Ref. to GD(H4DOTC)-83, DTC P0140 O2 SENSOR CIRCUIT NO ACTIVITY DETECTED (BANK1 SENSOR2), Diagnostic Trouble Code (DTC) Detecting Criteria.>

CAUTION:

After servicing or replacing faulty parts, perform Clear Memory Mode <Ref. to EN(H4DOTC)(diag)-53, OPERATION, Clear Memory Mode.>, and Inspection Mode <Ref. to EN(H4DOTC)(diag)-41, PROCEDURE, Inspection Mode.>.

WIRING DIAGRAM:

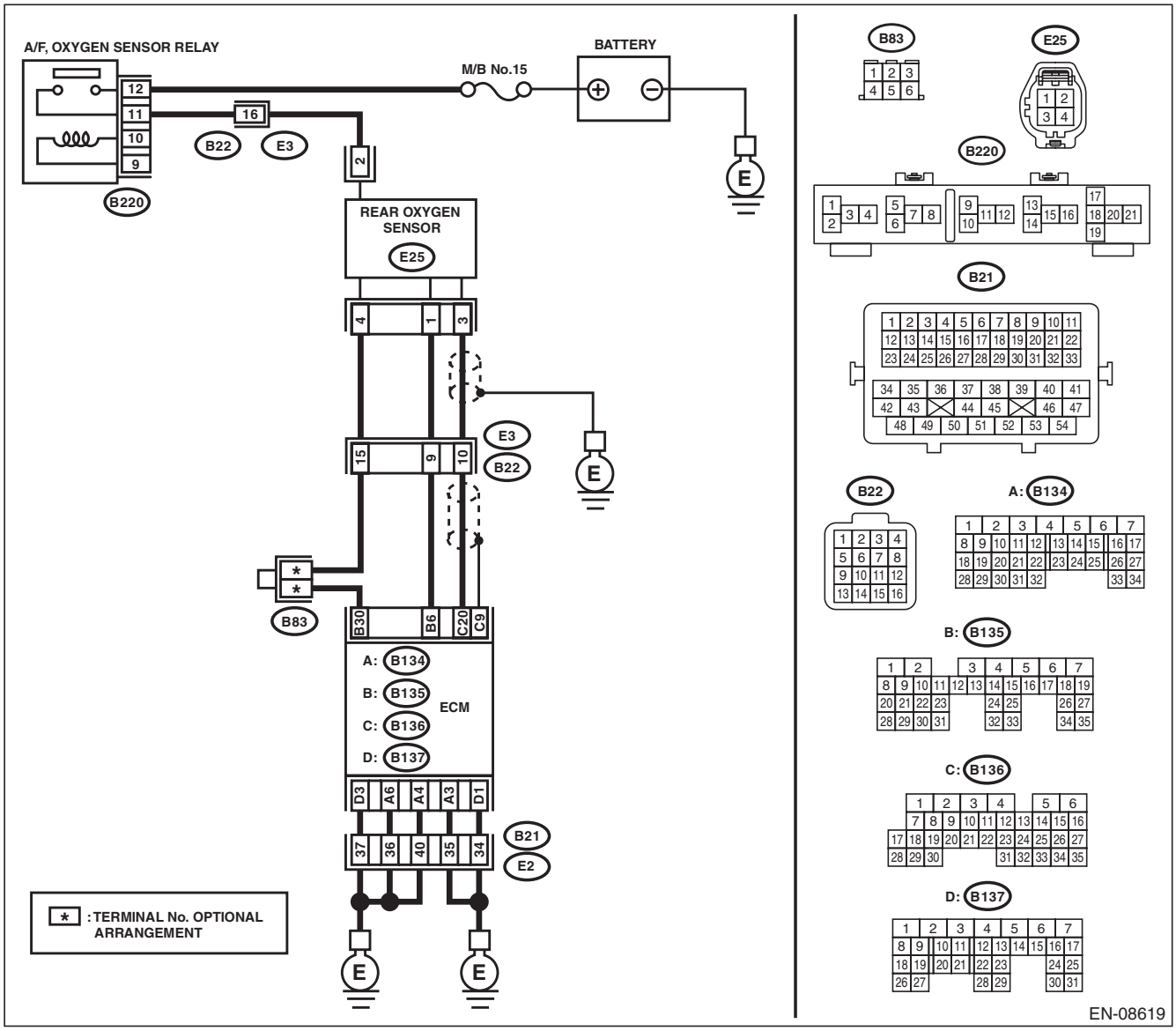

GETHEMANUALS.org

	Step	Check	Yes	No
1	**CHECK REAR OXYGEN SENSOR DATA.** 1) Warm up the engine until engine coolant temperature is higher than 75°C (167°F), and keep the engine speed at 3,000 rpm. (2 minutes maximum) 2) Read the value of «Rear O2 Sensor» using the Subaru Select Monitor or a general scan tool. NOTE: • Subaru Select Monitor For detailed operation procedures, refer to "READ CURRENT DATA FOR ENGINE". <Ref. to EN(H4DOTC)(diag)-34, Subaru Select Monitor.> • General scan tool For detailed operation procedures, refer to the general scan tool operation manual.	Is the value of «Rear O2 Sensor» 0.490 V or more?	Go to step **6**.	Go to step **2**.
2	**CHECK REAR OXYGEN SENSOR DATA.** 1) Warm up the engine until engine coolant temperature is higher than 75°C (167°F), and rapidly reduce the engine speed from 3,000 rpm. 2) Read the value of «Rear O2 Sensor» using the Subaru Select Monitor or a general scan tool. NOTE: • Subaru Select Monitor For detailed operation procedures, refer to "READ CURRENT DATA FOR ENGINE". <Ref. to EN(H4DOTC)(diag)-34, Subaru Select Monitor.> • General scan tool For detailed operation procedures, refer to the general scan tool operation manual.	Is the value of «Rear O2 Sensor» 0.250 V or less?	Go to step **6**.	Go to step **3**.
3	**CHECK REAR OXYGEN SENSOR CONNECTOR AND COUPLING CONNECTOR.**	Has water entered the connector?	Completely remove any water inside.	Go to step **4**.
4	**CHECK HARNESS BETWEEN ECM AND REAR OXYGEN SENSOR CONNECTOR.** 1) Turn the ignition switch to OFF. 2) Disconnect the connector from ECM and rear oxygen sensor. 3) Measure the resistance of harness between ECM and rear oxygen sensor connector. ***Connector & terminal*** ***(B136) No. 20 — (E25) No. 3:*** ***(B135) No. 30 — (E25) No. 4:***	Is the resistance less than 1 Ω?	Go to step **5**.	Repair the harness and connector. NOTE: In this case, repair the following item: • Open circuit in harness between ECM and rear oxygen sensor connector • Poor contact of coupling connector

GETTHEMANUALS.org

Step		Check	Yes	No
5	**CHECK HARNESS BETWEEN ECM AND REAR OXYGEN SENSOR CONNECTOR.** 1) Connect the connector to ECM. 2) Turn the ignition switch to ON. 3) Measure the voltage between rear oxygen sensor connector and chassis ground. ***Connector & terminal*** ***(E25) No. 3 (+) — Chassis ground (–):***	Is the voltage 0.2 — 0.5 V?	Replace the rear oxygen sensor. <Ref. to FU(H4DOTC)-56, Rear Oxygen Sensor.>	Repair the harness and connector. NOTE: In this case, repair the following item: • Open circuit in harness between ECM and rear oxygen sensor connector • Poor contact of ECM connector • Poor contact of coupling connector
6	**CHECK EXHAUST SYSTEM.** Check exhaust system parts. NOTE: Check the following items. • Looseness and improper fitting of exhaust system parts • Damage (crack, hole etc.) of parts • Damage (crack, hole etc.) between front oxygen (A/F) sensor and rear oxygen sensor	Is there any fault in exhaust system?	Repair or replace faulty parts.	Replace the rear oxygen sensor. <Ref. to FU(H4DOTC)-56, Rear Oxygen Sensor.>

AO:DTC P0141 O2 SENSOR HEATER CIRCUIT (BANK1 SENSOR2)

Refer to DTC P0037 for diagnostic procedure. <Ref. to EN(H4DOTC)(diag)-98, DTC P0037 HO2S HEATER CONTROL CIRCUIT LOW (BANK 1 SENSOR 2), Diagnostic Procedure with Diagnostic Trouble Code (DTC).>

AP:DTC P0171 SYSTEM TOO LEAN (BANK 1)

Refer to DTC P0172 for diagnostic procedure. <Ref. to EN(H4DOTC)(diag)-144, DTC P0172 SYSTEM TOO RICH (BANK 1), Diagnostic Procedure with Diagnostic Trouble Code (DTC).>

GETtheMANUALS.org

AQ:DTC P0172 SYSTEM TOO RICH (BANK 1)

DTC DETECTING CONDITION:

- Detected when two consecutive driving cycles with fault occur.
- GENERAL DESCRIPTION <Ref. to GD(H4DOTC)-88, DTC P0172 SYSTEM TOO RICH (BANK 1), Diagnostic Trouble Code (DTC) Detecting Criteria.>

TROUBLE SYMPTOM:

- Improper idling
- Engine stalls.
- Poor driving performance

CAUTION:
After servicing or replacing faulty parts, perform Clear Memory Mode <Ref. to EN(H4DOTC)(diag)-53, OPERATION, Clear Memory Mode.>, and Inspection Mode <Ref. to EN(H4DOTC)(diag)-41, PROCEDURE, Inspection Mode.>.

	Step	Check	Yes	No
1	**CHECK EXHAUST SYSTEM.**	Are there holes or loose bolts on exhaust system?	Repair the exhaust system.	Go to step **2**.
2	**CHECK AIR INTAKE SYSTEM.**	Are there holes, loose bolts or disconnection of hose on air intake system?	Repair the air intake system.	Go to step **3**.
3	**CHECK FUEL PRESSURE.** **WARNING:** **Place "NO OPEN FLAMES" signs near the working area.** **CAUTION:** **Be careful not to spill fuel.** Measure the fuel pressure while disconnecting pressure regulator vacuum hose from intake manifold. <Ref. to ME(H4DOTC)-26, INSPECTION, Fuel Pressure.> **CAUTION:** **Release fuel pressure before removing the fuel pressure gauge.** NOTE: If fuel pressure does not increase, squeeze the fuel return hose 2 to 3 times, then measure fuel pressure again.	Is the measured value 328 — 358 kPa (3.3 — 3.7 kg/cm^2, 48 — 52 psi)?	Go to step **4**.	Repair the following item. Fuel pressure is too high: • Clogged fuel return line or bent hose Fuel pressure is too low: • Improper fuel pump discharge • Clogged fuel supply line
4	**CHECK FUEL PRESSURE.** After connecting the pressure regulator vacuum hose, measure fuel pressure. <Ref. to ME(H4DOTC)-26, INSPECTION, Fuel Pressure.> **CAUTION:** **Release fuel pressure before removing the fuel pressure gauge.** NOTE: • If fuel pressure does not increase, squeeze fuel return hose 2 to 3 times, then measure fuel pressure again. • If the measured value at this step is out of specification, check or replace pressure regulator and pressure regulator vacuum hose.	Is the measured value 274 — 304 kPa (2.8 — 3.1 kg/cm^2, 40 — 44 psi)?	Go to step **5**.	Repair the following item. Fuel pressure is too high: • Faulty pressure regulator • Clogged fuel return line or bent hose Fuel pressure is too low: • Faulty pressure regulator • Improper fuel pump discharge • Clogged fuel supply line

GETTHEMANUALS.org

	Step	Check	Yes	No
5	**CHECK ENGINE COOLANT TEMPERATURE SENSOR.** 1) Start the engine and warm up completely. 2) Read the value of «Coolant Temp.» using the Subaru Select Monitor or a general scan tool. NOTE: • Subaru Select Monitor For detailed operation procedures, refer to "READ CURRENT DATA FOR ENGINE". <Ref. to EN(H4DOTC)(diag)-34, Subaru Select Monitor.> • General scan tool For detailed operation procedures, refer to the general scan tool operation manual.	Is the value of «Coolant Temp.» 75°C (167°F) or more?	Go to step **6**.	Replace the engine coolant temperature sensor. <Ref. to FU(H4DOTC)-34, Engine Coolant Temperature Sensor.>
6	**CHECK MASS AIR FLOW AND INTAKE AIR TEMPERATURE SENSOR.** 1) Start the engine and warm up engine until coolant temperature is higher than 75°C (167°F). 2) Place the shift lever in neutral position. 3) Turn the A/C switch to OFF. 4) Turn all the accessory switches to OFF. 5) Read the value of «Mass Air Flow» using the Subaru Select Monitor or a general scan tool. NOTE: • Subaru Select Monitor For detailed operation procedures, refer to "READ CURRENT DATA FOR ENGINE". <Ref. to EN(H4DOTC)(diag)-34, Subaru Select Monitor.> • General scan tool For detailed operation procedures, refer to the general scan tool operation manual.	Is the value of «Mass Air Flow» 2.0 — 5.0 g/s (0.26 — 0.66 lb/m)?	Go to step **7**.	Replace the mass air flow and intake air temperature sensor. <Ref. to FU(H4DOTC)-42, Mass Air Flow and Intake Air Temperature Sensor.>
7	**CHECK MASS AIR FLOW AND INTAKE AIR TEMPERATURE SENSOR.** 1) Start the engine and warm up engine until coolant temperature is higher than 75°C (167°F). 2) Place the shift lever in neutral position. 3) Turn the A/C switch to OFF. 4) Turn all the accessory switches to OFF. 5) Open the front hood. 6) Measure the ambient temperature. 7) Read the value of «Intake Air Temp.» using the Subaru Select Monitor or a general scan tool. NOTE: • Subaru Select Monitor For detailed operation procedures, refer to "READ CURRENT DATA FOR ENGINE". <Ref. to EN(H4DOTC)(diag)-34, Subaru Select Monitor.> • General scan tool For detailed operation procedures, refer to the general scan tool operation manual.	Subtract ambient temperature from «Intake Air Temp.». Is the obtained value –10 — 50°C (–18 — 90°F)?	Repair the poor contact of ECM connector.	Check the mass air flow and intake air temperature sensor. <Ref. to FU(H4DOTC)-42, Mass Air Flow and Intake Air Temperature Sensor.>

GETTHEMANUALS.org

AR:DTC P0181 FUEL TEMPERATURE SENSOR “A” CIRCUIT RANGE/PERFORMANCE

DTC DETECTING CONDITION:

- Detected when two consecutive driving cycles with fault occur.
- GENERAL DESCRIPTION <Ref. to GD(H4DOTC)-90, DTC P0181 FUEL TEMPERATURE SENSOR “A” CIRCUIT RANGE/PERFORMANCE, Diagnostic Trouble Code (DTC) Detecting Criteria.>

CAUTION:

After servicing or replacing faulty parts, perform Clear Memory Mode <Ref. to EN(H4DOTC)(diag)-53, OPERATION, Clear Memory Mode.>, and Inspection Mode <Ref. to EN(H4DOTC)(diag)-41, PROCEDURE, Inspection Mode.>.

Step	Check	Yes	No
1 CHECK FOR ANY OTHER DTC ON DISPLAY.	Is any other DTC displayed?	Check the appropriate DTC using the “List of Diagnostic Trouble Code (DTC)”. <Ref. to EN(H4DOTC)(diag)-75, List of Diagnostic Trouble Code (DTC).>	Replace the fuel temperature sensor. <Ref. to EC(H4DOTC)-15, Fuel Temperature Sensor.>

GETTHEMANUALS.org

AS:DTC P0182 FUEL TEMPERATURE SENSOR “A” CIRCUIT LOW INPUT

DTC DETECTING CONDITION:

- Immediately at fault recognition
- GENERAL DESCRIPTION <Ref. to GD(H4DOTC)-93, DTC P0182 FUEL TEMPERATURE SENSOR “A” CIRCUIT LOW INPUT, Diagnostic Trouble Code (DTC) Detecting Criteria.>

CAUTION:

After servicing or replacing faulty parts, perform Clear Memory Mode <Ref. to EN(H4DOTC)(diag)-53, OPERATION, Clear Memory Mode.>, and Inspection Mode <Ref. to EN(H4DOTC)(diag)-41, PROCEDURE, Inspection Mode.>.

WIRING DIAGRAM:

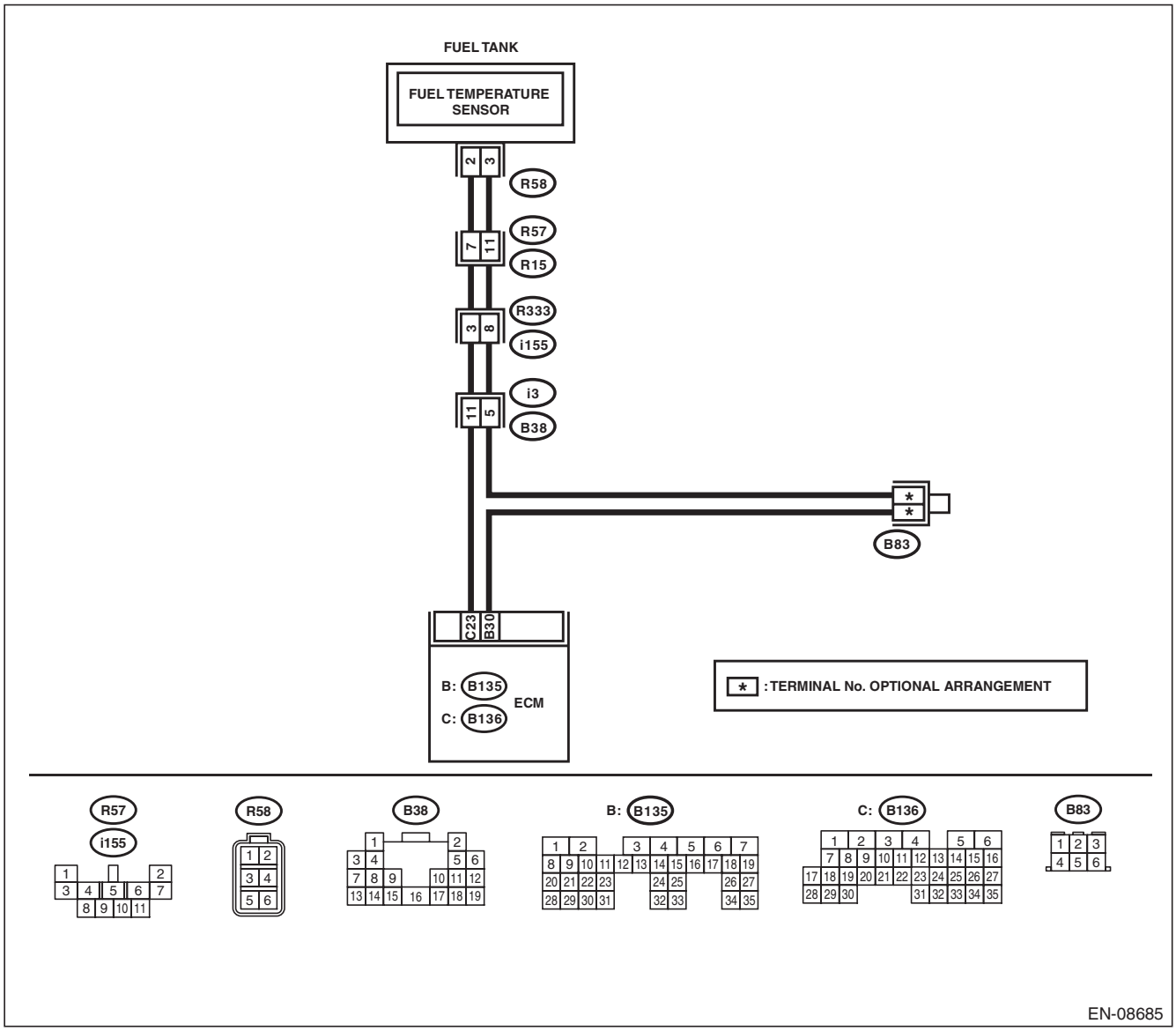

GETHEMANUALS.org

Step		Check	Yes	No
1	**CHECK CURRENT DATA.** 1) Start the engine. 2) Using the Subaru Select Monitor, read the value in «Fuel Temp.». NOTE: For detailed operation procedures, refer to “READ CURRENT DATA FOR ENGINE”. <Ref. to EN(H4DOTC)(diag)-34, Subaru Select Monitor.>	Is the value in «Fuel Temp.» 120°C (248°F) or more?	Go to step **2**.	Even if DTC is detected, the circuit has returned to a normal condition at this time. Reproduce the failure, and then perform the diagnosis again. NOTE: In this case, temporary poor contact of connector, temporary open or short circuit of harness may be the cause.
2	**CHECK HARNESS BETWEEN ECM AND FUEL TEMPERATURE SENSOR CONNECTOR.** 1) Turn the ignition switch to OFF. 2) Disconnect the connectors from ECM and fuel temperature sensor. 3) Measure the resistance between ECM and chassis ground. ***Connector & terminal*** ***(B136) No. 23 — Chassis ground:***	Is the resistance 1 MΩ or more?	Replace the fuel temperature sensor. <Ref. to EC(H4DOTC)-15, Fuel Temperature Sensor.>	Repair the ground short circuit of harness between ECM and fuel pump connector.

GETTHEMANUALS.org

AT:DTC P0183 FUEL TEMPERATURE SENSOR “A” CIRCUIT HIGH INPUT

DTC DETECTING CONDITION:

- Immediately at fault recognition
- GENERAL DESCRIPTION <Ref. to GD(H4DOTC)-95, DTC P0183 FUEL TEMPERATURE SENSOR “A” CIRCUIT HIGH INPUT, Diagnostic Trouble Code (DTC) Detecting Criteria.>

CAUTION:

After servicing or replacing faulty parts, perform Clear Memory Mode <Ref. to EN(H4DOTC)(diag)-53, OPERATION, Clear Memory Mode.>, and Inspection Mode <Ref. to EN(H4DOTC)(diag)-41, PROCEDURE, Inspection Mode.>.

WIRING DIAGRAM:

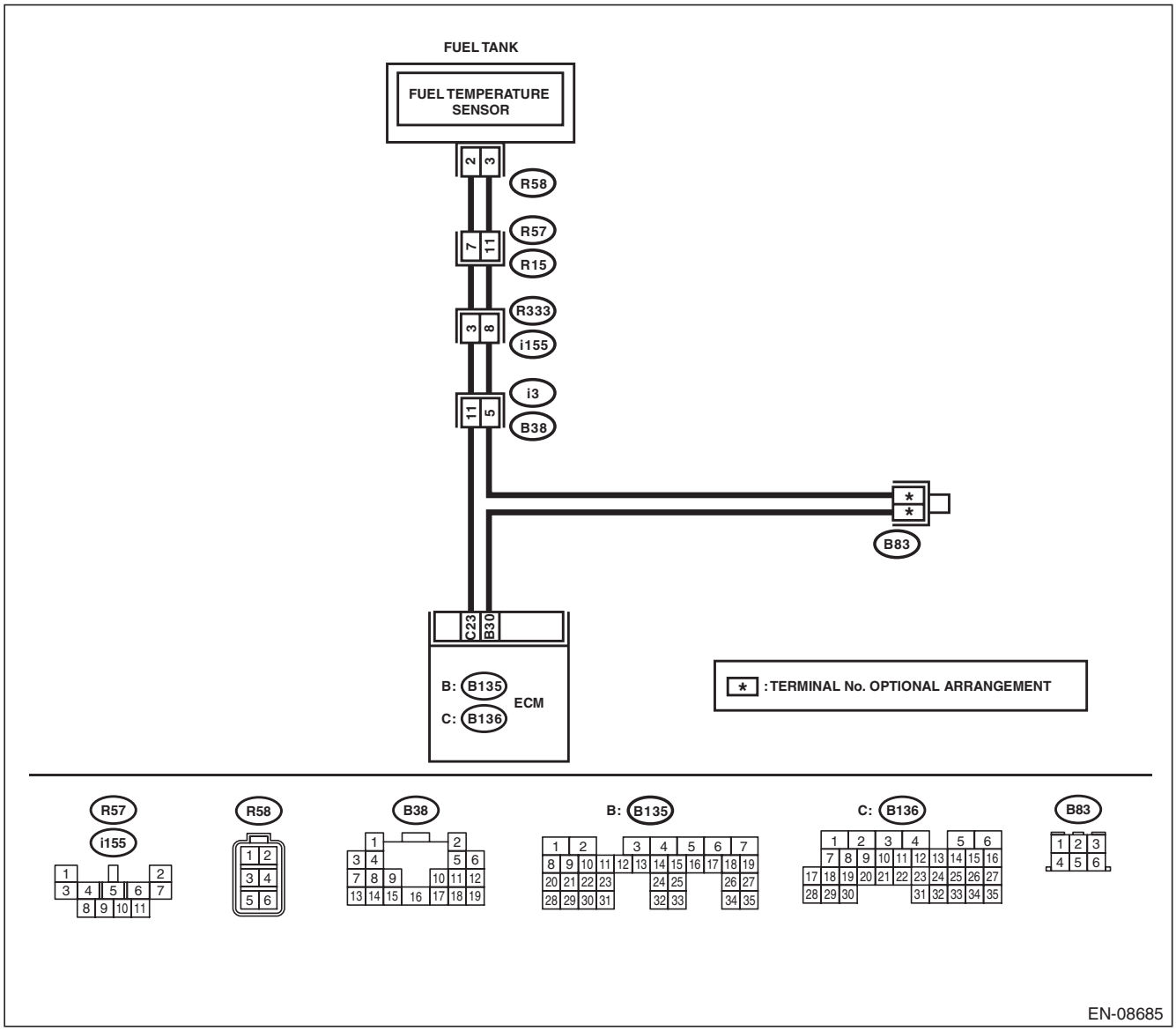

GETTHEMANUALS.org

	Step	Check	Yes	No
1	**CHECK CURRENT DATA.** 1) Start the engine. 2) Using the Subaru Select Monitor, read the value in «Fuel Temp.». NOTE: For detailed operation procedures, refer to "READ CURRENT DATA FOR ENGINE". <Ref. to EN(H4DOTC)(diag)-34, Subaru Select Monitor.>	Is the value in «Fuel Temp.» less than –40°C (–40°F)?	Go to step **2**.	Even if DTC is detected, the circuit has returned to a normal condition at this time. Reproduce the failure, and then perform the diagnosis again. NOTE: In this case, temporary poor contact of connector, temporary open or short circuit of harness may be the cause.
2	**CHECK FOR POOR CONTACT.** Check any poor contact of the ECM and fuel temperature sensor connectors.	Is there poor contact of the ECM or fuel temperature sensor connectors?	Repair any poor contact of the ECM or fuel temperature sensor connectors.	Go to step **3**.
3	**CHECK HARNESS BETWEEN ECM AND FUEL TEMPERATURE SENSOR CONNECTOR.** 1) Turn the ignition switch to OFF. 2) Disconnect the connectors from ECM and fuel temperature sensor. 3) Measure the resistance of the harness between the ECM and fuel temperature sensor connector. ***Connector & terminal*** ***(B136) No. 23 — (R58) No. 2:*** ***(B135) No. 30 — (R58) No. 3:***	Is the resistance less than 1 Ω?	Go to step **4**.	Repair the harness and connector. NOTE: In this case, repair the following item: • Open circuit in harness between ECM and fuel temperature sensor connector • Poor contact of coupling connector
4	**CHECK HARNESS BETWEEN ECM AND FUEL TEMPERATURE SENSOR CONNECTOR.** 1) Connect all connectors. 2) Turn the ignition switch to ON. 3) Measure the voltage between ECM and chassis ground. ***Connector & terminal*** ***(B136) No. 23 (+) — Chassis ground (–):***	Is the voltage 5 V or more?	Repair the short circuit to power in the harness between the ECM and fuel temperature sensor connector.	Replace the fuel temperature sensor. <Ref. to EC(H4DOTC)-15, Fuel Temperature Sensor.>

GETTHEMANUALS.org

AU:DTC P0201 INJECTOR #1

DTC DETECTING CONDITION:

- Immediately at fault recognition
- GENERAL DESCRIPTION <Ref. to GD(H4DOTC)-97, DTC P0201 INJECTOR #1, Diagnostic Trouble Code (DTC) Detecting Criteria.>

TROUBLE SYMPTOM:

- Improper idling
- Poor driving performance

CAUTION:

After servicing or replacing faulty parts, perform Clear Memory Mode <Ref. to EN(H4DOTC)(diag)-53, OPERATION, Clear Memory Mode.>, and Inspection Mode <Ref. to EN(H4DOTC)(diag)-41, PROCEDURE, Inspection Mode.>.

WIRING DIAGRAM:

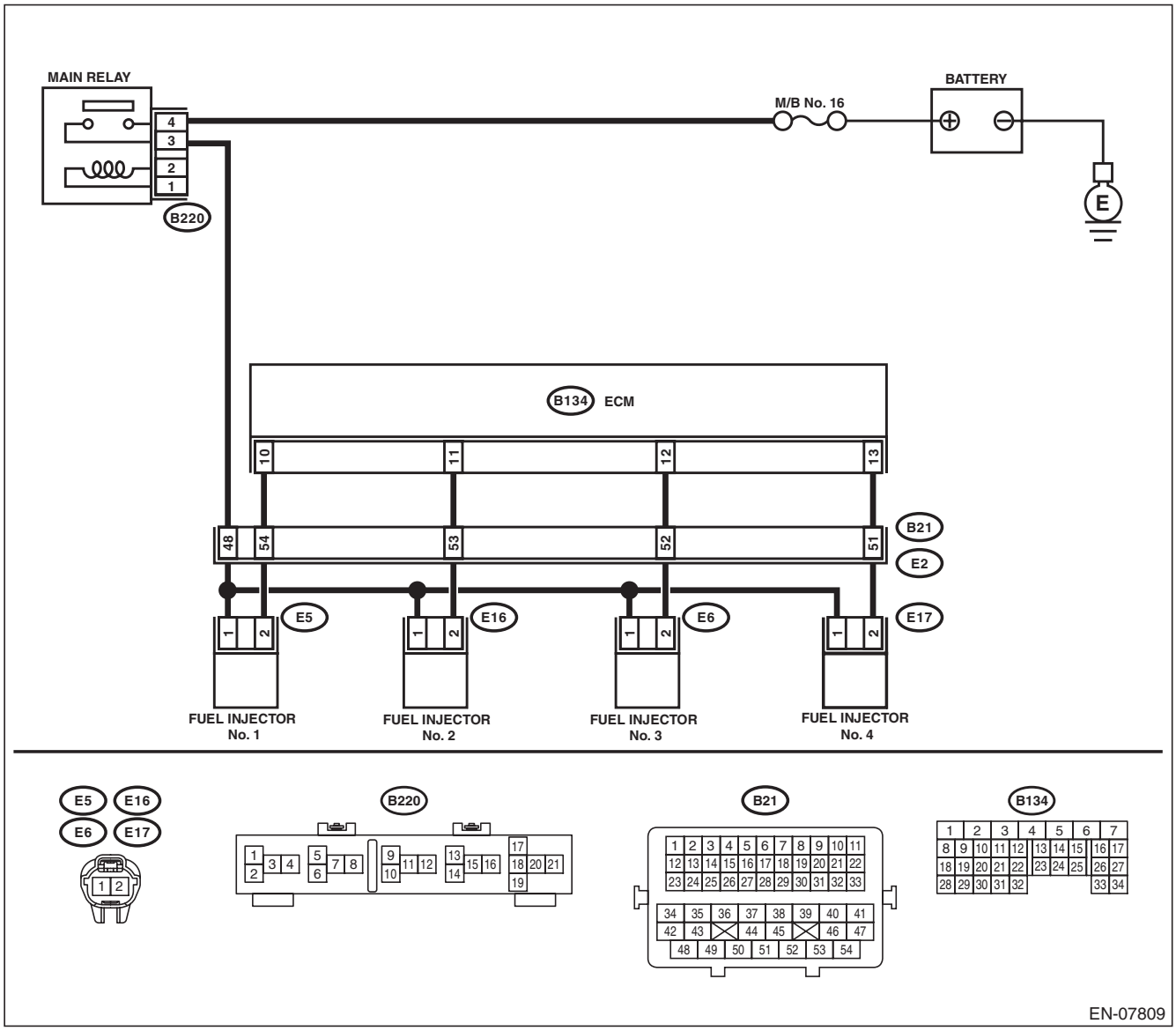

GETTHEMANUALS.org

	Step	Check	Yes	No
1	**CHECK POWER SUPPLY TO FUEL INJECTOR.** 1) Turn the ignition switch to OFF. 2) Disconnect the connector from fuel injector. 3) Turn the ignition switch to ON. 4) Measure the voltage between fuel injector connector and the engine ground. ***Connector & terminal*** ***DTC P0201; (E5) No. 1 (+) — Engine ground (–):*** ***DTC P0202; (E16) No. 1 (+) — Engine ground (–):*** ***DTC P0203; (E6) No. 1 (+) — Engine ground (–):*** ***DTC P0204; (E17) No. 1 (+) — Engine ground (–):***	Is the voltage 10 V or more?	Go to step **2**.	Repair the harness and connector. NOTE: In this case, repair the following item: • Open circuit in harness between main relay and fuel injector connector • Poor contact of main relay connector • Poor contact of coupling connector
2	**CHECK HARNESS BETWEEN ECM AND FUEL INJECTOR CONNECTOR.** 1) Turn the ignition switch to OFF. 2) Disconnect the connector from ECM. 3) Measure the resistance between fuel injector connector and engine ground. ***Connector & terminal*** ***DTC P0201; (E5) No. 2 — Engine ground:*** ***DTC P0202; (E16) No. 2 — Engine ground:*** ***DTC P0203; (E6) No. 2 — Engine ground:*** ***DTC P0204; (E17) No. 2 — Engine ground:***	Is the resistance 1 MΩ or more?	Go to step **3**.	Repair the short circuit to ground in harness between ECM connector and fuel injector connector.
3	**CHECK HARNESS BETWEEN ECM AND FUEL INJECTOR CONNECTOR.** Measure the resistance of harness between ECM connector and fuel injector connector. ***Connector & terminal*** ***DTC P0201; (B134) No. 10 — (E5) No. 2:*** ***DTC P0202; (B134) No. 11 — (E16) No. 2:*** ***DTC P0203; (B134) No. 12 — (E6) No. 2:*** ***DTC P0204; (B134) No. 13 — (E17) No. 2:***	Is the resistance less than 1 Ω?	Go to step **4**.	Repair the harness and connector. NOTE: In this case, repair the following item: • Open circuit in harness between ECM connector and fuel injector connector • Poor contact of coupling connector
4	**CHECK FUEL INJECTOR.** Measure the resistance between fuel injector terminals on the corresponding cylinder. ***Terminals*** ***No. 1 — No. 2:***	Is the resistance 5 — 20 Ω?	Go to step **5**.	Replace the fuel injector. <Ref. to FU(H4DOTC)-45, Fuel Injector.>
5	**CHECK FOR POOR CONTACT.** Check for poor contact of ECM connector.	Is there poor contact of ECM connector?	Repair the poor contact of ECM connector.	Go to step **6**.

GETTHEMANUALS.org

Step		Check	Yes	No
6	**CHECK FUEL INJECTOR OPERATION.** 1) Connect all connectors. 2) Start the engine. 3) Check if the corresponding fuel injector emits operating sound. NOTE: Use a sound scope to check the operating sound.	Does the fuel injector emit operating sound?	Even if DTC is detected, the circuit has returned to a normal condition at this time. Reproduce the failure, and then perform the diagnosis again. NOTE: In this case, temporary poor contact of connector, temporary open or short circuit of harness may be the cause.	Repair the poor contact of fuel injector connector.

AV:DTC P0202 INJECTOR #2

NOTE:
For the diagnostic procedure, refer to DTC P0201. <Ref. to EN(H4DOTC)(diag)-151, DTC P0201 INJECTOR #1, Diagnostic Procedure with Diagnostic Trouble Code (DTC).>

AW:DTC P0203 INJECTOR #3

NOTE:
For the diagnostic procedure, refer to DTC P0201. <Ref. to EN(H4DOTC)(diag)-151, DTC P0201 INJECTOR #1, Diagnostic Procedure with Diagnostic Trouble Code (DTC).>

AX:DTC P0204 INJECTOR #4

NOTE:
For the diagnostic procedure, refer to DTC P0201. <Ref. to EN(H4DOTC)(diag)-151, DTC P0201 INJECTOR #1, Diagnostic Procedure with Diagnostic Trouble Code (DTC).>

GETTHEMANUALS.org

AY:DTC P0222 THROTTLE/PEDAL POSITION SENSOR/SWITCH “B” CIRCUIT LOW

DTC DETECTING CONDITION:

- Immediately at fault recognition
- GENERAL DESCRIPTION <Ref. to GD(H4DOTC)-99, DTC P0222 THROTTLE/PEDAL POSITION SENSOR/SWITCH “B” CIRCUIT LOW, Diagnostic Trouble Code (DTC) Detecting Criteria.>

TROUBLE SYMPTOM:

- Improper idling
- Poor driving performance
- Engine stalls.

CAUTION:

After servicing or replacing faulty parts, perform Clear Memory Mode <Ref. to EN(H4DOTC)(diag)-53, OPERATION, Clear Memory Mode.>, and Inspection Mode <Ref. to EN(H4DOTC)(diag)-41, PROCEDURE, Inspection Mode.>.

WIRING DIAGRAM:

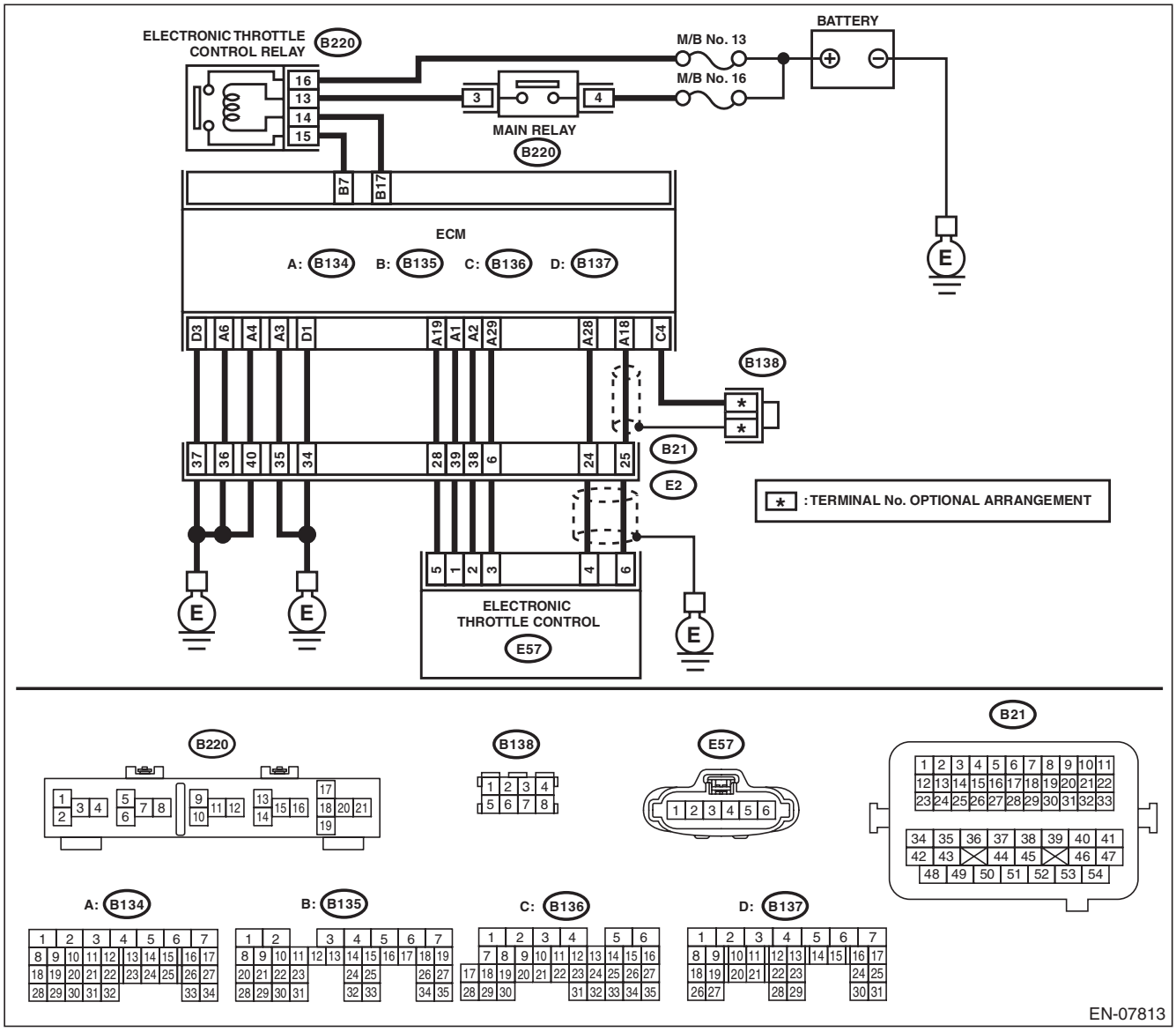

GETTHEMANUALS.org

Step		Check	Yes	No
1	**CHECK HARNESS BETWEEN ECM AND ELECTRONIC THROTTLE CONTROL CONNECTOR.** 1) Turn the ignition switch to OFF. 2) Disconnect the connectors from the ECM and electronic throttle control. 3) Measure the resistance between ECM and chassis ground. ***Connector & terminal*** ***(B134) No. 19 — Chassis ground:*** ***(B134) No. 28 — Chassis ground:***	Is the resistance 1 MΩ or more?	Go to step **2**.	Repair the ground short circuit of harness between ECM and electronic throttle control connector.
2	**CHECK SHORT CIRCUIT INSIDE THE ECM.** 1) Connect the connector to ECM. 2) Measure the resistance between electronic throttle control connector and engine ground. ***Connector & terminal*** ***(E57) No. 4 — Engine ground:***	Is the resistance 1 MΩ or more?	Replace the electronic throttle control. <Ref. to FU(H4DOTC)-15, Throttle Body.>	Repair the ground short circuit of harness between ECM and electronic throttle control connector. Replace the ECM if defective. <Ref. to FU(H4DOTC)-58, Engine Control Module (ECM).>

GETTHEMANUALS.org

AZ:DTC P0223 THROTTLE/PEDAL POSITION SENSOR/SWITCH “B” CIRCUIT HIGH

DTC DETECTING CONDITION:

- Immediately at fault recognition
- GENERAL DESCRIPTION <Ref. to GD(H4DOTC)-101, DTC P0223 THROTTLE/PEDAL POSITION SENSOR/SWITCH “B” CIRCUIT HIGH, Diagnostic Trouble Code (DTC) Detecting Criteria.>

TROUBLE SYMPTOM:

- Improper idling
- Poor driving performance
- Engine stalls.

CAUTION:

After servicing or replacing faulty parts, perform Clear Memory Mode <Ref. to EN(H4DOTC)(diag)-53, OPERATION, Clear Memory Mode.>, and Inspection Mode <Ref. to EN(H4DOTC)(diag)-41, PROCEDURE, Inspection Mode.>.

WIRING DIAGRAM:

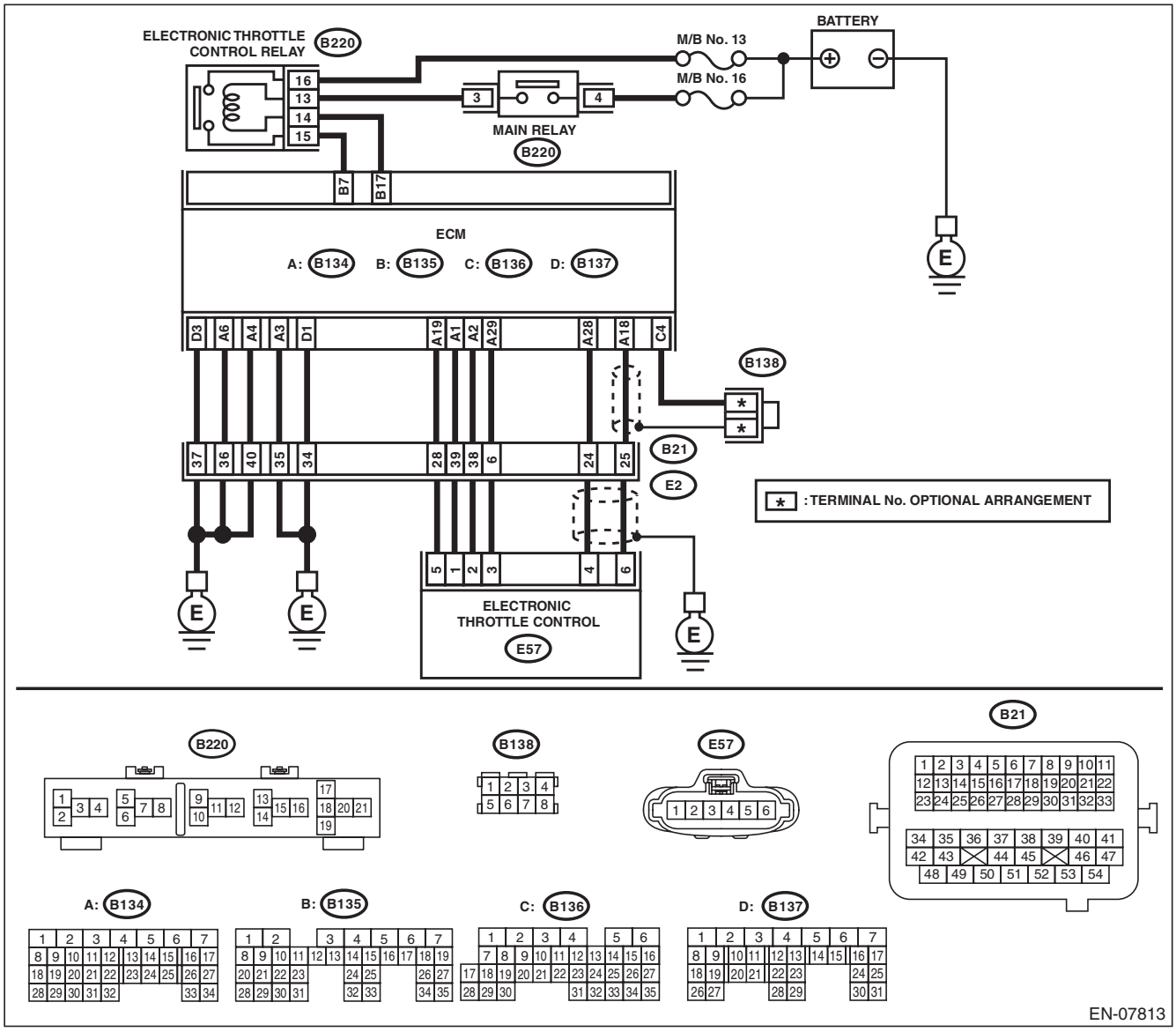

GETTHEMANUALS.org

	Step	Check	Yes	No
1	**CHECK HARNESS BETWEEN ECM AND ELECTRONIC THROTTLE CONTROL CONNECTOR.** 1) Turn the ignition switch to OFF. 2) Disconnect the connectors from the ECM and electronic throttle control. 3) Measure the resistance of harness between ECM and electronic throttle control connector. ***Connector & terminal*** ***(B134) No. 28 — (E57) No. 4:*** ***(B134) No. 29 — (E57) No. 3:***	Is the resistance less than 1 Ω?	Go to step **2**.	Repair the harness and connector. NOTE: In this case, repair the following item: • Open circuit in harness between ECM and electronic throttle control connector • Poor contact of coupling connector
2	**CHECK HARNESS BETWEEN ECM AND ELECTRONIC THROTTLE CONTROL CONNECTOR.** 1) Connect the connector to ECM. 2) Measure the resistance between electronic throttle control connector and engine ground. ***Connector & terminal*** ***(E57) No. 3 — Engine ground:***	Is the resistance less than 5 Ω?	Go to step **3**.	Repair the harness and connector. NOTE: In this case, repair the following item: • Open circuit of harness between ECM and engine ground • Poor contact of ECM connector • Poor contact of coupling connector
3	**CHECK HARNESS BETWEEN ECM AND ELECTRONIC THROTTLE CONTROL CONNECTOR.** 1) Turn the ignition switch to ON. 2) Measure the voltage between electronic throttle control connector and engine ground. ***Connector & terminal*** ***(E57) No. 4 (+) — Engine ground (–):***	Is the voltage 5 V or more?	Repair the short circuit of harness to power supply between ECM and electronic throttle control connector.	Go to step **4**.
4	**CHECK HARNESS BETWEEN ECM AND ELECTRONIC THROTTLE CONTROL CONNECTOR.** 1) Turn the ignition switch to OFF. 2) Disconnect the connector from ECM. 3) Measure the resistance between ECM connectors. ***Connector & terminal*** ***(B134) No. 19 — (B134) No. 28:***	Is the resistance 1 MΩ or more?	Repair the poor contact of electronic throttle control connector. Replace the electronic throttle control if defective. <Ref. to FU(H4DOTC)-15, Throttle Body.>	Repair the short circuit of harness to power supply between ECM and electronic throttle control connector.

GETtheMANUALS.org

BA:DTC P0230 FUEL PUMP PRIMARY CIRCUIT

DTC DETECTING CONDITION:

- Detected when two consecutive driving cycles with fault occur.
- GENERAL DESCRIPTION <Ref. to GD(H4DOTC)-103, DTC P0230 FUEL PUMP PRIMARY CIRCUIT, Diagnostic Trouble Code (DTC) Detecting Criteria.>

CAUTION:

After servicing or replacing faulty parts, perform Clear Memory Mode <Ref. to EN(H4DOTC)(diag)-53, OPERATION, Clear Memory Mode.>, and Inspection Mode <Ref. to EN(H4DOTC)(diag)-41, PROCEDURE, Inspection Mode.>.

WIRING DIAGRAM:

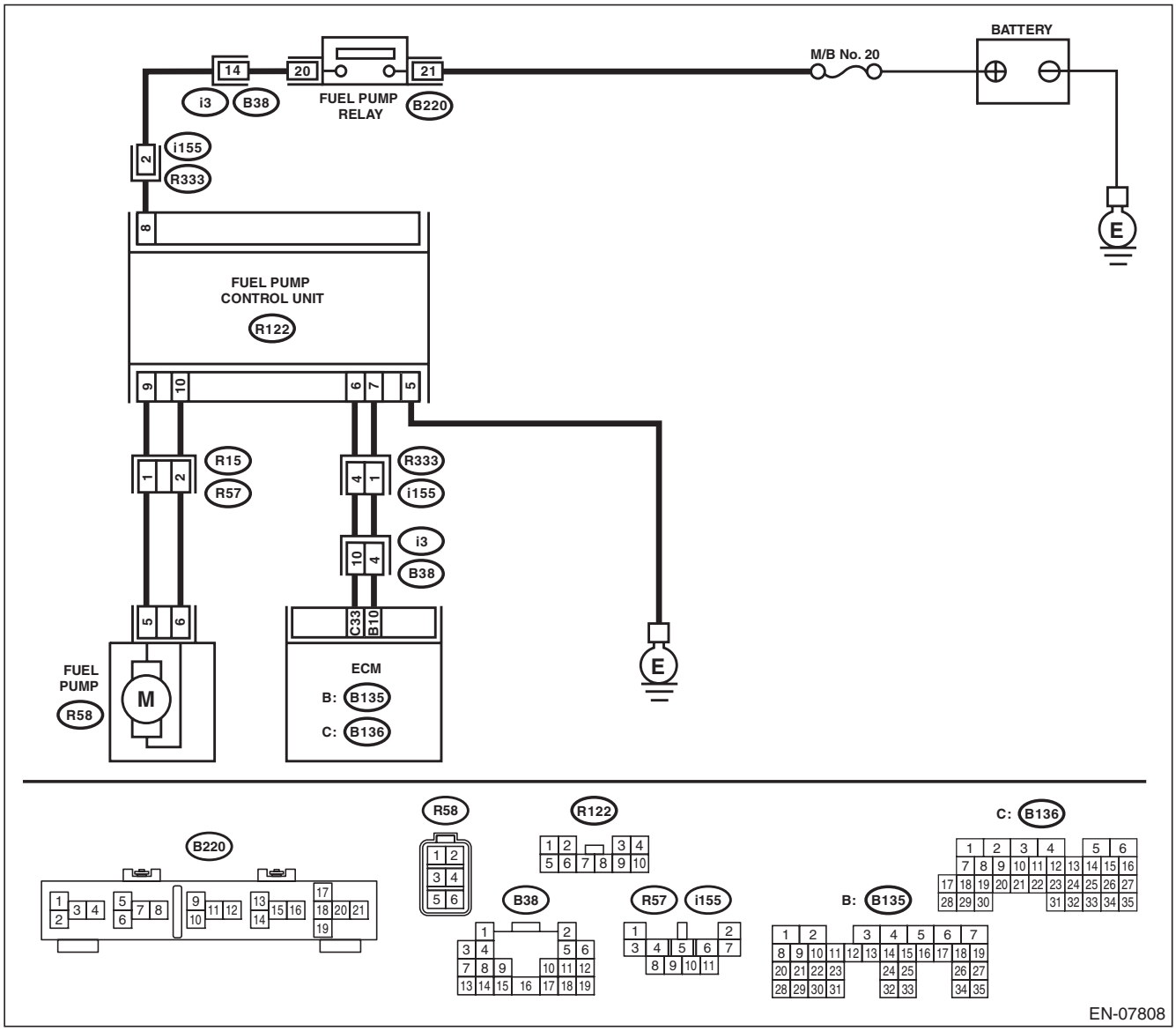

GETTHEMANUALS.org

	Step	Check	Yes	No
1	**CHECK POWER SUPPLY CIRCUIT TO FUEL PUMP CONTROL UNIT.** 1) Turn the ignition switch to OFF. 2) Disconnect the connector from fuel pump control unit. 3) Turn the ignition switch to ON. 4) Measure the voltage between fuel pump control unit connector and chassis ground. ***Connector & terminal*** ***(R122) No. 8 (+) — Chassis ground (–):***	Is the voltage 10 V or more?	Go to step **2**.	Repair the power supply circuit. NOTE: In this case, repair the following item: • Open or ground short circuit of harness between fuel pump relay and fuel pump control unit connector • Poor contact of fuel pump relay connector • Poor contact of coupling connector
2	**CHECK GROUND CIRCUIT OF FUEL PUMP CONTROL UNIT.** 1) Turn the ignition switch to OFF. 2) Measure the resistance of harness between fuel pump control unit connector and chassis ground. ***Connector & terminal*** ***(R122) No. 5 — Chassis ground:***	Is the resistance less than 5 Ω?	Go to step **3**.	Repair the open circuit in harness between fuel pump control unit and chassis ground.
3	**CHECK HARNESS BETWEEN FUEL PUMP CONTROL UNIT AND FUEL PUMP CONNECTOR.** 1) Disconnect the connector from fuel pump. 2) Measure the resistance of harness between fuel pump control unit and fuel pump connector. ***Connector & terminal*** ***(R122) No. 9 — (R58) No. 5:*** ***(R122) No. 10 — (R58) No. 6:***	Is the resistance less than 1 Ω?	Go to step **4**.	Repair the harness and connector. NOTE: In this case, repair the following item: • Open circuit in harness between fuel pump control unit and fuel pump connector • Poor contact of coupling connector
4	**CHECK HARNESS BETWEEN FUEL PUMP CONTROL UNIT AND FUEL PUMP CONNECTOR.** Measure the resistance between fuel pump control unit connector and chassis ground. ***Connector & terminal*** ***(R122) No. 9 — Chassis ground:*** ***(R122) No. 10 — Chassis ground:***	Is the resistance 1 MΩ or more?	Go to step **5**.	Repair the short circuit to ground in harness between fuel pump control unit and fuel pump connector.
5	**CHECK HARNESS BETWEEN ECM AND FUEL PUMP CONTROL UNIT CONNECTOR.** 1) Disconnect the connector from ECM. 2) Measure the resistance of harness between ECM and fuel pump control unit connector. ***Connector & terminal*** ***(B136) No. 33 — (R122) No. 6:*** ***(B135) No. 10 — (R122) No. 7:***	Is the resistance less than 1 Ω?	Go to step **6**.	Repair the harness and connector. NOTE: In this case, repair the following item: • Open circuit in harness between ECM and fuel pump control unit connector • Poor contact of coupling connector

GETTHEMANUALS.org

Step		Check	Yes	No
6	**CHECK HARNESS BETWEEN ECM AND FUEL PUMP CONTROL UNIT CONNECTOR.** Measure the resistance between fuel pump control unit connector and chassis ground. ***Connector & terminal*** ***(R122) No. 6 — Chassis ground:*** ***(R122) No. 7 — Chassis ground:***	Is the resistance 1 MΩ or more?	Go to step **7**.	Repair the short circuit to ground in harness between ECM and fuel pump control unit connector.
7	**CHECK FOR POOR CONTACT.** Check for poor contact of ECM and fuel pump control unit connector.	Is there poor contact of ECM or fuel pump control unit connector?	Repair the poor contact of ECM or fuel pump control unit connector.	Go to step **8**.
8	**CHECK EXPERIENCE OF RUNNING OUT OF FUEL.**	Has the vehicle experienced running out of fuel?	Finish the diagnosis. NOTE: DTC may be recorded as a result of fuel pump idling while running out of fuel.	Replace the fuel pump control unit. <Ref. to FU(H4DOTC)-65, Fuel Pump Control Unit.>

GETTHEMANUALS.org

BB:DTC P0244 TURBO/SUPER CHARGER WASTEGATE SOLENOID “A” RANGE/PERFORMANCE

DTC DETECTING CONDITION:

- Immediately at fault recognition
- GENERAL DESCRIPTION <Ref. to GD(H4DOTC)-105, DTC P0244 TURBO/SUPER CHARGER WASTEGATE SOLENOID “A” RANGE/PERFORMANCE, Diagnostic Trouble Code (DTC) Detecting Criteria.>

TROUBLE SYMPTOM:

Poor driving performance

CAUTION:

After servicing or replacing faulty parts, perform Clear Memory Mode <Ref. to EN(H4DOTC)(diag)-53, OPERATION, Clear Memory Mode.>, and Inspection Mode <Ref. to EN(H4DOTC)(diag)-41, PROCEDURE, Inspection Mode.>.

Step		Check	Yes	No
1	**CHECK FOR ANY OTHER DTC ON DISPLAY.**	Is any other DTC displayed?	Check the appropriate DTC using the “List of Diagnostic Trouble Code (DTC)”. <Ref. to EN(H4DOTC)(diag)-75, List of Diagnostic Trouble Code (DTC).>	Go to step **2**.
2	**CHECK WASTEGATE ACTUATOR PIPING AND WASTEGATE CONTROL SOLENOID VALVE PIPING.**	Are there any damage or disconnection of hose in wastegate actuator piping or wastegate control solenoid valve piping?	Connect the wastegate actuator pipe or wastegate control solenoid valve pipe properly. If defective, replace the hose.	Replace the wastegate control solenoid valve. <Ref. to FU(H4DOTC)-52, Wastegate Control Solenoid Valve.>

GETTHEMANUALS.org

BC:DTC P0245 TURBO/SUPER CHARGER WASTEGATE SOLENOID “A” LOW

DTC DETECTING CONDITION:

- Immediately at fault recognition
- GENERAL DESCRIPTION <Ref. to GD(H4DOTC)-107, DTC P0245 TURBO/SUPER CHARGER WASTEGATE SOLENOID “A” LOW, Diagnostic Trouble Code (DTC) Detecting Criteria.>

TROUBLE SYMPTOM:

Poor driving performance

CAUTION:

After servicing or replacing faulty parts, perform Clear Memory Mode <Ref. to EN(H4DOTC)(diag)-53, OPERATION, Clear Memory Mode.>, and Inspection Mode <Ref. to EN(H4DOTC)(diag)-41, PROCEDURE, Inspection Mode.>.

WIRING DIAGRAM:

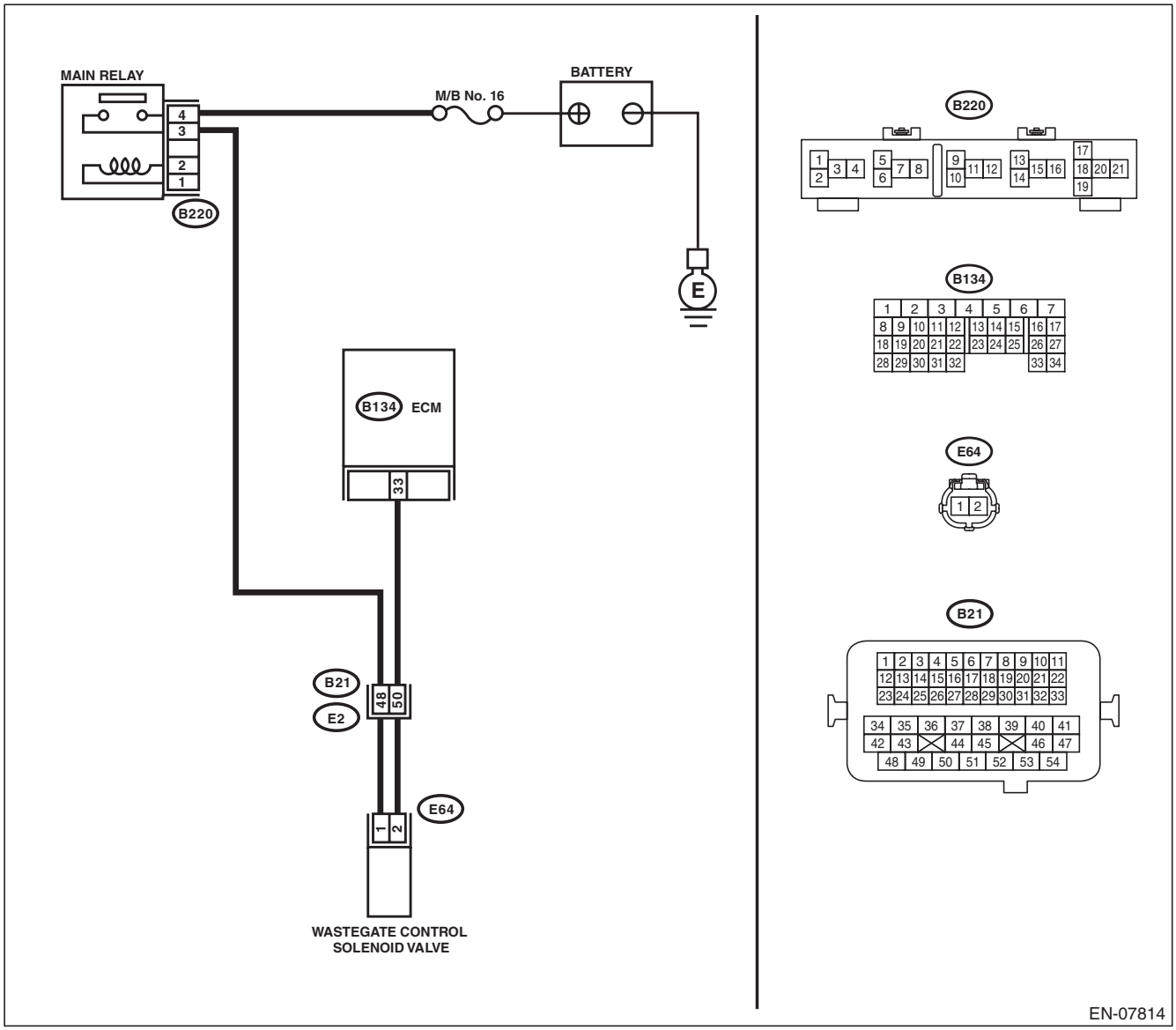

GETTHEMANUALS.org

	Step	Check	Yes	No
1	**CHECK OUTPUT SIGNAL OF ECM.** 1) Turn the ignition switch to ON. 2) Measure the voltage between ECM and chassis ground. ***Connector & terminal*** ***(B134) No. 33 (+) — Chassis ground (–):***	Is the voltage 10 V or more?	Go to step **2**.	Go to step **3**.
2	**CHECK FOR POOR CONTACT.** Check for poor contact of ECM connector.	Is there poor contact of ECM connector?	Repair the poor contact of ECM connector.	Even if DTC is detected, the circuit has returned to a normal condition at this time. Reproduce the failure, and then perform the diagnosis again. NOTE: In this case, temporary open or short circuit of harness or temporary poor contact of connector may be the cause.
3	**CHECK POWER SUPPLY TO WASTEGATE CONTROL SOLENOID VALVE.** Measure the voltage between wastegate control solenoid valve connector and engine ground. ***Connector & terminal*** ***(E64) No. 1 (+) — Engine ground (–):***	Is the voltage 10 V or more?	Go to step **4**.	Repair the power supply circuit.
4	**CHECK HARNESS BETWEEN ECM AND WASTEGATE CONTROL SOLENOID VALVE CONNECTOR.** 1) Turn the ignition switch to OFF. 2) Disconnect the connector from ECM and wastegate control solenoid valve. 3) Measure the resistance between wastegate control solenoid valve connector and engine ground. ***Connector & terminal*** ***(E64) No. 2 — Engine ground:***	Is the resistance 1 MΩ or more?	Go to step **5**.	Repair ground short circuit of harness between ECM and wastegate control solenoid valve connector.
5	**CHECK HARNESS BETWEEN ECM AND WASTEGATE CONTROL SOLENOID VALVE CONNECTOR.** Measure the resistance of harness between ECM and wastegate control solenoid valve connector. ***Connector & terminal*** ***(B134) No. 33 — (E64) No. 2:***	Is the resistance less than 1 Ω?	Go to step **6**.	Repair the harness and connector. NOTE: In this case, repair the following item: • Open circuit of harness between ECM and wastegate control solenoid valve connector • Poor contact of coupling connector

GETTHEMANUALS.org

Step		Check	Yes	No
6	**CHECK WASTEGATE CONTROL SOLENOID VALVE.** 1) Remove the wastegate control solenoid valve. 2) Measure the resistance between wastegate control solenoid valve terminals. ***Terminals*** ***No. 1 — No. 2:***	Is the resistance 10 — 100 Ω?	Repair poor contact of wastegate control solenoid valve connector.	Replace the wastegate control solenoid valve. <Ref. to FU(H4DOTC)-52, Wastegate Control Solenoid Valve.>

GETTHEMANUALS.org

BD:DTC P0246 TURBO/SUPER CHARGER WASTEGATE SOLENOID “A” HIGH

DTC DETECTING CONDITION:

- Immediately at fault recognition
- GENERAL DESCRIPTION <Ref. to GD(H4DOTC)-108, DTC P0246 TURBO/SUPER CHARGER WASTEGATE SOLENOID “A” HIGH, Diagnostic Trouble Code (DTC) Detecting Criteria.>

TROUBLE SYMPTOM:

Poor driving performance

CAUTION:

After servicing or replacing faulty parts, perform Clear Memory Mode <Ref. to EN(H4DOTC)(diag)-53, OPERATION, Clear Memory Mode.>, and Inspection Mode <Ref. to EN(H4DOTC)(diag)-41, PROCEDURE, Inspection Mode.>.

WIRING DIAGRAM:

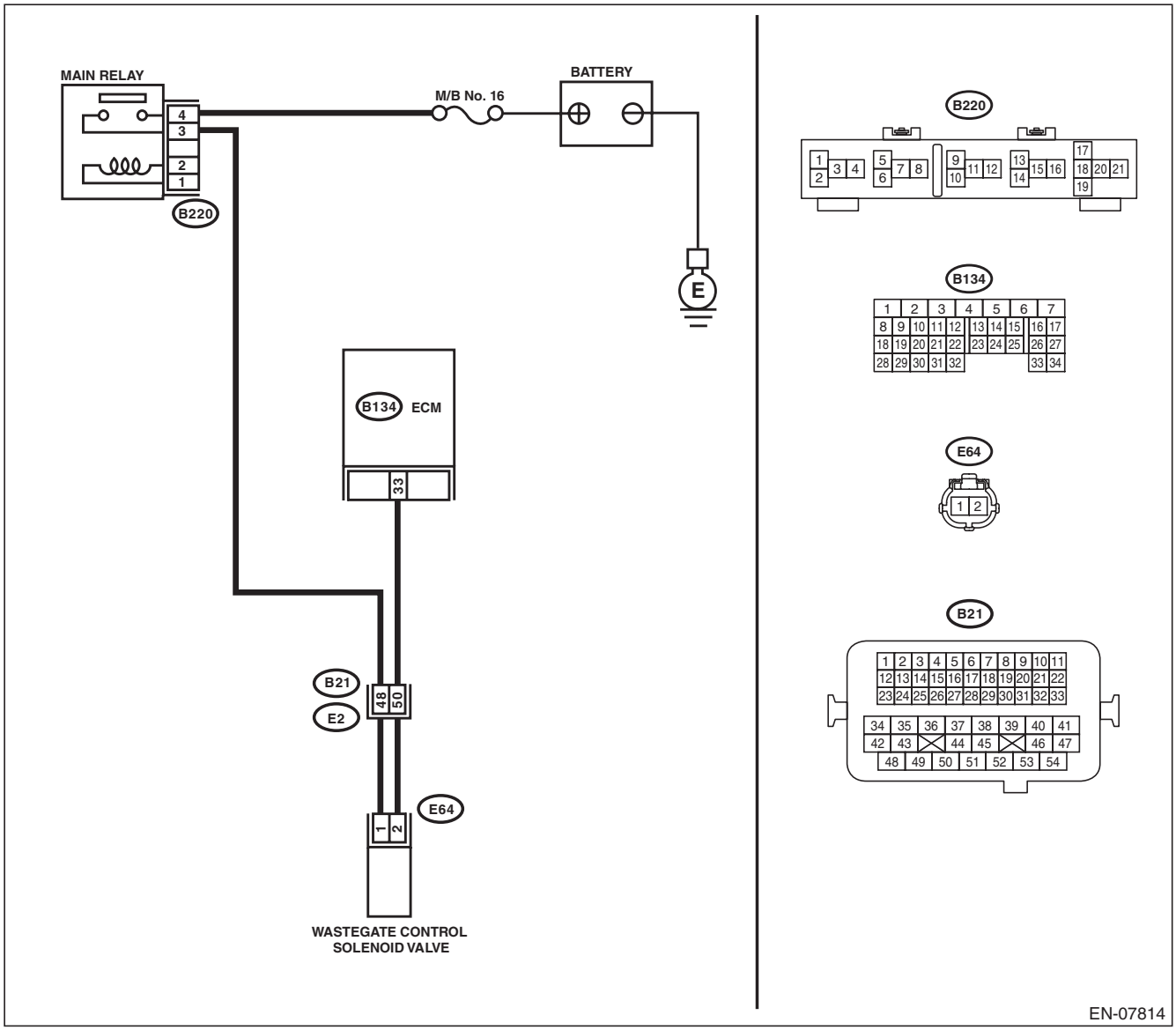

GETTHEMANUALS.org

Step		Check	Yes	No
1	**CHECK HARNESS BETWEEN ECM AND WASTEGATE CONTROL SOLENOID VALVE CONNECTOR.** 1) Turn the ignition switch to OFF. 2) Disconnect the connector from ECM and wastegate control solenoid valve. 3) Turn the ignition switch to ON. 4) Measure the voltage between ECM and chassis ground. ***Connector & terminal*** ***(B134) No. 33 (+) — Chassis ground (–):***	Is the voltage 10 V or more?	Repair short circuit of the harness to power supply between ECM and wastegate control solenoid valve connector.	Go to step **2**.
2	**CHECK WASTEGATE CONTROL SOLENOID VALVE.** 1) Turn the ignition switch to OFF. 2) Measure the resistance between wastegate control solenoid valve terminals. ***Terminals*** ***No. 1 — No. 2:***	Is the resistance less than 1 Ω?	Replace the wastegate control solenoid valve. <Ref. to FU(H4DOTC)-52, Wastegate Control Solenoid Valve.>	Repair the poor contact of ECM connector.

BE:DTC P0301 CYLINDER 1 MISFIRE DETECTED

NOTE:
For the diagnostic procedure, refer to DTC P0304. <Ref. to EN(H4DOTC)(diag)-167, DTC P0304 CYLINDER 4 MISFIRE DETECTED, Diagnostic Procedure with Diagnostic Trouble Code (DTC).>

BF:DTC P0302 CYLINDER 2 MISFIRE DETECTED

NOTE:
For the diagnostic procedure, refer to DTC P0304. <Ref. to EN(H4DOTC)(diag)-167, DTC P0304 CYLINDER 4 MISFIRE DETECTED, Diagnostic Procedure with Diagnostic Trouble Code (DTC).>

BG:DTC P0303 CYLINDER 3 MISFIRE DETECTED

NOTE:
For the diagnostic procedure, refer to DTC P0304. <Ref. to EN(H4DOTC)(diag)-167, DTC P0304 CYLINDER 4 MISFIRE DETECTED, Diagnostic Procedure with Diagnostic Trouble Code (DTC).>

GETTHEMANUALS.org

BH:DTC P0304 CYLINDER 4 MISFIRE DETECTED

DTC DETECTING CONDITION:

- Detected when two consecutive driving cycles with fault occur.
- Immediately at fault recognition (A misfire which could damage catalyst occurs.)
- GENERAL DESCRIPTION <Ref. to GD(H4DOTC)-115, DTC P0304 CYLINDER 4 MISFIRE DETECTED, Diagnostic Trouble Code (DTC) Detecting Criteria.>

TROUBLE SYMPTOM:

- Engine stalls.
- Improper idling
- Rough driving

CAUTION:

After servicing or replacing faulty parts, perform Clear Memory Mode <Ref. to EN(H4DOTC)(diag)-53, OPERATION, Clear Memory Mode.>, and Inspection Mode <Ref. to EN(H4DOTC)(diag)-41, PROCEDURE, Inspection Mode.>.

WIRING DIAGRAM:

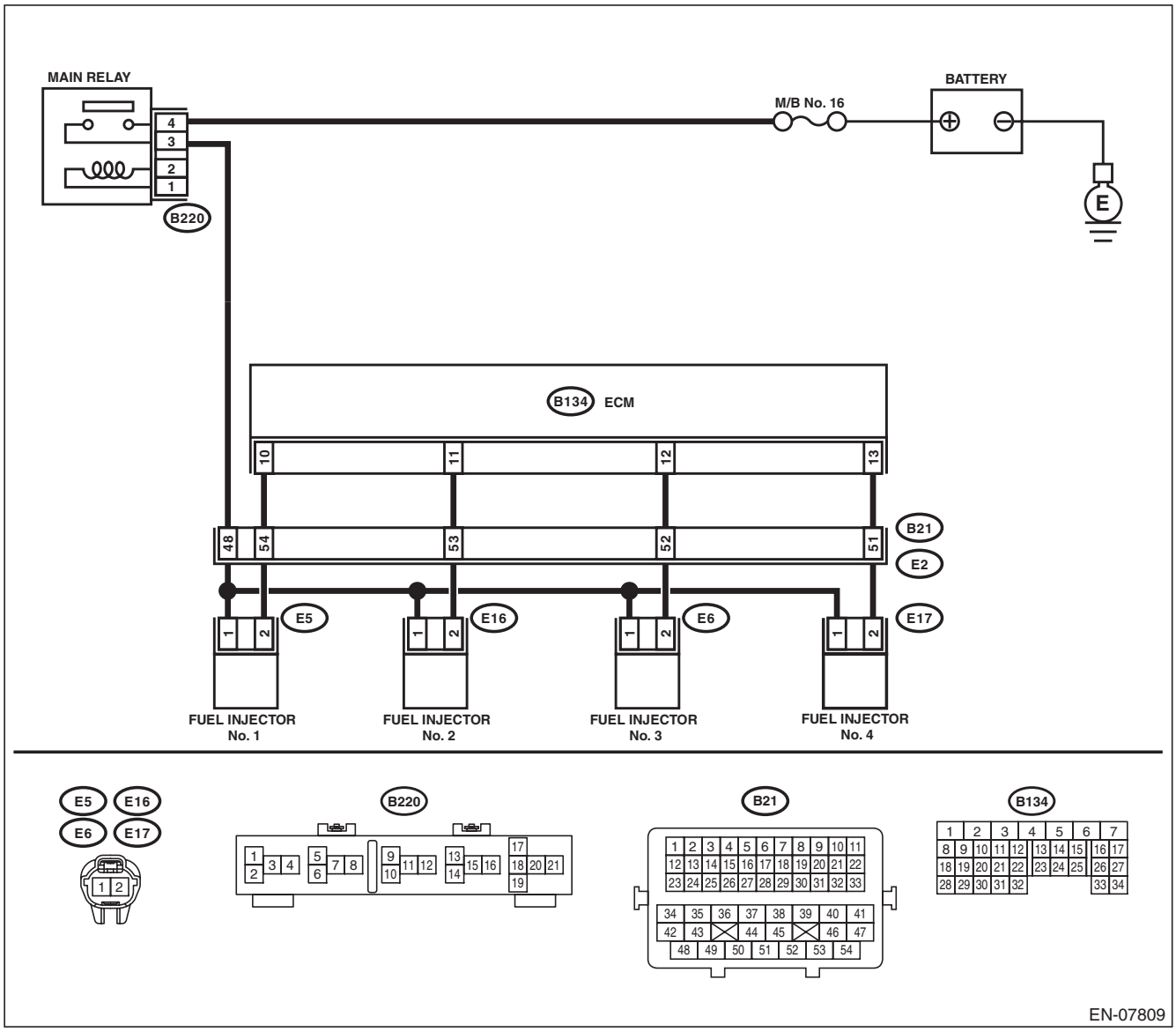

GETHEMANUALS.org

	Step	Check	Yes	No
1	**CHECK OUTPUT SIGNAL OF ECM.** 1) Turn the ignition switch to ON. 2) Measure the voltage between ECM and chassis ground on faulty cylinders. ***Connector & terminal*** ***#1 (B134) No. 10 (+) — Chassis ground (–):*** ***#2 (B134) No. 11 (+) — Chassis ground (–):*** ***#3 (B134) No. 12 (+) — Chassis ground (–):*** ***#4 (B134) No. 13 (+) — Chassis ground (–):***	Is the voltage 10 V or more?	Go to step **6**.	Go to step **2**.
2	**CHECK HARNESS BETWEEN ECM AND FUEL INJECTOR CONNECTOR.** 1) Turn the ignition switch to OFF. 2) Disconnect the connector from fuel injector on faulty cylinders. 3) Measure the resistance between fuel injector connector and engine ground on faulty cylinders. ***Connector & terminal*** ***#1 (E5) No. 2 — Engine ground:*** ***#2 (E16) No. 2 — Engine ground:*** ***#3 (E6) No. 2 — Engine ground:*** ***#4 (E17) No. 2 — Engine ground:***	Is the resistance 1 MΩ or more?	Go to step **3**.	Repair the short circuit to ground in harness between ECM and fuel injector connector.
3	**CHECK HARNESS BETWEEN ECM AND FUEL INJECTOR CONNECTOR.** Measure the resistance of harness between ECM and fuel injector connector on faulty cylinders. ***Connector & terminal*** ***#1 (B134) No. 10 — (E5) No. 2:*** ***#2 (B134) No. 11 — (E16) No. 2:*** ***#3 (B134) No. 12 — (E6) No. 2:*** ***#4 (B134) No. 13 — (E17) No. 2:***	Is the resistance less than 1 Ω?	Go to step **4**.	Repair the harness and connector. NOTE: In this case, repair the following item: • Open circuit in harness between ECM and fuel injector connector • Poor contact of coupling connector
4	**CHECK FUEL INJECTOR.** Measure the resistance between fuel injector terminals on faulty cylinder. ***Terminals*** ***No. 1 — No. 2:***	Is the resistance 5 — 20 Ω?	Go to step **5**.	Replace the faulty fuel injector. <Ref. to FU(H4DOTC)-45, Fuel Injector.>
5	**CHECK POWER SUPPLY LINE.** 1) Turn the ignition switch to ON. 2) Measure the voltage between fuel injector connector of faulty cylinders and engine ground. ***Connector & terminal*** ***#1 (E5) No. 1 (+) — Engine ground (–):*** ***#2 (E16) No. 1 (+) — Engine ground (–):*** ***#3 (E6) No. 1 (+) — Engine ground (–):*** ***#4 (E17) No. 1 (+) — Engine ground (–):***	Is the voltage 10 V or more?	Repair the poor contact of all connectors in fuel injector circuit.	Repair the harness and connector. NOTE: In this case, repair the following item: • Open circuit in harness between the main relay and fuel injector connector on faulty cylinders • Poor contact of coupling connector • Poor contact of main relay connector

GETTHEMANUALS.org

	Step	Check	Yes	No
6	**CHECK HARNESS BETWEEN ECM AND FUEL INJECTOR CONNECTOR.** 1) Turn the ignition switch to OFF. 2) Disconnect the connector from fuel injector on faulty cylinders. 3) Turn the ignition switch to ON. 4) Measure the voltage between ECM and chassis ground on faulty cylinders. ***Connector & terminal*** ***#1 (B134) No. 10 (+) — Chassis ground (–):*** ***#2 (B134) No. 11 (+) — Chassis ground (–):*** ***#3 (B134) No. 12 (+) — Chassis ground (–):*** ***#4 (B134) No. 13 (+) — Chassis ground (–):***	Is the voltage 10 V or more?	Repair the short circuit to power in harness between ECM and fuel injector connector.	Go to step **7**.
7	**CHECK FUEL INJECTOR.** 1) Turn the ignition switch to OFF. 2) Measure the resistance between fuel injector terminals on faulty cylinder. ***Terminals*** ***No. 1 — No. 2:***	Is the resistance 5 — 20 Ω?	Go to step **8**.	Replace the faulty fuel injector. <Ref. to FU(H4DOTC)-45, Fuel Injector.>
8	**CHECK INSTALLATION OF CAMSHAFT POSITION SENSOR/CRANKSHAFT POSITION SENSOR.**	Is the camshaft position sensor or crankshaft position sensor loosely installed?	Tighten the camshaft position sensor or crankshaft position sensor. <Ref. to FU(H4DOTC)-37, Camshaft Position Sensor.> <Ref. to FU(H4DOTC)-35, Crankshaft Position Sensor.>	Go to step **9**.
9	**CHECK CRANK SPROCKET.** Remove the timing belt cover. <Ref. to ME(H4DOTC)-46, REMOVAL, Timing Belt Cover.>	Is the crank sprocket rusted or does it have broken teeth?	Replace the crank sprocket. <Ref. to ME(H4DOTC)-62, Crank Sprocket.>	Go to step **10**.
10	**CHECK INSTALLATION CONDITION OF TIMING BELT.** Turn the crankshaft using ST, and align the alignment mark on crank sprocket with alignment mark on cylinder block. ST 499987500 CRANKSHAFT SOCKET	Is the timing belt dislocated from its proper position?	Repair the installation condition of timing belt. <Ref. to ME(H4DOTC)-52, Timing Belt.>	Go to step **11**.
11	**CHECK FUEL LEVEL.**	Is the fuel meter indication higher than the “Lower” level?	Go to step **12**.	Refill the fuel so that the fuel meter indication is higher than the “Lower” level, and proceed to the next step. Go to step **12**.
12	**CHECK STATUS OF MALFUNCTION INDICATOR LIGHT.** 1) Clear the memory using the Subaru Select Monitor or general scan tool. <Ref. to EN(H4DOTC)(diag)-53, Clear Memory Mode.> 2) Start the engine, and drive the vehicle 10 minutes or more.	Does the malfunction indicator light illuminate or blink?	Go to step **14**.	Go to step **13**.

GETTHEMANUALS.org

Step		Check	Yes	No
13	**CHECK CAUSE OF MISFIRE.**	Was the cause of misfire identified when the engine is running?	Finish diagnostics operation, if the engine has no abnormality.	Repair the poor contact of connector. NOTE: In this case, repair the following item: • Poor contact of ignition coil connector • Poor contact of fuel injector connector on faulty cylinders • Poor contact of ECM connector • Poor contact of coupling connector
14	**CHECK AIR INTAKE SYSTEM.**	Is there any fault in air intake system?	Repair the air intake system. NOTE: Check the following items. • Are there air leaks or air suction caused by loose or dislocated nuts and bolts? • Are there cracks or any disconnection of hoses?	Go to step **15**.
15	**CHECK MISFIRE SYMPTOM.** 1) Turn the ignition switch to ON. 2) Check for DTC. <Ref. to EN(H4DOTC)(diag)-40, Read Diagnostic Trouble Code (DTC).>	Does the Subaru Select Monitor or general scan tool indicate only one DTC?	Go to step **18**.	Go to step **16**.
16	**CHECK DTC.**	Is DTC P0301 and P0303 displayed on the Subaru Select Monitor or general scan tool?	Go to step **19**.	Go to step **17**.
17	**CHECK DTC.**	Is DTC P0302 and P0304 displayed on the Subaru Select Monitor or general scan tool?	Go to step **20**.	Go to step **21**.
18	**ONLY ONE CYLINDER.**	Is there any fault in the cylinder?	Repair or replace faulty parts. NOTE: Check the following items. • Spark plug • Ignition coil • Fuel injector • Compression ratio	Go to DTC P0171. <Ref. to EN(H4DOTC)(diag)-143, DTC P0171 SYSTEM TOO LEAN (BANK 1), Diagnostic Procedure with Diagnostic Trouble Code (DTC).>

GETTHEMANUALS.org

Step		Check	Yes	No
19	**GROUP OF #1 AND #3 CYLINDERS.**	Are there any faults in #1 and #3 cylinders?	Repair or replace faulty parts. NOTE: Check the following items. • Spark plug • Ignition coil • Fuel injector • Compression ratio • Skipping timing belt teeth	Go to DTC P0171. <Ref. to EN(H4DOTC)(diag)-143, DTC P0171 SYSTEM TOO LEAN (BANK 1), Diagnostic Procedure with Diagnostic Trouble Code (DTC).>
20	**GROUP OF #2 AND #4 CYLINDERS.**	Are there any faults in #2 and #4 cylinders?	Repair or replace faulty parts. NOTE: Check the following items. • Spark plug • Ignition coil • Fuel injector • Compression ratio • Skipping timing belt teeth	Go to DTC P0171. <Ref. to EN(H4DOTC)(diag)-143, DTC P0171 SYSTEM TOO LEAN (BANK 1), Diagnostic Procedure with Diagnostic Trouble Code (DTC).>
21	**CYLINDER AT RANDOM.**	Is the engine idle rough?	Go to DTC P0171. <Ref. to EN(H4DOTC)(diag)-143, DTC P0171 SYSTEM TOO LEAN (BANK 1), Diagnostic Procedure with Diagnostic Trouble Code (DTC).>	Repair or replace faulty parts. NOTE: Check the following items. • Spark plug • Ignition coil • Fuel injector • Compression ratio

GETTHEMANUALS.org

BI: DTC P0327 KNOCK SENSOR 1 CIRCUIT LOW (BANK 1 OR SINGLE SENSOR)

DTC DETECTING CONDITION:

- Immediately at fault recognition
- GENERAL DESCRIPTION <Ref. to GD(H4DOTC)-116, DTC P0327 KNOCK SENSOR 1 CIRCUIT LOW (BANK 1 OR SINGLE SENSOR), Diagnostic Trouble Code (DTC) Detecting Criteria.>

TROUBLE SYMPTOM:

- Poor driving performance
- Knocking occurs.

CAUTION:

After servicing or replacing faulty parts, perform Clear Memory Mode <Ref. to EN(H4DOTC)(diag)-53, OPERATION, Clear Memory Mode.>, and Inspection Mode <Ref. to EN(H4DOTC)(diag)-41, PROCEDURE, Inspection Mode.>.

WIRING DIAGRAM:

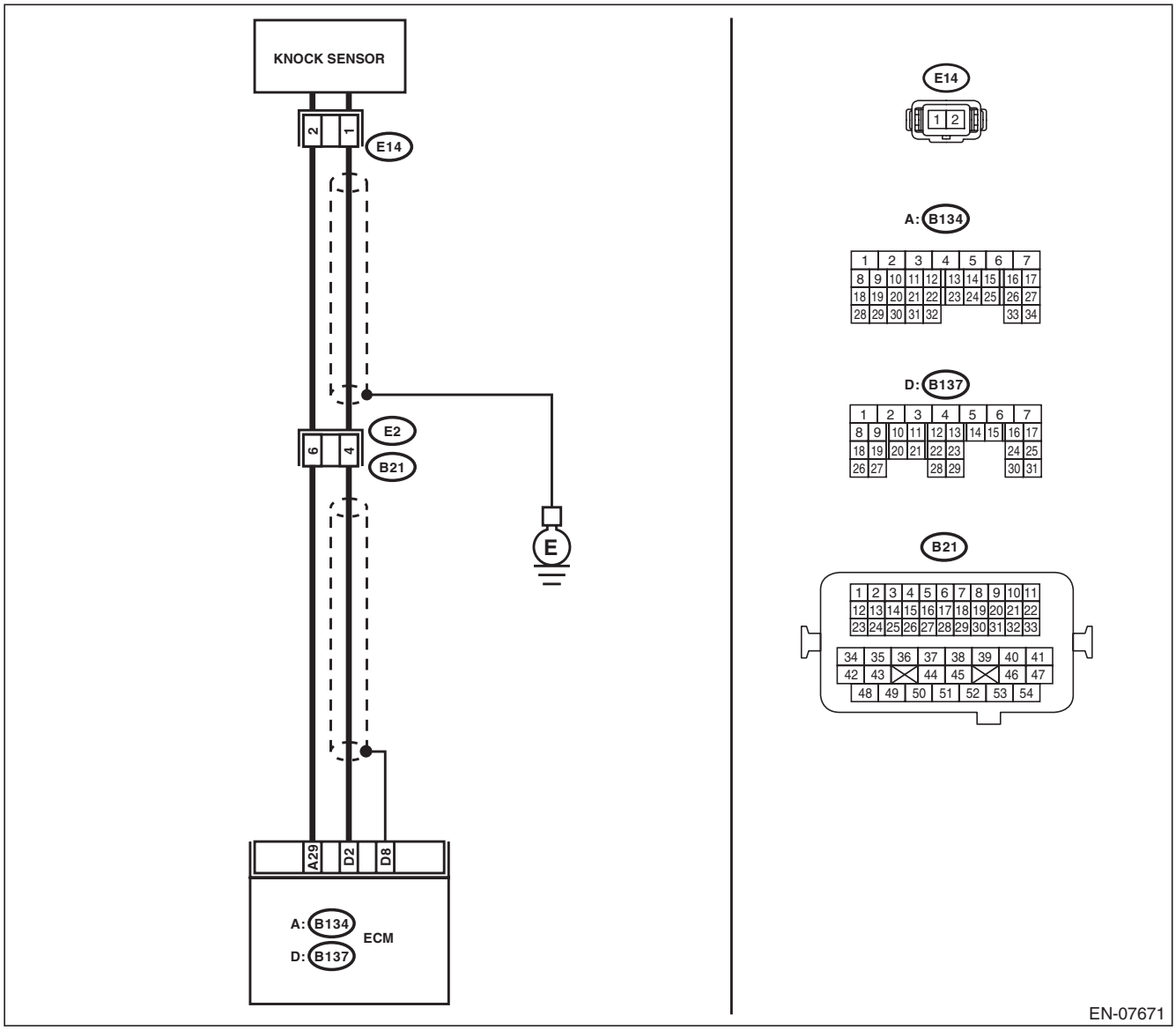

GETTHEMANUALS.org

Step		Check	Yes	No
1	**CHECK HARNESS BETWEEN ECM AND KNOCK SENSOR CONNECTOR.** 1) Turn the ignition switch to OFF. 2) Disconnect the connector from ECM. 3) Measure the resistance between ECM connectors. ***Connector & terminal*** ***(B137) No. 2 — (B134) No. 29:***	Is the resistance 600 kΩ or more?	Go to step **2**.	Repair the poor contact of ECM connector.
2	**CHECK KNOCK SENSOR.** 1) Disconnect the connector from knock sensor. 2) Measure the resistance between knock sensor terminals. ***Terminals*** ***No. 1 — No. 2:***	Is the resistance 600 kΩ or more?	Replace the knock sensor. <Ref. to FU(H4DOTC)-39, Knock Sensor.>	Repair the harness and connector. NOTE: In this case, repair the following item: • Open circuit in harness between ECM and knock sensor connector • Poor contact of knock sensor connector • Poor contact of coupling connector

GETTHEMANUALS.org

BJ:DTC P0328 KNOCK SENSOR 1 CIRCUIT HIGH (BANK 1 OR SINGLE SENSOR)

DTC DETECTING CONDITION:

- Immediately at fault recognition
- GENERAL DESCRIPTION <Ref. to GD(H4DOTC)-118, DTC P0328 KNOCK SENSOR 1 CIRCUIT HIGH (BANK 1 OR SINGLE SENSOR), Diagnostic Trouble Code (DTC) Detecting Criteria.>

TROUBLE SYMPTOM:

- Poor driving performance
- Knocking occurs.

CAUTION:

After servicing or replacing faulty parts, perform Clear Memory Mode <Ref. to EN(H4DOTC)(diag)-53, OPERATION, Clear Memory Mode.>, and Inspection Mode <Ref. to EN(H4DOTC)(diag)-41, PROCEDURE, Inspection Mode.>.

WIRING DIAGRAM:

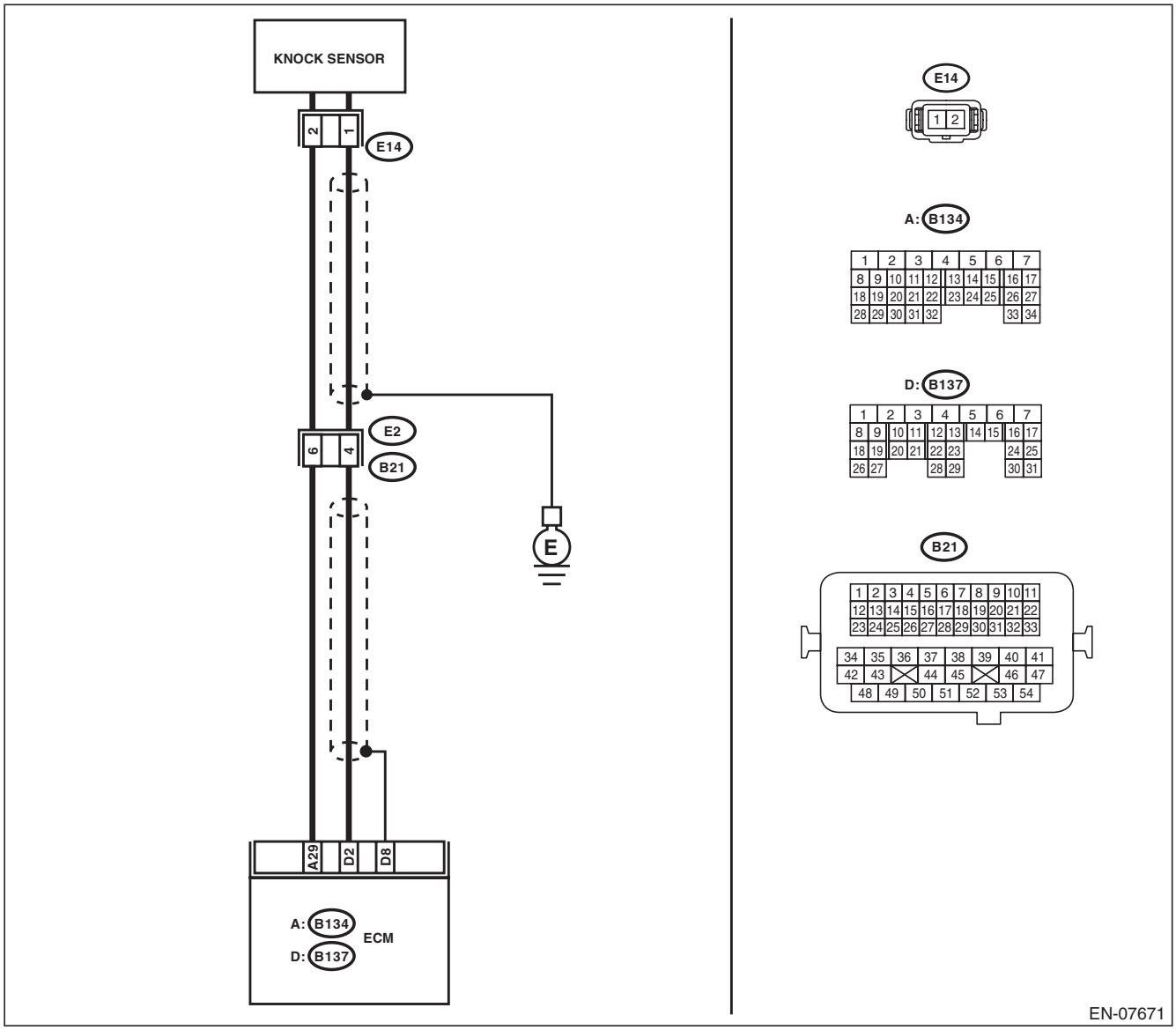

GETTHEMANUALS.org

	Step	Check	Yes	No
1	**CHECK HARNESS BETWEEN ECM AND KNOCK SENSOR CONNECTOR.** 1) Turn the ignition switch to OFF. 2) Disconnect the connector from ECM. 3) Measure the resistance between ECM connectors. ***Connector & terminal*** ***(B137) No. 2 — (B134) No. 29:***	Is the resistance less than 500 kΩ?	Go to step **2**.	Go to step **3**.
2	**CHECK KNOCK SENSOR.** 1) Disconnect the connector from knock sensor. 2) Measure the resistance between knock sensor connectors. ***Terminals*** ***No. 1 — No. 2:***	Is the resistance less than 500 kΩ?	Replace the knock sensor. <Ref. to FU(H4DOTC)-39, Knock Sensor.>	Repair the ground short circuit of harness between ECM and knock sensor connector. NOTE: The harness between both connectors are shielded. Remove the shield and repair the short circuit of the harness.
3	**CHECK INPUT SIGNAL OF ECM.** 1) Connect the connector to ECM. 2) Turn the ignition switch to ON. 3) Measure the voltage between ECM and chassis ground. ***Connector & terminal*** ***(B137) No. 2 (+) — Chassis ground (–):***	Is the voltage 2 V or more?	Even if DTC is detected, the circuit has returned to a normal condition at this time. Reproduce the failure, and then perform the diagnosis again. NOTE: In this case, temporary poor contact of connector, temporary open or short circuit of harness may be the cause.	Repair the poor contact of ECM connector.

GETTHEMANUALS.org

BK:DTC P0335 CRANKSHAFT POSITION SENSOR “A” CIRCUIT

DTC DETECTING CONDITION:

- Immediately at fault recognition
- GENERAL DESCRIPTION <Ref. to GD(H4DOTC)-120, DTC P0335 CRANKSHAFT POSITION SENSOR “A” CIRCUIT, Diagnostic Trouble Code (DTC) Detecting Criteria.>

TROUBLE SYMPTOM:

- Engine stalls.
- Failure of engine to start

CAUTION:

After servicing or replacing faulty parts, perform Clear Memory Mode <Ref. to EN(H4DOTC)(diag)-53, OPERATION, Clear Memory Mode.>, and Inspection Mode <Ref. to EN(H4DOTC)(diag)-41, PROCEDURE, Inspection Mode.>.

WIRING DIAGRAM:

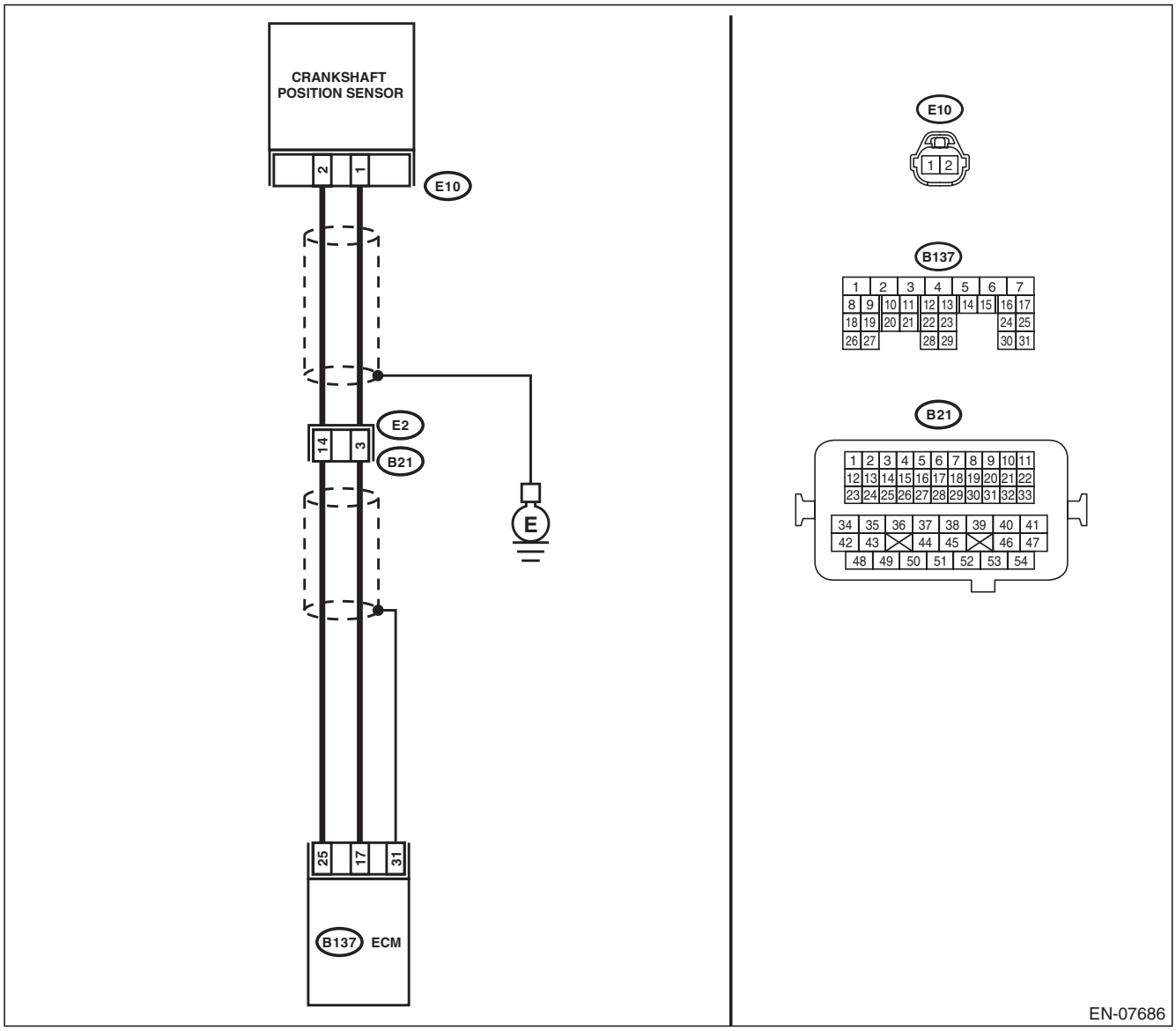

GETTHEMANUALS.org

	Step	Check	Yes	No
1	**CHECK CONDITION OF CRANKSHAFT POSITION SENSOR.**	Is the crankshaft position sensor installation bolt tightened securely?	Go to step **2**.	Tighten the crankshaft position sensor installation bolt securely. <Ref. to FU(H4DOTC)-35, Crankshaft Position Sensor.>
2	**CHECK CRANKSHAFT POSITION SENSOR.** 1) Turn the ignition switch to OFF. 2) Remove the crankshaft position sensor. <Ref. to FU(H4DOTC)-35, REMOVAL, Crankshaft Position Sensor.> 3) Measure the resistance between terminals of crankshaft position sensor. ***Terminals*** ***No. 1 — No. 2:***	Is the resistance between 1 and 4 kΩ?	Go to step **3**.	Replace the crankshaft position sensor. <Ref. to FU(H4DOTC)-35, Crankshaft Position Sensor.>
3	**CHECK HARNESS BETWEEN ECM AND CRANKSHAFT POSITION SENSOR CONNECTOR.** 1) Disconnect the connectors from ECM. 2) Measure the resistance of harness between ECM and crankshaft position sensor connector. ***Connector & terminal*** ***(B137) No. 17 — (E10) No. 1:*** ***(B137) No. 25 — (E10) No. 2:***	Is the resistance less than 1 Ω?	Repair the poor contact of ECM and crankshaft position sensor connector.	Repair the harness and connector. NOTE: In this case, repair the following item: • Open circuit in harness between ECM and crankshaft position sensor connector • Poor contact of coupling connector

GETtheMANUALS.org

BL:DTC P0336 CRANKSHAFT POSITION SENSOR “A” CIRCUIT RANGE/PERFORMANCE

DTC DETECTING CONDITION:

- Detected when two consecutive driving cycles with fault occur.
- GENERAL DESCRIPTION <Ref. to GD(H4DOTC)-122, DTC P0336 CRANKSHAFT POSITION SENSOR “A” CIRCUIT RANGE/PERFORMANCE, Diagnostic Trouble Code (DTC) Detecting Criteria.>

TROUBLE SYMPTOM:

- Engine stalls.
- Failure of engine to start

CAUTION:

After servicing or replacing faulty parts, perform Clear Memory Mode <Ref. to EN(H4DOTC)(diag)-53, OPERATION, Clear Memory Mode.>, and Inspection Mode <Ref. to EN(H4DOTC)(diag)-41, PROCEDURE, Inspection Mode.>.

	Step	Check	Yes	No
1	**CHECK CONDITION OF CRANKSHAFT POSITION SENSOR.** Turn the ignition switch to OFF.	Is the crankshaft position sensor installation bolt tightened securely?	Go to step **2**.	Tighten the crankshaft position sensor installation bolt securely. <Ref. to FU(H4DOTC)-35, Crankshaft Position Sensor.>
2	**CHECK CRANK SPROCKET.** Remove the timing belt cover. <Ref. to ME(H4DOTC)-46, REMOVAL, Timing Belt Cover.>	Are crank sprocket teeth cracked or damaged?	Replace the crank sprocket. <Ref. to ME(H4DOTC)-62, Crank Sprocket.>	Go to step **3**.
3	**CHECK INSTALLATION CONDITION OF TIMING BELT.** Turn the crankshaft using ST, and align the alignment mark on crank sprocket with alignment mark on cylinder block. ST 499987500 CRANKSHAFT SOCKET	Is the timing belt dislocated from its proper position?	Repair the installation condition of timing belt. <Ref. to ME(H4DOTC)-52, Timing Belt.>	Replace the crankshaft position sensor. <Ref. to FU(H4DOTC)-35, Crankshaft Position Sensor.>

GETTHEMANUALS.org

BM:DTC P0340 CAMSHAFT POSITION SENSOR “A” CIRCUIT (BANK 1 OR SINGLE SENSOR)

DTC DETECTING CONDITION:

- Immediately at fault recognition
- GENERAL DESCRIPTION <Ref. to GD(H4DOTC)-124, DTC P0340 CAMSHAFT POSITION SENSOR “A” CIRCUIT (BANK 1 OR SINGLE SENSOR), Diagnostic Trouble Code (DTC) Detecting Criteria.>

TROUBLE SYMPTOM:

- Engine stalls.
- Failure of engine to start

CAUTION:

After servicing or replacing faulty parts, perform Clear Memory Mode <Ref. to EN(H4DOTC)(diag)-53, OPERATION, Clear Memory Mode.>, and Inspection Mode <Ref. to EN(H4DOTC)(diag)-41, PROCEDURE, Inspection Mode.>.

WIRING DIAGRAM:

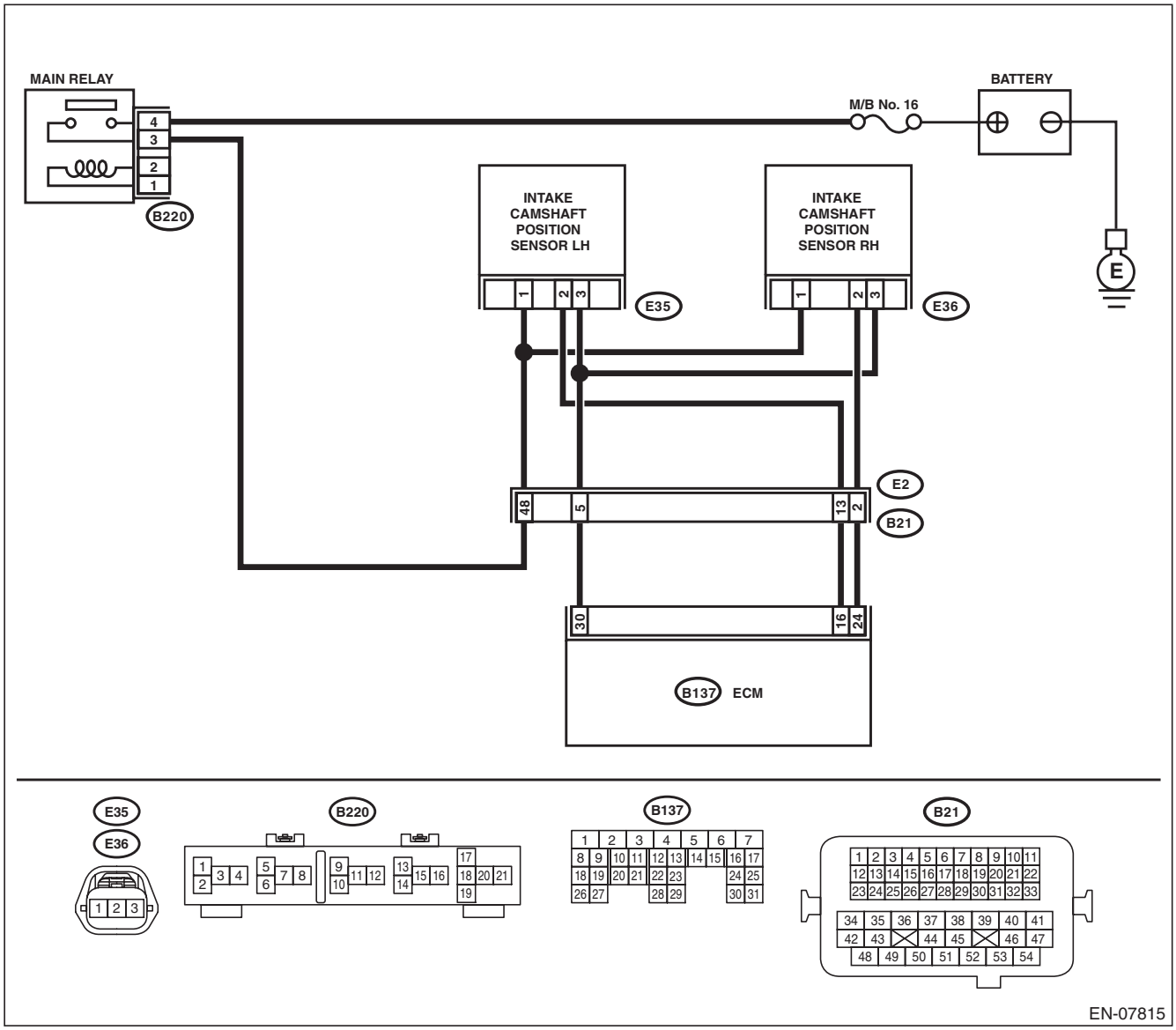

GETTHEMANUALS.org

	Step	Check	Yes	No
1	**CHECK POWER SUPPLY OF CAMSHAFT POSITION SENSOR.** 1) Turn the ignition switch to OFF. 2) Disconnect the connector from camshaft position sensor. 3) Turn the ignition switch to ON. 4) Measure the voltage between camshaft position sensor connector and engine ground. ***Connector & terminal*** ***(E36) No. 1 (+) — Engine ground (–):***	Is the voltage 10 V or more?	Go to step **2**.	Repair the harness and connector. NOTE: In this case, repair the following item: • Open circuit or short circuit to ground in harness between main relay connector and camshaft position sensor connector • Poor contact of coupling connector
2	**CHECK HARNESS BETWEEN ECM AND CAMSHAFT POSITION SENSOR CONNECTOR.** 1) Turn the ignition switch to OFF. 2) Disconnect the connectors from ECM. 3) Measure the resistance between ECM and camshaft position sensor connector. ***Connector & terminal*** ***(B137) No. 24 — (E36) No. 2:*** ***(B137) No. 30 — (E36) No. 3:***	Is the resistance less than 1 Ω?	Go to step **3**.	Repair the harness and connector. NOTE: In this case, repair the following item: • Open circuit in harness between ECM and camshaft position sensor connector • Poor contact of coupling connector
3	**CHECK HARNESS BETWEEN ECM AND CAMSHAFT POSITION SENSOR CONNECTOR.** Measure the resistance between camshaft position sensor connector and engine ground. ***Connector & terminal*** ***(E36) No. 2 — Engine ground:***	Is the resistance 1 MΩ or more?	Go to step **4**.	Repair short circuit to ground in harness between ECM and camshaft position sensor connector.
4	**CHECK HARNESS BETWEEN ECM AND CAMSHAFT POSITION SENSOR CONNECTOR.** Measure the voltage between camshaft position sensor connector and engine ground. ***Connector & terminal*** ***(E36) No. 2 (+) — Engine ground (–):***	Is the voltage 5 V or more?	Repair the short circuit to power in the harness between ECM and camshaft position sensor connector.	Go to step **5**.
5	**CHECK CONDITION OF CAMSHAFT POSITION SENSOR.**	Is the camshaft position sensor installation bolt tightened securely?	Go to step **6**.	Tighten the camshaft position sensor installation bolt securely. <Ref. to FU(H4DOTC)-37, Camshaft Position Sensor.>
6	**CHECK CAMSHAFT POSITION SENSOR.** Check the waveform of the camshaft position sensor. <Ref. to EN(H4DOTC)(diag)-18, Engine Control Module (ECM) I/O Signal.>	Is there any abnormality in waveform?	Replace the camshaft position sensor. <Ref. to FU(H4DOTC)-37, Camshaft Position Sensor.>	Repair the following item. • Poor contact of ECM connector • Poor contact of camshaft position sensor connector • Poor contact of coupling connector

GETTHEMANUALS.org

BN:DTC P0345 CAMSHAFT POSITION SENSOR “A” CIRCUIT (BANK 2)

DTC DETECTING CONDITION:

- Immediately at fault recognition
- GENERAL DESCRIPTION <Ref. to GD(H4DOTC)-125, DTC P0345 CAMSHAFT POSITION SENSOR “A” CIRCUIT (BANK 2), Diagnostic Trouble Code (DTC) Detecting Criteria.>

TROUBLE SYMPTOM:

- Engine stalls.
- Failure of engine to start

CAUTION:

After servicing or replacing faulty parts, perform Clear Memory Mode <Ref. to EN(H4DOTC)(diag)-53, OPERATION, Clear Memory Mode.>, and Inspection Mode <Ref. to EN(H4DOTC)(diag)-41, PROCEDURE, Inspection Mode.>.

WIRING DIAGRAM:

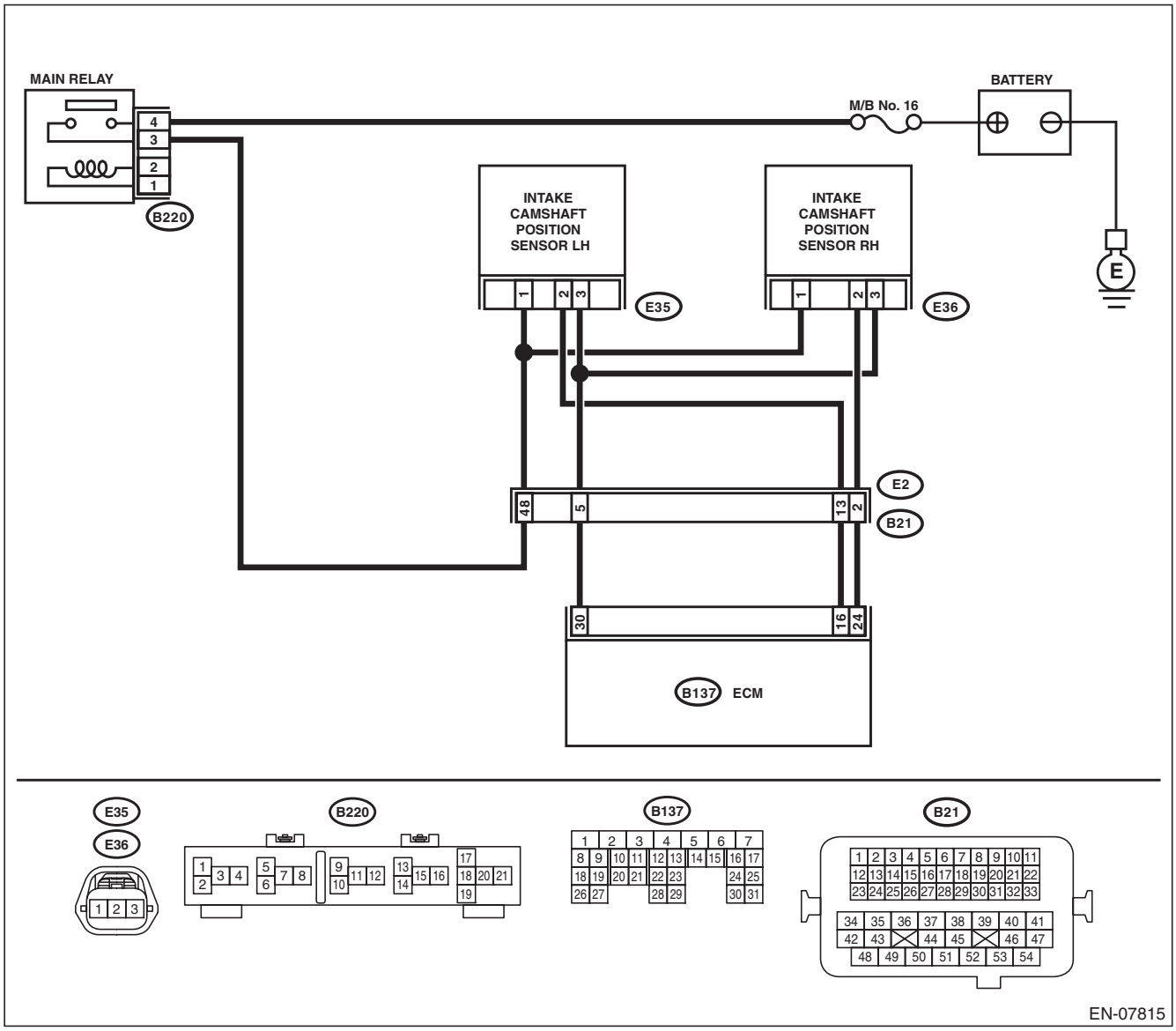

GETtheMANUALS.org

	Step	Check	Yes	No
1	**CHECK POWER SUPPLY OF CAMSHAFT POSITION SENSOR.** 1) Turn the ignition switch to OFF. 2) Disconnect the connector from camshaft position sensor. 3) Turn the ignition switch to ON. 4) Measure the voltage between camshaft position sensor connector and engine ground. ***Connector & terminal*** ***(E35) No. 1 (+) — Engine ground (–):***	Is the voltage 10 V or more?	Go to step **2**.	Repair the harness and connector. NOTE: In this case, repair the following item: • Open circuit or short circuit to ground in harness between main relay connector and camshaft position sensor connector • Poor contact of coupling connector
2	**CHECK HARNESS BETWEEN ECM AND CAMSHAFT POSITION SENSOR CONNECTOR.** 1) Turn the ignition switch to OFF. 2) Disconnect the connectors from ECM. 3) Measure the resistance between ECM and camshaft position sensor connector. ***Connector & terminal*** ***(B137) No. 16 — (E35) No. 2:*** ***(B137) No. 30 — (E35) No. 3:***	Is the resistance less than 1 Ω?	Go to step **3**.	Repair the harness and connector. NOTE: In this case, repair the following item: • Open circuit in harness between ECM and camshaft position sensor connector • Poor contact of coupling connector
3	**CHECK HARNESS BETWEEN ECM AND CAMSHAFT POSITION SENSOR CONNECTOR.** Measure the resistance between camshaft position sensor connector and engine ground. ***Connector & terminal*** ***(E35) No. 2 — Engine ground:***	Is the resistance 1 MΩ or more?	Go to step **4**.	Repair short circuit to ground in harness between ECM and camshaft position sensor connector.
4	**CHECK HARNESS BETWEEN ECM AND CAMSHAFT POSITION SENSOR CONNECTOR.** Measure the voltage between camshaft position sensor connector and engine ground. ***Connector & terminal*** ***(E35) No. 2 (+) — Engine ground (–):***	Is the voltage 5 V or more?	Repair the short circuit to power in the harness between ECM and camshaft position sensor connector.	Go to step **5**.
5	**CHECK CONDITION OF CAMSHAFT POSITION SENSOR.**	Is the camshaft position sensor installation bolt tightened securely?	Go to step **6**.	Tighten the camshaft position sensor installation bolt securely. <Ref. to FU(H4DOTC)-37, Camshaft Position Sensor.>
6	**CHECK CAMSHAFT POSITION SENSOR.** Check the waveform of the camshaft position sensor. <Ref. to EN(H4DOTC)(diag)-18, Engine Control Module (ECM) I/O Signal.>	Is there any abnormality in waveform?	Replace the camshaft position sensor. <Ref. to FU(H4DOTC)-37, Camshaft Position Sensor.>	Repair the following item. • Poor contact of ECM connector • Poor contact of camshaft position sensor connector • Poor contact of coupling connector

GETTHEMANUALS.org

BO:DTC P0351 IGNITION COIL A PRIMARY/SECONDARY CIRCUIT

DTC DETECTING CONDITION:

- Immediately at fault recognition
- GENERAL DESCRIPTION <Ref. to GD(H4DOTC)-126, DTC P0351 IGNITION COIL A PRIMARY/SECONDARY CIRCUIT, Diagnostic Trouble Code (DTC) Detecting Criteria.>

TROUBLE SYMPTOM:

- Improper idling
- Poor driving performance

CAUTION:

After servicing or replacing faulty parts, perform Clear Memory Mode <Ref. to EN(H4DOTC)(diag)-53, OPERATION, Clear Memory Mode.>, and Inspection Mode <Ref. to EN(H4DOTC)(diag)-41, PROCEDURE, Inspection Mode.>.

WIRING DIAGRAM:

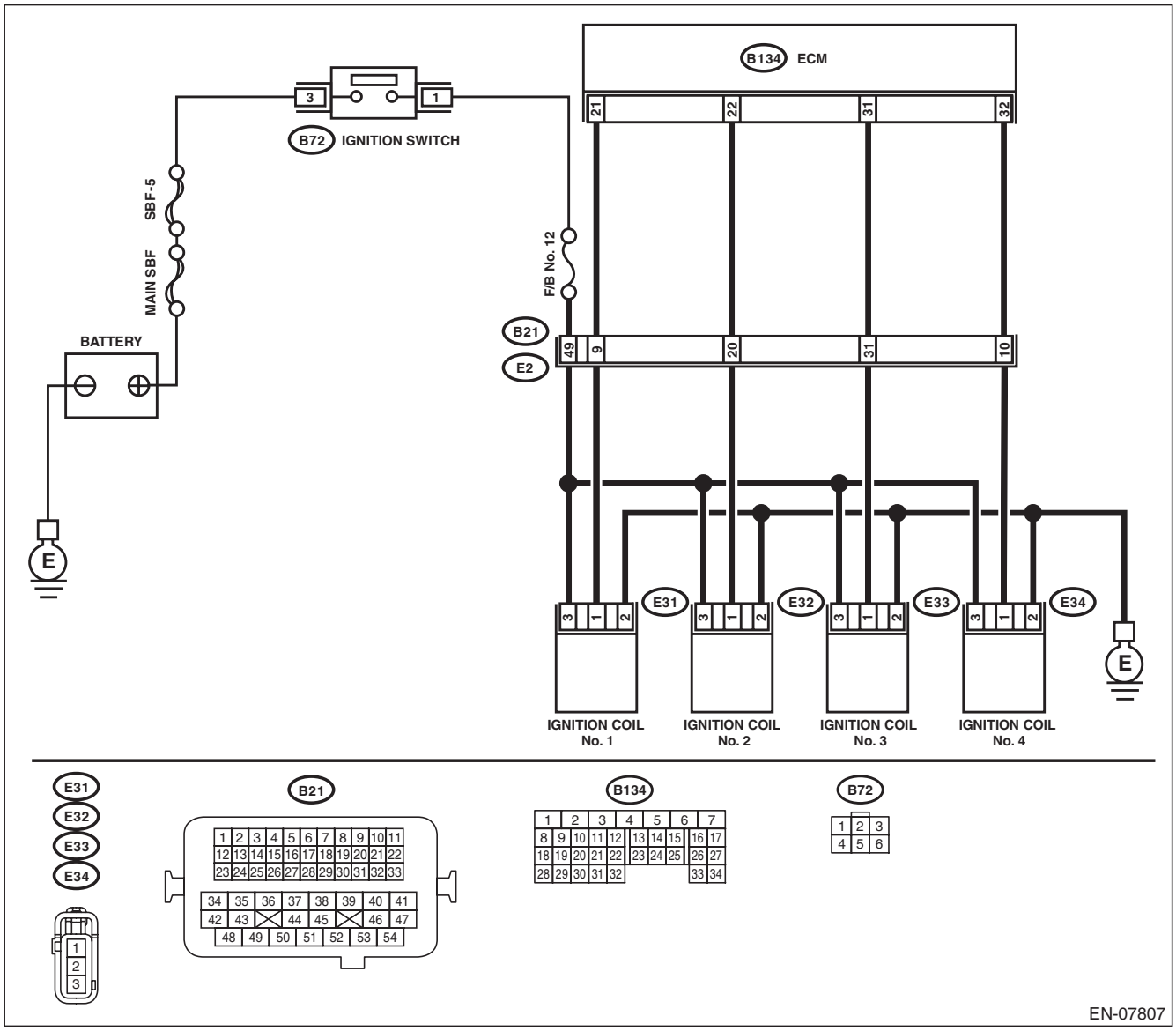

GETHEMANUALS.org

	Step	Check	Yes	No
1	**CHECK IGNITION COIL POWER SUPPLY CIRCUIT.** 1) Turn the ignition switch to OFF. 2) Disconnect the connector from ignition coil. 3) Turn the ignition switch to ON. 4) Measure the voltage between ignition coil connector and engine ground. ***Connector & terminal*** ***DTC P0351; (E31) No. 3 (+) — Engine ground (–):*** ***DTC P0352; (E32) No. 3 (+) — Engine ground (–):*** ***DTC P0353; (E33) No. 3 (+) — Engine ground (–):*** ***DTC P0354; (E34) No. 3 (+) — Engine ground (–):***	Is the voltage 10 V or more?	Go to step **2**.	Repair the harness and connector. NOTE: In this case, repair the following item: • Open circuit or short circuit to ground in harness of power supply circuit • Blown out of fuse (F/B No. 12) • Poor contact of coupling connector
2	**CHECK HARNESS OF IGNITION COIL GROUND CIRCUIT.** 1) Turn the ignition switch to OFF. 2) Measure the resistance of harness between ignition coil connector and engine ground. ***Connector & terminal*** ***DTC P0351; (E31) No. 2 — Engine ground:*** ***DTC P0352; (E32) No. 2 — Engine ground:*** ***DTC P0353; (E33) No. 2 — Engine ground:*** ***DTC P0354; (E34) No. 2 — Engine ground:***	Is the resistance less than 5 Ω?	Go to step **3**.	Repair the open circuit in harness between ignition coil connector and engine grounding terminal.
3	**CHECK HARNESS BETWEEN ECM AND IGNITION COIL CONNECTOR.** 1) Disconnect the connector from ECM. 2) Measure the resistance between ignition coil connector and engine ground. ***Connector & terminal*** ***DTC P0351; (E31) No. 1 — Engine ground:*** ***DTC P0352; (E32) No. 1 — Engine ground:*** ***DTC P0353; (E33) No. 1 — Engine ground:*** ***DTC P0354; (E34) No. 1 — Engine ground:***	Is the resistance 1 MΩ or more?	Go to step **4**.	Repair the ground short circuit of harness between ECM connector and ignition coil connector.
4	**CHECK HARNESS BETWEEN ECM AND IGNITION COIL CONNECTOR.** Measure the resistance of harness between ECM connector and ignition coil connector. ***Connector & terminal*** ***DTC P0351; (B134) No. 21 — (E31) No. 1:*** ***DTC P0352; (B134) No. 22 — (E32) No. 1:*** ***DTC P0353; (B134) No. 31 — (E33) No. 1:*** ***DTC P0354; (B134) No. 32 — (E34) No. 1:***	Is the resistance less than 1 Ω?	Go to step **5**.	Repair the harness and connector. NOTE: In this case, repair the following item: • Open circuit of harness between ECM connector and the ignition coil connector • Poor contact of coupling connector
5	**CHECK FOR POOR CONTACT.** Check for poor contact of ECM connector.	Is there poor contact of ECM connector?	Repair the poor contact of ECM connector.	Go to step **6**.
6	**CHECK SPARK PLUG CONDITION.** 1) Remove the spark plug of the corresponding cylinder. <Ref. to IG(H4DOTC)-4, REMOVAL, Spark Plug.> 2) Check the spark plug condition. <Ref. to IG(H4DOTC)-4, INSPECTION, Spark Plug.>	Is the spark plug condition normal?	Replace the ignition coil. <Ref. to IG(H4DOTC)-6, Ignition Coil.>	Replace the spark plug. <Ref. to IG(H4DOTC)-4, Spark Plug.>

GETTHEMANUALS.org

BP:DTC P0352 IGNITION COIL B PRIMARY/SECONDARY CIRCUIT

NOTE:
For the diagnostic procedure, refer to DTC P0351. <Ref. to EN(H4DOTC)(diag)-183, DTC P0351 IGNITION COIL A PRIMARY/SECONDARY CIRCUIT, Diagnostic Procedure with Diagnostic Trouble Code (DTC).>

BQ:DTC P0353 IGNITION COIL C PRIMARY/SECONDARY CIRCUIT

NOTE:
For the diagnostic procedure, refer to DTC P0351. <Ref. to EN(H4DOTC)(diag)-183, DTC P0351 IGNITION COIL A PRIMARY/SECONDARY CIRCUIT, Diagnostic Procedure with Diagnostic Trouble Code (DTC).>

BR:DTC P0354 IGNITION COIL D PRIMARY/SECONDARY CIRCUIT

NOTE:
For the diagnostic procedure, refer to DTC P0351. <Ref. to EN(H4DOTC)(diag)-183, DTC P0351 IGNITION COIL A PRIMARY/SECONDARY CIRCUIT, Diagnostic Procedure with Diagnostic Trouble Code (DTC).>

GETTHEMANUALS.org

BS:DTC P0365 CAMSHAFT POSITION SENSOR “B” CIRCUIT (BANK 1)

DTC DETECTING CONDITION:

- Immediately at fault recognition
- GENERAL DESCRIPTION <Ref. to GD(H4DOTC)-127, DTC P0365 CAMSHAFT POSITION SENSOR “B” CIRCUIT (BANK 1), Diagnostic Trouble Code (DTC) Detecting Criteria.>

TROUBLE SYMPTOM:

- Engine stalls.
- Failure of engine to start

CAUTION:

After servicing or replacing faulty parts, perform Clear Memory Mode <Ref. to EN(H4DOTC)(diag)-53, OPERATION, Clear Memory Mode.>, and Inspection Mode <Ref. to EN(H4DOTC)(diag)-41, PROCEDURE, Inspection Mode.>.

WIRING DIAGRAM:

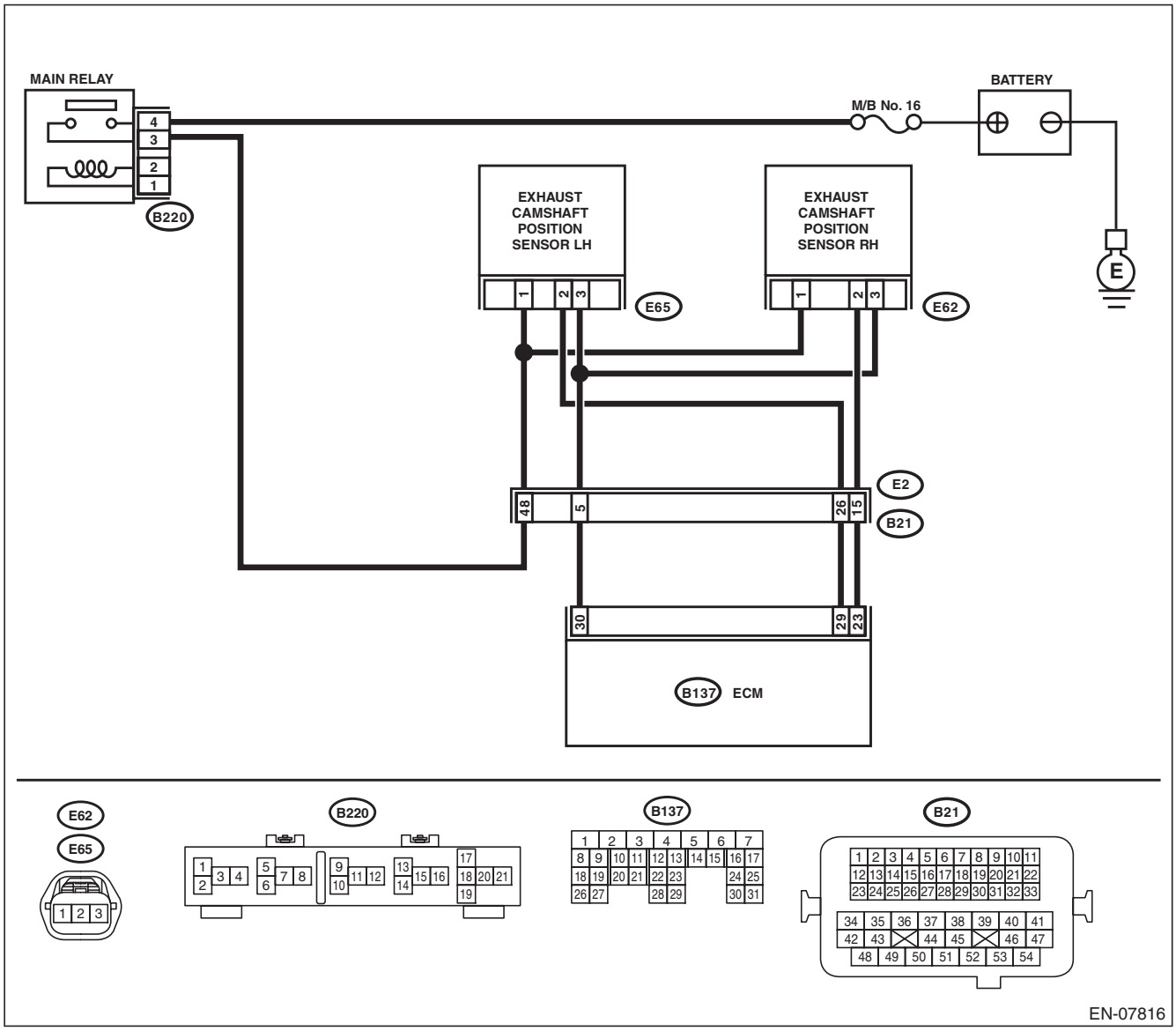

GETTHEMANUALS.org

	Step	Check	Yes	No
1	**CHECK POWER SUPPLY OF CAMSHAFT POSITION SENSOR.** 1) Turn the ignition switch to OFF. 2) Disconnect the connector from camshaft position sensor. 3) Turn the ignition switch to ON. 4) Measure the voltage between camshaft position sensor connector and engine ground. ***Connector & terminal*** ***(E62) No. 1 (+) — Engine ground (–):***	Is the voltage 10 V or more?	Go to step **2**.	Repair the harness and connector. NOTE: In this case, repair the following item: • Open circuit or short circuit to ground in harness between main relay connector and camshaft position sensor connector • Poor contact of coupling connector
2	**CHECK HARNESS BETWEEN ECM AND CAMSHAFT POSITION SENSOR CONNECTOR.** 1) Turn the ignition switch to OFF. 2) Disconnect the connectors from ECM. 3) Measure the resistance between ECM and camshaft position sensor connector. ***Connector & terminal*** ***(B137) No. 23 — (E62) No. 2:*** ***(B137) No. 30 — (E62) No. 3:***	Is the resistance less than 1 Ω?	Go to step **3**.	Repair the harness and connector. NOTE: In this case, repair the following item: • Open circuit in harness between ECM and camshaft position sensor connector • Poor contact of coupling connector
3	**CHECK HARNESS BETWEEN ECM AND CAMSHAFT POSITION SENSOR CONNECTOR.** Measure the resistance between camshaft position sensor connector and engine ground. ***Connector & terminal*** ***(E62) No. 2 — Engine ground:***	Is the resistance 1 MΩ or more?	Go to step **4**.	Repair short circuit to ground in harness between ECM and camshaft position sensor connector.
4	**CHECK HARNESS BETWEEN ECM AND CAMSHAFT POSITION SENSOR CONNECTOR.** Measure the voltage between camshaft position sensor connector and engine ground. ***Connector & terminal*** ***(E62) No. 2 (+) — Engine ground (–):***	Is the voltage 5 V or more?	Repair the short circuit to power in the harness between ECM and camshaft position sensor connector.	Go to step **5**.
5	**CHECK CONDITION OF CAMSHAFT POSITION SENSOR.**	Is the camshaft position sensor installation bolt tightened securely?	Go to step **6**.	Tighten the camshaft position sensor installation bolt securely. <Ref. to FU(H4DOTC)-37, Camshaft Position Sensor.>
6	**CHECK CAMSHAFT POSITION SENSOR.** Check the waveform of the camshaft position sensor. <Ref. to EN(H4DOTC)(diag)-18, Engine Control Module (ECM) I/O Signal.>	Is there any abnormality in waveform?	Replace the camshaft position sensor. <Ref. to FU(H4DOTC)-37, Camshaft Position Sensor.>	Repair the following item. • Poor contact of ECM connector • Poor contact of camshaft position sensor connector • Poor contact of coupling connector

GETtheMANUALS.org

BT:DTC P0390 CAMSHAFT POSITION SENSOR “B” CIRCUIT (BANK 2)

DTC DETECTING CONDITION:

- Immediately at fault recognition
- GENERAL DESCRIPTION <Ref. to GD(H4DOTC)-127, DTC P0390 CAMSHAFT POSITION SENSOR “B” CIRCUIT (BANK 2), Diagnostic Trouble Code (DTC) Detecting Criteria.>

TROUBLE SYMPTOM:

- Engine stalls.
- Failure of engine to start

CAUTION:

After servicing or replacing faulty parts, perform Clear Memory Mode <Ref. to EN(H4DOTC)(diag)-53, OPERATION, Clear Memory Mode.>, and Inspection Mode <Ref. to EN(H4DOTC)(diag)-41, PROCEDURE, Inspection Mode.>.

WIRING DIAGRAM:

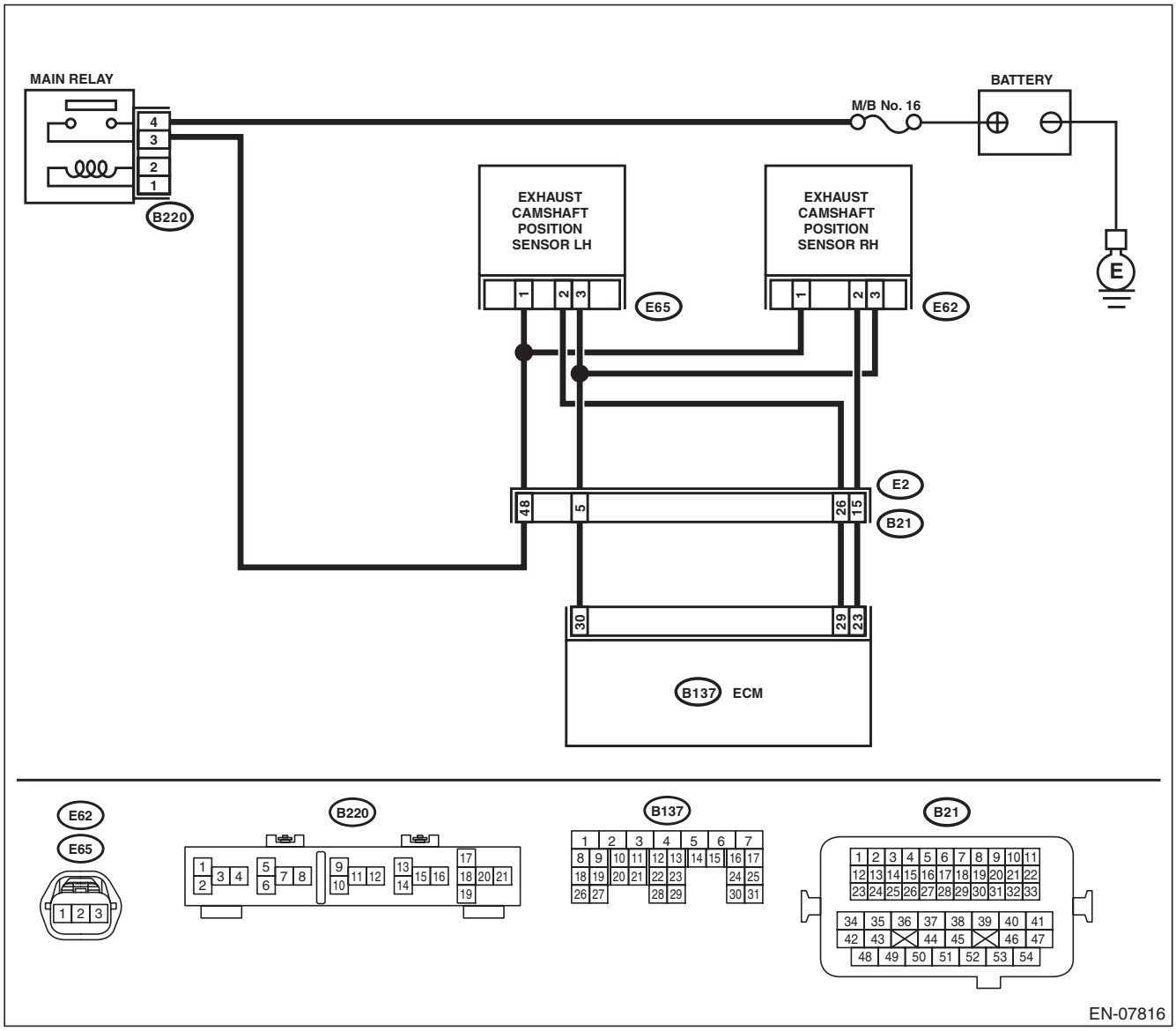

GETTHEMANUALS.org

	Step	Check	Yes	No
1	**CHECK POWER SUPPLY OF CAMSHAFT POSITION SENSOR.** 1) Turn the ignition switch to OFF. 2) Disconnect the connector from camshaft position sensor. 3) Turn the ignition switch to ON. 4) Measure the voltage between camshaft position sensor connector and engine ground. ***Connector & terminal*** ***(E65) No. 1 (+) — Engine ground (–):***	Is the voltage 10 V or more?	Go to step **2**.	Repair the harness and connector. NOTE: In this case, repair the following item: • Open circuit or short circuit to ground in harness between main relay connector and camshaft position sensor connector • Poor contact of coupling connector
2	**CHECK HARNESS BETWEEN ECM AND CAMSHAFT POSITION SENSOR CONNECTOR.** 1) Turn the ignition switch to OFF. 2) Disconnect the connectors from ECM. 3) Measure the resistance between ECM and camshaft position sensor connector. ***Connector & terminal*** ***(B137) No. 29 — (E65) No. 2:*** ***(B137) No. 30 — (E65) No. 3:***	Is the resistance less than 1 Ω?	Go to step **3**.	Repair the harness and connector. NOTE: In this case, repair the following item: • Open circuit in harness between ECM and camshaft position sensor connector • Poor contact of coupling connector
3	**CHECK HARNESS BETWEEN ECM AND CAMSHAFT POSITION SENSOR CONNECTOR.** Measure the resistance between camshaft position sensor connector and engine ground. ***Connector & terminal*** ***(E65) No. 2 — Engine ground:***	Is the resistance 1 MΩ or more?	Go to step **4**.	Repair short circuit to ground in harness between ECM and camshaft position sensor connector.
4	**CHECK HARNESS BETWEEN ECM AND CAMSHAFT POSITION SENSOR CONNECTOR.** Measure the voltage between camshaft position sensor connector and engine ground. ***Connector & terminal*** ***(E65) No. 2 (+) — Engine ground (–):***	Is the voltage 5 V or more?	Repair the short circuit to power in the harness between ECM and camshaft position sensor connector.	Go to step **5**.
5	**CHECK CONDITION OF CAMSHAFT POSITION SENSOR.**	Is the camshaft position sensor installation bolt tightened securely?	Go to step **6**.	Tighten the camshaft position sensor installation bolt securely. <Ref. to FU(H4DOTC)-37, Camshaft Position Sensor.>
6	**CHECK CAMSHAFT POSITION SENSOR.** Check the waveform of the camshaft position sensor. <Ref. to EN(H4DOTC)(diag)-18, Engine Control Module (ECM) I/O Signal.>	Is there any abnormality in waveform?	Replace the camshaft position sensor. <Ref. to FU(H4DOTC)-37, Camshaft Position Sensor.>	Repair the following item. • Poor contact of ECM connector • Poor contact of camshaft position sensor connector • Poor contact of coupling connector

GETTHEMANUALS.org

BU:DTC P0420 CATALYST SYSTEM EFFICIENCY BELOW THRESHOLD (BANK 1)

DTC DETECTING CONDITION:

- Detected when two consecutive driving cycles with fault occur.
- GENERAL DESCRIPTION <Ref. to GD(H4DOTC)-128, DTC P0420 CATALYST SYSTEM EFFICIENCY BELOW THRESHOLD (BANK 1), Diagnostic Trouble Code (DTC) Detecting Criteria.>

TROUBLE SYMPTOM:

- Engine stalls.
- Idle mixture is out of specifications.

CAUTION:

After servicing or replacing faulty parts, perform Clear Memory Mode <Ref. to EN(H4DOTC)(diag)-53, OPERATION, Clear Memory Mode.>, and Inspection Mode <Ref. to EN(H4DOTC)(diag)-41, PROCEDURE, Inspection Mode.>.

WIRING DIAGRAM:

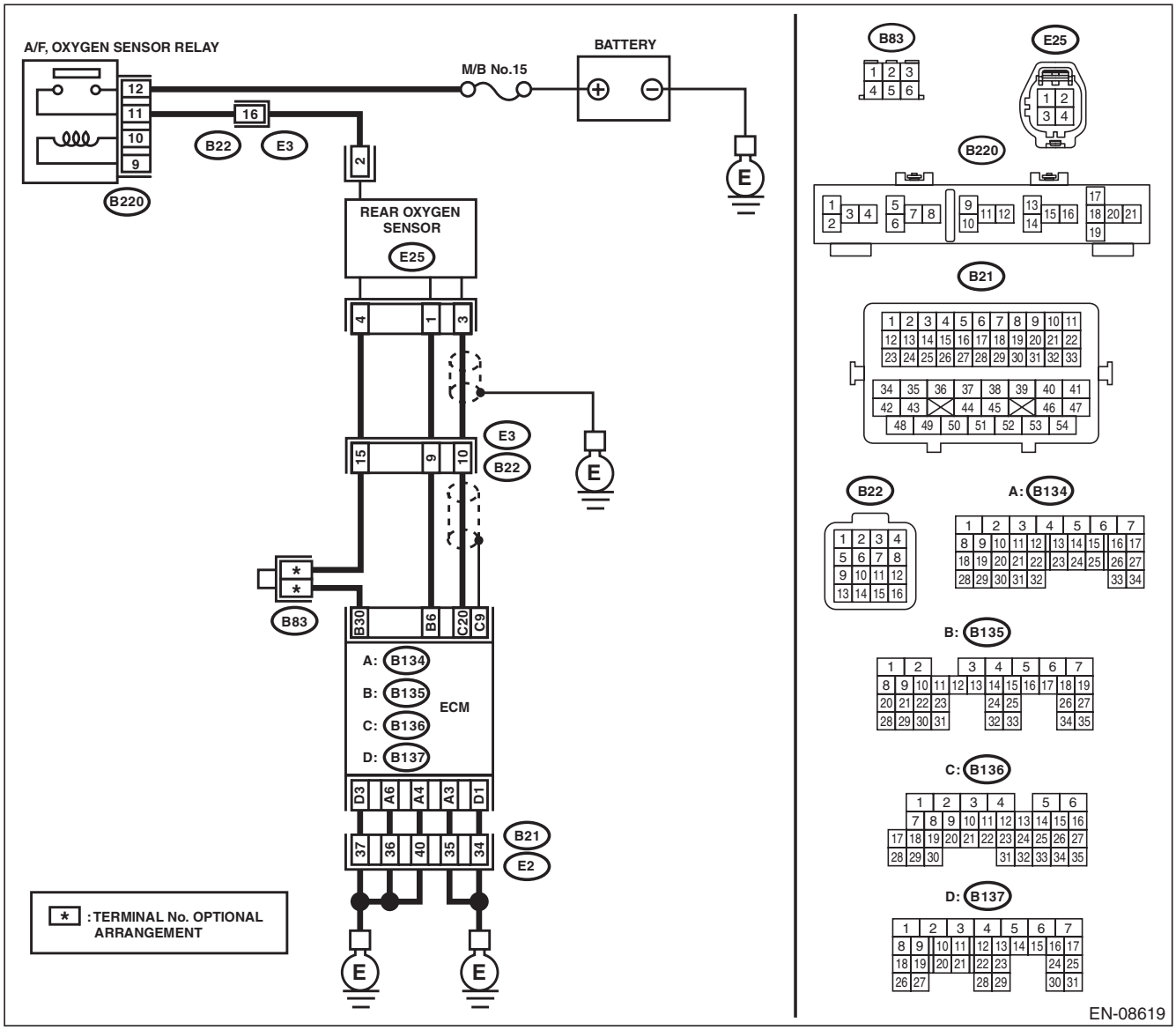

GETHEMANUALS.org

	Step	Check	Yes	No
1	**CHECK EXHAUST SYSTEM.** Check for gas leaks or air suction caused by loose or dislocated nuts and bolts, and open hole at exhaust pipes. NOTE: Check the following positions. • Between cylinder head and front exhaust pipe • Between front exhaust pipe and front catalytic converter • Between front catalytic converter and rear catalytic converter • Loose or improperly attached front oxygen (A/F) sensor or rear oxygen sensor	Is there any fault in exhaust system?	Repair or replace the exhaust system. <Ref. to EX(H4DOTC)-2, General Description.>	Go to step **2**.
2	**CHECK WAVEFORM DATA ON THE SUBARU SELECT MONITOR (WHILE DRIVING).** 1) Drive at a constant speed between 80 — 112 km/h (50 — 70 MPH). 2) After 5 minutes have elapsed in the condition of step 1), use the Subaru Select Monitor while still driving to read the waveform data. • At normal condition 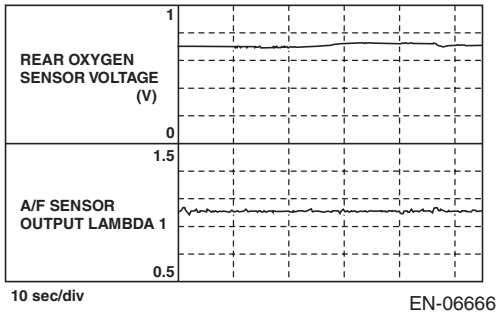 EN-06666 • At abnormal condition (numerous inversion) 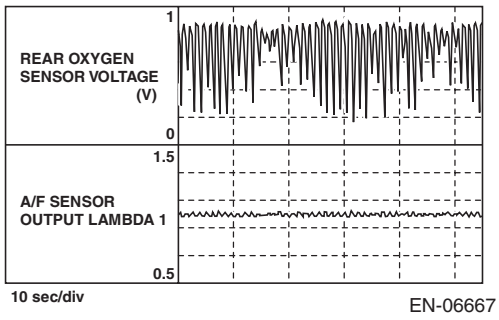 EN-06667	Is a normal waveform displayed?	Even if DTC is detected, the circuit has returned to a normal condition at this time. Reproduce the failure, and then perform the diagnosis again. NOTE: In this case, temporary poor contact of connector, temporary open or short circuit of harness may be the cause.	Go to step **3**.

GETTHEMANUALS.org

Step		Check	Yes	No
3	**CHECK WAVEFORM DATA ON THE SUBARU SELECT MONITOR (WHILE IDLING).** 1) Run the engine at idle. 2) In the condition of step 1), use the Subaru Select Monitor to read the waveform data. • At normal condition 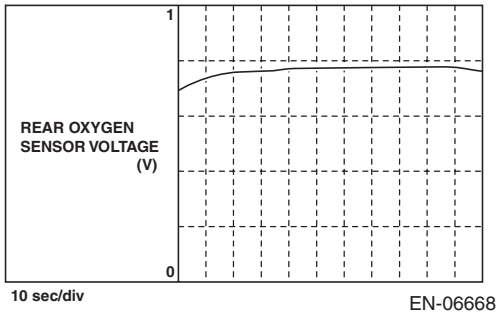 EN-06668 • At abnormal condition 1 (numerous inversion) 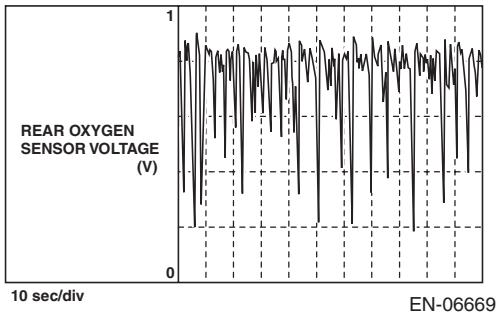 EN-06669 • At abnormal condition 2 (noise input) 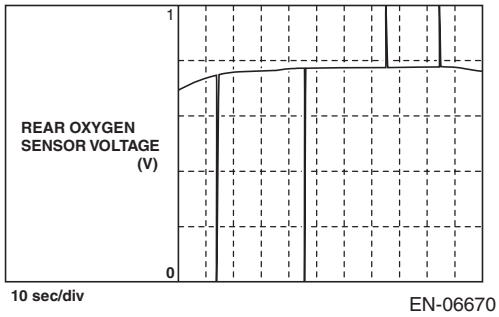 EN-06670	Is a normal waveform displayed?	Go to step **4**.	• The waveform is displayed at abnormal condition 1: Go to step **4**. • The waveform is displayed at abnormal condition 2: Go to step **5**.
4	**CHECK CATALYTIC CONVERTER.**	Is the catalytic converter damaged?	Replace the catalytic converter. <Ref. to EC(H4DOTC)-3, Front Catalytic Converter.>	Go to step **5**.
5	**CHECK REAR OXYGEN SENSOR CONNECTOR AND COUPLING CONNECTOR.**	Has water entered the connector?	Completely remove any water inside.	Go to step **6**.

GETtheMANUALS.org

Step		Check	Yes	No
6	**CHECK HARNESS BETWEEN ECM AND REAR OXYGEN SENSOR CONNECTOR.** 1) Turn the ignition switch to OFF. 2) Disconnect the connector from ECM and rear oxygen sensor. 3) Measure the resistance of harness between ECM and rear oxygen sensor connector. ***Connector & terminal*** ***(B136) No. 20 — (E25) No. 3:*** ***(B135) No. 30 — (E25) No. 4:***	Is the resistance less than 1 Ω?	Go to step **7**.	Repair the harness and connector. NOTE: Repair the following locations. • Open circuit in harness between ECM and rear oxygen sensor connector • Poor contact of coupling connector
7	**CHECK HARNESS BETWEEN ECM AND REAR OXYGEN SENSOR CONNECTOR.** 1) Connect the connector to ECM. 2) Turn the ignition switch to ON. 3) Measure the voltage between rear oxygen sensor connector and chassis ground. ***Connector & terminal*** ***(E25) No. 3 (+) — Chassis ground (–):***	Is the voltage 0.2 — 0.5 V?	Go to step **8**.	Repair the harness and connector. NOTE: Repair the following locations. • Open circuit in harness between ECM and rear oxygen sensor connector • Poor contact of coupling connector • Poor contact of ECM connector
8	**CHECK REAR OXYGEN SENSOR SHIELD.** 1) Turn the ignition switch to OFF. 2) Expose the rear oxygen sensor connector body side harness sensor shield. 3) Measure the resistance between sensor shield and chassis ground.	Is the resistance less than 1 Ω?	Replace the rear oxygen sensor. <Ref. to FU(H4DOTC)-56, Rear Oxygen Sensor.>	Repair the open circuit of rear oxygen sensor harness.

GETTHEMANUALS.org

BV:DTC P0442 EVAPORATIVE EMISSION CONTROL SYSTEM LEAK DETECTED (SMALL LEAK)

DTC DETECTING CONDITION:

- Detected when two consecutive driving cycles with fault occur.
- GENERAL DESCRIPTION <Ref. to GD(H4DOTC)-130, DTC P0442 EVAPORATIVE EMISSION CONTROL SYSTEM LEAK DETECTED (SMALL LEAK), Diagnostic Trouble Code (DTC) Detecting Criteria.>

TROUBLE SYMPTOM:

- Fuel odor
- There is a hole of more than 1.0 mm (0.04 in) dia. in evaporation system or fuel tank.

CAUTION:

After servicing or replacing faulty parts, perform Clear Memory Mode <Ref. to EN(H4DOTC)(diag)-53, OPERATION, Clear Memory Mode.>, and Inspection Mode <Ref. to EN(H4DOTC)(diag)-41, PROCEDURE, Inspection Mode.>.

	Step	Check	Yes	No
1	**CHECK FUEL FILLER CAP.** 1) Turn the ignition switch to OFF. 2) Check the fuel filler cap. NOTE: The DTC is stored in memory if fuel filler cap is or was loose or if the cap chain has caught while tightening.	Is the fuel filler cap tightened securely?	Go to step **2**.	Tighten fuel filler cap securely.
2	**CHECK FUEL FILLER CAP.**	Is the fuel filler cap genuine?	Go to step **3**.	Replace with a genuine fuel filler cap.
3	**CHECK FUEL FILLER PIPE GASKET.**	Is there any damage to the seal between fuel filler cap and fuel filler pipe?	Repair or replace the fuel filler cap and fuel filler pipe. <Ref. to FU(H4DOTC)-75, Fuel Filler Pipe.>	Go to step **4**.
4	**CHECK DRAIN VALVE OPERATION.** 1) Install the delivery (test) mode fuse. **CAUTION:** **Do not use any fuses that are installed on the vehicle.** 2) Turn the ignition switch to ON. 3) Perform operation check for the drain valve using the Subaru Select Monitor. NOTE: The drain valve can be operated using Subaru Select Monitor. For detailed procedures, refer to “SYSTEM OPERATION CHECK MODE”. <Ref. to EN(H4DOTC)(diag)-54, System Operation Check Mode.>	Does the drain valve operate?	Go to step **5**.	Replace the drain valve. <Ref. to EC(H4DOTC)-22, Drain Valve.>
5	**CHECK OPERATION OF PURGE CONTROL SOLENOID VALVE.** Perform operation check for the purge control solenoid valve using the Subaru Select Monitor. NOTE: Purge control solenoid valve operation can be executed using Subaru Select Monitor. For detailed procedures, refer to “SYSTEM OPERATION CHECK MODE”. <Ref. to EN(H4DOTC)(diag)-54, System Operation Check Mode.>	Does the purge control solenoid valve operate?	Go to step **6**.	Replace the purge control solenoid valve. <Ref. to EC(H4DOTC)-9, Purge Control Solenoid Valve.>

GETTHEMANUALS.org

	Step	Check	Yes	No
6	**CHECK OPERATION OF PRESSURE CONTROL SOLENOID VALVE.** Perform operation check for the pressure control solenoid valve using the Subaru Select Monitor. NOTE: The pressure control solenoid valve operation can be executed using the Subaru Select Monitor. For detailed procedures, refer to “SYSTEM OPERATION CHECK MODE”. <Ref. to EN(H4DOTC)(diag)-54, System Operation Check Mode.>	Does the pressure control solenoid valve operate?	Go to step **7**.	Replace the pressure control solenoid valve. <Ref. to EC(H4DOTC)-19, Pressure Control Solenoid Valve Assembly.>
7	**CHECK EVAPORATIVE EMISSION CONTROL SYSTEM LINE.** 1) Turn the ignition switch to OFF. 2) Remove the delivery (test) mode fuse.	Is there any hole of more than 1.0 mm (0.04 in) dia. on evaporation line?	Repair or replace the evaporation line. <Ref. to FU(H4DOTC)-88, Fuel Delivery, Return and Evaporation Lines.>	Go to step **8**.
8	**CHECK CANISTER.**	Is the canister damaged or is there a hole of more than 1.0 mm (0.04 in) dia. in it?	Repair or replace the canister. <Ref. to EC(H4DOTC)-5, Canister.>	Go to step **9**.
9	**CHECK FUEL TANK.** Remove the fuel tank. <Ref. to FU(H4DOTC)-68, Fuel Tank.>	Is the fuel tank damaged or is there any hole of more than 1.0 mm (0.04 in) dia. in it?	Repair or replace the fuel tank. <Ref. to FU(H4DOTC)-68, Fuel Tank.>	Go to step **10**.
10	**CHECK ANY OTHER MECHANICAL TROUBLE IN EVAPORATIVE EMISSION CONTROL SYSTEM.**	Is there any hole of more than 1.0 mm (0.04 in) dia., crack, clogging, or disconnection, bend, misconnection of hoses or pipes in evaporative emission control system?	Repair or replace the hoses or pipes.	Repair the poor contact of ECM connector.

GETTHEMANUALS.org

BW:DTC P0447 EVAPORATIVE EMISSION CONTROL SYSTEM VENT CONTROL CIRCUIT OPEN

DTC DETECTING CONDITION:

- Immediately at fault recognition
- GENERAL DESCRIPTION <Ref. to GD(H4DOTC)-144, DTC P0447 EVAPORATIVE EMISSION CONTROL SYSTEM VENT CONTROL CIRCUIT OPEN, Diagnostic Trouble Code (DTC) Detecting Criteria.>

CAUTION:

After servicing or replacing faulty parts, perform Clear Memory Mode <Ref. to EN(H4DOTC)(diag)-53, OPERATION, Clear Memory Mode.>, and Inspection Mode <Ref. to EN(H4DOTC)(diag)-41, PROCEDURE, Inspection Mode.>.

WIRING DIAGRAM:

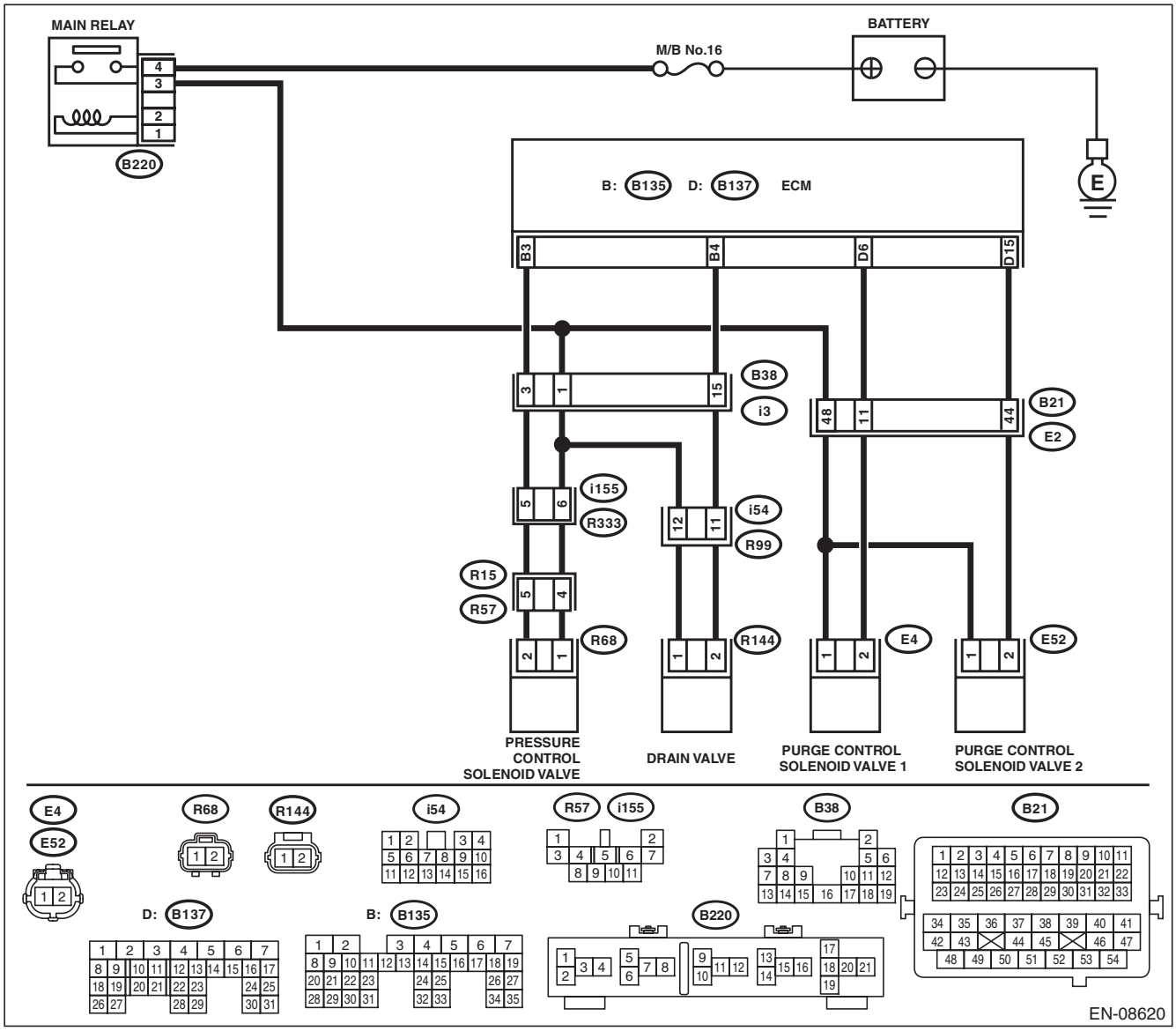

GETTHEMANUALS.org

	Step	Check	Yes	No
1	**CHECK OUTPUT SIGNAL OF ECM.** 1) Turn the ignition switch to ON. 2) Measure the voltage between ECM and chassis ground. ***Connector & terminal*** ***(B135) No. 4 (+) — Chassis ground (–):***	Is the voltage 10 V or more?	Go to step **2**.	Go to step **3**.
2	**CHECK FOR POOR CONTACT.** Check for poor contact of ECM connector.	Is there poor contact of ECM connector?	Repair the poor contact of ECM connector.	Even if DTC is detected, the circuit has returned to a normal condition at this time. Reproduce the failure, and then perform the diagnosis again. NOTE: In this case, temporary open or short circuit of harness or temporary poor contact of connector may be the cause.
3	**CHECK POWER SUPPLY TO DRAIN VALVE.** Measure the voltage between drain valve connector and chassis ground. ***Connector & terminal*** ***(R144) No. 1 (+) — Chassis ground (–):***	Is the voltage 10 V or more?	Go to step **4**.	Repair the power supply circuit.
4	**CHECK HARNESS BETWEEN ECM AND DRAIN VALVE CONNECTOR.** 1) Turn the ignition switch to OFF. 2) Disconnect the connectors from the ECM and drain valve. 3) Measure the resistance between the drain valve connector and chassis ground. ***Connector & terminal*** ***(R144) No. 2 — Chassis ground:***	Is the resistance 1 MΩ or more?	Go to step **5**.	Repair the ground short circuit of harness between ECM and drain valve connector.
5	**CHECK HARNESS BETWEEN ECM AND DRAIN VALVE CONNECTOR.** Measure the resistance of harness between ECM and drain valve connector. ***Connector & terminal*** ***(B135) No. 4 — (R144) No. 2:***	Is the resistance less than 1 Ω?	Go to step **6**.	Repair the harness and connector. NOTE: In this case, repair the following item: • Open circuit of harness between ECM and drain valve connector • Poor contact of coupling connector
6	**CHECK DRAIN VALVE.** Measure the resistance between drain valve terminals. ***Terminals*** ***No. 1 — No. 2:***	Is the resistance 10 — 100 Ω?	Repair the poor contact of drain valve connector.	Replace the drain valve. <Ref. to EC(H4DOTC)-22, Drain Valve.>

GETTHEMANUALS.org

BX:DTC P0448 EVAPORATIVE EMISSION CONTROL SYSTEM VENT CONTROL CIRCUIT SHORTED

DTC DETECTING CONDITION:

- Immediately at fault recognition
- GENERAL DESCRIPTION <Ref. to GD(H4DOTC)-146, DTC P0448 EVAPORATIVE EMISSION CONTROL SYSTEM VENT CONTROL CIRCUIT SHORTED, Diagnostic Trouble Code (DTC) Detecting Criteria.>

CAUTION:

After servicing or replacing faulty parts, perform Clear Memory Mode <Ref. to EN(H4DOTC)(diag)-53, OPERATION, Clear Memory Mode.>, and Inspection Mode <Ref. to EN(H4DOTC)(diag)-41, PROCEDURE, Inspection Mode.>.

WIRING DIAGRAM:

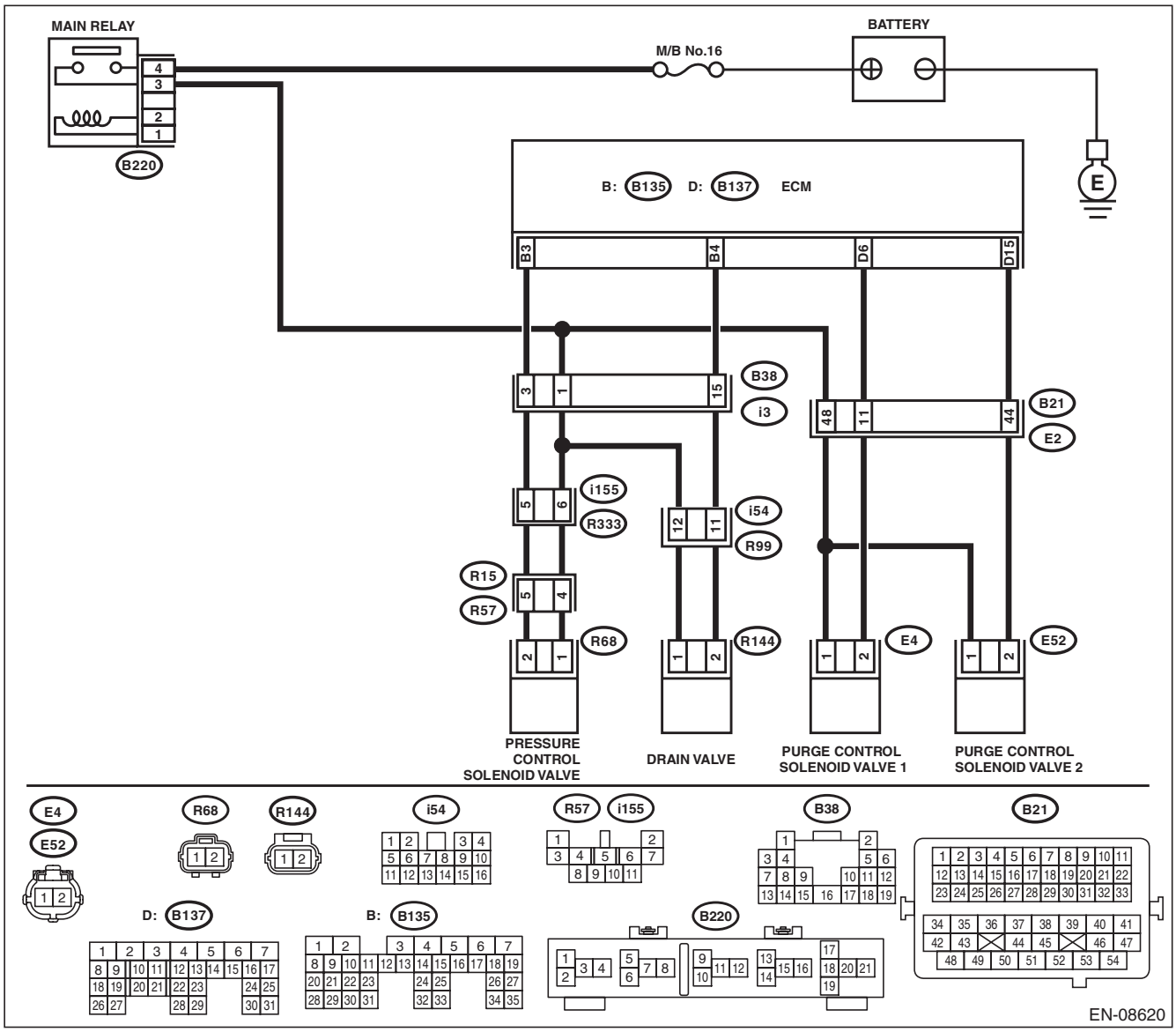

GETTHEMANUALS.org

Step		Check	Yes	No
1	**CHECK HARNESS BETWEEN ECM AND DRAIN VALVE CONNECTOR.** 1) Turn the ignition switch to OFF. 2) Disconnect the connectors from the ECM and drain valve. 3) Turn the ignition switch to ON. 4) Measure the voltage between ECM and chassis ground. ***Connector & terminal*** ***(B135) No. 4 (+) — Chassis ground (–):***	Is the voltage 10 V or more?	Repair the short circuit to power in the harness between ECM and drain valve connector.	Go to step **2**.
2	**CHECK DRAIN VALVE.** 1) Turn the ignition switch to OFF. 2) Measure the resistance between drain valve terminals. ***Terminals*** ***No. 1 — No. 2:***	Is the resistance less than 1 Ω?	Replace the drain valve. <Ref. to EC(H4DOTC)-22, Drain Valve.>	Repair the poor contact of ECM connector.

GETTHEMANUALS.org

BY:DTC P0451 EVAPORATIVE EMISSION CONTROL SYSTEM PRESSURE SENSOR

DTC DETECTING CONDITION:

- Detected when two consecutive driving cycles with fault occur.
- GENERAL DESCRIPTION <Ref. to GD(H4DOTC)-148, DTC P0451 EVAPORATIVE EMISSION CONTROL SYSTEM PRESSURE SENSOR, Diagnostic Trouble Code (DTC) Detecting Criteria.>

CAUTION:

After servicing or replacing faulty parts, perform Clear Memory Mode <Ref. to EN(H4DOTC)(diag)-53, OPERATION, Clear Memory Mode.>, and Inspection Mode <Ref. to EN(H4DOTC)(diag)-41, PROCEDURE, Inspection Mode.>.

	Step	Check	Yes	No
1	**CHECK FUEL FILLER CAP.** 1) Turn the ignition switch to OFF. 2) Open the fuel flap.	Is the fuel filler cap tightened securely?	Go to step **2**.	Tighten fuel filler cap securely.
2	**CHECK PRESSURE/VACUUM LINE.** NOTE: Check the following items. • Disconnection, leakage and clogging of the vacuum hoses and pipes between fuel tank pressure sensor and fuel tank • Disconnection, leakage and clogging of air ventilation hoses and pipes between fuel filler pipe and fuel tank	Is there any fault in pressure/ vacuum line?	Repair or replace the hoses and pipes.	Replace the fuel tank pressure sensor. <Ref. to EC(H4DOTC)-17, Fuel Tank Pressure Sensor.>

GETTHEMANUALS.org

BZ:DTC P0452 EVAPORATIVE EMISSION CONTROL SYSTEM PRESSURE SENSOR LOW INPUT

DTC DETECTING CONDITION:

- Immediately at fault recognition
- GENERAL DESCRIPTION <Ref. to GD(H4DOTC)-152, DTC P0452 EVAPORATIVE EMISSION CONTROL SYSTEM PRESSURE SENSOR LOW INPUT, Diagnostic Trouble Code (DTC) Detecting Criteria.>

CAUTION:

After servicing or replacing faulty parts, perform Clear Memory Mode <Ref. to EN(H4DOTC)(diag)-53, OPERATION, Clear Memory Mode.>, and Inspection Mode <Ref. to EN(H4DOTC)(diag)-41, PROCEDURE, Inspection Mode.>.

WIRING DIAGRAM:

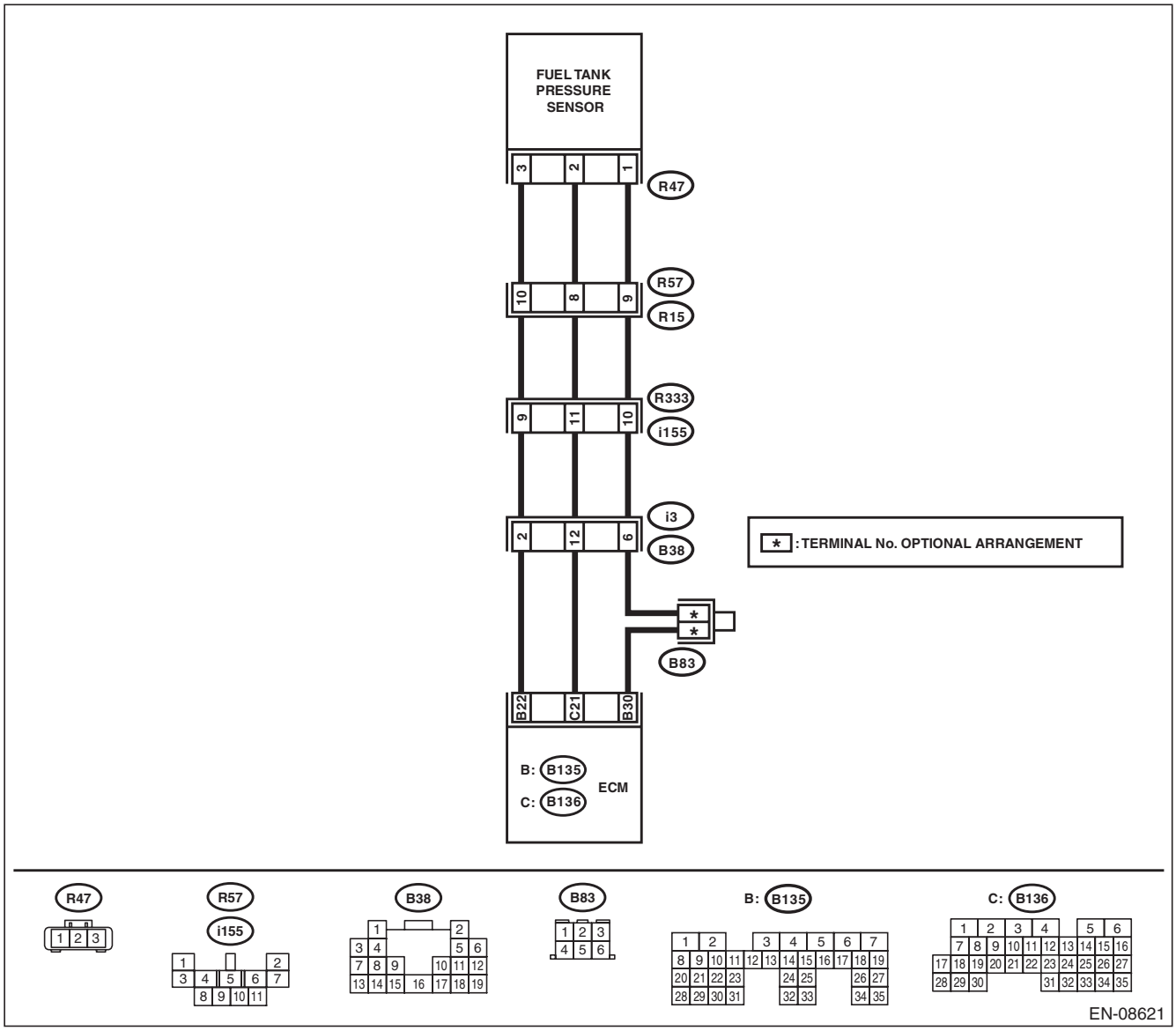

GETHEMANUALS.org

	Step	Check	Yes	No
1	**CHECK CURRENT DATA.** 1) Turn the ignition switch to ON. 2) Using the Subaru Select Monitor or a general scan tool, read the value in «Fuel Tank Pressure». NOTE: • Subaru Select Monitor For detailed operation procedures, refer to “READ CURRENT DATA FOR ENGINE”. <Ref. to EN(H4DOTC)(diag)-34, Subaru Select Monitor.> • General scan tool For detailed operation procedures, refer to the general scan tool operation manual.	Is the value in «Fuel Tank Pressure» less than –7.45 kPa (–55.89 mmHg, –2.2003 inHg)?	Go to step **2**.	Even if DTC is detected, the circuit has returned to a normal condition at this time. Reproduce the failure, and then perform the diagnosis again. NOTE: In this case, temporary poor contact of connector, temporary open or short circuit of harness may be the cause.
2	**CHECK FUEL TANK PRESSURE SENSOR POWER SUPPLY.** 1) Turn the ignition switch to OFF. 2) Disconnect the connector from the fuel tank pressure sensor. 3) Turn the ignition switch to ON. 4) Measure the voltage between the fuel tank pressure sensor connector and chassis ground. ***Connector & terminal*** ***(R47) No. 3 (+) — Chassis ground (–):***	Is the voltage 4.5 V or more?	Go to step **3**.	Repair the harness and connector. NOTE: In this case, repair the following item: • Open circuit of harness between ECM and fuel tank pressure sensor connector • Poor contact of ECM connector • Poor contact of coupling connector
3	**CHECK HARNESS BETWEEN ECM AND FUEL TANK PRESSURE SENSOR CONNECTOR.** 1) Turn the ignition switch to OFF. 2) Disconnect the connector from ECM. 3) Measure the resistance of harness between the ECM and fuel tank pressure sensor connector. ***Connector & terminal*** ***(B136) No. 21 — (R47) No. 2:***	Is the resistance less than 1 Ω?	Go to step **4**.	Repair the harness and connector. NOTE: In this case, repair the following item: • Open circuit of harness between ECM and fuel tank pressure sensor connector • Poor contact of coupling connector
4	**CHECK HARNESS BETWEEN ECM AND FUEL TANK PRESSURE SENSOR CONNECTOR.** Measure the resistance between ECM and chassis ground. ***Connector & terminal*** ***(B136) No. 21 — Chassis ground:***	Is the resistance 1 MΩ or more?	Go to step **5**.	Repair the ground short circuit of harness between ECM and fuel tank pressure sensor connector.
5	**CHECK FOR POOR CONTACT.** Check for poor contact between the ECM and fuel tank pressure sensor connector.	Is there poor contact of the ECM or fuel tank pressure sensor connector?	Repair the poor contact of the ECM or fuel tank pressure sensor connector.	Replace the fuel tank pressure sensor. <Ref. to EC(H4DOTC)-17, Fuel Tank Pressure Sensor.>

GETTHEMANUALS.org

CA:DTC P0453 EVAPORATIVE EMISSION CONTROL SYSTEM PRESSURE SENSOR HIGH INPUT

DTC DETECTING CONDITION:

- Immediately at fault recognition
- GENERAL DESCRIPTION <Ref. to GD(H4DOTC)-154, DTC P0453 EVAPORATIVE EMISSION CONTROL SYSTEM PRESSURE SENSOR HIGH INPUT, Diagnostic Trouble Code (DTC) Detecting Criteria.>

CAUTION:

After servicing or replacing faulty parts, perform Clear Memory Mode <Ref. to EN(H4DOTC)(diag)-53, OPERATION, Clear Memory Mode.>, and Inspection Mode <Ref. to EN(H4DOTC)(diag)-41, PROCEDURE, Inspection Mode.>.

WIRING DIAGRAM:

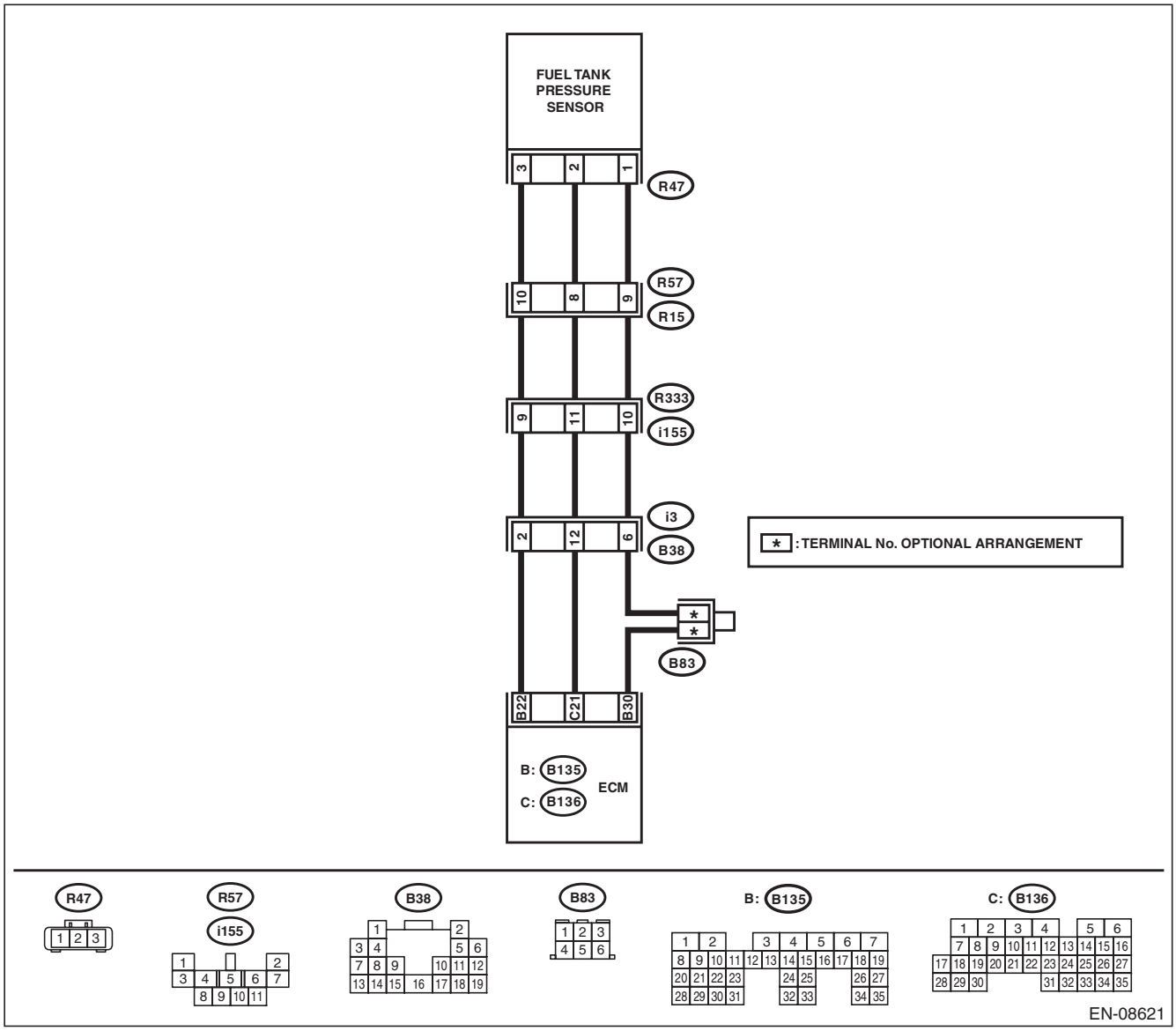

GETTHEMANUALS.org

	Step	Check	Yes	No
1	**CHECK CURRENT DATA.** 1) Turn the ignition switch to ON. 2) Using the Subaru Select Monitor or a general scan tool, read the value in «Fuel Tank Pressure». NOTE: • Subaru Select Monitor For detailed operation procedures, refer to "READ CURRENT DATA FOR ENGINE". <Ref. to EN(H4DOTC)(diag)-34, Subaru Select Monitor.> • General scan tool For detailed operation procedures, refer to the general scan tool operation manual.	Is the value in «Fuel Tank Pressure» 7.98 kPa (59.86 mmHg, 2.357 inHg) or more?	Go to step **2**.	Even if DTC is detected, the circuit has returned to a normal condition at this time. Reproduce the failure, and then perform the diagnosis again. NOTE: In this case, temporary poor contact of connector, temporary open or short circuit of harness may be the cause.
2	**CHECK HARNESS BETWEEN ECM AND FUEL TANK PRESSURE SENSOR CONNECTOR.** 1) Turn the ignition switch to OFF. 2) Disconnect the connector from the fuel tank pressure sensor. 3) Turn the ignition switch to ON. 4) Using the Subaru Select Monitor or a general scan tool, read the value in «Fuel Tank Pressure». NOTE: • Subaru Select Monitor For detailed operation procedures, refer to "READ CURRENT DATA FOR ENGINE". <Ref. to EN(H4DOTC)(diag)-34, Subaru Select Monitor.> • General scan tool For detailed operation procedures, refer to the general scan tool operation manual.	Is the value in «Fuel Tank Pressure» 7.98 kPa (59.86 mmHg, 2.357 inHg) or more?	Repair the short circuit to power in the harness between ECM and fuel tank pressure sensor connector.	Go to step **3**.
3	**CHECK HARNESS BETWEEN ECM AND FUEL TANK PRESSURE SENSOR CONNECTOR.** 1) Turn the ignition switch to OFF. 2) Measure the resistance of harness between fuel tank pressure sensor connector and engine ground. ***Connector & terminal*** ***(R47) No. 1 — Engine ground:***	Is the resistance less than 5 Ω?	Go to step **4**.	Repair the harness and connector. NOTE: In this case, repair the following item: • Open circuit of harness between ECM and fuel tank pressure sensor connector • Poor contact of ECM connector • Poor contact of coupling connector
4	**CHECK FOR POOR CONTACT.** Check for poor contact of the fuel tank pressure sensor connector.	Is there poor contact of fuel tank pressure sensor connector?	Repair the poor contact of fuel tank pressure sensor connector.	Replace the fuel tank pressure sensor. <Ref. to EC(H4DOTC)-17, Fuel Tank Pressure Sensor.>

GETTHEMANUALS.org

CB:DTC P0456 EVAPORATIVE EMISSION CONTROL SYSTEM LEAK DETECTED (VERY SMALL LEAK)

DTC DETECTING CONDITION:

- Detected when two consecutive driving cycles with fault occur.
- GENERAL DESCRIPTION <Ref. to GD(H4DOTC)-155, DTC P0456 EVAPORATIVE EMISSION CONTROL SYSTEM LEAK DETECTED (VERY SMALL LEAK), Diagnostic Trouble Code (DTC) Detecting Criteria.>

TROUBLE SYMPTOM:

- Fuel odor
- There is a hole of more than 0.5 mm (0.020 in) dia. in evaporation system or fuel tank.

CAUTION:

After servicing or replacing faulty parts, perform Clear Memory Mode <Ref. to EN(H4DOTC)(diag)-53, OPERATION, Clear Memory Mode.>, and Inspection Mode <Ref. to EN(H4DOTC)(diag)-41, PROCEDURE, Inspection Mode.>.

	Step	Check	Yes	No
1	**CHECK FUEL FILLER CAP.** 1) Turn the ignition switch to OFF. 2) Check the fuel filler cap. NOTE: The DTC is stored in memory if fuel filler cap is or was loose or if the cap chain has caught while tightening.	Is the fuel filler cap tightened securely?	Go to step **2**.	Tighten fuel filler cap securely.
2	**CHECK FUEL FILLER CAP.**	Is the fuel filler cap genuine?	Go to step **3**.	Replace with a genuine fuel filler cap.
3	**CHECK FUEL FILLER PIPE GASKET.**	Is there any damage to the seal between fuel filler cap and fuel filler pipe?	Repair or replace the fuel filler cap and fuel filler pipe. <Ref. to FU(H4DOTC)-75, Fuel Filler Pipe.>	Go to step **4**.
4	**CHECK DRAIN VALVE OPERATION.** 1) Install the delivery (test) mode fuse. **CAUTION:** **Do not use any fuses that are installed on the vehicle.** 2) Turn the ignition switch to ON. 3) Perform operation check for the drain valve using the Subaru Select Monitor. NOTE: Drain valve can be operated using the Subaru Select Monitor. For detailed procedures, refer to “SYSTEM OPERATION CHECK MODE”. <Ref. to EN(H4DOTC)(diag)-54, System Operation Check Mode.>	Does the drain valve operate?	Go to step **5**.	Replace the drain valve. <Ref. to EC(H4DOTC)-22, Drain Valve.>
5	**CHECK OPERATION OF PURGE CONTROL SOLENOID VALVE.** Perform operation check for the purge control solenoid valve using the Subaru Select Monitor. NOTE: Purge control solenoid valve operation can be executed using Subaru Select Monitor. For detailed procedures, refer to “SYSTEM OPERATION CHECK MODE”. <Ref. to EN(H4DOTC)(diag)-54, System Operation Check Mode.>	Does the purge control solenoid valve operate?	Go to step **6**.	Replace the purge control solenoid valve. <Ref. to EC(H4DOTC)-9, Purge Control Solenoid Valve.>

GETTHEMANUALS.org

Step		Check	Yes	No
6	**CHECK OPERATION OF PRESSURE CONTROL SOLENOID VALVE.** Perform operation check for the pressure control solenoid valve using the Subaru Select Monitor. NOTE: The pressure control solenoid valve operation can be executed using the Subaru Select Monitor. For detailed procedures, refer to “SYSTEM OPERATION CHECK MODE”. <Ref. to EN(H4DOTC)(diag)-54, System Operation Check Mode.>	Does the pressure control solenoid valve operate?	Go to step **7**.	Replace the pressure control solenoid valve. <Ref. to EC(H4DOTC)-19, Pressure Control Solenoid Valve Assembly.>
7	**CHECK EVAPORATIVE EMISSION CONTROL SYSTEM LINE.** 1) Turn the ignition switch to OFF. 2) Remove the delivery (test) mode fuse.	Is there any hole of more than 0.5 mm (0.020 in) dia. on evaporation line?	Repair or replace the evaporation line. <Ref. to FU(H4DOTC)-88, Fuel Delivery, Return and Evaporation Lines.>	Go to step **8**.
8	**CHECK CANISTER.**	Is the canister damaged or is there a hole of more than 0.5 mm (0.020 in) dia. in it?	Repair or replace the canister. <Ref. to EC(H4DOTC)-5, Canister.>	Go to step **9**.
9	**CHECK FUEL TANK.** Remove the fuel tank. <Ref. to FU(H4DOTC)-68, Fuel Tank.>	Is the fuel tank damaged or is there any hole of more than 0.5 mm (0.020 in) dia. in it?	Repair or replace the fuel tank. <Ref. to FU(H4DOTC)-68, Fuel Tank.>	Go to step **10**.
10	**CHECK ANY OTHER MECHANICAL TROUBLE IN EVAPORATIVE EMISSION CONTROL SYSTEM.**	Is there any hole of more than 0.5 mm (0.020 in) dia., crack, clogging, or disconnection, bend, misconnection of hoses or pipes in evaporative emission control system?	Repair or replace the hoses or pipes.	Repair the poor contact of ECM connector.

GETTHEMANUALS.org

CC:DTC P0457 EVAPORATIVE EMISSION CONTROL SYSTEM LEAK DETECTED (FUEL CAP LOOSE/OFF)

DTC DETECTING CONDITION:

- Detected when two consecutive driving cycles with fault occur.
- GENERAL DESCRIPTION <Ref. to GD(H4DOTC)-155, DTC P0457 EVAPORATIVE EMISSION CONTROL SYSTEM LEAK DETECTED (FUEL CAP LOOSE/OFF), Diagnostic Trouble Code (DTC) Detecting Criteria.>

TROUBLE SYMPTOM:

- Fuel odor
- Fuel filler cap loose or lost

CAUTION:

After servicing or replacing faulty parts, perform Clear Memory Mode <Ref. to EN(H4DOTC)(diag)-53, OPERATION, Clear Memory Mode.>, and Inspection Mode <Ref. to EN(H4DOTC)(diag)-41, PROCEDURE, Inspection Mode.>.

	Step	Check	Yes	No
1	**CHECK FUEL FILLER CAP.** 1) Turn the ignition switch to OFF. 2) Check the fuel filler cap. NOTE: The DTC is stored in memory if fuel filler cap is or was loose or if the cap chain has caught while tightening.	Is the fuel filler cap tightened securely?	Go to step **2**.	Tighten fuel filler cap securely.
2	**CHECK FUEL FILLER CAP.**	Is the fuel filler cap genuine?	Go to step **3**.	Replace with a genuine fuel filler cap.
3	**CHECK FUEL FILLER PIPE GASKET.**	Is there any damage to the seal between fuel filler cap and fuel filler pipe?	Repair or replace the fuel filler cap and fuel filler pipe. <Ref. to FU(H4DOTC)-75, Fuel Filler Pipe.>	Go to step **4**.
4	**CHECK DRAIN VALVE OPERATION.** 1) Install the delivery (test) mode fuse. **CAUTION:** **Do not use any fuses that are installed on the vehicle.** 2) Turn the ignition switch to ON. 3) Perform operation check for the drain valve using the Subaru Select Monitor. NOTE: Drain valve can be operated using the Subaru Select Monitor. For detailed procedures, refer to “SYSTEM OPERATION CHECK MODE”. <Ref. to EN(H4DOTC)(diag)-54, System Operation Check Mode.>	Does the drain valve operate?	Go to step **5**.	Replace the drain valve. <Ref. to EC(H4DOTC)-22, Drain Valve.>
5	**CHECK OPERATION OF PURGE CONTROL SOLENOID VALVE.** Perform operation check for the purge control solenoid valve using the Subaru Select Monitor. NOTE: Purge control solenoid valve operation can be executed using Subaru Select Monitor. For detailed procedures, refer to “SYSTEM OPERATION CHECK MODE”. <Ref. to EN(H4DOTC)(diag)-54, System Operation Check Mode.>	Does the purge control solenoid valve operate?	Go to step **6**.	Replace the purge control solenoid valve. <Ref. to EC(H4DOTC)-9, Purge Control Solenoid Valve.>

GETTHEMANUALS.org

Step		Check	Yes	No
6	**CHECK OPERATION OF PRESSURE CONTROL SOLENOID VALVE.** Perform operation check for the pressure control solenoid valve using the Subaru Select Monitor. NOTE: The pressure control solenoid valve operation can be executed using the Subaru Select Monitor. For detailed procedures, refer to “SYSTEM OPERATION CHECK MODE”. <Ref. to EN(H4DOTC)(diag)-54, System Operation Check Mode.>	Does the pressure control solenoid valve operate?	Go to step **7**.	Replace the pressure control solenoid valve. <Ref. to EC(H4DOTC)-19, Pressure Control Solenoid Valve Assembly.>
7	**CHECK EVAPORATIVE EMISSION CONTROL SYSTEM LINE.** 1) Turn the ignition switch to OFF. 2) Remove the delivery (test) mode fuse.	Is there any disconnection, damage or clogging on the evaporation line?	Repair or replace the evaporation line. <Ref. to FU(H4DOTC)-88, Fuel Delivery, Return and Evaporation Lines.>	Go to step **8**.
8	**CHECK CANISTER.**	Is the canister damaged?	Repair or replace the canister. <Ref. to EC(H4DOTC)-5, Canister.>	Go to step **9**.
9	**CHECK FUEL TANK.** Remove the fuel tank. <Ref. to FU(H4DOTC)-68, Fuel Tank.>	Is the fuel tank damaged?	Repair or replace the fuel tank. <Ref. to FU(H4DOTC)-68, Fuel Tank.>	Go to step **10**.
10	**CHECK ANY OTHER MECHANICAL TROUBLE IN EVAPORATIVE EMISSION CONTROL SYSTEM.**	Are there holes, cracks, clogging, or disconnection, misconnection of hoses or pipes in evaporative emission control system?	Repair or replace the hoses or pipes.	Repair the poor contact of ECM connector.

GETTHEMANUALS.org

CD:DTC P0458 EVAPORATIVE EMISSION SYSTEM PURGE CONTROL VALVE CIRCUIT LOW

DTC DETECTING CONDITION:

- Detected when two consecutive driving cycles with fault occur.
- GENERAL DESCRIPTION <Ref. to GD(H4DOTC)-156, DTC P0458 EVAPORATIVE EMISSION SYSTEM PURGE CONTROL VALVE CIRCUIT LOW, Diagnostic Trouble Code (DTC) Detecting Criteria.>

TROUBLE SYMPTOM:

Improper idling

CAUTION:

After servicing or replacing faulty parts, perform Clear Memory Mode <Ref. to EN(H4DOTC)(diag)-53, OPERATION, Clear Memory Mode.>, and Inspection Mode <Ref. to EN(H4DOTC)(diag)-41, PROCEDURE, Inspection Mode.>.

WIRING DIAGRAM:

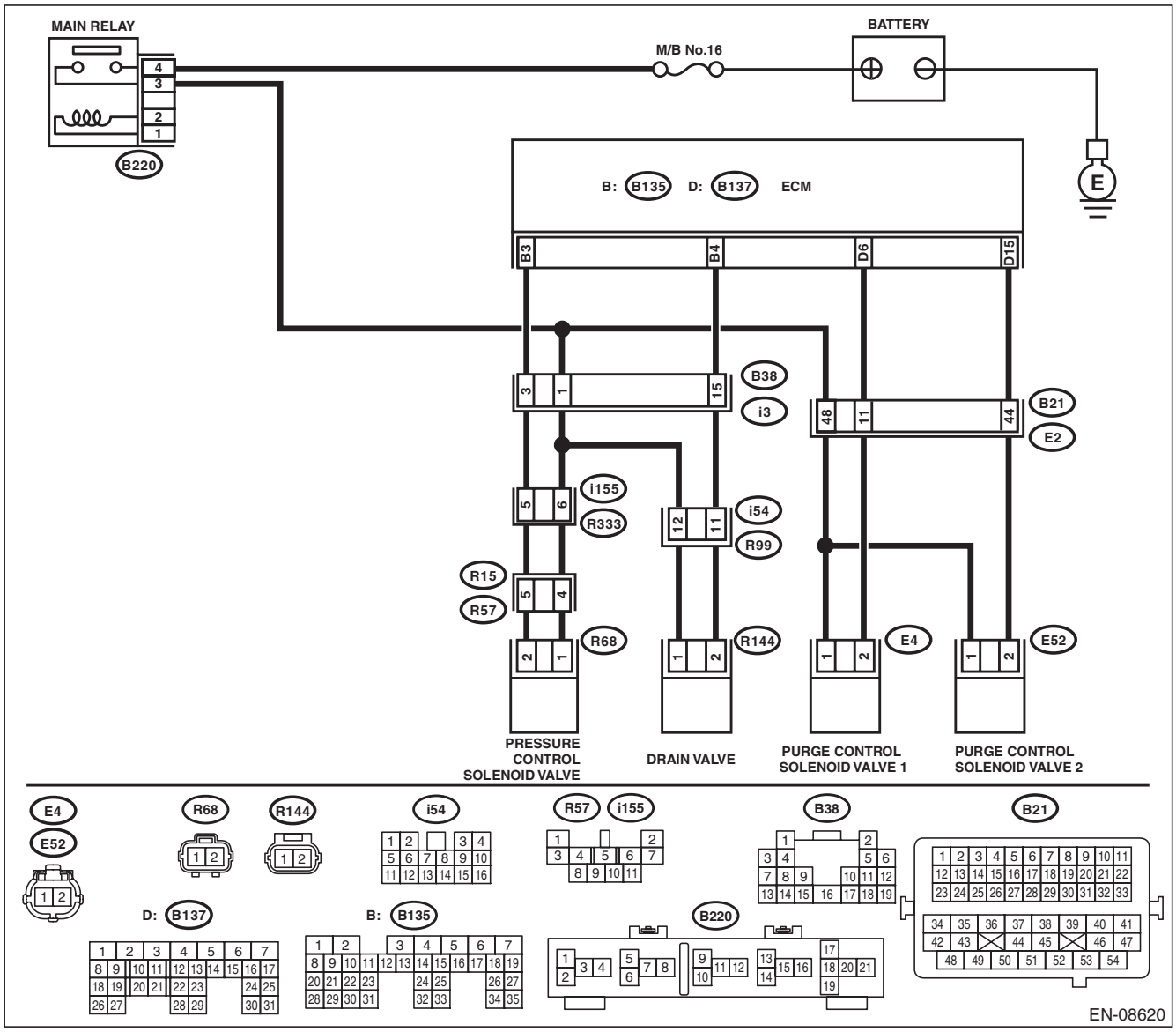

GETTHEMANUALS.org

	Step	Check	Yes	No
1	**CHECK OUTPUT SIGNAL OF ECM.** 1) Turn the ignition switch to ON. 2) Measure the voltage between ECM and chassis ground. ***Connector & terminal*** ***(B137) No. 6 (+) — Chassis ground (–):***	Is the voltage 10 V or more?	Go to step **2**.	Go to step **3**.
2	**CHECK FOR POOR CONTACT.** Check for poor contact of ECM connector.	Is there poor contact of ECM connector?	Repair the poor contact of ECM connector.	Even if DTC is detected, the circuit has returned to a normal condition at this time. Reproduce the failure, and then perform the diagnosis again. NOTE: In this case, temporary open or short circuit of harness or temporary poor contact of connector may be the cause.
3	**CHECK POWER SUPPLY TO PURGE CONTROL SOLENOID VALVE CONNECTOR.** Measure the voltage between purge control solenoid valve connector and engine ground. ***Connector & terminal*** ***(E4) No. 1 (+) — Engine ground (–):***	Is the voltage 10 V or more?	Go to step **4**.	Repair the power supply circuit.
4	**CHECK HARNESS BETWEEN ECM AND PURGE CONTROL SOLENOID VALVE CONNECTOR.** 1) Turn the ignition switch to OFF. 2) Disconnect the connectors from ECM and purge control solenoid valve. 3) Measure the resistance between the purge control solenoid valve connector and engine ground. ***Connector & terminal*** ***(E4) No. 2 — Engine ground:***	Is the resistance 1 MΩ or more?	Go to step **5**.	Repair the ground short circuit of harness between ECM and purge control solenoid valve connector.
5	**CHECK HARNESS BETWEEN ECM AND PURGE CONTROL SOLENOID VALVE CONNECTOR.** Measure the resistance of harness between ECM and purge control solenoid valve connector. ***Connector & terminal*** ***(B137) No. 6 — (E4) No. 2:***	Is the resistance less than 1 Ω?	Go to step **6**.	Repair the harness and connector. NOTE: In this case, repair the following item: • Open circuit in harness between ECM and purge control solenoid valve connector • Poor contact of coupling connector
6	**CHECK PURGE CONTROL SOLENOID VALVE.** 1) Remove the purge control solenoid valve. 2) Measure the resistance between purge control solenoid valve terminals. ***Terminals*** ***No. 1 — No. 2:***	Is the resistance 10 — 100 Ω?	Repair the poor contact of purge control solenoid valve connector.	Replace the purge control solenoid valve. <Ref. to EC(H4DOTC)-9, Purge Control Solenoid Valve.>

GETTHEMANUALS.org

CE:DTC P0459 EVAPORATIVE EMISSION SYSTEM PURGE CONTROL VALVE CIRCUIT HIGH

DTC DETECTING CONDITION:

- Detected when two consecutive driving cycles with fault occur.
- GENERAL DESCRIPTION <Ref. to GD(H4DOTC)-158, DTC P0459 EVAPORATIVE EMISSION SYSTEM PURGE CONTROL VALVE CIRCUIT HIGH, Diagnostic Trouble Code (DTC) Detecting Criteria.>

TROUBLE SYMPTOM:

Improper idling

CAUTION:

After servicing or replacing faulty parts, perform Clear Memory Mode <Ref. to EN(H4DOTC)(diag)-53, OPERATION, Clear Memory Mode.>, and Inspection Mode <Ref. to EN(H4DOTC)(diag)-41, PROCEDURE, Inspection Mode.>.

WIRING DIAGRAM:

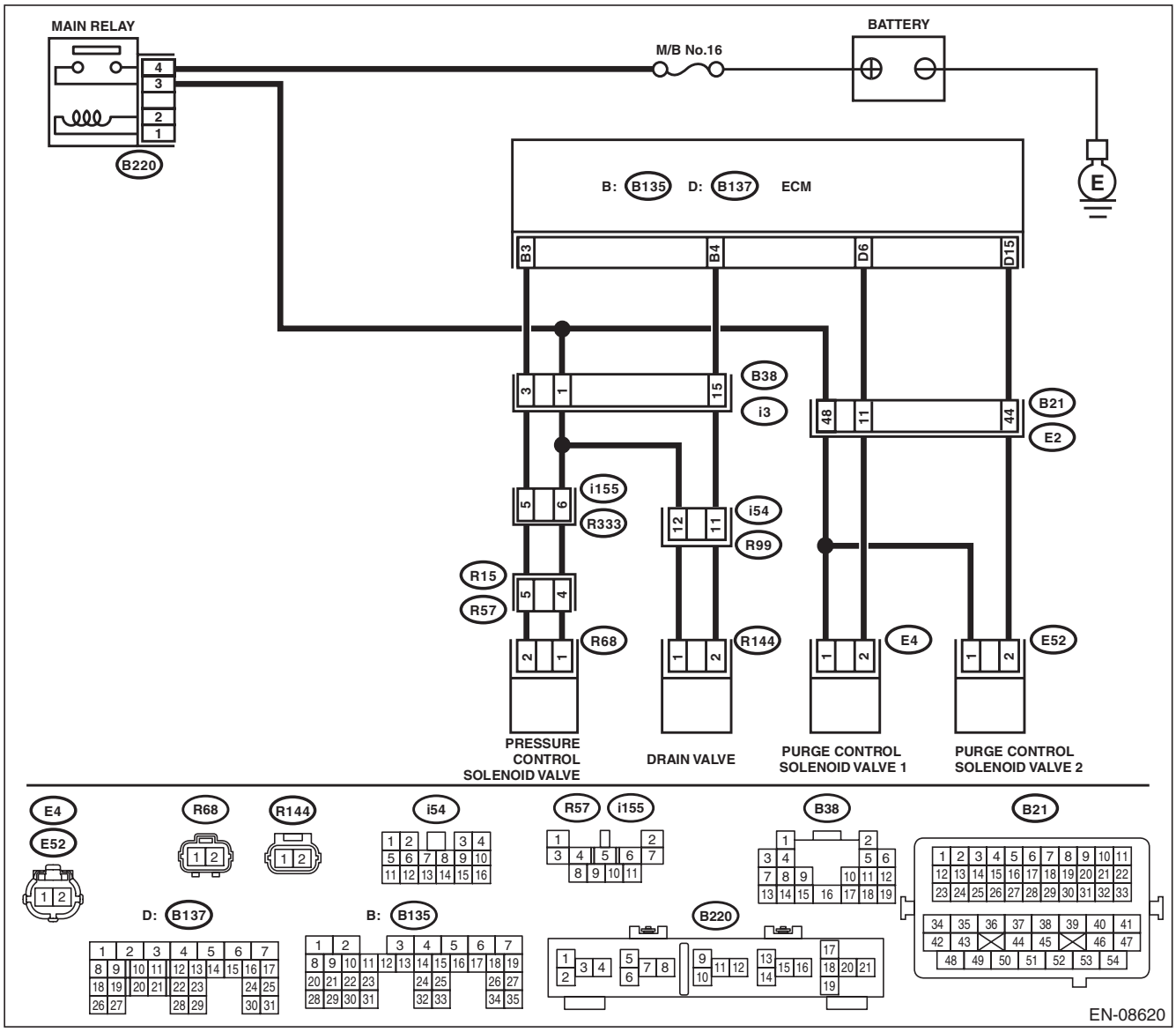

GETtheMANUALS.org

Step		Check	Yes	No
1	**CHECK HARNESS BETWEEN ECM AND PURGE CONTROL SOLENOID VALVE CONNECTOR.** 1) Turn the ignition switch to OFF. 2) Disconnect the connectors from ECM and purge control solenoid valve. 3) Turn the ignition switch to ON. 4) Measure the voltage between ECM and chassis ground. ***Connector & terminal*** ***(B137) No. 6 (+) — Chassis ground (–):***	Is the voltage 10 V or more?	Repair the short circuit to power in the harness between ECM and purge control solenoid valve connector.	Go to step **2**.
2	**CHECK PURGE CONTROL SOLENOID VALVE.** 1) Turn the ignition switch to OFF. 2) Measure the resistance between purge control solenoid valve terminals. ***Terminals*** ***No. 1 — No. 2:***	Is the resistance less than 1 Ω?	Replace the purge control solenoid valve. <Ref. to EC(H4DOTC)-9, Purge Control Solenoid Valve.>	Repair the poor contact of ECM connector.

GETTHEMANUALS.org

CF:DTC P0461 FUEL LEVEL SENSOR “A” CIRCUIT RANGE/PERFORMANCE

DTC DETECTING CONDITION:

- Detected when two consecutive driving cycles with fault occur.
- GENERAL DESCRIPTION <Ref. to GD(H4DOTC)-160, DTC P0461 FUEL LEVEL SENSOR “A” CIRCUIT RANGE/PERFORMANCE, Diagnostic Trouble Code (DTC) Detecting Criteria.>

CAUTION:

After servicing or replacing faulty parts, perform Clear Memory Mode <Ref. to EN(H4DOTC)(diag)-53, OPERATION, Clear Memory Mode.>, and Inspection Mode <Ref. to EN(H4DOTC)(diag)-41, PROCEDURE, Inspection Mode.>.

Step	Check	Yes	No
1 CHECK FOR ANY OTHER DTC ON DISPLAY.	Is any other DTC displayed?	Check the appropriate DTC using the “List of Diagnostic Trouble Code (DTC)”. <Ref. to EN(H4DOTC)(diag)-75, List of Diagnostic Trouble Code (DTC).>	Replace the fuel level sensor and fuel sub level sensor. <Ref. to FU(H4DOTC)-81, Fuel Level Sensor.> <Ref. to FU(H4DOTC)-83, Fuel Sub Level Sensor.>

CG:DTC P0462 FUEL LEVEL SENSOR “A” CIRCUIT LOW

NOTE:
For the diagnostic procedure, refer to DTC P0463. <Ref. to EN(H4DOTC)(diag)-214, DTC P0463 FUEL LEVEL SENSOR “A” CIRCUIT HIGH, Diagnostic Procedure with Diagnostic Trouble Code (DTC).>

GETTHEMANUALS.org

CH:DTC P0463 FUEL LEVEL SENSOR “A” CIRCUIT HIGH

DTC DETECTING CONDITION:

- Detected when two consecutive driving cycles with fault occur.
- GENERAL DESCRIPTION <Ref. to GD(H4DOTC)-164, DTC P0463 FUEL LEVEL SENSOR “A” CIRCUIT HIGH, Diagnostic Trouble Code (DTC) Detecting Criteria.>

CAUTION:

After servicing or replacing faulty parts, perform Clear Memory Mode <Ref. to EN(H4DOTC)(diag)-53, OPERATION, Clear Memory Mode.>, and Inspection Mode <Ref. to EN(H4DOTC)(diag)-41, PROCEDURE, Inspection Mode.>.

Step	Check	Yes	No
1 **CHECK FOR ANY OTHER DTC ON DISPLAY.**	Is DTC P0462 or P0463 displayed on the Subaru Select Monitor?	Check the combination meter. <Ref. to IDI-13, CHECK FUEL LEVEL SENSOR, INSPECTION, Combination Meter System.>	Even if DTC is detected, the circuit has returned to a normal condition at this time. Reproduce the failure, and then perform the diagnosis again. NOTE: In this case, temporary poor contact of connector, temporary open or short circuit of harness may be the cause.

GETTHEMANUALS.org

CI: DTC P0464 FUEL LEVEL SENSOR CIRCUIT INTERMITTENT

DTC DETECTING CONDITION:

- Detected when two consecutive driving cycles with fault occur.
- GENERAL DESCRIPTION <Ref. to GD(H4DOTC)-166, DTC P0464 FUEL LEVEL SENSOR CIRCUIT INTERMITTENT, Diagnostic Trouble Code (DTC) Detecting Criteria.>

CAUTION:

After servicing or replacing faulty parts, perform Clear Memory Mode <Ref. to EN(H4DOTC)(diag)-53, OPERATION, Clear Memory Mode.>, and Inspection Mode <Ref. to EN(H4DOTC)(diag)-41, PROCEDURE, Inspection Mode.>.

Step	Check	Yes	No
1 **CHECK FOR ANY OTHER DTC ON DISPLAY.**	Is DTC P0464 displayed on the display?	Check the combination meter. <Ref. to IDI-13, CHECK FUEL LEVEL SENSOR, INSPECTION, Combination Meter System.>	Even if DTC is detected, the circuit has returned to a normal condition at this time. Reproduce the failure, and then perform the diagnosis again. NOTE: In this case, temporary poor contact of connector, temporary open or short circuit of harness may be the cause.

CJ:DTC P0500 VEHICLE SPEED SENSOR “A”

DTC DETECTING CONDITION:

- Immediately at fault recognition
- GENERAL DESCRIPTION <Ref. to GD(H4DOTC)-169, DTC P0500 VEHICLE SPEED SENSOR “A”, Diagnostic Trouble Code (DTC) Detecting Criteria.>

CAUTION:

After servicing or replacing faulty parts, perform Clear Memory Mode <Ref. to EN(H4DOTC)(diag)-53, OPERATION, Clear Memory Mode.>, and Inspection Mode <Ref. to EN(H4DOTC)(diag)-41, PROCEDURE, Inspection Mode.>.

Step	Check	Yes	No
1 **CHECK DTC OF VDC.** Check DTC of VDC.	Is DTC of VDC displayed?	Perform the diagnosis according to DTC. <Ref. to VDC(diag)-35, List of Diagnostic Trouble Code (DTC).>	Repair the poor contact of ECM connector.

GETTHEMANUALS.org

CK:DTC P0506 IDLE AIR CONTROL SYSTEM RPM LOWER THAN EXPECTED

DTC DETECTING CONDITION:

- Detected when two consecutive driving cycles with fault occur.
- GENERAL DESCRIPTION <Ref. to GD(H4DOTC)-170, DTC P0506 IDLE AIR CONTROL SYSTEM RPM LOWER THAN EXPECTED, Diagnostic Trouble Code (DTC) Detecting Criteria.>

TROUBLE SYMPTOM:

- Hard to start the engine.
- Engine does not start.
- Improper idling
- Engine stalls.

CAUTION:

After servicing or replacing faulty parts, perform Clear Memory Mode <Ref. to EN(H4DOTC)(diag)-53, OPERATION, Clear Memory Mode.>, and Inspection Mode <Ref. to EN(H4DOTC)(diag)-41, PROCEDURE, Inspection Mode.>.

Step		Check	Yes	No
1	**CHECK FOR ANY OTHER DTC ON DISPLAY.**	Is any other DTC displayed?	Check the appropriate DTC using the “List of Diagnostic Trouble Code (DTC)”. <Ref. to EN(H4DOTC)(diag)-75, List of Diagnostic Trouble Code (DTC).>	Go to step **2**.
2	**CHECK AIR CLEANER ELEMENT.** 1) Turn the ignition switch to OFF. 2) Check the air cleaner element.	Is there excessive clogging on air cleaner element?	Replace the air cleaner element. <Ref. to IN(H4DOTC)-7, Air Cleaner Element.>	Go to step **3**.
3	**CHECK ELECTRONIC THROTTLE CONTROL.** 1) Remove the electronic throttle control. <Ref. to FU(H4DOTC)-15, REMOVAL, Throttle Body.> 2) Check the electronic throttle control.	Are foreign matter found inside electronic throttle control?	Remove foreign matter from electronic throttle control.	Perform the diagnosis of DTC P2101. <Ref. to EN(H4DOTC)(diag)-303, DTC P2101 THROTTLE ACTUATOR CONTROL MOTOR CIRCUIT RANGE/PERFORMANCE, Diagnostic Procedure with Diagnostic Trouble Code (DTC).>

GETTHEMANUALS.org

CL:DTC P0507 IDLE AIR CONTROL SYSTEM RPM HIGHER THAN EXPECTED

DTC DETECTING CONDITION:

- Detected when two consecutive driving cycles with fault occur.
- GENERAL DESCRIPTION <Ref. to GD(H4DOTC)-171, DTC P0507 IDLE AIR CONTROL SYSTEM RPM HIGHER THAN EXPECTED, Diagnostic Trouble Code (DTC) Detecting Criteria.>

TROUBLE SYMPTOM:

Engine keeps running at higher speed than specified idle speed.

CAUTION:

After servicing or replacing faulty parts, perform Clear Memory Mode <Ref. to EN(H4DOTC)(diag)-53, OPERATION, Clear Memory Mode.>, and Inspection Mode <Ref. to EN(H4DOTC)(diag)-41, PROCEDURE, Inspection Mode.>.

Step		Check	Yes	No
1	**CHECK FOR ANY OTHER DTC ON DISPLAY.**	Is any other DTC displayed?	Check the appropriate DTC using the “List of Diagnostic Trouble Code (DTC)”. <Ref. to EN(H4DOTC)(diag)-75, List of Diagnostic Trouble Code (DTC).>	Go to step **2**.
2	**CHECK AIR INTAKE SYSTEM.** 1) Start and idle the engine. 2) Check the following items. • Loose installation of intake manifold and throttle body • Cracks of intake manifold gasket and throttle body gasket • Disconnection of vacuum hoses	Is there any fault in air intake system?	Repair air suction and leaks.	Go to step **3**.
3	**CHECK ELECTRONIC THROTTLE CONTROL.** 1) Turn the ignition switch to OFF. 2) Remove the electronic throttle control. <Ref. to FU(H4DOTC)-15, REMOVAL, Throttle Body.> 3) Check the electronic throttle control.	Are foreign matter found inside electronic throttle control?	Remove foreign matter from electronic throttle control.	Perform the diagnosis of DTC P2101. <Ref. to EN(H4DOTC)(diag)-303, DTC P2101 THROTTLE ACTUATOR CONTROL MOTOR CIRCUIT RANGE/PERFORMANCE, Diagnostic Procedure with Diagnostic Trouble Code (DTC).>

GETtheMANUALS.org

CM:DTC P050A COLD START IDLE AIR CONTROL SYSTEM PERFORMANCE

DTC DETECTING CONDITION:

- Detected when two consecutive driving cycles with fault occur.
- GENERAL DESCRIPTION <Ref. to GD(H4DOTC)-172, DTC P050A COLD START IDLE AIR CONTROL SYSTEM PERFORMANCE, Diagnostic Trouble Code (DTC) Detecting Criteria.>

TROUBLE SYMPTOM:

- Engine keeps running at higher speed than specified idle speed.
- Engine keeps running at a lower speed than the specified idle speed.
- Engine stalls.

CAUTION:

After servicing or replacing faulty parts, perform Clear Memory Mode <Ref. to EN(H4DOTC)(diag)-53, OPERATION, Clear Memory Mode.>, and Inspection Mode <Ref. to EN(H4DOTC)(diag)-41, PROCEDURE, Inspection Mode.>.

WIRING DIAGRAM:

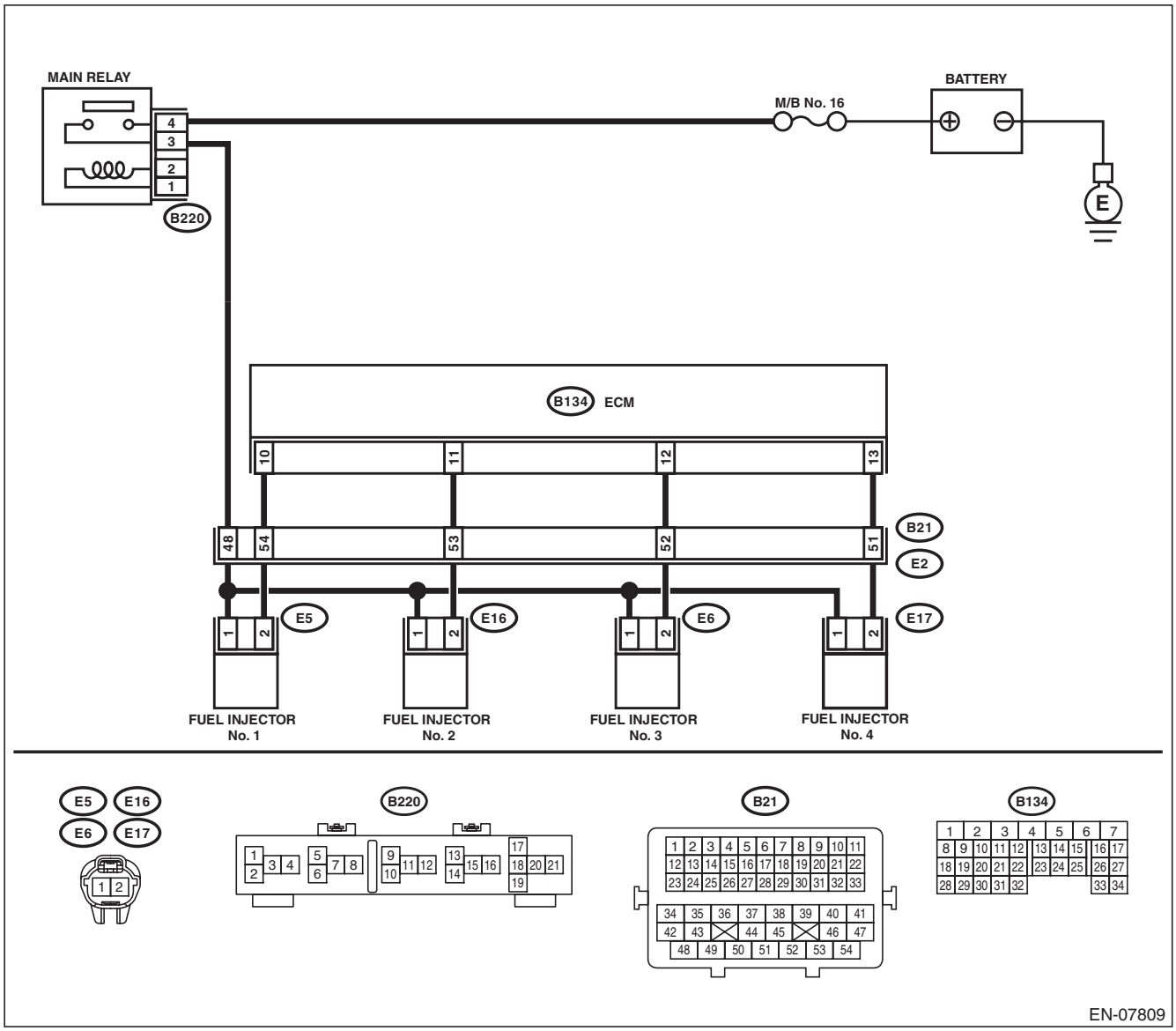

GETTHEMANUALS.org

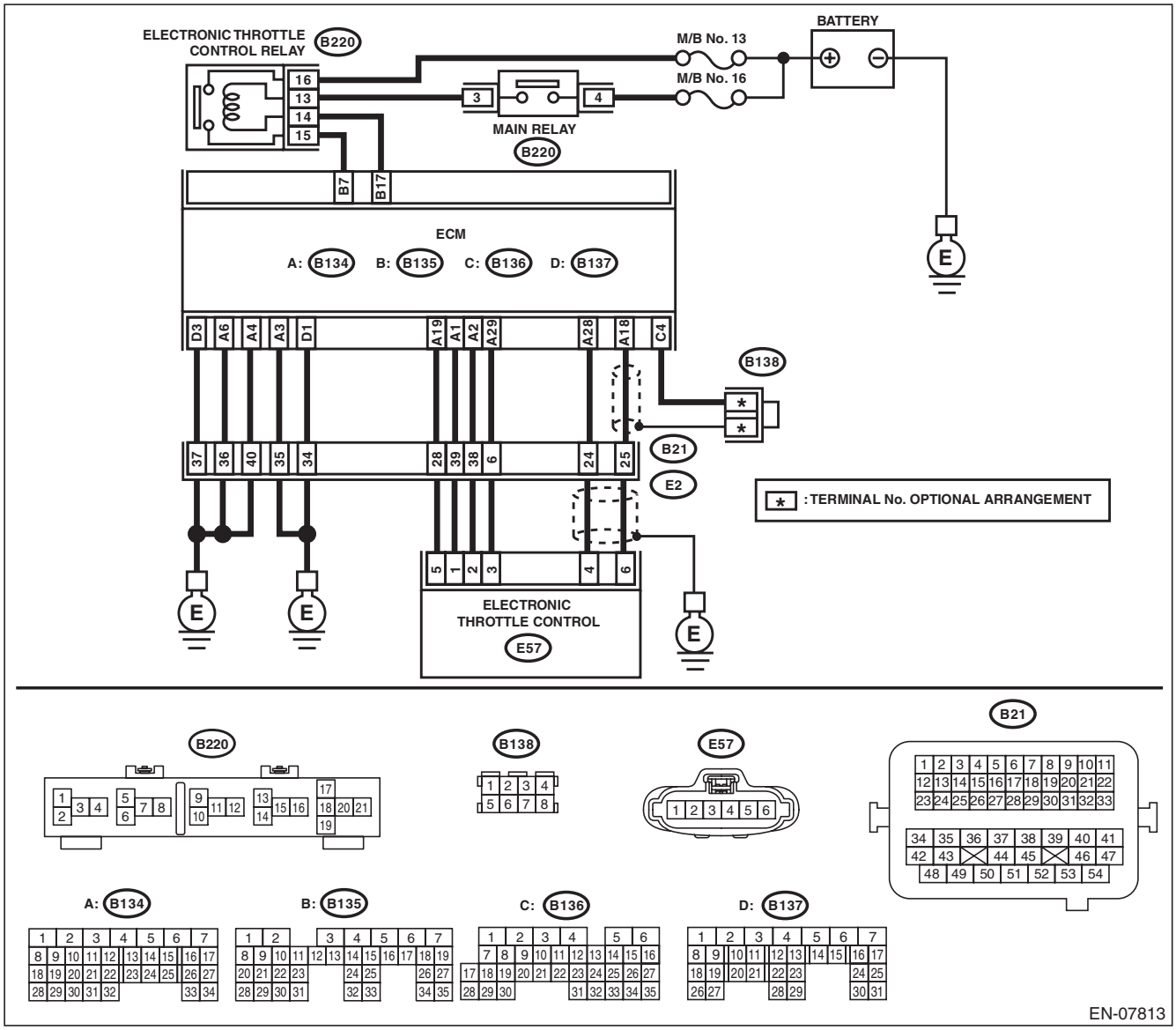

Step		Check	Yes	No
1	**CHECK FOR ANY OTHER DTC ON DISPLAY.**	Is any other DTC displayed?	Check the appropriate DTC using the “List of Diagnostic Trouble Code (DTC)”. <Ref. to EN(H4DOTC)(diag)-75, List of Diagnostic Trouble Code (DTC).>	Go to step **2**.
2	**CHECK ENGINE OIL.**	Is there a proper amount of engine oil?	Go to step **3**.	Replace engine oil. <Ref. to LU(H4SO)-13, REPLACEMENT, Engine Oil.>
3	**CHECK EXHAUST SYSTEM.**	Are there holes or loose bolts on exhaust system?	Repair the exhaust system.	Go to step **4**.

GETTHEMANUALS.org

	Step	Check	Yes	No
4	**CHECK AIR INTAKE SYSTEM.**	Are there holes, loose bolts or disconnection of hose on air intake system?	Repair the air intake system.	Go to step **5**.
5	**CHECK FUEL PRESSURE.** **WARNING:** **Place "NO OPEN FLAMES" signs near the working area.** **CAUTION:** **Be careful not to spill fuel.** Measure the fuel pressure while disconnecting pressure regulator vacuum hose from intake manifold. <Ref. to ME(H4DOTC)-26, INSPECTION, Fuel Pressure.> **CAUTION:** **Release fuel pressure before removing the fuel pressure gauge.** NOTE: If fuel pressure does not increase, squeeze the fuel return hose 2 to 3 times, then measure fuel pressure again.	Is the measured value 328 — 358 kPa (3.3 — 3.7 kg/cm^2, 48 — 52 psi)?	Go to step **6**.	Repair the following item. Fuel pressure is too high: • Clogged fuel return line or bent hose Fuel pressure is too low: • Improper fuel pump discharge • Clogged fuel supply line
6	**CHECK FUEL PRESSURE.** After connecting the pressure regulator vacuum hose, measure fuel pressure. <Ref. to ME(H4DOTC)-26, INSPECTION, Fuel Pressure.> **CAUTION:** **Release fuel pressure before removing the fuel pressure gauge.** NOTE: • If fuel pressure does not increase, squeeze fuel return hose 2 to 3 times, then measure fuel pressure again. • If the measured value at this step is out of specification, check or replace pressure regulator and pressure regulator vacuum hose.	Is the measured value 274 — 304 kPa (2.8 — 3.1 kg/cm^2, 40 — 44 psi)?	Go to step **7**.	Repair the following item. Fuel pressure is too high: • Faulty pressure regulator • Clogged fuel return line or bent hose Fuel pressure is too low: • Faulty pressure regulator • Improper fuel pump discharge • Clogged fuel supply line
7	**CHECK ENGINE COOLANT TEMPERATURE SENSOR.** 1) Start the engine and warm up completely. 2) Read the value of «Coolant Temp.» using the Subaru Select Monitor or a general scan tool. NOTE: • Subaru Select Monitor For detailed operation procedures, refer to "READ CURRENT DATA FOR ENGINE". <Ref. to EN(H4DOTC)(diag)-34, Subaru Select Monitor.> • General scan tool For detailed operation procedures, refer to the general scan tool operation manual.	Is the value of «Coolant Temp.» 75°C (167°F) or more?	Go to step **8**.	Replace the engine coolant temperature sensor. <Ref. to FU(H4DOTC)-34, Engine Coolant Temperature Sensor.>

GETTHEMANUALS.org

	Step	Check	Yes	No
8	**CHECK MASS AIR FLOW AND INTAKE AIR TEMPERATURE SENSOR.** 1) Start the engine and warm up engine until coolant temperature is higher than 70°C (158°F). 2) Place the shift lever in neutral position. 3) Turn the A/C switch to OFF. 4) Turn all the accessory switches to OFF. 5) Read the value of «Mass Air Flow» using the Subaru Select Monitor or a general scan tool. NOTE: • Subaru Select Monitor For detailed operation procedures, refer to "READ CURRENT DATA FOR ENGINE". <Ref. to EN(H4DOTC)(diag)-34, Subaru Select Monitor.> • General scan tool For detailed operation procedures, refer to the general scan tool operation manual.	Is the value of «Mass Air Flow» 2.0 — 5.0 g/s (0.26 — 0.66 lb/m)?	Go to step **9**.	Replace the mass air flow and intake air temperature sensor. <Ref. to FU(H4DOTC)-42, Mass Air Flow and Intake Air Temperature Sensor.>
9	**CHECK MASS AIR FLOW AND INTAKE AIR TEMPERATURE SENSOR.** 1) Start the engine and warm up engine until coolant temperature is higher than 70°C (158°F). 2) Place the shift lever in neutral position. 3) Turn the A/C switch to OFF. 4) Turn all the accessory switches to OFF. 5) Open the front hood. 6) Measure the ambient temperature. 7) Read the value of «Intake Air Temp.» using the Subaru Select Monitor or a general scan tool. NOTE: • Subaru Select Monitor For detailed operation procedures, refer to "READ CURRENT DATA FOR ENGINE". <Ref. to EN(H4DOTC)(diag)-34, Subaru Select Monitor.> • General scan tool For detailed operation procedures, refer to the general scan tool operation manual.	Subtract ambient temperature from «Intake Air Temp.». Is the obtained value –10 — 50°C (–18 — 90°F)?	Go to step **10**.	Check the mass air flow and intake air temperature sensor. <Ref. to FU(H4DOTC)-42, Mass Air Flow and Intake Air Temperature Sensor.>
10	**CHECK OUTPUT SIGNAL OF ECM.** 1) Turn the ignition switch to ON. 2) Measure the voltage between ECM and chassis ground on faulty cylinders. ***Connector & terminal*** ***#1 (B134) No. 10 (+) — Chassis ground (–):*** ***#2 (B134) No. 11 (+) — Chassis ground (–):*** ***#3 (B134) No. 12 (+) — Chassis ground (–):*** ***#4 (B134) No. 13 (+) — Chassis ground (–):***	Is the voltage 10 V or more?	Go to step **15**.	Go to step **11**.

GETTHEMANUALS.org

	Step	Check	Yes	No
11	**CHECK HARNESS BETWEEN ECM AND FUEL INJECTOR CONNECTOR.** 1) Turn the ignition switch to OFF. 2) Disconnect the connector from fuel injector on faulty cylinders. 3) Measure the resistance between fuel injector connector and engine ground on faulty cylinders. ***Connector & terminal*** ***#1 (E5) No. 2 — Engine ground:*** ***#2 (E16) No. 2 — Engine ground:*** ***#3 (E6) No. 2 — Engine ground:*** ***#4 (E17) No. 2 — Engine ground:***	Is the resistance 1 MΩ or more?	Go to step **12**.	Repair the short circuit to ground in harness between ECM and fuel injector connector.
12	**CHECK HARNESS BETWEEN ECM AND FUEL INJECTOR CONNECTOR.** Measure the resistance of harness between ECM and fuel injector connector on faulty cylinders. ***Connector & terminal*** ***#1 (B134) No. 10 — (E5) No. 2:*** ***#2 (B134) No. 11 — (E16) No. 2:*** ***#3 (B134) No. 12 — (E6) No. 2:*** ***#4 (B134) No. 13 — (E17) No. 2:***	Is the resistance less than 1 Ω?	Go to step **13**.	Repair the harness and connector. NOTE: In this case, repair the following item: • Open circuit in harness between ECM and fuel injector connector • Poor contact of coupling connector
13	**CHECK FUEL INJECTOR.** Measure the resistance between fuel injector terminals on faulty cylinder. ***Terminals*** ***No. 1 — No. 2:***	Is the resistance 5 — 20 Ω?	Go to step **14**.	Replace the faulty fuel injector. <Ref. to FU(H4DOTC)-45, Fuel Injector.>
14	**CHECK POWER SUPPLY LINE.** 1) Turn the ignition switch to ON. 2) Measure the voltage between fuel injector and engine ground on faulty cylinders. ***Connector & terminal*** ***#1 (E5) No. 1 (+) — Engine ground (–):*** ***#2 (E16) No. 1 (+) — Engine ground (–):*** ***#3 (E6) No. 1 (+) — Engine ground (–):*** ***#4 (E17) No. 1 (+) — Engine ground (–):***	Is the voltage 10 V or more?	Repair the poor contact of all connectors in fuel injector circuit.	Repair the harness and connector. NOTE: In this case, repair the following item: • Open circuit in harness between the main relay and fuel injector connector on faulty cylinders • Poor contact of coupling connector • Poor contact of main relay connector
15	**CHECK HARNESS BETWEEN ECM AND FUEL INJECTOR CONNECTOR.** 1) Turn the ignition switch to OFF. 2) Disconnect the connector from fuel injector on faulty cylinders. 3) Turn the ignition switch to ON. 4) Measure the voltage between ECM and chassis ground on faulty cylinders. ***Connector & terminal*** ***#1 (B134) No. 10 (+) — Chassis ground (–):*** ***#2 (B134) No. 11 (+) — Chassis ground (–):*** ***#3 (B134) No. 12 (+) — Chassis ground (–):*** ***#4 (B134) No. 13 (+) — Chassis ground (–):***	Is the voltage 10 V or more?	Repair the short circuit to power in harness between ECM and fuel injector connector.	Go to step **16**.

GETTHEMANUALS.org

	Step	Check	Yes	No
16	**CHECK FUEL INJECTOR.** 1) Turn the ignition switch to OFF. 2) Measure the resistance between fuel injector terminals on faulty cylinder. ***Terminals*** ***No. 1 — No. 2:***	Is the resistance 5 — 20 Ω?	Go to step **17**.	Replace the faulty fuel injector. <Ref. to FU(H4DOTC)-45, Fuel Injector.>
17	**CHECK INSTALLATION OF CAMSHAFT POSITION SENSOR/CRANKSHAFT POSITION SENSOR.**	Is the camshaft position sensor or crankshaft position sensor loosely installed?	Tighten the camshaft position sensor or crankshaft position sensor.	Go to step **18**.
18	**CHECK CRANK SPROCKET.** Remove the timing belt cover. <Ref. to ME(H4DOTC)-46, REMOVAL, Timing Belt Cover.>	Is the crank sprocket rusted or does it have broken teeth?	Replace the crank sprocket. <Ref. to ME(H4DOTC)-62, Crank Sprocket.>	Go to step **19**.
19	**CHECK INSTALLATION CONDITION OF TIMING BELT.** Turn the crankshaft using ST, and align the alignment mark on crank sprocket with alignment mark on cylinder block. ST 499987500 CRANKSHAFT SOCKET	Is the timing belt dislocated from its proper position?	Repair the installation condition of timing belt. <Ref. to ME(H4DOTC)-52, Timing Belt.>	Go to step **20**.
20	**CHECK ELECTRONIC THROTTLE CONTROL RELAY.** 1) Turn the ignition switch to OFF. 2) Remove the electronic throttle control relay. 3) Connect the battery to terminals No. 13 and No. 14 of electronic throttle control relay. 4) Measure the resistance between electronic throttle control relay terminals. ***Terminals*** ***No. 16 — No. 15:***	Is the resistance less than 1 Ω?	Go to step **21**.	Replace the electronic throttle control relay. <Ref. to FU(H4DOTC)-63, Electronic Throttle Control Relay.>
21	**CHECK POWER SUPPLY OF ELECTRONIC THROTTLE CONTROL RELAY.** Measure the voltage between electronic throttle control relay connector and chassis ground. ***Connector & terminal*** ***(B220) No. 16 (+) — Chassis ground (–):***	Is the voltage 10 V or more?	Go to step **22**.	Repair the open or ground short circuit of power supply circuit.
22	**CHECK HARNESS BETWEEN ECM AND ELECTRONIC THROTTLE CONTROL RELAY CONNECTOR.** 1) Disconnect the connector from ECM. 2) Turn the ignition switch to ON. 3) Measure the voltage between electronic throttle control relay connector and chassis ground. ***Connector & terminal*** ***(B220) No. 14 (+) — Chassis ground (–):***	Is the voltage 10 V or more?	Repair the short circuit to power in the harness between ECM and electronic throttle control relay connector.	Go to step **23**.
23	**CHECK HARNESS BETWEEN ECM AND ELECTRONIC THROTTLE CONTROL RELAY CONNECTOR.** 1) Turn the ignition switch to OFF. 2) Measure the resistance between electronic throttle control relay connector and chassis ground. ***Connector & terminal*** ***(B220) No. 14 — Chassis ground:*** ***(B220) No. 15 — Chassis ground:***	Is the resistance 1 MΩ or more?	Go to step **24**.	Repair the short circuit in harness to ground between ECM and electronic throttle control relay connector.

GETTHEMANUALS.org

	Step	Check	Yes	No
24	**CHECK HARNESS BETWEEN ECM AND ELECTRONIC THROTTLE CONTROL RELAY CONNECTOR.** Measure the resistance between ECM and electronic throttle control relay connector. ***Connector & terminal*** ***(B135) No. 17 — (B220) No. 14:*** ***(B135) No. 7 — (B220) No. 15:***	Is the resistance less than 1 Ω?	Go to step **25**.	Repair the open circuit in harness between ECM and electronic throttle control relay connector.
25	**CHECK HARNESS BETWEEN ECM AND ELECTRONIC THROTTLE CONTROL CONNECTOR.** 1) Turn the ignition switch to OFF. 2) Disconnect the connectors from ECM and electronic throttle control. 3) Measure the resistance between ECM and chassis ground. ***Connector & terminal*** ***(B134) No. 19 — Chassis ground:*** ***(B134) No. 18 — Chassis ground:*** ***(B134) No. 18 — (B136) No. 4:*** ***(B134) No. 28 — Chassis ground:***	Is the resistance 1 MΩ or more?	Go to step **26**.	Repair the short circuit to ground in harness between ECM and electronic throttle control connector.
26	**CHECK SHORT CIRCUIT INSIDE THE ECM.** 1) Connect the connector to ECM. 2) Measure the resistance between electronic throttle control connector and engine ground. ***Connector & terminal*** ***(E57) No. 6 — Engine ground:*** ***(E57) No. 4 — Engine ground:***	Is the resistance 1 MΩ or more?	Go to step **27**.	Repair the short circuit to ground in harness between ECM and electronic throttle control connector. Replace the ECM if defective. <Ref. to FU(H4DOTC)-58, Engine Control Module (ECM).>
27	**CHECK HARNESS BETWEEN ECM AND ELECTRONIC THROTTLE CONTROL CONNECTOR.** 1) Disconnect the connector from ECM. 2) Measure the resistance of harness between ECM and electronic throttle control connector. ***Connector & terminal*** ***(B134) No. 18 — (E57) No. 6:*** ***(B134) No. 28 — (E57) No. 4:*** ***(B134) No. 29 — (E57) No. 3:***	Is the resistance less than 1 Ω?	Go to step **28**.	Repair the harness and connector. NOTE: In this case, repair the following item: • Open circuit in harness between ECM and electronic throttle control connector • Poor contact of coupling connector
28	**CHECK HARNESS BETWEEN ECM AND ELECTRONIC THROTTLE CONTROL CONNECTOR.** 1) Connect the connector to ECM. 2) Measure the resistance between electronic throttle control connector and engine ground. ***Connector & terminal*** ***(E57) No. 3 — Engine ground:***	Is the resistance less than 5 Ω?	Go to step **29**.	Repair the harness and connector. NOTE: In this case, repair the following item: • Open circuit of harness between ECM and engine ground • Poor contact of ECM connector • Poor contact of coupling connector

GETTHEMANUALS.org

	Step	Check	Yes	No
29	**CHECK HARNESS BETWEEN ECM AND ELECTRONIC THROTTLE CONTROL CONNECTOR.** 1) Turn the ignition switch to ON. 2) Measure the voltage between electronic throttle control connector and engine ground. ***Connector & terminal*** ***(E57) No. 6 (+) — Engine ground (–):*** ***(E57) No. 4 (+) — Engine ground (–):***	Is the voltage 5 V or more?	Repair the short circuit to power in harness between ECM and electronic throttle control connector.	Go to step **30**.
30	**CHECK HARNESS BETWEEN ECM AND ELECTRONIC THROTTLE CONTROL CONNECTOR.** 1) Turn the ignition switch to OFF. 2) Disconnect the connector from ECM. 3) Measure the resistance between ECM connectors. ***Connector & terminal*** ***(B134) No. 19 — (B134) No. 18:*** ***(B134) No. 19 — (B134) No. 28:***	Is the resistance 1 MΩ or more?	Go to step **31**.	Repair the short circuit to power in harness between ECM and electronic throttle control connector.
31	**CHECK SENSOR OUTPUT.** 1) Connect all connectors. 2) Turn the ignition switch to ON. 3) Read the value of «Main-Throttle Sensor» using Subaru Select Monitor. NOTE: For detailed operation procedures, refer to “READ CURRENT DATA FOR ENGINE”. <Ref. to EN(H4DOTC)(diag)-34, Subaru Select Monitor.>	Is the value of «Main-Throttle Sensor» 0.81 — 0.87 V?	Go to step **32**.	Repair the poor contact of electronic throttle control connector. Replace the electronic throttle control if defective. <Ref. to FU(H4DOTC)-15, Throttle Body.>
32	**CHECK SENSOR OUTPUT.** Read the value of «Sub-Throttle Sensor» using Subaru Select Monitor. NOTE: For detailed operation procedures, refer to “READ CURRENT DATA FOR ENGINE”. <Ref. to EN(H4DOTC)(diag)-34, Subaru Select Monitor.>	Is the value of «Sub-Throttle Sensor» 1.64 — 1.70 V?	Go to step **33**.	Repair the poor contact of electronic throttle control connector. Replace the electronic throttle control if defective. <Ref. to FU(H4DOTC)-15, Throttle Body.>
33	**CHECK HARNESS BETWEEN ECM AND ELECTRONIC THROTTLE CONTROL MOTOR.** 1) Turn the ignition switch to OFF. 2) Disconnect the connectors from ECM and electronic throttle control. 3) Measure the resistance between ECM and electronic throttle control connector. ***Connector & terminal*** ***(B134) No. 2 — (E57) No. 2:*** ***(B134) No. 1 — (E57) No. 1:***	Is the resistance less than 1 Ω?	Go to step **34**.	Repair the harness and connector. NOTE: In this case, repair the following item: • Open circuit in harness between ECM and electronic throttle control connector • Poor contact of coupling connector

GETTHEMANUALS.org

	Step	Check	Yes	No
34	**CHECK HARNESS BETWEEN ECM AND ELECTRONIC THROTTLE CONTROL MOTOR.** 1) Connect the connector to ECM. 2) Turn the ignition switch to ON. 3) Measure the voltage between electronic throttle control connector and engine ground. ***Connector & terminal*** ***(E57) No. 2 (+) — Engine ground (–):*** ***(E57) No. 1 (+) — Engine ground (–):***	Is the voltage 5 V or more?	Repair the short circuit to power in harness between ECM and electronic throttle control connector.	Go to step **35**.
35	**CHECK HARNESS BETWEEN ECM AND ELECTRONIC THROTTLE CONTROL MOTOR.** 1) Turn the ignition switch to OFF. 2) Disconnect the connector from ECM. 3) Measure the resistance between electronic throttle control connector and engine ground. ***Connector & terminal*** ***(E57) No. 2 — Engine ground:*** ***(E57) No. 1 — Engine ground:***	Is the resistance 1 MΩ or more?	Go to step **36**.	Repair the short circuit to ground in harness between ECM and electronic throttle control connector.
36	**CHECK ELECTRONIC THROTTLE CONTROL MOTOR HARNESS.** Measure the resistance between electronic throttle control connectors. ***Connector & terminal*** ***(E57) No. 2 — (E57) No. 1:***	Is the resistance 1 MΩ or more?	Go to step **37**.	Repair the short circuit of harness between ECM and electronic throttle control connector.
37	**CHECK ELECTRONIC THROTTLE CONTROL GROUND CIRCUIT.** Measure the resistance between ECM and chassis ground. ***Connector & terminal*** ***(B134) No. 3 — Chassis ground:*** ***(B134) No. 4 — Chassis ground:*** ***(B134) No. 6 — Chassis ground:*** ***(B137) No. 1 — Chassis ground:*** ***(B137) No. 3 — Chassis ground:***	Is the resistance less than 5 Ω?	Go to step **38**.	Repair the harness and connector. NOTE: In this case, repair the following item: • Open circuit of harness between ECM and engine ground • Poor contact of coupling connector
38	**CHECK ELECTRONIC THROTTLE CONTROL.** Measure the resistance between electronic throttle control terminals. ***Terminals*** ***No. 1 — No. 2:***	Is the resistance 50 Ω or less?	Go to step **39**.	Replace the electronic throttle control. <Ref. to FU(H4DOTC)-15, Throttle Body.>
39	**CHECK ELECTRONIC THROTTLE CONTROL.** Move the throttle valve to the fully open and fully closed positions with fingers. Check that the valve returns to the specified position when releasing fingers.	Does the valve return to the specified position? Standard value: 3 mm (0.12 in) from fully closed position	Repair the poor contact of ECM connector.	Replace the electronic throttle control. <Ref. to FU(H4DOTC)-15, Throttle Body.>

CN:DTC P050B COLD START IGNITION TIMING PERFORMANCE

NOTE:
For the diagnostic procedure, refer to DTC P050A. <Ref. to EN(H4DOTC)(diag)-218, DTC P050A COLD START IDLE AIR CONTROL SYSTEM PERFORMANCE, Diagnostic Procedure with Diagnostic Trouble Code (DTC).>

GETTHEMANUALS.org

CO:DTC P0512 STARTER REQUEST CIRCUIT

DTC DETECTING CONDITION:

- Immediately at fault recognition
- GENERAL DESCRIPTION <Ref. to GD(H4DOTC)-177, DTC P0512 STARTER REQUEST CIRCUIT, Diagnostic Trouble Code (DTC) Detecting Criteria.>

TROUBLE SYMPTOM:

Failure of engine to start

CAUTION:

After servicing or replacing faulty parts, perform Clear Memory Mode <Ref. to EN(H4DOTC)(diag)-53, OPERATION, Clear Memory Mode.>, and Inspection Mode <Ref. to EN(H4DOTC)(diag)-41, PROCEDURE, Inspection Mode.>.

WIRING DIAGRAM:

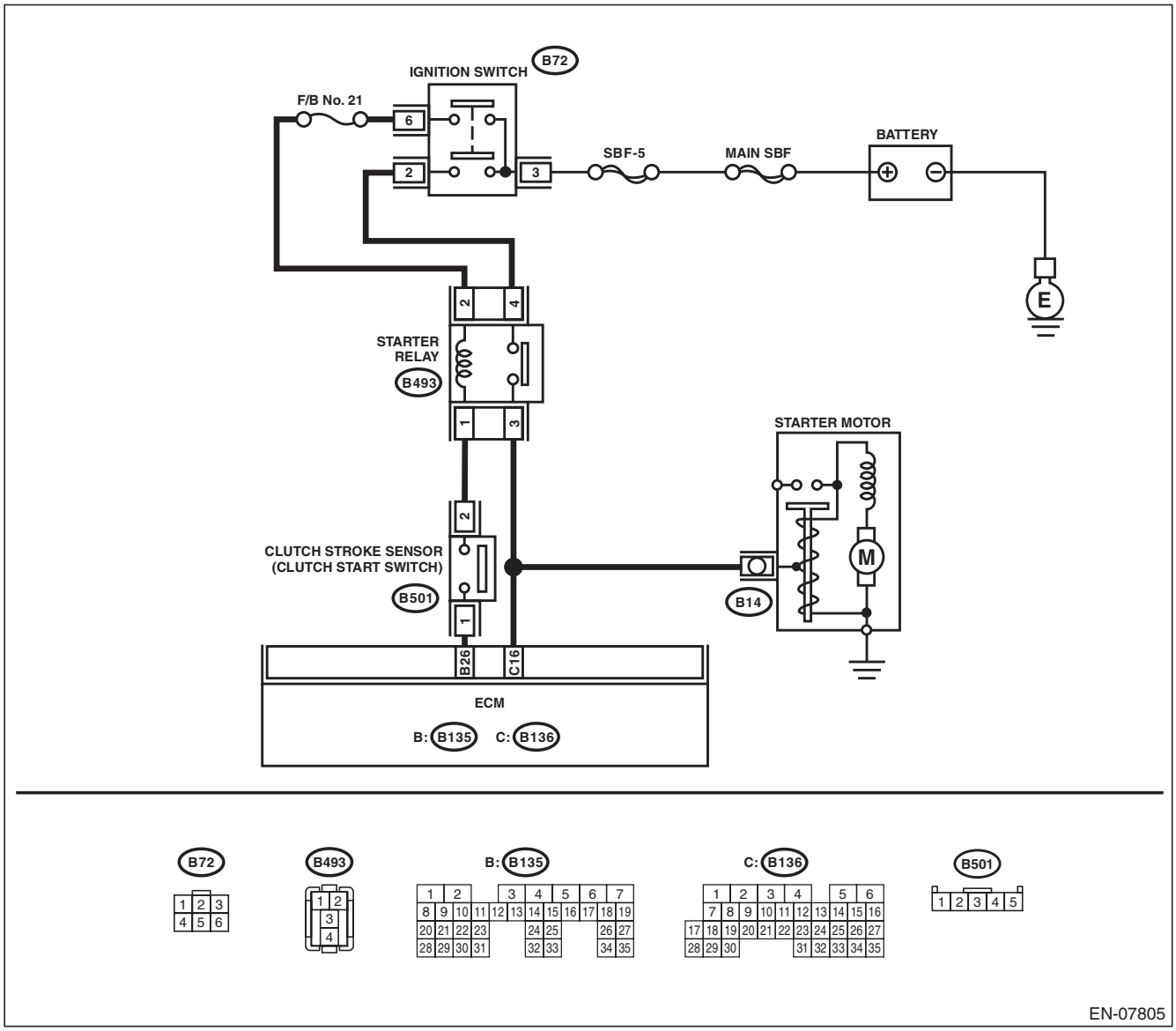

GETtheMANUALS.org

Step		Check	Yes	No
1	**CHECK FOR ANY OTHER DTC ON DISPLAY.**	Is any other DTC displayed?	Check the appropriate DTC using the “List of Diagnostic Trouble Code (DTC)”. <Ref. to EN(H4DOTC)(diag)-75, List of Diagnostic Trouble Code (DTC).>	Go to step **2**.
2	**CHECK HARNESS BETWEEN ECM AND STARTER RELAY CONNECTOR.** 1) Turn the ignition switch to OFF. 2) Disconnect the connector from ECM. 3) Turn the ignition switch to ON. 4) Measure the voltage between ECM and chassis ground. ***Connector & terminal*** ***(B136) No. 16 (+) — Chassis ground (–):***	Is the voltage 10 V or more?	Repair the short circuit to power supply in harness between ECM and starter relay connector.	Repair the poor contact of ECM connector.

GETTHEMANUALS.org

CP:DTC P0604 INTERNAL CONTROL MODULE RANDOM ACCESS MEMORY (RAM) ERROR

DTC DETECTING CONDITION:
- Immediately at fault recognition
- GENERAL DESCRIPTION <Ref. to GD(H4DOTC)-179, DTC P0604 INTERNAL CONTROL MODULE RANDOM ACCESS MEMORY (RAM) ERROR, Diagnostic Trouble Code (DTC) Detecting Criteria.>

TROUBLE SYMPTOM:
- Engine does not start.
- Engine stalls.

CAUTION:
After servicing or replacing faulty parts, perform Clear Memory Mode <Ref. to EN(H4DOTC)(diag)-53, OPERATION, Clear Memory Mode.>, and Inspection Mode <Ref. to EN(H4DOTC)(diag)-41, PROCEDURE, Inspection Mode.>.

Step	Check	Yes	No
1 **CHECK FOR ANY OTHER DTC ON DISPLAY.**	Is any other DTC displayed?	Check the appropriate DTC using the “List of Diagnostic Trouble Code (DTC)”. <Ref. to EN(H4DOTC)(diag)-75, List of Diagnostic Trouble Code (DTC).>	Even if DTC is detected, the circuit has returned to a normal condition at this time. Reproduce the failure, and then perform the diagnosis again. NOTE: In this case, temporary poor contact of connector, temporary open or short circuit of harness may be the cause.

CQ:DTC P0605 INTERNAL CONTROL MODULE READ ONLY MEMORY (ROM) ERROR

NOTE:
For the diagnostic procedure, refer to DTC P0607. <Ref. to EN(H4DOTC)(diag)-230, DTC P0607 THROTTLE CONTROL SYSTEM CIRCUIT RANGE/PERFORMANCE, Diagnostic Procedure with Diagnostic Trouble Code (DTC).>

GETTHEMANUALS.org

CR:DTC P0607 THROTTLE CONTROL SYSTEM CIRCUIT RANGE/PERFORMANCE

DTC DETECTING CONDITION:

- Immediately at fault recognition
- GENERAL DESCRIPTION <Ref. to GD(H4DOTC)-181, DTC P0607 THROTTLE CONTROL SYSTEM CIRCUIT RANGE/PERFORMANCE, Diagnostic Trouble Code (DTC) Detecting Criteria.>

TROUBLE SYMPTOM:

- Improper idling
- Poor driving performance

CAUTION:

After servicing or replacing faulty parts, perform Clear Memory Mode <Ref. to EN(H4DOTC)(diag)-53, OPERATION, Clear Memory Mode.>, and Inspection Mode <Ref. to EN(H4DOTC)(diag)-41, PROCEDURE, Inspection Mode.>.

WIRING DIAGRAM:

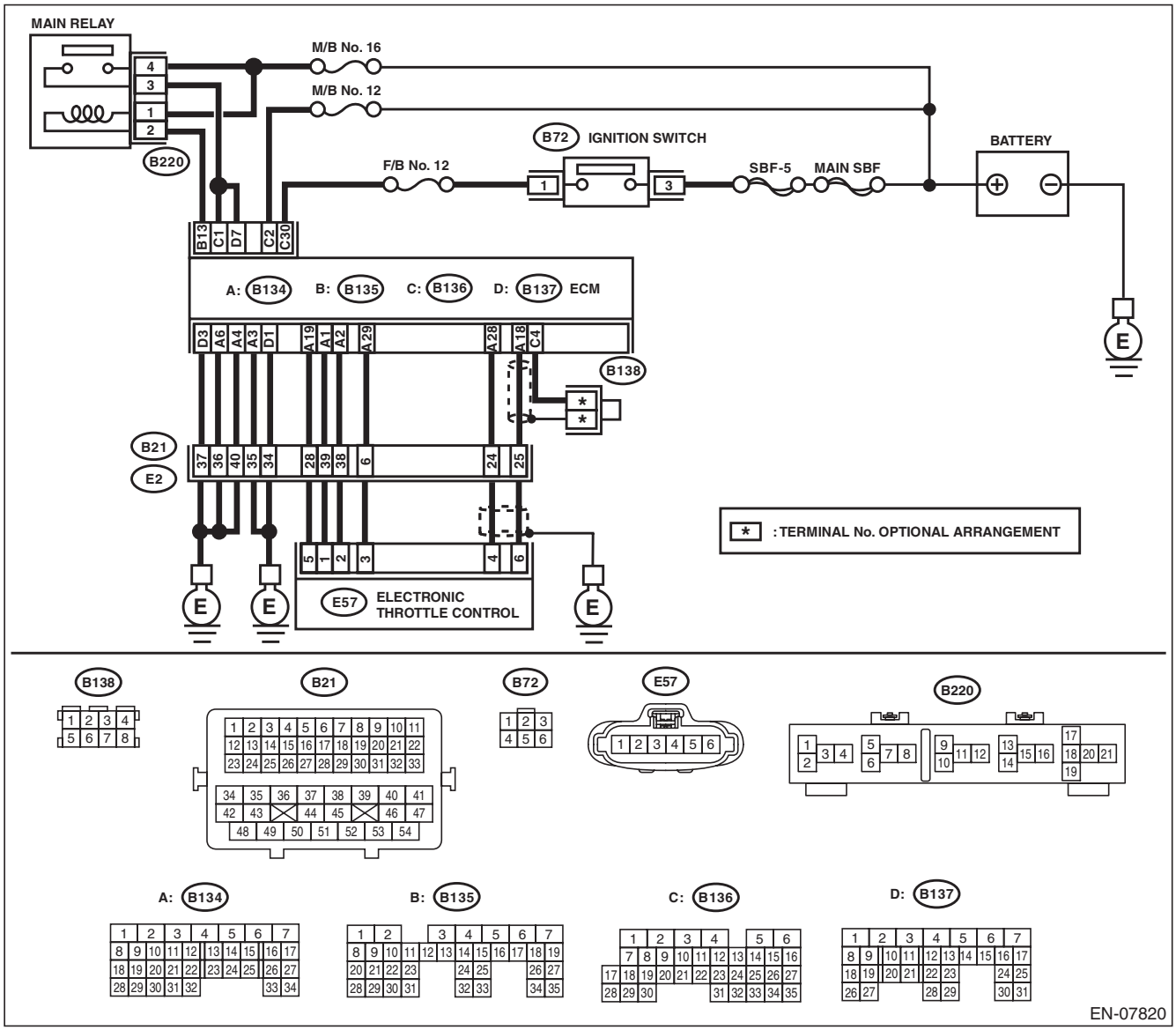

GETtheMANUALS.org

Step		Check	Yes	No
1	**CHECK INPUT VOLTAGE OF ECM.** 1) Turn the ignition switch to ON. 2) Measure the voltage between ECM and chassis ground. ***Connector & terminal*** ***(B136) No. 1 (+) — Chassis ground (–):*** ***(B137) No. 7 (+) — Chassis ground (–):***	Is the voltage 10 — 13 V?	Go to step **2**.	Repair the open or ground short circuit of power supply circuit.
2	**CHECK INPUT VOLTAGE OF ECM.** 1) Start the engine. 2) Measure the voltage between ECM and chassis ground. ***Connector & terminal*** ***(B136) No. 1 (+) — Chassis ground (–):*** ***(B137) No. 7 (+) — Chassis ground (–):***	Is the voltage 13 — 15 V?	Go to step **3**.	Repair the open or ground short circuit of power supply circuit.
3	**CHECK HARNESS BETWEEN ECM AND ELECTRONIC THROTTLE CONTROL CONNECTOR.** 1) Turn the ignition switch to OFF. 2) Disconnect the connectors from the ECM and electronic throttle control. 3) Measure the resistance of harness between ECM and electronic throttle control connector. ***Connector & terminal*** ***(B134) No. 19 — (E57) No. 5:*** ***(B134) No. 29 — (E57) No. 3:***	Is the resistance less than 1 Ω?	Go to step **4**.	Repair the harness and connector. NOTE: In this case, repair the following item: • Open circuit in harness between ECM and electronic throttle control connector • Poor contact of coupling connector
4	**CHECK ECM GROUND HARNESS.** 1) Connect all connectors. 2) Turn the ignition switch to ON. 3) Measure the voltage between ECM and chassis ground. ***Connector & terminal*** ***(B134) No. 3 (+) — Chassis ground (–):*** ***(B134) No. 4 (+) — Chassis ground (–):*** ***(B134) No. 6 (+) — Chassis ground (–):*** ***(B137) No. 1 (+) — Chassis ground (–):*** ***(B137) No. 3 (+) — Chassis ground (–):***	Is the voltage less than 1 V?	Repair the poor contact of ECM connector.	Repair the harness and connector. NOTE: In this case, repair the following item: • Open circuit in ground circuit • Retightening of engine ground terminals • Poor contact of coupling connector

CS:DTC P0638 THROTTLE ACTUATOR CONTROL RANGE/PERFORMANCE (BANK 1)

NOTE:
For the diagnostic procedure, refer to DTC P2101. <Ref. to EN(H4DOTC)(diag)-303, DTC P2101 THROTTLE ACTUATOR CONTROL MOTOR CIRCUIT RANGE/PERFORMANCE, Diagnostic Procedure with Diagnostic Trouble Code (DTC).>

GETTHEMANUALS.org

CT:DTC P0851 NEUTRAL SWITCH INPUT CIRCUIT LOW (MT MODEL)

DTC DETECTING CONDITION:

- Detected when two consecutive driving cycles with fault occur.
- GENERAL DESCRIPTION <Ref. to GD(H4DOTC)-185, DTC P0851 NEUTRAL SWITCH INPUT CIRCUIT LOW (MT MODEL), Diagnostic Trouble Code (DTC) Detecting Criteria.>

TROUBLE SYMPTOM:

Improper idling

CAUTION:

After servicing or replacing faulty parts, perform Clear Memory Mode <Ref. to EN(H4DOTC)(diag)-53, OPERATION, Clear Memory Mode.>, and Inspection Mode <Ref. to EN(H4DOTC)(diag)-41, PROCEDURE, Inspection Mode.>.

WIRING DIAGRAM:

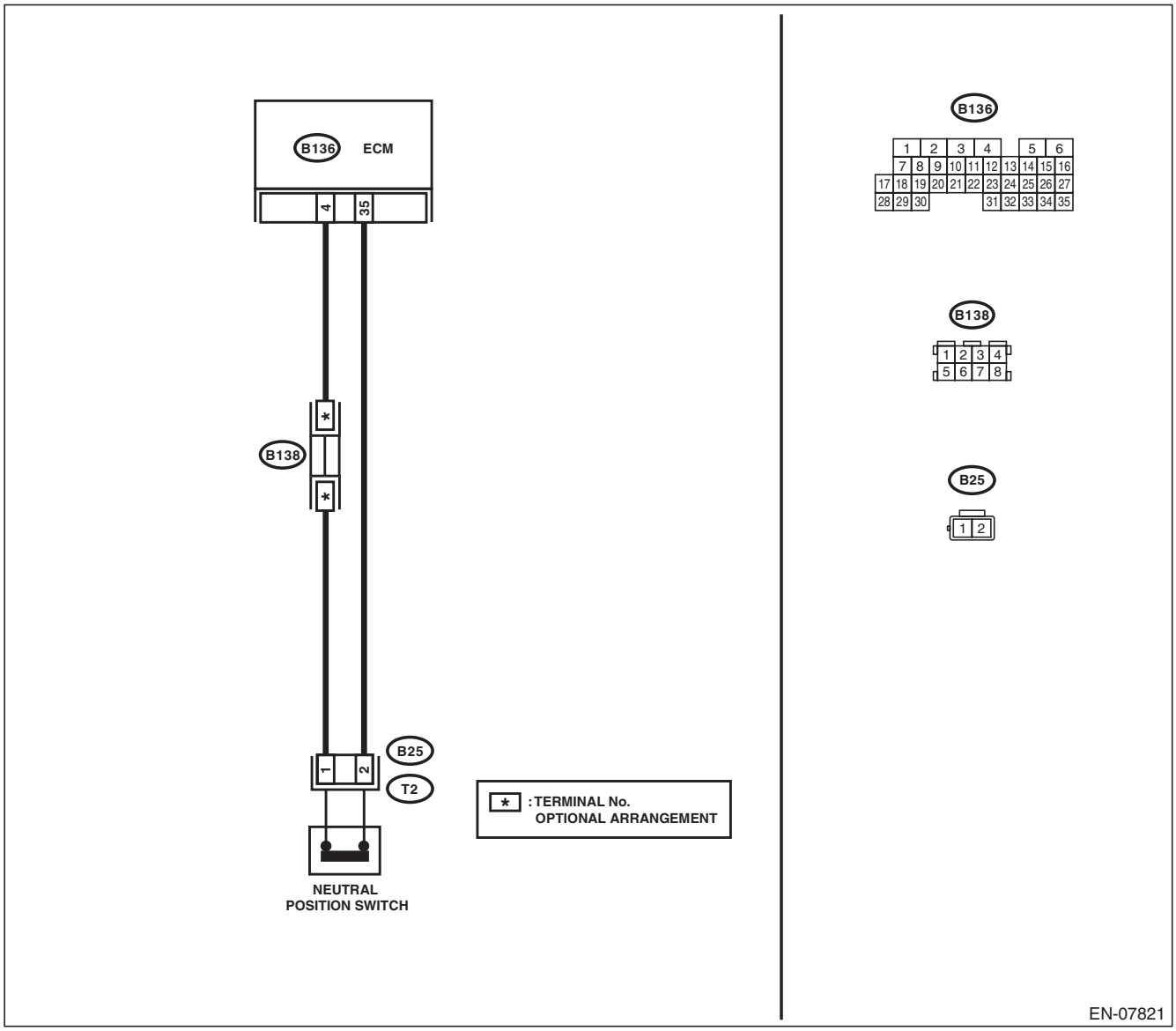

GETTHEMANUALS.org

	Step	Check	Yes	No
1	**CHECK INPUT SIGNAL OF ECM.** 1) Turn the ignition switch to ON. 2) Place the shift lever in a position other than neutral. 3) Measure the voltage between ECM and chassis ground. ***Connector & terminal*** ***(B136) No. 35 (+) — Chassis ground (–):***	Is the voltage 10 V or more?	Repair the poor contact of ECM connector.	Go to step **2**.
2	**CHECK HARNESS BETWEEN ECM AND NEUTRAL POSITION SWITCH CONNECTOR.** 1) Turn the ignition switch to OFF. 2) Disconnect the connectors from ECM and neutral position switch. 3) Measure the resistance between ECM and chassis ground. ***Connector & terminal*** ***(B136) No. 35 — Chassis ground:***	Is the resistance 1 MΩ or more?	Replace the neutral position switch. <Ref. to 6MT-37, Switches and Harness.>	Repair the short circuit to ground harness between ECM and neutral position switch connector.

GETTHEMANUALS.org

CU:DTC P0852 NEUTRAL SWITCH INPUT CIRCUIT HIGH (MT MODEL)

DTC DETECTING CONDITION:

- Detected when two consecutive driving cycles with fault occur.
- GENERAL DESCRIPTION <Ref. to GD(H4DOTC)-186, DTC P0852 NEUTRAL SWITCH INPUT CIRCUIT HIGH (MT MODEL), Diagnostic Trouble Code (DTC) Detecting Criteria.>

TROUBLE SYMPTOM:

Improper idling

CAUTION:

After servicing or replacing faulty parts, perform Clear Memory Mode <Ref. to EN(H4DOTC)(diag)-53, OPERATION, Clear Memory Mode.>, and Inspection Mode <Ref. to EN(H4DOTC)(diag)-41, PROCEDURE, Inspection Mode.>.

WIRING DIAGRAM:

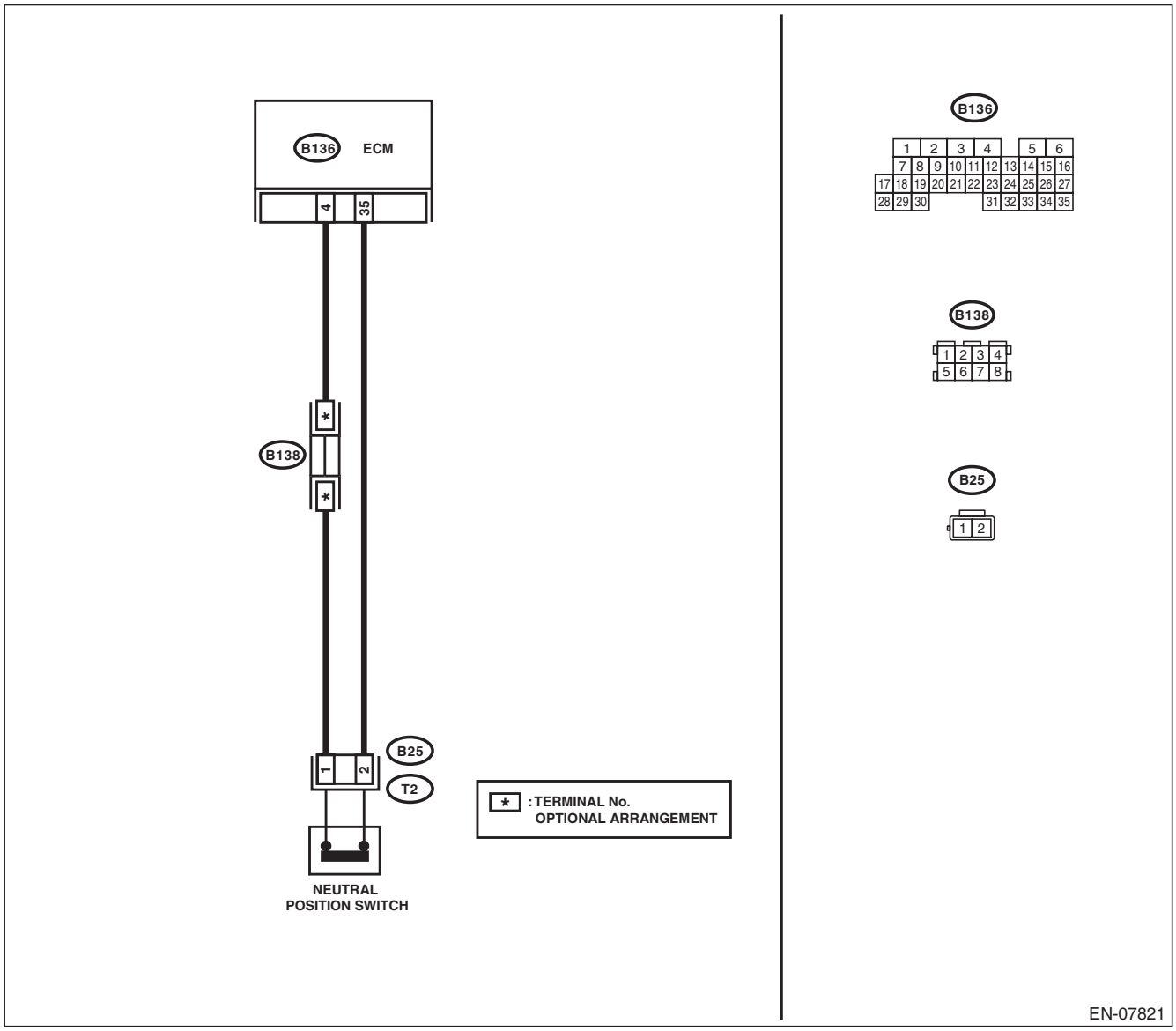

GETTHEMANUALS.org

Step		Check	Yes	No
1	**CHECK INPUT SIGNAL OF ECM.** 1) Turn the ignition switch to ON. 2) Place the shift lever in neutral. 3) Measure the voltage between ECM and chassis ground. ***Connector & terminal*** ***(B136) No. 35 (+) — Chassis ground (–):***	Is the voltage less than 1 V?	Repair the poor contact of ECM connector.	Go to step **2**.
2	**CHECK HARNESS BETWEEN ECM AND NEUTRAL POSITION SWITCH CONNECTOR.** 1) Turn the ignition switch to OFF. 2) Disconnect the connectors from ECM and neutral position switch. 3) Measure the resistance of harness between ECM and neutral position switch connector. ***Connector & terminal*** ***(B136) No. 35 — (B25) No. 2:*** ***(B136) No. 4 — (B25) No. 1:***	Is the resistance less than 1 Ω?	Go to step **3**.	Repair the harness and connector. NOTE: In this case, repair the following item: • Open circuit in harness between ECM and neutral position switch connector • Poor contact of coupling connector
3	**CHECK NEUTRAL POSITION SWITCH.** 1) Place the shift lever in neutral. 2) Measure the resistance between neutral position switch terminals. ***Terminals*** ***No. 1 — No. 2:***	Is the resistance less than 1 Ω?	Repair the poor contact of neutral position switch connector.	Replace the neutral position switch. <Ref. to 6MT-37, Switches and Harness.>

GETTHEMANUALS.org

CV:DTC P1152 O2 SENSOR CIRCUIT RANGE/PERFORMANCE (LOW) (BANK1 SENSOR1)

DTC DETECTING CONDITION:

- Detected when two consecutive driving cycles with fault occur.
- GENERAL DESCRIPTION <Ref. to GD(H4DOTC)-187, DTC P1152 O2 SENSOR CIRCUIT RANGE/ PERFORMANCE (LOW) (BANK1 SENSOR1), Diagnostic Trouble Code (DTC) Detecting Criteria.>

CAUTION:

After servicing or replacing faulty parts, perform Clear Memory Mode <Ref. to EN(H4DOTC)(diag)-53, OPERATION, Clear Memory Mode.>, and Inspection Mode <Ref. to EN(H4DOTC)(diag)-41, PROCEDURE, Inspection Mode.>.

WIRING DIAGRAM:

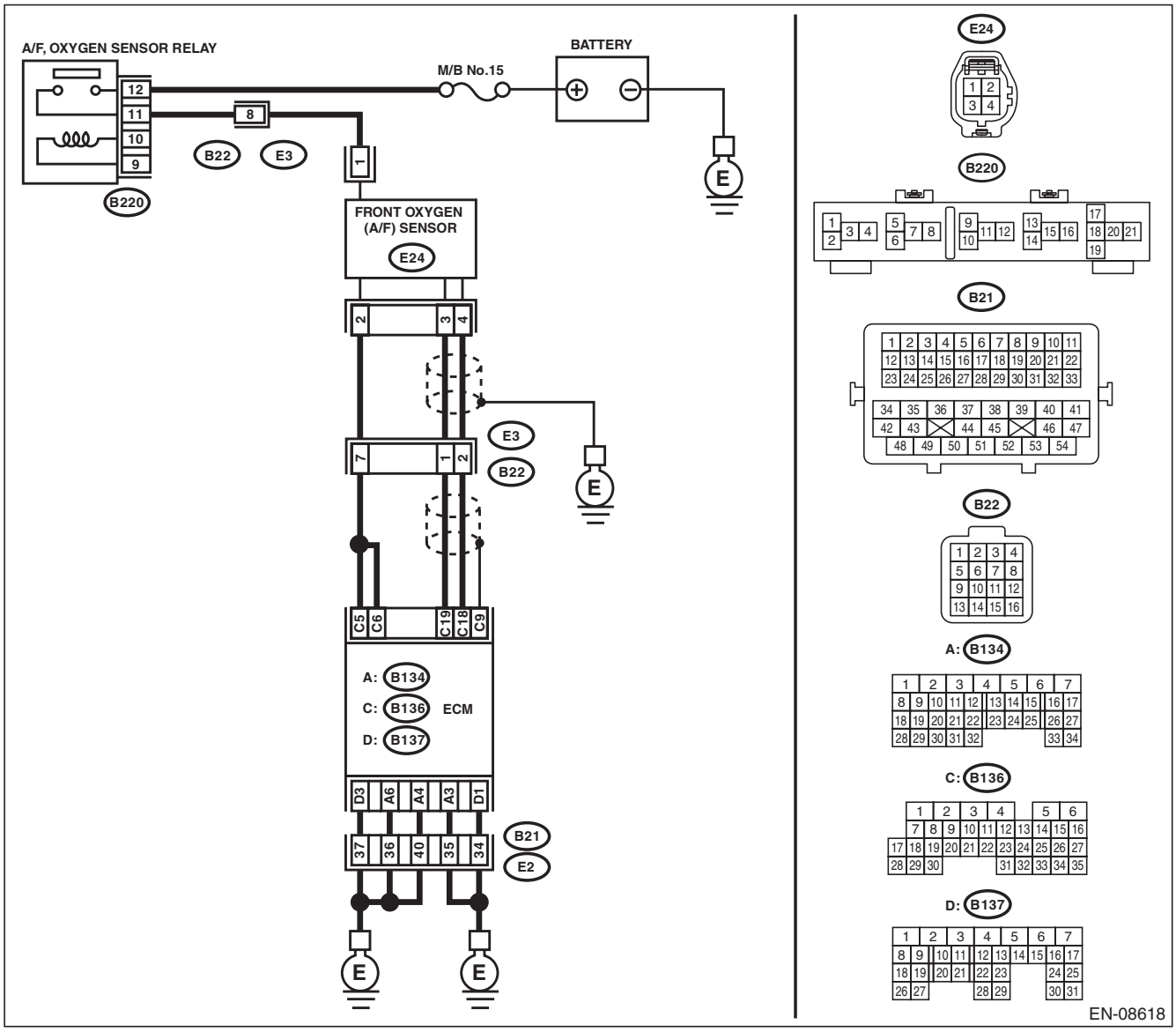

Step		Check	Yes	No
1	**CHECK FRONT OXYGEN (A/F) SENSOR CONNECTOR AND COUPLING CONNECTOR.**	Has water entered the connector?	Completely remove any water inside.	Go to step **2**.

GETtheMANUALS.org

Step		Check	Yes	No
2	**CHECK HARNESS BETWEEN ECM AND FRONT OXYGEN (A/F) SENSOR CONNECTOR.** 1) Turn the ignition switch to OFF. 2) Disconnect the connectors from ECM and front oxygen (A/F) sensor. 3) Measure the resistance of harness between ECM and front oxygen (A/F) sensor connector. ***Connector & terminal*** ***(B136) No. 19 — (E24) No. 3:*** ***(B136) No. 18 — (E24) No. 4:***	Is the resistance less than 1 Ω?	Go to step **3**.	Repair the harness and connector. NOTE: In this case, repair the following item: • Open circuit in harness between ECM and front oxygen (A/F) sensor connector • Poor contact of coupling connector
3	**CHECK FOR POOR CONTACT.** Check for poor contact of the front oxygen (A/F) sensor connector.	Is there poor contact of front oxygen (A/F) sensor connector?	Repair the poor contact of front oxygen (A/F) sensor connector.	Replace the front oxygen (A/F) sensor. <Ref. to FU(H4DOTC)-54, Front Oxygen (A/F) Sensor.>

GETTHEMANUALS.org

CW:DTC P1153 O2 SENSOR CIRCUIT RANGE/PERFORMANCE (HIGH) (BANK1 SENSOR1)

DTC DETECTING CONDITION:

- Detected when two consecutive driving cycles with fault occur.
- GENERAL DESCRIPTION <Ref. to GD(H4DOTC)-189, DTC P1153 O2 SENSOR CIRCUIT RANGE/ PERFORMANCE (HIGH) (BANK1 SENSOR1), Diagnostic Trouble Code (DTC) Detecting Criteria.>

CAUTION:

After servicing or replacing faulty parts, perform Clear Memory Mode <Ref. to EN(H4DOTC)(diag)-53, OPERATION, Clear Memory Mode.>, and Inspection Mode <Ref. to EN(H4DOTC)(diag)-41, PROCEDURE, Inspection Mode.>.

WIRING DIAGRAM:

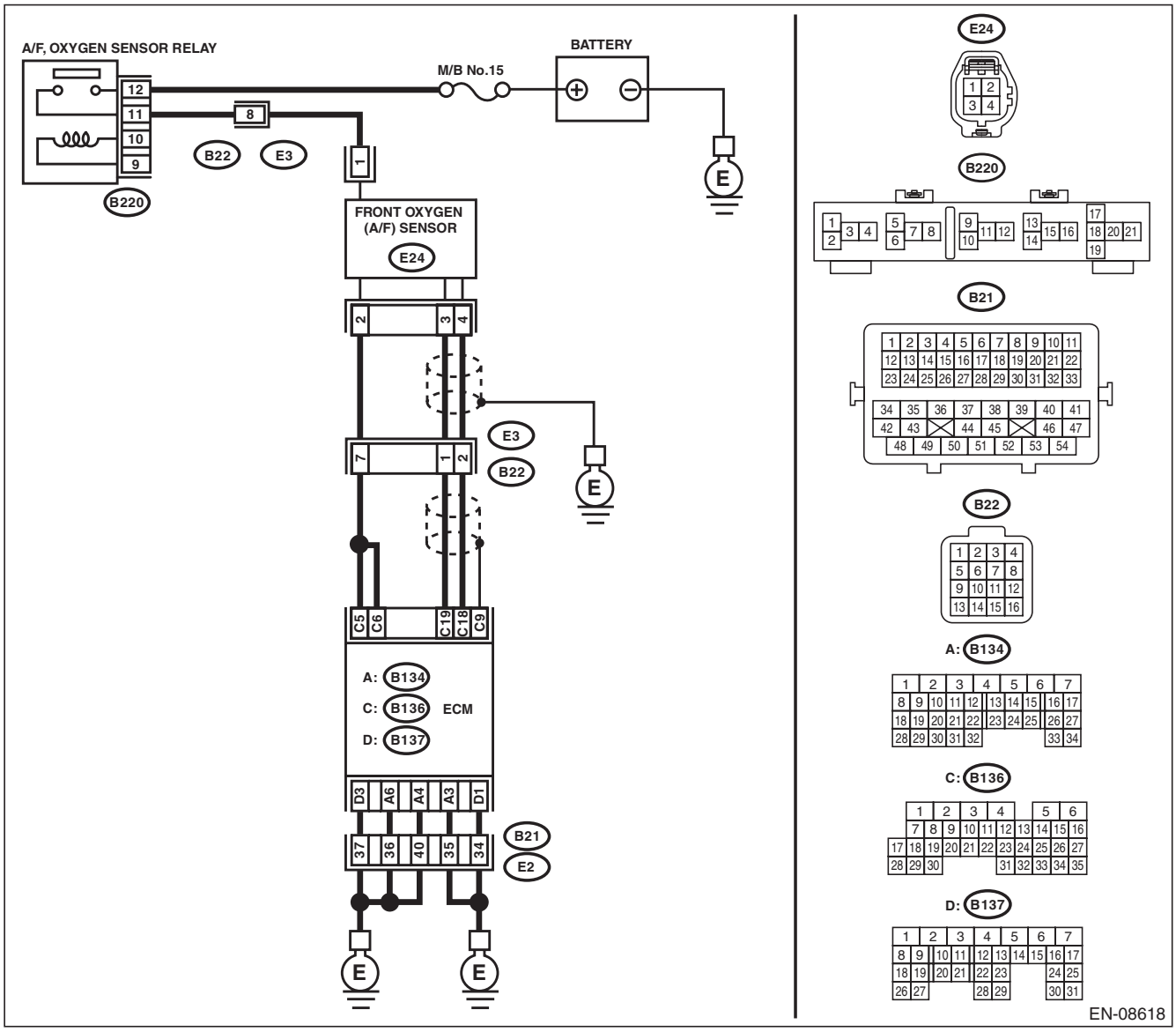

Step		Check	Yes	No
1	**CHECK FRONT OXYGEN (A/F) SENSOR CONNECTOR AND COUPLING CONNECTOR.**	Has water entered the connector?	Completely remove any water inside.	Go to step **2**.

GETtheMANUALS.org

Step		Check	Yes	No
2	**CHECK HARNESS BETWEEN ECM AND FRONT OXYGEN (A/F) SENSOR CONNECTOR.** 1) Turn the ignition switch to OFF. 2) Disconnect the connector from ECM. 3) Measure the resistance between ECM and chassis ground. ***Connector & terminal*** ***(B136) No. 19 — Chassis ground:*** ***(B136) No. 18 — Chassis ground:***	Is the resistance 1 MΩ or more?	Go to step **3**.	Repair the ground short circuit of harness between ECM and front oxygen (A/F) sensor connector.
3	**CHECK OUTPUT SIGNAL FOR ECM.** 1) Connect the connector to ECM. 2) Turn the ignition switch to ON. 3) Measure the voltage between ECM and chassis ground. ***Connector & terminal*** ***(B136) No. 19 (+) — Chassis ground (–):***	Is the voltage 4.5 V or more?	Go to step **5**.	Go to step **4**.
4	**CHECK OUTPUT SIGNAL FOR ECM.** Measure the voltage between ECM and chassis ground. ***Connector & terminal*** ***(B136) No. 18 (+) — Chassis ground (–):***	Is the voltage 4.95 V or more?	Go to step **5**.	Replace the front oxygen (A/F) sensor. <Ref. to FU(H4DOTC)-54, Front Oxygen (A/F) Sensor.>
5	**CHECK OUTPUT SIGNAL FOR ECM.** Measure the voltage between ECM and chassis ground. ***Connector & terminal*** ***(B136) No. 19 (+) — Chassis ground (–):*** ***(B136) No. 18 (+) — Chassis ground (–):***	Is the voltage 8 V or more?	Repair the short circuit to power in the harness between ECM and front oxygen (A/F) sensor connector. After repair, replace the ECM. <Ref. to FU(H4DOTC)-58, Engine Control Module (ECM).>	Repair the poor contact of ECM connector.

CX:DTC P1160 RETURN SPRING FAILURE

NOTE:
For the diagnostic procedure, refer to DTC P2101. <Ref. to EN(H4DOTC)(diag)-303, DTC P2101 THROTTLE ACTUATOR CONTROL MOTOR CIRCUIT RANGE/PERFORMANCE, Diagnostic Procedure with Diagnostic Trouble Code (DTC).>

GETTHEMANUALS.org

CY:DTC P1400 FUEL TANK PRESSURE CONTROL SOLENOID VALVE CIRCUIT LOW

DTC DETECTING CONDITION:

- Detected when two consecutive driving cycles with fault occur.
- GENERAL DESCRIPTION <Ref. to GD(H4DOTC)-193, DTC P1400 FUEL TANK PRESSURE CONTROL SOLENOID VALVE CIRCUIT LOW, Diagnostic Trouble Code (DTC) Detecting Criteria.>

CAUTION:

After servicing or replacing faulty parts, perform Clear Memory Mode <Ref. to EN(H4DOTC)(diag)-53, OPERATION, Clear Memory Mode.>, and Inspection Mode <Ref. to EN(H4DOTC)(diag)-41, PROCEDURE, Inspection Mode.>.

WIRING DIAGRAM:

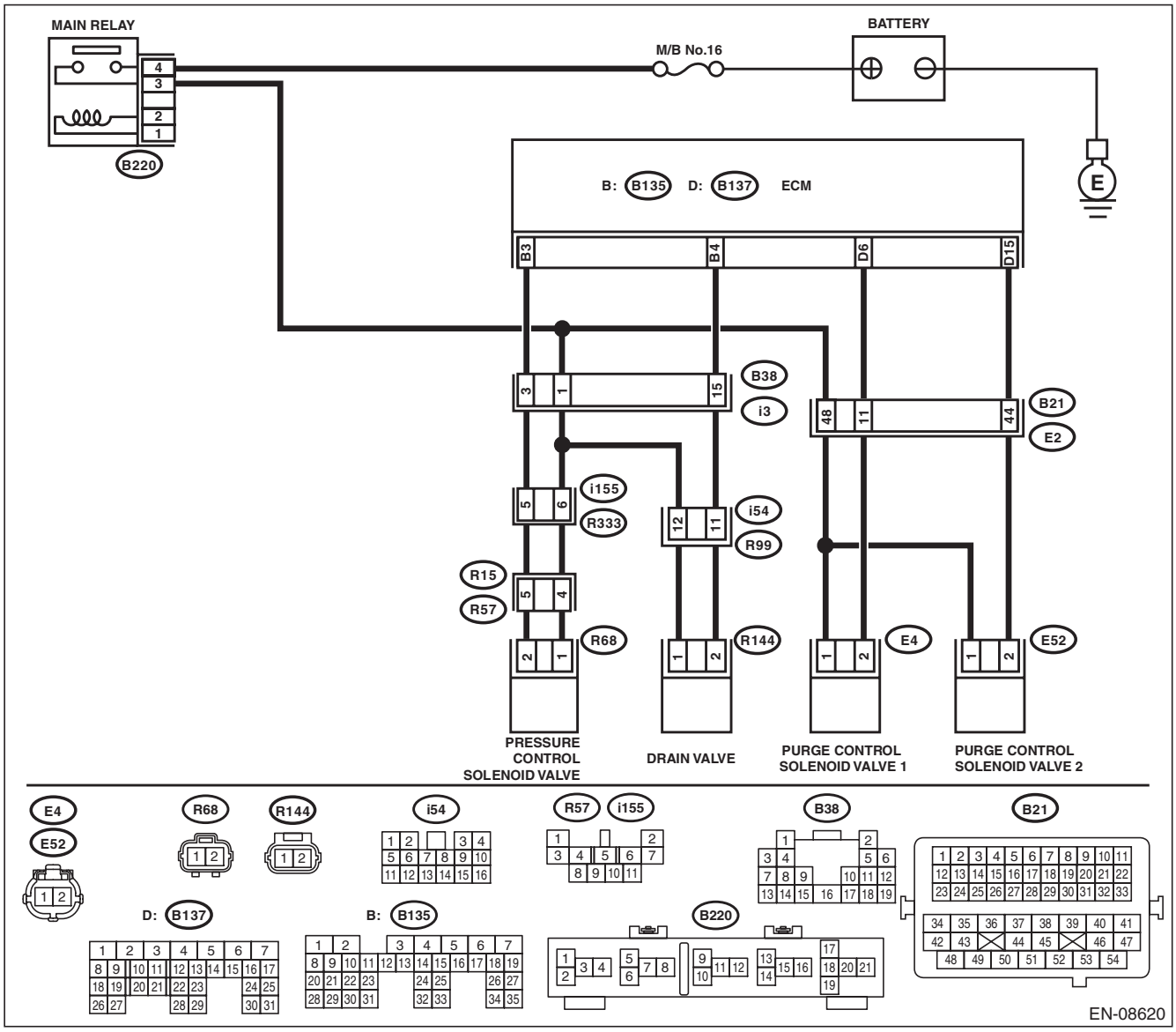

GETtheMANUALS.org

	Step	Check	Yes	No
1	**CHECK OUTPUT SIGNAL OF ECM.** 1) Turn the ignition switch to ON. 2) Measure the voltage between ECM and chassis ground. ***Connector & terminal*** ***(B135) No. 3 (+) — Chassis ground (–):***	Is the voltage 10 V or more?	Go to step **2**.	Go to step **3**.
2	**CHECK FOR POOR CONTACT.** Check for poor contact of ECM connector.	Is there poor contact of ECM connector?	Repair the poor contact of ECM connector.	Even if DTC is detected, the circuit has returned to a normal condition at this time. Reproduce the failure, and then perform the diagnosis again. NOTE: In this case, temporary open or short circuit of harness or temporary poor contact of connector may be the cause.
3	**CHECK POWER SUPPLY TO THE PRESSURE CONTROL SOLENOID VALVE.** Measure the voltage between pressure control solenoid valve and chassis ground. ***Connector & terminal*** ***(R68) No. 1 (+) — Chassis ground (–):***	Is the voltage 10 V or more?	Go to step **4**.	Repair the power supply circuit.
4	**CHECK HARNESS BETWEEN ECM AND PRESSURE CONTROL SOLENOID VALVE CONNECTOR.** 1) Turn the ignition switch to OFF. 2) Disconnect the connector from the ECM and pressure control solenoid valve. 3) Measure the resistance between pressure control solenoid valve and chassis ground. ***Connector & terminal*** ***(R68) No. 2 — Chassis ground:***	Is the resistance 1 MΩ or more?	Go to step **5**.	Repair the ground short circuit of harness between ECM and pressure control solenoid valve connector.
5	**CHECK HARNESS BETWEEN ECM AND PRESSURE CONTROL SOLENOID VALVE CONNECTOR.** Measure the resistance of harness between ECM and pressure control solenoid valve connector. ***Connector & terminal*** ***(B135) No. 3 — (R68) No. 2:***	Is the resistance less than 1 Ω?	Go to step **6**.	Repair the harness and connector. NOTE: In this case, repair the following item: • Open circuit in harness between ECM and pressure control solenoid valve connector • Poor contact of coupling connector
6	**CHECK PRESSURE CONTROL SOLENOID VALVE.** Measure the resistance between pressure control solenoid valve terminals. ***Terminals*** ***No. 1 — No. 2:***	Is the resistance 10 — 100 Ω?	Repair the poor contact of pressure control solenoid valve connector.	Replace the pressure control solenoid valve. <Ref. to EC(H4DOTC)-19, Pressure Control Solenoid Valve Assembly.>

GETTHEMANUALS.org

CZ:DTC P1420 FUEL TANK PRESSURE CONTROL SOL. VALVE CIRCUIT HIGH

DTC DETECTING CONDITION:

- Detected when two consecutive driving cycles with fault occur.
- GENERAL DESCRIPTION <Ref. to GD(H4DOTC)-195, DTC P1420 FUEL TANK PRESSURE CONTROL SOL. VALVE CIRCUIT HIGH, Diagnostic Trouble Code (DTC) Detecting Criteria.>

CAUTION:

After servicing or replacing faulty parts, perform Clear Memory Mode <Ref. to EN(H4DOTC)(diag)-53, OPERATION, Clear Memory Mode.>, and Inspection Mode <Ref. to EN(H4DOTC)(diag)-41, PROCEDURE, Inspection Mode.>.

WIRING DIAGRAM:

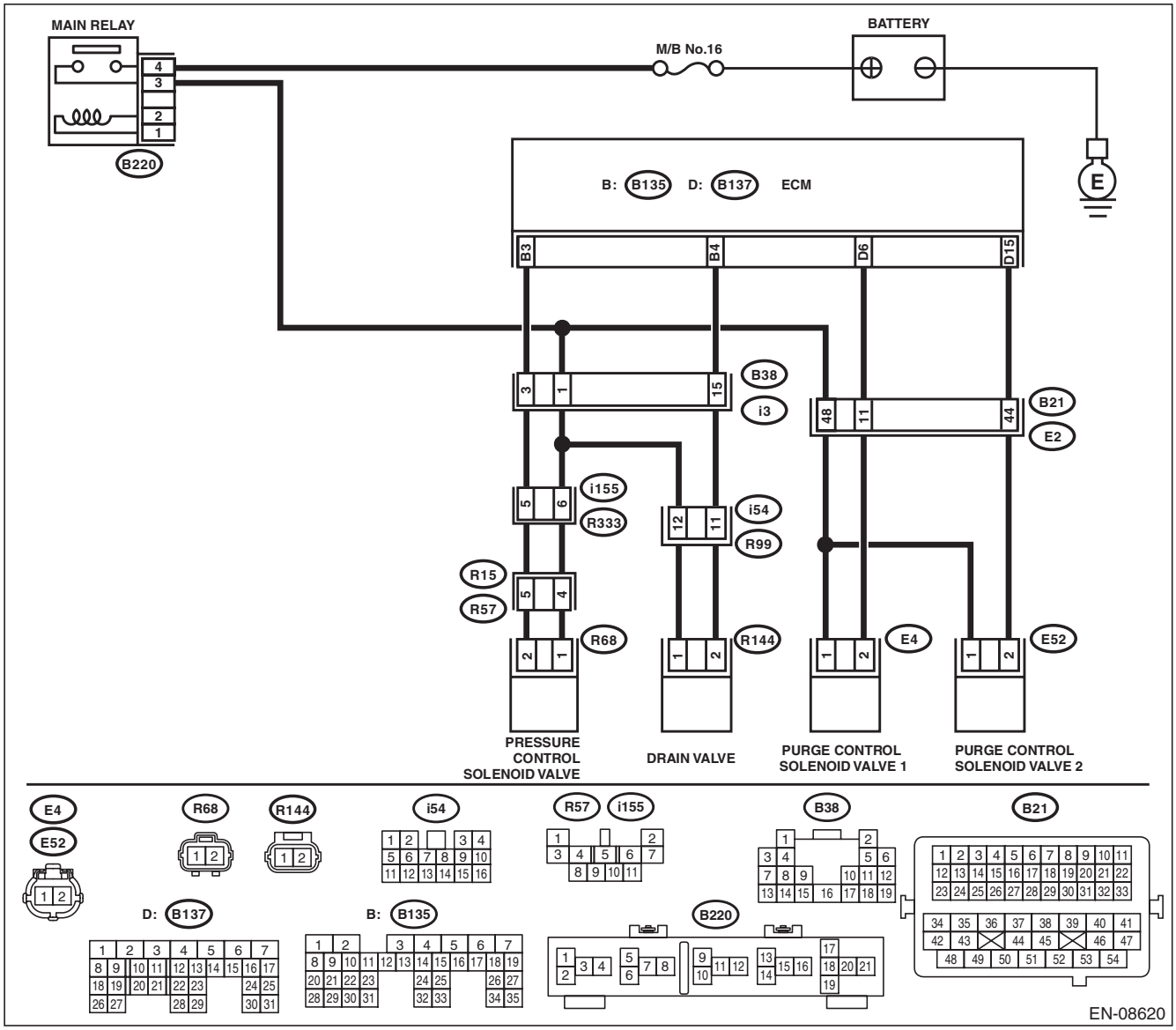

GETtheMANUALS.org

Step		Check	Yes	No
1	**CHECK HARNESS BETWEEN ECM AND PRESSURE CONTROL SOLENOID VALVE CONNECTOR.** 1) Turn the ignition switch to OFF. 2) Disconnect the connector from the ECM and pressure control solenoid valve. 3) Turn the ignition switch to ON. 4) Measure the voltage between ECM and chassis ground. ***Connector & terminal*** ***(B135) No. 3 (+) — Chassis ground (–):***	Is the voltage 10 V or more?	Repair the short circuit to power in the harness between ECM and pressure control solenoid valve connector.	Go to step **2**.
2	**CHECK PRESSURE CONTROL SOLENOID VALVE.** 1) Turn the ignition switch to OFF. 2) Measure the resistance between pressure control solenoid valve terminals. ***Terminals*** ***No. 1 — No. 2:***	Is the resistance less than 1 Ω?	Replace the pressure control solenoid valve. <Ref. to EC(H4DOTC)-19, Pressure Control Solenoid Valve Assembly.>	Repair the poor contact of ECM connector.

GETTHEMANUALS.org

DA:DTC P1443 VENT CONTROL SOLENOID VALVE FUNCTION PROBLEM

DTC DETECTING CONDITION:

- Immediately at fault recognition
- GENERAL DESCRIPTION <Ref. to GD(H4DOTC)-197, DTC P1443 VENT CONTROL SOLENOID VALVE FUNCTION PROBLEM, Diagnostic Trouble Code (DTC) Detecting Criteria.>

TROUBLE SYMPTOM:

Improper fuel supply

CAUTION:

After servicing or replacing faulty parts, perform Clear Memory Mode <Ref. to EN(H4DOTC)(diag)-53, OPERATION, Clear Memory Mode.>, and Inspection Mode <Ref. to EN(H4DOTC)(diag)-41, PROCEDURE, Inspection Mode.>.

Step		Check	Yes	No
1	**CHECK FOR ANY OTHER DTC ON DISPLAY.**	Is any other DTC displayed?	Check the appropriate DTC using the “List of Diagnostic Trouble Code (DTC)”. <Ref. to EN(H4DOTC)(diag)-75, List of Diagnostic Trouble Code (DTC).>	Go to step **2**.
2	**CHECK DRAIN HOSE.** Check the drain hose for clogging.	Is there clogging in the drain hose?	Replace the drain hose.	Go to step **3**.
3	**CHECK DRAIN VALVE OPERATION.** 1) Turn the ignition switch to OFF. 2) Install the delivery (test) mode fuse. **CAUTION:** **Do not use any fuses that are installed on the vehicle.** 3) Turn the ignition switch to ON. 4) Perform operation check for the drain valve using the Subaru Select Monitor. NOTE: Drain valve can be operated using the Subaru Select Monitor. For detailed procedures, refer to “SYSTEM OPERATION CHECK MODE”. <Ref. to EN(H4DOTC)(diag)-54, System Operation Check Mode.>	Does the drain valve operate?	Repair the poor contact of ECM connector.	Replace the drain valve. <Ref. to EC(H4DOTC)-22, Drain Valve.>

GETTHEMANUALS.org

DB:DTC P1458 CANISTER PURGE CONTROL SOLENOID VALVE 2

DTC DETECTING CONDITION:

- Detected when two consecutive driving cycles with fault occur.
- GENERAL DESCRIPTION <Ref. to GD(H4DOTC)-199, DTC P1458 CANISTER PURGE CONTROL SOLENOID VALVE 2, Diagnostic Trouble Code (DTC) Detecting Criteria.>

TROUBLE SYMPTOM:

Improper idling

CAUTION:

After servicing or replacing faulty parts, perform Clear Memory Mode <Ref. to EN(H4DOTC)(diag)-53, OPERATION, Clear Memory Mode.>, and Inspection Mode <Ref. to EN(H4DOTC)(diag)-41, PROCEDURE, Inspection Mode.>.

WIRING DIAGRAM:

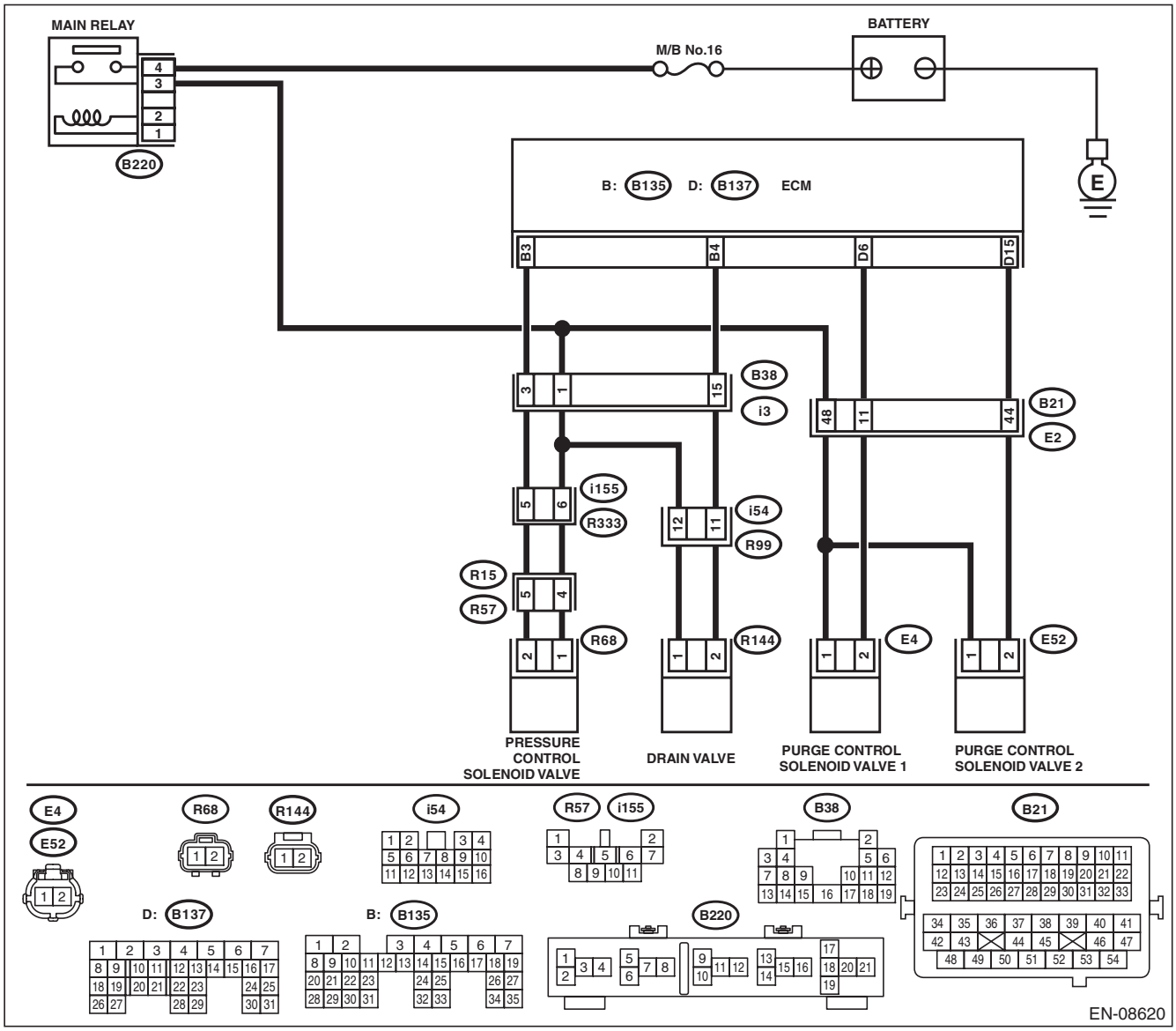

GETtheMANUALS.org

	Step	Check	Yes	No
1	**CHECK OUTPUT SIGNAL OF ECM.** 1) Turn the ignition switch to ON. 2) Measure the voltage between ECM and chassis ground. ***Connector & terminal*** ***(B137) No. 15 (+) — Chassis ground (–):***	Is the voltage 10 V or more?	Go to step **2**.	Go to step **3**.
2	**CHECK FOR POOR CONTACT.** Check for poor contact of ECM connector.	Is there poor contact of ECM connector?	Repair the poor contact of ECM connector.	Even if DTC is detected, the circuit has returned to a normal condition at this time. Reproduce the failure, and then perform the diagnosis again. NOTE: In this case, temporary open or short circuit of harness or temporary poor contact of connector may be the cause.
3	**CHECK POWER SUPPLY TO PURGE CONTROL SOLENOID VALVE 2.** Measure the voltage between purge control solenoid valve 2 connector and engine ground. ***Connector & terminal*** ***(E52) No. 1 (+) — Engine ground (–):***	Is the voltage 10 V or more?	Go to step **4**.	Repair the power supply circuit.
4	**CHECK HARNESS BETWEEN ECM AND PURGE CONTROL SOLENOID VALVE 2 CONNECTOR.** 1) Turn the ignition switch to OFF. 2) Disconnect the connectors from ECM and purge control solenoid valve 2. 3) Measure the resistance between the purge control solenoid valve 2 connector and engine ground. ***Connector & terminal*** ***(E52) No. 2 — Engine ground:***	Is the resistance 1 MΩ or more?	Go to step **5**.	Repair the ground short circuit of harness between ECM and purge control solenoid valve 2 connector.
5	**CHECK HARNESS BETWEEN ECM AND PURGE CONTROL SOLENOID VALVE 2 CONNECTOR.** Measure the resistance of harness between ECM and purge control solenoid valve 2 connector. ***Connector & terminal*** ***(B137) No. 15 — (E52) No. 2:***	Is the resistance less than 1 Ω?	Go to step **6**.	Repair the harness and connector. NOTE: In this case, repair the following item: • Open circuit of harness between ECM and purge control solenoid valve 2 connector • Poor contact of coupling connector
6	**CHECK PURGE CONTROL SOLENOID VALVE 2.** 1) Remove the purge control solenoid valve 2. 2) Measure the resistance between purge control solenoid valve 2 terminals. ***Terminals*** ***No. 1 — No. 2:***	Is the resistance 10 — 100 Ω?	Repair the poor contact of the purge control solenoid valve 2 connector.	Replace the purge control solenoid valve 2. <Ref. to EC(H4DOTC)-9, Purge Control Solenoid Valve.>

GETTHEMANUALS.org

DC:DTC P1459 CANISTER PURGE CONTROL SOLENOID VALVE 2

DTC DETECTING CONDITION:

- Detected when two consecutive driving cycles with fault occur.
- GENERAL DESCRIPTION <Ref. to GD(H4DOTC)-200, DTC P1459 CANISTER PURGE CONTROL SOLENOID VALVE 2, Diagnostic Trouble Code (DTC) Detecting Criteria.>

TROUBLE SYMPTOM:

Improper idling

CAUTION:

After servicing or replacing faulty parts, perform Clear Memory Mode <Ref. to EN(H4DOTC)(diag)-53, OPERATION, Clear Memory Mode.>, and Inspection Mode <Ref. to EN(H4DOTC)(diag)-41, PROCEDURE, Inspection Mode.>.

WIRING DIAGRAM:

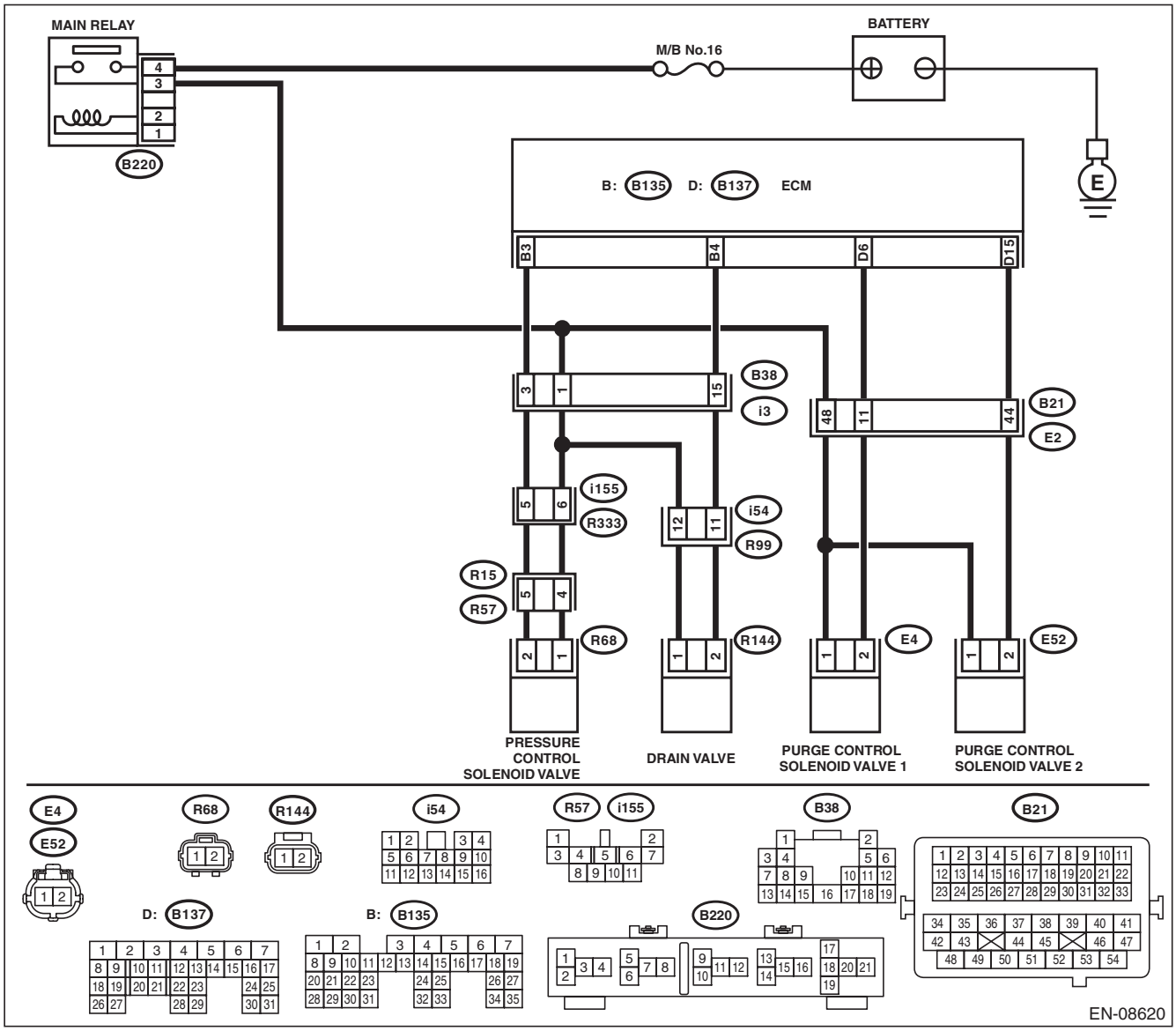

GETtheMANUALS.org

Step		Check	Yes	No
1	**CHECK HARNESS BETWEEN ECM AND PURGE CONTROL SOLENOID VALVE 2 CONNECTOR.** 1) Turn the ignition switch to OFF. 2) Disconnect the connectors from ECM and purge control solenoid valve 2. 3) Turn the ignition switch to ON. 4) Measure the voltage between ECM and chassis ground. ***Connector & terminal*** ***(B137) No. 15 (+) — Chassis ground (–):***	Is the voltage 10 V or more?	Repair the short to power in the harness between ECM and purge control solenoid valve 2 connector.	Go to step **2**.
2	**CHECK PURGE CONTROL SOLENOID VALVE 2.** 1) Turn the ignition switch to OFF. 2) Measure the resistance between purge control solenoid valve 2 terminals. ***Terminals*** ***No. 1 — No. 2:***	Is the resistance less than 1 Ω?	Replace the purge control solenoid valve 2. <Ref. to EC(H4DOTC)-9, Purge Control Solenoid Valve.>	Repair the poor contact of ECM connector.

GETTHEMANUALS.org

DD:DTC P1518 STARTER SWITCH CIRCUIT LOW INPUT

DTC DETECTING CONDITION:

- Immediately at fault recognition
- GENERAL DESCRIPTION <Ref. to GD(H4DOTC)-201, DTC P1518 STARTER SWITCH CIRCUIT LOW INPUT, Diagnostic Trouble Code (DTC) Detecting Criteria.>

TROUBLE SYMPTOM:

Failure of engine to start

CAUTION:

After servicing or replacing faulty parts, perform Clear Memory Mode <Ref. to EN(H4DOTC)(diag)-53, OPERATION, Clear Memory Mode.>, and Inspection Mode <Ref. to EN(H4DOTC)(diag)-41, PROCEDURE, Inspection Mode.>.

WIRING DIAGRAM:

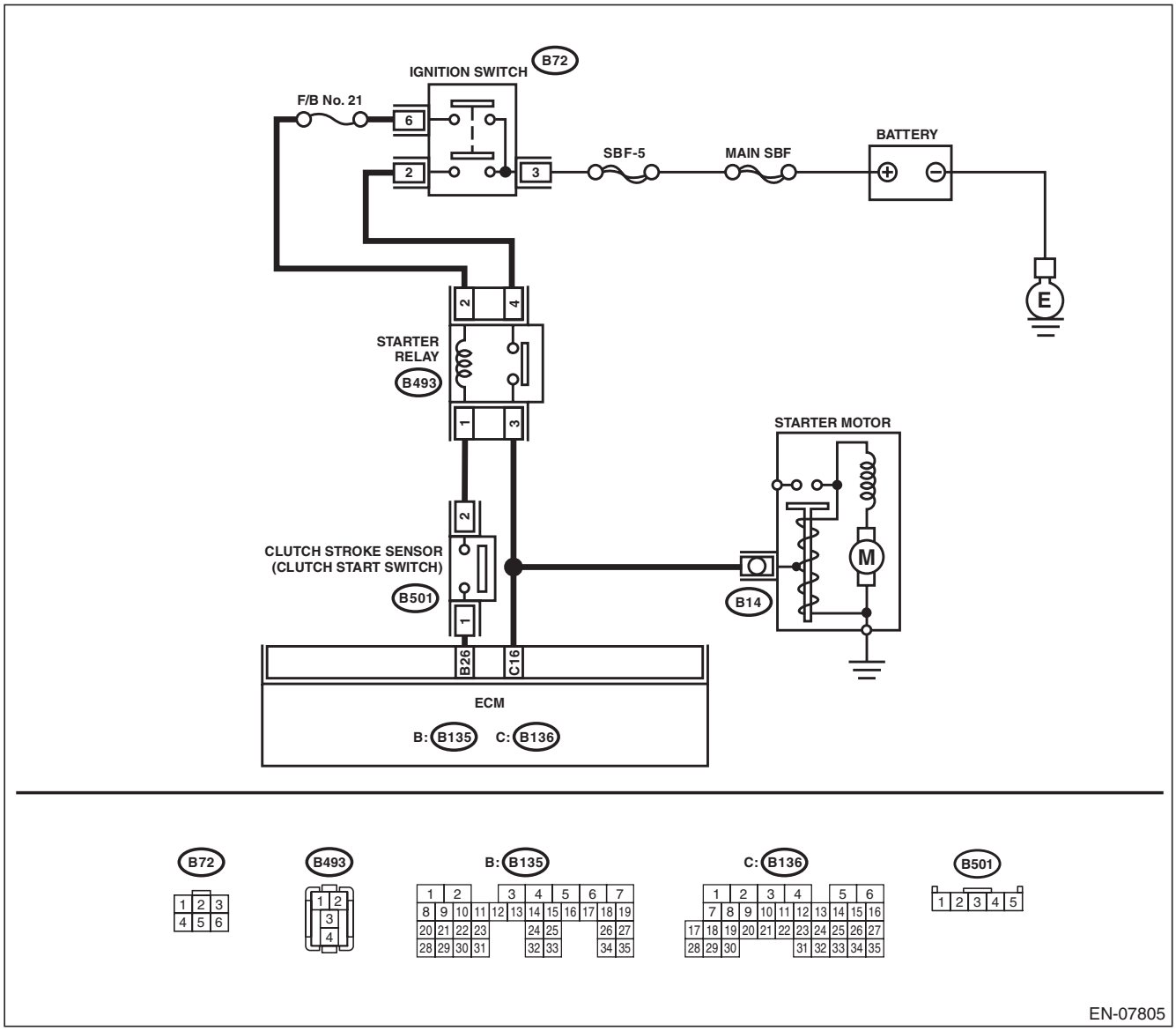

GETHEMANUALS.org

Step		Check	Yes	No
1	**CHECK FOR ANY OTHER DTC ON DISPLAY.**	Is any other DTC displayed?	Check DTC using "List of Diagnostic Trouble Code (DTC)". <Ref. to EN(H4DOTC)(diag)-75, List of Diagnostic Trouble Code (DTC).>	Go to step **2**.
2	**CHECK HARNESS BETWEEN ECM AND STARTER RELAY CONNECTOR.** 1) Turn the ignition to OFF. 2) Disconnect the connectors from ECM and starter motor. 3) Remove the starter relay. 4) Measure the resistance of harness between ECM and starter relay connector. ***Connector & terminal*** ***(B136) No. 16 — (B493) No. 3:***	Is the resistance less than 1 Ω?	Go to step **3**.	Repair the open circuit of harness between ECM and starter relay connector.
3	**CHECK HARNESS BETWEEN ECM AND STARTER RELAY CONNECTOR.** Measure the resistance between ECM and chassis ground. ***Connector & terminal*** ***(B136) No. 16 — Chassis ground:***	Is the resistance 1 MΩ or more?	Repair the poor contact of ECM connector.	Repair the short circuit to ground in harness between ECM and starter relay connector.

GETTHEMANUALS.org

DE:DTC P1560 BACK-UP VOLTAGE CIRCUIT MALFUNCTION

DTC DETECTING CONDITION:

- Immediately at fault recognition
- GENERAL DESCRIPTION <Ref. to GD(H4DOTC)-202, DTC P1560 BACK-UP VOLTAGE CIRCUIT MALFUNCTION, Diagnostic Trouble Code (DTC) Detecting Criteria.>

CAUTION:

After servicing or replacing faulty parts, perform Clear Memory Mode <Ref. to EN(H4DOTC)(diag)-53, OPERATION, Clear Memory Mode.>, and Inspection Mode <Ref. to EN(H4DOTC)(diag)-41, PROCEDURE, Inspection Mode.>.

WIRING DIAGRAM:

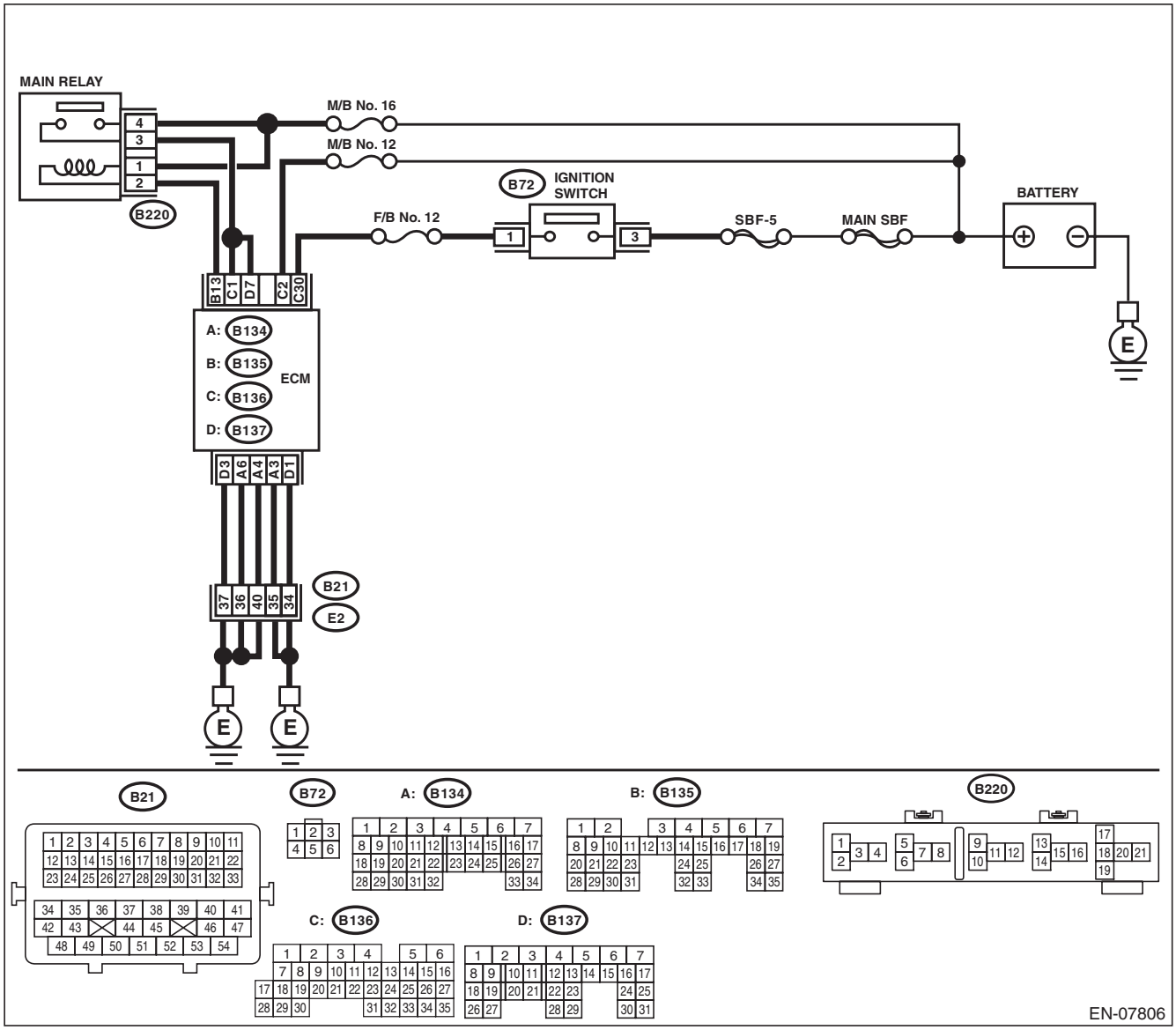

Step	Check	Yes	No
1 **CHECK INPUT SIGNAL OF ECM.** 1) Turn the ignition switch to OFF. 2) Measure the voltage between ECM and chassis ground. ***Connector & terminal*** ***(B136) No. 2 (+) — Chassis ground (–):***	Is the voltage 10 V or more?	Repair the poor contact of ECM connector.	Go to step **2**.

GETHEMANUALS.org

Step		Check	Yes	No
2	**CHECK HARNESS BETWEEN ECM AND MAIN FUSE BOX CONNECTOR.** 1) Disconnect the connector from ECM. 2) Measure the resistance between ECM and chassis ground. ***Connector & terminal*** ***(B136) No. 2 — Chassis ground:***	Is the resistance 1 MΩ or more?	Go to step **3**.	Repair the ground short circuit of harness between ECM and battery terminal.
3	**CHECK M/B FUSE NO. 12.**	Is the fuse blown out?	Replace the fuse.	Repair the harness and connector. NOTE: In this case, repair the following item: • Open circuit in harness between ECM and battery • Poor contact of ECM connector • Poor contact of battery terminal

GETTHEMANUALS.org

DF:DTC P2004 INTAKE MANIFOLD RUNNER CONTROL STUCK OPEN (BANK 1)

DTC DETECTING CONDITION:

- Immediately at fault recognition
- GENERAL DESCRIPTION <Ref. to GD(H4DOTC)-204, DTC P2004 INTAKE MANIFOLD RUNNER CONTROL STUCK OPEN (BANK 1), Diagnostic Trouble Code (DTC) Detecting Criteria.>

CAUTION:

After servicing or replacing faulty parts, perform Clear Memory Mode <Ref. to EN(H4DOTC)(diag)-53, OPERATION, Clear Memory Mode.>, and Inspection Mode <Ref. to EN(H4DOTC)(diag)-41, PROCEDURE, Inspection Mode.>.

	Step	Check	Yes	No
1	**CHECK FOR ANY OTHER DTC ON DISPLAY.**	Is any other DTC displayed?	Check the appropriate DTC using the “List of Diagnostic Trouble Code (DTC)”. <Ref. to EN(H4DOTC)(diag)-75, List of Diagnostic Trouble Code (DTC).>	Go to step **2**.
2	**CHECK TUMBLE GENERATOR VALVE RH.** 1) Remove the tumble generator valve assembly RH. 2) Check the tumble generator valve body.	Is there any dirt or clogging with foreign objects in the tumble generator valve?	Clean the tumble generator valve.	Replace the tumble generator valve assembly RH. <Ref. to FU(H4DOTC)-48, Tumble Generator Valve Assembly.>

GETTHEMANUALS.org

DG:DTC P2005 INTAKE MANIFOLD RUNNER CONTROL STUCK OPEN (BANK 2)

DTC DETECTING CONDITION:

- Immediately at fault recognition
- GENERAL DESCRIPTION <Ref. to GD(H4DOTC)-205, DTC P2005 INTAKE MANIFOLD RUNNER CONTROL STUCK OPEN (BANK 2), Diagnostic Trouble Code (DTC) Detecting Criteria.>

CAUTION:

After servicing or replacing faulty parts, perform Clear Memory Mode <Ref. to EN(H4DOTC)(diag)-53, OPERATION, Clear Memory Mode.>, and Inspection Mode <Ref. to EN(H4DOTC)(diag)-41, PROCEDURE, Inspection Mode.>.

	Step	Check	Yes	No
1	**CHECK FOR ANY OTHER DTC ON DISPLAY.**	Is any other DTC displayed?	Check the appropriate DTC using the “List of Diagnostic Trouble Code (DTC)”. <Ref. to EN(H4DOTC)(diag)-75, List of Diagnostic Trouble Code (DTC).>	Go to step **2**.
2	**CHECK TUMBLE GENERATOR VALVE LH.** 1) Remove the tumble generator valve assembly LH. 2) Check the tumble generator valve body.	Is there any dirt or clogging with foreign objects in the tumble generator valve?	Clean the tumble generator valve.	Replace the tumble generator valve assembly LH. <Ref. to FU(H4DOTC)-48, Tumble Generator Valve Assembly.>

GETTHEMANUALS.org

DH:DTC P2006 INTAKE MANIFOLD RUNNER CONTROL STUCK CLOSED (BANK 1)

DTC DETECTING CONDITION:

- Immediately at fault recognition
- GENERAL DESCRIPTION <Ref. to GD(H4DOTC)-206, DTC P2006 INTAKE MANIFOLD RUNNER CONTROL STUCK CLOSED (BANK 1), Diagnostic Trouble Code (DTC) Detecting Criteria.>

CAUTION:

After servicing or replacing faulty parts, perform Clear Memory Mode <Ref. to EN(H4DOTC)(diag)-53, OPERATION, Clear Memory Mode.>, and Inspection Mode <Ref. to EN(H4DOTC)(diag)-41, PROCEDURE, Inspection Mode.>.

	Step	Check	Yes	No
1	**CHECK FOR ANY OTHER DTC ON DISPLAY.**	Is any other DTC displayed?	Check the appropriate DTC using the “List of Diagnostic Trouble Code (DTC)”. <Ref. to EN(H4DOTC)(diag)-75, List of Diagnostic Trouble Code (DTC).>	Go to step **2**.
2	**CHECK TUMBLE GENERATOR VALVE RH.** 1) Remove the tumble generator valve assembly RH. 2) Check the tumble generator valve body.	Is there any dirt or clogging with foreign objects in the tumble generator valve?	Clean the tumble generator valve.	Replace the tumble generator valve assembly RH. <Ref. to FU(H4DOTC)-48, Tumble Generator Valve Assembly.>

GETTHEMANUALS.org

DI: DTC P2007 INTAKE MANIFOLD RUNNER CONTROL STUCK CLOSED (BANK 2)

DTC DETECTING CONDITION:

- Immediately at fault recognition
- GENERAL DESCRIPTION <Ref. to GD(H4DOTC)-207, DTC P2007 INTAKE MANIFOLD RUNNER CONTROL STUCK CLOSED (BANK 2), Diagnostic Trouble Code (DTC) Detecting Criteria.>

CAUTION:

After servicing or replacing faulty parts, perform Clear Memory Mode <Ref. to EN(H4DOTC)(diag)-53, OPERATION, Clear Memory Mode.>, and Inspection Mode <Ref. to EN(H4DOTC)(diag)-41, PROCEDURE, Inspection Mode.>.

	Step	Check	Yes	No
1	**CHECK FOR ANY OTHER DTC ON DISPLAY.**	Is any other DTC displayed?	Check the appropriate DTC using the “List of Diagnostic Trouble Code (DTC)”. <Ref. to EN(H4DOTC)(diag)-75, List of Diagnostic Trouble Code (DTC).>	Go to step **2**.
2	**CHECK TUMBLE GENERATOR VALVE LH.** 1) Remove the tumble generator valve assembly LH. 2) Check the tumble generator valve body.	Is there any dirt or clogging with foreign objects in the tumble generator valve?	Clean the tumble generator valve.	Replace the tumble generator valve assembly LH. <Ref. to FU(H4DOTC)-48, Tumble Generator Valve Assembly.>

GETTHEMANUALS.org

DJ:DTC P2008 INTAKE MANIFOLD RUNNER CONTROL CIRCUIT / OPEN (BANK 1)

DTC DETECTING CONDITION:

- Immediately at fault recognition
- GENERAL DESCRIPTION <Ref. to GD(H4DOTC)-208, DTC P2008 INTAKE MANIFOLD RUNNER CONTROL CIRCUIT / OPEN (BANK 1), Diagnostic Trouble Code (DTC) Detecting Criteria.>

CAUTION:

After servicing or replacing faulty parts, perform Clear Memory Mode <Ref. to EN(H4DOTC)(diag)-53, OPERATION, Clear Memory Mode.>, and Inspection Mode <Ref. to EN(H4DOTC)(diag)-41, PROCEDURE, Inspection Mode.>.

WIRING DIAGRAM:

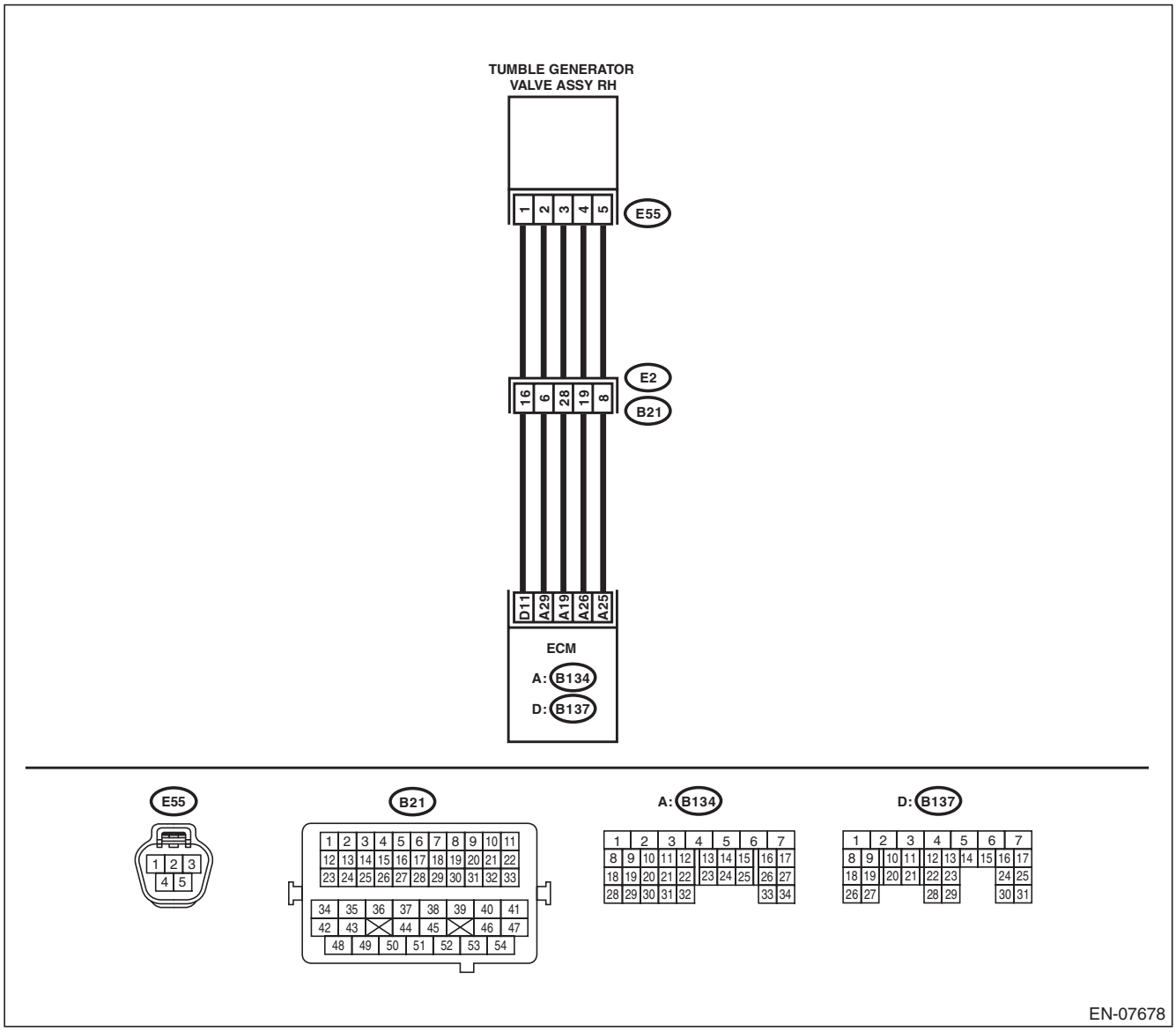

GETtheMANUALS.org

Step		Check	Yes	No
1	**CHECK HARNESS BETWEEN ECM AND TUMBLE GENERATOR VALVE ASSEMBLY RH CONNECTOR.** 1) Turn the ignition switch to OFF. 2) Disconnect the connectors from the ECM and tumble generator valve assembly RH. 3) Measure the resistance of harness between ECM and tumble generator valve assembly RH. ***Connector & terminal*** ***(B134) No. 25 — (E55) No. 5:*** ***(B134) No. 26 — (E55) No. 4:***	Is the resistance less than 1 Ω?	Go to step **2**.	Repair the harness and connector. NOTE: In this case, repair the following item: • Open circuit in harness between ECM and tumble generator valve assembly RH connector • Poor contact of coupling connector
2	**CHECK HARNESS BETWEEN ECM AND TUMBLE GENERATOR VALVE ASSEMBLY RH CONNECTOR.** Measure the resistance between ECM and chassis ground. ***Connector & terminal*** ***(B134) No. 25 — Chassis ground:*** ***(B134) No. 26 — Chassis ground:***	Is the resistance 1 MΩ or more?	Go to step **3**.	Repair the short circuit to ground in harness between ECM and tumble generator valve assembly RH connector.
3	**CHECK FOR POOR CONTACT.** Check for poor contact of tumble generator valve assembly RH connector.	Is there poor contact of the tumble generator valve assembly RH connector?	Repair the poor contact of tumble generator valve assembly RH connector.	Replace the tumble generator valve assembly RH. <Ref. to FU(H4DOTC)-48, Tumble Generator Valve Assembly.>

GETTHEMANUALS.org

DK:DTC P2009 INTAKE MANIFOLD RUNNER CONTROL CIRCUIT LOW (BANK 1)

DTC DETECTING CONDITION:

- Immediately at fault recognition
- GENERAL DESCRIPTION <Ref. to GD(H4DOTC)-210, DTC P2009 INTAKE MANIFOLD RUNNER CONTROL CIRCUIT LOW (BANK 1), Diagnostic Trouble Code (DTC) Detecting Criteria.>

CAUTION:

After servicing or replacing faulty parts, perform Clear Memory Mode <Ref. to EN(H4DOTC)(diag)-53, OPERATION, Clear Memory Mode.>, and Inspection Mode <Ref. to EN(H4DOTC)(diag)-41, PROCEDURE, Inspection Mode.>.

WIRING DIAGRAM:

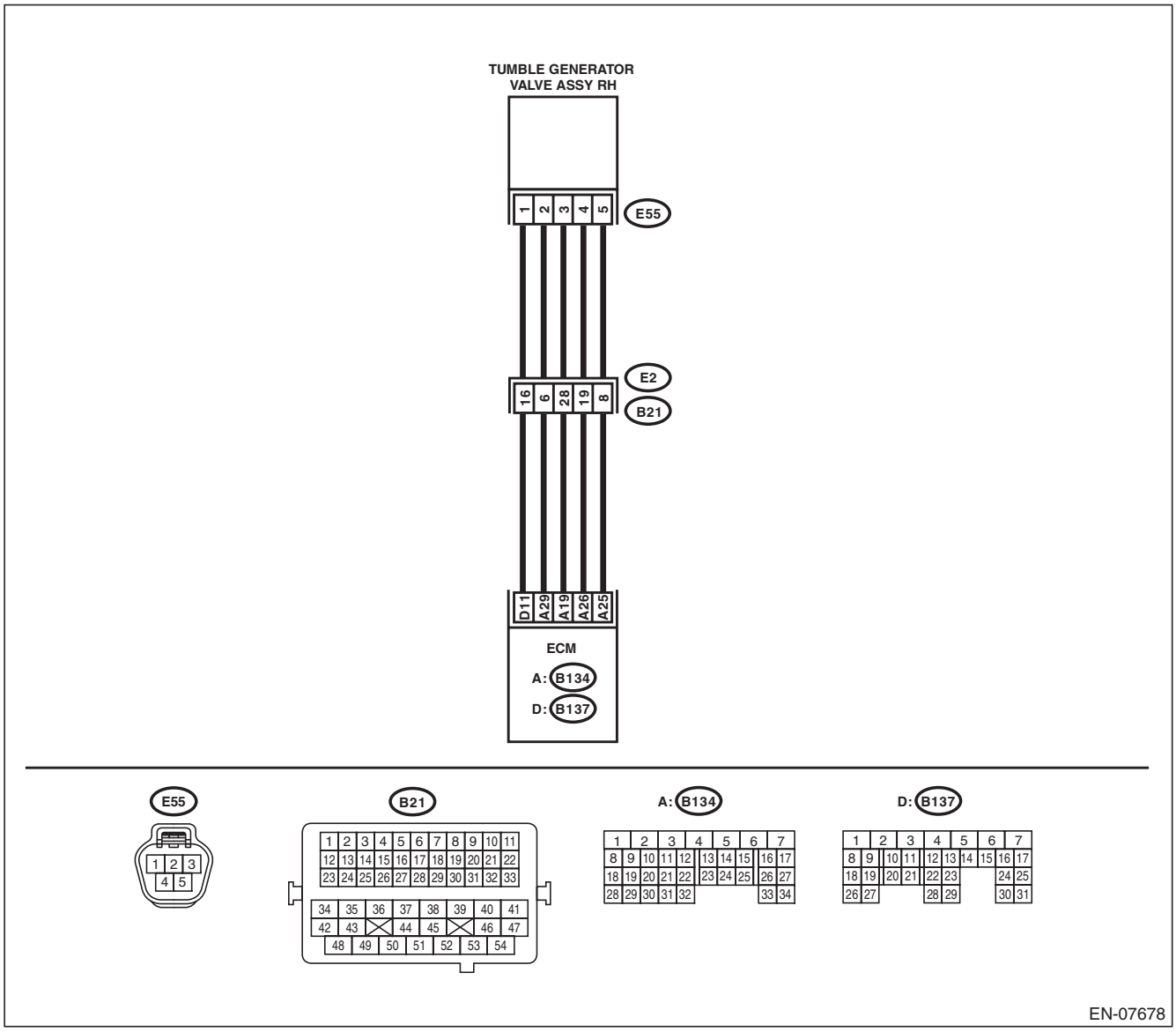

GETtheMANUALS.org

Step		Check	Yes	No
1	**CHECK HARNESS BETWEEN ECM AND TUMBLE GENERATOR VALVE ASSEMBLY RH CONNECTOR.** 1) Turn the ignition switch to OFF. 2) Disconnect the connectors from ECM. 3) Measure the voltage between ECM and chassis ground. ***Connector & terminal*** ***(B134) No. 25 (+) — Chassis ground (–):*** ***(B134) No. 26 (+) — Chassis ground (–):***	Is the voltage 5 V or more?	Repair the short circuit to power in harness between ECM and tumble generator valve assembly RH connector.	Replace the tumble generator valve assembly RH. <Ref. to FU(H4DOTC)-48, Tumble Generator Valve Assembly.>

GETTHEMANUALS.org

DL:DTC P2011 INTAKE MANIFOLD RUNNER CONTROL CIRCUIT / OPEN (BANK 2)

DTC DETECTING CONDITION:

- Immediately at fault recognition
- GENERAL DESCRIPTION <Ref. to GD(H4DOTC)-211, DTC P2011 INTAKE MANIFOLD RUNNER CONTROL CIRCUIT / OPEN (BANK 2), Diagnostic Trouble Code (DTC) Detecting Criteria.>

CAUTION:

After servicing or replacing faulty parts, perform Clear Memory Mode <Ref. to EN(H4DOTC)(diag)-53, OPERATION, Clear Memory Mode.>, and Inspection Mode <Ref. to EN(H4DOTC)(diag)-41, PROCEDURE, Inspection Mode.>.

WIRING DIAGRAM:

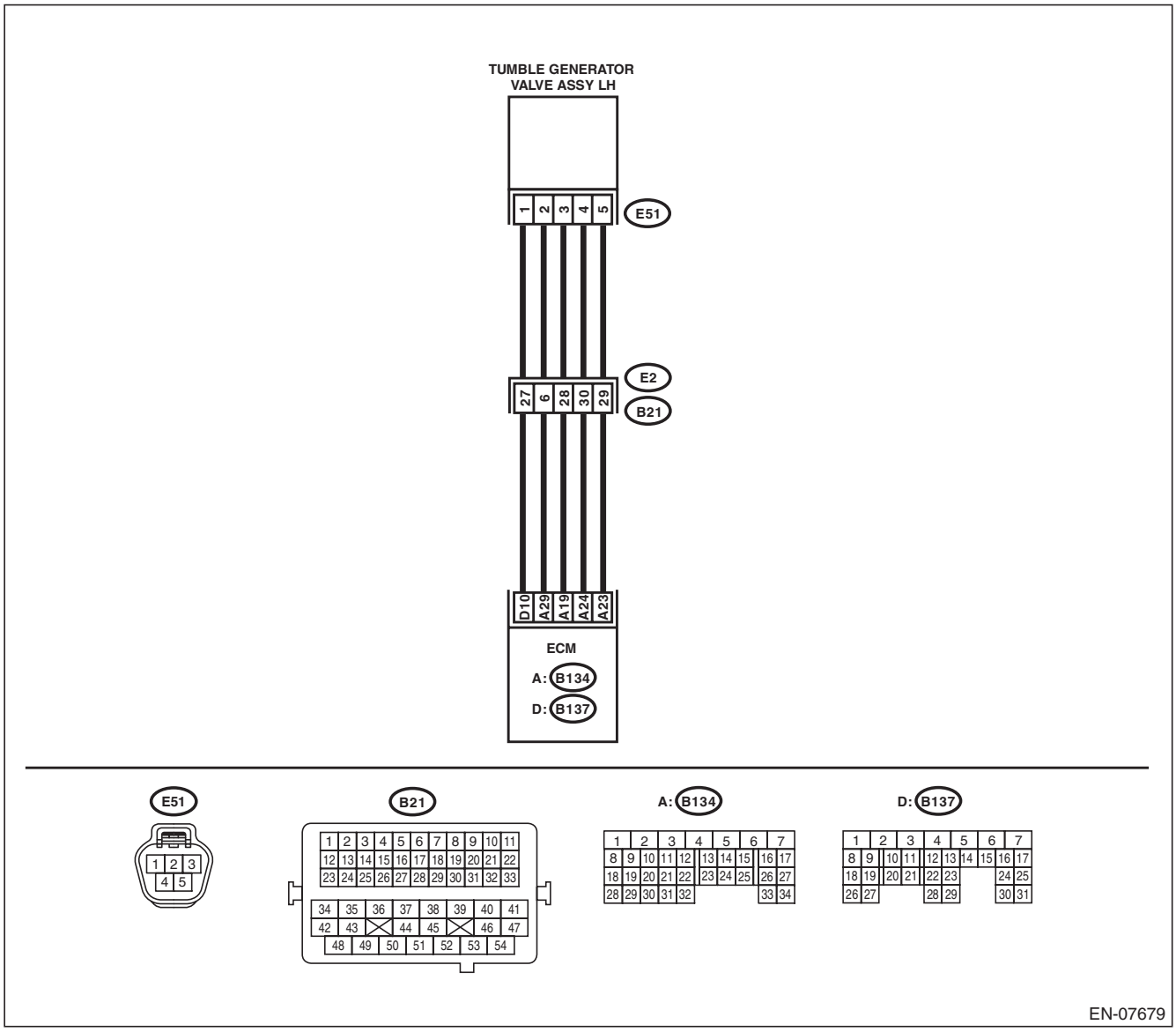

GETtheMANUALS.org

Step		Check	Yes	No
1	**CHECK HARNESS BETWEEN ECM AND TUMBLE GENERATOR VALVE ASSEMBLY LH CONNECTOR.** 1) Turn the ignition switch to OFF. 2) Disconnect the connectors from ECM and tumble generator valve assembly LH. 3) Measure the resistance of harness between ECM and tumble generator valve assembly LH. ***Connector & terminal*** ***(B134) No. 23 — (E51) No. 5:*** ***(B134) No. 24 — (E51) No. 4:***	Is the resistance less than 1 Ω?	Go to step **2**.	Repair the harness and connector. NOTE: In this case, repair the following item: • Open circuit in harness between ECM and tumble generator valve assembly LH connector • Poor contact of coupling connector
2	**CHECK HARNESS BETWEEN ECM AND TUMBLE GENERATOR VALVE ASSEMBLY LH CONNECTOR.** Measure the resistance between ECM and chassis ground. ***Connector & terminal*** ***(B134) No. 23 — Chassis ground:*** ***(B134) No. 24 — Chassis ground:***	Is the resistance 1 MΩ or more?	Go to step **3**.	Repair the short circuit to ground in harness between ECM and tumble generator valve assembly LH connector.
3	**CHECK FOR POOR CONTACT.** Check for poor contact of tumble generator valve assembly LH connector.	Is there poor contact of the tumble generator valve assembly LH connector?	Repair the poor contact of tumble generator valve assembly LH connector.	Replace the tumble generator valve assembly LH. <Ref. to FU(H4DOTC)-48, Tumble Generator Valve Assembly.>

GETTHEMANUALS.org

DM:DTC P2012 INTAKE MANIFOLD RUNNER CONTROL CIRCUIT LOW (BANK 2)

DTC DETECTING CONDITION:

- Immediately at fault recognition
- GENERAL DESCRIPTION <Ref. to GD(H4DOTC)-212, DTC P2012 INTAKE MANIFOLD RUNNER CONTROL CIRCUIT LOW (BANK 2), Diagnostic Trouble Code (DTC) Detecting Criteria.>

CAUTION:

After servicing or replacing faulty parts, perform Clear Memory Mode <Ref. to EN(H4DOTC)(diag)-53, OPERATION, Clear Memory Mode.>, and Inspection Mode <Ref. to EN(H4DOTC)(diag)-41, PROCEDURE, Inspection Mode.>.

WIRING DIAGRAM:

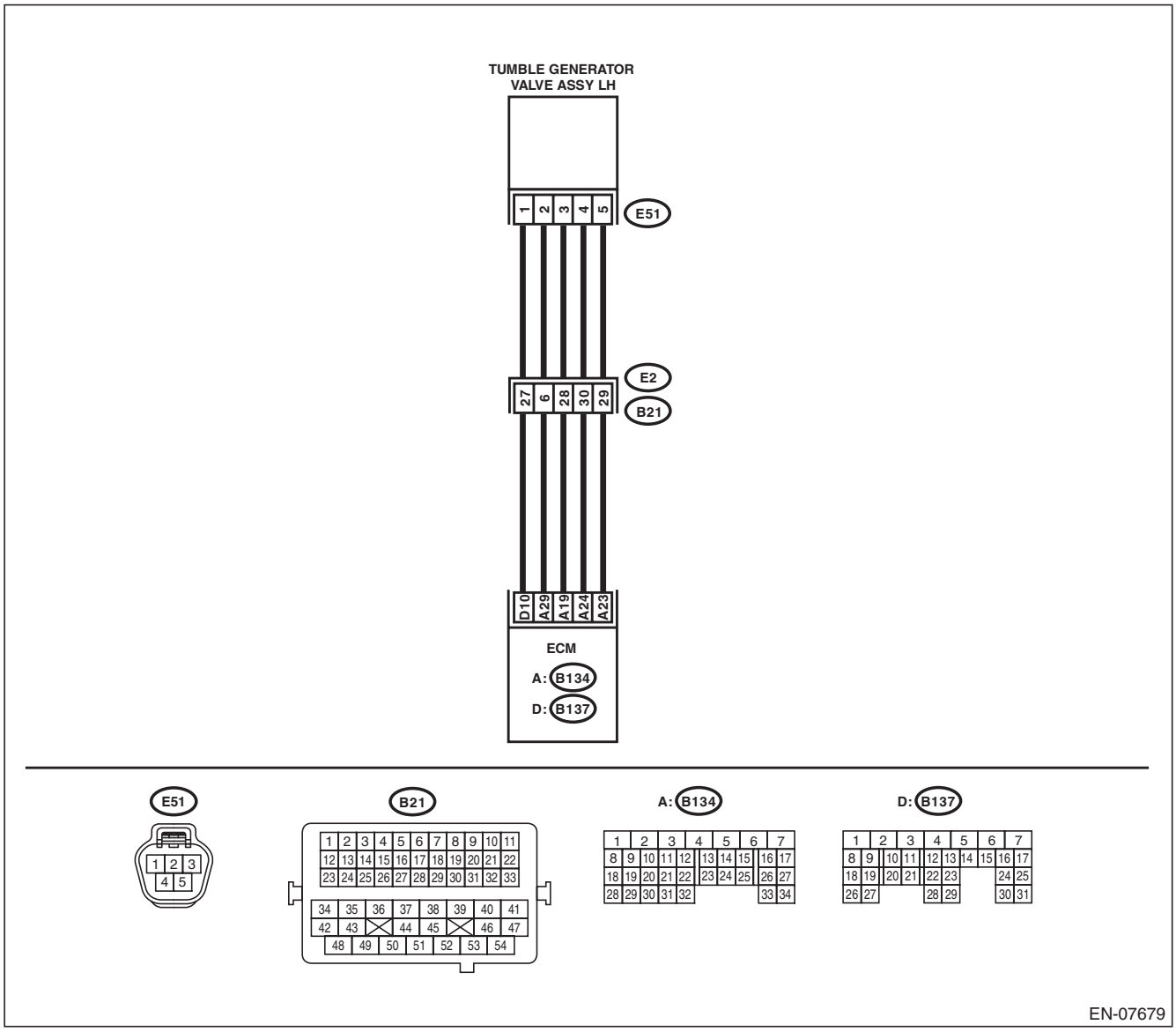

GETTHEMANUALS.org

Step		Check	Yes	No
1	**CHECK HARNESS BETWEEN ECM AND TUMBLE GENERATOR VALVE ASSEMBLY LH CONNECTOR.** 1) Turn the ignition switch to OFF. 2) Disconnect the connectors from ECM. 3) Measure the voltage between ECM and chassis ground. ***Connector & terminal*** ***(B134) No. 23 (+) — Chassis ground (–):*** ***(B134) No. 24 (+) — Chassis ground (–):***	Is the voltage 5 V or more?	Repair the short circuit to power in harness between ECM and tumble generator valve assembly LH connector.	Replace the tumble generator valve assembly LH. <Ref. to FU(H4DOTC)-48, Tumble Generator Valve Assembly.>

GETTHEMANUALS.org

DN:DTC P2016 INTAKE MANIFOLD RUNNER POSITION SENSOR / SWITCH CIRCUIT LOW (BANK 1)

DTC DETECTING CONDITION:

- Immediately at fault recognition
- GENERAL DESCRIPTION <Ref. to GD(H4DOTC)-213, DTC P2016 INTAKE MANIFOLD RUNNER POSITION SENSOR / SWITCH CIRCUIT LOW (BANK 1), Diagnostic Trouble Code (DTC) Detecting Criteria.>

TROUBLE SYMPTOM:

- Improper idling
- Engine stalls.
- Poor driving performance

CAUTION:

After servicing or replacing faulty parts, perform Clear Memory Mode <Ref. to EN(H4DOTC)(diag)-53, OPERATION, Clear Memory Mode.>, and Inspection Mode <Ref. to EN(H4DOTC)(diag)-41, PROCEDURE, Inspection Mode.>.

WIRING DIAGRAM:

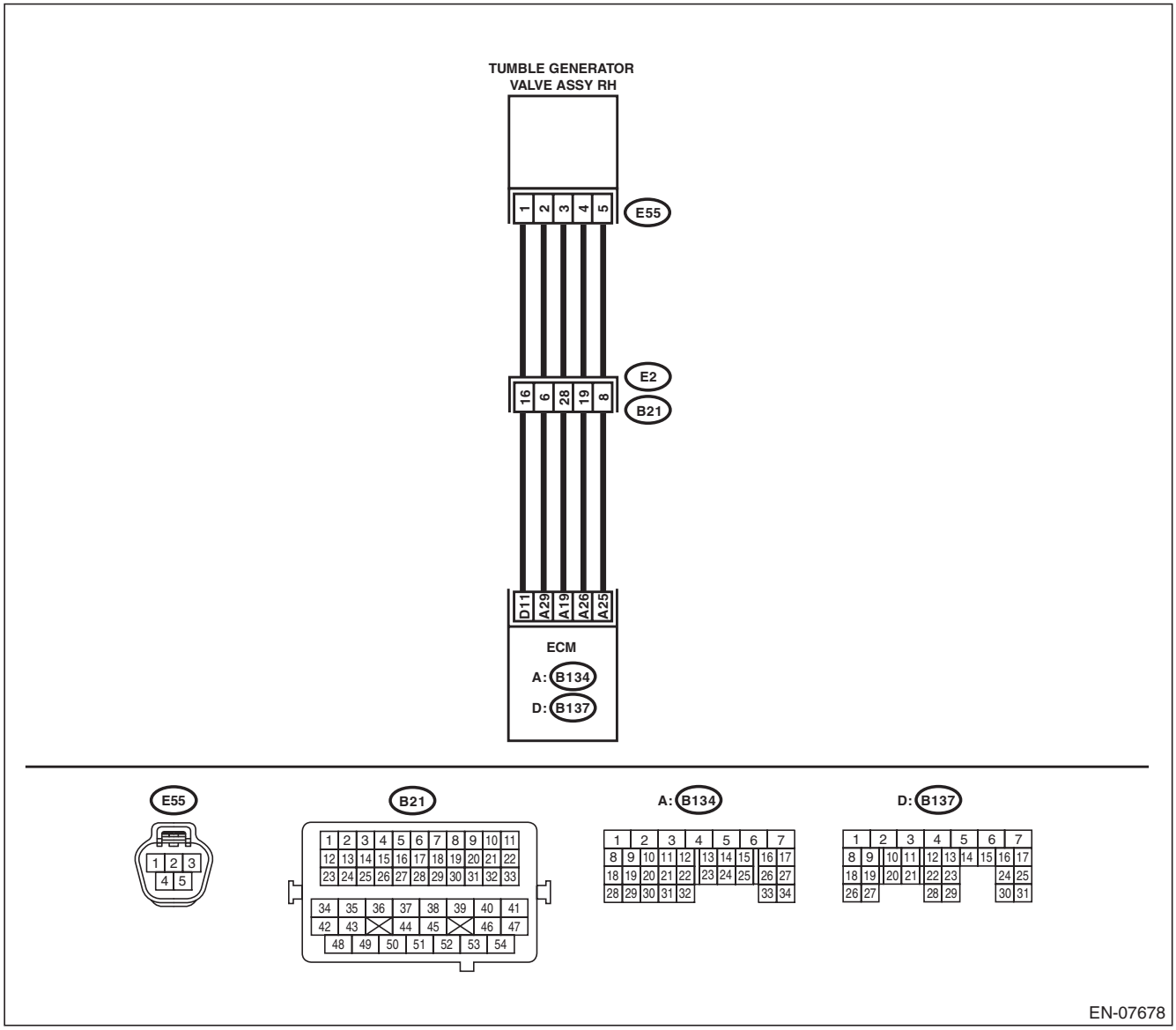

GETtheMANUALS.org

	Step	Check	Yes	No
1	**CHECK CURRENT DATA.** 1) Start the engine. 2) Read the value of «TGV Position Sensor R» using the Subaru Select Monitor. NOTE: For detailed operation procedures, refer to "READ CURRENT DATA FOR ENGINE". <Ref. to EN(H4DOTC)(diag)-34, Subaru Select Monitor.>	Is the value of «TGV Position Sensor R» less than 0.2 V?	Go to step **2**.	Even if DTC is detected, the circuit has returned to a normal condition at this time. Reproduce the failure, and then perform the diagnosis again. NOTE: In this case, temporary poor contact of connector, temporary open or short circuit of harness may be the cause.
2	**CHECK POWER SUPPLY OF TUMBLE GENERATOR VALVE ASSEMBLY RH.** 1) Turn the ignition switch to OFF. 2) Disconnect the connector from tumble generator valve assembly RH. 3) Turn the ignition switch to ON. 4) Measure the voltage between tumble generator valve assembly RH connector and engine ground. ***Connector & terminal*** ***(E55) No. 3 (+) — Engine ground (–):***	Is the voltage 4.5 V or more?	Go to step **3**.	Repair the harness and connector. NOTE: In this case, repair the following item: • Open circuit in harness between ECM and tumble generator valve assembly RH connector • Poor contact of ECM connector • Poor contact of coupling connector
3	**CHECK HARNESS BETWEEN ECM AND TUMBLE GENERATOR VALVE ASSEMBLY RH CONNECTOR.** 1) Turn the ignition switch to OFF. 2) Disconnect the connector from ECM. 3) Measure the resistance of harness between ECM and tumble generator valve assembly RH. ***Connector & terminal*** ***(B137) No. 11 — (E55) No. 1:***	Is the resistance less than 1 Ω?	Go to step **4**.	Repair the harness and connector. NOTE: In this case, repair the following item: • Open circuit in harness between ECM and tumble generator valve assembly RH connector • Poor contact of coupling connector
4	**CHECK HARNESS BETWEEN ECM AND TUMBLE GENERATOR VALVE ASSEMBLY RH CONNECTOR.** Measure the resistance between ECM and chassis ground. ***Connector & terminal*** ***(B137) No. 11 — Chassis ground:***	Is the resistance 1 MΩ or more?	Go to step **5**.	Repair the short circuit to ground in harness between ECM and tumble generator valve assembly RH connector.
5	**CHECK FOR POOR CONTACT.** Check for poor contact of ECM and tumble generator valve assembly RH connector.	Is there poor contact of ECM or the tumble generator valve assembly RH connector?	Repair the poor contact of ECM or tumble generator valve assembly RH connector.	Replace the tumble generator valve assembly RH. <Ref. to FU(H4DOTC)-48, Tumble Generator Valve Assembly.>

GETTHEMANUALS.org

DO:DTC P2017 INTAKE MANIFOLD RUNNER POSITION SENSOR / SWITCH CIRCUIT HIGH (BANK 1)

DTC DETECTING CONDITION:

- Immediately at fault recognition
- GENERAL DESCRIPTION <Ref. to GD(H4DOTC)-215, DTC P2017 INTAKE MANIFOLD RUNNER POSITION SENSOR / SWITCH CIRCUIT HIGH (BANK 1), Diagnostic Trouble Code (DTC) Detecting Criteria.>

TROUBLE SYMPTOM:

- Improper idling
- Engine stalls.
- Poor driving performance

CAUTION:

After servicing or replacing faulty parts, perform Clear Memory Mode <Ref. to EN(H4DOTC)(diag)-53, OPERATION, Clear Memory Mode.>, and Inspection Mode <Ref. to EN(H4DOTC)(diag)-41, PROCEDURE, Inspection Mode.>.

WIRING DIAGRAM:

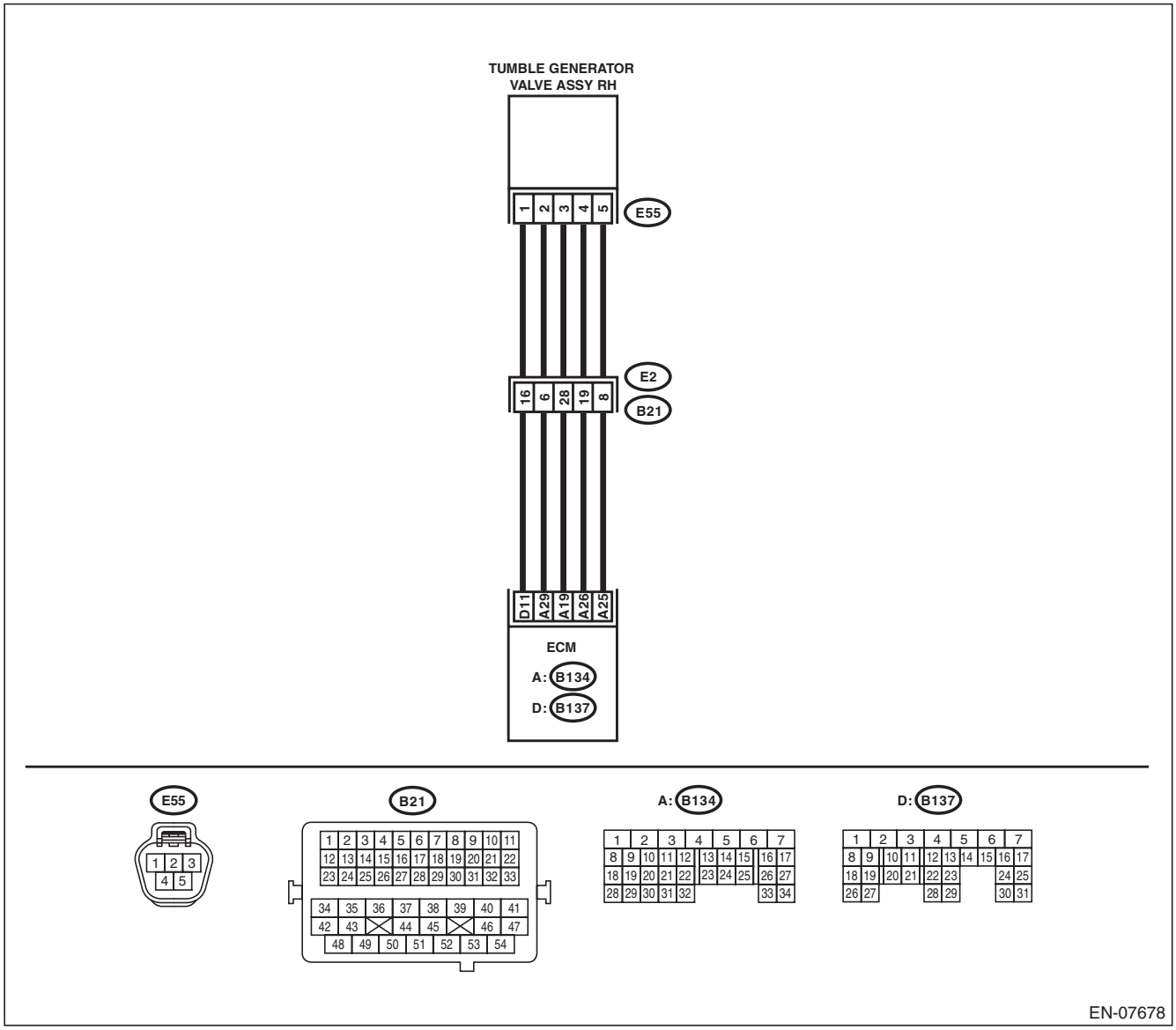

GETtheMANUALS.org

	Step	Check	Yes	No
1	**CHECK CURRENT DATA.** 1) Start the engine. 2) Read the value of «TGV Position Sensor R» using the Subaru Select Monitor. NOTE: For detailed operation procedures, refer to "READ CURRENT DATA FOR ENGINE". <Ref. to EN(H4DOTC)(diag)-34, Subaru Select Monitor.>	Is the value of «TGV Position Sensor R» 5 V or more?	Go to step **2**.	Even if DTC is detected, the circuit has returned to a normal condition at this time. Reproduce the failure, and then perform the diagnosis again. NOTE: In this case, temporary poor contact of connector, temporary open or short circuit of harness may be the cause.
2	**CHECK HARNESS BETWEEN ECM AND TUMBLE GENERATOR VALVE ASSEMBLY RH CONNECTOR.** 1) Turn the ignition switch to OFF. 2) Disconnect the connector from tumble generator valve assembly RH. 3) Start the engine. 4) Read the value of «TGV Position Sensor R» using the Subaru Select Monitor. NOTE: For detailed operation procedures, refer to "READ CURRENT DATA FOR ENGINE". <Ref. to EN(H4DOTC)(diag)-34, Subaru Select Monitor.>	Is the value of «TGV Position Sensor R» 5 V or more?	Repair the short circuit to power in harness between ECM and tumble generator valve assembly RH connector.	Go to step **3**.
3	**CHECK HARNESS BETWEEN ECM AND TUMBLE GENERATOR VALVE ASSEMBLY RH CONNECTOR.** 1) Turn the ignition switch to OFF. 2) Measure the resistance of harness between tumble generator valve assembly RH connector and engine ground. ***Connector & terminal*** ***(E55) No. 2 — Engine ground:***	Is the resistance less than 5 Ω?	Go to step **4**.	Repair the harness and connector. NOTE: In this case, repair the following item: • Open circuit in harness between ECM and tumble generator valve assembly RH connector • Poor contact of ECM connector • Poor contact of coupling connector
4	**CHECK FOR POOR CONTACT.** Check for poor contact of tumble generator valve assembly RH connector.	Is there poor contact of the tumble generator valve assembly RH connector?	Repair the poor contact of tumble generator valve assembly RH connector.	Replace the tumble generator valve assembly RH. <Ref. to FU(H4DOTC)-48, Tumble Generator Valve Assembly.>

GETTHEMANUALS.org

DP:DTC P2021 INTAKE MANIFOLD RUNNER POSITION SENSOR / SWITCH CIRCUIT LOW (BANK 2)

DTC DETECTING CONDITION:

- Immediately at fault recognition
- GENERAL DESCRIPTION <Ref. to GD(H4DOTC)-217, DTC P2021 INTAKE MANIFOLD RUNNER POSITION SENSOR / SWITCH CIRCUIT LOW (BANK 2), Diagnostic Trouble Code (DTC) Detecting Criteria.>

TROUBLE SYMPTOM:

- Improper idling
- Engine stalls.
- Poor driving performance

CAUTION:

After servicing or replacing faulty parts, perform Clear Memory Mode <Ref. to EN(H4DOTC)(diag)-53, OPERATION, Clear Memory Mode.>, and Inspection Mode <Ref. to EN(H4DOTC)(diag)-41, PROCEDURE, Inspection Mode.>.

WIRING DIAGRAM:

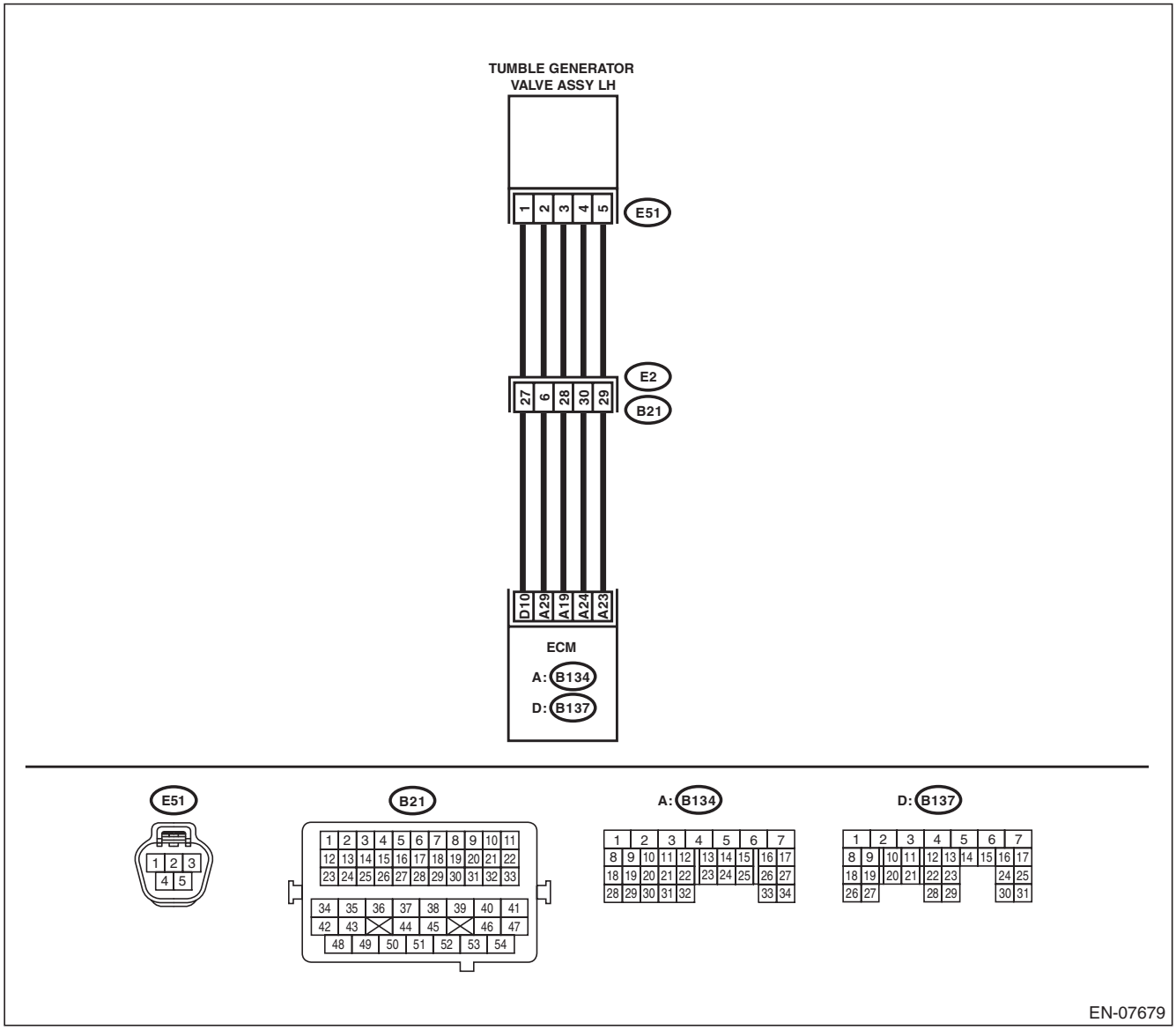

GETTHEMANUALS.org

	Step	Check	Yes	No
1	**CHECK CURRENT DATA.** 1) Start the engine. 2) Read the value of «TGV Position Sensor L» using the Subaru Select Monitor. NOTE: For detailed operation procedures, refer to "READ CURRENT DATA FOR ENGINE". <Ref. to EN(H4DOTC)(diag)-34, Subaru Select Monitor.>	Is the value of «TGV Position Sensor L» less than 0.2 V?	Go to step **2**.	Even if DTC is detected, the circuit has returned to a normal condition at this time. Reproduce the failure, and then perform the diagnosis again. NOTE: In this case, temporary poor contact of connector, temporary open or short circuit of harness may be the cause.
2	**CHECK POWER SUPPLY OF TUMBLE GENERATOR VALVE ASSEMBLY LH.** 1) Turn the ignition switch to OFF. 2) Disconnect the connector from tumble generator valve assembly LH. 3) Turn the ignition switch to ON. 4) Measure the voltage between tumble generator valve assembly LH connector and engine ground. ***Connector & terminal*** ***(E51) No. 3 (+) — Engine ground (–):***	Is the voltage 4.5 V or more?	Go to step **3**.	Repair the harness and connector. NOTE: In this case, repair the following item: • Open circuit in harness between ECM and tumble generator valve assembly LH connector • Poor contact of ECM connector • Poor contact of coupling connector
3	**CHECK HARNESS BETWEEN ECM AND TUMBLE GENERATOR VALVE ASSEMBLY LH CONNECTOR.** 1) Turn the ignition switch to OFF. 2) Disconnect the connector from ECM. 3) Measure the resistance of harness between ECM and tumble generator valve assembly LH. ***Connector & terminal*** ***(B137) No. 10 — (E51) No. 1:***	Is the resistance less than 1 Ω?	Go to step **4**.	Repair the harness and connector. NOTE: In this case, repair the following item: • Open circuit in harness between ECM and tumble generator valve assembly LH connector • Poor contact of coupling connector
4	**CHECK HARNESS BETWEEN ECM AND TUMBLE GENERATOR VALVE ASSEMBLY LH CONNECTOR.** Measure the resistance between ECM and chassis ground. ***Connector & terminal*** ***(B137) No. 10 — Chassis ground:***	Is the resistance 1 MΩ or more?	Go to step **5**.	Repair the short circuit to ground in harness between ECM and tumble generator valve assembly LH connector.
5	**CHECK FOR POOR CONTACT.** Check for poor contact of ECM and tumble generator valve assembly LH connector.	Is there poor contact of ECM or the tumble generator valve assembly LH connector?	Repair the poor contact of ECM or tumble generator valve assembly LH connector.	Replace the tumble generator valve assembly LH. <Ref. to FU(H4DOTC)-48, Tumble Generator Valve Assembly.>

GETTHEMANUALS.org

DQ:DTC P2022 INTAKE MANIFOLD RUNNER POSITION SENSOR / SWITCH CIRCUIT HIGH (BANK 2)

DTC DETECTING CONDITION:

- Immediately at fault recognition
- GENERAL DESCRIPTION <Ref. to GD(H4DOTC)-219, DTC P2022 INTAKE MANIFOLD RUNNER POSITION SENSOR / SWITCH CIRCUIT HIGH (BANK 2), Diagnostic Trouble Code (DTC) Detecting Criteria.>

TROUBLE SYMPTOM:

- Improper idling
- Engine stalls.
- Poor driving performance

CAUTION:

After servicing or replacing faulty parts, perform Clear Memory Mode <Ref. to EN(H4DOTC)(diag)-53, OPERATION, Clear Memory Mode.>, and Inspection Mode <Ref. to EN(H4DOTC)(diag)-41, PROCEDURE, Inspection Mode.>.

WIRING DIAGRAM:

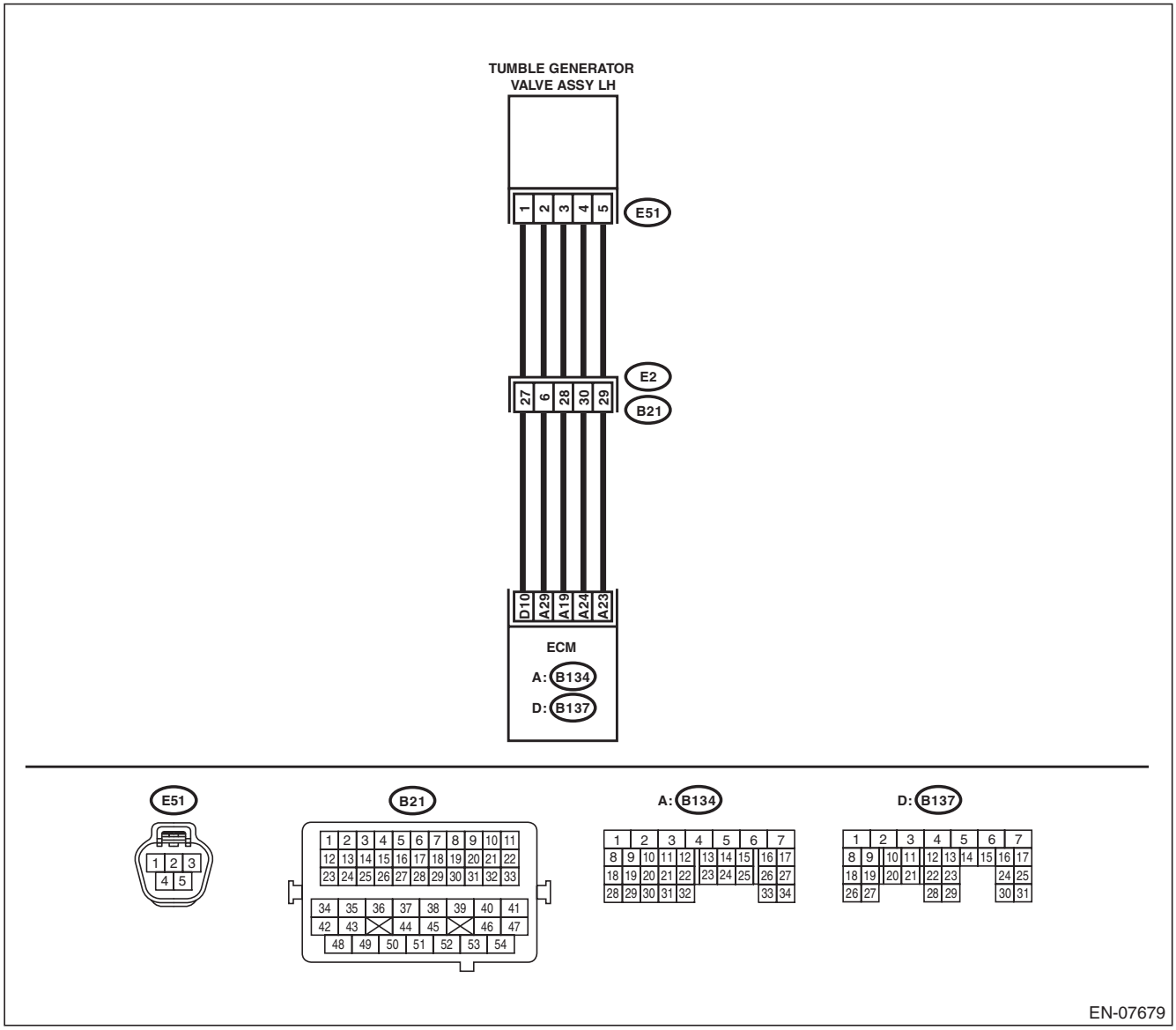

GETtheMANUALS.org

	Step	Check	Yes	No
1	**CHECK CURRENT DATA.** 1) Start the engine. 2) Read the value of «TGV Position Sensor L» using the Subaru Select Monitor. NOTE: For detailed operation procedures, refer to "READ CURRENT DATA FOR ENGINE". <Ref. to EN(H4DOTC)(diag)-34, Subaru Select Monitor.>	Is the value of «TGV Position Sensor L» 5 V or more?	Go to step **2**.	Even if DTC is detected, the circuit has returned to a normal condition at this time. Reproduce the failure, and then perform the diagnosis again. NOTE: In this case, temporary poor contact of connector, temporary open or short circuit of harness may be the cause.
2	**CHECK HARNESS BETWEEN ECM AND TUMBLE GENERATOR VALVE ASSEMBLY LH CONNECTOR.** 1) Turn the ignition switch to OFF. 2) Disconnect the connector from tumble generator valve assembly LH. 3) Start the engine. 4) Read the value of «TGV Position Sensor L» using the Subaru Select Monitor. NOTE: For detailed operation procedures, refer to "READ CURRENT DATA FOR ENGINE". <Ref. to EN(H4DOTC)(diag)-34, Subaru Select Monitor.>	Is the value of «TGV Position Sensor L» 5 V or more?	Repair the short circuit to power in harness between ECM and tumble generator valve assembly LH connector.	Go to step **3**.
3	**CHECK HARNESS BETWEEN ECM AND TUMBLE GENERATOR VALVE ASSEMBLY LH CONNECTOR.** 1) Turn the ignition switch to OFF. 2) Measure the resistance of harness between tumble generator valve assembly LH connector and engine ground. ***Connector & terminal*** ***(E51) No. 2 — Engine ground:***	Is the resistance less than 5 Ω?	Go to step **4**.	Repair the harness and connector. NOTE: In this case, repair the following item: • Open circuit in harness between ECM and tumble generator valve assembly LH connector • Poor contact of ECM connector • Poor contact of coupling connector
4	**CHECK FOR POOR CONTACT.** Check for poor contact of tumble generator valve assembly LH connector.	Is there poor contact of the tumble generator valve assembly LH connector?	Repair the poor contact of tumble generator valve assembly LH connector.	Replace the tumble generator valve assembly LH. <Ref. to FU(H4DOTC)-48, Tumble Generator Valve Assembly.>

GETTHEMANUALS.org

DR:DTC P2088 INTAKE CAMSHAFT POSITION ACTUATOR CONTROL CIRCUIT LOW (BANK 1)

DTC DETECTING CONDITION:

- Immediately at fault recognition
- GENERAL DESCRIPTION <Ref. to GD(H4DOTC)-221, DTC P2088 INTAKE CAMSHAFT POSITION ACTUATOR CONTROL CIRCUIT LOW (BANK 1), Diagnostic Trouble Code (DTC) Detecting Criteria.>

TROUBLE SYMPTOM:

Improper idling

CAUTION:

After servicing or replacing faulty parts, perform Clear Memory Mode <Ref. to EN(H4DOTC)(diag)-53, OPERATION, Clear Memory Mode.>, and Inspection Mode <Ref. to EN(H4DOTC)(diag)-41, PROCEDURE, Inspection Mode.>.

WIRING DIAGRAM:

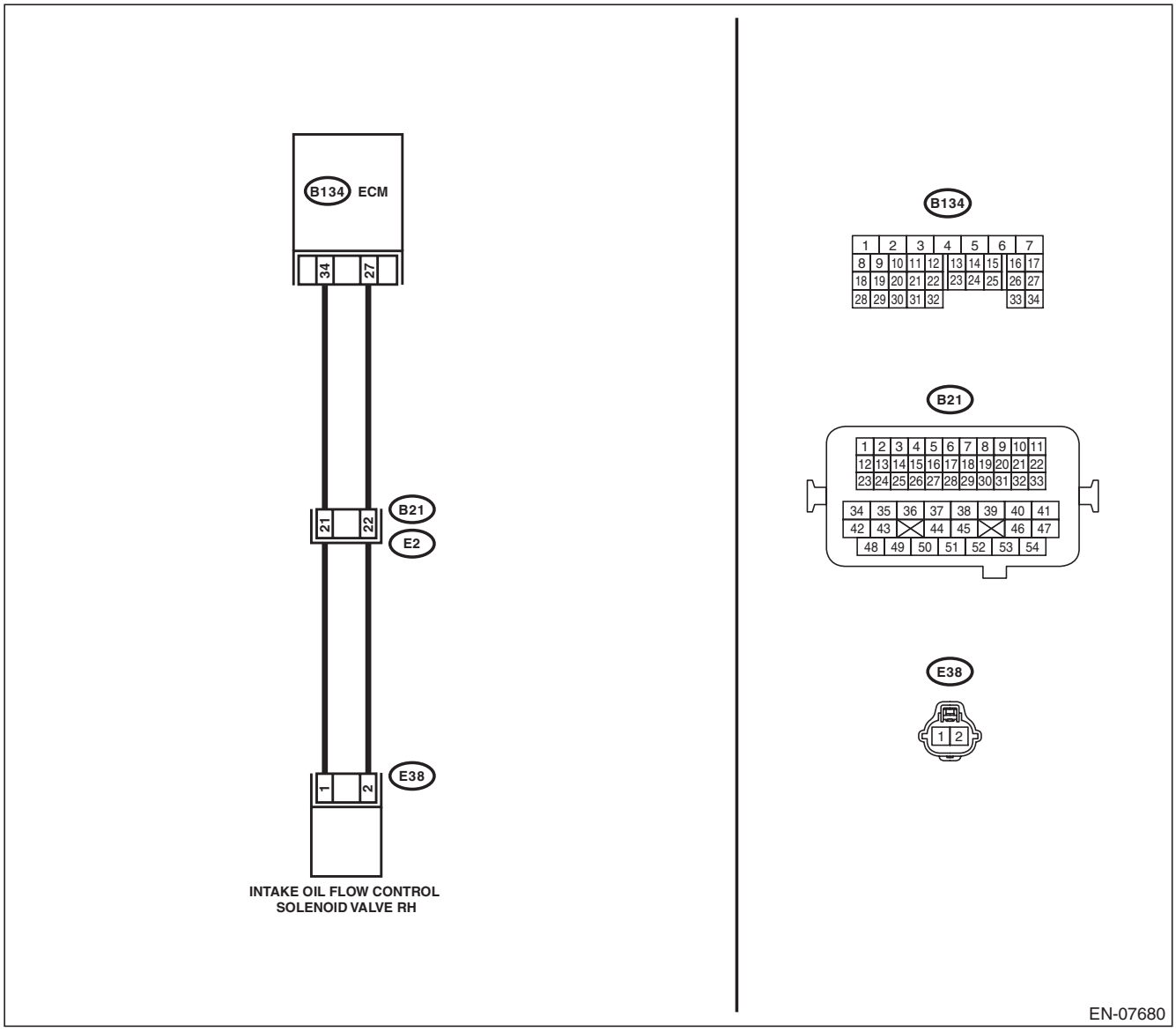

GETTHEMANUALS.org

Step		Check	Yes	No
1	**CHECK HARNESS BETWEEN ECM AND OIL FLOW CONTROL SOLENOID VALVE RH CONNECTOR.** 1) Turn the ignition switch to OFF. 2) Disconnect the connectors from ECM and oil flow control solenoid valve RH. 3) Measure the resistance of harness between ECM and oil flow control solenoid valve RH connector. ***Connector & terminal*** ***(B134) No. 34 — (E38) No. 1:*** ***(B134) No. 27 — (E38) No. 2:***	Is the resistance less than 1 Ω?	Go to step **2**.	Repair the harness and connector. NOTE: In this case, repair the following item: • Open circuit in harness between ECM and oil flow control solenoid valve RH connector • Poor contact of coupling connector
2	**CHECK HARNESS BETWEEN ECM AND OIL FLOW CONTROL SOLENOID VALVE RH CONNECTOR.** Measure the resistance between ECM and chassis ground. ***Connector & terminal*** ***(B134) No. 34 — Chassis ground:*** ***(B134) No. 27 — Chassis ground:***	Is the resistance 1 MΩ or more?	Go to step **3**.	Repair the short circuit to ground in harness between ECM and oil flow control solenoid valve RH connector.
3	**CHECK OIL FLOW CONTROL SOLENOID VALVE.** Measure the resistance between oil flow control solenoid valve terminals. ***Terminals*** ***No. 1 — No. 2:***	Is the resistance 6 — 12 Ω?	Repair the poor contact of ECM and oil flow control solenoid valve RH connector RH.	Replace the oil flow control solenoid valve RH. <Ref. to ME(H4DOTC)-63, Camshaft.>

GETTHEMANUALS.org

DS:DTC P2089 INTAKE CAMSHAFT POSITION ACTUATOR CONTROL CIRCUIT HIGH (BANK 1)

DTC DETECTING CONDITION:

- Immediately at fault recognition
- GENERAL DESCRIPTION <Ref. to GD(H4DOTC)-222, DTC P2089 INTAKE CAMSHAFT POSITION ACTUATOR CONTROL CIRCUIT HIGH (BANK 1), Diagnostic Trouble Code (DTC) Detecting Criteria.>

TROUBLE SYMPTOM:

Improper idling

CAUTION:

After servicing or replacing faulty parts, perform Clear Memory Mode <Ref. to EN(H4DOTC)(diag)-53, OPERATION, Clear Memory Mode.>, and Inspection Mode <Ref. to EN(H4DOTC)(diag)-41, PROCEDURE, Inspection Mode.>.

WIRING DIAGRAM:

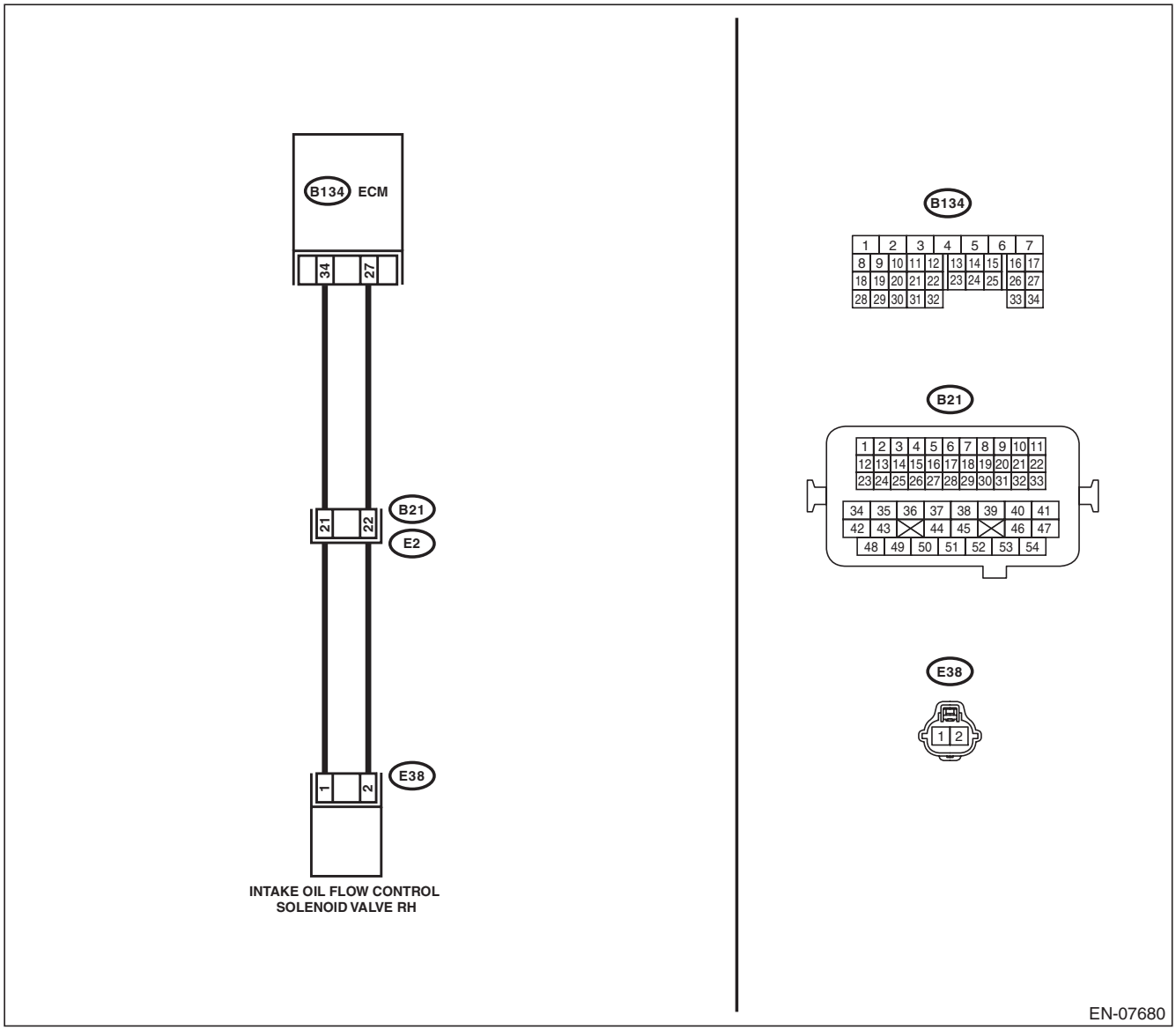

GETTHEMANUALS.org

Step		Check	Yes	No
1	**CHECK HARNESS BETWEEN ECM AND OIL FLOW CONTROL SOLENOID VALVE RH CONNECTOR.** 1) Turn the ignition switch to OFF. 2) Disconnect the connectors from ECM and oil flow control solenoid valve RH. 3) Measure the voltage between ECM and chassis ground. ***Connector & terminal*** ***(B134) No. 34 (+) — Chassis ground (–):*** ***(B134) No. 27 (+) — Chassis ground (–):***	Is the voltage less than 1 V?	Go to step **2**.	Repair the short circuit to power supply in harness between ECM and oil flow control solenoid valve RH connector.
2	**CHECK HARNESS BETWEEN ECM AND OIL FLOW CONTROL SOLENOID VALVE RH CONNECTOR.** Measure the resistance of harness between ECM and oil flow control solenoid valve RH connector. ***Connector & terminal*** ***(B134) No. 34 — (E38) No. 1:*** ***(B134) No. 27 — (E38) No. 2:***	Is the resistance less than 1 Ω?	Go to step **3**.	Repair the harness and connector. NOTE: In this case, repair the following item: • Open circuit in harness between ECM and oil flow control solenoid valve RH connector • Poor contact of coupling connector
3	**CHECK OIL FLOW CONTROL SOLENOID VALVE.** Measure the resistance between oil flow control solenoid valve terminals. ***Terminals*** ***No. 1 — No. 2:***	Is the resistance 6 — 12 Ω?	Repair the poor contact of ECM and oil flow control solenoid valve RH connector RH.	Replace the oil flow control solenoid valve RH. <Ref. to ME(H4DOTC)-63, Camshaft.>

GETTHEMANUALS.org

DT:DTC P2090 EXHAUST CAMSHAFT POSITION ACTUATOR CONTROL CIRCUIT LOW (BANK 1)

DTC DETECTING CONDITION:

- Immediately at fault recognition
- GENERAL DESCRIPTION <Ref. to GD(H4DOTC)-223, DTC P2090 EXHAUST CAMSHAFT POSITION ACTUATOR CONTROL CIRCUIT LOW (BANK 1), Diagnostic Trouble Code (DTC) Detecting Criteria.>

TROUBLE SYMPTOM:

Improper idling

CAUTION:

After servicing or replacing faulty parts, perform Clear Memory Mode <Ref. to EN(H4DOTC)(diag)-53, OPERATION, Clear Memory Mode.>, and Inspection Mode <Ref. to EN(H4DOTC)(diag)-41, PROCEDURE, Inspection Mode.>.

WIRING DIAGRAM:

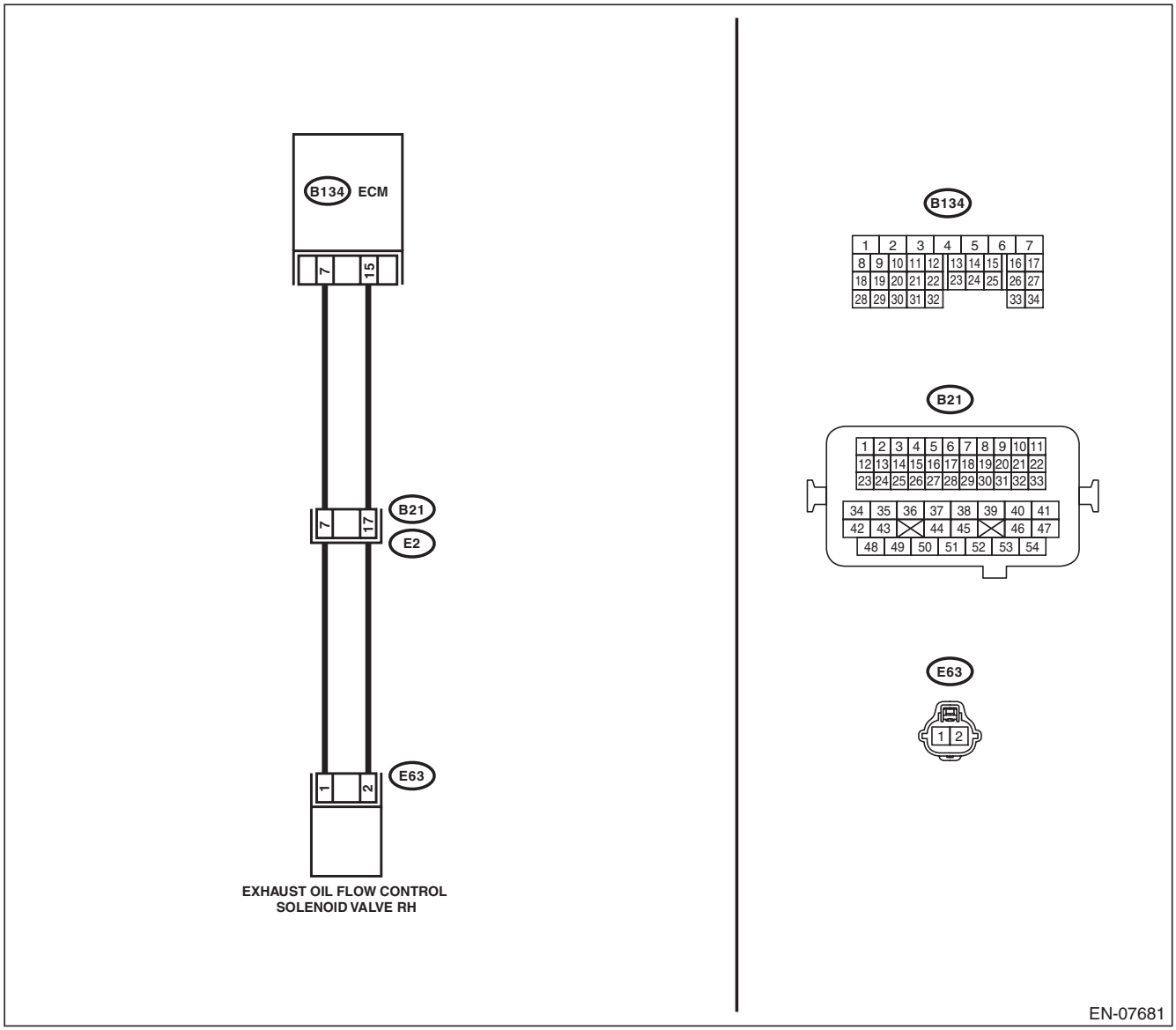

GETTHEMANUALS.org

Step		Check	Yes	No
1	**CHECK HARNESS BETWEEN ECM AND OIL FLOW CONTROL SOLENOID VALVE RH CONNECTOR.** 1) Turn the ignition switch to OFF. 2) Disconnect the connectors from ECM and oil flow control solenoid valve RH. 3) Measure the resistance of harness between ECM and oil flow control solenoid valve RH connector. ***Connector & terminal*** ***(B134) No. 7 — (E63) No. 1:*** ***(B134) No. 15 — (E63) No. 2:***	Is the resistance less than 1 Ω?	Go to step **2**.	Repair the harness and connector. NOTE: In this case, repair the following item: • Open circuit in harness between ECM and oil flow control solenoid valve RH connector • Poor contact of coupling connector
2	**CHECK HARNESS BETWEEN ECM AND OIL FLOW CONTROL SOLENOID VALVE RH CONNECTOR.** Measure the resistance between ECM and chassis ground. ***Connector & terminal*** ***(B134) No. 7 — Chassis ground:*** ***(B134) No. 15 — Chassis ground:***	Is the resistance 1 MΩ or more?	Go to step **3**.	Repair the short circuit to ground in harness between ECM and oil flow control solenoid valve RH connector.
3	**CHECK OIL FLOW CONTROL SOLENOID VALVE.** Measure the resistance between oil flow control solenoid valve terminals. ***Terminals*** ***No. 1 — No. 2:***	Is the resistance 6 — 12 Ω?	Repair the poor contact of ECM and oil flow control solenoid valve RH connector RH.	Replace the oil flow control solenoid valve RH. <Ref. to FU(H4DOTC)-50, Oil Flow Control Solenoid Valve.>

GETTHEMANUALS.org

DU:DTC P2091 EXHAUST CAMSHAFT POSITION ACTUATOR CONTROL CIRCUIT HIGH (BANK 1)

DTC DETECTING CONDITION:

- Immediately at fault recognition
- GENERAL DESCRIPTION <Ref. to GD(H4DOTC)-224, DTC P2091 EXHAUST CAMSHAFT POSITION ACTUATOR CONTROL CIRCUIT HIGH (BANK 1), Diagnostic Trouble Code (DTC) Detecting Criteria.>

TROUBLE SYMPTOM:

Improper idling

CAUTION:

After servicing or replacing faulty parts, perform Clear Memory Mode <Ref. to EN(H4DOTC)(diag)-53, OPERATION, Clear Memory Mode.>, and Inspection Mode <Ref. to EN(H4DOTC)(diag)-41, PROCEDURE, Inspection Mode.>.

WIRING DIAGRAM:

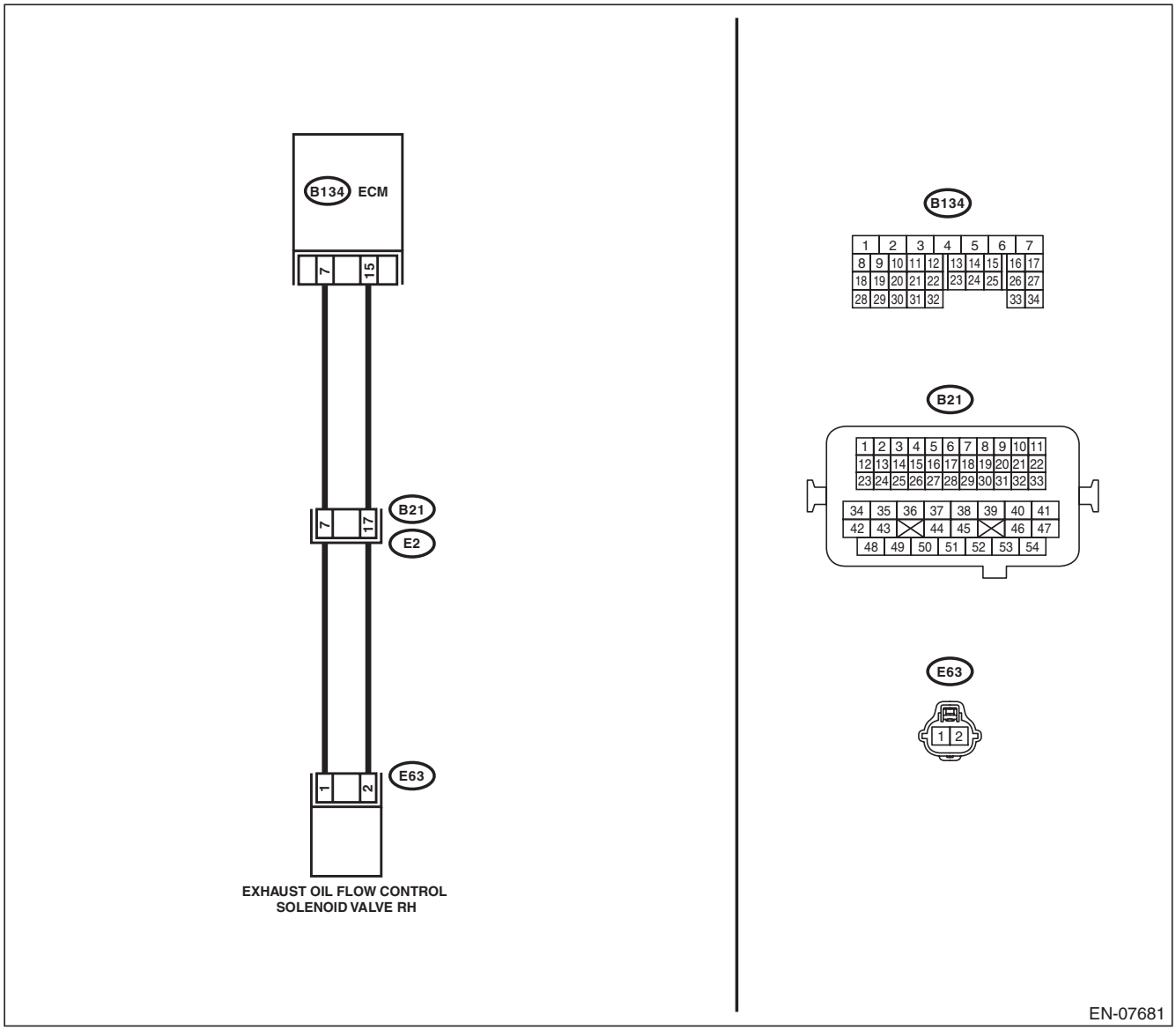

GETTHEMANUALS.org

Step		Check	Yes	No
1	**CHECK HARNESS BETWEEN ECM AND OIL FLOW CONTROL SOLENOID VALVE RH CONNECTOR.** 1) Turn the ignition switch to OFF. 2) Disconnect the connectors from ECM and oil flow control solenoid valve RH. 3) Measure the voltage between ECM and chassis ground. ***Connector & terminal*** ***(B134) No. 7 (+) — Chassis ground (–):*** ***(B134) No. 15 (+) — Chassis ground (–):***	Is the voltage less than 1 V?	Go to step **2**.	Repair the short circuit to power supply in harness between ECM and oil flow control solenoid valve RH connector.
2	**CHECK HARNESS BETWEEN ECM AND OIL FLOW CONTROL SOLENOID VALVE RH CONNECTOR.** Measure the resistance of harness between ECM and oil flow control solenoid valve RH connector. ***Connector & terminal*** ***(B134) No. 7 — (E63) No. 1:*** ***(B134) No. 15 — (E63) No. 2:***	Is the resistance less than 1 Ω?	Go to step **3**.	Repair the harness and connector. NOTE: In this case, repair the following item: • Open circuit in harness between ECM and oil flow control solenoid valve RH connector • Poor contact of coupling connector
3	**CHECK OIL FLOW CONTROL SOLENOID VALVE.** Measure the resistance between oil flow control solenoid valve terminals. ***Terminals*** ***No. 1 — No. 2:***	Is the resistance 6 — 12 Ω?	Repair the poor contact of ECM and oil flow control solenoid valve RH connector RH.	Replace the oil flow control solenoid valve RH. <Ref. to FU(H4DOTC)-50, Oil Flow Control Solenoid Valve.>

GETTHEMANUALS.org

DV:DTC P2092 INTAKE CAMSHAFT POSITION ACTUATOR CONTROL CIRCUIT LOW (BANK 2)

DTC DETECTING CONDITION:

- Immediately at fault recognition
- GENERAL DESCRIPTION <Ref. to GD(H4DOTC)-225, DTC P2092 INTAKE CAMSHAFT POSITION ACTUATOR CONTROL CIRCUIT LOW (BANK 2), Diagnostic Trouble Code (DTC) Detecting Criteria.>

TROUBLE SYMPTOM:

Improper idling

CAUTION:

After servicing or replacing faulty parts, perform Clear Memory Mode <Ref. to EN(H4DOTC)(diag)-53, OPERATION, Clear Memory Mode.>, and Inspection Mode <Ref. to EN(H4DOTC)(diag)-41, PROCEDURE, Inspection Mode.>.

WIRING DIAGRAM:

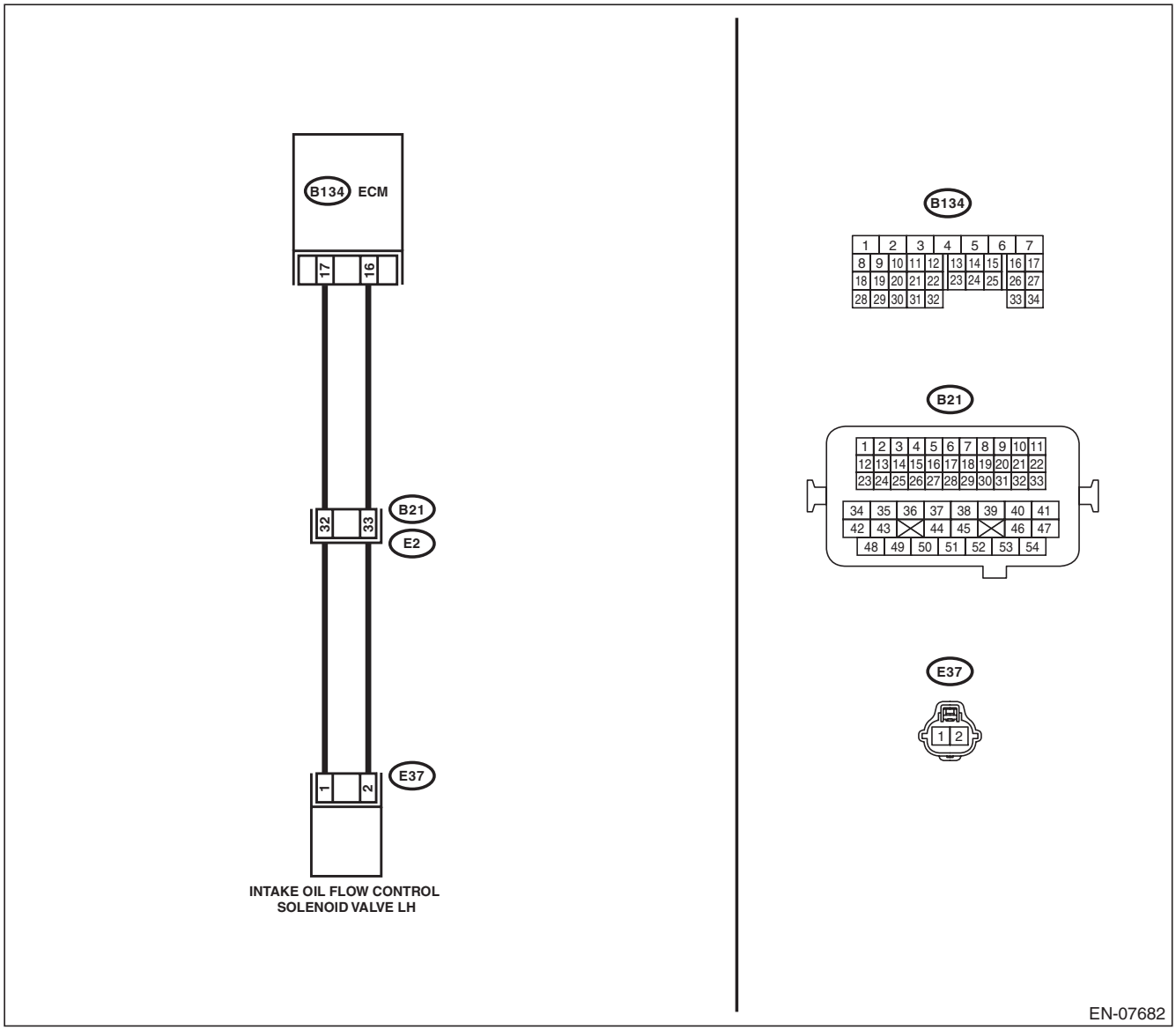

GETTHEMANUALS.org

Step		Check	Yes	No
1	**CHECK HARNESS BETWEEN ECM AND OIL FLOW CONTROL SOLENOID VALVE LH CONNECTOR.** 1) Turn the ignition switch to OFF. 2) Disconnect the connectors from ECM and oil flow control solenoid valve LH. 3) Measure the resistance of harness between ECM and oil flow control solenoid valve LH connector. ***Connector & terminal*** ***(B134) No. 17 — (E37) No. 1:*** ***(B134) No. 16 — (E37) No. 2:***	Is the resistance less than 1 Ω?	Go to step **2**.	Repair the harness and connector. NOTE: In this case, repair the following item: • Open circuit in harness between ECM and oil flow control solenoid valve RH connector • Poor contact of coupling connector
2	**CHECK HARNESS BETWEEN ECM AND OIL FLOW CONTROL SOLENOID VALVE LH CONNECTOR.** Measure the resistance between ECM and chassis ground. ***Connector & terminal*** ***(B134) No. 17 — Chassis ground:*** ***(B134) No. 16 — Chassis ground:***	Is the resistance 1 MΩ or more?	Go to step **3**.	Repair the short circuit to ground in harness between ECM and oil flow control solenoid valve LH connector.
3	**CHECK OIL FLOW CONTROL SOLENOID VALVE.** Measure the resistance between oil flow control solenoid valve terminals. ***Terminals*** ***No. 1 — No. 2:***	Is the resistance 6 — 12 Ω?	Repair the poor contact of ECM and oil flow control solenoid valve LH connector.	Replace the oil flow control solenoid valve LH. <Ref. to ME(H4DOTC)-63, Camshaft.>

GETTHEMANUALS.org

DW:DTC P2093 INTAKE CAMSHAFT POSITION ACTUATOR CONTROL CIRCUIT HIGH (BANK 2)

DTC DETECTING CONDITION:

- Immediately at fault recognition
- GENERAL DESCRIPTION <Ref. to GD(H4DOTC)-225, DTC P2093 INTAKE CAMSHAFT POSITION ACTUATOR CONTROL CIRCUIT HIGH (BANK 2), Diagnostic Trouble Code (DTC) Detecting Criteria.>

TROUBLE SYMPTOM:

Improper idling

CAUTION:

After servicing or replacing faulty parts, perform Clear Memory Mode <Ref. to EN(H4DOTC)(diag)-53, OPERATION, Clear Memory Mode.>, and Inspection Mode <Ref. to EN(H4DOTC)(diag)-41, PROCEDURE, Inspection Mode.>.

WIRING DIAGRAM:

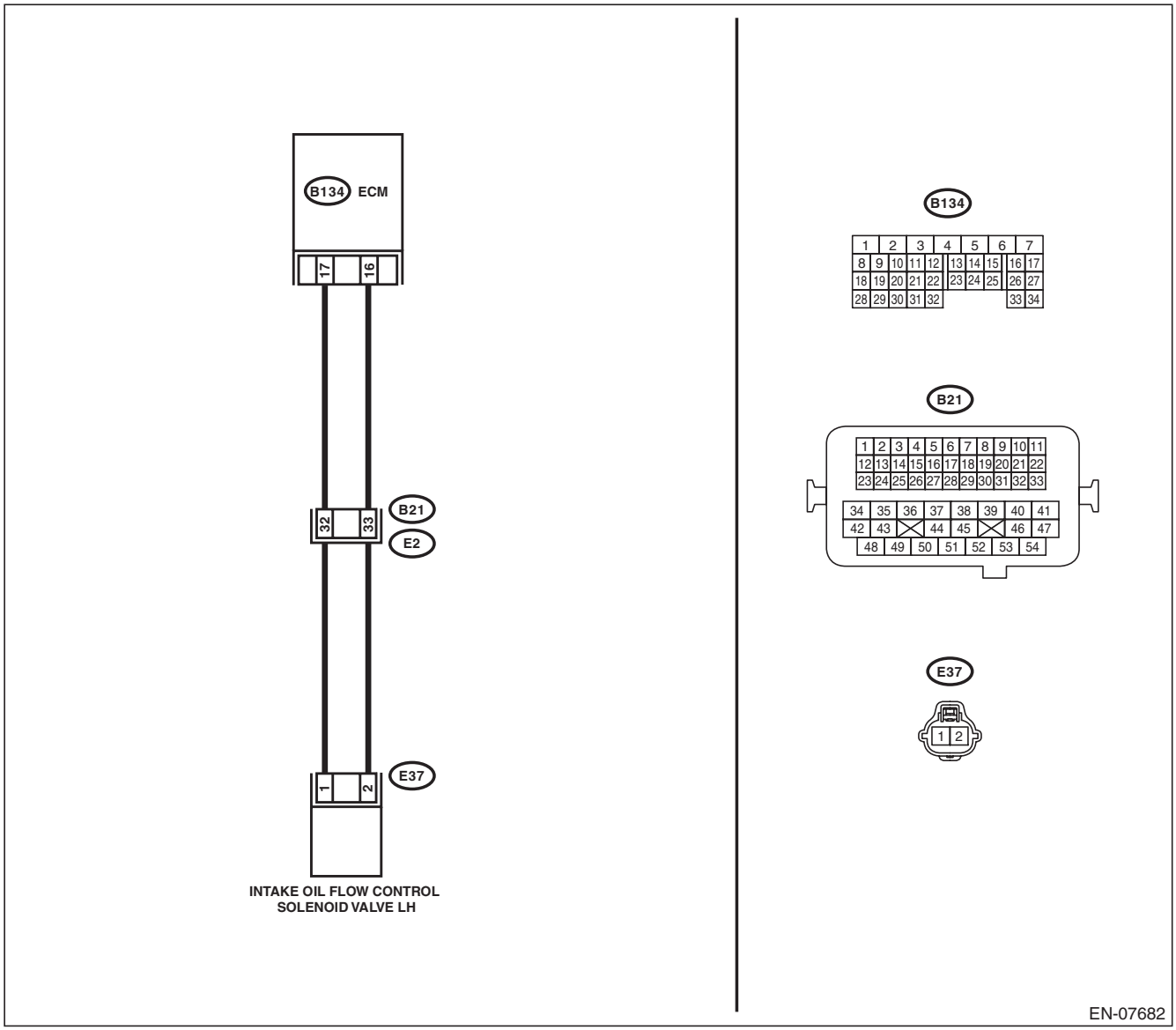

GETTHEMANUALS.org

Step		Check	Yes	No
1	**CHECK HARNESS BETWEEN ECM AND OIL FLOW CONTROL SOLENOID VALVE LH CONNECTOR.** 1) Turn the ignition switch to OFF. 2) Disconnect the connectors from ECM and oil flow control solenoid valve LH. 3) Measure the voltage between ECM and chassis ground. ***Connector & terminal*** ***(B134) No. 17 (+) — Chassis ground (–):*** ***(B134) No. 16 (+) — Chassis ground (–):***	Is the voltage less than 1 V?	Go to step **2**.	Repair the short circuit to power supply in harness between ECM and oil flow control solenoid valve LH connector.
2	**CHECK HARNESS BETWEEN ECM AND OIL FLOW CONTROL SOLENOID VALVE LH CONNECTOR.** Measure the resistance of harness between ECM and oil flow control solenoid valve LH connector. ***Connector & terminal*** ***(B134) No. 17 — (E37) No. 1:*** ***(B134) No. 16 — (E37) No. 2:***	Is the resistance less than 1 Ω?	Go to step **3**.	Repair the harness and connector. NOTE: In this case, repair the following item: • Open circuit in harness between ECM and oil flow control solenoid valve RH connector • Poor contact of coupling connector
3	**CHECK OIL FLOW CONTROL SOLENOID VALVE.** Measure the resistance between oil flow control solenoid valve terminals. ***Terminals*** ***No. 1 — No. 2:***	Is the resistance 6 — 12 Ω?	Repair the poor contact of ECM and oil flow control solenoid valve LH connector.	Replace the oil flow control solenoid valve LH. <Ref. to ME(H4DOTC)-63, Camshaft.>

GETTHEMANUALS.org

DX:DTC P2094 EXHAUST CAMSHAFT POSITION ACTUATOR CONTROL CIRCUIT LOW (BANK 2)

DTC DETECTING CONDITION:

- Immediately at fault recognition
- GENERAL DESCRIPTION <Ref. to GD(H4DOTC)-225, DTC P2094 EXHAUST CAMSHAFT POSITION ACTUATOR CONTROL CIRCUIT LOW (BANK 2), Diagnostic Trouble Code (DTC) Detecting Criteria.>

TROUBLE SYMPTOM:

Improper idling

CAUTION:

After servicing or replacing faulty parts, perform Clear Memory Mode <Ref. to EN(H4DOTC)(diag)-53, OPERATION, Clear Memory Mode.>, and Inspection Mode <Ref. to EN(H4DOTC)(diag)-41, PROCEDURE, Inspection Mode.>.

WIRING DIAGRAM:

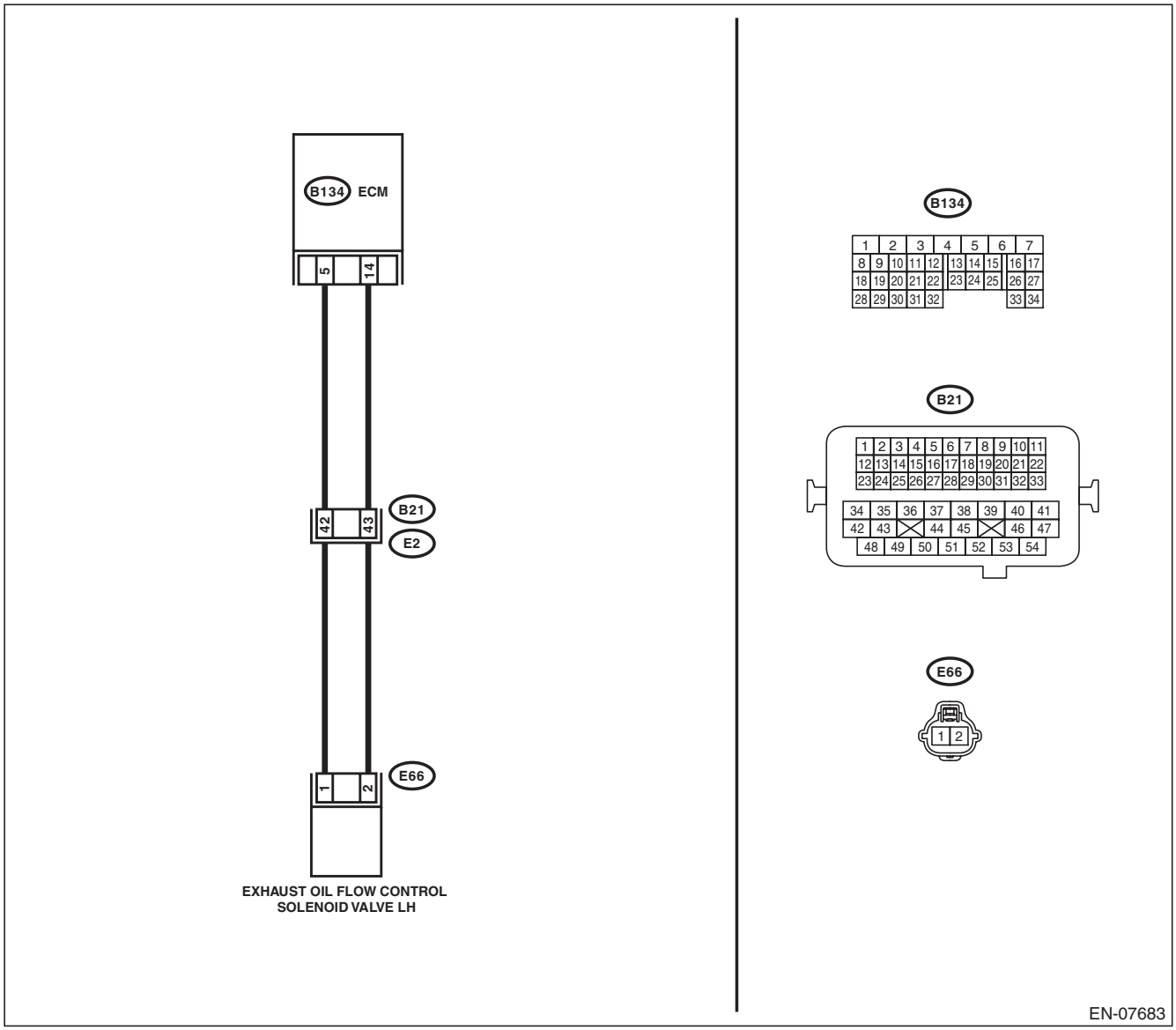

GETTHEMANUALS.org

Step		Check	Yes	No
1	**CHECK HARNESS BETWEEN ECM AND OIL FLOW CONTROL SOLENOID VALVE LH CONNECTOR.** 1) Turn the ignition switch to OFF. 2) Disconnect the connectors from ECM and oil flow control solenoid valve LH. 3) Measure the resistance of harness between ECM and oil flow control solenoid valve LH connector. ***Connector & terminal*** ***(B134) No. 5 — (E66) No. 1:*** ***(B134) No. 14 — (E66) No. 2:***	Is the resistance less than 1 Ω?	Go to step **2**.	Repair the harness and connector. NOTE: In this case, repair the following item: • Open circuit in harness between ECM and oil flow control solenoid valve RH connector • Poor contact of coupling connector
2	**CHECK HARNESS BETWEEN ECM AND OIL FLOW CONTROL SOLENOID VALVE LH CONNECTOR.** Measure the resistance between ECM and chassis ground. ***Connector & terminal*** ***(B134) No. 5 — Chassis ground:*** ***(B134) No. 14 — Chassis ground:***	Is the resistance 1 MΩ or more?	Go to step **3**.	Repair the short circuit to ground in harness between ECM and oil flow control solenoid valve LH connector.
3	**CHECK OIL FLOW CONTROL SOLENOID VALVE.** Measure the resistance between oil flow control solenoid valve terminals. ***Terminals*** ***No. 1 — No. 2:***	Is the resistance 6 — 12 Ω?	Repair the poor contact of ECM and oil flow control solenoid valve LH connector.	Replace the oil flow control solenoid valve LH. <Ref. to FU(H4DOTC)-50, Oil Flow Control Solenoid Valve.>

GETTHEMANUALS.org

DY:DTC P2095 EXHAUST CAMSHAFT POSITION ACTUATOR CONTROL CIRCUIT HIGH (BANK 2)

DTC DETECTING CONDITION:

- Immediately at fault recognition
- GENERAL DESCRIPTION <Ref. to GD(H4DOTC)-225, DTC P2095 EXHAUST CAMSHAFT POSITION ACTUATOR CONTROL CIRCUIT HIGH (BANK 2), Diagnostic Trouble Code (DTC) Detecting Criteria.>

TROUBLE SYMPTOM:

Improper idling

CAUTION:

After servicing or replacing faulty parts, perform Clear Memory Mode <Ref. to EN(H4DOTC)(diag)-53, OPERATION, Clear Memory Mode.>, and Inspection Mode <Ref. to EN(H4DOTC)(diag)-41, PROCEDURE, Inspection Mode.>.

WIRING DIAGRAM:

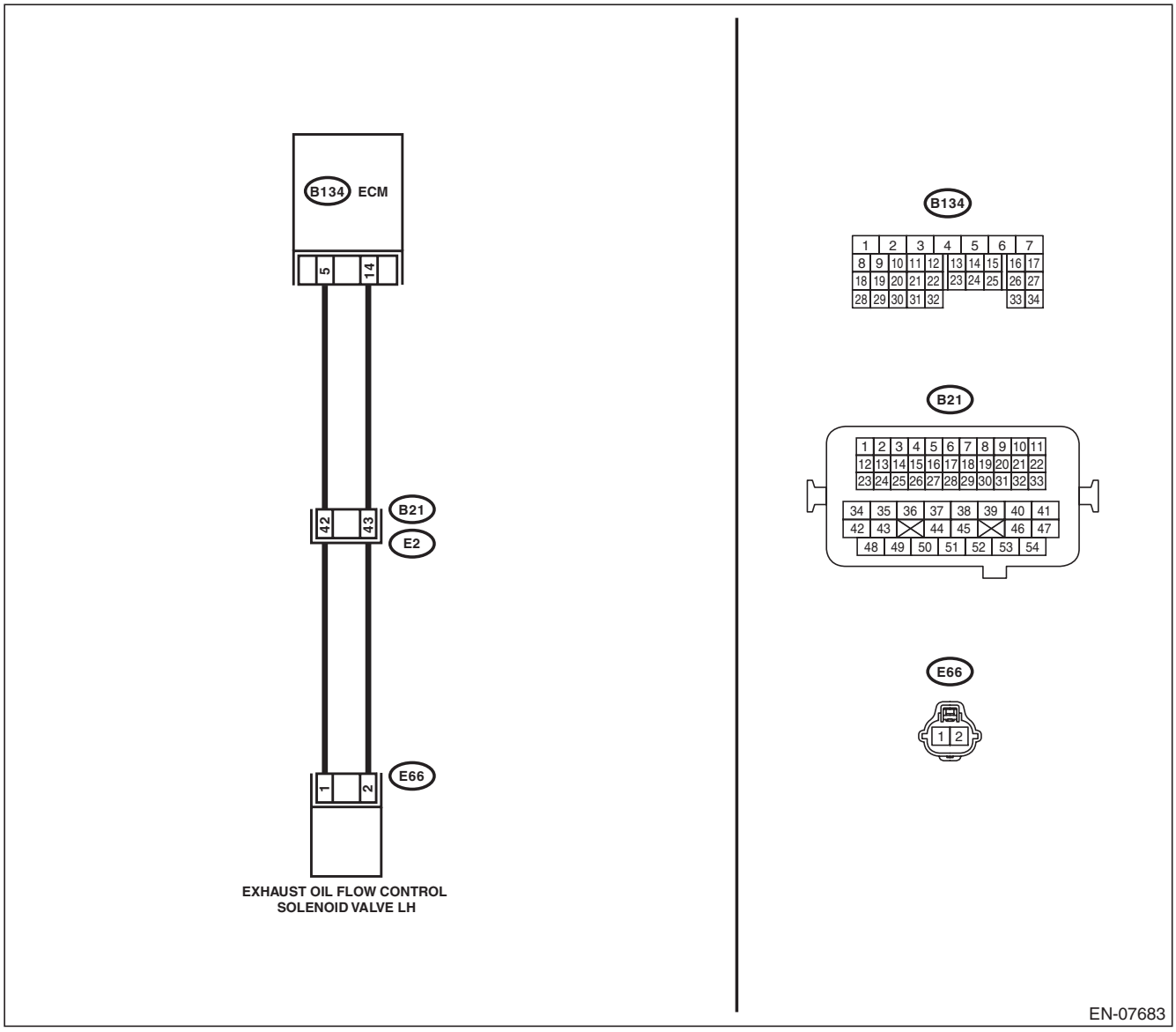

GETTHEMANUALS.org

Step		Check	Yes	No
1	**CHECK HARNESS BETWEEN ECM AND OIL FLOW CONTROL SOLENOID VALVE LH CONNECTOR.** 1) Turn the ignition switch to OFF. 2) Disconnect the connectors from ECM and oil flow control solenoid valve LH. 3) Measure the voltage between ECM and chassis ground. ***Connector & terminal*** ***(B134) No. 5 (+) — Chassis ground (–):*** ***(B134) No. 14 (+) — Chassis ground (–):***	Is the voltage less than 1 V?	Go to step **2**.	Repair the short circuit to power supply in harness between ECM and oil flow control solenoid valve LH connector.
2	**CHECK HARNESS BETWEEN ECM AND OIL FLOW CONTROL SOLENOID VALVE LH CONNECTOR.** Measure the resistance of harness between ECM and oil flow control solenoid valve LH connector. ***Connector & terminal*** ***(B134) No. 5 — (E66) No. 1:*** ***(B134) No. 14 — (E66) No. 2:***	Is the resistance less than 1 Ω?	Go to step **3**.	Repair the harness and connector. NOTE: In this case, repair the following item: • Open circuit in harness between ECM and oil flow control solenoid valve RH connector • Poor contact of coupling connector
3	**CHECK OIL FLOW CONTROL SOLENOID VALVE.** Measure the resistance between oil flow control solenoid valve terminals. ***Terminals*** ***No. 1 — No. 2:***	Is the resistance 6 — 12 Ω?	Repair the poor contact of ECM and oil flow control solenoid valve LH connector.	Replace the oil flow control solenoid valve LH. <Ref. to FU(H4DOTC)-50, Oil Flow Control Solenoid Valve.>

GETTHEMANUALS.org

DZ:DTC P2096 POST CATALYST FUEL TRIM SYSTEM TOO LEAN (BANK 1)

DTC DETECTING CONDITION:

- Detected when two consecutive driving cycles with fault occur.
- GENERAL DESCRIPTION <Ref. to GD(H4DOTC)-226, DTC P2096 POST CATALYST FUEL TRIM SYSTEM TOO LEAN (BANK 1), Diagnostic Trouble Code (DTC) Detecting Criteria.>

CAUTION:

After servicing or replacing faulty parts, perform Clear Memory Mode <Ref. to EN(H4DOTC)(diag)-53, OPERATION, Clear Memory Mode.>, and Inspection Mode <Ref. to EN(H4DOTC)(diag)-41, PROCEDURE, Inspection Mode.>.

WIRING DIAGRAM:

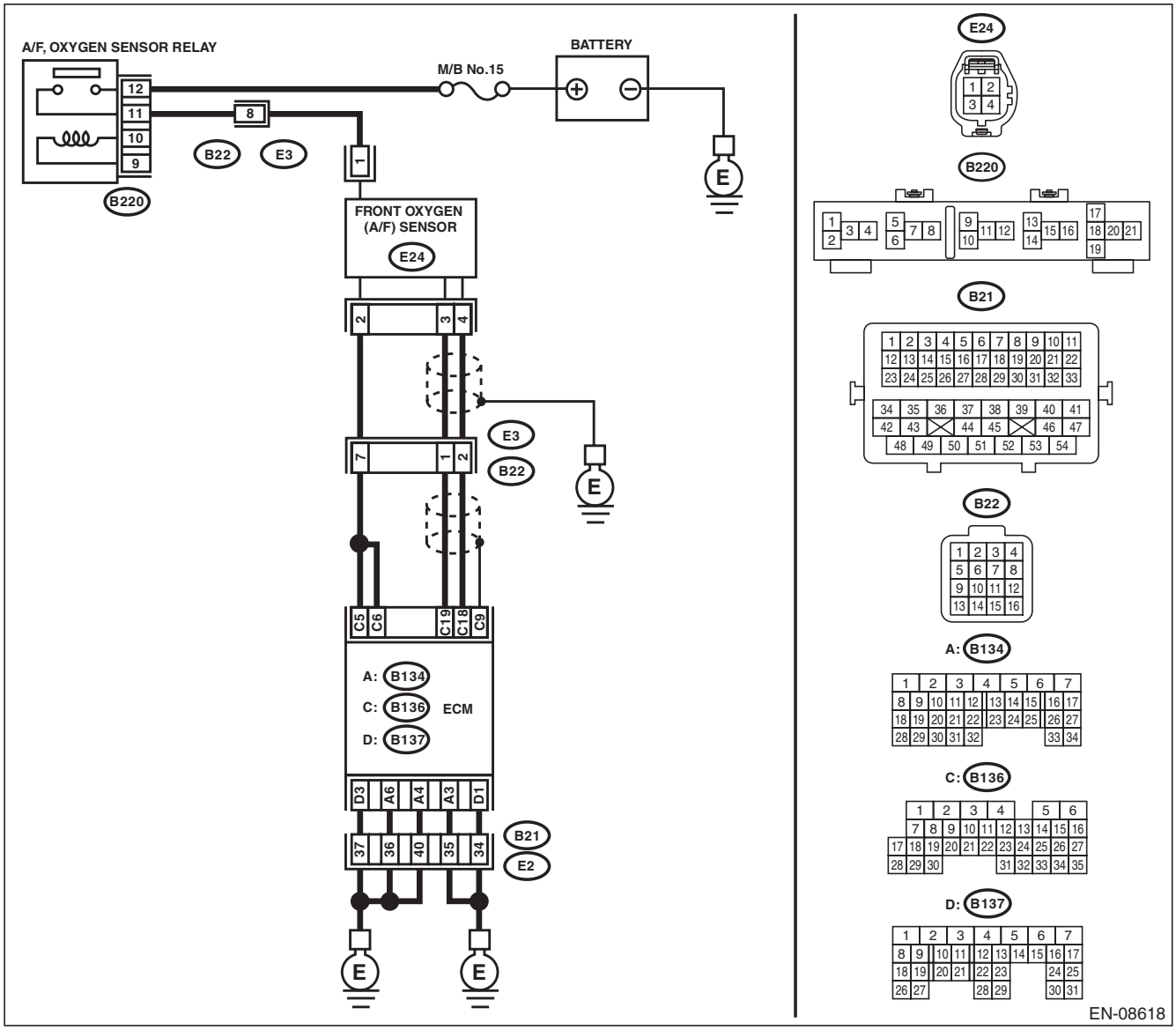

GETHEMANUALS.org

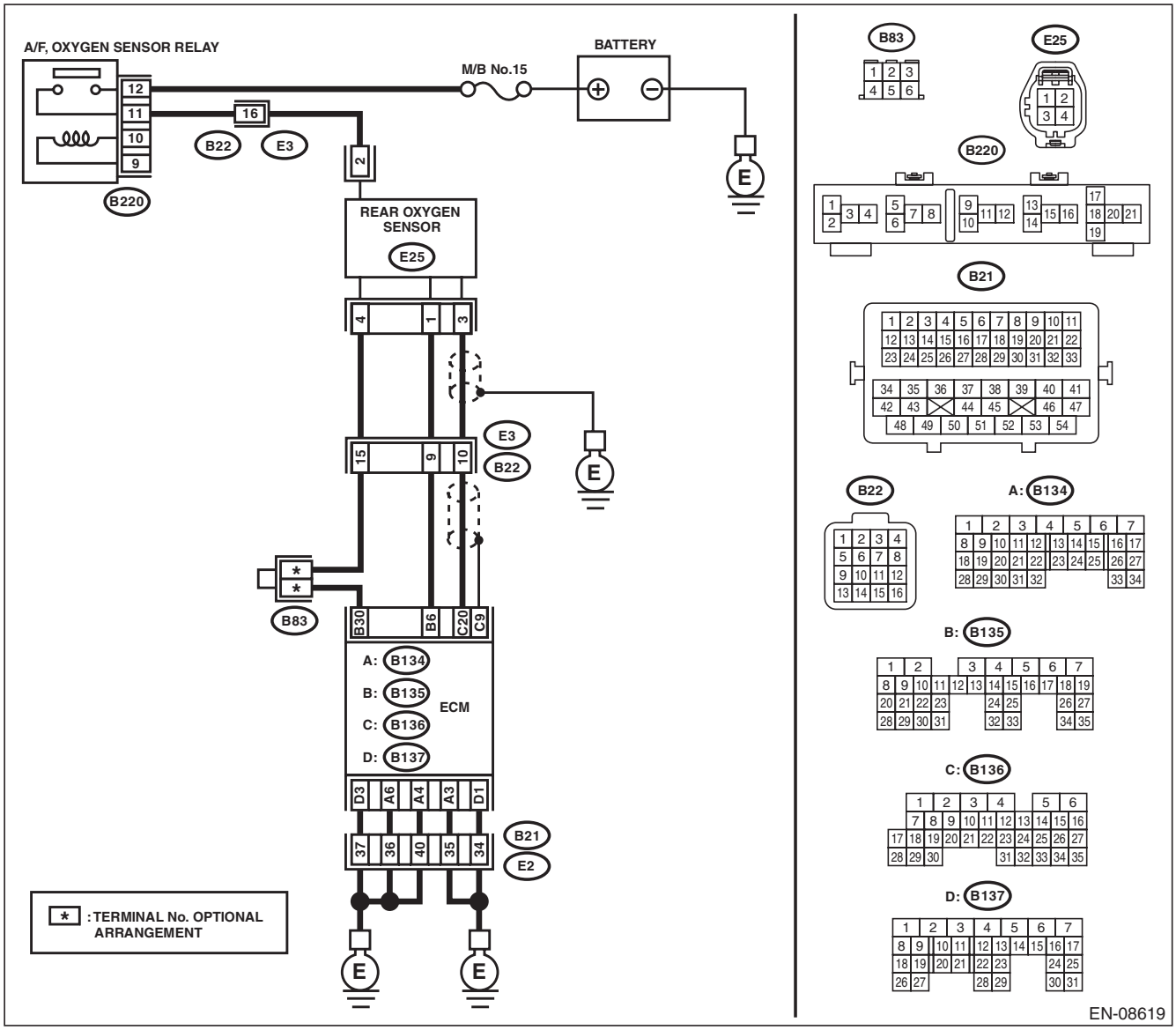

Step		Check	Yes	No
1	**CHECK FOR ANY OTHER DTC ON DISPLAY.**	Is any other DTC displayed?	Check DTC using "List of Diagnostic Trouble Code (DTC)". <Ref. to EN(H4DOTC)(diag)-75, List of Diagnostic Trouble Code (DTC).>	Go to step **2**.
2	**CHECK FRONT OXYGEN (A/F) SENSOR CONNECTOR AND COUPLING CONNECTOR.**	Has water entered the connector?	Completely remove any water inside.	Go to step **3**.

GETTHEMANUALS.org

Step		Check	Yes	No
3	**CHECK HARNESS BETWEEN ECM AND FRONT OXYGEN (A/F) SENSOR CONNECTOR.** 1) Turn the ignition switch to OFF. 2) Disconnect the connectors from ECM and front oxygen (A/F) sensor. 3) Measure the resistance of harness between ECM and front oxygen (A/F) sensor connector. ***Connector & terminal*** ***(B136) No. 19 — (E24) No. 3:*** ***(B136) No. 18 — (E24) No. 4:***	Is the resistance less than 1 Ω?	Go to step **4**.	Repair the harness and connector. NOTE: In this case, repair the following item: • Open circuit in harness between ECM and front oxygen (A/F) sensor connector • Poor contact of coupling connector
4	**CHECK HARNESS BETWEEN ECM AND FRONT OXYGEN (A/F) SENSOR CONNECTOR.** Measure the resistance between ECM and chassis ground. ***Connector & terminal*** ***(B136) No. 19 — Chassis ground:*** ***(B136) No. 18 — Chassis ground:***	Is the resistance 1 MΩ or more?	Go to step **5**.	Repair the ground short circuit of harness between ECM and front oxygen (A/F) sensor connector.
5	**CHECK OUTPUT SIGNAL FOR ECM.** 1) Connect the connector to ECM. 2) Turn the ignition switch to ON. 3) Measure the voltage between front oxygen (A/F) sensor connector and chassis ground. ***Connector & terminal*** ***(E24) No. 3 (+) — Chassis ground (–):***	Is the voltage 4.5 V or more?	Go to step **7**.	Go to step **6**.
6	**CHECK OUTPUT SIGNAL FOR ECM.** Measure the voltage between front oxygen (A/F) sensor connector and chassis ground. ***Connector & terminal*** ***(E24) No. 4 (+) — Chassis ground (–):***	Is the voltage 4.95 V or more?	Go to step **7**.	Go to step **8**.
7	**CHECK OUTPUT SIGNAL FOR ECM.** Measure the voltage between front oxygen (A/F) sensor connector and chassis ground. ***Connector & terminal*** ***(E24) No. 3 (+) — Chassis ground (–):*** ***(E24) No. 4 (+) — Chassis ground (–):***	Is the voltage 8 V or more?	Repair the short circuit to power in the harness between ECM and front oxygen (A/F) sensor connector. After repair, replace the ECM. <Ref. to FU(H4DOTC)-58, Engine Control Module (ECM).>	Repair the poor contact of ECM connector.
8	**CHECK EXHAUST SYSTEM.**	Are there holes or loose bolts on exhaust system?	Repair the exhaust system.	Go to step **9**.
9	**CHECK AIR INTAKE SYSTEM.**	Are there holes, loose bolts or disconnection of hose on air intake system?	Repair the air intake system.	Go to step **10**.

GETtheMANUALS.org

	Step	Check	Yes	No
10	**CHECK FUEL PRESSURE.** **WARNING:** **Place "NO OPEN FLAMES" signs near the working area.** **CAUTION:** **Be careful not to spill fuel.** 1) Connect the front oxygen (A/F) sensor connector. 2) Measure the fuel pressure while disconnecting pressure regulator vacuum hose from intake manifold. <Ref. to ME(H4DOTC)-26, INSPECTION, Fuel Pressure.> **CAUTION:** **Release fuel pressure before removing the fuel pressure gauge.** NOTE: If fuel pressure does not increase, squeeze the fuel return hose 2 to 3 times, then measure fuel pressure again.	Is the measured value 328 — 358 kPa (3.3 — 3.7 kgf/cm^2, 48 — 52 psi)?	Go to step **11**.	Repair the following item. Fuel pressure is too high: • Clogged fuel return line or bent hose Fuel pressure is too low: • Improper fuel pump discharge • Clogged fuel supply line
11	**CHECK FUEL PRESSURE.** After connecting the pressure regulator vacuum hose, measure fuel pressure. <Ref. to ME(H4DOTC)-26, INSPECTION, Fuel Pressure.> **CAUTION:** **Release fuel pressure before removing the fuel pressure gauge.** NOTE: • If fuel pressure does not increase, squeeze fuel return hose 2 to 3 times, then measure fuel pressure again. • If the measured value at this step is out of specification, check or replace pressure regulator and pressure regulator vacuum hose.	Is the measured value 274 — 304 kPa (2.8 — 3.1 kgf/cm^2, 40 — 44 psi)?	Go to step **12**.	Repair the following item. Fuel pressure is too high: • Faulty pressure regulator • Clogged fuel return line or bent hose Fuel pressure is too low: • Faulty pressure regulator • Improper fuel pump discharge • Clogged fuel supply line
12	**CHECK ENGINE COOLANT TEMPERATURE SENSOR.** 1) Start the engine and warm up completely. 2) Read the value of «Coolant Temp.» using the Subaru Select Monitor or a general scan tool. NOTE: • Subaru Select Monitor For detailed operation procedures, refer to "READ CURRENT DATA FOR ENGINE". <Ref. to EN(H4DOTC)(diag)-34, Subaru Select Monitor.> • General scan tool For detailed operation procedures, refer to the general scan tool operation manual.	Is the value of «Coolant Temp.» 75°C (167°F) or more?	Go to step **13**.	Replace the engine coolant temperature sensor. <Ref. to FU(H4DOTC)-34, Engine Coolant Temperature Sensor.>

GETTHEMANUALS.org

	Step	Check	Yes	No
13	**CHECK MASS AIR FLOW AND INTAKE AIR TEMPERATURE SENSOR.** 1) Start the engine and warm up engine until coolant temperature is higher than 75°C (167°F). 2) Place the shift lever in neutral position. 3) Turn the A/C switch to OFF. 4) Turn all the accessory switches to OFF. 5) Read the value of «Mass Air Flow» using the Subaru Select Monitor or a general scan tool. NOTE: • Subaru Select Monitor For detailed operation procedures, refer to "READ CURRENT DATA FOR ENGINE". <Ref. to EN(H4DOTC)(diag)-34, Subaru Select Monitor.> • General scan tool For detailed operation procedures, refer to the general scan tool operation manual.	Is the value in «Mass Air Flow» 2.0 — 5.0 g/s (0.26 — 0.66 lb/s)?	Go to step **14**.	Replace the mass air flow and intake air temperature sensor. <Ref. to FU(H4DOTC)-42, Mass Air Flow and Intake Air Temperature Sensor.>
14	**CHECK MASS AIR FLOW AND INTAKE AIR TEMPERATURE SENSOR.** 1) Start the engine and warm up engine until coolant temperature is higher than 75°C (167°F). 2) Place the shift lever in neutral position. 3) Turn the A/C switch to OFF. 4) Turn all the accessory switches to OFF. 5) Open the front hood. 6) Measure the ambient temperature. 7) Read the value of «Intake Air Temp.» using the Subaru Select Monitor or a general scan tool. NOTE: • Subaru Select Monitor For detailed operation procedures, refer to "READ CURRENT DATA FOR ENGINE". <Ref. to EN(H4DOTC)(diag)-34, Subaru Select Monitor.> • General scan tool For detailed operation procedures, refer to the general scan tool operation manual.	Subtract ambient temperature from «Intake Air Temp.». Is the obtained value –10 — 50°C (–18 — 90°F)?	Go to step **15**.	Check the mass air flow and intake air temperature sensor. <Ref. to FU(H4DOTC)-42, Mass Air Flow and Intake Air Temperature Sensor.>
15	**CHECK REAR OXYGEN SENSOR DATA.** 1) Warm up the engine until engine coolant temperature is higher than 75°C (167°F), and keep the engine speed at 3,000 rpm. (2 minutes maximum) 2) Read the value of «Rear O2 Sensor» using the Subaru Select Monitor or a general scan tool. NOTE: • Depress the clutch pedal. • Subaru Select Monitor For detailed operation procedures, refer to "READ CURRENT DATA FOR ENGINE". <Ref. to EN(H4DOTC)(diag)-34, Subaru Select Monitor.> • General scan tool For detailed operation procedures, refer to the general scan tool operation manual.	Is the value of «Rear O2 Sensor» 0.490 V or more?	Go to step **16**.	Go to step **17**.

GETTHEMANUALS.org

	Step	Check	Yes	No
16	**CHECK REAR OXYGEN SENSOR DATA.** 1) Warm up the engine until engine coolant temperature is higher than 75°C (167°F), and rapidly reduce the engine speed from 3,000 rpm. 2) Read the value of «Rear O2 Sensor» using the Subaru Select Monitor or a general scan tool. NOTE: • Depress the clutch pedal. • Subaru Select Monitor For detailed operation procedures, refer to "READ CURRENT DATA FOR ENGINE". <Ref. to EN(H4DOTC)(diag)-34, Subaru Select Monitor.> • General scan tool For detailed operation procedures, refer to the general scan tool operation manual.	Is the value of «Rear O2 Sensor» 0.250 V or less?	Go to step **18**.	Go to step **17**.
17	**CHECK REAR OXYGEN SENSOR CONNECTOR AND COUPLING CONNECTOR.**	Has water entered the connector?	Completely remove any water inside.	Go to step **19**.
18	**CHECK FRONT OXYGEN (A/F) SENSOR USING REAR OXYGEN SENSOR SIGNAL.** 1) Warm up the engine until engine coolant temperature is higher than 75°C (167°F), then keep the engine idling for 5 minutes or more. 2) Read the value of «Rear O2 Sensor» using the Subaru Select Monitor or a general scan tool. NOTE: • Subaru Select Monitor For detailed operation procedures, refer to "READ CURRENT DATA FOR ENGINE". <Ref. to EN(H4DOTC)(diag)-34, Subaru Select Monitor.> • General scan tool For detailed operation procedures, refer to the general scan tool operation manual.	Is the value in «Rear O2 Sensor» kept at 0.250 V or less for 5 minutes or more?	Replace the front oxygen (A/F) sensor. <Ref. to FU(H4DOTC)-54, Front Oxygen (A/F) Sensor.>	Go to step **19**.
19	**CHECK HARNESS BETWEEN ECM AND REAR OXYGEN SENSOR CONNECTOR.** 1) Turn the ignition switch to OFF. 2) Disconnect the connector from ECM and rear oxygen sensor. 3) Measure the resistance of harness between ECM and rear oxygen sensor connector. ***Connector & terminal*** ***(B136) No. 20 — (E25) No. 3:*** ***(B135) No. 30 — (E25) No. 4:***	Is the resistance less than 1 Ω?	Go to step **20**.	Repair the harness and connector. NOTE: In this case, repair the following item: • Open circuit in harness between ECM and rear oxygen sensor connector • Poor contact of coupling connector

GETTHEMANUALS.org

Step		Check	Yes	No
20	**CHECK HARNESS BETWEEN ECM AND REAR OXYGEN SENSOR CONNECTOR.** 1) Connect the connector to ECM. 2) Turn the ignition switch to ON. 3) Measure the voltage between rear oxygen sensor connector and chassis ground. ***Connector & terminal*** ***(E25) No. 3 (+) — Chassis ground (–):***	Is the voltage 0.2 — 0.5 V?	Replace the rear oxygen sensor. <Ref. to FU(H4DOTC)-56, Rear Oxygen Sensor.>	Repair the harness and connector. NOTE: In this case, repair the following item: • Open circuit in harness between ECM and rear oxygen sensor connector • Poor contact of ECM connector • Poor contact of coupling connector

GETTHEMANUALS.org

EA:DTC P2097 POST CATALYST FUEL TRIM SYSTEM TOO RICH (BANK 1)

DTC DETECTING CONDITION:

- Detected when two consecutive driving cycles with fault occur.
- GENERAL DESCRIPTION <Ref. to GD(H4DOTC)-228, DTC P2097 POST CATALYST FUEL TRIM SYSTEM TOO RICH (BANK 1), Diagnostic Trouble Code (DTC) Detecting Criteria.>

CAUTION:

After servicing or replacing faulty parts, perform Clear Memory Mode <Ref. to EN(H4DOTC)(diag)-53, OPERATION, Clear Memory Mode.>, and Inspection Mode <Ref. to EN(H4DOTC)(diag)-41, PROCEDURE, Inspection Mode.>.

WIRING DIAGRAM:

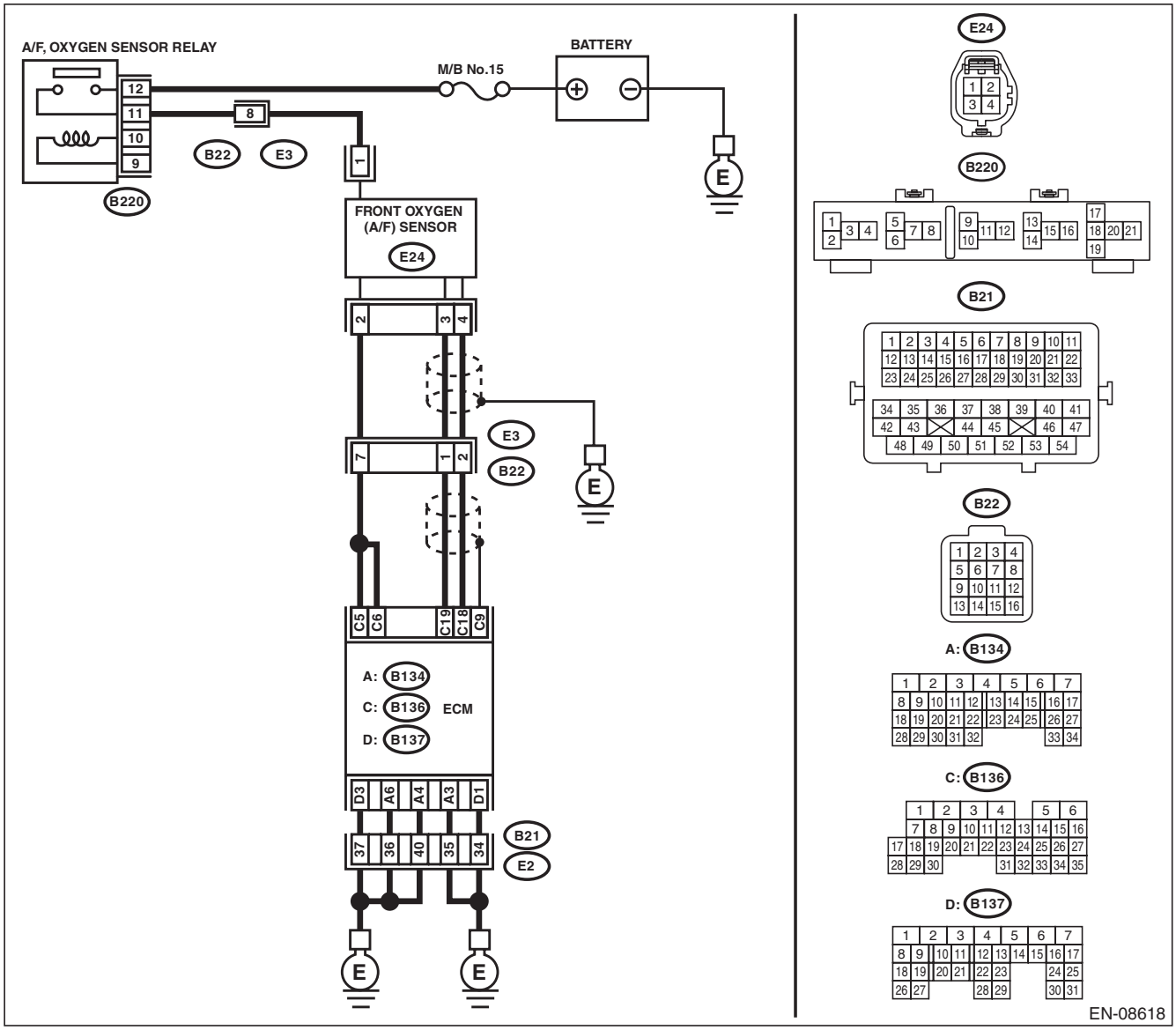

GETHEMANUALS.org

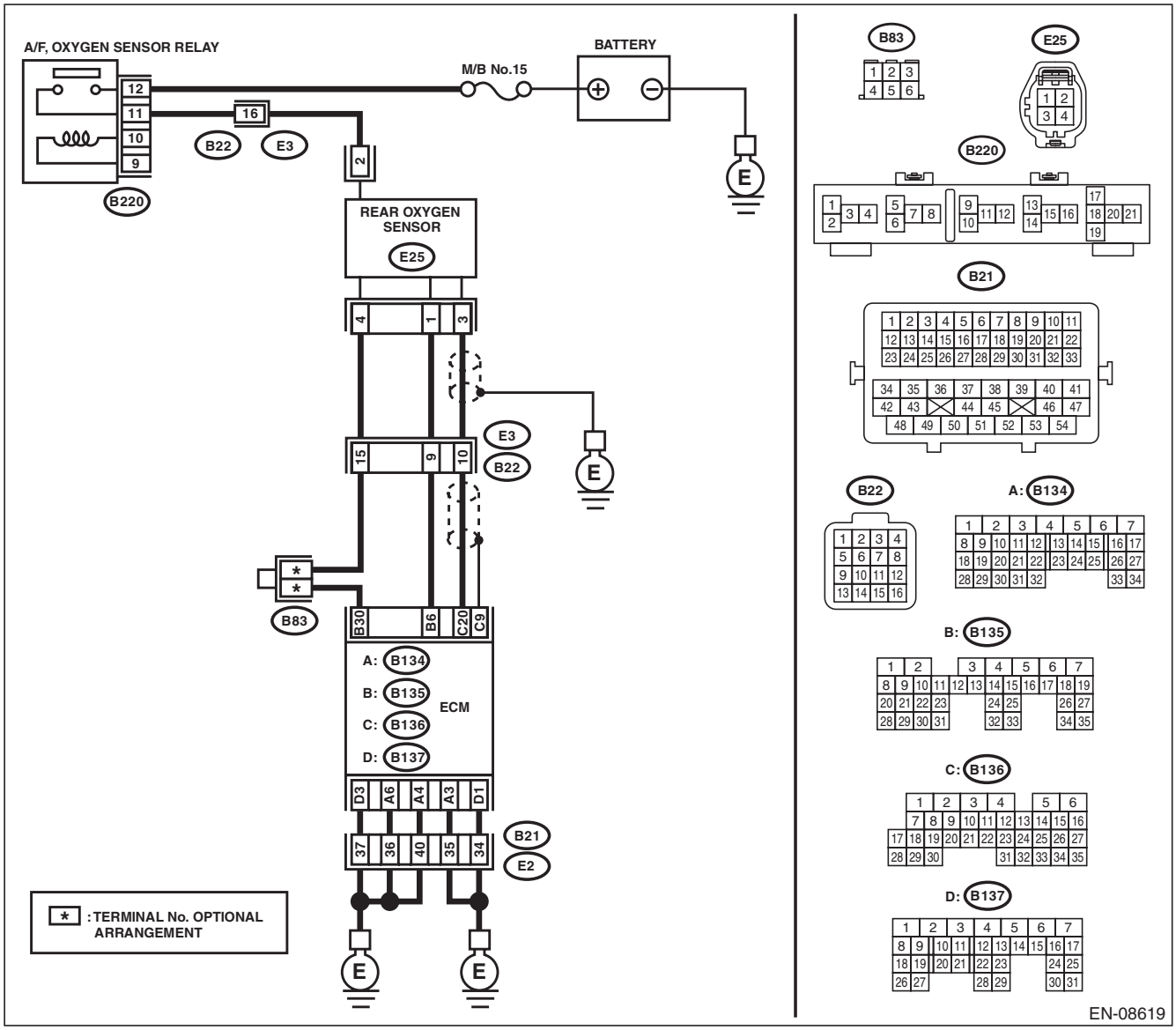

Step		Check	Yes	No
1	**CHECK FOR ANY OTHER DTC ON DISPLAY.**	Is any other DTC displayed?	Check DTC using "List of Diagnostic Trouble Code (DTC)". <Ref. to EN(H4DOTC)(diag)-75, List of Diagnostic Trouble Code (DTC).>	Go to step **2**.
2	**CHECK FRONT OXYGEN (A/F) SENSOR CONNECTOR AND COUPLING CONNECTOR.**	Has water entered the connector?	Completely remove any water inside.	Go to step **3**.

GETTHEMANUALS.org

	Step	Check	Yes	No
3	**CHECK HARNESS BETWEEN ECM AND FRONT OXYGEN (A/F) SENSOR CONNECTOR.** 1) Turn the ignition switch to OFF. 2) Disconnect the connectors from ECM and front oxygen (A/F) sensor. 3) Measure the resistance of harness between ECM and front oxygen (A/F) sensor connector. ***Connector & terminal*** ***(B136) No. 19 — (E24) No. 3:*** ***(B136) No. 18 — (E24) No. 4:***	Is the resistance less than 1 Ω?	Go to step **4**.	Repair the harness and connector. NOTE: In this case, repair the following item: • Open circuit in harness between ECM and front oxygen (A/F) sensor connector • Poor contact of coupling connector
4	**CHECK HARNESS BETWEEN ECM AND FRONT OXYGEN (A/F) SENSOR CONNECTOR.** Measure the resistance between ECM and chassis ground. ***Connector & terminal*** ***(B136) No. 19 — Chassis ground:*** ***(B136) No. 18 — Chassis ground:***	Is the resistance 1 MΩ or more?	Go to step **5**.	Repair the ground short circuit of harness between ECM and front oxygen (A/F) sensor connector.
5	**CHECK OUTPUT SIGNAL FOR ECM.** 1) Connect the connector to ECM. 2) Turn the ignition switch to ON. 3) Measure the voltage between front oxygen (A/F) sensor connector and chassis ground. ***Connector & terminal*** ***(E24) No. 3 (+) — Chassis ground (–):***	Is the voltage 4.5 V or more?	Go to step **7**.	Go to step **6**.
6	**CHECK OUTPUT SIGNAL FOR ECM.** Measure the voltage between front oxygen (A/F) sensor connector and chassis ground. ***Connector & terminal*** ***(E24) No. 4 (+) — Chassis ground (–):***	Is the voltage 4.95 V or more?	Go to step **7**.	Go to step **8**.
7	**CHECK OUTPUT SIGNAL FOR ECM.** Measure the voltage between front oxygen (A/F) sensor connector and chassis ground. ***Connector & terminal*** ***(E24) No. 3 (+) — Chassis ground (–):*** ***(E24) No. 4 (+) — Chassis ground (–):***	Is the voltage 8 V or more?	Repair the short circuit to power in the harness between ECM and front oxygen (A/F) sensor connector. After repair, replace the ECM. <Ref. to FU(H4DOTC)-58, Engine Control Module (ECM).>	Repair the poor contact of ECM connector.
8	**CHECK EXHAUST SYSTEM.**	Are there holes or loose bolts on exhaust system?	Repair the exhaust system.	Go to step **9**.
9	**CHECK AIR INTAKE SYSTEM.**	Are there holes, loose bolts or disconnection of hose on air intake system?	Repair the air intake system.	Go to step **10**.

GETTHEMANUALS.org

	Step	Check	Yes	No
10	**CHECK FUEL PRESSURE.** **WARNING:** **Place "NO OPEN FLAMES" signs near the working area.** **CAUTION:** **Be careful not to spill fuel.** 1) Connect the front oxygen (A/F) sensor connector. 2) Measure the fuel pressure while disconnecting pressure regulator vacuum hose from intake manifold. <Ref. to ME(H4DOTC)-26, INSPECTION, Fuel Pressure.> **CAUTION:** **Release fuel pressure before removing the fuel pressure gauge.** NOTE: If fuel pressure does not increase, squeeze the fuel return hose 2 to 3 times, then measure fuel pressure again.	Is the measured value 328 — 358 kPa (3.3 — 3.7 kgf/cm^2, 48 — 52 psi)?	Go to step **11**.	Repair the following item. Fuel pressure is too high: • Clogged fuel return line or bent hose Fuel pressure is too low: • Improper fuel pump discharge • Clogged fuel supply line
11	**CHECK FUEL PRESSURE.** After connecting the pressure regulator vacuum hose, measure fuel pressure. <Ref. to ME(H4DOTC)-26, INSPECTION, Fuel Pressure.> **CAUTION:** **Release fuel pressure before removing the fuel pressure gauge.** NOTE: • If fuel pressure does not increase, squeeze fuel return hose 2 to 3 times, then measure fuel pressure again. • If the measured value at this step is out of specification, check or replace pressure regulator and pressure regulator vacuum hose.	Is the measured value 274 — 304 kPa (2.8 — 3.1 kgf/cm^2, 40 — 44 psi)?	Go to step **12**.	Repair the following item. Fuel pressure is too high: • Faulty pressure regulator • Clogged fuel return line or bent hose Fuel pressure is too low: • Faulty pressure regulator • Improper fuel pump discharge • Clogged fuel supply line
12	**CHECK ENGINE COOLANT TEMPERATURE SENSOR.** 1) Start the engine and warm up completely. 2) Read the value of «Coolant Temp.» using the Subaru Select Monitor or a general scan tool. NOTE: • Subaru Select Monitor For detailed operation procedures, refer to "READ CURRENT DATA FOR ENGINE". <Ref. to EN(H4DOTC)(diag)-34, Subaru Select Monitor.> • General scan tool For detailed operation procedures, refer to the general scan tool operation manual.	Is the value of «Coolant Temp.» 75°C (167°F) or more?	Go to step **13**.	Replace the engine coolant temperature sensor. <Ref. to FU(H4DOTC)-34, Engine Coolant Temperature Sensor.>

GETTHEMANUALS.org

	Step	Check	Yes	No
13	**CHECK MASS AIR FLOW AND INTAKE AIR TEMPERATURE SENSOR.** 1) Start the engine and warm up engine until coolant temperature is higher than 75°C (167°F). 2) Place the shift lever in neutral position. 3) Turn the A/C switch to OFF. 4) Turn all the accessory switches to OFF. 5) Read the value of «Mass Air Flow» using the Subaru Select Monitor or a general scan tool. NOTE: • Subaru Select Monitor For detailed operation procedures, refer to "READ CURRENT DATA FOR ENGINE". <Ref. to EN(H4DOTC)(diag)-34, Subaru Select Monitor.> • General scan tool For detailed operation procedures, refer to the general scan tool operation manual.	Is the value in «Mass Air Flow» 2.0 — 5.0 g/s (0.26 — 0.66 lb/s)?	Go to step **14**.	Replace the mass air flow and intake air temperature sensor. <Ref. to FU(H4DOTC)-42, Mass Air Flow and Intake Air Temperature Sensor.>
14	**CHECK MASS AIR FLOW AND INTAKE AIR TEMPERATURE SENSOR.** 1) Start the engine and warm up engine until coolant temperature is higher than 75°C (167°F). 2) Place the shift lever in neutral position. 3) Turn the A/C switch to OFF. 4) Turn all the accessory switches to OFF. 5) Open the front hood. 6) Measure the ambient temperature. 7) Read the value of «Intake Air Temp.» using the Subaru Select Monitor or a general scan tool. NOTE: • Subaru Select Monitor For detailed operation procedures, refer to "READ CURRENT DATA FOR ENGINE". <Ref. to EN(H4DOTC)(diag)-34, Subaru Select Monitor.> • General scan tool For detailed operation procedures, refer to the general scan tool operation manual.	Subtract ambient temperature from «Intake Air Temp.». Is the obtained value –10 — 50°C (–18 — 90°F)?	Go to step **15**.	Check the mass air flow and intake air temperature sensor. <Ref. to FU(H4DOTC)-42, Mass Air Flow and Intake Air Temperature Sensor.>
15	**CHECK REAR OXYGEN SENSOR DATA.** 1) Warm up the engine until engine coolant temperature is higher than 75°C (167°F), and keep the engine speed at 3,000 rpm. (2 minutes maximum) 2) Read the value of «Rear O2 Sensor» using the Subaru Select Monitor or a general scan tool. NOTE: • Depress the clutch pedal. • Subaru Select Monitor For detailed operation procedures, refer to "READ CURRENT DATA FOR ENGINE". <Ref. to EN(H4DOTC)(diag)-34, Subaru Select Monitor.> • General scan tool For detailed operation procedures, refer to the general scan tool operation manual.	Is the value of «Rear O2 Sensor» 0.490 V or more?	Go to step **16**.	Go to step **17**.

GETTHEMANUALS.org

	Step	Check	Yes	No
16	**CHECK REAR OXYGEN SENSOR DATA.** 1) Warm up the engine until engine coolant temperature is higher than 75°C (167°F), and rapidly reduce the engine speed from 3,000 rpm. 2) Read the value of «Rear O2 Sensor» using the Subaru Select Monitor or a general scan tool. NOTE: • Depress the clutch pedal. • Subaru Select Monitor For detailed operation procedures, refer to "READ CURRENT DATA FOR ENGINE". <Ref. to EN(H4DOTC)(diag)-34, Subaru Select Monitor.> • General scan tool For detailed operation procedures, refer to the general scan tool operation manual.	Is the value of «Rear O2 Sensor» 0.250 V or less?	Go to step **18**.	Go to step **17**.
17	**CHECK REAR OXYGEN SENSOR CONNECTOR AND COUPLING CONNECTOR.**	Has water entered the connector?	Completely remove any water inside.	Go to step **19**.
18	**CHECK FRONT OXYGEN (A/F) SENSOR USING REAR OXYGEN SENSOR SIGNAL.** 1) Warm up the engine until engine coolant temperature is higher than 75°C (167°F), then keep the engine idling for 5 minutes or more. 2) Read the value of «Rear O2 Sensor» using the Subaru Select Monitor or a general scan tool. NOTE: • Subaru Select Monitor For detailed operation procedures, refer to "READ CURRENT DATA FOR ENGINE". <Ref. to EN(H4DOTC)(diag)-34, Subaru Select Monitor.> • General scan tool For detailed operation procedures, refer to the general scan tool operation manual.	Is the value in «Rear O2 Sensor» kept at 0.8 V or more for 5 minutes or more?	Replace the front oxygen (A/F) sensor. <Ref. to FU(H4DOTC)-54, Front Oxygen (A/F) Sensor.>	Go to step **19**.
19	**CHECK HARNESS BETWEEN ECM AND REAR OXYGEN SENSOR CONNECTOR.** 1) Turn the ignition switch to OFF. 2) Disconnect the connector from ECM and rear oxygen sensor. 3) Measure the resistance of harness between ECM and rear oxygen sensor connector. ***Connector & terminal*** ***(B136) No. 20 — (E25) No. 3:*** ***(B135) No. 30 — (E25) No. 4:***	Is the resistance less than 1 Ω?	Go to step **20**.	Repair the harness and connector. NOTE: In this case, repair the following item: • Open circuit in harness between ECM and rear oxygen sensor connector • Poor contact of coupling connector

GETtheMANUALS.org

Step		Check	Yes	No
20	**CHECK HARNESS BETWEEN ECM AND REAR OXYGEN SENSOR CONNECTOR.** 1) Connect the connector to ECM. 2) Turn the ignition switch to ON. 3) Measure the voltage between rear oxygen sensor connector and chassis ground. ***Connector & terminal*** ***(E25) No. 3 (+) — Chassis ground (–):***	Is the voltage 0.2 — 0.5 V?	Replace the rear oxygen sensor. <Ref. to FU(H4DOTC)-56, Rear Oxygen Sensor.>	Repair the harness and connector. NOTE: In this case, repair the following item: • Open circuit in harness between ECM and rear oxygen sensor connector • Poor contact of ECM connector • Poor contact of coupling connector

GETTHEMANUALS.org

EB:DTC P2101 THROTTLE ACTUATOR CONTROL MOTOR CIRCUIT RANGE/ PERFORMANCE

DTC DETECTING CONDITION:

- Immediately at fault recognition
- GENERAL DESCRIPTION <Ref. to GD(H4DOTC)-230, DTC P2101 THROTTLE ACTUATOR CONTROL MOTOR CIRCUIT RANGE/PERFORMANCE, Diagnostic Trouble Code (DTC) Detecting Criteria.>

TROUBLE SYMPTOM:

- Improper idling
- Poor driving performance
- Engine stalls.

CAUTION:

After servicing or replacing faulty parts, perform Clear Memory Mode <Ref. to EN(H4DOTC)(diag)-53, OPERATION, Clear Memory Mode.>, and Inspection Mode <Ref. to EN(H4DOTC)(diag)-41, PROCEDURE, Inspection Mode.>.

WIRING DIAGRAM:

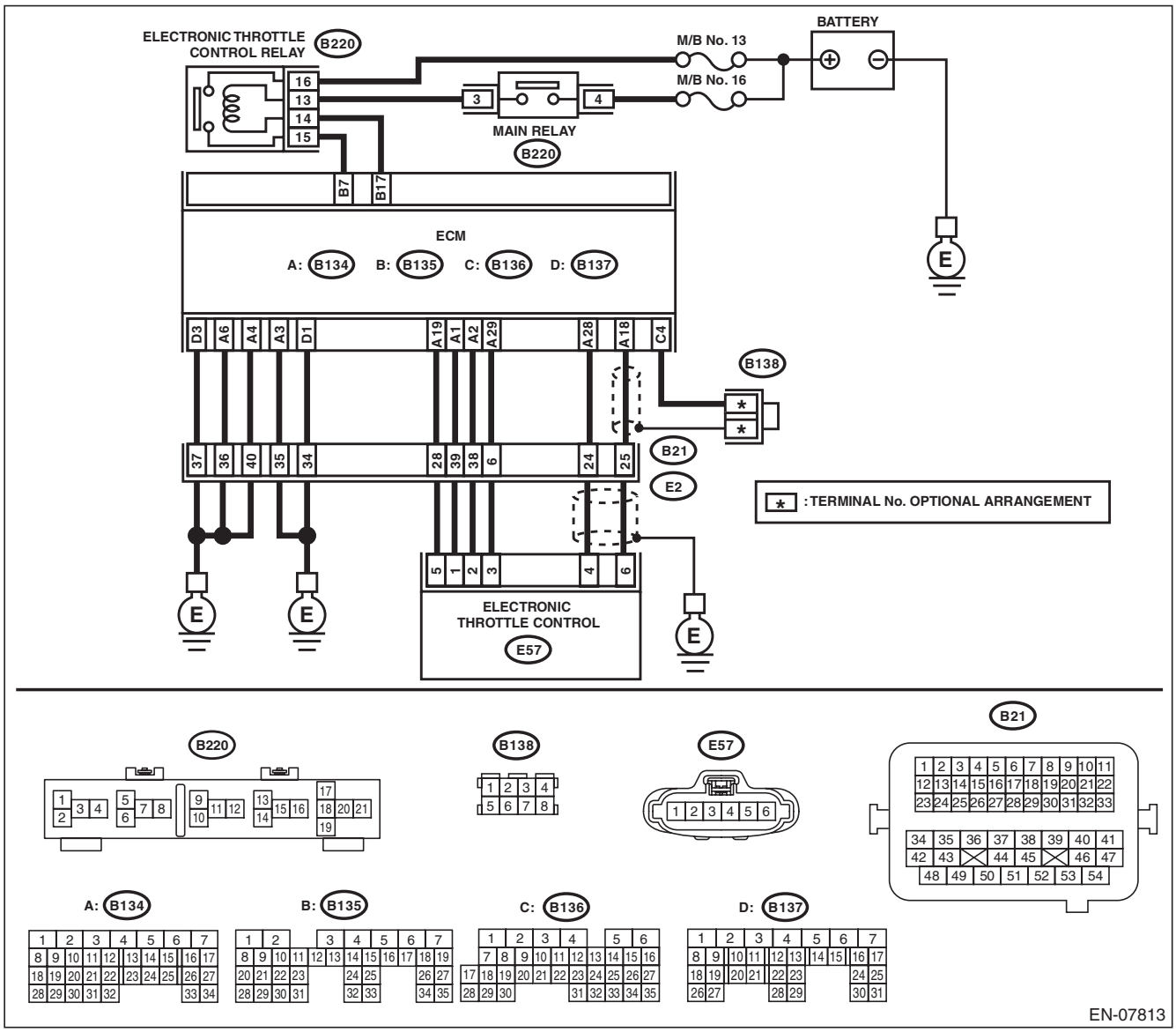

GETTHEMANUALS.org

	Step	Check	Yes	No
1	**CHECK ELECTRONIC THROTTLE CONTROL RELAY.** 1) Turn the ignition switch to OFF. 2) Remove the electronic throttle control relay. 3) Connect the battery to terminals No. 13 and No. 14 of electronic throttle control relay. 4) Measure the resistance between electronic throttle control relay terminals. ***Terminals*** ***No. 16 — No. 15:***	Is the resistance less than 1 Ω?	Go to step **2**.	Replace the electronic throttle control relay. <Ref. to FU(H4DOTC)-63, Electronic Throttle Control Relay.>
2	**CHECK POWER SUPPLY OF ELECTRONIC THROTTLE CONTROL RELAY.** Measure the voltage between electronic throttle control relay connector and chassis ground. ***Connector & terminal*** ***(B220) No. 16 (+) — Chassis ground (–):***	Is the voltage 10 V or more?	Go to step **3**.	Repair the open or ground short circuit of power supply circuit.
3	**CHECK HARNESS BETWEEN ECM AND ELECTRONIC THROTTLE CONTROL RELAY CONNECTOR.** 1) Disconnect the connector from ECM. 2) Turn the ignition switch to ON. 3) Measure the voltage between electronic throttle control relay connector and chassis ground. ***Connector & terminal*** ***(B220) No. 14 (+) — Chassis ground (–):***	Is the voltage 10 V or more?	Repair the short circuit to power in the harness between ECM and electronic throttle control relay connector.	Go to step **4**.
4	**CHECK HARNESS BETWEEN ECM AND ELECTRONIC THROTTLE CONTROL RELAY CONNECTOR.** 1) Turn the ignition switch to OFF. 2) Measure the resistance between electronic throttle control relay connector and chassis ground. ***Connector & terminal*** ***(B220) No. 14 — Chassis ground:*** ***(B220) No. 15 — Chassis ground:***	Is the resistance 1 MΩ or more?	Go to step **5**.	Repair the short circuit in harness to ground between ECM and electronic throttle control relay connector.
5	**CHECK HARNESS BETWEEN ECM AND ELECTRONIC THROTTLE CONTROL RELAY CONNECTOR.** Measure the resistance between ECM and electronic throttle control relay connector. ***Connector & terminal*** ***(B135) No. 17 — (B220) No. 14:*** ***(B135) No. 7 — (B220) No. 15:***	Is the resistance less than 1 Ω?	Go to step **6**.	Repair the open circuit in harness between ECM and electronic throttle control relay connector.
6	**CHECK HARNESS BETWEEN ECM AND ELECTRONIC THROTTLE CONTROL CONNECTOR.** 1) Turn the ignition switch to OFF. 2) Disconnect the connectors from electronic throttle control. 3) Measure the resistance between ECM and chassis ground. ***Connector & terminal*** ***(B134) No. 19 — Chassis ground:*** ***(B134) No. 18 — Chassis ground:*** ***(B134) No. 18 — (B136) No. 4:*** ***(B134) No. 28 — Chassis ground:***	Is the resistance 1 MΩ or more?	Go to step **7**.	Repair the short circuit to ground in harness between ECM and electronic throttle control connector.

GETTHEMANUALS.org

	Step	Check	Yes	No
7	**CHECK SHORT CIRCUIT INSIDE THE ECM.** 1) Connect the connector to ECM. 2) Measure the resistance between electronic throttle control connector and engine ground. ***Connector & terminal*** ***(E57) No. 6 — Engine ground:*** ***(E57) No. 4 — Engine ground:***	Is the resistance 1 MΩ or more?	Go to step **8**.	Repair the short circuit to ground in harness between ECM and electronic throttle control connector. Replace the ECM if defective. <Ref. to FU(H4DOTC)-58, Engine Control Module (ECM).>
8	**CHECK HARNESS BETWEEN ECM AND ELECTRONIC THROTTLE CONTROL CONNECTOR.** 1) Disconnect the connector from ECM. 2) Measure the resistance of harness between ECM and electronic throttle control connector. ***Connector & terminal*** ***(B134) No. 18 — (E57) No. 6:*** ***(B134) No. 28 — (E57) No. 4:*** ***(B134) No. 29 — (E57) No. 3:***	Is the resistance less than 1 Ω?	Go to step **9**.	Repair the harness and connector. NOTE: In this case, repair the following item: • Open circuit in harness between ECM and electronic throttle control connector • Poor contact of coupling connector
9	**CHECK HARNESS BETWEEN ECM AND ELECTRONIC THROTTLE CONTROL CONNECTOR.** 1) Connect the connector to ECM. 2) Measure the resistance between electronic throttle control connector and engine ground. ***Connector & terminal*** ***(E57) No. 3 — Engine ground:***	Is the resistance less than 5 Ω?	Go to step **10**.	Repair the harness and connector. NOTE: In this case, repair the following item: • Open circuit of harness between ECM and engine ground • Poor contact of ECM connector • Poor contact of coupling connector
10	**CHECK HARNESS BETWEEN ECM AND ELECTRONIC THROTTLE CONTROL CONNECTOR.** 1) Turn the ignition switch to ON. 2) Measure the voltage between electronic throttle control connector and engine ground. ***Connector & terminal*** ***(E57) No. 6 (+) — Engine ground (–):*** ***(E57) No. 4 (+) — Engine ground (–):***	Is the voltage 5 V or more?	Repair the short circuit to power in harness between ECM and electronic throttle control connector.	Go to step **11**.
11	**CHECK HARNESS BETWEEN ECM AND ELECTRONIC THROTTLE CONTROL CONNECTOR.** 1) Turn the ignition switch to OFF. 2) Disconnect the connector from ECM. 3) Measure the resistance between ECM connectors. ***Connector & terminal*** ***(B134) No. 19 — (B134) No. 18:*** ***(B134) No. 19 — (B134) No. 28:***	Is the resistance 1 MΩ or more?	Go to step **12**.	Repair the short circuit to power in harness between ECM and electronic throttle control connector.

GETTHEMANUALS.org

	Step	Check	Yes	No
12	**CHECK SENSOR OUTPUT.** 1) Connect all connectors. 2) Turn the ignition switch to ON. 3) Read the value of «Main-Throttle Sensor» using Subaru Select Monitor. NOTE: For detailed operation procedures, refer to "READ CURRENT DATA FOR ENGINE". <Ref. to EN(H4DOTC)(diag)-34, Subaru Select Monitor.>	Is the value of «Main-Throttle Sensor» 0.81 — 0.87 V?	Go to step **13**.	Repair the poor contact of electronic throttle control connector. Replace the electronic throttle control if defective. <Ref. to FU(H4DOTC)-15, Throttle Body.>
13	**CHECK SENSOR OUTPUT.** Read the value of «Sub-Throttle Sensor» using Subaru Select Monitor. NOTE: For detailed operation procedures, refer to "READ CURRENT DATA FOR ENGINE". <Ref. to EN(H4DOTC)(diag)-34, Subaru Select Monitor.>	Is the value of «Sub-Throttle Sensor» 1.64 — 1.70 V?	Go to step **14**.	Repair the poor contact of electronic throttle control connector. Replace the electronic throttle control if defective. <Ref. to FU(H4DOTC)-15, Throttle Body.>
14	**CHECK HARNESS BETWEEN ECM AND ELECTRONIC THROTTLE CONTROL MOTOR.** 1) Turn the ignition switch to OFF. 2) Disconnect the connectors from ECM and electronic throttle control. 3) Measure the resistance between ECM and electronic throttle control connector. ***Connector & terminal*** ***(B134) No. 2 — (E57) No. 2:*** ***(B134) No. 1 — (E57) No. 1:***	Is the resistance less than 1 Ω?	Go to step **15**.	Repair the harness and connector. NOTE: In this case, repair the following item: • Open circuit in harness between ECM and electronic throttle control • Poor contact of coupling connector
15	**CHECK HARNESS BETWEEN ECM AND ELECTRONIC THROTTLE CONTROL MOTOR.** 1) Connect the connector to ECM. 2) Turn the ignition switch to ON. 3) Measure the voltage between electronic throttle control connector and engine ground. ***Connector & terminal*** ***(E57) No. 2 (+) — Engine ground (–):*** ***(E57) No. 1 (+) — Engine ground (–):***	Is the voltage 5 V or more?	Repair the short circuit to power in harness between ECM and electronic throttle control connector.	Go to step **16**.
16	**CHECK HARNESS BETWEEN ECM AND ELECTRONIC THROTTLE CONTROL MOTOR.** 1) Turn the ignition switch to OFF. 2) Disconnect the connector from ECM. 3) Measure the resistance between electronic throttle control connector and engine ground. ***Connector & terminal*** ***(E57) No. 2 — Engine ground:*** ***(E57) No. 1 — Engine ground:***	Is the resistance 1 MΩ or more?	Go to step **17**.	Repair the short circuit to ground in harness between ECM and electronic throttle control connector.
17	**CHECK ELECTRONIC THROTTLE CONTROL MOTOR HARNESS.** Measure the resistance between electronic throttle control connectors. ***Connector & terminal*** ***(E57) No. 2 — (E57) No. 1:***	Is the resistance 1 MΩ or more?	Go to step **18**.	Repair the short circuit of harness between ECM and electronic throttle control connector.

GETTHEMANUALS.org

Step		Check	Yes	No
18	**CHECK ELECTRONIC THROTTLE CONTROL GROUND CIRCUIT.** Measure the resistance between ECM and chassis ground. ***Connector & terminal*** ***(B134) No. 3 — Chassis ground:*** ***(B134) No. 4 — Chassis ground:*** ***(B134) No. 6 — Chassis ground:*** ***(B137) No. 1 — Chassis ground:*** ***(B137) No. 3 — Chassis ground:***	Is the resistance less than 5 Ω?	Go to step **19**.	Repair the harness and connector. NOTE: In this case, repair the following item: • Open circuit of harness between ECM and engine ground • Poor contact of coupling connector
19	**CHECK ELECTRONIC THROTTLE CONTROL.** Measure the resistance between electronic throttle control terminals. ***Terminals*** ***No. 2 — No. 1:***	Is the resistance 50 Ω or less?	Go to step **20**.	Replace the electronic throttle control. <Ref. to FU(H4DOTC)-15, Throttle Body.>
20	**CHECK ELECTRONIC THROTTLE CONTROL.** Move the throttle valve to the fully open and fully closed positions with fingers. Check that the valve returns to the specified position when releasing fingers.	Does the valve return to the specified position? Standard value: 3 mm (0.12 in) from fully closed position	Repair the poor contact of ECM connector.	Replace the electronic throttle control. <Ref. to FU(H4DOTC)-15, Throttle Body.>

GETTHEMANUALS.org

EC:DTC P2102 THROTTLE ACTUATOR CONTROL MOTOR CIRCUIT LOW

DTC DETECTING CONDITION:

- Immediately at fault recognition
- GENERAL DESCRIPTION <Ref. to GD(H4DOTC)-232, DTC P2102 THROTTLE ACTUATOR CONTROL MOTOR CIRCUIT LOW, Diagnostic Trouble Code (DTC) Detecting Criteria.>

TROUBLE SYMPTOM:

- Improper idling
- Poor driving performance
- Engine stalls.

CAUTION:

After servicing or replacing faulty parts, perform Clear Memory Mode <Ref. to EN(H4DOTC)(diag)-53, OPERATION, Clear Memory Mode.>, and Inspection Mode <Ref. to EN(H4DOTC)(diag)-41, PROCEDURE, Inspection Mode.>.

WIRING DIAGRAM:

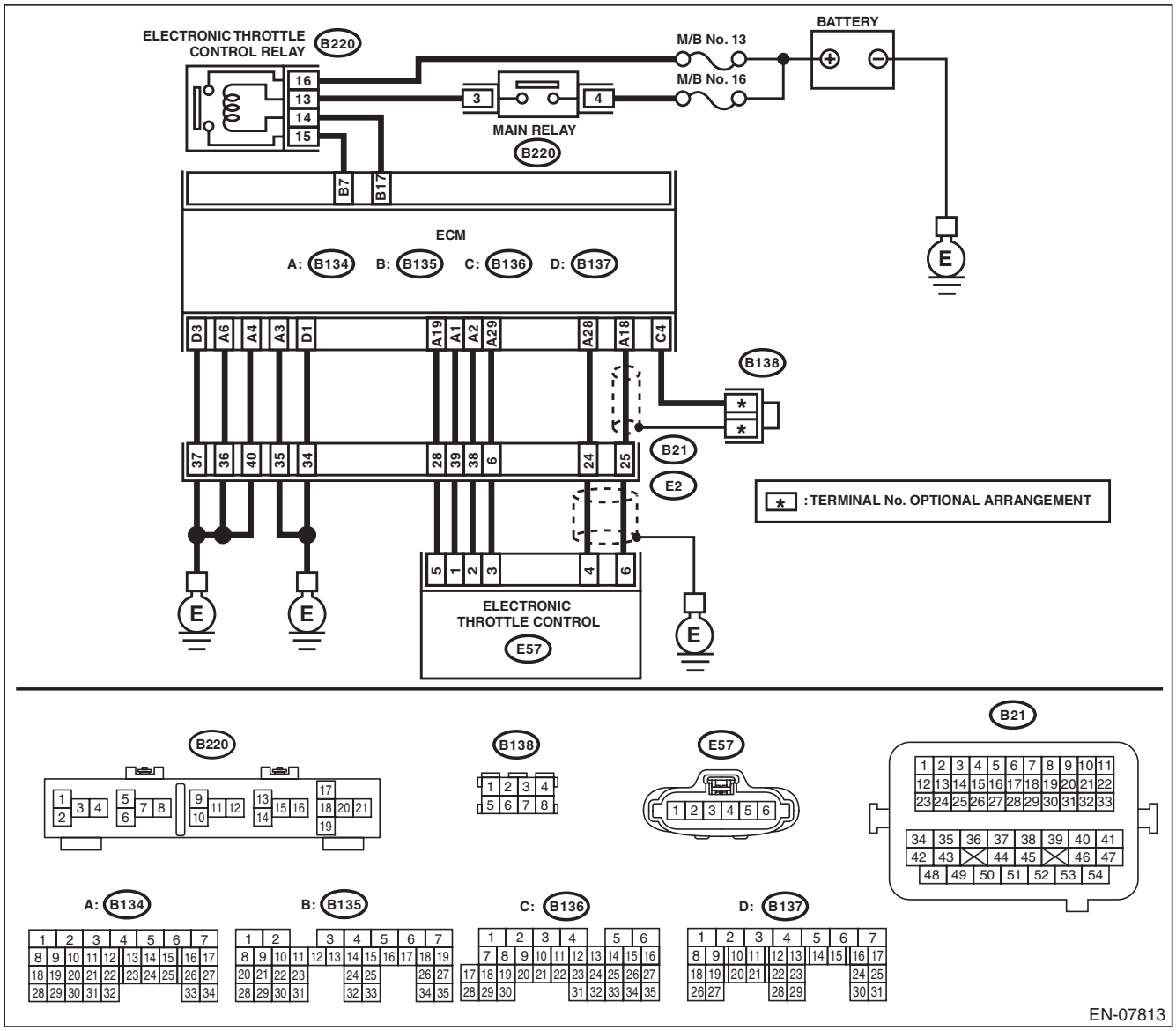

GETTHEMANUALS.org

Step		Check	Yes	No
1	**CHECK ELECTRONIC THROTTLE CONTROL RELAY.** 1) Turn the ignition switch to OFF. 2) Remove the electronic throttle control relay. 3) Connect the battery to terminals No. 13 and No. 14 of electronic throttle control relay. 4) Measure the resistance between electronic throttle control relay terminals. ***Terminals*** ***No. 16 — No. 15:***	Is the resistance less than 1 Ω?	Go to step **2**.	Replace the electronic throttle control relay. <Ref. to FU(H4DOTC)-63, Electronic Throttle Control Relay.>
2	**CHECK POWER SUPPLY OF ELECTRONIC THROTTLE CONTROL RELAY.** Measure the voltage between electronic throttle control relay connector and chassis ground. ***Connector & terminal*** ***(B220) No. 16 (+) — Chassis ground (–):***	Is the voltage 10 V or more?	Go to step **3**.	Repair the open or ground short circuit of power supply circuit.
3	**CHECK HARNESS BETWEEN ECM AND ELECTRONIC THROTTLE CONTROL RELAY CONNECTOR.** 1) Disconnect the connector from ECM. 2) Turn the ignition switch to ON. 3) Measure the voltage between electronic throttle control relay connector and chassis ground. ***Connector & terminal*** ***(B220) No. 14 (+) — Chassis ground (–):***	Is the voltage 10 V or more?	Repair the short circuit to power in the harness between ECM and electronic throttle control relay connector.	Go to step **4**.
4	**CHECK HARNESS BETWEEN ECM AND ELECTRONIC THROTTLE CONTROL RELAY CONNECTOR.** 1) Turn the ignition switch to OFF. 2) Measure the resistance between electronic throttle control relay connector and chassis ground. ***Connector & terminal*** ***(B220) No. 14 — Chassis ground:*** ***(B220) No. 15 — Chassis ground:***	Is the resistance 1 MΩ or more?	Go to step **5**.	Repair the short circuit in harness to ground between ECM and electronic throttle control relay connector.
5	**CHECK HARNESS BETWEEN ECM AND ELECTRONIC THROTTLE CONTROL RELAY CONNECTOR.** Measure the resistance between ECM and electronic throttle control relay connector. ***Connector & terminal*** ***(B135) No. 17 — (B220) No. 14:*** ***(B135) No. 7 — (B220) No. 15:***	Is the resistance less than 1 Ω?	Repair the poor contact of ECM connector.	Repair the open circuit in harness between ECM and electronic throttle control relay connector.

GETTHEMANUALS.org

ED:DTC P2103 THROTTLE ACTUATOR CONTROL MOTOR CIRCUIT HIGH

DTC DETECTING CONDITION:

- Immediately at fault recognition
- GENERAL DESCRIPTION <Ref. to GD(H4DOTC)-234, DTC P2103 THROTTLE ACTUATOR CONTROL MOTOR CIRCUIT HIGH, Diagnostic Trouble Code (DTC) Detecting Criteria.>

CAUTION:

After servicing or replacing faulty parts, perform Clear Memory Mode <Ref. to EN(H4DOTC)(diag)-53, OPERATION, Clear Memory Mode.>, and Inspection Mode <Ref. to EN(H4DOTC)(diag)-41, PROCEDURE, Inspection Mode.>.

WIRING DIAGRAM:

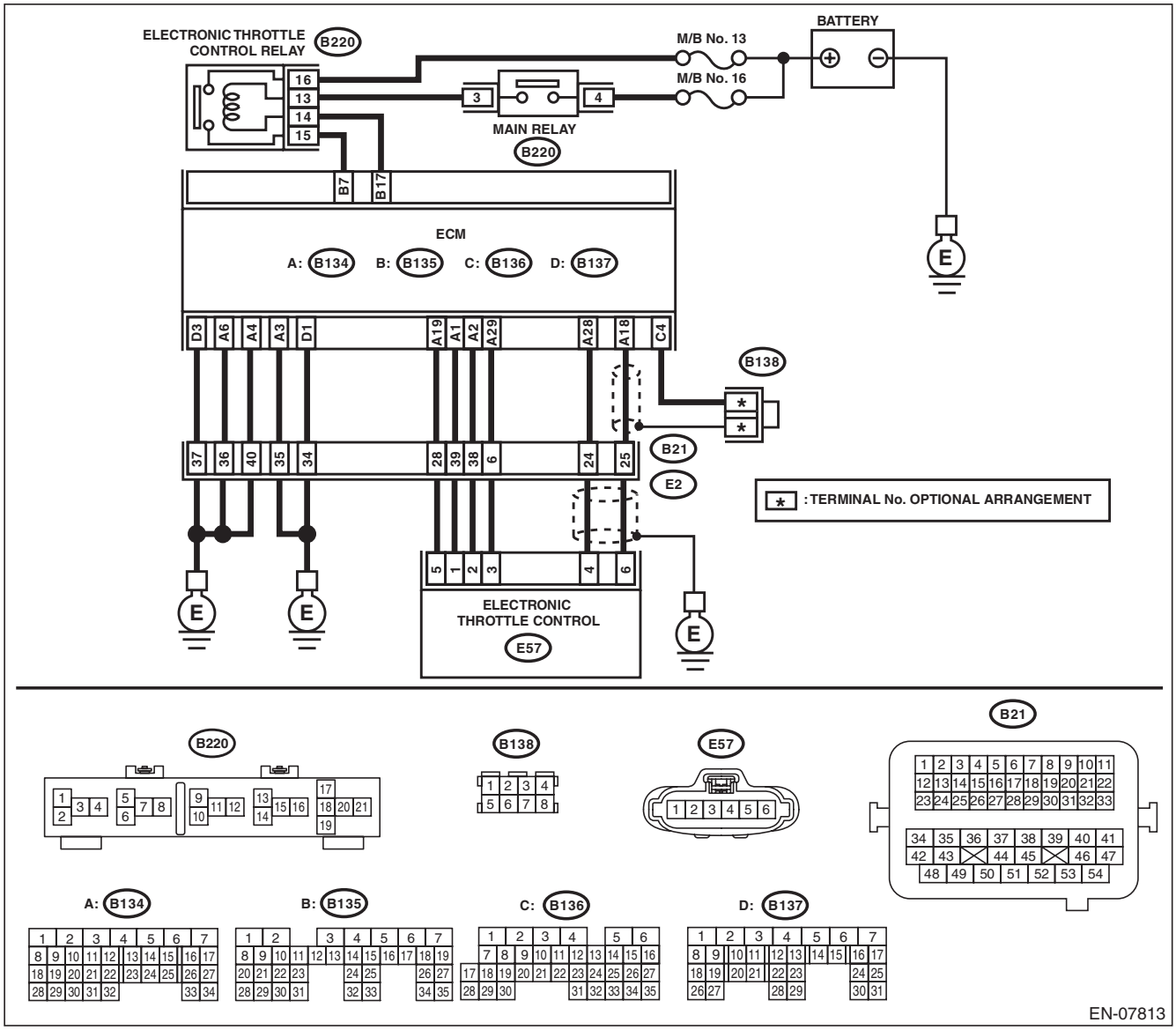

GETTHEMANUALS.org

Step		Check	Yes	No
1	**CHECK ELECTRONIC THROTTLE CONTROL RELAY.** 1) Turn the ignition switch to OFF. 2) Remove the electronic throttle control relay. 3) Measure the resistance between electronic throttle control relay terminals. ***Terminals*** ***No. 16 — No. 15:***	Is the resistance 1 MΩ or more?	Go to step **2**.	Replace the electronic throttle control relay. <Ref. to FU(H4DOTC)-63, Electronic Throttle Control Relay.>
2	**CHECK SHORT CIRCUIT OF ELECTRONIC THROTTLE CONTROL RELAY POWER SUPPLY.** 1) Turn the ignition switch to ON. 2) Measure the voltage between electronic throttle control relay connector and chassis ground. ***Connector & terminal*** ***(B220) No. 15 (+) — Chassis ground (–):***	Is the voltage 10 V or more?	Repair the short circuit to power in the harness between ECM and electronic throttle control relay connector.	Go to step **3**.
3	**CHECK HARNESS BETWEEN ECM AND ELECTRONIC THROTTLE CONTROL RELAY CONNECTOR.** 1) Turn the ignition switch to OFF. 2) Disconnect the connector from ECM. 3) Measure the resistance between ECM and chassis ground. ***Connector & terminal*** ***(B135) No. 17 — Chassis ground:***	Is the resistance 1 MΩ or more?	Repair the poor contact of ECM connector.	Repair the short circuit in harness to ground between ECM and electronic throttle control relay connector.

EE:DTC P2109 THROTTLE/PEDAL POSITION SENSOR “A” MINIMUM STOP PERFORMANCE

NOTE:
For the diagnostic procedure, refer to DTC P2101. <Ref. to EN(H4DOTC)(diag)-303, DTC P2101 THROTTLE ACTUATOR CONTROL MOTOR CIRCUIT RANGE/PERFORMANCE, Diagnostic Procedure with Diagnostic Trouble Code (DTC).>

GETTHEMANUALS.org

EF:DTC P2122 THROTTLE/PEDAL POSITION SENSOR/SWITCH “D” CIRCUIT LOW INPUT

DTC DETECTING CONDITION:

- Immediately at fault recognition
- GENERAL DESCRIPTION <Ref. to GD(H4DOTC)-238, DTC P2122 THROTTLE/PEDAL POSITION SENSOR/SWITCH “D” CIRCUIT LOW INPUT, Diagnostic Trouble Code (DTC) Detecting Criteria.>

TROUBLE SYMPTOM:

- Improper idling
- Poor driving performance

CAUTION:

After servicing or replacing faulty parts, perform Clear Memory Mode <Ref. to EN(H4DOTC)(diag)-53, OPERATION, Clear Memory Mode.>, and Inspection Mode <Ref. to EN(H4DOTC)(diag)-41, PROCEDURE, Inspection Mode.>.

WIRING DIAGRAM:

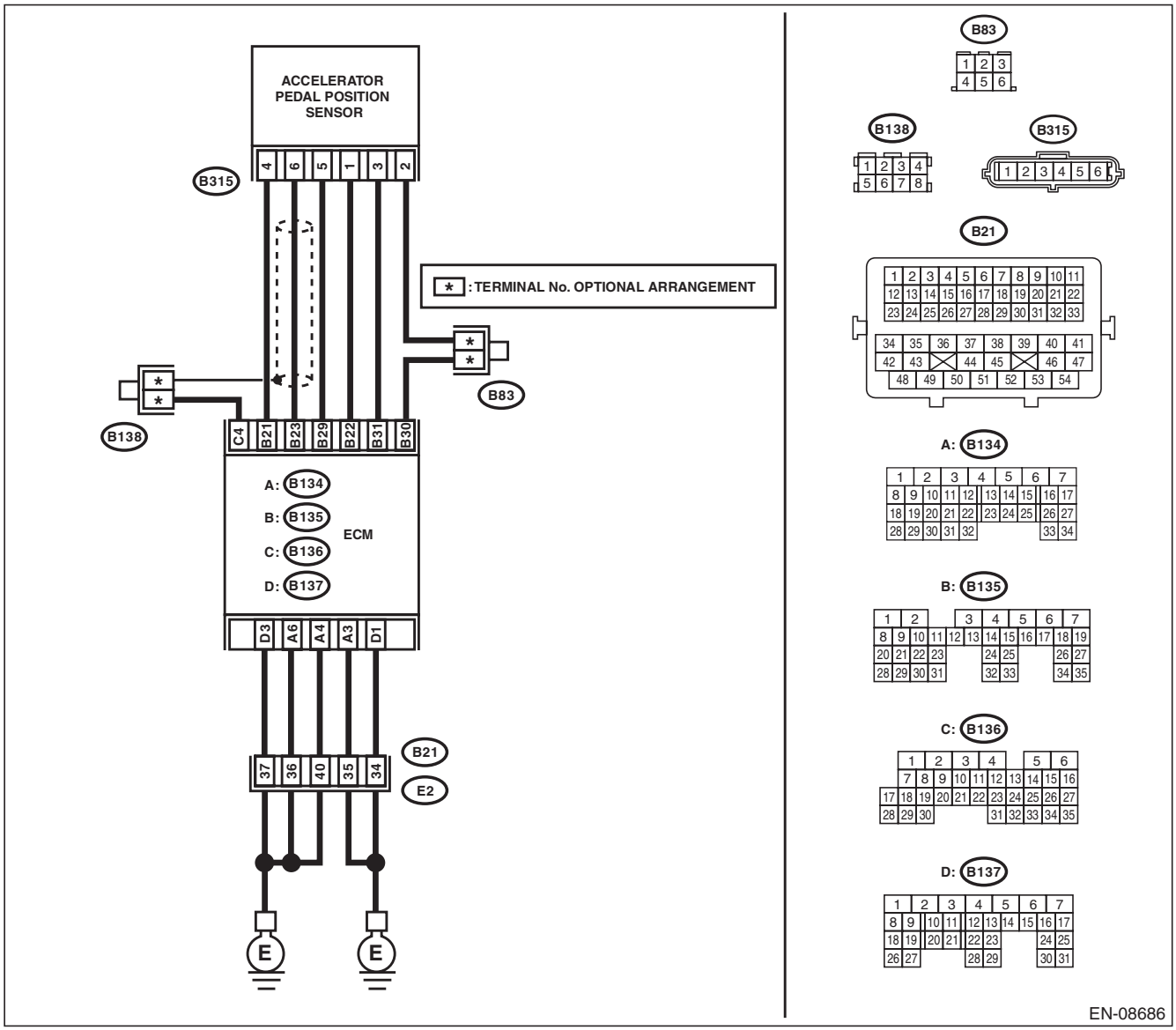

GETTHEMANUALS.org

Step		Check	Yes	No
1	**CHECK HARNESS BETWEEN ECM AND ACCELERATOR PEDAL POSITION SENSOR CONNECTOR.** 1) Turn the ignition switch to OFF. 2) Disconnect the connectors from ECM and accelerator pedal position sensor. 3) Measure the resistance between ECM and chassis ground. ***Connector & terminal*** ***(B135) No. 21 — Chassis ground:*** ***(B135) No. 23 — Chassis ground:*** ***(B135) No. 23 — (B136) No. 4:***	Is the resistance 1 MΩ or more?	Go to step **2**.	Repair the short circuit to ground in harness between ECM and accelerator pedal position sensor connector.
2	**CHECK SHORT CIRCUIT INSIDE THE ECM.** 1) Connect the connector to ECM. 2) Measure the resistance between accelerator pedal position sensor connector and chassis ground. ***Connector & terminal*** ***(B315) No. 6 — Chassis ground:***	Is the resistance 1 MΩ or more?	Replace the accelerator pedal. <Ref. to SP(H4SO)-4, Accelerator Pedal.>	Repair the short circuit to ground in harness between ECM and accelerator pedal position sensor connector. Replace the ECM if defective. <Ref. to FU(H4DOTC)-58, Engine Control Module (ECM).>

GETTHEMANUALS.org

EG:DTC P2123 THROTTLE/PEDAL POSITION SENSOR/SWITCH “D” CIRCUIT HIGH INPUT

DTC DETECTING CONDITION:

- Immediately at fault recognition
- GENERAL DESCRIPTION <Ref. to GD(H4DOTC)-240, DTC P2123 THROTTLE/PEDAL POSITION SENSOR/SWITCH “D” CIRCUIT HIGH INPUT, Diagnostic Trouble Code (DTC) Detecting Criteria.>

TROUBLE SYMPTOM:

- Improper idling
- Poor driving performance

CAUTION:

After servicing or replacing faulty parts, perform Clear Memory Mode <Ref. to EN(H4DOTC)(diag)-53, OPERATION, Clear Memory Mode.>, and Inspection Mode <Ref. to EN(H4DOTC)(diag)-41, PROCEDURE, Inspection Mode.>.

WIRING DIAGRAM:

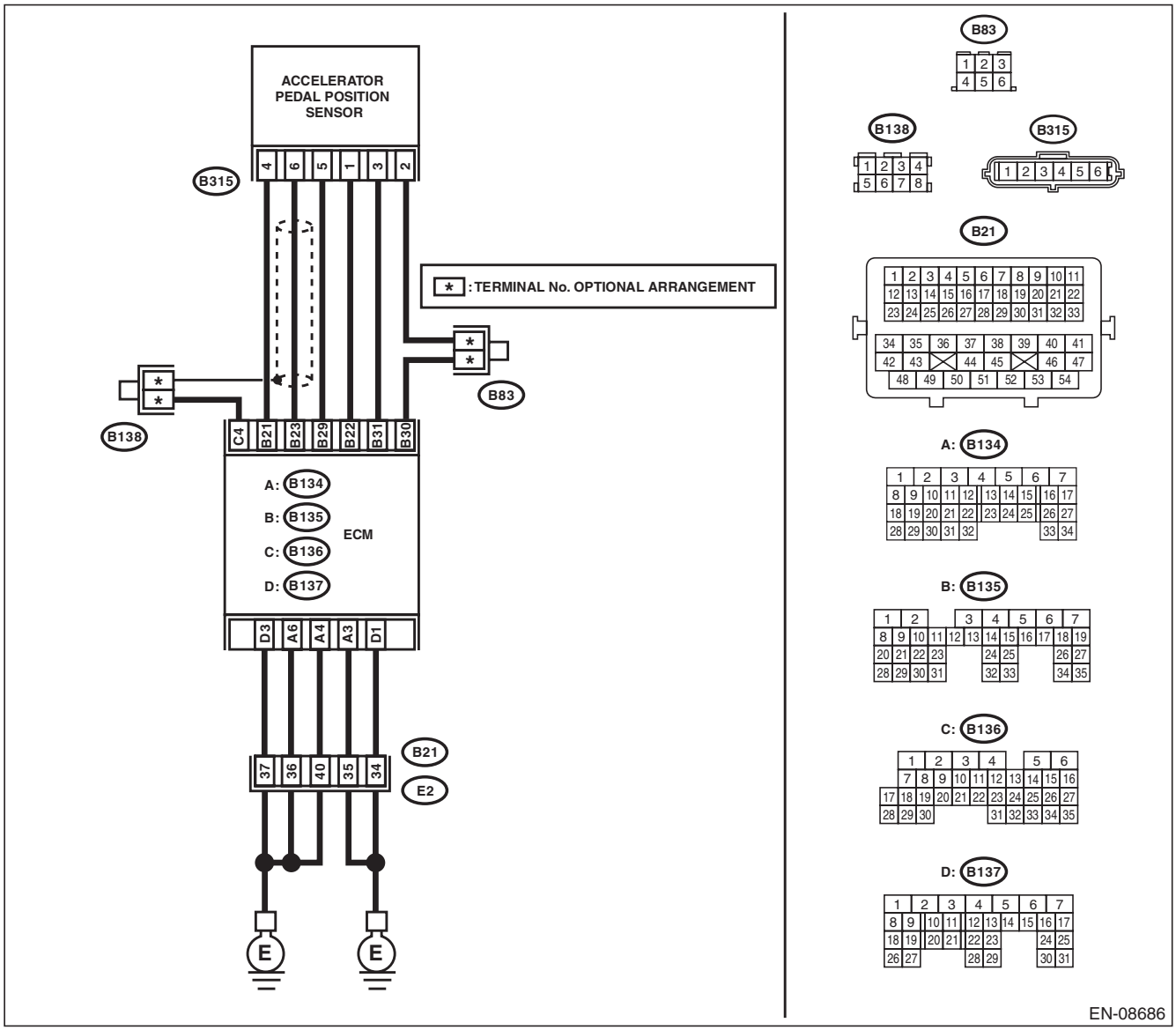

GETHEMANUALS.org

	Step	Check	Yes	No
1	**CHECK HARNESS BETWEEN ECM AND ACCELERATOR PEDAL POSITION SENSOR CONNECTOR.** 1) Turn the ignition switch to OFF. 2) Disconnect the connectors from ECM and accelerator pedal position sensor. 3) Measure the resistance of harness between ECM and accelerator pedal position sensor connector. ***Connector & terminal*** ***(B135) No. 23 — (B315) No. 6:*** ***(B135) No. 29 — (B315) No. 5:***	Is the resistance less than 1 Ω?	Go to step **2**.	Repair the open circuit in harness between ECM and accelerator pedal position sensor connector.
2	**CHECK HARNESS BETWEEN ECM AND ACCELERATOR PEDAL POSITION SENSOR CONNECTOR.** 1) Connect the connector to ECM. 2) Measure the resistance between accelerator pedal position sensor connector and chassis ground. ***Connector & terminal*** ***(B315) No. 5 — Chassis ground:***	Is the resistance less than 5 Ω?	Go to step **3**.	Repair the harness and connector. NOTE: In this case, repair the following item: • Open circuit of harness between ECM and engine ground • Poor contact of ECM connector • Poor contact of coupling connector
3	**CHECK HARNESS BETWEEN ECM AND ACCELERATOR PEDAL POSITION SENSOR CONNECTOR.** 1) Turn the ignition switch to ON. 2) Measure the voltage between accelerator pedal position sensor connector and chassis ground. ***Connector & terminal*** ***(B315) No. 6 (+) — Chassis ground (–):***	Is the voltage 5 V or more?	Repair the short circuit to power supply in the harness between the ECM and accelerator pedal position sensor connector.	Go to step **4**.
4	**CHECK HARNESS BETWEEN ECM AND ACCELERATOR PEDAL POSITION SENSOR CONNECTOR.** 1) Turn the ignition switch to OFF. 2) Disconnect the connectors from ECM. 3) Measure the resistance between ECM connectors. ***Connector & terminal*** ***(B135) No. 21 — (B135) No. 23:***	Is the resistance 1 MΩ or more?	Repair the poor contact of accelerator pedal position sensor connector. Replace the accelerator pedal if defective. <Ref. to SP(H4SO)-4, Accelerator Pedal.>	Repair the short circuit to power supply in the harness between the ECM and accelerator pedal position sensor connector.

GETTHEMANUALS.org

EH:DTC P2127 THROTTLE/PEDAL POSITION SENSOR/SWITCH “E” CIRCUIT LOW INPUT

DTC DETECTING CONDITION:

- Immediately at fault recognition
- GENERAL DESCRIPTION <Ref. to GD(H4DOTC)-242, DTC P2127 THROTTLE/PEDAL POSITION SENSOR/SWITCH “E” CIRCUIT LOW INPUT, Diagnostic Trouble Code (DTC) Detecting Criteria.>

TROUBLE SYMPTOM:

- Improper idling
- Poor driving performance

CAUTION:

After servicing or replacing faulty parts, perform Clear Memory Mode <Ref. to EN(H4DOTC)(diag)-53, OPERATION, Clear Memory Mode.>, and Inspection Mode <Ref. to EN(H4DOTC)(diag)-41, PROCEDURE, Inspection Mode.>.

WIRING DIAGRAM:

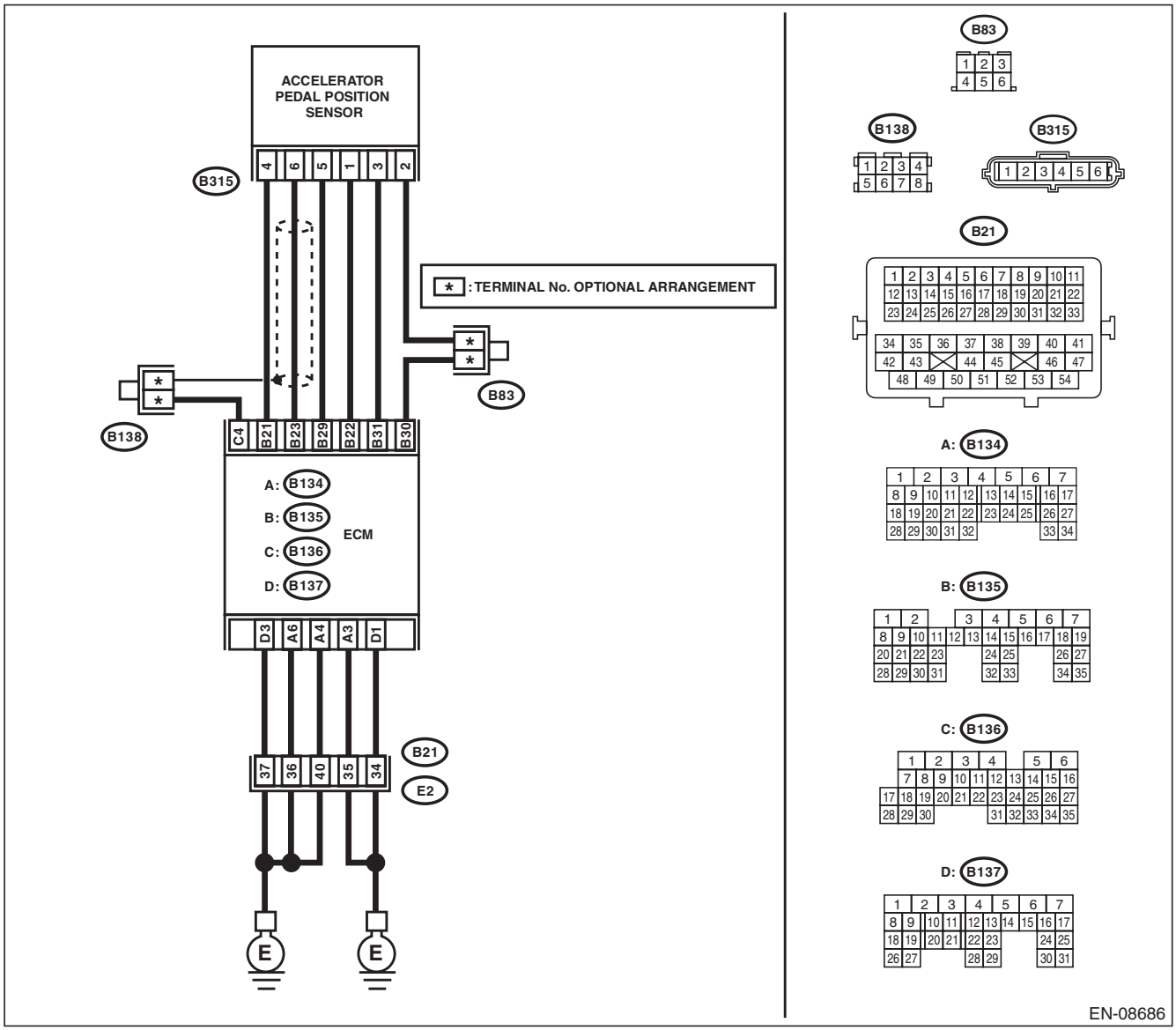

GETTHEMANUALS.org

Step		Check	Yes	No
1	**CHECK HARNESS BETWEEN ECM AND ACCELERATOR PEDAL POSITION SENSOR CONNECTOR.** 1) Turn the ignition switch to OFF. 2) Disconnect the connectors from ECM and accelerator pedal position sensor. 3) Measure the resistance between ECM and chassis ground. ***Connector & terminal*** ***(B135) No. 22 — Chassis ground:*** ***(B135) No. 31 — Chassis ground:***	Is the resistance 1 MΩ or more?	Go to step **2**.	Repair the short circuit to ground in harness between ECM and accelerator pedal position sensor connector.
2	**CHECK SHORT CIRCUIT INSIDE THE ECM.** 1) Connect the connector to ECM. 2) Measure the resistance between accelerator pedal position sensor connector and chassis ground. ***Connector & terminal*** ***(B315) No. 3 — Chassis ground:***	Is the resistance 1 MΩ or more?	Replace the accelerator pedal. <Ref. to SP(H4SO)-4, Accelerator Pedal.>	Repair the short circuit to ground in harness between ECM and accelerator pedal position sensor connector. Replace the ECM if defective. <Ref. to FU(H4DOTC)-58, Engine Control Module (ECM).>

GETTHEMANUALS.org

EI: DTC P2128 THROTTLE/PEDAL POSITION SENSOR/SWITCH “E” CIRCUIT HIGH INPUT

DTC DETECTING CONDITION:

- Immediately at fault recognition
- GENERAL DESCRIPTION <Ref. to GD(H4DOTC)-244, DTC P2128 THROTTLE/PEDAL POSITION SENSOR/SWITCH “E” CIRCUIT HIGH INPUT, Diagnostic Trouble Code (DTC) Detecting Criteria.>

TROUBLE SYMPTOM:

- Improper idling
- Poor driving performance

CAUTION:

After servicing or replacing faulty parts, perform Clear Memory Mode <Ref. to EN(H4DOTC)(diag)-53, OPERATION, Clear Memory Mode.>, and Inspection Mode <Ref. to EN(H4DOTC)(diag)-41, PROCEDURE, Inspection Mode.>.

WIRING DIAGRAM:

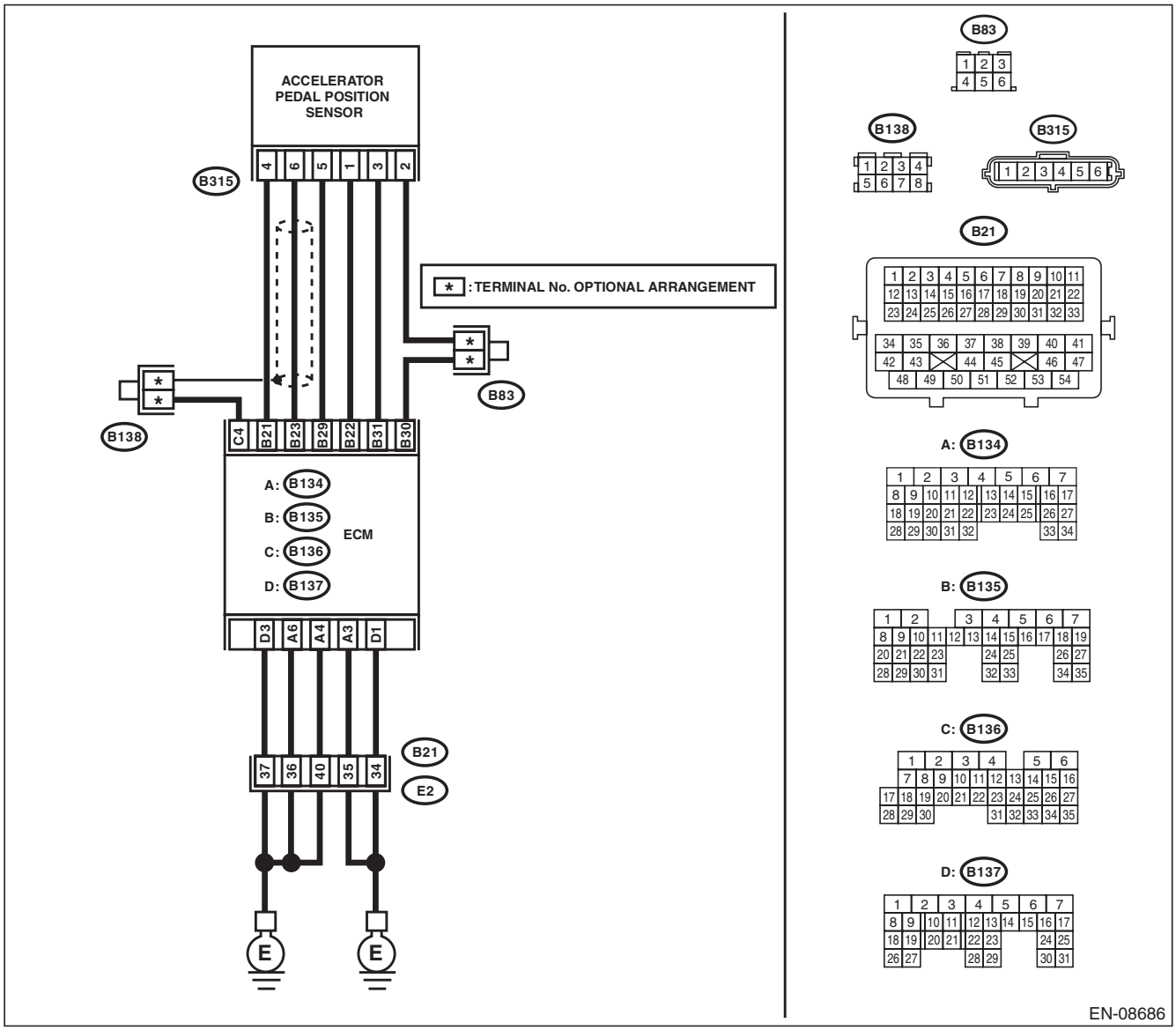

GETHEMANUALS.org

	Step	Check	Yes	No
1	**CHECK HARNESS BETWEEN ECM AND ACCELERATOR PEDAL POSITION SENSOR CONNECTOR.** 1) Turn the ignition switch to OFF. 2) Disconnect the connectors from ECM and accelerator pedal position sensor. 3) Measure the resistance of harness between ECM and accelerator pedal position sensor connector. ***Connector & terminal*** ***(B135) No. 31 — (B315) No. 3:*** ***(B135) No. 30 — (B315) No. 2:***	Is the resistance less than 1 Ω?	Go to step **2**.	Repair the harness and connector. NOTE: In this case, repair the following item: • Open circuit in harness between ECM and accelerator pedal position sensor connector • Poor contact of coupling connector
2	**CHECK HARNESS BETWEEN ECM AND ACCELERATOR PEDAL POSITION SENSOR CONNECTOR.** 1) Connect the connector to ECM. 2) Measure the resistance between accelerator pedal position sensor connector and chassis ground. ***Connector & terminal*** ***(B315) No. 2 — Chassis ground:***	Is the resistance less than 1 Ω?	Go to step **3**.	Repair the harness and connector. NOTE: In this case, repair the following item: • Open circuit of harness between ECM and engine ground • Poor contact of ECM connector • Poor contact of coupling connector
3	**CHECK HARNESS BETWEEN ECM AND ACCELERATOR PEDAL POSITION SENSOR CONNECTOR.** 1) Turn the ignition switch to ON. 2) Measure the voltage between accelerator pedal position sensor connector and chassis ground. ***Connector & terminal*** ***(B315) No. 3 (+) — Chassis ground (–):***	Is the voltage 5 V or more?	Repair the short circuit to power supply in the harness between the ECM and accelerator pedal position sensor connector.	Go to step **4**.
4	**CHECK HARNESS BETWEEN ECM AND ACCELERATOR PEDAL POSITION SENSOR CONNECTOR.** 1) Turn the ignition switch to OFF. 2) Disconnect the connectors from ECM. 3) Measure the resistance between ECM connectors. ***Connector & terminal*** ***(B135) No. 22 — (B135) No. 31:***	Is the resistance 1 MΩ or more?	Repair the poor contact of accelerator pedal position sensor connector. Replace the accelerator pedal if defective. <Ref. to SP(H4SO)-4, Accelerator Pedal.>	Repair the short circuit to power supply in the harness between the ECM and accelerator pedal position sensor connector.

GETTHEMANUALS.org

EJ: DTC P2135 THROTTLE/PEDAL POSITION SENSOR/SWITCH “A”/“B” VOLTAGE CORRELATION

DTC DETECTING CONDITION:

- Immediately at fault recognition
- GENERAL DESCRIPTION <Ref. to GD(H4DOTC)-246, DTC P2135 THROTTLE/PEDAL POSITION SENSOR/SWITCH “A”/“B” VOLTAGE CORRELATION, Diagnostic Trouble Code (DTC) Detecting Criteria.>

TROUBLE SYMPTOM:

- Improper idling
- Poor driving performance

CAUTION:

After servicing or replacing faulty parts, perform Clear Memory Mode <Ref. to EN(H4DOTC)(diag)-53, OPERATION, Clear Memory Mode.>, and Inspection Mode <Ref. to EN(H4DOTC)(diag)-41, PROCEDURE, Inspection Mode.>.

WIRING DIAGRAM:

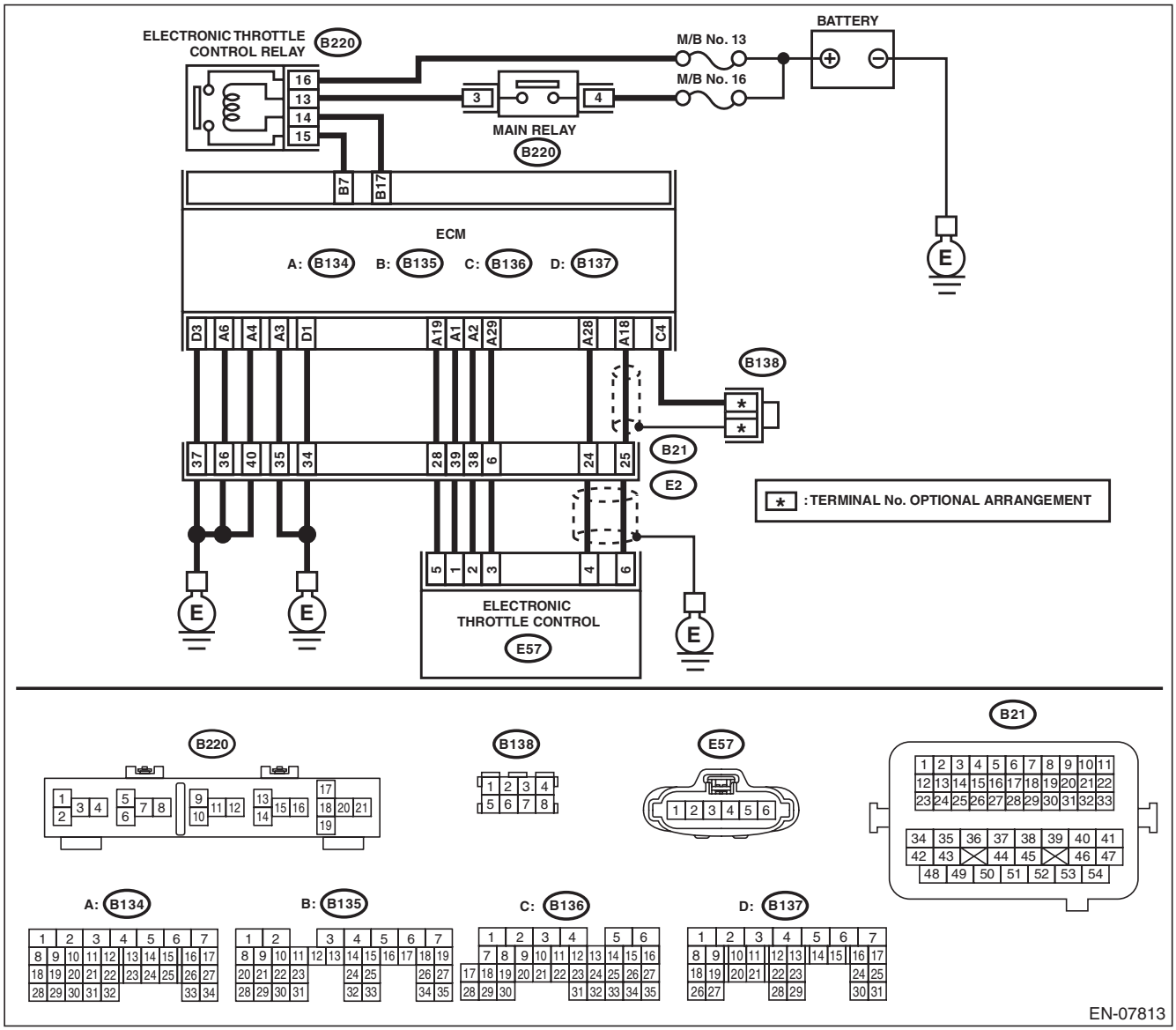

GETtheMANUALS.org

	Step	Check	Yes	No
1	**CHECK HARNESS BETWEEN ECM AND ELECTRONIC THROTTLE CONTROL CONNECTOR.** 1) Turn the ignition switch to OFF. 2) Disconnect the connectors from the ECM and electronic throttle control. 3) Measure the resistance between ECM and chassis ground. ***Connector & terminal*** ***(B134) No. 19 — Chassis ground:*** ***(B134) No. 18 — Chassis ground:*** ***(B134) No. 18 — (B136) No. 4:*** ***(B134) No. 28 — Chassis ground:***	Is the resistance 1 MΩ or more?	Go to step **2**.	Repair the ground short circuit of harness between ECM and electronic throttle control connector.
2	**CHECK SHORT CIRCUIT INSIDE THE ECM.** 1) Connect the connector to ECM. 2) Measure the resistance between electronic throttle control connector and engine ground. ***Connector & terminal*** ***(E57) No. 6 — Engine ground:*** ***(E57) No. 4 — Engine ground:***	Is the resistance 1 MΩ or more?	Go to step **3**.	Repair the ground short circuit of harness between ECM and electronic throttle control connector. Replace the ECM if defective. <Ref. to FU(H4DOTC)-58, Engine Control Module (ECM).>
3	**CHECK HARNESS BETWEEN ECM AND ELECTRONIC THROTTLE CONTROL CONNECTOR.** 1) Disconnect the connector from ECM. 2) Measure the resistance of harness between ECM and electronic throttle control connector. ***Connector & terminal*** ***(B134) No. 18 — (E57) No. 6:*** ***(B134) No. 28 — (E57) No. 4:*** ***(B134) No. 29 — (E57) No. 3:***	Is the resistance less than 1 Ω?	Go to step **4**.	Repair the harness and connector. NOTE: In this case, repair the following item: • Open circuit in harness between ECM and electronic throttle control connector • Poor contact of coupling connector
4	**CHECK HARNESS BETWEEN ECM AND ELECTRONIC THROTTLE CONTROL CONNECTOR.** 1) Connect the connector to ECM. 2) Measure the resistance between electronic throttle control connector and engine ground. ***Connector & terminal*** ***(E57) No. 3 — Engine ground:***	Is the resistance less than 5 Ω?	Go to step **5**.	Repair the harness and connector. NOTE: In this case, repair the following item: • Open circuit of harness between ECM and engine ground • Poor contact of ECM connector • Poor contact of coupling connector
5	**CHECK HARNESS BETWEEN ECM AND ELECTRONIC THROTTLE CONTROL CONNECTOR.** 1) Turn the ignition switch to ON. 2) Measure the voltage between electronic throttle control connector and engine ground. ***Connector & terminal*** ***(E57) No. 6 (+) — Engine ground (–):*** ***(E57) No. 4 (+) — Engine ground (–):***	Is the voltage 5 V or more?	Repair the short circuit of harness to power supply between ECM and electronic throttle control connector.	Go to step **6**.

GETTHEMANUALS.org

Step		Check	Yes	No
6	**CHECK HARNESS BETWEEN ECM AND ELECTRONIC THROTTLE CONTROL CONNECTOR.** 1) Turn the ignition switch to OFF. 2) Disconnect the connector from ECM. 3) Measure the resistance between ECM connectors. ***Connector & terminal*** ***(B134) No. 19 — (B134) No. 18:*** ***(B134) No. 19 — (B134) No. 28:***	Is the resistance 1 MΩ or more?	Repair the poor contact of electronic throttle control connector. Replace the electronic throttle control if defective. <Ref. to FU(H4DOTC)-15, Throttle Body.>	Repair the short circuit of harness to power supply between ECM and electronic throttle control connector.

GETTHEMANUALS.org

EK:DTC P2138 THROTTLE/PEDAL POSITION SENSOR/SWITCH “D”/“E” VOLTAGE CORRELATION

DTC DETECTING CONDITION:

- Immediately at fault recognition
- GENERAL DESCRIPTION <Ref. to GD(H4DOTC)-248, DTC P2138 THROTTLE/PEDAL POSITION SENSOR/SWITCH “D”/“E” VOLTAGE CORRELATION, Diagnostic Trouble Code (DTC) Detecting Criteria.>

TROUBLE SYMPTOM:

- Improper idling
- Poor driving performance

CAUTION:

After servicing or replacing faulty parts, perform Clear Memory Mode <Ref. to EN(H4DOTC)(diag)-53, OPERATION, Clear Memory Mode.>, and Inspection Mode <Ref. to EN(H4DOTC)(diag)-41, PROCEDURE, Inspection Mode.>.

WIRING DIAGRAM:

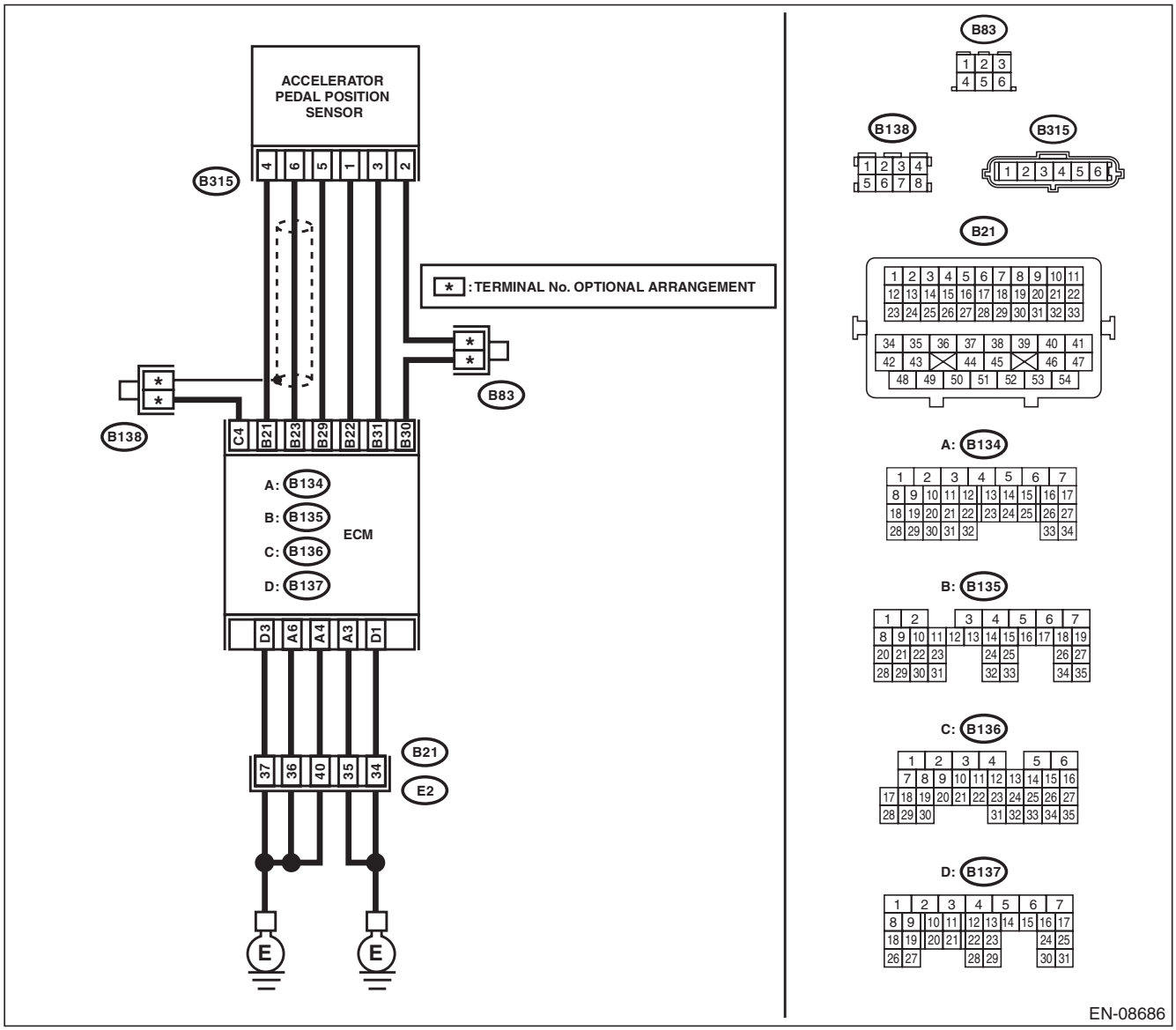

GETHEMANUALS.org

Step		Check	Yes	No
1	**CHECK ACCELERATOR PEDAL POSITION SENSOR OUTPUT.** 1) Turn the ignition switch to ON. 2) Measure the voltage between ECM and chassis ground. ***Connector & terminal*** ***Main accelerator pedal position sensor signal*** ***(B135) No. 23 (+) — Chassis ground (–):*** ***Sub accelerator pedal position sensor signal*** ***(B135) No. 31 (+) — Chassis ground (–):***	Is the difference in measured values for the main accelerator pedal position sensor signal and the sub accelerator pedal position sensor signal 0 V?	Go to step **3**.	Go to step **2**.
2	**CHECK ACCELERATOR PEDAL POSITION SENSOR OUTPUT.** 1) Measure the voltage between accelerator pedal position sensor connector and chassis ground. ***Connector & terminal*** ***(B315) No. 6 (+) — Chassis ground (–):*** ***(B315) No. 3 (+) — Chassis ground (–):***	Is the difference in measured values for the main accelerator pedal position sensor signal and the sub accelerator pedal position sensor signal 0 V?	Replace the accelerator pedal. <Ref. to SP(H4SO)-4, Accelerator Pedal.>	Repair the harness and connector. NOTE: In this case, repair the following item: • Open circuit in harness between ECM and accelerator pedal position sensor connector • Short circuit to ground in harness between ECM and accelerator pedal position sensor connector
3	**CHECK HARNESS BETWEEN ECM AND ACCELERATOR PEDAL POSITION SENSOR CONNECTOR.** Measure the resistance of harness between the accelerator pedal position sensor connector and chassis ground. ***Connector & terminal*** ***(B315) No. 5 — Chassis ground:*** ***(B315) No. 2 — Chassis ground:***	Is the resistance less than 5 Ω?	Repair the poor contact of ECM connector.	Repair the harness and connector. NOTE: In this case, repair the following item: • Open circuit in harness between ECM and accelerator pedal position sensor connector • Open circuit of harness between ECM and engine ground • Poor contact of ECM connector • Poor contact of coupling connector

GETTHEMANUALS.org

EL:DTC P219A BANK 1 AIR-FUEL RATIO IMBALANCE

DTC DETECTING CONDITION:

- Detected when two consecutive driving cycles with fault occur.
- GENERAL DESCRIPTION <Ref. to GD(H4DOTC)-250, DTC P219A BANK 1 AIR-FUEL RATIO IMBALANCE, Diagnostic Trouble Code (DTC) Detecting Criteria.>

TROUBLE SYMPTOM:

- Engine stalls.
- Improper idling

CAUTION:

After servicing or replacing faulty parts, perform Clear Memory Mode <Ref. to EN(H4DOTC)(diag)-53, OPERATION, Clear Memory Mode.>, and Inspection Mode <Ref. to EN(H4DOTC)(diag)-41, PROCEDURE, Inspection Mode.>.

WIRING DIAGRAM:

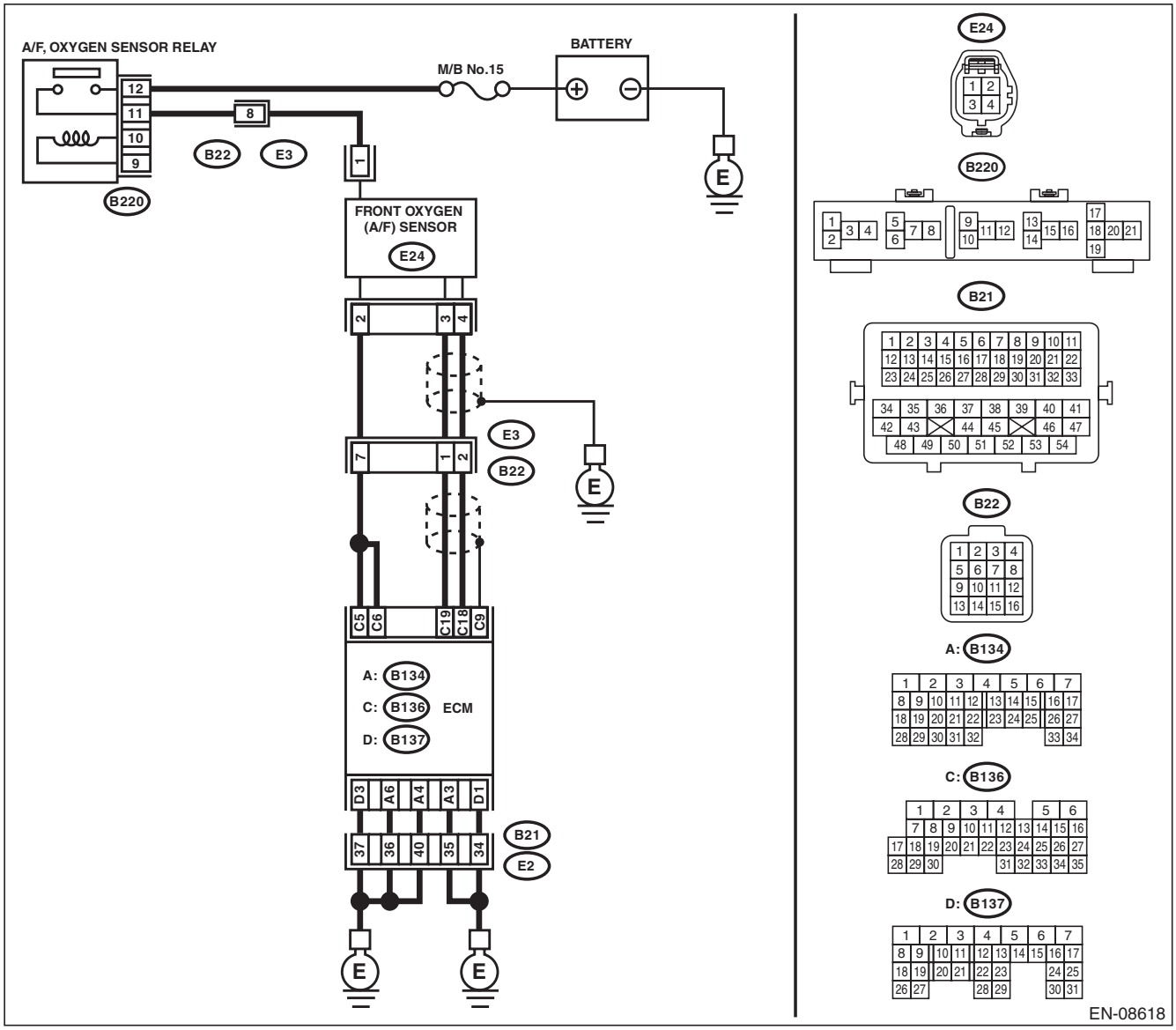

GETtheMANUALS.org

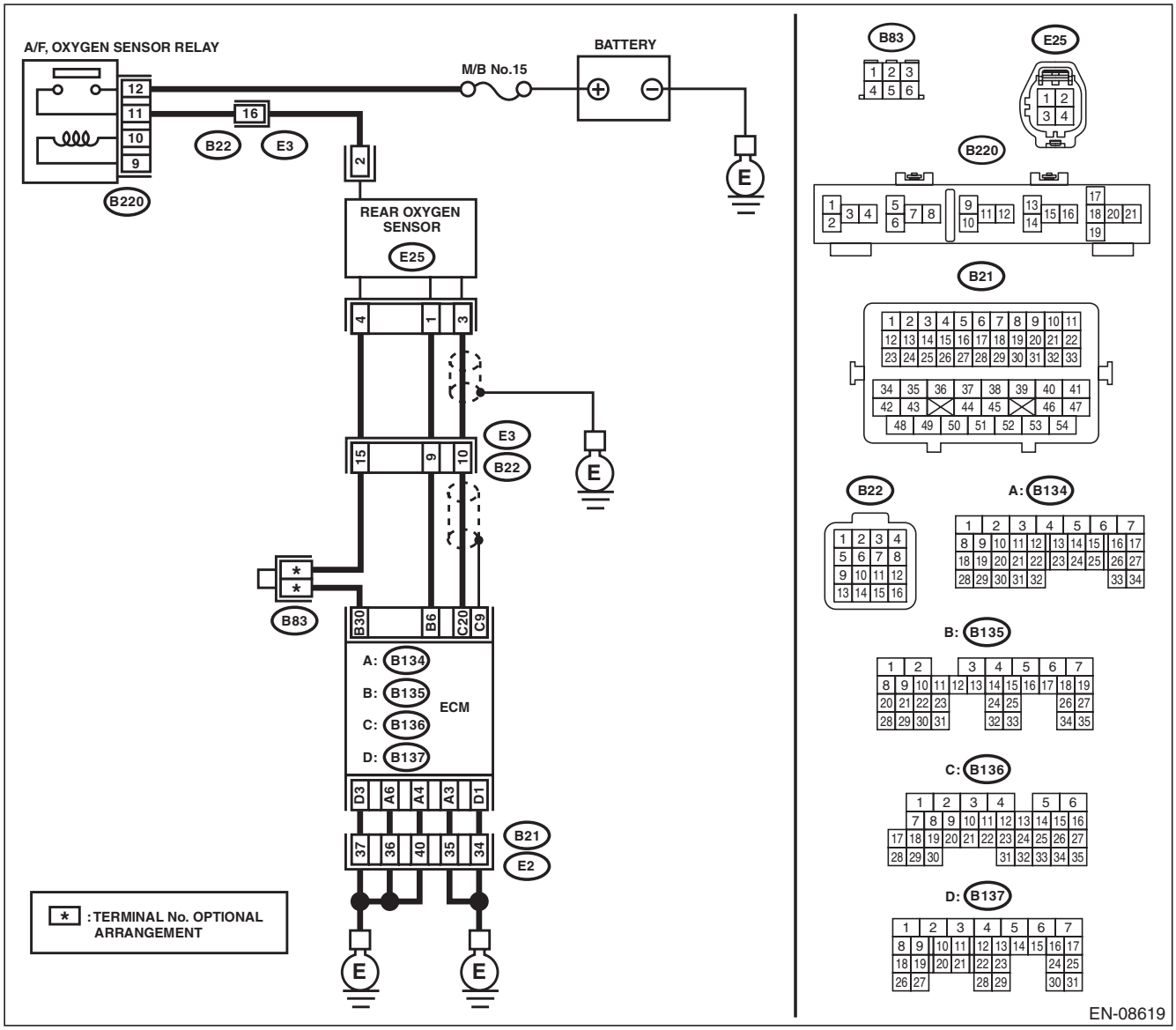

GETTHEMANUALS.org

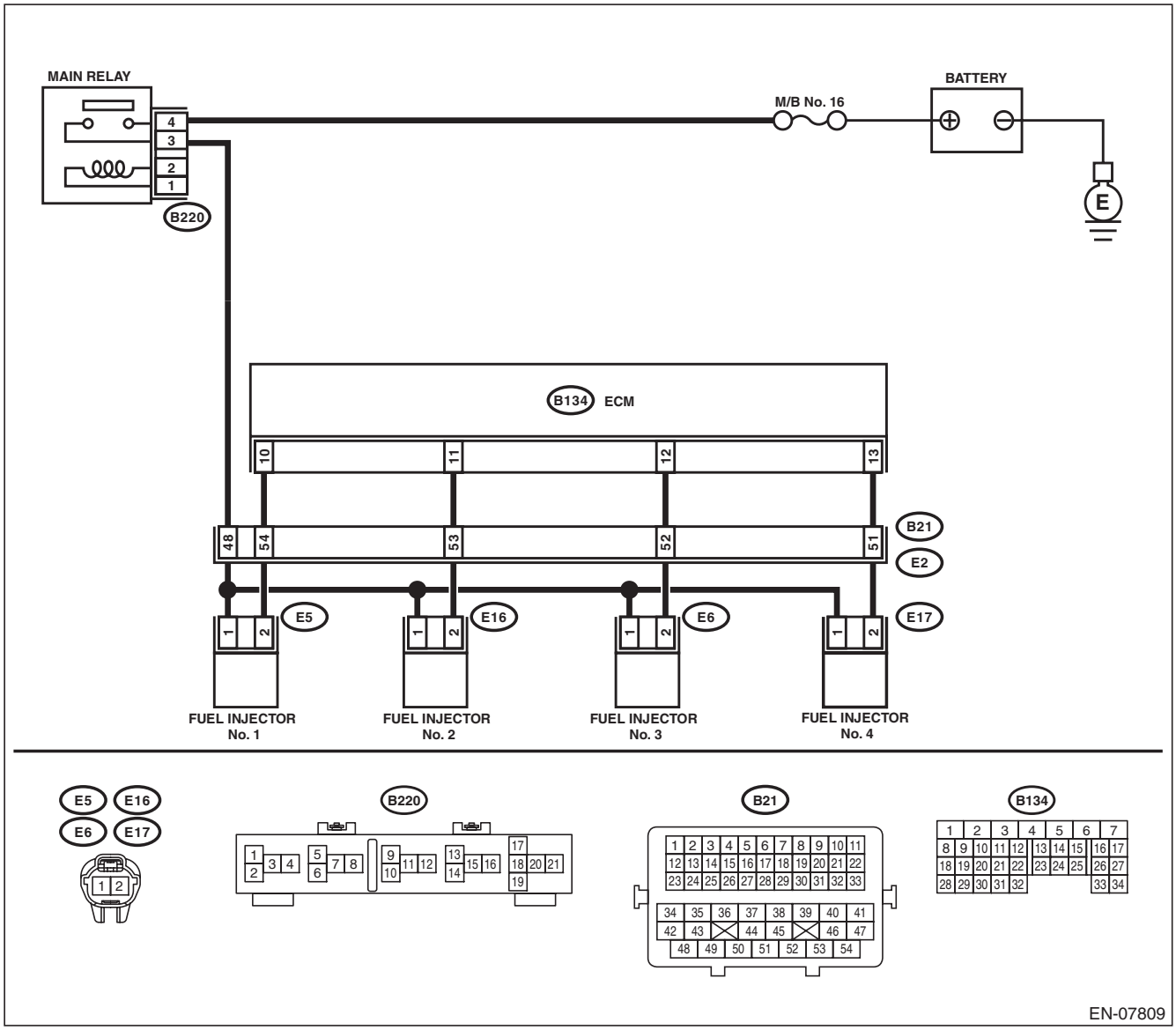

Step		Check	Yes	No
1	**CHECK FRONT OXYGEN (A/F) SENSOR CONNECTOR AND COUPLING CONNECTOR.**	Has water entered the connector?	Completely remove any water inside.	Go to step **2**.
2	**CHECK HARNESS BETWEEN ECM AND FRONT OXYGEN (A/F) SENSOR CONNECTOR.** 1) Turn the ignition switch to OFF. 2) Disconnect the connectors from ECM and front oxygen (A/F) sensor. 3) Measure the resistance of harness between ECM and front oxygen (A/F) sensor connector. ***Connector & terminal*** ***(B136) No. 19 — (E24) No. 3:*** ***(B136) No. 18 — (E24) No. 4:***	Is the resistance less than 1 Ω?	Go to step **3**.	Repair the harness and connector. NOTE: In this case, repair the following item: • Open circuit in harness between ECM and front oxygen (A/F) sensor connector • Poor contact of coupling connector

GETTHEMANUALS.org

Step		Check	Yes	No
3	**CHECK HARNESS BETWEEN ECM AND FRONT OXYGEN (A/F) SENSOR CONNECTOR.** Measure the resistance between ECM and chassis ground. ***Connector & terminal*** ***(B136) No. 19 — Chassis ground:*** ***(B136) No. 18 — Chassis ground:***	Is the resistance 1 MΩ or more?	Go to step **4**.	Repair the ground short circuit of harness between ECM and front oxygen (A/F) sensor connector.
4	**CHECK OUTPUT SIGNAL FOR ECM.** 1) Connect the connector to ECM. 2) Turn the ignition switch to ON. 3) Measure the voltage between front oxygen (A/F) sensor connector and chassis ground. ***Connector & terminal*** ***(E24) No. 3 (+) — Chassis ground (–):***	Is the voltage 4.5 V or more?	Go to step **6**.	Go to step **5**.
5	**CHECK OUTPUT SIGNAL FOR ECM.** Measure the voltage between front oxygen (A/F) sensor connector and chassis ground. ***Connector & terminal*** ***(E24) No. 4 (+) — Chassis ground (–):***	Is the voltage 4.95 V or more?	Go to step **6**.	Go to step **7**.
6	**CHECK OUTPUT SIGNAL FOR ECM.** Measure the voltage between front oxygen (A/F) sensor connector and chassis ground. ***Connector & terminal*** ***(E24) No. 3 (+) — Chassis ground (–):*** ***(E24) No. 4 (+) — Chassis ground (–):***	Is the voltage 8 V or more?	Repair the short circuit to power in the harness between ECM and front oxygen (A/F) sensor connector. After repair, replace the ECM. <Ref. to FU(H4DOTC)-58, Engine Control Module (ECM).>	Repair the poor contact of ECM connector.
7	**CHECK EXHAUST SYSTEM.**	Are there holes or loose bolts on exhaust system?	Repair the exhaust system.	Go to step **8**.
8	**CHECK AIR INTAKE SYSTEM.**	Are there holes, loose bolts or disconnection of hose on air intake system?	Repair the air intake system.	Go to step **9**.
9	**CHECK FUEL PRESSURE.** **WARNING:** **Place "NO OPEN FLAMES" signs near the working area.** **CAUTION:** **Be careful not to spill fuel.** 1) Connect the front oxygen (A/F) sensor connector. 2) Measure the fuel pressure while disconnecting pressure regulator vacuum hose from intake manifold. <Ref. to ME(H4DOTC)-26, INSPECTION, Fuel Pressure.> **CAUTION:** **Release fuel pressure before removing the fuel pressure gauge.** NOTE: If fuel pressure does not increase, squeeze the fuel return hose 2 to 3 times, then measure fuel pressure again.	Is the measured value 328 — 358 kPa (3.3 — 3.7 kg/cm^2, 48 — 52 psi)?	Go to step **10**.	Repair the following item. Fuel pressure is too high: • Clogged fuel line or bent hose Fuel pressure is too low: • Improper fuel pump discharge • Clogged fuel supply line

GETTHEMANUALS.org

Step		Check	Yes	No
10	**CHECK FUEL PRESSURE.** After connecting the pressure regulator vacuum hose, measure fuel pressure. <Ref. to ME(H4DOTC)-26, INSPECTION, Fuel Pressure.> **CAUTION:** **Release fuel pressure before removing the fuel pressure gauge.** NOTE: • If fuel pressure does not increase, squeeze fuel return hose 2 to 3 times, then measure fuel pressure again. • If the measured value at this step is out of specification, check or replace pressure regulator vacuum hose.	Is the measured value 274 — 304 kPa (2.8 — 3.1 kg/cm^2, 40 — 44 psi)?	Go to step **11**.	Repair the following item. Fuel pressure is too high: • Faulty pressure regulator • Clogged fuel return line or bent hose Fuel pressure is too low: • Faulty pressure regulator • Improper fuel pump discharge • Clogged fuel supply line
11	**CHECK ENGINE COOLANT TEMPERATURE SENSOR.** 1) Start the engine and warm up completely. 2) Read the value of «Coolant Temp.» using the Subaru Select Monitor or a general scan tool. NOTE: • Subaru Select Monitor For detailed operation procedures, refer to “READ CURRENT DATA FOR ENGINE”. <Ref. to EN(H4DOTC)(diag)-34, Subaru Select Monitor.> • General scan tool For detailed operation procedures, refer to the general scan tool operation manual.	Is the value of «Coolant Temp.» 75°C (167°F) or more?	Go to step **12**.	Replace the engine coolant temperature sensor. <Ref. to FU(H4DOTC)-34, Engine Coolant Temperature Sensor.>
12	**CHECK MASS AIR FLOW AND INTAKE AIR TEMPERATURE SENSOR.** 1) Start the engine and warm up engine until coolant temperature is higher than 75°C (167°F). 2) Place the shift lever in neutral position. 3) Turn the A/C switch to OFF. 4) Turn all the accessory switches to OFF. 5) Read the value of «Mass Air Flow» using the Subaru Select Monitor or a general scan tool. NOTE: • Subaru Select Monitor For detailed operation procedures, refer to “READ CURRENT DATA FOR ENGINE”. <Ref. to EN(H4DOTC)(diag)-34, Subaru Select Monitor.> • General scan tool For detailed operation procedures, refer to the general scan tool operation manual.	Is the value of «Mass Air Flow» 2.0 — 5.0 g/s (0.26 — 0.66 lb/m)?	Go to step **13**.	Replace the mass air flow and intake air temperature sensor. <Ref. to FU(H4DOTC)-42, Mass Air Flow and Intake Air Temperature Sensor.>

GETTHEMANUALS.org

	Step	Check	Yes	No
13	**CHECK MASS AIR FLOW AND INTAKE AIR TEMPERATURE SENSOR.** 1) Start the engine and warm up engine until coolant temperature is higher than 75°C (167°F). 2) Place the shift lever in neutral position. 3) Turn the A/C switch to OFF. 4) Turn all the accessory switches to OFF. 5) Open the front hood. 6) Measure the ambient temperature. 7) Read the value of «Intake Air Temp.» using the Subaru Select Monitor or a general scan tool. NOTE: • Subaru Select Monitor For detailed operation procedures, refer to "READ CURRENT DATA FOR ENGINE". <Ref. to EN(H4DOTC)(diag)-34, Subaru Select Monitor.> • General scan tool For detailed operation procedures, refer to the general scan tool operation manual.	Subtract ambient temperature from «Intake Air Temp.». Is the obtained value –10 — 50°C (–18 — 90°F)?	Go to step **14**.	Check the mass air flow and intake air temperature sensor. <Ref. to FU(H4DOTC)-42, Mass Air Flow and Intake Air Temperature Sensor.>
14	**CHECK REAR OXYGEN SENSOR DATA.** 1) Warm up the engine until engine coolant temperature is higher than 75°C (167°F), and keep the engine speed at 3,000 rpm. (2 minutes maximum) 2) Read the value of «Rear O2 Sensor» using the Subaru Select Monitor or a general scan tool. NOTE: • Depress the clutch pedal. • Subaru Select Monitor For detailed operation procedures, refer to "READ CURRENT DATA FOR ENGINE". <Ref. to EN(H4DOTC)(diag)-34, Subaru Select Monitor.> • General scan tool For detailed operation procedures, refer to the general scan tool operation manual.	Is the value of «Rear O2 Sensor» 0.490 V or more?	Go to step **15**.	Go to step **16**.
15	**CHECK REAR OXYGEN SENSOR DATA.** 1) Warm up the engine until engine coolant temperature is higher than 75°C (167°F), and rapidly reduce the engine speed from 3,000 rpm. 2) Read the value of «Rear O2 Sensor» using the Subaru Select Monitor or a general scan tool. NOTE: • Depress the clutch pedal. • Subaru Select Monitor For detailed operation procedures, refer to "READ CURRENT DATA FOR ENGINE". <Ref. to EN(H4DOTC)(diag)-34, Subaru Select Monitor.> • General scan tool For detailed operation procedures, refer to the general scan tool operation manual.	Is the value of «Rear O2 Sensor» 0.250 V or less?	Go to step **17**.	Go to step **16**.

GETTHEMANUALS.org

Step		Check	Yes	No
16	**CHECK REAR OXYGEN SENSOR CONNECTOR AND COUPLING CONNECTOR.**	Has water entered the connector?	Completely remove any water inside.	Go to step **18**.
17	**CHECK FRONT OXYGEN (A/F) SENSOR USING REAR OXYGEN SENSOR SIGNAL.** 1) Warm up the engine until engine coolant temperature is higher than 75°C (167°F), then keep the engine idling for 5 minutes or more. 2) Read the value of «Rear O2 Sensor» using the Subaru Select Monitor or a general scan tool. NOTE: • Subaru Select Monitor For detailed operation procedures, refer to "READ CURRENT DATA FOR ENGINE". <Ref. to EN(H4DOTC)(diag)-34, Subaru Select Monitor.> • General scan tool For detailed operation procedures, refer to the general scan tool operation manual.	Is the value in «Rear O2 Sensor» kept at 0.250 V or less for 5 minutes or more?	Replace the front oxygen (A/F) sensor. <Ref. to FU(H4DOTC)-54, Front Oxygen (A/F) Sensor.>	Go to step **18**.
18	**CHECK HARNESS BETWEEN ECM AND REAR OXYGEN SENSOR CONNECTOR.** 1) Turn the ignition switch to OFF. 2) Disconnect the connector from ECM and rear oxygen sensor. 3) Measure the resistance of harness between ECM and rear oxygen sensor connector. ***Connector & terminal*** ***(B136) No. 20 — (E25) No. 3:*** ***(B135) No. 30 — (E25) No. 4:***	Is the resistance less than 1 Ω?	Go to step **19**.	Repair the harness and connector. NOTE: In this case, repair the following item: • Open circuit in harness between ECM and rear oxygen sensor connector • Poor contact of coupling connector
19	**CHECK HARNESS BETWEEN ECM AND REAR OXYGEN SENSOR CONNECTOR.** 1) Connect the connector to ECM. 2) Turn the ignition switch to ON. 3) Measure the voltage between rear oxygen sensor connector and chassis ground. ***Connector & terminal*** ***(E25) No. 3 (+) — Chassis ground (–):***	Is the voltage 0.2 — 0.5 V?	Replace the rear oxygen sensor. <Ref. to FU(H4DOTC)-56, Rear Oxygen Sensor.>	Go to step **20**.
20	**CHECK OUTPUT SIGNAL OF ECM.** 1) Turn the ignition switch to ON. 2) Measure the voltage between ECM and chassis ground on faulty cylinders. ***Connector & terminal*** ***#1 (B134) No. 10 (+) — Chassis ground (–):*** ***#2 (B134) No. 11 (+) — Chassis ground (–):*** ***#3 (B134) No. 12 (+) — Chassis ground (–):*** ***#4 (B134) No. 13 (+) — Chassis ground (–):***	Is the voltage 10 V or more?	Go to step **25**.	Go to step **21**.

GETTHEMANUALS.org

	Step	Check	Yes	No
21	**CHECK HARNESS BETWEEN ECM AND FUEL INJECTOR CONNECTOR.** 1) Turn the ignition switch to OFF. 2) Disconnect the connector from fuel injector on faulty cylinders. 3) Measure the resistance between fuel injector connector and engine ground on faulty cylinders. ***Connector & terminal*** ***#1 (E5) No. 2 — Engine ground:*** ***#2 (E16) No. 2 — Engine ground:*** ***#3 (E6) No. 2 — Engine ground:*** ***#4 (E17) No. 2 — Engine ground:***	Is the resistance 1 MΩ or more?	Go to step **22**.	Repair the short circuit to ground in harness between ECM and fuel injector connector.
22	**CHECK HARNESS BETWEEN ECM AND FUEL INJECTOR CONNECTOR.** Measure the resistance of harness between ECM and fuel injector connector on faulty cylinders. ***Connector & terminal*** ***#1 (B134) No. 10 — (E5) No. 2:*** ***#2 (B134) No. 11 — (E16) No. 2:*** ***#3 (B134) No. 12 — (E6) No. 2:*** ***#4 (B134) No. 13 — (E17) No. 2:***	Is the resistance less than 1 Ω?	Go to step **23**.	Repair the harness and connector. NOTE: In this case, repair the following item: • Open circuit in harness between ECM and fuel injector connector • Poor contact of coupling connector
23	**CHECK FUEL INJECTOR.** Measure the resistance between fuel injector terminals on faulty cylinder. ***Terminals*** ***No. 1 — No. 2:***	Is the resistance 5 — 20 Ω?	Go to step **24**.	Replace the faulty fuel injector. <Ref. to FU(H4DOTC)-45, Fuel Injector.>
24	**CHECK POWER SUPPLY LINE.** 1) Turn the ignition switch to ON. 2) Measure the voltage between fuel injector connector of faulty cylinders and engine ground. ***Connector & terminal*** ***#1 (E5) No. 1 (+) — Engine ground (–):*** ***#2 (E16) No. 1 (+) — Engine ground (–):*** ***#3 (E6) No. 1 (+) — Engine ground (–):*** ***#4 (E17) No. 1 (+) — Engine ground (–):***	Is the voltage 10 V or more?	Repair the poor contact of all connectors in fuel injector circuit.	Repair the harness and connector. NOTE: In this case, repair the following item: • Open circuit in harness between the main relay and fuel injector connector on faulty cylinders • Poor contact of coupling connector • Poor contact of main relay connector
25	**CHECK HARNESS BETWEEN ECM AND FUEL INJECTOR CONNECTOR.** 1) Turn the ignition switch to OFF. 2) Disconnect the connector from fuel injector on faulty cylinders. 3) Turn the ignition switch to ON. 4) Measure the voltage between ECM and chassis ground on faulty cylinders. ***Connector & terminal*** ***#1 (B134) No. 10 (+) — Chassis ground (–):*** ***#2 (B134) No. 11 (+) — Chassis ground (–):*** ***#3 (B134) No. 12 (+) — Chassis ground (–):*** ***#4 (B134) No. 13 (+) — Chassis ground (–):***	Is the voltage 10 V or more?	Repair the short circuit to power in harness between ECM and fuel injector connector.	Go to step **26**.

GETTHEMANUALS.org

	Step	Check	Yes	No
26	**CHECK FUEL INJECTOR.** 1) Turn the ignition switch to OFF. 2) Measure the resistance between fuel injector terminals on faulty cylinder. ***Terminals*** ***No. 1 — No. 2:***	Is the resistance 5 — 20 Ω?	Go to step **27**.	Replace the faulty fuel injector. <Ref. to FU(H4DOTC)-45, Fuel Injector.>
27	**CHECK INSTALLATION CONDITION OF CAMSHAFT POSITION SENSOR/CRANKSHAFT POSITION SENSOR.**	Is the camshaft position sensor or crankshaft position sensor loosely installed?	Tighten the camshaft position sensor or crankshaft position sensor. <Ref. to FU(H4DOTC)-37, Camshaft Position Sensor.> <Ref. to FU(H4DOTC)-35, Crankshaft Position Sensor.>	Go to step **28**.
28	**CHECK CRANK SPROCKET.** Remove the timing belt cover. <Ref. to ME(H4DOTC)-46, REMOVAL, Timing Belt Cover.>	Is the crank sprocket rusted or does it have broken teeth?	Replace the crank sprocket. <Ref. to ME(H4DOTC)-62, Crank Sprocket.>	Go to step **29**.
29	**CHECK INSTALLATION CONDITION OF TIMING BELT.** Turn the crankshaft using ST, and align the alignment mark on crank sprocket with alignment mark on cylinder block. ST 499987500 CRANKSHAFT SOCKET	Is the timing belt dislocated from its proper position?	Repair the installation condition of timing belt. <Ref. to ME(H4DOTC)-52, Timing Belt.>	Go to step **30**.
30	**CHECK FUEL LEVEL.**	Is the fuel meter indication higher than the “Lower” level?	Go to step **31**.	Refill the fuel so that the fuel meter indication is higher than the “Lower” level, and proceed to the next step. Go to step **31**.
31	**CHECK STATUS OF MALFUNCTION INDICATOR LIGHT.** 1) Clear the memory using the Subaru Select Monitor or general scan tool. <Ref. to EN(H4DOTC)(diag)-53, Clear Memory Mode.> 2) Start the engine, and drive the vehicle 10 minutes or more.	Does the malfunction indicator light illuminate or blink?	Go to step **33**.	Go to step **32**.
32	**CHECK CAUSE OF MISFIRE.**	Was the cause of misfire identified when the engine is running?	Finish diagnostics operation, if the engine has no abnormality.	Repair the poor contact of connector. NOTE: In this case, repair the following item: • Poor contact of ignition coil connector • Poor contact of fuel injector connector on faulty cylinders • Poor contact of ECM connector • Poor contact of coupling connector

GETTHEMANUALS.org

Step		Check	Yes	No
33	**CHECK AIR INTAKE SYSTEM.**	Is there any fault in air intake system?	Repair the air intake system. NOTE: Check the following items. • Are there air leaks or air suction caused by loose or dislocated nuts and bolts? • Are there cracks or any disconnection of hoses?	Go to step **34**.
34	**CHECK MISFIRE SYMPTOM.** 1) Turn the ignition switch to ON. 2) Check for DTC. <Ref. to EN(H4DOTC)(diag)-40, Read Diagnostic Trouble Code (DTC).>	Does the Subaru Select Monitor or general scan tool indicate only one DTC?	Go to step **37**.	Go to step **35**.
35	**CHECK DTC.**	Is DTC P0301 and P0303 displayed on the Subaru Select Monitor or general scan tool?	Go to step **38**.	Go to step **36**.
36	**CHECK DTC.**	Is DTC P0302 and P0304 displayed on the Subaru Select Monitor or general scan tool?	Go to step **39**.	Go to step **40**.
37	**ONLY ONE CYLINDER.**	Is there any fault in the cylinder?	Repair or replace faulty parts. NOTE: Check the following items. • Spark plug • Ignition coil • Fuel injector • Compression ratio	Go to DTC P0171. <Ref. to EN(H4DOTC)(diag)-143, DTC P0171 SYSTEM TOO LEAN (BANK 1), Diagnostic Procedure with Diagnostic Trouble Code (DTC).>
38	**GROUP OF #1 AND #3 CYLINDERS.**	Are there any faults in #1 and #3 cylinders?	Repair or replace faulty parts. NOTE: Check the following items. • Spark plug • Ignition coil • Fuel injector • Compression ratio • Skipping timing belt teeth	Go to DTC P0171. <Ref. to EN(H4DOTC)(diag)-143, DTC P0171 SYSTEM TOO LEAN (BANK 1), Diagnostic Procedure with Diagnostic Trouble Code (DTC).>
39	**GROUP OF #2 AND #4 CYLINDERS.**	Are there any faults in #2 and #4 cylinders?	Repair or replace faulty parts. NOTE: Check the following items. • Spark plug • Ignition coil • Fuel injector • Compression ratio • Skipping timing belt teeth	Go to DTC P0171. <Ref. to EN(H4DOTC)(diag)-143, DTC P0171 SYSTEM TOO LEAN (BANK 1), Diagnostic Procedure with Diagnostic Trouble Code (DTC).>

GETTHEMANUALS.org

Step		Check	Yes	No
40	**CYLINDER AT RANDOM.**	Is the engine idle rough?	Go to DTC P0171. <Ref. to EN(H4DOTC)(diag)-143, DTC P0171 SYSTEM TOO LEAN (BANK 1), Diagnostic Procedure with Diagnostic Trouble Code (DTC).>	Repair or replace faulty parts. NOTE: Check the following items. • Spark plug • Ignition coil • Fuel injector • Compression ratio

GETTHEMANUALS.org

EM:DTC P2227 BAROMETRIC PRESSURE CIRCUIT RANGE/PERFORMANCE

DTC DETECTING CONDITION:

- Detected when two consecutive driving cycles with fault occur.
- GENERAL DESCRIPTION <Ref. to GD(H4DOTC)-253, DTC P2227 BAROMETRIC PRESSURE CIRCUIT RANGE/PERFORMANCE, Diagnostic Trouble Code (DTC) Detecting Criteria.>

CAUTION:

After servicing or replacing faulty parts, perform Clear Memory Mode <Ref. to EN(H4DOTC)(diag)-53, OPERATION, Clear Memory Mode.>, and Inspection Mode <Ref. to EN(H4DOTC)(diag)-41, PROCEDURE, Inspection Mode.>.

Step	Check	Yes	No
1 **CHECK FOR ANY OTHER DTC ON DISPLAY.**	Is any other DTC displayed?	Check DTC using "List of Diagnostic Trouble Code (DTC)". <Ref. to EN(H4DOTC)(diag)-75, List of Diagnostic Trouble Code (DTC).>	Replace the ECM. <Ref. to FU(H4DOTC)-58, Engine Control Module (ECM).> NOTE: The barometric pressure sensor is built into the ECM.

EN:DTC P2228 BAROMETRIC PRESSURE CIRCUIT LOW

DTC DETECTING CONDITION:

- Immediately at fault recognition
- GENERAL DESCRIPTION <Ref. to GD(H4DOTC)-254, DTC P2228 BAROMETRIC PRESSURE CIRCUIT LOW, Diagnostic Trouble Code (DTC) Detecting Criteria.>

CAUTION:

After servicing or replacing faulty parts, perform Clear Memory Mode <Ref. to EN(H4DOTC)(diag)-53, OPERATION, Clear Memory Mode.>, and Inspection Mode <Ref. to EN(H4DOTC)(diag)-41, PROCEDURE, Inspection Mode.>.

Step	Check	Yes	No
1 **CHECK FOR ANY OTHER DTC ON DISPLAY.**	Is any other DTC displayed?	Check DTC using "List of Diagnostic Trouble Code (DTC)". <Ref. to EN(H4DOTC)(diag)-75, List of Diagnostic Trouble Code (DTC).>	Replace the ECM. <Ref. to FU(H4DOTC)-58, Engine Control Module (ECM).> NOTE: The barometric pressure sensor is built into the ECM.

GETTHEMANUALS.org

EO:DTC P2229 BAROMETRIC PRESSURE CIRCUIT HIGH

DTC DETECTING CONDITION:

- Immediately at fault recognition
- GENERAL DESCRIPTION <Ref. to GD(H4DOTC)-255, DTC P2229 BAROMETRIC PRESSURE CIRCUIT HIGH, Diagnostic Trouble Code (DTC) Detecting Criteria.>

CAUTION:

After servicing or replacing faulty parts, perform Clear Memory Mode <Ref. to EN(H4DOTC)(diag)-53, OPERATION, Clear Memory Mode.>, and Inspection Mode <Ref. to EN(H4DOTC)(diag)-41, PROCEDURE, Inspection Mode.>.

Step	Check	Yes	No
1 **CHECK FOR ANY OTHER DTC ON DISPLAY.**	Is any other DTC displayed?	Check DTC using "List of Diagnostic Trouble Code (DTC)". <Ref. to EN(H4DOTC)(diag)-75, List of Diagnostic Trouble Code (DTC).>	Replace the ECM. <Ref. to FU(H4DOTC)-58, Engine Control Module (ECM).> NOTE: The barometric pressure sensor is built into the ECM.

EP:DTC P2610 ECM/PCM INTERNAL ENGINE OFF TIMER PERFORMANCE

DTC DETECTING CONDITION:

- Detected when two consecutive driving cycles with fault occur.
- GENERAL DESCRIPTION <Ref. to GD(H4DOTC)-256, DTC P2610 ECM/PCM INTERNAL ENGINE OFF TIMER PERFORMANCE, Diagnostic Trouble Code (DTC) Detecting Criteria.>

CAUTION:

After servicing or replacing faulty parts, perform Clear Memory Mode <Ref. to EN(H4DOTC)(diag)-53, OPERATION, Clear Memory Mode.>, and Inspection Mode <Ref. to EN(H4DOTC)(diag)-41, PROCEDURE, Inspection Mode.>.

Step	Check	Yes	No
1 **CHECK FOR ANY OTHER DTC ON DISPLAY.**	Is any other DTC displayed?	Check DTC using "List of Diagnostic Trouble Code (DTC)". <Ref. to EN(H4DOTC)(diag)-75, List of Diagnostic Trouble Code (DTC).>	Replace the ECM. <Ref. to FU(H4DOTC)-58, Engine Control Module (ECM).> NOTE: The soak timer IC is built into the ECM.

GETTHEMANUALS.org

EQ:DTC U0073 CAN FAILURE, BUS ‘OFF’ DETECTION

NOTE:
For the diagnostic procedure, refer to LAN section. <Ref. to LAN(diag)-2, Basic Diagnostic Procedure.>

ER:DTC U0101 CAN (TCU) DATA NOT LOADED

NOTE:
For the diagnostic procedure, refer to LAN section. <Ref. to LAN(diag)-2, Basic Diagnostic Procedure.>

ES:DTC U0122 CAN (VDC) DATA NOT LOADED

NOTE:
For the diagnostic procedure, refer to LAN section. <Ref. to LAN(diag)-2, Basic Diagnostic Procedure.>

ET:DTC U0140 CAN (BCU) DATA NOT LOADED

NOTE:
For the diagnostic procedure, refer to LAN section. <Ref. to LAN(diag)-2, Basic Diagnostic Procedure.>

EU:DTC U0402 CAN (TCU) DATA ABNORMAL

NOTE:
For the diagnostic procedure, refer to LAN section. <Ref. to LAN(diag)-2, Basic Diagnostic Procedure.>

EV:DTC U0416 CAN (VDC) DATA ABNORMAL

NOTE:
For the diagnostic procedure, refer to LAN section. <Ref. to LAN(diag)-2, Basic Diagnostic Procedure.>

EW:DTC U0422 CAN (BCU) DATA ABNORMAL

NOTE:
For the diagnostic procedure, refer to LAN section. <Ref. to LAN(diag)-2, Basic Diagnostic Procedure.>

GETTHEMANUALS.org

20. General Diagnostic Table

A: INSPECTION

1. ENGINE

NOTE:
Malfunction of parts other than those listed is also possible. <Ref. to ME(H4DOTC)-111, Engine Trouble in General.>

Symptoms	Problem parts
1. Engine stalls during idling.	1) Electronic throttle control 2) Manifold absolute pressure sensor 3) Mass air flow and intake air temperature sensor 4) Ignition parts (*1) 5) Engine coolant temperature sensor (*2) 6) Crankshaft position sensor (*3) 7) Camshaft position sensor (*3) 8) Fuel injection parts (*4)
2. Rough idling	1) Electronic throttle control 2) Manifold absolute pressure sensor 3) Mass air flow and intake air temperature sensor 4) Engine coolant temperature sensor (*2) 5) Ignition parts (*1) 6) Air intake system (*5) 7) Fuel injection parts (*4) 8) Crankshaft position sensor (*3) 9) Camshaft position sensor (*3) 10) Oxygen sensor 11) Fuel pump and fuel pump relay
3. Engine does not return to idle.	1) Electronic throttle control 2) Engine coolant temperature sensor 3) Manifold absolute pressure sensor 4) Mass air flow and intake air temperature sensor 5) Accelerator pedal position sensor
4. Poor acceleration	1) Manifold absolute pressure sensor 2) Mass air flow and intake air temperature sensor 3) Electronic throttle control 4) Fuel injection parts (*4) 5) Fuel pump and fuel pump relay 6) Engine coolant temperature sensor (*2) 7) Crankshaft position sensor (*3) 8) Camshaft position sensor (*3) 9) Engine torque control signal circuit 10) Ignition parts (*1) 11) Accelerator pedal position sensor
5. Engine stalls, hesitates, or sputters at acceleration.	1) Manifold absolute pressure sensor 2) Mass air flow and intake air temperature sensor 3) Engine coolant temperature sensor (*2) 4) Crankshaft position sensor (*3) 5) Camshaft position sensor (*3) 6) Purge control solenoid valve 7) Fuel injection parts (*4) 8) Fuel pump and fuel pump relay 9) Electronic throttle control

GETTHEMANUALS.org

General Diagnostic Table

Symptoms	Problem parts
6. Surging	1) Manifold absolute pressure sensor 2) Mass air flow and intake air temperature sensor 3) Engine coolant temperature sensor (*2) 4) Crankshaft position sensor (*3) 5) Camshaft position sensor (*3) 6) Fuel injection parts (*4) 7) Electronic control position sensor 8) Fuel pump and fuel pump relay
7. Spark knock	1) Manifold absolute pressure sensor 2) Mass air flow and intake air temperature sensor 3) Engine coolant temperature sensor 4) Knock sensor 5) Fuel injection parts (*4) 6) Fuel pump and fuel pump relay
8. After-burning in exhaust system	1) Manifold absolute pressure sensor 2) Mass air flow and intake air temperature sensor 3) Engine coolant temperature sensor (*2) 4) Fuel injection parts (*4) 5) Fuel pump and fuel pump relay

*1: Check ignition coil and spark plug.
*2: Indicate the symptom occurring only in cold temperatures.
*3: Ensure the secure installation.
*4: Check fuel injector, fuel pressure regulator and fuel filter.
*5: Inspect air leak in air intake system.

GETTHEMANUALS.org

GENERAL DESCRIPTION

GD(H4DOTC)

Page

1. List of Diagnostic Trouble Code (DTC) 2
2. Diagnostic Trouble Code (DTC) Detecting Criteria 10

GETtheMANUALS.org

1. List of Diagnostic Trouble Code (DTC)

A: LIST

DTC	Item	Index
P0011	Intake Camshaft Position - Timing Over-Advanced or System Performance (Bank 1)	<Ref. to GD(H4DOTC)-10, DTC P0011 INTAKE CAMSHAFT POSITION - TIMING OVER-ADVANCED OR SYSTEM PERFORMANCE (BANK 1), Diagnostic Trouble Code (DTC) Detecting Criteria.>
P0014	Exhaust AVCS System 1 (Range/ Performance)	<Ref. to GD(H4DOTC)-12, DTC P0014 EXHAUST AVCS SYSTEM 1 (RANGE/PERFORMANCE), Diagnostic Trouble Code (DTC) Detecting Criteria.>
P0016	Crankshaft Position - Camshaft Position Correlation (Bank1)	<Ref. to GD(H4DOTC)-14, DTC P0016 CRANKSHAFT POSITION - CAMSHAFT POSITION CORRELATION (BANK1), Diagnostic Trouble Code (DTC) Detecting Criteria.>
P0017	Crank and Cam Timing B System Failure (Bank 1)	<Ref. to GD(H4DOTC)-16, DTC P0017 CRANK AND CAM TIMING B SYSTEM FAILURE (BANK 1), Diagnostic Trouble Code (DTC) Detecting Criteria.>
P0018	Crankshaft Position - Camshaft Position Correlation (Bank2)	<Ref. to GD(H4DOTC)-18, DTC P0018 CRANKSHAFT POSITION - CAMSHAFT POSITION CORRELATION (BANK2), Diagnostic Trouble Code (DTC) Detecting Criteria.>
P0019	Crank and Cam Timing B System Failure (Bank 2)	<Ref. to GD(H4DOTC)-18, DTC P0019 CRANK AND CAM TIMING B SYSTEM FAILURE (BANK 2), Diagnostic Trouble Code (DTC) Detecting Criteria.>
P0021	Intake Camshaft Position - Timing Over-Advanced or System Performance (Bank 2)	<Ref. to GD(H4DOTC)-18, DTC P0021 INTAKE CAMSHAFT POSITION - TIMING OVER-ADVANCED OR SYSTEM PERFORMANCE (BANK 2), Diagnostic Trouble Code (DTC) Detecting Criteria.>
P0024	Exhaust AVCS System 2 (Range/ Performance)	<Ref. to GD(H4DOTC)-18, DTC P0024 EXHAUST AVCS SYSTEM 2 (RANGE/PERFORMANCE), Diagnostic Trouble Code (DTC) Detecting Criteria.>
P0030	HO2S Heater Control Circuit (Bank 1 Sensor 1)	<Ref. to GD(H4DOTC)-19, DTC P0030 HO2S HEATER CONTROL CIRCUIT (BANK 1 SENSOR 1), Diagnostic Trouble Code (DTC) Detecting Criteria.>
P0031	HO2S Heater Control Circuit Low (Bank 1 Sensor 1)	<Ref. to GD(H4DOTC)-21, DTC P0031 HO2S HEATER CONTROL CIRCUIT LOW (BANK 1 SENSOR 1), Diagnostic Trouble Code (DTC) Detecting Criteria.>
P0032	HO2S Heater Control Circuit High (Bank 1 Sensor 1)	<Ref. to GD(H4DOTC)-23, DTC P0032 HO2S HEATER CONTROL CIRCUIT HIGH (BANK 1 SENSOR 1), Diagnostic Trouble Code (DTC) Detecting Criteria.>
P0037	HO2S Heater Control Circuit Low (Bank 1 Sensor 2)	<Ref. to GD(H4DOTC)-25, DTC P0037 HO2S HEATER CONTROL CIRCUIT LOW (BANK 1 SENSOR 2), Diagnostic Trouble Code (DTC) Detecting Criteria.>
P0038	HO2S Heater Control Circuit High (Bank 1 Sensor 2)	<Ref. to GD(H4DOTC)-27, DTC P0038 HO2S HEATER CONTROL CIRCUIT HIGH (BANK 1 SENSOR 2), Diagnostic Trouble Code (DTC) Detecting Criteria.>
P0068	MAP/MAF - Throttle Position Correlation	<Ref. to GD(H4DOTC)-29, DTC P0068 MAP/MAF - THROTTLE POSITION CORRELATION, Diagnostic Trouble Code (DTC) Detecting Criteria.>
P0101	Mass or Volume Air Flow Circuit Range/Performance	<Ref. to GD(H4DOTC)-31, DTC P0101 MASS OR VOLUME AIR FLOW CIRCUIT RANGE/PERFORMANCE, Diagnostic Trouble Code (DTC) Detecting Criteria.>
P0102	Mass or Volume Air Flow Circuit Low Input	<Ref. to GD(H4DOTC)-33, DTC P0102 MASS OR VOLUME AIR FLOW CIRCUIT LOW INPUT, Diagnostic Trouble Code (DTC) Detecting Criteria.>
P0103	Mass or Volume Air Flow Circuit High Input	<Ref. to GD(H4DOTC)-35, DTC P0103 MASS OR VOLUME AIR FLOW CIRCUIT HIGH INPUT, Diagnostic Trouble Code (DTC) Detecting Criteria.>
P0107	Manifold Absolute Pressure/Barometric Pressure Circuit Low Input	<Ref. to GD(H4DOTC)-37, DTC P0107 MANIFOLD ABSOLUTE PRESSURE/BAROMETRIC PRESSURE CIRCUIT LOW INPUT, Diagnostic Trouble Code (DTC) Detecting Criteria.>
P0108	Manifold Absolute Pressure/Barometric Pressure Circuit High Input	<Ref. to GD(H4DOTC)-39, DTC P0108 MANIFOLD ABSOLUTE PRESSURE/BAROMETRIC PRESSURE CIRCUIT HIGH INPUT, Diagnostic Trouble Code (DTC) Detecting Criteria.>

GETthemANUALS.org

DTC	Item	Index
P0111	Intake Air Temperature Sensor 1 Circuit Range/Performance	<Ref. to GD(H4DOTC)-41, DTC P0111 INTAKE AIR TEMPERATURE SENSOR 1 CIRCUIT RANGE/PERFORMANCE, Diagnostic Trouble Code (DTC) Detecting Criteria.>
P0112	Intake Air Temperature Sensor 1 Circuit Low	<Ref. to GD(H4DOTC)-43, DTC P0112 INTAKE AIR TEMPERATURE SENSOR 1 CIRCUIT LOW, Diagnostic Trouble Code (DTC) Detecting Criteria.>
P0113	Intake Air Temperature Sensor 1 Circuit High	<Ref. to GD(H4DOTC)-45, DTC P0113 INTAKE AIR TEMPERATURE SENSOR 1 CIRCUIT HIGH, Diagnostic Trouble Code (DTC) Detecting Criteria.>
P0117	Engine Coolant Temperature Circuit Low	<Ref. to GD(H4DOTC)-47, DTC P0117 ENGINE COOLANT TEMPERATURE CIRCUIT LOW, Diagnostic Trouble Code (DTC) Detecting Criteria.>
P0118	Engine Coolant Temperature Circuit High	<Ref. to GD(H4DOTC)-49, DTC P0118 ENGINE COOLANT TEMPERATURE CIRCUIT HIGH, Diagnostic Trouble Code (DTC) Detecting Criteria.>
P0122	Throttle/Pedal Position Sensor/ Switch “A” Circuit Low	<Ref. to GD(H4DOTC)-51, DTC P0122 THROTTLE/PEDAL POSITION SENSOR/SWITCH “A” CIRCUIT LOW, Diagnostic Trouble Code (DTC) Detecting Criteria.>
P0123	Throttle/Pedal Position Sensor/ Switch “A” Circuit High	<Ref. to GD(H4DOTC)-53, DTC P0123 THROTTLE/PEDAL POSITION SENSOR/SWITCH “A” CIRCUIT HIGH, Diagnostic Trouble Code (DTC) Detecting Criteria.>
P0125	Insufficient Coolant Temperature for Closed Loop Fuel Control	<Ref. to GD(H4DOTC)-55, DTC P0125 INSUFFICIENT COOLANT TEMPERATURE FOR CLOSED LOOP FUEL CONTROL, Diagnostic Trouble Code (DTC) Detecting Criteria.>
P0126	Insufficient Engine Coolant Temperature for Stable Operation	<Ref. to GD(H4DOTC)-57, DTC P0126 INSUFFICIENT ENGINE COOLANT TEMPERATURE FOR STABLE OPERATION, Diagnostic Trouble Code (DTC) Detecting Criteria.>
P0128	Coolant Thermostat (Engine Coolant Temperature Below Thermostat Regulating Temperature)	<Ref. to GD(H4DOTC)-59, DTC P0128 COOLANT THERMOSTAT (ENGINE COOLANT TEMPERATURE BELOW THERMOSTAT REGULATING TEMPERATURE), Diagnostic Trouble Code (DTC) Detecting Criteria.>
P0131	O2 Sensor Circuit Low Voltage (Bank 1 Sensor 1)	<Ref. to GD(H4DOTC)-63, DTC P0131 O2 SENSOR CIRCUIT LOW VOLTAGE (BANK 1 SENSOR 1), Diagnostic Trouble Code (DTC) Detecting Criteria.>
P0132	O2 Sensor Circuit High Voltage (Bank 1 Sensor 1)	<Ref. to GD(H4DOTC)-65, DTC P0132 O2 SENSOR CIRCUIT HIGH VOLTAGE (BANK 1 SENSOR 1), Diagnostic Trouble Code (DTC) Detecting Criteria.>
P0133	O2 Sensor Circuit Slow Response (Bank 1 Sensor 1)	<Ref. to GD(H4DOTC)-67, DTC P0133 O2 SENSOR CIRCUIT SLOW RESPONSE (BANK 1 SENSOR 1), Diagnostic Trouble Code (DTC) Detecting Criteria.>
P0134	O2 Sensor Circuit No Activity Detected (Bank 1 Sensor 1)	<Ref. to GD(H4DOTC)-70, DTC P0134 O2 SENSOR CIRCUIT NO ACTIVITY DETECTED (BANK 1 SENSOR 1), Diagnostic Trouble Code (DTC) Detecting Criteria.>
P0137	O2 Sensor Circuit Low Voltage (Bank 1 Sensor 2)	<Ref. to GD(H4DOTC)-72, DTC P0137 O2 SENSOR CIRCUIT LOW VOLTAGE (BANK 1 SENSOR 2), Diagnostic Trouble Code (DTC) Detecting Criteria.>
P0138	O2 Sensor Circuit High Voltage (Bank 1 Sensor 2)	<Ref. to GD(H4DOTC)-74, DTC P0138 O2 SENSOR CIRCUIT HIGH VOLTAGE (BANK 1 SENSOR 2), Diagnostic Trouble Code (DTC) Detecting Criteria.>
P013A	O2 Sensor Slow Response - Rich to Lean (Bank 1 Sensor 2)	<Ref. to GD(H4DOTC)-75, DTC P013A O2 SENSOR SLOW RESPONSE - RICH TO LEAN (BANK 1 SENSOR 2), Diagnostic Trouble Code (DTC) Detecting Criteria.>
P013B	O2 Sensor Slow Response - Lean to Rich (Bank 1 Sensor 2)	<Ref. to GD(H4DOTC)-77, DTC P013B O2 SENSOR SLOW RESPONSE - LEAN TO RICH (BANK 1 SENSOR 2), Diagnostic Trouble Code (DTC) Detecting Criteria.>
P013E	O2 Sensor Delayed Response - Rich to Lean (Bank 1 Sensor 2)	<Ref. to GD(H4DOTC)-79, DTC P013E O2 SENSOR DELAYED RESPONSE - RICH TO LEAN (BANK 1 SENSOR 2), Diagnostic Trouble Code (DTC) Detecting Criteria.>
P013F	O2 Sensor Delayed Response - Lean to Rich (Bank 1 Sensor 2)	<Ref. to GD(H4DOTC)-81, DTC P013F O2 SENSOR DELAYED RESPONSE - LEAN TO RICH (BANK 1 SENSOR 2), Diagnostic Trouble Code (DTC) Detecting Criteria.>

GETthemANUALS.org

List of Diagnostic Trouble Code (DTC)

DTC	Item	Index
P0140	O2 Sensor Circuit No Activity Detected (Bank1 Sensor2)	<Ref. to GD(H4DOTC)-83, DTC P0140 O2 SENSOR CIRCUIT NO ACTIVITY DETECTED (BANK1 SENSOR2), Diagnostic Trouble Code (DTC) Detecting Criteria.>
P0141	O2 Sensor Heater Circuit (Bank1 Sensor2)	<Ref. to GD(H4DOTC)-85, DTC P0141 O2 SENSOR HEATER CIRCUIT (BANK1 SENSOR2), Diagnostic Trouble Code (DTC) Detecting Criteria.>
P0171	System Too Lean (Bank 1)	<Ref. to GD(H4DOTC)-87, DTC P0171 SYSTEM TOO LEAN (BANK 1), Diagnostic Trouble Code (DTC) Detecting Criteria.>
P0172	System Too Rich (Bank 1)	<Ref. to GD(H4DOTC)-88, DTC P0172 SYSTEM TOO RICH (BANK 1), Diagnostic Trouble Code (DTC) Detecting Criteria.>
P0181	Fuel Temperature Sensor “A” Circuit Range/Performance	<Ref. to GD(H4DOTC)-90, DTC P0181 FUEL TEMPERATURE SENSOR “A” CIRCUIT RANGE/PERFORMANCE, Diagnostic Trouble Code (DTC) Detecting Criteria.>
P0182	Fuel Temperature Sensor “A” Circuit Low Input	<Ref. to GD(H4DOTC)-93, DTC P0182 FUEL TEMPERATURE SENSOR “A” CIRCUIT LOW INPUT, Diagnostic Trouble Code (DTC) Detecting Criteria.>
P0183	Fuel Temperature Sensor “A” Circuit High Input	<Ref. to GD(H4DOTC)-95, DTC P0183 FUEL TEMPERATURE SENSOR “A” CIRCUIT HIGH INPUT, Diagnostic Trouble Code (DTC) Detecting Criteria.>
P0201	Injector #1	<Ref. to GD(H4DOTC)-97, DTC P0201 INJECTOR #1, Diagnostic Trouble Code (DTC) Detecting Criteria.>
P0202	Injector #2	<Ref. to GD(H4DOTC)-98, DTC P0202 INJECTOR #2, Diagnostic Trouble Code (DTC) Detecting Criteria.>
P0203	Injector #3	<Ref. to GD(H4DOTC)-98, DTC P0203 INJECTOR #3, Diagnostic Trouble Code (DTC) Detecting Criteria.>
P0204	Injector #4	<Ref. to GD(H4DOTC)-98, DTC P0204 INJECTOR #4, Diagnostic Trouble Code (DTC) Detecting Criteria.>
P0222	Throttle/Pedal Position Sensor/Switch “B” Circuit Low	<Ref. to GD(H4DOTC)-99, DTC P0222 THROTTLE/PEDAL POSITION SENSOR/SWITCH “B” CIRCUIT LOW, Diagnostic Trouble Code (DTC) Detecting Criteria.>
P0223	Throttle/Pedal Position Sensor/Switch “B” Circuit High	<Ref. to GD(H4DOTC)-101, DTC P0223 THROTTLE/PEDAL POSITION SENSOR/SWITCH “B” CIRCUIT HIGH, Diagnostic Trouble Code (DTC) Detecting Criteria.>
P0230	Fuel Pump Primary Circuit	<Ref. to GD(H4DOTC)-103, DTC P0230 FUEL PUMP PRIMARY CIRCUIT, Diagnostic Trouble Code (DTC) Detecting Criteria.>
P0244	Turbo/Super Charger Wastegate Solenoid “A” Range/Performance	<Ref. to GD(H4DOTC)-105, DTC P0244 TURBO/SUPER CHARGER WASTEGATE SOLENOID “A” RANGE/PERFORMANCE, Diagnostic Trouble Code (DTC) Detecting Criteria.>
P0245	Turbo/Super Charger Wastegate Solenoid “A” Low	<Ref. to GD(H4DOTC)-107, DTC P0245 TURBO/SUPER CHARGER WASTEGATE SOLENOID “A” LOW, Diagnostic Trouble Code (DTC) Detecting Criteria.>
P0246	Turbo/Super Charger Wastegate Solenoid “A” High	<Ref. to GD(H4DOTC)-108, DTC P0246 TURBO/SUPER CHARGER WASTEGATE SOLENOID “A” HIGH, Diagnostic Trouble Code (DTC) Detecting Criteria.>
P0301	Cylinder 1 Misfire Detected	<Ref. to GD(H4DOTC)-109, DTC P0301 CYLINDER 1 MISFIRE DETECTED, Diagnostic Trouble Code (DTC) Detecting Criteria.>
P0302	Cylinder 2 Misfire Detected	<Ref. to GD(H4DOTC)-115, DTC P0302 CYLINDER 2 MISFIRE DETECTED, Diagnostic Trouble Code (DTC) Detecting Criteria.>
P0303	Cylinder 3 Misfire Detected	<Ref. to GD(H4DOTC)-115, DTC P0303 CYLINDER 3 MISFIRE DETECTED, Diagnostic Trouble Code (DTC) Detecting Criteria.>
P0304	Cylinder 4 Misfire Detected	<Ref. to GD(H4DOTC)-115, DTC P0304 CYLINDER 4 MISFIRE DETECTED, Diagnostic Trouble Code (DTC) Detecting Criteria.>
P0327	Knock Sensor 1 Circuit Low (Bank 1 or Single Sensor)	<Ref. to GD(H4DOTC)-116, DTC P0327 KNOCK SENSOR 1 CIRCUIT LOW (BANK 1 OR SINGLE SENSOR), Diagnostic Trouble Code (DTC) Detecting Criteria.>
P0328	Knock Sensor 1 Circuit High (Bank 1 or Single Sensor)	<Ref. to GD(H4DOTC)-118, DTC P0328 KNOCK SENSOR 1 CIRCUIT HIGH (BANK 1 OR SINGLE SENSOR), Diagnostic Trouble Code (DTC) Detecting Criteria.>

GETtheMANUALS.org

DTC	Item	Index
P0335	Crankshaft Position Sensor “A” Circuit	<Ref. to GD(H4DOTC)-120, DTC P0335 CRANKSHAFT POSITION SENSOR “A” CIRCUIT, Diagnostic Trouble Code (DTC) Detecting Criteria.>
P0336	Crankshaft Position Sensor “A” Circuit Range/Performance	<Ref. to GD(H4DOTC)-122, DTC P0336 CRANKSHAFT POSITION SENSOR “A” CIRCUIT RANGE/PERFORMANCE, Diagnostic Trouble Code (DTC) Detecting Criteria.>
P0340	Camshaft Position Sensor “A” Circuit (Bank 1 or Single Sensor)	<Ref. to GD(H4DOTC)-124, DTC P0340 CAMSHAFT POSITION SENSOR “A” CIRCUIT (BANK 1 OR SINGLE SENSOR), Diagnostic Trouble Code (DTC) Detecting Criteria.>
P0345	Camshaft Position Sensor “A” Circuit (Bank 2)	<Ref. to GD(H4DOTC)-125, DTC P0345 CAMSHAFT POSITION SENSOR “A” CIRCUIT (BANK 2), Diagnostic Trouble Code (DTC) Detecting Criteria.>
P0351	Ignition Coil A Primary/Secondary Circuit	<Ref. to GD(H4DOTC)-126, DTC P0351 IGNITION COIL A PRIMARY/SECONDARY CIRCUIT, Diagnostic Trouble Code (DTC) Detecting Criteria.>
P0352	Ignition Coil B Primary/Secondary Circuit	<Ref. to GD(H4DOTC)-126, DTC P0352 IGNITION COIL B PRIMARY/SECONDARY CIRCUIT, Diagnostic Trouble Code (DTC) Detecting Criteria.>
P0353	Ignition Coil C Primary/Secondary Circuit	<Ref. to GD(H4DOTC)-126, DTC P0353 IGNITION COIL C PRIMARY/SECONDARY CIRCUIT, Diagnostic Trouble Code (DTC) Detecting Criteria.>
P0354	Ignition Coil D Primary/Secondary Circuit	<Ref. to GD(H4DOTC)-126, DTC P0354 IGNITION COIL D PRIMARY/SECONDARY CIRCUIT, Diagnostic Trouble Code (DTC) Detecting Criteria.>
P0365	Camshaft Position Sensor “B” Circuit (Bank 1)	<Ref. to GD(H4DOTC)-127, DTC P0365 CAMSHAFT POSITION SENSOR “B” CIRCUIT (BANK 1), Diagnostic Trouble Code (DTC) Detecting Criteria.>
P0390	Camshaft Position Sensor “B” Circuit (Bank 2)	<Ref. to GD(H4DOTC)-127, DTC P0390 CAMSHAFT POSITION SENSOR “B” CIRCUIT (BANK 2), Diagnostic Trouble Code (DTC) Detecting Criteria.>
P0420	Catalyst System Efficiency Below Threshold (Bank 1)	<Ref. to GD(H4DOTC)-128, DTC P0420 CATALYST SYSTEM EFFICIENCY BELOW THRESHOLD (BANK 1), Diagnostic Trouble Code (DTC) Detecting Criteria.>
P0442	Evaporative Emission Control System Leak Detected (Small Leak)	<Ref. to GD(H4DOTC)-130, DTC P0442 EVAPORATIVE EMISSION CONTROL SYSTEM LEAK DETECTED (SMALL LEAK), Diagnostic Trouble Code (DTC) Detecting Criteria.>
P0447	Evaporative Emission Control System Vent Control Circuit Open	<Ref. to GD(H4DOTC)-144, DTC P0447 EVAPORATIVE EMISSION CONTROL SYSTEM VENT CONTROL CIRCUIT OPEN, Diagnostic Trouble Code (DTC) Detecting Criteria.>
P0448	Evaporative Emission Control System Vent Control Circuit Shorted	<Ref. to GD(H4DOTC)-146, DTC P0448 EVAPORATIVE EMISSION CONTROL SYSTEM VENT CONTROL CIRCUIT SHORTED, Diagnostic Trouble Code (DTC) Detecting Criteria.>
P0451	Evaporative Emission Control System Pressure Sensor	<Ref. to GD(H4DOTC)-148, DTC P0451 EVAPORATIVE EMISSION CONTROL SYSTEM PRESSURE SENSOR, Diagnostic Trouble Code (DTC) Detecting Criteria.>
P0452	Evaporative Emission Control System Pressure Sensor Low Input	<Ref. to GD(H4DOTC)-152, DTC P0452 EVAPORATIVE EMISSION CONTROL SYSTEM PRESSURE SENSOR LOW INPUT, Diagnostic Trouble Code (DTC) Detecting Criteria.>
P0453	Evaporative Emission Control System Pressure Sensor High Input	<Ref. to GD(H4DOTC)-154, DTC P0453 EVAPORATIVE EMISSION CONTROL SYSTEM PRESSURE SENSOR HIGH INPUT, Diagnostic Trouble Code (DTC) Detecting Criteria.>
P0456	Evaporative Emission Control System Leak Detected (Very Small Leak)	<Ref. to GD(H4DOTC)-155, DTC P0456 EVAPORATIVE EMISSION CONTROL SYSTEM LEAK DETECTED (VERY SMALL LEAK), Diagnostic Trouble Code (DTC) Detecting Criteria.>
P0457	Evaporative Emission Control System Leak Detected (Fuel Cap Loose/Off)	<Ref. to GD(H4DOTC)-155, DTC P0457 EVAPORATIVE EMISSION CONTROL SYSTEM LEAK DETECTED (FUEL CAP LOOSE/OFF), Diagnostic Trouble Code (DTC) Detecting Criteria.>
P0458	Evaporative Emission System Purge Control Valve Circuit Low	<Ref. to GD(H4DOTC)-156, DTC P0458 EVAPORATIVE EMISSION SYSTEM PURGE CONTROL VALVE CIRCUIT LOW, Diagnostic Trouble Code (DTC) Detecting Criteria.>
P0459	Evaporative Emission System Purge Control Valve Circuit High	<Ref. to GD(H4DOTC)-158, DTC P0459 EVAPORATIVE EMISSION SYSTEM PURGE CONTROL VALVE CIRCUIT HIGH, Diagnostic Trouble Code (DTC) Detecting Criteria.>

GETtheMANUALS.org

List of Diagnostic Trouble Code (DTC)

DTC	Item	Index
P0461	Fuel Level Sensor “A” Circuit Range/Performance	<Ref. to GD(H4DOTC)-160, DTC P0461 FUEL LEVEL SENSOR “A” CIRCUIT RANGE/PERFORMANCE, Diagnostic Trouble Code (DTC) Detecting Criteria.>
P0462	Fuel Level Sensor “A” Circuit Low	<Ref. to GD(H4DOTC)-162, DTC P0462 FUEL LEVEL SENSOR “A” CIRCUIT LOW, Diagnostic Trouble Code (DTC) Detecting Criteria.>
P0463	Fuel Level Sensor “A” Circuit High	<Ref. to GD(H4DOTC)-164, DTC P0463 FUEL LEVEL SENSOR “A” CIRCUIT HIGH, Diagnostic Trouble Code (DTC) Detecting Criteria.>
P0464	Fuel Level Sensor Circuit Intermittent	<Ref. to GD(H4DOTC)-166, DTC P0464 FUEL LEVEL SENSOR CIRCUIT INTERMITTENT, Diagnostic Trouble Code (DTC) Detecting Criteria.>
P0500	Vehicle Speed Sensor “A”	<Ref. to GD(H4DOTC)-169, DTC P0500 VEHICLE SPEED SENSOR “A”, Diagnostic Trouble Code (DTC) Detecting Criteria.>
P0506	Idle Air Control System RPM Lower Than Expected	<Ref. to GD(H4DOTC)-170, DTC P0506 IDLE AIR CONTROL SYSTEM RPM LOWER THAN EXPECTED, Diagnostic Trouble Code (DTC) Detecting Criteria.>
P0507	Idle Air Control System RPM Higher Than Expected	<Ref. to GD(H4DOTC)-171, DTC P0507 IDLE AIR CONTROL SYSTEM RPM HIGHER THAN EXPECTED, Diagnostic Trouble Code (DTC) Detecting Criteria.>
P050A	Cold Start Idle Air Control System Performance	<Ref. to GD(H4DOTC)-172, DTC P050A COLD START IDLE AIR CONTROL SYSTEM PERFORMANCE, Diagnostic Trouble Code (DTC) Detecting Criteria.>
P050B	Cold Start Ignition Timing Performance	<Ref. to GD(H4DOTC)-176, DTC P050B COLD START IGNITION TIMING PERFORMANCE, Diagnostic Trouble Code (DTC) Detecting Criteria.>
P0512	Starter Request Circuit	<Ref. to GD(H4DOTC)-177, DTC P0512 STARTER REQUEST CIRCUIT, Diagnostic Trouble Code (DTC) Detecting Criteria.>
P0513	Incorrect Immobilizer Key	<Ref. to GD(H4DOTC)-178, DTC P0513 INCORRECT IMMOBILIZER KEY, Diagnostic Trouble Code (DTC) Detecting Criteria.>
P0604	Internal Control Module Random Access Memory (RAM) Error	<Ref. to GD(H4DOTC)-179, DTC P0604 INTERNAL CONTROL MODULE RANDOM ACCESS MEMORY (RAM) ERROR, Diagnostic Trouble Code (DTC) Detecting Criteria.>
P0605	Internal Control Module Read Only Memory (ROM) Error	<Ref. to GD(H4DOTC)-180, DTC P0605 INTERNAL CONTROL MODULE READ ONLY MEMORY (ROM) ERROR, Diagnostic Trouble Code (DTC) Detecting Criteria.>
P0607	Throttle Control System Circuit Range/Performance	<Ref. to GD(H4DOTC)-181, DTC P0607 THROTTLE CONTROL SYSTEM CIRCUIT RANGE/PERFORMANCE, Diagnostic Trouble Code (DTC) Detecting Criteria.>
P0638	Throttle Actuator Control Range/Performance (Bank 1)	<Ref. to GD(H4DOTC)-183, DTC P0638 THROTTLE ACTUATOR CONTROL RANGE/PERFORMANCE (BANK 1), Diagnostic Trouble Code (DTC) Detecting Criteria.>
P0851	Neutral Switch Input Circuit Low (MT Model)	<Ref. to GD(H4DOTC)-185, DTC P0851 NEUTRAL SWITCH INPUT CIRCUIT LOW (MT MODEL), Diagnostic Trouble Code (DTC) Detecting Criteria.>
P0852	Neutral Switch Input Circuit High (MT Model)	<Ref. to GD(H4DOTC)-186, DTC P0852 NEUTRAL SWITCH INPUT CIRCUIT HIGH (MT MODEL), Diagnostic Trouble Code (DTC) Detecting Criteria.>
P1152	O2 Sensor Circuit Range/Performance (Low) (Bank1 Sensor1)	<Ref. to GD(H4DOTC)-187, DTC P1152 O2 SENSOR CIRCUIT RANGE/PERFORMANCE (LOW) (BANK1 SENSOR1), Diagnostic Trouble Code (DTC) Detecting Criteria.>
P1153	O2 Sensor Circuit Range/Performance (High) (Bank1 Sensor1)	<Ref. to GD(H4DOTC)-189, DTC P1153 O2 SENSOR CIRCUIT RANGE/PERFORMANCE (HIGH) (BANK1 SENSOR1), Diagnostic Trouble Code (DTC) Detecting Criteria.>
P1160	Return Spring Failure	<Ref. to GD(H4DOTC)-191, DTC P1160 RETURN SPRING FAILURE, Diagnostic Trouble Code (DTC) Detecting Criteria.>
P1400	Fuel Tank Pressure Control Solenoid Valve Circuit Low	<Ref. to GD(H4DOTC)-193, DTC P1400 FUEL TANK PRESSURE CONTROL SOLENOID VALVE CIRCUIT LOW, Diagnostic Trouble Code (DTC) Detecting Criteria.>

GETtheMANUALS.org

DTC	Item	Index
P1420	Fuel Tank Pressure Control Sol. Valve Circuit High	<Ref. to GD(H4DOTC)-195, DTC P1420 FUEL TANK PRESSURE CONTROL SOL. VALVE CIRCUIT HIGH, Diagnostic Trouble Code (DTC) Detecting Criteria.>
P1443	Vent Control Solenoid Valve Function Problem	<Ref. to GD(H4DOTC)-197, DTC P1443 VENT CONTROL SOLENOID VALVE FUNCTION PROBLEM, Diagnostic Trouble Code (DTC) Detecting Criteria.>
P1458	Canister Purge Control Solenoid Valve 2	<Ref. to GD(H4DOTC)-199, DTC P1458 CANISTER PURGE CONTROL SOLENOID VALVE 2, Diagnostic Trouble Code (DTC) Detecting Criteria.>
P1459	Canister Purge Control Solenoid Valve 2	<Ref. to GD(H4DOTC)-200, DTC P1459 CANISTER PURGE CONTROL SOLENOID VALVE 2, Diagnostic Trouble Code (DTC) Detecting Criteria.>
P1518	Starter Switch Circuit Low Input	<Ref. to GD(H4DOTC)-201, DTC P1518 STARTER SWITCH CIRCUIT LOW INPUT, Diagnostic Trouble Code (DTC) Detecting Criteria.>
P1560	Back-Up Voltage Circuit Malfunction	<Ref. to GD(H4DOTC)-202, DTC P1560 BACK-UP VOLTAGE CIRCUIT MALFUNCTION, Diagnostic Trouble Code (DTC) Detecting Criteria.>
P1570	Antenna	<Ref. to GD(H4DOTC)-203, DTC P1570 ANTENNA, Diagnostic Trouble Code (DTC) Detecting Criteria.>
P1571	Reference Code Incompatibility	<Ref. to GD(H4DOTC)-203, DTC P1571 REFERENCE CODE INCOMPATIBILITY, Diagnostic Trouble Code (DTC) Detecting Criteria.>
P1572	IMM Circuit Failure (Except Antenna Circuit)	<Ref. to GD(H4DOTC)-203, DTC P1572 IMM CIRCUIT FAILURE (EXCEPT ANTENNA CIRCUIT), Diagnostic Trouble Code (DTC) Detecting Criteria.>
P1574	Key Communication Failure	<Ref. to GD(H4DOTC)-203, DTC P1574 KEY COMMUNICATION FAILURE, Diagnostic Trouble Code (DTC) Detecting Criteria.>
P1576	EGI Control Module EEPROM	<Ref. to GD(H4DOTC)-203, DTC P1576 EGI CONTROL MODULE EEPROM, Diagnostic Trouble Code (DTC) Detecting Criteria.>
P1577	IMM Control Module EEPROM	<Ref. to GD(H4DOTC)-203, DTC P1577 IMM CONTROL MODULE EEPROM, Diagnostic Trouble Code (DTC) Detecting Criteria.>
P1578	Meter Failure	<Ref. to GD(H4DOTC)-203, DTC P1578 METER FAILURE, Diagnostic Trouble Code (DTC) Detecting Criteria.>
P2004	Intake Manifold Runner Control Stuck Open (Bank 1)	<Ref. to GD(H4DOTC)-204, DTC P2004 INTAKE MANIFOLD RUNNER CONTROL STUCK OPEN (BANK 1), Diagnostic Trouble Code (DTC) Detecting Criteria.>
P2005	Intake Manifold Runner Control Stuck Open (Bank 2)	<Ref. to GD(H4DOTC)-205, DTC P2005 INTAKE MANIFOLD RUNNER CONTROL STUCK OPEN (BANK 2), Diagnostic Trouble Code (DTC) Detecting Criteria.>
P2006	Intake Manifold Runner Control Stuck Closed (Bank 1)	<Ref. to GD(H4DOTC)-206, DTC P2006 INTAKE MANIFOLD RUNNER CONTROL STUCK CLOSED (BANK 1), Diagnostic Trouble Code (DTC) Detecting Criteria.>
P2007	Intake Manifold Runner Control Stuck Closed (Bank 2)	<Ref. to GD(H4DOTC)-207, DTC P2007 INTAKE MANIFOLD RUNNER CONTROL STUCK CLOSED (BANK 2), Diagnostic Trouble Code (DTC) Detecting Criteria.>
P2008	Intake Manifold Runner Control Circuit / Open (Bank 1)	<Ref. to GD(H4DOTC)-208, DTC P2008 INTAKE MANIFOLD RUNNER CONTROL CIRCUIT / OPEN (BANK 1), Diagnostic Trouble Code (DTC) Detecting Criteria.>
P2009	Intake Manifold Runner Control Circuit Low (Bank 1)	<Ref. to GD(H4DOTC)-210, DTC P2009 INTAKE MANIFOLD RUNNER CONTROL CIRCUIT LOW (BANK 1), Diagnostic Trouble Code (DTC) Detecting Criteria.>
P2011	Intake Manifold Runner Control Circuit / Open (Bank 2)	<Ref. to GD(H4DOTC)-211, DTC P2011 INTAKE MANIFOLD RUNNER CONTROL CIRCUIT / OPEN (BANK 2), Diagnostic Trouble Code (DTC) Detecting Criteria.>
P2012	Intake Manifold Runner Control Circuit Low (Bank 2)	<Ref. to GD(H4DOTC)-212, DTC P2012 INTAKE MANIFOLD RUNNER CONTROL CIRCUIT LOW (BANK 2), Diagnostic Trouble Code (DTC) Detecting Criteria.>
P2016	Intake Manifold Runner Position Sensor / Switch Circuit Low (Bank 1)	<Ref. to GD(H4DOTC)-213, DTC P2016 INTAKE MANIFOLD RUNNER POSITION SENSOR / SWITCH CIRCUIT LOW (BANK 1), Diagnostic Trouble Code (DTC) Detecting Criteria.>

GETtheMANUALS.org

List of Diagnostic Trouble Code (DTC)

DTC	Item	Index
P2017	Intake Manifold Runner Position Sensor / Switch Circuit High (Bank 1)	<Ref. to GD(H4DOTC)-215, DTC P2017 INTAKE MANIFOLD RUNNER POSITION SENSOR / SWITCH CIRCUIT HIGH (BANK 1), Diagnostic Trouble Code (DTC) Detecting Criteria.>
P2021	Intake Manifold Runner Position Sensor / Switch Circuit Low (Bank 2)	<Ref. to GD(H4DOTC)-217, DTC P2021 INTAKE MANIFOLD RUNNER POSITION SENSOR / SWITCH CIRCUIT LOW (BANK 2), Diagnostic Trouble Code (DTC) Detecting Criteria.>
P2022	Intake Manifold Runner Position Sensor / Switch Circuit High (Bank 2)	<Ref. to GD(H4DOTC)-219, DTC P2022 INTAKE MANIFOLD RUNNER POSITION SENSOR / SWITCH CIRCUIT HIGH (BANK 2), Diagnostic Trouble Code (DTC) Detecting Criteria.>
P2088	Intake Camshaft Position Actuator Control Circuit Low (Bank 1)	<Ref. to GD(H4DOTC)-221, DTC P2088 INTAKE CAMSHAFT POSITION ACTUATOR CONTROL CIRCUIT LOW (BANK 1), Diagnostic Trouble Code (DTC) Detecting Criteria.>
P2089	Intake Camshaft Position Actuator Control Circuit High (Bank 1)	<Ref. to GD(H4DOTC)-222, DTC P2089 INTAKE CAMSHAFT POSITION ACTUATOR CONTROL CIRCUIT HIGH (BANK 1), Diagnostic Trouble Code (DTC) Detecting Criteria.>
P2090	Exhaust Camshaft Position Actuator Control Circuit Low (Bank 1)	<Ref. to GD(H4DOTC)-223, DTC P2090 EXHAUST CAMSHAFT POSITION ACTUATOR CONTROL CIRCUIT LOW (BANK 1), Diagnostic Trouble Code (DTC) Detecting Criteria.>
P2091	Exhaust Camshaft Position Actuator Control Circuit High (Bank 1)	<Ref. to GD(H4DOTC)-224, DTC P2091 EXHAUST CAMSHAFT POSITION ACTUATOR CONTROL CIRCUIT HIGH (BANK 1), Diagnostic Trouble Code (DTC) Detecting Criteria.>
P2092	Intake Camshaft Position Actuator Control Circuit Low (Bank 2)	<Ref. to GD(H4DOTC)-225, DTC P2092 INTAKE CAMSHAFT POSITION ACTUATOR CONTROL CIRCUIT LOW (BANK 2), Diagnostic Trouble Code (DTC) Detecting Criteria.>
P2093	Intake Camshaft Position Actuator Control Circuit High (Bank 2)	<Ref. to GD(H4DOTC)-225, DTC P2093 INTAKE CAMSHAFT POSITION ACTUATOR CONTROL CIRCUIT HIGH (BANK 2), Diagnostic Trouble Code (DTC) Detecting Criteria.>
P2094	Exhaust Camshaft Position Actuator Control Circuit Low (Bank 2)	<Ref. to GD(H4DOTC)-225, DTC P2094 EXHAUST CAMSHAFT POSITION ACTUATOR CONTROL CIRCUIT LOW (BANK 2), Diagnostic Trouble Code (DTC) Detecting Criteria.>
P2095	Exhaust Camshaft Position Actuator Control Circuit High (Bank 2)	<Ref. to GD(H4DOTC)-225, DTC P2095 EXHAUST CAMSHAFT POSITION ACTUATOR CONTROL CIRCUIT HIGH (BANK 2), Diagnostic Trouble Code (DTC) Detecting Criteria.>
P2096	Post Catalyst Fuel Trim System Too Lean (Bank 1)	<Ref. to GD(H4DOTC)-226, DTC P2096 POST CATALYST FUEL TRIM SYSTEM TOO LEAN (BANK 1), Diagnostic Trouble Code (DTC) Detecting Criteria.>
P2097	Post Catalyst Fuel Trim System Too Rich (Bank 1)	<Ref. to GD(H4DOTC)-228, DTC P2097 POST CATALYST FUEL TRIM SYSTEM TOO RICH (BANK 1), Diagnostic Trouble Code (DTC) Detecting Criteria.>
P2101	Throttle Actuator Control Motor Circuit Range/Performance	<Ref. to GD(H4DOTC)-230, DTC P2101 THROTTLE ACTUATOR CONTROL MOTOR CIRCUIT RANGE/PERFORMANCE, Diagnostic Trouble Code (DTC) Detecting Criteria.>
P2102	Throttle Actuator Control Motor Circuit Low	<Ref. to GD(H4DOTC)-232, DTC P2102 THROTTLE ACTUATOR CONTROL MOTOR CIRCUIT LOW, Diagnostic Trouble Code (DTC) Detecting Criteria.>
P2103	Throttle Actuator Control Motor Circuit High	<Ref. to GD(H4DOTC)-234, DTC P2103 THROTTLE ACTUATOR CONTROL MOTOR CIRCUIT HIGH, Diagnostic Trouble Code (DTC) Detecting Criteria.>
P2109	Throttle/Pedal Position Sensor “A” Minimum Stop Performance	<Ref. to GD(H4DOTC)-236, DTC P2109 THROTTLE/PEDAL POSITION SENSOR “A” MINIMUM STOP PERFORMANCE, Diagnostic Trouble Code (DTC) Detecting Criteria.>
P2122	Throttle/Pedal Position Sensor/ Switch “D” Circuit Low Input	<Ref. to GD(H4DOTC)-238, DTC P2122 THROTTLE/PEDAL POSITION SENSOR/SWITCH “D” CIRCUIT LOW INPUT, Diagnostic Trouble Code (DTC) Detecting Criteria.>
P2123	Throttle/Pedal Position Sensor/ Switch “D” Circuit High Input	<Ref. to GD(H4DOTC)-240, DTC P2123 THROTTLE/PEDAL POSITION SENSOR/SWITCH “D” CIRCUIT HIGH INPUT, Diagnostic Trouble Code (DTC) Detecting Criteria.>

GETthemANUALS.org

DTC	Item	Index
P2127	Throttle/Pedal Position Sensor/ Switch “E” Circuit Low Input	<Ref. to GD(H4DOTC)-242, DTC P2127 THROTTLE/PEDAL POSITION SENSOR/SWITCH “E” CIRCUIT LOW INPUT, Diagnostic Trouble Code (DTC) Detecting Criteria.>
P2128	Throttle/Pedal Position Sensor/ Switch “E” Circuit High Input	<Ref. to GD(H4DOTC)-244, DTC P2128 THROTTLE/PEDAL POSITION SENSOR/SWITCH “E” CIRCUIT HIGH INPUT, Diagnostic Trouble Code (DTC) Detecting Criteria.>
P2135	Throttle/Pedal Position Sensor/ Switch “A”/“B” Voltage Correlation	<Ref. to GD(H4DOTC)-246, DTC P2135 THROTTLE/PEDAL POSITION SENSOR/SWITCH “A”/“B” VOLTAGE CORRELATION, Diagnostic Trouble Code (DTC) Detecting Criteria.>
P2138	Throttle/Pedal Position Sensor/ Switch “D”/“E” Voltage Correlation	<Ref. to GD(H4DOTC)-248, DTC P2138 THROTTLE/PEDAL POSITION SENSOR/SWITCH “D”/“E” VOLTAGE CORRELATION, Diagnostic Trouble Code (DTC) Detecting Criteria.>
P219A	Bank 1 Air-Fuel Ratio Imbalance	<Ref. to GD(H4DOTC)-250, DTC P219A BANK 1 AIR-FUEL RATIO IMBALANCE, Diagnostic Trouble Code (DTC) Detecting Criteria.>
P2227	Barometric Pressure Circuit Range/Performance	<Ref. to GD(H4DOTC)-253, DTC P2227 BAROMETRIC PRESSURE CIRCUIT RANGE/PERFORMANCE, Diagnostic Trouble Code (DTC) Detecting Criteria.>
P2228	Barometric Pressure Circuit Low	<Ref. to GD(H4DOTC)-254, DTC P2228 BAROMETRIC PRESSURE CIRCUIT LOW, Diagnostic Trouble Code (DTC) Detecting Criteria.>
P2229	Barometric Pressure Circuit High	<Ref. to GD(H4DOTC)-255, DTC P2229 BAROMETRIC PRESSURE CIRCUIT HIGH, Diagnostic Trouble Code (DTC) Detecting Criteria.>
P2610	ECM/PCM Internal Engine Off Timer Performance	<Ref. to GD(H4DOTC)-256, DTC P2610 ECM/PCM INTERNAL ENGINE OFF TIMER PERFORMANCE, Diagnostic Trouble Code (DTC) Detecting Criteria.>
U0073	CAN Failure, Bus ‘Off’ Detection	<Ref. to GD(H4DOTC)-265, DTC U0073 CAN FAILURE, BUS ‘OFF’ DETECTION, Diagnostic Trouble Code (DTC) Detecting Criteria.>
U0101	CAN (TCU) Data Not Loaded	<Ref. to GD(H4DOTC)-266, DTC U0101 CAN (TCU) DATA NOT LOADED, Diagnostic Trouble Code (DTC) Detecting Criteria.>
U0122	CAN (VDC) Data Not Loaded	<Ref. to GD(H4DOTC)-267, DTC U0122 CAN (VDC) DATA NOT LOADED, Diagnostic Trouble Code (DTC) Detecting Criteria.>
U0140	CAN (BCU) Data Not Loaded	<Ref. to GD(H4DOTC)-267, DTC U0140 CAN (BCU) DATA NOT LOADED, Diagnostic Trouble Code (DTC) Detecting Criteria.>
U0402	CAN (TCU) Data Abnormal	<Ref. to GD(H4DOTC)-268, DTC U0402 CAN (TCU) DATA ABNORMAL, Diagnostic Trouble Code (DTC) Detecting Criteria.>
U0416	CAN (VDC) Data Abnormal	<Ref. to GD(H4DOTC)-269, DTC U0416 CAN (VDC) DATA ABNORMAL, Diagnostic Trouble Code (DTC) Detecting Criteria.>
U0422	CAN (BCU) Data Abnormal	<Ref. to GD(H4DOTC)-269, DTC U0422 CAN (BCU) DATA ABNORMAL, Diagnostic Trouble Code (DTC) Detecting Criteria.>

GETthemANUALS.org

2. Diagnostic Trouble Code (DTC) Detecting Criteria

A: DTC P0011 INTAKE CAMSHAFT POSITION - TIMING OVER-ADVANCED OR SYSTEM PERFORMANCE (BANK 1)

1. OUTLINE OF DIAGNOSIS

Detect the AVCS system malfunction.
Judge NG when the amount of AVCS actual timing advance does not approach to the amount of AVCS target timing advance.

2. COMPONENT DESCRIPTION

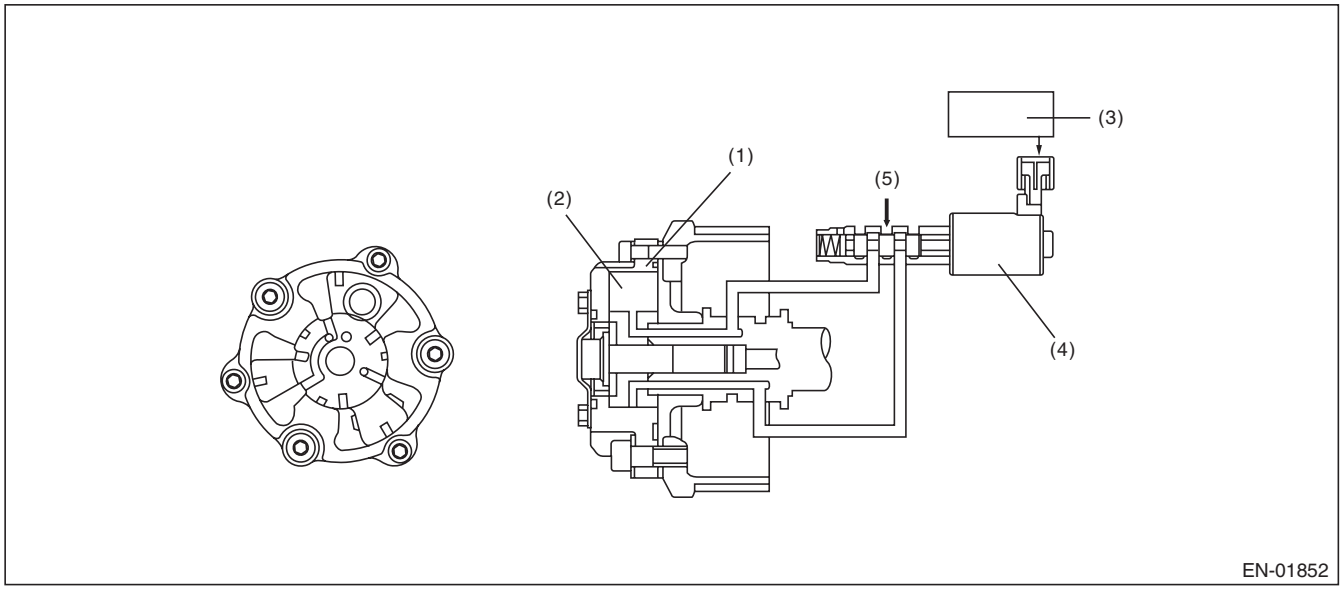

(1) AVCS timing controller
(2) Vane
(3) Engine control module (ECM)
(4) Oil flow control solenoid valve
(5) Oil pressure

3. ENABLE CONDITION

Secondary Parameters	Enable Conditions
Time of establishing all secondary parameter conditions	≥ 3000 ms
Battery voltage	≥ 10.9 V
Engine speed	≥ 1500 rpm
Engine coolant temperature	≥ 20 °C (68 °F)
AVCS control	Operation
Target timing advance change amount (per 64 ms)	< 1.07 °CA

4. GENERAL DRIVING CYCLE

Perform the diagnosis continuously after warming up when the engine speed increases and AVCS operates.

GETmyMANUALS.org

5. DIAGNOSTIC METHOD

1) When the conditions during which the differences of AVCS target timing advance amount and AVCS actual timing advance amount is large continues for certain amount of time.
2) When the differences of target timing advance amount and actual timing advance amount is calculated during AVCS control, and the difference per predetermined time is the specified value or larger.

- **Abnormality Judgment**

Judge as NG when the following conditions are established within the predetermined time.

Judgment Value

Malfunction Criteria	Threshold Value
Σ(Target position – Actual position)	> 4500 °CA (Bank 1) > 4500 °CA (Bank 2)
or	
Σ(Target position – Actual position)	< –7000 °CA (Bank 1) < –7000 °CA (Bank 2)

Time Needed for Diagnosis: 30000 ms
Malfunction Indicator Light Illumination: Illuminates when malfunction occurs in 2 continuous driving cycles.

- **Normality Judgment**

Judge as OK and clear the NG if the following conditions are established within the predetermined time.

Judgment Value

Malfunction Criteria	Threshold Value
Σ(Target position – Actual position)	≤ 4500 °CA (Bank 1) ≤ 4500 °CA (Bank 2) and ≥ –7000 °CA (Bank 1) ≥ –7000 °CA (Bank 2)

Time Needed for Diagnosis: 30000 ms

GETmyMANUALS.org

B: DTC P0014 EXHAUST AVCS SYSTEM 1 (RANGE/PERFORMANCE)

1. OUTLINE OF DIAGNOSIS

Detect the exhaust AVCS system malfunction.
Judge NG when the amount of exhaust AVCS actual timing advance does not approach the amount of exhaust AVCS target timing advance.

2. COMPONENT DESCRIPTION

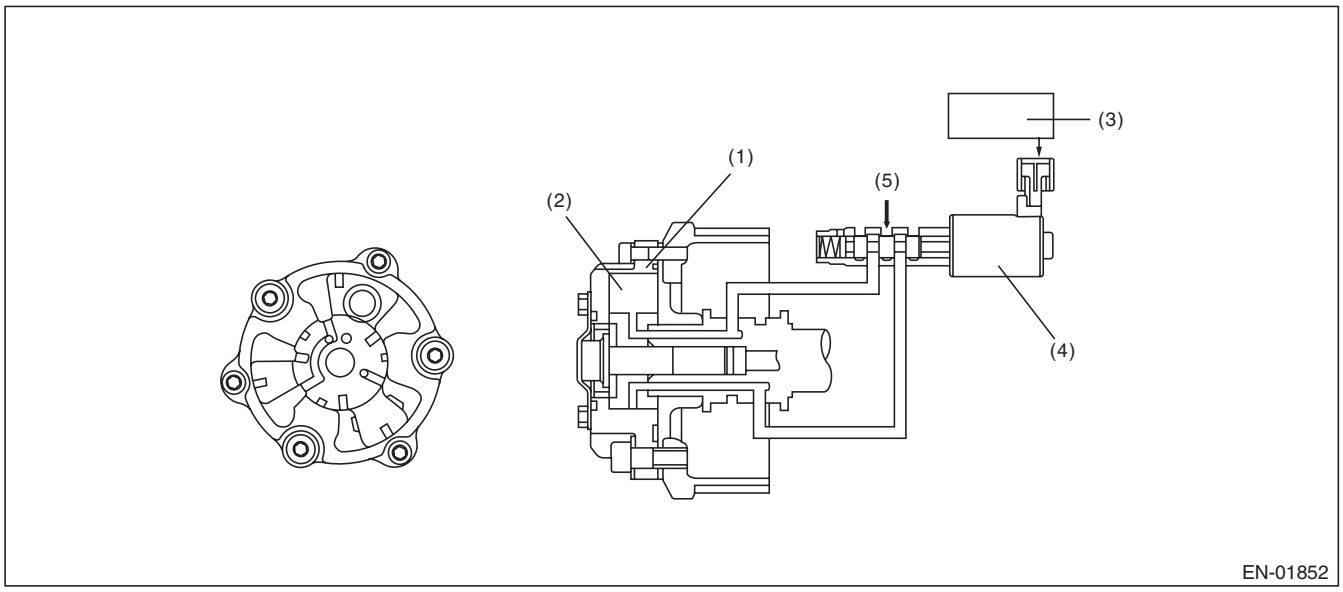

(1) Exhaust AVCS timing controller
(2) Vane
(3) Engine control module (ECM)
(4) Oil flow control solenoid valve
(5) Oil pressure

3. ENABLE CONDITIONS

Secondary Parameters	Enable Conditions
Time of establishing all secondary parameter conditions	≥ 3000 ms
Battery voltage	≥ 10.9 V
Engine speed	≥ 1500 rpm
Engine coolant temperature	≥ 20 °C (68 °F)
Exhaust AVCS control	Operation
Target timing advance change amount (per 64 ms)	< 1.07 °CA

4. GENERAL DRIVING CYCLE

Perform the diagnosis continuously after warming up when the engine speed increases and exhaust AVCS operates.

GETmyMANUALS.org

5. DIAGNOSTIC METHOD

1) When the conditions during which the differences of exhaust AVCS target timing advance amount and exhaust AVCS actual timing advance amount is large continues for certain amount of time.
2) When the differences of target timing advance amount and actual timing advance amount is calculated during exhaust AVCS control, and the difference per predetermined time is the specified value or larger.

- **Abnormality Judgment**

Judge as NG when the following conditions are established within the predetermined time.

Judgment Value

Malfunction Criteria	Threshold Value
Σ(Target position – Actual position) or Σ(Target position – Actual position)	> 6000 °CA (Bank 1) > 6000 °CA (Bank 2) < –6000 °CA (Bank 1) < –6000 °CA (Bank 2)

Time Needed for Diagnosis:
30000 ms
Malfunction Indicator Light Illumination: Illuminates when malfunction occurs in 2 continuous driving cycles.

- **Normality Judgment**

Judge as OK and clear the NG if the following conditions are established within the predetermined time.

Judgment Value

Malfunction Criteria	Threshold Value
Σ(Target position – Actual position)	≤ 6000 °CA (Bank 1) ≤ 6000 °CA (Bank 2) and ≥ –6000 °CA (Bank 1) ≥ –6000 °CA (Bank 2)

Time Needed for Diagnosis: 30000 ms

GETmyMANUALS.org

C: DTC P0016 CRANKSHAFT POSITION - CAMSHAFT POSITION CORRELATION (BANK1)

1. OUTLINE OF DIAGNOSIS

Detect the AVCS system malfunction.
Judge as NG when standard timing advance amount is far from learning angle.

2. COMPONENT DESCRIPTION

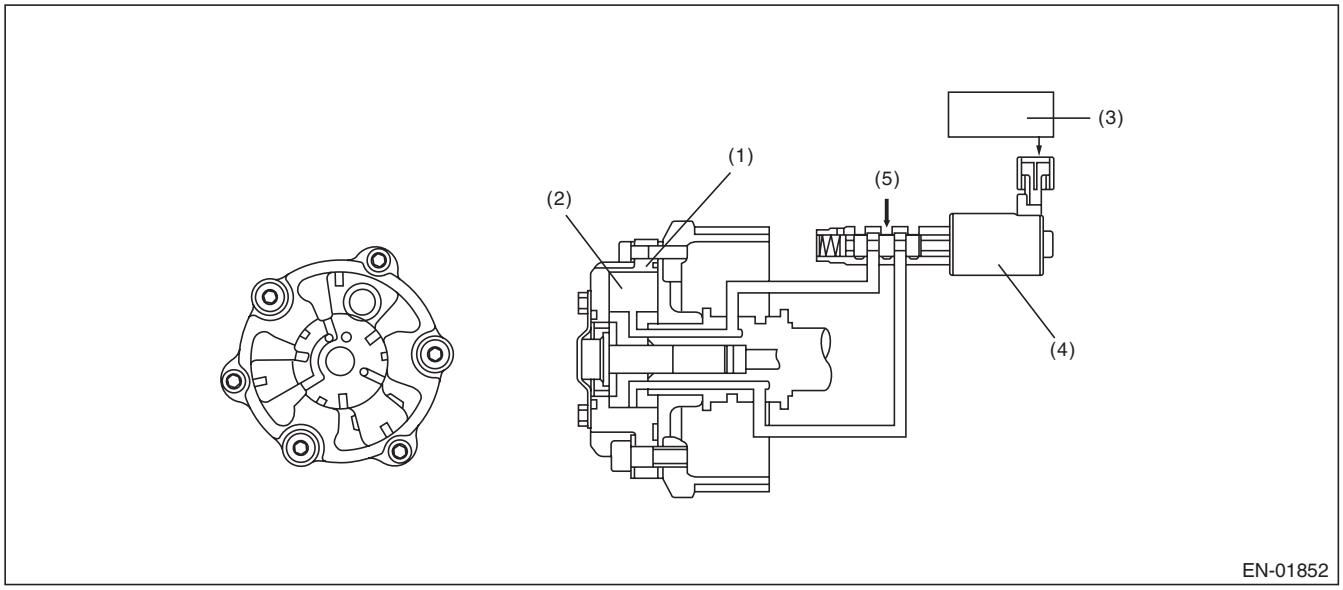

(1) AVCS timing controller
(2) Vane
(3) Engine control module (ECM)
(4) Oil flow control solenoid valve
(5) Hydraulic pressure

3. ENABLE CONDITION

Secondary Parameters	Enable Conditions
Battery voltage	≥ 10.9 V
Engine speed	≥ 600 rpm and < 975 rpm
Engine coolant temperature	≥ 72 °C (161.6 °F)
AVCS control	Not in operation
Target timing advance	0°CA

4. GENERAL DRIVING CYCLE

Perform the diagnosis continuously after starting engine and while AVCS is not operating.

GETthemANUALS.org

5. DIAGNOSTIC METHOD

Judge as NG when the absolute value of the difference between cam signal input position and learning value is out of specification.

- **Abnormality Judgment**

If the duration of time while the following conditions are met is longer than the time indicated, judge as NG.

Judgment Value

Malfunction Criteria	Threshold Value
|Crankshaft position when camshaft position sensor signal is input – Learning value|	> 9 °CA

Time Needed for Diagnosis: 20000 ms
Malfunction Indicator Light Illumination: Illuminates when malfunction occurs in 2 continuous driving cycles.

NOTE:
Initial standard learning value is the value of crank angle initially input at the production plant. And then it will be updated every time normal judgment has been completed. Learning value will not be updated if NG judgment occurs because timing belt or chain derails suddenly in process or because wrong assembly occurs during servicing.

- **Normality Judgment**

Judge as OK and clear the NG if the continuous time while the following conditions are established is more than the predetermined time.

Judgment Value

Malfunction Criteria	Threshold Value
|Crankshaft position when camshaft position sensor signal is input – Learning value|	≤ 9 °CA

Time Needed for Diagnosis: Less than 1 second

GETTHEMANUALS.org

D: DTC P0017 CRANK AND CAM TIMING B SYSTEM FAILURE (BANK 1)

1. OUTLINE OF DIAGNOSIS

Detect the exhaust AVCS system malfunction.
Judge as NG when standard timing advance amount is far from learning angle.

2. COMPONENT DESCRIPTION

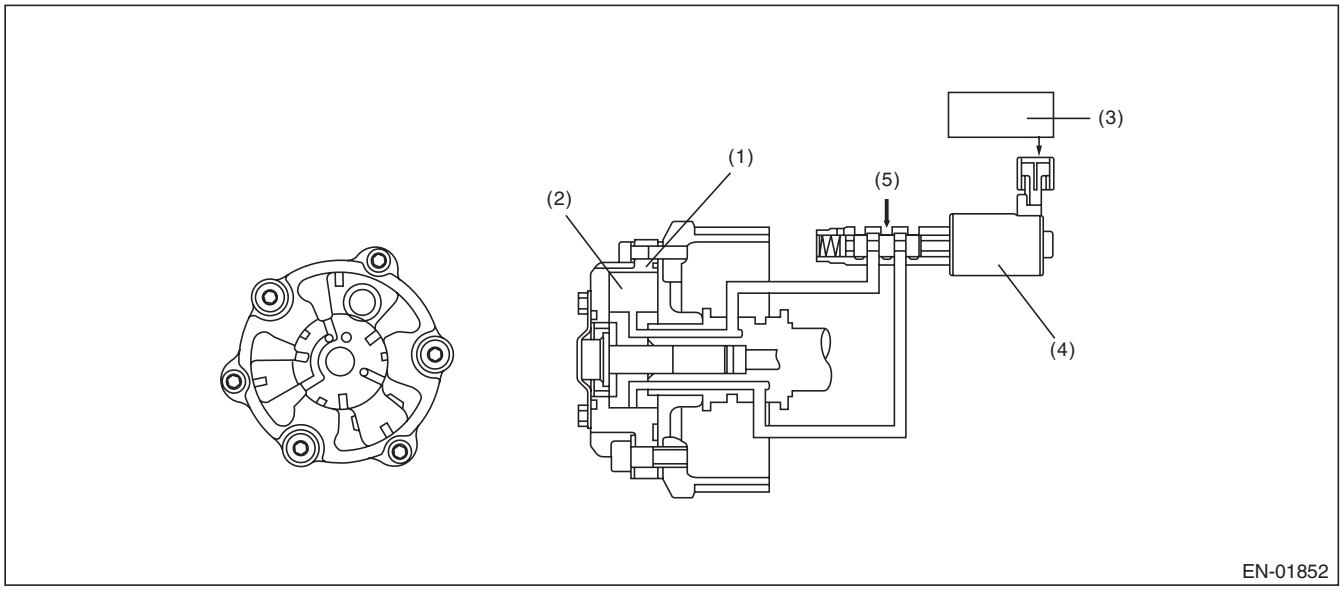

(1) Exhaust AVCS timing controller
(2) Vane
(3) Engine control module (ECM)
(4) Oil flow control solenoid valve
(5) Oil pressure

3. ENABLE CONDITIONS

Secondary Parameters	Enable Conditions
Battery voltage	≥ 10.9 V
Engine speed	≥ 600 rpm and < 975 rpm
Engine coolant temperature	≥ 72 °C (161.6 °F)
Exhaust AVCS control	Not in operation
Target timing advance	0°CA

4. GENERAL DRIVING CYCLE

Perform the diagnosis continuously while the exhaust AVCS is not operating after warming up.

GETTHEMANUALS.org

5. DIAGNOSTIC METHOD

Judge as NG when the absolute value of the difference between cam signal input position and learning value is out of specification.

- **Abnormality Judgment**

If the duration of time while the following conditions are met is longer than the time indicated, judge as NG.

Judgment Value

Malfunction Criteria	Threshold Value
|Crankshaft position when camshaft position sensor signal is input – Learning value|	> 9 °CA

Time Needed for Diagnosis: 20000 ms
Malfunction Indicator Light Illumination: Illuminates when malfunction occurs in 2 continuous driving cycles.

NOTE:
Initial standard learning value is the value of crank angle initially input at the production plant. And then it will be updated every time normal judgment has been completed. Learning value will not be updated if NG judgment occurs because timing belt or chain derails suddenly in process or because wrong assembly occurs during servicing.

- **Normality Judgment**

Judge as OK and clear the NG if the continuous time while the following conditions are established is more than the predetermined time.

Judgment Value

Malfunction Criteria	Threshold Value
|Crankshaft position when camshaft position sensor signal is input – Learning value|	≤ 9 °CA

Time Needed for Diagnosis: Less than 1 second

GETMANUALS.org

E: DTC P0018 CRANKSHAFT POSITION - CAMSHAFT POSITION CORRELATION (BANK2)

1. OUTLINE OF DIAGNOSIS

NOTE:
For the detection standard, refer to DTC P0016. <Ref. to GD(H4DOTC)-14, DTC P0016 CRANKSHAFT POSITION - CAMSHAFT POSITION CORRELATION (BANK1), Diagnostic Trouble Code (DTC) Detecting Criteria.>

F: DTC P0019 CRANK AND CAM TIMING B SYSTEM FAILURE (BANK 2)

1. OUTLINE OF DIAGNOSIS

NOTE:
For the detection standard, refer to DTC P0017. <Ref. to GD(H4DOTC)-16, DTC P0017 CRANK AND CAM TIMING B SYSTEM FAILURE (BANK 1), Diagnostic Trouble Code (DTC) Detecting Criteria.>

G: DTC P0021 INTAKE CAMSHAFT POSITION - TIMING OVER-ADVANCED OR SYSTEM PERFORMANCE (BANK 2)

1. OUTLINE OF DIAGNOSIS

NOTE:
For the detection standard, refer to DTC P0011. <Ref. to GD(H4DOTC)-10, DTC P0011 INTAKE CAMSHAFT POSITION - TIMING OVER-ADVANCED OR SYSTEM PERFORMANCE (BANK 1), Diagnostic Trouble Code (DTC) Detecting Criteria.>

H: DTC P0024 EXHAUST AVCS SYSTEM 2 (RANGE/PERFORMANCE)

1. OUTLINE OF DIAGNOSIS

NOTE:
For the detection standard, refer to DTC P0014. <Ref. to GD(H4DOTC)-12, DTC P0014 EXHAUST AVCS SYSTEM 1 (RANGE/PERFORMANCE), Diagnostic Trouble Code (DTC) Detecting Criteria.>

GETthemANUALS.org

I: DTC P0030 HO2S HEATER CONTROL CIRCUIT (BANK 1 SENSOR 1)

1. OUTLINE OF DIAGNOSIS

Detect functional errors of the front oxygen (A/F) sensor heater.
Judge as NG when it is determined that the front oxygen (A/F) sensor impedance is large when looking at engine status such as deceleration fuel cut.

2. COMPONENT DESCRIPTION

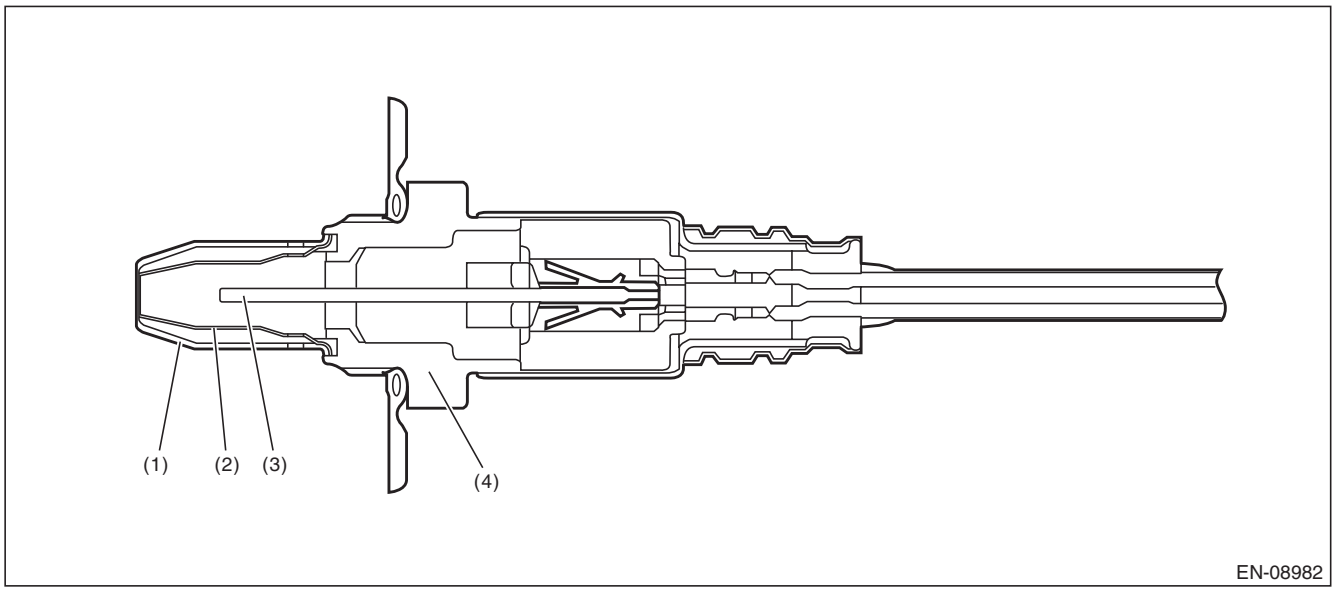

(1) Element cover (outer)
(2) Element cover (inner)
(3) Sensor element
(4) Sensor housing

3. ENABLE CONDITION

Secondary Parameters	Enable Conditions
Condition established time	≥ 42000 ms
Battery voltage	≥ 10.9 V
Heater current	Permitted
A/F sensor heater final control	Main energization status
After fuel cut	≥ 20000 ms

4. GENERAL DRIVING CYCLE

Perform the diagnosis continuously after 42000 ms seconds or more have passed since the engine started.

GETthemANUALS.org

5. DIAGNOSTIC METHOD

- **Abnormality Judgment**

If the duration of time while the following conditions are met is longer than the time indicated, judge as NG.

Judgment Value

Malfunction Criteria	Threshold Value
Front oxygen (A/F) sensor impedance	> 50 Ω

Time Needed for Diagnosis: 10000 ms
Malfunction Indicator Light Illumination: Illuminates when malfunction occurs in 2 continuous driving cycles.

- **Normality Judgment**

Judge as OK and clear the NG if the continuous time while the following conditions are established is more than the predetermined time.

Judgment Value

Malfunction Criteria	Threshold Value
Front oxygen (A/F) sensor impedance	≤ 50 Ω

Time Needed for Diagnosis: 10000 ms

GETmyMANUALS.org

J: DTC P0031 HO2S HEATER CONTROL CIRCUIT LOW (BANK 1 SENSOR 1)

1. OUTLINE OF DIAGNOSIS

Detect front oxygen (A/F) sensor heater open or short circuit.
The front oxygen (A/F) sensor heater performs duty control, and the output terminal voltage at ON is 0 V, and the output terminal voltage at OFF is the battery voltage.
Judge as NG when the terminal voltage remains Low.

2. COMPONENT DESCRIPTION

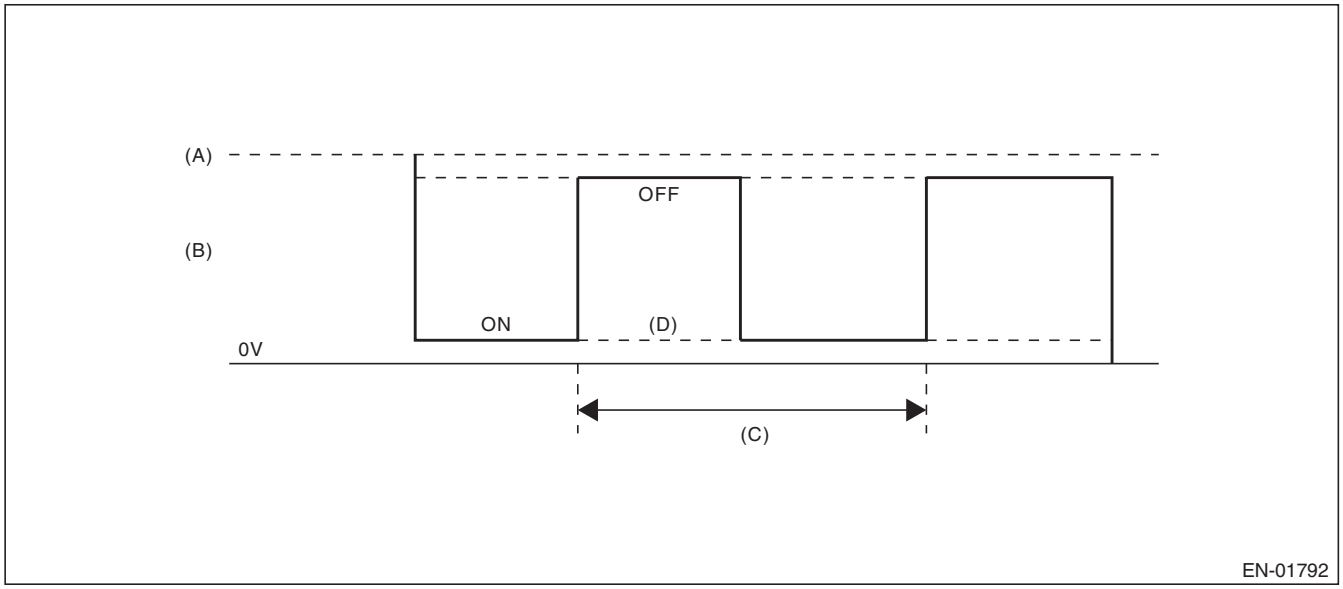

(A) Battery voltage
(B) Front oxygen (A/F) sensor heater output voltage
(C) 128 ms
(D) Low error

3. ENABLE CONDITION

Secondary Parameters	Enable Conditions
Battery voltage	≥ 10.9 V

4. GENERAL DRIVING CYCLE

Always perform the diagnosis continuously.

GETmyMANUALS.org

5. DIAGNOSTIC METHOD

- **Abnormality Judgment**

If the duration of time while the following conditions are met is longer than the time indicated, judge as NG.

Judgment Value

Malfunction Criteria	Threshold Value
Output voltage level	Low
Front oxygen (A/F) sensor heater control duty	< 87.5 %

Time Needed for Diagnosis: 4 ms × 250 time(s)
Malfunction Indicator Light Illumination: Illuminates as soon as a malfunction occurs.

- **Normality Judgment**

Judge as OK and clear the NG if the continuous time while the following conditions are established is more than the predetermined time.

Judgment Value

Malfunction Criteria	Threshold Value
Output voltage level	High

Time Needed for Diagnosis: Less than 1 second

GETthemANUALS.org

K: DTC P0032 HO2S HEATER CONTROL CIRCUIT HIGH (BANK 1 SENSOR 1)

1. OUTLINE OF DIAGNOSIS

Detect front oxygen (A/F) sensor heater open or short circuit.
The front oxygen (A/F) sensor heater performs duty control, and the output terminal voltage at ON is 0 V, and the output terminal voltage at OFF is the battery voltage.
Judge as NG when the terminal voltage remains High.

2. COMPONENT DESCRIPTION

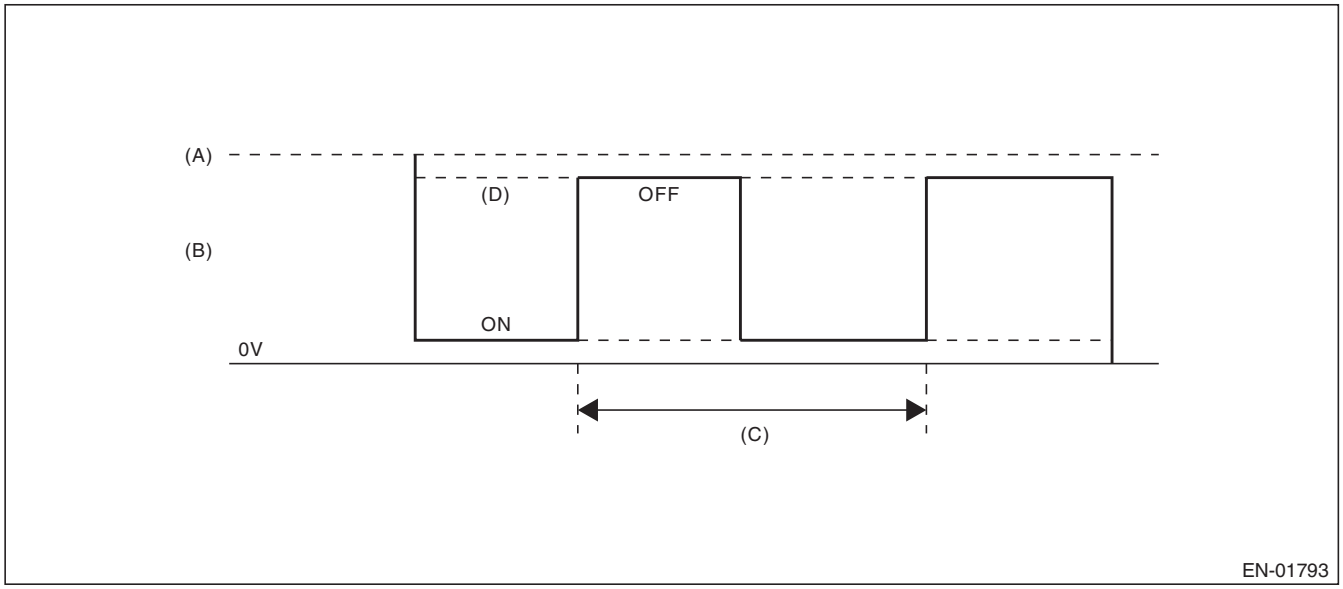

(A) Battery voltage
(B) Front oxygen (A/F) sensor heater output voltage
(C) 128 ms
(D) High error

3. ENABLE CONDITION

Secondary Parameters	Enable Conditions
Battery voltage	≥ 10.9 V

4. GENERAL DRIVING CYCLE

Always perform the diagnosis continuously.

GETmyMANUALS.org

5. DIAGNOSTIC METHOD

- **Abnormality Judgment**

If the duration of time while the following conditions are met is longer than the time indicated, judge as NG.

Judgment Value

Malfunction Criteria	Threshold Value
Output voltage level	High
Front oxygen (A/F) sensor heater control duty	≥ 12.5 %

Time Needed for Diagnosis: 4 ms × 500 time(s)
Malfunction Indicator Light Illumination: Illuminates as soon as a malfunction occurs.

- **Normality Judgment**

Judge as OK and clear the NG if the continuous time while the following conditions are established is more than the predetermined time.

Judgment Value

Malfunction Criteria	Threshold Value
Output voltage level	Low

Time Needed for Diagnosis: Less than 1 second

GETthemANUALS.org

L: DTC P0037 HO2S HEATER CONTROL CIRCUIT LOW (BANK 1 SENSOR 2)

1. OUTLINE OF DIAGNOSIS

Detect the rear oxygen sensor heater open or short circuit.
The rear oxygen sensor heater performs duty control, and the output terminal voltage at ON is 0 V, and the output terminal voltage at OFF is the battery voltage.
Judge as NG when the terminal voltage remains Low.

2. COMPONENT DESCRIPTION

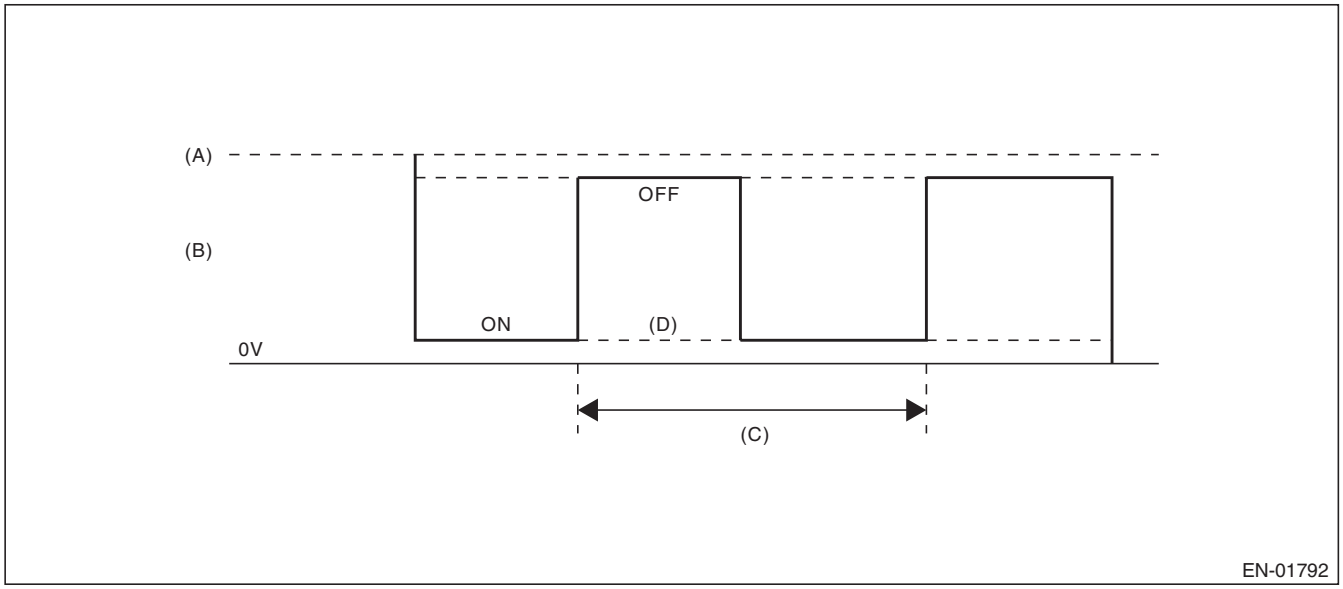

(A) Battery voltage
(B) Output voltage of the rear oxygen sensor heater
(C) 256 ms (cycle)
(D) Low error

3. ENABLE CONDITION

Secondary Parameters	Enable Conditions
Battery voltage	≥ 10.9 V
Elapsed time after starting the engine	≥ 1 second
Engine speed	< 8000 rpm

4. GENERAL DRIVING CYCLE

After starting the engine, perform the diagnosis continuously when engine is low speed.

GETthemANUALS.org

5. DIAGNOSTIC METHOD

- **Abnormality Judgment**

If the duration of time while the following conditions are met is longer than the time indicated, judge as NG.

Judgment Value

Malfunction Criteria	Threshold Value
Output voltage level	Low
Rear oxygen sensor heater control duty	< 75 %

Time Needed for Diagnosis: 8 ms × 1250 time(s)
Malfunction Indicator Light Illumination: Illuminates when malfunction occurs in 2 continuous driving cycles.

- **Normality Judgment**

Judge as OK and clear the NG if the continuous time while the following conditions are established is more than the predetermined time.

Judgment Value

Malfunction Criteria	Threshold Value
Output voltage level	High

Time Needed for Diagnosis: Less than 1 second

GETmyMANUALS.org

M: DTC P0038 HO2S HEATER CONTROL CIRCUIT HIGH (BANK 1 SENSOR 2)

1. OUTLINE OF DIAGNOSIS

Detect the rear oxygen sensor heater open or short circuit.
The rear oxygen sensor heater performs duty control, and the output terminal voltage at ON is 0 V, and the output terminal voltage at OFF is the battery voltage.
Judge as NG when the terminal voltage remains High.

2. COMPONENT DESCRIPTION

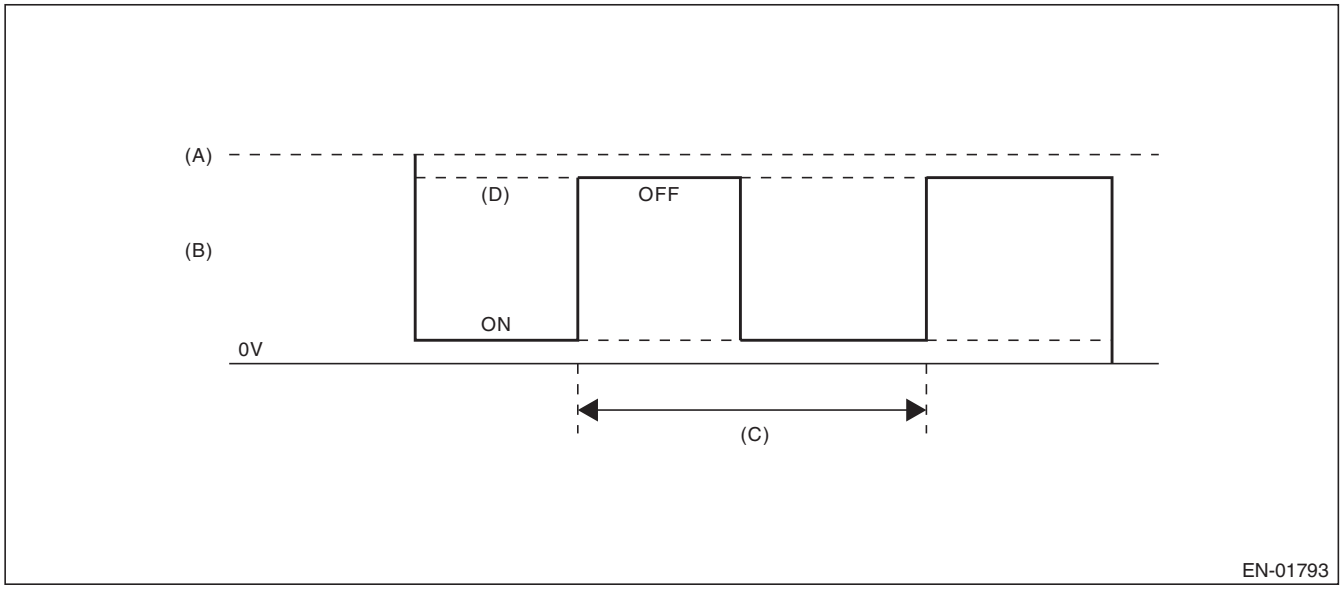

(A) Battery voltage
(B) Output voltage of the rear oxygen sensor heater
(C) 256 ms (cycle)
(D) High error

3. ENABLE CONDITION

Secondary Parameters	Enable Conditions
Battery voltage	≥ 10.9 V
Elapsed time after starting the engine	≥ 1 second
Engine speed	< 8000 rpm

4. GENERAL DRIVING CYCLE

After starting the engine, perform the diagnosis continuously when engine is low speed.

GETmyMANUALS.org

5. DIAGNOSTIC METHOD

- **Abnormality Judgment**

If the duration of time while the following conditions are met is longer than the time indicated, judge as NG.

Judgment Value

Malfunction Criteria	Threshold Value
Output voltage level	High
Rear oxygen sensor heater control duty	≥ 25 %

Time Needed for Diagnosis: 8 ms × 1250 time(s)
Malfunction Indicator Light Illumination: Illuminates when malfunction occurs in 2 continuous driving cycles.

- **Normality Judgment**

Judge as OK and clear the NG if the continuous time while the following conditions are established is more than the predetermined time.

Judgment Value

Malfunction Criteria	Threshold Value
Output voltage level	Low

Time Needed for Diagnosis: Less than 1 second

GETmyMANUALS.org

N: DTC P0068 MAP/MAF - THROTTLE POSITION CORRELATION

1. OUTLINE OF DIAGNOSIS

Detect problems in the intake manifold pressure sensor output properties.
Judge as NG when the intake air pressure AD value is Low whereas it seemed to be High from the viewpoint of engine condition, or when it is High whereas it seemed to be Low from the engine condition.

2. COMPONENT DESCRIPTION

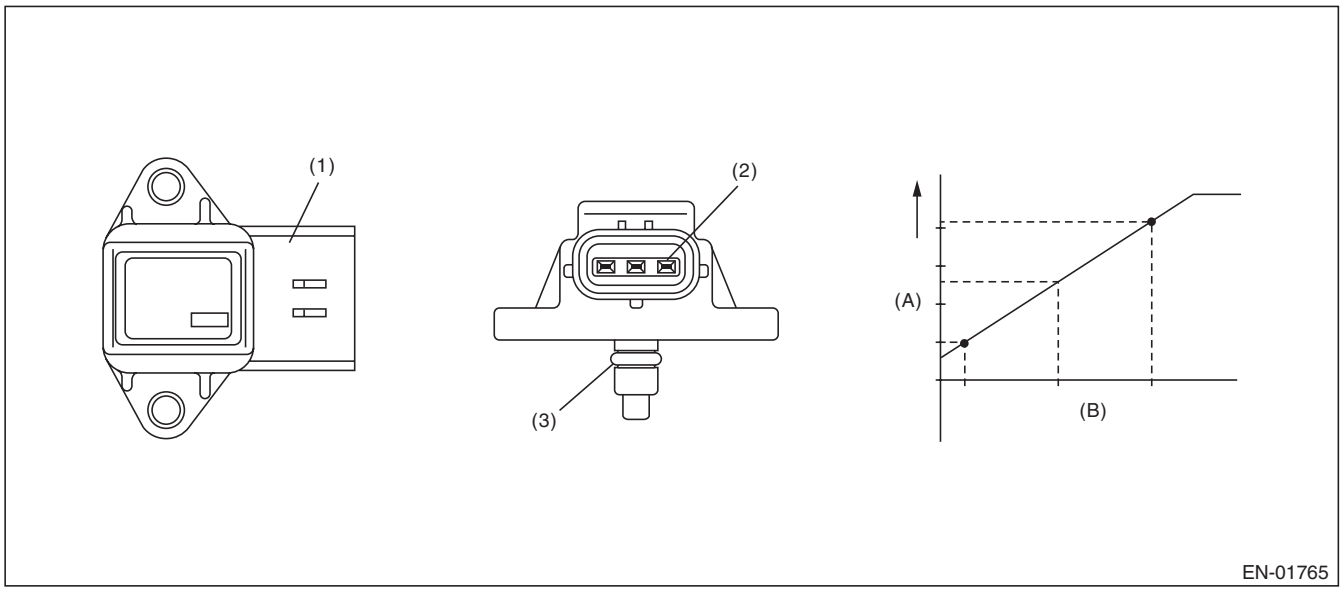

(A) Output voltage
(B) Absolute pressure

(1) Connector
(2) Terminals
(3) O-ring

3. ENABLE CONDITION

Secondary Parameters	Enable Conditions
Engine coolant temperature	≥ 72 °C (161.6 °F)

4. GENERAL DRIVING CYCLE

Perform the diagnosis continuously after idling.

GETthemANUALS.org

5. DIAGNOSTIC METHOD

- **Abnormality Judgment**

Judge as NG when Low side or High side becomes NG.
If the duration of time while the following conditions are met is longer than the time indicated, judge as NG.

Judgment Value

Malfunction Criteria	Threshold Value
Low	
Engine speed	< 3000 rpm
Throttle position	≥ 16 °
Output voltage	< 1 V
Engine load	> 0.96 g/rev (0.03 oz/rev)
High	
Engine speed	600 rpm — 900 rpm
Throttle position	< 5.13 °
Output voltage	≥ 2.36 V
Engine load	< 0.48 g/rev (0.02 oz/rev)

Time Needed for Diagnosis:
Low side: 3000 ms
High side: 3000 ms
Malfunction Indicator Light Illumination: Illuminates when malfunction occurs in 2 continuous driving cycles.

- **Normality Judgment**

Judge as OK and clear the NG when both Low side and High side become OK.
If the duration of time while the following conditions are met is longer than the time indicated, judge as OK.

Judgment Value

Malfunction Criteria	Threshold Value
Low	
Engine speed	< 3000 rpm
Throttle position	≥ 16 °
Output voltage	≥ 1 V
Engine load	> 0.96 g/rev (0.03 oz/rev)
High	
Engine speed	600 rpm — 900 rpm
Throttle position	< 5.13 °
Output voltage	< 2.36 V
Engine load	< 0.48 g/rev (0.02 oz/rev)

Time Needed for Diagnosis:
Low side: Less than 1 second
High side: Less than 1 second

GETmyMANUALS.org

O: DTC P0101 MASS OR VOLUME AIR FLOW CIRCUIT RANGE/PERFORMANCE

1. OUTLINE OF DIAGNOSIS

Detect the malfunction of air flow sensor output properties.
Judge as a low side NG when the air flow voltage indicates a small value regardless of running in a state where the air flow voltage increases. Judge as a high side NG when the air flow voltage indicates a large value regardless of running in a state where the air flow voltage decreases. Judge air flow sensor property NG when the Low side or High side becomes NG.

2. COMPONENT DESCRIPTION

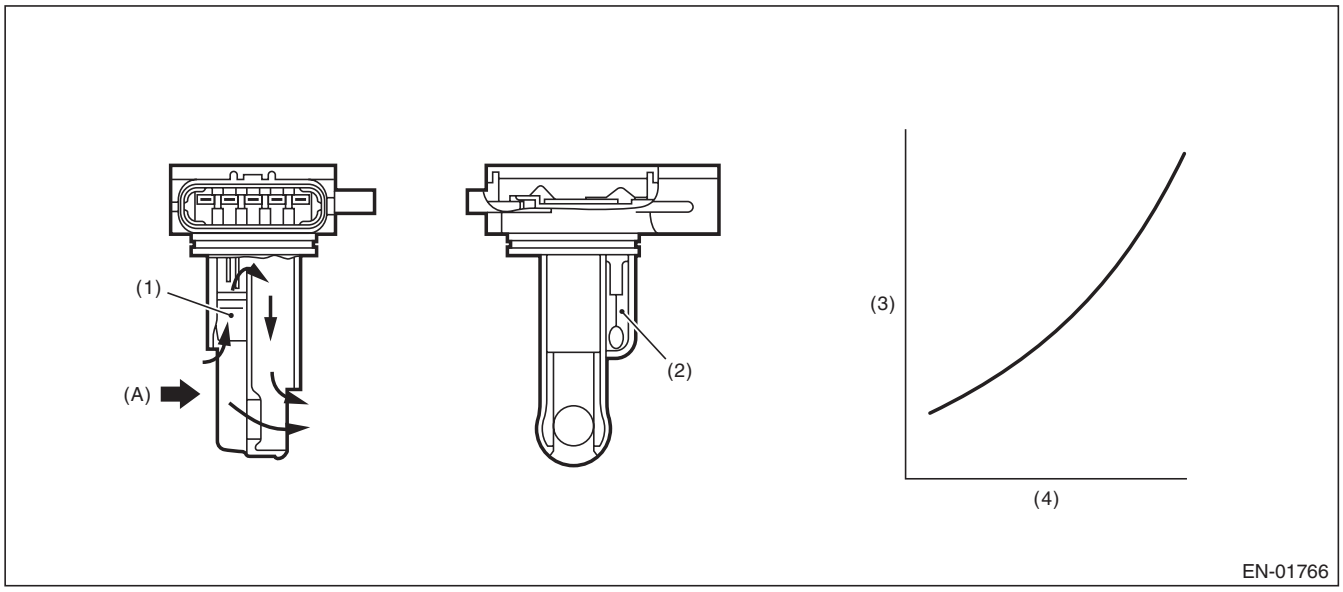

(A) Air

(1) Air flow sensor
(2) Intake air temperature sensor
(3) Voltage (V)
(4) Amount of intake air (kg (lb)/s)

3. ENABLE CONDITION

Secondary Parameters	Enable Conditions
Engine coolant temperature	≥ 72 °C (161.6 °F)

4. GENERAL DRIVING CYCLE

Perform the diagnosis continuously after idling.

GETthemanual.org

5. DIAGNOSTIC METHOD

- **Abnormality Judgment**

Judge as NG when Low side or High side becomes NG.
If the duration of time while the following conditions are met is longer than the time indicated, judge as NG.

Judgment Value

Malfunction Criteria	Threshold Value
Low	
Output voltage	< 1.5 V
Engine speed	≥ 2300 rpm
Throttle opening angle	≥ 16 °
Intake manifold pressure	≥ 66.7 kPa (500 mmHg, 19.7 inHg)
High (1)	
Output voltage	≥ 1.95 V
Engine speed	600 rpm — 900 rpm
Throttle opening angle	< 5.13 °
Intake manifold pressure	≥ 50 kPa (375 mmHg, 14.8 inHg)
High (2)	
Output voltage	≥ 1.65 V
Engine speed	600 rpm — 900 rpm
Throttle opening angle	< 5.13 °
Intake manifold pressure	≥ 50 kPa (375 mmHg, 14.8 inHg)
Fuel system diagnosis	Rich side malfunction

Time Needed for Diagnosis:
Low: 3000 ms
High: 3000 ms
Malfunction Indicator Light Illumination: Illuminates when malfunction occurs in 2 continuous driving cycles.

- **Normality Judgment**

Judge as OK and clear the NG when both Low side and High side become OK.
Judge as OK and clear the NG if the continuous time while the following conditions are established is more than the predetermined time.

Judgment Value

Malfunction Criteria	Threshold Value
Low	
Output voltage	≥ 1.5 V
Engine speed	≥ 2300 rpm
Throttle opening angle	≥ 16 °
Intake manifold pressure	≥ 66.7 kPa (500 mmHg, 19.7 inHg)
High	
Output voltage	< 1.95 V
Engine speed	600 rpm — 900 rpm
Throttle opening angle	< 5.13 °
Intake manifold pressure	< 50 kPa (375 mmHg, 14.8 inHg)
Fuel system diagnosis	Rich side normal

Time Needed for Diagnosis:
Low: Less than 1 second
High: Less than 1 second

GETmyMANUALS.org

P: DTC P0102 MASS OR VOLUME AIR FLOW CIRCUIT LOW INPUT

1. OUTLINE OF DIAGNOSIS

Detect open or short circuits of the air flow sensor.
Judge as NG if out of specification.

2. COMPONENT DESCRIPTION

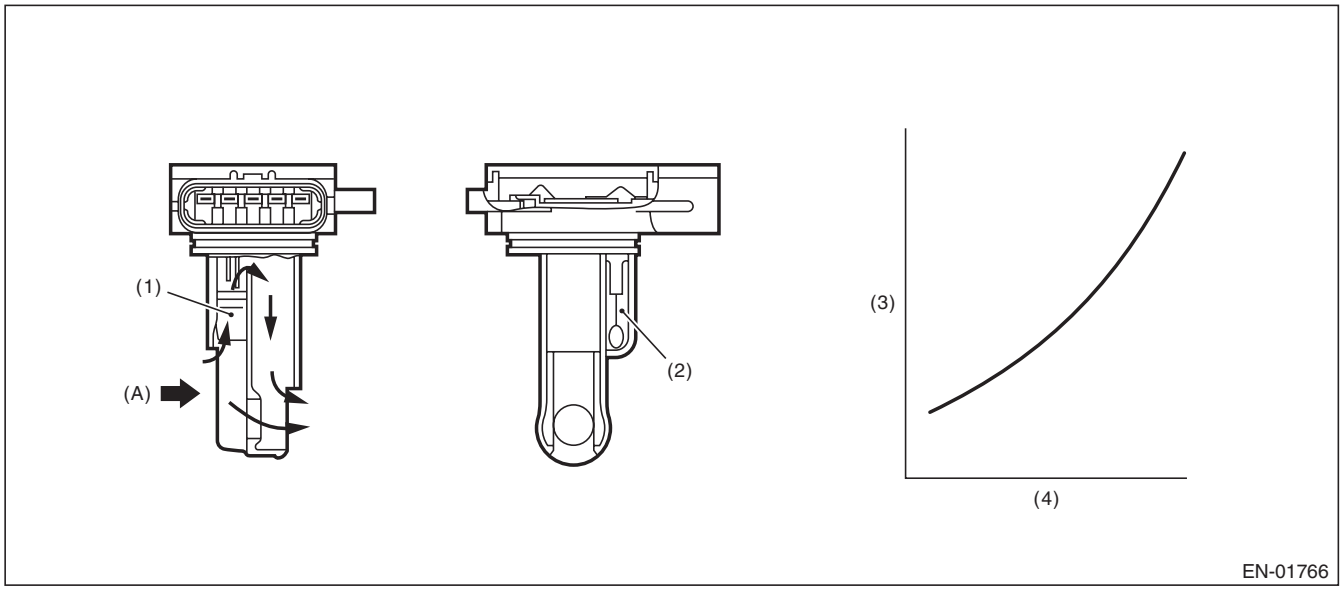

(A) Air

(1) Air flow sensor
(2) Intake air temperature sensor
(3) Voltage (V)
(4) Amount of intake air (kg (lb)/s)

3. ENABLE CONDITION

Secondary Parameters	Enable Conditions
None	

4. GENERAL DRIVING CYCLE

Always perform the diagnosis continuously.

GETmyMANUALS.org

5. DIAGNOSTIC METHOD

- **Abnormality Judgment**

If the duration of time while the following conditions are met is longer than the time indicated, judge as NG.

Judgment Value

Malfunction Criteria	Threshold Value
Output voltage	≤ 0.22 V

Time Needed for Diagnosis: 500 ms
Malfunction Indicator Light Illumination: Illuminates as soon as a malfunction occurs.

- **Normality Judgment**

Judge as OK and clear the NG if the continuous time while the following conditions are established is more than the predetermined time.

Judgment Value

Malfunction Criteria	Threshold Value
Output voltage	> 0.22 V

Time Needed for Diagnosis: Less than 1 second

GETmyMANUALS.org

Q: DTC P0103 MASS OR VOLUME AIR FLOW CIRCUIT HIGH INPUT

1. OUTLINE OF DIAGNOSIS

Detect open or short circuits of the air flow sensor.
Judge as NG if out of specification.

2. COMPONENT DESCRIPTION

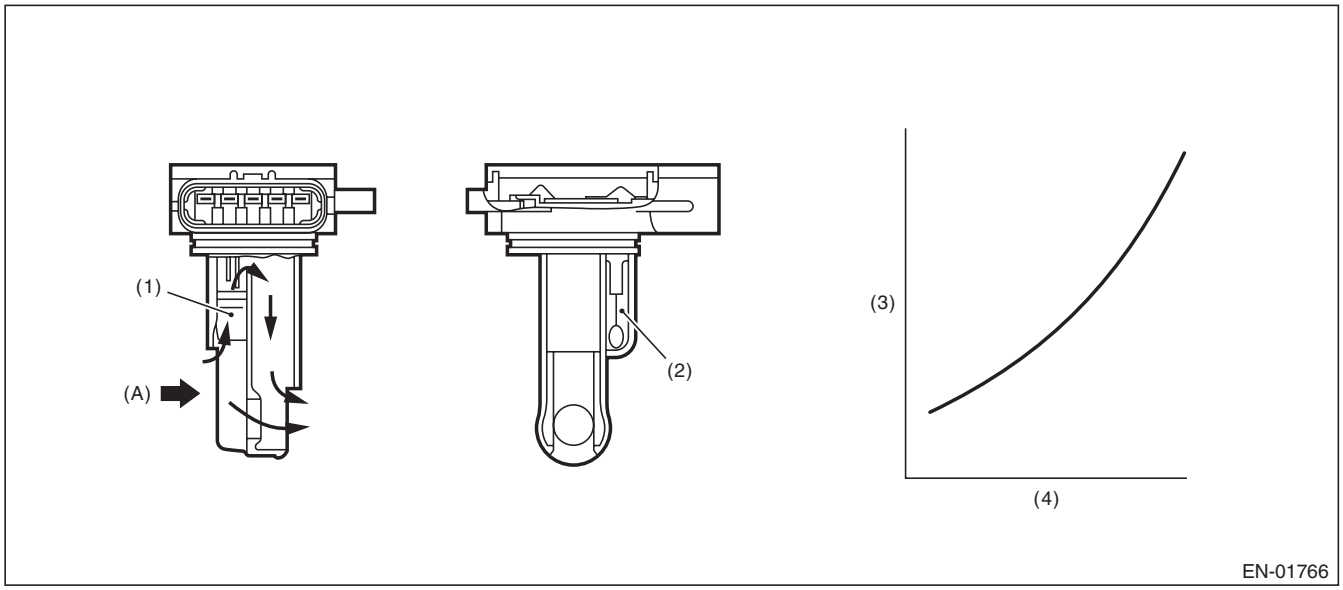

(A) Air

(1) Air flow sensor
(2) Intake air temperature sensor
(3) Voltage (V)
(4) Amount of intake air (kg (lb)/s)

3. ENABLE CONDITION

Secondary Parameters	Enable Conditions
None	

4. GENERAL DRIVING CYCLE

Always perform the diagnosis continuously.

GETTHEMANUALS.org

5. DIAGNOSTIC METHOD

- **Abnormality Judgment**

If the duration of time while the following conditions are met is longer than the time indicated, judge as NG.

Judgment Value

Malfunction Criteria	Threshold Value
Output voltage	≥ 4.952 V

Time Needed for Diagnosis: 500 ms
Malfunction Indicator Light Illumination: Illuminates as soon as a malfunction occurs.

- **Normality Judgment**

Judge as OK and clear the NG if the continuous time while the following conditions are established is more than the predetermined time.

Judgment Value

Malfunction Criteria	Threshold Value
Output voltage	< 4.952 V

Time Needed for Diagnosis: Less than 1 second

GETmyMANUALS.org

R: DTC P0107 MANIFOLD ABSOLUTE PRESSURE/BAROMETRIC PRESSURE CIRCUIT LOW INPUT

1. OUTLINE OF DIAGNOSIS

Detect the open or short circuit of intake manifold pressure sensor.
Judge as NG if out of specification.

2. COMPONENT DESCRIPTION

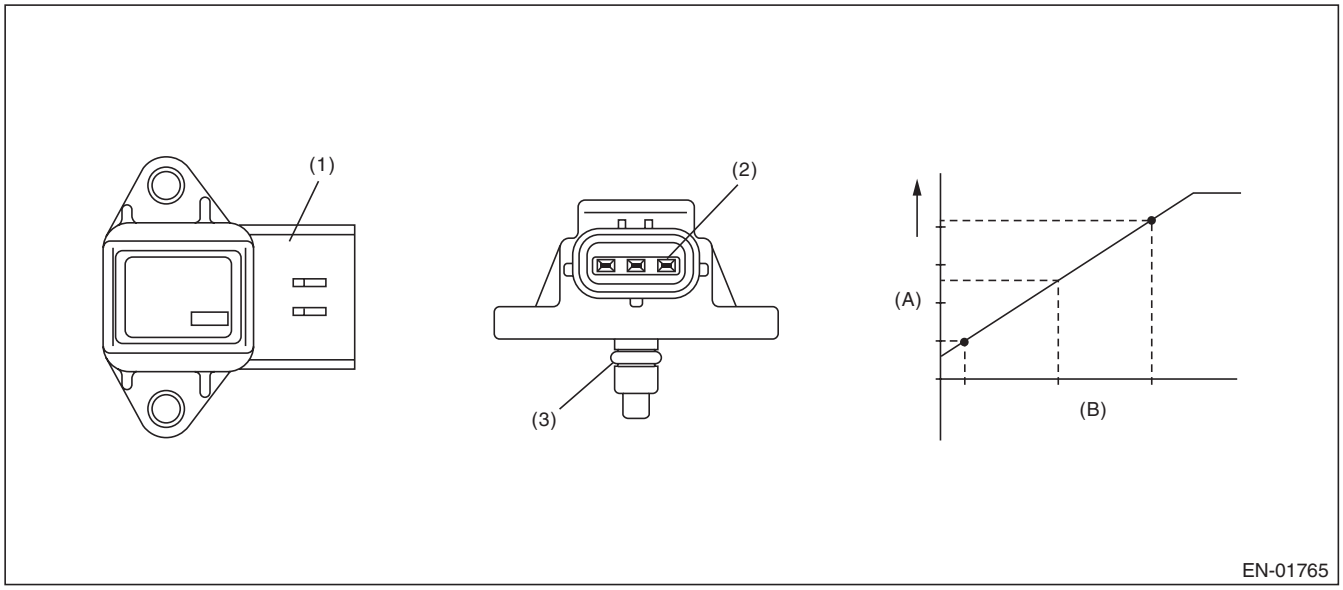

(A) Output voltage (B) Absolute pressure

(1) Connector (2) Terminals (3) O-ring

3. ENABLE CONDITION

Secondary Parameters	Enable Conditions
None	

4. GENERAL DRIVING CYCLE

Always perform the diagnosis continuously.

GETmyMANUALS.org

5. DIAGNOSTIC METHOD

- **Abnormality Judgment**

If the duration of time while the following conditions are met is longer than the time indicated, judge as NG.

Judgment Value

Malfunction Criteria	Threshold Value
Output voltage	≤ 0.822 V

Time Needed for Diagnosis: 500 ms
Malfunction Indicator Light Illumination: Illuminates as soon as a malfunction occurs.

- **Normality Judgment**

Judge as OK and clear the NG if the continuous time while the following conditions are established is more than the predetermined time.

Judgment Value

Malfunction Criteria	Threshold Value
Output voltage	> 0.822 V

Time Needed for Diagnosis: Less than 1 second

GETmyMANUALS.org

S: DTC P0108 MANIFOLD ABSOLUTE PRESSURE/BAROMETRIC PRESSURE CIRCUIT HIGH INPUT

1. OUTLINE OF DIAGNOSIS

Detect the open or short circuit of intake manifold pressure sensor.
Judge as NG if out of specification.

2. COMPONENT DESCRIPTION

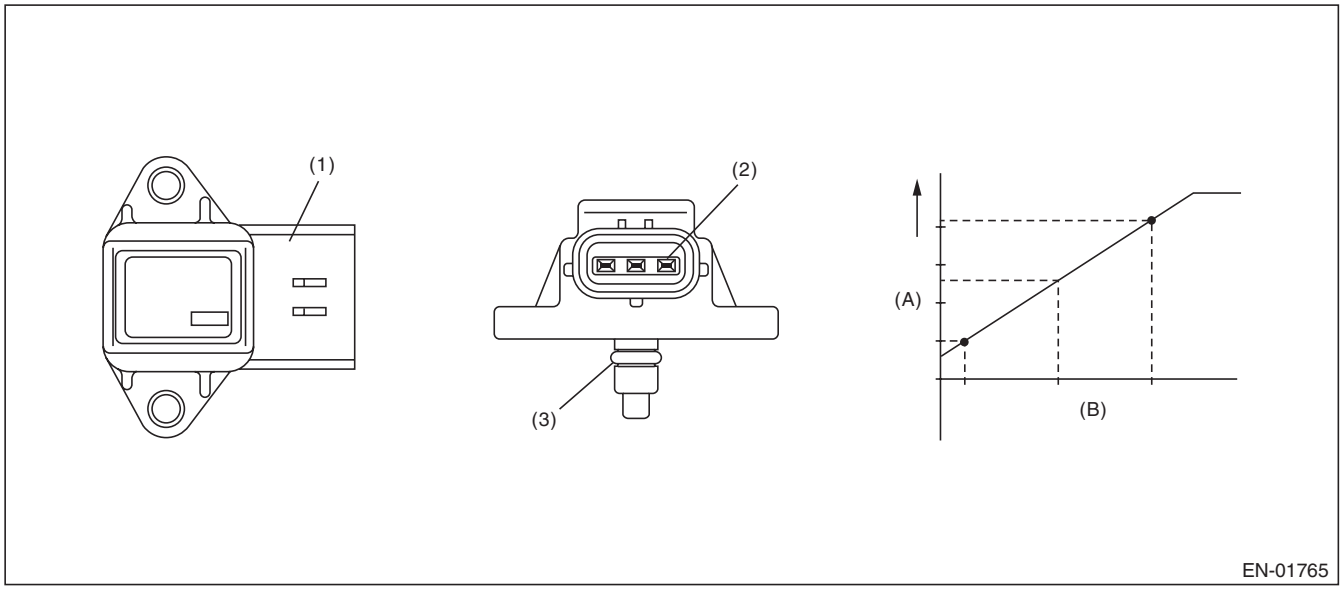

(A) Output voltage (B) Absolute pressure

(1) Connector (2) Terminals (3) O-ring

3. ENABLE CONDITION

Secondary Parameters	Enable Conditions
None	

4. GENERAL DRIVING CYCLE

Always perform the diagnosis continuously.

GETmyMANUALS.org

5. DIAGNOSTIC METHOD

- **Abnormality Judgment**

If the duration of time while the following conditions are met is longer than the time indicated, judge as NG.

Judgment Value

Malfunction Criteria	Threshold Value
Output voltage	≥ 4.474 V

Time Needed for Diagnosis: 500 ms
Malfunction Indicator Light Illumination: Illuminates as soon as a malfunction occurs.

- **Normality Judgment**

Judge as OK and clear the NG if the continuous time while the following conditions are established is more than the predetermined time.

Judgment Value

Malfunction Criteria	Threshold Value
Output voltage	< 4.474 V

Time Needed for Diagnosis: Less than 1 second

GETmyMANUALS.org

T: DTC P0111 INTAKE AIR TEMPERATURE SENSOR 1 CIRCUIT RANGE/PERFORMANCE

1. OUTLINE OF DIAGNOSIS

Detect the malfunction of intake air temperature sensor output property.
Judge as NG when the intake air temperature is not varied whereas it seemed to be varied from the viewpoint of engine condition.

2. COMPONENT DESCRIPTION

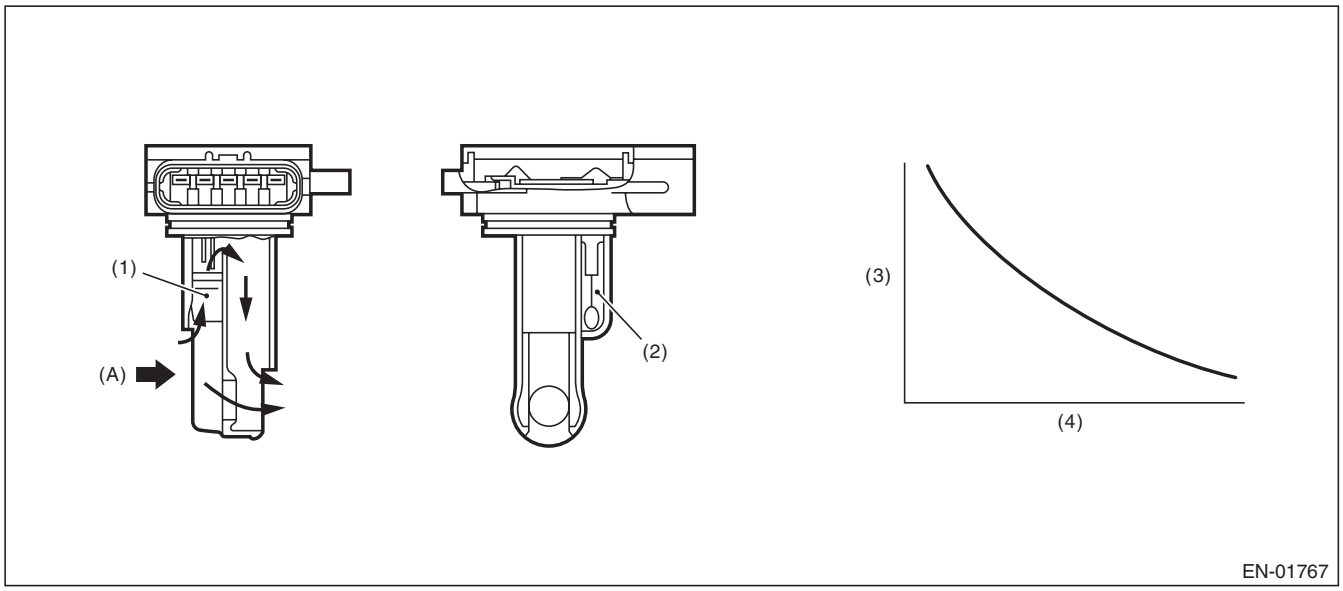

(A) Air

(1) Air flow sensor
(2) Intake air temperature sensor
(3) Resistance value (Ω)
(4) Intake air temperature °C (°F)

3. ENABLE CONDITION

Secondary Parameters	Enable Conditions
Engine coolant temperature at engine starting	< 35 °C (95 °F)
Battery voltage	≥ 10.9 V
Continuous time when the vehicle speed is less than 140 km/h (87 MPH)	≥ 610 s
Engine coolant temperature	≥ 72 °C (161.6 °F)
Intake air amount sum value	≥ Value of Map 1
Number of experiences under conditions below	≥ 3 time(s)
• Continuous time when vehicle speed is less than 4 km/h (2.5 MPH)	≥ Value from Map 2
• Continuous time when vehicle speed is 40 km/h (24.9 MPH) or more	≥ 15 s
and	
Establishing time of 1, 2	≥ 15 s
1. Intake air amount	≥ 15 g/s (0.53 oz/s)
2. Vehicle speed	≥ 4 km/h (2.5 MPH)

GETthemanuals.org

Map 1

Engine coolant temperature °C (°F)	–20 (–4)	–10 (14)	0 (32)	10 (50)	20 (68)
Intake air amount sum value (g (oz))	76000 (2680.52)	8880 (313.2)	8153 (287.56)	7427 (261.95)	6009 (211.94)

Map 2

Engine coolant temperature °C (°F)	–20 (–4)	–10 (14)	5 (41)	20 (68)
Continuous time (s) when vehicle speed is less than 4 km/h (2.5 MPH)	250	40	32	24

4. GENERAL DRIVING CYCLE

Perform the diagnosis when the vehicle speed condition is met after warming up from a cold condition.

5. DIAGNOSTIC METHOD

- **Abnormality Judgment**

Judge as NG when the following conditions are established.

Judgment Value

Malfunction Criteria	Threshold Value
Output voltage difference between Max. and Min.	< 0.02 V(Equivalent to approximately 0.5°C (0.9°F) near 25°C)

Time Needed for Diagnosis: Less than 1 second
Malfunction Indicator Light Illumination: Illuminates when malfunction occurs in 2 continuous driving cycles.

- **Normality Judgment**

Judge as OK and clear the NG if the following conditions are established.

Judgment Value

Malfunction Criteria	Threshold Value
Output voltage difference between Max. and Min.	≥ 0.02 V

Time Needed for Diagnosis: Less than 1 second

GETTHEMANUALS.org

U: DTC P0112 INTAKE AIR TEMPERATURE SENSOR 1 CIRCUIT LOW

1. OUTLINE OF DIAGNOSIS

Detect open or short circuit of the intake air temperature sensor.
Judge as NG if out of specification.

2. COMPONENT DESCRIPTION

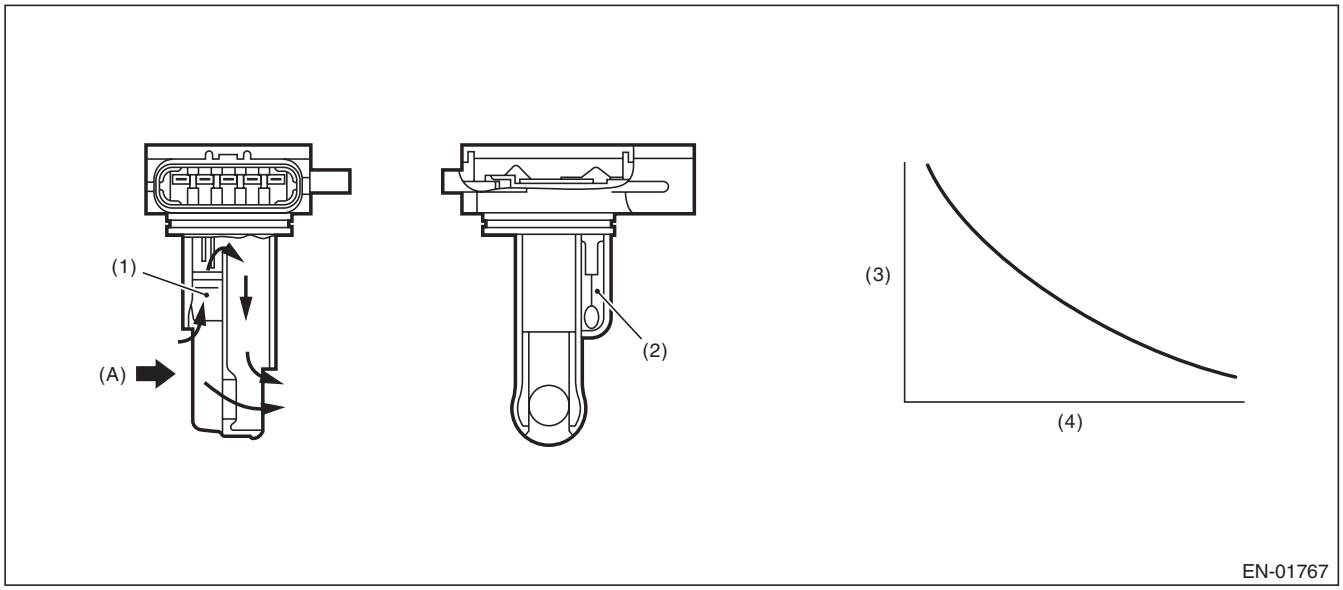

(A) Air

(1) Air flow sensor
(2) Intake air temperature sensor
(3) Resistance value (Ω)
(4) Intake air temperature °C (°F)

3. ENABLE CONDITION

Secondary Parameters	Enable Conditions
None	

4. GENERAL DRIVING CYCLE

Always perform the diagnosis continuously.

GETTHEMANUALS.org

5. DIAGNOSTIC METHOD

- **Abnormality Judgment**

If the duration of time while the following conditions are met is longer than the time indicated, judge as NG.

Judgment Value

Malfunction Criteria	Threshold Value
Output voltage	< 0.395 V

Time Needed for Diagnosis: 500 ms
Malfunction Indicator Light Illumination: Illuminates as soon as a malfunction occurs.

- **Normality Judgment**

Judge as OK and clear the NG if the continuous time while the following conditions are established is more than the predetermined time.

Judgment Value

Malfunction Criteria	Threshold Value
Output voltage	≥ 0.395 V

Time Needed for Diagnosis: Less than 1 second

GETmyMANUALS.org

V: DTC P0113 INTAKE AIR TEMPERATURE SENSOR 1 CIRCUIT HIGH

1. OUTLINE OF DIAGNOSIS

Detect open or short circuit of the intake air temperature sensor.
Judge as NG if out of specification.

2. COMPONENT DESCRIPTION

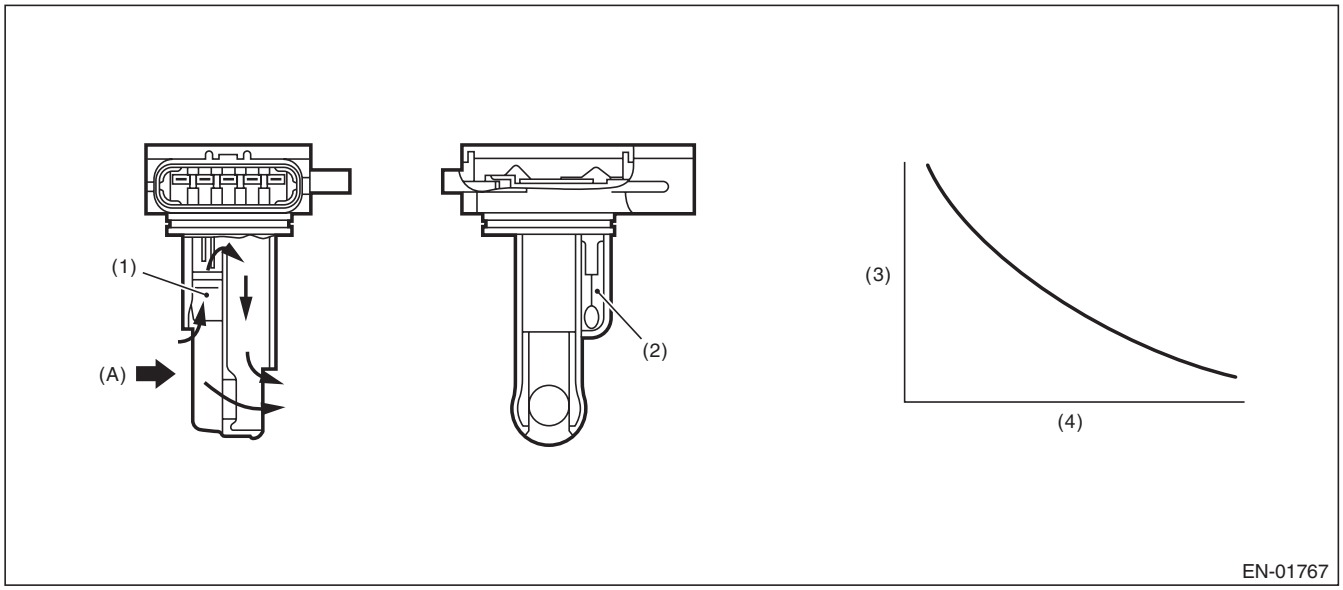

(A) Air

(1) Air flow sensor
(2) Intake air temperature sensor
(3) Resistance value (Ω)
(4) Intake air temperature °C (°F)

3. ENABLE CONDITION

Secondary Parameters	Enable Conditions
None	

4. GENERAL DRIVING CYCLE

Always perform the diagnosis continuously.

GETTHEMANUALS.org

5. DIAGNOSTIC METHOD

- **Abnormality Judgment**

If the duration of time while the following conditions are met is longer than the time indicated, judge as NG.

Judgment Value

Malfunction Criteria	Threshold Value
Output voltage	≥ 4.712 V

Time Needed for Diagnosis: 500 ms
Malfunction Indicator Light Illumination: Illuminates as soon as a malfunction occurs.

- **Normality Judgment**

Judge as OK and clear the NG if the continuous time while the following conditions are established is more than the predetermined time.

Judgment Value

Malfunction Criteria	Threshold Value
Output voltage	< 4.712 V

Time Needed for Diagnosis: Less than 1 second

GETmyMANUALS.org

W: DTC P0117 ENGINE COOLANT TEMPERATURE CIRCUIT LOW

1. OUTLINE OF DIAGNOSIS

Detect the open or short circuit of the engine coolant temperature sensor.
Judge as NG if out of specification.

2. COMPONENT DESCRIPTION

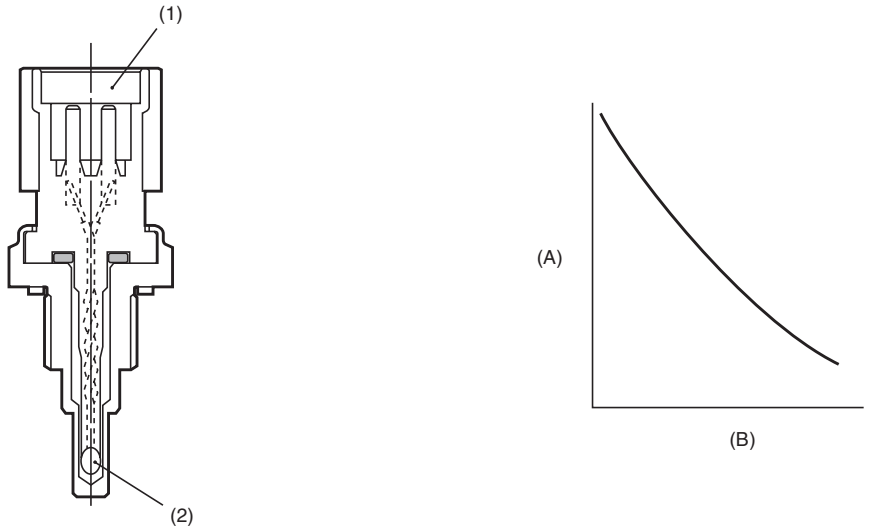

(A) Resistance value (kΩ) (B) Temperature °C (°F)

(1) Connector (2) Thermistor element

3. ENABLE CONDITION

Secondary Parameters	Enable Conditions
None	

4. GENERAL DRIVING CYCLE

Always perform the diagnosis continuously.

GETmyMANUALS.org

5. DIAGNOSTIC METHOD

- **Abnormality Judgment**

If the duration of time while the following conditions are met is longer than the time indicated, judge as NG.

Judgment Value

Malfunction Criteria	Threshold Value
Output voltage	< 0.464 V

Time Needed for Diagnosis: 500 ms
Malfunction Indicator Light Illumination: Illuminates as soon as a malfunction occurs.

- **Normality Judgment**

Judge as OK and clear the NG if the continuous time while the following conditions are established is more than the predetermined time.

Judgment Value

Malfunction Criteria	Threshold Value
Output voltage	≥ 0.464 V

Time Needed for Diagnosis: Less than 1 second

GETmyMANUALS.org

X: DTC P0118 ENGINE COOLANT TEMPERATURE CIRCUIT HIGH

1. OUTLINE OF DIAGNOSIS

Detect the open or short circuit of the engine coolant temperature sensor.
Judge as NG if out of specification.

2. COMPONENT DESCRIPTION

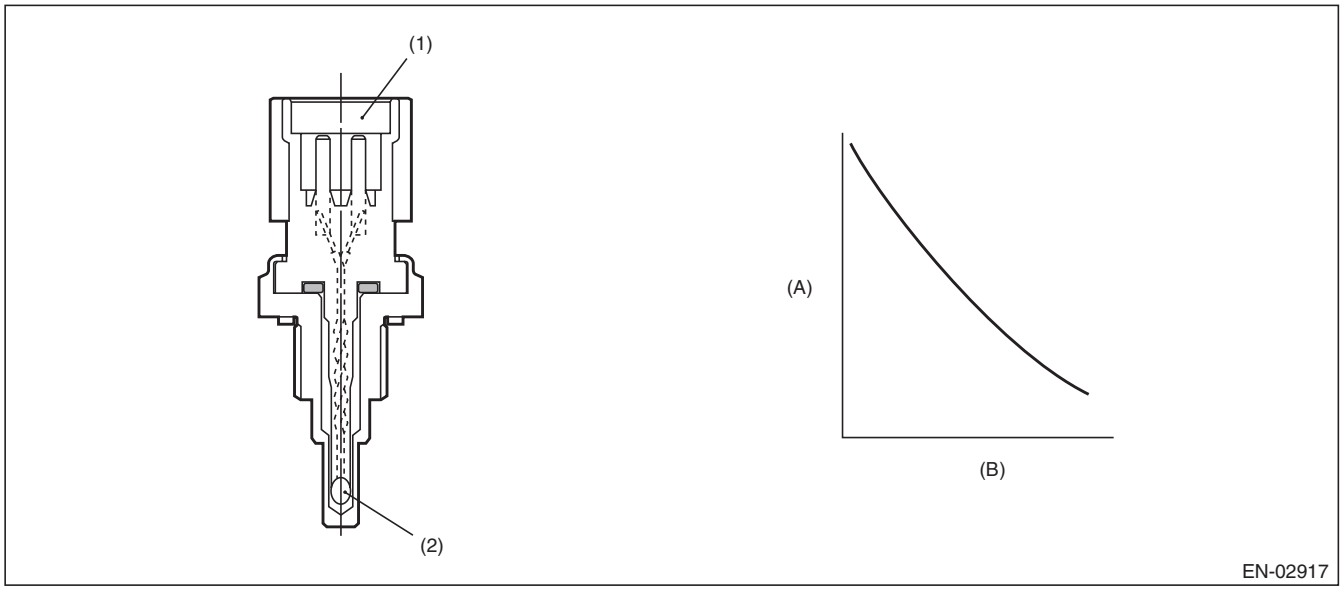

(A) Resistance value (kΩ) (B) Temperature °C (°F)

(1) Connector (2) Thermistor element

3. ENABLE CONDITION

Secondary Parameters	Enable Conditions
None	

4. GENERAL DRIVING CYCLE

Always perform the diagnosis continuously.

GETmyMANUALS.org

5. DIAGNOSTIC METHOD

- **Abnormality Judgment**

If the duration of time while the following conditions are met is longer than the time indicated, judge as NG.

Judgment Value

Malfunction Criteria	Threshold Value
Output voltage	≥ 4.702 V

Time Needed for Diagnosis: 500 ms
Malfunction Indicator Light Illumination: Illuminates as soon as a malfunction occurs.

- **Normality Judgment**

Judge as OK and clear the NG if the continuous time while the following conditions are established is more than the predetermined time.

Judgment Value

Malfunction Criteria	Threshold Value
Output voltage	< 4.702 V

Time Needed for Diagnosis: Less than 1 second

GETmyMANUALS.org

Y: DTC P0122 THROTTLE/PEDAL POSITION SENSOR/SWITCH “A” CIRCUIT LOW

1. OUTLINE OF DIAGNOSIS

Detect the open or short circuit of throttle position sensor 1.
Judge as NG if out of specification.

2. COMPONENT DESCRIPTION

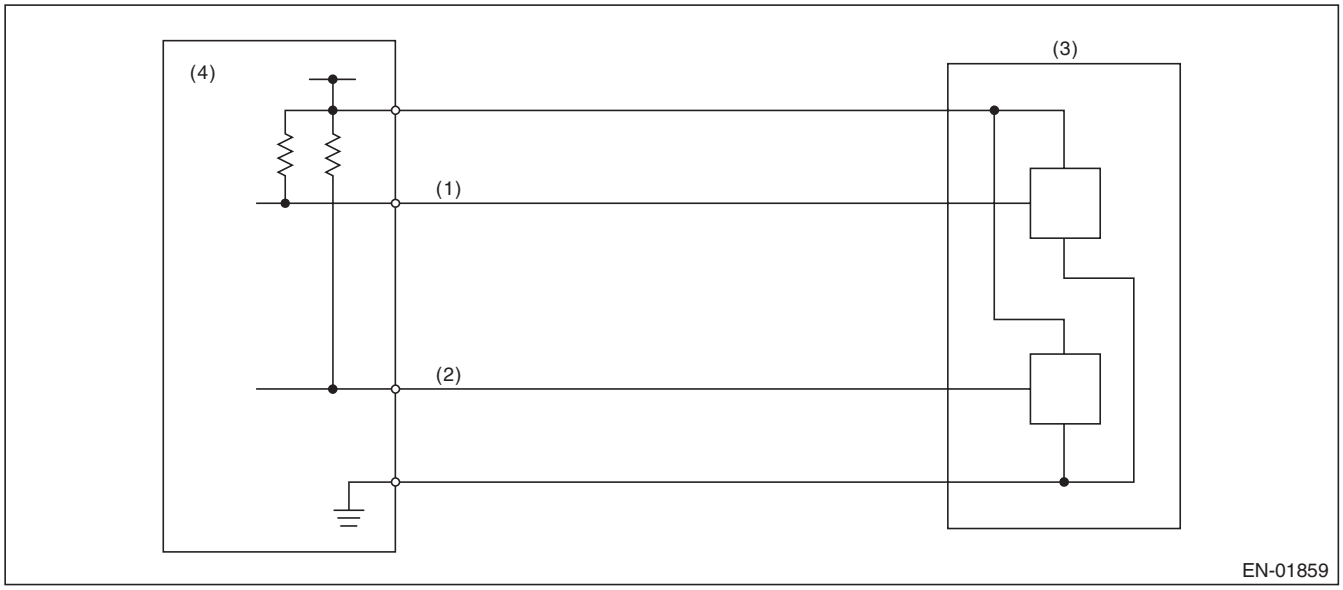

(1) Throttle position sensor 1 signal
(2) Throttle position sensor 2 signal
(3) Throttle position sensor
(4) Engine control module (ECM)

3. ENABLE CONDITION

Secondary Parameters	Enable Conditions
Ignition switch	ON
Battery voltage	≥ 6 V

4. GENERAL DRIVING CYCLE

Always perform the diagnosis continuously.

GETmyMANUALS.org

5. DIAGNOSTIC METHOD

- **Abnormality Judgment**

If the duration of time while the following conditions are met is longer than the time indicated, judge as NG.

Judgment Value

Malfunction Criteria	Threshold Value
Sensor 1 input voltage	≤ 0.23 V

Time Needed for Diagnosis: 24 ms
Malfunction Indicator Light Illumination: Illuminates as soon as a malfunction occurs.

- **Normality Judgment**

Judge as OK and clear the NG if the continuous time while the following conditions are established is more than the predetermined time.

Judgment Value

Malfunction Criteria	Threshold Value
Sensor 1 input voltage	> 0.23 V

Time Needed for Diagnosis: 24 ms

GETmyMANUALS.org

Z: DTC P0123 THROTTLE/PEDAL POSITION SENSOR/SWITCH “A” CIRCUIT HIGH

1. OUTLINE OF DIAGNOSIS

Detect the open or short circuit of throttle position sensor 1.
Judge as NG if out of specification.

2. COMPONENT DESCRIPTION

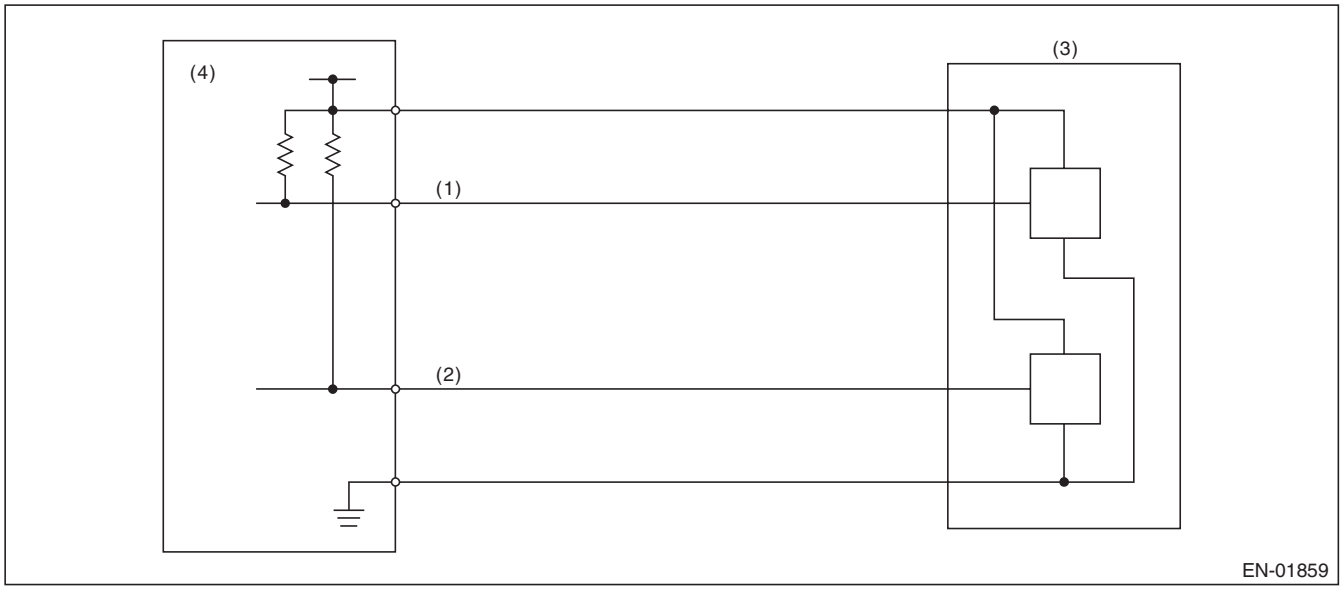

(1) Throttle position sensor 1 signal
(2) Throttle position sensor 2 signal
(3) Throttle position sensor
(4) Engine control module (ECM)

3. ENABLE CONDITION

Secondary Parameters	Enable Conditions
Ignition switch	ON
Battery voltage	≥ 6 V

4. GENERAL DRIVING CYCLE

Always perform the diagnosis continuously.

GETmyMANUALS.org

5. DIAGNOSTIC METHOD

- **Abnormality Judgment**

If the duration of time while the following conditions are met is longer than the time indicated, judge as NG.

Judgment Value

Malfunction Criteria	Threshold Value
Sensor 1 input voltage	≥ 4.858 V

Time Needed for Diagnosis: 24 ms
Malfunction Indicator Light Illumination: Illuminates as soon as a malfunction occurs.

- **Normality Judgment**

Judge as OK and clear the NG if the continuous time while the following conditions are established is more than the predetermined time.

Judgment Value

Malfunction Criteria	Threshold Value
Sensor 1 input voltage	< 4.858 V

Time Needed for Diagnosis: 24 ms

GETTHEMANUALS.org

AA:DTC P0125 INSUFFICIENT COOLANT TEMPERATURE FOR CLOSED LOOP FUEL CONTROL

1. OUTLINE OF DIAGNOSIS

Detect the malfunction of engine coolant temperature output property.
Judge as NG when the engine coolant temperature does not rise in driving conditions where it should.

2. COMPONENT DESCRIPTION

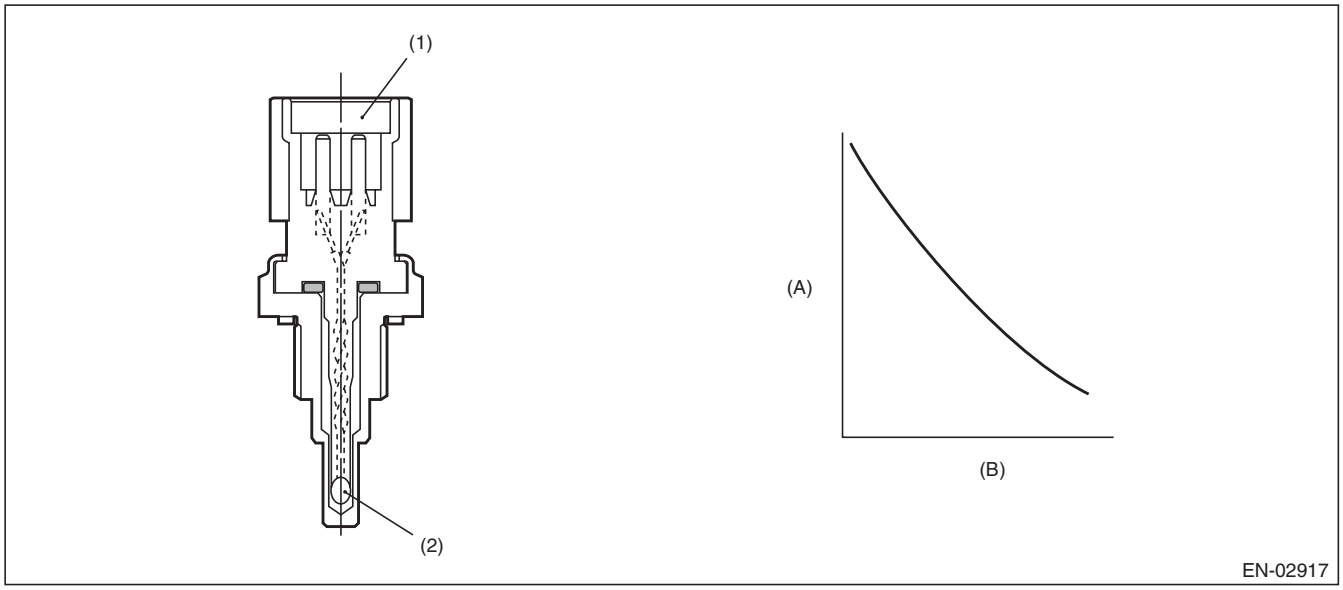

(A) Resistance value (kΩ) (B) Temperature °C (°F)

(1) Connector (2) Thermistor element

3. ENABLE CONDITION

Secondary Parameters	Enable Conditions
Engine speed	≥ Value from Map
Battery voltage	≥ 10.9 V

Map

Engine coolant temperature °C (°F)	–40 (–40)	–30 (–22)	–20 (–4)	–10 (14)	0 (32)	10 (50)	20 (68)	30 (86)
Engine speed rpm	500	500	500	500	500	500	500	500

Engine coolant temperature °C (°F)	40 (104)	50 (122)	60 (140)	70 (158)	80 (176)	90 (194)	100 (212)	110 (230)
Engine speed rpm	500	500	500	500	500	500	500	500

4. GENERAL DRIVING CYCLE

Perform the diagnosis only once after engine start.

GETthemANUALS.org

5. DIAGNOSTIC METHOD

- **Abnormality Judgment**

Judge as NG if the criteria below are met.

Judgment Value

Malfunction Criteria	Threshold Value
Engine coolant temperature	< 20 °C (68 °F)
Timer for diagnosis after engine start	≥ Judgment value of timer after engine start

Timer for diagnosis after engine start
a. Timer stop at fuel cut
b. During the driving conditions except a) above, timer counts up as follows.
64 ms + TWCNT ms (when at 64 ms)
TWCNT is defined as follows,
TWCNT = 0 at idle switch ON,
TWCNT show on the following table at idle switch OFF.

		Vehicle speed km/h (MPH)							
		0 (0)	8 (5)	16 (9.9)	24 (14.9)	32 (19.9)	40 (24.9)	48 (29.8)	56 (34.8)
Temperature °C (°F)	–20 (–4)	0 ms	37.136 ms	74.272 ms	111.41 ms	126.66 ms	141.91 ms	163.59 ms	185.26 ms
	–10 (14)	0 ms	27.391 ms	54.782 ms	82.173 ms	99.65 ms	117.13 ms	135.96 ms	154.8 ms
	0 (32)	0 ms	17.646 ms	35.292 ms	52.938 ms	72.64 ms	92.341 ms	108.34 ms	124.33 ms
	10 (50)	0 ms	7.9012 ms	15.802 ms	23.704 ms	45.63 ms	67.556 ms	80.711 ms	93.867 ms
	20 (68)	0 ms	7.9012 ms	15.802 ms	23.704 ms	45.63 ms	67.556 ms	80.711 ms	93.867 ms

Judgment value of timer after engine starting
t = 451056 ms – 25870 ms × Ti
Ti : The lowest coolant temperature after engine start
Time Needed for Diagnosis: Less than 1 second
Malfunction Indicator Light Illumination: Illuminates when malfunction occurs in 2 continuous driving cycles.

- **Normality Judgment**

Judge as OK and clear the NG when the malfunction criteria below are met.

Judgment Value

Malfunction Criteria	Threshold Value
Engine coolant temperature	≥ 20 °C (68 °F)

Time Needed for Diagnosis: Less than 1 second

GETTHEMANUALS.org

AB:DTC P0126 INSUFFICIENT ENGINE COOLANT TEMPERATURE FOR STABLE OPERATION

1. OUTLINE OF DIAGNOSIS

Detect the malfunction of the engine coolant temperature sensor characteristics.
When the ignition is ON after the specified period of soaking time has elapsed, compare the engine coolant temperature with intake air temperature. Judge as NG if the difference between two temperatures is larger than the predetermined value and the engine coolant temperature becomes the specified value or more.

2. COMPONENT DESCRIPTION

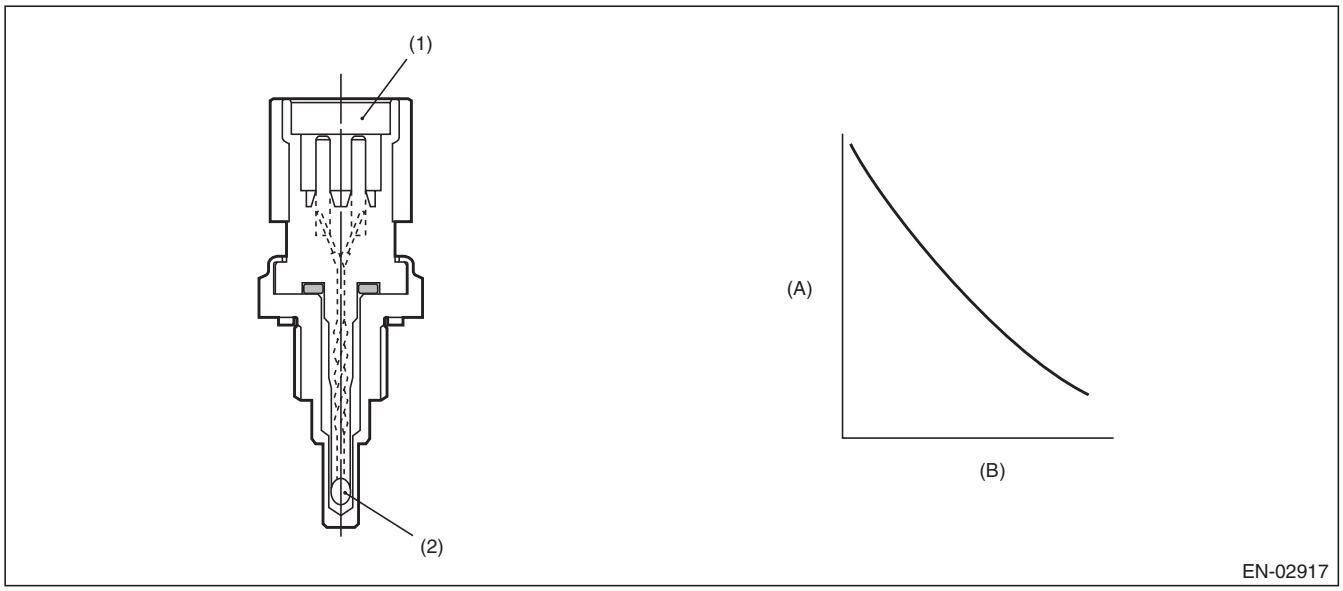

(A) Resistance value (kΩ) (B) Temperature °C (°F)

(1) Connector (2) Thermistor element

3. ENABLE CONDITION

Secondary Parameters	Enable Conditions
Battery voltage	≥ 10.9 V
Soaking time	≥ 21600 s
Engine coolant temperature at the last engine stop	≥ Value from Map

Map

Estimate ambient temperature °C (°F)	–7 (19.4)	8 (46.4)	10 (50)	25 (77)
Engine coolant temperature at the last engine stop °C (°F)	79.1 (174.4)	79.1 (174.4)	79.1 (174.4)	79.1 (174.4)

4. GENERAL DRIVING CYCLE

Perform the diagnosis only once after starting the engine.

GETmyMANUALS.org

5. DIAGNOSTIC METHOD

- **Abnormality Judgment**

If the duration of time while the following conditions are met is longer than the time indicated, judge as NG.

Judgment Value

Malfunction Criteria	Threshold Value
All of the following conditions are established.	
Engine coolant temperature – intake air temperature	> 15°C (27°F)
Engine coolant temperature	> 40 °C (104 °F)

Time Needed for Diagnosis: 512 ms
Malfunction Indicator Light Illumination: Illuminates when malfunction occurs in 2 continuous driving cycles.

- **Normality Judgment**

Judge as OK and clear the NG if the continuous time while the following conditions are established is more than the predetermined time.

Judgment Value

Malfunction Criteria	Threshold Value
When any one of the followings is established.	
Engine coolant temperature – intake air temperature	≤ 15°C (27°F)
Engine coolant temperature	≤ 40 °C (104 °F)

Time Needed for Diagnosis: Less than 1 second

GETTHEMANUALS.org

AC:DTC P0128 COOLANT THERMOSTAT (ENGINE COOLANT TEMPERATURE BELOW THERMOSTAT REGULATING TEMPERATURE)

1. OUTLINE OF DIAGNOSIS

Detect malfunctions of the thermostat function.
Judge as NG when any one of the following conditions is established.

- When the actual engine coolant temperature does not reach the maximum temperature necessary to perform other OBDII diagnosis and Σ (Estimated engine coolant temperature – actual engine coolant temperature) exceeded the predetermined value. (Judgment 1)
- When the actual engine coolant temperature does not reach the range within –11°C (–19.8°F) from the regulated temperature and Σ (Estimated engine coolant temperature – actual engine coolant temperature) exceeded the predetermined value. (Judgment 2)
- When the difference between the estimated coolant temperature and the actual engine coolant temperature exceeds the predetermined value, and Σ (Estimated engine coolant temperature – actual engine coolant temperature) exceeded the predetermined value. (Judgment 3)

2. COMPONENT DESCRIPTION

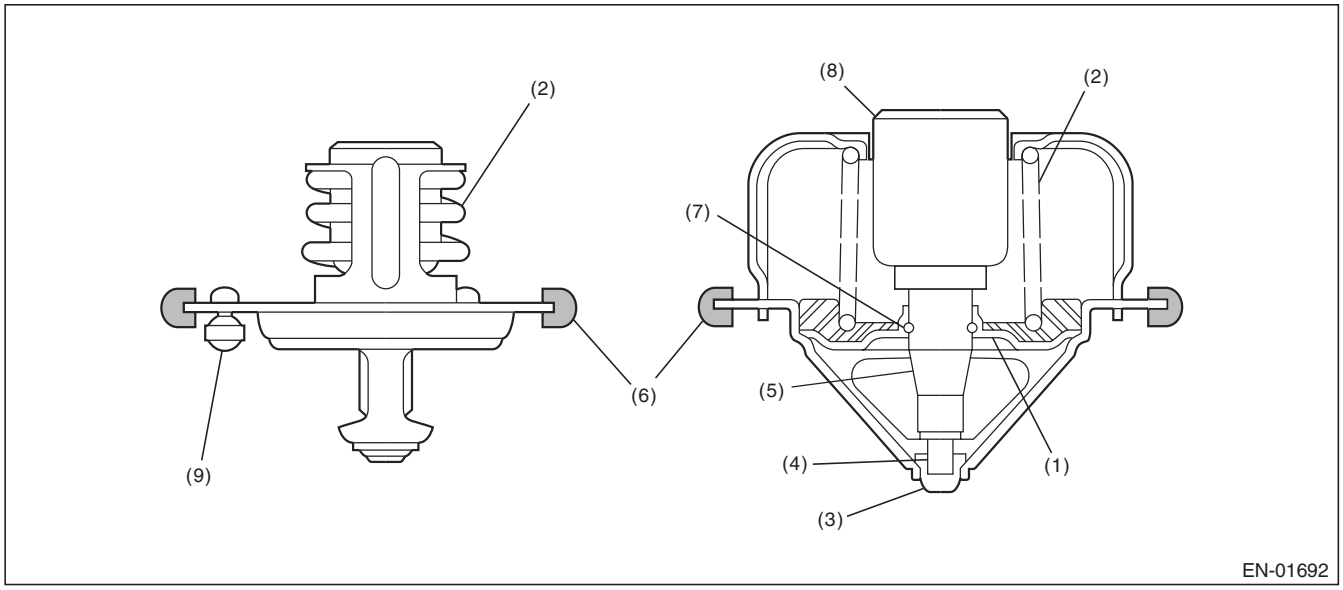

(1)	Valve	(4)	Piston	(7)	Stop ring
(2)	Spring	(5)	Guide	(8)	Wax element
(3)	Stopper	(6)	Rubber seal	(9)	Jiggle valve

GETMANUALS.org

3. ENABLE CONDITION

Secondary Parameters	Enable Conditions
<Judgment 1>	
Battery voltage	≥ 10.9 V
Estimate ambient temperature	≥ –7 °C (19.4 °F)
Vehicle speed	≥ 30 km/h (18.6 MPH)
Estimated coolant temperature	≥ Value of Map 1
<Judgment 2>	
Battery voltage	≥ 10.9 V
Estimate ambient temperature	≥ –7 °C (19.4 °F)
Vehicle speed	≥ 30 km/h (18.6 MPH)
Estimated coolant temperature	≥ Value from Map 2
<Judgment 3>	
Battery voltage	≥ 10.9 V
Estimate ambient temperature	≥ –7 °C (19.4 °F)
Vehicle speed	≥ 30 km/h (18.6 MPH)
Estimated coolant temperature	≥ Value from Map 3

Map 1

Engine coolant temperature at engine starting °C (°F)	–7 (19.4)	8 (46.4)	10 (50)	25 (77)
Estimated coolant temperature °C (°F)	72 (161.6)	72 (161.6)	72 (161.6)	72 (161.6)

Map 2

Engine coolant temperature at engine starting °C (°F)	–7 (19.4)	8 (46.4)	10 (50)	25 (77)
Estimated coolant temperature °C (°F)	79.1 (174.4)	79.1 (174.4)	79.1 (174.4)	79.1 (174.4)

Map 3

Engine coolant temperature at engine starting °C (°F)	–7 (19.4)	10 (50)	25 (77)	27 (80.6)
Estimated coolant temperature °C (°F)	58.5 (137.3)	68.6 (155.5)	77.6 (171.7)	79.1 (174.4)

4. GENERAL DRIVING CYCLE

Perform the diagnosis only once after starting the engine.

GETmyMANUALS.org

5. DIAGNOSTIC METHOD

• Abnormality Judgment

If the duration of time while the following conditions are met is longer than the time indicated, judge as NG.

Judgment Value

Malfunction Criteria	Threshold Value
When any one of the followings is established.	
<Judgment 1>	
Actual engine coolant temperature and Σ (Estimated engine coolant temperature – actual engine coolant temperature)	< Value of Map 4 > Value of Map 5
<Judgment 2>	
Actual engine coolant temperature and Σ (Estimated engine coolant temperature – actual engine coolant temperature)	< Regulated temperature – Value of Map 6 > Value of Map 7
<Judgment 3>	
Estimated engine coolant temperature – actual engine coolant temperature and Σ (Estimated engine coolant temperature – actual engine coolant temperature)	> Value of Map 8 > Value of Map 9

Map 4

Estimate ambient temperature °C (°F)	–7 (19.4)	8 (46.4)	10 (50)	25 (77)
Threshold Value °C (°F)	72 (161.6)	72 (161.6)	72 (161.6)	72 (161.6)

Map 5

Engine coolant temperature at engine starting °C (°F)	–7 (19.4)	0 (32)	8 (46.4)	10 (50)	25 (77)	35 (95)
Threshold Value °C (°F)	1731.6 (3116.9)	1731.6 (3116.9)	1731.6 (3116.9)	1731.6 (3116.9)	1731.6 (3116.9)	1000 (1800)

Map 6

Estimate ambient temperature °C (°F)	–7 (19.4)	8 (46.4)	10 (50)	25 (77)
Threshold Value °C (°F)	11.1 (20)	11.1 (20)	11.1 (20)	11.1 (20)

Map 7

Engine coolant temperature at engine starting °C (°F)	–7 (19.4)	0 (32)	8 (46.4)	10 (50)	25 (77)	30 (86)	35 (95)
Threshold Value °C (°F)	1731.6 (3116.9)	1731.6 (3116.9)	1731.6 (3116.9)	1731.6 (3116.9)	1731.6 (3116.9)	1731.6 (3116.9)	1000 (1800)

GETthemanual.org

Map 8

Estimate ambient temperature °C (°F)	–7 (19.4)	8 (46.4)	10 (50)	25 (77)
Threshold Value °C (°F)	11.1 (20)	11.1 (20)	11.1 (20)	11.1 (20)

Map 9

Engine coolant temperature at engine starting °C (°F)	–7 (19.4)	8 (46.4)	10 (50)	25 (77)
Threshold Value °C (°F)	1731.6 (3116.9)	1731.6 (3116.9)	1731.6 (3116.9)	1731.6 (3116.9)

Time Needed for Diagnosis: 300 — 700 seconds
Malfunction Indicator Light Illumination: Illuminates when malfunction occurs in 2 continuous driving cycles.

- **Normality Judgment**

Judge as OK and clear the NG if the continuous time while the following conditions are established is more than the predetermined time.

Judgment Value

Malfunction Criteria	Threshold Value
All of the following conditions are established.	
<Judgment 1>	
Actual engine coolant temperature and Σ (Estimated engine coolant temperature – actual engine coolant temperature)	≥ Value of Map 4 ≤ Value of Map 5
<Judgment 2>	
Actual engine coolant temperature and Σ (Estimated engine coolant temperature – actual engine coolant temperature)	≥ Regulated temperature – Value of Map 6 ≤ Value of Map 7
<Judgment 3>	
Estimated engine coolant temperature – actual engine coolant temperature and Σ (Estimated engine coolant temperature – actual engine coolant temperature) and Actual engine coolant temperature	≤ Value of Map 8 ≤ Value of Map 9 ≥ Regulated temperature – Value of Map 10

Map 10

Estimate ambient temperature °C (°F)	–7 (19.4)	8 (46.4)	10 (50)	25 (77)
Threshold Value °C (°F)	11.1 (20)	11.1 (20)	11.1 (20)	11.1 (20)

Time Needed for Diagnosis: 300 — 700 seconds

GETmyMANUALS.org

AD:DTC P0131 O2 SENSOR CIRCUIT LOW VOLTAGE (BANK 1 SENSOR 1)

1. OUTLINE OF DIAGNOSIS

Detect the open or short circuit of sensor.
Judge as NG, when the element voltage is out of the specified range.

2. COMPONENT DESCRIPTION

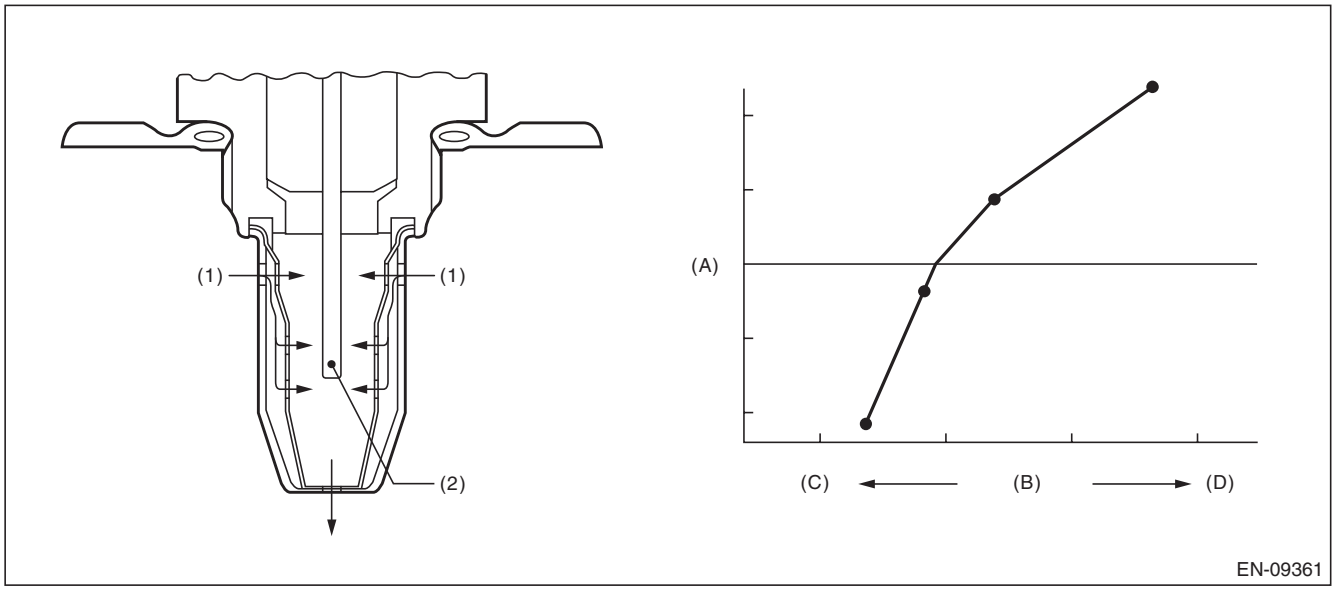

(A) Electromotive force (B) Air fuel ratio (C) Lean
(D) Rich

(1) Exhaust gas (2) ZrO_2

3. ENABLE CONDITION

Secondary Parameters	Enable Conditions
Battery voltage	≥ 10.9 V

4. GENERAL DRIVING CYCLE

Always perform the diagnosis continuously.

GETmyMANUALS.org

5. DIAGNOSTIC METHOD

- **Abnormality Judgment**

If the duration of time while the following conditions are met is longer than the time indicated, judge as NG.

Judgment Value

Malfunction Criteria	Threshold Value
Input voltage (+)	< 1.128 V
or	
Input voltage (–)	< 0.23 V
or	
|Input voltage (+) – Input voltage (–)|	< 0.644 V

Time Needed for Diagnosis:
Input voltage (+): 1000 ms
Input voltage (–): 1000 ms
|Input voltage (+) – Input voltage (–)|: 1000 ms
Malfunction Indicator Light Illumination: Illuminates as soon as a malfunction occurs.

- **Normality Judgment**

Judge as OK and clear the NG if the continuous time while the following conditions are established is more than the predetermined time.

Judgment Value

Malfunction Criteria	Threshold Value
Input voltage (+)	≥ 1.128 V
Input voltage (–)	≥ 0.23 V
|Input voltage (+) – Input voltage (–)|	≥ 0.644 V

Time Needed for Diagnosis: Less than 1 second

GETTHEMANUALS.org

AE:DTC P0132 O2 SENSOR CIRCUIT HIGH VOLTAGE (BANK 1 SENSOR 1)

1. OUTLINE OF DIAGNOSIS

Detect the open or short circuit of sensor.
Judge as NG, when the element voltage is out of the specified range.

2. COMPONENT DESCRIPTION

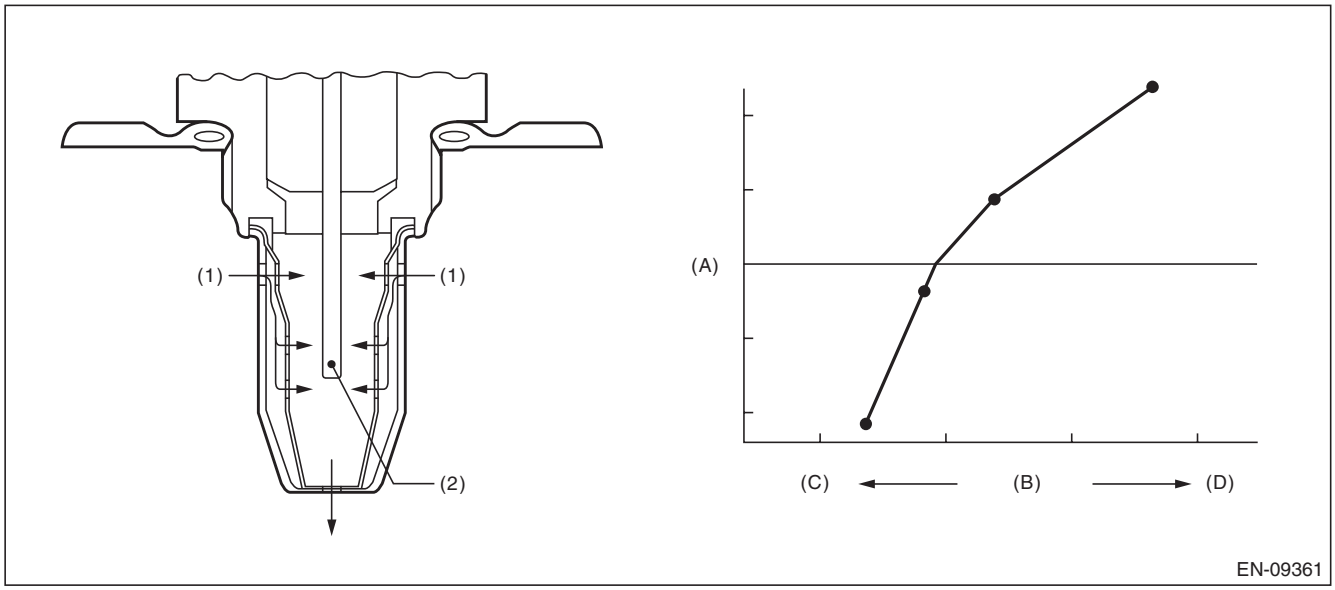

(A) Electromotive force (B) Air fuel ratio (C) Lean
(D) Rich

(1) Exhaust gas (2) ZrO_2

3. ENABLE CONDITION

Secondary Parameters	Enable Conditions
Battery voltage	≥ 10.9 V

4. GENERAL DRIVING CYCLE

Always perform the diagnosis continuously.

GETmyMANUALS.org

5. DIAGNOSTIC METHOD

- **Abnormality Judgment**

If the duration of time while the following conditions are met is longer than the time indicated, judge as NG.

Judgment Value

Malfunction Criteria	Threshold Value
Input voltage (+)	> 3.589 V
or	
Input voltage (–)	> 3.541 V

Time Needed for Diagnosis:
Input voltage (+): 1000 ms
Input voltage (–): 1000 ms
Malfunction Indicator Light Illumination: Illuminates as soon as a malfunction occurs.

- **Normality Judgment**

Judge as OK and clear the NG if the continuous time while the following conditions are established is more than the predetermined time.

Judgment Value

Malfunction Criteria	Threshold Value
Input voltage (+)	≤ 3.589 V
Input voltage (–)	≤ 3.541 V

Time Needed for Diagnosis: Less than 1 second

GETmyMANUALS.org

AF:DTC P0133 O2 SENSOR CIRCUIT SLOW RESPONSE (BANK 1 SENSOR 1)

1. OUTLINE OF DIAGNOSIS

Detect the slow response of front oxygen (A/F) sensor.
Front oxygen (A/F) sensor cover has some ventilation holes for exhaust gas. Clogged ventilation holes are diagnosed.
When the holes are clogged, the A/F output variation becomes slow comparing with the actual A/F variation because oxygen which reaches the zirconia layer is insufficient. Therefore, if the sensor cover holes are clogged, the rich to lean judgment in the ECM is delayed when the actual change from rich to lean occurs.
Judge as NG when the actual movement in comparison to the ECM control amount is slow.

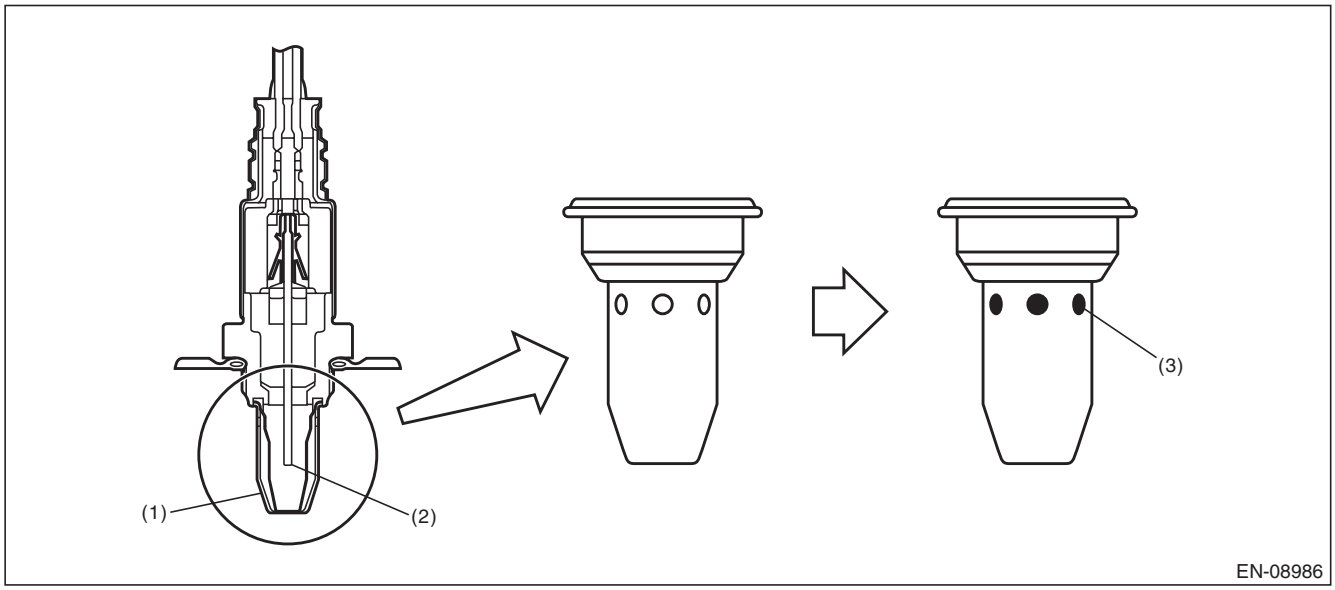

(1) Cover (2) Zirconia (3) Clogging

2. COMPONENT DESCRIPTION

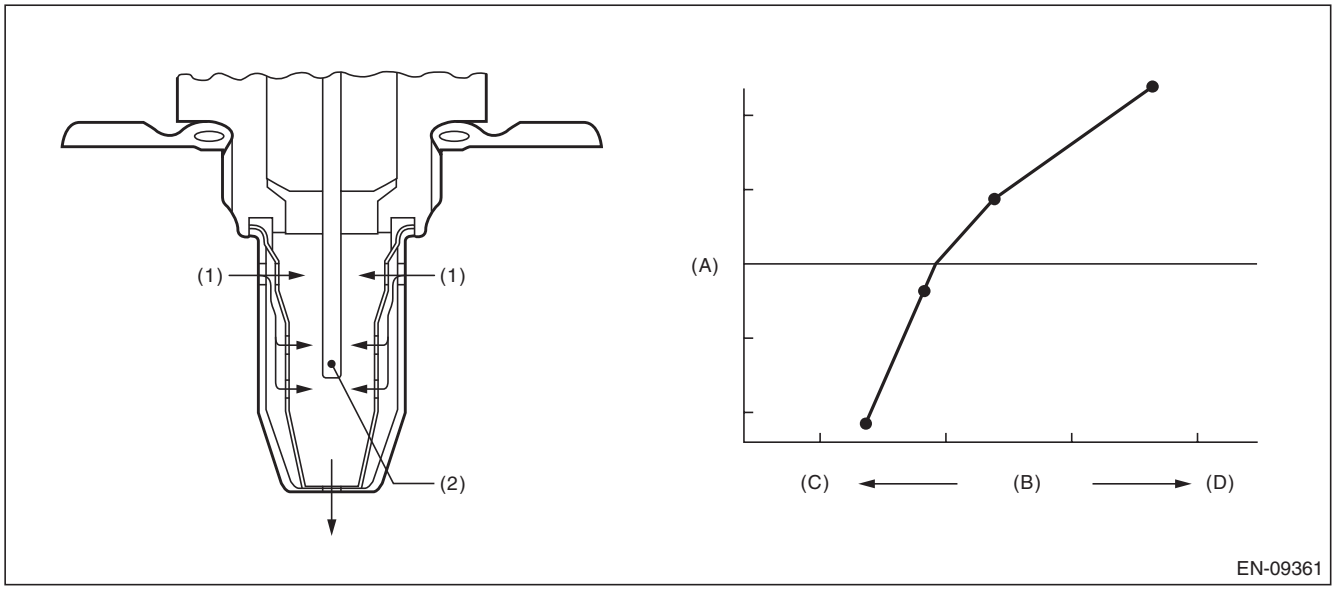

(A) Electromotive force (B) Air fuel ratio (C) Lean
(D) Rich

(1) Exhaust gas (2) ZrO_2

GETTHEMANUALS.org

3. ENABLE CONDITION

Secondary Parameters	Enable Conditions
Time needed for all secondary parameters to be in enable conditions	≥ 1024 ms
Battery voltage	≥ 10.9 V
Atmospheric pressure	> 75 kPa (563 mmHg, 22.2 inHg)
Closed loop control with main feedback	Operation
Front oxygen (A/F) sensor impedance	0 Ω — 50 Ω
Elapsed time after starting the engine	≥ 120000 ms
Engine coolant temperature	≥ 72 °C (161.6 °F)
Engine speed	1000 rpm — 10000 rpm
Vehicle speed	10 km/h — 200 km/h (6.2 MPH — 124.3 MPH)
Amount of intake air	10 g/s — 31 g/s (0.35 oz/s — 1.09 oz/s)
Engine load	< 0.02 g/rev (0 oz/rev)
Learning value of EVAP conc. during purge	< 0.2
Total time of operating canister purge	≥ 19.9 s

4. GENERAL DRIVING CYCLE

Perform diagnosis only once at a constant speed of 10 km/h — 200 km/h (6.2 MPH — 124.3 MPH) 120000 ms or more after starting the engine.

5. DIAGNOSTIC METHOD

Calculate faf difference every 32 ms × 4 , and the λ value difference. Calculate the diagnostic value after calculating 820 time(s).

- **Abnormality Judgment**

If the duration of time while the following conditions are met is longer than the time indicated, judge as NG.

Judgment Value

Malfunction Criteria	Threshold Value
parafca = td2faf/td2lmd where, td2faf (N) = td2faf (n–1) + |d2faf (n)| td2lmd (N) = td2lmd (n–1) + |d2lmd (n)| add up to 32 ms × 4 × 820 time(s). d2faf (n) = (faf (n) – faf (n–1)) – (faf (n–1) – faf (n–2)) d2lmd (n) = (lmd (n) – lmd (n–1)) – (lmd (n–1) – lmd (n–2)) faf = main feedback compensation coefficient every 128 milliseconds lmd = output lambda every 128 milliseconds	> 0.379

Time Needed for Diagnosis: 32 ms × 4 × 820 time(s)
Malfunction Indicator Light Illumination: Illuminates when malfunction occurs in 2 continuous driving cycles.

GETmyMANUALS.org

- **Normality Judgment**

Judge as OK and clear the NG if the continuous time while the following conditions are established is more than the predetermined time.

Judgment Value

Malfunction Criteria	Threshold Value
parafca = td2faf/td2lmd where, td2faf (N) = td2faf (n–1) + |d2faf (n)| td2lmd (N) = td2lmd (n–1) + |d2lmd (n)| add up to 32 ms × 4 × 820 time(s). d2faf (n) = (faf (n) – faf (n–1)) – (faf (n–1) – faf (n–2)) d2lmd (n) = (lmd (n) – lmd (n–1)) – (lmd (n–1) – lmd (n–2)) faf = main feedback compensation coefficient every 128 milliseconds lmd = output lambda every 128 milliseconds	≤ 0.379

Time Needed for Diagnosis: 32 ms × 4 × 820 time(s)

GETmyMANUALS.org

AG:DTC P0134 O2 SENSOR CIRCUIT NO ACTIVITY DETECTED (BANK 1 SENSOR 1)

1. OUTLINE OF DIAGNOSIS

Detect open circuits of the sensor.
Judge as NG when the impedance of the element is large.

2. COMPONENT DESCRIPTION

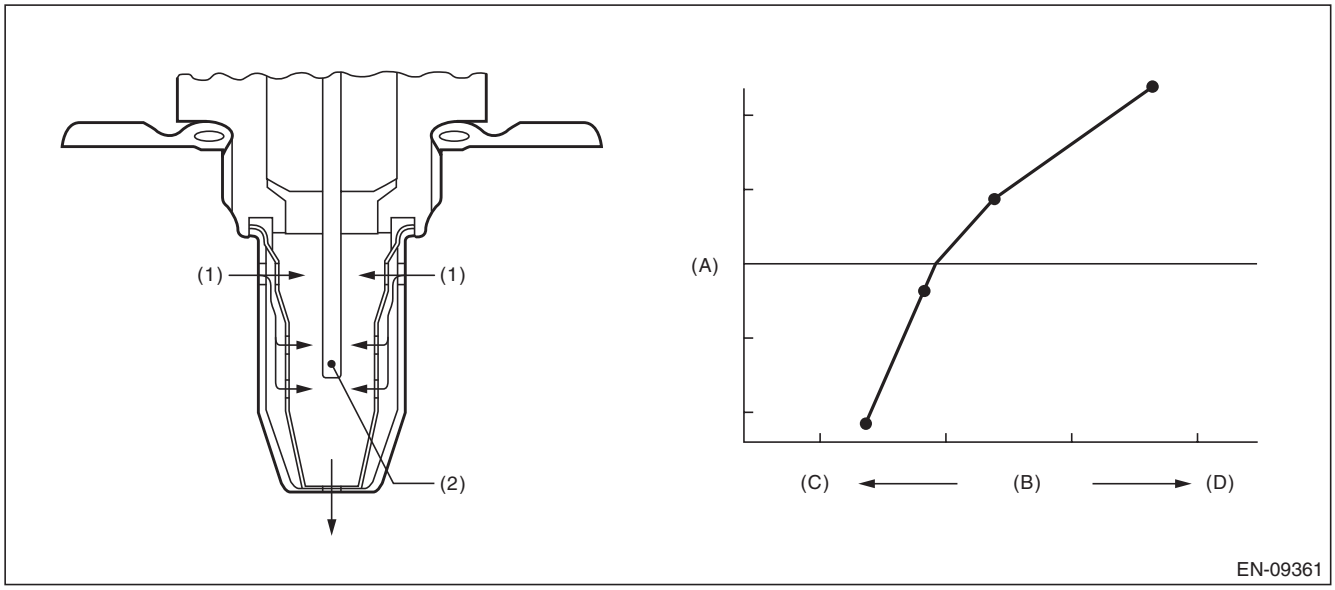

(A) Electromotive force (B) Air fuel ratio (C) Lean
(D) Rich

(1) Exhaust gas (2) ZrO_2

3. ENABLE CONDITION

Secondary Parameters	Enable Conditions
None	

4. GENERAL DRIVING CYCLE

Always perform the diagnosis continuously.

GETmyMANUALS.org

5. DIAGNOSTIC METHOD

- **Abnormality Judgment**

If the duration of time while the following conditions are met is longer than the time indicated, judge as NG.

Judgment Value

Malfunction Criteria	Threshold Value
Battery voltage	≥ 10.9 V
Time of heater control duty at 70 % or more	≥ 36000 ms
Front oxygen (A/F) sensor impedance.	> 500 Ω

Time Needed for Diagnosis: 5000 ms
Malfunction Indicator Light Illumination: Illuminates as soon as a malfunction occurs.

- **Normality Judgment**

Judge as OK and clear the NG if the continuous time while the following conditions are established is more than the predetermined time.

Judgment Value

Malfunction Criteria	Threshold Value
Battery voltage	≥ 10.9 V
Front oxygen (A/F) sensor impedance.	≤ 500 Ω

Time Needed for Diagnosis: Less than 1 second

GETmyMANUALS.org

AH:DTC P0137 O2 SENSOR CIRCUIT LOW VOLTAGE (BANK 1 SENSOR 2)

1. OUTLINE OF DIAGNOSIS

Detect continuity NG of the oxygen sensor. If the oxygen sensor voltage reading is not within the probable range considering the operating conditions, judge as NG.

2. COMPONENT DESCRIPTION

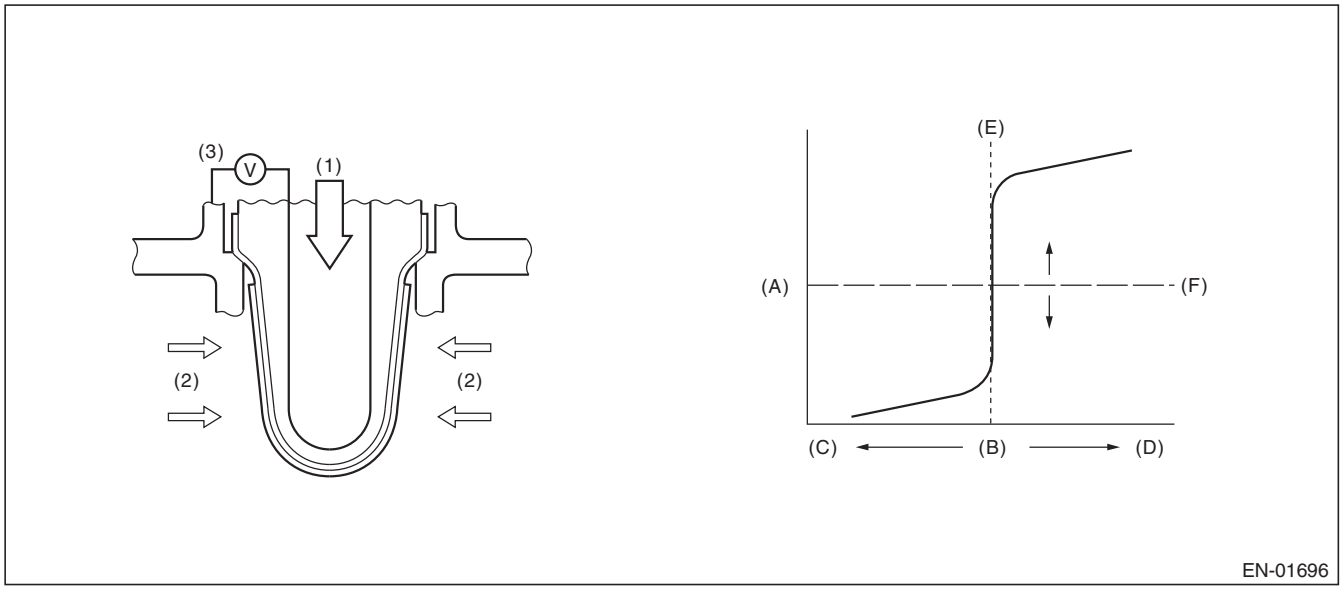

(A)	Electromotive force	(B)	Air fuel ratio	(C)	Rich
(D)	Lean	(E)	Theoretical air fuel ratio	(F)	Comparative voltage
(1)	Atmosphere	(2)	Exhaust gas	(3)	Electromotive force

GETthemANUALS.org

3. ENABLE CONDITION

Used for abnormality judgment

Secondary Parameters	Enable Conditions
High	
Secondary air system	Not in operation
Closed loop control at the oxygen sensor	In operation
Misfire detection every 200 rotations	< 65535 time(s)
Front oxygen (A/F) sensor compensation coefficient	Not in limit value
Battery voltage	≥ 10.9 V
Engine coolant temperature	≥ 72 °C (161.6 °F)
Low (1)	
Secondary air system	Not in operation
Closed loop control at the oxygen sensor	In operation
Misfire detection every 200 rotations	< 65535 time(s)
Front oxygen (A/F) sensor compensation coefficient	Not in limit value
Battery voltage	≥ 10.9 V
Engine coolant temperature	≥ 72 °C (161.6 °F)
Amount of intake air	≥ 10 g/s (0.35 oz/s)
Low (2)	
Secondary air system	Not in operation
Closed loop control at the oxygen sensor	In operation
Misfire detection every 200 rotations	< 65535 time(s)
Front oxygen (A/F) sensor compensation coefficient	Not in limit value
Battery voltage	≥ 10.9 V
Engine coolant temperature	≥ 72 °C (161.6 °F)
Amount of intake air	< 10 g/s (0.35 oz/s)
Current continuation time of the rear oxygen sensor heater	≥ 25000 ms
Low (3)	
Secondary air system	Not in operation
Closed loop control at the oxygen sensor	In operation
Misfire detection every 200 rotations	< 65535 time(s)
Front oxygen (A/F) sensor compensation coefficient	Not in limit value
Battery voltage	≥ 10.9 V
Engine coolant temperature	≥ 72 °C (161.6 °F)
Amount of intake air	< 10 g/s (0.35 oz/s)
Current continuation time of the rear oxygen sensor heater	≥ 25000 ms
Fuel cut	Experienced

Used for normality judgment

Secondary Parameters	Enable Conditions
Secondary air system	Not in operation
Closed loop control at the oxygen sensor	In operation
Misfire detection every 200 rotations	< 65535 time(s)
Front oxygen (A/F) sensor compensation coefficient	Not in limit value
Battery voltage	≥ 10.9 V
Engine coolant temperature	≥ 72 °C (161.6 °F)

4. GENERAL DRIVING CYCLE

After starting the engine, continuously perform the diagnosis with the same engine condition.

GETmyMANUALS.org

5. DIAGNOSTIC METHOD

- **Abnormality Judgment**

If the duration of time while the following conditions are met is longer than the time indicated, judge as NG.

Judgment Value

Malfunction Criteria	Threshold Value	DTC
High Sensor output voltage	> 1.2 V	P0138
Low Sensor output voltage	< 0.03 V	P0137

Time Needed for Diagnosis:
High: 2500 ms
Low (1): 20000 ms
Low (2): 150000 ms
Low (3): Value from Map

Map

Fuel cut time (ms)	0	2000	10000
Time Needed for Diagnosis (ms)	150000	150000	150000

Malfunction Indicator Light Illumination: Illuminates when malfunction occurs in 2 continuous driving cycles.

- **Normality Judgment**

Judge as OK and clear the NG if the continuous time while the following conditions are established is more than the predetermined time.

Judgment Value

Malfunction Criteria	Threshold Value	DTC
High Sensor output voltage	≤ 1.2 V	P0138
Low Sensor output voltage	≥ 0.03 V	P0137

Time Needed for Diagnosis:
High: Less than 1 second
Low (1): Less than 1 second
Low (2): Less than 1 second
Low (3): Less than 1 second

AI: DTC P0138 O2 SENSOR CIRCUIT HIGH VOLTAGE (BANK 1 SENSOR 2)

1. OUTLINE OF DIAGNOSIS

NOTE:
For the detection standard, refer to DTC P0137. <Ref. to GD(H4DOTC)-72, DTC P0137 O2 SENSOR CIRCUIT LOW VOLTAGE (BANK 1 SENSOR 2), Diagnostic Trouble Code (DTC) Detecting Criteria.>

GETthemanual.org

AJ:DTC P013A O2 SENSOR SLOW RESPONSE - RICH TO LEAN (BANK 1 SENSOR 2)

1. OUTLINE OF DIAGNOSIS

Detect the slow response of rich → lean for rear oxygen sensor output.
When the deceleration fuel cut has occurred, detect the trouble by calculating the time when the rear oxygen sensor output passes through the predetermined range of voltages.
Judge as NG when the response time is larger than the threshold value.

2. COMPONENT DESCRIPTION

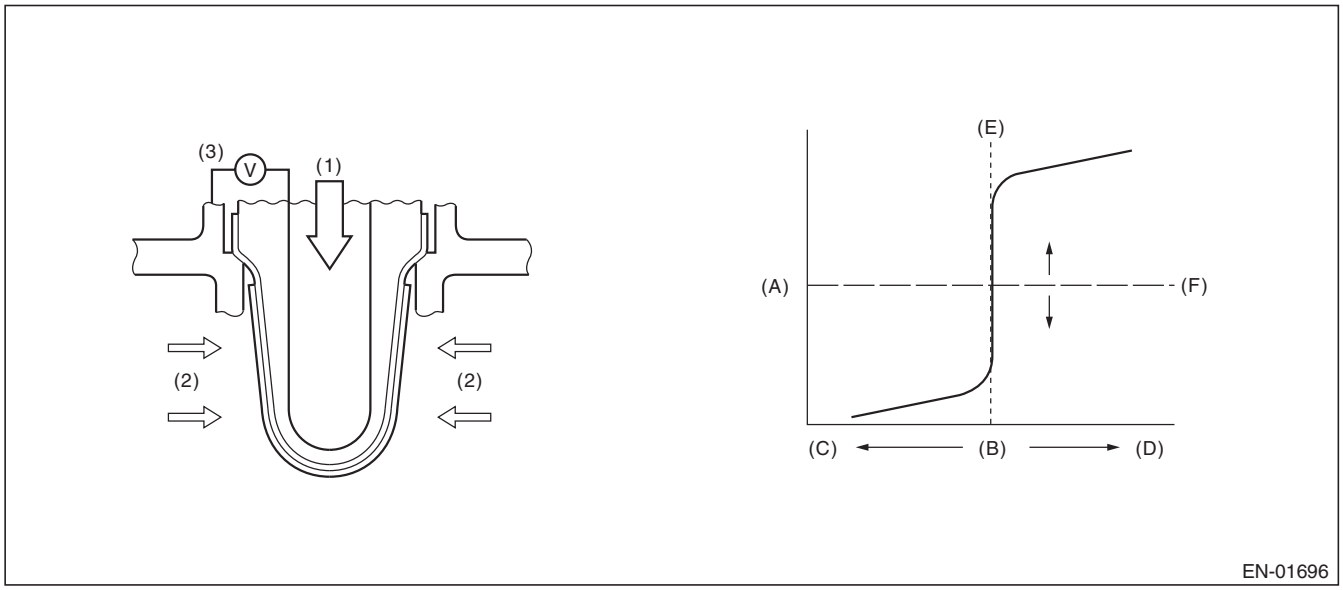

(A)	Electromotive force	(B)	Air fuel ratio	(C)	Rich
(D)	Lean	(E)	Theoretical air fuel ratio	(F)	Comparative voltage
(1)	Atmosphere	(2)	Exhaust gas	(3)	Electromotive force

3. ENABLE CONDITIONS

Secondary Parameters	Enable Conditions
Battery voltage	> 10.9 V
Rear oxygen sensor closed loop control	Operation
Current calculation time of the rear oxygen sensor heater after starting	≥ 180000 ms
Engine speed when fuel cut starts	≥ 1700 rpm
Rear oxygen sensor voltage when fuel cut starts	≥ 0.55 V
Fuel cut time	≥ 5000 ms
Engine coolant temperature when fuel cut starts	≥ 72 °C (161.6 °F)
Estimated temperature of rear oxygen sensor element when fuel cut starts	≥ 450 °C (842 °F)

4. GENERAL DRIVING CYCLE

Perform diagnosis once during deceleration fuel cut from a constant and high speed driving, when rear oxygen sensor is warmed up sufficiently.

GETthemanuals.org

5. DIAGNOSTIC METHOD

Detect the trouble by calculating the response time of the rear oxygen sensor during fuel cut.

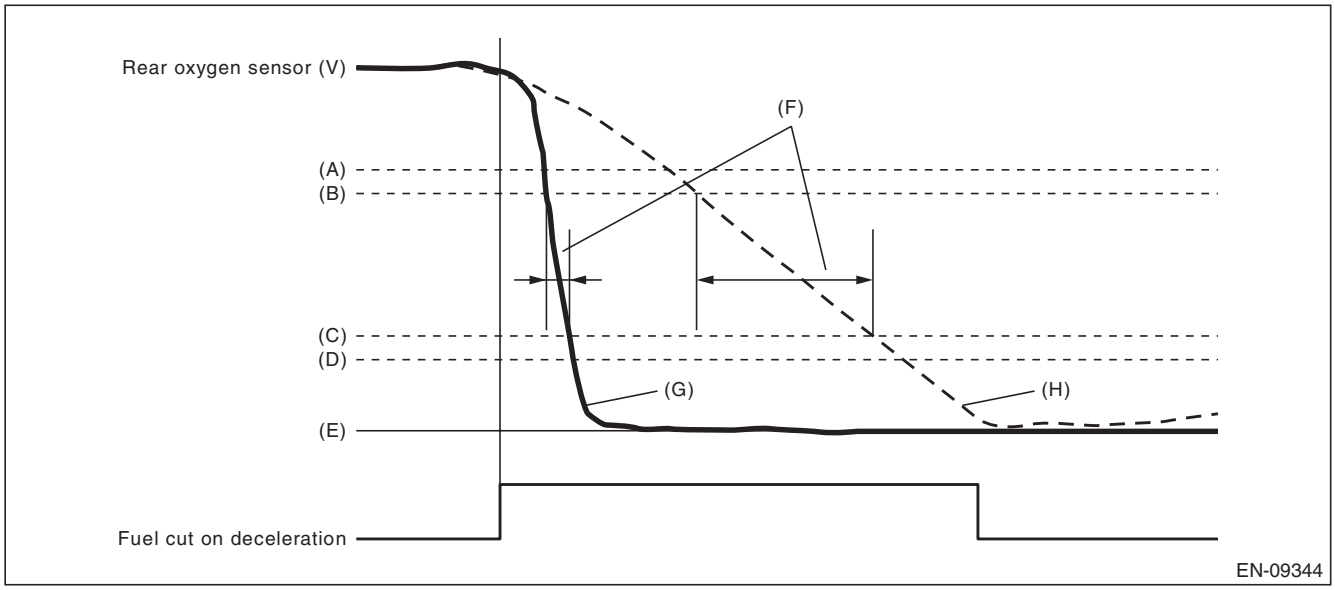

(A)	0.55 V	(B)	0.50 V	(C)	0.20 V
(D)	0.15 V	(E)	0 V	(F)	Diagnostic parameter
(G)	Normal	(H)	Malfunction		

- **Abnormality Judgment**

Judge as NG when the following conditions are established.

Judgment Value

Malfunction Criteria	Threshold Value
Time when rear oxygen sensor voltage changed from 0.5 V to 0.2 V.	> 837 ms

Time Needed for Diagnosis: 10 seconds

Malfunction Indicator Light Illumination: Illuminates when malfunction occurs in 2 continuous driving cycles.

- **Normality Judgment**

Judge as OK and clear the NG if the following conditions are established.

Judgment Value

Malfunction Criteria	Threshold Value
Time when rear oxygen sensor voltage changed from 0.5 V to 0.2 V.	≤ 837 ms

Time Needed for Diagnosis: 10 seconds

GETmyMANUALS.org

AK:DTC P013B O2 SENSOR SLOW RESPONSE - LEAN TO RICH (BANK 1 SENSOR 2)

1. OUTLINE OF DIAGNOSIS

Detect the slow response of lean → rich for rear oxygen sensor output.
After the deceleration fuel cut has occurred, detect the trouble by calculating the time when the rear oxygen sensor output passes through the predetermined range of voltages.
Judge as NG when the response time is larger than the threshold value.

2. COMPONENT DESCRIPTION

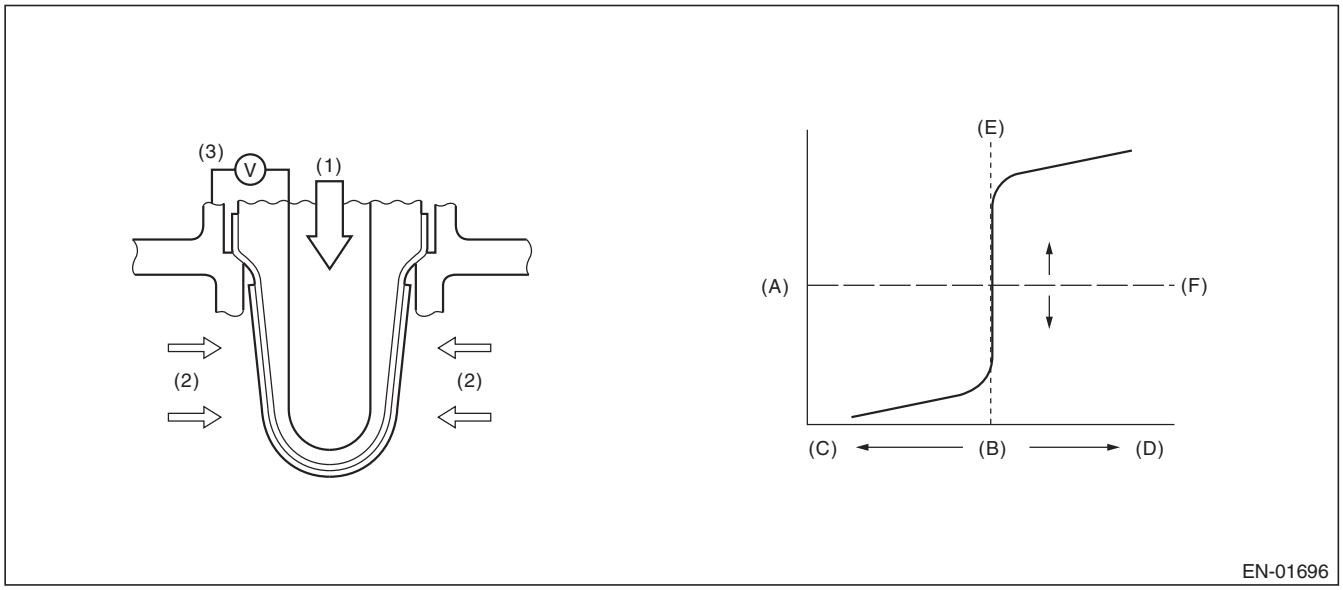

(A)	Electromotive force	(B)	Air fuel ratio	(C)	Rich
(D)	Lean	(E)	Theoretical air fuel ratio	(F)	Comparative voltage
(1)	Atmosphere	(2)	Exhaust gas	(3)	Electromotive force

3. ENABLE CONDITIONS

Secondary Parameters	Enable Conditions
Battery voltage	> 10.9 V
Rear oxygen sensor closed loop control	Operation
Fuel cut time	≥ 5000 ms

4. GENERAL DRIVING CYCLE

Perform diagnosis only once after recovering from a deceleration fuel cut continued for more than predetermined time.

GETmyMANUALS.org

5. DIAGNOSTIC METHOD

Detect the trouble by calculating the response time of the rear oxygen sensor after fuel cut.

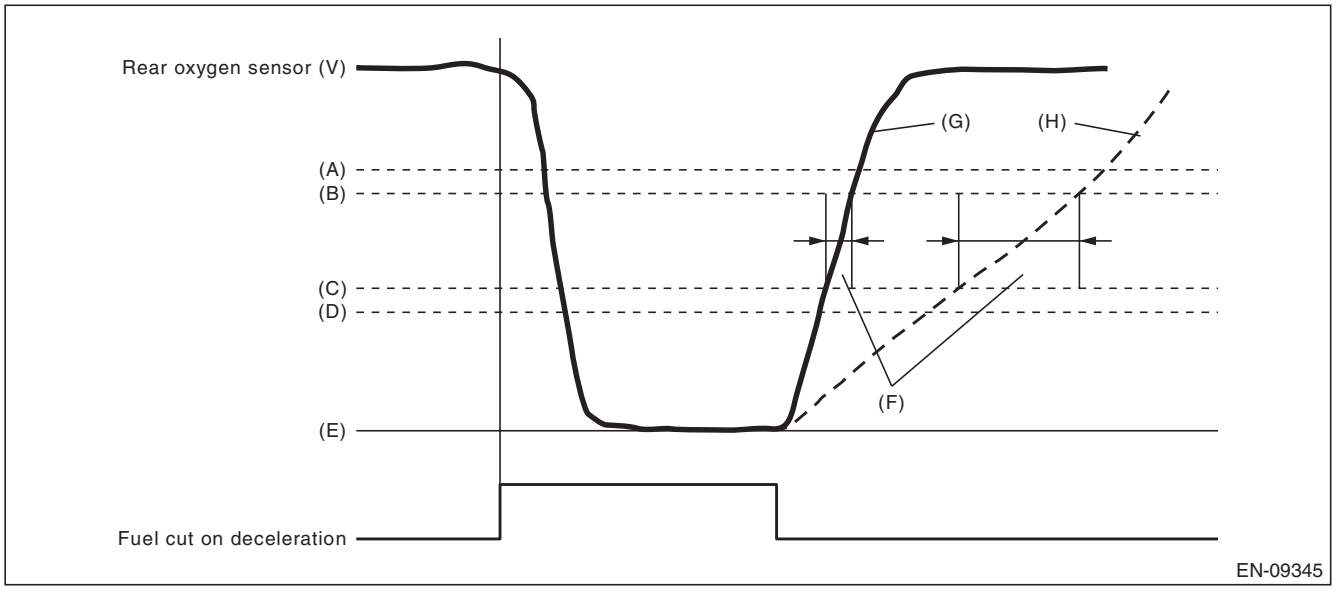

(A)	0.55 V	(B)	0.50 V	(C)	0.30 V
(D)	0.25 V	(E)	0 V	(F)	Diagnostic parameter
(G)	Normal	(H)	Malfunction		

- **Abnormality Judgment**

Judge as NG when the following conditions are established.

Judgment Value

Malfunction Criteria	Threshold Value
Time when rear oxygen sensor voltage changed from 0.3 V to 0.5 V.	> 4000 ms

Time Needed for Diagnosis: 10 seconds

Malfunction Indicator Light Illumination: Illuminates when malfunction occurs in 2 continuous driving cycles.

- **Normality Judgment**

Judge as OK and clear the NG if the following conditions are established.

Judgment Value

Malfunction Criteria	Threshold Value
Time when rear oxygen sensor voltage changed from 0.3 V to 0.5 V.	≤ 4000 ms

Time Needed for Diagnosis: 10 seconds

GETmyMANUALS.org

AL:DTC P013E O2 SENSOR DELAYED RESPONSE - RICH TO LEAN (BANK 1 SENSOR 2)

1. OUTLINE OF DIAGNOSIS

Detect the delayed response of rear oxygen sensor output for rich → lean.
After the deceleration fuel cut has started, detect the trouble by calculating the time when the rear oxygen sensor output decreases to the predetermined voltages.
Judge as NG when the response time is larger than the threshold value.

2. COMPONENT DESCRIPTION

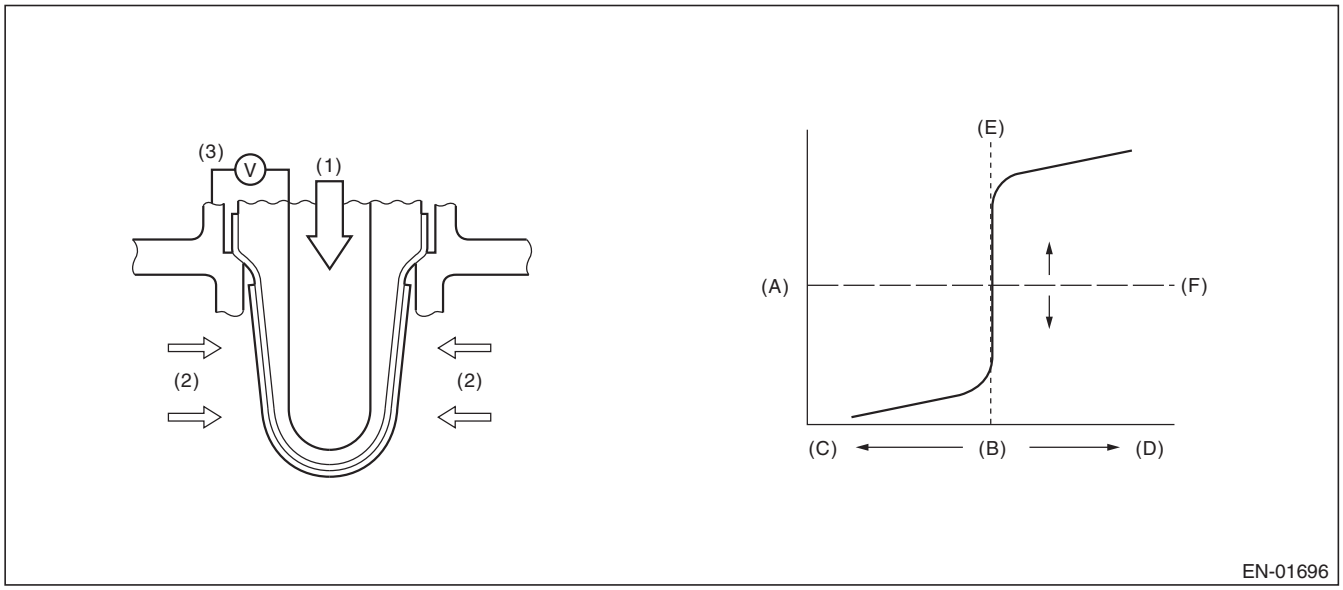

(A)	Electromotive force	(B)	Air fuel ratio	(C)	Rich
(D)	Lean	(E)	Theoretical air fuel ratio	(F)	Comparative voltage
(1)	Atmosphere	(2)	Exhaust gas	(3)	Electromotive force

3. ENABLE CONDITIONS

Secondary Parameters	Enable Conditions
Battery voltage	> 10.9 V
Rear oxygen sensor closed loop control	Operation
Engine speed when fuel cut starts	≥ 1700 rpm
Rear oxygen sensor voltage when fuel cut starts	≥ 0.55 V
Fuel cut time	≥ 5000 ms
Engine coolant temperature when fuel cut starts	≥ 72 °C (161.6 °F)
Estimated temperature of rear oxygen sensor element when fuel cut starts	≥ 450 °C (842 °F)

4. GENERAL DRIVING CYCLE

Perform diagnosis once during deceleration fuel cut from a constant and high speed driving, when rear oxygen sensor is warmed up sufficiently.

GETmyMANUALS.org

5. DIAGNOSTIC METHOD

Detect the trouble by calculating the time from the beginning of the fuel cut to the beginning of the rear oxygen sensor voltage starting to drop.

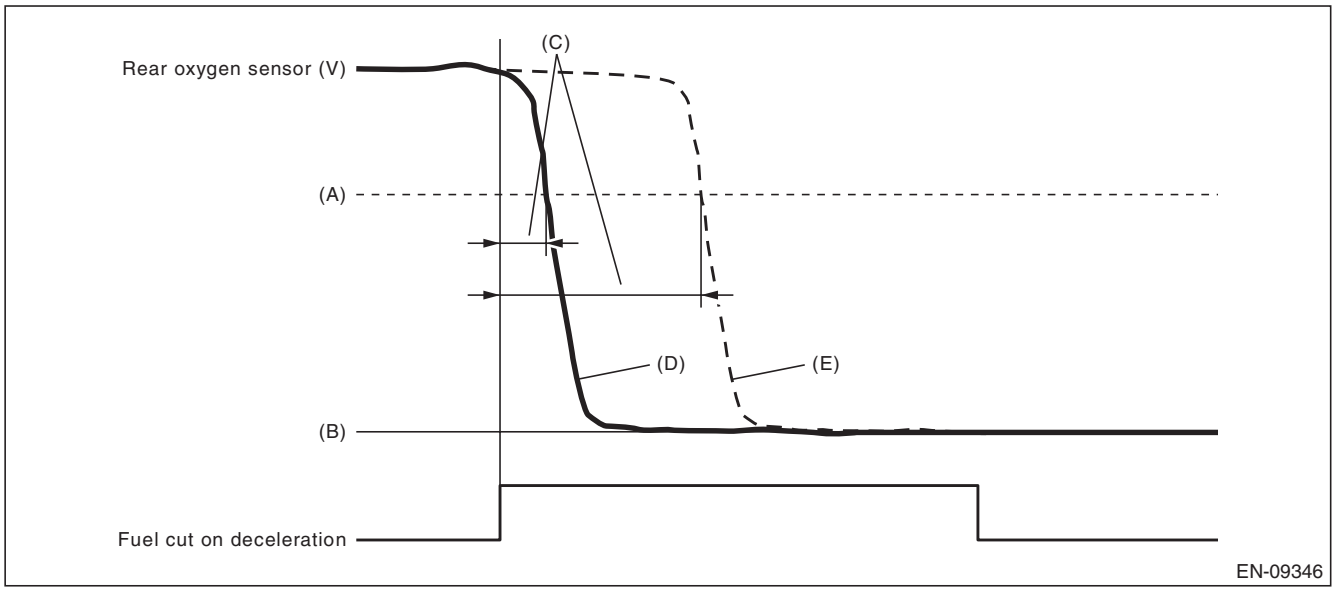

(A) 0.5 V (B) 0 V (C) Diagnostic parameter
(D) Normal (E) Malfunction

- **Abnormality Judgment**

Judge as NG when the following conditions are established.

Judgment Value

Malfunction Criteria	Threshold Value
Time when rear oxygen sensor voltage changed to 0.5 V after the fuel cut started.	> 4000 ms

Time Needed for Diagnosis: 10 seconds
Malfunction Indicator Light Illumination: Illuminates when malfunction occurs in 2 continuous driving cycles.

- **Normality Judgment**

Judge as OK and clear the NG if the following conditions are established.

Judgment Value

Malfunction Criteria	Threshold Value
Time when rear oxygen sensor voltage changed to 0.5 V after the fuel cut started.	≤ 4000 ms

Time Needed for Diagnosis: 10 seconds

GETmyMANUALS.org

AM:DTC P013F O2 SENSOR DELAYED RESPONSE - LEAN TO RICH (BANK 1 SENSOR 2)

1. OUTLINE OF DIAGNOSIS

Detect the delayed response of rear oxygen sensor output for lean → rich.
After the deceleration fuel cut has completed, detect the trouble by calculating the time when the rear oxygen sensor output increases to the predetermined voltages.
Judge as NG when the response time is larger than the threshold value.

2. COMPONENT DESCRIPTION

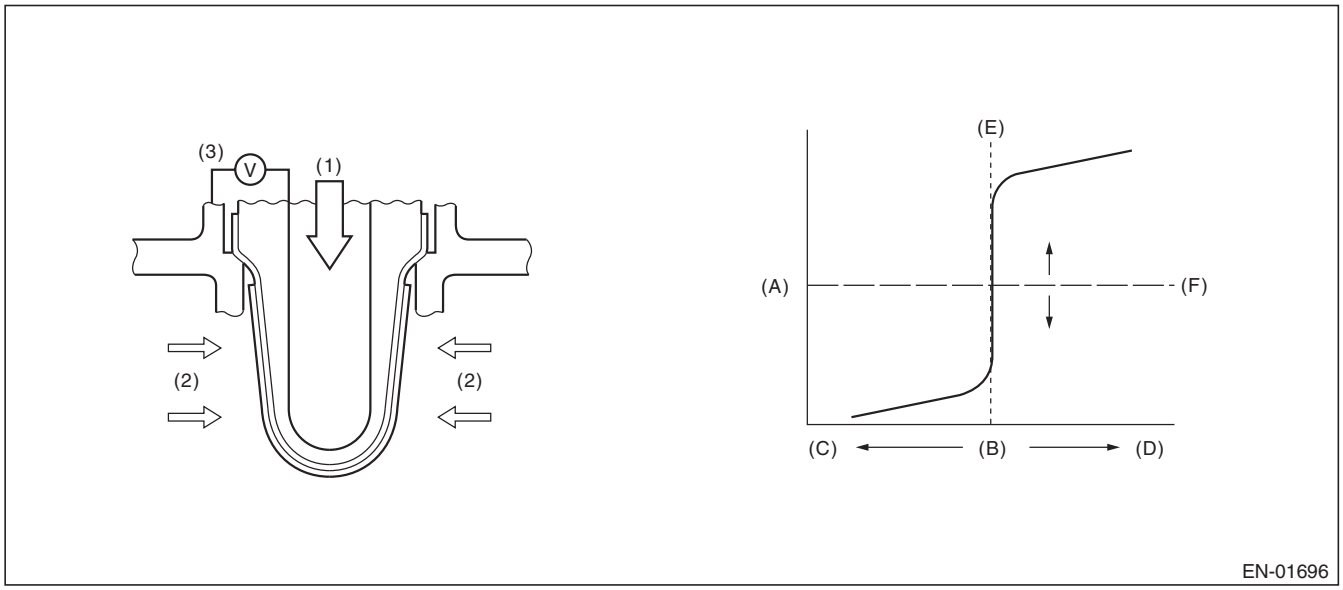

(A)	Electromotive force	(B)	Air fuel ratio	(C)	Rich
(D)	Lean	(E)	Theoretical air fuel ratio	(F)	Comparative voltage
(1)	Atmosphere	(2)	Exhaust gas	(3)	Electromotive force

3. ENABLE CONDITIONS

Secondary Parameters	Enable Conditions
Battery voltage	> 10.9 V
Rear oxygen sensor closed loop control	Operation
Engine speed	≥ 500 rpm
Rear oxygen sensor voltage when fuel cut has completed	< 0.15 V
Fuel cut time	≥ 5000 ms
Engine coolant temperature when fuel cut has completed	≥ 72 °C (161.6 °F)
Estimated element temperature of rear oxygen sensor when fuel cut has completed	≥ 450 °C (842 °F)

4. GENERAL DRIVING CYCLE

Perform diagnosis only once when recovering from the deceleration fuel cut continued for more than predetermined time with the rear oxygen sensor warmed up sufficiently.

GETTHEMANUALS.org

5. DIAGNOSTIC METHOD

Detect the trouble by calculating the time from the completion of the fuel cut to the beginning of the rear oxygen sensor voltage starting to rise.

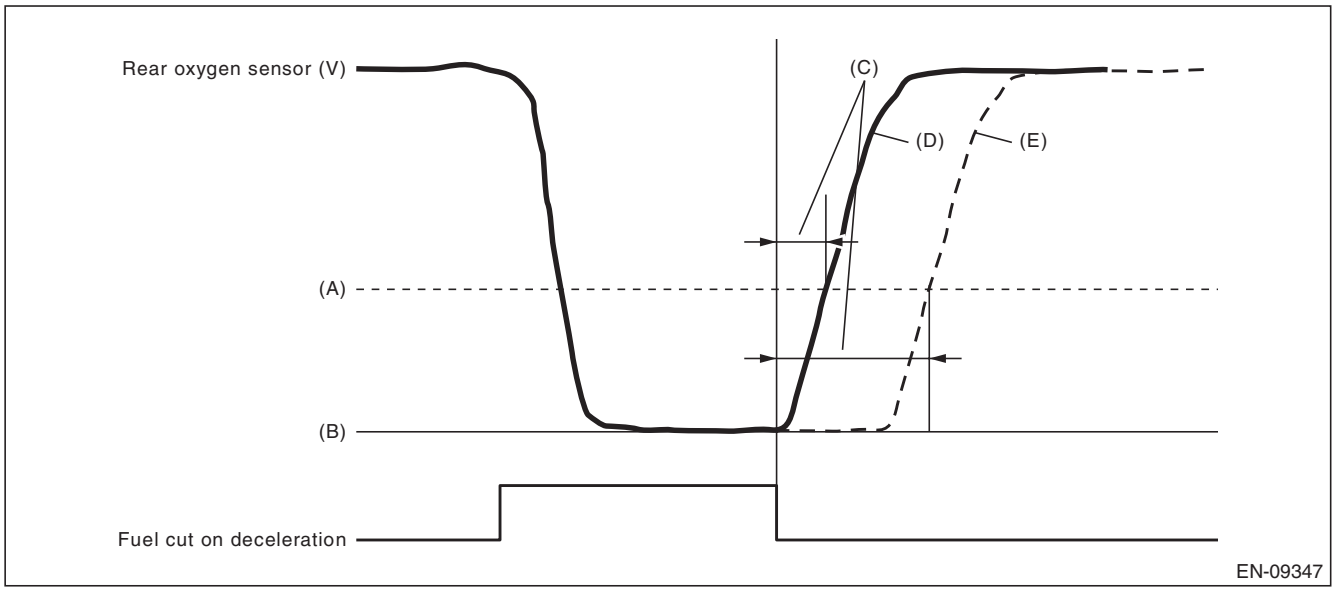

(A) 0.3 V (B) 0 V (C) Diagnostic parameter
(D) Normal (E) Malfunction

- **Abnormality Judgment**

Judge as NG when the following conditions are established.

Judgment Value

Malfunction Criteria	Threshold Value
The number of times that the rear oxygen sensor voltage changed to 0.3 V after the fuel cut has completed (time counter)	> 3750 time(s)

Time Needed for Diagnosis: 10 seconds
Malfunction Indicator Light Illumination: Illuminates when malfunction occurs in 2 continuous driving cycles.

- **Normality Judgment**

Judge as OK and clear the NG if the following conditions are established.

Judgment Value

Malfunction Criteria	Threshold Value
The number of times that the rear oxygen sensor voltage changed to 0.3 V after the fuel cut has completed (time counter)	≤ 3750 time(s)

Time Needed for Diagnosis: 10 seconds

GETmyMANUALS.org

AN:DTC P0140 O2 SENSOR CIRCUIT NO ACTIVITY DETECTED (BANK1 SENSOR2)

1. OUTLINE OF DIAGNOSIS

Detect the rear oxygen sensor open or short circuit. Judge as NG when the rear oxygen sensor voltage can be determined to be abnormal considering conditions such as intake air amount, engine coolant temperature, main feedback control and deceleration fuel cut.

2. COMPONENT DESCRIPTION

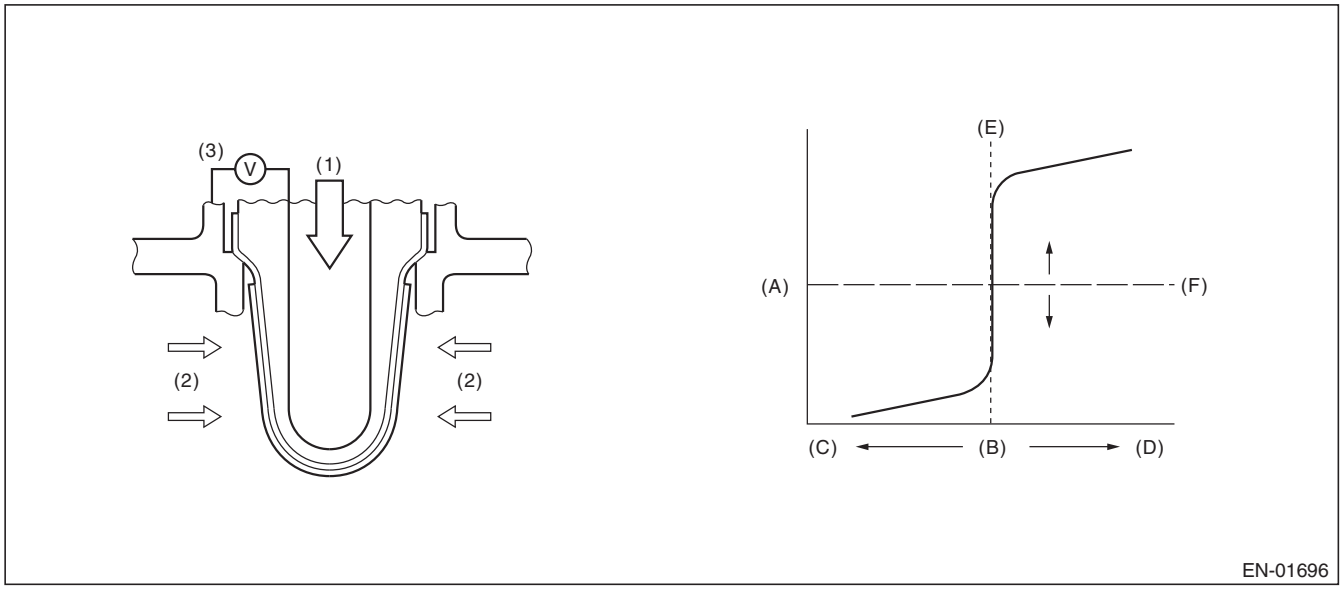

(A)	Electromotive force	(B)	Air fuel ratio	(C)	Rich
(D)	Lean	(E)	Theoretical air fuel ratio	(F)	Comparative voltage
(1)	Atmosphere	(2)	Exhaust gas	(3)	Electromotive force

3. ENABLE CONDITION (USED ONLY FOR MALFUNCTION JUDGMENT)

Secondary Parameters	Enable Conditions
Closed loop control at the rear oxygen sensor	In operation
Target output voltage of rear oxygen sensor	≥ 0.55 V + 0.05 V
Amount of intake air	≥ 10 g/s (0.35 oz/s)
Engine coolant temperature	≥ 72 °C (161.6 °F)
Misfire detection every 200 rotations	< 65535 time(s)
Front oxygen (A/F) sensor compensation coefficient	Not in limit value
Battery voltage	≥ 10.9 V
Deceleration fuel cut of 5000 ms or more.	Experienced

4. GENERAL DRIVING CYCLE

Perform the diagnosis once after starting the engine.

GETthemanuals.org

5. DIAGNOSTIC METHOD

- **Abnormality Judgment**

If the duration of time while the following conditions are met is longer than the time indicated, judge as NG.

Judgment Value

Malfunction Criteria	Threshold Value
Minimum output voltage or Maximum output voltage	> 0.15 V < 0.55 V

Time Needed for Diagnosis: 200000 ms
Malfunction Indicator Light Illumination: Illuminates when malfunction occurs in 2 continuous driving cycles.

- **Normality Judgment**

Judge as OK and clear the NG if the following conditions are established.

Judgment Value

Malfunction Criteria	Threshold Value
Diagnosis of the rear oxygen sensor voltage low side	Incomplete
Minimum output voltage	≤ 0.15 V
Maximum output voltage	≥ 0.55 V

GETthemANUALS.org

AO:DTC P0141 O2 SENSOR HEATER CIRCUIT (BANK1 SENSOR2)

1. OUTLINE OF DIAGNOSIS

Detect the malfunction of rear oxygen sensor heater.
While observing the engine condition, judge as NG if the rear oxygen sensor impedance is great.

2. COMPONENT DESCRIPTION

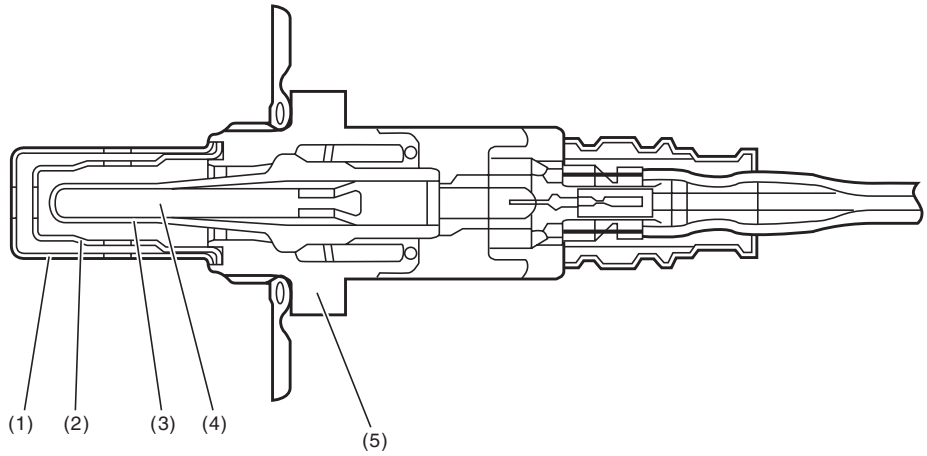

EN-08983

(1) Element cover (outer)
(2) Element cover (inner)
(3) Sensor element
(4) Ceramic heater
(5) Sensor housing

3. ENABLE CONDITIONS

Secondary Parameters	Enable Conditions
Battery voltage	≥ 10.9 V
Elapsed time after starting the engine	≥ 1000 ms
Engine coolant temperature	≥ 72 °C (161.6 °F)
A/F sensor element impedance	≤ 50 Ω
A/F sensor heater control duty	≤ 75 %
Rear oxygen sensor heater control duty	< 70 %

4. GENERAL DRIVING CYCLE

Perform the diagnosis continuously after 1000 ms seconds or more have passed since the engine started.

GETTHEMANUALS.org

5. DIAGNOSTIC METHOD

- **Abnormality Judgment**

If the duration of time while the following conditions are met is longer than the time indicated, judge as NG.

Judgment Value

Malfunction Criteria	Threshold Value
Output terminal for heater characteristics failure detection	Low

Time Needed for Diagnosis: 4 ms × 2500 time(s)
Malfunction Indicator Light Illumination: Illuminates when malfunction occurs in 2 continuous driving cycles.

- **Normality Judgment**

Judge as OK and clear the NG if the continuous time while the following conditions are established is more than the predetermined time.

Judgment Value

Malfunction Criteria	Threshold Value
Output terminal for heater characteristics failure detection	High

Time Needed for Diagnosis: 4 ms × 2500 time(s)

GETmyMANUALS.org

AP:DTC P0171 SYSTEM TOO LEAN (BANK 1)

1. OUTLINE OF DIAGNOSIS

Detect fuel system malfunction by the amount of main feedback control.

DIAGNOSTIC METHOD

Fuel system is diagnosed by comparing the target air fuel ratio calculated by ECM with the actual air fuel ratio measured by sensor.

2. ENABLE CONDITION

Secondary Parameters	Enable Conditions
A/F main learning system	In operation
Engine coolant temperature	≥ 72 °C (161.6 °F)
Engine load change	< 0.02 g/rev (0 oz/rev)
Engine load	≥ Value of Map 1

Map 1

Engine speed (rpm)	Idling	700	1200	1600	2000	2400	2800	3200	3600	4000	4400
Measured value (g (oz)/rev)	na	0.230 (0.01)	0.217 (0.01)	0.213 (0.01)	0.210 (0.01)	0.210 (0.01)	0.220 (0.01)	0.223 (0.01)	0.240 (0.01)	0.252 (0.01)	0.261 (0.01)

3. GENERAL DRIVING CYCLE

Perform the diagnosis continuously at idling or at a constant speed after warming up the engine.

4. DIAGNOSTIC METHOD

- **Abnormality Judgment**

Compare the diagnostic value (fsobd) with the threshold value, and if a condition meeting the malfunction criteria below continues for 10 s × 5 time(s) or more, judge that there is a fault in the fuel system.

Judgment Value

Malfunction Criteria	Threshold Value
fsobd = (sglmd – tglmda) + faf + flaf In this case: sglmd = measured lambda tglmda = target lambda faf = main feedback compensation coefficient (every 64 milliseconds) flaf = main feedback learning compensation coefficient	≥ Value from Map 2

Map 2

Amount of air (g (oz)/s)	0 (0)	2.34375 (0.08)	4.6875 (0.17)	7.03125 (0.25)	9.375 (0.33)	11.71875 (0.41)	14.0625 (0.5)
fsobdL1 (%)	1.4	1.4	1.368623	1.319185	1.26975	1.265	1.265

Time Needed for Diagnosis: 10 s × 5 time(s)
Malfunction Indicator Light Illumination: Illuminates when malfunction occurs in 2 continuous driving cycles.

- **Normality Judgment**

Judge as OK and clear the NG if the continuous time while the following conditions are established is more than the predetermined time.

Judgment Value

Malfunction Criteria	Threshold Value
fsobd = (sglmd – tglmda) + faf + flaf	< 1.15

Time Needed for Diagnosis: 10 s

GETmyMANUALS.org

AQ:DTC P0172 SYSTEM TOO RICH (BANK 1)

1. OUTLINE OF DIAGNOSIS

Detect fuel system malfunction by the amount of main feedback control.

Diagnostic method

Fuel system is diagnosed by comparing the target air fuel ratio calculated by ECM with the actual air fuel ratio measured by sensor.

2. ENABLE CONDITION

Secondary Parameters	Enable Conditions
A/F main learning system	In operation
Engine coolant temperature	≥ 72 °C (161.6 °F)
Engine load change	≤ 0.02 g/rev (0 oz/rev)
Learning value of EVAP conc.	< 0.2
Cumulative time of canister purge after engine start	≥ 20 s
Continuous period after canister purge starting	≥ 5000 ms
Engine load	≥ Value of Map 1

Map 1

Engine speed (rpm)	Idling	700	1200	1600	2000	2400	2800	3200	3600	4000	4400
Measured value (g (oz)/rev)	na	0.230 (0.01)	0.217 (0.01)	0.213 (0.01)	0.210 (0.01)	0.210 (0.01)	0.220 (0.01)	0.223 (0.01)	0.240 (0.01)	0.252 (0.01)	0.261 (0.01)

3. GENERAL DRIVING CYCLE

Perform the diagnosis continuously at idling or at a constant speed after warming up the engine.

GETmyMANUALS.org

4. DIAGNOSTIC METHOD

• Abnormality Judgment

Compare the diagnostic value (fsobd) with the threshold value, and if a condition meeting the malfunction criteria below continues for 10 s × 5 time(s) or more, judge that there is a fault in the fuel system.

Judgment Value

Malfunction Criteria	Threshold Value
fsobd = (sglmd – tglmda) + faf + flaf In this case: sglmd = measured lambda tglmda = target lambda faf = main feedback compensation coefficient (every 64 milliseconds) flaf = main feedback learning compensation coefficient	< Value of Map 2

Map 2

Amount of air (g (oz)/s)	0 (0)	2.34375 (0.08)	4.6875 (0.17)	7.03125 (0.25)	9.375 (0.33)	11.71875 (0.41)	14.0625 (0.5)
fsobdL1 (%)	0.6	0.6	0.63137	0.68082	0.71025	0.72525	0.73025

Time Needed for Diagnosis: 10 s × 5 time(s)
Malfunction Indicator Light Illumination: Illuminates when malfunction occurs in 2 continuous driving cycles.

• Normality Judgment

Judge as OK if the status that the criteria below are met continues for 10 seconds.

Judgment Value

Malfunction Criteria	Threshold Value
fsobd = (sglmd – tglmda) + faf + flaf	≥ 0.85

Time Needed for Diagnosis: 10 s

GETmyMANUALS.org

AR:DTC P0181 FUEL TEMPERATURE SENSOR “A” CIRCUIT RANGE/PERFORMANCE

1. OUTLINE OF DIAGNOSIS

Detect faults in the fuel temperature sensor output properties.
Diagnosis is performed in two methods (drift diagnosis and stuck diagnosis). If either is NG, judge as NG. If both are OK, Judge as OK and clear the NG.

Drift Diagnosis

Normally fuel temperature is lower than engine coolant temperature. When the fuel temperature becomes higher than the engine coolant temperature, the range is considered to be shifted, and judged as NG.

Stuck Diagnosis

As the engine warms up (cumulative amount of intake air after starting is large), if the fuel temperature which should rise does not, determine as being stuck and NG.

2. COMPONENT DESCRIPTION

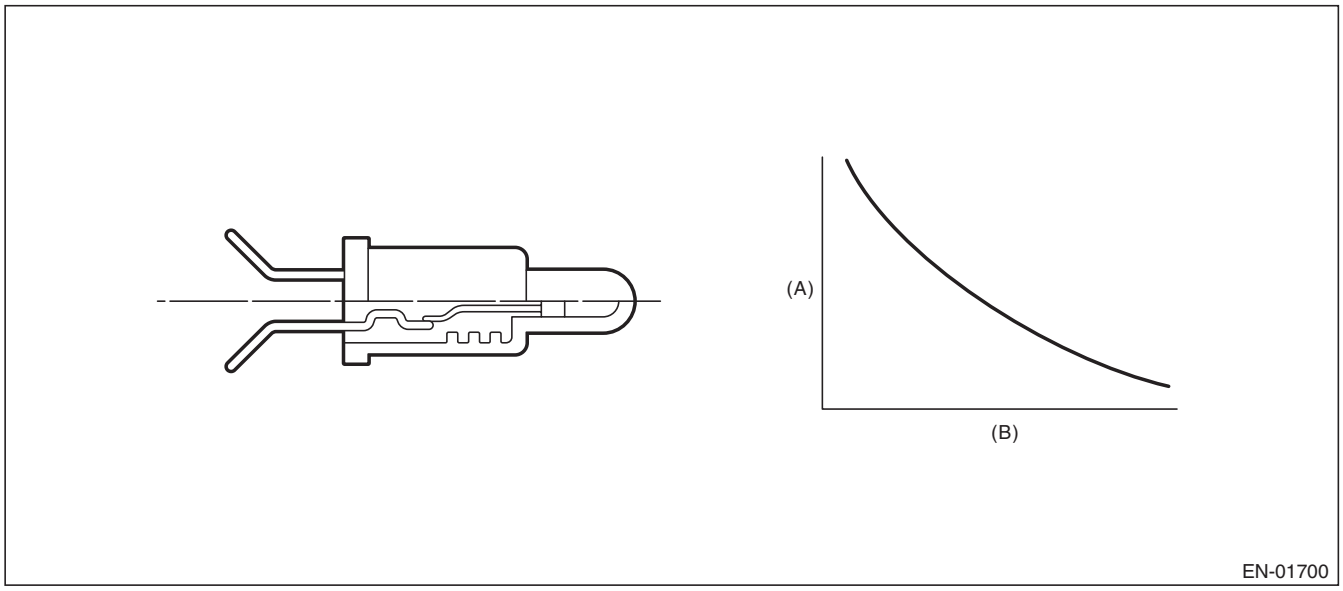

(A) Resistance value (Ω) (B) Fuel temperature °C (°F)

3. ENABLE CONDITION

DRIFT DIAGNOSIS

Secondary Parameters	Enable Conditions
None	

4. GENERAL DRIVING CYCLE

Always perform the diagnosis continuously.

GETmyMANUALS.org

5. DIAGNOSTIC METHOD

• Abnormality Judgment

If the duration of time while the following conditions are met is longer than the time indicated, judge as NG.

Judgment Value

Malfunction Criteria	Threshold Value
Fuel level	≥ 10.5 ℓ (2.77 US gal, 2.31 Imp gal)
Elapsed time after starting the engine	≥ 20 s
Engine coolant temperature – Engine coolant temperature at engine start	> 10 °C (18°F)
Fuel temperature – Engine coolant temperature	≥ 10 °C (18°F)
Battery voltage	≥ 10.9 V

Time Needed for Diagnosis: 120 s
Malfunction Indicator Light Illumination: Illuminates when malfunction occurs in 2 continuous driving cycles.

• Normality Judgment

Judge as OK and clear the NG if the continuous time while the following conditions are established is more than the predetermined time.

Judgment Value

Malfunction Criteria	Threshold Value
Fuel level	≥ 10.5 ℓ (2.77 US gal, 2.31 Imp gal)
Elapsed time after starting the engine	≥ 20 s
Engine coolant temperature – Engine coolant temperature at engine start	> 10 °C (18°F)
Fuel temperature – Engine coolant temperature	< 10 °C (18°F)
Battery voltage	≥ 10.9 V
Engine coolant temperature	< 70 °C (158 °F)

Time Needed for Diagnosis: Less than 1 second

6. ENABLE CONDITION

Stuck Diagnosis

Secondary Parameters	Enable Conditions
Elapsed time after starting the engine	≥ 20000 ms
Battery voltage	≥ 10.9 V

7. GENERAL DRIVING CYCLE

Perform the diagnosis continuously 20 seconds after starting engine.

GETmyMANUALS.org

8. DIAGNOSTIC METHOD

- **Abnormality Judgment**

Judge as NG when the following conditions are established.

Judgment Value

Malfunction Criteria	Threshold Value
Accumulated amount of intake air	≥ 551043 g (19435.29 oz)
Fuel temperature difference between Max. and Min.	< 2 °C (3.6°F)

Time Needed for Diagnosis: Less than 1 second
Malfunction Indicator Light Illumination: Illuminates when malfunction occurs in 2 continuous driving cycles.

- **Normality Judgment**

Judge as OK and clear the NG if the following conditions are established.

Judgment Value

Malfunction Criteria	Threshold Value
Fuel temperature difference between Max. and Min.	≥ 2 °C (3.6°F)

Time Needed for Diagnosis: Less than 1 second

GETmyMANUALS.org

AS:DTC P0182 FUEL TEMPERATURE SENSOR “A” CIRCUIT LOW INPUT

1. OUTLINE OF DIAGNOSIS

Detect the open or short circuit of fuel temperature sensor.
Judge as NG if out of specification.

2. COMPONENT DESCRIPTION

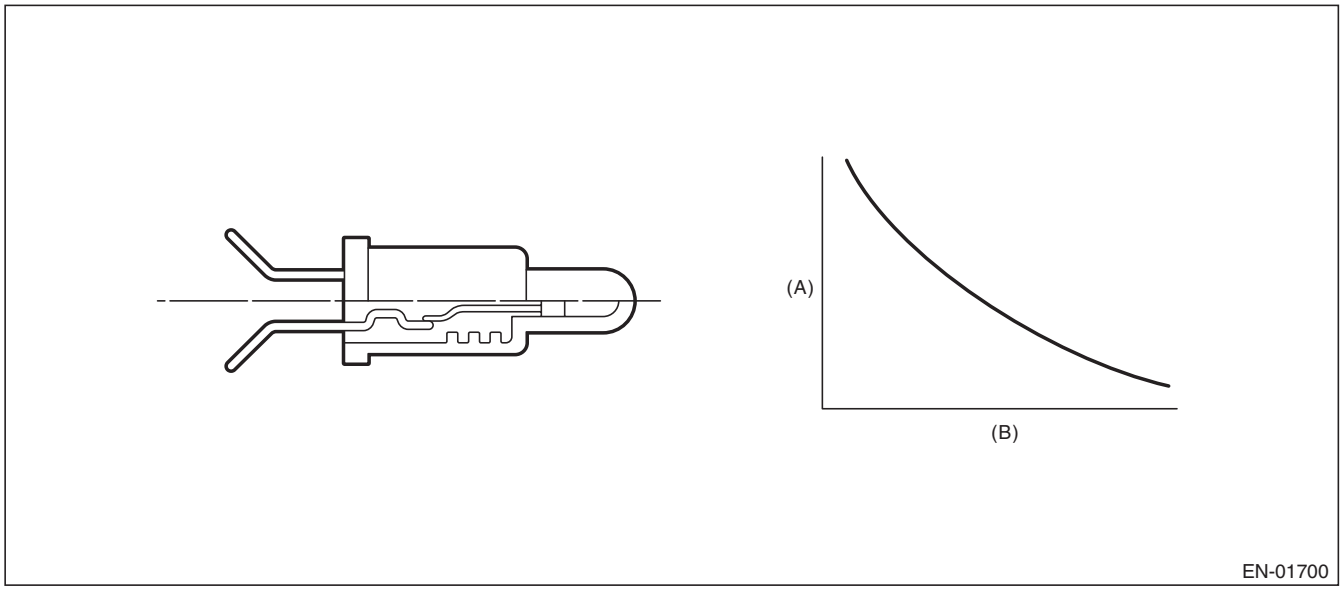

(A) Resistance value (Ω) (B) Fuel temperature °C (°F)

3. ENABLE CONDITION

Secondary Parameters	Enable Conditions
None	

4. GENERAL DRIVING CYCLE

Always perform the diagnosis continuously.

GETmyMANUALS.org

5. DIAGNOSTIC METHOD

- **Abnormality Judgment**

If the duration of time while the following conditions are met is longer than the time indicated, judge as NG.

Judgment Value

Malfunction Criteria	Threshold Value
Output voltage	< 0.344 V
Battery voltage	≥ 10.9 V

Time Needed for Diagnosis: 2500 ms
Malfunction Indicator Light Illumination: Illuminates as soon as a malfunction occurs.

- **Normality Judgment**

Judge as OK and clear the NG if the continuous time while the following conditions are established is more than the predetermined time.

Judgment Value

Malfunction Criteria	Threshold Value
Output voltage	≥ 0.344 V
Battery voltage	≥ 10.9 V

Time Needed for Diagnosis: Less than 1 second

GETmyMANUALS.org

AT:DTC P0183 FUEL TEMPERATURE SENSOR “A” CIRCUIT HIGH INPUT

1. OUTLINE OF DIAGNOSIS

Detect the open or short circuit of fuel temperature sensor.
Judge as NG if out of specification.

2. COMPONENT DESCRIPTION

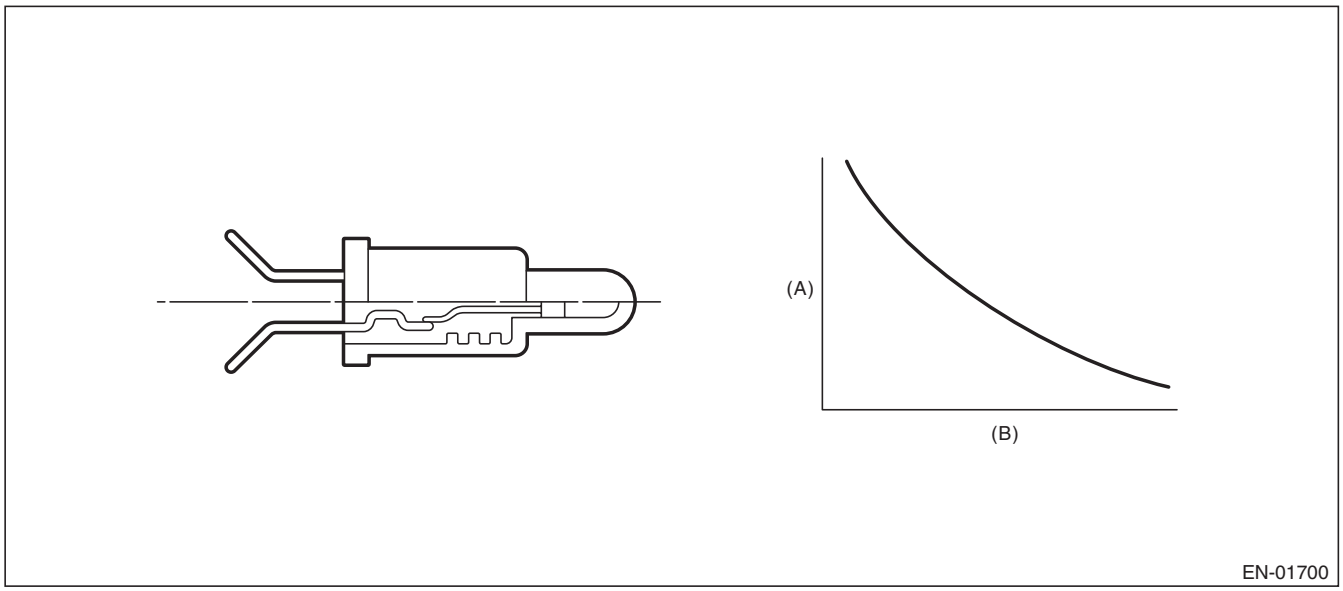

(A) Resistance value (Ω) (B) Fuel temperature °C (°F)

3. ENABLE CONDITION

Secondary Parameters	Enable Conditions
None	

4. GENERAL DRIVING CYCLE

Always perform the diagnosis continuously.

GETTHEMANUALS.org

5. DIAGNOSTIC METHOD

- **Abnormality Judgment**

If the duration of time while the following conditions are met is longer than the time indicated, judge as NG.

Judgment Value

Malfunction Criteria	Threshold Value
Output voltage	≥ 4.714 V
Battery voltage	≥ 10.9 V

Time Needed for Diagnosis: 2500 ms
Malfunction Indicator Light Illumination: Illuminates as soon as a malfunction occurs.

- **Normality Judgment**

Judge as OK and clear the NG if the continuous time while the following conditions are established is more than the predetermined time.

Judgment Value

Malfunction Criteria	Threshold Value
Output voltage	< 4.714 V
Battery voltage	≥ 10.9 V

Time Needed for Diagnosis: Less than 1 second

GETTHEMANUALS.org

AU:DTC P0201 INJECTOR #1

1. OUTLINE OF DIAGNOSIS

Based on the self-diagnostic result of the injector driving IC, judge the injector driving circuit as normal or abnormal.
Injector driving IC detects the status of “fuel remains injected” or “fuel is not injected” as a malfunction.

2. ENABLE CONDITIONS

Secondary Parameters	Enable Conditions
Battery voltage	≥ 10.9 V
Elapsed time after starting the engine	> 1 s
Engine speed	> 500 rpm
Injection time	≥ 1000 μs and < 120000000/engine speed – 1000 μs
Injection status	Not during fuel cut and Not during asynchronous injection controlled by crankshaft position sensor

3. GENERAL DRIVING CYCLE

Always perform the diagnosis continuously.

4. DIAGNOSTIC METHOD

- **Abnormality Judgment**

Judge as NG when the following conditions are established.

Judgment Value

Malfunction Criteria	Threshold Value
Injector driving IC information	Malfunction

Time Needed for Diagnosis: 2500 ms
Malfunction Indicator Light Illumination: Illuminates as soon as a malfunction occurs.

- **Normality Judgment**

Judge as OK and clear the NG if the following conditions are established.

Judgment Value

Malfunction Criteria	Threshold Value
Injector driving IC information	Normal

Time Needed for Diagnosis: Less than 1 second

GETTHEMANUALS.org

AV:DTC P0202 INJECTOR #2

1. OUTLINE OF DIAGNOSIS

NOTE:
For the detection standard, refer to DTC P0201. <Ref. to GD(H4DOTC)-97, DTC P0201 INJECTOR #1, Diagnostic Trouble Code (DTC) Detecting Criteria.>

AW:DTC P0203 INJECTOR #3

1. OUTLINE OF DIAGNOSIS

NOTE:
For the detection standard, refer to DTC P0201. <Ref. to GD(H4DOTC)-97, DTC P0201 INJECTOR #1, Diagnostic Trouble Code (DTC) Detecting Criteria.>

AX:DTC P0204 INJECTOR #4

1. OUTLINE OF DIAGNOSIS

NOTE:
For the detection standard, refer to DTC P0201. <Ref. to GD(H4DOTC)-97, DTC P0201 INJECTOR #1, Diagnostic Trouble Code (DTC) Detecting Criteria.>

GETTHEMANUALS.org

AY:DTC P0222 THROTTLE/PEDAL POSITION SENSOR/SWITCH “B” CIRCUIT LOW

1. OUTLINE OF DIAGNOSIS

Detect the open or short circuit of throttle position sensor 2.
Judge as NG if out of specification.

2. COMPONENT DESCRIPTION

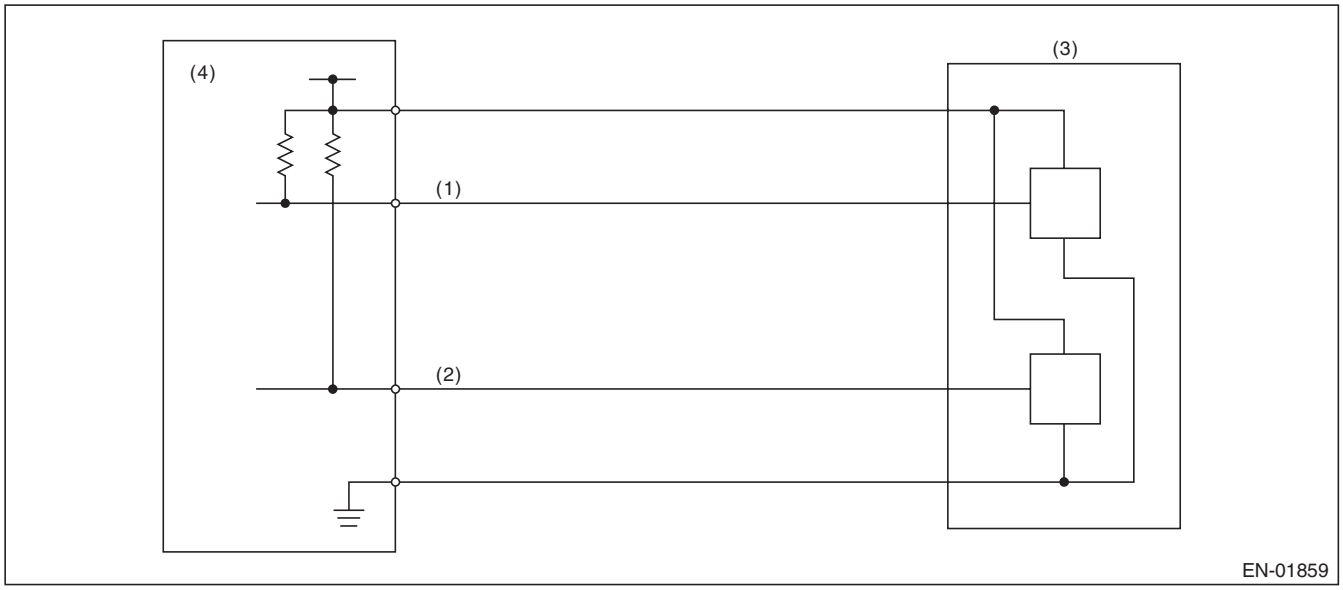

(1) Throttle position sensor 1 signal
(2) Throttle position sensor 2 signal
(3) Throttle position sensor
(4) Engine control module (ECM)

3. ENABLE CONDITION

Secondary Parameters	Enable Conditions
Ignition switch	ON
Battery voltage	≥ 6 V

4. GENERAL DRIVING CYCLE

Always perform the diagnosis continuously.

GETmyMANUALS.org

5. DIAGNOSTIC METHOD

- **Abnormality Judgment**

If the duration of time while the following conditions are met is longer than the time indicated, judge as NG.

Judgment Value

Malfunction Criteria	Threshold Value
Sensor 2 input voltage	≤ 1.07 V

Time Needed for Diagnosis: 24 ms
Malfunction Indicator Light Illumination: Illuminates as soon as a malfunction occurs.

- **Normality Judgment**

Judge as OK and clear the NG if the continuous time while the following conditions are established is more than the predetermined time.

Judgment Value

Malfunction Criteria	Threshold Value
Sensor 2 input voltage	> 1.07 V

Time Needed for Diagnosis: 24 ms

GETTHEMANUALS.org

AZ:DTC P0223 THROTTLE/PEDAL POSITION SENSOR/SWITCH “B” CIRCUIT HIGH

1. OUTLINE OF DIAGNOSIS

Detect the open or short circuit of throttle position sensor 2.
Judge as NG if out of specification.

2. COMPONENT DESCRIPTION

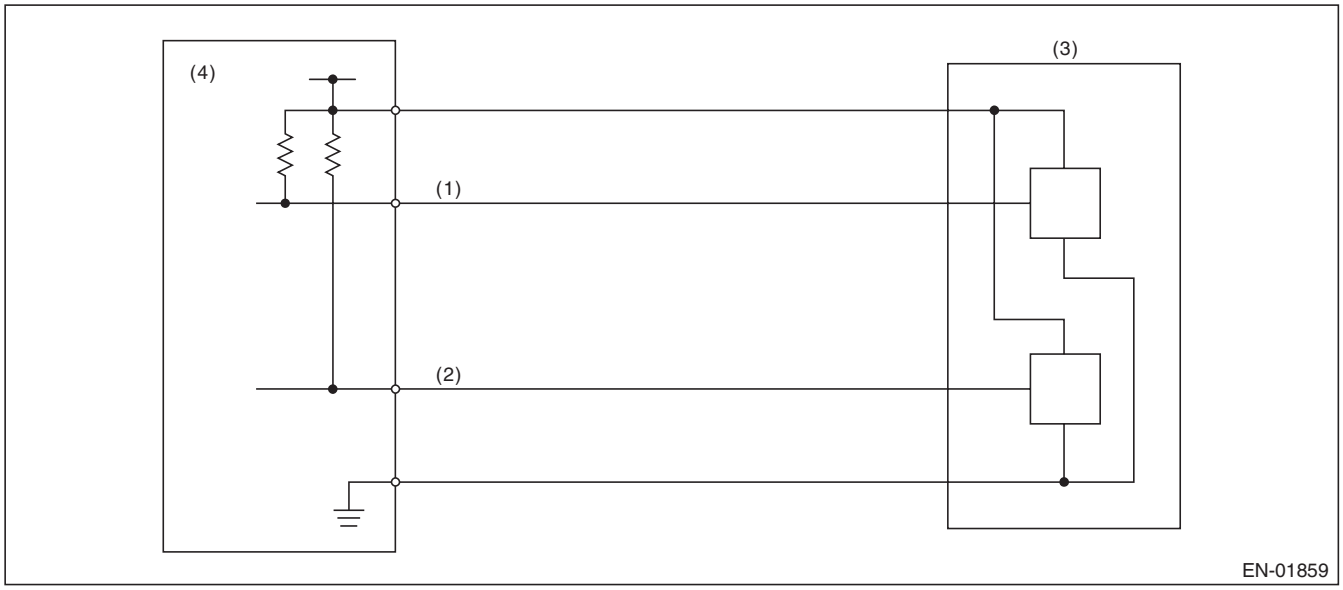

(1) Throttle position sensor 1 signal
(2) Throttle position sensor 2 signal
(3) Throttle position sensor
(4) Engine control module (ECM)

3. ENABLE CONDITION

Secondary Parameters	Enable Conditions
Ignition switch	ON
Battery voltage	≥ 6 V

4. GENERAL DRIVING CYCLE

Always perform the diagnosis continuously.

GETTHEMANUALS.org

5. DIAGNOSTIC METHOD

- **Abnormality Judgment**

If the duration of time while the following conditions are met is longer than the time indicated, judge as NG.

Judgment Value

Malfunction Criteria	Threshold Value
Sensor 2 input voltage	≥ 4.858 V

Time Needed for Diagnosis: 24 ms
Malfunction Indicator Light Illumination: Illuminates as soon as a malfunction occurs.

- **Normality Judgment**

Judge as OK and clear the NG if the continuous time while the following conditions are established is more than the predetermined time.

Judgment Value

Malfunction Criteria	Threshold Value
Sensor 2 input voltage	< 4.858 V

Time Needed for Diagnosis: 24 ms

GETTHEMANUALS.org

BA:DTC P0230 FUEL PUMP PRIMARY CIRCUIT

1. OUTLINE OF DIAGNOSIS

Detect the malfunction of fuel pump control unit.
Judge as NG when the NG signal is sent through a diagnostic line coming from the fuel pump control unit.
Fuel pump control unit detects the open or short circuit malfunction for each line, and then sends NG signals if one of them is found NG.

2. COMPONENT DESCRIPTION

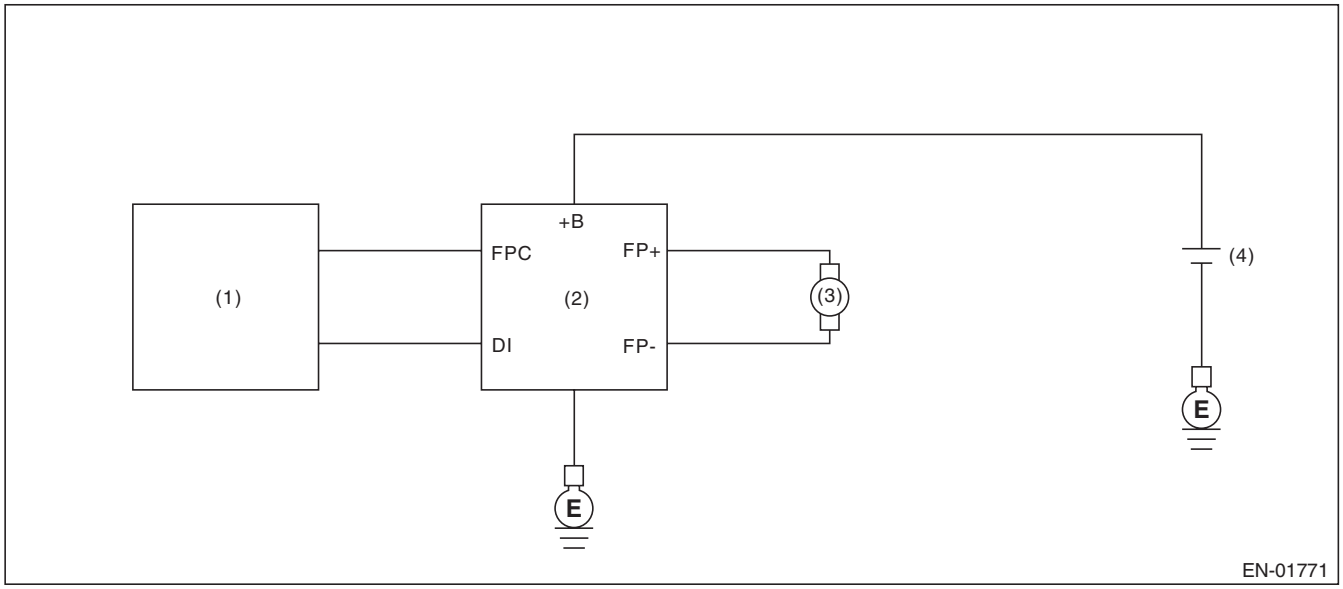

(1) Engine control module (ECM)
(2) Fuel pump control unit
(3) Fuel pump
(4) Battery

3. ENABLE CONDITION

Secondary Parameters	Enable Conditions
None	

4. GENERAL DRIVING CYCLE

Always perform the diagnosis continuously.

GETTHEMANUALS.org

5. DIAGNOSTIC METHOD

- **Abnormality Judgment**

If the duration of time while the following conditions are met is longer than the time indicated, judge as NG.

Judgment Value

Malfunction Criteria	Threshold Value
Battery voltage	≥ 8 V
Elapsed time after starting the engine	≥ 180000 ms
Fuel pump control	ON
Fuel pump control unit output diagnosis signal	Low
Fuel level	≥ 10 ℓ (2.64 US gal, 2.2 Imp gal)

Time Needed for Diagnosis: 2500 ms
Malfunction Indicator Light Illumination: Illuminates when malfunction occurs in 2 continuous driving cycles.

- **Normality Judgment**

Judge as OK and clear the NG if the continuous time while the following conditions are established is more than the predetermined time.

Judgment Value

Malfunction Criteria	Threshold Value
Battery voltage	≥ 8 V
Elapsed time after starting the engine	≥ 180000 ms
Fuel pump control	ON
Fuel pump control unit output diagnosis signal	High
Fuel level	≥ 10 ℓ (2.64 US gal, 2.2 Imp gal)

Time Needed for Diagnosis: Less than 1 second

GETTHEMANUALS.org

BB:DTC P0244 TURBO/SUPER CHARGER WASTEGATE SOLENOID “A” RANGE/PERFORMANCE

1. OUTLINE OF DIAGNOSIS

Detect the malfunction of wastegate control solenoid valve function.
Judge as NG when becoming high wastegate pressure.

2. COMPONENT DESCRIPTION

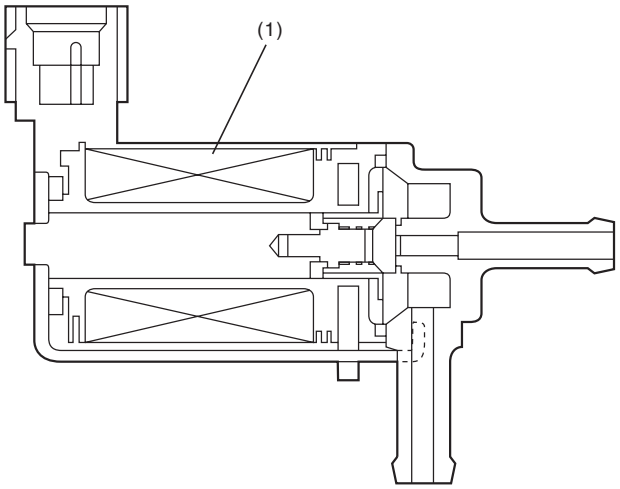

EN-01772

(1) Coil

3. ENABLE CONDITIONS

Secondary Parameters	Enable Conditions
None	

4. GENERAL DRIVING CYCLE

Always perform the diagnosis continuously.

GETTHEMANUALS.org

5. DIAGNOSTIC METHOD

- **Abnormality Judgment**

If the duration of time while the following conditions are met is longer than the time indicated, judge as NG.

Judgment Value

Malfunction Criteria	Threshold Value
Intake manifold pressure	≥ Value from Map

Map

		Atmospheric pressure (kPa (mmHg, inHg))							
		64 (480, 18.9)	70.6 (530, 20.9)	77.3 (580, 22.8)	84 (630, 24.8)	90.6 (680, 26.8)	93.3 (700, 27.6)	96 (720, 28.3)	97.3 (730, 28.7)
Engine speed (rpm)	2000	194.6 (1460, 57.5)	194.6 (1460, 57.5)	194.6 (1460, 57.5)	194.6 (1460, 57.5)	194.6 (1460, 57.5)	194.6 (1460, 57.5)	194.6 (1460, 57.5)	194.6 (1460, 57.5)
	2400	197.3 (1480, 58.3)	197.3 (1480, 58.3)	197.3 (1480, 58.3)	197.3 (1480, 58.3)	197.3 (1480, 58.3)	197.3 (1480, 58.3)	197.3 (1480, 58.3)	197.3 (1480, 58.3)
	2800	197.3 (1480, 58.3)	197.3 (1480, 58.3)	197.3 (1480, 58.3)	197.3 (1480, 58.3)	197.3 (1480, 58.3)	197.3 (1480, 58.3)	197.3 (1480, 58.3)	197.3 (1480, 58.3)
	3200	193.9 (1454, 57.3)	194.7 (1461, 57.5)	195.6 (1467, 57.8)	196.4 (1474, 58)	197.3 (1480, 58.3)	197.3 (1480, 58.3)	197.3 (1480, 58.3)	197.3 (1480, 58.3)
	3600	188.3 (1413, 55.6)	190.9 (1432, 56.4)	193.5 (1451, 57.1)	196 (1471, 57.9)	198.6 (1490, 58.7)	198.6 (1490, 58.7)	198.6 (1490, 58.7)	198.6 (1490, 58.7)
	4000	182.6 (1370, 53.9)	187 (1403, 55.2)	191.3 (1435, 56.5)	195.6 (1468, 57.8)	200 (1500, 59.1)	200 (1500, 59.1)	200 (1500, 59.1)	200 (1500, 59.1)
	4400	172.2 (1292, 50.9)	178.3 (1338, 52.7)	184.4 (1383, 54.4)	190.4 (1429, 56.2)	196.5 (1474, 58)	198.2 (1487, 58.5)	200 (1500, 59.1)	200 (1500, 59.1)
	4800	161.8 (1214, 47.8)	169.6 (1273, 50.1)	177.4 (1331, 52.4)	185.2 (1390, 54.7)	193 (1448, 57)	196.5 (1474, 58)	200 (1500, 59.1)	200 (1500, 59.1)
	5200	155.2 (1164, 45.8)	164.9 (1237, 48.7)	174.7 (1311, 51.6)	184.4 (1384, 54.5)	194.2 (1457, 57.4)	198.6 (1490, 58.7)	203.1 (1523, 60)	203.9 (1530, 60.2)
	5600	149 (1118, 44)	160.8 (1206, 47.5)	172.6 (1295, 51)	184.4 (1383, 54.5)	196.2 (1472, 57.9)	200.7 (1506, 59.3)	205.2 (1540, 60.6)	207.9 (1560, 61.4)
	6000	138.3 (1038, 40.8)	151.7 (1138, 44.8)	165.1 (1239, 48.8)	178.5 (1339, 52.7)	191.9 (1440, 56.7)	196.4 (1473, 58)	200.8 (1507, 59.3)	205.3 (1540, 60.6)
	6400	137 (1028, 40.5)	150.3 (1128, 44.4)	163.5 (1227, 48.3)	176.8 (1326, 52.2)	190 (1426, 56.1)	194.5 (1459, 57.4)	198.9 (1492, 58.7)	203.3 (1525, 60)
kPa (mmHg, inHg)									

Time Needed for Diagnosis: 2000 ms
Malfunction Indicator Light Illumination: Illuminates as soon as a malfunction occurs.

- **Normality Judgment**

Judge as OK and clear the NG if the continuous time while the following conditions are established is more than the predetermined time.

Judgment Value

Malfunction Criteria	Threshold Value
Intake manifold pressure	< Value from Map – 20 kPa (150 mmHg, 5.9 inHg)

Time Needed for Diagnosis: Less than 1 second

GETTHEMANUALS.org

BC:DTC P0245 TURBO/SUPER CHARGER WASTEGATE SOLENOID “A” LOW

1. OUTLINE OF DIAGNOSIS

Detect open or short circuit of the wastegate control solenoid valve.
Judge as NG when the terminal output voltage remains Low during outputting the duty signal.

2. COMPONENT DESCRIPTION

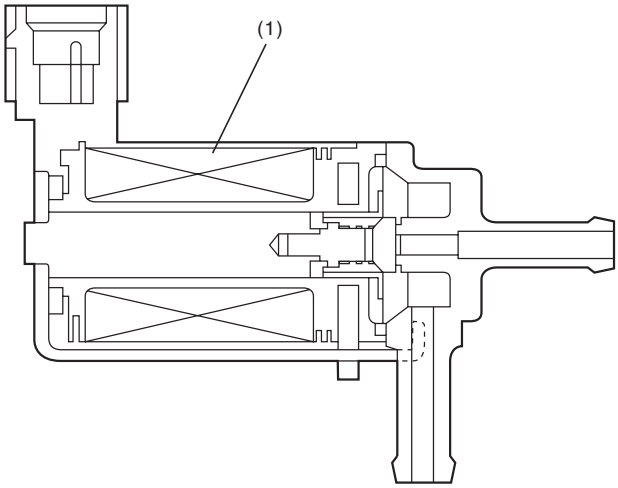

EN-01772

(1) Coil

3. ENABLE CONDITION

Secondary Parameters	Enable Conditions
Battery voltage	≥ 10.9 V
Elapsed time after starting the engine	≥ 1 second

4. GENERAL DRIVING CYCLE

Perform the diagnosis continuously after starting the engine.

5. DIAGNOSTIC METHOD

Abnormality Judgment

If the duration of time while the following conditions are met is longer than the time indicated, judge as NG.

Judgment Value

Malfunction Criteria	Threshold Value
Terminal output voltage	Low
Duty ratio of wastegate control	< 75%

Time Needed for Diagnosis: 4 ms × 640 ms
Malfunction Indicator Light Illumination: Illuminates as soon as a malfunction occurs.

Normality Judgment

Judge as OK and clear the NG if the continuous time while the following conditions are established is more than the predetermined time.

Judgment Value

Malfunction Criteria	Threshold Value
Terminal output voltage	High

Time Needed for Diagnosis: Less than 1 second

GETTHEMANUALS.org

BD:DTC P0246 TURBO/SUPER CHARGER WASTEGATE SOLENOID “A” HIGH

1. OUTLINE OF DIAGNOSIS

Detect open or short circuit of the wastegate control solenoid valve.
Judge as NG when the terminal output voltage remains Low or High during outputting the duty signal.

2. COMPONENT DESCRIPTION

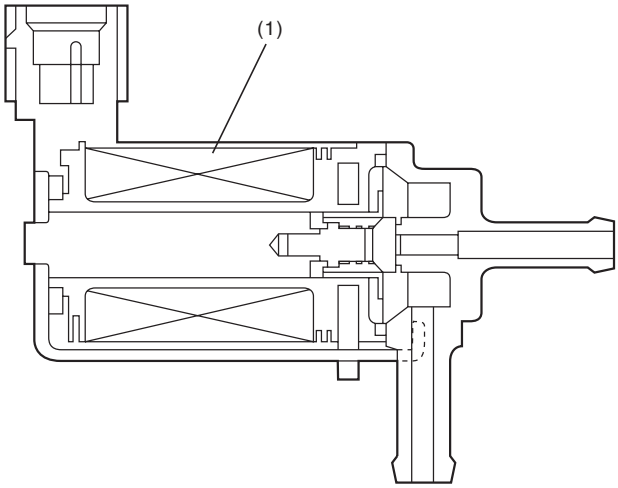

EN-01772

(1) Coil

3. ENABLE CONDITION

Secondary Parameters	Enable Conditions
Battery voltage	≥ 10.9 V
Elapsed time after starting the engine	≥ 1 second

4. GENERAL DRIVING CYCLE

Perform the diagnosis continuously after starting the engine.

5. DIAGNOSTIC METHOD

Abnormality Judgment

If the duration of time while the following conditions are met is longer than the time indicated, judge as NG.

Judgment Value

Malfunction Criteria	Threshold Value
Terminal output voltage	High
Duty ratio of wastegate control	≥ 25%

Time Needed for Diagnosis: 4 ms × 640 ms
Malfunction Indicator Light Illumination: Illuminates as soon as a malfunction occurs.

Normality Judgment

Judge as OK and clear the NG if the continuous time while the following conditions are established is more than the predetermined time.

Judgment Value

Malfunction Criteria	Threshold Value
Terminal output voltage	Low

Time Needed for Diagnosis: Less than 1 second

GETTHEMANUALS.org

BE:DTC P0301 CYLINDER 1 MISFIRE DETECTED

1. OUTLINE OF DIAGNOSIS

Detect the presence of misfire occurrence. (Revolution fluctuation method)
Monitoring Misfire which influences exhaust deterioration (1.5 times of FTP) and catalyst damage is made obligatory by the law. Misfire affecting these two has two patterns below. :

- Intermittent misfire (The same cylinder misfires in random, or different cylinders misfire in random.): FTP 1.5 times misfire
- Every time misfire (The same cylinder misfires every time.): FTP 1.5 times misfire, Catalyst damage misfire

The following detecting methods are adopted for these detection.
1) Intermittent misfire: FTP 1.5 times misfire

- 180° Interval Difference Method
- 360° Interval Difference Method (whole range)
- 720° Interval Difference Method (3,000 rpm or more)

2) Misfire every time: FTP 1.5 times misfire, Catalyst damage misfire

- 360° Interval Difference Method

2. ENABLE CONDITION

Secondary Parameters	Enable Conditions
All secondary parameters enable conditions	≥ 1024 ms
Intake manifold pressure change at 180°CA	< Value of Map 1
Throttle position change during 16 milliseconds	< 14 °
Fuel shut-off function	Not in operation
Fuel level	≥ 10.5 ℓ (2.77 US gal, 2.31 Imp gal)
Vehicle dynamic control or AT torque control	Not in operation
Evaporative system leak check	Not in operation
Engine speed	550 rpm — 6700 rpm
Intake manifold pressure	≥ Value from Map 2
Battery voltage	≥ 8 V
Fuel parameter determination	Not extremely low volatility
Elapsed time after starting the engine	≥ 0 ms
Engine speed change during 32 milliseconds	< 1000 rpm

Map 1

rpm	700	6700
kPa (mmHg, inHg)	13.3 (100, 3.9)	13.3 (100, 3.9)

GETTHEMANUALS.org

Map 2

- Normal ignition

		Barometric pressure (kPa (mmHg, inHg))						
		66.7 (500, 19.7)	76.6 (575, 22.6)	80 (600, 23.6)	84 (630, 24.8)	86.6 (650, 25.6)	92 (690, 27.2)	100.2 (752, 29.6)
Engine speed (rpm)	700	24.1 (180.6 , 7.1)	24.1 (180.6 , 7.1)	25.6 (191.7 , 7.5)	26.8 (200.7 , 7.9)	27 (202.5 , 8)	27.6 (207.4 , 8.2)	28 (210.0 , 8.3)
	1000	22.5 (168.5 , 6.6)	22.5 (168.5 , 6.6)	23.5 (176.6 , 7)	24.3 (182.6 , 7.2)	24.7 (185.3 , 7.3)	25.6 (192.0 , 7.6)	26.9 (201.5 , 7.9)
	1500	18.4 (137.7 , 5.4)	18.4 (137.7 , 5.4)	19 (142.2 , 5.6)	19.8 (148.4 , 5.8)	20.1 (150.5 , 5.9)	21.4 (160.8 , 6.3)	22.7 (170.1 , 6.7)
	2000	19 (142.2 , 5.6)	19 (142.2 , 5.6)	19.7 (147.9 , 5.8)	20.6 (154.7 , 6.1)	20.5 (154.0 , 6.1)	22 (165.4 , 6.5)	23.5 (176.0 , 6.9)
	2500	19.3 (145.1 , 5.7)	19.3 (145.1 , 5.7)	20.3 (152.6 , 6)	21.3 (159.6 , 6.3)	21.3 (160.0 , 6.3)	22.8 (171.0 , 6.7)	24.2 (181.5 , 7.1)
	3000	21.1 (158.2 , 6.2)	21.1 (158.2 , 6.2)	22.2 (166.4 , 6.6)	22.5 (169.1 , 6.7)	22.7 (170.2 , 6.7)	23.4 (175.3 , 6.9)	25.1 (188.1 , 7.4)
	3500	22.5 (168.5 , 6.6)	22.5 (168.5 , 6.6)	23.5 (176.2 , 6.9)	24.3 (182.1 , 7.2)	24.7 (185.0 , 7.3)	25.8 (193.3 , 7.6)	27.4 (205.4 , 8.1)
	4000	22.2 (166.7 , 6.6)	22.2 (166.7 , 6.6)	23.3 (174.7 , 6.9)	25.7 (193.0 , 7.6)	24.1 (180.5 , 7.1)	25.5 (191.2 , 7.5)	26.4 (198.4 , 7.8)
	4500	21 (157.9 , 6.2)	21 (157.9 , 6.2)	21.9 (164.2 , 6.5)	22.1 (165.9 , 6.5)	22.1 (165.9 , 6.5)	23.5 (176.0 , 6.9)	24.5 (183.8 , 7.2)
	5000	22.7 (170.5 , 6.7)	22.7 (170.5 , 6.7)	23.5 (176.1 , 6.9)	24.5 (183.8 , 7.2)	24.9 (187.0 , 7.4)	25.2 (188.7 , 7.4)	26.4 (197.9 , 7.8)
	5500	24.1 (181.0 , 7.1)	24.1 (181.0 , 7.1)	24.9 (186.8 , 7.4)	25.9 (194.5 , 7.7)	26.1 (196.1 , 7.7)	26.9 (201.7 , 7.9)	28.3 (212.5 , 8.4)
	6000	26.6 (199.6 , 7.9)	26.6 (199.6 , 7.9)	26.9 (202.0 , 8)	27.7 (208.1 , 8.2)	28 (210.1 , 8.3)	29.7 (223.0 , 8.8)	30 (225.3 , 8.9)
	6500	29.1 (218.4 , 8.6)	29.1 (218.4 , 8.6)	29.4 (220.7 , 8.7)	30.5 (229.0 , 9)	30.8 (230.7 , 9.1)	31.7 (237.6 , 9.4)	33.1 (248.6 , 9.8)
	6700	30.8 (230.9333333, 9.1)	30.8 (230.9333333, 9.1)	31.1 (233.1666667, 9.2)	32.4 (242.9333333, 9.6)	32.6 (244.4333333, 9.6)	33 (247.3333333, 9.7)	35.2 (264.1333333, 10.4)
kPa (mmHg, inHg)								

GETTHEMANUALS.org

- Idling ignition

		Barometric pressure (kPa (mmHg, inHg))						
		66.7 (500, 19.7)	76.6 (575 , 22.6)	80 (600 , 23.6)	84 (630 , 24.8)	86.6 (650 , 25.6)	92 (690 , 27.2)	100.2 (752 , 29.6)
Engine speed (rpm)	700	24.1 (180.6 , 7.1)	24.1 (180.6 , 7.1)	25.6 (191.7 , 7.5)	26.8 (200.7 , 7.9)	27 (202.5 , 8)	27.6 (207.4 , 8.2)	28 (210.0 , 8.3)
	1000	24.3 (181.9 , 7.2)	24.3 (181.9 , 7.2)	25.2 (188.8 , 7.4)	25.9 (194.2 , 7.6)	27.1 (203.1 , 8)	27.5 (206.5 , 8.1)	29 (217.3 , 8.6)
	1500	20.7 (155.3 , 6.1)	20.7 (155.3 , 6.1)	21.6 (162.3 , 6.4)	22.5 (168.7 , 6.6)	22.9 (172.0 , 6.8)	23.8 (178.7 , 7)	25.1 (188.1 , 7.4)
	2000	20.8 (155.9 , 6.1)	20.8 (155.9 , 6.1)	21.3 (159.6 , 6.3)	22.7 (170.1 , 6.7)	23.2 (174.2 , 6.9)	25.4 (190.4 , 7.5)	25.6 (192.3 , 7.6)
	2500	22.7 (170.4 , 6.7)	22.7 (170.4 , 6.7)	22.9 (171.9 , 6.8)	23.3 (174.8 , 6.9)	23.8 (178.8 , 7)	25 (187.3 , 7.4)	26.3 (197.0 , 7.8)
	3000	22.2 (166.6 , 6.6)	22.2 (166.6 , 6.6)	23.1 (173.5 , 6.8)	23.5 (176.2 , 6.9)	23.7 (177.7 , 7)	25.1 (188.6 , 7.4)	26.2 (196.6 , 7.7)
	3500	28.4 (212.9 , 8.4)	28.4 (212.9 , 8.4)	29.5 (221.0 , 8.7)	30.9 (231.5 , 9.1)	31.4 (235.4 , 9.3)	32.2 (241.9 , 9.5)	33.8 (253.9 , 10)
	4000	27.6 (207.3 , 8.2)	27.6 (207.3 , 8.2)	28.8 (216.3 , 8.5)	29.9 (224.0 , 8.8)	30.3 (227.2 , 8.9)	31 (232.4 , 9.1)	32.8 (245.8 , 9.7)
	4500	24.7 (185.2 , 7.3)	24.7 (185.2 , 7.3)	26.2 (196.4 , 7.7)	26.5 (198.6 , 7.8)	26.6 (199.5 , 7.9)	27.8 (208.4 , 8.2)	28.7 (215.3 , 8.5)
	5000	26.7 (200.7 , 7.9)	26.7 (200.7 , 7.9)	27.4 (205.2 , 8.1)	29.4 (220.2 , 8.7)	28.7 (215.2 , 8.5)	30.2 (226.8 , 8.9)	31 (232.5 , 9.2)
	5500	27.8 (208.7 , 8.2)	27.8 (208.7 , 8.2)	28.6 (214.3 , 8.4)	30 (224.7 , 8.8)	30 (224.7 , 8.8)	31 (232.8 , 9.2)	32 (240.0 , 9.4)
	6000	28 (209.7 , 8.3)	28 (209.7 , 8.3)	29.3 (220.1 , 8.7)	31.3 (234.8 , 9.2)	31.4 (235.4 , 9.3)	32.9 (247.1 , 9.7)	33.3 (249.7 , 9.8)
	6500	32.1 (241.1 , 9.5)	32.1 (241.1 , 9.5)	33.8 (253.8 , 10)	35 (262.6 , 10.3)	35.7 (267.5 , 10.5)	37.3 (280.2 , 11)	37.2 (279.4 , 11)
	6700	34.9 (262.0 , 10.3)	34.9 (262.0 , 10.3)	36.8 (276.3 , 10.9)	37.5 (281.2 , 11.1)	38.5 (288.9 , 11.4)	40.3 (302.2 , 11.9)	39.9 (299.2 , 11.8)
kPa (mmHg, inHg)								

3. GENERAL DRIVING CYCLE

- If conditions are met, it is possible to detect the misfires from idling to high engine speed. However, to avoid excessive load or harm to the engine, perform diagnosis at idle.
- Perform the diagnosis continuously.

4. DIAGNOSTIC METHOD

When a misfire occurs, the engine speed will decrease and the crankshaft position speed will change. Calculate the interval difference value (diagnostic value) from crankshaft position speed by the following formula, and judge whether a misfire is occurring or not comparing the calculated result with judgment value. Count the number of misfires, if the misfire ratio is higher during 1000 revs. or 200 revs., judge corresponding cylinders as NG.

Diagnostic value calculation (Calculate from angle speed) →	Misfire detection every single ignition (Compare diagnostic value with judgment value) →	NG judgment (Misfire occurrence judgment required by the law) (Compare number of misfire with judgment value)
	• 180° Interval Difference Method • 360° Interval Difference Method • 720° Interval Difference Method	• FTP 1.5 times misfire NG judgment • Catalyst damage misfire NG judgment

GETTHEMANUALS.org

As shown in the following figure, pick a cylinder as the standard and name it omg 0. And the former crankshaft position speed is named omg 1, the second former crankshaft position speed is named omg 2, the third is named omg 3, etc.

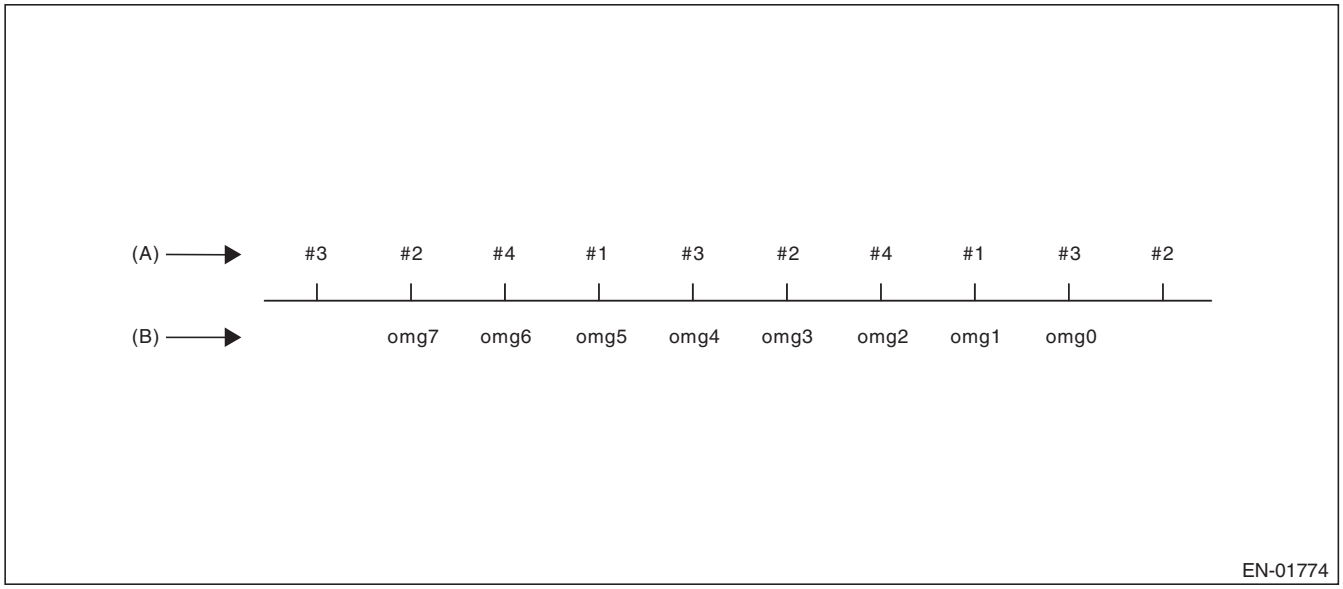

(A) Ignition order (B) Crankshaft position speed

180° Interval Difference Method

Diagnostic value	domg 180 = (omg 1 – omg 0) – (omg 5 – omg 1)/4
Judge as a misfire in the following cases. • domg 180 > judgment value of positive side • domg 180 ≤ judgment value of negative side (Diagnostic value before 180° CA)	

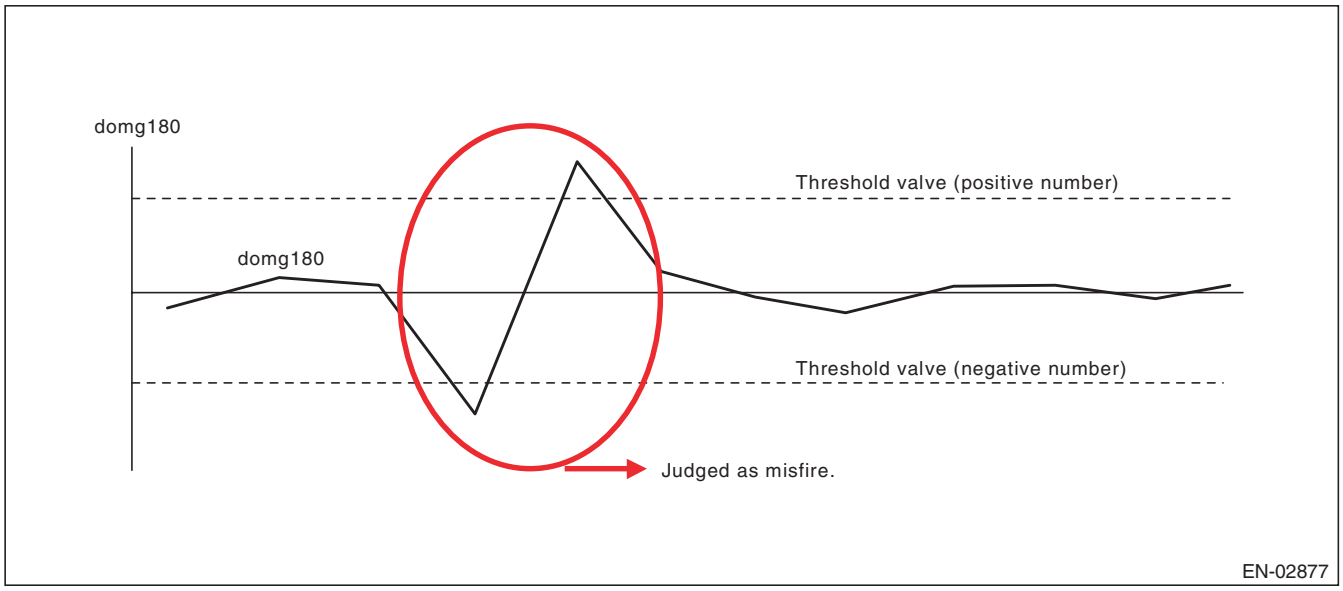

GETTHEMANUALS.org

360° Interval Difference Method

Diagnostic value	domg 360 = (omg 1 – omg 0) – (omg 3 – omg 2)
Misfire judgment	domg 360 > Judgment value → Judge as misfire

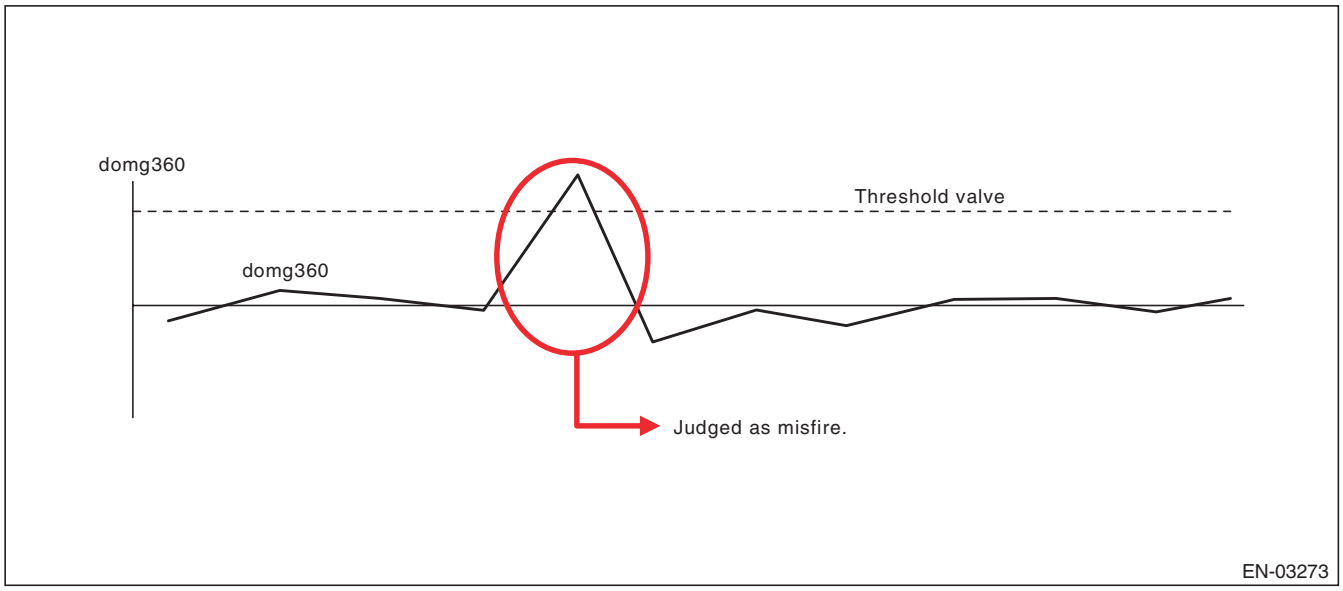

720° Interval Difference Method

Diagnostic value	domg 720 = (omg 1 – omg 0) – (omg 5 – omg 4)
Misfire judgment	domg 720 > Judgment value → Judge as misfire

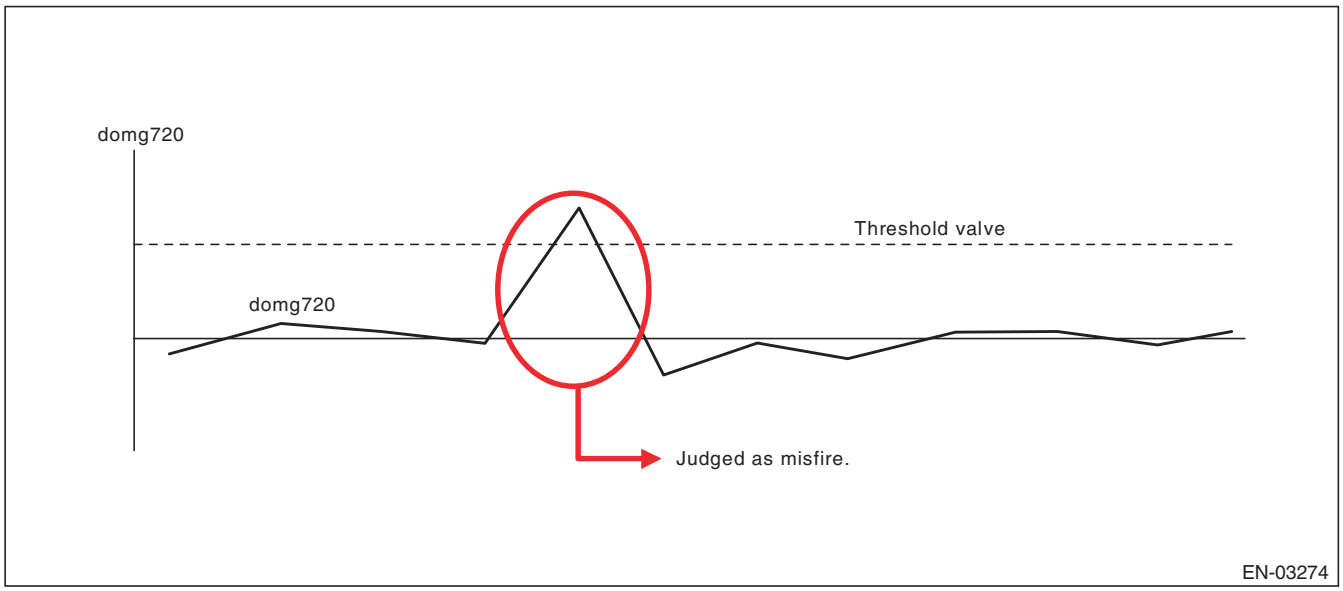

GETTHEMANUALS.org

- **FTP 1.5 times misfire (Misfire occurrence level which influences exhaust gas)**
- **Abnormality Judgment**

Judgment Value (Judge that malfunction occurs when the misfire ratio is high in 1000 engine revs.)

Malfunction Criteria	Threshold Value
FTP emission diagnostic value	≥ 36 × 100/2000% in 1000 revs.

Time Needed for Diagnosis: 1000 engine revs.
Malfunction Indicator Light Illumination: Illuminates when malfunction occurs in 2 continuous driving cycles.

- **Normality Judgment**

Judgment Value

Malfunction Criteria	Threshold Value
FTP emission diagnostic value	< 36 × 100/2000% in 1000 revs.

Time Needed for Diagnosis: 1000 engine revs.

- **Catalyst damage misfire (Misfire occurrence level damaging catalyst)**
- **Abnormality Judgment**

Judgment Value

Malfunction Criteria	Threshold Value
Catalyst damage misfire diagnostic value	≥ Value from Map 3

Map 3

		Intake air (g(oz)/rev)									
		0.2 (0.01)	0.4 (0.01)	0.6 (0.02)	0.8 (0.03)	1 (0.04)	1.2 (0.04)	1.4 (0.05)	1.6 (0.06)	1.8 (0.06)	2 (0.07)
Engine speed (rpm)	700	100	100	99	90	85	77	77	77	77	77
	1000	100	100	97	88	78	72	72	72	72	72
	1500	100	100	87	77	72	72	72	61	61	61
	2000	100	77	77	62	49	37	34	31	27	20
	2500	99	74	48	38	33	31	29	27	26	20
	3000	92	74	49	33	31	31	27	26	24	20
	3500	83	63	37	23	20	20	20	20	20	20
	4000	59	52	34	23	20	20	20	20	20	20
	4500	51	47	29	21	20	20	20	20	20	20
	5000	47	47	29	20	20	20	20	20	20	20
	5500	46	46	28	20	20	20	20	20	20	20
	6000	44	44	27	20	20	20	20	20	20	20
	6500	43	43	26	20	20	20	20	20	20	20
	6700	43	43	26	20	20	20	20	20	20	20

Time Needed for Diagnosis: 200 engine revs.
Malfunction Indicator Light Illumination: Illuminates as soon as a malfunction occurs.

- **Normality Judgment**

Judgment Value

Malfunction Criteria	Threshold Value
Catalyst damage misfire diagnostic value	< Value of Map 3

Time Needed for Diagnosis: 200 engine revs.

GETTHEMANUALS.org

BF:DTC P0302 CYLINDER 2 MISFIRE DETECTED

1. OUTLINE OF DIAGNOSIS

NOTE:
For the detection standard, refer to DTC P0301. <Ref. to GD(H4DOTC)-109, DTC P0301 CYLINDER 1 MISFIRE DETECTED, Diagnostic Trouble Code (DTC) Detecting Criteria.>

BG:DTC P0303 CYLINDER 3 MISFIRE DETECTED

1. OUTLINE OF DIAGNOSIS

NOTE:
For the detection standard, refer to DTC P0301. <Ref. to GD(H4DOTC)-109, DTC P0301 CYLINDER 1 MISFIRE DETECTED, Diagnostic Trouble Code (DTC) Detecting Criteria.>

BH:DTC P0304 CYLINDER 4 MISFIRE DETECTED

1. OUTLINE OF DIAGNOSIS

NOTE:
For the detection standard, refer to DTC P0301. <Ref. to GD(H4DOTC)-109, DTC P0301 CYLINDER 1 MISFIRE DETECTED, Diagnostic Trouble Code (DTC) Detecting Criteria.>

GETTHEMANUALS.org

BI: DTC P0327 KNOCK SENSOR 1 CIRCUIT LOW (BANK 1 OR SINGLE SENSOR)

1. OUTLINE OF DIAGNOSIS

Detect the open or short circuit of knock sensor.
Judge as NG if out of specification.

2. COMPONENT DESCRIPTION

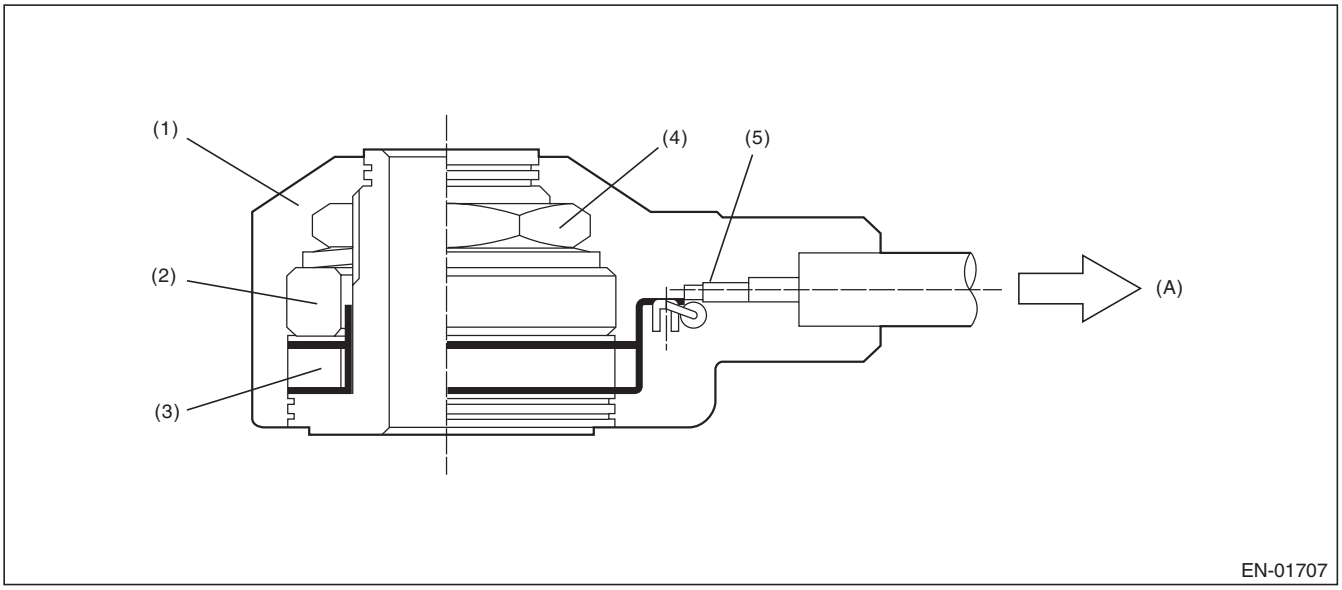

(A) To knock sensor harness

(1) Case
(2) Weight
(3) Piezoelectric element
(4) Nut
(5) Resistance

3. ENABLE CONDITION

Secondary Parameters	Enable Conditions
None	

4. GENERAL DRIVING CYCLE

Always perform the diagnosis continuously.

GETTHEMANUALS.org

5. DIAGNOSTIC METHOD

- **Abnormality Judgment**

If the duration of time while the following conditions are met is longer than the time indicated, judge as NG.

Judgment Value

Malfunction Criteria	Threshold Value
Output voltage	< 0.243 V

Time Needed for Diagnosis: 1000 ms
Malfunction Indicator Light Illumination: Illuminates as soon as a malfunction occurs.

- **Normality Judgment**

Judge as OK and clear the NG if the continuous time while the following conditions are established is more than the predetermined time.

Judgment Value

Malfunction Criteria	Threshold Value
Output voltage	≥ 0.243 V

Time Needed for Diagnosis: Less than 1 second

GETTHEMANUALS.org

BJ:DTC P0328 KNOCK SENSOR 1 CIRCUIT HIGH (BANK 1 OR SINGLE SENSOR)

1. OUTLINE OF DIAGNOSIS

Detect the open or short circuit of knock sensor.
Judge as NG if out of specification.

2. COMPONENT DESCRIPTION

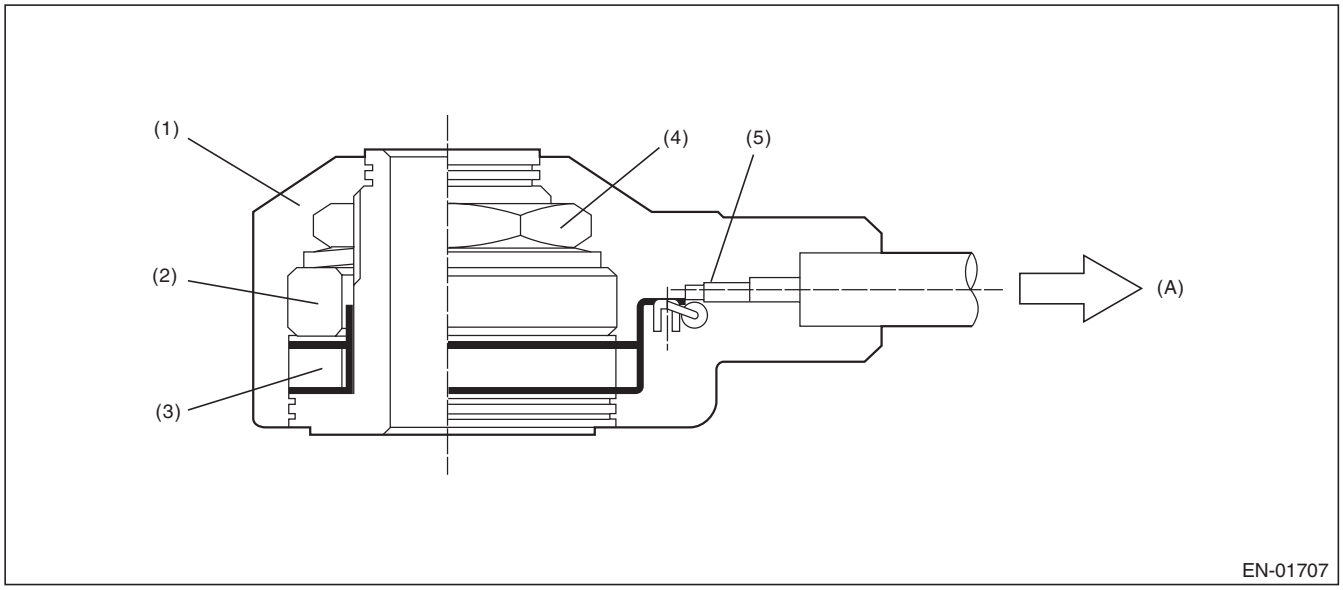

(A) To knock sensor harness

(1) Case
(2) Weight
(3) Piezoelectric element
(4) Nut
(5) Resistance

3. ENABLE CONDITION

Secondary Parameters	Enable Conditions
None	

4. GENERAL DRIVING CYCLE

Always perform the diagnosis continuously.

GETTHEMANUALS.org

5. DIAGNOSTIC METHOD

- **Abnormality Judgment**

If the duration of time while the following conditions are met is longer than the time indicated, judge as NG.

Judgment Value

Malfunction Criteria	Threshold Value
Output voltage	≥ 4.709 V

Time Needed for Diagnosis: 1000 ms
Malfunction Indicator Light Illumination: Illuminates as soon as a malfunction occurs.

- **Normality Judgment**

Judge as OK and clear the NG if the continuous time while the following conditions are established is more than the predetermined time.

Judgment Value

Malfunction Criteria	Threshold Value
Output voltage	< 4.709 V

Time Needed for Diagnosis: Less than 1 second

GETTHEMANUALS.org

BK:DTC P0335 CRANKSHAFT POSITION SENSOR “A” CIRCUIT

1. OUTLINE OF DIAGNOSIS

Detect the open or short circuit of the crankshaft position sensor.
Judge as NG when the crank signal is not input even though the starter was rotated.

2. COMPONENT DESCRIPTION

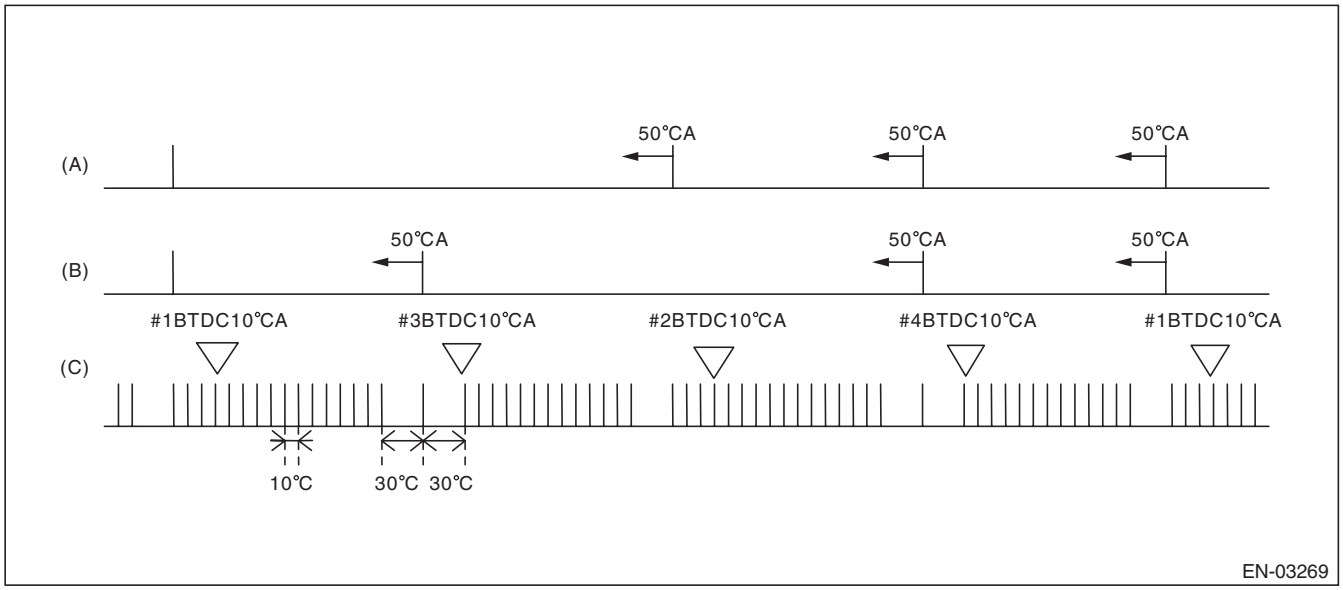

(A) Camshaft signal (RH) (B) Camshaft signal (LH) (C) Crankshaft signal

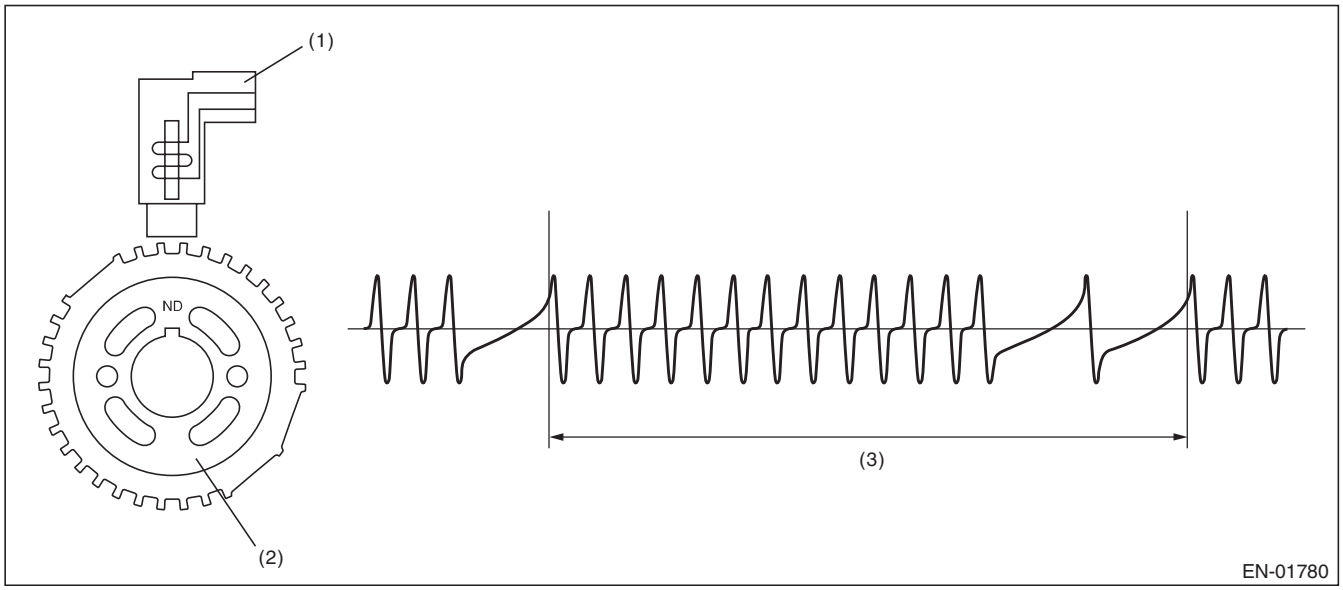

(1) Crankshaft position sensor (2) Crank sprocket (3) Crankshaft half-turn

3. ENABLE CONDITION

Secondary Parameters	Enable Conditions
None	

4. GENERAL DRIVING CYCLE

Always perform the diagnosis continuously.

GETTHEMANUALS.org

5. DIAGNOSTIC METHOD

- **Abnormality Judgment**

If the duration of time while the following conditions are met is longer than the time indicated, judge as NG.

Judgment Value

Malfunction Criteria	Threshold Value
Starter switch	ON
Crankshaft position sensor signal	Not detected
Battery voltage	≥ 8 V

Time Needed for Diagnosis: 3000 ms
Malfunction Indicator Light Illumination: Illuminates as soon as a malfunction occurs.

- **Normality Judgment**

Judge as OK and clear the NG if the continuous time while the following conditions are established is more than the predetermined time.

Judgment Value

Malfunction Criteria	Threshold Value
Crankshaft position sensor signal	Input exists
Battery voltage	≥ 8 V

Time Needed for Diagnosis: Less than 1 second

GETTHEMANUALS.org

BL:DTC P0336 CRANKSHAFT POSITION SENSOR “A” CIRCUIT RANGE/PERFORMANCE

1. OUTLINE OF DIAGNOSIS

Detect for faults in crankshaft position sensor output properties.
Judge as NG when there is a problem in the number of crankshaft signals for every revolution of crankshaft.

2. COMPONENT DESCRIPTION

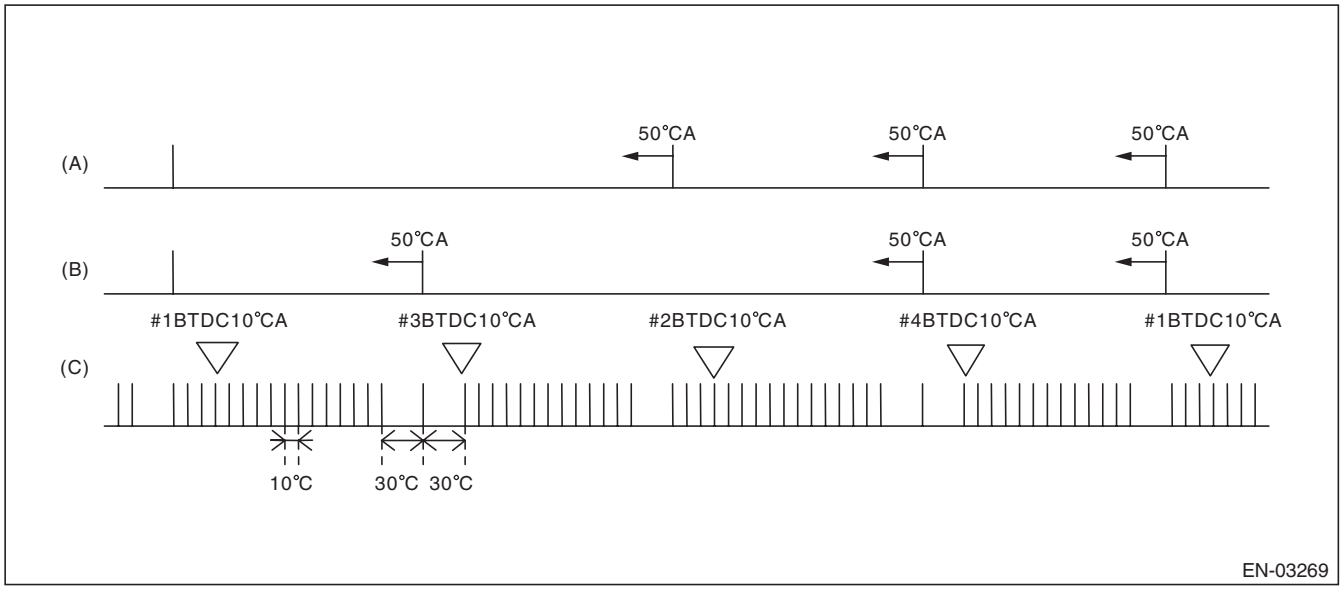

(A) Camshaft signal (RH) (B) Camshaft signal (LH) (C) Crankshaft signal

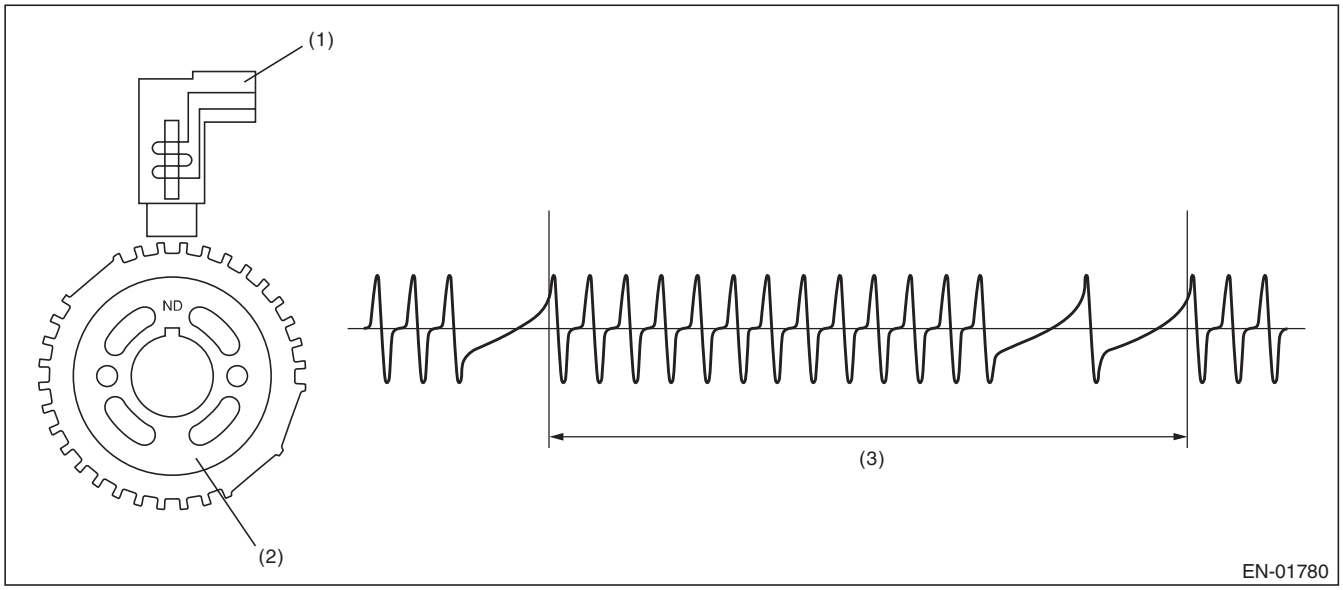

(1) Crankshaft position sensor (2) Crank sprocket (3) Crankshaft half-turn

3. ENABLE CONDITION

Secondary Parameters	Enable Conditions
Battery voltage	≥ 8 V
Engine speed	< 3000 rpm

GETTHEMANUALS.org

4. GENERAL DRIVING CYCLE

Perform the diagnosis continuously under 3000 rpm engine speed.

5. DIAGNOSTIC METHOD

- **Abnormality Judgment**

Judge as NG when the following conditions are established.

Judgment Value

Malfunction Criteria	Threshold Value
Cylinder number identification	Completed
Amount of crank sensor signal during 1 rev of crankshaft.	Not = 30

Time Needed for Diagnosis: 10 engine revs.
Malfunction Indicator Light Illumination: Illuminates when malfunction occurs in 2 continuous driving cycles.

- **Normality Judgment**

Judge as OK and clear the NG if the continuous time while the following conditions are established is more than the predetermined time.

Judgment Value

Malfunction Criteria	Threshold Value
Cylinder number identification	Completed
Amount of crank sensor signal during 1 rev of crankshaft.	= 30

Time Needed for Diagnosis: Less than 1 second

GETTHEMANUALS.org

BM:DTC P0340 CAMSHAFT POSITION SENSOR “A” CIRCUIT (BANK 1 OR SINGLE SENSOR)

1. OUTLINE OF DIAGNOSIS

Detect the open or short circuit of the camshaft position sensor.
Judge as NG when the number of camshaft signals remains abnormal.

2. COMPONENT DESCRIPTION

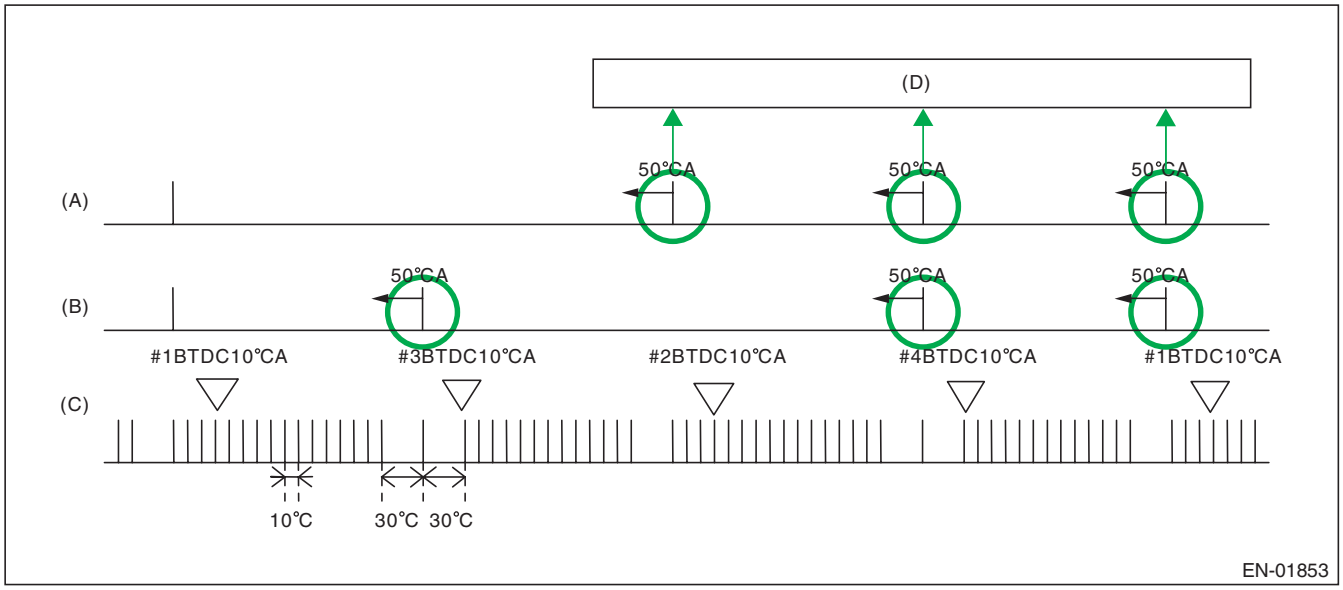

(A) Camshaft signal (RH)
(B) Camshaft signal (LH)
(C) Crankshaft signal
(D) Number of camshaft position signals = When normal, there will be 3 cam signals for every two engine revolutions.

3. ENABLE CONDITION

Secondary Parameters	Enable Conditions
Battery voltage	≥ 8 V

4. GENERAL DRIVING CYCLE

Always perform the diagnosis continuously.

GETTHEMANUALS.org

5. DIAGNOSTIC METHOD

- **Abnormality Judgment 1**

Judge as NG when the status where the number of camshaft position sensor signal in two engine revolutions is less than 3 time(s).

Judgment Value

Malfunction Criteria	Threshold Value
Amount of camshaft sensor signal during 2 revs.	< 3 time(s)

Time Needed for Diagnosis: Engine two revolutions × 4 time(s)
Malfunction Indicator Light Illumination: Illuminates as soon as a malfunction occurs.

- **Normality Judgment 1**

Judge as OK and clear the NG when the malfunction criteria below are met.

Judgment Value

Malfunction Criteria	Threshold Value
Camshaft position sensor signal	≥ 3 time(s)

Time Needed for Diagnosis: Two engine revolutions

- **Abnormality Judgment 2**

If the duration of time while the following conditions are met is longer than the time indicated, judge as NG.

Judgment Value

Malfunction Criteria	Threshold Value
Starter	ON
Camshaft position sensor signal	No input

Time Needed for Diagnosis: 3000 ms

- **Normality Judgment 2**

Judge as OK and clear the NG if the continuous time while the following conditions are established is more than the predetermined time.

Judgment Value

Malfunction Criteria	Threshold Value
Camshaft position sensor signal	Input exists

Time Needed for Diagnosis: Less than 1 second

BN:DTC P0345 CAMSHAFT POSITION SENSOR “A” CIRCUIT (BANK 2)

1. OUTLINE OF DIAGNOSIS

NOTE:
For the detection standard, refer to DTC P0340. <Ref. to GD(H4DOTC)-124, DTC P0340 CAMSHAFT POSITION SENSOR “A” CIRCUIT (BANK 1 OR SINGLE SENSOR), Diagnostic Trouble Code (DTC) Detecting Criteria.>

GETTHEMANUALS.org

BO:DTC P0351 IGNITION COIL A PRIMARY/SECONDARY CIRCUIT

1. OUTLINE OF DIAGNOSIS

Based on the self-diagnostic result of the ignition coil driving IC, judge the ignition coil driving circuit as normal or abnormal.
The ignition coil driving IC detects “no ignition” status as a malfunction.

2. ENABLE CONDITIONS

Secondary Parameters	Enable Conditions
Battery voltage	≥ 10.9 V
Elapsed time after starting the engine	> 1 s
Engine speed	> 500 rpm
Ignition energization time	> 2000 μs
Ignition status	Not during ignition cut

3. GENERAL DRIVING CYCLE

Always perform the diagnosis continuously.

4. DIAGNOSTIC METHOD

- **Abnormality Judgment**

Judge as NG when the following conditions are established.

Judgment Value

Malfunction Criteria	Threshold Value
Ignition driving IC information	Malfunction

Time Needed for Diagnosis: 2500 ms
Malfunction Indicator Light Illumination: Illuminates as soon as a malfunction occurs.

- **Normality Judgment**

Judge as OK and clear the NG if the following conditions are established.

Judgment Value

Malfunction Criteria	Threshold Value
Ignition driving IC information	Normal

Time Needed for Diagnosis: Less than 1 second

BP:DTC P0352 IGNITION COIL B PRIMARY/SECONDARY CIRCUIT

1. OUTLINE OF DIAGNOSIS

NOTE:
For the detection standard, refer to DTC P0351. <Ref. to GD(H4DOTC)-126, DTC P0351 IGNITION COIL A PRIMARY/SECONDARY CIRCUIT, Diagnostic Trouble Code (DTC) Detecting Criteria.>

BQ:DTC P0353 IGNITION COIL C PRIMARY/SECONDARY CIRCUIT

1. OUTLINE OF DIAGNOSIS

NOTE:
For the detection standard, refer to DTC P0351. <Ref. to GD(H4DOTC)-126, DTC P0351 IGNITION COIL A PRIMARY/SECONDARY CIRCUIT, Diagnostic Trouble Code (DTC) Detecting Criteria.>

BR:DTC P0354 IGNITION COIL D PRIMARY/SECONDARY CIRCUIT

1. OUTLINE OF DIAGNOSIS

NOTE:
For the detection standard, refer to DTC P0351. <Ref. to GD(H4DOTC)-126, DTC P0351 IGNITION COIL A PRIMARY/SECONDARY CIRCUIT, Diagnostic Trouble Code (DTC) Detecting Criteria.>

GETTHEMANUALS.org

BS:DTC P0365 CAMSHAFT POSITION SENSOR “B” CIRCUIT (BANK 1)

1. OUTLINE OF DIAGNOSIS

Detect the open or short circuit of the camshaft position sensor.
Judge as NG when the number of camshaft signals remains abnormal.

2. ENABLE CONDITIONS

Secondary Parameters	Enable Conditions
Battery voltage	≥ 8 V

3. GENERAL DRIVING CYCLE

Always perform the diagnosis continuously.

4. DIAGNOSTIC METHOD

- **Abnormality Judgment**

Judge as NG when the status where the number of camshaft position sensor signal in two engine revolutions is less than 2 time(s).

Judgment Value

Malfunction Criteria	Threshold Value
Amount of camshaft sensor signal during 2 revs.	< 2 time(s)

Time Needed for Diagnosis: Engine two revolutions × 4 time(s)
Malfunction Indicator Light Illumination: Illuminates as soon as a malfunction occurs.

- **Normality Judgment**

Judge as OK and clear the NG when the malfunction criteria below are met.

Judgment Value

Malfunction Criteria	Threshold Value
Camshaft position sensor signal	≥ 2 time(s)

Time Needed for Diagnosis: Two engine revolutions

BT:DTC P0390 CAMSHAFT POSITION SENSOR “B” CIRCUIT (BANK 2)

1. OUTLINE OF DIAGNOSIS

NOTE:
For the detection standard, refer to DTC P0365. <Ref. to GD(H4DOTC)-127, DTC P0365 CAMSHAFT POSITION SENSOR “B” CIRCUIT (BANK 1), Diagnostic Trouble Code (DTC) Detecting Criteria.>

GETTHEMANUALS.org

BU:DTC P0420 CATALYST SYSTEM EFFICIENCY BELOW THRESHOLD (BANK 1)

1. OUTLINE OF DIAGNOSIS

Detect the deterioration of the catalyst function.
Though the front oxygen sensor output would change slowly with a new catalyst, the sensor output with a deteriorated catalyst becomes high and the inversion time is shortened.
For this reason, the catalyst diagnosis is carried out by monitoring the front oxygen sensor output and comparing it with the front oxygen (A/F) sensor output.

2. COMPONENT DESCRIPTION

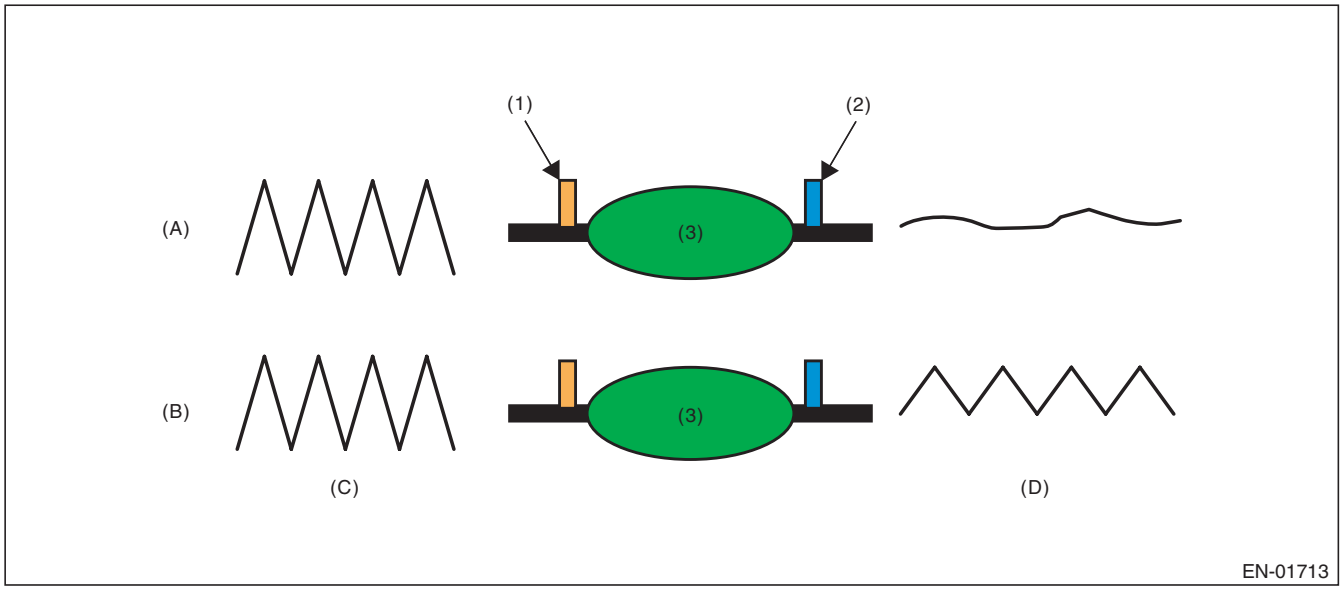

(A)	Normal	(B)	Deterioration	(C)	Output waveform from the front oxygen (A/F) sensor
(D)	Output waveform from the front oxygen sensor				
(1)	Front oxygen (A/F) sensor	(2)	Front oxygen sensor	(3)	Catalytic converter

GETTHEMANUALS.org

3. ENABLE CONDITION

Secondary Parameters	Enable Conditions
Battery voltage	≥ 10.9 V
Atmospheric pressure	≥ 75 kPa (563 mmHg, 22.2 inHg)
Engine coolant temperature	≥ 72 °C (161.6 °F)
Estimated catalyst temperature	≥ 540 °C (1004 °F)
Misfire detection every 200 rotations	< 65535 time(s)
Learning value of evaporation gas density	< 0.2
Sub feedback	In operation
Evaporative system diagnosis	Not in operation
Time of difference (< 0.10) between actual lambda and target lambda	≥ 1000 ms
Vehicle speed	> 60 km/h (37.3 MPH)
Amount of intake air	≥ 6.5 g/s (0.23 oz/s) and < 50 g/s (1.76 oz/s)
Engine load change every 0.5 engine revs.	< 0.02 g/rev (0 oz/rev)
Rear oxygen output change from 660 mV or less to 660 mV or more	Experienced after fuel cut
Elapsed time after starting the engine	≥ 230 s
Purge execution calculated time	≥ 5 s

4. GENERAL DRIVING CYCLE

Perform the diagnosis only once at a constant speed of 60 km/h (37.3 MPH) or higher.

5. DIAGNOSTIC METHOD

After the enable conditions have been established, calculate the front oxygen (A/F) sensor lambda value deviation sum value (Σ |($sglmd_n$ – $sglmd_{n-1}$)|), and rear oxygen sensor output voltage deviation sum value (Σ |($ro2sad_n$ – $ro2sad_{n-1}$)|) in every 32 ms × 4 times. If the front oxygen (A/F) sensor lambda value deviation sum value (Σ |($sglmd_n$ – $sglmd_{n-1}$)|) is the predetermined value or more, calculate the diagnostic value.

- **Abnormality Judgment**

If the duration of time while the following conditions are met is within the time indicated, judge as NG.

Judgment Value

Malfunction Criteria	Threshold Value
Σ |($ro2sad_n$ – $ro2sad_{n-1}$)| / Σ |($sglmd_n$ – $sglmd_{n-1}$)|	> 9.03

Time Needed for Diagnosis: 30 — 55 seconds
Malfunction Indicator Light Illumination: Illuminates when malfunction occurs in 2 continuous driving cycles.

- **Normality Judgment**

Judge as OK and clear the NG if the continuous time while the following conditions are established is within the predetermined time.

Judgment Value

Malfunction Criteria	Threshold Value
Σ |($ro2sad_n$ – $ro2sad_{n-1}$)| / Σ |($sglmd_n$ – $sglmd_{n-1}$)|	≤ 9.03

Time Needed for Diagnosis: 30 — 55 seconds

GETTHEMANUALS.org

BV:DTC P0442 EVAPORATIVE EMISSION CONTROL SYSTEM LEAK DETECTED (SMALL LEAK)

1. OUTLINE OF DIAGNOSIS

The evaporative system monitor detects leak up to 0.020 inch in the fuel tank and evaporative emissions system. If the fuel cap is not present or has not been correctly tightened after a refueling event, a malfunction is also detected. These malfunctions are detected by monitoring the fuel tank and system pressure during an intrusive pull-down pressure test. Pull down is accomplished via the purge valve while the engine is running. Monitors run during the first idle after engine start and while driving.
The diagnostic is classified into two monitors. The first monitor detects a 0.040 inch leak, fuel cap loose/off, and canister purge valve stuck open/close whilst the other monitor detects a 0.020 inch leak when the vehicle is moving or during the first idle. Failures, DTCs and monitor methods are as follows.

P0457	Fuel cap loose/off or CPC valve stuck open/close	Monitor 1
P0442	0.040 inch leak	Monitor 1
P0456	0.020 inch leak	Monitor 2

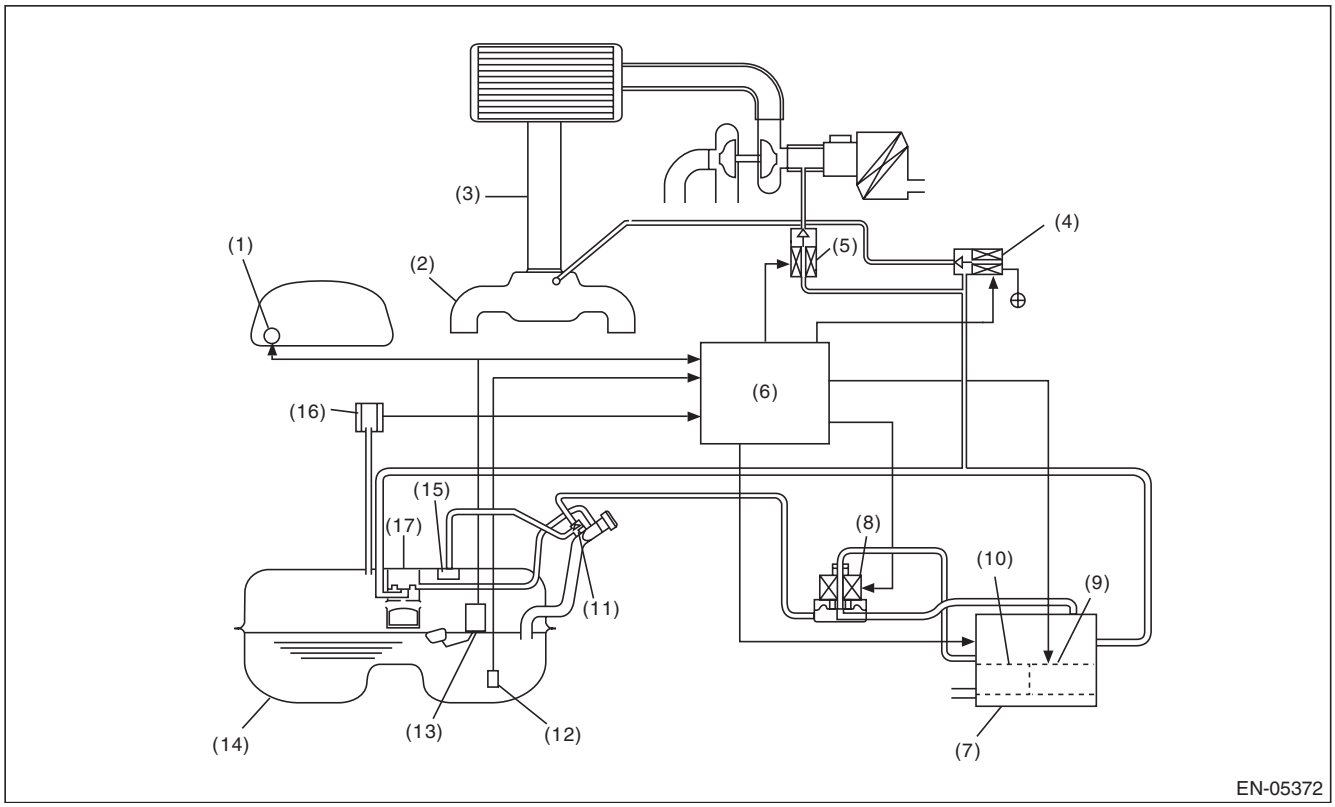

(1)	Fuel gauge	(7)	Canister	(13)	Fuel level sensor
(2)	Intake manifold	(8)	Pressure control solenoid valve	(14)	Fuel tank
(3)	Throttle body	(9)	Drain valve (CCV)	(15)	Fuel cut valve
(4)	Purge control solenoid valve (CPC valve)	(10)	Drain filter	(16)	Fuel tank pressure sensor
(5)	Purge control solenoid valve 2 (CPC valve)	(11)	Shut-off valve	(17)	Vent valve
(6)	Engine control module (ECM)	(12)	Fuel temperature sensor		

GETTHEMANUALS.org

Monitor 1

- **P0457 Fuel cap loose/off or CPC valve stuck open/close**
- **P0442 0.040 inch leak check**

This monitor detects CPC valve stuck open/close, fuel cap loose/off, and 0.040 inch leak in the evaporative emission system by monitoring the fuel tank system pressure an intrusive pull-down pressure test. The monitor consists of Modes Z, A, B, C and D. There are three judgment times for these malfunctions. CPC valve stuck open is performed in Mode Z, CPC valve stuck closed or fuel cap loose/off is in Mode B, 0.040 inch leak is in Mode D.

Mode	Description of each mode	Required time for each mode
Mode Z (Monitoring of CPC stuck open)	CPC valve: Closed CCV: Closed The system requires 3000 ms to measure the pressure difference. (1) Pressure difference < 0.9 kPa (6.5 mmHg, 0.3 inHg) → Judged as “Fail of CPC stuck open” **[P0457]** (2) Pressure difference ≥ 0.4 kPa (3 mmHg, 0.1 inHg) → Move to Mode A	3000 ms
Mode A (Estimation of Evap. Generation)	The system requires 10000 ms to measure the pressure increase (evpp1), and then move to Mode B.	10000 ms
Mode B (Negative Pressure Introduction/ Monitoring of Fuel cap off or CPC stuck close)	CPC valve: Open Negative pressure is introduced to the fuel tank. (1) Elapsed time in Mode B ≥ 10000 ms and (Minimum tank pressure) – (Initial tank pressure) > –0.3 kPa (–2.5 mmHg, –0.1 inHg) → Judged as “Fail of Fuel cap off or CPC stuck close” **[P0457]** (2) Elapsed time in Mode B ≥ 10000 ms + 25000 ms → Judged as “Fail of Fuel cap off or CPC stuck close” **[P0457]** (3) Fuel tank pressure ≤ –1.4 kPa (–10.5 mmHg, –0.4 inHg) → Move to Mode C	Average: 7 s (Depends on the tank condition)
Mode C (Keeping Negative Pressure / Pass in Mode C)	CPC valve: Closed When the tank pressure comes up to the target pressure (–1.4 kPa (–10.5 mmHg, –0.4 inHg)), the monitor moves to Mode D. If the fuel tank pressure does not exceed the –1.4 kPa (–10.5 mmHg, –0.4 inHg) after 23635 ms, the system judges as “Pass in Mode C” and moves to “Final Judgment”.	Average: 7 s (Depends on the tank condition)
Mode D (Pressure Measurement / Pass Fail in Mode D)	The monitor requires 10000 ms to measure the pressure change (evpp2) and calculates the monitor value (evpp2 – 1.5 × evpp1), where Mode A (evpp1) is the generated vapor pressure. The calculated value (evpp2 – 1.5 × evpp1) is then compared to a calibrated threshold table as a function of fuel temperature and fuel level. The system judges as a “Pass/Fail in Mode D” and then moves to “Final Judgment”. (1) evpp2 – 1.5 × evpp1 > Fail Threshold (Map 1) → “Fail in Mode D” (2) evpp2 – 1.5 × evpp1 ≤ Pass Threshold (Map 1) → “Pass in Mode D”	10000 ms
Final Judgment (Pass / Fail)	The monitor is completed in the following order (1) Judged as “Fail in Mode D” → “Fail of 0.040 inch leak” **[P0442]** (2) Judged as “Pass in Mode C / Mode D” → “Pass of 0.040 inch leak”	0.128 s

GETTHEMANUALS.org

Map 1 (Threshold value for 0.040 inch leak)

		Fuel temperature (°C (°F))			
		15 (59)	25 (77)	35 (95)	45 (113)
Fuel Level ℓ (US gal, Imp gal)	10.5 (2.77, 2.31)	0.3 (2.00, 0.1)	0.3 (2.17, 0.1)	0.3 (2.34, 0.1)	0.4 (2.66, 0.1)
	27 (7.13, 5.94)	0.3 (2.12, 0.1)	0.3 (2.22, 0.1)	0.3 (2.40, 0.1)	0.4 (3.07, 0.1)
	43 (11.36, 9.46)	0.4 (2.74, 0.1)	0.4 (2.91, 0.1)	0.4 (3.08, 0.1)	0.4 (3.26, 0.1)
	59.5 (15.72, 13.09)	0.5 (3.38, 0.1)	0.5 (3.86, 0.2)	0.5 (3.87, 0.2)	0.5 (4.07, 0.2)
kPa (mmHg, inHg)					

Monitor 2

P0456 0.020 inch leak check

This monitor detects a very small leak (0.020 inch) in the evaporative emissions system by monitoring the fuel tank and system pressure during an intrusive pull-down pressure test. Pull down is accomplished via the purge valve while the engine is running. The monitor runs during the first idle after engine start and also while the vehicle is running.

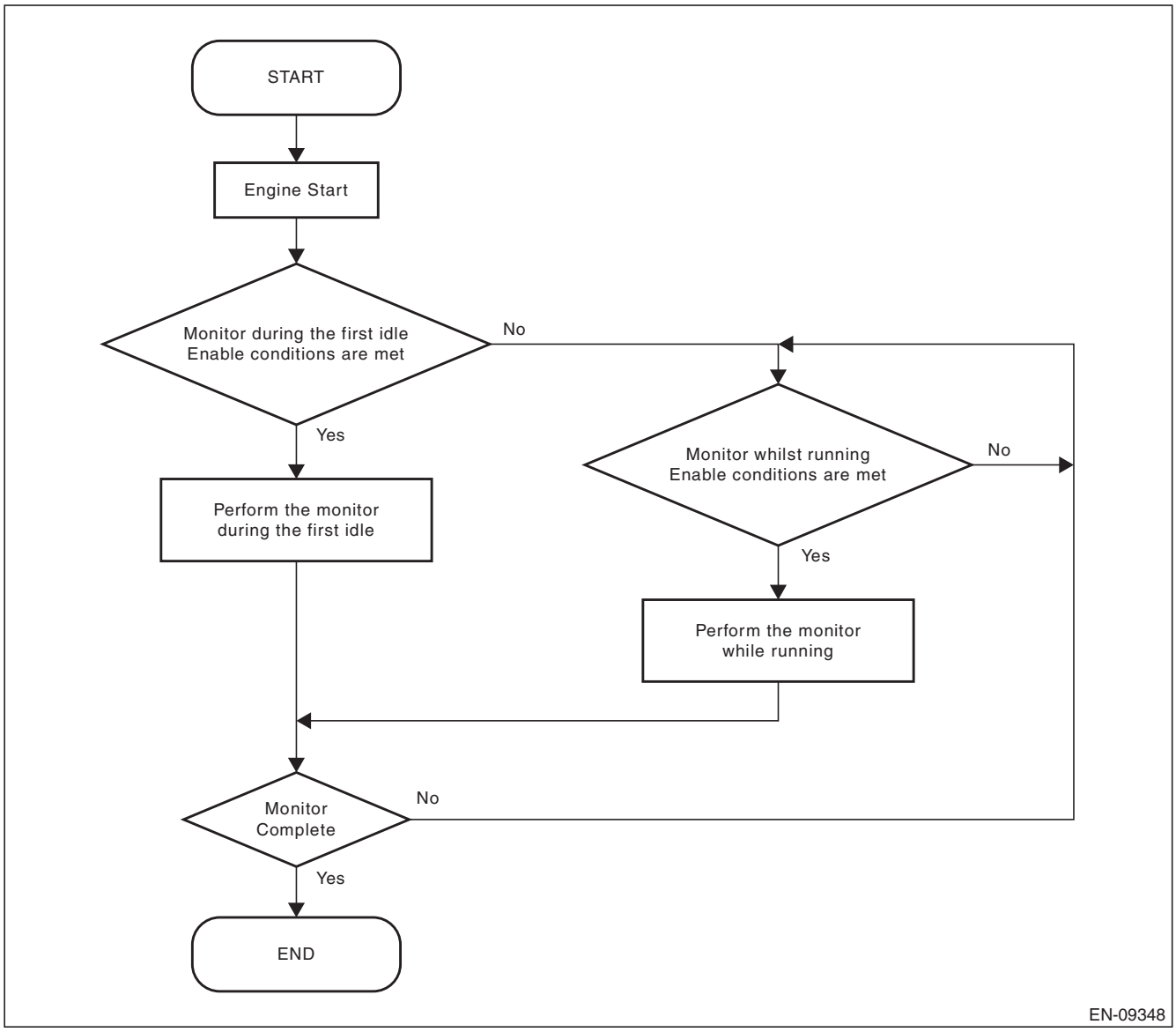

GETTHEMANUALS.org

Monitor 2 (first idle condition)

Mode	Description of each mode	Required time for each mode
Mode A (Estimation of Evap. Generation)	CPC valve: Closed CCV: Closed Low vapor flag At the beginning of the monitor test when; → Fuel temperature is lower than Map 2 listed value → Intake air temperature is lower than Map 3 listed value The system sets “Low vapor flag = ON”. Low vapor flag is used in Mode A, Mode C, and Mode D. The system measures the generated vapor pressure increase (△P1) in the specific time period (*1), and then moves to Mode B. (*1) Low vapor flag OFF: 10000 ms, Low vapor flag ON: 128 ms	Low vapor flag OFF 10000 ms Low vapor flag ON 128 ms
Mode B (Negative Pressure Introduction)	CPC valve: Open Negative pressure is introduced to the fuel tank via engine manifold vacuum. When the fuel tank pressure reaches the target pressure (–1.3 kPa (–10 mmHg, –0.4 inHg)), the monitor moves to Mode C.	Average: 13 s (Depends on the tank condition)
Mode C (Keeping Negative Pressure / Pass in Mode C)	CPC valve: Closed After a calibrated time period (*2) has elapsed since the tank pressure comes up to the target pressure (–1.3 kPa (–10 mmHg, –0.4 inHg)), move to Mode D. If the fuel tank pressure does not exceed the target pressure (–1.3 kPa (–10 mmHg, –0.4 inHg)) after Map 4 (ms), the system is judged as “Pass in Mode C” and moves to “Final Judgment”. (*2) Low vapor flag OFF: 10000 ms, Low vapor flag ON: 2000 ms	Low vapor flag OFF Average: 21 s Low vapor flag ON Average: 10 s (Depends on the tank condition)
Mode D (Pressure Measurement / Fail or Pass in Mode D)	The monitor requires 10000 ms to measure the pressure change (△P2) and calculates the monitor value (△P2-△P1), where Mode A (△P1) is the generated vapor pressure. The calculated value (△P2-△P1) is then compared to a calibrated threshold table as a function of fuel temperature and fuel level. The system judges as a “Pass/Fail in Mode D” and then moves to “Final Judgment”. (1) △P2 – △P1 > Fail Threshold (*3) → “Fail in Mode D” (2) △P2 – △P1 ≤ Pass Threshold (*4) → “Pass in Mode D” (*3) Low vapor flag OFF: Map 5, Low vapor flag ON: Map 7 (*4) Low vapor flag OFF: Map 6, Low vapor flag ON: Map 8	10000 ms
Final Judgment (Pass / Fail)	The monitor is completed in the following order (1) Judged as “Fail in Mode D” → “Fail of 0.020 inch leak” **[P0456]** (2) Judged as “Pass in Mode C / Mode D” → “Pass of 0.020 inch leak”	0.128 s

Map 2 (Fuel temperature threshold for “Low vapor flag”)

Fuel Level ℓ (US gal, Imp gal)	10.5 (2.77, 2.31)	35 (9.25, 7.7)	59.5 (15.72, 13.09)
Fuel temperature threshold °C (°F)	5 (41)	10 (50)	15 (59)

Map 3 (intake air temperature threshold for “Low Vapor Flag”)

Fuel Level ℓ (US gal, Imp gal)	10.5 (2.77, 2.31)	35 (9.25, 7.7)	59.5 (15.72, 13.09)
Intake air temperature threshold °C (°F)	5 (41)	10 (50)	15 (59)

GETTHEMANUALS.org

Map 4 (Period for judgment of Pass in Mode C)

Fuel Level ℓ (US gal, Imp gal)	10.5 (2.77, 2.31)	35 (9.25, 7.7)	50 (13.21, 11)	59.5 (15.72, 13.09)
Period for Pass in Mode C (ms)	28000	18000	13000	11500

Map 5 (Threshold value for 0.020 inch leak in Mode D under normal condition)

		Fuel temperature (°C (°F))									
		0 (32)	10 (50)	15 (59)	20 (68)	25 (77)	30 (86)	35 (95)	40 (104)	45 (113)	50 (122)
Fuel Level ℓ (US gal, Imp gal)	10.5 (2.77, 2.31)	0.1 (0.70, 0)	0.1 (0.70, 0)	0.1 (0.70, 0)	0.1 (0.70, 0)	0.1 (0.90, 0)	0.1 (1.10, 0)	0.1 (1.10, 0)	0.1 (1.10, 0)	0.1 (1.10, 0)	0.1 (1.10, 0)
	35 (9.25, 7.7)	0.1 (0.80, 0)	0.1 (0.80, 0)	0.1 (0.80, 0)	0.1 (0.80, 0)	0.1 (1.00, 0)	0.2 (1.20, 0)	0.2 (1.20, 0)	0.2 (1.20, 0)	0.2 (1.20, 0)	0.2 (1.20, 0)
	59.5 (15.72, 13.09)	0.1 (0.90, 0)	0.1 (0.90, 0)	0.1 (0.90, 0)	0.1 (0.90, 0)	0.1 (1.10, 0)	0.2 (1.30, 0.1)	0.2 (1.30, 0.1)	0.2 (1.30, 0.1)	0.2 (1.30, 0.1)	0.2 (1.30, 0.1)
kPa (mmHg, inHg)											

Map 6 (Threshold value for Pass in Mode D under normal conditions)

		Fuel temperature (°C (°F))									
		0 (32)	10 (50)	15 (59)	20 (68)	25 (77)	30 (86)	35 (95)	40 (104)	45 (113)	50 (122)
Fuel Level ℓ (US gal, Imp gal)	10.5 (2.77, 2.31)	0.1 (0.60, 0)	0.1 (0.60, 0)	0.1 (0.60, 0)	0.1 (0.60, 0)	0.1 (0.60, 0)	0.1 (0.60, 0)	0.1 (0.60, 0)	0.1 (0.60, 0)	0.1 (0.60, 0)	0.1 (0.60, 0)
	35 (9.25, 7.7)	0.1 (0.60, 0)	0.1 (0.60, 0)	0.1 (0.60, 0)	0.1 (0.60, 0)	0.1 (0.60, 0)	0.1 (0.60, 0)	0.1 (0.60, 0)	0.1 (0.60, 0)	0.1 (0.60, 0)	0.1 (0.60, 0)
	59.5 (15.72, 13.09)	0.1 (0.80, 0)	0.1 (0.80, 0)	0.1 (0.80, 0)	0.1 (0.80, 0)	0.1 (0.80, 0)	0.1 (0.80, 0)	0.1 (0.80, 0)	0.1 (0.80, 0)	0.1 (0.80, 0)	0.1 (0.80, 0)
kPa (mmHg, inHg)											

Map 7 (Threshold value for 0.020 inch leak in Mode D with under low vapor conditions)

		Fuel temperature (°C (°F))			
		0 (32)	10 (50)	15 (59)	20 (68)
Fuel Level ℓ (US gal, Imp gal)	10.5 (2.77, 2.31)	0.1 (0.80, 0)	0.1 (0.80, 0)	0.1 (0.80, 0)	0.1 (0.80, 0)
	35 (9.25, 7.7)	0.1 (0.90, 0)	0.1 (0.90, 0)	0.1 (0.90, 0)	0.1 (0.90, 0)
	59.5 (15.72, 13.09)	0.1 (1, 0)	0.1 (1, 0)	0.1 (1, 0)	0.1 (1, 0)
kPa (mmHg, inHg)					

Map 8 (Threshold value for Pass in Mode D with under low vapor conditions)

		Fuel temperature (°C (°F))			
		0 (32)	10 (50)	15 (59)	20 (68)
Fuel Level ℓ (US gal, Imp gal)	10.5 (2.77, 2.31)	0.1 (0.60, 0)	0.1 (0.60, 0)	0.1 (0.60, 0)	0.1 (0.60, 0)
	35 (9.25, 7.7)	0.1 (0.7, 0)	0.1 (0.7, 0)	0.1 (0.7, 0)	0.1 (0.7, 0)
	59.5 (15.72, 13.09)	0.1 (0.80, 0)	0.1 (0.80, 0)	0.1 (0.80, 0)	0.1 (0.80, 0)
kPa (mmHg, inHg)					

GETTHEMANUALS.org

Monitor 2 (vehicle running condition)

Mode	Description of each mode	Required time for each mode
Mode A-1 (Zero adjust)	CPC valve: Closed Fuel tank pressure is adjusted to zero. If the fuel tank pressure is close to the ambient pressure, the system waits 5000 ms for stabilization of the tank pressure prior to moving to Mode A-2.	Average: 7 s (Depends on the tank condition)
Mode A-2 (Estimation of Evap. Generation)	CCV: Closed The system requires 30000 ms to measure the pressure increase (P1), and then move to Mode B.	30000 ms
Mode B (Negative Pressure Introduction)	CPC valve: Open Negative pressure is introduced to the fuel tank via engine manifold vacuum. When the fuel tank pressure reaches the target pressure (–2 kPa (–15 mmHg, –0.6 inHg)), the monitor moves to Mode C.	Average: 22 s (Depends on the tank condition)
Mode C (Keeping Negative Pressure)	CPC valve: Closed When the tank pressure comes up to target pressure (–2 kPa (–15 mmHg, –0.6 inHg)) or the calibrated period (Map 9) has passed, move to Mode D.	Average: 5 s (Depends on the tank condition)
Mode D (Pressure Measurement / Pass Fail in Mode D)	The system calculates the integrated pressure change (ptepap1sum) which is compensated by “P1” (the generated vapor pressure), ptepap1sum (n) = ptepap1sum (n–1) + ptepap1 – (–2 kPa (–15 mmHg, –0.6 inHg)) ptepap1 = (Fuel tank pressure) – (“P1”) / (Mode A-2 time) × (Elapsed time in Mode D) When the calibrated period (Map 10) has passed or the tank pressure reaches the Ambient pressure (0 kPa (0 mmHg, 0 inHg)), the system compares the monitor value (ptepap1sum) to a calibrated threshold table as a function of elapsed time in Mode D and fuel level. The system judges as “Pass/Fail in Mode D” and then moves to “Final Judgment”. (1) ptepap1sum > Fail Threshold (Map 11) → “Fail in Mode D” (2) ptepap1sum ≤ Pass Threshold (Map 12) → “Pass in Mode D”	Average: 134 s (Depends on the tank condition)
Final Judgment (Pass / Fail)	The monitor is completed in the following order (1) Judged as “Fail in Mode D” → Fail of 0.020 inch leak **[P0456]** (2) Judged as “Pass in Mode D” → Pass of 0.020 inch leak	0.128 s

Map 9 (Maximum time of Mode C)

Fuel Level ℓ (US gal, Imp gal)	10.5 (2.77, 2.31)	27 (7.13, 5.94)	43 (11.36, 9.46)	59.5 (15.72, 13.09)
Maximum time of Mode C (ms)	21208	19288	9742	8057

Map 10 (Maximum time of Mode D)

Fuel Level ℓ (US gal, Imp gal)	10.5 (2.77, 2.31)	35 (9.25, 7.7)	60 (15.85, 13.2)
Maximum time of Mode D (ms)	210000	153000	92000

GETTHEMANUALS.org

Map 11 (Threshold value for 0.020 inch leak in Mode D)

		Elapsed time in Mode D (ms)							
		14976	30080	45056	60032	75008	89984	104960	119936
Fuel Level ℓ (US gal, Imp gal)	10.5 (2.77, 2.31)	11.8 (89 , 3.5)	44.5 (334 , 13.2)	93.7 (703 , 27.7)	157.7 (1183 , 46.6)	235.2 (1764 , 69.5)	325.2 (2440 , 96.1)	427.1 (3204 , 126.2)	540.2 (4053 , 159.6)
	35 (9.25, 7.7)	16.6 (125 , 4.9)	59.9 (449 , 17.7)	124.3 (932 , 36.7)	207.6 (1558 , 61.3)	308 (2311 , 91)	424 (3181 , 125.2)	554.2 (4157 , 163.7)	698.1 (5237 , 206.2)
	60 (15.85, 13.2)	19.5 (147 , 5.8)	72.6 (544 , 21.4)	153.1 (1149 , 45.2)	258.3 (1938 , 76.3)	385.3 (2891 , 113.8)	531.9 (3990 , 157.1)	695.9 (5220 , 205.5)	874.7 (6562 , 258.3)
kPa (mmHg, inHg)									

		Elapsed time in Mode D (ms)						
		135040	150016	164992	179968	194944	209920	225024
Fuel Level ℓ (US gal, Imp gal)	10.5 (2.77, 2.31)	664.9 (4988 , 196.4)	798.3 (5988.759196, 235.8)	941.1 (7059.829331, 277.9)	1093 (8199.589852, 322.8)	1253.1 (9400.484819, 370.1)	1421.1 (10660.58808, 419.7)	1597.7 (11985.45394, 471.9)
	35 (9.25, 7.7)	855.3 (6417 , 252.6)	1022.1 (7667.574279, 301.9)	1198.3 (8989.295773, 353.9)	1383 (10375.1614, 408.5)	1575.5 (11819.51053, 465.3)	1774.4 (13311.35531, 524.1)	1979.4 (14848.89523, 584.6)
	60 (15.85, 13.2)	1067.4 (8007 , 315.2)	1268.4 (9515.072146, 374.6)	1476.9 (11079.18417, 436.2)	1690.4 (12681.30069, 499.3)	1907 (14306.15395, 563.2)	2125.6 (15945.85818, 627.8)	2346.1 (17599.98997, 692.9)
kPa (mmHg, inHg)								

Map 12 (Threshold value for Pass in Mode D)

		Elapsed time in Mode D (ms)							
		14976	30080	45056	60032	75008	89984	104960	119936
Fuel Level ℓ (US gal, Imp gal)	10.5 (2.77, 2.31)	8.7 (65 , 2.6)	32.8 (246 , 9.7)	69 (518 , 20.4)	116.2 (871 , 34.3)	173.3 (1300 , 51.2)	239.7 (1798 , 70.8)	314.7 (2361 , 93)	398.1 (2986 , 117.6)
	35 (9.25, 7.7)	12.3 (92 , 3.6)	44.1 (331 , 13)	91.6 (687 , 27)	153 (1148 , 45.2)	226.9 (1703 , 67)	312.4 (2344 , 92.3)	408.3 (3063 , 120.6)	514.4 (3859 , 151.9)
	60 (15.85, 13.2)	14.4 (108 , 4.3)	53.5 (401 , 15.8)	112.8 (846 , 33.3)	190.3 (1428 , 56.2)	283.9 (2130 , 83.9)	391.9 (2940 , 115.8)	512.7 (3847 , 151.4)	644.5 (4835 , 190.3)
kPa (mmHg, inHg)									

		Elapsed time in Mode D (ms)						
		135040	150016	164992	179968	194944	209920	225024
Fuel Level ℓ (US gal, Imp gal)	10.5 (2.77, 2.31)	489.9 (3675 , 144.7)	588.2 (4412.769934, 173.7)	693.4 (5201.979507, 204.8)	805.4 (6041.803049, 237.9)	923.3 (6926.673025, 272.7)	1047.1 (7855.170163, 309.3)	1177.2 (8831.38711, 347.7)
	35 (9.25, 7.7)	630.2 (4728 , 186.1)	753.1 (5649.791574, 222.4)	882.9 (6623.691622, 260.8)	1019.1 (7644.85577, 301)	1160.9 (8709.113019, 342.9)	1307.5 (9808.367067, 386.2)	1458.5 (10941.29122, 430.8)
	60 (15.85, 13.2)	786.5 (5900 , 232.3)	934.6 (7011.105792, 276)	1088.2 (8163.609387, 321.4)	1245.6 (9344.116297, 367.9)	1405.2 (10541.3766, 415)	1566.2 (11749.57971, 462.6)	1728.7 (12968.41366, 510.6)
kPa (mmHg, inHg)								

GETTHEMANUALS.org

2. ENABLE CONDITION

Monitor 1

Secondary Parameters	Enable Conditions
Battery voltage	≥ 10.9 V
Ambient pressure	≥ 75 kPa (563 mmHg, 22.2 inHg)
Fuel tank pressure	≥ –4 kPa (–30 mmHg, –1.2 inHg) and < 2.7 kPa (20 mmHg, 0.8 inHg)
Elapsed time after previous EVAP monitor was finished/canceled	≥ 230000 ms
Total time of canister purge operation	≥ 120000 ms
Learning value of EVAP concentration	< 0.08
Engine speed	≥ 1050 rpm and < 4000 rpm
Intake manifold vacuum (= ambient pressure – intake manifold pressure)	≥ 13.3 kPa (100 mmHg, 3.9 inHg)
Vehicle speed	≥ 32 km/h (19.9 MPH)
Closed loop air fuel ratio control	Active
Fuel temperature	< 45 °C (113 °F)
Intake air temperature	≥ –10 °C (14 °F)
Fuel level	≥ 10.5 ℓ (2.77 US gal, 2.31 Imp gal) and < 59.5 ℓ (15.72 US gal, 13.09 Imp gal)

Monitor 2 (first idle condition)

Secondary Parameters	Enable Conditions
Battery voltage	≥ 10.9 V
Ambient pressure	≥ 75 kPa (563 mmHg, 22.2 inHg)
Soak time	≥ 18000 s
Accumulated intake air mass after engine start	≥ Map 13
Closed loop air fuel ratio control	Active
Fuel level	≥ 10.5 ℓ (2.77 US gal, 2.31 Imp gal) and < 59.5 ℓ (15.72 US gal, 13.09 Imp gal)
Fuel temperature	< 35 °C (95 °F)
Fuel tank pressure	≥ –0.7 kPa (–5.106 mmHg, –0.2 inHg) and < 0.7 kPa (5.106 mmHg, 0.2 inHg)
Adapted fuel tank pressure	≥ –0.3 kPa (–2.507 mmHg, –0.1 inHg) and < 0.3 kPa (2.507 mmHg, 0.1 inHg)
Engine speed	≥ 1000 rpm and < 2000 rpm
Intake manifold vacuum (= ambient pressure – intake manifold pressure)	≥ 13.3 kPa (100 mmHg, 3.9 inHg)
Vehicle speed	< 2 km/h (1.2 MPH)
Idle switch	ON
Intake air temperature	≥ –10 °C (14 °F)

GETTHEMANUALS.org

Monitor 2 (vehicle running condition)

Secondary Parameters	Enable Conditions
Battery voltage	≥ 10.9 V
Ambient pressure	≥ 75 kPa (563 mmHg, 22.2 inHg)
Elapsed time after previous EVAP monitor was finished/canceled	≥ 60000 ms
Total time of canister purge operation	≥ 120000 ms
Fuel temperature	< 55 °C (131 °F)
Fuel level	≥ 10.5 ℓ (2.77 US gal, 2.31 Imp gal) and < 59.5 ℓ (15.72 US gal, 13.09 Imp gal)
Intake air temperature	≥ –10 °C (14 °F)
Vehicle speed	≥ 30 km/h (18.6 MPH)
All conditions below are satisfied	≥ 5000 ms
• Fuel tank pressure	≥ –0.7 kPa (–5 mmHg, –0.2 inHg) and < 1.4 kPa (10.7 mmHg, 0.4 inHg)
• Engine speed	≥ 1050 rpm and < 4000 rpm
• Intake manifold vacuum (= ambient pressure – intake manifold pressure)	≥ 13.3 kPa (100 mmHg, 3.9 inHg)
• Closed loop air fuel ratio control	Active
• Short term fuel trim	> 0.9
• Fuel level with large smoothing coefficient – Fuel level with small smoothing coefficient	< Map 14
• Learning value of EVAP density	< 0.08

Map 13 (Accumulated intake air mass after engine start)

Engine coolant temperature at start °C (°F)	–10 (14)	0 (32)	10 (50)	20 (68)	30 (86)	40 (104)	50 (122)	60 (140)	70 (158)
Accumulated intake air mass after engine start g (oz)	420 (14.81)	420 (14.81)	420 (14.81)	380 (13.4)	360 (12.7)	280 (9.88)	180 (6.35)	120 (4.23)	120 (4.23)

Map 14 (Threshold value the fuel slosh detection)

Fuel Level ℓ (US gal, Imp gal)	10 (2.64, 2.2)	20 (5.28, 4.4)	25 (6.61, 5.5)	30 (7.93, 6.6)	43 (11.36, 9.46)	45 (11.89, 9.9)	50 (13.21, 11)	60 (15.85, 13.2)
Fuel level change for detection of fuel slosh ℓ (US gal, Imp gal)	5 (1.32, 1.1)	5 (1.32, 1.1)	5 (1.32, 1.1)	5 (1.32, 1.1)	5 (1.32, 1.1)	5 (1.32, 1.1)	6 (1.59, 1.32)	8 (2.11, 1.76)

GETTHEMANUALS.org

3. GENERAL DRIVING CYCLE

Monitor 1

Perform the diagnosis when the cumulative time of canister purge after engine start becomes 120 seconds or more, at a vehicle speed of 32 km/h (20 MPH) or more.
If judgment cannot be made, repeat the diagnosis after a predetermined interval has passed.

Monitor 2 (first idle condition)

Perform the diagnosis only once at the fast idle (the idling before starting to move) after soaking of 5 hours or more, in conditions that A/F feedback has been executed and catalytic converter has been warmed up (approx. 25 seconds after engine start).
If judgment cannot be made, or the diagnosis cannot be performed at fast idle, do not repeat the diagnosis in this driving cycle.

Monitor 2 (vehicle running condition)

Perform this procedure only when the diagnosis cannot be completed at fast idle.
Perform the diagnosis when the cumulative time of canister purge after engine start becomes 120 seconds or more, at a vehicle speed of 30 km/h (18.6 MPH) or more.
If judgment cannot be made, repeat the diagnosis after a predetermined interval has passed.

4. DIAGNOSTIC METHOD

- **Monitor 1**

• CPC valve stuck open

At the beginning of the Monitor 1, system performs CPC valve stuck open monitor in Mode Z. CPC valve and CCV are closed and the fuel tank pressure is monitored. The pressure transition over a calibrated time is then used to determine if the CPC valve is stuck open.

CPC valve stuck open test at Mode Z of Monitor 1

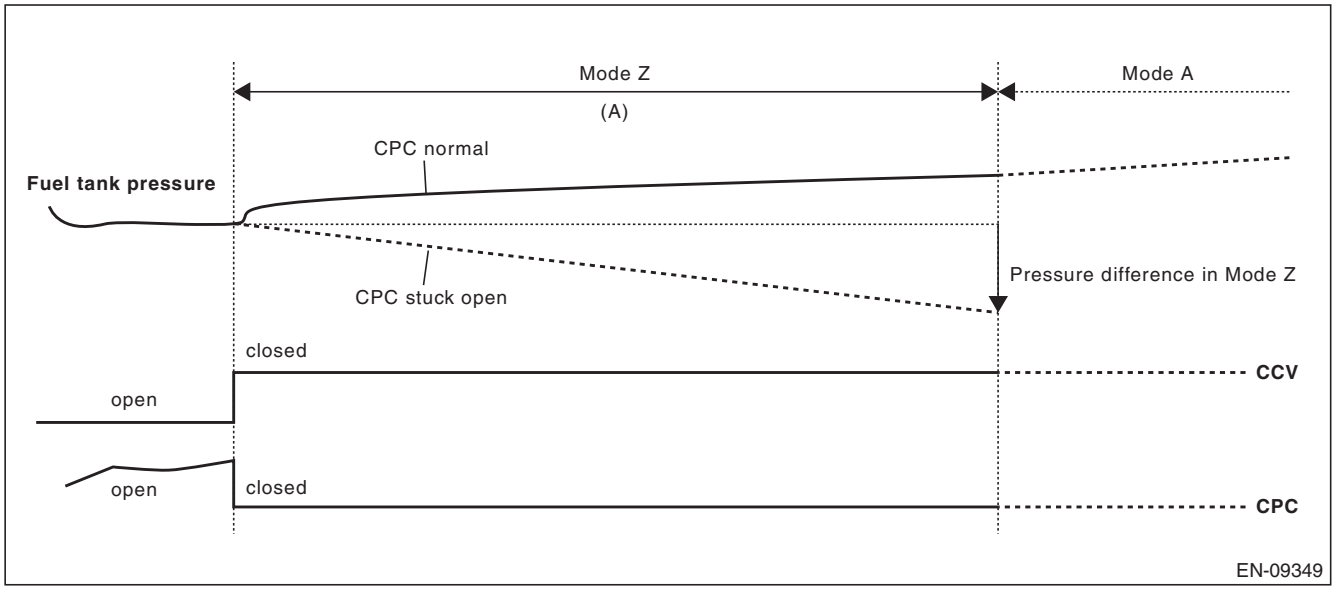

(A) 3000 ms

Judgment

- Pressure difference in Mode Z < 0.9 kPa (6.5 mmHg, 0.3 inHg) → Fail [CPC valve stuck open]: **P0457**
- Pressure difference in Mode Z ≥ 0.4 kPa (3 mmHg, 0.1 inHg) → Pass → move to **Mode A**

• Fuel cap loose/off and CPC valve stuck close

Fuel cap loose/off and CPC valve stuck close monitor is performed in Mode B of Monitor 1. The engine lowers the fuel tank pressure using intake manifold vacuum via the operation of the CPC valve. The pressure transition over a calibrated time is then used to determine if the Fuel cap loose/off or CPC valve stuck closed.

GETTHEMANUALS.org

Fuel cap off or CPC stuck close at Mode B of Monitor 1

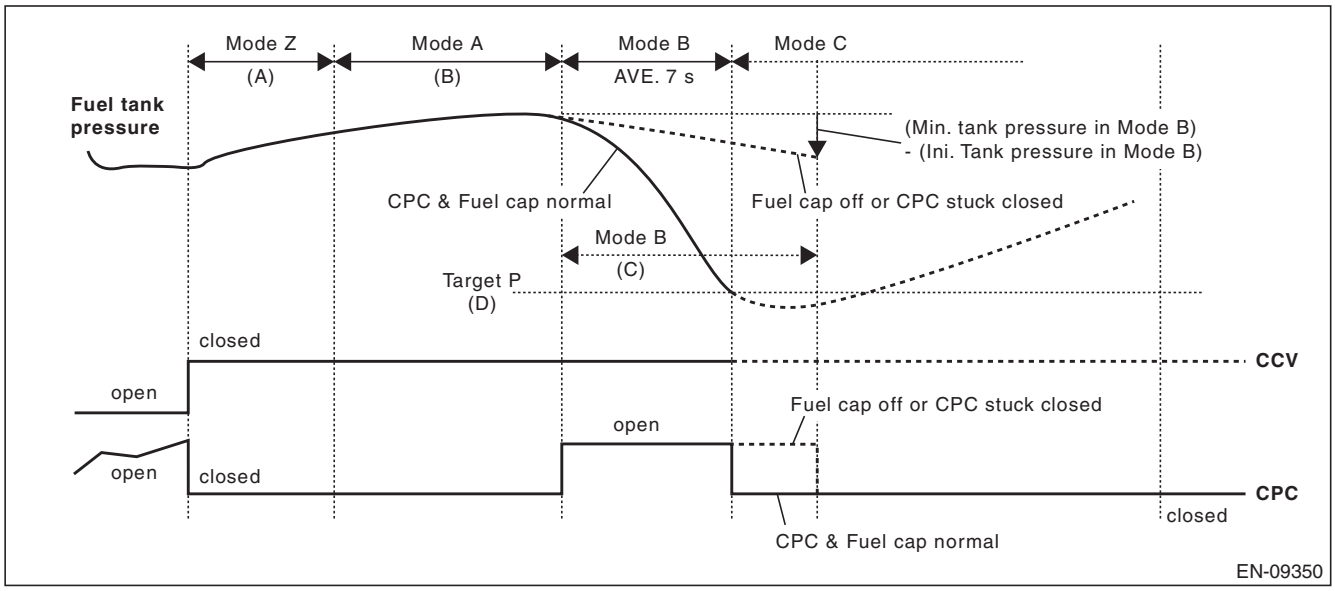

(A) 3000 ms (B) 10000 ms (C) 10000 ms
(D) –1.4 kPa (–10.5 mmHg, –0.4 inHg)

Judgment

- Elapsed time in Mode B ≥ 10000 ms and (Minimum tank pressure in Mode B) – (Initial tank pressure in Mode B) > –0.3 kPa (–2.5 mmHg, –0.1 inHg) → Fail [Fuel cap off or CPC valve stuck close]: **P0457**
- Fuel tank pressure ≤ –1.4 kPa (–10.5 mmHg, –0.4 inHg) → Pass → move to **Mode C**

Fuel cap loose at Mode B of Monitor 1

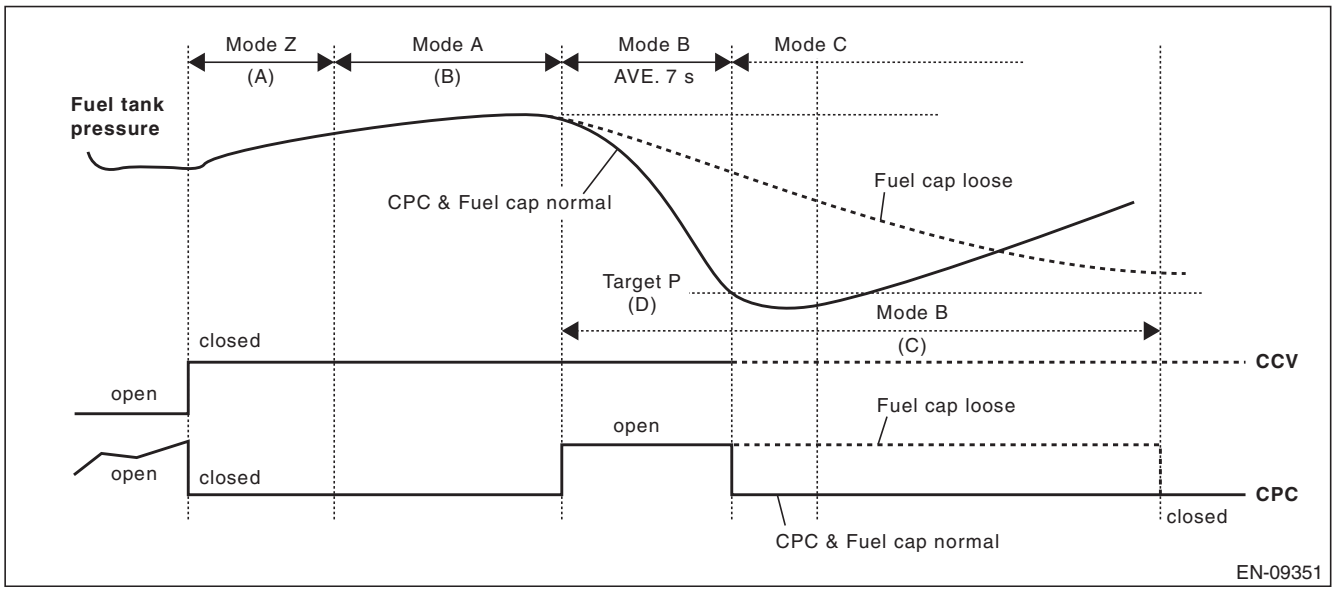

(A) 3000 ms (B) 10000 ms (C) 10000 ms + 25000 ms
(D) –1.4 kPa (–10.5 mmHg, –0.4 inHg)

GETTHEMANUALS.org

Judgment

- Elapsed time in Mode B ≥ 10000 ms + 25000 ms → Fail [Fuel cap loose]: **P0457**
- Fuel tank pressure ≤ –1.4 kPa (–10.5 mmHg, –0.4 inHg) → Pass → move to **Mode C**

• 0.040 inch leak check

0.040 inch evaporative leak monitor is executed through Mode A to Mode D of Monitor 1. The engine lowers the fuel tank pressure using intake manifold vacuum via the canister purge operation during engine running. Once the tank pressure reaches a calibrated target (below atmospheric pressure) the purge valve is closed and the fuel tank pressure is monitored. The pressure transition over a calibrated time period is then used to determine if the fuel tank system has a leak.

0.040 inch EVAP monitor test

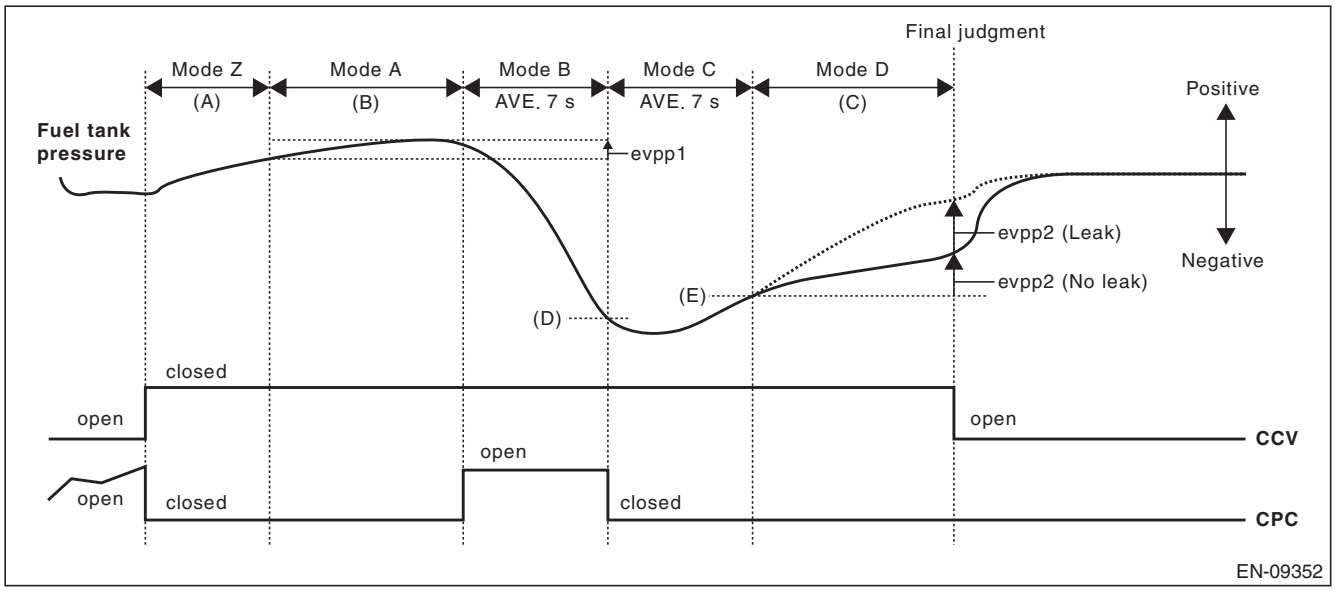

(A)	3000 ms	(B)	10000 ms	(C)	10000 ms
(D)	–1.4 kPa (–10.5 mmHg, –0.4 inHg)	(E)	–1.4 kPa (–10.5 mmHg, –0.4 inHg)		

Judgment

- evpp2 – 1.5 × evpp1 > Map 1 → Fail [0.040 inch Leak]: **P0442**
- evpp2 – 1.5 × evpp1 ≤ Map 1 → Pass [No Leak]

GETTHEMANUALS.org

- **Monitor 2 (first idle condition)**

0.020 inch leak check at first idle condition

An intrusive evaporative leak monitor test is run following the first engine start after a calibrated engine off soak period. The engine lowers the fuel tank pressure using intake manifold vacuum via the purge valve operation during engine idle. Once the tank pressure reaches a calibrated target (below atmospheric pressure) the purge valve is closed and the fuel tank pressure is monitored. The pressure transition over a calibrated time period is then used to determine if the fuel tank system has a leak.

Intrusive EVAP Monitor test at first Idle

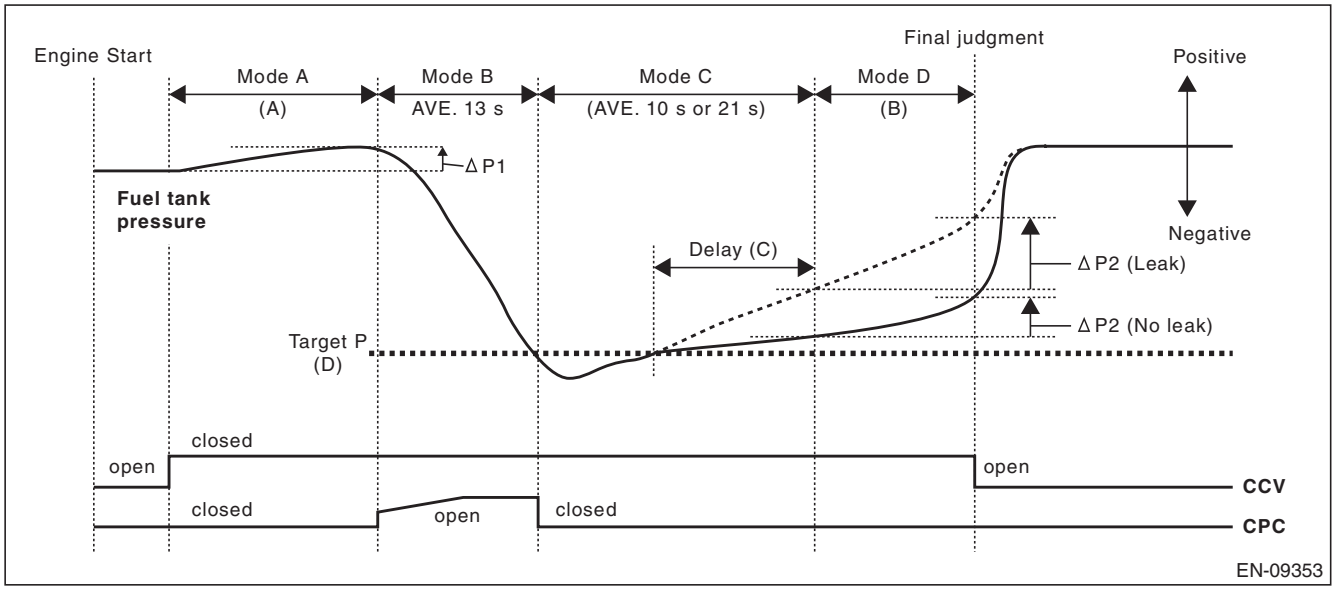

(A) 128 ms or 10000 ms (B) 10000 ms (C) 2000 ms or 10000 ms
(D) –1.3 kPa (–10 mmHg, –0.4 inHg)

Judgment

- $\triangle$P2 – $\triangle$P1 > Map 5 or Map 7 → Fail [0.020 inch Leak]: **P0456**
- $\triangle$P2 – $\triangle$P1 ≤ Map 6 or Map 8 → Pass [No Leak]

GETTHEMANUALS.org

- **Monitor 2 (vehicle running condition)**

0.020 inch Monitor during Vehicle Running (moving) Conditions

While the vehicle is vehicle running, the diagnostic intrusively pulls-down the fuel tank pressure using manifold vacuum via the purge valve. Once the tank pressure reaches a calibrated target (below atmospheric pressure) the purge valve is closed and the fuel tank pressure is monitored. The pressure transition over a calibrated time period is then used to determine if the fuel tank system has a leak.

Intrusive EVAP Monitor Test (Vehicle Running)

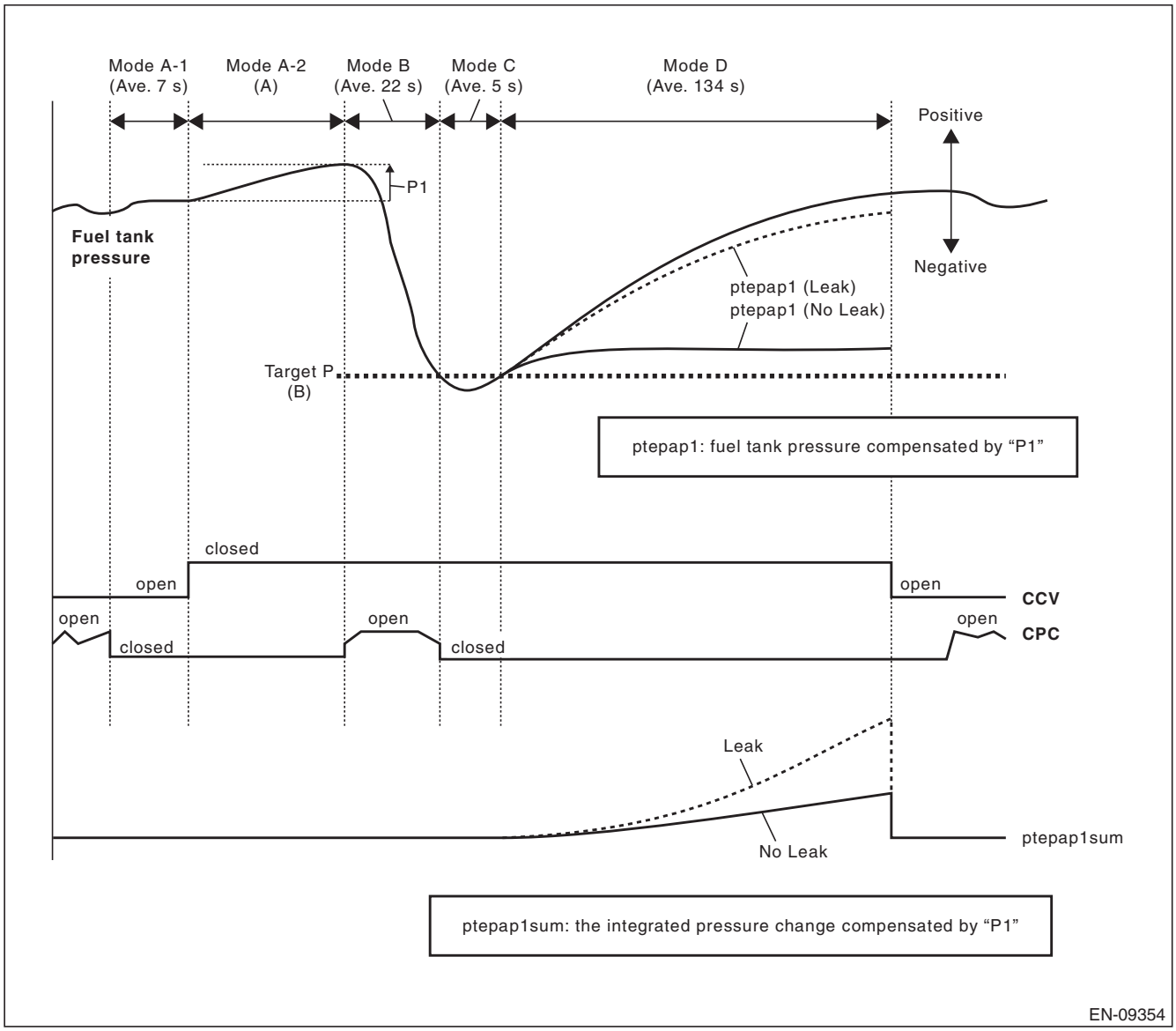

(A) 30000 ms (B) –2 kPa (–15 mmHg, –0.6 inHg)

Judgment

- ptepap1sum > Map 11 → Fail [0.020 inch Leak]: **P0456**
- ptepap1sum ≤ Map 12 → Pass [No Leak]

GETTHEMANUALS.org

BW:DTC P0447 EVAPORATIVE EMISSION CONTROL SYSTEM VENT CONTROL CIRCUIT OPEN

1. OUTLINE OF DIAGNOSIS

Detect open or short circuit of the drain valve.
Judge as NG when the ECM output level differs from the actual terminal level.

2. COMPONENT DESCRIPTION

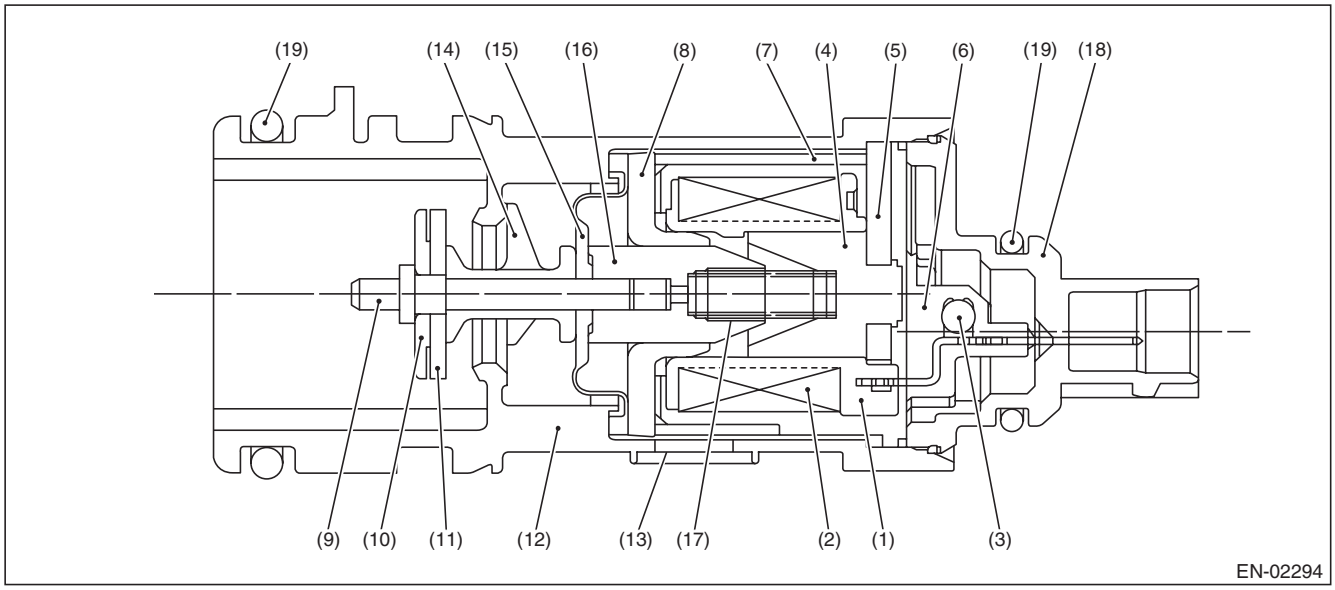

(1)	Bobbin	(8)	Magnetic plate	(15)	Diaphragm
(2)	Coil	(9)	Shaft	(16)	Movable core
(3)	Diode	(10)	Plate	(17)	Spring
(4)	Stator core	(11)	Valve	(18)	Cover
(5)	End plate	(12)	Housing	(19)	O-ring
(6)	Body	(13)	Filter		
(7)	Yoke	(14)	Retainer		

3. ENABLE CONDITION

Secondary Parameters	Enable Conditions
None	

4. GENERAL DRIVING CYCLE

Always perform the diagnosis continuously.

GETTHEMANUALS.org

5. DIAGNOSTIC METHOD

- **Abnormality Judgment**

If the duration of time while the following conditions are met is longer than the time indicated, judge as NG.

Judgment Value

Malfunction Criteria	Threshold Value
Battery voltage	≥ 10.9 V
Elapsed time after starting the engine	≥ 1 second
Terminal output voltage when ECM outputs OFF signal	Low

Time Needed for Diagnosis: 2500 ms
Malfunction Indicator Light Illumination: Illuminates as soon as a malfunction occurs.

- **Normality Judgment**

Judge as OK and clear the NG if the continuous time while the following conditions are established is more than the predetermined time.

Judgment Value

Malfunction Criteria	Threshold Value
Battery voltage	≥ 10.9 V
Elapsed time after starting the engine	≥ 1 second
Terminal output voltage when ECM outputs OFF signal	High

Time Needed for Diagnosis: Less than 1 second

GETTHEMANUALS.org

BX:DTC P0448 EVAPORATIVE EMISSION CONTROL SYSTEM VENT CONTROL CIRCUIT SHORTED

1. OUTLINE OF DIAGNOSIS

Detect open or short circuit of the drain valve.
Judge as NG when the ECM output level differs from the actual terminal level.

2. COMPONENT DESCRIPTION

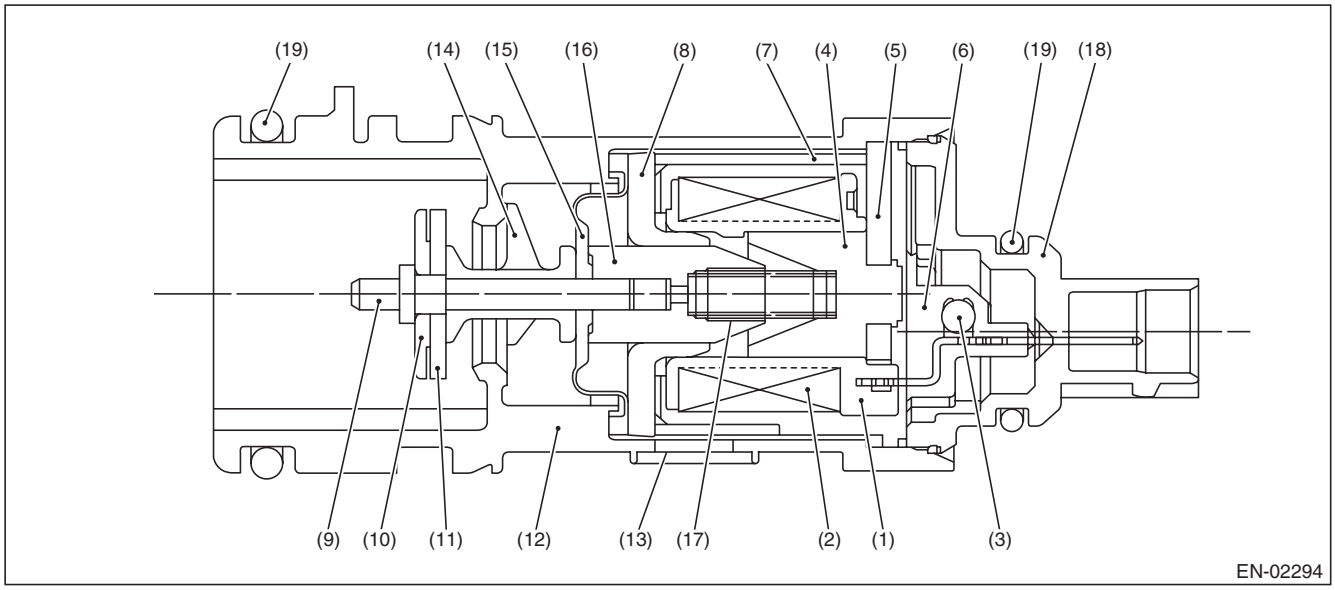

(1)	Bobbin	(8)	Magnetic plate	(15)	Diaphragm
(2)	Coil	(9)	Shaft	(16)	Movable core
(3)	Diode	(10)	Plate	(17)	Spring
(4)	Stator core	(11)	Valve	(18)	Cover
(5)	End plate	(12)	Housing	(19)	O-ring
(6)	Body	(13)	Filter		
(7)	Yoke	(14)	Retainer		

3. ENABLE CONDITION

Secondary Parameters	Enable Conditions
None	

4. GENERAL DRIVING CYCLE

Always perform the diagnosis continuously.

GETTHEMANUALS.org

5. DIAGNOSTIC METHOD

- **Abnormality Judgment**

If the duration of time while the following conditions are met is longer than the time indicated, judge as NG.

Judgment Value

Malfunction Criteria	Threshold Value
Battery voltage	≥ 10.9 V
Elapsed time after starting the engine	≥ 1 second
Terminal output voltage when ECM outputs ON signal	High

Time Needed for Diagnosis: 2500 ms
Malfunction Indicator Light Illumination: Illuminates as soon as a malfunction occurs.

- **Normality Judgment**

Judge as OK and clear the NG if the continuous time while the following conditions are established is more than the predetermined time.

Judgment Value

Malfunction Criteria	Threshold Value
Battery voltage	≥ 10.9 V
Elapsed time after starting the engine	≥ 1 second
Terminal output voltage when ECM outputs ON signal	Low

Time Needed for Diagnosis: Less than 1 second

GETTHEMANUALS.org

BY:DTC P0451 EVAPORATIVE EMISSION CONTROL SYSTEM PRESSURE SENSOR

1. OUTLINE OF DIAGNOSIS

Detect malfunctions of tank pressure sensor output property by the following two diagnoses.

- **DRIFT DIAGNOSIS**

To detect drift malfunction and offset malfunction of tank pressure sensor, activate ECM in the predetermined soaking time after turning the ignition switch OFF, and check that the tank pressure sensor input value is equivalent to the barometric pressure.
For vehicles equipped with pressure control valve, be sure to open the pressure control valve when performing the diagnosis, because the pressure inside the tank increases if the ambient temperature rises during soaking.

- **Stuck Diagnosis**

When there is no pressure variation, which should have occurred in the tank considering the operation status, judge as NG.

2. COMPONENT DESCRIPTION

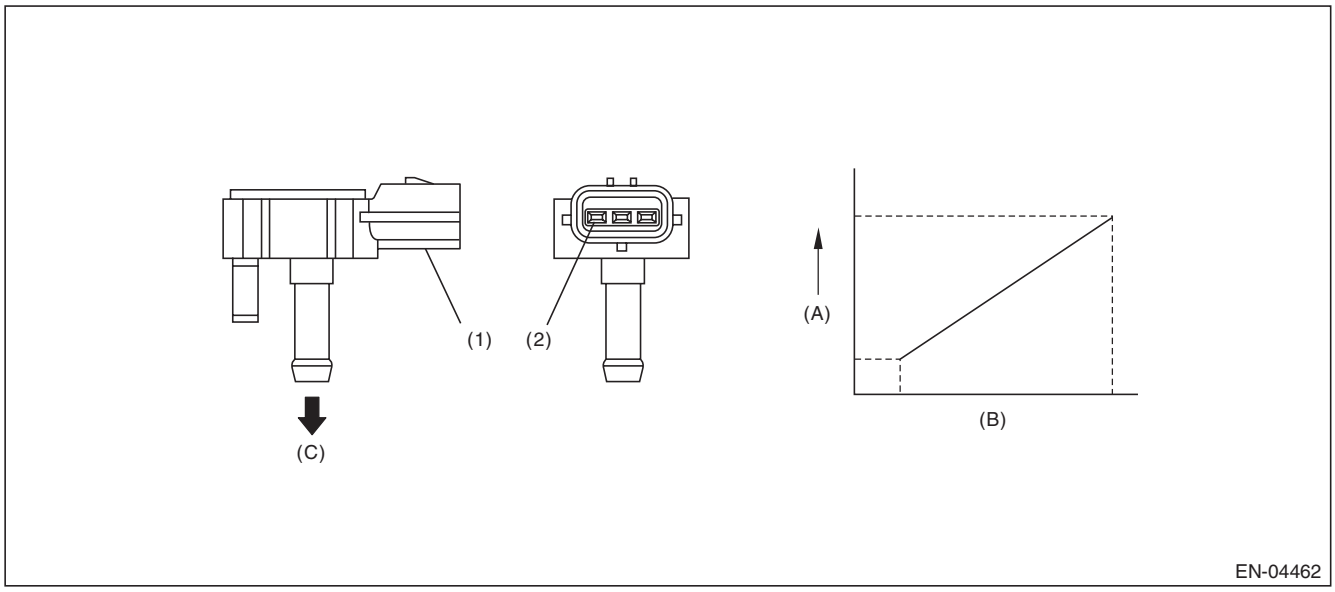

(A)	Output voltage	(B)	Input voltage	(C)	To fuel tank
(1)	Connector	(2)	Terminals		

GETTHEMANUALS.org

3. ENABLE CONDITION

<DRIFT DIAGNOSIS>

Secondary Parameters	Enable Conditions
Soaking time	≥ 3600 s × 3 time(s)
Ignition switch	OFF
Battery voltage	≥ 10.9 V
Atmospheric pressure	≥ 75 kPa (563 mmHg, 22.2 inHg)
Fuel temperature	< 55 °C (131 °F)
Intake air temperature	> –10 °C (14 °F) and < 55 °C (131 °F)
Cumulative amount of purge during previous driving cycle	≥ Value from Map
Fuel level when the ignition switch is OFF	≥ 10.5 ℓ (2.77 US gal, 2.31 Imp gal) and < 59.5 ℓ (15.72 US gal, 13.09 Imp gal)

Map

Ambient air temperature °C (°F)	25 (77)	35 (95)	40 (104)	45 (113)
Cumulative amount of purge during previous driving cycle g (oz)	500 (17.64)	2200 (77.59)	3000 (105.81)	3800 (134.03)

<Stuck Diagnosis>

Secondary Parameters	Enable Conditions
Elapsed time after starting the engine	≥ 60 s
Fuel level	≥ 10.5 ℓ (2.77 US gal, 2.31 Imp gal)
Fuel temperature	< 55 °C (131 °F)
Battery voltage	≥ 10.9 V
Atmospheric pressure	≥ 75 kPa (563 mmHg, 22.2 inHg)

4. GENERAL DRIVING CYCLE

<DRIFT DIAGNOSIS>

Perform the diagnosis only once when 3600 s × 3 time(s) has passed after the ignition switch is OFF.

<Stuck Diagnosis>

- Perform the diagnosis continuously after 60 s have passed since the engine started.
- Pay attention to the fuel level and temperature.

GETTHEMANUALS.org

5. DIAGNOSTIC METHOD

<DRIFT DIAGNOSIS>

Abnormality Judgment

Judge as NG when one of the following conditions is established.

Judgment Value

Malfunction Criteria	Threshold Value
Tank pressure sensor learning value	≥ 0.7 kPa (5.106 mmHg, 0.2 inHg) or < –0.7 kPa (–5.106 mmHg, –0.2 inHg)
Tank pressure sensor measured value – Tank pressure sensor learning value	≥ 0.3 kPa (2.507 mmHg, 0.1 inHg) or < –0.3 kPa (–2.507 mmHg, –0.1 inHg)

Time Needed for Diagnosis: 10 seconds

Malfunction Indicator Light Illumination: Illuminates when malfunction occurs in 2 continuous driving cycles.

Normality Judgment

Judge as OK and clear the NG if the following conditions are established.

Judgment Value

Malfunction Criteria	Threshold Value
Tank pressure sensor learning value	< 0.7 kPa (5.106 mmHg, 0.2 inHg) and ≥ –0.7 kPa (–5.106 mmHg, –0.2 inHg)
Tank pressure sensor measured value – Tank pressure sensor learning value	< 0.3 kPa (2.507 mmHg, 0.1 inHg) and ≥ –0.3 kPa (–2.507 mmHg, –0.1 inHg)

Time Needed for Diagnosis: 10 seconds

GETTHEMANUALS.org

<Stuck Diagnosis>

Abnormality Judgment

If the duration of time while the following conditions are met is longer than the time indicated, judge as NG.

Judgment Value

Malfunction Criteria	Threshold Value
Number of times that the difference between the Max. fuel level every 60 s and Min. fuel level every 60 s is 2 ℓ (0.53 US gal, 0.44 Imp gal) or more (with enable condition established)	≥ 16 time(s)
Maximum – Minimum tank pressure (with enable condition completed)	< 0 kPa (0.375 mmHg, 0 inHg)
Maximum – Minimum fuel temperature (with enable condition completed)	≥ 7 °C (12.6°F)

If the difference between the Max. fuel level every 60 s and Min. fuel level every 60 s is less than 2 ℓ (0.53 US gal, 0.44 Imp gal), extend 60 s and make judgment with the Max. and Min. values for the fuel level in 60 s × 2. If there is no difference after the extension of 60 s, continue further to 60 s × 3, 60 s × 4, 60 s × 5. If the difference between the Max. fuel level every 60 s and Min. fuel level every 60 s is 2 ℓ (0.53 US gal, 0.44 Imp gal) or more, the diagnosis counter counts up.

Time Needed for Diagnosis: 60 s × 16 time(s) or more

Malfunction Indicator Light Illumination: Illuminates when malfunction occurs in 2 continuous driving cycles.

Normality Judgment

Judge as OK and clear the NG if the continuous time while the following conditions are established is more than the predetermined time.

Judgment Value

Malfunction Criteria	Threshold Value
Maximum – Minimum tank pressure	≥ 0 kPa (0.375 mmHg, 0 inHg)

Time Needed for Diagnosis: Less than 1 second

GETTHEMANUALS.org

BZ:DTC P0452 EVAPORATIVE EMISSION CONTROL SYSTEM PRESSURE SENSOR LOW INPUT

1. OUTLINE OF DIAGNOSIS

Detect the open or short circuit of the fuel tank pressure sensor.
Judge as NG if out of specification.

2. COMPONENT DESCRIPTION

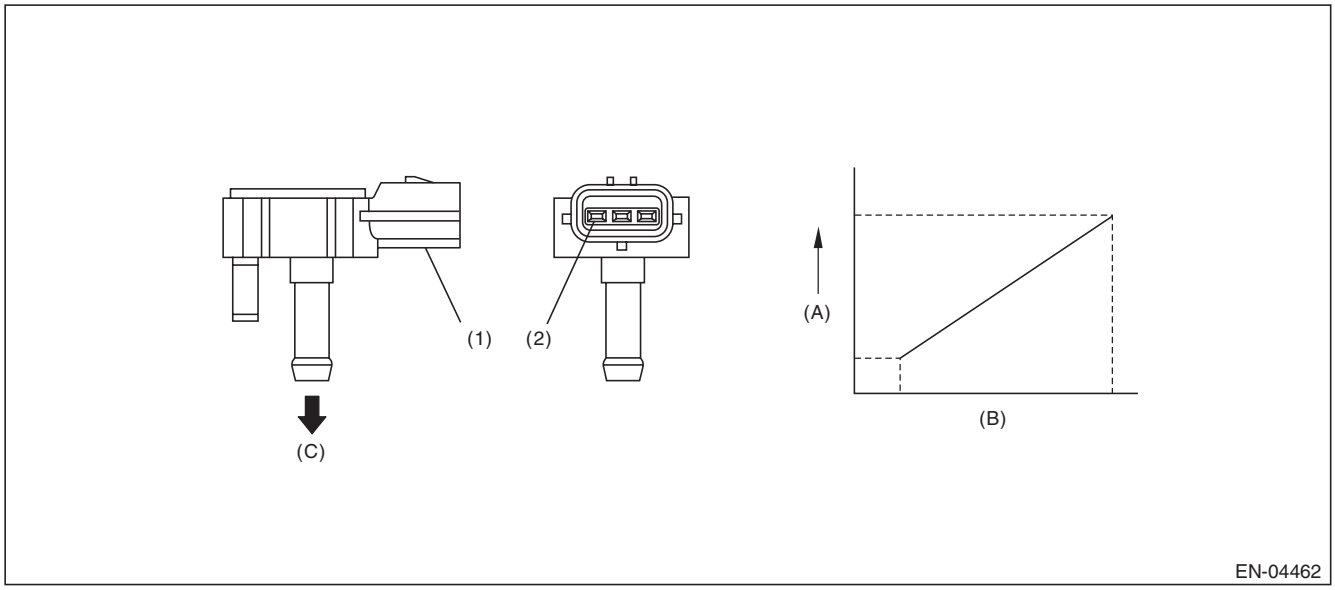

(A) Output voltage
(B) Input voltage
(C) To fuel tank
(1) Connector
(2) Terminals

3. ENABLE CONDITION

Secondary Parameters	Enable Conditions
None	

4. GENERAL DRIVING CYCLE

Always perform the diagnosis continuously.

GETTHEMANUALS.org

5. DIAGNOSTIC METHOD

- **Abnormality Judgment**

If the duration of time while the following conditions are met is longer than the time indicated, judge as NG.

Judgment Value

Malfunction Criteria	Threshold Value
Fuel tank pressure	< –7.4 kPa (–55.6 mmHg, –2.2 inHg)
Battery voltage	≥ 10.9 V

Time Needed for Diagnosis: 15000 ms
Malfunction Indicator Light Illumination: Illuminates as soon as a malfunction occurs.

- **Normality Judgment**

Judge as OK and clear the NG if the continuous time while the following conditions are established is more than the predetermined time.

Judgment Value

Malfunction Criteria	Threshold Value
Fuel tank pressure	≥ –7.4 kPa (–55.6 mmHg, –2.2 inHg)
Battery voltage	≥ 10.9 V

Time Needed for Diagnosis: Less than 1 second

GETTHEMANUALS.org

CA:DTC P0453 EVAPORATIVE EMISSION CONTROL SYSTEM PRESSURE SENSOR HIGH INPUT

1. OUTLINE OF DIAGNOSIS

Detect the open or short circuit of the fuel tank pressure sensor.
Judge as NG if out of specification.

2. COMPONENT DESCRIPTION

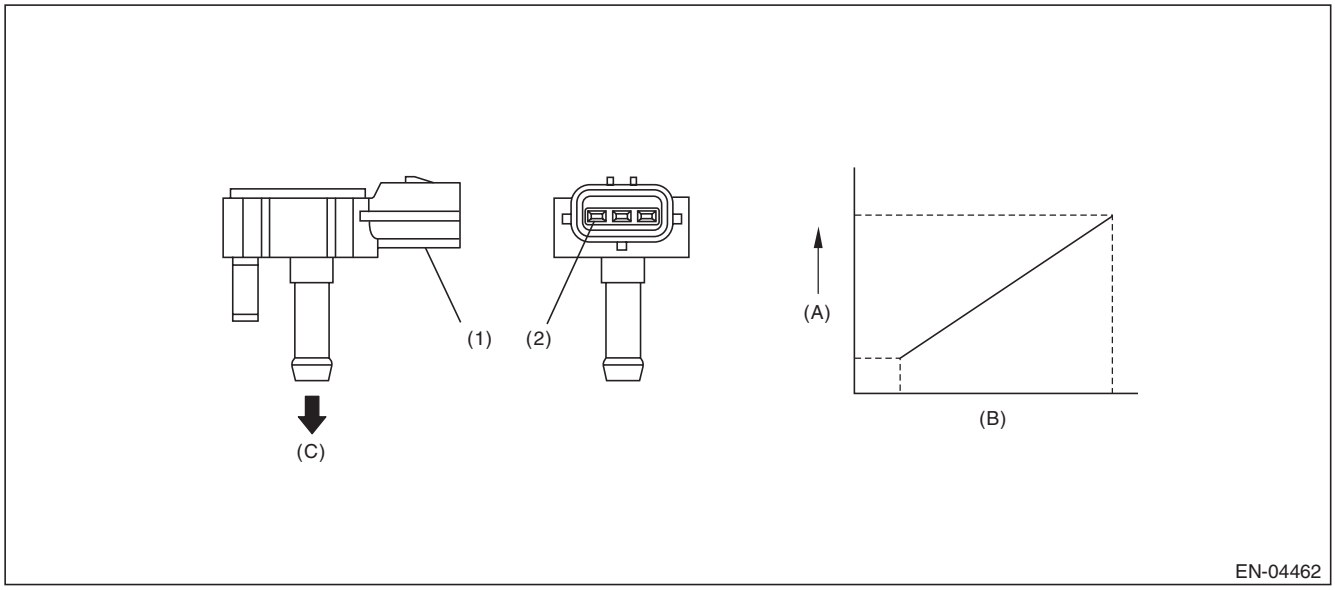

(A) Output voltage (B) Input voltage (C) To fuel tank

(1) Connector (2) Terminals

3. ENABLE CONDITION

Secondary Parameters	Enable Conditions
Time needed for all secondary parameters to be in enable conditions	≥ 5000 ms
Vehicle speed	≥ 2 km/h (1.2 MPH)
All conditions of EVAP canister purge	Complete
Learning value of evaporation gas concentration (left and right)	< 0.08
Main feedback compensation coefficient (left and right)	≥ 0.9
Battery voltage	≥ 10.9 V

4. GENERAL DRIVING CYCLE

Perform the diagnosis when purging enable conditions are met without idling.

GETTHEMANUALS.org

5. DIAGNOSTIC METHOD

• Abnormality Judgment

If the duration of time while the following conditions are met is longer than the time indicated, judge as NG.

Judgment Value

Malfunction Criteria	Threshold Value
Fuel tank pressure	≥ 7.9 kPa (59.6 mmHg, 2.3 inHg)
Fuel temperature	< 55 °C (131 °F)
Atmospheric pressure	≥ 75 kPa (563 mmHg, 22.2 inHg)

Time Needed for Diagnosis: 15000 ms
Malfunction Indicator Light Illumination: Illuminates as soon as a malfunction occurs.

• Normality Judgment

Judge as OK and clear the NG if the continuous time while the following conditions are established is more than the predetermined time.

Judgment Value

Malfunction Criteria	Threshold Value
Fuel tank pressure	< 7.9 kPa (59.6 mmHg, 2.3 inHg)

Time Needed for Diagnosis: Less than 1 second

CB:DTC P0456 EVAPORATIVE EMISSION CONTROL SYSTEM LEAK DETECTED (VERY SMALL LEAK)

1. OUTLINE OF DIAGNOSIS

NOTE:
For the detection standard, refer to DTC P0442. <Ref. to GD(H4DOTC)-130, DTC P0442 EVAPORATIVE EMISSION CONTROL SYSTEM LEAK DETECTED (SMALL LEAK), Diagnostic Trouble Code (DTC) Detecting Criteria.>

CC:DTC P0457 EVAPORATIVE EMISSION CONTROL SYSTEM LEAK DETECTED (FUEL CAP LOOSE/OFF)

1. OUTLINE OF DIAGNOSIS

NOTE:
For the detection standard, refer to DTC P0442. <Ref. to GD(H4DOTC)-130, DTC P0442 EVAPORATIVE EMISSION CONTROL SYSTEM LEAK DETECTED (SMALL LEAK), Diagnostic Trouble Code (DTC) Detecting Criteria.>

GETTHEMANUALS.org

CD:DTC P0458 EVAPORATIVE EMISSION SYSTEM PURGE CONTROL VALVE CIRCUIT LOW

1. OUTLINE OF DIAGNOSIS

Detect open or short circuit of the purge control solenoid valve.
Judge as NG when the ECM output level differs from the actual terminal level.

2. COMPONENT DESCRIPTION

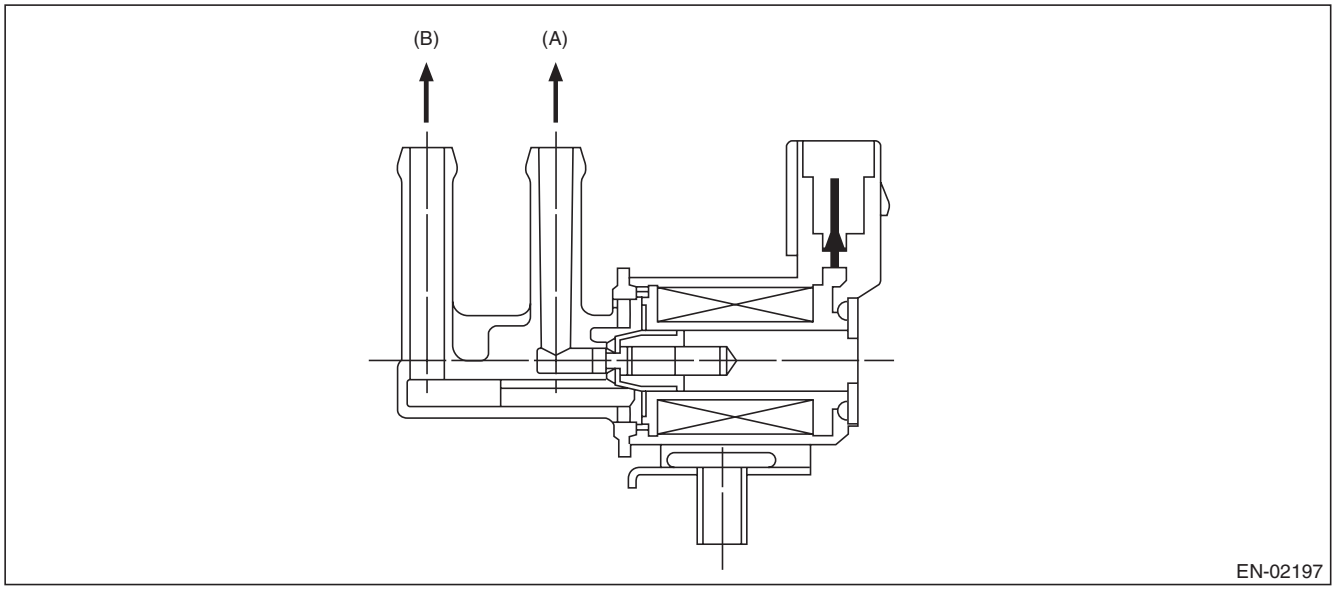

(A) To canister (B) To intake manifold

3. ENABLE CONDITION

Secondary Parameters	Enable Conditions
Battery voltage	≥ 10.9 V
Elapsed time after starting the engine	≥ 1 second

4. GENERAL DRIVING CYCLE

Always perform the diagnosis after starting the engine.

GETTHEMANUALS.org

5. DIAGNOSTIC METHOD

- **Abnormality Judgment**

If the duration of time while the following conditions are met is longer than the time indicated, judge as NG.

Judgment Value

Malfunction Criteria	Threshold Value
Duty ratio of “ON”	< 0.75
Terminal output voltage	Low

Time Needed for Diagnosis: 2500 ms
Malfunction Indicator Light Illumination: Illuminates when malfunction occurs in 2 continuous driving cycles.

- **Normality Judgment**

Judge as OK and clear the NG if the continuous time while the following conditions are established is more than the predetermined time.

Judgment Value

Malfunction Criteria	Threshold Value
Terminal output voltage	High

Time Needed for Diagnosis: Less than 1 second

GETTHEMANUALS.org

CE:DTC P0459 EVAPORATIVE EMISSION SYSTEM PURGE CONTROL VALVE CIRCUIT HIGH

1. OUTLINE OF DIAGNOSIS

Detect open or short circuit of the purge control solenoid valve.
Judge as NG when the ECM output level differs from the actual terminal level.

2. COMPONENT DESCRIPTION

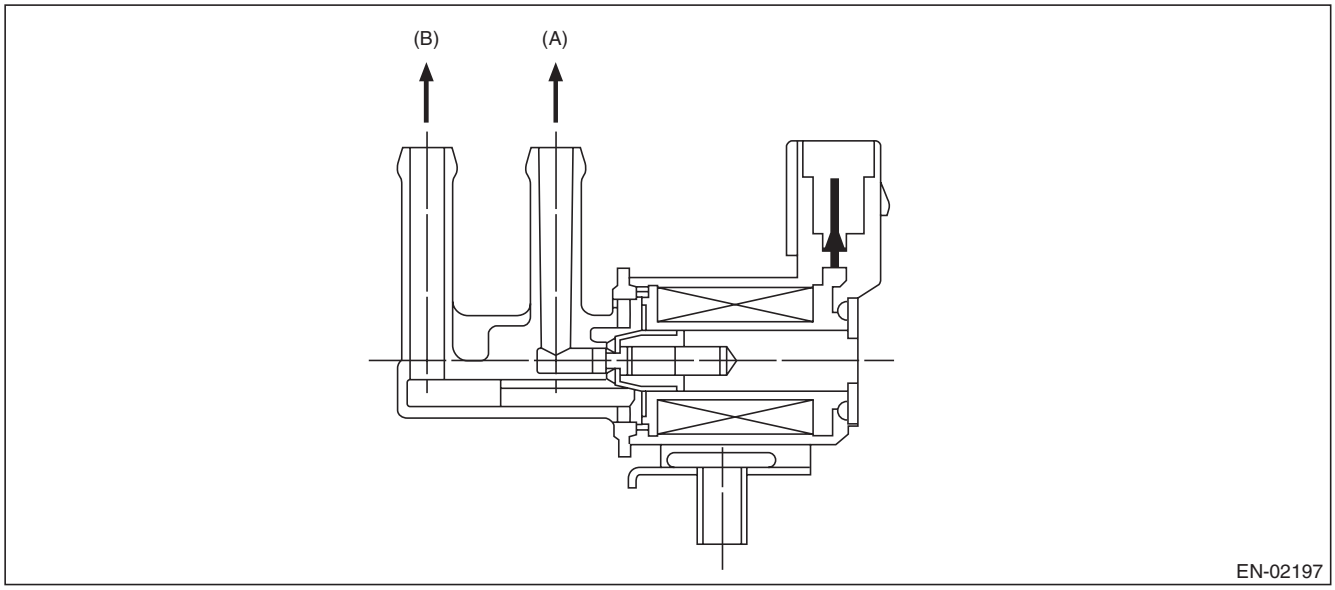

(A) To canister (B) To intake manifold

3. ENABLE CONDITION

Secondary Parameters	Enable Conditions
Battery voltage	≥ 10.9 V
Elapsed time after starting the engine	≥ 1 second

4. GENERAL DRIVING CYCLE

Always perform the diagnosis after starting the engine.

GETTHEMANUALS.org

5. DIAGNOSTIC METHOD

- **Abnormality Judgment**

If the duration of time while the following conditions are met is longer than the time indicated, judge as NG.

Judgment Value

Malfunction Criteria	Threshold Value
Duty ratio of “ON”	≥ 0.25
Terminal output voltage	High

Time Needed for Diagnosis: 2500 ms
Malfunction Indicator Light Illumination: Illuminates when malfunction occurs in 2 continuous driving cycles.

- **Normality Judgment**

Judge as OK and clear the NG if the continuous time while the following conditions are established is more than the predetermined time.

Judgment Value

Malfunction Criteria	Threshold Value
Terminal output voltage	Low

Time Needed for Diagnosis: Less than 1 second

GETTHEMANUALS.org

CF:DTC P0461 FUEL LEVEL SENSOR “A” CIRCUIT RANGE/PERFORMANCE

1. OUTLINE OF DIAGNOSIS

Detect malfunctions of the fuel level sensor output property.
If the fuel level does not vary in a particular driving condition / engine condition where it should, judge as NG.

2. COMPONENT DESCRIPTION

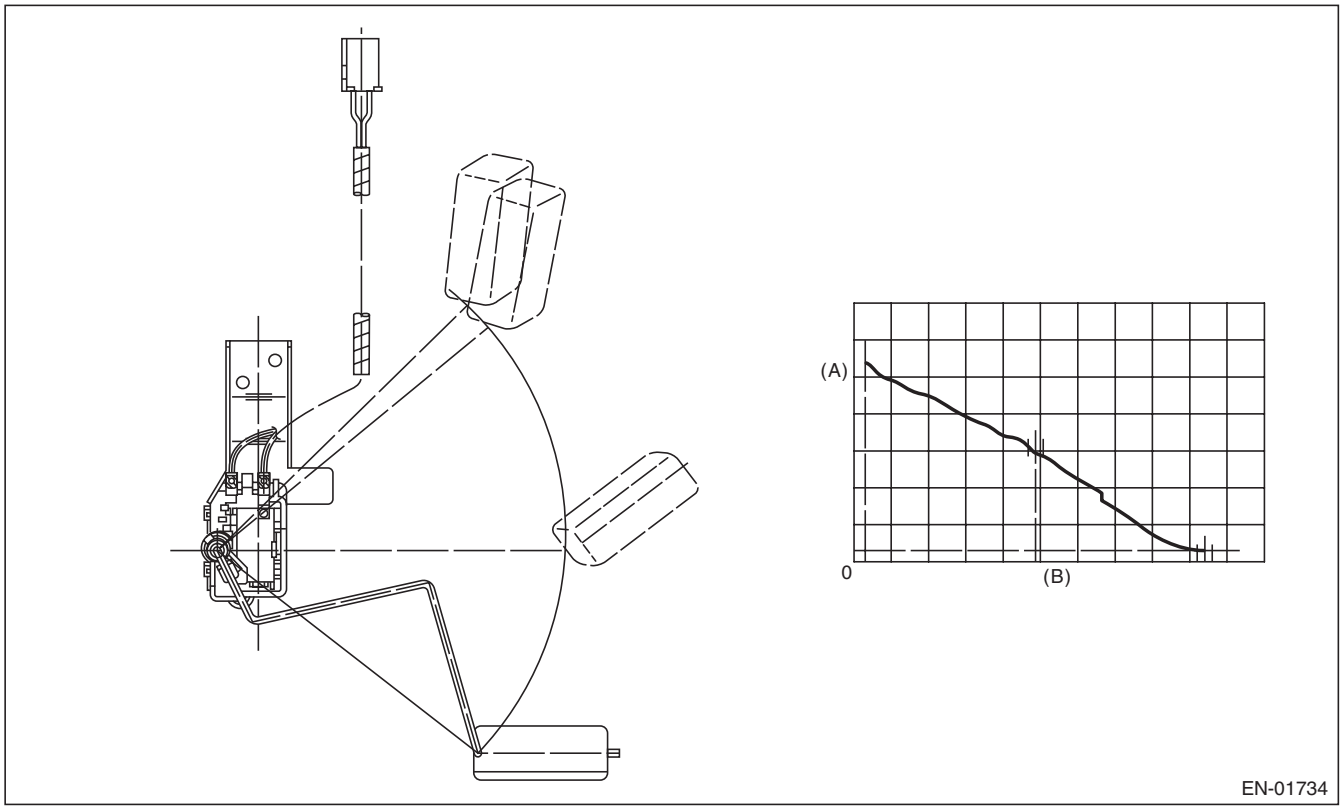

(A) Fuel level (B) Resistance

3. ENABLE CONDITION

Secondary Parameters	Enable Conditions
None	

4. GENERAL DRIVING CYCLE

Always perform the diagnosis continuously.

GETTHEMANUALS.org

5. DIAGNOSTIC METHOD

- **Abnormality Judgment**

Judge as NG when the following conditions are established.

Judgment Value

Malfunction Criteria	Threshold Value
Accumulated amount of intake air	≥ 165375 g (5832.78 oz)
Max. – min. values of fuel level output	< 2.6 ℓ (0.69 US gal, 0.57 Imp gal)
Battery voltage	≥ 10.9 V
Engine speed	< 4000 rpm
Elapsed time after starting the engine	≥ 5000 ms

Time Needed for Diagnosis: Less than 1 second
Malfunction Indicator Light Illumination: Illuminates when malfunction occurs in 2 continuous driving cycles.

- **Normality Judgment**

Judge as OK and clear the NG if the following conditions are established.

Judgment Value

Malfunction Criteria	Threshold Value
Accumulated amount of intake air	≥ 165375 g (5832.78 oz)
Max. – min. values of fuel level output	≥ 2.6 ℓ (0.69 US gal, 0.57 Imp gal)
Battery voltage	≥ 10.9 V
Engine speed	< 4000 rpm
Elapsed time after starting the engine	≥ 5000 ms

Time Needed for Diagnosis: Less than 1 second

GETTHEMANUALS.org

CG:DTC P0462 FUEL LEVEL SENSOR “A” CIRCUIT LOW

1. OUTLINE OF DIAGNOSIS

Detect the open or short circuit of fuel level sensor. Judge as NG if out of specification.

2. COMPONENT DESCRIPTION

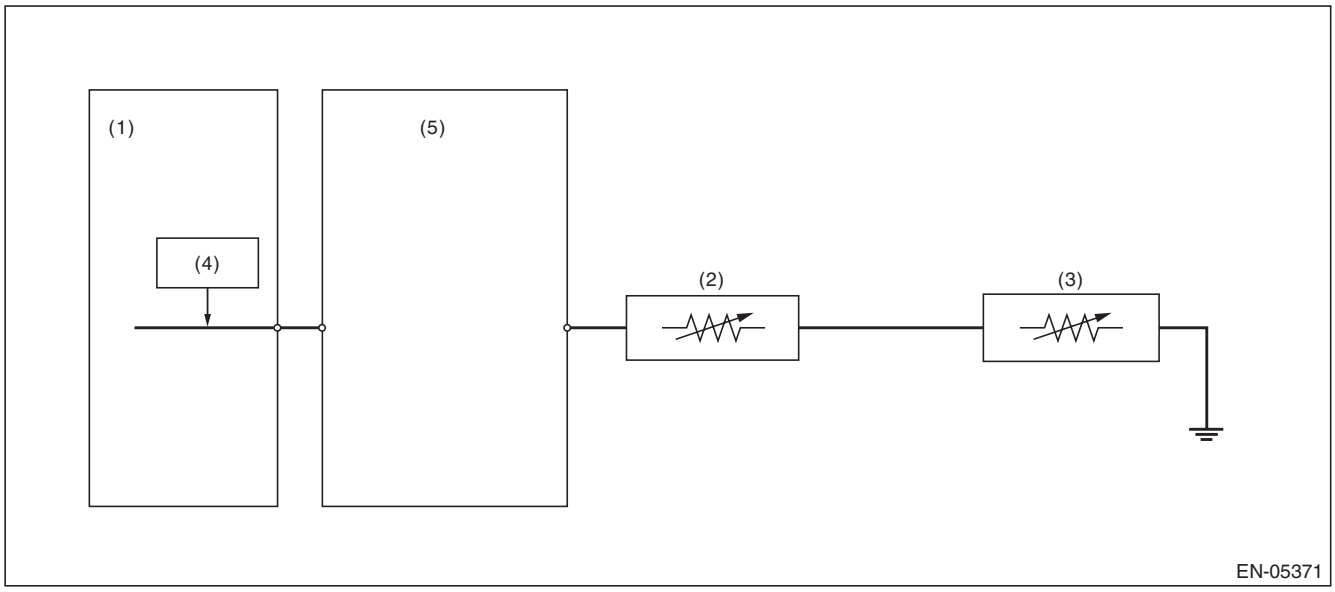

(1) Engine control module (ECM)
(2) Fuel level sensor
(3) Fuel sub level sensor
(4) Detecting circuit
(5) Body integrated unit

3. ENABLE CONDITION

Secondary Parameters	Enable Conditions
None	

4. GENERAL DRIVING CYCLE

Always perform the diagnosis continuously.

GETTHEMANUALS.org

5. DIAGNOSTIC METHOD

- **Abnormality Judgment**

If the duration of time while the following conditions are met is longer than the time indicated, judge as NG.

Judgment Value

Malfunction Criteria	Threshold Value
Battery voltage	≥ 10.9 V
Elapsed time after starting the engine	≥ 3000 ms
Output voltage	< 0.173 V

Time Needed for Diagnosis: 2500 ms
Malfunction Indicator Light Illumination: Illuminates when malfunction occurs in 2 continuous driving cycles.

- **Normality Judgment**

Judge as OK and clear the NG if the continuous time while the following conditions are established is more than the predetermined time.

Judgment Value

Malfunction Criteria	Threshold Value
Battery voltage	≥ 10.9 V
Elapsed time after starting the engine	≥ 3000 ms
Output voltage	≥ 0.173 V

Time Needed for Diagnosis: Less than 1 second

GETTHEMANUALS.org

CH:DTC P0463 FUEL LEVEL SENSOR “A” CIRCUIT HIGH

1. OUTLINE OF DIAGNOSIS

Detect the open or short circuit of fuel level sensor. Judge as NG if out of specification.

2. COMPONENT DESCRIPTION

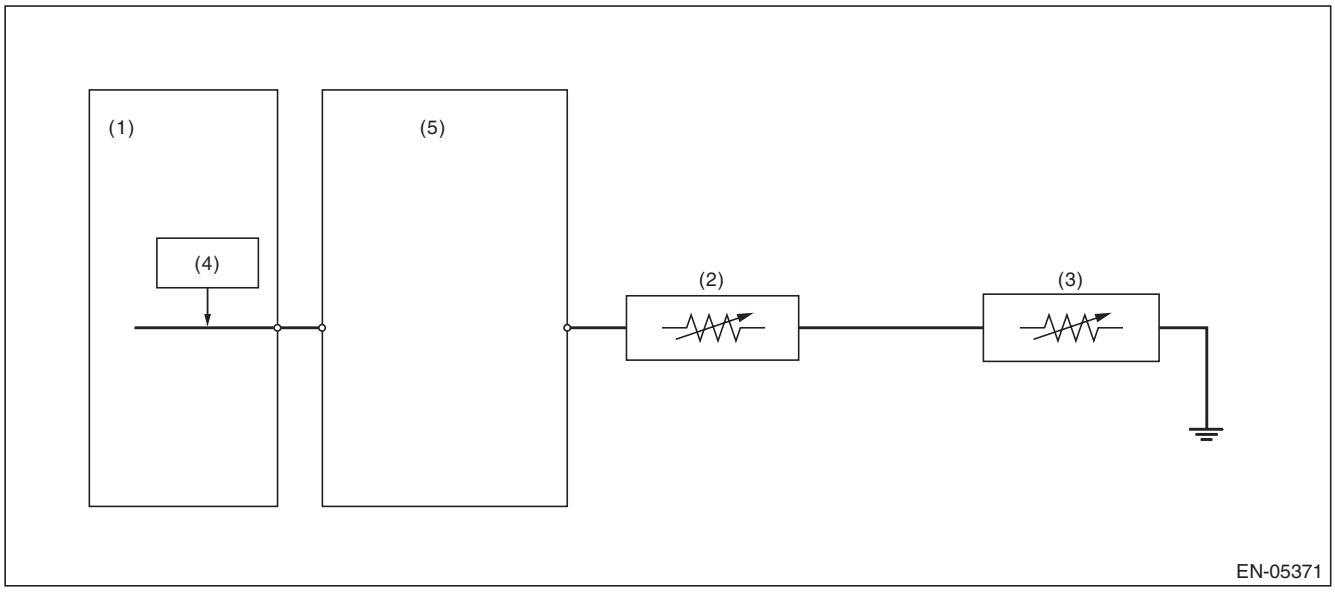

(1) Engine control module (ECM)
(2) Fuel level sensor
(3) Fuel sub level sensor
(4) Detecting circuit
(5) Body integrated unit

3. ENABLE CONDITION

Secondary Parameters	Enable Conditions
None	

4. GENERAL DRIVING CYCLE

Always perform the diagnosis continuously.

GETTHEMANUALS.org

5. DIAGNOSTIC METHOD

- **Abnormality Judgment**

If the duration of time while the following conditions are met is longer than the time indicated, judge as NG.

Judgment Value

Malfunction Criteria	Threshold Value
Battery voltage	≥ 10.9 V
Elapsed time after starting the engine	≥ 3000 ms
Output voltage	≥ 7.212 V

Time Needed for Diagnosis: 1000 ms
Malfunction Indicator Light Illumination: Illuminates when malfunction occurs in 2 continuous driving cycles.

- **Normality Judgment**

Judge as OK and clear the NG if the continuous time while the following conditions are established is more than the predetermined time.

Judgment Value

Malfunction Criteria	Threshold Value
Battery voltage	≥ 10.9 V
Elapsed time after starting the engine	≥ 3000 ms
Output voltage	< 7.212 V

Time Needed for Diagnosis: Less than 1 second

GETTHEMANUALS.org

CI: DTC P0464 FUEL LEVEL SENSOR CIRCUIT INTERMITTENT

1. OUTLINE OF DIAGNOSIS

Detect the unstable output faults from the fuel level sensor caused by noise. Judge as NG when the max. value and cumulative value of output voltage variation of the fuel level sensor is larger than the threshold value.

2. ENABLE CONDITION

Malfunction Criteria	Threshold Value
Engine speed	≥ 500 rpm
Elapsed time after starting the engine	≥ 1 s
Battery voltage	≥ 10.9 V
Idle switch	ON
Fuel level	≥ 10.5 ℓ (2.77 US gal, 2.31 Imp gal) and < 59.5 ℓ (15.72 US gal, 13.09 Imp gal)
Vehicle speed = 0 km/h (0 MPH)	≥ 10000 ms

3. GENERAL DRIVING CYCLE

- Always perform the diagnosis continuously at idle speed.
- Pay attention to the fuel level.

GETTHEMANUALS.org

4. DIAGNOSTIC METHOD

Calculate the Max. value (DELFLMAX) and cumulative value (SUMFL) of output voltage variation of fuel level sensor during 12.2 seconds. Judge it normal when both max. and cumulative values are not over the threshold value. Otherwise, when either of them is over the threshold value, the diagnosis counter counts up. Judge as NG if the counter indicated 4 time(s).

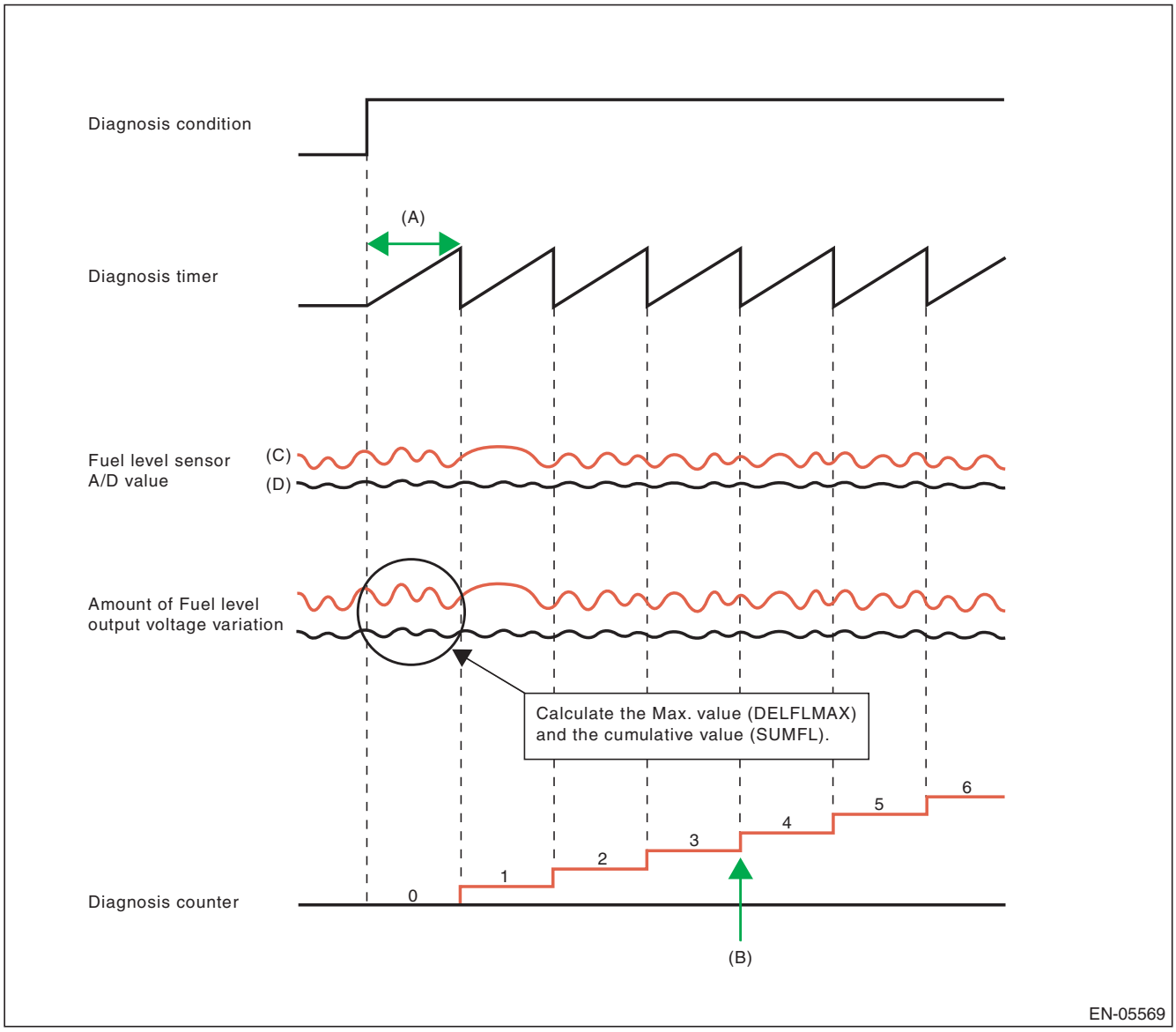

(A) 12288 ms
(B) NG at 4 time(s) counts
(C) Malfunction
(D) Normal

GETTHEMANUALS.org

- **Abnormality Judgment**

If the duration of time while the following conditions are met is longer than the time indicated, judge as NG.

Judgment Value

Malfunction Criteria	Threshold Value
Integrated times of the condition reaching follows,	≥ 4 time(s)
DELFLMAX	≥ Value from Map
or	
SUMFL	≥ 23.8 V
At this time,	
DELFLMAX: Maximum difference of sensor output for 12288 ms	
SUMFL: Integrated value of the sensor output deviation for 12288 ms	

Map

Fuel level (ℓ, US gal, Imp gal)	10, 2.64, 2.2	20, 5.28, 4.4	25, 6.61, 5.5	30, 7.93, 6.6	43, 11.36, 9.46	45, 11.89, 9.9	50, 13.21, 11	60, 15.85, 13.2
Measured voltage (V)	0.248	0.519	0.796	0.6	1.025	1.069	1.402	2.186

The diagnosis counter does not count up when the following conditions are completed within 12288 ms.

Maximum value – minimum value of change of tank pressure during 12288 ms	≥ 0 kPa (0.375 mmHg, 0 inHg)
Maximum value – minimum value of battery voltage during 12288 ms	≥ 0.969 V

Time Needed for Diagnosis: 12288 ms × 4 time(s)
Malfunction Indicator Light Illumination: Illuminates when malfunction occurs in 2 continuous driving cycles.

- **Normality Judgment**

Judge as OK and clear the NG if the continuous time while the following conditions are established is more than the predetermined time.

Judgment Value

Malfunction Criteria	Threshold Value
DELFLMAX	< Value from Map
SUMFL	< 23.8 V
At this time,	
DELFLMAX: Maximum difference of sensor output for 12288 ms	
SUMFL: Integrated value of the sensor output deviation for 12288 ms	

Time Needed for Diagnosis: 12288 ms

GETTHEMANUALS.org

CJ:DTC P0500 VEHICLE SPEED SENSOR “A”

1. OUTLINE OF DIAGNOSIS

Judge as NG when outside of the judgment value.
Judge NG when the received data from VDCCM&H/U is abnormal vehicle speed, and the vehicle speed data is impossible.

2. COMPONENT DESCRIPTION

Vehicle speed signals are taken in to the VDC control module and hydraulic control unit, and normal/erroneous data of the ABS wheel speed sensor is received by CAN communication from the VDC control module and hydraulic control unit.

3. ENABLE CONDITION

Secondary Parameters	Enable Conditions
Battery voltage	≥ 10.9 V
Elapsed time after starting the engine	≥ 2000 ms

4. GENERAL DRIVING CYCLE

Always perform diagnosis more than 2000 ms after starting the engine.

5. DIAGNOSTIC METHOD

- **Abnormality Judgment**

If the duration of time while the following conditions are met is longer than the time indicated, judge as NG.

Judgment Value

Malfunction Criteria	Threshold Value
Front ABS wheel speed sensor status	Malfunction
Either of the following is established	
Front left wheel speed	≥ 300 km/h (186.4 MPH)
Front right wheel speed	≥ 300 km/h (186.4 MPH)

Time Needed for Diagnosis: 2500 ms
Malfunction Indicator Light Illumination: Illuminates as soon as a malfunction occurs.

- **Normality Judgment**

Judge as OK and clear the NG if the continuous time while the following conditions are established is more than the predetermined time.

Judgment Value

Malfunction Criteria	Threshold Value
Front left wheel speed	> 0 km/h (0 MPH) and < 300 km/h (186.4 MPH)
Front right wheel speed	> 0 km/h (0 MPH) and < 300 km/h (186.4 MPH)

Time Needed for Diagnosis: 2500 ms

GETTHEMANUALS.org

CK:DTC P0506 IDLE AIR CONTROL SYSTEM RPM LOWER THAN EXPECTED

1. OUTLINE OF DIAGNOSIS

Detect the malfunction that actual engine speed is not close to target engine speed during idling. Judge as NG when actual engine speed is not close to target engine speed during idling.

2. ENABLE CONDITION

Secondary Parameters	Enable Conditions
Engine coolant temperature	≥ 72 °C (161.6 °F)
Battery voltage	≥ 10.9 V
Atmospheric pressure	≥ 75 kPa (563 mmHg, 22.2 inHg)
Fuel level	≥ 10.5 ℓ (2.77 US gal, 2.31 Imp gal)
Elapsed time after starting the engine	≥ 10.49 s
Feedback of ISC	In operation
Lambda value (left and right)	≥ 0.9 and < 1.1
After switching air conditioner to ON/OFF	≥ 5.1 s
After intake manifold pressure changes by 4 kPa (30 mmHg, 1.2 inHg) or more.	> 5.1 s
Elapsed time after switching neutral position switch to ON/OFF	> 5.1 s
Vehicle speed	0 km/h (0 MPH)

3. GENERAL DRIVING CYCLE

Perform the diagnosis continuously at idling after warming up engine.

4. DIAGNOSTIC METHOD

- **Abnormality Judgment**

If the duration of time while the following conditions are met is longer than the time indicated, judge as NG.

Judgment Value

Malfunction Criteria	Threshold Value
Actual engine speed – Targeted engine speed	< –100 rpm
Feedback compensation for ISC	Max.

Time Needed for Diagnosis: 10 s × 3 time(s)
Malfunction Indicator Light Illumination: Illuminates when malfunction occurs in 2 continuous driving cycles.

- **Normality Judgment**

Judge as OK and clear the NG if the continuous time while the following conditions are established is more than the predetermined time.

Judgment Value

Malfunction Criteria	Threshold Value
Actual engine speed – Targeted engine speed	≥ –100 rpm

Time Needed for Diagnosis: 10 s

GETTHEMANUALS.org

CL:DTC P0507 IDLE AIR CONTROL SYSTEM RPM HIGHER THAN EXPECTED

1. OUTLINE OF DIAGNOSIS

Detect the malfunction that actual engine speed is not close to target engine speed during idling. Judge as NG when actual engine speed is not close to target engine speed during idling.

2. ENABLE CONDITION

Secondary Parameters	Enable Conditions
Engine coolant temperature	≥ 72 °C (161.6 °F)
Battery voltage	≥ 10.9 V
Atmospheric pressure	≥ 75 kPa (563 mmHg, 22.2 inHg)
Fuel level	≥ 10.5 ℓ (2.77 US gal, 2.31 Imp gal)
Elapsed time after starting the engine	≥ 10.49 s
Feedback of ISC	In operation
Lambda value (left and right)	≥ 0.9 and < 1.1
After switching air conditioner to ON/OFF	≥ 5.1 s
After intake manifold pressure changes by 4 kPa (30 mmHg, 1.2 inHg) or more.	> 5.1 s
Elapsed time after switching neutral position switch to ON/OFF	> 5.1 s
Vehicle speed	0 km/h (0 MPH)

3. GENERAL DRIVING CYCLE

Perform the diagnosis continuously at idling after warming up engine.

4. DIAGNOSTIC METHOD

- **Abnormality Judgment**

If the duration of time while the following conditions are met is longer than the time indicated, judge as NG.

Judgment Value

Malfunction Criteria	Threshold Value
Actual – Target engine speed	≥ 200 rpm
Feedback compensation for ISC	Min.

Time Needed for Diagnosis: 10 s × 3 time(s)
Malfunction Indicator Light Illumination: Illuminates when malfunction occurs in 2 continuous driving cycles.

- **Normality Judgment**

Judge as OK and clear the NG if the continuous time while the following conditions are established is more than the predetermined time.

Judgment Value

Malfunction Criteria	Threshold Value
Actual – Target engine speed	< 200 rpm

Time Needed for Diagnosis: 10 s

GETTHEMANUALS.org

CM:DTC P050A COLD START IDLE AIR CONTROL SYSTEM PERFORMANCE

1. OUTLINE OF DIAGNOSIS

- **When cold, the abnormality in the control of target engine speed increase is detected. (P050A)**

Judge as NG if the exhaust gas temperature diagnosis or idle speed diagnosis is NG.

- Exhaust gas temperature diagnosis

Judge as NG when the estimated exhausted gas temperature in 14 seconds after the cold start is below the specified value.

- Idle speed diagnosis

Judge as NG when actual engine speed is not close to target engine speed at cold start.

- **Detect malfunctions of the catalyst advanced idling retard angle control. (P050B)**

Judge as NG when ECM is not controlling the angle properly during catalyst advanced idling retard angle control.

- Final ignition timing diagnosis

Judge as NG when actual retard amount is under the specified value at cold start.

GETTHEMANUALS.org

2. ENABLE CONDITIONS

Secondary Parameters	Enable Conditions
<Exhaust gas temperature diagnosis>	
Atmospheric pressure	≥ 75 kPa (563 mmHg, 22.2 inHg)
Battery voltage	> 10.9 V
Engine condition	In operation
Vehicle speed	≤ 2 km/h (1.2 MPH)
Elapsed time after gear position change (P ←→ D or N ←→ D)	≥ 3000 ms
ISC feedback	In operation
Throttle opening angle	< 0.37 °
Fuel property	Not extremely low volatility
Target retard amount	≥ 18 °CA
<Idle speed diagnosis>	
Atmospheric pressure	≥ 75 kPa (563 mmHg, 22.2 inHg)
Battery voltage	> 10.9 V
Engine condition	In operation
Vehicle speed	≤ 2 km/h (1.2 MPH)
Engine coolant temperature	≤ 60 °C (140 °F)
Intake air amount sum value	≤ Value of Map 1
Elapsed time after gear position change (P ←→ D or N ←→ D)	≥ 3000 ms
Throttle opening angle	< 0.37 °
Fuel property	Not extremely low volatility
Elapsed time after starting the engine	≥ 2000 ms
<Final ignition timing diagnosis>	
Atmospheric pressure	≥ 75 kPa (563 mmHg, 22.2 inHg)
Battery voltage	> 10.9 V
Engine condition	In operation
Vehicle speed	≤ 2 km/h (1.2 MPH)
Engine coolant temperature	≤ 60 °C (140 °F)
Intake air amount sum value	≤ Value of Map 2
Elapsed time after gear position change (P ←→ D or N ←→ D)	≥ 3000 ms
Throttle opening angle	< 0.37 °
Fuel property	Not extremely low volatility
Target retard amount	≥ Value from Map 3

GETTHEMANUALS.org

Map 1

Engine coolant temperature at engine starting °C (°F)	–40 (–40)	–30 (–22)	–20 (–4)	–10 (14)	0 (32)	10 (50)	20 (68)	30 (86)
Intake air amount sum value g (oz)	970 (34.21)	860 (30.33)	750 (26.45)	660 (23.28)	590 (20.81)	550 (19.4)	530 (18.69)	520 (18.34)

Engine coolant temperature at engine starting °C (°F)	40 (104)	50 (122)	60 (140)	70 (158)	80 (176)	90 (194)	100 (212)	110 (230)
Intake air amount sum value g (oz)	500 (17.64)	460 (16.22)	350 (12.34)	350 (12.34)	350 (12.34)	350 (12.34)	350 (12.34)	350 (12.34)

Map 2

Engine coolant temperature at engine starting °C (°F)	–40 (–40)	–30 (–22)	–20 (–4)	–10 (14)	0 (32)	10 (50)	20 (68)	30 (86)
Intake air amount sum value g (oz)	970 (34.21)	860 (30.33)	750 (26.45)	660 (23.28)	590 (20.81)	550 (19.4)	530 (18.69)	520 (18.34)

Engine coolant temperature at engine starting °C (°F)	40 (104)	50 (122)	60 (140)	70 (158)	80 (176)	90 (194)	100 (212)	110 (230)
Intake air amount sum value g (oz)	500 (17.64)	460 (16.22)	350 (12.34)	350 (12.34)	350 (12.34)	350 (12.34)	350 (12.34)	350 (12.34)

Map 3

Engine coolant temperature	–40 °C (–40 °F)	–30 °C (–22 °F)	–20 °C (–4 °F)	–10 °C (14 °F)	0 °C (32 °F)	10 °C (50 °F)	20 °C (68 °F)	30 °C (86 °F)	40 °C (104 °F)	50 °C (122 °F)	60 °C (140 °F)
Target retard amount	6 °CA	6 °CA	6 °CA	6 °CA	6 °CA	6 °CA	6 °CA	6 °CA	6 °CA	6 °CA	6 °CA

3. GENERAL DRIVING CYCLE

Perform the diagnosis at cold start.

GETTHEMANUALS.org

4. DIAGNOSTIC METHOD

- **Exhaust gas temperature diagnosis**

Abnormality Judgment
Calculate the estimated exhaust gas temperature when the diagnostic enable condition is established. Judge as NG when the following conditions are established.

Judgment Value

Malfunction Criteria	Threshold Value
Estimated exhaust gas temperature	< Value of Map 4

Map 4

Engine coolant temperature at engine starting	–40 °C (–40 °F)	–30 °C (–22 °F)	–20 °C (–4 °F)	–10 °C (14 °F)	0 °C (32 °F)	10 °C (50 °F)	20 °C (68 °F)	30 °C (86 °F)	40 °C (104 °F)	45 °C (113 °F)
Threshold Value	0 °C (32 °F)	0 °C (32 °F)	0 °C (32 °F)	79 °C (174.2 °F)	78 °C (172.4 °F)	76 °C (168.8 °F)	74 °C (165.2 °F)	72 °C (161.6 °F)	69 °C (156.2 °F)	65 °C (149 °F)

Time Needed for Diagnosis: 14 seconds
Malfunction Indicator Light Illumination: Illuminates when malfunction occurs in 2 continuous driving cycles.
Normality Judgment
Judge as OK and clear the NG if the following conditions are established.

Judgment Value

Malfunction Criteria	Threshold Value
Estimated exhaust gas temperature	≥ Value of Map 4

Time Needed for Diagnosis: Less than 1 second

- **Idle speed diagnosis**

Abnormality Judgment
Judge as NG when the following conditions are established.

Judgment Value

Malfunction Criteria	Threshold Value
Actual engine speed – Target engine speed	< – 125 rpm

Time Needed for Diagnosis: 5000 ms
Malfunction Indicator Light Illumination: Illuminates when malfunction occurs in 2 continuous driving cycles.
Normality Judgment
Judge as OK and clear the NG if the following conditions are established.

Judgment Value

Malfunction Criteria	Threshold Value
Actual engine speed – Target engine speed	≥ – 125 rpm

Time Needed for Diagnosis: 5000 ms

GETTHEMANUALS.org

- **Final ignition timing diagnosis**

Abnormality Judgment
Judge as NG when the following conditions are established.
Judgment Value

Malfunction Criteria	Threshold Value
Final ignition timing – ignition timing during CSERS* *: Ignition timing during CSERS (Cold Start Emission Reduction Strategy) = Base ignition timing – retard amount	> Value of Map 5

Map 5

Engine coolant temperature	–40 °C (–40 °F)	–30 °C (–22 °F)	–20 °C (–4 °F)	–10 °C (14 °F)	0 °C (32 °F)	10 °C (50 °F)	20 °C (68 °F)	30 °C (86 °F)	40 °C (104 °F)	50 °C (122 °F)	60 °C (140 °F)
Threshold Value	6 °CA	6 °CA	6 °CA	6 °CA	6 °CA	6 °CA	6 °CA	6 °CA	6 °CA	6 °CA	6 °CA

Time Needed for Diagnosis: 5000 ms
Malfunction Indicator Light Illumination: Illuminates when malfunction occurs in 2 continuous driving cycles.
Normality Judgment
Judge as OK and clear the NG if the following conditions are established.
Judgment Value

Malfunction Criteria	Threshold Value
Final ignition timing – ignition timing during CSERS* *: Ignition timing during CSERS (Cold Start Emission Reduction Strategy) = Base ignition timing – retard amount	≤ Value of Map 5

Time Needed for Diagnosis: 5000 ms

CN:DTC P050B COLD START IGNITION TIMING PERFORMANCE

1. OUTLINE OF DIAGNOSIS

NOTE:
For the detection standard, refer to DTC P050A. <Ref. to GD(H4DOTC)-172, DTC P050A COLD START IDLE AIR CONTROL SYSTEM PERFORMANCE, Diagnostic Trouble Code (DTC) Detecting Criteria.>

GETTHEMANUALS.org

CO:DTC P0512 STARTER REQUEST CIRCUIT

1. OUTLINE OF DIAGNOSIS

Detect the open or short circuit of starter SW.
Judge as ON NG when the starter SW signal remains ON.

2. ENABLE CONDITION

Secondary Parameters	Enable Conditions
None	

3. GENERAL DRIVING CYCLE

Always perform the diagnosis continuously.

4. DIAGNOSTIC METHOD

- **Abnormality Judgment**

If the duration of time while the following conditions are met is longer than the time indicated, judge as NG.

Judgment Value

Malfunction Criteria	Threshold Value
Engine condition	After engine starting
Starter OFF signal	Not detected
Battery voltage	≥ 8 V

Time Needed for Diagnosis: 30000 ms
Malfunction Indicator Light Illumination: Illuminates when malfunction occurs in 2 continuous driving cycles.

- **Normality Judgment**

Judge as OK and clear the NG if the continuous time while the following conditions are established is more than the predetermined time.

Judgment Value

Malfunction Criteria	Threshold Value
Starter OFF signal	Detected
Battery voltage	≥ 8 V

Time Needed for Diagnosis: Less than 1 second

GETTHEMANUALS.org

CP:DTC P0513 INCORRECT IMMOBILIZER KEY

1. OUTLINE OF DIAGNOSIS

DTC	Item	Outline of Diagnosis
P0513	Incorrect Immobilizer Key	Incorrect immobilizer key (Use of unregistered key in body integrated unit)
P1570	Antenna	Faulty antenna
P1571	Reference Code Incompatibility	Reference code incompatibility between body integrated unit and ECM
P1572	IMM Circuit Failure (Except Antenna Circuit)	Communication failure between body integrated unit and ECM
P1574	Key Communication Failure	Failure of body integrated unit to verify key (transponder) ID code or transponder failure
P1576	EGI Control Module EEPROM	ECM malfunctioning
P1577	IMM Control Module EEPROM	Body integrated unit malfunctioning
P1578	Meter Failure	Reference code incompatibility between body integrated unit and combination meter

2. ENABLE CONDITION

When starting the engine.

3. GENERAL DRIVING CYCLE

Perform the diagnosis only after starting the engine.

4. DIAGNOSTIC METHOD

Judge as NG when the conditions for the outline of the diagnosis of the top are established.

GETTHEMANUALS.org

CQ:DTC P0604 INTERNAL CONTROL MODULE RANDOM ACCESS MEMORY (RAM) ERROR

1. OUTLINE OF DIAGNOSIS

Detect the malfunction of microcomputer (RAM).
When there is a problem in the CPU normal RAM, judge as NG.
If it is possible to write data to the whole area of RAM in the initial routine, and is possible to read the same data, it is judged as OK, and if not, NG.

2. ENABLE CONDITION

Secondary Parameters	Enable Conditions
None	

Diagnosis with the initial routine.

3. GENERAL DRIVING CYCLE

Perform the diagnosis as soon as the ignition switch is turned to ON.

4. DIAGNOSTIC METHOD

- **Abnormality Judgment**

Judge as NG when the following conditions are established.

Judgment Value

Malfunction Criteria	Threshold Value
Write the specified value to RAM and then read.	The written value cannot be read.

Time Needed for Diagnosis: Less than 1 second
Malfunction Indicator Light Illumination: Illuminates as soon as a malfunction occurs.

- **Normality Judgment**

Judge as OK and clear the NG if the following conditions are established.

Judgment Value

Malfunction Criteria	Threshold Value
Write the specified value to RAM and then read.	The written value can be read.

Time Needed for Diagnosis: Less than 1 second

GETTHEMANUALS.org

CR:DTC P0605 INTERNAL CONTROL MODULE READ ONLY MEMORY (ROM) ERROR

1. OUTLINE OF DIAGNOSIS

Judge as NG when SUM value of ROM is outside the standard value.

2. ENABLE CONDITION

Secondary Parameters	Enable Conditions
Ignition switch	ON

3. GENERAL DRIVING CYCLE

Always perform the diagnosis continuously.

4. DIAGNOSTIC METHOD

Abnormality Judgment

Judge as NG if the criteria below are met.

Judgment Value

Malfunction Criteria	Threshold Value
SUM value of ROM	Standard

Time Needed for Diagnosis: Undetermined
Malfunction Indicator Light Illumination: Illuminates as soon as a malfunction occurs.

GETTHEMANUALS.org

CS:DTC P0607 THROTTLE CONTROL SYSTEM CIRCUIT RANGE/PERFORMANCE

1. OUTLINE OF DIAGNOSIS

Judge as NG when any one of the followings is established.
(1) Monitoring IC operates abnormally. (Monitoring IC malfunction)
(2) Input amplifier circuit of throttle position sensor 1 operates abnormally. (fourfold amplifier malfunction)
(3) CPU operates abnormally. (Instruction/flow check)
(4) A/D converter operates abnormally. (ADC malfunction)
(5) EEPROM operates abnormally. (EEPROM malfunction)
(6) Output IC operates abnormally. (Output driver malfunction)

2. COMPONENT DESCRIPTION

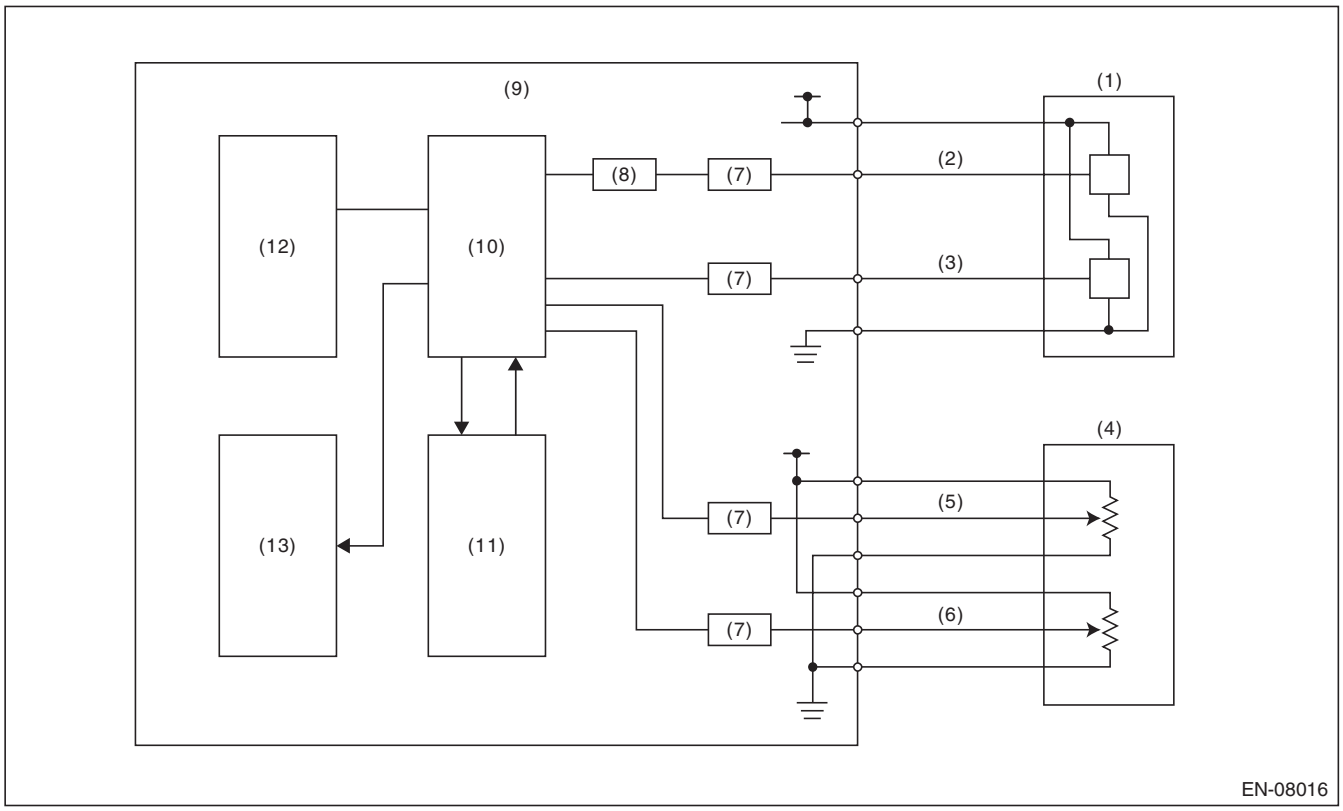

(1)	Throttle position sensor	(6)	Accelerator pedal position sensor 2	(10)	CPU
(2)	Throttle position sensor 1	(7)	I/F circuit	(11)	Monitoring IC
(3)	Throttle position sensor 2	(8)	Amplifier circuit	(12)	EEPROM
(4)	Accelerator pedal position sensor	(9)	Engine control module (ECM)	(13)	Output IC
(5)	Accelerator pedal position sensor 1				

GETTHEMANUALS.org

3. ENABLE CONDITION

Secondary Parameters	Enable Conditions
(1) Battery voltage	≥ 6 V
(2) Ignition switch	ON
(2) Battery voltage	≥ 6 V
(3) Ignition switch	ON
(3) ETC control	Permitted
(4) Ignition switch	ON
(4) Battery voltage	≥ 6 V
(5) Starter switch	OFF
(5) Battery voltage	> 6 V
(6) Ignition switch	ON
(6) Battery voltage	≥ 10.9 V

4. GENERAL DRIVING CYCLE

Always perform the diagnosis continuously.

5. DIAGNOSTIC METHOD

Judge as OK and clear the NG when the malfunction criteria below are met.

Judgment Value

Malfunction Criteria	Threshold Value
(1) Monitoring IC operation	The result and estimated value match.
(2) | Throttle position sensor 1 opening angle – (Throttle position sensor 1 opening angle after passing amplifier)/4 |	< 3 °
(3) Main CPU calculation result	The result and estimated value match.
(4) | Standard voltage – Voltage reading |	< 0.078125 V
(5) EEPROM writing	Writing completed
(6) Communication with output IC	Possible to communicate

Time Needed for Diagnosis:
(1): 200 ms
(2): 24 ms
(3): 192 ms
(4): 200 ms
(5): 48 ms
(6): 2500 ms
Malfunction Indicator Light Illumination: Illuminates as soon as a malfunction occurs.

GETTHEMANUALS.org

CT:DTC P0638 THROTTLE ACTUATOR CONTROL RANGE/PERFORMANCE (BANK 1)

1. OUTLINE OF DIAGNOSIS

Judge as NG when the target opening angle and actual opening angle is mismatched or the current to motor is the specified duty or more for specified time continuously.

2. COMPONENT DESCRIPTION

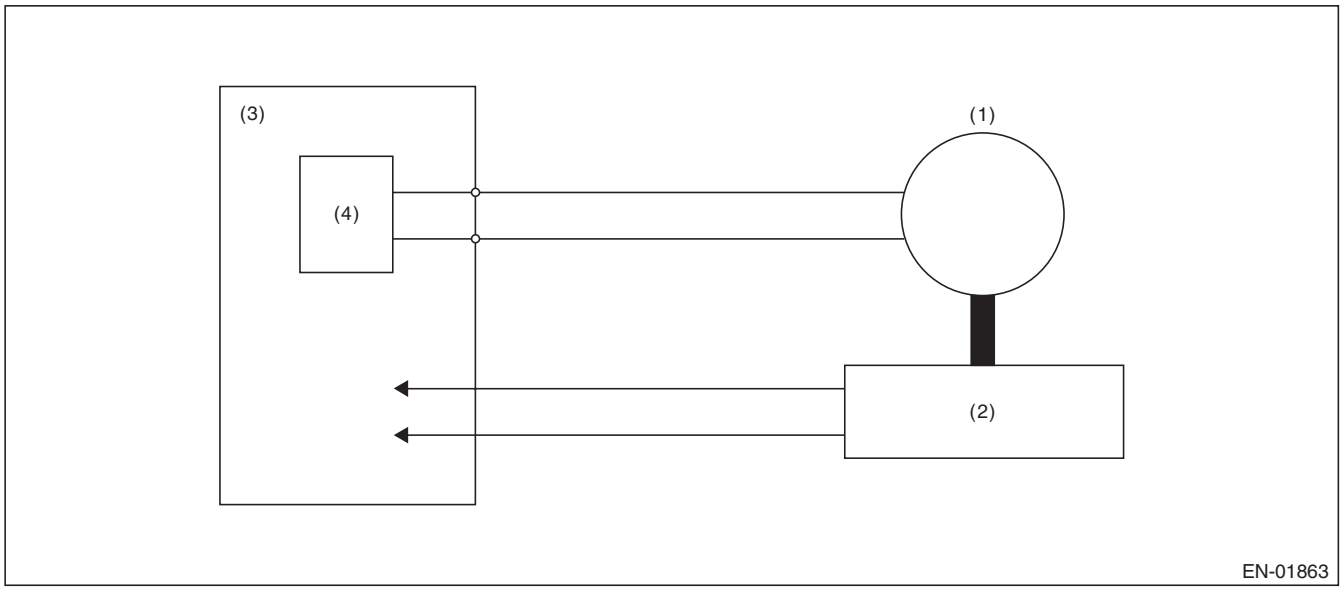

(1) Motor
(2) Throttle position sensor
(3) Engine control module (ECM)
(4) Drive circuit

3. ENABLE CONDITION

Secondary Parameters	Enable Conditions
Ignition switch	ON
Normal operation of electronic throttle control	ON

4. GENERAL DRIVING CYCLE

Always perform the diagnosis continuously when the electronic throttle control is operating.

5. DIAGNOSTIC METHOD

Judge as OK and clear the NG when the malfunction criteria below are met.

Judgment Value

Malfunction Criteria	Threshold Value
Difference between target opening angle and actual opening angle	Within the OK range of **judgment value detail**
Output duty to drive circuit	< 95 %

Time Needed for Diagnosis:

- Difference between target opening angle and actual opening angle:
  - NG judgment: Refer to the **judgment time detail**.
  - OK judgment: 2000 ms
- Output duty to drive circuit: 2000 ms

GETTHEMANUALS.org

Details of Judgment Value

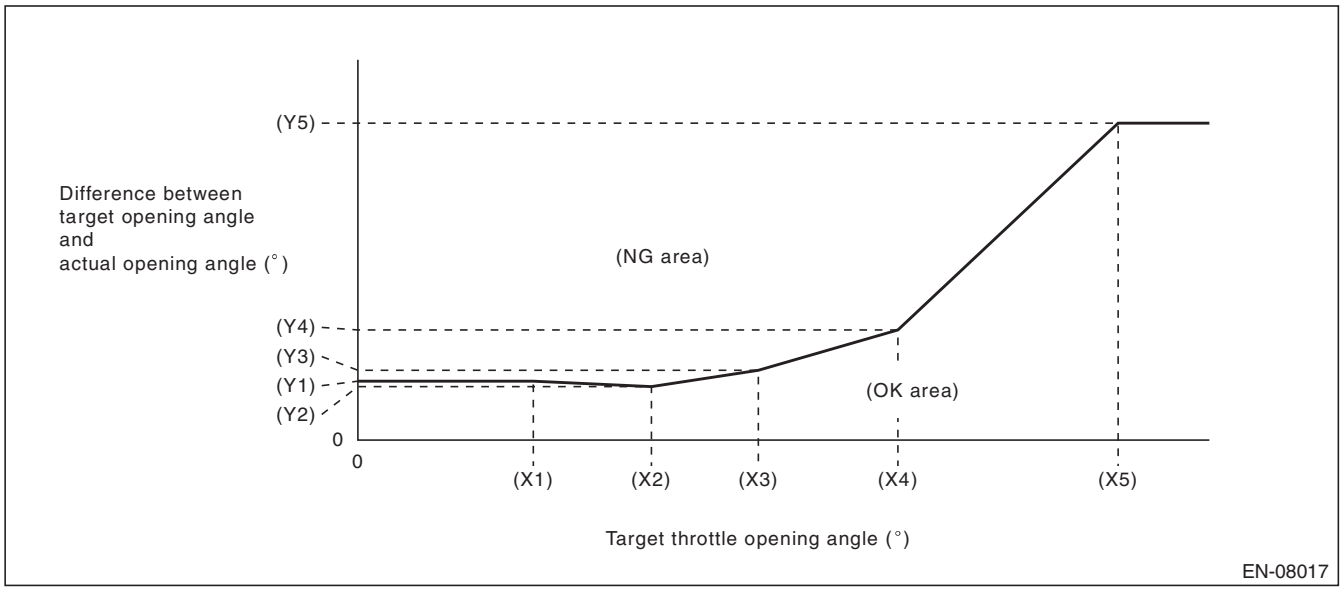

(X1)	6.915 °	(X2)	11.565 °	(X3)	15.785 °
(X4)	21.285 °	(X5)	29.965 °		
(Y1)	4.65 °	(Y2)	4.22 °	(Y3)	5.5 °
(Y4)	8.68 °	(Y5)	25 °		

Judgment time detail

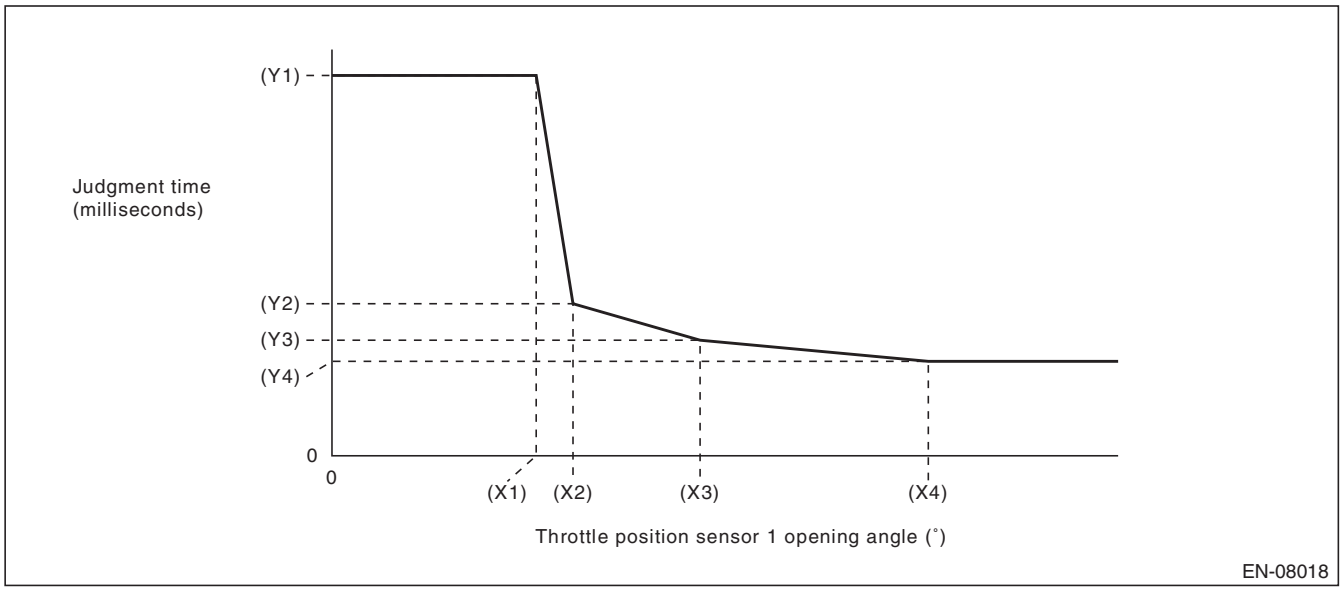

(X1)	8.049999237 °	(X2)	9.5 °	(X3)	14.5 °
(X4)	23.5 °				
(Y1)	1000 ms	(Y2)	400 ms	(Y3)	304 ms
(Y4)	248 ms				

NOTE:
Judgment time is constantly 1000 ms with Actual opening angle ≤ Target opening angle.
Malfunction Indicator Light Illumination: Illuminates as soon as a malfunction occurs.

GETTHEMANUALS.org

CU:DTC P0851 NEUTRAL SWITCH INPUT CIRCUIT LOW (MT MODEL)

1. OUTLINE OF DIAGNOSIS

Detect the open or short circuit of neutral SW.
Judge as NG when there is no change in the neutral SW even if the driving shift was applied. (There is neutral SW ON/OFF inversion from the vehicle speed and engine speed.)

2. ENABLE CONDITION

Secondary Parameters	Enable Conditions
Battery voltage	≥ 10.9 V
Starter relay	OFF

3. GENERAL DRIVING CYCLE

Perform the diagnosis continuously in 2 seconds after starting the engine.

4. DIAGNOSTIC METHOD

- **Abnormality Judgment**

Judge NG when the malfunction criteria below are completed determined times or more after the neutral SW change.

Judgment Value

Malfunction Criteria	Threshold Value
Neutral switch signal (while changing from a to b below)	LOW (ON) continues.
Driving condition change	From a) to b)
a) Engine speed 600 rpm — 900 rpm & Vehicle speed = 0 km/h (0 MPH)	
b) Engine speed 1600 rpm — 2000 rpm & Vehicle speed ≥ 64 km/h (39.8 MPH)	

Time Needed for Diagnosis: 3 time(s)
Malfunction Indicator Light Illumination: Illuminates when malfunction occurs in 2 continuous driving cycles.

- **Normality Judgment**

Judge as OK and clear NG when there is change in the neutral SW.

Judgment Value

Malfunction Criteria	Threshold Value
Neutral switch signal (while changing from a to b below)	Changes to HIGH (OFF).
Driving condition change	From a) to b)
a) Engine speed 600 rpm — 900 rpm & Vehicle speed = 0 km/h (0 MPH)	
b) Engine speed 1600 rpm — 2000 rpm & Vehicle speed ≥ 64 km/h (39.8 MPH)	

Time Needed for Diagnosis: Less than 1 second

GETTHEMANUALS.org

CV:DTC P0852 NEUTRAL SWITCH INPUT CIRCUIT HIGH (MT MODEL)

1. OUTLINE OF DIAGNOSIS

Detect the open or short circuit of neutral SW.
Judge as NG when there is no change in the neutral SW even if the driving shift was applied. (There is neutral SW ON/OFF inversion from the vehicle speed and engine speed.)

2. ENABLE CONDITION

Secondary Parameters	Enable Conditions
Battery voltage	≥ 10.9 V
Starter relay	OFF

3. GENERAL DRIVING CYCLE

Perform the diagnosis continuously in 2 seconds after starting the engine.

4. DIAGNOSTIC METHOD

- **Abnormality Judgment**

Judge NG when the malfunction criteria below are completed determined times or more after the neutral SW change.

Judgment Value

Malfunction Criteria	Threshold Value
Neutral switch signal (while changing from a to b below)	HIGH (OFF) continues.
Driving condition change	From a) to b)
a) Engine speed 600 rpm — 900 rpm & Vehicle speed = 0 km/h (0 MPH)	
b) Engine speed 1600 rpm — 2000 rpm & Vehicle speed ≥ 64 km/h (39.8 MPH)	

Time Needed for Diagnosis: 3 time(s)
Malfunction Indicator Light Illumination: Illuminates when malfunction occurs in 2 continuous driving cycles.

- **Normality Judgment**

Judge as OK and clear NG when there is change in the neutral SW.

Judgment Value

Malfunction Criteria	Threshold Value
Neutral switch signal (while changing from a to b below)	Changes to LOW (ON).
Driving condition change	From a) to b)
a) Engine speed 600 rpm — 900 rpm & Vehicle speed = 0 km/h (0 MPH)	
b) Engine speed 1600 rpm — 2000 rpm & Vehicle speed ≥ 64 km/h (39.8 MPH)	

Time Needed for Diagnosis: Less than 1 second

GETTHEMANUALS.org

CW:DTC P1152 O2 SENSOR CIRCUIT RANGE/PERFORMANCE (LOW) (BANK1 SENSOR1)

1. OUTLINE OF DIAGNOSIS

Detect that λ value remains low.
Judge as NG when lambda value is abnormal in accordance with λ value of front oxygen (A/F) sensor and running conditions such as vehicle speed, amount of intake air, engine coolant temperature, sub feedback control, etc.

λ value = Actual air fuel ratio/Theoretical air fuel ratio
λ > 1: Lean
λ < 1: Rich

2. COMPONENT DESCRIPTION

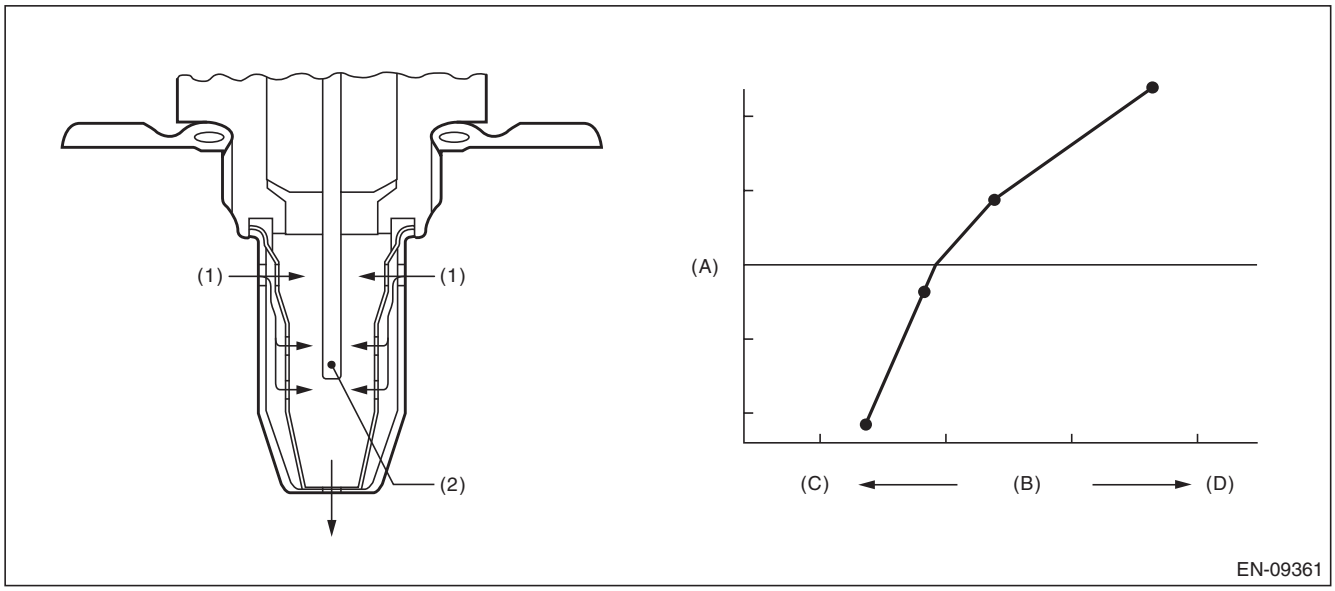

(A)	Electromotive force	(B)	Air fuel ratio	(C)	Lean
(D)	Rich				
(1)	Exhaust gas	(2)	ZrO_2		

GETTHEMANUALS.org

3. ENABLE CONDITION

Secondary Parameters	Enable Conditions
Time needed for all secondary parameters to be in enable conditions	≥ 4096 ms
Battery voltage	≥ 10.9 V
Atmospheric pressure	≥ 75 kPa (563 mmHg, 22.2 inHg)
Rear oxygen sensor sub feedback	Execution
Rear oxygen sensor output voltage – Feedback target voltage	– 0.2 V — 0.1 V
or rear oxygen sensor sub feedback compensation coefficient	On Min.
or rear oxygen sensor sub feedback compensation coefficient	On Max.
Elapsed time after starting the engine	≥ 60000 ms
Engine coolant temperature	≥ 72 °C (161.6 °F)
Vehicle speed	≥ 20 km/h (12.4 MPH)
Amount of intake air	≥ 6 g/s (0.21 oz/s)
Load change at 180° CA	< 0.02 g/rev (0 oz/rev)
Front oxygen (A/F) sensor impedance	0 Ω — 50 Ω
Learning value of evaporation gas density	< 0.2
Total time of operating canister purge	≥ 19.9 s
Targeted lambda value load compensation coefficient	–1 — 1

4. GENERAL DRIVING CYCLE

Perform diagnosis continuously at a constant speed of 20 km/h (12.4 MPH) or more after 60000 ms have passed since the engine started.

5. DIAGNOSTIC METHOD

- **Abnormality Judgment**

If the duration of time while the following conditions are met is longer than the time indicated, judge as NG.

Judgment Value

Malfunction Criteria	Threshold Value
λ value	< 0.85

Time Needed for Diagnosis: 10000 ms
Malfunction Indicator Light Illumination: Illuminates when malfunction occurs in 2 continuous driving cycles.

- **Normality Judgment**

Judge as OK and clear the NG if the continuous time while the following conditions are established is more than the predetermined time.

Judgment Value

Malfunction Criteria	Threshold Value
λ value	≥ 0.85

Time Needed for Diagnosis: Less than 1 second

GETTHEMANUALS.org

CX:DTC P1153 O2 SENSOR CIRCUIT RANGE/PERFORMANCE (HIGH) (BANK1 SENSOR1)

1. OUTLINE OF DIAGNOSIS

Detect that λ value remains high.
Judge as NG when lambda value is abnormal in accordance with λ value of front oxygen (A/F) sensor and running conditions such as vehicle speed, amount of intake air, engine coolant temperature, sub feedback control, etc.

λ value = Actual air fuel ratio/Theoretical air fuel ratio
λ > 1: Lean
λ < 1: Rich

2. COMPONENT DESCRIPTION

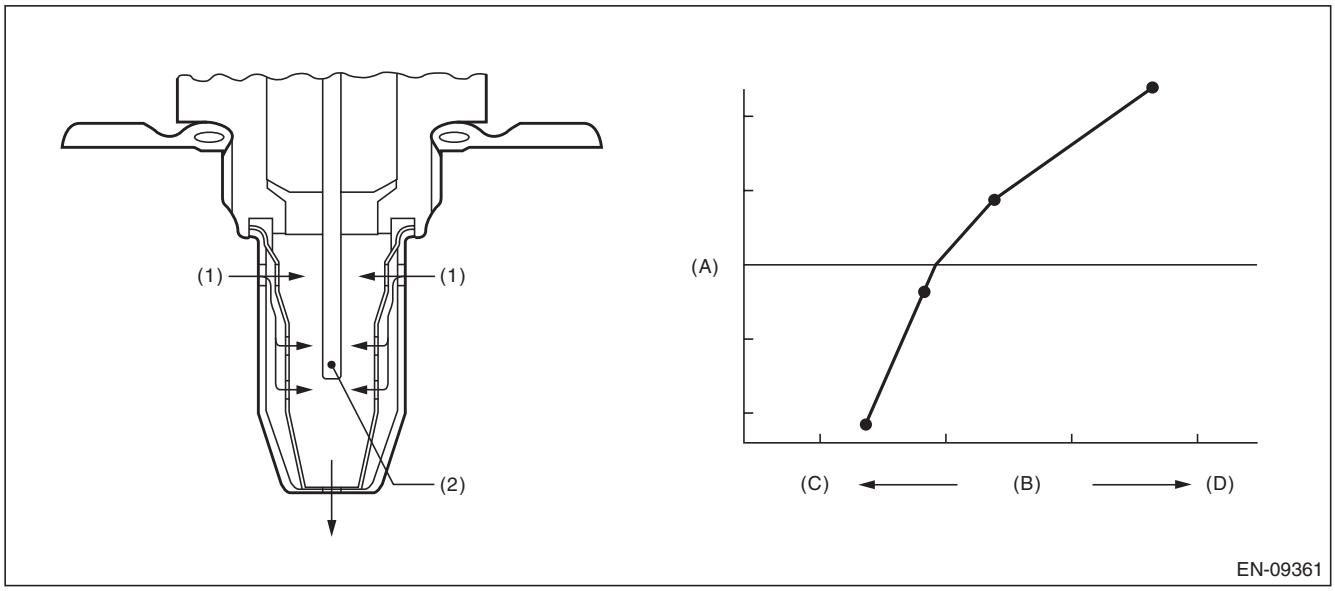

(A)	Electromotive force	(B)	Air fuel ratio	(C)	Lean
(D)	Rich				
(1)	Exhaust gas	(2)	ZrO_2		

GETTHEMANUALS.org

3. ENABLE CONDITION

Secondary Parameters	Enable Conditions
Time needed for all secondary parameters to be in enable conditions	≥ 4096 ms
Battery voltage	≥ 10.9 V
Atmospheric pressure	≥ 75 kPa (563 mmHg, 22.2 inHg)
Rear oxygen sensor sub feedback	Execution
Rear oxygen sensor output voltage – Feedback target voltage	– 0.2 V — 0.1 V
or rear oxygen sensor sub feedback compensation coefficient	On Min.
or rear oxygen sensor sub feedback compensation coefficient	On Max.
Elapsed time after starting the engine	≥ 60000 ms
Engine coolant temperature	≥ 72 °C (161.6 °F)
Vehicle speed	≥ 20 km/h (12.4 MPH)
Amount of intake air	≥ 6 g/s (0.21 oz/s)
Load change at 180° CA	< 0.02 g/rev (0 oz/rev)
Front oxygen (A/F) sensor impedance	0 Ω — 50 Ω
Learning value of evaporation gas density	< 0.2
Total time of operating canister purge	≥ 19.9 s
Targeted lambda value load compensation coefficient	–1 — 1

4. GENERAL DRIVING CYCLE

Perform diagnosis continuously at a constant speed of 20 km/h (12.4 MPH) or more after 60000 ms have passed since the engine started.

5. DIAGNOSTIC METHOD

- **Abnormality Judgment**

If the duration of time while the following conditions are met is longer than the time indicated, judge as NG.

Judgment Value

Malfunction Criteria	Threshold Value
λ value	> 1.15

Time Needed for Diagnosis: 10000 ms
Malfunction Indicator Light Illumination: Illuminates when malfunction occurs in 2 continuous driving cycles.

- **Normality Judgment**

Judge as OK and clear the NG if the continuous time while the following conditions are established is more than the predetermined time.

Judgment Value

Malfunction Criteria	Threshold Value
λ value	≤ 1.15

Time Needed for Diagnosis: Less than 1 second

GETTHEMANUALS.org

CY:DTC P1160 RETURN SPRING FAILURE

1. OUTLINE OF DIAGNOSIS

Judge as NG when the valve is opened more than the default opening angle, but does not move to the close direction with the motor power stopped.

2. COMPONENT DESCRIPTION

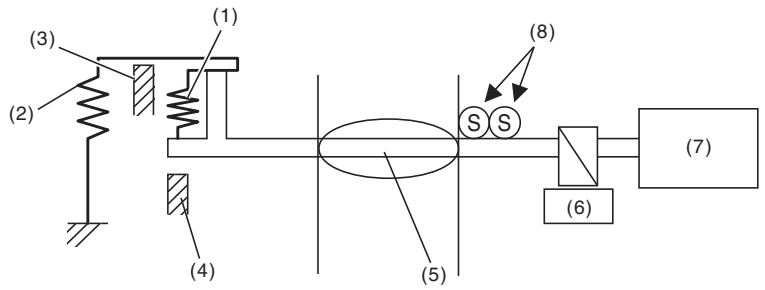

(1)	Opener spring	(4)	Full closed stopper	(7)	DC motor
(2)	Return spring	(5)	Throttle valve	(8)	Main and sub throttle position sensor
(3)	Intermediate stopper	(6)	Gear		

3. ENABLE CONDITION

Secondary Parameters	Enable Conditions
Battery voltage	≥ 6 V
Throttle position sensor	Normal

4. GENERAL DRIVING CYCLE

- Ignition switch ON → OFF
- Ignition switch OFF → ON (Only after clearing memory)

GETTHEMANUALS.org

5. DIAGNOSTIC METHOD

- **Abnormality Judgment**

Judge as NG when the following conditions are established.

Judgment Value

Malfunction Criteria	Threshold Value
Opening variation after continuity is set to OFF	< 2 °

Time Needed for Diagnosis: 24 ms
Malfunction Indicator Light Illumination: Illuminates as soon as a malfunction occurs.

- **Normality Judgment**

Judge as OK and clear the NG if the following conditions are established.

Judgment Value

Malfunction Criteria	Threshold Value
Opening variation after continuity is set to OFF	≥ 2 °

Time Needed for Diagnosis: 3400 ms

GETTHEMANUALS.org

CZ:DTC P1400 FUEL TANK PRESSURE CONTROL SOLENOID VALVE CIRCUIT LOW

1. OUTLINE OF DIAGNOSIS

Detect the open/short circuit of pressure control solenoid valve.
Judge as NG when ECM output level is different from actual terminal level.

2. COMPONENT DESCRIPTION

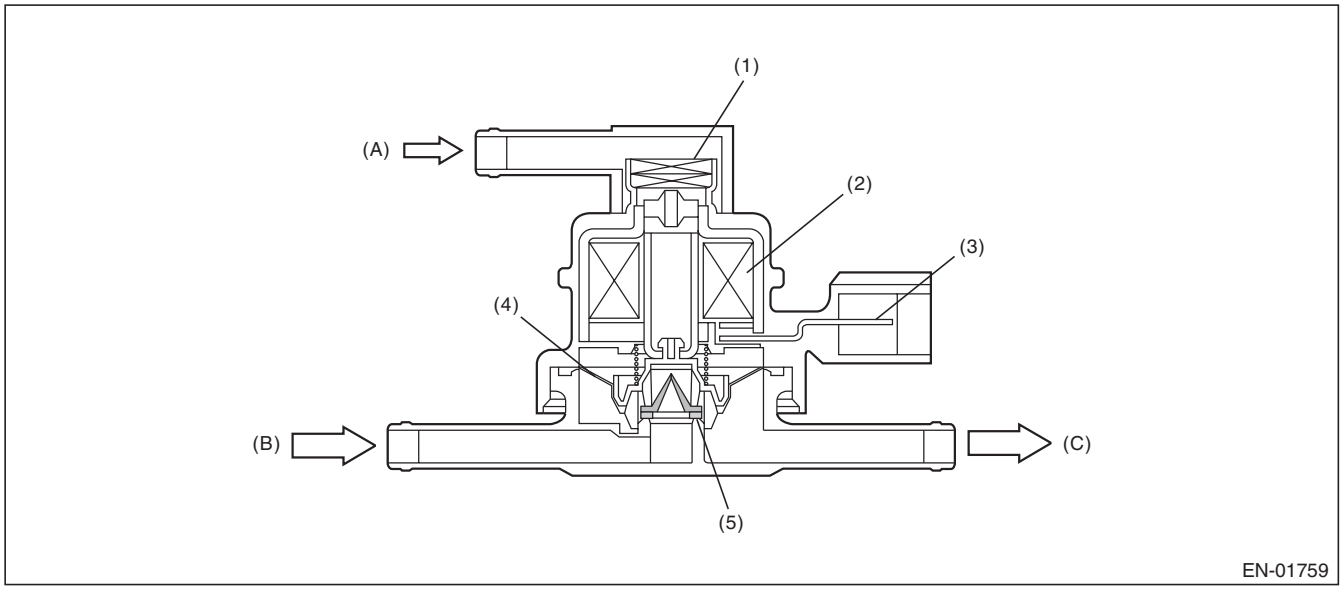

(A)	Atmospheric pressure	(B)	Shut-off valve	(C)	To fuel tank
(1)	Filter	(3)	Connector terminal	(5)	Valve
(2)	Coil	(4)	Diaphragm		

3. ENABLE CONDITION

Secondary Parameters	Enable Conditions
None	

4. GENERAL DRIVING CYCLE

Always perform the diagnosis after starting the engine.

GETTHEMANUALS.org

5. DIAGNOSTIC METHOD

- **Abnormality Judgment**

If the duration of time while the following conditions are met is longer than the time indicated, judge as NG.

Judgment Value

Malfunction Criteria	Threshold Value
Battery voltage	≥ 10.9 V
Elapsed time after starting the engine	≥ 1 s
Terminal output voltage when ECM outputs OFF signal	Low

Time Needed for Diagnosis: 2500 ms
Malfunction Indicator Light Illumination: Illuminates when malfunction occurs in 2 continuous driving cycles.

- **Normality Judgment**

Judge as OK and clear the NG if the continuous time while the following conditions are established is more than the predetermined time.

Judgment Value

Malfunction Criteria	Threshold Value
Battery voltage	≥ 10.9 V
Elapsed time after starting the engine	≥ 1 s
Terminal output voltage when ECM outputs OFF signal	High

Time Needed for Diagnosis: Less than 1 second

GETTHEMANUALS.org

DA:DTC P1420 FUEL TANK PRESSURE CONTROL SOL. VALVE CIRCUIT HIGH

1. OUTLINE OF DIAGNOSIS

Detect the open/short circuit of pressure control solenoid valve.
Judge as NG when ECM output level is different from actual terminal level.

2. COMPONENT DESCRIPTION

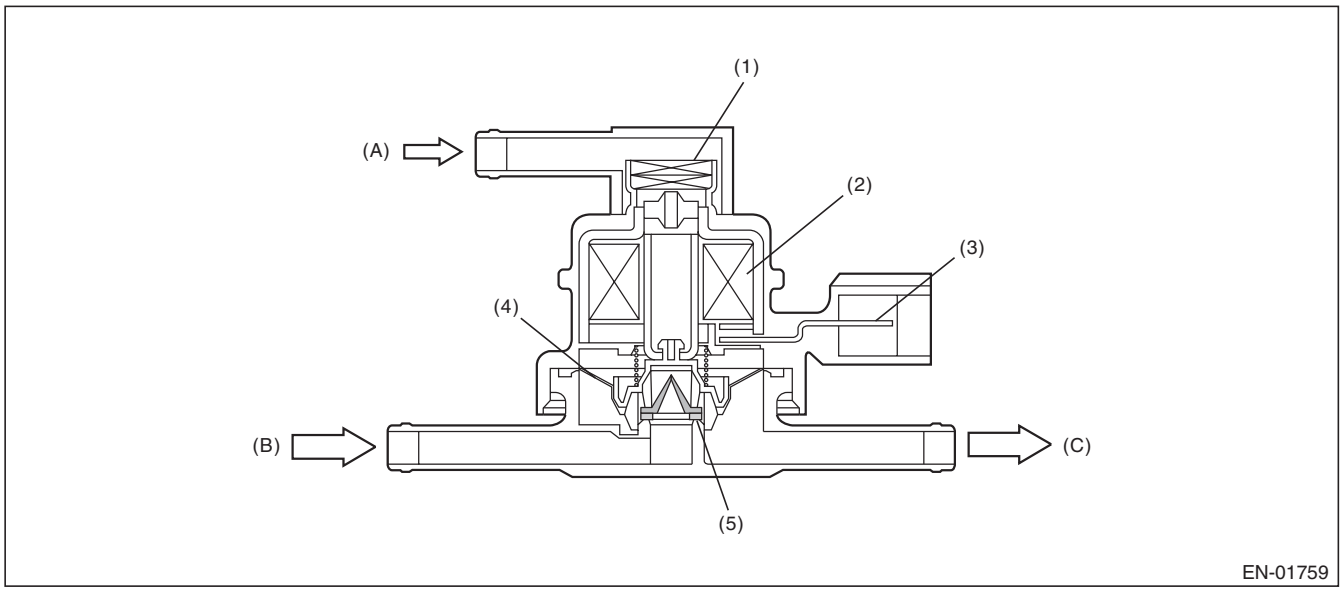

(A)	Atmospheric pressure	(B)	Shut-off valve	(C)	To fuel tank
(1)	Filter	(3)	Connector terminal	(5)	Valve
(2)	Coil	(4)	Diaphragm		

3. ENABLE CONDITION

Secondary Parameters	Enable Conditions
None	

4. GENERAL DRIVING CYCLE

Always perform the diagnosis after starting the engine.

GETTHEMANUALS.org

5. DIAGNOSTIC METHOD

- **Abnormality Judgment**

If the duration of time while the following conditions are met is longer than the time indicated, judge as NG.

Judgment Value

Malfunction Criteria	Threshold Value
Battery voltage	≥ 10.9 V
Elapsed time after starting the engine	≥ 1 s
Terminal output voltage when ECM outputs ON signal	High

Time Needed for Diagnosis: 2500 ms
Malfunction Indicator Light Illumination: Illuminates when malfunction occurs in 2 continuous driving cycles.

- **Normality Judgment**

Judge as OK and clear the NG if the continuous time while the following conditions are established is more than the predetermined time.

Judgment Value

Malfunction Criteria	Threshold Value
Battery voltage	≥ 10.9 V
Elapsed time after starting the engine	≥ 1 s
Terminal output voltage when ECM outputs ON signal	Low

Time Needed for Diagnosis: Less than 1 second

GETTHEMANUALS.org

DB:DTC P1443 VENT CONTROL SOLENOID VALVE FUNCTION PROBLEM

1. OUTLINE OF DIAGNOSIS

Detect the abnormal function (stuck closed) of the drain valve.
Judge as NG when fuel tank pressure is low.

2. COMPONENT DESCRIPTION

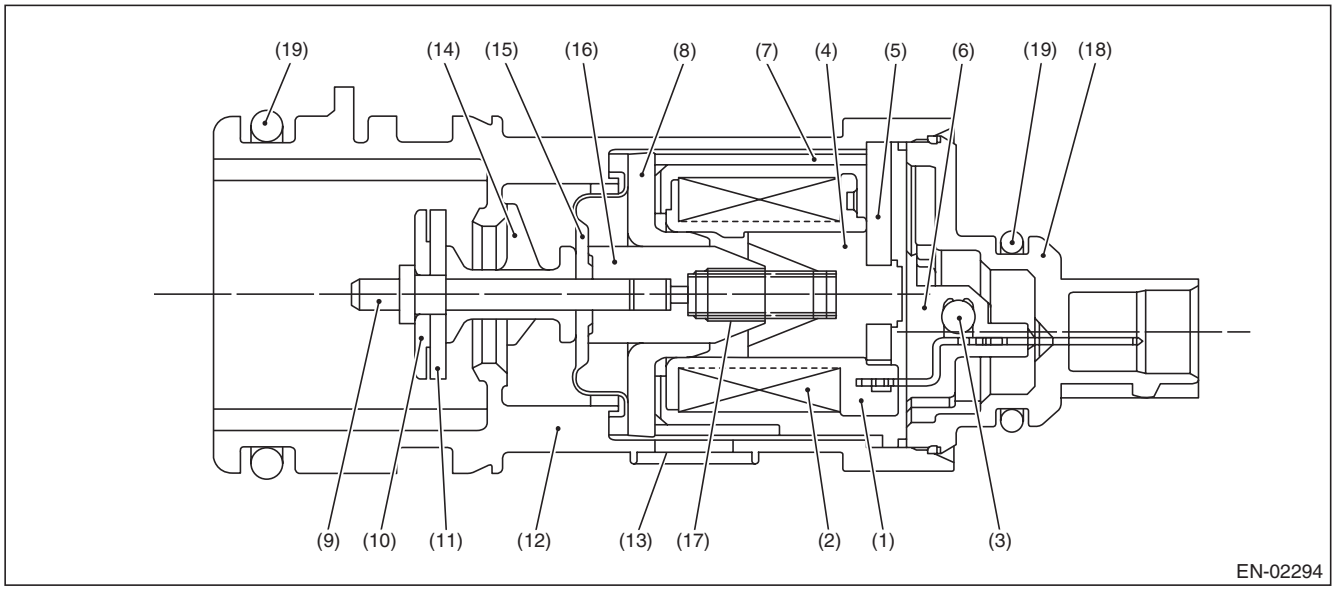

(1)	Bobbin	(8)	Magnetic plate	(14)	Retainer
(2)	Coil	(9)	Shaft	(15)	Diaphragm
(3)	Diode	(10)	Plate	(16)	Movable core
(4)	Stator core	(11)	Valve	(17)	Spring
(5)	End plate	(12)	Housing	(18)	Cover
(6)	Body	(13)	Filter	(19)	O-ring
(7)	Yoke				

3. ENABLE CONDITION

Secondary Parameters	Enable Conditions
Drain valve	Open
Battery voltage	≥ 10.9 V
Atmospheric pressure	≥ 75 kPa (563 mmHg, 22.2 inHg)
Tank pressure when starter is OFF → ON	–0.7 kPa (–5 mmHg, –0.2 inHg) and 1.4 kPa (10.7 mmHg, 0.4 inHg)

4. GENERAL DRIVING CYCLE

Always perform the diagnosis continuously.

GETTHEMANUALS.org

5. DIAGNOSTIC METHOD

- **Abnormality Judgment**

If the duration of time while the following conditions are met is longer than the time indicated, judge as NG.

Judgment Value

Malfunction Criteria	Threshold Value
Fuel tank pressure	≤ –4 kPa (–30 mmHg, –1.2 inHg)

Time Needed for Diagnosis: 3000 ms
Malfunction Indicator Light Illumination: Illuminates as soon as a malfunction occurs.

- **Normality Judgment**

Judge as OK and clear the NG if the continuous time while the following conditions are established is more than the predetermined time.

Judgment Value

Malfunction Criteria	Threshold Value
Fuel tank pressure	> –4 kPa (–30 mmHg, –1.2 inHg)
Cumulative time when all the malfunction criteria below are met.	≥ 30000 ms
Purge control solenoid valve duty	Not = 0
Fuel temperature	–10 °C (14 °F) — 55 °C (131 °F)
Intake manifold relative pressure	≥ – 26.7 kPa (– 200 mmHg, – 7.9 inHg)

Time Needed for Diagnosis: Less than 1 second

GETTHEMANUALS.org

DC:DTC P1458 CANISTER PURGE CONTROL SOLENOID VALVE 2

1. OUTLINE OF DIAGNOSIS

Detect open or short circuit of the purge control solenoid valve 2.
Judge as NG when the ECM output level differs from the actual terminal level.

2. ENABLE CONDITIONS

Secondary Parameters	Enable Conditions
None	

3. GENERAL DRIVING CYCLE

Always perform the diagnosis continuously.

4. DIAGNOSTIC METHOD

- **Abnormality Judgment**

If the duration of time while the following conditions are met is longer than the time indicated, judge as NG.

Judgment Value

Malfunction Criteria	Threshold Value
Battery voltage	≥ 10.9 V
Elapsed time after starting the engine	≥ 1 s
Terminal output voltage when ECM outputs OFF signal	Low

Time Needed for Diagnosis: 2500 ms
Malfunction Indicator Light Illumination: Illuminates when malfunction occurs in 2 continuous driving cycles.

- **Normality Judgment**

Judge as OK and clear the NG if the continuous time while the following conditions are established is more than the predetermined time.

Judgment Value

Malfunction Criteria	Threshold Value
Battery voltage	≥ 10.9 V
Elapsed time after starting the engine	≥ 1 s
Terminal output voltage when ECM outputs OFF signal	High

Time Needed for Diagnosis: Less than 1 second

GETTHEMANUALS.org

DD:DTC P1459 CANISTER PURGE CONTROL SOLENOID VALVE 2

1. OUTLINE OF DIAGNOSIS

Detect open or short circuit of the purge control solenoid valve 2.
Judge as NG when the ECM output level differs from the actual terminal level.

2. ENABLE CONDITIONS

Secondary Parameters	Enable Conditions
None	

3. GENERAL DRIVING CYCLE

Always perform the diagnosis continuously.

4. DIAGNOSTIC METHOD

- **Abnormality Judgment**

If the duration of time while the following conditions are met is longer than the time indicated, judge as NG.

Judgment Value

Malfunction Criteria	Threshold Value
Battery voltage	≥ 10.9 V
Elapsed time after starting the engine	≥ 1 s
Terminal output voltage when ECM outputs ON signal	High

Time Needed for Diagnosis: 2500 ms
Malfunction Indicator Light Illumination: Illuminates when malfunction occurs in 2 continuous driving cycles.

- **Normality Judgment**

Judge as OK and clear the NG if the continuous time while the following conditions are established is more than the predetermined time.

Judgment Value

Malfunction Criteria	Threshold Value
Battery voltage	≥ 10.9 V
Elapsed time after starting the engine	≥ 1 s
Terminal output voltage when ECM outputs ON signal	Low

Time Needed for Diagnosis: Less than 1 second

GETTHEMANUALS.org

DE:DTC P1518 STARTER SWITCH CIRCUIT LOW INPUT

1. OUTLINE OF DIAGNOSIS

Detect the open or short circuit of starter SW.
Judge as OFF NG when it becomes after engine start despite no starter ON experience.

2. ENABLE CONDITIONS

Secondary Parameters	Enable Conditions
None	

3. GENERAL DRIVING CYCLE

Always perform the diagnosis continuously.

4. DIAGNOSTIC METHOD

- **Abnormality Judgment**

Judge as OFF NG when the following conditions are established.

Judgment Value

Malfunction Criteria	Threshold Value
Vehicle speed	< 1 km/h (0.6 MPH)
Starter ON signal	Not detected
Engine condition	Change from pre-start to post-start
Battery voltage	≥ 8 V

Time Needed for Diagnosis: Less than 1 second
Malfunction Indicator Light Illumination: Illuminates when malfunction occurs in 2 continuous driving cycles.

- **Normality Judgment**

Judge as OFF OK and clear the NG if the following conditions are established.

Judgment Value

Malfunction Criteria	Threshold Value
Starter ON	Experienced
Starter ON diagnosis	No diagnosis experience
Battery voltage	≥ 8 V

Time Needed for Diagnosis: Less than 1 second

GETTHEMANUALS.org

DF:DTC P1560 BACK-UP VOLTAGE CIRCUIT MALFUNCTION

1. OUTLINE OF DIAGNOSIS

Detect the open/short circuit of back-up power supply circuit.
Judge as NG when the backup power voltage is low.

2. ENABLE CONDITION

Secondary Parameters	Enable Conditions
None	

3. GENERAL DRIVING CYCLE

Always perform the diagnosis continuously.

4. DIAGNOSTIC METHOD

- **Abnormality Judgment**

If the duration of time while the following conditions are met is longer than the time indicated, judge as NG.

Judgment Value

Malfunction Criteria	Threshold Value
Voltage of back-up power supply	Low
Battery voltage	≥ 10.9 V
Engine condition	After engine starting

Time Needed for Diagnosis: 2500 ms
Malfunction Indicator Light Illumination: Illuminates as soon as a malfunction occurs.

- **Normality Judgment**

Judge as OK and clear the NG if the continuous time while the following conditions are established is more than the predetermined time.

Judgment Value

Malfunction Criteria	Threshold Value
Voltage of back-up power supply	High
Battery voltage	≥ 10.9 V
Engine condition	After engine starting

Time Needed for Diagnosis: Less than 1 second

GETTHEMANUALS.org

DG:DTC P1570 ANTENNA

1. OUTLINE OF DIAGNOSIS

NOTE:
For the detection standard, refer to DTC P0513. <Ref. to GD(H4DOTC)-178, DTC P0513 INCORRECT IMMOBILIZER KEY, Diagnostic Trouble Code (DTC) Detecting Criteria.>

DH:DTC P1571 REFERENCE CODE INCOMPATIBILITY

1. OUTLINE OF DIAGNOSIS

NOTE:
For the detection standard, refer to DTC P0513. <Ref. to GD(H4DOTC)-178, DTC P0513 INCORRECT IMMOBILIZER KEY, Diagnostic Trouble Code (DTC) Detecting Criteria.>

DI: DTC P1572 IMM CIRCUIT FAILURE (EXCEPT ANTENNA CIRCUIT)

1. OUTLINE OF DIAGNOSIS

NOTE:
For the detection standard, refer to DTC P0513. <Ref. to GD(H4DOTC)-178, DTC P0513 INCORRECT IMMOBILIZER KEY, Diagnostic Trouble Code (DTC) Detecting Criteria.>

DJ:DTC P1574 KEY COMMUNICATION FAILURE

1. OUTLINE OF DIAGNOSIS

NOTE:
For the detection standard, refer to DTC P0513. <Ref. to GD(H4DOTC)-178, DTC P0513 INCORRECT IMMOBILIZER KEY, Diagnostic Trouble Code (DTC) Detecting Criteria.>

DK:DTC P1576 EGI CONTROL MODULE EEPROM

1. OUTLINE OF DIAGNOSIS

NOTE:
For the detection standard, refer to DTC P0513. <Ref. to GD(H4DOTC)-178, DTC P0513 INCORRECT IMMOBILIZER KEY, Diagnostic Trouble Code (DTC) Detecting Criteria.>

DL:DTC P1577 IMM CONTROL MODULE EEPROM

1. OUTLINE OF DIAGNOSIS

NOTE:
For the detection standard, refer to DTC P0513. <Ref. to GD(H4DOTC)-178, DTC P0513 INCORRECT IMMOBILIZER KEY, Diagnostic Trouble Code (DTC) Detecting Criteria.>

DM:DTC P1578 METER FAILURE

1. OUTLINE OF DIAGNOSIS

NOTE:
For the detection standard, refer to DTC P0513. <Ref. to GD(H4DOTC)-178, DTC P0513 INCORRECT IMMOBILIZER KEY, Diagnostic Trouble Code (DTC) Detecting Criteria.>

GETTHEMANUALS.org

DN:DTC P2004 INTAKE MANIFOLD RUNNER CONTROL STUCK OPEN (BANK 1)

1. OUTLINE OF DIAGNOSIS

Detect the malfunction of tumble generator valve motor function.
Judge open fixing malfunction when the opening degree is large even after finishing the tumble generator valve closing driving.

2. ENABLE CONDITION

Secondary Parameters	Enable Conditions
Battery voltage	≥ 10.9 V
Engine coolant temperature	≥ –30 °C (–22 °F)
Ambient air temperature	≥ –30 °C (–22 °F)

3. GENERAL DRIVING CYCLE

Always perform the diagnosis continuously.

4. DIAGNOSTIC METHOD

- **Abnormality Judgment**

If the duration of time while the following conditions are met is longer than the time indicated, judge as NG.

Judgment Value

Malfunction Criteria	Threshold Value
Tumble generator valve opening	≥ 64.3 °
Tumble generator valve “close” signal output	≥ 3200 ms

Time Needed for Diagnosis: 3000 ms
Malfunction Indicator Light Illumination: Illuminates as soon as a malfunction occurs.

- **Normality Judgment**

Judge as OK and clear the NG if the continuous time while the following conditions are established is more than the predetermined time.

Judgment Value

Malfunction Criteria	Threshold Value
Tumble generator valve opening	< 64.3 °
Tumble generator valve “close” signal output	≥ 3200 ms

Time Needed for Diagnosis: Less than 1 second

GETTHEMANUALS.org

DO:DTC P2005 INTAKE MANIFOLD RUNNER CONTROL STUCK OPEN (BANK 2)

1. OUTLINE OF DIAGNOSIS

Detect the malfunction of tumble generator valve motor function.
Judge open fixing malfunction when the opening degree is large even after finishing the tumble generator valve closing driving.

2. ENABLE CONDITION

Secondary Parameters	Enable Conditions
Battery voltage	≥ 10.9 V
Engine coolant temperature	≥ –30 °C (–22 °F)
Ambient air temperature	≥ –30 °C (–22 °F)

3. GENERAL DRIVING CYCLE

Always perform the diagnosis continuously.

4. DIAGNOSTIC METHOD

- **Abnormality Judgment**

If the duration of time while the following conditions are met is longer than the time indicated, judge as NG.

Judgment Value

Malfunction Criteria	Threshold Value
Tumble generator valve opening	≥ 64.3 °
Tumble generator valve “close” signal output	≥ 3200 ms

Time Needed for Diagnosis: 3000 ms
Malfunction Indicator Light Illumination: Illuminates as soon as a malfunction occurs.

- **Normality Judgment**

Judge as OK and clear the NG if the continuous time while the following conditions are established is more than the predetermined time.

Judgment Value

Malfunction Criteria	Threshold Value
Tumble generator valve opening	< 64.3 °
Tumble generator valve “close” signal output	≥ 3200 ms

Time Needed for Diagnosis: Less than 1 second

GETTHEMANUALS.org

DP:DTC P2006 INTAKE MANIFOLD RUNNER CONTROL STUCK CLOSED (BANK 1)

1. OUTLINE OF DIAGNOSIS

Detect the malfunction of tumble generator valve motor function.
Judge close fixing malfunction when the opening degree is small even after finishing the tumble generator valve open driving.

2. ENABLE CONDITION

Secondary Parameters	Enable Conditions
Battery voltage	≥ 10.9 V
Engine coolant temperature	≥ –30 °C (–22 °F)
Ambient air temperature	≥ –30 °C (–22 °F)

3. GENERAL DRIVING CYCLE

Always perform the diagnosis continuously.

4. DIAGNOSTIC METHOD

- **Abnormality Judgment**

If the duration of time while the following conditions are met is longer than the time indicated, judge as NG.

Judgment Value

Malfunction Criteria	Threshold Value
Tumble generator valve opening	< 64.3 °
Tumble generator valve “open” signal output	≥ 4600 ms

Time Needed for Diagnosis: 3000 ms
Malfunction Indicator Light Illumination: Illuminates as soon as a malfunction occurs.

- **Normality Judgment**

Judge as OK and clear the NG if the continuous time while the following conditions are established is more than the predetermined time.

Judgment Value

Malfunction Criteria	Threshold Value
Tumble generator valve opening	≥ 64.3 °
Tumble generator valve “open” signal output	≥ 4600 ms

Time Needed for Diagnosis: Less than 1 second

GETTHEMANUALS.org

DQ:DTC P2007 INTAKE MANIFOLD RUNNER CONTROL STUCK CLOSED (BANK 2)

1. OUTLINE OF DIAGNOSIS

Detect the malfunction of tumble generator valve motor function.
Judge close fixing malfunction when the opening degree is small even after finishing the tumble generator valve open driving.

2. ENABLE CONDITION

Secondary Parameters	Enable Conditions
Battery voltage	≥ 10.9 V
Engine coolant temperature	≥ –30 °C (–22 °F)
Ambient air temperature	≥ –30 °C (–22 °F)

3. GENERAL DRIVING CYCLE

Always perform the diagnosis continuously.

4. DIAGNOSTIC METHOD

- **Abnormality Judgment**

If the duration of time while the following conditions are met is longer than the time indicated, judge as NG.

Judgment Value

Malfunction Criteria	Threshold Value
Tumble generator valve opening	< 64.3 °
Tumble generator valve “open” signal output	≥ 4600 ms

Time Needed for Diagnosis: 3000 ms
Malfunction Indicator Light Illumination: Illuminates as soon as a malfunction occurs.

- **Normality Judgment**

Judge as OK and clear the NG if the continuous time while the following conditions are established is more than the predetermined time.

Judgment Value

Malfunction Criteria	Threshold Value
Tumble generator valve opening	≥ 64.3 °
Tumble generator valve “open” signal output	≥ 4600 ms

Time Needed for Diagnosis: Less than 1 second

GETTHEMANUALS.org

DR:DTC P2008 INTAKE MANIFOLD RUNNER CONTROL CIRCUIT / OPEN (BANK 1)

1. OUTLINE OF DIAGNOSIS

Detect the open or short circuit of tumble generator valve motor.
Judge as NG when the open signal is sent from IC after tumble generator valve driving IC diagnosis.

2. COMPONENT DESCRIPTION

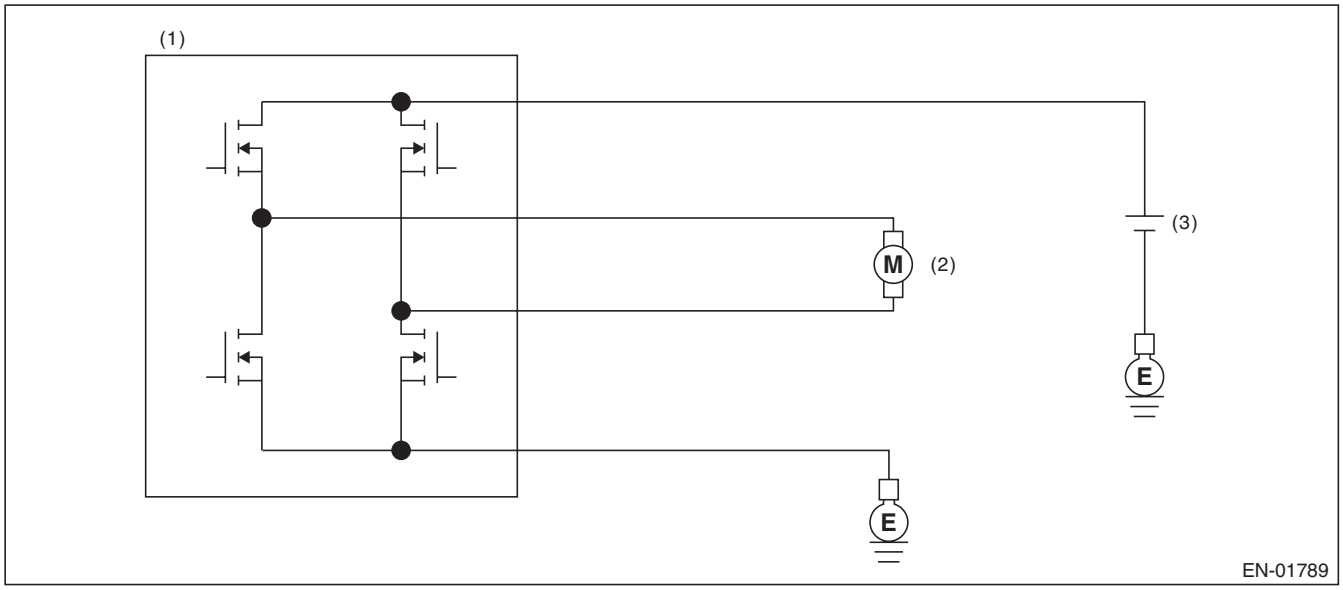

(1) Engine control module (ECM) (2) Tumble generator valve (3) Battery

3. ENABLE CONDITION

Secondary Parameters	Enable Conditions
Battery voltage	≥ 10.9 V

4. GENERAL DRIVING CYCLE

Always perform the diagnosis continuously.

GETTHEMANUALS.org

5. DIAGNOSTIC METHOD

- **Abnormality Judgment**

At the main IC, check the sent signal at each timing which occurs immediately after the tumble generator valve output is set to ON → OFF, and judge open NG when the open NG signal is sent 96 ms × 20 time(s) in a row.

Judgment Value

Malfunction Criteria	Threshold Value
Open NG signal input	Low

Time Needed for Diagnosis: 96 ms × 20 time(s)
Malfunction Indicator Light Illumination: Illuminates as soon as a malfunction occurs.

- **Normality Judgment**

Judge as OK and clear the NG when the OK signal is sent.

Judgment Value

Malfunction Criteria	Threshold Value
Open NG signal input	High

Time Needed for Diagnosis: Less than 1 second

GETTHEMANUALS.org

DS:DTC P2009 INTAKE MANIFOLD RUNNER CONTROL CIRCUIT LOW (BANK 1)

1. OUTLINE OF DIAGNOSIS

Detect the open or short circuit of tumble generator valve motor.
Judge as NG when the overcurrent signal is sent from IC after tumble generator valve driving IC diagnosis.

2. COMPONENT DESCRIPTION

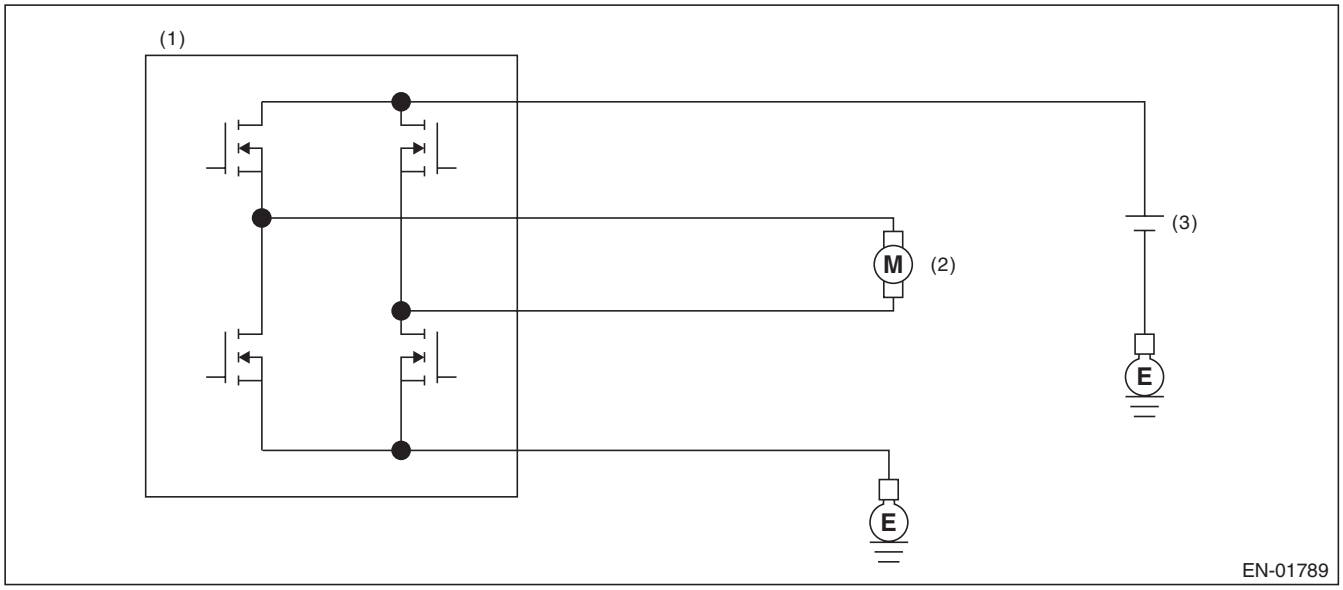

(1) Engine control module (ECM) (2) Tumble generator valve (3) Battery

3. ENABLE CONDITION

Secondary Parameters	Enable Conditions
Battery voltage	≥ 10.9 V

4. GENERAL DRIVING CYCLE

Always perform the diagnosis continuously.

5. DIAGNOSTIC METHOD

- **Abnormality Judgment**

At the main IC, check the sent signal at each timing which occurs just before the tumble generator valve output is set to ON → OFF, and judge open NG when the open NG signal is sent 96 ms × 10 time(s) in a row.

Judgment Value

Malfunction Criteria	Threshold Value
Overcurrent NG signal input	Low

Time Needed for Diagnosis: 96 ms × 10 time(s)
Malfunction Indicator Light Illumination: Illuminates as soon as a malfunction occurs.

- **Normality Judgment**

Judge as OK and clear the NG when the OK signal is sent.

Judgment Value

Malfunction Criteria	Threshold Value
Overcurrent NG signal input	High

Time Needed for Diagnosis: Less than 1 second

GETTHEMANUALS.org

DT:DTC P2011 INTAKE MANIFOLD RUNNER CONTROL CIRCUIT / OPEN (BANK 2)

1. OUTLINE OF DIAGNOSIS

Detect the open or short circuit of tumble generator valve motor.
Judge as NG when the open signal is sent from IC after tumble generator valve driving IC diagnosis.

2. COMPONENT DESCRIPTION

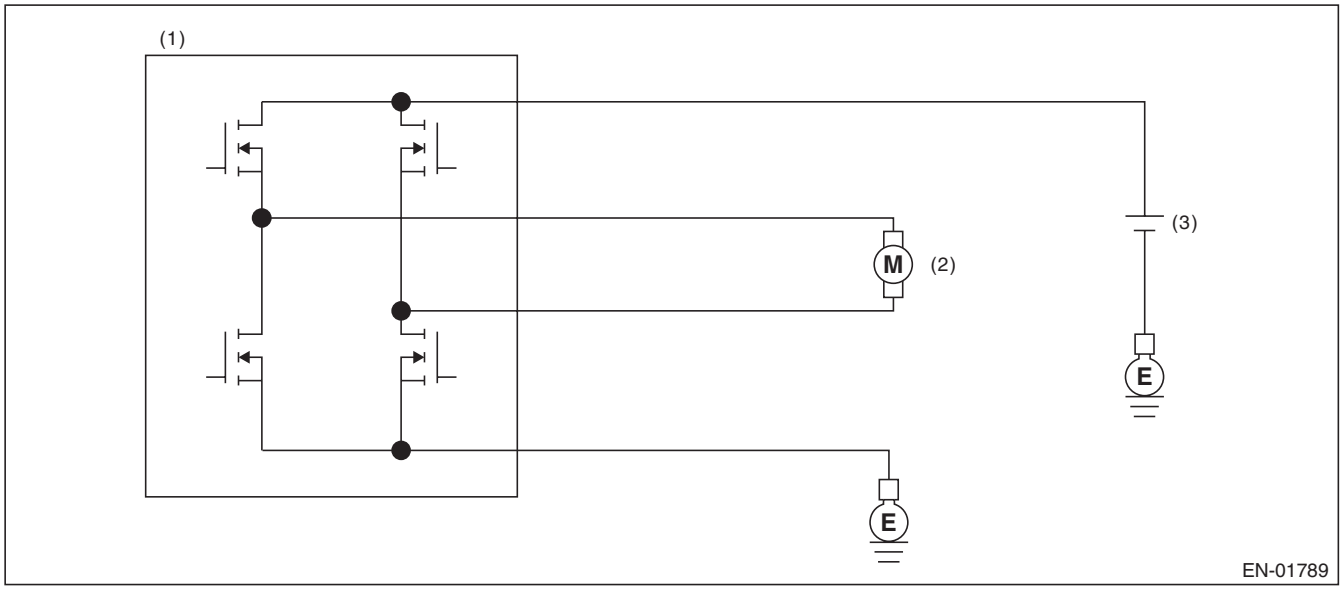

(1) Engine control module (ECM) (2) Tumble generator valve (3) Battery

3. ENABLE CONDITION

Secondary Parameters	Enable Conditions
Battery voltage	≥ 10.9 V

4. GENERAL DRIVING CYCLE

Always perform the diagnosis continuously.

5. DIAGNOSTIC METHOD

- **Abnormality Judgment**

At the main IC, check the sent signal at each timing which occurs just before the tumble generator valve output is set to ON → OFF, and judge open NG when the open NG signal is sent 96 ms × 20 time(s) in a row.

Judgment Value

Malfunction Criteria	Threshold Value
Open NG signal input	Low

Time Needed for Diagnosis: 96 ms × 20 time(s)
Malfunction Indicator Light Illumination: Illuminates as soon as a malfunction occurs.

- **Normality Judgment**

Judge as OK and clear the NG when the OK signal is sent.

Judgment Value

Malfunction Criteria	Threshold Value
Open NG signal input	High

Time Needed for Diagnosis: Less than 1 second

GETTHEMANUALS.org

DU:DTC P2012 INTAKE MANIFOLD RUNNER CONTROL CIRCUIT LOW (BANK 2)

1. OUTLINE OF DIAGNOSIS

Detect the open or short circuit of tumble generator valve motor.
Judge as NG when the overcurrent signal is sent from IC after tumble generator valve driving IC diagnosis.

2. COMPONENT DESCRIPTION

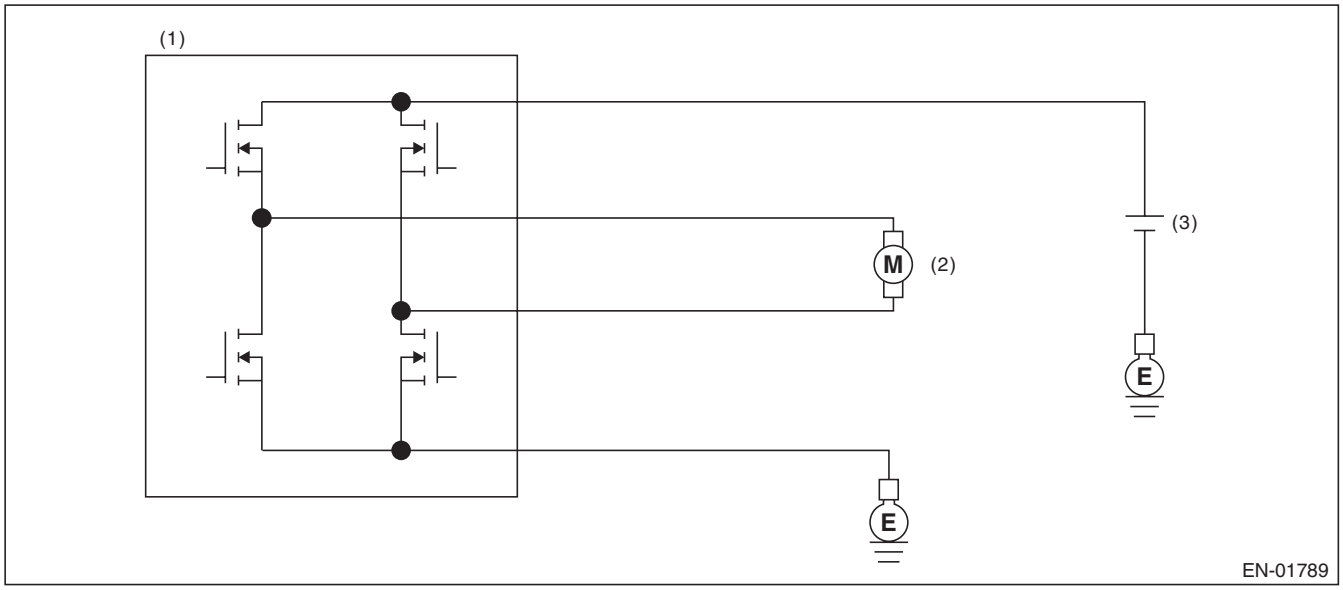

(1) Engine control module (ECM) (2) Tumble generator valve (3) Battery

3. ENABLE CONDITION

Secondary Parameters	Enable Conditions
Battery voltage	≥ 10.9 V

4. GENERAL DRIVING CYCLE

Always perform the diagnosis continuously.

5. DIAGNOSTIC METHOD

- **Abnormality Judgment**

At the main IC, check the sent signal at each timing which occurs just before the tumble generator valve output is set to ON → OFF, and judge open NG when the open NG signal is sent 96 ms × 10 time(s) in a row.

Judgment Value

Malfunction Criteria	Threshold Value
Overcurrent NG signal input	Low

Time Needed for Diagnosis: 96 ms × 10 time(s)
Malfunction Indicator Light Illumination: Illuminates as soon as a malfunction occurs.

- **Normality Judgment**

Judge as OK and clear the NG when the OK signal is sent.

Judgment Value

Malfunction Criteria	Threshold Value
Overcurrent NG signal input	High

Time Needed for Diagnosis: Less than 1 second

GETTHEMANUALS.org

DV:DTC P2016 INTAKE MANIFOLD RUNNER POSITION SENSOR / SWITCH CIRCUIT LOW (BANK 1)

1. OUTLINE OF DIAGNOSIS

Detect open or short circuit of tumble generator valve position sensor.
Judge as NG if out of specification.

2. COMPONENT DESCRIPTION

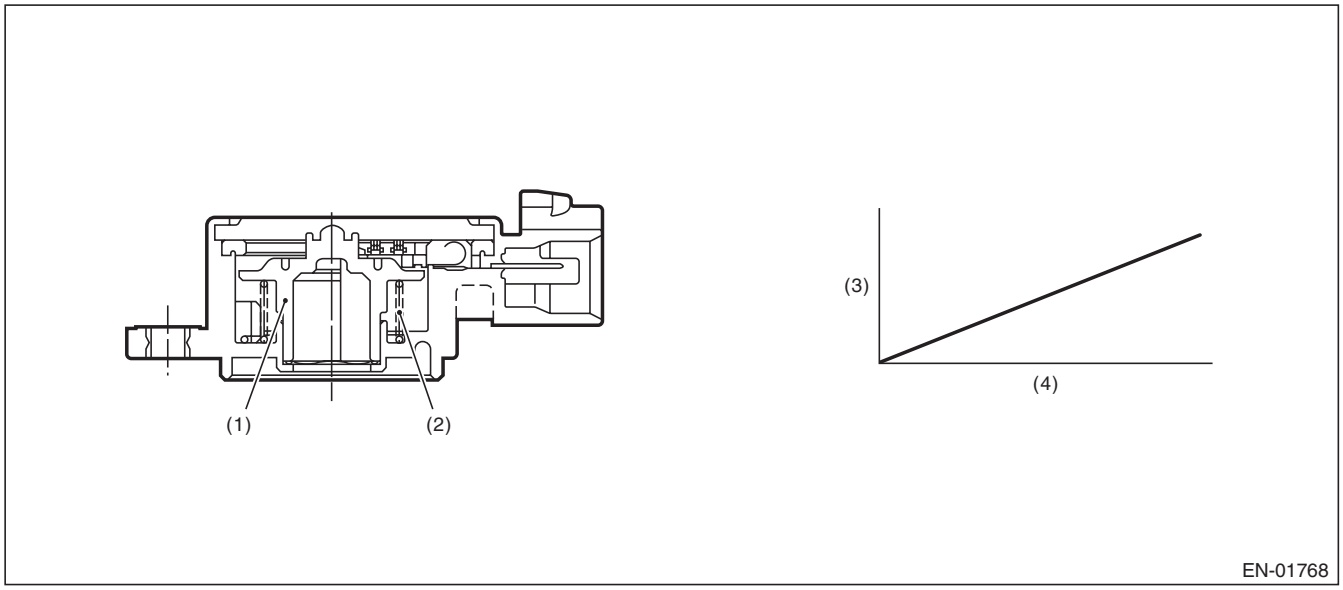

(1) Rotor
(2) Return spring
(3) Voltage (V)
(4) Tumble generator valve opening (°)

3. ENABLE CONDITION

Secondary Parameters	Enable Conditions
None	

4. GENERAL DRIVING CYCLE

Always perform the diagnosis continuously.

GETTHEMANUALS.org

5. DIAGNOSTIC METHOD

- **Abnormality Judgment**

If the duration of time while the following conditions are met is longer than the time indicated, judge as NG.

Judgment Value

Malfunction Criteria	Threshold Value
Output voltage	< 0.264 V

Time Needed for Diagnosis: 500 ms
Malfunction Indicator Light Illumination: Illuminates as soon as a malfunction occurs.

- **Normality Judgment**

Judge as OK and clear the NG if the continuous time while the following conditions are established is more than the predetermined time.

Judgment Value

Malfunction Criteria	Threshold Value
Output voltage	≥ 0.264 V

Time Needed for Diagnosis: Less than 1 second

GETTHEMANUALS.org

DW:DTC P2017 INTAKE MANIFOLD RUNNER POSITION SENSOR / SWITCH CIRCUIT HIGH (BANK 1)

1. OUTLINE OF DIAGNOSIS

Detect open or short circuit of tumble generator valve position sensor.
Judge as NG if out of specification.

2. COMPONENT DESCRIPTION

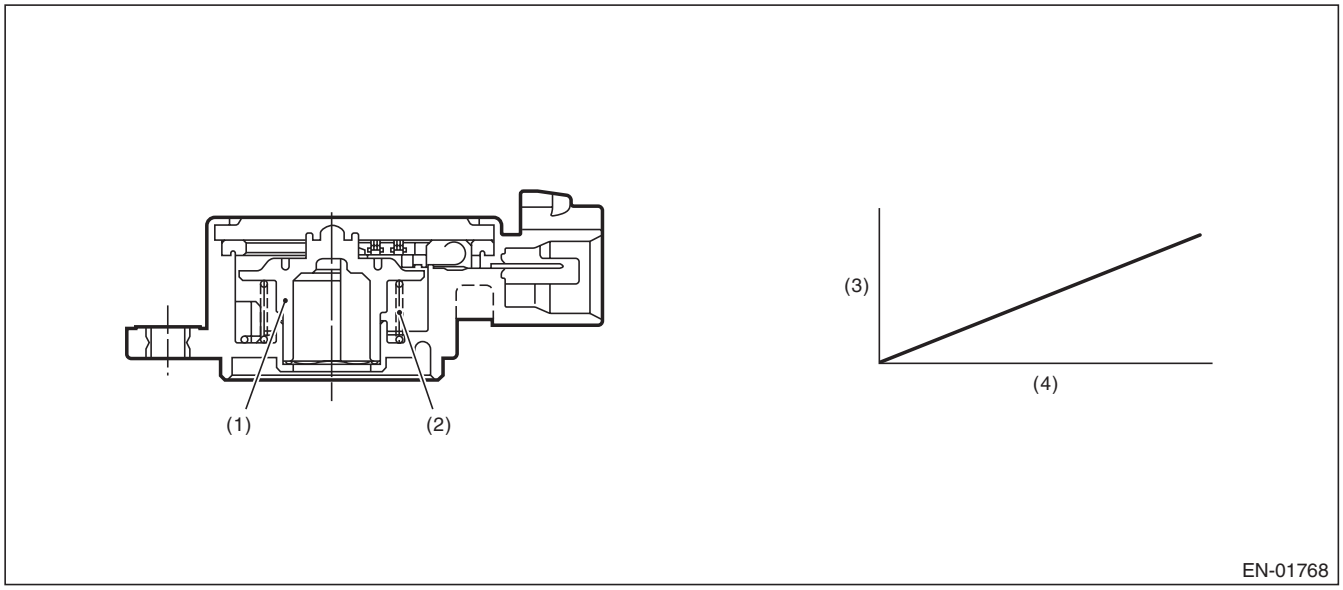

(1) Rotor
(2) Return spring
(3) Voltage (V)
(4) Throttle valve opening angle (°)

3. ENABLE CONDITION

Secondary Parameters	Enable Conditions
None	

4. GENERAL DRIVING CYCLE

Always perform the diagnosis continuously.

GETTHEMANUALS.org

5. DIAGNOSTIC METHOD

- **Abnormality Judgment**

If the duration of time while the following conditions are met is longer than the time indicated, judge as NG.

Judgment Value

Malfunction Criteria	Threshold Value
Output voltage	≥ 4.783 V

Time Needed for Diagnosis: 500 ms
Malfunction Indicator Light Illumination: Illuminates as soon as a malfunction occurs.

- **Normality Judgment**

Judge as OK and clear the NG if the continuous time while the following conditions are established is more than the predetermined time.

Judgment Value

Malfunction Criteria	Threshold Value
Output voltage	< 4.783 V

Time Needed for Diagnosis: Less than 1 second

GETTHEMANUALS.org

DX:DTC P2021 INTAKE MANIFOLD RUNNER POSITION SENSOR / SWITCH CIRCUIT LOW (BANK 2)

1. OUTLINE OF DIAGNOSIS

Detect open or short circuit of tumble generator valve position sensor.
Judge as NG if out of specification.

2. COMPONENT DESCRIPTION

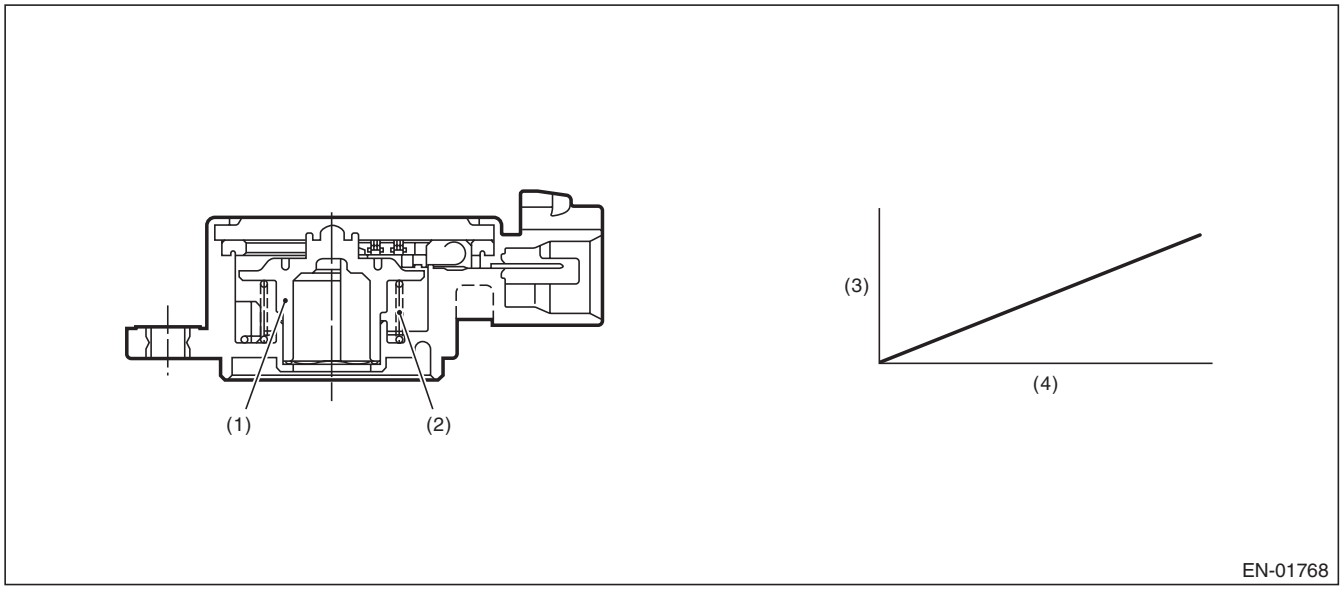

(1) Rotor
(2) Return spring
(3) Voltage (V)
(4) Tumble generator valve opening (°)

3. ENABLE CONDITION

Secondary Parameters	Enable Conditions
None	

4. GENERAL DRIVING CYCLE

Always perform the diagnosis continuously.

GETTHEMANUALS.org

5. DIAGNOSTIC METHOD

- **Abnormality Judgment**

If the duration of time while the following conditions are met is longer than the time indicated, judge as NG.

Judgment Value

Malfunction Criteria	Threshold Value
Output voltage	< 0.264 V

Time Needed for Diagnosis: 500 ms
Malfunction Indicator Light Illumination: Illuminates as soon as a malfunction occurs.

- **Normality Judgment**

Judge as OK and clear the NG if the continuous time while the following conditions are established is more than the predetermined time.

Judgment Value

Malfunction Criteria	Threshold Value
Output voltage	≥ 0.264 V

Time Needed for Diagnosis: Less than 1 second

GETTHEMANUALS.org

DY:DTC P2022 INTAKE MANIFOLD RUNNER POSITION SENSOR / SWITCH CIRCUIT HIGH (BANK 2)

1. OUTLINE OF DIAGNOSIS

Detect open or short circuit of tumble generator valve position sensor.
Judge as NG if out of specification.

2. COMPONENT DESCRIPTION

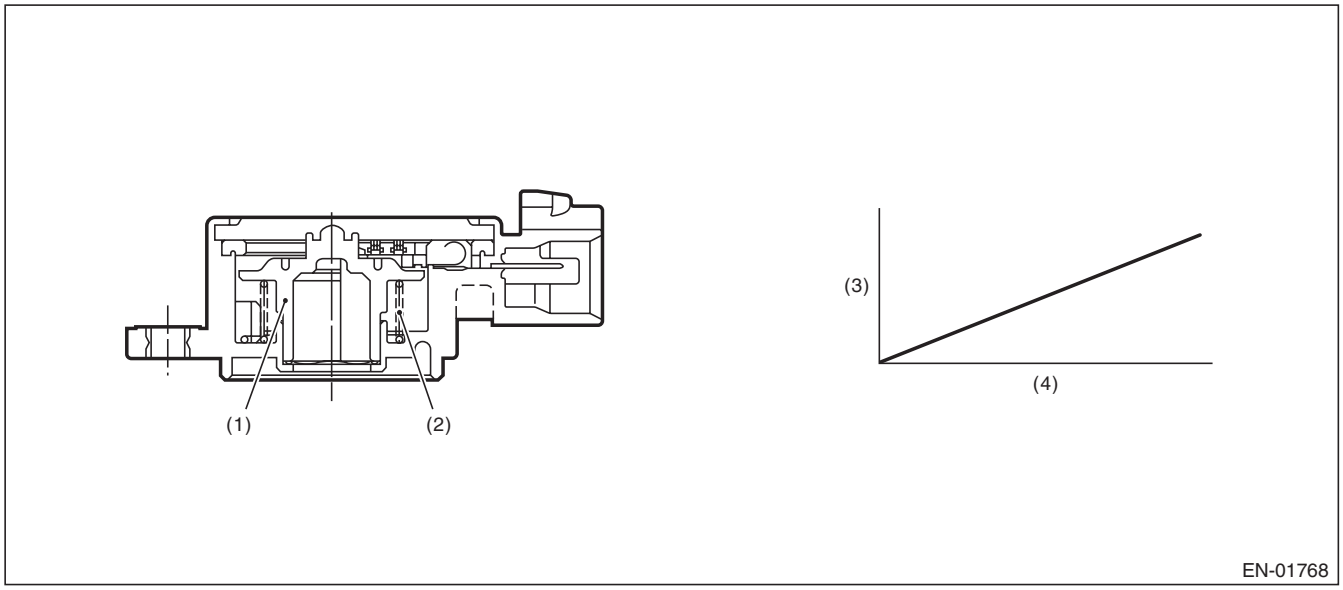

(1) Rotor
(2) Return spring
(3) Voltage (V)
(4) Tumble generator valve opening (°)

3. ENABLE CONDITION

Secondary Parameters	Enable Conditions
None	

4. GENERAL DRIVING CYCLE

Always perform the diagnosis continuously.

GETTHEMANUALS.org

5. DIAGNOSTIC METHOD

- **Abnormality Judgment**

If the duration of time while the following conditions are met is longer than the time indicated, judge as NG.

Judgment Value

Malfunction Criteria	Threshold Value
Output voltage	≥ 4.783 V

Time Needed for Diagnosis: 500 ms
Malfunction Indicator Light Illumination: Illuminates as soon as a malfunction occurs.

- **Normality Judgment**

Judge as OK and clear the NG if the continuous time while the following conditions are established is more than the predetermined time.

Judgment Value

Malfunction Criteria	Threshold Value
Output voltage	< 4.783 V

Time Needed for Diagnosis: Less than 1 second

GETTHEMANUALS.org

DZ:DTC P2088 INTAKE CAMSHAFT POSITION ACTUATOR CONTROL CIRCUIT LOW (BANK 1)

1. OUTLINE OF DIAGNOSIS

Detect open or short circuit of the oil flow control solenoid valve.
Judge as NG when the current is small even though the duty signal is large.

2. ENABLE CONDITION

Secondary Parameters	Enable Conditions
None	

3. GENERAL DRIVING CYCLE

Always perform the diagnosis continuously.

4. DIAGNOSTIC METHOD

- **Abnormality Judgment**

If the duration of time while the following conditions are met is longer than the time indicated, judge as NG.

Judgment Value

Malfunction Criteria	Threshold Value
Battery voltage	≥ 10.9 V
Oil flow control solenoid valve control duty	≥ 99.61 %
Oil control solenoid valve control present current	< 0.306 A

Time Needed for Diagnosis: 2000 ms
Malfunction Indicator Light Illumination: Illuminates as soon as a malfunction occurs.

- **Normality Judgment**

Judge as OK and clear the NG if the continuous time while the following conditions are established is more than the predetermined time.

Judgment Value

Malfunction Criteria	Threshold Value
Battery voltage	≥ 10.9 V
Target current value of the oil flow control solenoid valve	≥ 0.14 A
|Target current value of the oil flow control solenoid valve – oil flow control solenoid valve control current value|	< 0.08 A

Time Needed for Diagnosis: 2000 ms

GETTHEMANUALS.org

EA:DTC P2089 INTAKE CAMSHAFT POSITION ACTUATOR CONTROL CIRCUIT HIGH (BANK 1)

1. OUTLINE OF DIAGNOSIS

Detect open or short circuit of oil flow control solenoid valve.
Judge as NG when the current is large even though the duty signal is small.

2. ENABLE CONDITION

Secondary Parameters	Enable Conditions
None	

3. GENERAL DRIVING CYCLE

Always perform the diagnosis continuously.

4. DIAGNOSTIC METHOD

- **Abnormality Judgment**

If the duration of time while the following conditions are met is longer than the time indicated, judge as NG.

Judgment Value

Malfunction Criteria	Threshold Value
Battery voltage	≥ 10.9 V
Oil flow control solenoid valve control duty	< 0.39 %
Oil control solenoid valve control present current	≥ 0.306 A

Time Needed for Diagnosis: 2000 ms
Malfunction Indicator Light Illumination: Illuminates as soon as a malfunction occurs.

- **Normality Judgment**

Judge as OK and clear the NG if the continuous time while the following conditions are established is more than the predetermined time.

Judgment Value

Malfunction Criteria	Threshold Value
Battery voltage	≥ 10.9 V
|Target current value of the oil flow control solenoid valve – oil flow control solenoid valve control current value|	< 0.08 A

Time Needed for Diagnosis: 2000 ms

GETTHEMANUALS.org

EB:DTC P2090 EXHAUST CAMSHAFT POSITION ACTUATOR CONTROL CIRCUIT LOW (BANK 1)

1. OUTLINE OF DIAGNOSIS

Detect open or short circuit of the oil flow control solenoid valve.
Judge as NG when the current is small even though the duty signal is large.

2. ENABLE CONDITIONS

Secondary Parameters	Enable Conditions
None	

3. GENERAL DRIVING CYCLE

Always perform the diagnosis continuously.

4. DIAGNOSTIC METHOD

- **Abnormality Judgment**

If the duration of time while the following conditions are met is longer than the time indicated, judge as NG.

Judgment Value

Malfunction Criteria	Threshold Value
Battery voltage	≥ 10.9 V
Oil flow control solenoid valve control duty	≥ 99.61 %
Oil control solenoid valve control present current	< 0.306 A

Time Needed for Diagnosis: 2000 ms
Malfunction Indicator Light Illumination: Illuminates as soon as a malfunction occurs.

- **Normality Judgment**

Judge as OK and clear the NG if the continuous time while the following conditions are established is more than the predetermined time.

Judgment Value

Malfunction Criteria	Threshold Value
Battery voltage	≥ 10.9 V
Target current value of the oil flow control solenoid valve	≥ 0.14 A
|Target current value of the oil flow control solenoid valve – oil flow control solenoid valve control current value|	< 0.08 A

Time Needed for Diagnosis: 2000 ms

GETTHEMANUALS.org

EC:DTC P2091 EXHAUST CAMSHAFT POSITION ACTUATOR CONTROL CIRCUIT HIGH (BANK 1)

1. OUTLINE OF DIAGNOSIS

Detect open or short circuit of oil flow control solenoid valve.
Judge as NG when the current is large even though the duty signal is small.

2. ENABLE CONDITIONS

Secondary Parameters	Enable Conditions
None	

3. GENERAL DRIVING CYCLE

Always perform the diagnosis continuously.

4. DIAGNOSTIC METHOD

- **Abnormality Judgment**

If the duration of time while the following conditions are met is longer than the time indicated, judge as NG.

Judgment Value

Malfunction Criteria	Threshold Value
Battery voltage	≥ 10.9 V
Oil flow control solenoid valve control duty	< 0.39 %
Oil control solenoid valve control present current	≥ 0.306 A

Time Needed for Diagnosis: 2000 ms
Malfunction Indicator Light Illumination: Illuminates as soon as a malfunction occurs.

- **Normality Judgment**

Judge as OK and clear the NG if the continuous time while the following conditions are established is more than the predetermined time.

Judgment Value

Malfunction Criteria	Threshold Value
Battery voltage	≥ 10.9 V
|Target current value of the oil flow control solenoid valve – oil flow control solenoid valve control current value|	< 0.08 A

Time Needed for Diagnosis: 2000 ms

GETTHEMANUALS.org

ED:DTC P2092 INTAKE CAMSHAFT POSITION ACTUATOR CONTROL CIRCUIT LOW (BANK 2)

1. OUTLINE OF DIAGNOSIS

NOTE:
For the detection standard, refer to DTC P2088. <Ref. to GD(H4DOTC)-221, DTC P2088 INTAKE CAMSHAFT POSITION ACTUATOR CONTROL CIRCUIT LOW (BANK 1), Diagnostic Trouble Code (DTC) Detecting Criteria.>

EE:DTC P2093 INTAKE CAMSHAFT POSITION ACTUATOR CONTROL CIRCUIT HIGH (BANK 2)

1. OUTLINE OF DIAGNOSIS

NOTE:
For the detection standard, refer to DTC P2089. <Ref. to GD(H4DOTC)-222, DTC P2089 INTAKE CAMSHAFT POSITION ACTUATOR CONTROL CIRCUIT HIGH (BANK 1), Diagnostic Trouble Code (DTC) Detecting Criteria.>

EF:DTC P2094 EXHAUST CAMSHAFT POSITION ACTUATOR CONTROL CIRCUIT LOW (BANK 2)

1. OUTLINE OF DIAGNOSIS

NOTE:
For the detection standard, refer to DTC P2090. <Ref. to GD(H4DOTC)-223, DTC P2090 EXHAUST CAMSHAFT POSITION ACTUATOR CONTROL CIRCUIT LOW (BANK 1), Diagnostic Trouble Code (DTC) Detecting Criteria.>

EG:DTC P2095 EXHAUST CAMSHAFT POSITION ACTUATOR CONTROL CIRCUIT HIGH (BANK 2)

1. OUTLINE OF DIAGNOSIS

NOTE:
For the detection standard, refer to DTC P2091. <Ref. to GD(H4DOTC)-224, DTC P2091 EXHAUST CAMSHAFT POSITION ACTUATOR CONTROL CIRCUIT HIGH (BANK 1), Diagnostic Trouble Code (DTC) Detecting Criteria.>

GETTHEMANUALS.org

EH:DTC P2096 POST CATALYST FUEL TRIM SYSTEM TOO LEAN (BANK 1)

1. OUTLINE OF DIAGNOSIS

Detect the malfunction of fuel system from the size of the sub feedback learning value.
Control the sub feedback learning and judge as NG when the learning value is in the lean zone.

2. COMPONENT DESCRIPTION

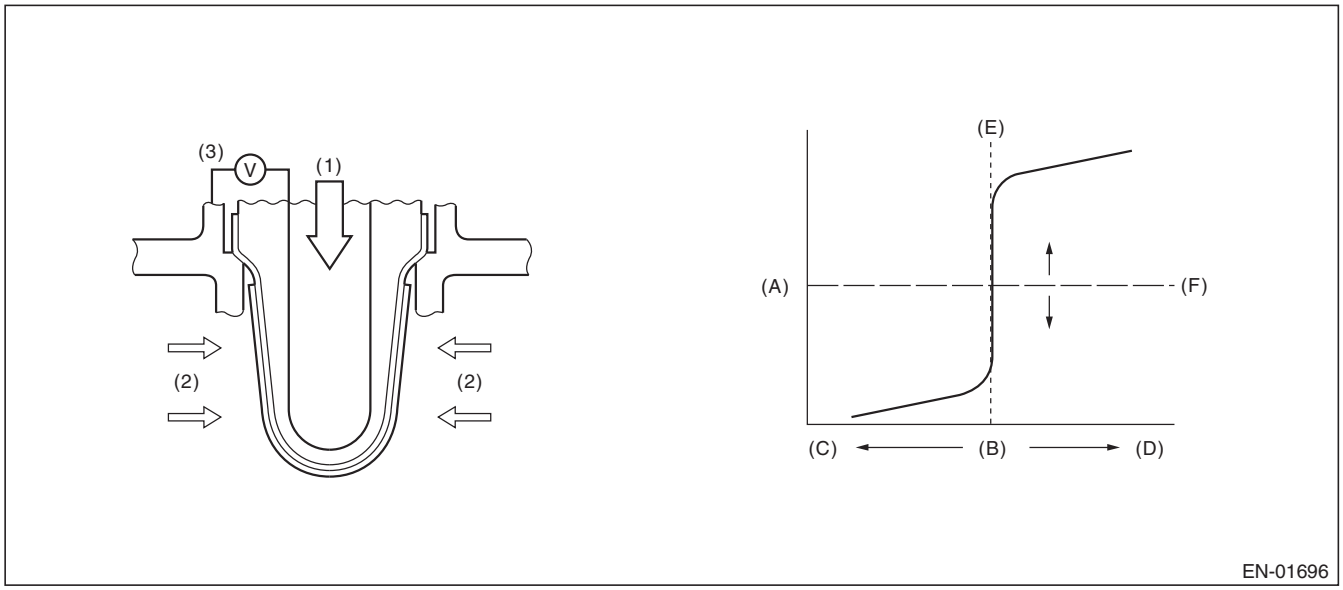

(A)	Electromotive force	(B)	Air fuel ratio	(C)	Rich
(D)	Lean	(E)	Theoretical air fuel ratio	(F)	Comparative voltage
(1)	Atmosphere	(2)	Exhaust gas	(3)	Electromotive force

3. ENABLE CONDITION

Secondary Parameters	Enable Conditions
Conditions for carrying out the sub feedback learning	Complete
Continuous time when all conditions are established.	≥ 1 s

4. GENERAL DRIVING CYCLE

Perform the diagnosis continuously when the vehicle is idling or running at a constant speed of 80 km/h (50 MPH) or more.

GETTHEMANUALS.org

5. DIAGNOSTIC METHOD

- **Abnormality Judgment**

If the duration of time while the following conditions are met is longer than the time indicated, judge as NG.

Judgment Value

Malfunction Criteria	Threshold Value
Sub feedback learning value	< –0.05

Time Needed for Diagnosis: 1 s × 1 time(s)
Malfunction Indicator Light Illumination: Illuminates when malfunction occurs in 2 continuous driving cycles.

- **Normality Judgment**

Judge as OK and clear the NG if the continuous time while the following conditions are established is more than the predetermined time.

Judgment Value

Malfunction Criteria	Threshold Value
Sub feedback learning value	≥ –0.05 + 0

Time Needed for Diagnosis: 1 s

GETTHEMANUALS.org

EI: DTC P2097 POST CATALYST FUEL TRIM SYSTEM TOO RICH (BANK 1)

1. OUTLINE OF DIAGNOSIS

Detect the malfunction of fuel system from the size of the sub feedback learning value.
Sub feedback learning is being performed. When the learning value goes to the rich side, judge as NG.

2. COMPONENT DESCRIPTION

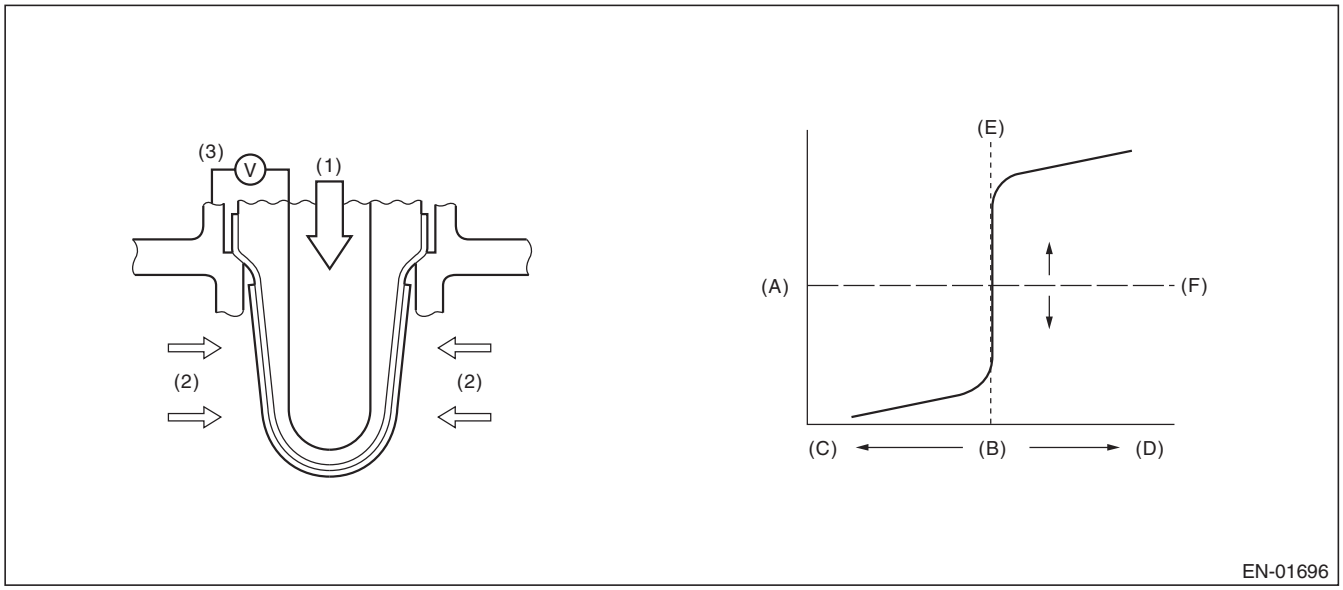

(A)	Electromotive force	(B)	Air fuel ratio	(C)	Rich
(D)	Lean	(E)	Theoretical air fuel ratio	(F)	Comparative voltage
(1)	Atmosphere	(2)	Exhaust gas	(3)	Electromotive force

3. ENABLE CONDITION

Secondary Parameters	Enable Conditions
Conditions for carrying out the sub feedback learning	Complete
Continuous time when all conditions are established.	≥ 1 s

4. GENERAL DRIVING CYCLE

Perform the diagnosis continuously when the vehicle is idling or running at a constant speed of 80 km/h (50 MPH) or more.

GETTHEMANUALS.org

5. DIAGNOSTIC METHOD

- **Abnormality Judgment**

If the duration of time while the following conditions are met is longer than the time indicated, judge as NG.

Judgment Value

Malfunction Criteria	Threshold Value
Sub feedback learning value	≥ 0.03

Time Needed for Diagnosis: 1 s × 1 time(s)
Malfunction Indicator Light Illumination: Illuminates when malfunction occurs in 2 continuous driving cycles.

- **Normality Judgment**

Judge as OK and clear the NG if the continuous time while the following conditions are established is more than the predetermined time.

Judgment Value

Malfunction Criteria	Threshold Value
Sub feedback learning value	< 0.03 + 0

Time Needed for Diagnosis: 1 s

GETTHEMANUALS.org

EJ: DTC P2101 THROTTLE ACTUATOR CONTROL MOTOR CIRCUIT RANGE/ PERFORMANCE

1. OUTLINE OF DIAGNOSIS

Judge as NG when the motor current becomes large or drive circuit is heated.

2. COMPONENT DESCRIPTION

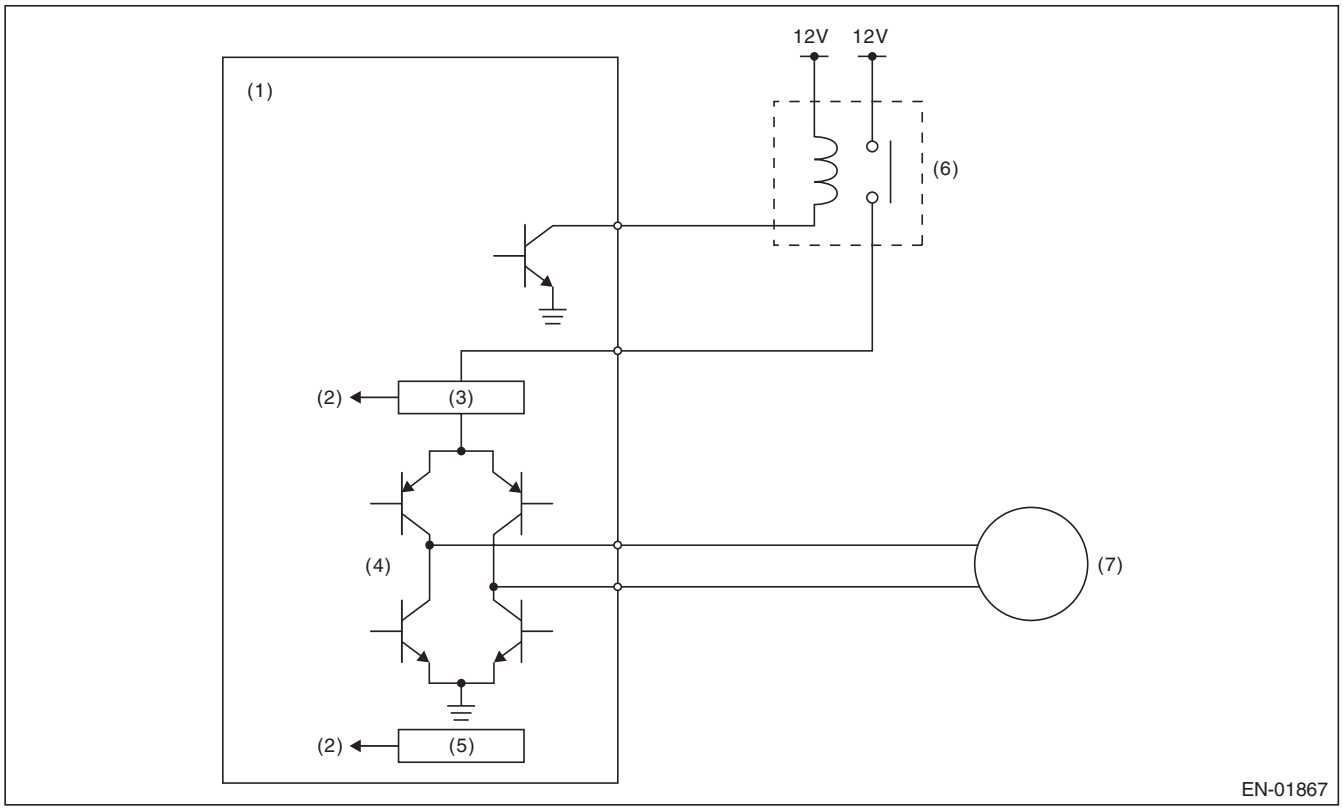

(1)	Engine control module (ECM)	(4)	Drive circuit	(6)	Electronic throttle control relay
(2)	Detecting circuit	(5)	Temperature detection circuit	(7)	Motor
(3)	Overcurrent detection circuit				

3. ENABLE CONDITION

Secondary Parameters	Enable Conditions
Under control of electronic throttle control	ON
CPU communication line sub → main normal judgment	Normal

4. GENERAL DRIVING CYCLE

Always perform the diagnosis continuously.

GETTHEMANUALS.org

5. DIAGNOSTIC METHOD

- **Abnormality Judgment**

If the duration of time while the following conditions are met is longer than the time indicated, judge as NG.

Judgment Value

Malfunction Criteria	Threshold Value
Motor current or Drive circuit inner temperature	> 8 A > 175°C (347°F)

Time Needed for Diagnosis: 512 ms
Malfunction Indicator Light Illumination: Illuminates as soon as a malfunction occurs.

- **Normality Judgment**

Judge as OK and clear the NG if the continuous time while the following conditions are established is more than the predetermined time.

Judgment Value

Malfunction Criteria	Threshold Value
Motor current	≤ 8 A
Drive circuit inner temperature	≤ 175°C (347°F)

Time Needed for Diagnosis: 2000 ms

GETTHEMANUALS.org

EK:DTC P2102 THROTTLE ACTUATOR CONTROL MOTOR CIRCUIT LOW

1. OUTLINE OF DIAGNOSIS

Judge as NG when the electronic throttle control power is not supplied even when ECM sets the electronic throttle control relay to ON.

2. COMPONENT DESCRIPTION

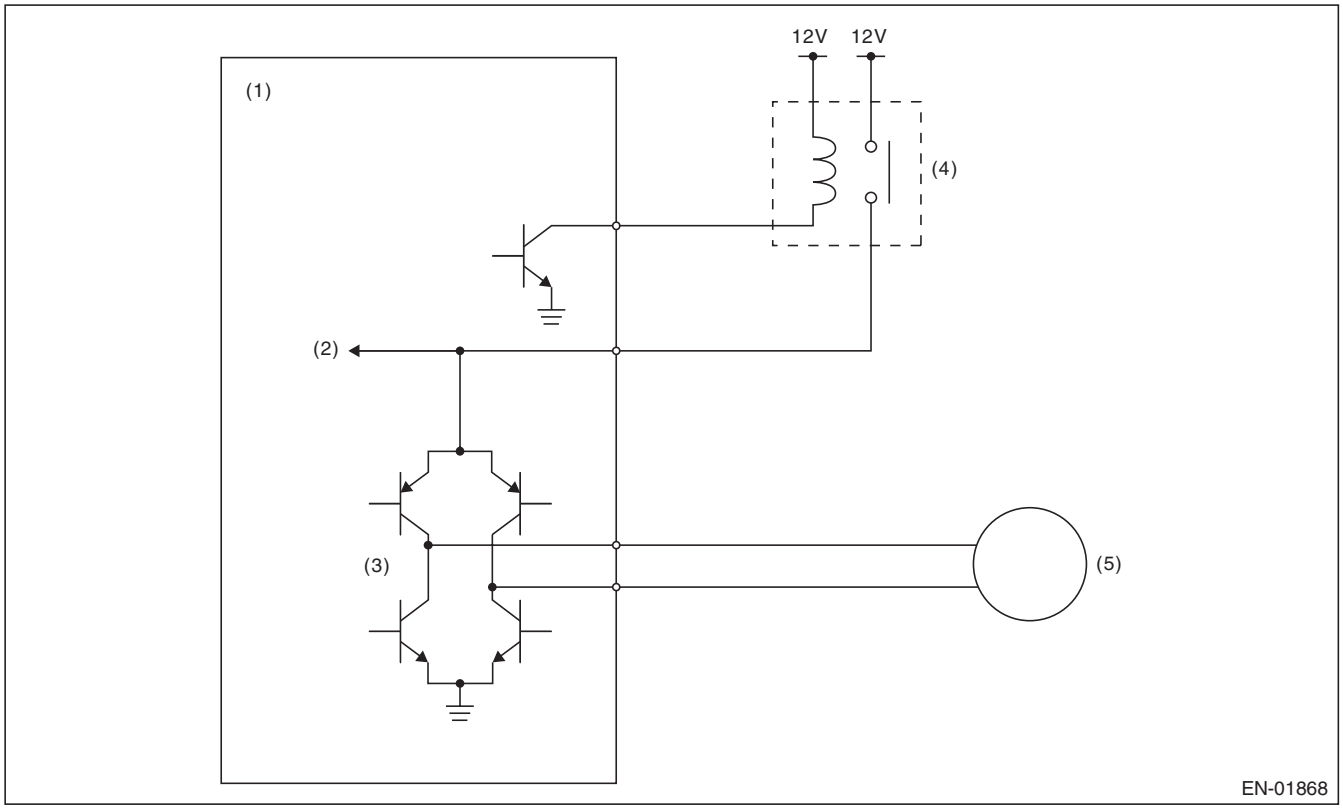

(1) Engine control module (ECM)
(2) Voltage detection circuit
(3) Drive circuit
(4) Electronic throttle control relay
(5) Motor

3. ENABLE CONDITION

Secondary Parameters	Enable Conditions
Battery voltage	≥ 11 V
Electronic throttle control relay output	ON

4. GENERAL DRIVING CYCLE

Always perform the diagnosis continuously.

GETTHEMANUALS.org

5. DIAGNOSTIC METHOD

- **Abnormality Judgment**

If the duration of time while the following conditions are met is longer than the time indicated, judge as NG.

Judgment Value

Malfunction Criteria	Threshold Value
Motor power voltage	≤ 5 V

Time Needed for Diagnosis: 352 ms
Malfunction Indicator Light Illumination: Illuminates as soon as a malfunction occurs.

- **Normality Judgment**

Judge as OK and clear the NG if the continuous time while the following conditions are established is more than the predetermined time.

Judgment Value

Malfunction Criteria	Threshold Value
Motor power voltage	> 5 V

Time Needed for Diagnosis: 2000 ms

GETTHEMANUALS.org

EL:DTC P2103 THROTTLE ACTUATOR CONTROL MOTOR CIRCUIT HIGH

1. OUTLINE OF DIAGNOSIS

Judge as NG when the electronic throttle control power is supplied even when ECM sets the electronic throttle control relay to OFF.

2. COMPONENT DESCRIPTION

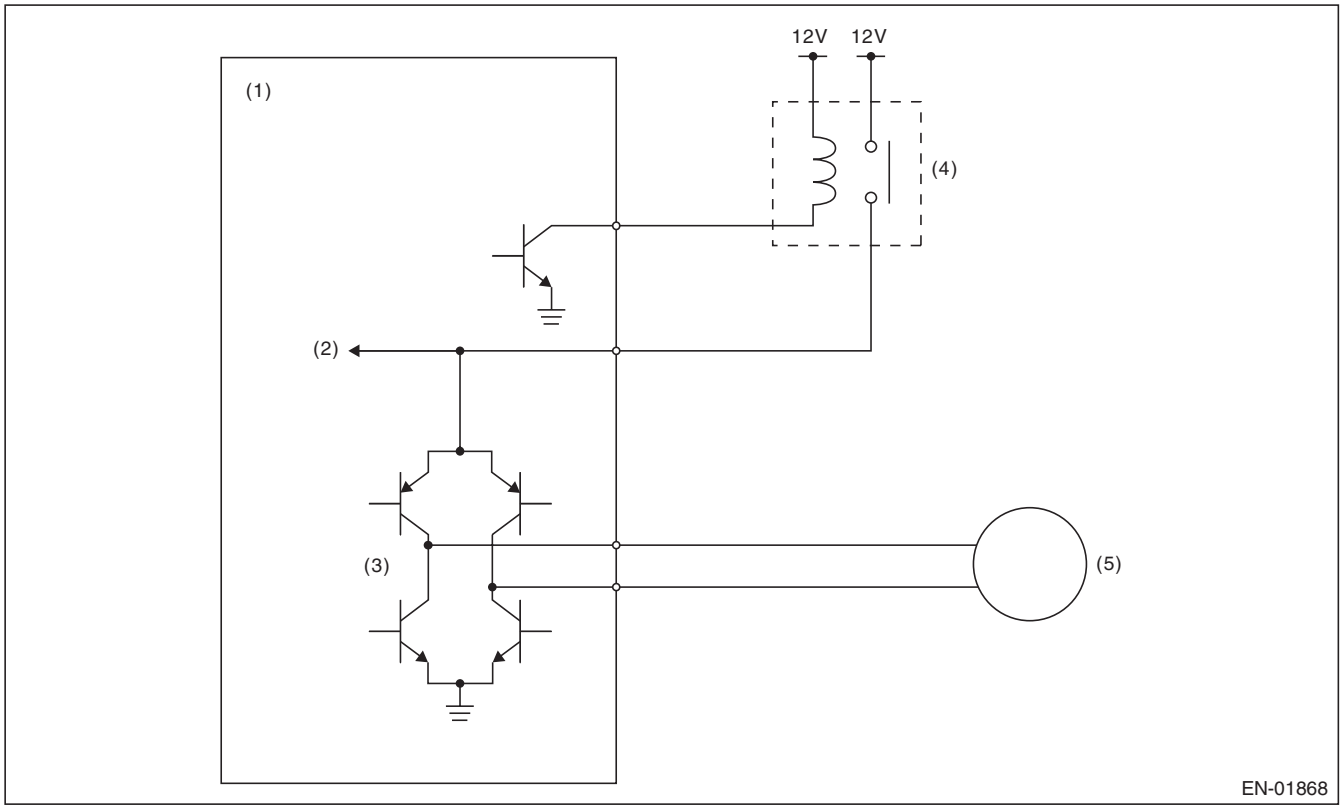

(1) Engine control module (ECM)
(2) Voltage detection circuit
(3) Drive circuit
(4) Electronic throttle control relay
(5) Motor

3. ENABLE CONDITION

Secondary Parameters	Enable Conditions
Battery voltage	≥ 6 V
Electronic throttle control relay output	OFF

4. GENERAL DRIVING CYCLE

- When ignition switch ON → OFF
- Ignition switch OFF → ON (Only after clearing memory)

GETTHEMANUALS.org

5. DIAGNOSTIC METHOD

- **Abnormality Judgment**

If the duration of time while the following conditions are met is longer than the time indicated, judge as NG.

Judgment Value

Malfunction Criteria	Threshold Value
Motor power voltage	≥ 5 V

Time Needed for Diagnosis: 600 ms
Malfunction Indicator Light Illumination: Illuminates as soon as a malfunction occurs.

- **Normality Judgment**

Judge as OK and clear the NG if the continuous time while the following conditions are established is more than the predetermined time.

Judgment Value

Malfunction Criteria	Threshold Value
Motor power voltage	< 5 V

Time Needed for Diagnosis: 400 ms

GETTHEMANUALS.org

EM:DTC P2109 THROTTLE/PEDAL POSITION SENSOR “A” MINIMUM STOP PERFORMANCE

1. OUTLINE OF DIAGNOSIS

Judge as NG when full close point learning cannot conducted or abnormal value is detected.

2. COMPONENT DESCRIPTION

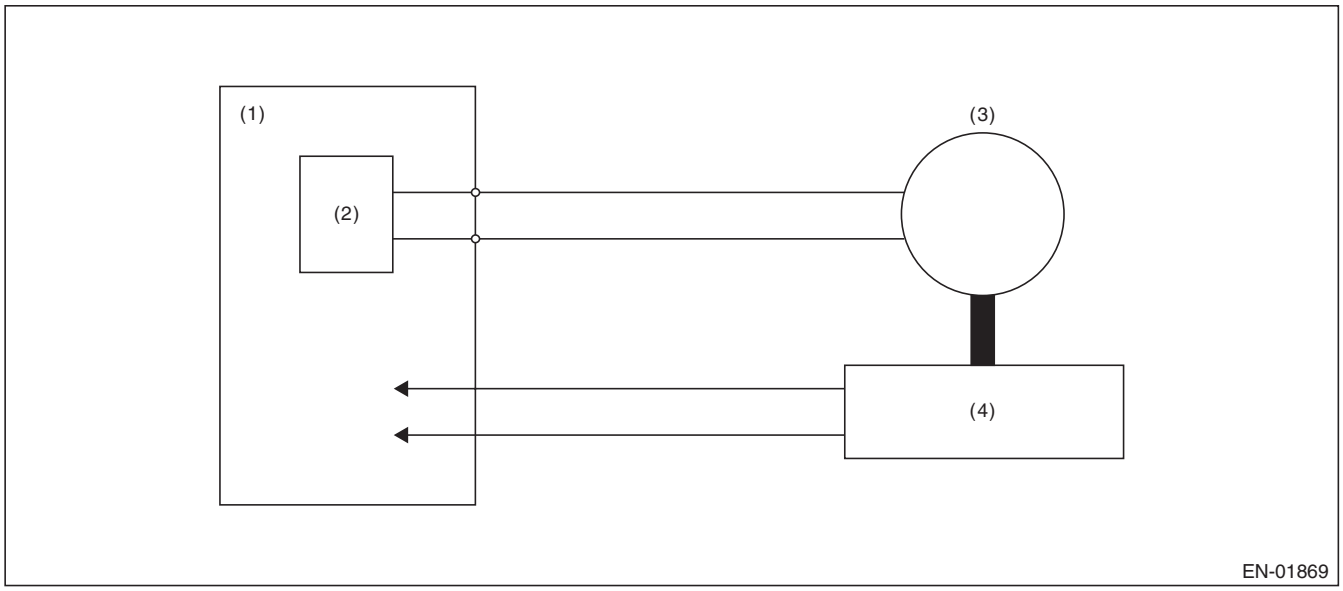

(1) Engine control module (ECM)
(2) Drive circuit
(3) Motor
(4) Throttle position sensor

3. ENABLE CONDITION

Secondary Parameters	Enable Conditions
Ignition switch	ON → OFF
Ignition switch (only after clear memory)	OFF → ON

4. GENERAL DRIVING CYCLE

Perform the diagnosis at full closed point learning.

GETTHEMANUALS.org

5. DIAGNOSTIC METHOD

- **Abnormality Judgment**

If the duration of time while the following conditions are met is longer than the time indicated, judge as NG.

Judgment Value

Malfunction Criteria	Threshold Value
Throttle sensor opening angle at full close point learning	< 9.884 ° or > 20.116 °
or	
Throttle opening angle when the ignition switch is ON – Throttle minimum stop position	< 0.887 °

Time Needed for Diagnosis: 8 ms — 80 ms
Malfunction Indicator Light Illumination: Illuminates as soon as a malfunction occurs.

- **Normality Judgment**

Judge as OK and clear the NG if the continuous time while the following conditions are established is more than the predetermined time.

Judgment Value

Malfunction Criteria	Threshold Value
Throttle sensor opening angle at full close point learning	≥ 9.884 ° and ≤ 20.116 °
Throttle opening angle when the ignition switch is ON – Throttle minimum stop position	≥ 0.887 °

Time Needed for Diagnosis: 8 ms

GETTHEMANUALS.org

EN:DTC P2122 THROTTLE/PEDAL POSITION SENSOR/SWITCH “D” CIRCUIT LOW INPUT

1. OUTLINE OF DIAGNOSIS

Detect the open or short circuit of accelerator pedal position sensor 1.
Judge as NG if out of specification.

2. COMPONENT DESCRIPTION

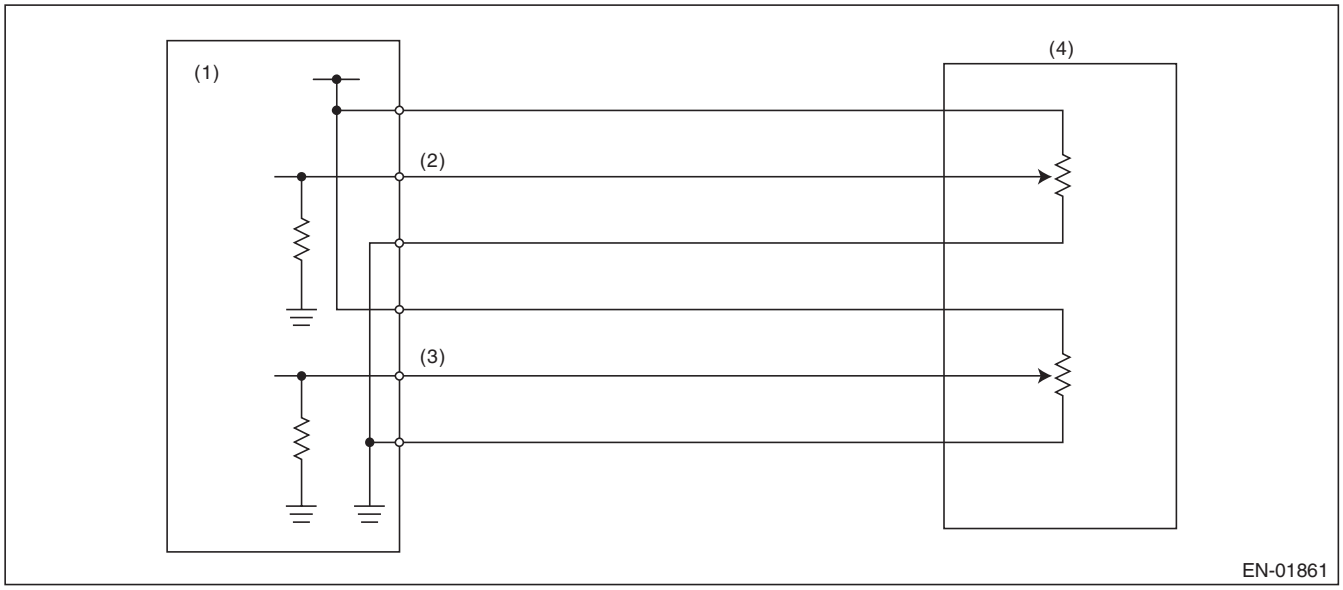

(1) Engine control module (ECM)
(2) Accelerator pedal position sensor 1 signal
(3) Accelerator pedal position sensor 2 signal
(4) Accelerator pedal position sensor

3. ENABLE CONDITION

Secondary Parameters	Enable Conditions
Ignition switch	ON
Battery voltage	≥ 6 V

4. GENERAL DRIVING CYCLE

Always perform the diagnosis continuously.

GETTHEMANUALS.org

5. DIAGNOSTIC METHOD

- **Abnormality Judgment**

If the duration of time while the following conditions are met is longer than the time indicated, judge as NG.

Judgment Value

Malfunction Criteria	Threshold Value
Sensor 1 input voltage	< 0.295 V

Time Needed for Diagnosis: 100 ms
Malfunction Indicator Light Illumination: Illuminates as soon as a malfunction occurs.

- **Normality Judgment**

Judge as OK and clear the NG if the continuous time while the following conditions are established is more than the predetermined time.

Judgment Value

Malfunction Criteria	Threshold Value
Sensor 1 input voltage	≥ 0.295 V

Time Needed for Diagnosis: 100 ms

GETTHEMANUALS.org

EO:DTC P2123 THROTTLE/PEDAL POSITION SENSOR/SWITCH “D” CIRCUIT HIGH INPUT

1. OUTLINE OF DIAGNOSIS

Detect the open or short circuit of accelerator pedal position sensor 1.
Judge as NG if out of specification.

2. COMPONENT DESCRIPTION

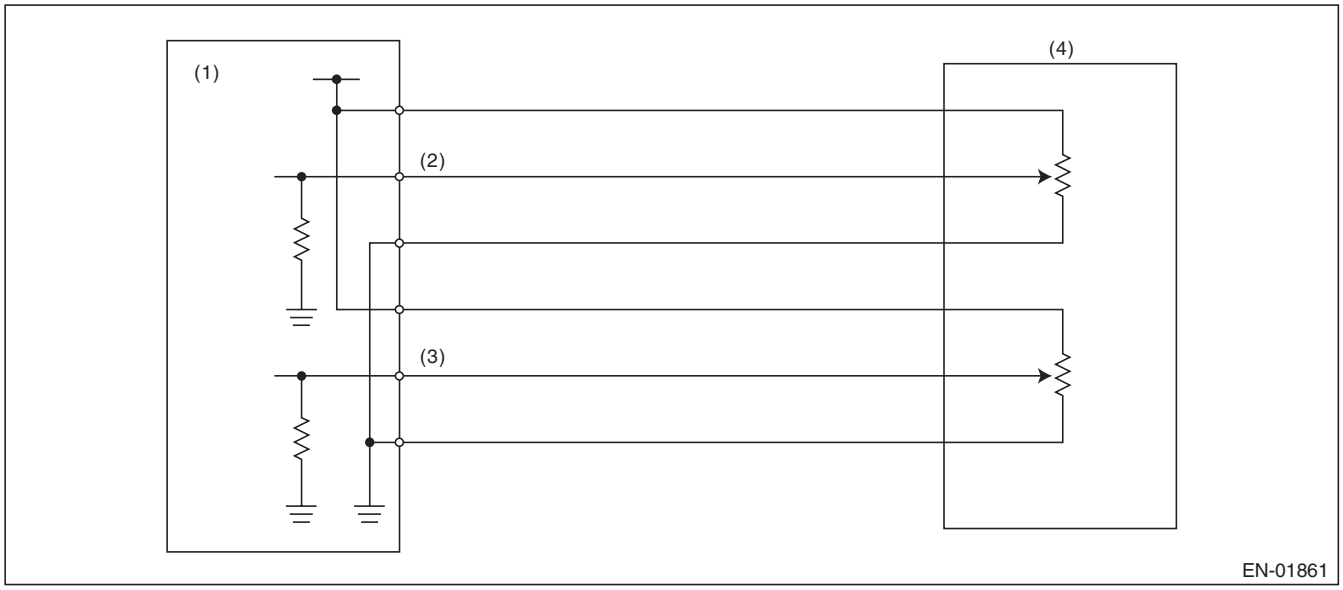

(1) Engine control module (ECM)
(2) Accelerator pedal position sensor 1 signal
(3) Accelerator pedal position sensor 2 signal
(4) Accelerator pedal position sensor

3. ENABLE CONDITION

Secondary Parameters	Enable Conditions
Ignition switch	ON
Battery voltage	≥ 6 V

4. GENERAL DRIVING CYCLE

Always perform the diagnosis continuously.

GETTHEMANUALS.org

5. DIAGNOSTIC METHOD

- **Abnormality Judgment**

If the duration of time while the following conditions are met is longer than the time indicated, judge as NG.

Judgment Value

Malfunction Criteria	Threshold Value
Sensor 1 input voltage	≥ 4.783 V

Time Needed for Diagnosis: 32 ms
Malfunction Indicator Light Illumination: Illuminates as soon as a malfunction occurs.

- **Normality Judgment**

Judge as OK and clear the NG if the continuous time while the following conditions are established is more than the predetermined time.

Judgment Value

Malfunction Criteria	Threshold Value
Sensor 1 input voltage	< 4.783 V

Time Needed for Diagnosis: 32 ms

GETTHEMANUALS.org

EP:DTC P2127 THROTTLE/PEDAL POSITION SENSOR/SWITCH “E” CIRCUIT LOW INPUT

1. OUTLINE OF DIAGNOSIS

Detect the open or short circuit of accelerator pedal position sensor 2.
Judge as NG if out of specification.

2. COMPONENT DESCRIPTION

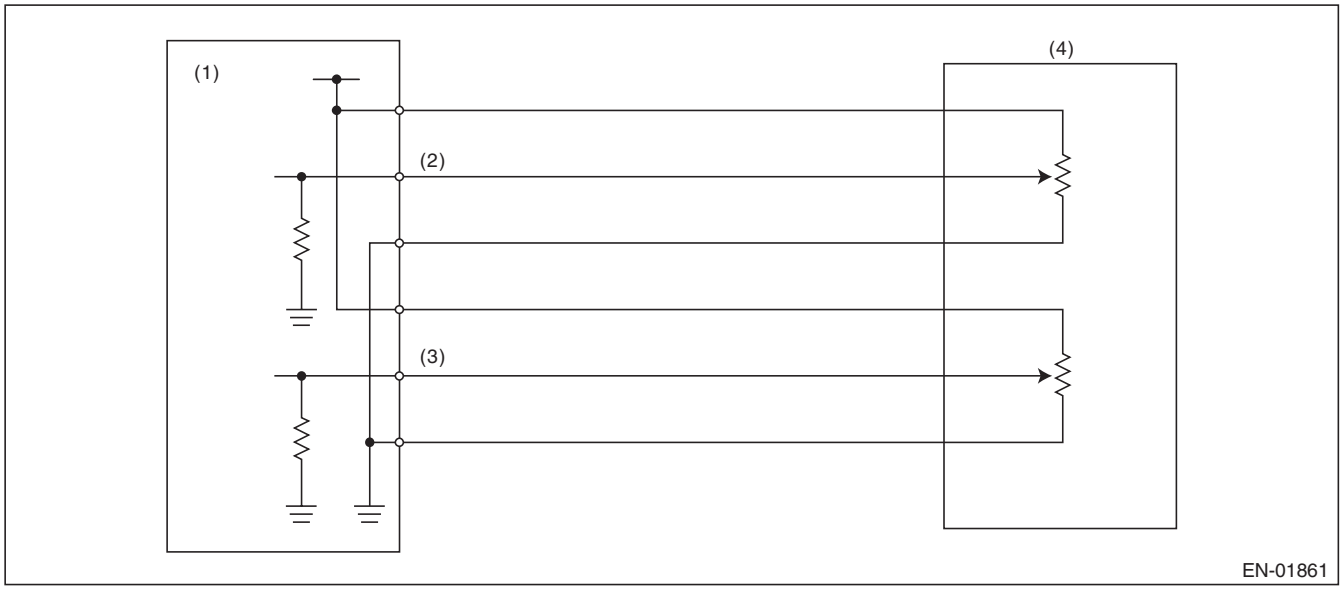

(1) Engine control module (ECM)
(2) Accelerator pedal position sensor 1 signal
(3) Accelerator pedal position sensor 2 signal
(4) Accelerator pedal position sensor

3. ENABLE CONDITION

Secondary Parameters	Enable Conditions
Ignition switch	ON
Battery voltage	≥ 6 V

4. GENERAL DRIVING CYCLE

Always perform the diagnosis continuously.

GETTHEMANUALS.org

5. DIAGNOSTIC METHOD

- **Abnormality Judgment**

If the duration of time while the following conditions are met is longer than the time indicated, judge as NG.

Judgment Value

Malfunction Criteria	Threshold Value
Sensor 2 input voltage	< 0.295 V

Time Needed for Diagnosis: 100 ms
Malfunction Indicator Light Illumination: Illuminates as soon as a malfunction occurs.

- **Normality Judgment**

Judge as OK and clear the NG if the continuous time while the following conditions are established is more than the predetermined time.

Judgment Value

Malfunction Criteria	Threshold Value
Sensor 2 input voltage	≥ 0.295 V

Time Needed for Diagnosis: 100 ms

GETTHEMANUALS.org

EQ:DTC P2128 THROTTLE/PEDAL POSITION SENSOR/SWITCH “E” CIRCUIT HIGH INPUT

1. OUTLINE OF DIAGNOSIS

Detect the open or short circuit of accelerator pedal position sensor 2.
Judge as NG if out of specification.

2. COMPONENT DESCRIPTION

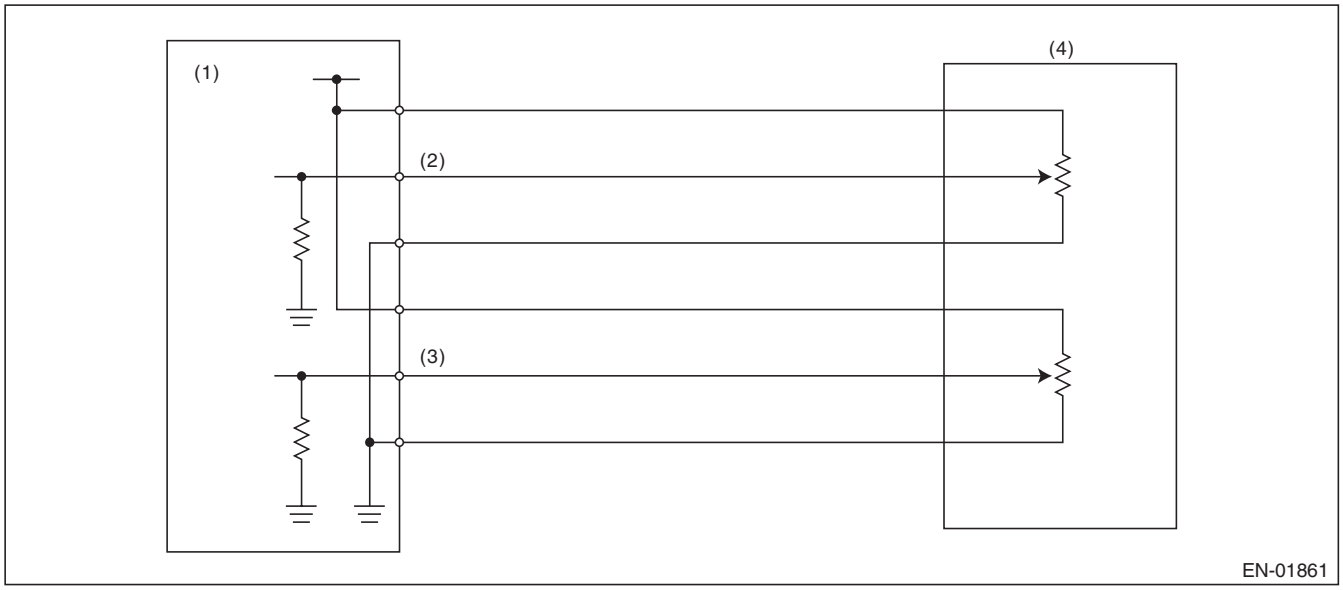

(1) Engine control module (ECM)
(2) Accelerator pedal position sensor 1 signal
(3) Accelerator pedal position sensor 2 signal
(4) Accelerator pedal position sensor

3. ENABLE CONDITION

Secondary Parameters	Enable Conditions
Ignition switch	ON
Battery voltage	≥ 6 V

4. GENERAL DRIVING CYCLE

Always perform the diagnosis continuously.

GETTHEMANUALS.org

5. DIAGNOSTIC METHOD

- **Abnormality Judgment**

If the duration of time while the following conditions are met is longer than the time indicated, judge as NG.

Judgment Value

Malfunction Criteria	Threshold Value
Sensor 2 input voltage	≥ 4.783 V

Time Needed for Diagnosis: 100 ms
Malfunction Indicator Light Illumination: Illuminates as soon as a malfunction occurs.

- **Normality Judgment**

Judge as OK and clear the NG if the continuous time while the following conditions are established is more than the predetermined time.

Judgment Value

Malfunction Criteria	Threshold Value
Sensor 2 input voltage	< 4.783 V

Time Needed for Diagnosis: 100 ms

GETTHEMANUALS.org

ER:DTC P2135 THROTTLE/PEDAL POSITION SENSOR/SWITCH “A”/“B” VOLTAGE CORRELATION

1. OUTLINE OF DIAGNOSIS

Judge as NG when the signal level of throttle position sensor 1 is different from the throttle position sensor 2.

2. COMPONENT DESCRIPTION

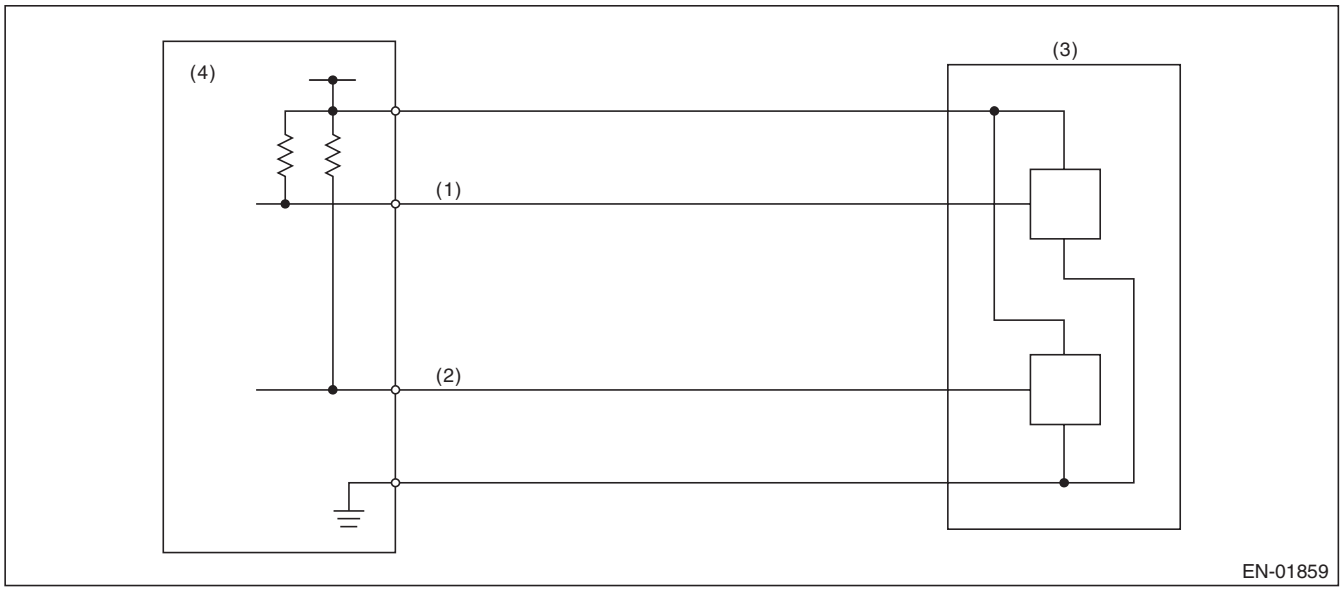

(1) Throttle position sensor 1 signal
(2) Throttle position sensor 2 signal
(3) Throttle position sensor
(4) Engine control module (ECM)

3. ENABLE CONDITION

Secondary Parameters	Enable Conditions
Ignition switch	ON
Battery voltage	≥ 6 V

4. GENERAL DRIVING CYCLE

Always perform the diagnosis continuously.

GETTHEMANUALS.org

5. DIAGNOSTIC METHOD

• Abnormality Judgment

If the duration of time while the following conditions are met is longer than the time indicated, judge as NG.

Judgment Value

Malfunction Criteria	Threshold Value
Signal difference between two sensors	Within the NG range of **judgment value detail**

Details of Judgment Value

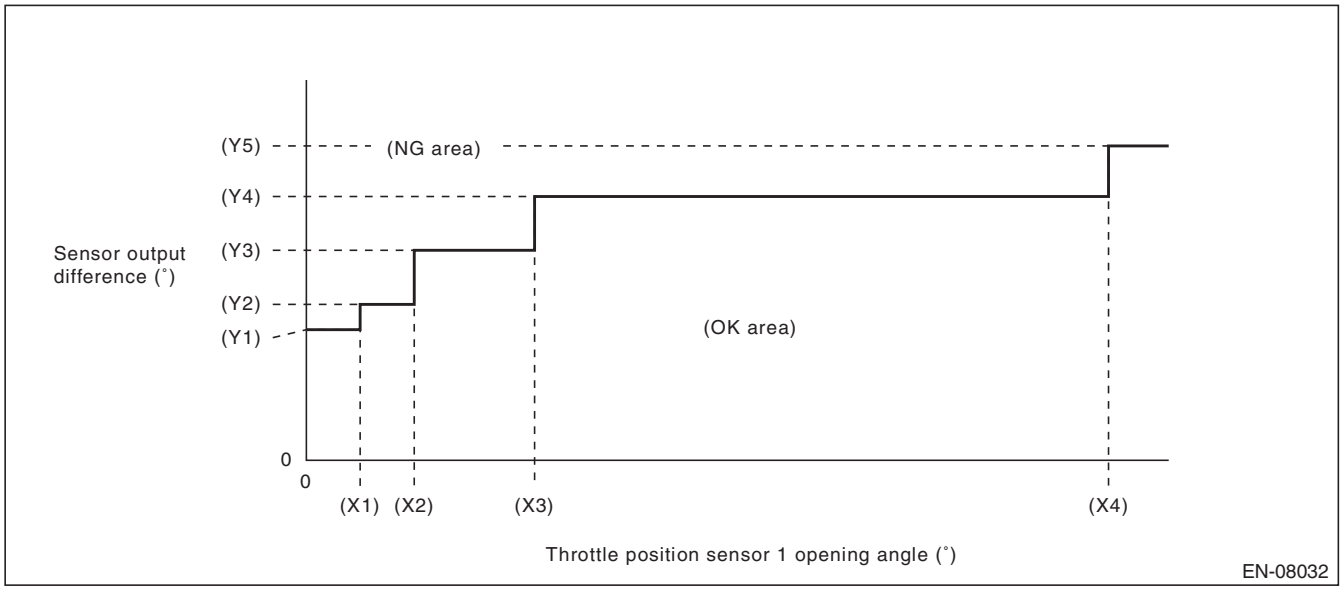

(X1)	2.125 °	(X2)	4.25 °	(X3)	9 °
(X4)	31.625 °				
(Y1)	5.15 °	(Y2)	6.15 °	(Y3)	8.28 °
(Y4)	10.4 °	(Y5)	12.4 °		

Time Needed for Diagnosis: 212 ms
Malfunction Indicator Light Illumination: Illuminates as soon as a malfunction occurs.

• Normality Judgment

Judge as OK and clear the NG if the continuous time while the following conditions are established is more than the predetermined time.

Judgment Value

Malfunction Criteria	Threshold Value
Signal difference between two sensors	Within the OK range of **judgment value detail**

Time Needed for Diagnosis: 24 ms

GETTHEMANUALS.org

ES:DTC P2138 THROTTLE/PEDAL POSITION SENSOR/SWITCH “D”/“E” VOLTAGE CORRELATION

1. OUTLINE OF DIAGNOSIS

Judge as NG when the signal level of throttle position sensor 1 is different from the throttle position sensor 2.

2. COMPONENT DESCRIPTION

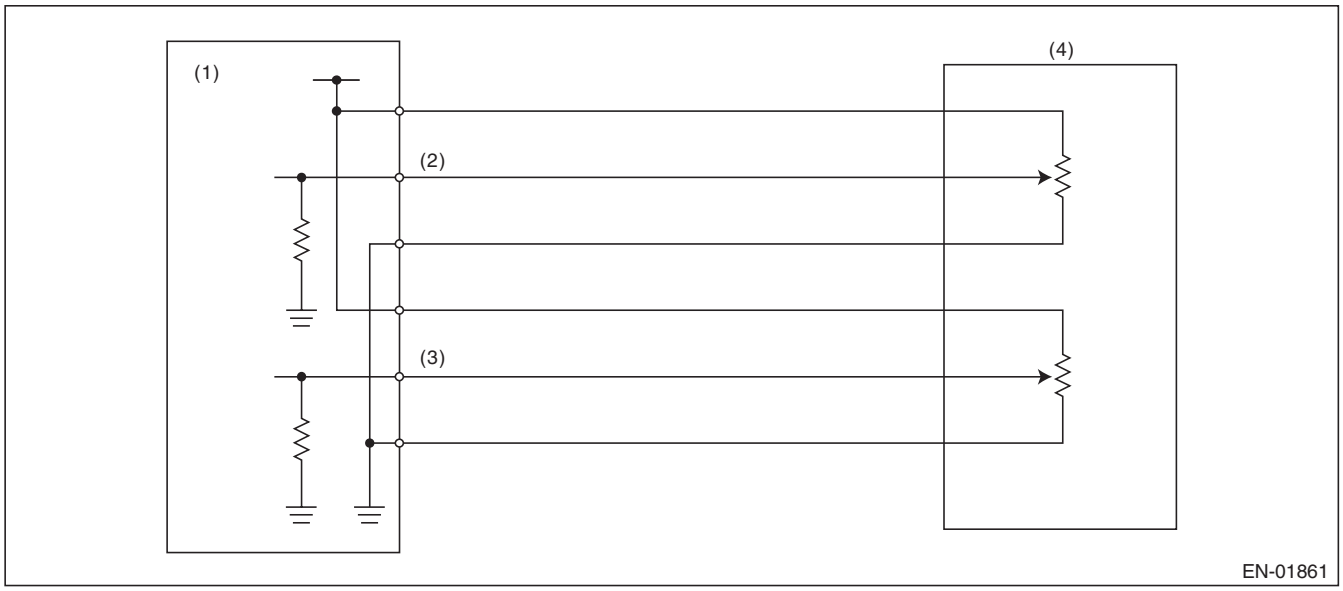

(1) Engine control module (ECM)
(2) Accelerator pedal position sensor 1 signal
(3) Accelerator pedal position sensor 2 signal
(4) Accelerator pedal position sensor

3. ENABLE CONDITION

Secondary Parameters	Enable Conditions
Ignition switch	ON
Battery voltage	≥ 6 V

4. GENERAL DRIVING CYCLE

Always perform the diagnosis continuously.

GETTHEMANUALS.org

5. DIAGNOSTIC METHOD

• Abnormality Judgment

If the duration of time while the following conditions are met is longer than the time indicated, judge as NG.

Judgment Value

Malfunction Criteria	Threshold Value
Signal difference between two sensors	Within the NG range of **judgment value detail**

Details of Judgment Value

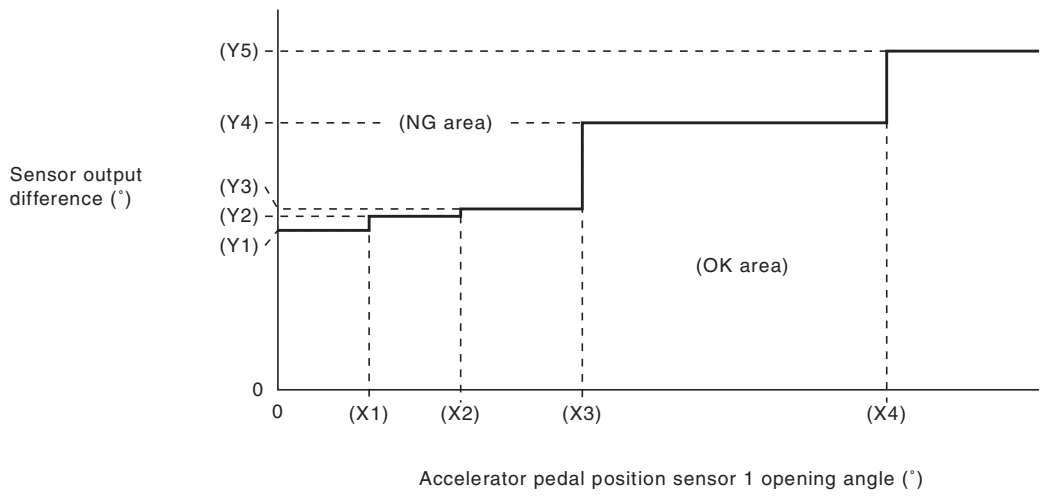

(X1)	0.6 °	(X2)	1.2 °	(X3)	2 °
(X4)	4 °				
(Y1)	1.465 °	(Y2)	1.597 °	(Y3)	1.663 °
(Y4)	2.455 °	(Y5)	3.116 °		

Time Needed for Diagnosis: 116 ms
Malfunction Indicator Light Illumination: Illuminates as soon as a malfunction occurs.

• Normality Judgment

Judge as OK and clear the NG if the continuous time while the following conditions are established is more than the predetermined time.

Judgment Value

Malfunction Criteria	Threshold Value
Signal difference between two sensors	Within the OK range of **judgment value detail**

Time Needed for Diagnosis: 116 ms

GETTHEMANUALS.org

ET:DTC P219A BANK 1 AIR-FUEL RATIO IMBALANCE

1. OUTLINE OF DIAGNOSIS

Detect malfunction of air fuel ratio deviation between cylinders from main feedback learning value, sub feedback learning value and engine speed variation.

2. ENABLE CONDITIONS

Secondary Parameters	Enable Conditions
Battery voltage	> 10.9 V
Atmospheric pressure	> 75 kPa (563 mmHg, 22.2 inHg)
A/F main learning system	In operation
Engine speed	> 550 rpm
Engine coolant temperature	> 72 °C (161.6 °F)
Intake air temperature	< 70 °C (158 °F)
Engine load	> Value of Map 1
Engine load change	< 0.02 g/rev (0 oz/rev)
Evaporative system leak check	Not in operation
Cumulative time of canister purge after engine start	≥ 20 s
Learning value of EVAP conc.	< 0.2
Vehicle dynamic control or AT torque control	Not in operation
Intake manifold pressure change at 180°CA	< Value of Map 2
Throttle position change during 16 milliseconds	< 14 °
Fuel shut-off function	Not in operation

Map 1

Engine speed (rpm)	Idling	700	1200	1600	2000	2400	2800	3200	3600	4000
Measured value (g (oz)/rev)	na	0.230 (0.01)	0.217 (0.01)	0.213 (0.01)	0.210 (0.01)	0.210 (0.01)	0.220 (0.01)	0.223 (0.01)	0.240 (0.01)	0.252 (0.01)

Map 2

rpm	700	6700
kPa (mmHg, inHg)	13.3 (100, 3.9)	13.3 (100, 3.9)

3. GENERAL DRIVING CYCLE

Always perform the diagnosis continuously.

GETTHEMANUALS.org

4. DIAGNOSTIC METHOD

• Abnormality Judgment

Judge as NG when the following conditions are established.

Judgment Value

Malfunction Criteria	Threshold Value
Rich	
Main feedback learning value	< –0.125
Sub feedback learning value	< –0.0327
When any one of the followings is established.	
• any one of the rich side misfire counters for each cylinder when in idling	> 13 time(s)
• total of the rich side misfire counters for each cylinder when in idling	> 13 time(s)
• any one of the rich side misfire counters for each cylinder when not in idling	> 30 time(s)
• total of the rich side misfire counters for each cylinder when not in idling	> 30 time(s)
Lean	
Main feedback learning value	> –0.035
Sub feedback learning value	< –0.0143
When any one of the followings is established.	
• any one of the lean side misfire counters for each cylinder when in idling	> 25 time(s)
• total of the lean side misfire counters for each cylinder when in idling	> 65535 time(s)
• any one of the lean side misfire counters for each cylinder when not in idling	> 30 time(s)
• total of the lean side misfire counters for each cylinder when not in idling	> 65535 time(s)

Time Needed for Diagnosis: 1000 engine revs.
Malfunction Indicator Light Illumination: Illuminates when malfunction occurs in 2 continuous driving cycles.

GETTHEMANUALS.org

- **Normality Judgment**

Judge as OK and clear the NG if the following conditions are established.

Judgment Value

Malfunction Criteria	Threshold Value
Rich	
Main feedback learning value	≥ –0.125
or	
Sub feedback learning value	≥ –0.0327
or	
All of the following conditions are established.	
• any one of the rich side misfire counters for each cylinder when in idling	≤ 13 time(s)
• total of the rich side misfire counters for each cylinder when in idling	≤ 13 time(s)
• any one of the rich side misfire counters for each cylinder when not in idling	≤ 30 time(s)
• total of the rich side misfire counters for each cylinder when not in idling	≤ 30 time(s)
Lean	
Main feedback learning value	≤ –0.035
or	
Sub feedback learning value	≥ –0.0143
or	
All of the following conditions are established.	
• any one of the lean side misfire counters for each cylinder when in idling	≤ 25 time(s)
• total of the lean side misfire counters for each cylinder when in idling	≤ 65535 time(s)
• any one of the lean side misfire counters for each cylinder when not in idling	≤ 30 time(s)
• total of the lean side misfire counters for each cylinder when not in idling	≤ 65535 time(s)

Time Needed for Diagnosis: 1000 engine revs.

GETTHEMANUALS.org

EU:DTC P2227 BAROMETRIC PRESSURE CIRCUIT RANGE/PERFORMANCE

1. OUTLINE OF DIAGNOSIS

Detect the malfunction of barometric pressure sensor output property.
Judge as NG when the barometric pressure sensor output is largely different from the intake manifold pressure at engine start.

2. COMPONENT DESCRIPTION

The barometric pressure sensor is built into the ECM.

3. ENABLE CONDITIONS

Secondary Parameters	Enable Conditions
Engine speed	< 300 rpm
Vehicle speed	< 1 km/h (0.6 MPH)

4. GENERAL DRIVING CYCLE

Perform the diagnosis once at ignition switch ON.

5. DIAGNOSTIC METHOD

- **Abnormality Judgment**

If the duration of time while the following conditions are met is longer than the time indicated, judge as NG.

Judgment Value

Malfunction Criteria	Threshold Value
|Barometric pressure – Intake manifold pressure|	≥ 26.7 kPa (200 mmHg, 7.9 inHg)
|Intake manifold pressure at engine start – Intake manifold pressure|	< 1.3 kPa (9.99 mmHg, 0.4 inHg)

Time Needed for Diagnosis: 328 ms
Malfunction Indicator Light Illumination: Illuminates when malfunction occurs in 2 continuous driving cycles.

- **Normality Judgment**

Judge as OK and clear the NG if the continuous time while the following conditions are established is more than the predetermined time.

Judgment Value

Malfunction Criteria	Threshold Value
|Barometric pressure – Intake manifold pressure|	< 26.7 kPa (200 mmHg, 7.9 inHg)

Time Needed for Diagnosis: 262 ms

GETTHEMANUALS.org

EV:DTC P2228 BAROMETRIC PRESSURE CIRCUIT LOW

1. OUTLINE OF DIAGNOSIS

Detect the open/short circuit of the barometric pressure sensor.
Judge as NG if out of specification.

2. COMPONENT DESCRIPTION

The barometric pressure sensor is built into the ECM.

3. ENABLE CONDITIONS

Secondary Parameters	Enable Conditions
None	

4. GENERAL DRIVING CYCLE

Always perform the diagnosis continuously.

5. DIAGNOSTIC METHOD

- **Abnormality Judgment**

If the duration of time while the following conditions are met is longer than the time indicated, judge as NG.

Judgment Value

Malfunction Criteria	Threshold Value
Output voltage	< 2.146 V

Time Needed for Diagnosis: 500 ms
Malfunction Indicator Light Illumination: Illuminates as soon as a malfunction occurs.

- **Normality Judgment**

Judge as OK and clear the NG if the continuous time while the following conditions are established is more than the predetermined time.

Judgment Value

Malfunction Criteria	Threshold Value
Output voltage	≥ 2.146 V

Time Needed for Diagnosis: Less than 1 second

GETTHEMANUALS.org

EW:DTC P2229 BAROMETRIC PRESSURE CIRCUIT HIGH

1. OUTLINE OF DIAGNOSIS

Detect the open/short circuit of the barometric pressure sensor.
Judge as NG if out of specification.

2. COMPONENT DESCRIPTION

The barometric pressure sensor is built into the ECM.

3. ENABLE CONDITIONS

Secondary Parameters	Enable Conditions
None	

4. GENERAL DRIVING CYCLE

Always perform the diagnosis continuously.

5. DIAGNOSTIC METHOD

- **Abnormality Judgment**

If the duration of time while the following conditions are met is longer than the time indicated, judge as NG.

Judgment Value

Malfunction Criteria	Threshold Value
Output voltage	≥ 3.875 V

Time Needed for Diagnosis: 500 ms
Malfunction Indicator Light Illumination: Illuminates as soon as a malfunction occurs.

- **Normality Judgment**

Judge as OK and clear the NG if the continuous time while the following conditions are established is more than the predetermined time.

Judgment Value

Malfunction Criteria	Threshold Value
Output voltage	< 3.875 V

Time Needed for Diagnosis: Less than 1 second

GETTHEMANUALS.org

EX:DTC P2610 ECM/PCM INTERNAL ENGINE OFF TIMER PERFORMANCE

1. OUTLINE OF DIAGNOSIS

Detect malfunction of soaking timer IC by the five diagnoses below.

Monitor Number	Explanation	Time required for diagnosis
Monitor #1 <Timer diagnosis>	Perform diagnosis of the soaking timer IC accuracy	196 ms
Monitor #2 <Full count diagnosis>	Perform diagnosis of the soaking timer IC counter function	4000 ms
Monitor #3 <Soaking timer IC setting diagnosis>	Perform diagnosis of communication between ECM and soaking timer IC	196 ms
Monitor #4 <Timer diagnosis (during soaking)>	Perform diagnosis of the soaking timer IC accuracy during soaking	3000 ms
Monitor #5 <Wake-up diagnosis>	Perform diagnosis of wake-up function	64 ms

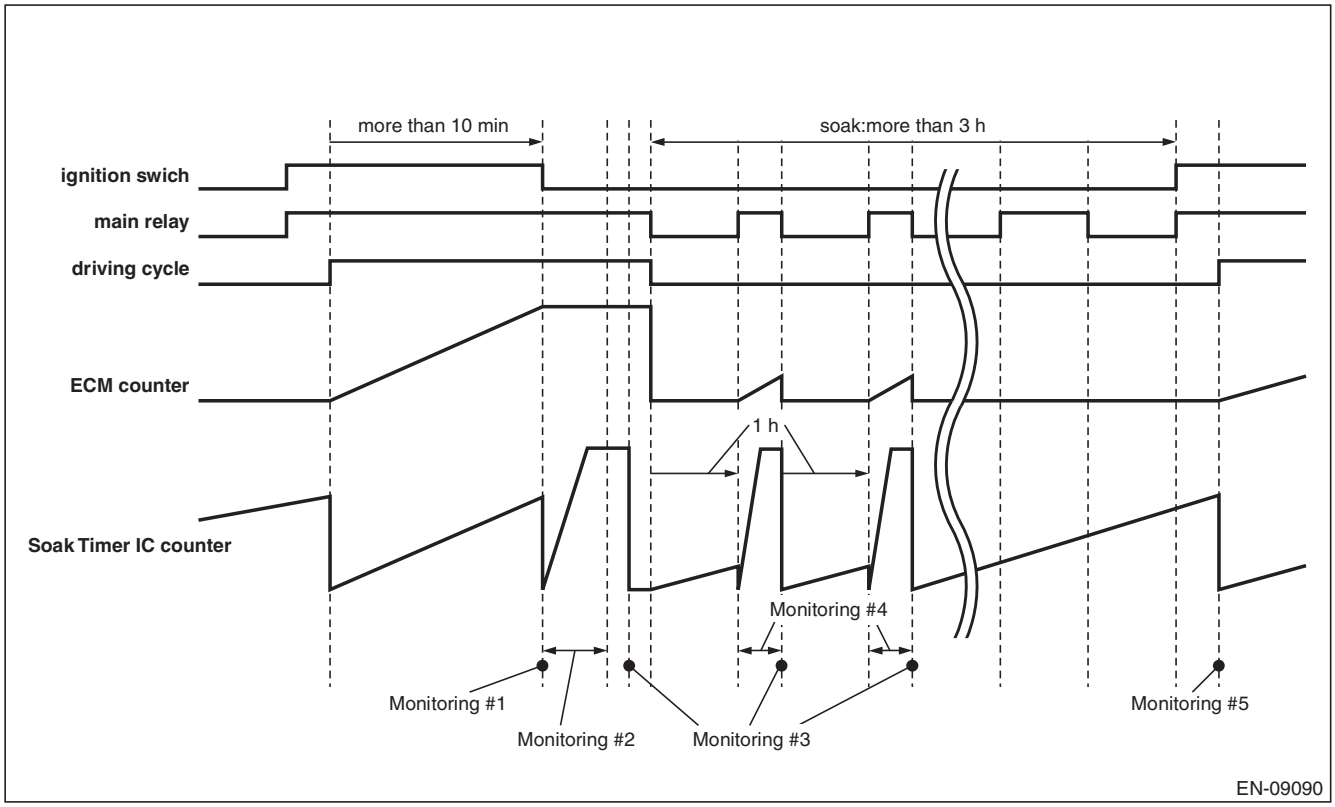

2. COMPONENT DESCRIPTION

The soaking timer IC is built into the ECM.

GETTHEMANUALS.org

3. ENABLE CONDITIONS

Secondary Parameters	Enable Conditions
<Timer diagnosis>	
Battery voltage Ignition switch Elapsed time after starting the engine	≥ 10.9 V OFF > 600 s
< Full count diagnosis & soaking timer IC setting diagnosis>	
Battery voltage Ignition switch	≥ 10.9 V OFF
<Timer diagnosis (during soaking)>	
Battery voltage Ignition switch Number of wake-up	≥ 10.9 V OFF < 3 time(s)
<Wake-up diagnosis>	
Ignition switch Wake-up activation time setting Time in the soaking timer IC	ON Completed > 3600 s × 3 time(s)

4. GENERAL DRIVING CYCLE

Perform the diagnosis only once when 10 minutes have passed after the engine start and the ignition switch is OFF, and also when the ignition switch is ON after the soaking of five hours or more.

GETTHEMANUALS.org

5. DIAGNOSTIC METHOD

<Timer diagnosis>

Start the count up operation of counters in ECM and in soaking timer IC when the engine is started.
Judge as timer malfunction if the difference between the counter in ECM and counter in soaking timer IC exceeds the allowable limit when the ignition switch is OFF.

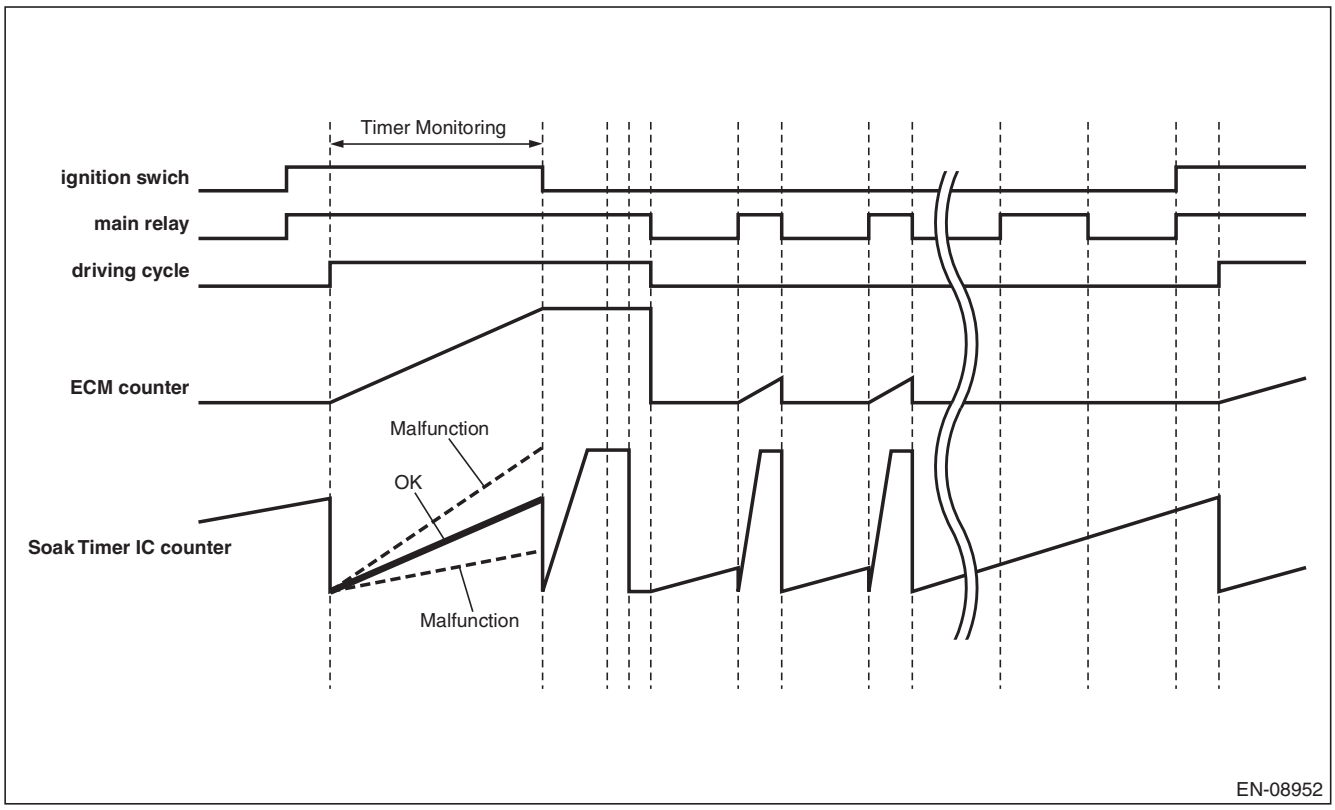

- **Abnormality Judgment**

Judge as NG when the following conditions are established.

Judgment Value

Malfunction Criteria	Threshold Value
|osoaktimcpu – osoaktimic| / osoaktimcpu osoaktimcpu = Counter in ECM osoaktimic = Counter in soaking timer IC	> 0.24

- **Normality Judgment**

Judge as OK when the following conditions are established.

Judgment Value

Malfunction Criteria	Threshold Value
|osoaktimcpu – osoaktimic| / osoaktimcpu	≤ 0.24

GETTHEMANUALS.org

<Full count diagnosis>

After the timer diagnosis is completed, reset the counter in soaking timer IC and start the count up operation. Judge as full count diagnosis malfunction if counter in soaking timer IC is not $3FF (1023 count) after 4 seconds.

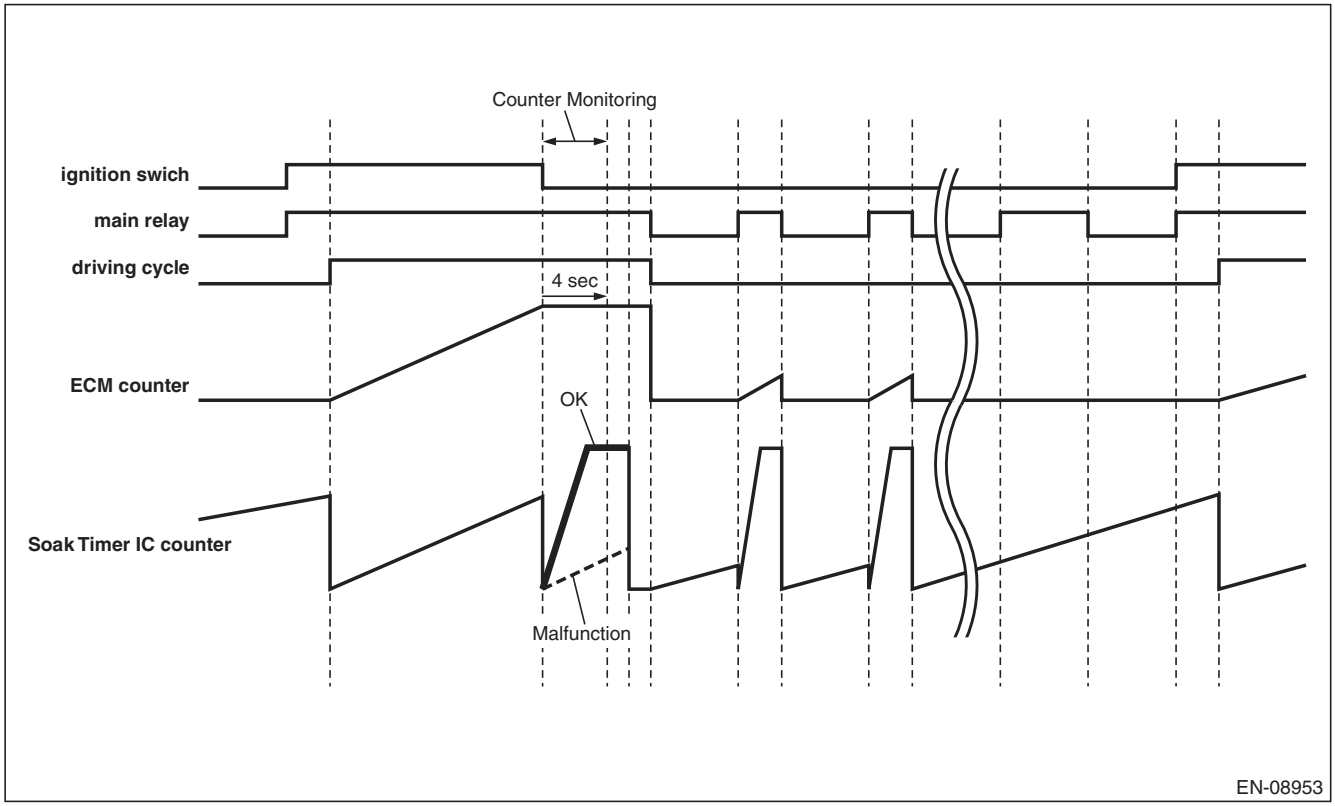

- **Abnormality Judgment**

Judge as NG when the following conditions are established.

Judgment Value

Malfunction Criteria	Threshold Value
osoakfcntic osoakfcntic = Counter in soaking timer IC	≠ $3FF (1023 count)

- **Normality Judgment**

Judge as OK when the following conditions are established.

Judgment Value

Malfunction Criteria	Threshold Value
osoakfcntic	= $3FF (1023 count)

GETTHEMANUALS.org

<Soaking timer IC setting diagnosis>

When setting the activation setting time to soaking timer IC, compare the writing value to soaking timer IC with read out value. Judge as malfunction if the values do not match 3 times in a row.

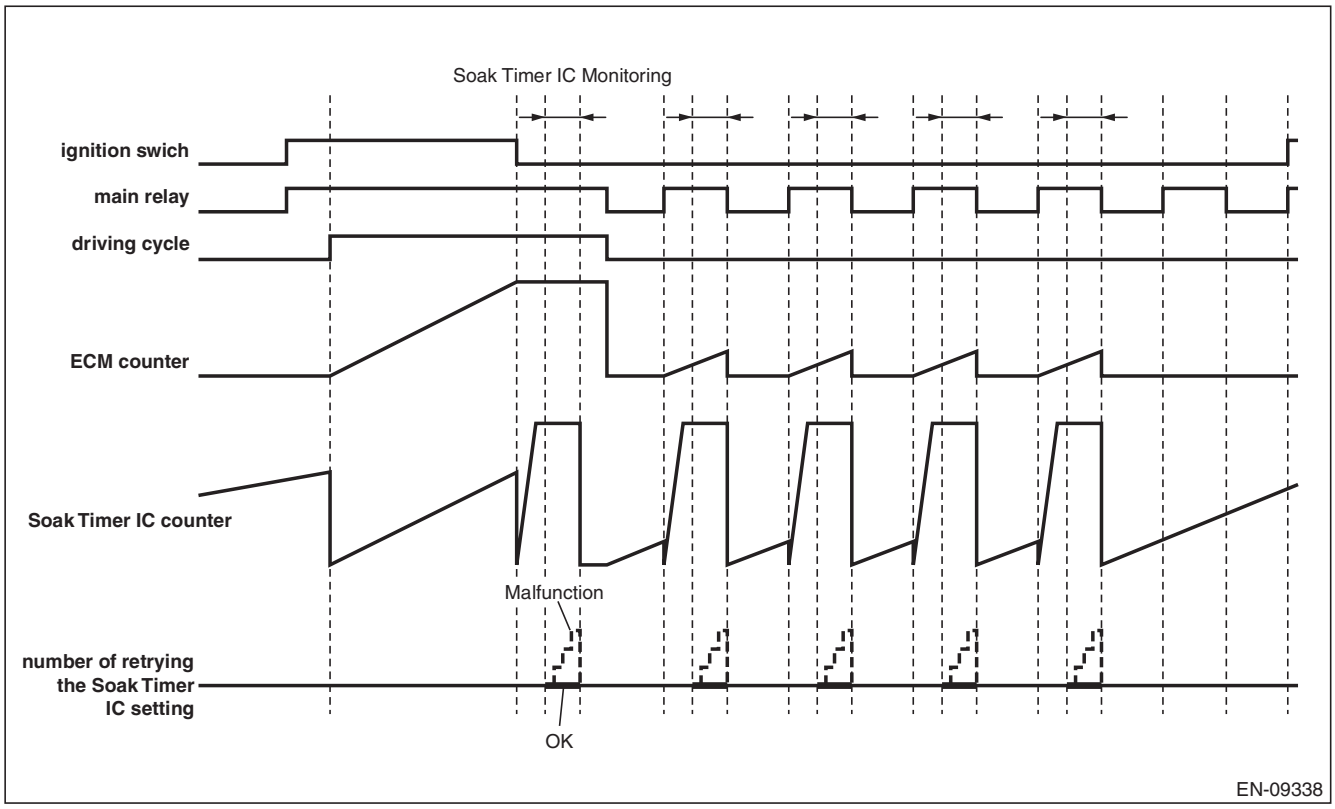

- **Abnormality Judgment**

Judge as NG when the following conditions are established.

Judgment Value

Malfunction Criteria	Threshold Value
Writing value and read out value when setting the soaking timer	Unmatch
Number of retrying the soaking timer setting	≥ 3 times

- **Normality Judgment**

Judge as OK when the following conditions are established.

Judgment Value

Malfunction Criteria	Threshold Value
Writing value and read out value when setting the soaking timer	Match

GETTHEMANUALS.org

<Timer diagnosis (during soaking)>

Wake-up at the predetermined interval until five hours have passed after the ignition switch is OFF, and compare the counter in soaking timer IC with the counter in ECM.
Judge as malfunction if the counter in soaking timer IC is counted up to maximum value (1023 count) when the counter in ECM is 1637 ms, or if the counter in soaking timer IC is not counted up to maximum value (1023 count) when the counter in ECM is 2455 ms.

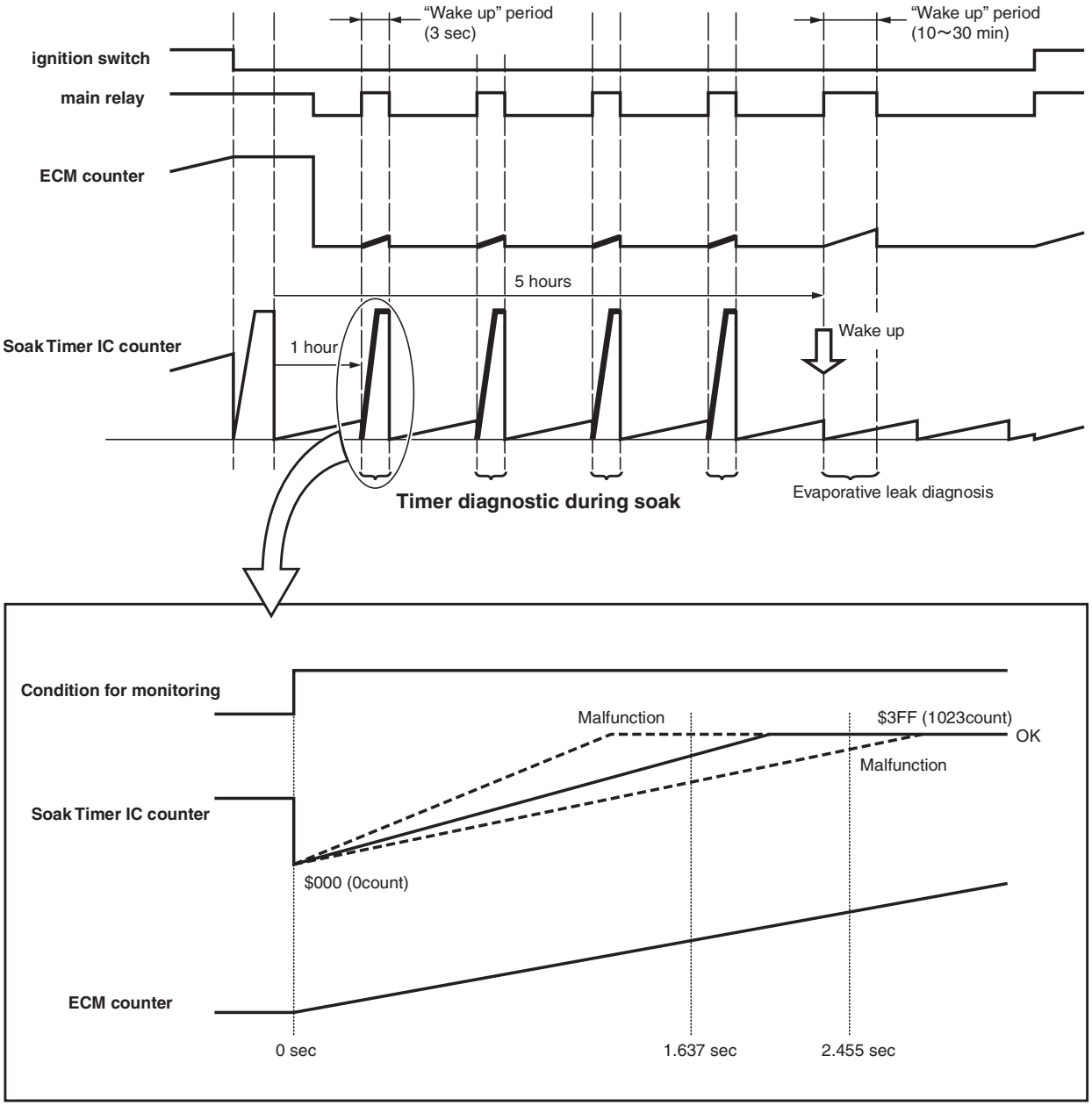

EN-08981

GETTHEMANUALS.org

- **Abnormality Judgment**

Judge as NG when the following conditions are established.

Judgment Value

Malfunction Criteria	Threshold Value
When any one of the followings is established.	
• All of the following conditions are established. Counter in ECM Counter in soaking timer IC	 ≤ 1637 ms = $3FF (1023 count)
• All of the following conditions are established. Counter in ECM Counter in soaking timer IC	 ≥ 2455 ms ≠ $3FF (1023 count)

- **Normality Judgment**

Judge as OK when the following conditions are established.

Judgment Value

Malfunction Criteria	Threshold Value
Following conditions are established.	
• All of the following conditions are established. Counter in ECM Counter in soaking timer IC	 ≤ 1637 ms ≠ $3FF (1023 count)
• All of the following conditions are established. Counter in ECM Counter in soaking timer IC	 ≥ 2455 ms = $3FF (1023 count)

GETTHEMANUALS.org

<Wake-up diagnosis>

Store the number of wake-up activation when the ECM wakes up by the soaking timer IC.
Next time when the ignition switch is ON, if the number of wake-up activation does not reach the predetermined value even though the counter in soaking timer IC exceeds the activation setting time, judge as wake-up malfunction.

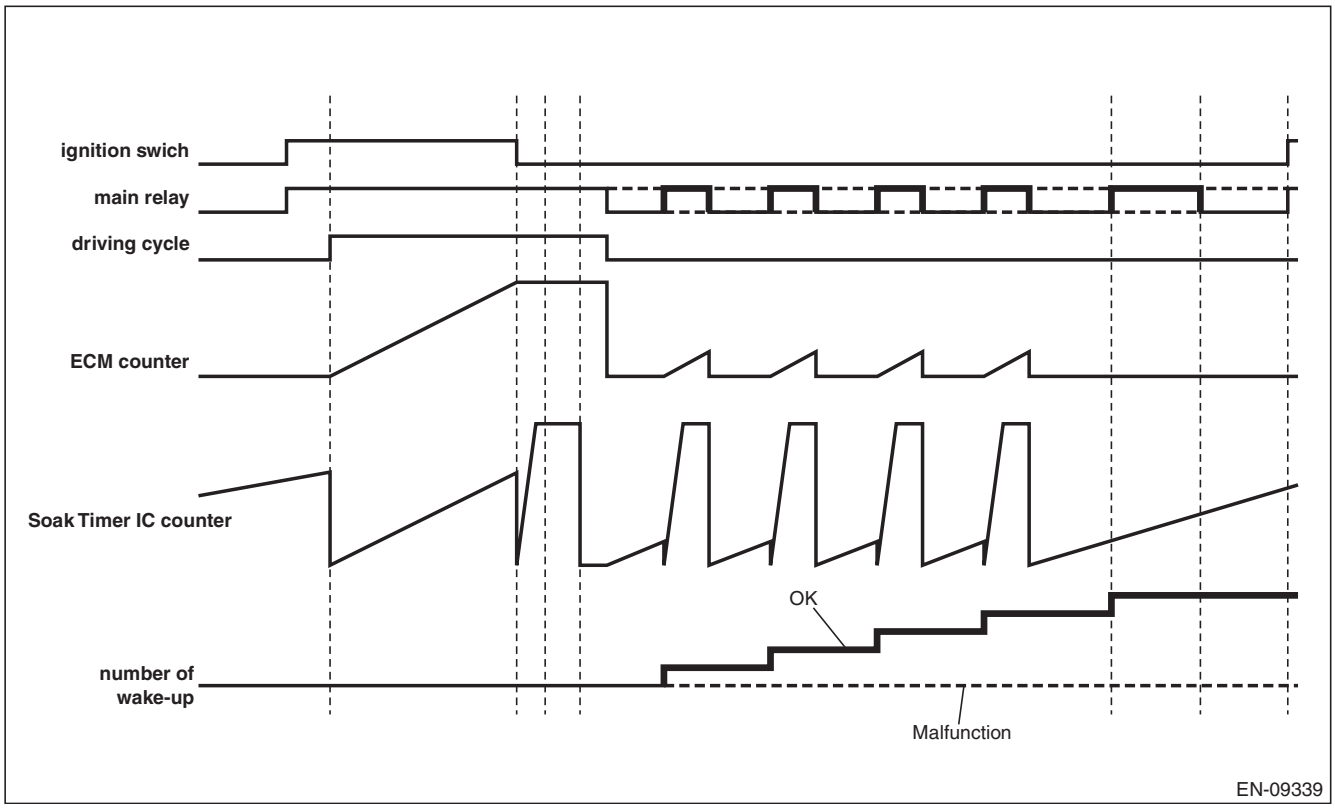

- **Abnormality Judgment**

Judge as NG when the following conditions are established.

Judgment Value

Malfunction Criteria	Threshold Value
Number of wake-up	< 3 time(s)

- **Normality Judgment**

Judge as OK when the following conditions are established.

Judgment Value

Malfunction Criteria	Threshold Value
Number of wake-up	≥ 3 time(s)

GETTHEMANUALS.org

- **Abnormality Judgment**

Judge as NG when the following conditions are established.

Judgment Value

Malfunction Criteria	Threshold Value
Ignition switch	ON
Driving cycle	Completed
When any one of the followings is established.	
• Timer diagnosis	NG
• Full count diagnosis	NG
• Soaking timer IC setting diagnosis	NG
• Timer diagnosis (during soaking)	NG
• Wake-up diagnosis	NG

Time Needed for Diagnosis: 18620 s (Approx. 5 hours)
Malfunction Indicator Light Illumination: Illuminates when malfunction occurs in 2 continuous driving cycles.

- **Normality Judgment**

Judge as OK and clear the NG if the following conditions are established.

Judgment Value

Malfunction Criteria	Threshold Value
Ignition switch	ON
Driving cycle	Completed
All of the following conditions are established.	
• Timer diagnosis	OK
• Full count diagnosis	OK
• Soaking timer IC setting diagnosis	OK
• Timer diagnosis (during soaking)	OK
• Wake-up diagnosis	OK

Time Needed for Diagnosis: 18620 s (Approx. 5 hours)

GETTHEMANUALS.org

EY:DTC U0073 CAN FAILURE, BUS ‘OFF’ DETECTION

1. OUTLINE OF DIAGNOSIS

Detect malfunction of CAN communication.
Judge as NG when CAN communication failure has occurred.

2. COMPONENT DESCRIPTION

(Common Specifications)
CAN Protocol 2.0 B (Active)
Frame Format: 11 Bit ID Frame (Standard Frame)
Conforms to ISO11898
Communication Speed: 500 kbps

3. ENABLE CONDITIONS

Secondary Parameters	Enable Conditions
None	

4. GENERAL DRIVING CYCLE

Perform the diagnosis continuously after starting the engine.

5. DIAGNOSTIC METHOD

- **Abnormality Judgment**

Judge as NG when the following conditions are established.

Judgment Value

Malfunction Criteria	Threshold Value
Battery voltage	> 10.9 V
Starter switch	OFF
Engine	run
bus off flag or error warning flag	set (error)

Time Needed for Diagnosis: 436 ms
Malfunction Indicator Light Illumination: Illuminates as soon as a malfunction occurs.

- **Normality Judgment**

Judge as OK and clear the NG if the continuous time while the following conditions are established is more than the predetermined time.

Judgment Value

Malfunction Criteria	Threshold Value
Engine	run
bus off flag or error warning flag	clear (No error)

Time Needed for Diagnosis: 1000 ms

GETTHEMANUALS.org

EZ:DTC U0101 CAN (TCU) DATA NOT LOADED

1. OUTLINE OF DIAGNOSIS

Detect malfunction of CAN communication.
Judge as NG when CAN communication failure has occurred between TCM, VDC CM and body integrated unit.

2. COMPONENT DESCRIPTION

(Common Specifications)
CAN Protocol 2.0 B (Active)
Frame Format: 11 Bit ID Frame (Standard Frame)
Conforms to ISO11898
Communication Speed: 500 kbps

3. ENABLE CONDITIONS

Secondary Parameters	Enable Conditions
None	

4. GENERAL DRIVING CYCLE

Perform the diagnosis continuously after starting the engine.

5. DIAGNOSTIC METHOD

- **Abnormality Judgment**

Judge as NG when the following conditions are established.

Judgment Value

Malfunction Criteria	Threshold Value
Battery voltage	> 10.9 V
Starter switch	OFF
Engine	run
ID received from control module connected to CAN	None during 500 milliseconds

Time Needed for Diagnosis: 500 ms
Malfunction Indicator Light Illumination: Illuminates as soon as a malfunction occurs.

- **Normality Judgment**

Judge as OK and clear the NG if the continuous time while the following conditions are established is more than the predetermined time.

Judgment Value

Malfunction Criteria	Threshold Value
Engine	run
ID received from control module connected to CAN	Yes

Time Needed for Diagnosis: 1000 ms

GETTHEMANUALS.org

FA:DTC U0122 CAN (VDC) DATA NOT LOADED

1. OUTLINE OF DIAGNOSIS

NOTE:
For the detection standard, refer to DTC U0101. <Ref. to GD(H4DOTC)-266, DTC U0101 CAN (TCU) DATA NOT LOADED, Diagnostic Trouble Code (DTC) Detecting Criteria.>

FB:DTC U0140 CAN (BCU) DATA NOT LOADED

1. OUTLINE OF DIAGNOSIS

NOTE:
For the detection standard, refer to DTC U0101. <Ref. to GD(H4DOTC)-266, DTC U0101 CAN (TCU) DATA NOT LOADED, Diagnostic Trouble Code (DTC) Detecting Criteria.>

GETTHEMANUALS.org

FC:DTC U0402 CAN (TCU) DATA ABNORMAL

1. OUTLINE OF DIAGNOSIS

Detect malfunction of CAN communication.
Judge as NG when data received from TCM, VDC CM and body integrated unit is not normal.

2. COMPONENT DESCRIPTION

(Common Specifications)
CAN Protocol 2.0 B (Active)
Frame Format: 11 Bit ID Frame (Standard Frame)
Conforms to ISO11898
Communication Speed: 500 kbps

3. ENABLE CONDITIONS

Secondary Parameters	Enable Conditions
None	

4. GENERAL DRIVING CYCLE

Perform the diagnosis continuously after starting the engine.

5. DIAGNOSTIC METHOD

- **Abnormality Judgment**

Judge as NG when the following conditions are established.

Judgment Value

Malfunction Criteria	Threshold Value
Battery voltage	> 10.9 V
Starter switch	OFF
Engine	run
Data updated from control module connected to CAN	None during 2000 milliseconds

Time Needed for Diagnosis: 2 seconds
Malfunction Indicator Light Illumination: Illuminates as soon as a malfunction occurs.

- **Normality Judgment**

Judge as OK and clear the NG if the continuous time while the following conditions are established is more than the predetermined time.

Judgment Value

Malfunction Criteria	Threshold Value
Engine	run
Data updated from control module connected to CAN	Yes

Time Needed for Diagnosis: 1000 ms

GETTHEMANUALS.org

FD:DTC U0416 CAN (VDC) DATA ABNORMAL

1. OUTLINE OF DIAGNOSIS

NOTE:
For the detection standard, refer to DTC U0402. <Ref. to GD(H4DOTC)-268, DTC U0402 CAN (TCU) DATA ABNORMAL, Diagnostic Trouble Code (DTC) Detecting Criteria.>

FE:DTC U0422 CAN (BCU) DATA ABNORMAL

1. OUTLINE OF DIAGNOSIS

NOTE:
For the detection standard, refer to DTC U0402. <Ref. to GD(H4DOTC)-268, DTC U0402 CAN (TCU) DATA ABNORMAL, Diagnostic Trouble Code (DTC) Detecting Criteria.>

GETTHEMANUALS.org

GETTHEMANUALS.org