AIRBAG SYSTEM

PRECAUTION

CAUTION:

- **The vehicle is equipped with a Supplemental Restraint System (SRS), which consists of a driver airbag, front passenger airbag, side airbags, curtain shield airbags and front seat belt pretensioners. Failure to carry out service operations in the correct sequence could cause the SRS to unexpectedly deploy during servicing, possibly leading to a serious accident. Furthermore, if a mistake is made in servicing the SRS, it is possible that the SRS may fail to operate when required. Before performing servicing (including removal or installation of parts, inspection or replacement), be sure to read the following items carefully, then follow the correct procedures as indicated in the repair manual.**
- **Wait at least 90 seconds after the ignition switch is turned off and the negative (-) terminal cable is disconnected from the battery before starting the operation.**
  (The SRS is equipped with a back-up power source, so if work is started within 90 seconds of disconnecting the negative (-) terminal cable of the battery, the SRS may be deployed).
- **Do not directly expose the steering pad, front passenger airbag assembly, center airbag sensor assembly, front airbag sensor, front seat inner belt assembly, seat position sensor, occupant classification ECU, front seat side airbag assembly, side airbag sensor, curtain shield airbag assembly, rear airbag sensor or front seat outer belt assembly to hot air or flames.**

NOTICE:

- **Malfunction symptoms of the SRS are difficult to confirm, so DTCs are the most important source of information when troubleshooting. When troubleshooting the SRS, always inspect DTCs before disconnecting the battery.**
- **Even in the case of a minor collision when the SRS does not deploy, the following parts should be inspected.**
  - **Steering pad**
  - **Front passenger airbag assembly**
  - **Center airbag sensor assembly**
  - **Front airbag sensor**
  - **Front seat inner belt assembly**
  - **Seat position sensor**
  - **Occupant classification ECU**
  - **Front seat side airbag assembly**
  - **Side airbag sensor**
  - **Curtain shield airbag assembly**
  - **Rear airbag sensor**

- **Front seat outer belt assembly**

- **Before commencing repair work, remove the airbag sensor if any kind of shock is likely to occur to the airbag sensor during the operation.**
- **Never use SRS parts from another vehicle. When replacing parts, replace them with new ones.**
- **Never disassemble or repair any of the following parts in order to reuse them. If any of these parts have been dropped, or a defect is found (e.g. cracks, dents or any other defects) in any of the housings, brackets or connectors, then replace the part with a new one.**
  - **Steering pad**
  - **Front passenger airbag assembly**
  - **Center airbag sensor assembly**
  - **Front airbag sensor**
  - **Front seat inner belt assembly**
  - **Seat position sensor**
  - **Occupant classification ECU**
  - **Front seat side airbag assembly**
  - **Side airbag sensor**
  - **Curtain shield airbag assembly**
  - **Rear airbag sensor**
  - **Front seat outer belt assembly**
- **Use a volt/ohmmeter with high impedance (10 kΩ/V minimum) for troubleshooting the electrical circuits.**
- **Information labels are attached to the periphery of the SRS components. Follow the instructions in the cautions.**
- **After work on the SRS is completed, perform the SRS warning light check (See page RS-31).**
- **When the negative (-) terminal cable is disconnected from the battery, the memory will be cleared. Therefore make a record of the contents stored in each system before starting work. When the work is finished, reset each system as it was before. Never use a back-up power supply from outside the vehicle to avoid erasing the memory in any system.**
- **If the vehicle is equipped with a mobile communication system, refer to the precautions in the INTRODUCTION section.**

HINT:
In the airbag system, the center airbag sensor assembly, front airbag sensor LH and RH, side airbag sensor LH and RH, rear airbag sensor LH and RH are collectively referred to as the airbag sensors.

1. HANDLING PRECAUTIONS FOR AIRBAG SENSORS

(a) Before starting the following operations, wait for at least 90 seconds after disconnecting the negative (-) terminal cable from the battery:
  (1) Replacement of the airbag sensors
  (2) Adjustment of the front/rear doors of the vehicle equipped with the side airbags and curtain shield airbags (fitting adjustment)

(b) When connecting or disconnecting the airbag sensor connectors, ensure that each sensor is installed in the vehicle.
(c) Do not use the airbag sensors which have been dropped during the operation or transportation.
(d) Do not disassemble the airbag sensors.

2. INSPECTION PROCEDURE FOR VEHICLE INVOLVED IN ACCIDENT

(a) When the airbag has not deployed, confirm the DTCs by checking the SRS warning light. If there is any malfunction in the SRS airbag system, perform troubleshooting.
(b) When any of the airbags have deployed, replace the airbag sensors and check the installation condition.

RS

3. SRS CONNECTORS

(a) SRS connectors are located as shown in the following illustration.

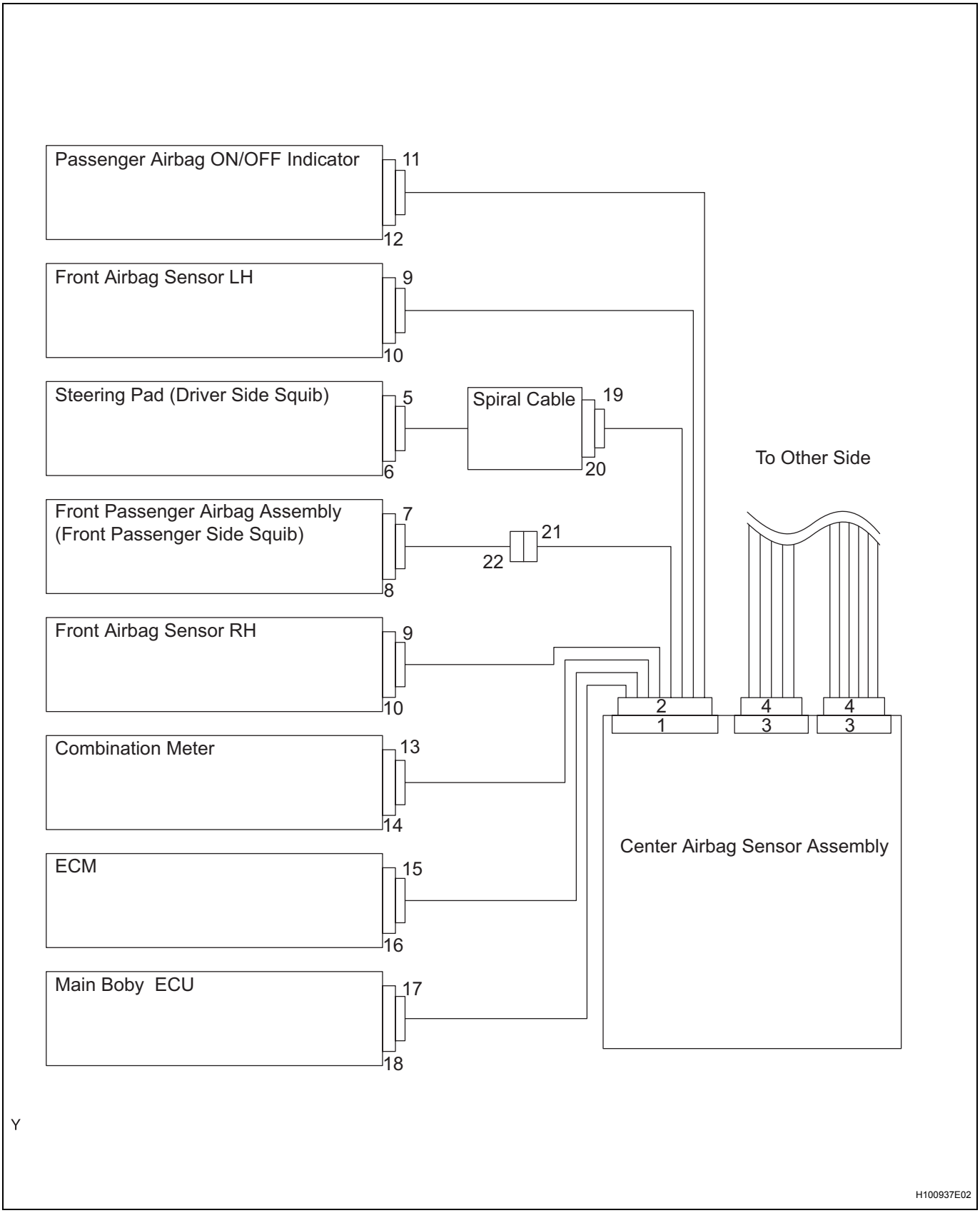

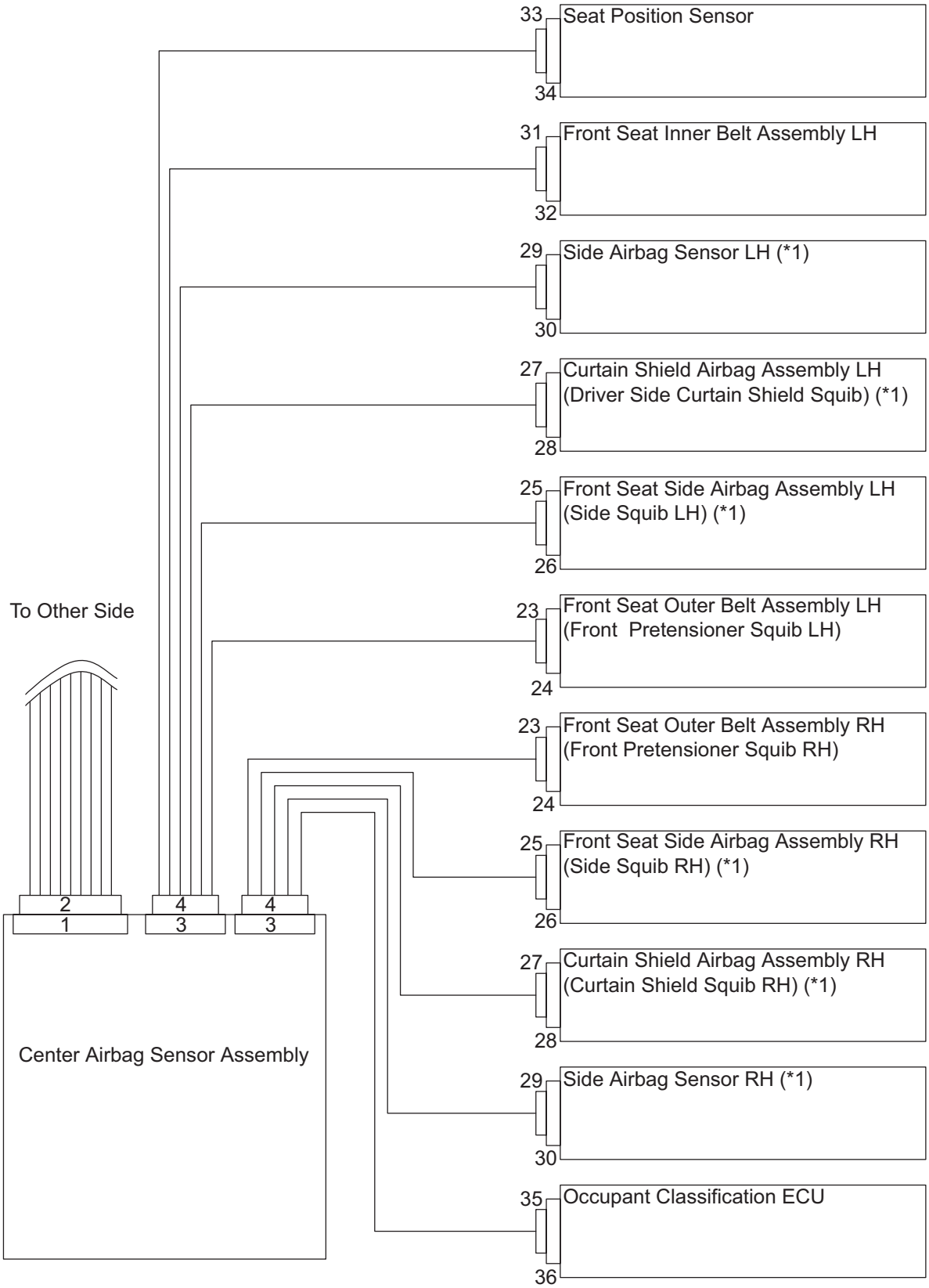

*1: w/ Side Airbag Assembly and Curtain Shield Airbag Assembly

Y

H100938E02

No.	Item	Application
(1)	Terminal Twin-Lock Mechanism	Connectors 2, 4, 9, 11, 13, 15, 19, 21, 22, 25, 29, 31, 33
(2)	Activation Prevention Mechanism	Connectors 2, 4, 6, 8, 20, 22, 24, 26, 28
(3)	Half Connection Prevention Mechanism	Connectors 9, 19, 21, 26, 29
(4)	Connector Position Assurance Mechanism	Connector 9
(5)	Connector Lock Mechanism (1)	Connectors 5, 7, 23, 27
(6)	Connector Lock Mechanism (2)	Connectors 2, 4
(7)	Improper Connection Prevention Lock Mechanism	Connectors 1, 3

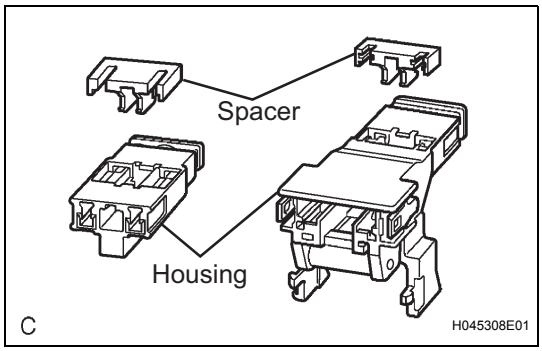

(b) All connectors in the SRS except the seat position sensor connector and the occupant classification ECU connector are colored yellow to distinguish them from other connectors. Some connectors have special functions, and are specially designed for the SRS. These connectors use durable gold-plated terminals, and are placed in the locations shown on the previous page to ensure high reliability.

(1) Terminal twin-lock mechanism:
Each connector is a two-piece component consisting of a housing and a spacer. This design enables the terminal to be locked securely by two locking devices (the retainer and the lance) to prevent the terminals from becoming disconnected.

(2) Activation prevention mechanism:
Each connector contains a short spring plate. When the connector is disconnected, the short spring plate creates a short circuit by automatically connecting the positive (+) and negative (-) terminals of the squib.

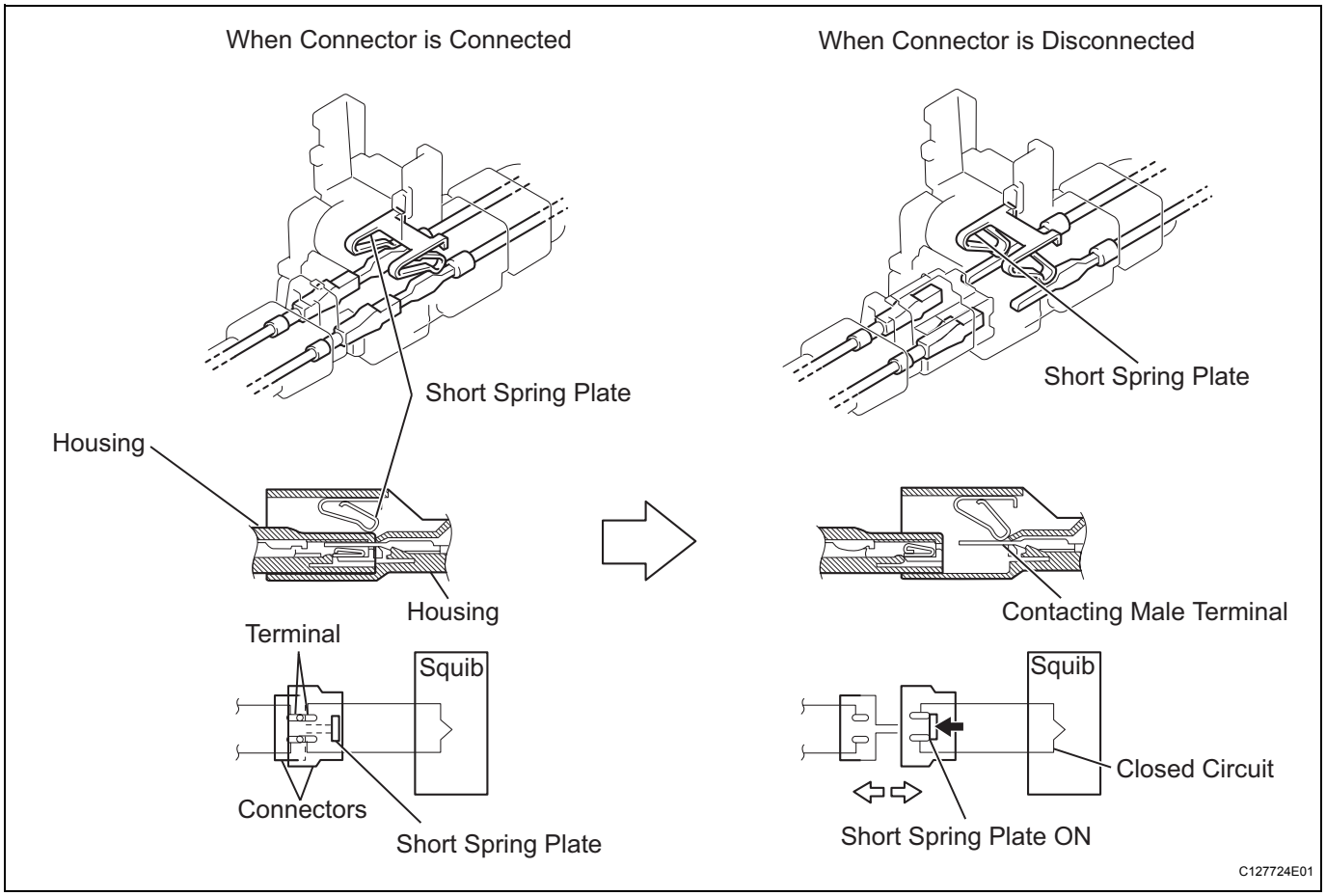

(3) Half connection prevention mechanism:
If the connector is not completely connected, the connector is disconnected by the spring operation so that no continuity exists.

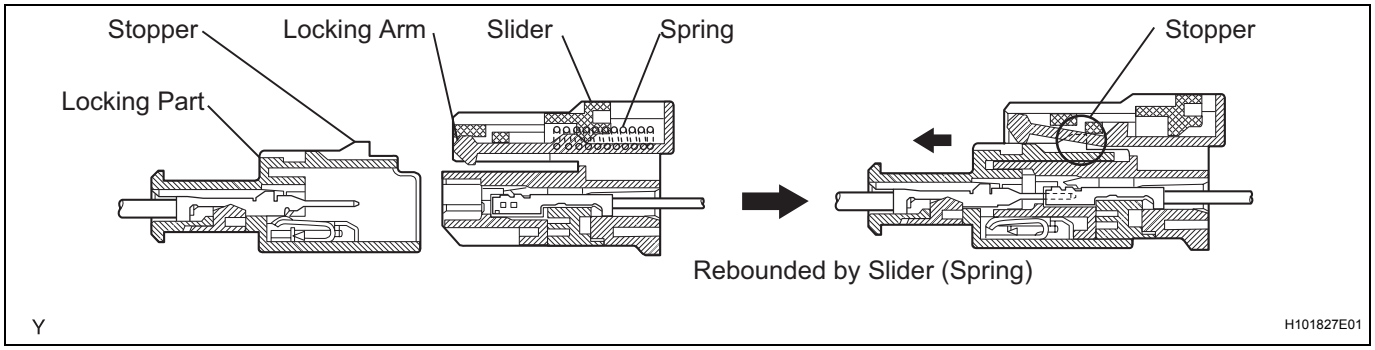

RS

(4) Connector position assurance mechanism:
The CPA (yellow part) slides, which completes the connector engagement, only when the housing lock (white part) is completely engaged.

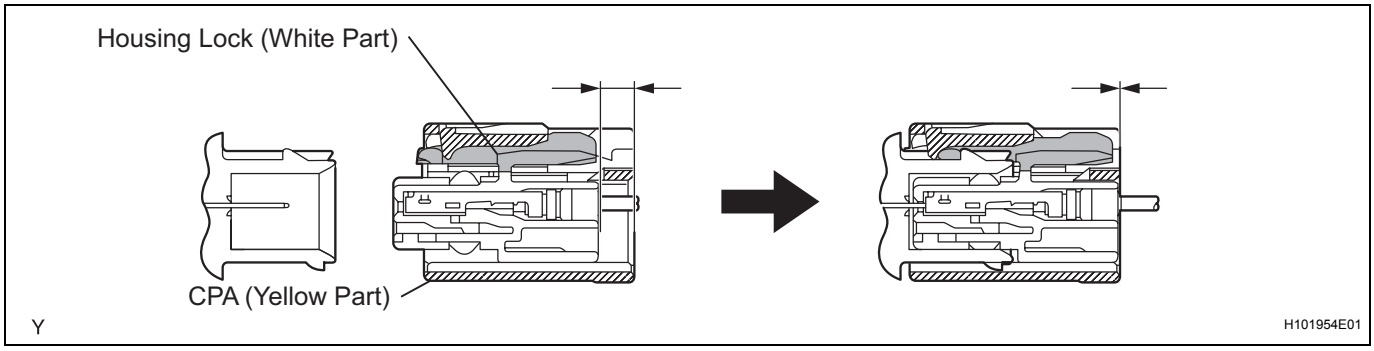

(5) Connector lock mechanism (1):
Locking the connector lock button connects the connector.

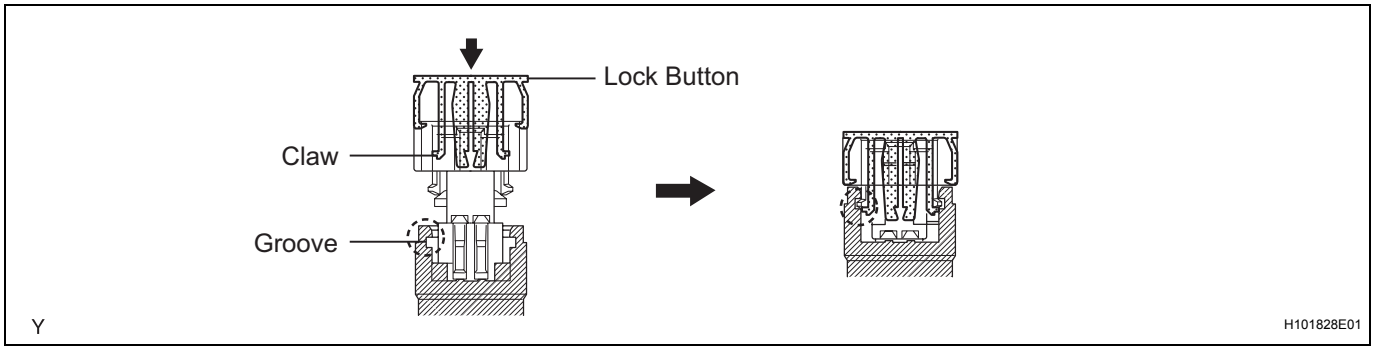

(6) Connector lock mechanism (2):
Both the primary lock with holder lances and the secondary lock with a retainer prevent the connectors from becoming disconnected.

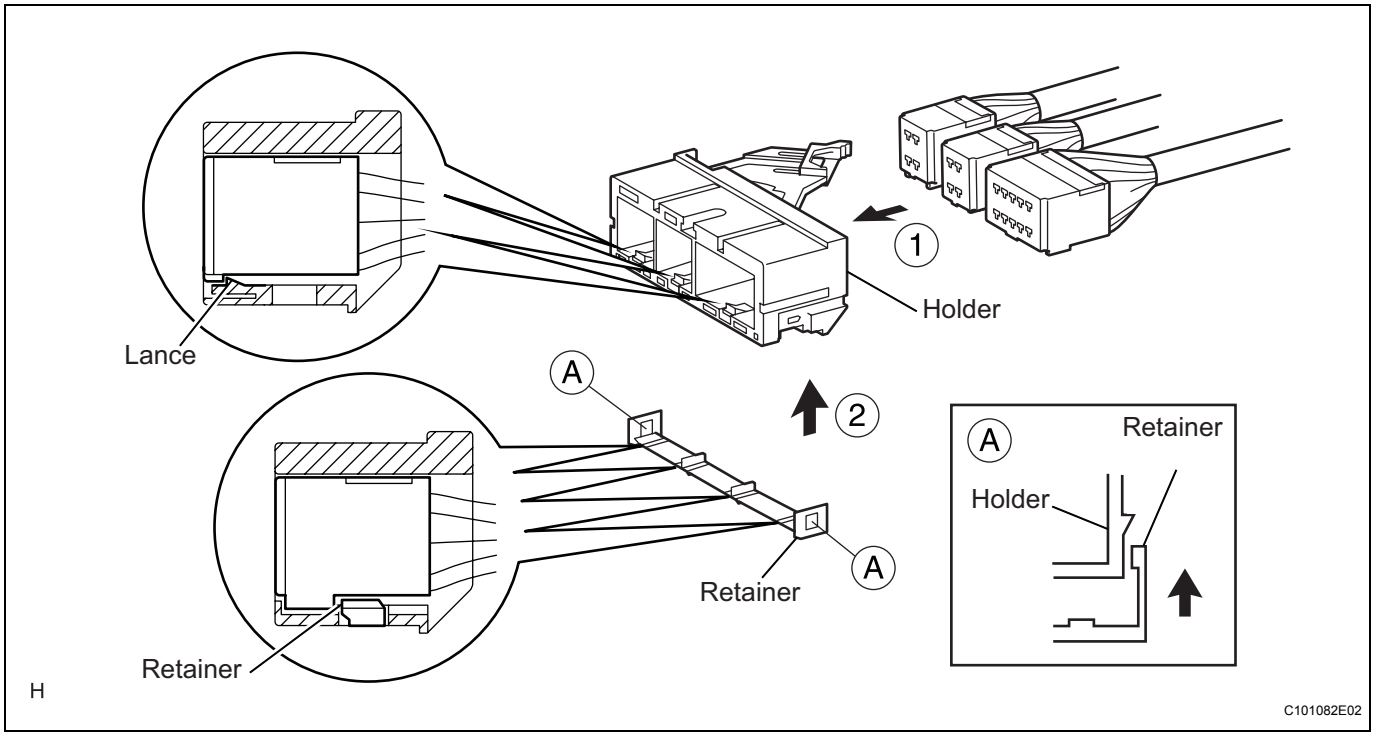

(7) Improper connection prevention lock mechanism:
When connecting the holder, the lever is pushed into the end by rotating around the A axis to lock the holder securely.

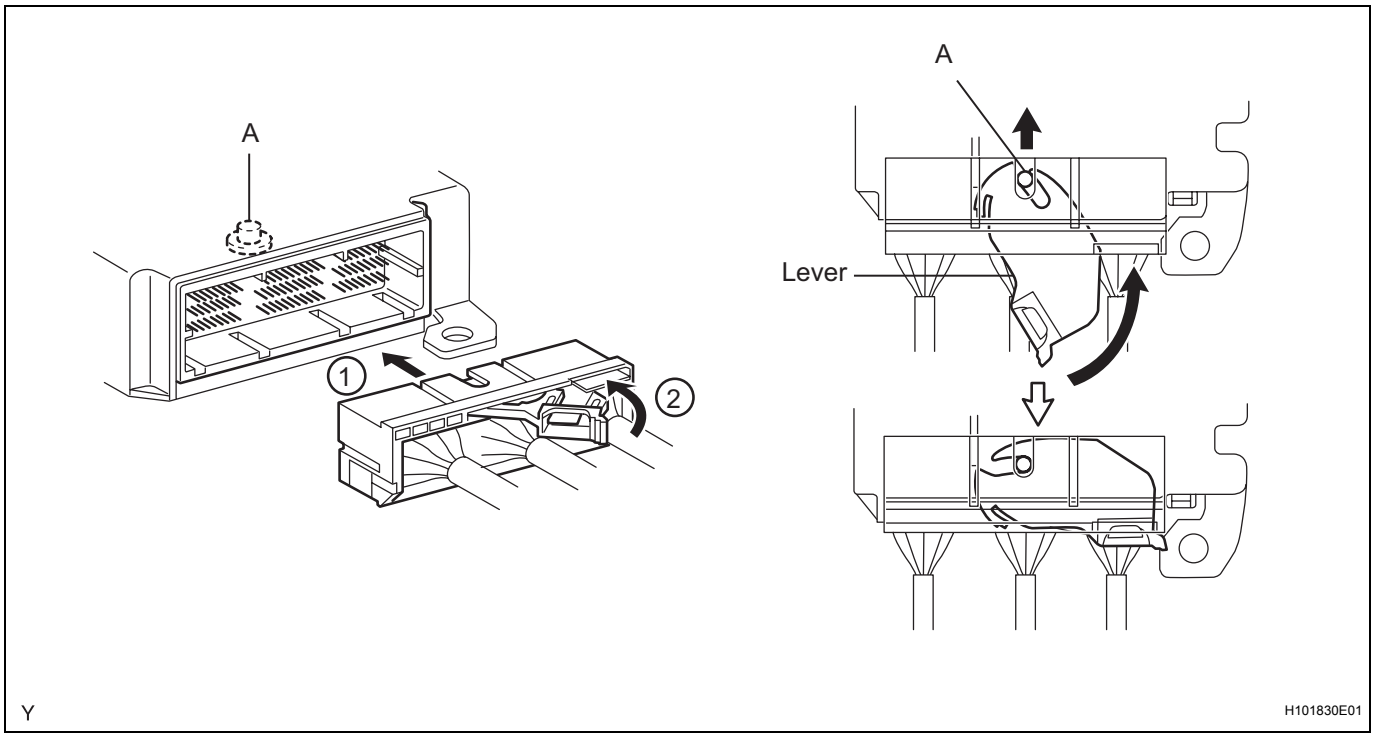

4. DISCONNECTION OF CONNECTORS FOR STEERING PAD, FRONT PASSENGER AIRBAG ASSEMBLY (SQUIB SIDE), CURTAIN SHIELD AIRBAG ASSEMBLY AND FRONT SEAT OUTER BELT ASSEMBLY

HINT:
Tape up the screwdriver tip before use.

(a) Release the lock button (yellow part) of the connector using a screwdriver.

(b) Insert the screwdriver tip between the connector and the base, and then raise the connector.

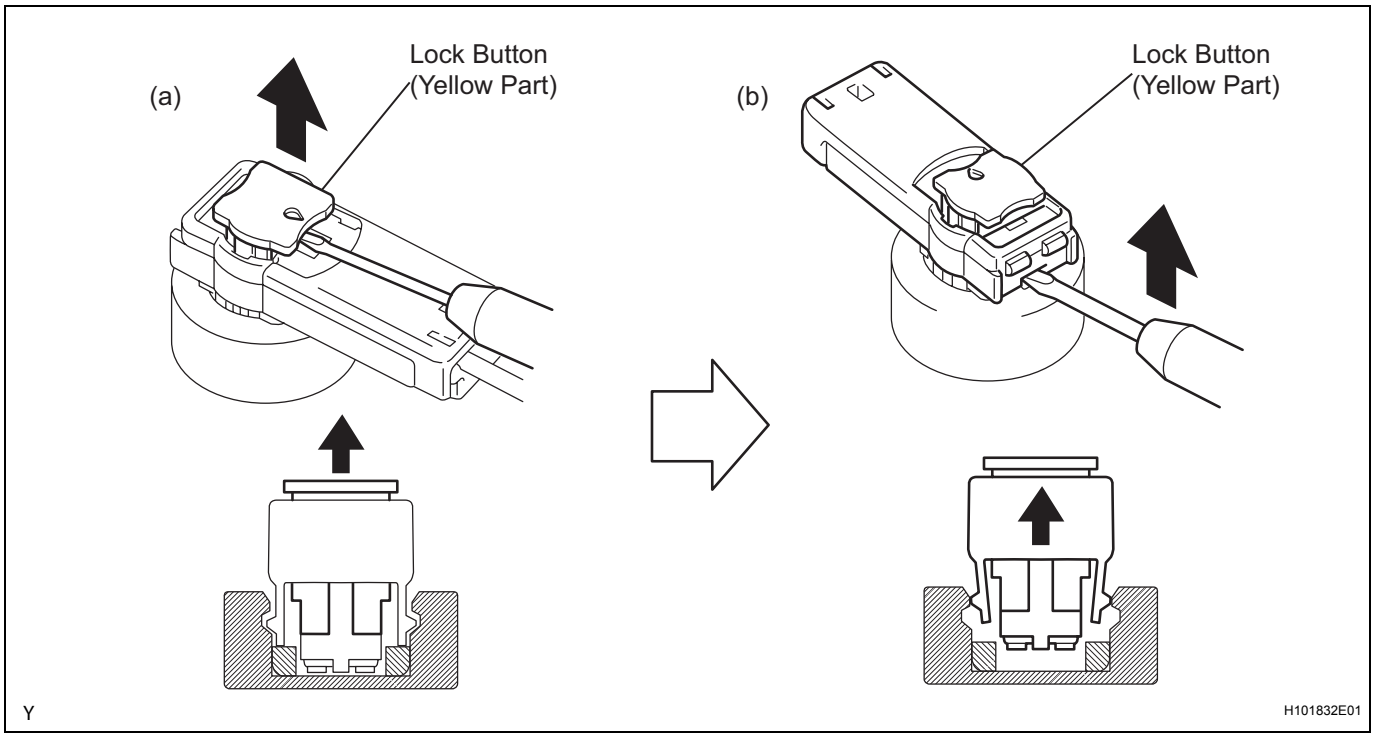

5. CONNECTION OF CONNECTORS FOR STEERING PAD, FRONT PASSENGER AIRBAG ASSEMBLY (SQUIB SIDE), CURTAIN SHIELD AIRBAG ASSEMBLY AND FRONT SEAT OUTER BELT ASSEMBLY

(a) Connect the connector.

(b) Push the lock button (yellow part) of the connector down securely. (When locking, a click sound can be heard.)

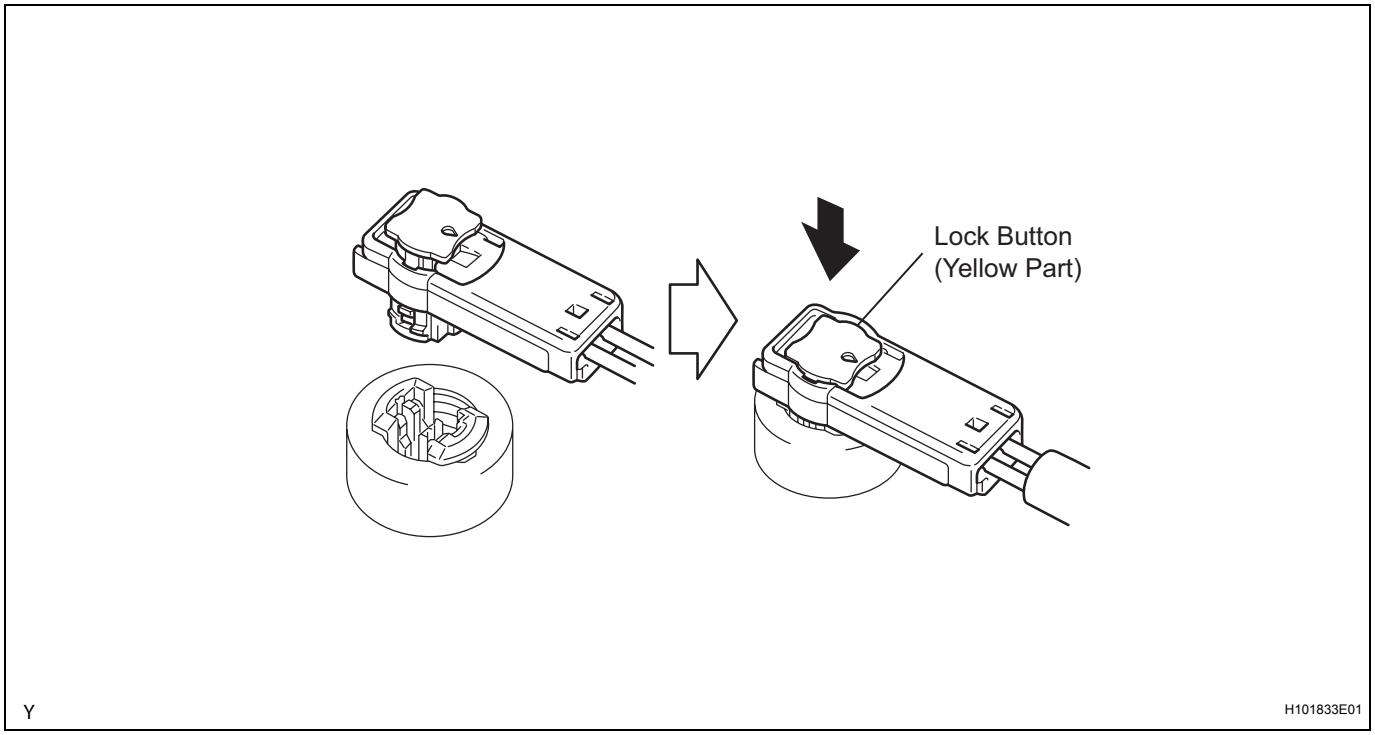

6. DISCONNECTION OF CONNECTORS FOR FRONT PASSENGER AIRBAG ASSEMBLY (INSTRUMENT PANEL WIRE SIDE)

(a) Place a finger on the slider, slide the slider to release the lock, and then disconnect the connector.

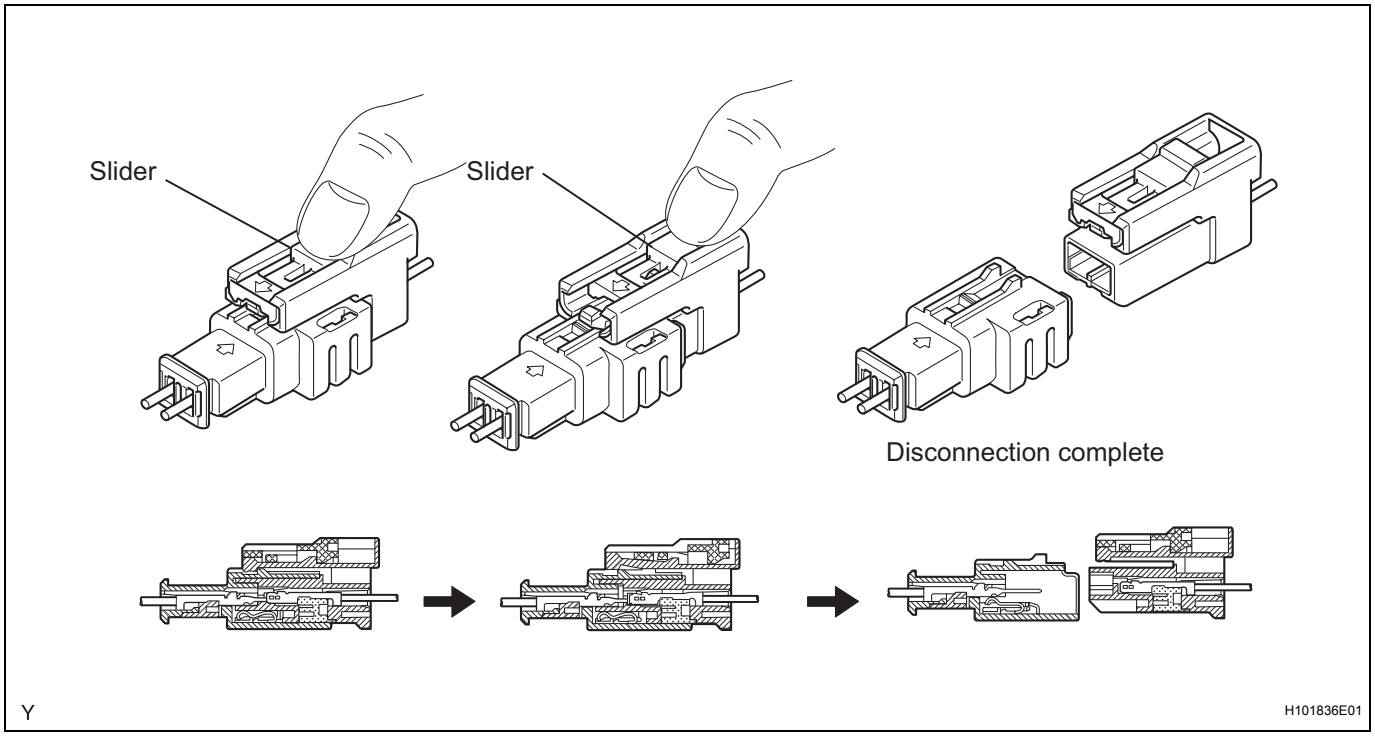

7. CONNECTION OF CONNECTORS FOR FRONT PASSENGER AIRBAG ASSEMBLY (INSTRUMENT PANEL WIRE SIDE)

(a) Connect the connector as shown in the illustration. (When locking, make sure that the slider returns to its original position and a click sound can be heard.)
HINT:
When connecting, the slider sides. Do not touch the slider while connecting, as this may result in an insecure fit.

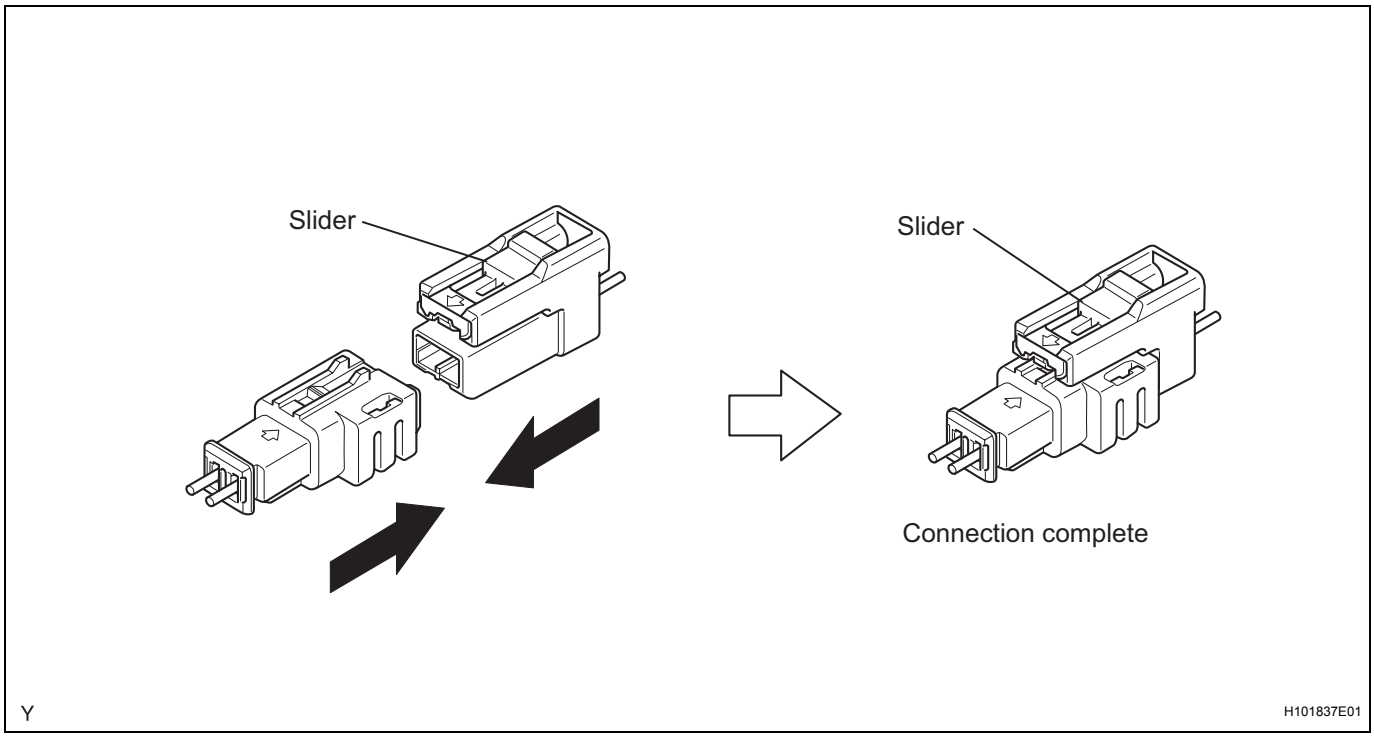

8. DISCONNECTION OF CONNECTORS FOR FRONT SEAT SIDE AIRBAG ASSEMBLY AND REAR SEAT AIRBAG ASSEMBLY

(a) Place a finger on the slider, slide the slider to release the lock, and then disconnect the connector.

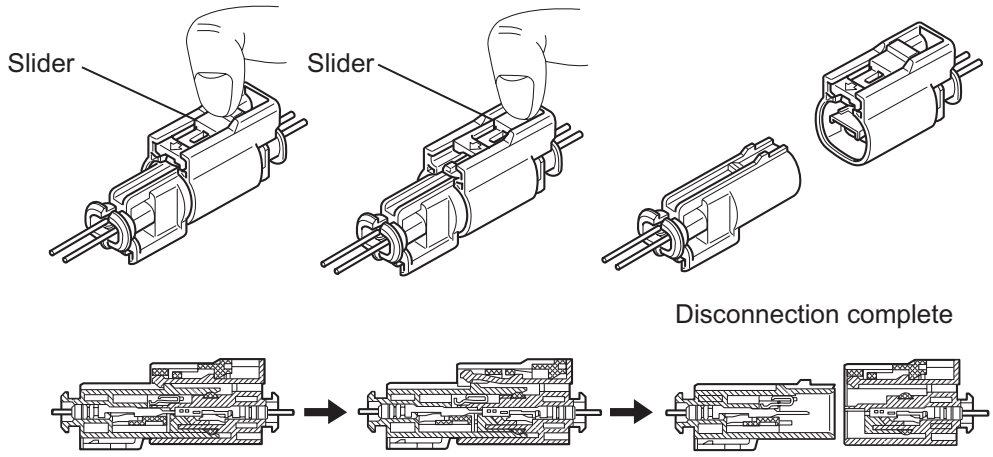

Y H101834E01

9. CONNECTION OF CONNECTORS FOR FRONT SEAT SIDE AIRBAG ASSEMBLY AND REAR SEAT AIRBAG ASSEMBLY

(a) Connect the connector as shown in the illustration. (When locking, make sure that the slider returns to its original position and a click sound can be heard.)
HINT:
When connecting, the slider slides. Do not touch the slider while connecting, as this may result in an insecure fit.

RS

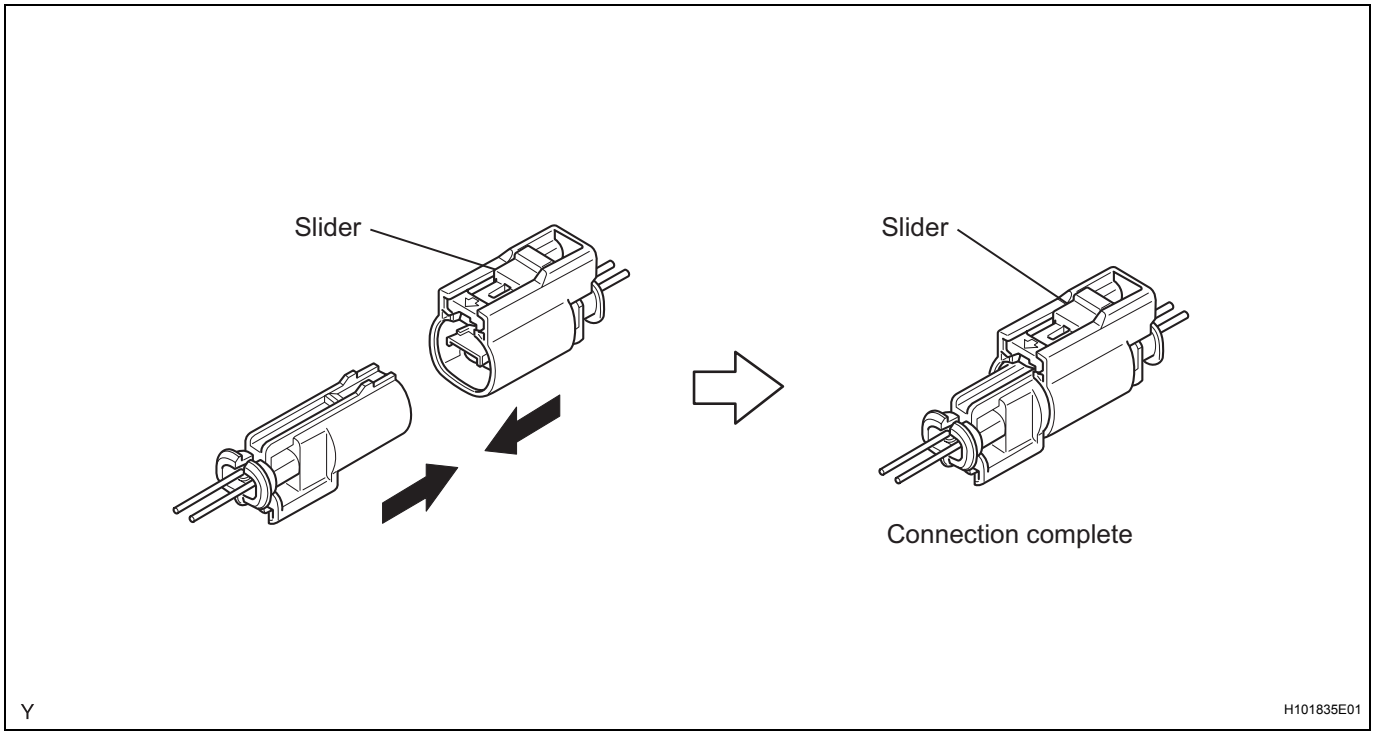

10. DISCONNECTION OF CONNECTORS FOR CENTER AIRBAG SENSOR ASSEMBLY

(a) Pull the lever by pushing part A as shown in the illustration and disconnect the holder (with connectors).

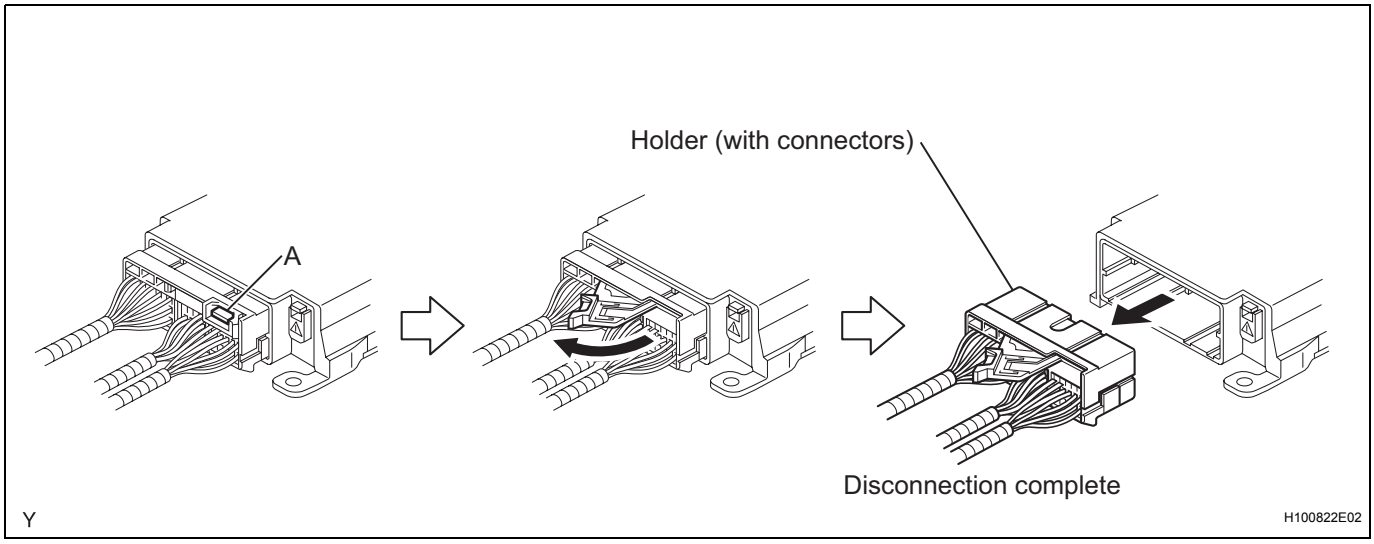

HINT:
Perform the following procedures when replacing the holder.

(b) Remove the holder.
(1) Using a screwdriver, unlock the retainer.

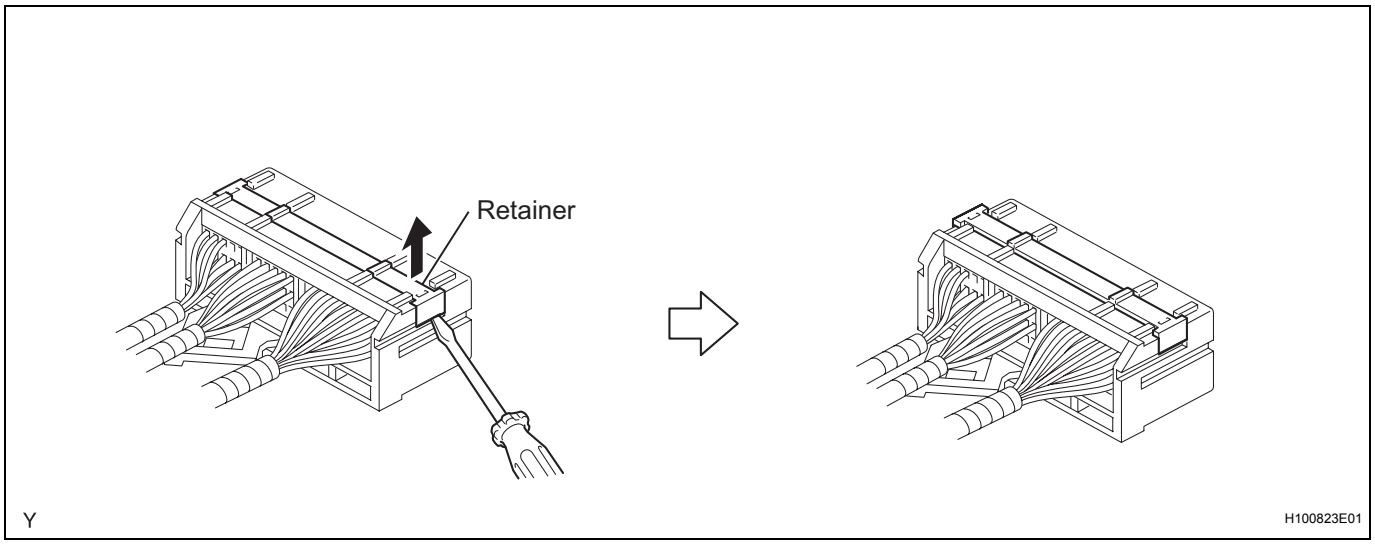

(2) Release the fitting lances and remove the holder.

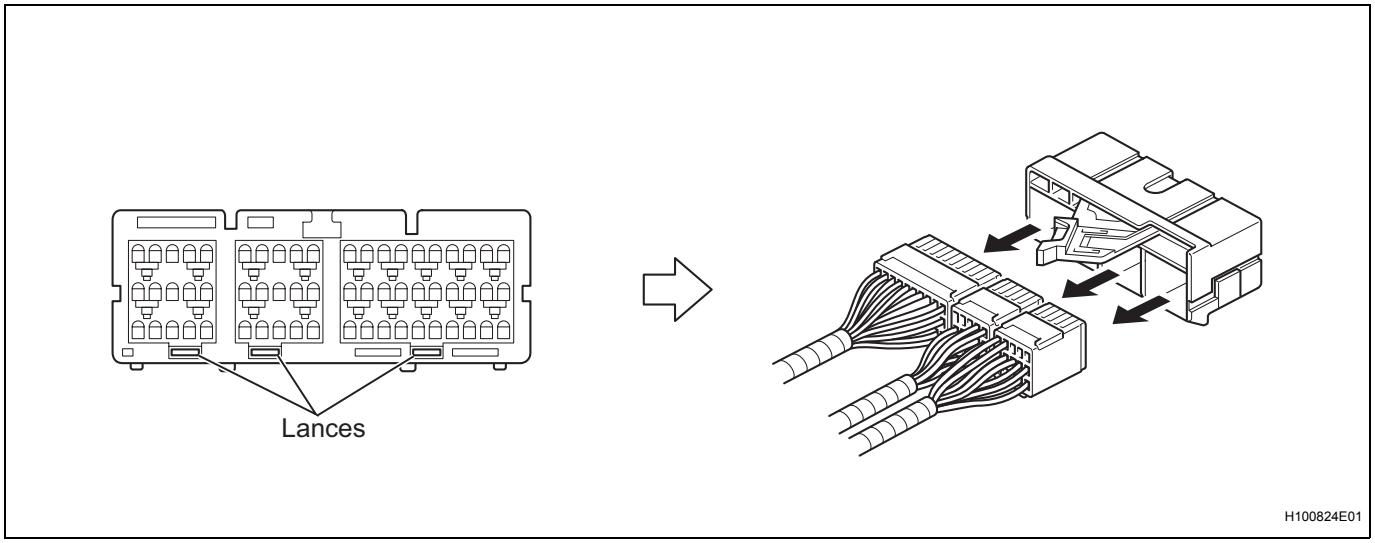

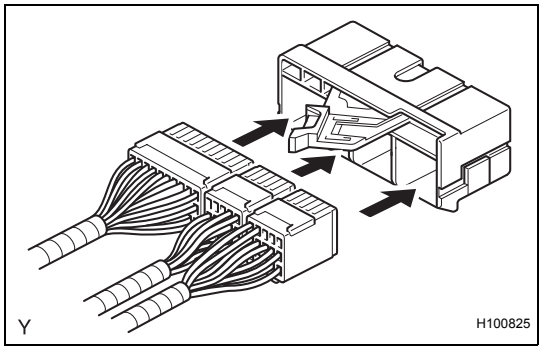

(c) Install the holder.
(1) Install the connectors into the holder. (When locking, a click sound can be heard.)
HINT:
The retainer is locked when the holder is connected.

11. CONNECTION OF CONNECTORS FOR CENTER AIRBAG SENSOR ASSEMBLY

(a) Firmly insert the holder (with connectors) into the center airbag sensor assembly until it cannot be pushed any further.

(b) Push the lever to connect the holder (with connectors). (When locking, a click sound can be heard.)
HINT:
The holder slides into the center airbag sensor assembly when it is being connected. Do not hold the holder while connecting, as it may result in an insecure fit.

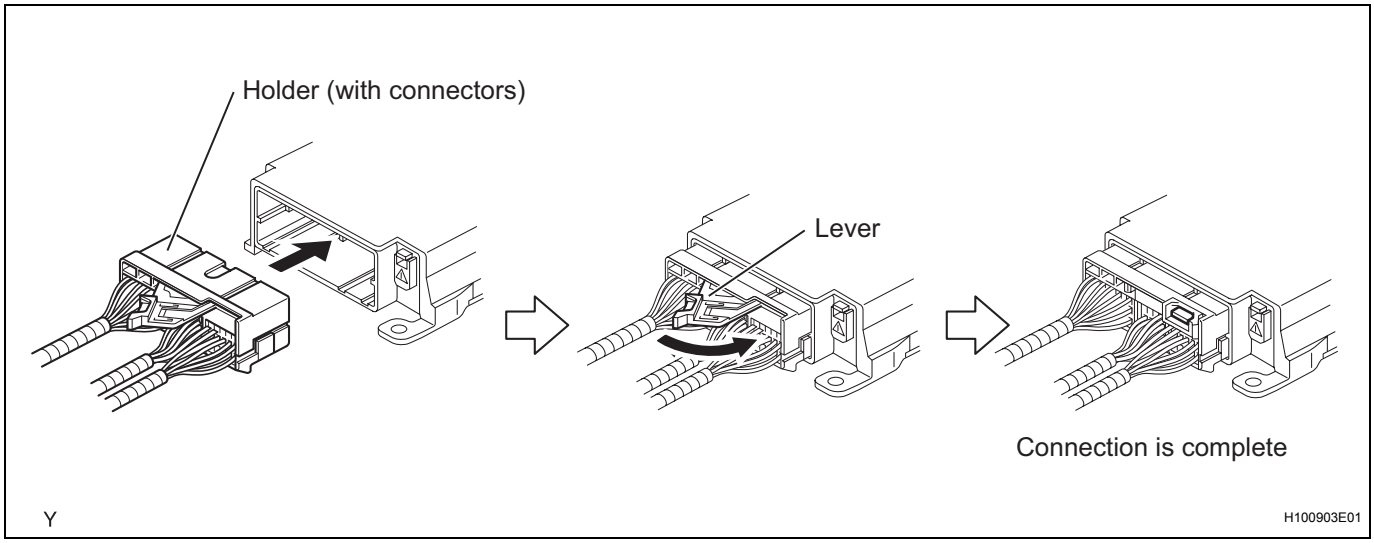

12. DISCONNECTION OF CONNECTORS FOR FRONT AIRBAG SENSOR

(a) Push down the housing lock (white part) and slide the CPA (yellow part). (At this time, the connector cannot be disconnected yet.)

(b) Push down the housing lock (white part) again and disconnect the connector.
HINT:
Do not push down part A shown in the illustration when disconnecting.

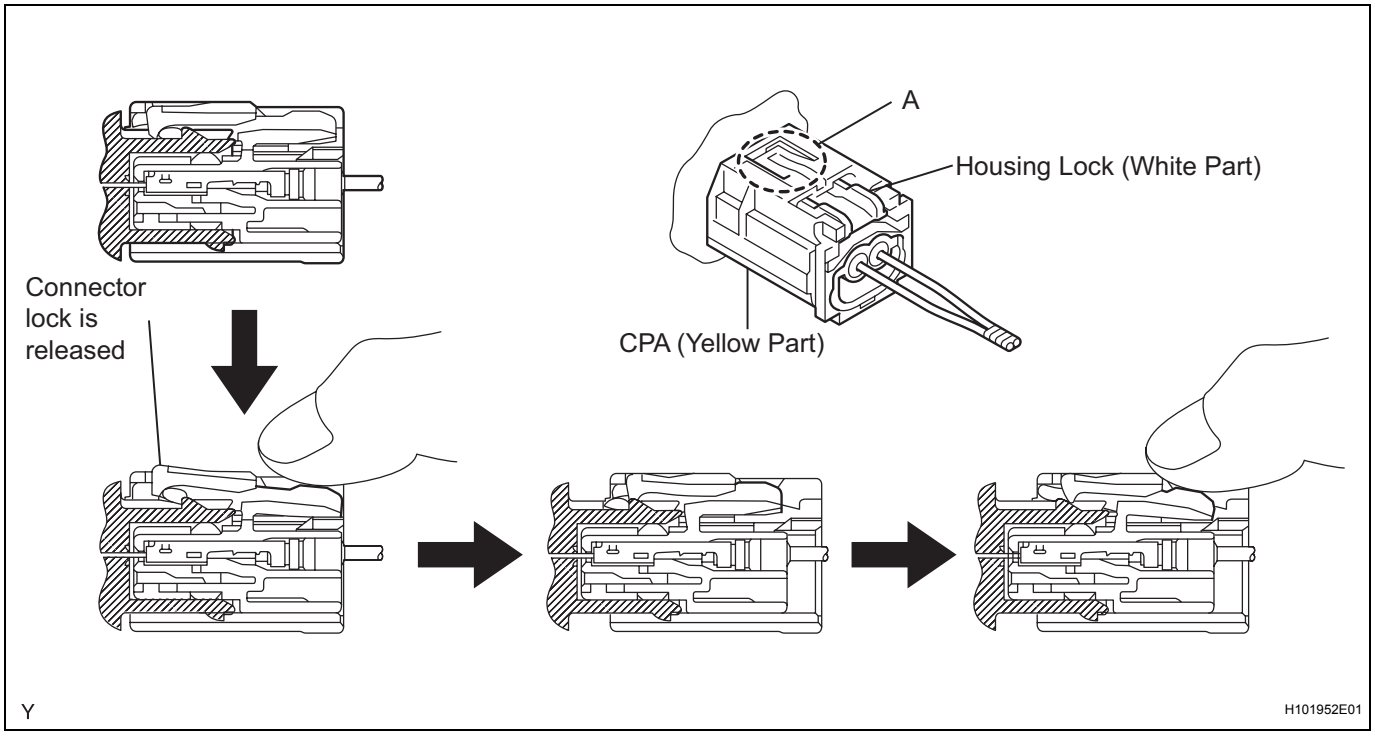

(c) After disconnecting the connector, check that the position of the housing lock (white part) is as shown in the illustration.

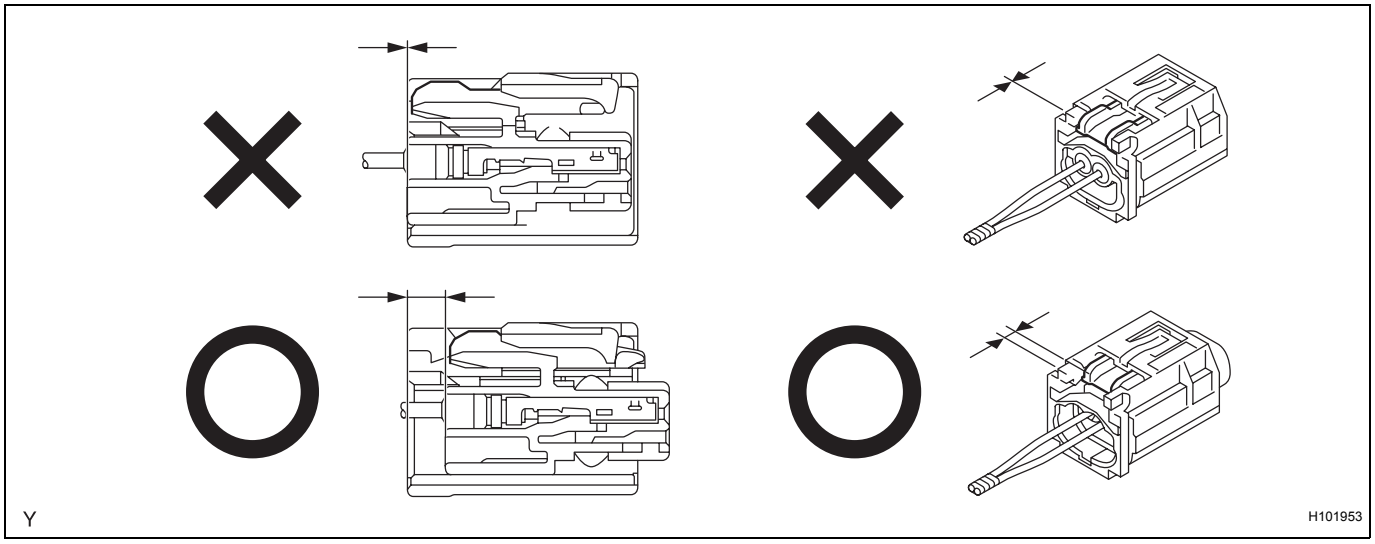

RS

13. CONNECTION OF CONNECTORS FOR FRONT AIRBAG SENSOR

(a) Before connecting the connectors, check that the position of the housing lock (white part) is as shown in the illustration.

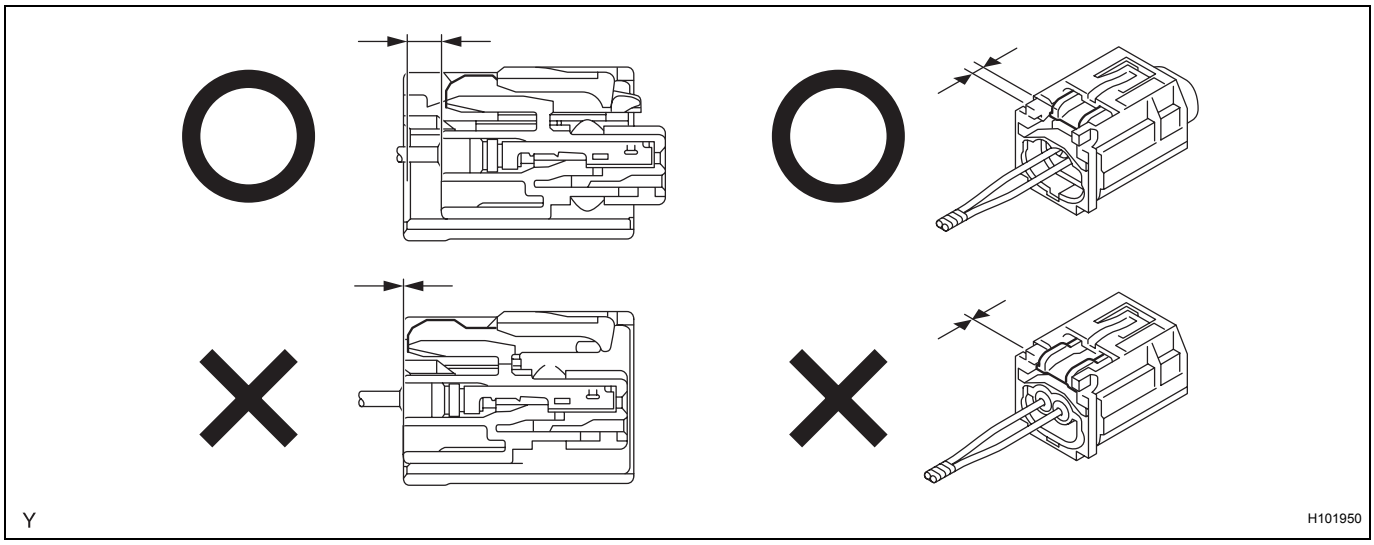

(b) Be sure to engage the connectors until they are locked. (When locking, make sure that a click sound can be heard.)
HINT:
When connecting them, the housing lock (white part) slides. Do not hold the housing lock (white part) and part A, as it may result in an insecure fit.

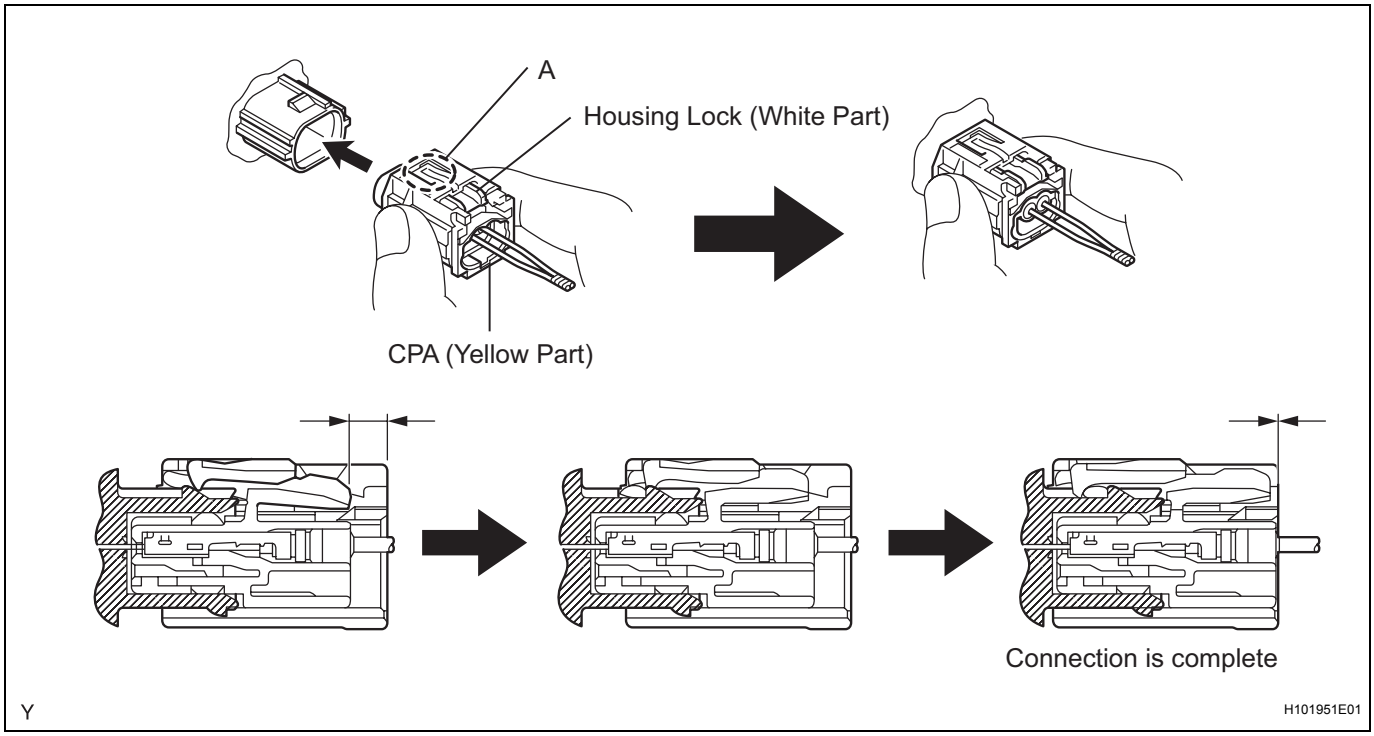

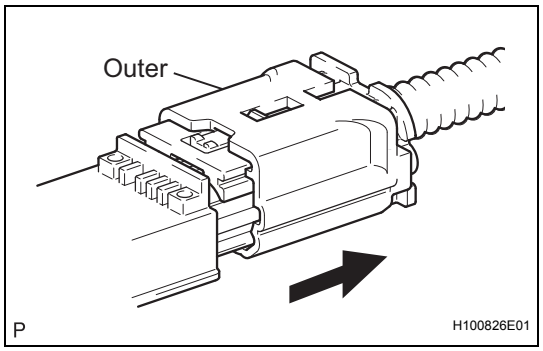

14. DISCONNECTION OF CONNECTORS FOR SIDE AIRBAG SENSOR AND REAR AIRBAG SENSOR

(a) While holding both sides of the outer connector locking sleeve, slide the outer in the direction shown by the arrow.

(b) When the connector lock is released, the connectors are disconnected.
HINT:
Be sure to hold both outer flanks. Holding the top and bottom sides will make disconnection difficult.

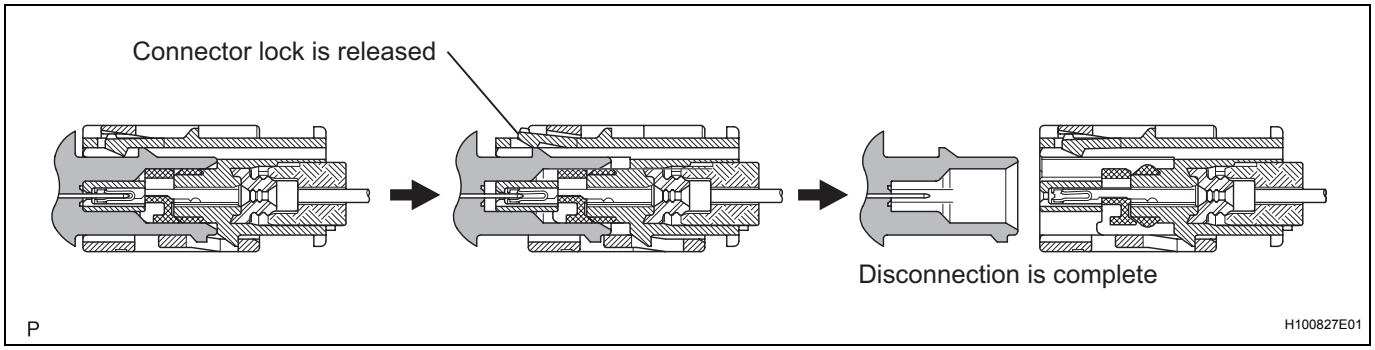

15. CONNECTION OF CONNECTORS FOR SIDE AIRBAG SENSOR AND REAR AIRBAG SENSOR

(a) Connect the connector as shown in the illustration.
(When locking, make sure that the outer returns to its original position and a click sound can be heard)
HINT:
When connecting, the outer slides. Do not hold the outer while connecting, as it may result in an insecure fit.

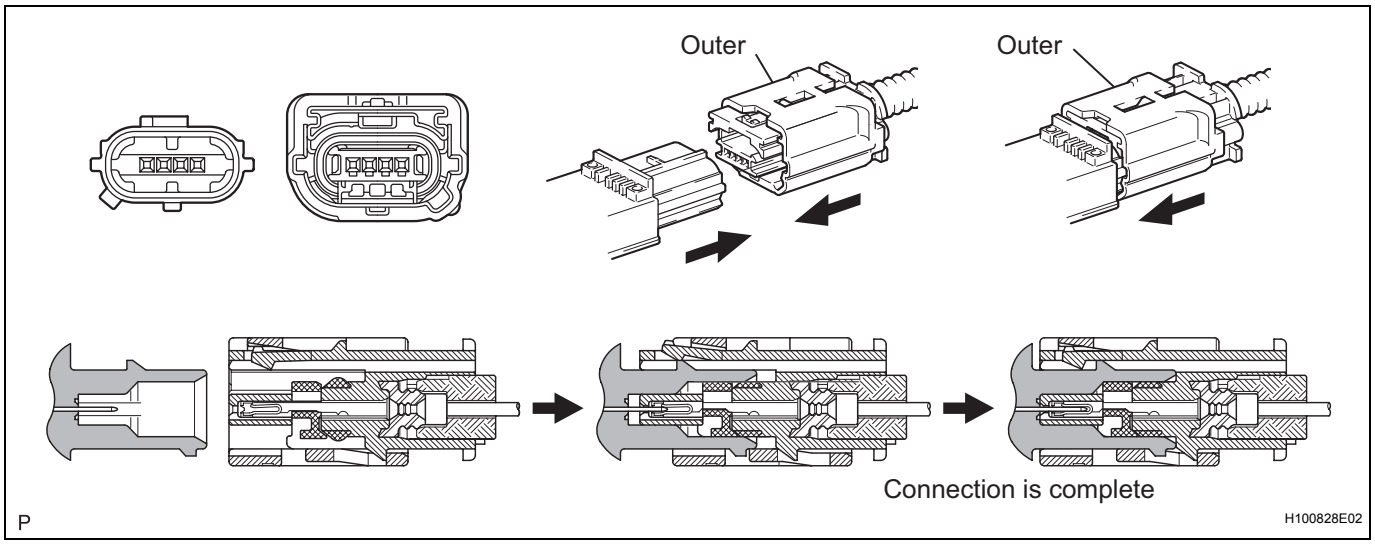

PARTS LOCATION

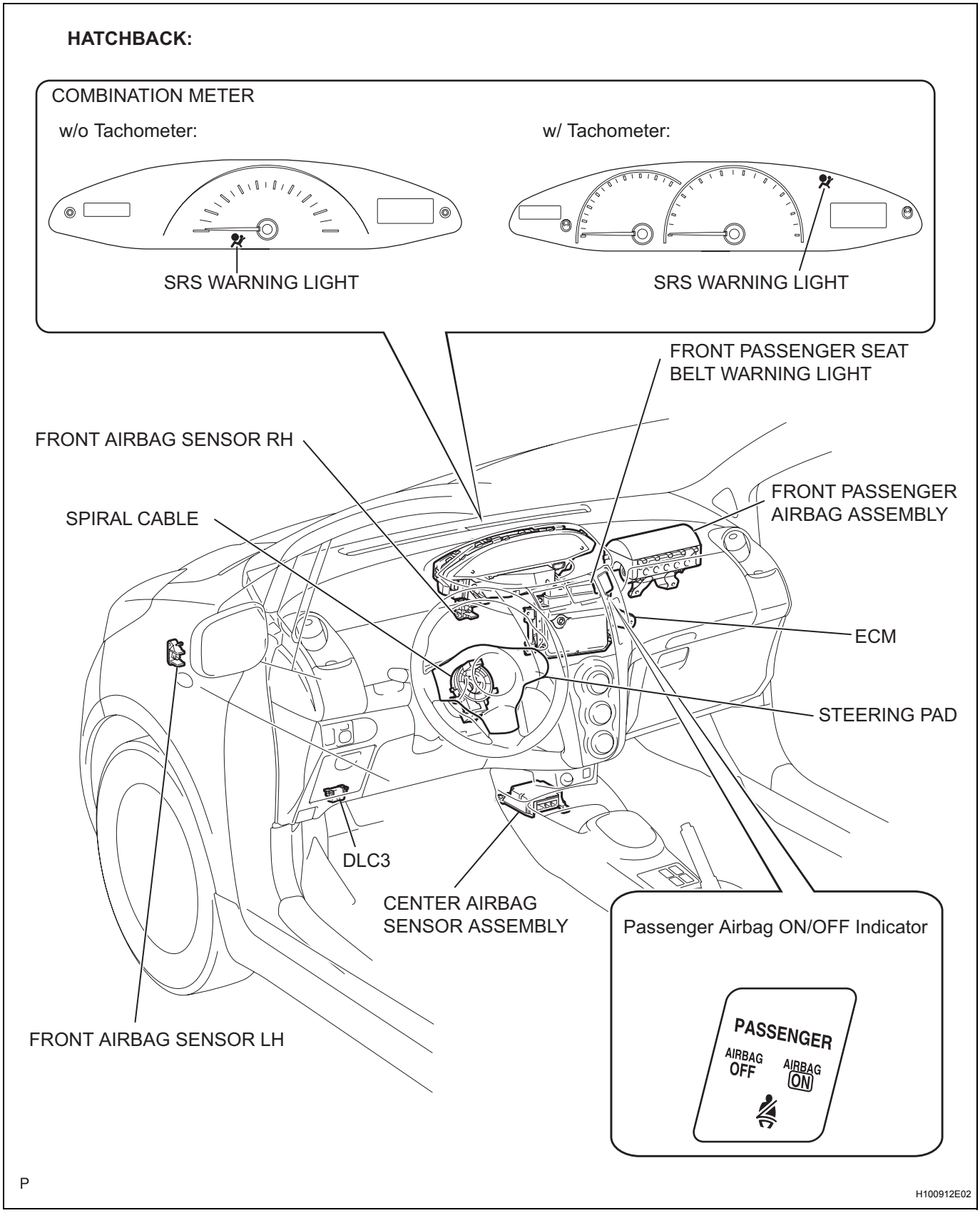

RS

HATCHBACK:

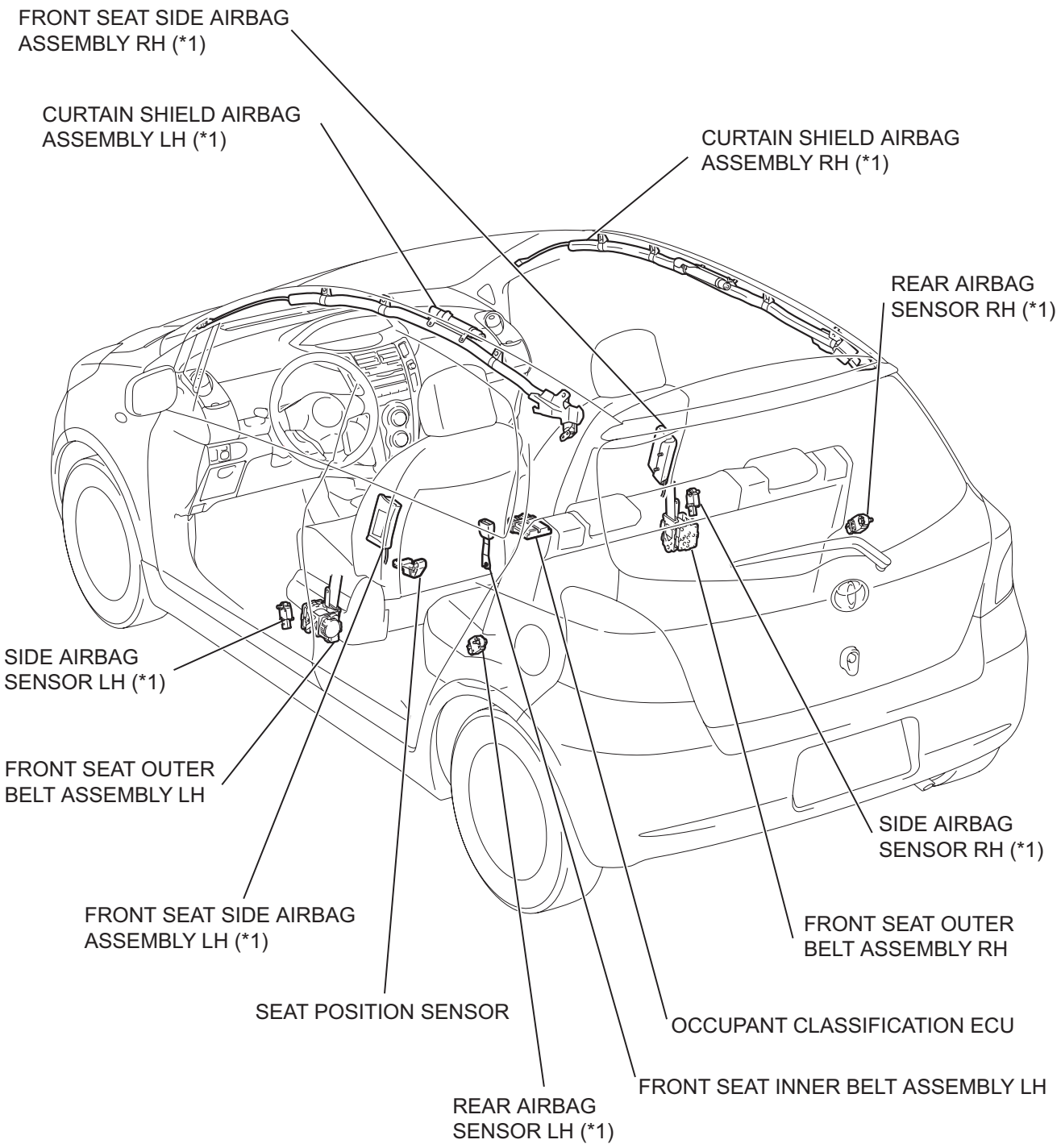

*1: w/ Side Airbag Assembly and Curtain Shield Airbag Assembly

P

C141225E01

RS

SEDAN:

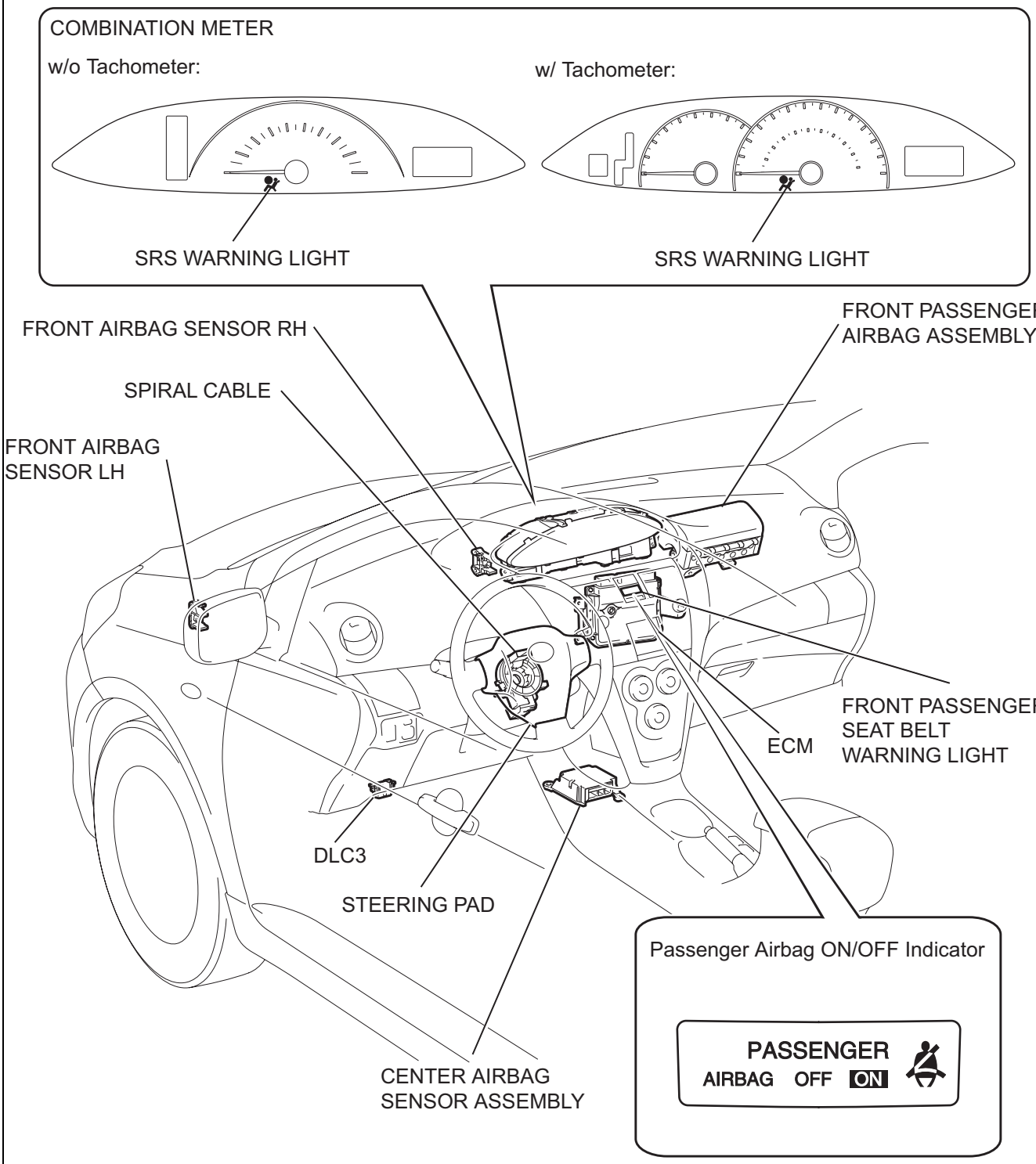

P

H102139E01

SEDAN:

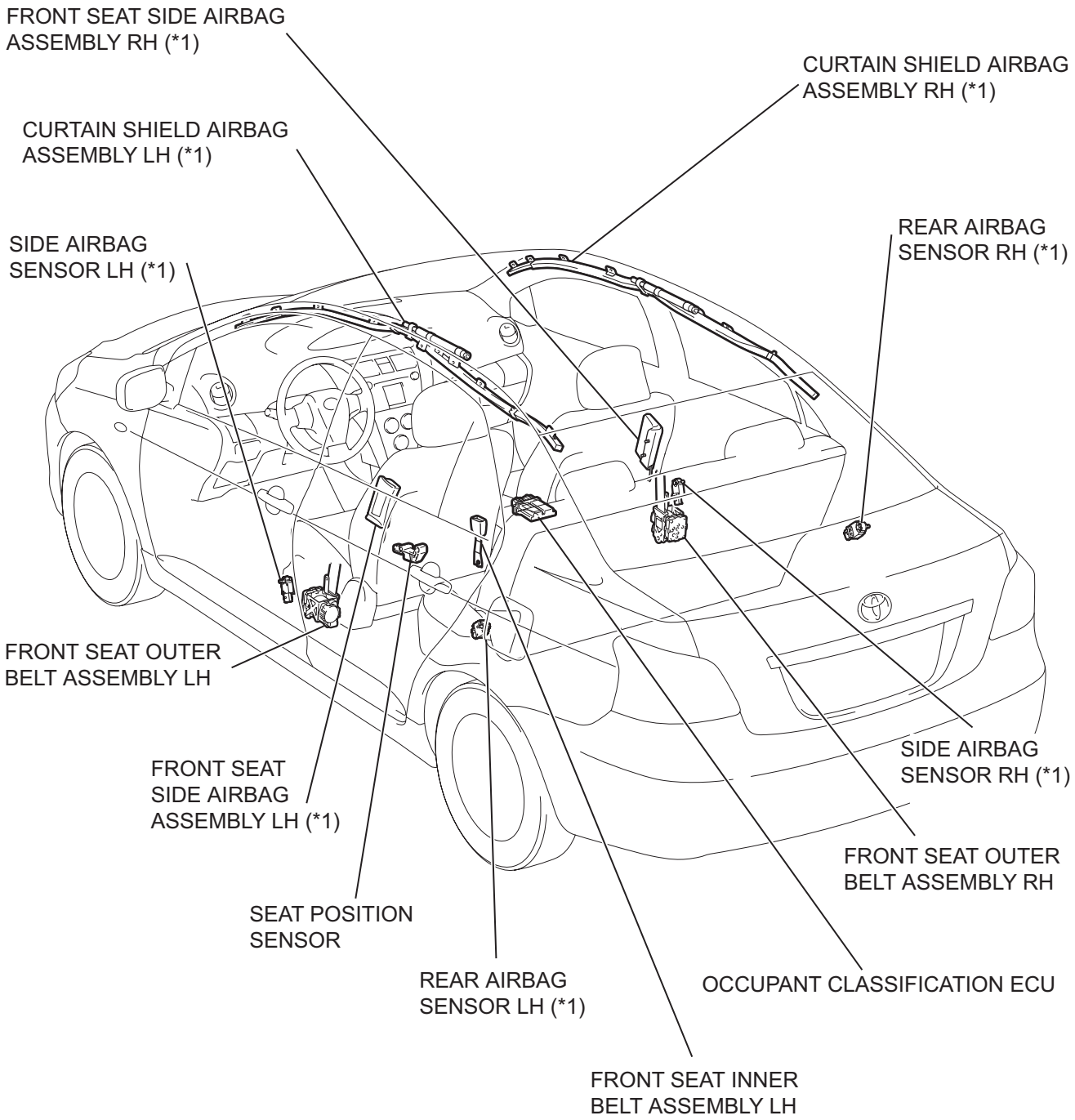

*1: w/ Side Airbag Assenmbly and Curtain Shield Airbag Assembly

P

C141226E02

RS

SYSTEM DIAGRAM

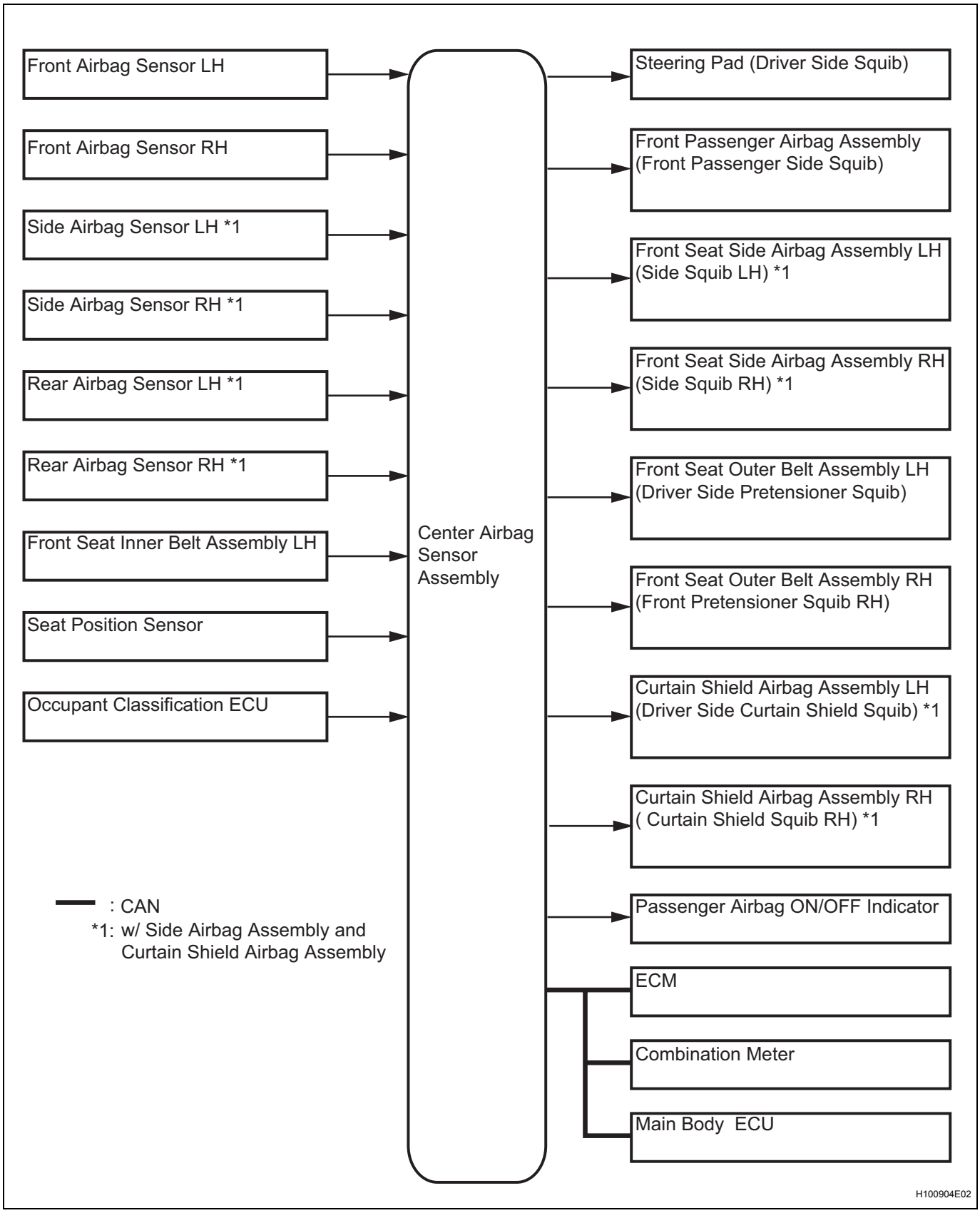

SYSTEM DESCRIPTION

1. GENERAL

(a) Airbag for Frontal Collision

(1) The dual-stage SRS driver and front passenger airbags deploy simultaneously in the event of a frontal impact collision as supplements to the seat belts. The dual-stage SRS airbag system controls the airbag inflation output by judging the extent of the impact, the seat position and whether the seat belt is fastened.

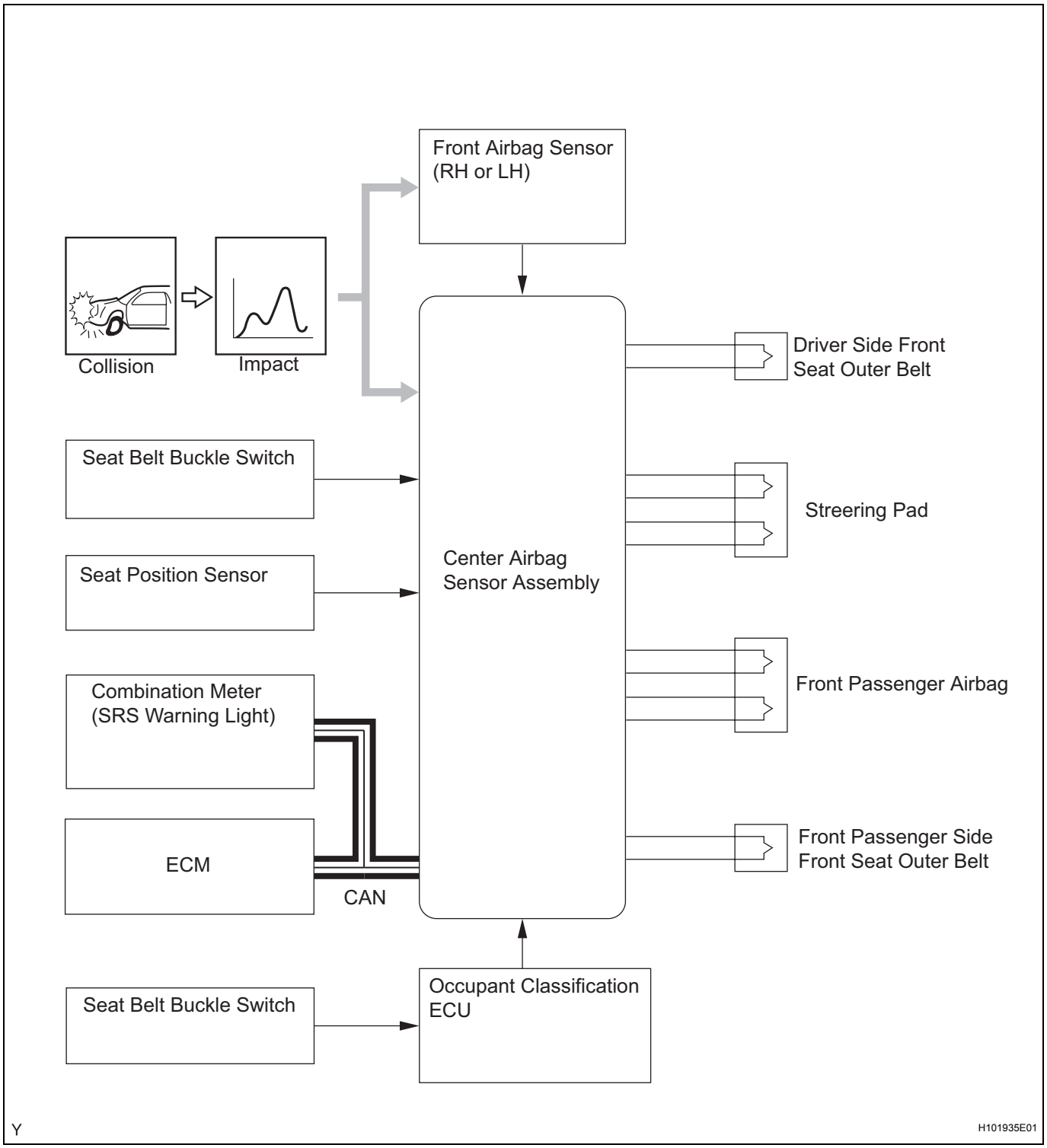

(b) Airbag for Side/Rear Side Collision

(1) SRS side and curtain shield airbags deploy simultaneously in the event of a side collision. Only the curtain shield airbag deploys in the event of a rear side collision.

RS

Airbag for Side Collision :

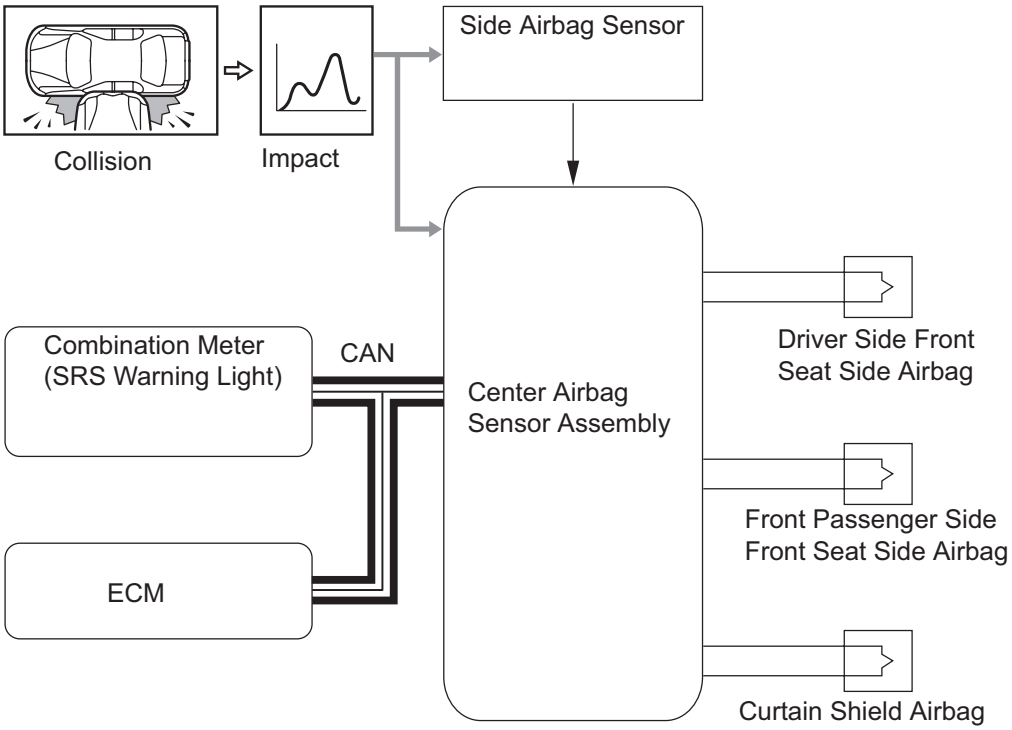

Airbag for Rear Side Collision :

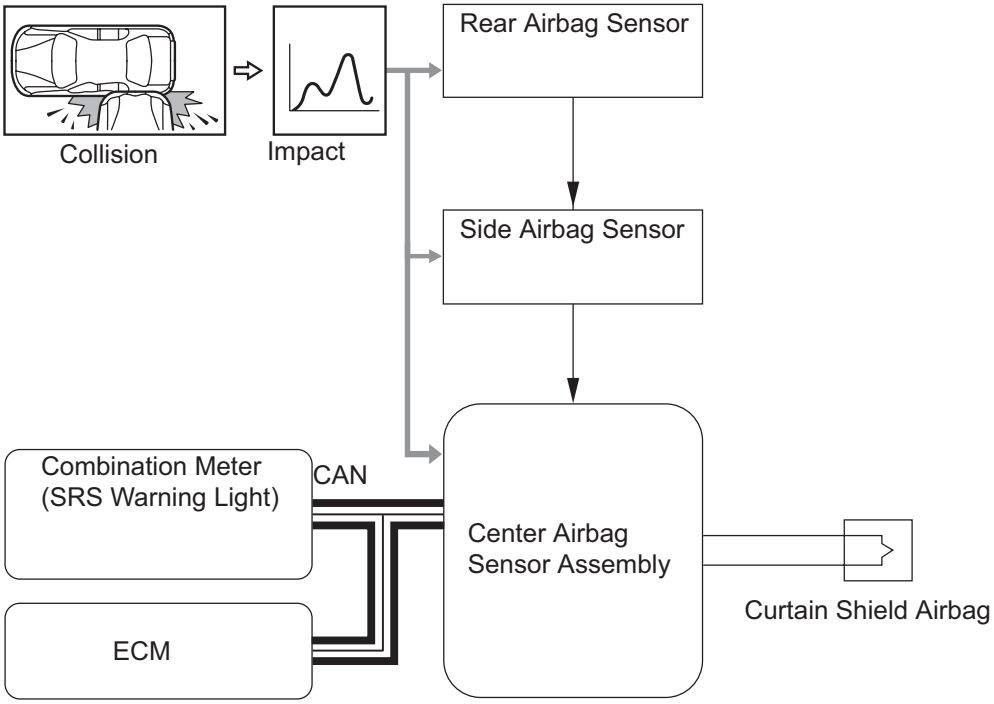

H101946E01

2. MAIN COMPONENTS

Component	Description
SRS Driver & Front Passenger Airbags	Help reduce shocks to heads and chests of driver and front passenger in event of frontal impact collision as supplements to seat belts
Front Airbag Sensor	Converts distortion created in sensor into electrical signal based on deceleration of vehicle during front collision
Seat Belt Buckle Switch	Integrated into front seat inner belt assembly and detects whether seat belt fastened (for driver seat)
Seat Position Sensor	Detects sliding position of seat (for driver seat)
Front Seat Side and Curtain Shield Airbags	Help reduce shocks to heads and chests of driver, front passenger and outer rear passengers in event of side or rear side collision
Side Airbag Sensor and Rear Airbag Sensor	Convert distortion created in sensors into electrical signal based on deceleration of vehicle during side or rear side collision

HOW TO PROCEED WITH TROUBLESHOOTING

1 **VEHICLE BROUGHT TO WORKSHOP**

NEXT

2 **CUSTOMER PROBLEM ANALYSIS (See page IN-26)**

(a) Confirm problem symptoms.

NEXT

3 **CHECK CAN COMMUNICATION SYSTEM (See page CA-22)**

Result	Proceed to
DTCs NOT OUTPUT	A
DTCs OUTPUT	B

B → **CHECK CAN COMMUNICATION CIRCUIT**

A

4 **WARNING LIGHT CHECK (See page RS-31)**

NEXT

5 **DTC CHECK (Present and Past DTCs) (See page RS-38)**

Result	Proceed to
DTCs OUTPUT	A
DTCs NOT OUTPUT	B

B → **PROBLEM SYMPTOMS TABLE**

A

6 **DTC CHART (See page RS-42)**

NEXT

7 **CIRCUIT INSPECTION**

NEXT

RS

8	REPAIR OR REPLACEMENT

NEXT

9	DTC CLEARANCE (Present and Past DTCs) (See page RS-38)

NEXT

10	DTC CHECK (Present and Past DTCs) (See page RS-38)

Result	Proceed to
DTCs NOT OUTPUT	A
DTCs OUTPUT	B

B → Go to step 6

A

END

PROBLEM SYMPTOMS TABLE

Symptom	Suspected area	See page
The SRS warning light goes off after the primary check, but comes on again.	SRS Warning Light Remains ON	RS-196
Approximately 6 seconds after the ignition switch is turned on, the SRS warning light sometimes comes on.	SRS Warning Light Remains ON	RS-196
The SRS warning light always comes on even when no DTSs are output.	SRS Warning Light Remains ON	RS-196
With the ignition switch on, the SRS warning light does not come on.	SRS Warning Light does not Come On	RS-202
Although the SRS warning light operates normally, DTC or a normal system code is not displayed.	TC and CG Terminal Circuit	RS-205
Although terminals TC and CG of the DLC3 are not connected, a DTC or a normal system code is displayed.	TC and CG Terminal Circuit	RS-205

TERMINALS OF ECU

Center Airbag Sensor Assembly:

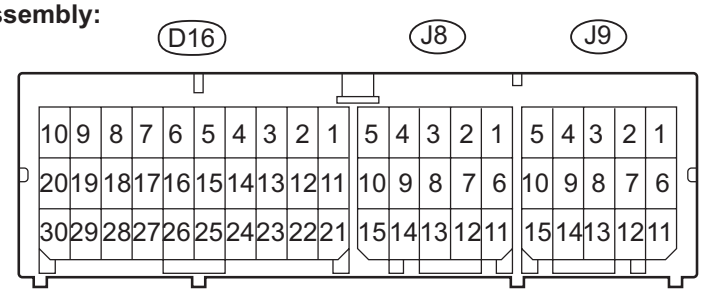

H

C108107E05

Terminal No.	Terminal Symbol	Destination
D16-1	P2+	Front passenger airbag (Front passenger side squib 2nd step)
D16-2	P2-	Front passenger airbag (Front passenger side squib 2nd step)
D16-3	P-	Front passenger airbag (Front passenger side squib)
D16-4	P+	Front passenger airbag (Front passenger side squib)
D16-5	D+	Steering pad (Driver side squib)
D16-6	D-	Steering pad (Driver side squib)
D16-7	D2-	Steering pad (Driver side squib 2nd step)
D16-8	D2+	Steering pad (Driver side squib 2nd step)
D16-13	CANH	CAN
D16-16	SIL	DLC3
D16-17	P-AB	Front passenger seat belt warning light (Passenger airbag ON/OFF indicator)
D16-21	IG2	IGN fuse
D16-22	CANL	CAN
D16-23	PAON	Front passenger seat belt warning light (Passenger airbag ON/OFF indicator)
D16-25	E1	Ground
D16-26	E2	Ground
D16-27	-SR	Front airbag sensor RH
D16-28	-SL	Front airbag sensor LH
D16-29	+SR	Front airbag sensor RH
D16-30	+SL	Front airbag sensor LH
J8-1	PD-	Front seat outer belt assembly LH (Driver side pretensioner squib)
J8-2	PD+	Front seat outer belt assembly LH (Driver side pretensioner squib)
J8-3	ED	Shield
J8-6	ICD-	Curtain shield airbag assembly LH (Driver side curtain shield squib)
J8-7	ICD+	Curtain shield airbag assembly LH (Driver side curtain shield squib)
J8-8	BBD+	Side airbag sensor LH
J8-9	SFD+	Front seat side airbag assembly LH (Side squib LH)
J8-10	SFD-	Front seat side airbag assembly LH (Side squib LH)
J8-11	DBE+	Front seat inner belt assembly LH
J8-12	DBE-	Front seat inner belt assembly LH
J8-13	DSP-	Seat position sensor
J8-14	DSP+	Seat position sensor
J8-15	BBD-	Side airbag sensor LH
J9-4	PP+	Front seat outer belt assembly RH (Front passenger side pretensioner squib RH)
J9-5	PP-	Front seat outer belt assembly RH (Front passenger side pretensioner squib RH)
J9-6	SFP-	Front seat side airbag assembly RH (Side squib RH)
J9-7	SFP+	Front seat side airbag assembly RH (Side squib RH)

Terminal No.	Terminal Symbol	Destination
J9-8	BBP+	Side airbag sensor RH
J9-9	ICP+	Curtain shield airbag assembly RH (Curtain shield squib RH)
J9-10	ICP-	Curtain shield airbag assembly RH (Curtain shield squib RH)
J9-11	BBP-	Side airbag sensor RH
J9-12	FSP+	Occupant Classification ECU
J9-13	FSP-	Occupant Classification ECU

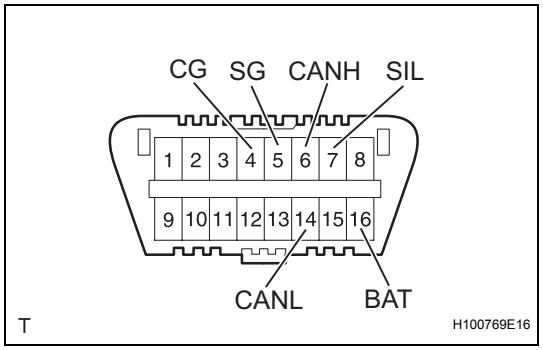

DIAGNOSIS SYSTEM

1. CHECK DLC3

(a) The ECU uses ISO 15765-4 for communication. The terminal arrangement of the DLC3 complies with SAE J1962 and matches the ISO 15765-4 format.

Symbols (Terminal No.)	Terminal Description	Condition	Specified Condition
SIL (7) - SG (5)	Bus "+" line	During transmission	Pulse generation
CG (4) - Body ground	Chassis ground	Always	Below 1 Ω
SG (5) - Body ground	Signal ground	Always	Below 1 Ω
BAT (16) - Body ground	Battery positive	Always	11 to 14 V
CANH (6) - CANL (14)	CAN bus line	Ignition switch OFF*	54 to 69 Ω
CANH (6) - CG (4)	HIGH-level CAN bus line	Ignition switch OFF*	200 Ω or higher
CANL (14) - CG (4)	LOW-level CAN bus line	Ignition switch OFF*	200 Ω or higher
CANH (6) - BAT (16)	HIGH-level CAN bus line	Ignition switch OFF*	6 kΩ or higher
CANL (14) - BAT (16)	LOW-level CAN bus line	Ignition switch OFF*	6 kΩ or higher

NOTICE:

***: Before measuring the resistance, leave the vehicle as is for at least 1 minute and do not operate the ignition switch, any other switches or the doors.**

If the result is not as specified, the DLC3 may have a malfunction. Repair or replace the harness and connector.

HINT:

Connect the cable of the intelligent tester to the CAN VIM, connect the CAN VIM to the DLC3, turn the ignition switch ON and attempt to use the tester. If the display indicates that a communication error has occurred, there is a problem either with the vehicle or with the tester.

- If communication is normal when the tester is connected to another vehicle, inspect the DLC3 of the original vehicle.
- If communication is still not possible when the tester is connected to another vehicle, the problem is probably in the tester itself. Consult the Service Department listed in the tester's instruction manual.

RS

2. SYMPTOM SIMULATION

HINT:
The most difficult case in troubleshooting is when no symptoms occur. In such cases, a thorough customer problem analysis must be carried out. Then the same or similar conditions and environment in which the problem occurred in the customer's vehicle should be simulated. No matter how experienced or skilled a technician may be, if he proceeds to troubleshoot without confirming the problem symptoms, he will likely overlook something important and make a wrong guess at some points in the repair operation.
This leads to a standstill in troubleshooting.

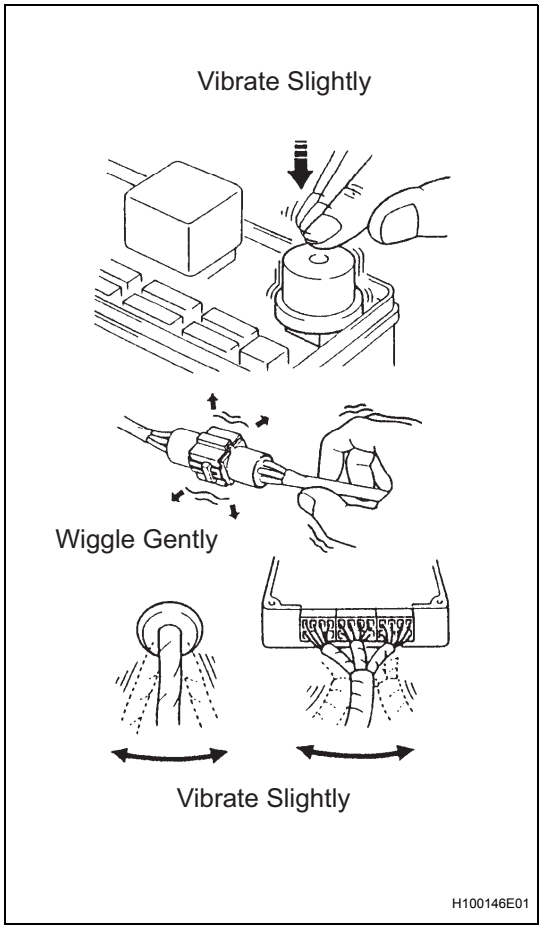

(a) Simulation method: When vibration seems to be the major cause
HINT:
Perform this method only during the primary check period (for approximately 6 seconds after the ignition switch is turned to the on position).
(1) Use your finger to slightly vibrate the part of the sensor considered to be the problem cause, and check whether the malfunction recurs.
HINT:
Wiggling the relays too strongly may result in open relays.
(2) Gently wiggle the connector.
(3) Slightly shake the wire harness vertically and horizontally.
The connector joint and fulcrum of the vibration are the major areas to be checked thoroughly.

3. FUNCTION OF SRS WARNING LIGHT

(a) Primary check
(1) Turn the ignition switch to the lock position. Wait for at least 2 seconds, then turn the ignition switch to the on position. The SRS warning light comes on for approximately 6 seconds and the SRS airbag system diagnosis (including the seat belt pretensioner) is performed.
HINT:
If any malfunctions are detected during the primary check, the SRS warning light remains on even after the primary check period has elapsed.

(b) Constant check
(1) After the primary check, the center airbag sensor assembly constantly monitors the SRS airbag system for trouble.
HINT:
If any malfunctions are detected during the constant check, the center airbag sensor assembly functions as follows:
- The SRS warning light comes on.

- The SRS warning light goes off, and then comes on again. This blinking pattern indicates a source voltage drop. The SRS warning light goes off 10 seconds after the source voltage returns to normal.

(c) Review

(1) When the airbag system is normal:
The SRS warning light comes on only during the primary check period (for approximately 6 seconds after the ignition switch is turned to the on position).

(2) When the airbag system malfunctions:
- The SRS warning light blinks after the primary check period has elapsed.
- The SRS warning light goes off after the primary check, but comes on again during the constant check.
- The SRS warning light remains off even after the ignition switch is turned from lock to on. However, if malfunctions such as an open circuit have occurred in the wire harness between the meter and ECU, the warning light comes on 10 seconds after the ignition switch is turned on.

HINT:
The center airbag sensor assembly keeps the SRS warning light on if any malfunctions have been detected in the airbag system.

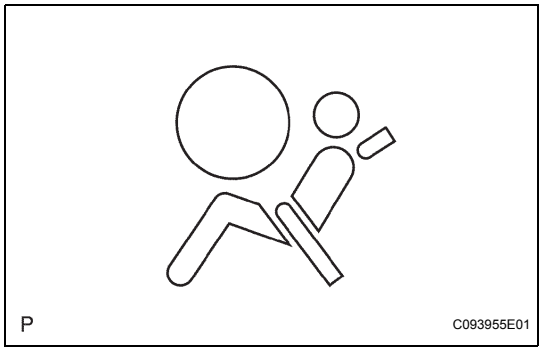

4. SRS WARNING LIGHT CHECK

(a) Turn the ignition switch to the on position, and check that the SRS warning light comes on for approximately 6 seconds (primary check).

(b) Check that the SRS warning light goes off approximately 6 seconds after the ignition switch is turned to the on position (constant check).
HINT:
When any of the following symptoms occur, refer to the Problem Symptoms Table (See page RS-29).
- The SRS warning light comes on occasionally, after the primary check period has elapsed.
- Even when the SRS warning light comes on, no DTCs are set.
- Even when the ignition switch is turned from the lock to on position, the SRS warning light remains off.

5. ACTIVATION PREVENTION MECHANISM

(a) FUNCTION OF ACTIVATION PREVENTION MECHANISM

(1) An activation prevention mechanism is built into the connector (on the center airbag sensor assembly side) of the airbag system squib circuit to prevent accidental airbag activation.

(2) This mechanism closes the circuit when the connector is disconnected by bringing the short spring into contact with the terminals and shutting off external electricity to prevent accidental airbag activation.

(b) RELEASE METHOD OF ACTIVATION PREVENTION MECHANISM

(1) To release the activation prevention mechanism, insert a piece of paper with the same thickness as the male terminal (approximately 0.5 mm [0.020 in.]) between the terminals and the short spring to break the connection.

(2) Refer to the illustrations on the next 3 pages concerning connectors to utilize the activation prevention mechanism and its release method.

CAUTION:

Never release the activation prevention mechanism on the squib connector even when inspecting with the squib disconnected.

NOTICE:

- **Do not release the activation prevention mechanism unless specifically directed by the troubleshooting procedure.**
- **To prevent the terminal and the short spring from being damaged, always use a piece of paper that is the same thickness as the male terminal.**

RS

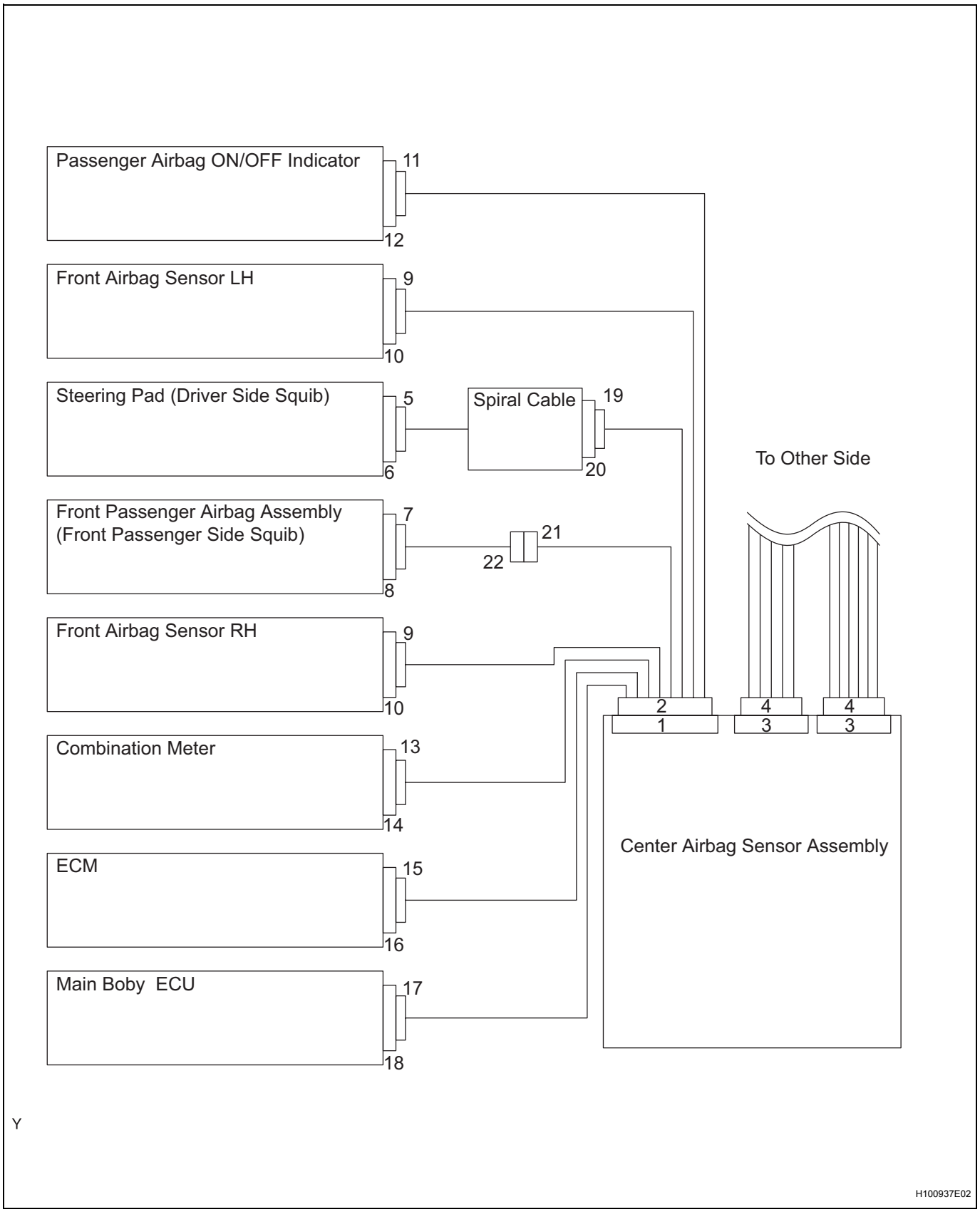
Passenger Airbag ON/OFF Indicator
11
12
Front Airbag Sensor LH
9
10
Steering Pad (Driver Side Squib)
5
6
Spiral Cable
19
20
To Other Side
Front Passenger Airbag Assembly
(Front Passenger Side Squib)
7
8
21
22
Front Airbag Sensor RH
9
10
2
1
4
3
4
3
Combination Meter
13
14
Center Airbag Sensor Assembly
ECM
15
16
Main Boby ECU
17
18
Y
H100937E02

RS

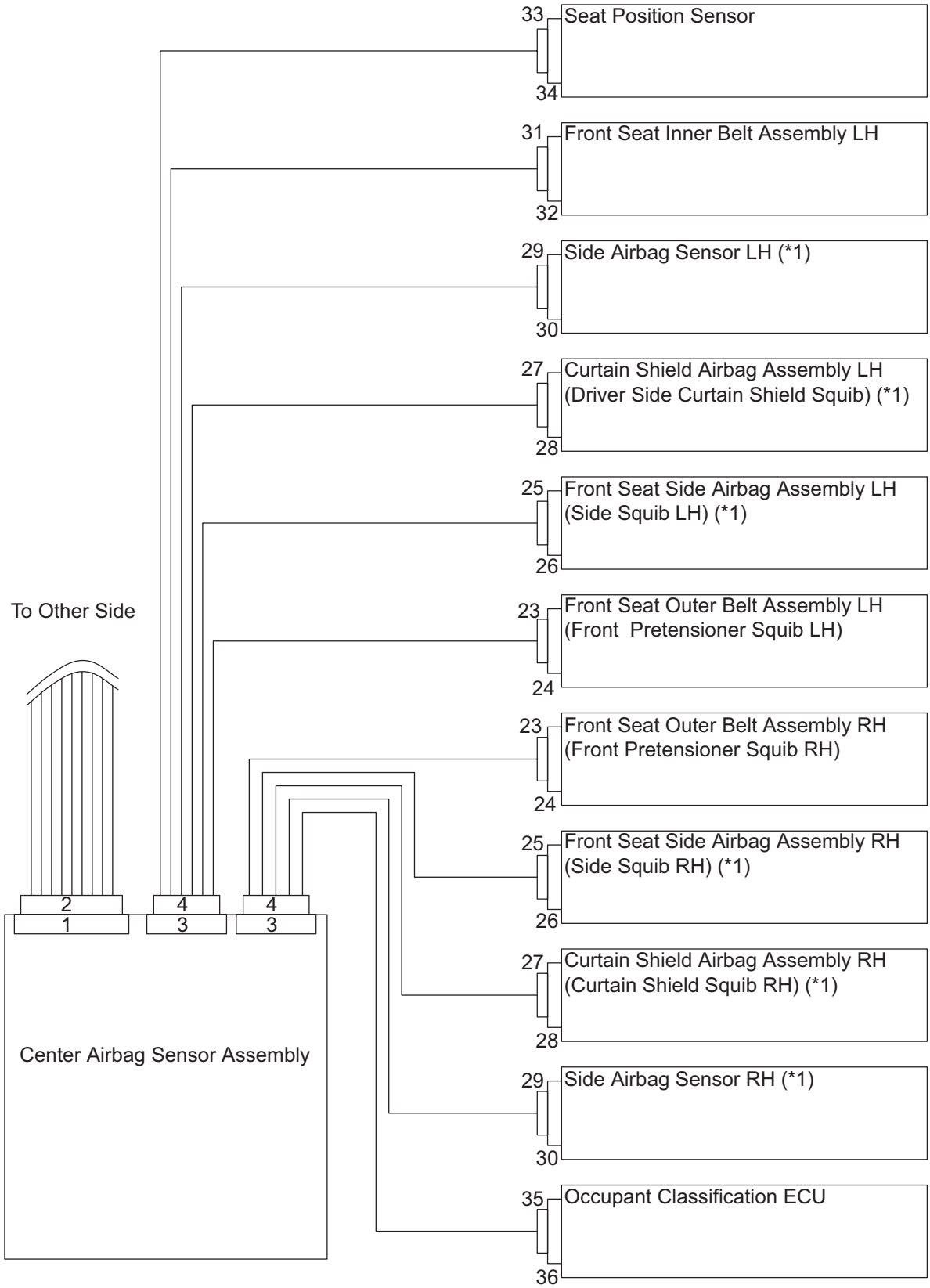

*1: w/ Side Airbag Assembly and Curtain Shield Airbag Assembly

Y

H100938E02

RS

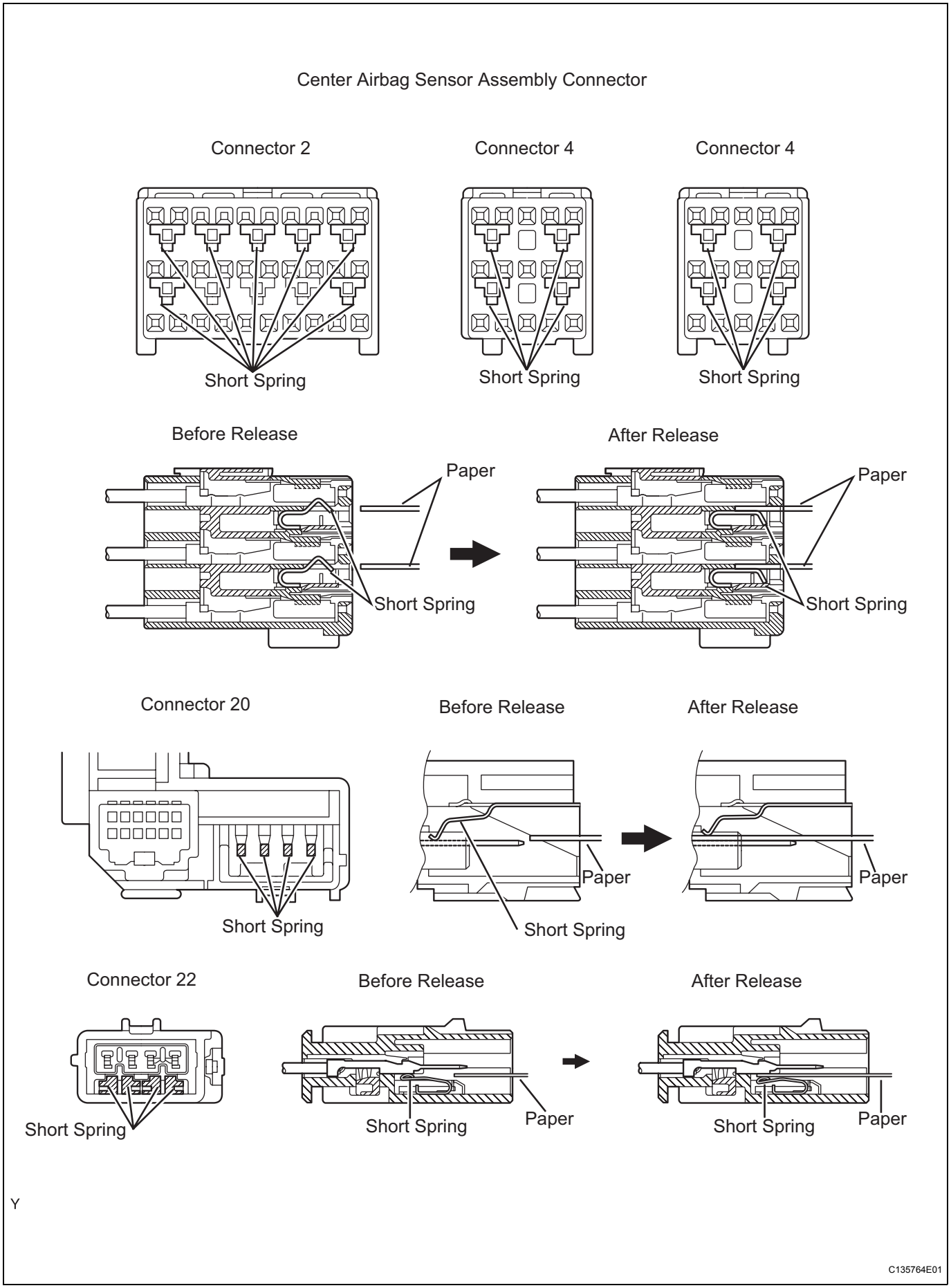
Center Airbag Sensor Assembly Connector
Connector 2
Connector 4
Connector 4
Short Spring
Short Spring
Short Spring
Before Release
After Release
Paper
Short Spring
Paper
Short Spring
Connector 20
Before Release
After Release
Short Spring
Paper
Short Spring
Paper
Connector 22
Before Release
After Release
Short Spring
Short Spring
Paper
Short Spring
Paper
Y
C135764E01

RS

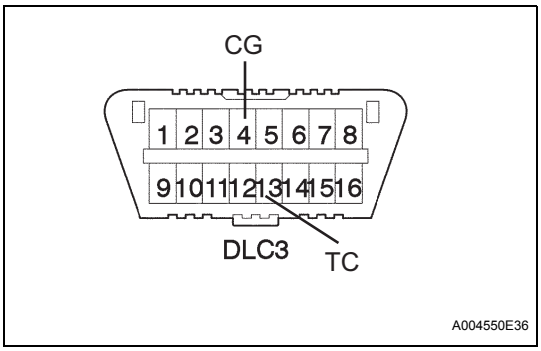

DTC CHECK / CLEAR

1. DTC CHECK (USING SST CHECK WIRE)

(a) Check for DTCs (Present DTC).

(1) Turn the ignition switch on, and wait for approximately 60 seconds.

(2) Using SST, connect terminals TC and CG of the DLC3.

SST 09843-18040

NOTICE:

Connect the terminals to the correct positions to avoid a malfunction.

(b) Check for DTCs (Past DTC).

(1) Using SST, connect terminals TC and CG of the DLC3.

SST 09843-18040

NOTICE:

Connect the terminals to the correct positions to avoid a malfunction.

(2) Turn the ignition switch on, and wait for approximately 60 seconds.

(c) Read the DTCs.

(1) Read the blinking patterns of the DTCs. As examples, the blinking patterns for the normal system code and DTCs 11 and 31 are shown in the illustration on the left.

- Normal system code indication (w/o past DTC)
  The light blinks twice per second.
- Normal system code indication (w/ past DTC)
  When the past DTC is stored in the center airbag sensor assembly, the light blinks once per second.
- DTC indication
  The first blinking pattern indicates the first digit DTC. The second blinking pattern occurs after a 1.5-second pause.

If there are two or more DTCs, there is a 2.5-second pause between each DTC. After all DTCs are shown, there is a 4.0-second pause, and they are all repeated.

HINT:

- If 2 or more malfunctions are found, the indication begins with the lowest numbered DTC.
- If DTCs are indicated without connecting the terminals, proceed to the "TC and CG Terminal Circuit" on page (See page RS-205).

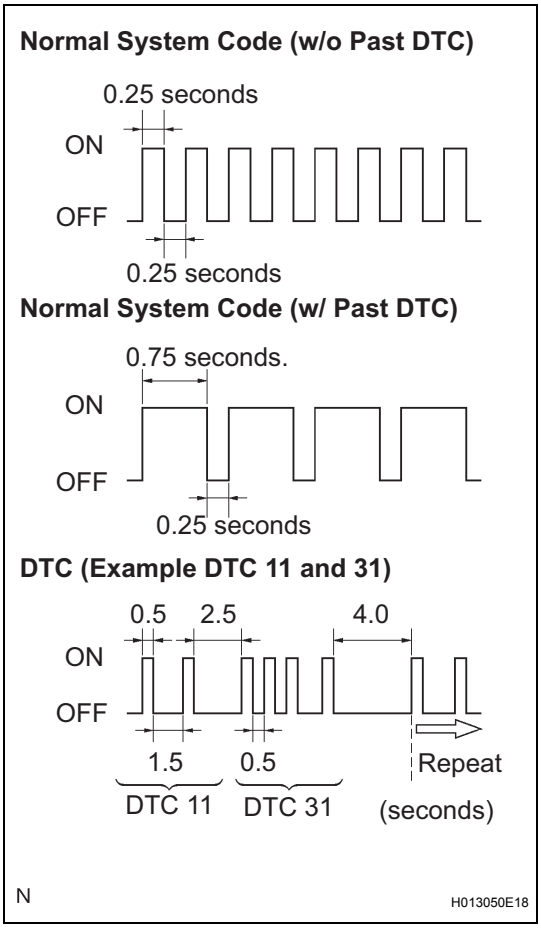

2. DTC CLEAR (USING SST CHECK WIRE)

(a) Clear the DTCs.

(1) When the ignition switch is turned off (turned to the lock position), the DTCs are cleared.
HINT:
Depending on the DTCs, the DTCs may not all be cleared by turning off the ignition switch. In this case, proceed to the next operation.

(2) Using SST, connect terminals TC and CG of the DLC3, and then turn the ignition switch on.
SST 09843-18040

(3) Disconnect terminal TC of the DLC3 within 3 to 10 seconds after the DTCs are output, and check that the SRS warning light comes on after 3 seconds.

(4) Within 2 to 4 seconds of the SRS warning light coming on, connect terminals TC and CG of the DLC3.

(5) The SRS warning light goes off within 2 to 4 seconds of connecting terminals TC and CG of the DLC3. Then, disconnect terminal TC within 2 to 4 seconds of the SRS warning light going off.

(6) The SRS warning light comes on again within 2 to 4 seconds of disconnecting terminal TC. Then, reconnect terminals TC and CG within 2 to 4 seconds of the SRS warning light coming on.

RS

(7) Check that the SRS warning light goes off within 2 to 4 seconds of connecting terminals TC and CG of the DLC3. Also check that the normal system code is output within 1 second of the SRS warning light going off.
If DTCs are not cleared, repeat these procedure until the DTCs are cleared.

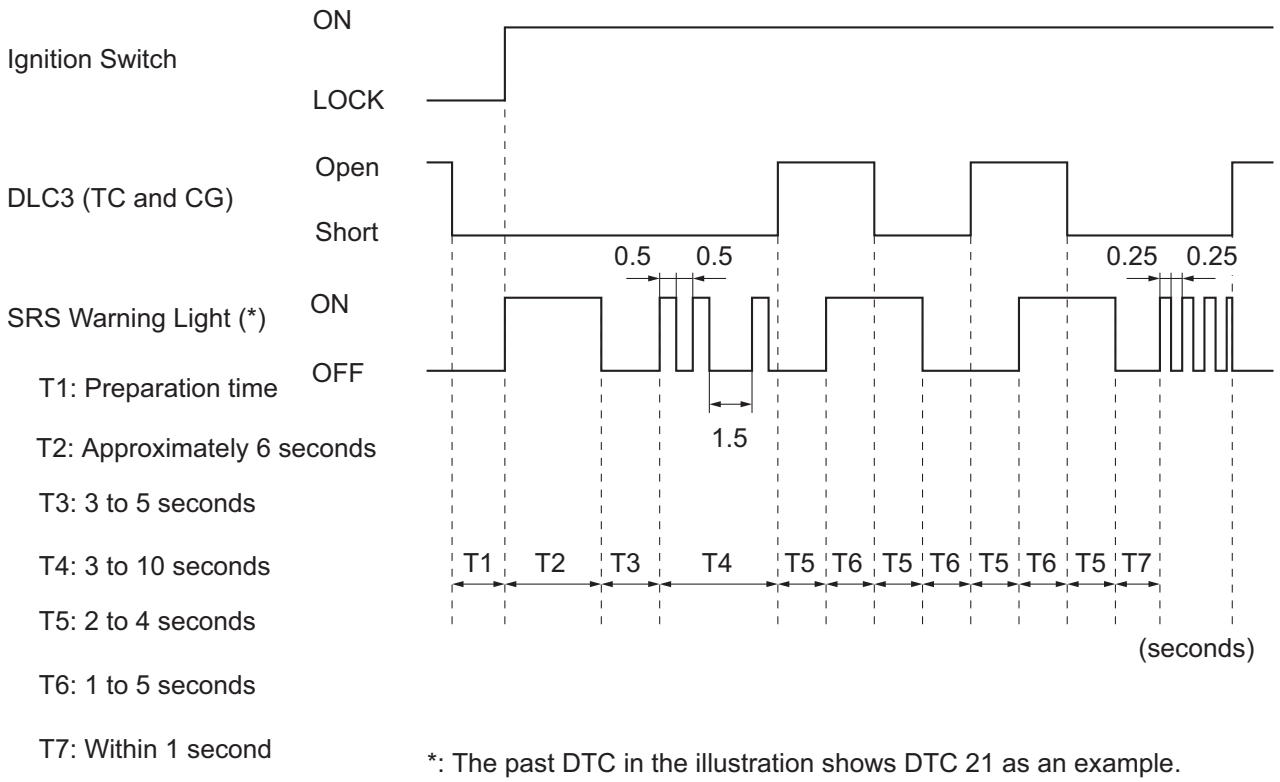

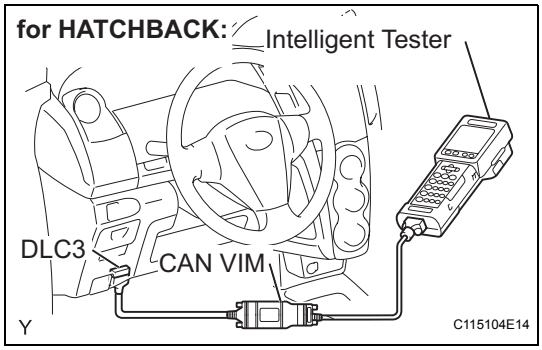

3. DTC CHECK

(a) Check for DTCs.

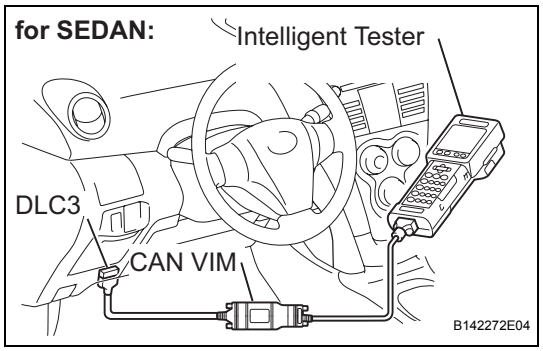

(1) Connect the intelligent tester to the DLC3.
(2) Turn the ignition switch on.
(3) Check the DTCs by following the prompts on the tester screen.
HINT:
Refer to the intelligent tester operator's manual for further details.

(b) Clear DTCs.
(1) Connect the intelligent tester to the DLC3.
(2) Turn the ignition switch on.
(3) Clear the DTCs by following the prompts on the tester screen.
HINT:
Refer to the intelligent tester operator's manual for further details.

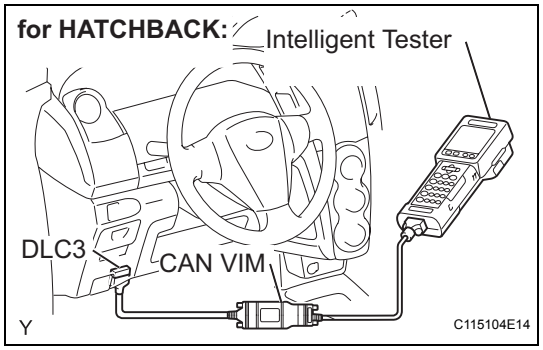

CHECK MODE PROCEDURE

1. CHECK MODE (SIGNAL CHECK): DTC CHECK

(a) Connect the intelligent tester to the DLC3.

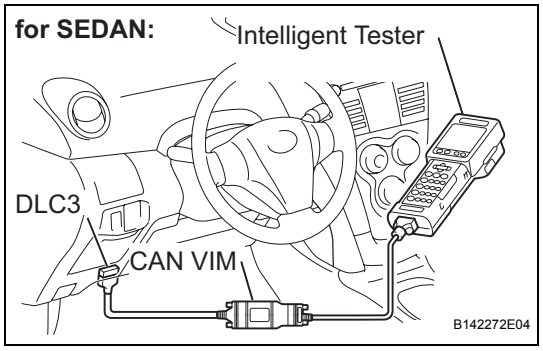

(b) Turn the ignition switch on.

(c) Select the SIGNAL CHECK, and proceed checking with the intelligent tester.

NOTICE:
Select the SIGNAL CHECK from the DTC CHECK screen displayed on the intelligent tester to clear the output DTCs (both present and past).

HINT:
- DTCs can be detected more sensitively in check mode than in normal diagnosis mode.
- Perform the check mode inspection when a malfunction in each squib circuit is suspected even after the normal system code is output through the normal diagnosis mode inspection.

DATA LIST / ACTIVE TEST

HINT:
By accessing the DATA LIST displayed on the intelligent tester, you can perform functions such as reading the values of switches and sensors without removing any parts. Reading the DATA LIST is the first step of troubleshooting and is one method shortening diagnostic time.

1. DATA LIST FOR CENTER AIRBAG SENSOR ASSEMBLY

(a) Connect the intelligent tester to the DLC3.
(b) Turn the ignition switch on and turn the tester on.
(c) Following the display on the tester screen, select the DATA LIST.
(d) Check the condition by referring to the table below.

Item	Measure Item/ Range (Display)	Normal Condition	Diagnostic Note
D SEAT POSITION	Seat position (Driver side)/ FORWARD: Seat position forward BKWARD: Seat position backward FAIL: Failure detected	FORWARD/BKWARD	-
PASSENGER CLASS	Front passenger classification/ NG: Data not determined OFF: Vacant CHILD: Child (Less than 36 kg [79.37 lb]) seated AF05: Adult (36 to 54 kg [79.37 to 119.05 lb]) seated AM50: Adult (More than 54 kg [119.05 lb]) seated FAIL: Failure detected	NG/OFF/CHILD/AF05/AM50/ FAIL	-
D BUCKLE SW	Buckle switch (Driver side)/ UNSET: Seat belt not fastened SET: Seat belt fastened NG: Data not determined	UNSET/SET	-
P BUCKLE SW	Buckle switch (Front passenger side)/ UNSET: Seat belt not fastened SET: Seat belt fastened NG: Data not determined	UNSET/SET	-
DISPLAY TYPE	Display type identification information/ LR: Display indicated by LH/RH DP: Display indicated by Driver/ Passenger	DP	-
PAST CODES	Number of past DTCs/ Min.: 0, Max.: 255	0	-

DIAGNOSTIC TROUBLE CODE CHART

If a DTC is displayed during the DTC check, check the circuit listed for the DTC in the table below (refer to the appropriate page listed for that circuit).

HINT:

- When the SRS warning light remains on and the normal system code is output, a decrease in the source voltage is likely to occur. This malfunction is not stored in the memory of the center airbag sensor assembly. If the power source voltage returns to normal, the SRS warning light will automatically go off.
- When 2 or more DTCs are indicated, the DTC with the lowest number appears first.
- If a DTC is not listed in the DTC chart, the center airbag sensor may have malfunctioned.
- In the case of any malfunctions concerning open circuits, shorts to ground, or shorts to B+ due to squibs, other DTCs may not be set. In this case, repair the malfunction currently indicated and then perform malfunction diagnosis again.
- Marks in the check mode column:
  -: DTC dose not correspond to check mode.
  ○: DTC corresponds to check mode.
- When DTC B1650/32 is set as a result of troubleshooting the Supplemental Restraint System (SRS), perform troubleshooting for the occupant classification system.

DTC No.	Detection Item	Trouble Area	Check Mode	See page
B1000/31	Center Airbag Sensor Assembly Malfunction	1. Center airbag sensor assembly	-	RS-49
B1610/13	Front Airbag Sensor RH Circuit Malfunction	1. Instrument panel wire 2. Engine room main wire 3. Front airbag sensor RH 4. Center airbag sensor assembly	-	RS-50
B1615/14	Front Airbag Sensor LH Circuit Malfunction	1. Instrument panel wire 2. Engine room main wire 3. Front airbag sensor LH 4. Center airbag sensor assembly	-	RS-59
B1620/21	Driver Side - Side Airbag Sensor Circuit Malfunction	1. Floor wire 2. Side airbag sensor LH 3. Center airbag sensor assembly	-	RS-68
B1625/22	Front Passenger Side - Side Airbag Sensor Circuit Malfunction	1. Floor wire 2. Side airbag sensor RH 3. Center airbag sensor assembly	-	RS-76
B1630/23	Driver Side Rear Airbag Sensor Circuit Malfunction	1. Floor wire 2. Rear airbag sensor LH 3. Center airbag sensor assembly	-	RS-84

DTC No.	Detection Item	Trouble Area	Check Mode	See page
B1635/24	Front Passenger Side Rear Airbag Sensor Circuit Malfunction	1. Floor wire 2. Rear airbag sensor RH 3. Center airbag sensor assembly	-	RS-90
B1650/32	Occupant Classification System Malfunction	1. Floor wire 2. Occupant classification system 3. Center airbag sensor assembly	-	RS-96
B1653/35	Seat Position Airbag Sensor Circuit Malfunction	1. Floor wire 2. Front seat inner belt assembly LH 3. Seat position airbag sensor 4. Center airbag sensor assembly	-	RS-103
B1655/37	Driver Side Seat Belt Buckle Switch Circuit Malfunction	1. Floor wire 2. Front seat inner belt assembly LH 3. Center airbag sensor assembly	-	RS-113
B1660/43	Passenger Airbag ON / OFF Indicator Circuit Malfunction	1. Instrument panel wire 2. Front passenger seat belt warning light (Passenger airbag ON/OFF indicator 3. Center airbag sensor assembly	-	RS-119
B1662/45	Indicator Light Circuit Malfunction	1. Instrument panel wire 2. Combination meter 3. Center airbag sensor assembly	-	RS-133
B1800/51	Short in Driver Side Squib Circuit	1. Instrument panel wire 2. Spiral cable 3. Steering pad (Driver side squib) 4. Center airbag sensor assembly	○	RS-138
B1801/51	Open in Driver Side Squib Circuit	1. Instrument panel wire 2. Spiral cable 3. Steering pad (Driver side squib) 4. Center airbag sensor assembly	○	RS-138
B1802/51	Short to GND in Driver Side Squib Circuit	1. Instrument panel wire 2. Spiral cable 3. Steering pad (Driver side squib) 4. Center airbag sensor assembly	○	RS-138
B1803/51	Short to B+ in Driver Side Squib Circuit	1. Instrument panel wire 2. Spiral cable 3. Steering pad (Driver side squib) 4. Center airbag sensor assembly	○	RS-138

DTC No.	Detection Item	Trouble Area	Check Mode	See page
B1805/52	Short in Front Passenger Side Squib Circuit	1. Instrument panel wire 2. Instrument panel wire assembly 3. Front passenger airbag assembly (Front passenger side squib) 4. Center airbag sensor assembly	○	RS-145
B1806/52	Open in Front Passenger Side Squib Circuit	1. Instrument panel wire 2. Instrument panel wire assembly 3. Front passenger airbag assembly (Front passenger side squib)	○	RS-145
B1807/52	Short to GND in Front Passenger Side Squib Circuit	1. Instrument panel wire 2. Instrument panel wire assembly 3. Front passenger airbag assembly (Front passenger side squib) 4. Center airbag sensor assembly	○	RS-145
B1808/52	Short to B+ in Front Passenger Side Squib Circuit	1. Instrument panel wire 2. Instrument panel wire assembly 3. Front passenger airbag assembly (Front passenger side squib) 4. Center airbag sensor assembly	○	RS-145
B1810/53	Short in Driver Side Squib 2nd Step Circuit	1. Instrument panel wire 2. Spiral cable 3. Steering pad (Driver side squib 2nd step) 4. Center airbag sensor assembly	○	RS-152
B1811/53	Open in Driver Side Squib 2nd Step Circuit	1. Instrument panel wire 2. Spiral cable 3. Steering pad (Driver side squib 2nd step) 4. Center airbag sensor assembly	○	RS-152
B1812/53	Short to GND in Driver Side Squib 2nd Step Circuit	1. Instrument panel wire 2. Spiral cable 3. Steering pad (Driver side squib 2nd step) 4. Center airbag sensor assembly	○	RS-152
B1813/53	Short to B+ in Driver Side Squib 2nd Step Circuit	1. Instrument panel wire 2. Spiral cable 3. Steering pad (Driver side squib 2nd step) 4. Center airbag sensor assembly	○	RS-152

DTC No.	Detection Item	Trouble Area	Check Mode	See page
B1815/54	Short in Front Passenger Side Squib 2nd Step Circuit	1. Instrument panel wire 2. Instrument panel wire assembly 3. Front passenger airbag assembly (Front passenger side squib 2nd step) 4. Center airbag sensor assembly	○	RS-159
B1816/54	Open in Front Passenger Side Squib 2nd Step Circuit	1. Instrument panel wire 2. Instrument panel wire assembly 3. Front passenger airbag assembly (Front passenger side squib 2nd step) 4. Center airbag sensor assembly	○	RS-159
B1817/54	Short to GND in Front Passenger Side Squib 2nd Step Circuit	1. Instrument panel wire 2. Instrument panel wire assembly 3. Front passenger airbag assembly (Front passenger side squib 2nd step) 4. Center airbag sensor assembly	○	RS-159
B1818/54	Short to B+ in Front Passenger Side Squib 2nd Step Circuit	1. Instrument panel wire 2. Instrument panel wire assembly 3. Front passenger airbag assembly (Front passenger side squib 2nd step) 4. Center airbag sensor assembly	○	RS-159
B1820/55	Short in Driver Side - Side Squib Circuit	1. Floor wire 2. Front seat airbag assembly LH (Driver side-side squib) 3. Center airbag sensor assembly	○	RS-166
B1821/55	Open in Driver Side - Side Squib Circuit	1. Floor wire 2. Front seat airbag assembly LH (Driver side-side squib) 3. Center airbag sensor assembly	○	RS-166
B1822/55	Short to GND in Driver Side - Side Squib Circuit	1. Floor wire 2. Front seat airbag assembly LH (Driver side-side squib) 3. Center airbag sensor assembly	○	RS-166
B1823/55	Short to B+ in Driver Side - Side Squib Circuit	1. Floor wire 2. Front seat airbag assembly LH (Driver side-side squib) 3. Center airbag sensor assembly	○	RS-166

DTC No.	Detection Item	Trouble Area	Check Mode	See page
B1825/56	Short in Front Passenger Side - Side Squib Circuit	1. Floor wire 2. Front seat airbag assembly RH (Front passenger side-side squib) 3. Center airbag sensor assembly	○	RS-171
B1826/56	Open in Front Passenger Side - Side Squib Circuit	1. Floor wire 2. Front seat airbag assembly RH (Front passenger side-side squib) 3. Center airbag sensor assembly	○	RS-171
B1827/56	Short to GND in Front Passenger Side - Side Squib Circuit	1. Floor wire 2. Front seat airbag assembly RH (Front passenger side-side squib) 3. Center airbag sensor assembly	○	RS-171
B1828/56	Short to B+ in Front Passenger Side - Side Squib Circuit	1. Floor wire 2. Front seat airbag assembly RH (Front passenger side-side squib) 3. Center airbag sensor assembly	○	RS-171
B1830/57	Short in Driver Side Curtain Shield Squib Circuit	1. Floor wire 2. Curtain shield airbag assembly LH (Driver side curtain shield squib) 3. Center airbag sensor assembly	○	RS-176
B1831/57	Open in Driver Side Curtain Shield Squib Circuit	1. Floor wire 2. Curtain shield airbag assembly LH (Driver side curtain shield squib) 3. Center airbag sensor assembly	○	RS-176
B1832/57	Short to GND in Driver Side Curtain Shield Squib Circuit	1. Floor wire 2. Curtain shield airbag assembly LH (Driver side curtain shield squib) 3. Center airbag sensor assembly	○	RS-176
B1833/57	Short to B+ in Driver Side Curtain Shield Squib Circuit	1. Floor wire 2. Curtain shield airbag assembly LH (Driver side curtain shield squib) 3. Center airbag sensor assembly	○	RS-176
B1835/58	Short in Front Passenger Side Curtain Shield Squib Circuit	1. Floor wire 2. Curtain shield airbag assembly RH (Front passenger side curtain shield squib) 3. Center airbag sensor assembly	○	RS-181

DTC No.	Detection Item	Trouble Area	Check Mode	See page
B1836/58	Open in Front Passenger Side Curtain Shield Squib Circuit	1. Floor wire 2. Curtain shield airbag assembly RH (Front passenger side curtain shield squib) 3. Center airbag sensor assembly	○	RS-181
B1837/58	Short to GND in Front Passenger Side Curtain Shield Squib Circuit	1. Floor wire 2. Curtain shield airbag assembly RH (Front passenger side curtain shield squib) 3. Center airbag sensor assembly	○	RS-181
B1838/58	Short to B+ in Front Passenger Side Curtain Shield Squib Circuit	1. Floor wire 2. Curtain shield airbag assembly RH (Front passenger side curtain shield squib) 3. Center airbag sensor assembly	○	RS-181
B1900/73	Short in Driver Side Front Pretensioner Squib Circuit	1. Floor wire 2. Front seat outer belt assembly LH (Driver side front pretensioner squib) 3. Center airbag sensor assembly	○	RS-186
B1901/73	Open in Driver Side Front Pretensioner Squib Circuit	1. Floor wire 2. Front seat outer belt assembly LH (Driver side front pretensioner squib) 3. Center airbag sensor assembly	○	RS-186
B1902/73	Short to GND in Driver Side Front Pretensioner Squib Circuit	1. Floor wire 2. Front seat outer belt assembly LH (Driver side front pretensioner squib) 3. Center airbag sensor assembly	○	RS-186
B1903/73	Short to B+ in Driver Side Front Pretensioner Squib Circuit	1. Floor wire 2. Front seat outer belt assembly LH (Driver side front pretensioner squib) 3. Center airbag sensor assembly	○	RS-186
B1905/74	Short in Front Passenger Side Front Pretensioner Squib Circuit	1. Floor wire 2. Front seat outer belt assembly RH (Front passenger side front pretensioner squib) 3. Center airbag sensor assembly	○	RS-191
B1906/74	Open in Front Passenger Side Front Pretensioner Squib Circuit	1. Floor wire 2. Front seat outer belt assembly RH (Front passenger side front pretensioner squib) 3. Center airbag sensor assembly	○	RS-191

DTC No.	Detection Item	Trouble Area	Check Mode	See page
B1907/74	Short to GND in Front Passenger Side Front Pretensioner Squib Circuit	1. Floor wire 2. Front seat outer belt assembly RH (Front passenger side front pretensioner squib) 3. Center airbag sensor assembly	○	RS-191
B1908/74	Short to B+ in Front Passenger Side Front Pretensioner Squib Circuit	1. Floor wire 2. Front seat outer belt assembly RH (Front passenger side front pretensioner squib) 3. Center airbag sensor assembly	○	RS-191

DTC	B1000/31	Center Airbag Sensor Assembly Malfunction

DESCRIPTION

The center airbag sensor assembly consists of parts including the airbag sensor, the safing sensor, the drive circuit, the diagnosis circuit, and the ignition control.

RS

When the center airbag sensor assembly receives signals from the airbag sensor, it determines whether or not the SRS should be activated.

DTC B1000/31 is set when a malfunction is detected in the center airbag sensor assembly.

DTC No.	DTC Detecting Condition	Trouble Area
B1000/31	• Center airbag sensor assembly malfunction	• Center airbag sensor assembly

HINT:

When any other DTCs are set simultaneously with B1000/31, repair the malfunctions indicated by those DTCs first.

INSPECTION PROCEDURE

1	CHECK CENTER AIRBAG SENSOR ASSEMBLY

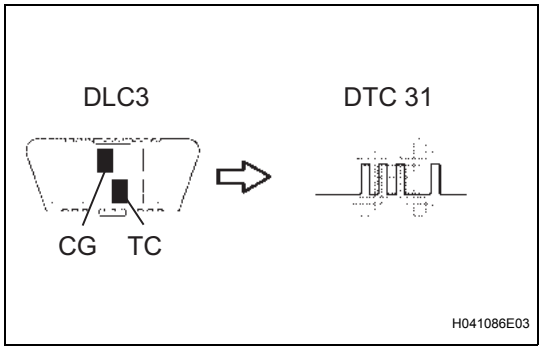

(a) Turn the ignition switch to the lock position.
(b) Disconnect the negative (-) terminal cable from the battery, and wait for at least 90 seconds.
(c) Connect the negative (-) terminal cable to the battery, and wait for at least 2 seconds.
(d) Turn the ignition switch to the on position, and wait for at least 60 seconds.
(e) Clear any DTCs stored in the memory (See page RS-38).
(f) Turn the ignition switch to the lock position.
(g) Turn the ignition switch to the on position, and wait for at least 60 seconds.
(h) Check for DTCs (See page RS-38).

OK:

DTC B1000/31 is not output.

NG → **REPLACE CENTER AIRBAG SENSOR ASSEMBLY**

OK

USE SIMULATION METHOD TO CHECK

DTC	B1610/13	Front Airbag Sensor RH Circuit Malfunction

DESCRIPTION

The front airbag sensor RH consists of part including the diagnostic circuit and the frontal deceleration sensor.
When the center airbag sensor assembly receives signals from the frontal deceleration sensor, it determines whether or not the SRS should be activated.
DTC B1610/13 is set when a malfunction is detected in the front airbag sensor RH circuit.

DTC No.	DTC Detecting Condition	Trouble Area
B1610/13	• Center airbag sensor assembly detects line short circuit signal, open circuit signal, short circuit to ground signal or short circuit to B+ signal in front airbag sensor RH circuit for 2 seconds. • Front airbag sensor RH malfunction • Center airbag sensor assembly malfunction	• Instrument panel wire • Engine room main wire • Front airbag sensor RH • Center airbag sensor assembly

WIRING DIAGRAM

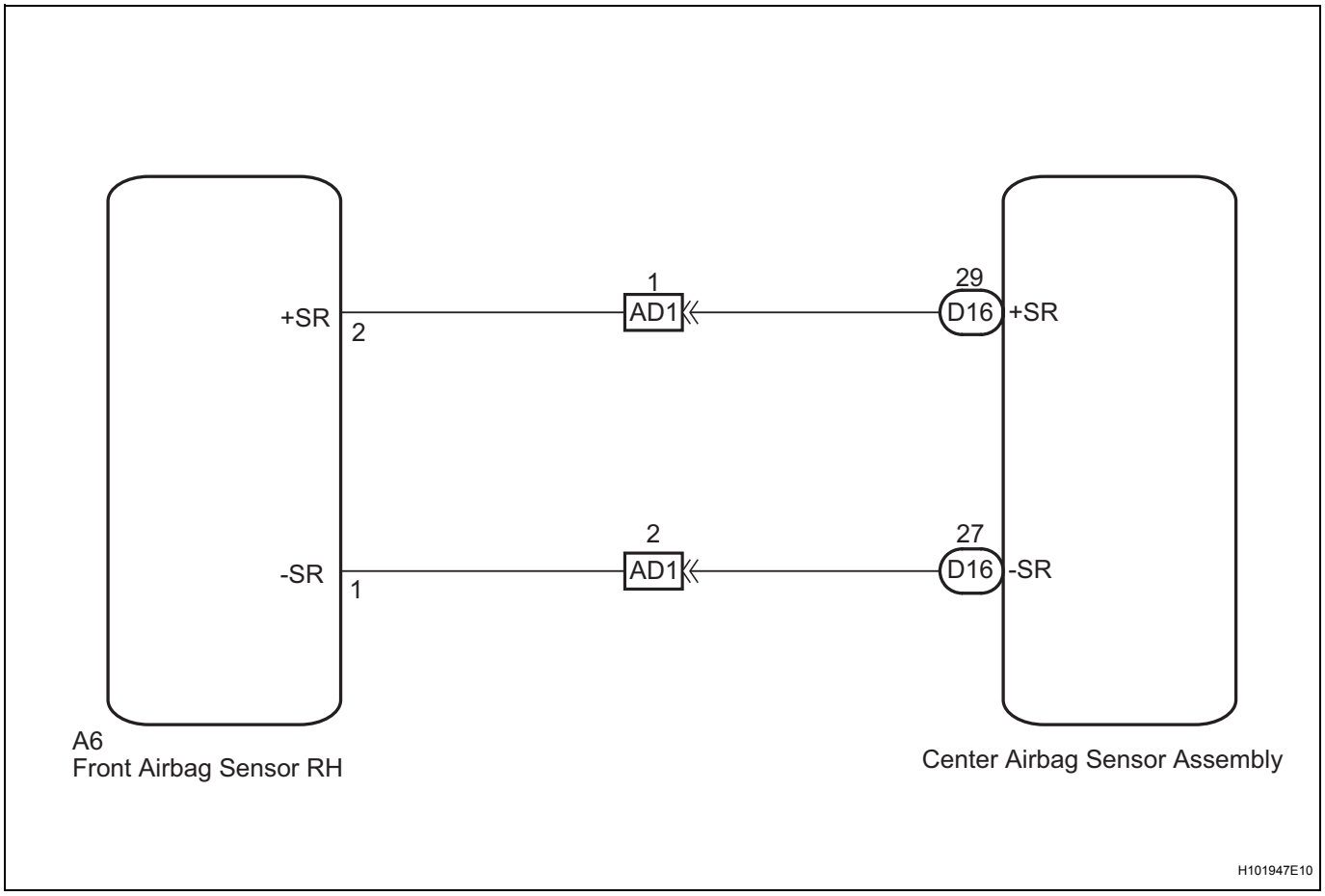

INSPECTION PROCEDURE

NOTICE:

In order to prevent unexpected airbag deployment, disconnect the following connectors before inspecting parts such as wire harnesses, if the application of tester probes to the center airbag sensor assembly connector is necessary.

1. Turn the ignition switch to the lock position.
2. Disconnect the negative (-) terminal cable from the battery, and wait for at least 90 seconds.
3. Disconnect the connector from the center airbag sensor assembly.

4. Disconnect the connectors from the steering pad.
5. Disconnect the connectors from the front passenger airbag assembly.
6. Disconnect the connector from the front seat outer belt assembly LH.
7. Disconnect the connector from the front seat outer belt assembly RH.
   HINT:
   Skip the following steps if side and curtain shield airbags are not fitted.
8. Disconnect the connector from the front seat side airbag assembly LH.
9. Disconnect the connector from the front seat side airbag assembly RH.
10. Disconnect the connector from the curtain shield airbag assembly LH.
11. Disconnect the connector from the curtain shield airbag assembly RH.

1 CHECK DTC

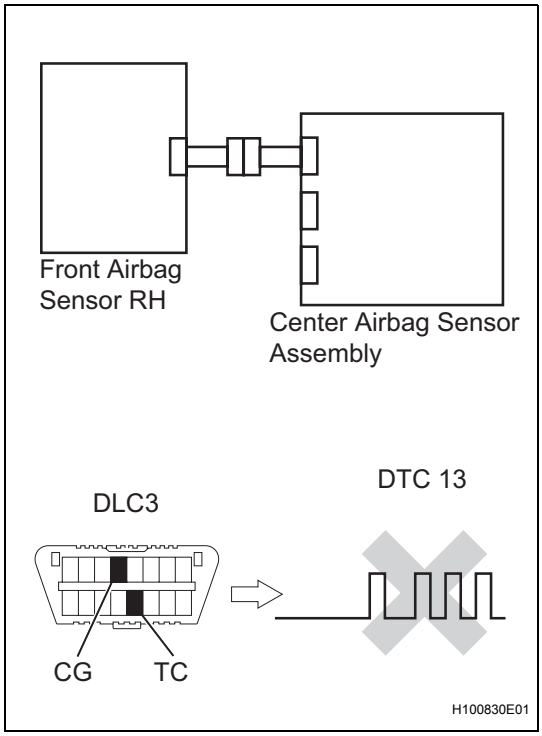

(a) Turn the ignition switch on, and wait for at least 60 seconds.
(b) Clear the DTCs stored in the memory (See page RS-38).
(c) Turn the ignition switch off.
(d) Turn the ignition switch on, and wait for at least 60 seconds.
(e) Check the DTCs (See page RS-38).
OK:
DTC B1610/13 is not output.
HINT:
DTCs other than DTC B1610/13 may be output at this time, but they are not related to this check.

OK → **USE SIMULATION METHOD TO CHECK**

NG

2 CHECK CONNECTION OF CONNECTORS

(a) Turn the ignition switch off.
(b) Disconnect the negative (-) terminal cable from the battery, and wait for at least 90 seconds.
(c) Check that the connectors are properly connected to the center airbag sensor assembly and the front airbag sensor RH.
OK:
The connectors are properly connected.

NG → **CONNECT CONNECTORS**

OK

RS

3 CHECK FRONT AIRBAG SENSOR RH CIRCUIT (FOR OPEN)

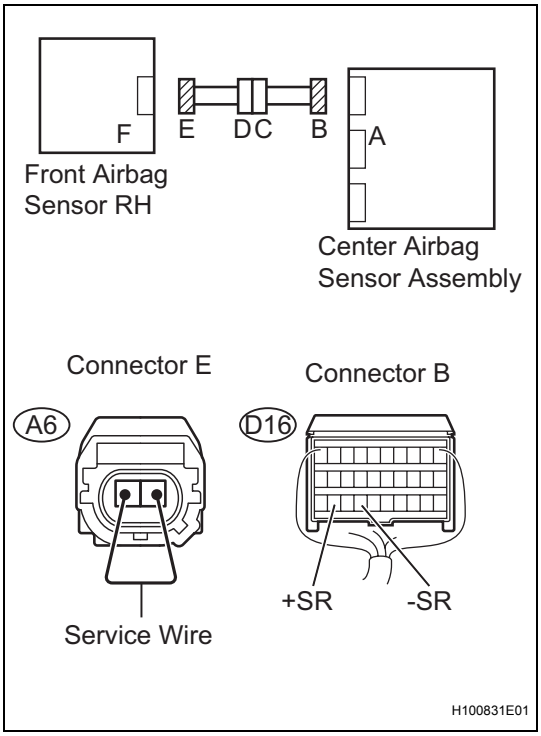

(a) Disconnect the connectors from the center airbag sensor assembly and the front airbag sensor RH.

(b) Using a service wire, connect A6-1 and A6-2 of connector E.

NOTICE:
Do not forcibly insert the service wire into the terminals of the connector when connecting.

(c) Measure the resistance.

Standard resistance

Tester Connection	Condition	Specified Condition
D16-29 (+SR) - D16-27 (-SR)	Always	Below 1 Ω

NG → **Go to step 8**

OK

4 CHECK FRONT AIRBAG SENSOR RH CIRCUIT (FOR SHORT)

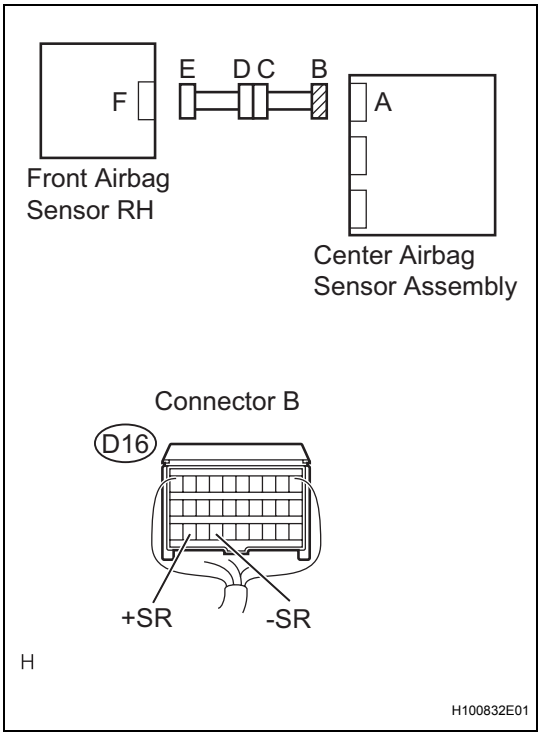

(a) Disconnect the service wire from connector E.

(b) Measure the resistance.

Standard resistance

Tester Connection	Condition	Specified Condition
D16-29 (+SR) - D16-27 (-SR)	Always	1 MΩ or higher

NG → **Go to step 9**

OK

RS

5 CHECK FRONT AIRBAG SENSOR RH CIRCUIT (TO B+)

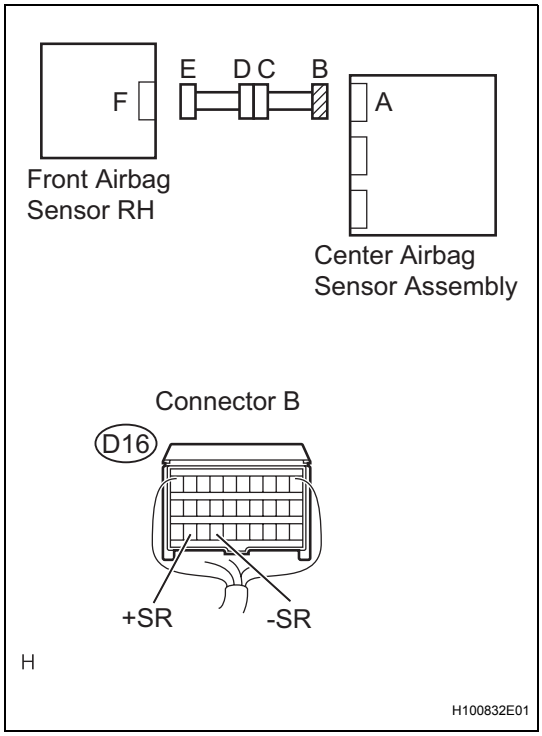

(a) Connect the negative (-) terminal cable to the battery, and wait for at least 2 seconds.
(b) Turn the ignition switch on.
(c) Measure the voltage.
Standard voltage

Tester Connection	Condition	Specified Condition
D16-29 (+SR) - Body ground	Ignition switch on	Below 1 V
D16-27 (-SR) - Body ground	Ignition switch on	Below 1 V

NG → **Go to step 10**

OK

6 CHECK FRONT AIRBAG SENSOR RH CIRCUIT (TO GROUND)

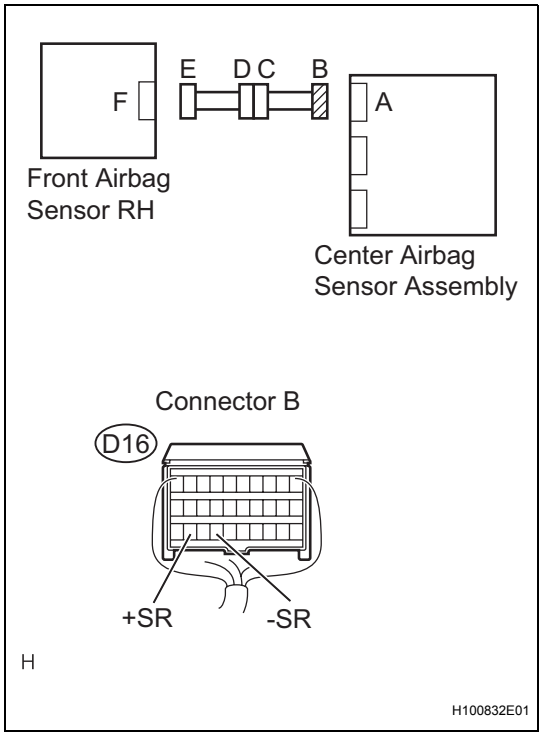

(a) Turn the ignition switch off.
(b) Disconnect the negative (-) terminal cable from the battery, and wait for at least 90 seconds.
(c) Measure the resistance.
Standard resistance

Tester Connection	Condition	Specified Condition
D16-29 (+SR) - Body ground	Always	1 MΩ or higher
D16-27 (-SR) - Body ground	Always	1 MΩ or higher

NG → **Go to step 11**

OK

RS

7 CHECK FRONT AIRBAG SENSOR RH

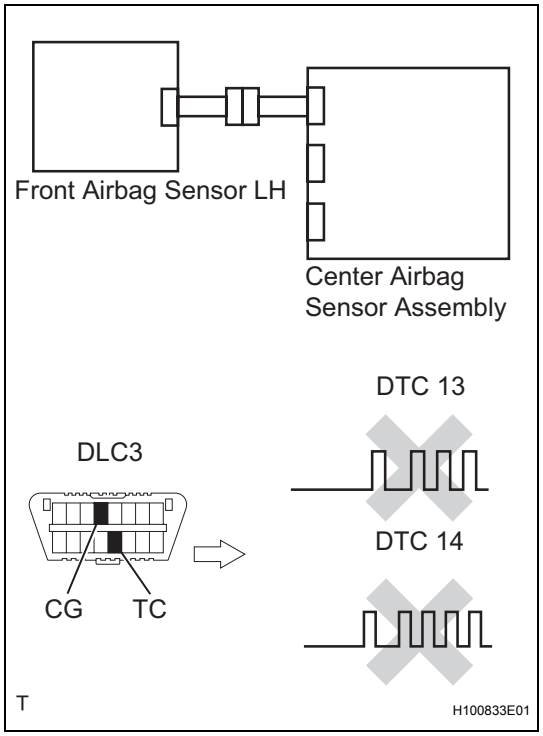

(a) Connect the connectors to the center airbag sensor assembly.
(b) Interchange the front airbag sensor LH with RH and connect the connectors to them.
(c) Connect the negative (-) terminal cable to the battery, and wait for at least 2 seconds.
(d) Turn the ignition switch on, and wait for at least 60 seconds.
(e) Clear the DTCs stored in the memory (See page RS-38).
(f) Turn the ignition switch off.
(g) Turn the ignition switch on, and wait for at least 60 seconds.
(h) Check the DTCs (See page RS-38).

Result

Result	Proceed to
DTC B1610/13 is output.	A
DTC B1615/14 is output.	B
DTC B1610/13 and B1615/14 are not output.	C

HINT:
DTCs other than DTC B1610/13 and B1615/14 may be output at this time, but they are not related to this check.

A → **REPLACE CENTER AIRBAG SENSOR ASSEMBLY**

B → **REPLACE FRONT AIRBAG SENSOR RH**

C

USE SIMULATION METHOD TO CHECK

RS

8	CHECK ENGINE ROOM MAIN WIRE (FOR OPEN)

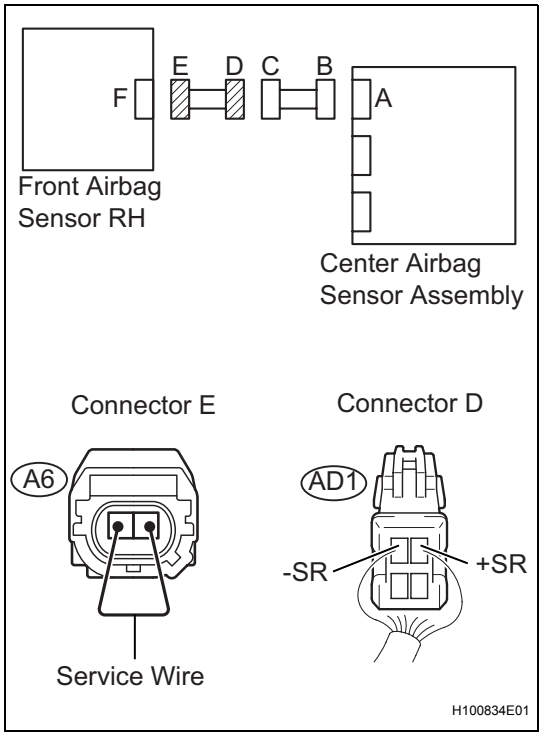

(a) Disconnect the engine room main wire connector from the instrument panel wire.
HINT:
The service wire has already been inserted into connector E.

(b) Measure the resistance.
Standard resistance

Tester Connection	Condition	Specified Condition
AD1-1 (+SR) - AD1-2 (-SR)	Always	Below 1 Ω

NG → **REPAIR OR REPLACE ENGINE ROOM MAIN WIRE**

OK

REPAIR OR REPLACE INSTRUMENT PANEL WIRE

RS

9	CHECK ENGINE ROOM MAIN WIRE (FOR SHORT)

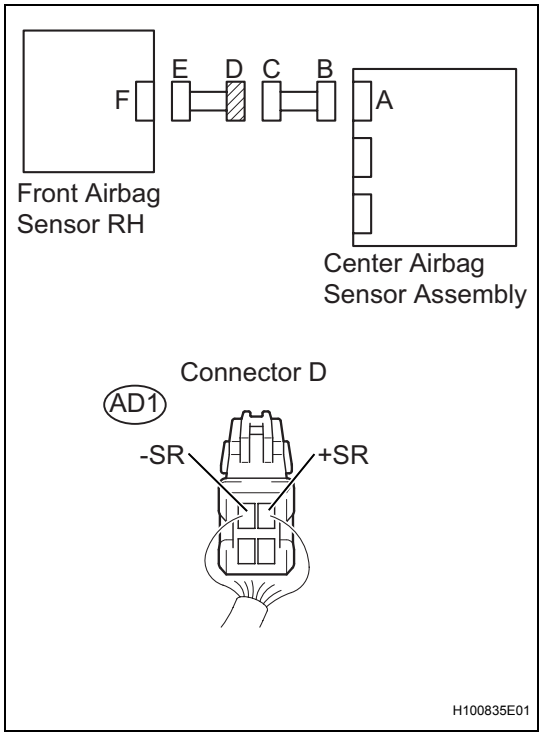

(a) Disconnect the service wire from connector E.
(b) Measure the resistance.
Standard resistance

Tester Connection	Condition	Specified Condition
AD1-1 (+SR) - AD1-2 (-SR)	Always	1 MΩ or higher

NG → **REPAIR OR REPLACE ENGINE ROOM MAIN WIRE**

OK

REPAIR OR REPLACE INSTRUMENT PANEL WIRE

RS

10	CHECK ENGINE ROOM MAIN WIRE (TO B+)

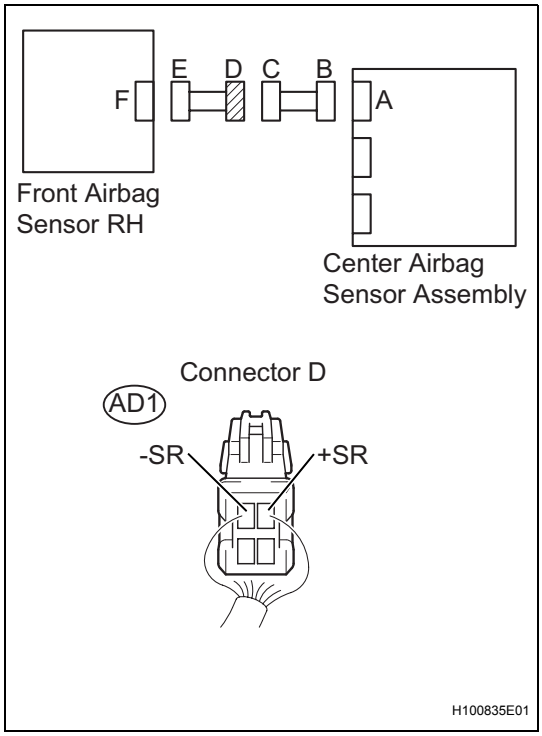

(a) Turn the ignition switch to the lock position.
(b) Disconnect the negative (-) terminal cable from the battery, and wait for at least 90 seconds.
(c) Disconnect the engine room main wire connector from the instrument panel wire.
(d) Connect the negative (-) terminal cable to the battery, and wait for at least 2 seconds.
(e) Turn the ignition switch on.
(f) Measure the voltage.
Standard voltage

Tester Connection	Condition	Specified Condition
AD1-1 (+SR) - Body ground	Ignition switch on	Below 1 V
AD1-2 (-SR) - Body ground	Ignition switch on	Below 1 V

NG → **REPAIR OR REPLACE ENGINE ROOM MAIN WIRE**

OK

REPAIR OR REPLACE INSTRUMENT PANEL WIRE

RS

11	CHECK ENGINE ROOM MAIN WIRE (TO GROUND)

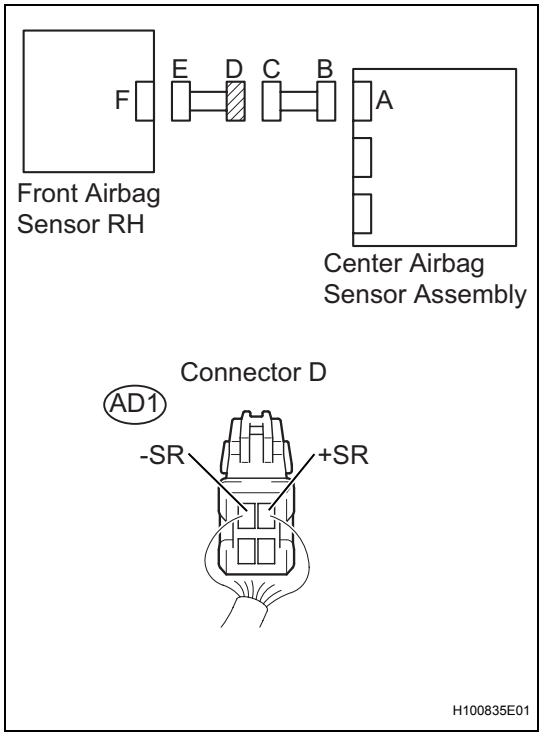

(a) Disconnect the engine room main wire connector from the instrument panel wire.

(b) Measure the resistance.

Standard resistance

Tester Connection	Condition	Specified Condition
AD1-1 (+SR) - Body ground	Always	1 MΩ or higher
AD1-2 (-SR) - Body ground	Always	1 MΩ or higher

NG → **REPAIR OR REPLACE ENGINE ROOM MAIN WIRE**

OK

REPAIR OR REPLACE INSTRUMENT PANEL WIRE

INSTALLATION

CAUTION:
Some of these service operations affect the SRS airbag system. Read the precautionary notices concerning the SRS airbag system before servicing.
NOTICE:
Always use "Torx" socket wrench E10 when installing the rear seat.
HINT:
The procedure described below is for the RH side. Use the same procedure for both the RH and LH sides, unless otherwise specified.

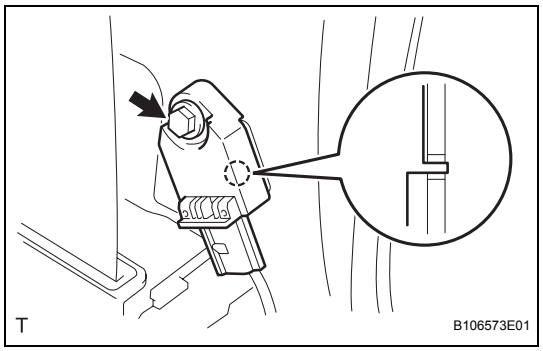

1. **INSTALL SIDE AIRBAG SENSOR**
   (a) Confirm that the ignition switch is turned to OFF.
   (b) Confirm that the negative battery terminal is detached.
   CAUTION:
   - **Confirm that the negative battery terminal is disconnected before performing the operation. Even an impact to only the airbag sensor will cause the airbag to deploy.**

   (c) Insert the hook into the body hole and install the airbag sensor with the bolt.
   Torque: 9.0 N*m (90 kgf*cm, 80 in.*lbf)
   NOTICE:
   - **Do not use a side airbag sensor that has been dropped.**
   - **Do not subject the side airbag sensor to any impact or force.**

   (d) Confirm that there is no looseness by shaking the side airbag sensor.
   (e) Connect the airbag connector.

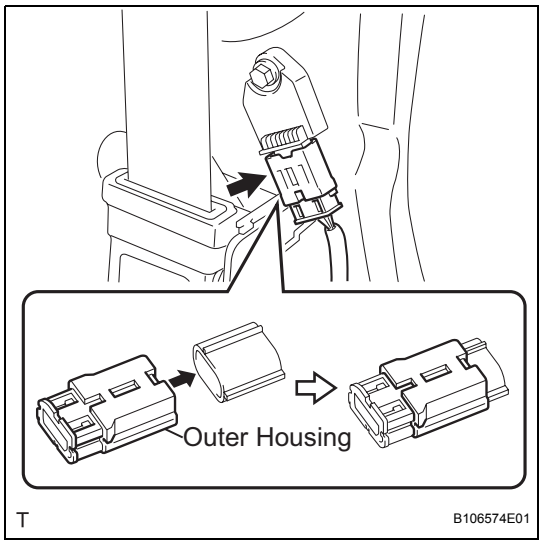

2. **INSTALL FRONT QUARTER TRIM PANEL ASSEMBLY RH (See page IR-118)**
3. **INSTALL FRONT DOOR OPENING TRIM WEATHERSTRIP RH (See page IR-119)**
4. **INSTALL FRONT DOOR SCUFF PLATE RH (See page IR-119)**
5. **INSTALL REAR SEAT ASSEMBLY LH (for 60/40 Split Seat Type) (See page SE-84)**
6. **INSTALL REAR SEAT ASSEMBLY RH (for 60/40 Split Seat Type) (See page SE-102)**
7. **INSTALL NO. 2 REAR SEAT LEG COVER (for 60/40 Split Seat Type) (See page SE-85)**
8. **INSTALL NO. 1 REAR SEAT LEG COVER (for 60/40 Split Seat Type) (See page IR-119)**
9. **INSTALL REAR SEATBACK ASSEMBLY (for Hold Down Seat Type) (See page SE-122)**

10. **INSTALL REAR SEAT CUSHION COVER PAD SUB-ASSEMBLY (for Hold Down Seat Type) (See page SE-123)**
11. **INSTALL DECK FLOOR BOX RH (See page IR-83)**
12. **INSTALL DECK FLOOR BOX LH (See page IR-83)**
13. **INSTALL DECK BOARD SUB-ASSEMBLY (See page IR-83)**
14. **INSTALL PACKAGE TRAY TRIM PANEL ASSEMBLY (See page IR-83)**
15. **CONNECT CABLE TO NEGATIVE BATTERY TERMINAL**
    Torque: 5.4 N*m (55 kgf*cm, 48 in.*lbf)
16. **INSPECT SRS WARNING LIGHT**
    (See page RS-31)

REAR AIRBAG SENSOR (for Sedan)

COMPONENTS

RS

for 60/40 Split Seat Type:

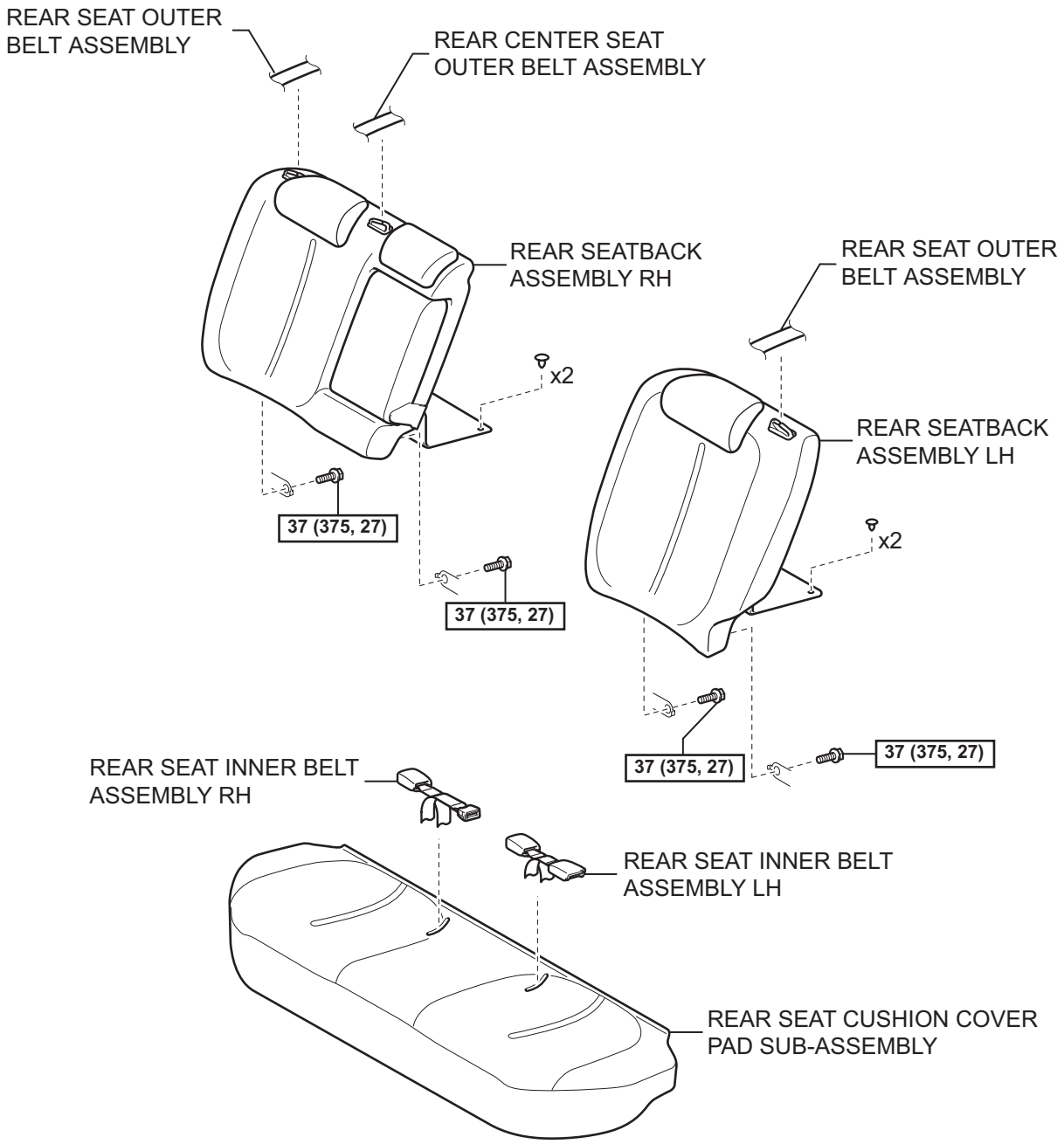

N*m (kgf*cm, ft*lbf) : Specified torque

T

C143561E01

RS

for Fixed Seat Type:

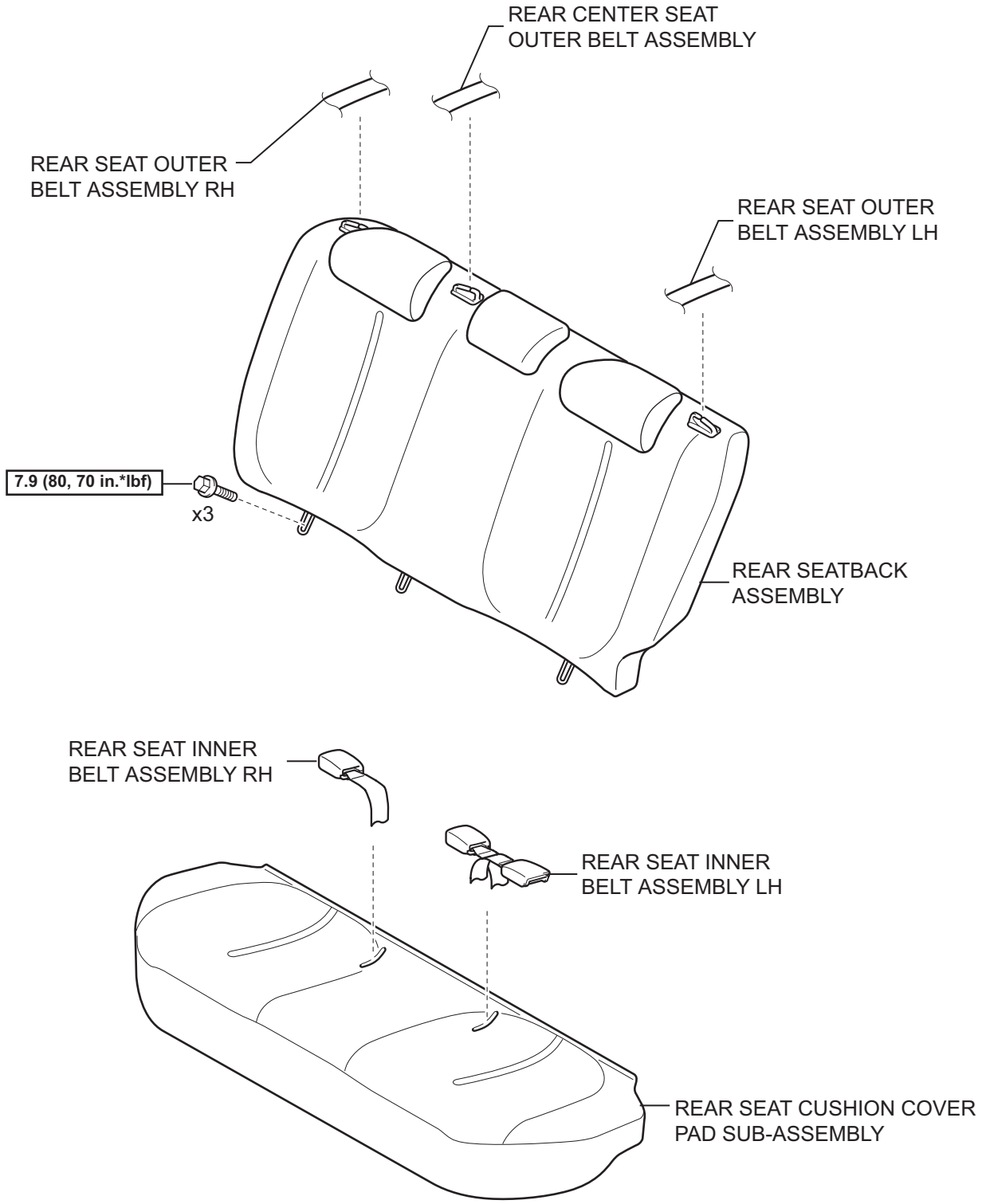

N*m (kgf*cm, ft*lbf) : Specified torque

T

C143562E01

RS

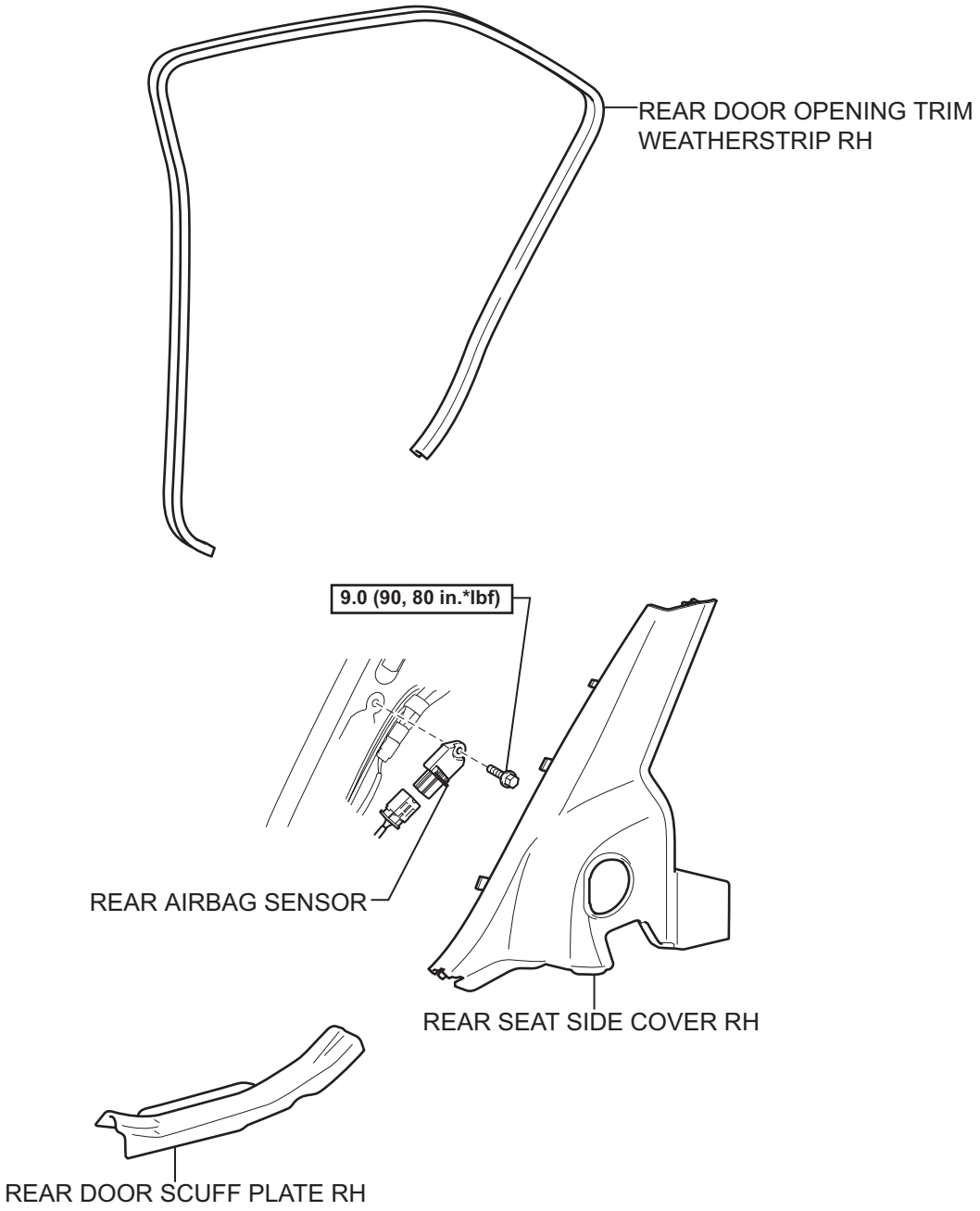

N*m (kgf*cm, ft*lbf) : Specified torque

B135704E01

ON-VEHICLE INSPECTION

1. **INSPECT REAR AIRBAG SENSOR ASSEMBLY (for Vehicle not Involved in Collision)**
   (a) Perform a diagnostic system check (See page RS-38).

2. **INSPECT REAR AIRBAG SENSOR ASSEMBLY (for Vehicle Involved in Collision and Airbag not Deployed)**
   CAUTION:
   For rear airbag sensor removal and installation procedures, see pages RS-467 and RS-468, and be sure to carefully follow the correct procedure.
   (a) Perform a diagnostic system check (See page RS-38).
   (b) When the center pillar of the vehicle or its periphery is damaged, check whether there is any damage to the rear airbag sensor. If there are any defects, such as those mentioned below, replace the rear airbag sensor with a new one:
   - Any cracks, dents or chips in the case.
   - Any cracks or other damage to the connector.
   - Peeling of the label or damage to the serial number.

3. **INSPECT REAR AIRBAG SENSOR ASSEMBLY (for Vehicle Involved in Collision)**
   CAUTION:
   For rear airbag sensor removal and installation procedures, see pages RS-467 and IR-107, and carefully follow the correct procedure.
   (a) Replace the rear airbag sensor.

REMOVAL

CAUTION:
Some of these service operations affect the SRS airbag system. Read the precautionary notices concerning the SRS airbag system before servicing (See page RS-1).
HINT:
The procedure described below is for the RH side. Use the same procedure for both the RH and LH sides, unless otherwise specified.

1. **DISCONNECT CABLE FROM NEGATIVE BATTERY TERMINAL**
2. **REMOVE REAR SEAT CUSHION COVER PAD SUB-ASSEMBLY (See page IR-13)**
3. **REMOVE REAR SEATBACK ASSEMBLY RH (for 60/40 Split Seat Type) (See page SE-57)**
4. **REMOVE REAR SEATBACK ASSEMBLY LH (for 60/40 Split Seat Type) (See page SE-71)**
5. **REMOVE REAR SEATBACK ASSEMBLY (for Fixed Seat Type) (See page SE-106)**
6. **REMOVE LUGGAGE COMPARTMENT FLOOR MAT (for 60/40 Split Seat Type) (See page ED-133)**
7. **REMOVE SPARE WHEEL COVER ASSEMBLY (for 60/40 Split Seat Type) (See page ED-133)**
8. **REMOVE LUGGAGE COMPARTMENT TRIM INNER PAD (for 60/40 Split Seat Type) (See page ED-134)**
9. **REMOVE REAR DOOR SCUFF PLATE RH (See page IR-15)**
10. **REMOVE REAR DOOR OPENING TRIM WEATHERSTRIP RH (See page IR-15)**
11. **REMOVE REAR SEAT SIDE COVER RH (See page IR-16)**
12. **REMOVE REAR AIRBAG SENSOR**
    CAUTION:
    Confirm that the negative battery terminal is disconnected before performing the operation. Even an impact to only the airbag sensor will cause the airbag to deploy.

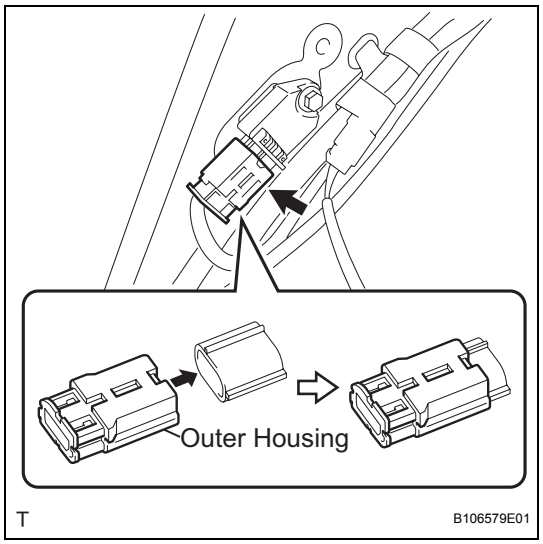

(a) Slide the outer housing and detach the airbag connector.

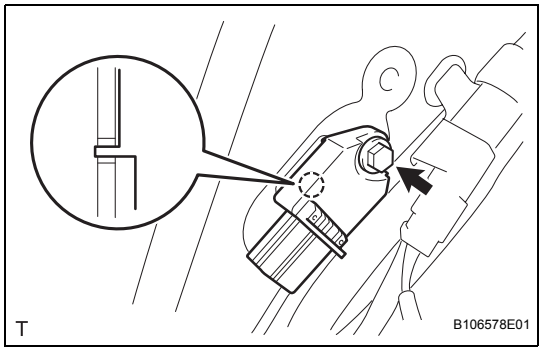

(b) Disengage the bolt and hook and remove the airbag sensor.

RS

INSTALLATION

CAUTION:
Some of these service operations affect the SRS airbag system. Read the precautionary notices concerning the SRS airbag system before servicing (See page RS-1).
NOTICE:
Always use "Torx" socket wrench E10 when removing the rear seat.
HINT:
The procedure described below is for the RH side. Use the same procedure for both the LH and RH sides, unless otherwise specified.

1. **INSTALL REAR AIRBAG SENSOR**
   (a) Confirm that the ignition switch is turned to off.
   (b) Confirm that the negative battery terminal is detached.
   CAUTION:
   Confirm that the negative battery terminal is disconnected before performing the operation. Even an impact to only the airbag sensor will cause the airbag to deploy.
   (c) Insert the hook into the body hole and install the airbag sensor with the bolt.
   Torque: 9.0 N*m (90 kgf*cm, 80 in.*lbf)
   NOTICE:
   - **Do not use a rear airbag sensor that has been dropped.**
   - **Do not subject the rear airbag sensor to any impact or force.**
   (d) Confirm that there is no looseness by shaking the rear airbag sensor.
   (e) Connect the airbag connector.

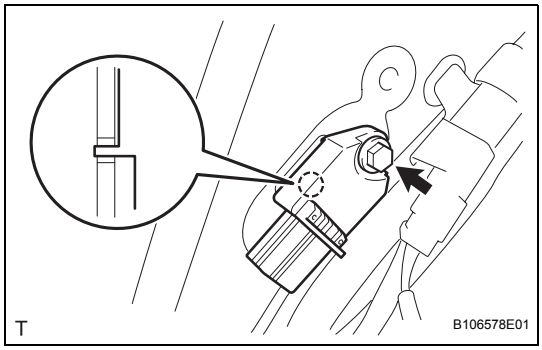

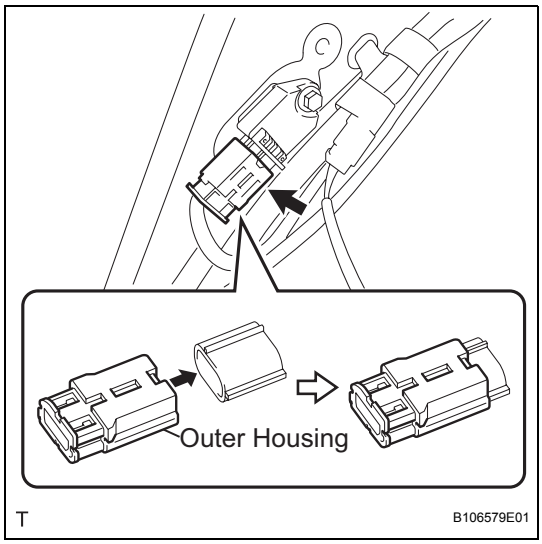

2. **INSTALL REAR SEAT SIDE COVER RH (See page IR-33)**
3. **INSTALL REAR DOOR OPENING TRIM WEATHERSTRIP RH (See page IR-33)**
4. **INSTALL REAR DOOR SCUFF PLATE RH (See page IR-34)**
5. **INSTALL LUGGAGE COMPARTMENT TRIM INNER PAD (for 60/40 Split Seat Type) (See page ED-136)**
6. **INSTALL SPARE WHEEL COVER ASSEMBLY (for 60/40 Split Seat Type) (See page ED-137)**
7. **INSTALL LUGGAGE COMPARTMENT FLOOR MAT (for 60/40 Split Seat Type) (See page ED-137)**
8. **INSTALL REAR SEATBACK ASSEMBLY RH (for 60/40 Split Seat Type) (See page SE-65)**
9. **INSTALL REAR SEATBACK ASSEMBLY LH (for 60/40 Split Seat Type) (See page SE-52)**

10. **INSTALL REAR SEATBACK ASSEMBLY (for Fixed Seat Type) (See page SE-108)**
11. **INSTALL REAR SEAT CUSHION COVER PAD SUB-ASSEMBLY (See page IR-36)**
12. **CONNECT CABLE TO NEGATIVE BATTERY TERMINAL**
    Torque: 5.4 N*m (55 kgf*cm, 48 in.*lbf)
13. **INSPECT SRS WARNING LIGHT**
    (See page RS-31)

REAR AIRBAG SENSOR (for 5 Door)

COMPONENTS

RS

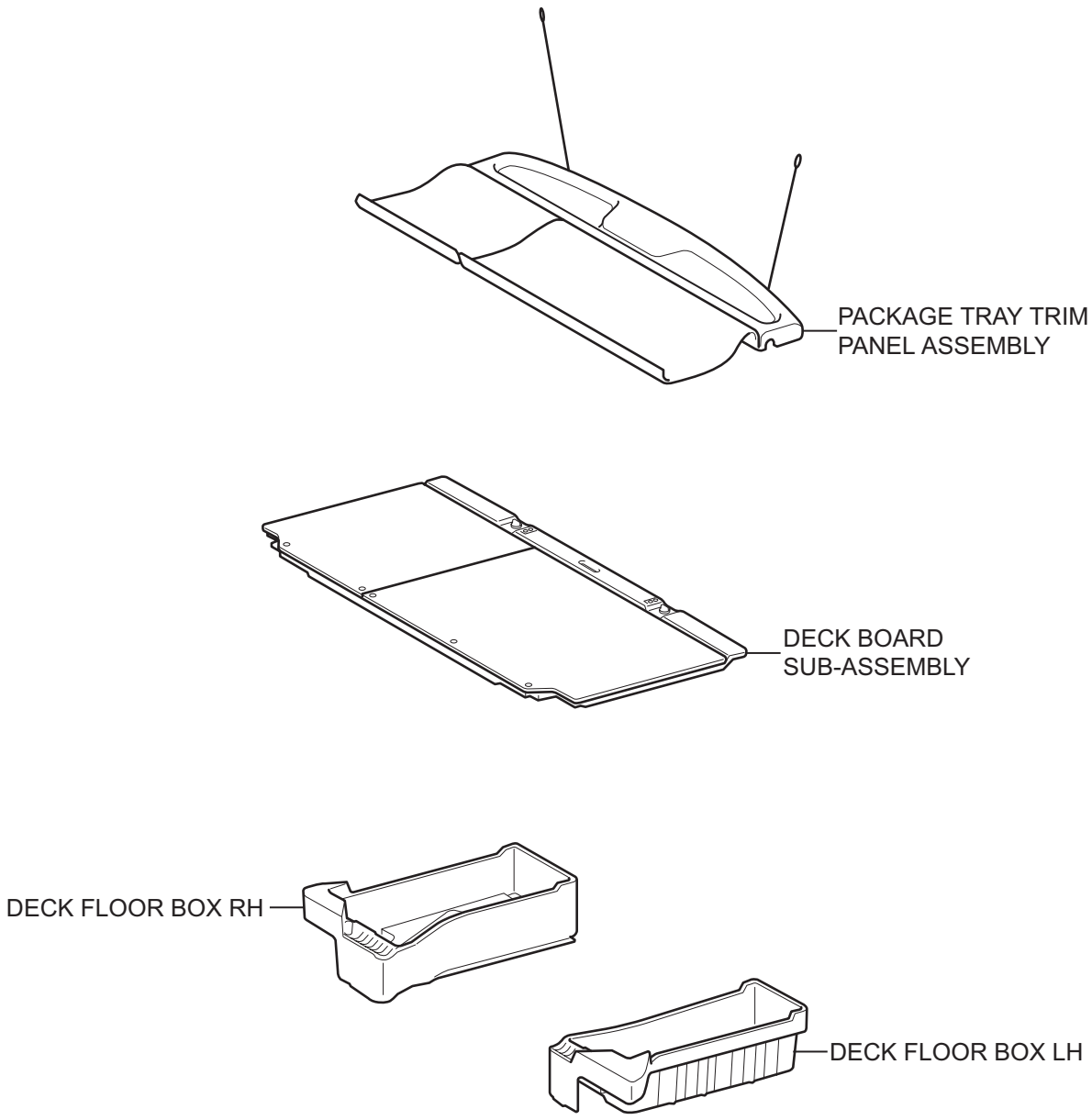

T

B114273E01

RS

for 60/40 Split Seat Type:

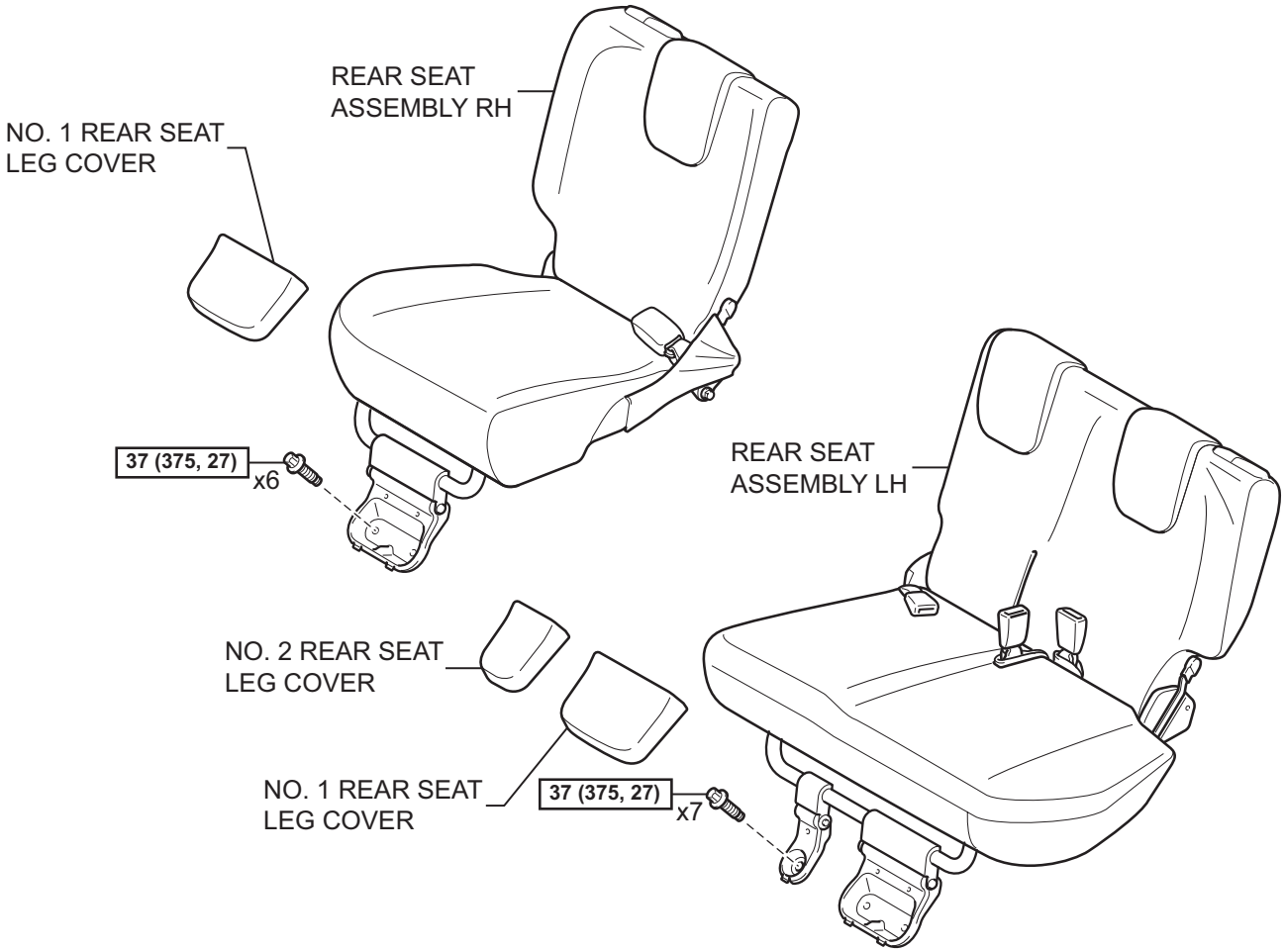

for Hold Down Seat Type:

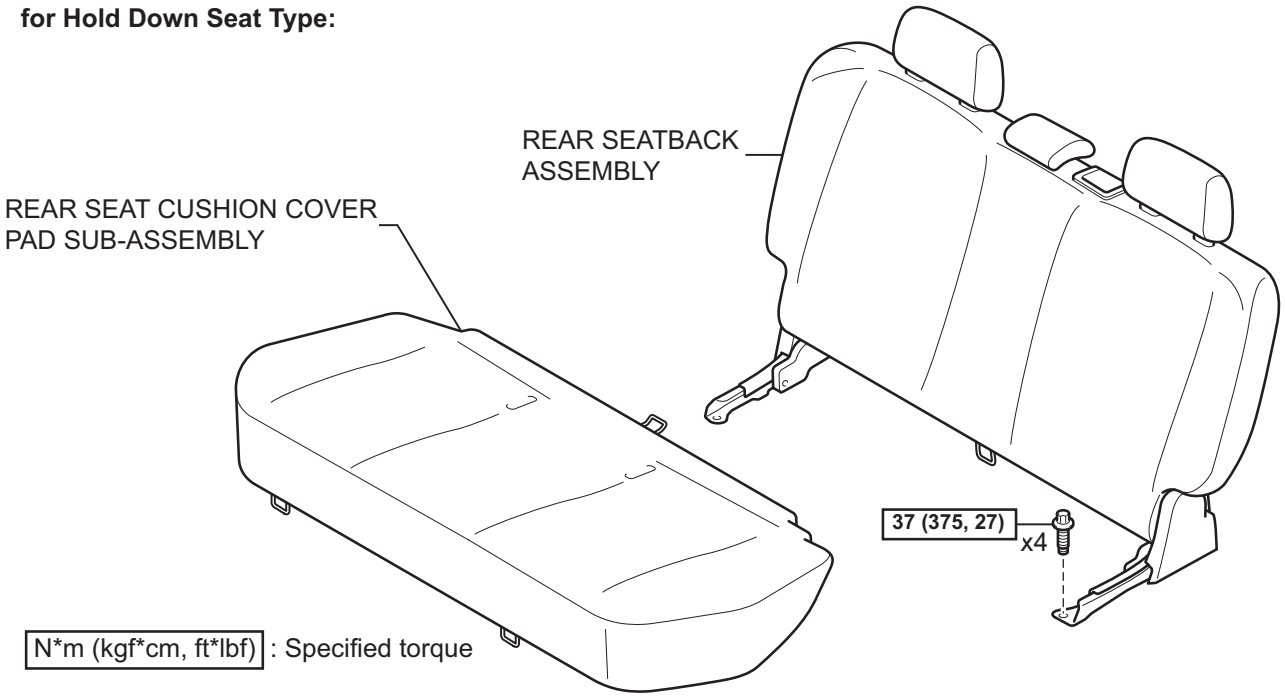

T

B121713E03

RS

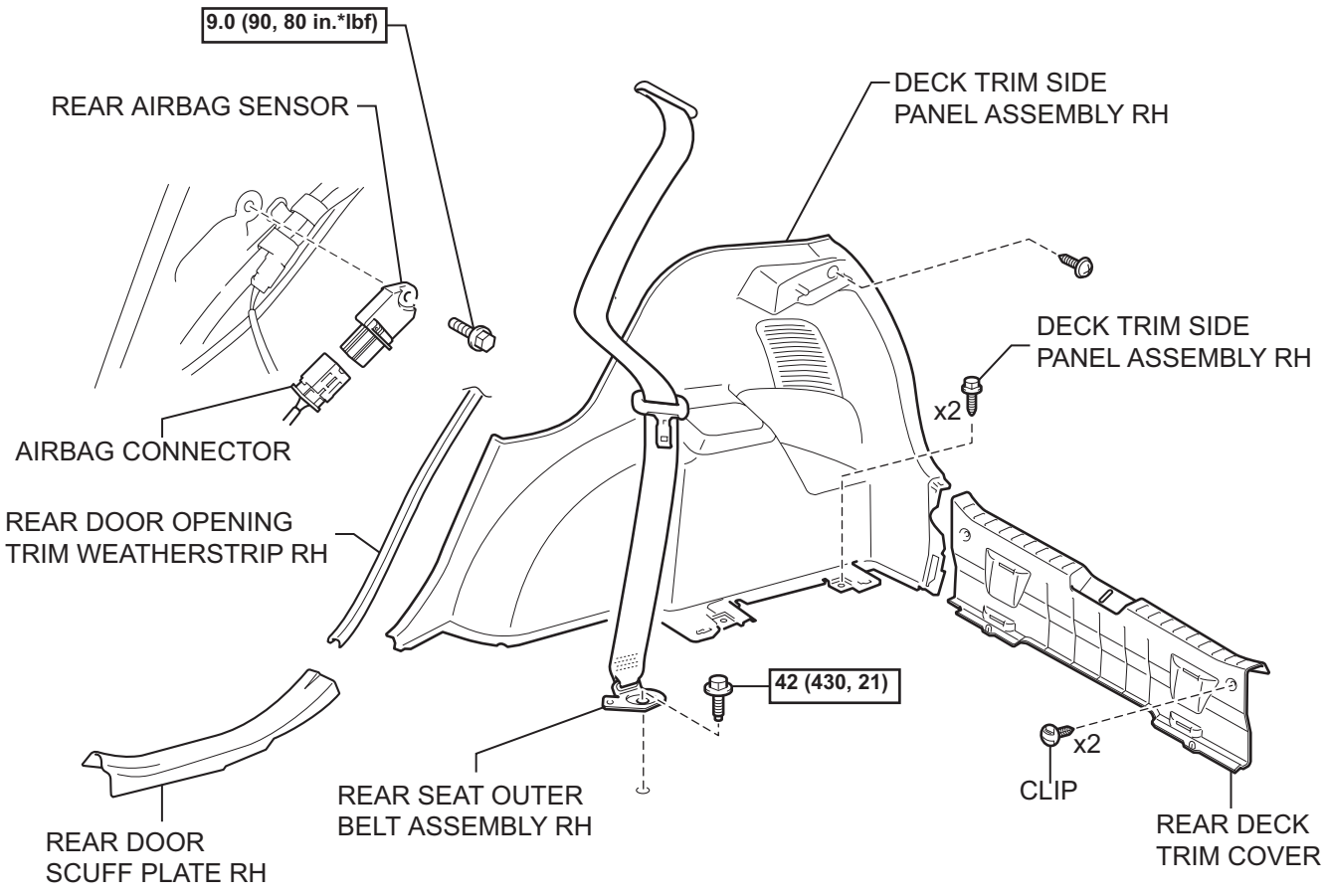

N*m (kgf*cm, ft*lbf) : Specified torque

C121156E01

ON-VEHICLE INSPECTION

1. **INSPECT REAR AIRBAG SENSOR ASSEMBLY (for Vehicle not Involved in Collision)**
   (a) Perform a diagnostic system check (See page RS-38).

2. **INSPECT REAR AIRBAG SENSOR ASSEMBLY (for Vehicle Involved in Collision and Airbag not Deployed)**
   CAUTION:
   For rear airbag sensor removal and installation procedures, see pages RS-473 and RS-475, and carefully follow the correct procedure.
   (a) Perform a diagnostic system check (See page RS-38).
   (b) When the center pillar of the vehicle or its periphery is damaged, check whether there is any damage to the rear airbag sensor. If there are any defects, such as those mentioned below, replace the rear airbag sensor with a new one:
   - Any cracks, dents or chips in the case.
   - Any cracks or other damage to the connector.
   - Peeling of the label or damage to the serial number.

3. **INSPECT REAR AIRBAG SENSOR ASSEMBLY (for Vehicle Involved in Collision)**
   CAUTION:
   For rear airbag sensor removal and installation procedures, see pages RS-473 and RS-475, and carefully follow the correct procedure.
   (a) Replace the rear airbag sensor.

RS

REMOVAL

CAUTION:
Some of the these service operations affect the SRS airbag system. Read the precautionary notices concerning the SRS airbag system before servicing (See page RS-1).
NOTICE:
Always use "Torx" socket wrench E10 when installing the rear seat.
HINT:
The procedure described below is for the RH side. Use the same procedure for both the RH and LH sides, unless otherwise specified.

1. **DISCONNECT CABLE FROM NEGATIVE BATTERY TERMINAL**
2. **REMOVE PACKAGE TRAY TRIM PANEL ASSEMBLY (See page IR-48)**
3. **REMOVE DECK BOARD SUB-ASSEMBLY (See page IR-48)**
4. **REMOVE DECK FLOOR BOX RH (See page IR-48)**
5. **REMOVE DECK FLOOR BOX LH (See page IR-48)**
6. **REMOVE NO. 1 REAR SEAT LEG COVER (for 60/40 Split Seat Type) (See page IR-48)**
7. **REMOVE NO. 2 REAR SEAT LEG COVER (for 60/40 Split Seat Type) (See page SE-70)**
8. **REMOVE REAR SEAT ASSEMBLY RH (for 60/40 Split Seat Type) (See page SE-89)**
9. **REMOVE REAR SEAT ASSEMBLY LH (for 60/40 Split Seat Type) (See page SE-71)**
10. **REMOVE REAR SEAT CUSHION COVER PAD SUB-ASSEMBLY (for Hold Down Seat Type) (See page SE-114)**
11. **REMOVE REAR SEATBACK ASSEMBLY (for Hold Down Seat Type) (See page SE-115)**
12. **REMOVE REAR DECK TRIM COVER (See page IR-49)**
13. **REMOVE REAR DOOR OPENING TRIM WEATHERSTRIP RH**
    (a) Remove the rear opening trim weatherstrip to the extent necessary to remove the deck trim side panel.
14. **REMOVE REAR SEAT OUTER BELT ASSEMBLY RH (See page IR-55)**

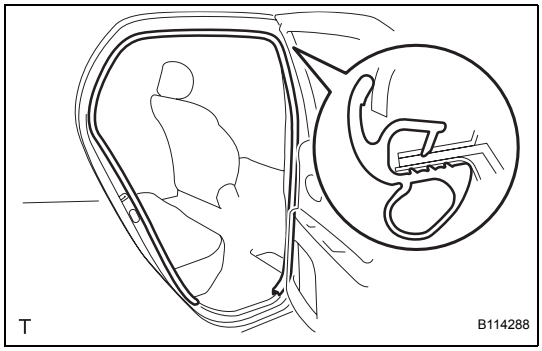

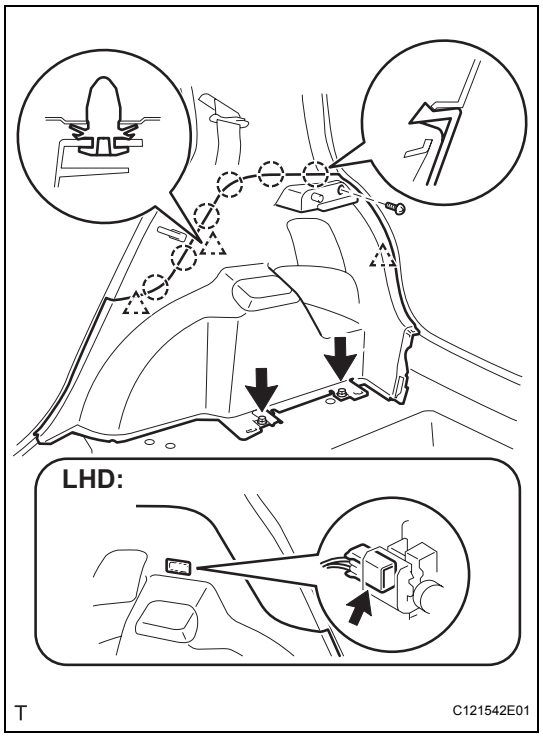

15. REMOVE DECK TRIM SIDE PANEL ASSEMBLY RH

(a) Remove the 3 screws.

(b) Disengage the 3 clips and the 6 claws and remove the deck trim side panel.

HINT:

When removing the deck trim side panel assembly LH, disconnect the room light connector and remove the deck trim side panel.

16. REMOVE REAR AIRBAG SENSOR

CAUTION:

Confirm that the negative battery terminal is disconnected before performing the operation. Even an impact to only the airbag sensor will cause the airbag to deploy.

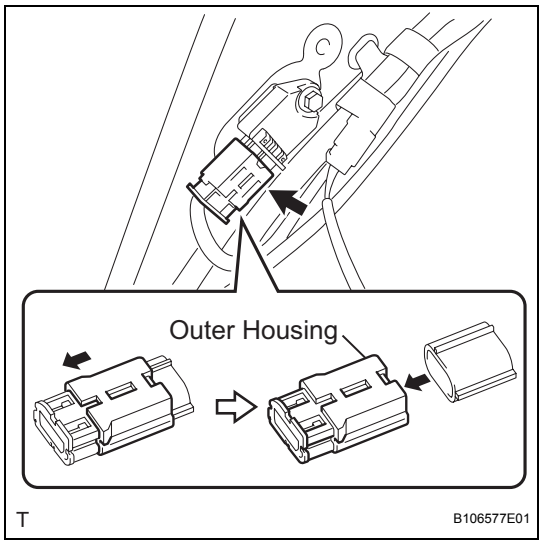

(a) Slide the outer housing and detach the airbag connector.

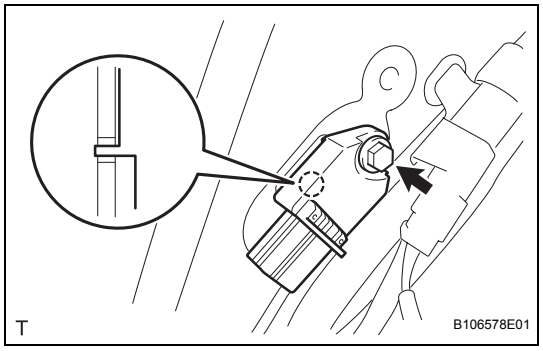

(b) Disengage the bolt and hook and remove the airbag sensor.

RS

INSTALLATION

CAUTION:
Some of these service operations affect the SRS airbag system. Read the precautionary notices concerning the SRS airbag system before servicing.
NOTICE:
Always use "Torx" socket wrench E10 when installing the rear seat.
HINT:
The procedure described below is for the RH side. Use the same procedure for both the LH and RH sides, unless otherwise specified.

1. INSTALL REAR AIRBAG SENSOR

(a) Confirm that the ignition switch is turned to OFF.

(b) Confirm that the negative battery terminal is detached.
CAUTION:
- **Confirm that the negative battery terminal is disconnected before performing the operation. Even an impact to only the airbag sensor will cause the airbag to deploy.**

(c) Insert the hook into the body hole and install the airbag sensor with the bolt.
Torque: 9.0 N*m (90 kgf*cm, 80 in.*lbf)
NOTICE:
- **Do not use a rear airbag sensor that has been dropped.**
- **Do not subject the rear airbag sensor to any impact or force.**

(d) Confirm that there is no looseness by shaking the rear airbag sensor.

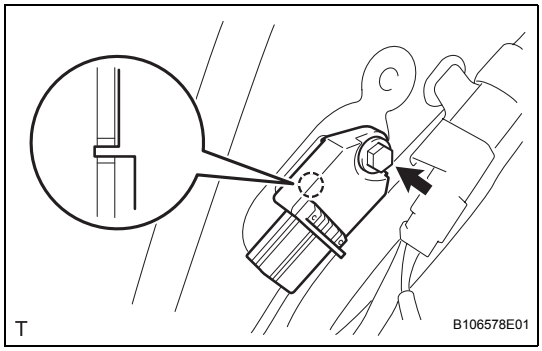

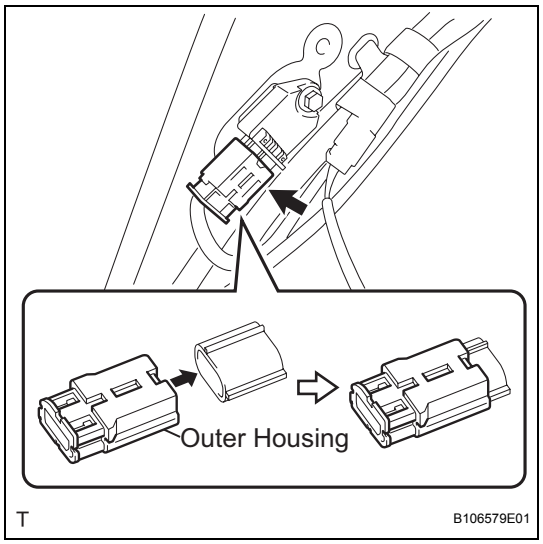

(e) Connect the airbag connector.

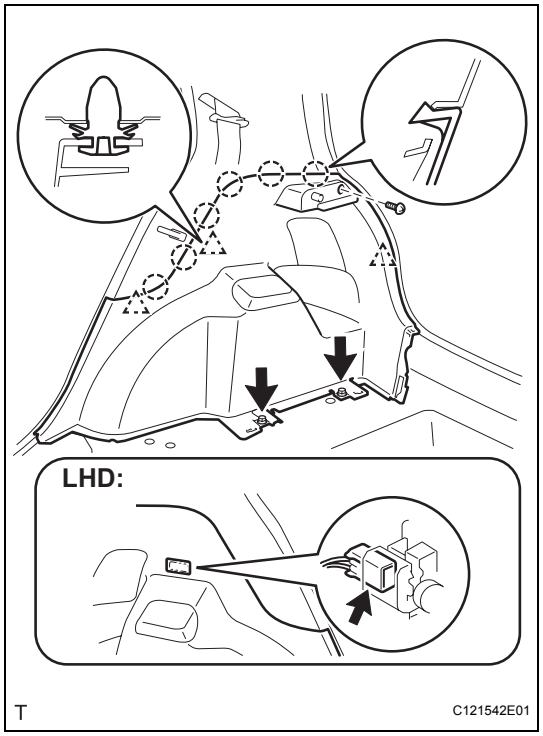

2. INSTALL DECK TRIM SIDE PANEL ASSEMBLY RH

(a) Engage the 3 clips and the 6 claws and install the deck trim side panel.

(b) Tighten the 3 screws.

HINT:

When installing the rear seat outer belt assembly RH, connect the room light connector and install the deck trim side panel assembly RH.

3. INSTALL REAR SEAT OUTER BELT ASSEMBLY RH (See page IR-31)

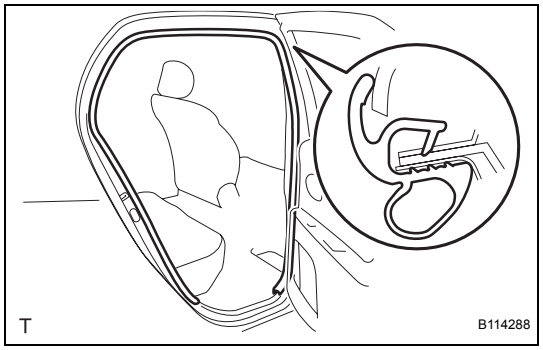

4. INSTALL REAR DOOR OPENING TRIM WEATHERSTRIP RH

(a) Install the rear door opening trim weatherstrip.

5. INSTALL REAR DOOR SCUFF PLATE RH (See page IR-80)

6. INSTALL REAR DECK TRIM COVER (See page IR-82)

7. INSTALL REAR SEAT ASSEMBLY LH (for 60/40 Split Seat Type) (See page SE-84)

8. INSTALL REAR SEAT ASSEMBLY RH (for 60/40 Split Seat Type) (See page SE-102)

9. INSTALL NO. 2 REAR SEAT LEG COVER (for 60/40 Split Seat Type) (See page SE-85)

10. **INSTALL NO. 1 REAR SEAT LEG COVER (for 60/40 Split Seat Type) (See page IR-82)**
11. **INSTALL REAR SEATBACK ASSEMBLY (for Hold Down Seat Type) (See page SE-122)**
12. **INSTALL REAR SEAT CUSHION COVER PAD SUB-ASSEMBLY (for Hold Down Seat Type) (See page SE-123)**
13. **INSTALL DECK FLOOR BOX RH (See page IR-83)**
14. **INSTALL DECK FLOOR BOX LH (See page IR-83)**
15. **INSTALL DECK BOARD SUB-ASSEMBLY (See page IR-83)**
16. **INSTALL PACKAGE TRAY TRIM PANEL ASSEMBLY (See page IR-83)**
17. **CONNECT CABLE TO NEGATIVE BATTERY TERMINAL**
    Torque: 5.4 N*m (55 kgf*cm, 48 in.*lbf)
18. **INSPECT SRS WARNING LIGHT**
    (See page RS-31)

REAR AIRBAG SENSOR (for 3 Door)

COMPONENTS

RS

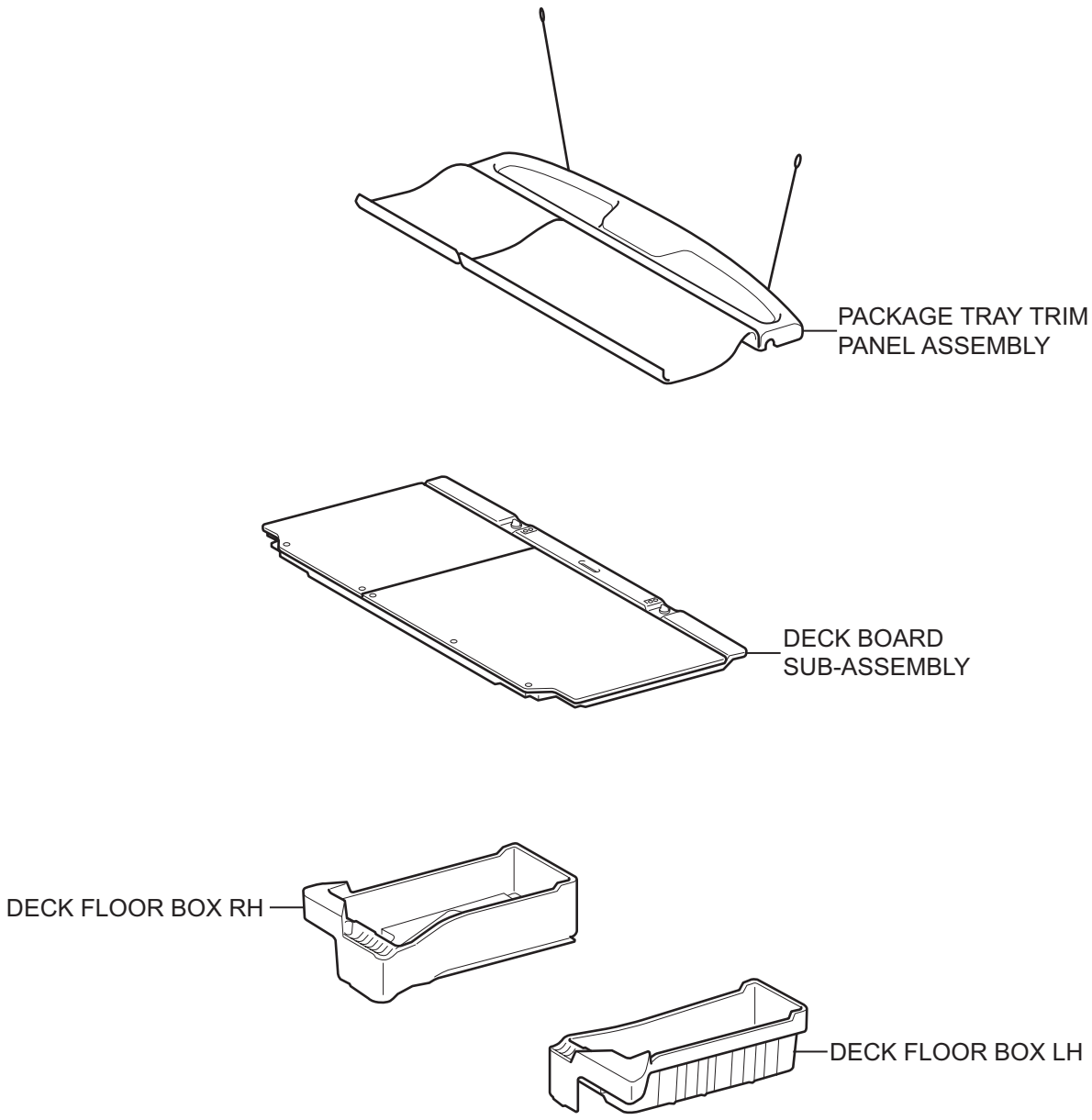

T

B114273E01

RS

for 60/40 Split Seat Type:

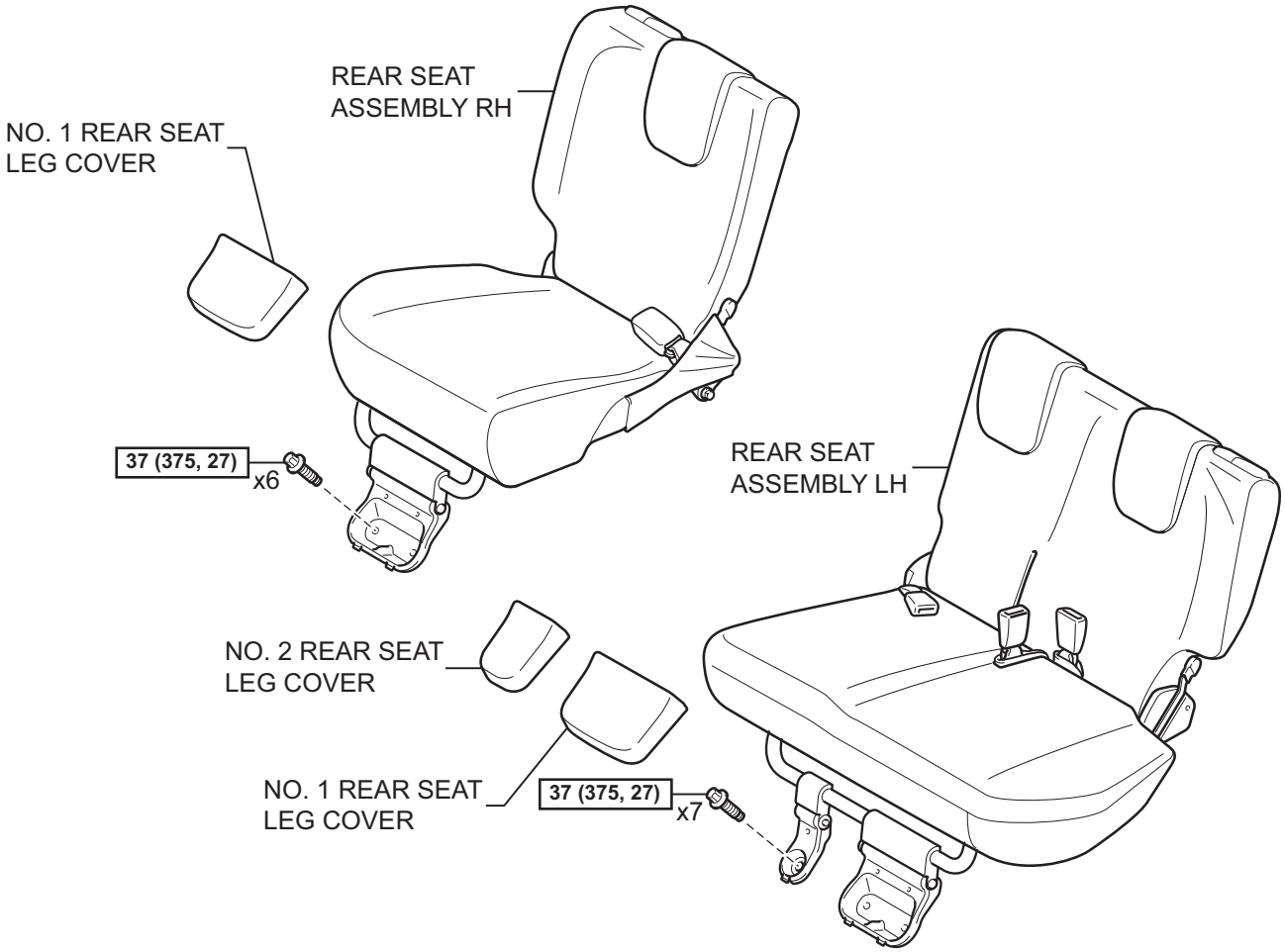

for Hold Down Seat Type:

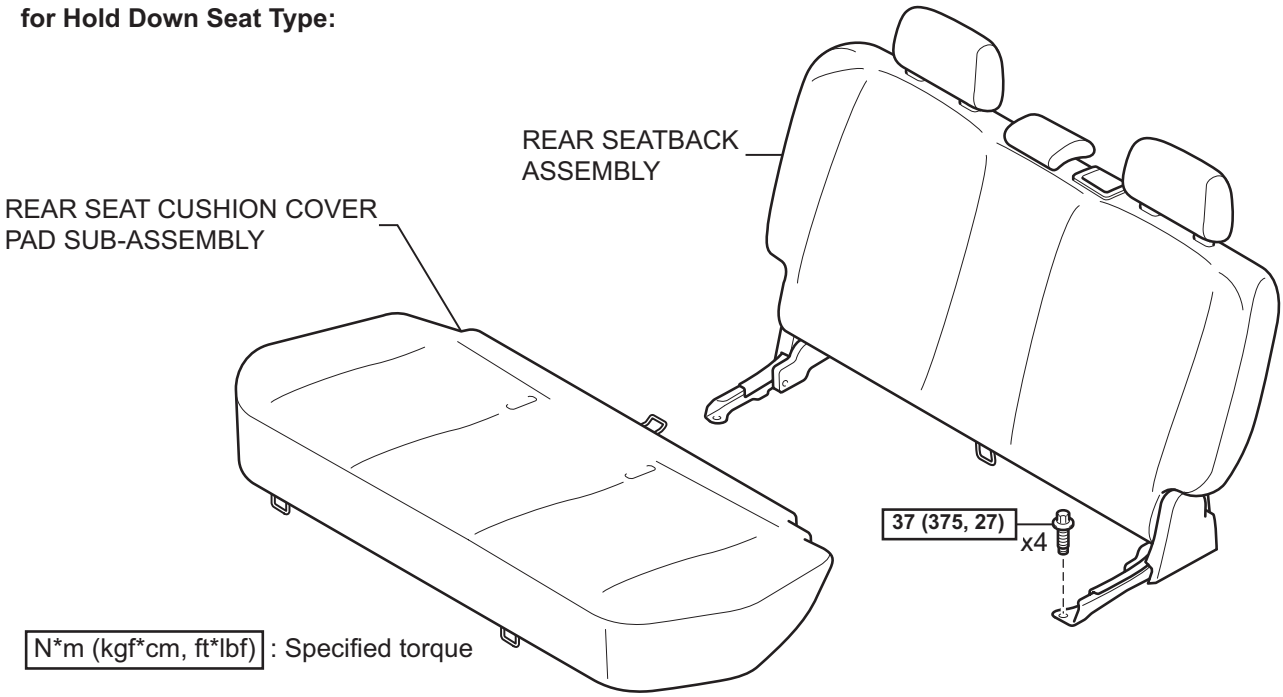

T

B121713E03

RS

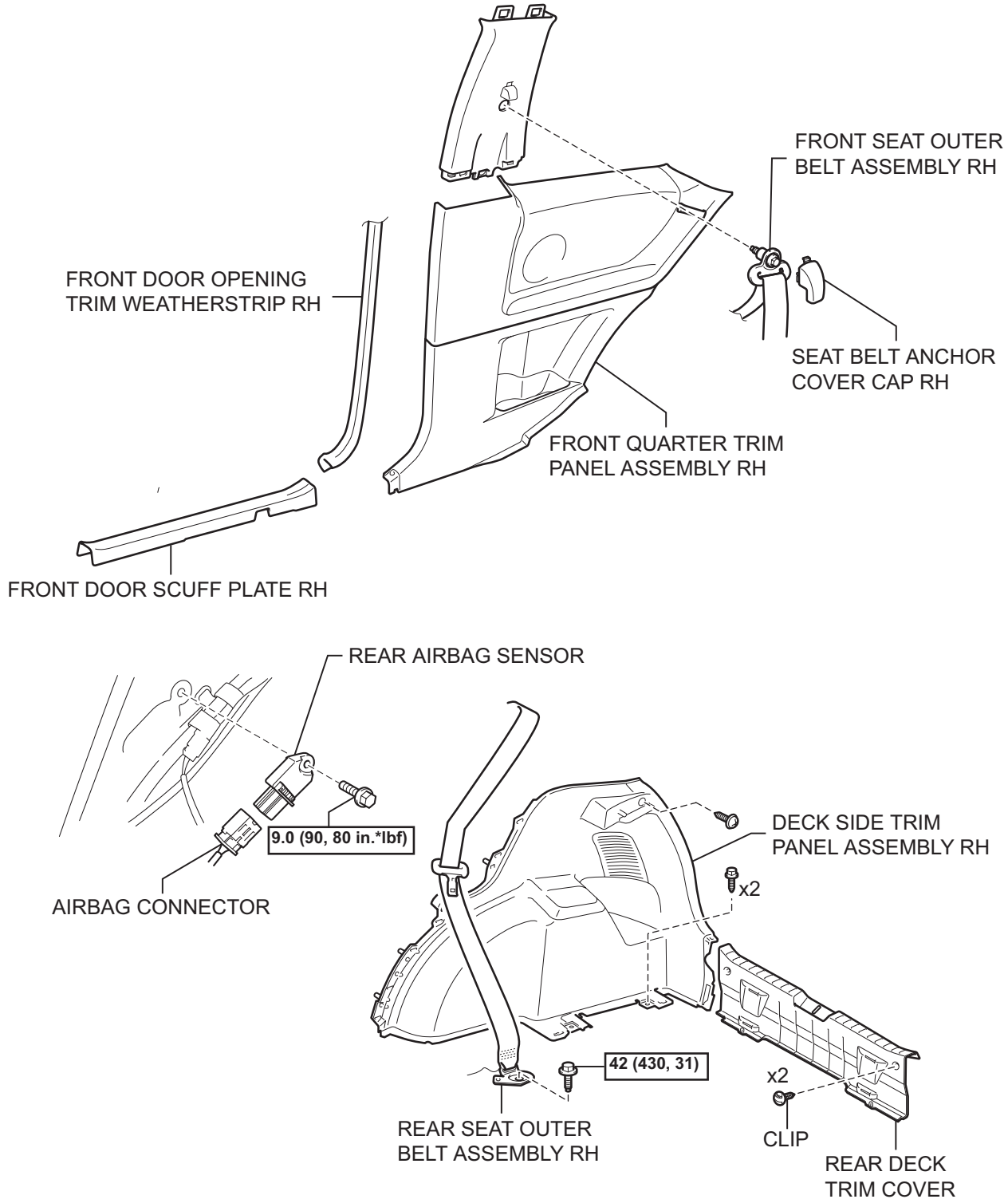

T

C121545E01

ON-VEHICLE INSPECTION

1. **INSPECT REAR AIRBAG SENSOR ASSEMBLY (for Vehicle not Involved in Collision)**
   (a) Perform a diagnostic system check (See page RS-38).

2. **INSPECT REAR AIRBAG SENSOR ASSEMBLY (for Vehicle Involved in Collision and Airbag not Deployed)**
   CAUTION:
   For rear airbag sensor removal and installation procedures, see pages RS-481 and RS-483, and carefully follow the correct procedure.
   (a) Perform a diagnostic system check (See page RS-38).
   (b) When the center pillar of the vehicle or its periphery is damaged, check whether there is any damage to the rear airbag sensor. If there are any defects, such as those mentioned below, replace the rear airbag sensor with a new one:
   - Any cracks, dents or chips in the case.
   - Any cracks or other damage to the connector.
   - Peeling of the label or damage to the serial number.

3. **INSPECT REAR AIRBAG SENSOR ASSEMBLY (for Vehicle Involved in Collision)**
   CAUTION:
   For rear airbag sensor removal and installation procedures, see pages RS-481 and RS-483, and carefully follow the correct procedure.
   (a) Replace the rear airbag sensor.

RS

REMOVAL

CAUTION:
Some of the these service operations affect the SRS airbag system. Read the precautionary notices concerning the SRS airbag system before servicing (See page RS-1).
NOTICE:
Always use "Torx" socket wrench E10 when installing the rear seat.
HINT:
The procedure described below is for the RH side. Use the same procedure for both the RH and LH sides, unless otherwise specified.

1. **DISCONNECT CABLE FROM NEGATIVE BATTERY TERMINAL**
2. **REMOVE PACKAGE TRAY TRIM PANEL ASSEMBLY (See page IR-48)**
3. **REMOVE DECK BOARD SUB-ASSEMBLY (See page IR-48)**
4. **REMOVE DECK FLOOR BOX RH (See page IR-48)**
5. **REMOVE DECK FLOOR BOX LH (See page IR-48)**
6. **REMOVE NO. 1 REAR SEAT LEG COVER (for 60/40 Split Seat Type) (See page IR-96)**
7. **REMOVE NO. 2 REAR SEAT LEG COVER (for 60/40 Split Seat Type) (See page SE-70)**
8. **REMOVE REAR SEAT ASSEMBLY RH (for Slide Reclining Hold Down Seat Type) (See page SE-89)**
9. **REMOVE REAR SEAT ASSEMBLY LH (for Slide Reclining Hold Down Seat Type) (See page SE-71)**
10. **REMOVE REAR SEAT CUSHION COVER PAD SUB-ASSEMBLY (for Hold Down Seat Type) (See page SE-114)**
11. **REMOVE REAR SEATBACK ASSEMBLY (for Hold Down Seat Type) (See page SE-115)**
12. **REMOVE FRONT DOOR SCUFF PLATE RH (See page IR-97)**
13. **REMOVE FRONT DOOR OPENING TRIM WEATHERSTRIP RH**
    (a) Remove the rear opening trim weatherstrip to the extent necessary to remove the quarter trim panel assembly front.
14. **REMOVE FRONT QUARTER TRIM PANEL ASSEMBLY RH (See page IR-97)**
15. **REMOVE REAR DECK TRIM COVER (See page IR-49)**
16. **REMOVE REAR SEAT OUTER BELT ASSEMBLY RH (See page IR-98)**

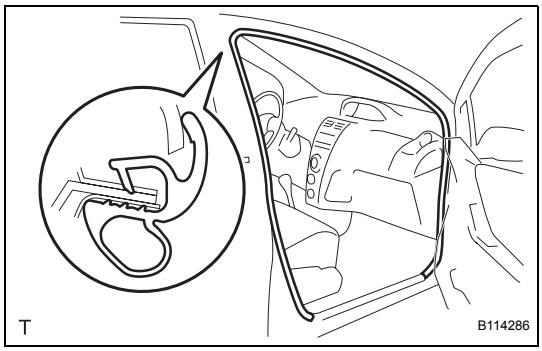

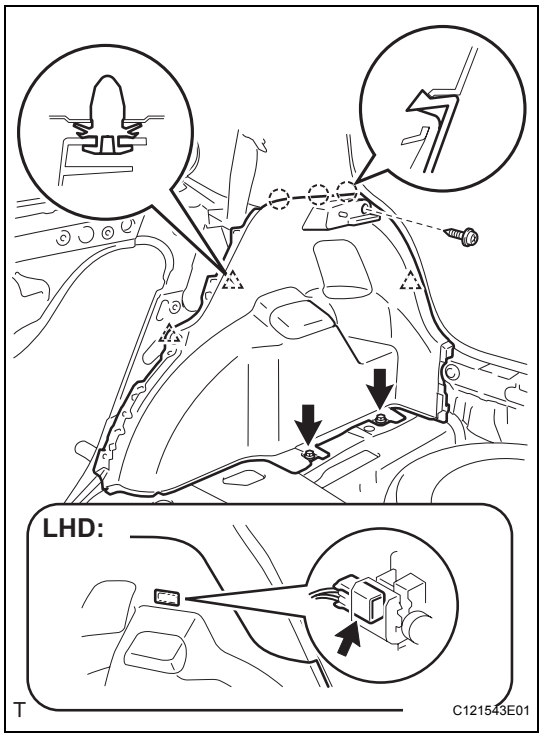

17. REMOVE DECK SIDE TRIM PANEL ASSEMBLY RH

(a) Remove the 3 screws.

(b) Disengage the 3 clips and the 3 claws and remove the deck side trim panel.

HINT:

When removing the deck side trim panel assembly LH, disconnect the room light connector and remove the deck side trim panel .

18. REMOVE REAR AIRBAG SENSOR

CAUTION:

Confirm that the negative battery terminal is disconnected before performing the operation. Even an impact to only the airbag sensor will cause the airbag to deploy.

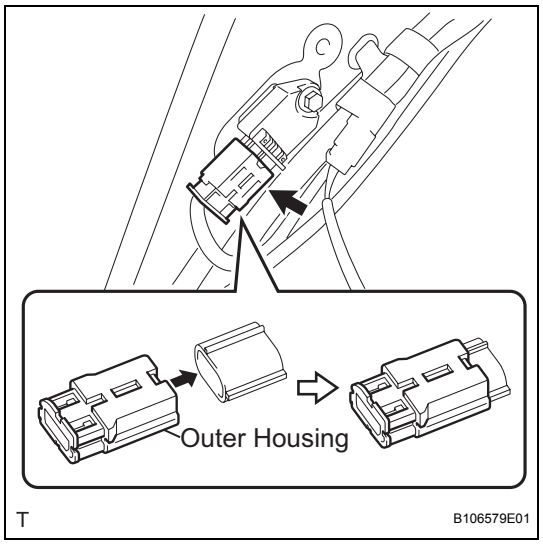

(a) Slide the outer housing and detach the airbag connector.

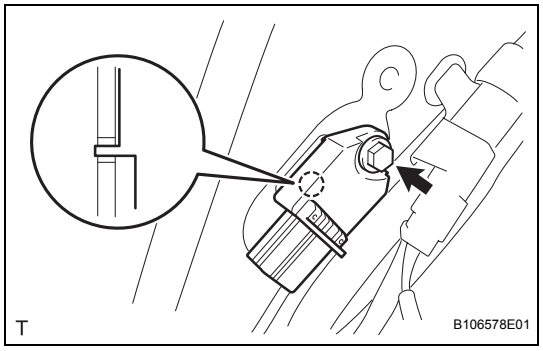

(b) Remove the bolt, disengage the hook and remove the airbag sensor.

RS

INSTALLATION

CAUTION:
Some of these service operations affect the SRS airbag system. Read the precautionary notices concerning the SRS airbag system before servicing.
NOTICE:
Always use "Torx" socket wrench E10 when installing the rear seat.
HINT:
The procedure described below is for the RH side. Use the same procedure for both the LH and RH sides, unless otherwise specified.

1. INSTALL REAR AIRBAG SENSOR

(a) Confirm that the ignition switch is turned to OFF.

(b) Confirm that the negative battery terminal is detached.
CAUTION:
- **Confirm that the negative battery terminal is disconnected before performing the operation. Even an impact to only the airbag sensor will cause the airbag to deploy.**

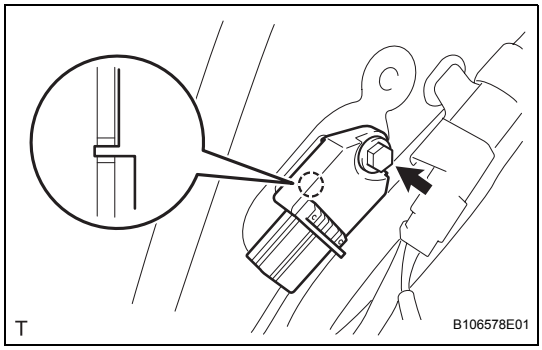

(c) Insert the hook into the body hole and install the airbag sensor with the bolt.
Torque: 9.0 N*m (90 kgf*cm, 80 in.*lbf)
NOTICE:
- **Do not use a rear airbag sensor that has been dropped.**
- **Do not subject the rear airbag sensor to any impact or force.**

(d) Confirm that there is no looseness by shaking the rear airbag sensor.

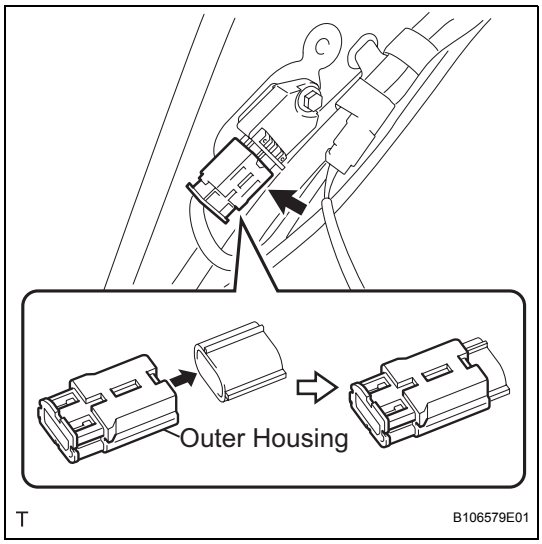

(e) Connect the airbag connector.

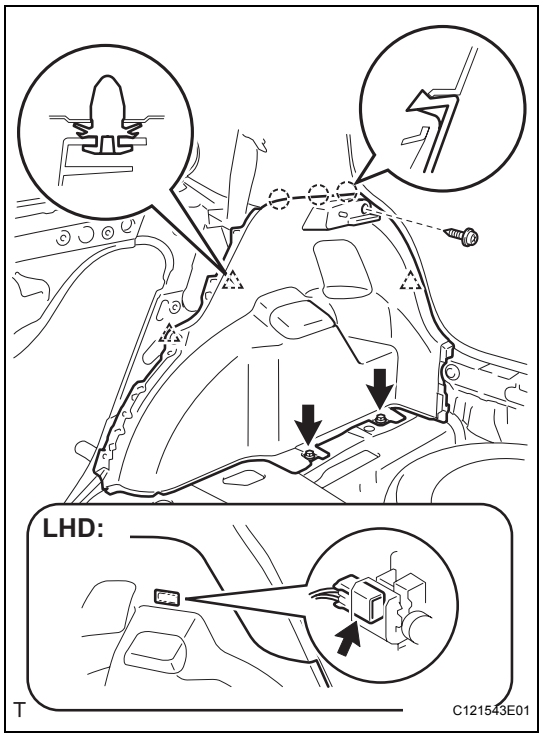

2. **INSTALL DECK SIDE TRIM PANEL ASSEMBLY RH**
   (a) Engage the 3 clips and the 3 claws and install the deck trim side panel.
   (b) Tighten the 3 screws.
   HINT:
   When installing the deck side trim panel assembly LH, connect the room light connector and install the deck side trim panel.
3. **INSTALL REAR SEAT OUTER BELT ASSEMBLY RH (See page IR-118)**
4. **INSTALL REAR DECK TRIM COVER (See page IR-82)**
5. **INSTALL FRONT QUARTER TRIM PANEL ASSEMBLY RH (See page IR-118)**

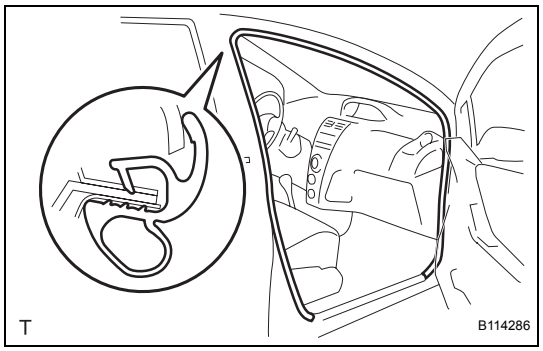

6. **INSTALL FRONT DOOR OPENING TRIM WEATHERSTRIP RH**
   (a) Install the rear door opening trim weatherstrip.
7. **INSTALL FRONT DOOR SCUFF PLATE RH (See page IR-119)**
8. **INSTALL REAR SEAT ASSEMBLY LH (for 60/40 Split Seat Type) (See page SE-84)**
9. **INSTALL REAR SEAT ASSEMBLY RH (for 60/40 Split Seat Type) (See page SE-102)**
10. **INSTALL NO. 2 REAR SEAT LEG COVER (for 60/40 Split Seat Type) (See page SE-85)**
11. **INSTALL NO. 1 REAR SEAT LEG COVER (for 60/40 Split Seat Type) (See page IR-119)**
12. **INSTALL REAR SEATBACK ASSEMBLY (for Hold Down Seat Type) (See page SE-122)**
13. **INSTALL REAR SEAT CUSHION COVER PAD SUB-ASSEMBLY (for Hold Down Seat Type) (See page SE-123)**
14. **INSTALL DECK FLOOR BOX RH (See page IR-83)**
15. **INSTALL DECK FLOOR BOX LH (See page IR-83)**
16. **INSTALL DECK BOARD SUB-ASSEMBLY (See page IR-83)**
17. **INSTALL PACKAGE TRAY TRIM PANEL ASSEMBLY (See page IR-83)**
18. **CONNECT CABLE TO NEGATIVE BATTERY TERMINAL**
    Torque: 5.4 N*m (55 kgf*cm, 48 in.*lbf)

19. INSPECT SRS WARNING LIGHT
(See page RS-31)

SEAT POSITION SENSOR

COMPONENTS

RS

for Hatchback:

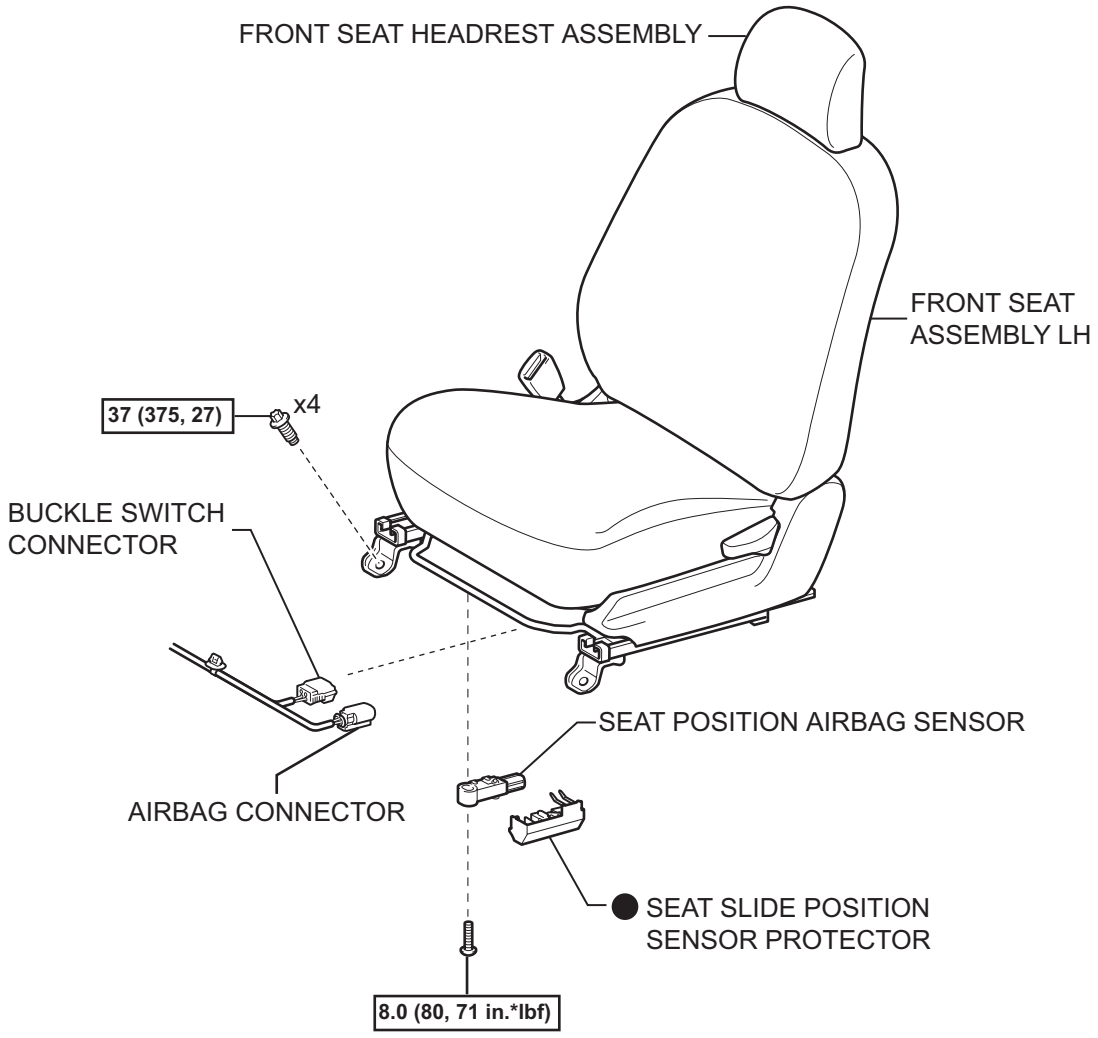

N*m (kgf*cm, ft.*lbf) : Specified torque ● Non-reusable part

T

C119865E01

RS

for Sedan:

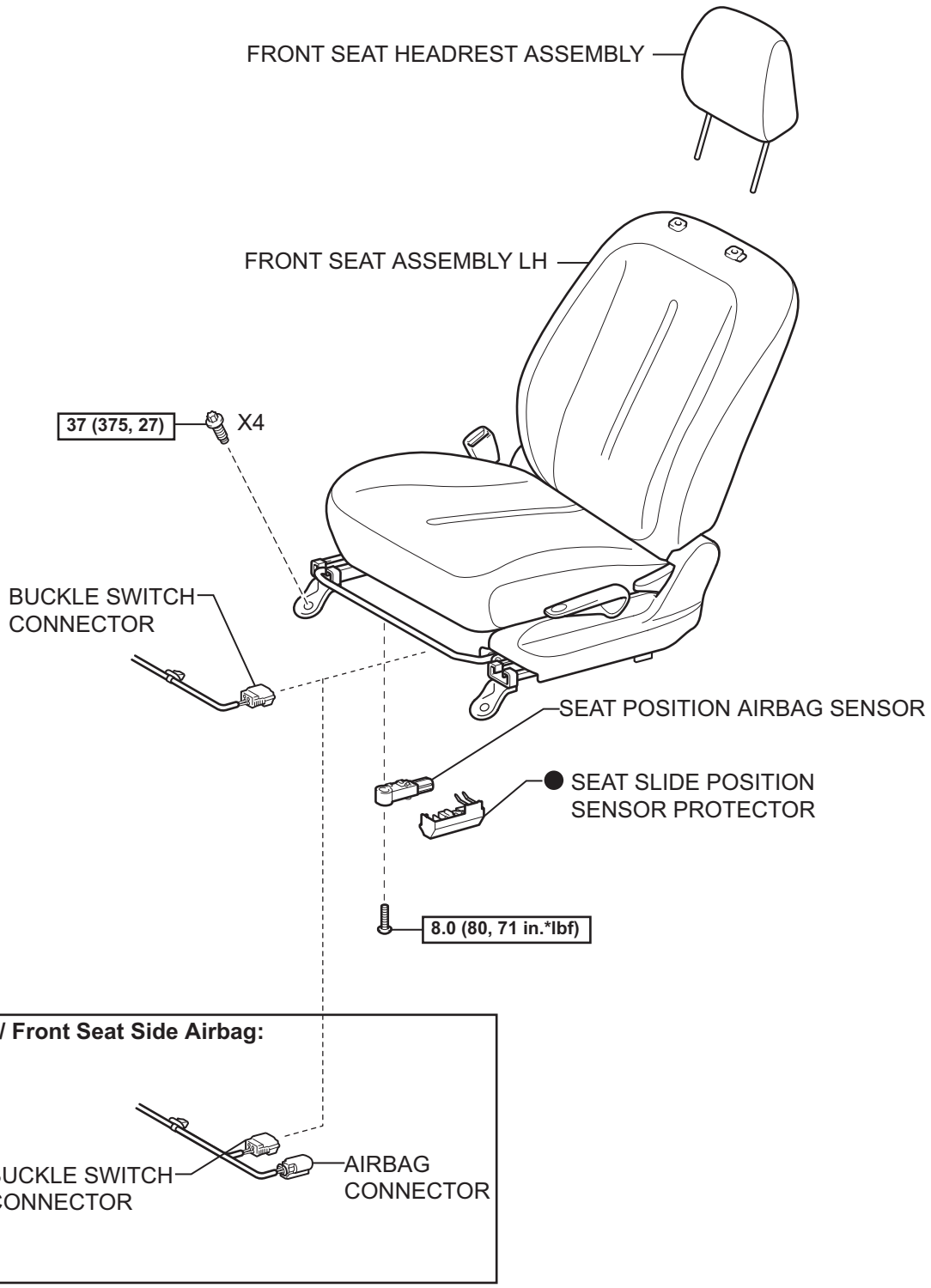

N*m (kgf*cm, ft*lbf) : Specified torque ● Non-reusable part

T

C143432E01

DTC	B1615/14	Front Airbag Sensor LH Circuit Malfunction

DESCRIPTION

The front airbag sensor LH consists of parts including the diagnostic circuit and the frontal deceleration sensor.

RS

When the center airbag sensor assembly receives signals from the frontal deceleration sensor, it determines whether or not the SRS should be activated.

DTC B1615/14 is set when a malfunction is detected in the front airbag sensor LH circuit.

DTC No.	DTC Detecting Condition	Trouble Area
B1615/14	• Center airbag sensor assembly detects line short circuit signal, open circuit signal, short circuit to ground signal or short circuit to B+ signal in front airbag sensor LH circuit for 2 seconds. • Front airbag sensor LH malfunction • Center airbag sensor assembly malfunction	• Instrument panel wire • Engine room main wire • Front airbag sensor LH • Center airbag sensor assembly

WIRING DIAGRAM

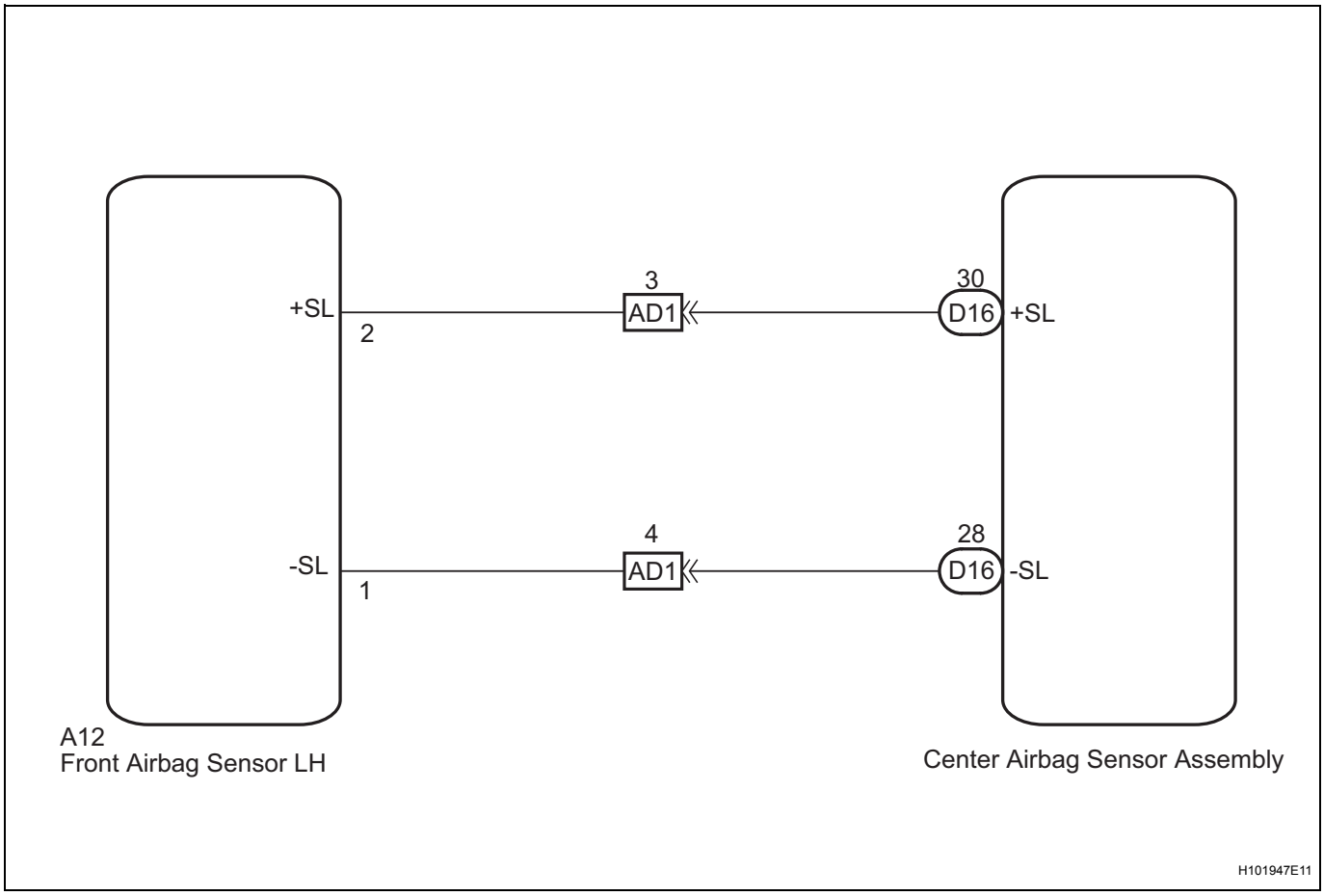

INSPECTION PROCEDURE

NOTICE:

In order to prevent unexpected airbag deployment, disconnect the following connectors before inspecting parts such as wire harnesses, if the application of tester probes to the center airbag sensor assembly connector is necessary.

1. Turn the ignition switch to the lock position.
2. Disconnect the negative (-) terminal cable from the battery, and wait for at least 90 seconds.
3. Disconnect the connector from the center airbag sensor assembly.

4. Disconnect the connectors from the steering pad.
5. Disconnect the connectors from the front passenger airbag assembly.
6. Disconnect the connector from the front seat outer belt assembly LH.
7. Disconnect the connector from the front seat outer belt assembly RH.
   HINT:
   Skip the following steps if side and curtain shield airbags are not fitted.
8. Disconnect the connector from the front seat side airbag assembly LH.
9. Disconnect the connector from the front seat side airbag assembly RH.
10. Disconnect the connector from the curtain shield airbag assembly LH.
11. Disconnect the connector from the curtain shield airbag assembly RH.

1 CHECK DTC

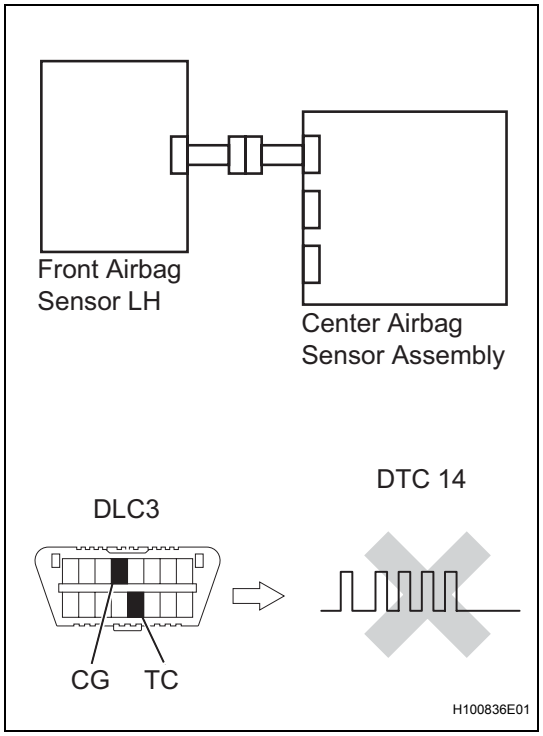

(a) Turn the ignition switch on, and wait for at least 60 seconds.
(b) Clear the DTCs stored in the memory (See page RS-38).
(c) Turn the ignition switch off.
(d) Turn the ignition switch on, and wait for at least 60 seconds.
(e) Check the DTCs (See page RS-38).
OK:
DTC B1615/14 is not output.
HINT:
DTCs other than DTC B1615/14 may be output at this time, but they are not related to this check.

OK → **USE SIMULATION METHOD TO CHECK**

NG

2 CHECK CONNECTION OF CONNECTORS

(a) Turn the ignition switch off.
(b) Disconnect the negative (-) terminal cable from the battery, and wait for at least 90 seconds.
(c) Check that the connectors are properly connected to the center airbag sensor assembly and the front airbag sensor LH.
OK:
The connectors are properly connected.

NG → **CONNECT CONNECTORS**

OK

RS

3 CHECK FRONT AIRBAG SENSOR LH CIRCUIT (FOR OPEN)

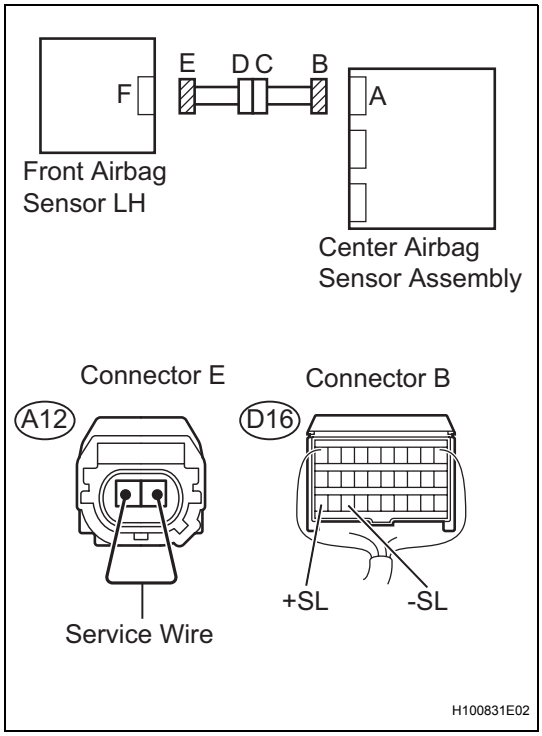

(a) Disconnect the connectors from the center airbag sensor assembly and the front airbag sensor LH.
(b) Using a service wire, connect A12-1 and A12-2 of connector E.
NOTICE:
Do not forcibly insert the service wire into the terminals of the connector when connecting.
(c) Measure the resistance.
Standard resistance

Tester Connection	Condition	Specified Condition
D16-30 (+SL) - D16-28 (-SL)	Always	Below 1 Ω

NG → **Go to step 8**

OK

4 CHECK FRONT AIRBAG SENSOR LH CIRCUIT (FOR SHORT)

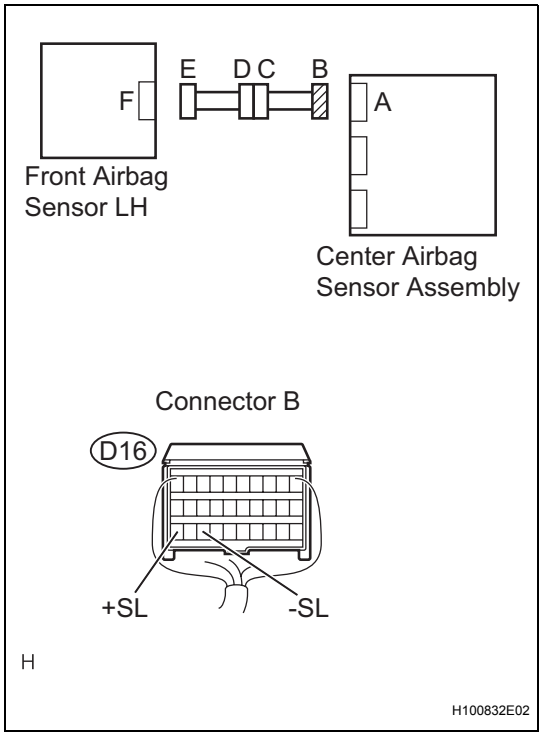

(a) Disconnect the service wire from connector E.
(b) Measure the resistance.
Standard resistance

Tester Connection	Condition	Specified Condition
D16-30 (+SL) - D16-28 (-SL)	Always	1 MΩ or higher

NG → **Go to step 9**

OK

RS

5 CHECK FRONT AIRBAG SENSOR LH CIRCUIT (TO B+)

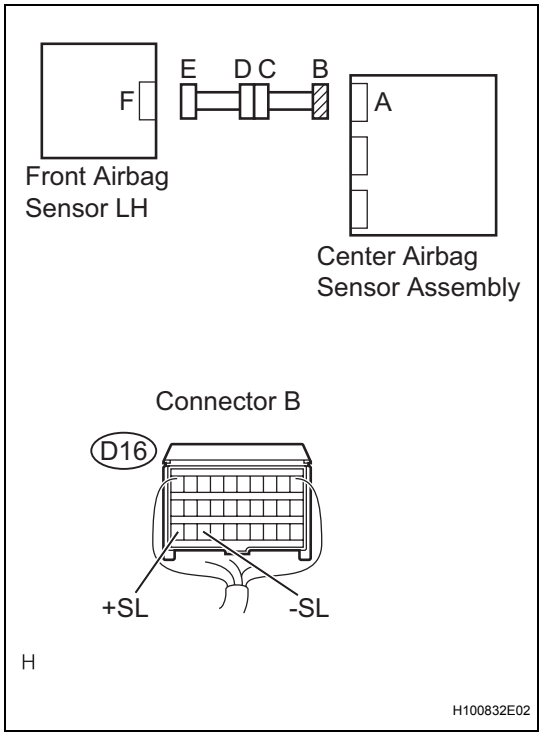

(a) Connect the negative (-) terminal cable to the battery, and wait for at least 2 seconds.
(b) Turn the ignition switch on.
(c) Measure the voltage.
Standard voltage

Tester Connection	Condition	Specified Condition
D16-30 (+SL) - Body ground	Ignition switch on	Below 1 V
D16-28 (-SL) - Body ground	Ignition switch on	Below 1 V

NG → **Go to step 10**

OK

6 CHECK FRONT AIRBAG SENSOR LH CIRCUIT (TO GROUND)

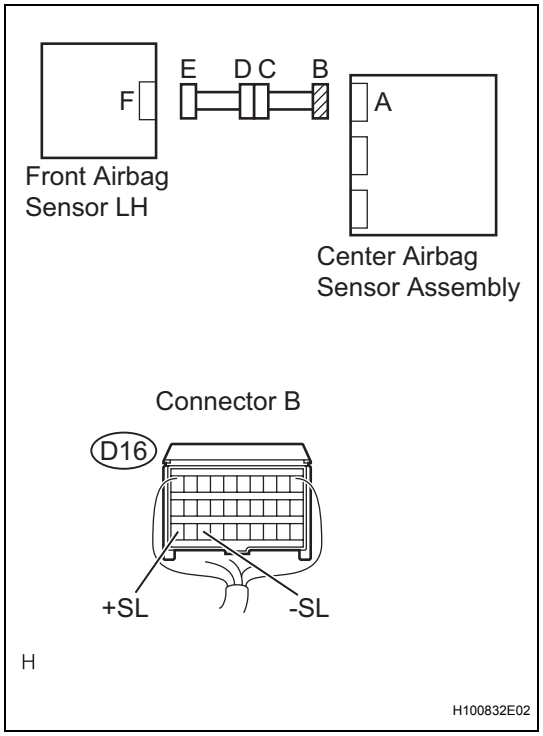

(a) Turn the ignition switch off.
(b) Disconnect the negative (-) terminal cable from the battery, and wait for at least 90 seconds.
(c) Measure the resistance.
Standard resistance

Tester Connection	Condition	Specified Condition
D16-30 (+SL) - Body ground	Always	1 MΩ or higher
D16-28 (-SL) - Body ground	Always	1 MΩ or higher

NG → **Go to step 11**

OK

RS

7	CHECK FRONT AIRBAG SENSOR LH

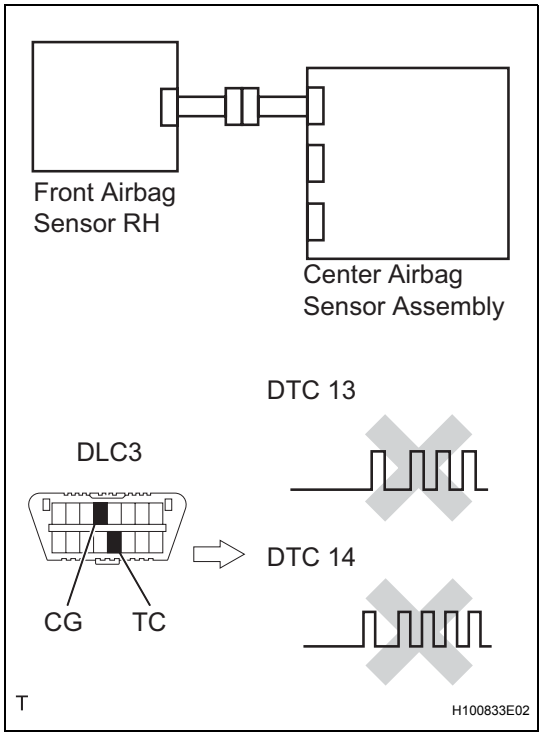

(a) Connect the connectors to the center airbag sensor assembly.
(b) Interchange the front airbag sensor LH with RH and connect the connectors to them.
(c) Connect the negative (-) terminal cable to the battery, and wait for at least 2 seconds.
(d) Turn the ignition switch on, and wait for at least 60 seconds.
(e) Clear the DTCs stored in the memory (See page RS-38).
(f) Turn the ignition switch off.
(g) Turn the ignition switch on, and wait for at least 60 seconds.
(h) Check the DTCs (See page RS-38).

Result

Result	Proceed to
DTC B1615/14 is output.	A
DTC B1610/13 is output.	B
DTC B1610/13 and B1615/14 are not output.	C

HINT:
DTCs other than DTC B1610/13 and B1615/14 may be output at this time, but they are not related to this check.

A → **REPLACE CENTER AIRBAG SENSOR ASSEMBLY**

B → **REPLACE FRONT AIRBAG SENSOR LH**

C

USE SIMULATION METHOD TO CHECK

RS

8	CHECK ENGINE ROOM MAIN WIRE (FOR OPEN)

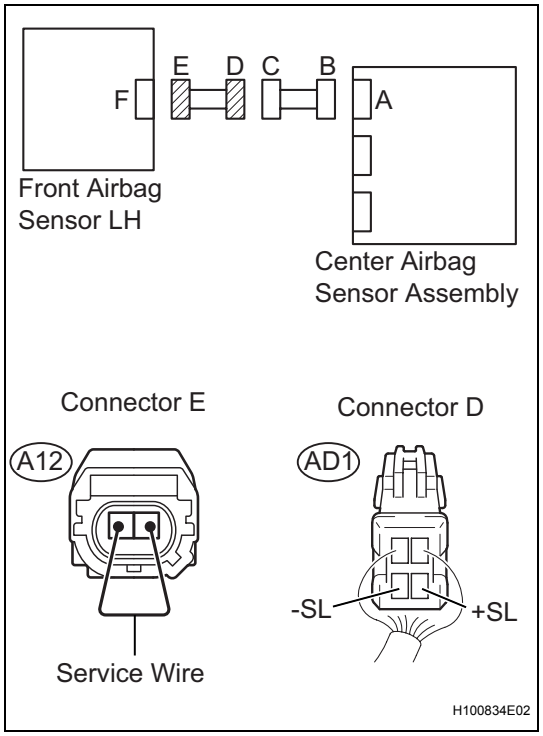

(a) Disconnect the engine room main wire connector from the instrument panel wire.
HINT:
The service wire has already been inserted into connector E.

(b) Measure the resistance.
Standard resistance

Tester Connection	Condition	Specified Condition
AD1-3 (+SL) - AD1-4 (-SL)	Always	Below 1 Ω

NG → **REPAIR OR REPLACE ENGINE ROOM MAIN WIRE**

OK

REPAIR OR REPLACE INSTRUMENT PANEL WIRE

RS

9	CHECK ENGINE ROOM MAIN WIRE (FOR SHORT)

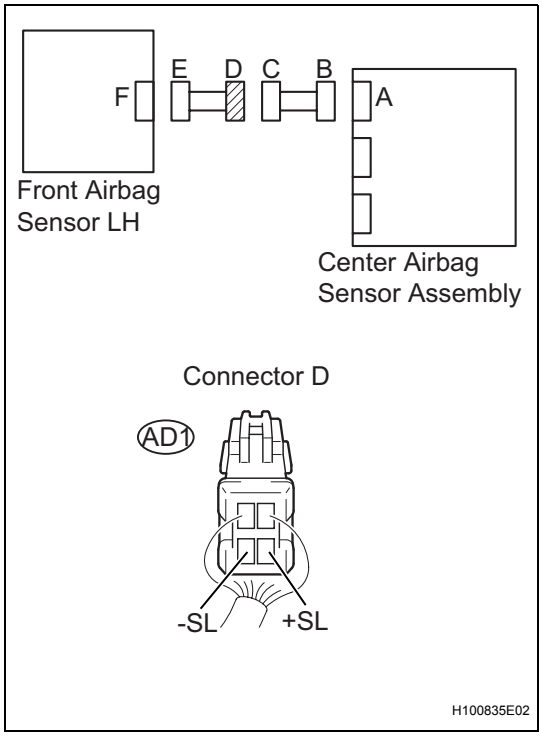

(a) Disconnect the service wire from connector E.
(b) Measure the resistance.
Standard resistance

Tester Connection	Condition	Specified Condition
AD1-3 (+SL) - AD1-4 (-SL)	Always	1 MΩ or higher

NG → **REPAIR OR REPLACE ENGINE ROOM MAIN WIRE**

OK

REPAIR OR REPLACE INSTRUMENT PANEL WIRE

RS

10 CHECK ENGINE ROOM MAIN WIRE (TO B+)

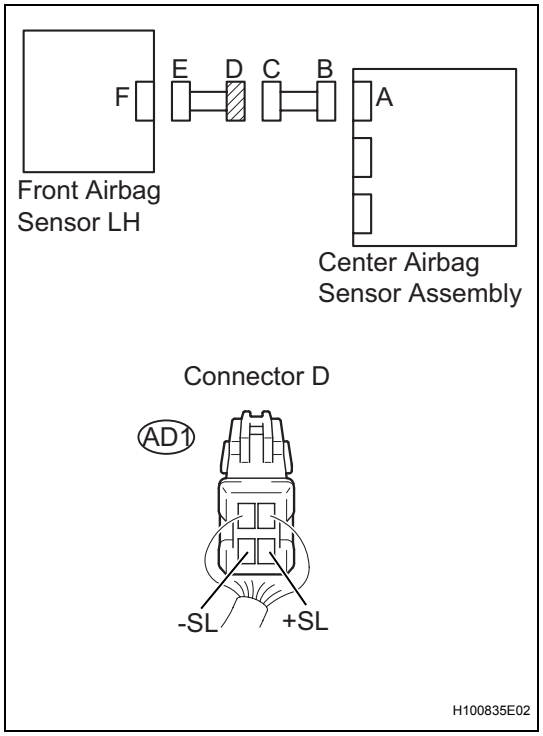

(a) Turn the ignition switch to the lock position.
(b) Disconnect the negative(-) terminal cable from the battery, and wait for at least 90 seconds.
(c) Disconnect the engine room main wire connector from the instrument panel wire.
(d) Connect the negative (-) terminal cable to the battery, and wait for at least 2 seconds.
(e) Turn the ignition switch on.
(f) Measure the voltage.

Standard voltage

Tester Connection	Condition	Specified Condition
AD1-3 (+SL) - Body ground	Ignition switch on	Below 1 V
AD1-4 (-SL) - Body ground	Ignition switch on	Below 1 V

NG → **REPAIR OR REPLACE ENGINE ROOM MAIN WIRE**

OK

REPAIR OR REPLACE INSTRUMENT PANEL WIRE

RS

11	CHECK ENGINE ROOM MAIN WIRE (TO GROUND)

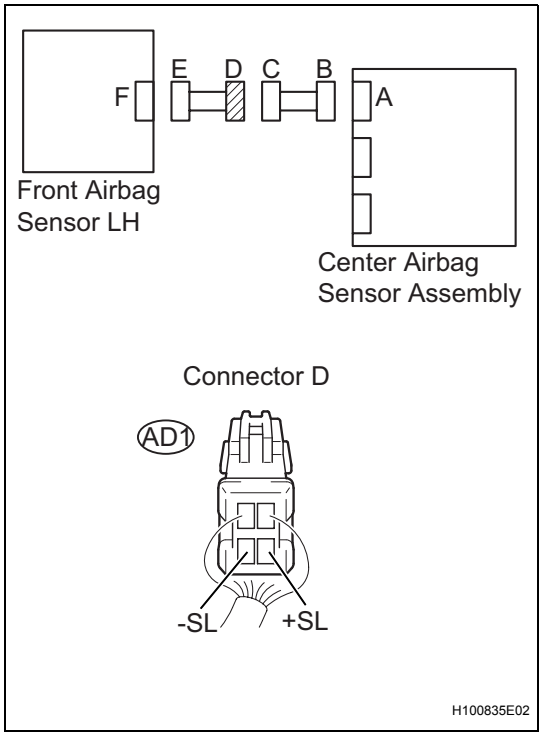

(a) Disconnect the engine room main wire connector from the instrument panel wire.
(b) Measure the resistance.
Standard resistance

Tester Connection	Condition	Specified Condition
AD1-3 (+SL) - Body ground	Always	1 MΩ or higher
AD1-4 (-SL) - Body ground	Always	1 MΩ or higher

NG → **REPAIR OR REPLACE ENGINE ROOM MAIN WIRE**

OK

REPAIR OR REPLACE INSTRUMENT PANEL WIRE

SEAT POSITION SENSOR

COMPONENTS

RS

for Hatchback:

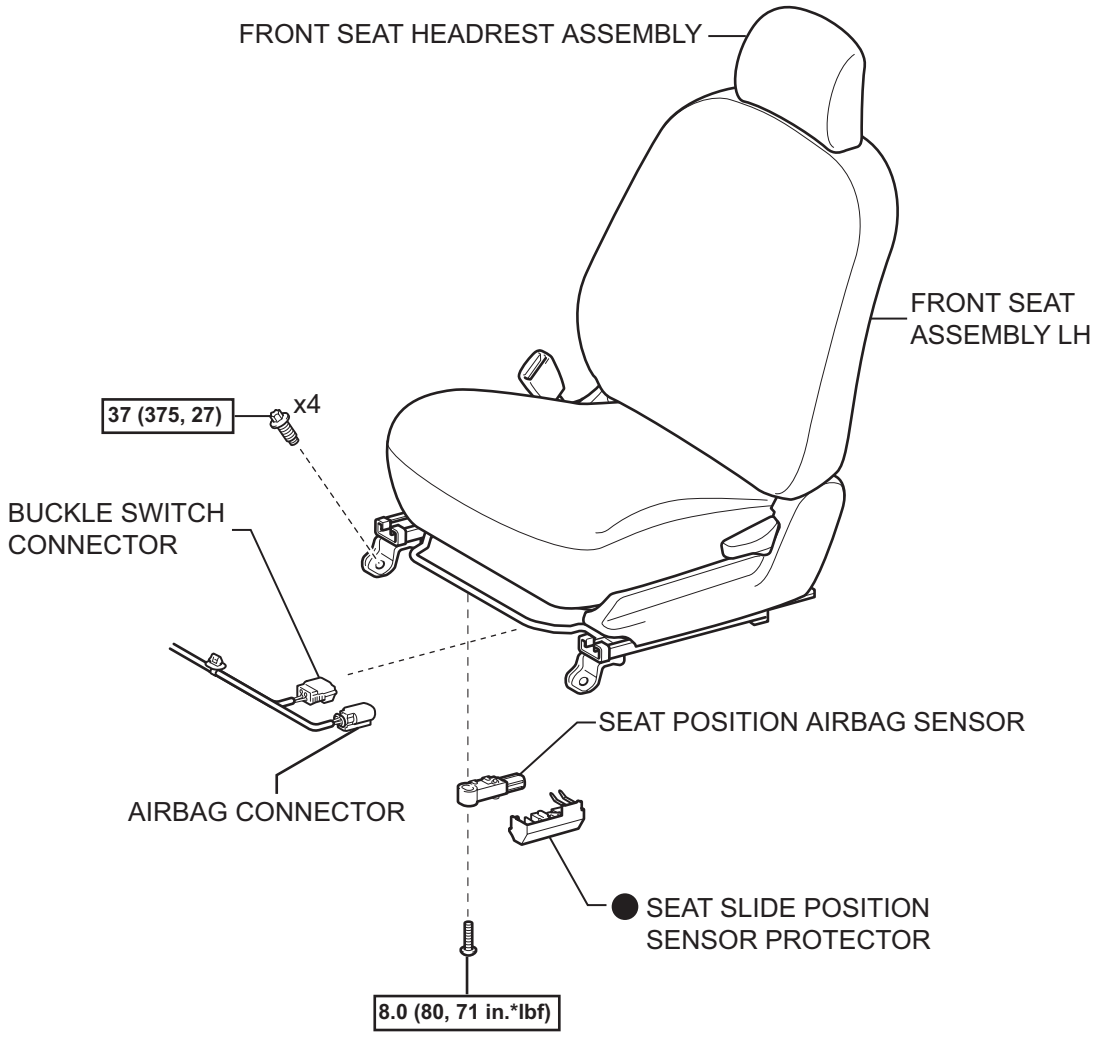

N*m (kgf*cm, ft.*lbf) : Specified torque ● Non-reusable part

T

C119865E01

RS

for Sedan:

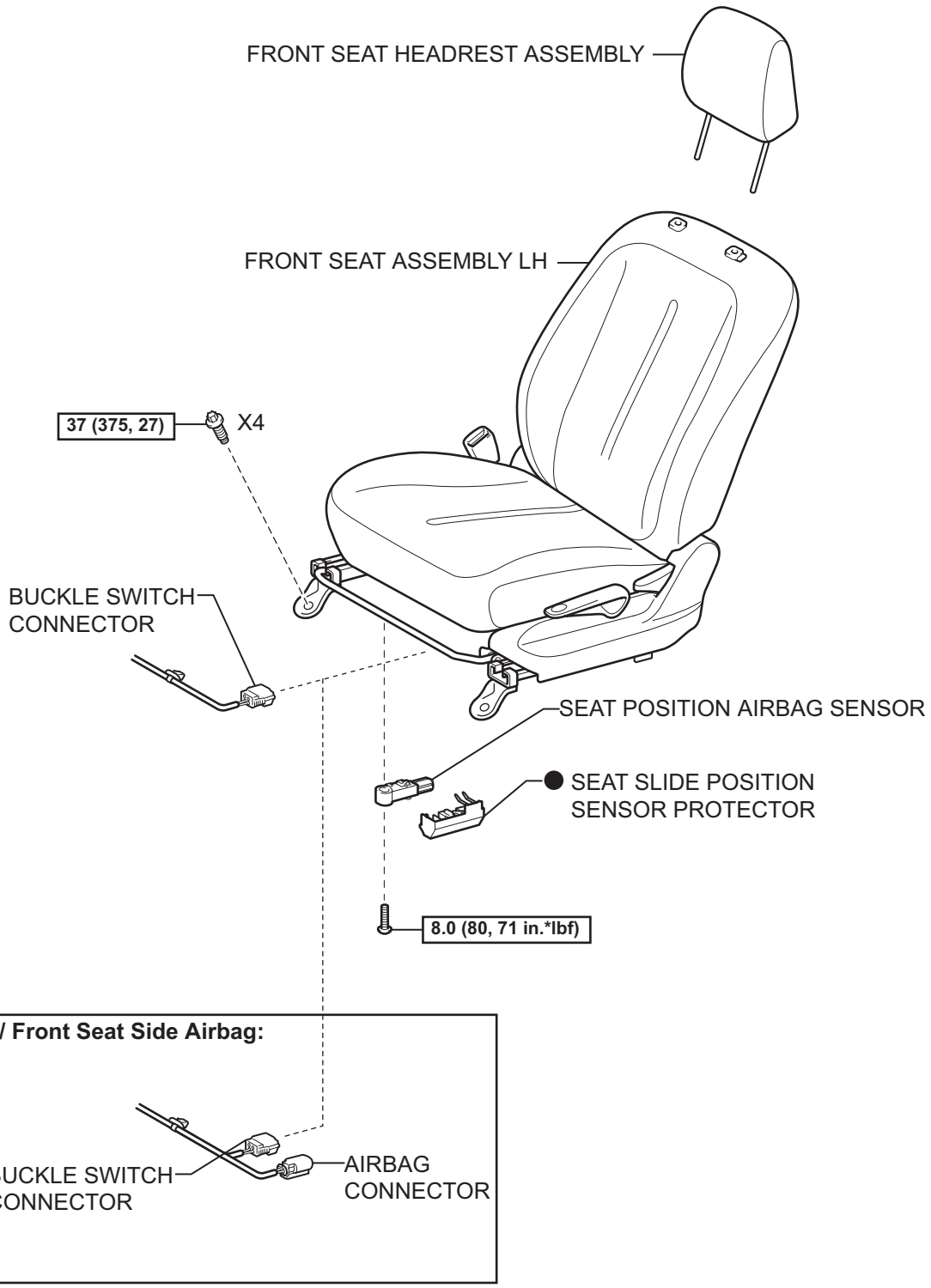

N*m (kgf*cm, ft*lbf) : Specified torque ● Non-reusable part

T

C143432E01

ON-VEHICLE INSPECTION

1. **INSPECT SEAT POSITION SENSOR (for Vehicle not Involved in Collision)**
   (a) Perform a diagnostic system check (See page RS-38).

2. **INSPECT SEAT POSITION SENSOR (for Vehicle Involved in Collision)**
   (a) Perform a diagnostic system check (See page RS-38).
   (b) Even if the airbag was not deployed, check whether there is any damage to the seat position sensor. If there are any defects such as those mentioned below, replace the seat position sensor with a new one:
   - Cracks, dents or chips on the sensor housing.
   - Cracks or other damage to the connector.

   CAUTION:
   Follow the correct removal and installation procedures.

REMOVAL

CAUTION:
Some of these service operations affect the SRS airbag system. Read the precautionary notices concerning the SRS airbag system before servicing.
NOTICE:
Always use "Torx" socket wrench E10 when removing the front seat.
HINT:
Installation is in the reverse order of removal.

1. **DISCONNECT CABLE FROM NEGATIVE BATTERY TERMINAL**
2. **REMOVE FRONT SEAT HEADREST ASSEMBLY (for Sedan) (See page SE-5)**
3. **REMOVE FRONT SEAT HEADREST ASSEMBLY (for Hatchback) (See page SE-28)**
4. **REMOVE FRONT SEAT ASSEMBLY LH (for Sedan) (See page SE-5)**
5. **REMOVE FRONT SEAT ASSEMBLY LH (for Hatchback) (See page SE-28)**
6. **REMOVE SEAT SLIDE POSITION SENSOR PROTECTOR**
   (a) Remove the seat slide position sensor protector from the seat position airbag sensor.

RS

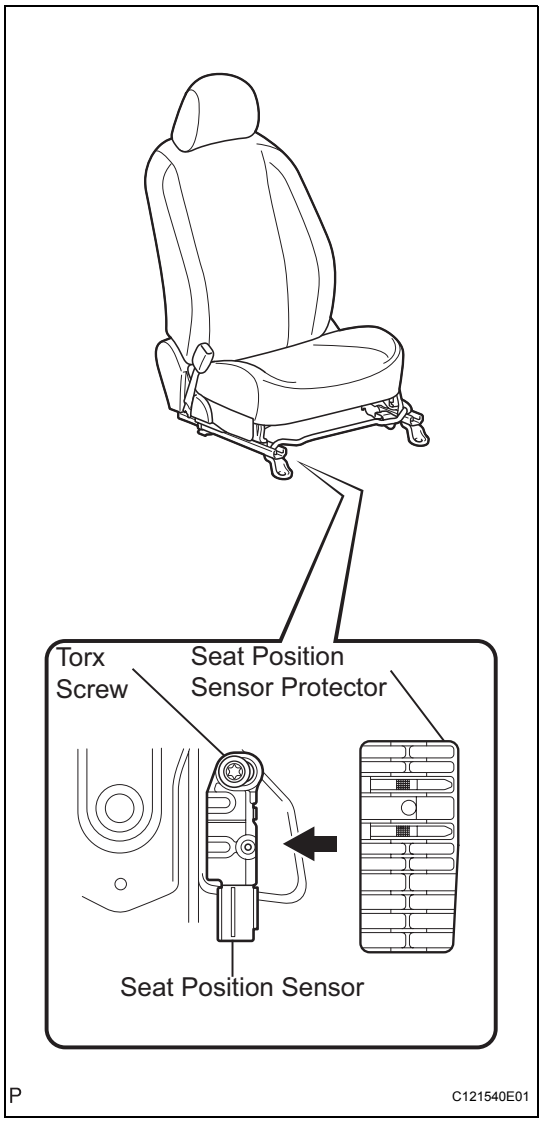

7. REMOVE SEAT POSITION AIRBAG SENSOR

(a) Disconnect the connector from the seat position airbag sensor.

(b) Using "Torx" socket wrench T30, remove the torx screw and the seat position airbag sensor.

INSTALLATION

CAUTION:
Some of these service operations affect the SRS airbag system. Read the precautionary notices concerning the SRS airbag system before servicing.
NOTICE:
Always use "Torx" socket wrench E10 when removing the front seat.

1. INSTALL SEAT POSITION AIRBAG SENSOR

(a) Check that the ignition switch is turned to OFF.

(b) Check that the battery negative (-) terminal is disconnected.
CAUTION:
After removing the terminal, wait for at least 90 seconds before starting the operation.

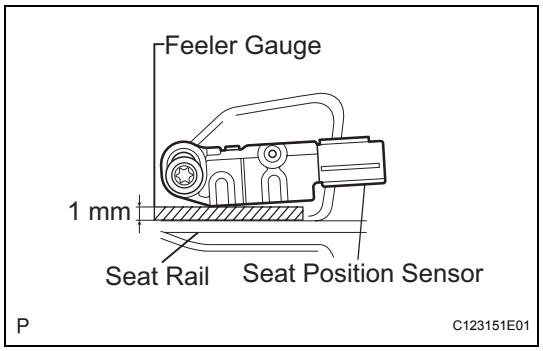

(c) Using an 1 mm (0.039 in.) feeler gauge, install the seat position airbag sensor.
NOTICE:
- **If the seat position airbag sensor has been dropped, or there are any cracks, dents or other defects in the case, bracket or connector, replace the seat position airbag sensor with a new one.**
- **When installing the seat position airbag sensor, make sure that the SRS wiring does not interfere with other parts and is not pinched between other parts.**

HINT:
Maintain a clearance between the seat position airbag sensor and the seat rail within 0.6 mm (0.023 in.) to 2 mm (0.079 in.).

(d) Using "Torx" socket wrench, tighten the torx screw to install the seat position airbag sensor.
Torque: 8.0 N*m (82 kgf*cm, 71 in.*lbf)

(e) Make sure that a clearance between the seat position airbag sensor and the seat rail is within 0.6 mm (0.023 in.) to 2 mm (0.079 in.).

(f) Connect the connector to the seat position airbag sensor.

(g) Check that there is no looseness in the installation parts of the seat position airbag sensor.

RS

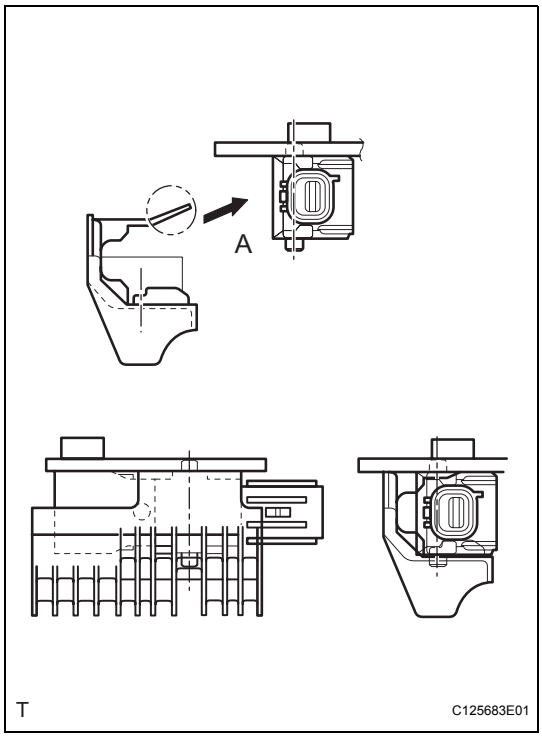

2. **INSTALL SEAT SLIDE POSITION SENSOR PROTECTOR**
   (a) Engage the pin and install a new seat position sensor protector.
   NOTICE:
   Do not damage portion A, shown in the illustration, when installing the seat position sensor protector.
3. **REMOVE FRONT SEAT ASSEMBLY LH (for Sedan) (See page SE-20)**
4. **INSTALL FRONT SEAT ASSEMBLY LH (for Hatchback) (See page SE-42)**
5. **INSTALL FRONT SEAT HEADREST ASSEMBLY (for Sedan) (See page SE-21)**
6. **INSTALL FRONT SEAT HEADREST ASSEMBLY (for Hatchback) (See page SE-43)**
7. **CONNECT CABLE TO NEGATIVE BATTERY TERMINAL**
   Torque: 5.4 N*m (54 kgf*cm, 48 in.*lbf)
8. **INSPECT SRS WARNING LIGHT**
   (See page RS-31)

OCCUPANT CLASSIFICATION ECU

COMPONENTS

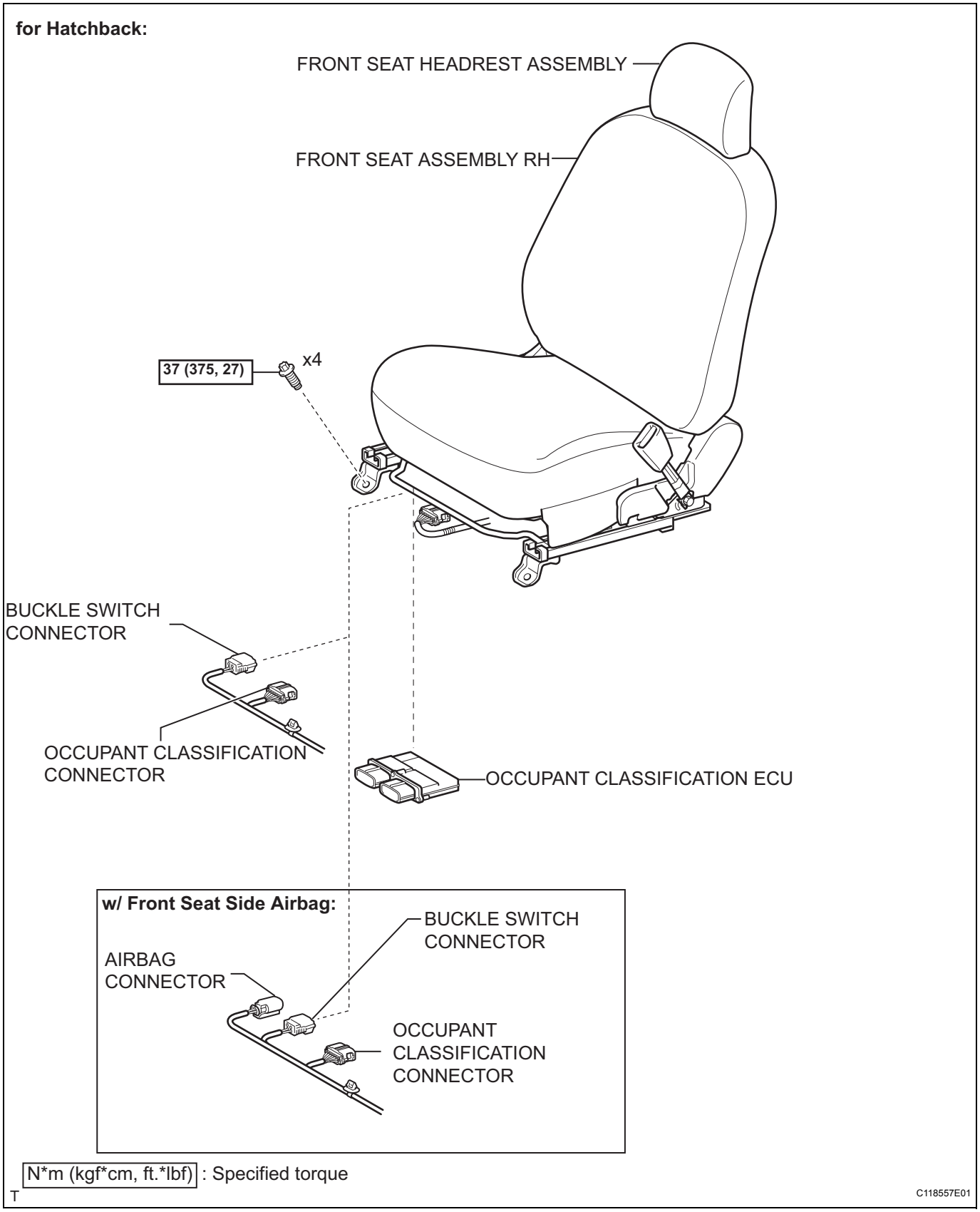

RS

for Sedan:

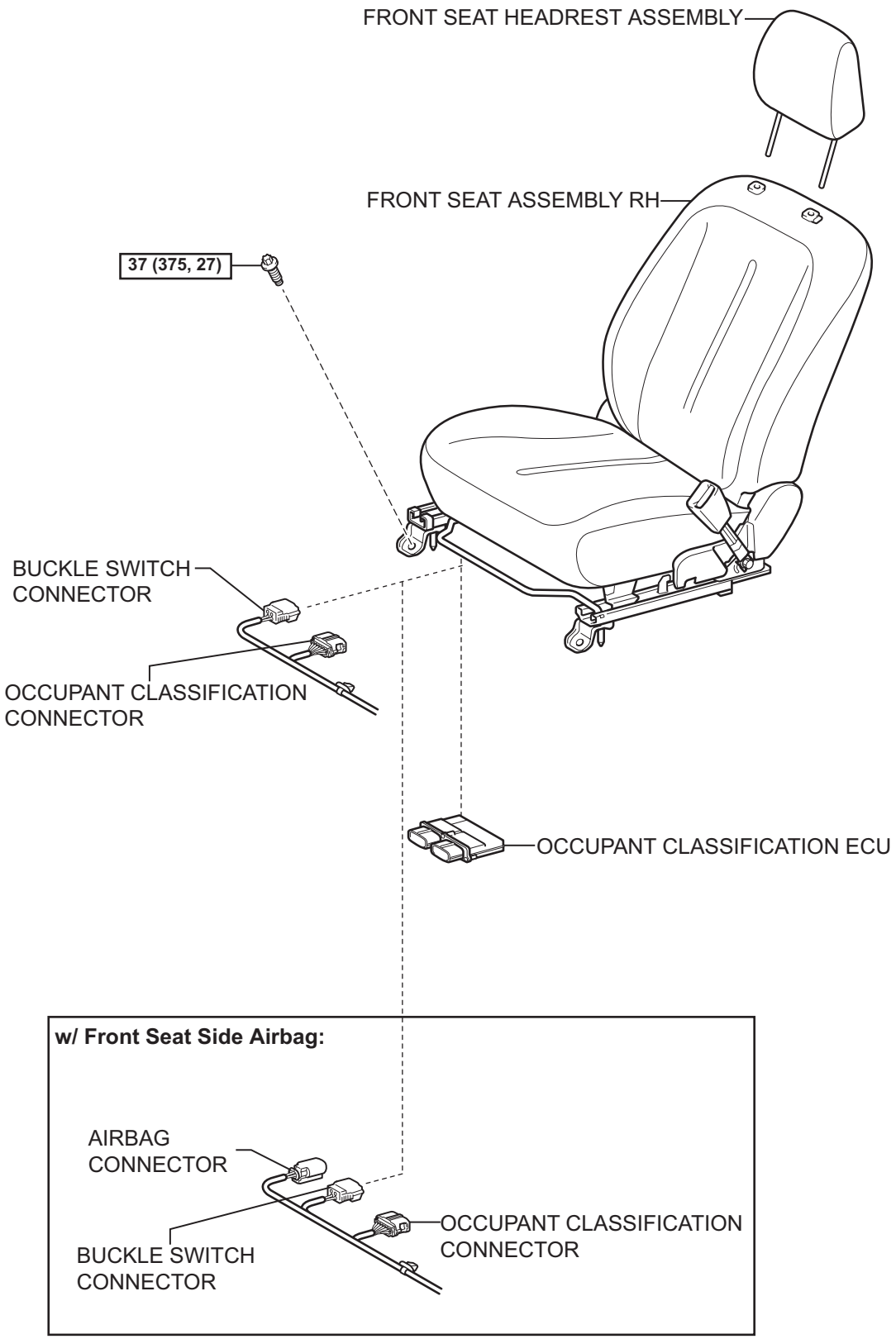

N*m (kgf*cm, ft*lbf) : Specified torque

T

C143431E01

ON-VEHICLE INSPECTION

1. **INSPECT OCCUPANT CLASSIFICATION ECU (for Vehicle not Involved in Collision)**
   (a) Perform a diagnostic system check (See page RS-38).

2. **REMOVE OCCUPANT CLASSIFICATION ECU (for Vehicle Involved in Collision)**
   (a) Perform a diagnostic system check (See page RS-38).
   (b) Even if the airbag was not deployed, check if there is any damage to the occupant classification ECU. If there are any defects as those mentioned below, replace the occupant classification ECU with a new one:
   - Cracks, dents or chips in the case.
   - Cracks or other damage to the connector.

   CAUTION:
   Follow the correct removal and installation procedures.

RS

REMOVAL

CAUTION:
Some of these service operations affect the SRS airbag system. Read the precautionary notices concerning the SRS airbag system before servicing.
NOTICE:
Installation is in the reverse order of removal.

1. **DISCONNECT CABLE FROM NEGATIVE BATTERY TERMINAL**
2. **REMOVE FRONT SEAT HEADREST ASSEMBLY (for Sedan) (See page SE-5)**
3. **REMOVE FRONT SEAT HEADREST ASSEMBLY (for Hatchback) (See page SE-28)**
4. **REMOVE FRONT SEAT ASSEMBLY RH (for Sedan) (See page SE-5)**
5. **REMOVE FRONT SEAT ASSEMBLY RH (for Hatchback) (See page SE-28)**
6. **REMOVE OCCUPANT CLASSIFICATION ECU**
   (a) Disconnect the connectors from the occupant classification ECU.
   (b) Using a screwdriver, remove the occupant classification ECU.

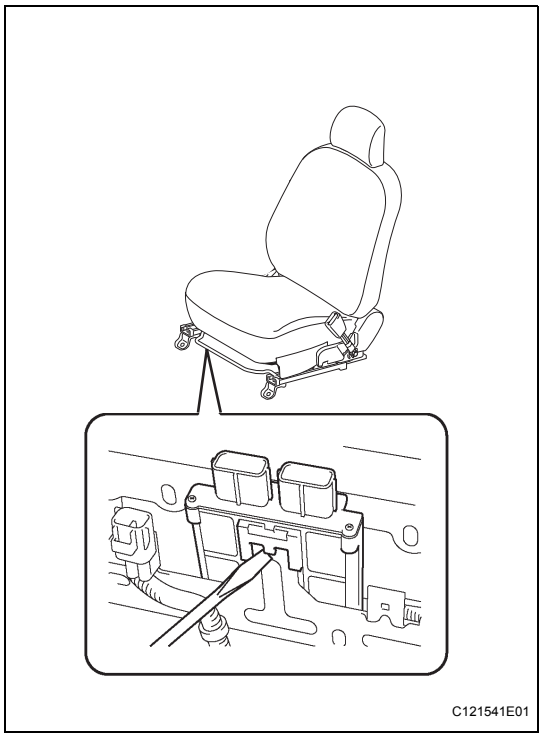

INSTALLATION

CAUTION:
Some of these service operations affect the SRS airbag system. Read the precautionary notices concerning the SRS airbag system before servicing.
NOTICE:
Always use "Torx" socket wrench E10 when installing the front seat.

1. **INSTALL OCCUPANT CLASSIFICATION ECU**
   (a) Check that the ignition switch is turned OFF.
   (b) Check that the negative (-) battery terminal is disconnected.
   CAUTION:
   After removing the terminal, wait for at least 90 seconds before starting the operation.
   (c) Install the occupant classification ECU.
   (d) Connect the connectors to the occupant classification ECU.
   NOTICE:
   - **If the occupant classification ECU has been dropped, or there are any cracks, dents or other defects in the case, bracket or connector, replace it with a new one.**
   - **When installing the occupant classification ECU, make sure that the SRS wiring does not interfere with other parts and that it is not pinched between other parts.**
2. **INSTALL FRONT SEAT ASSEMBLY RH (for Sedan) (See page SE-20)**
3. **INSTALL FRONT SEAT ASSEMBLY RH (for Hatchback) (See page SE-42)**
4. **INSTALL FRONT SEAT HEADREST ASSEMBLY (for Sedan) (See page SE-21)**
5. **INSTALL FRONT SEAT HEADREST ASSEMBLY (for Hatchback) (See page SE-43)**
6. **CONNECT CABLE TO NEGATIVE BATTERY TERMINAL**
   Torque: 5.4 N*m (55 kgf*cm, 48 in.*lbf)
7. **PERFORM OCCUPANT CLASSIFICATION ECU INITIALIZATION**
   (See page RS-215)
8. **INSPECT SRS WARNING LIGHT**
   (See page RS-31)

DTC	B1620/21	Driver Side - Side Airbag Sensor Circuit Malfunction

DESCRIPTION

The side airbag sensor LH consists of parts including the diagnostic circuit and the lateral deceleration sensor.
When the center airbag sensor assembly receives signals from the lateral deceleration sensor, it determines whether or not the SRS should be activated.
DTC B1620/21 is set when a malfunction is detected in the side airbag sensor LH circuit.

DTC No.	DTC Detecting Condition	Trouble Area
B1620/21	• Center airbag sensor assembly detects open circuit signal in side airbag sensor LH circuit for 2 seconds. • Side airbag sensor LH malfunction • Center airbag sensor assembly malfunction	• Floor wire • Side airbag sensor LH • Center airbag sensor assembly

WIRING DIAGRAM

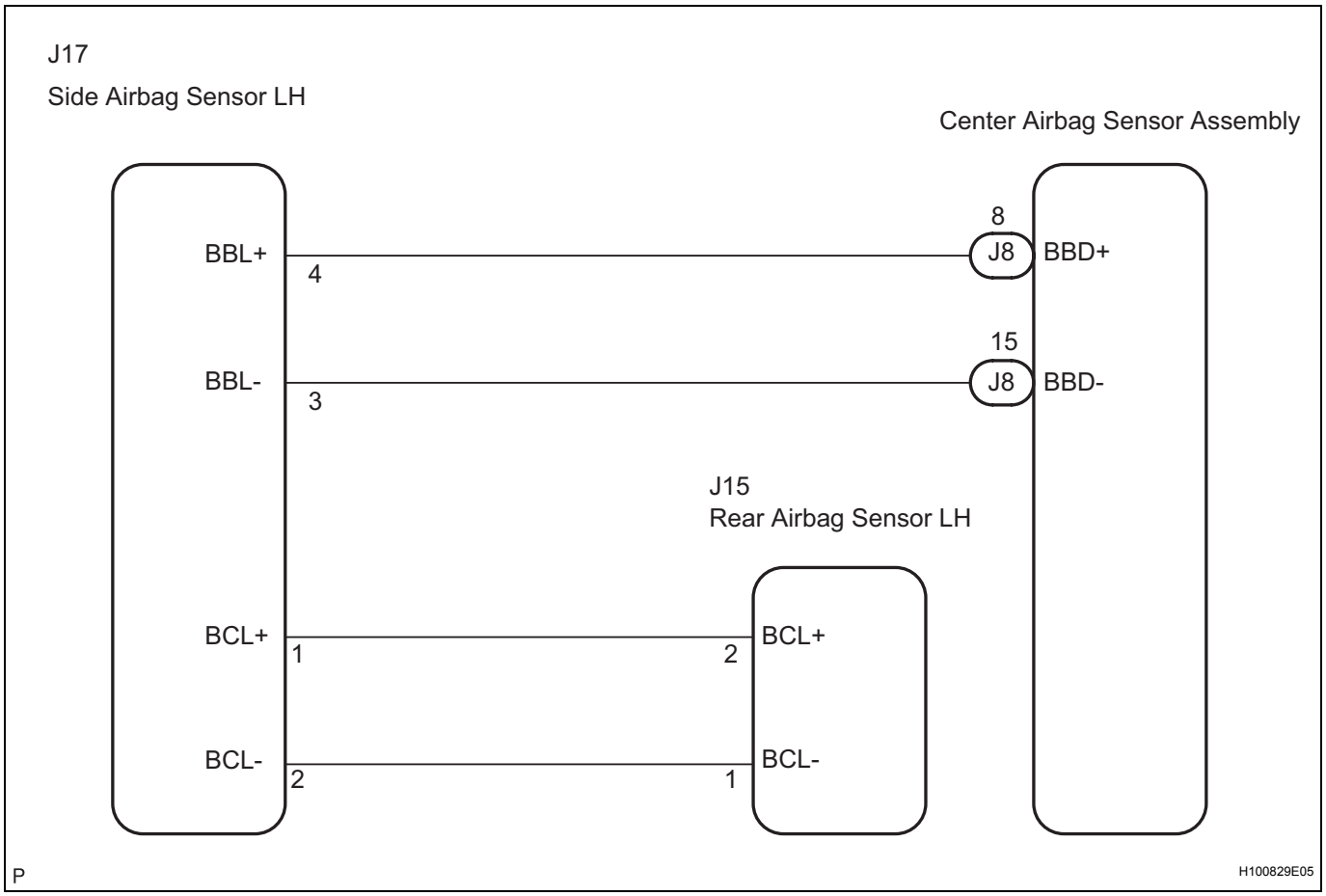

INSPECTION PROCEDURE

NOTICE:

In order to prevent unexpected airbag deployment, disconnect the following connectors before inspecting parts such as wire harnesses, if the application of tester probes to the center airbag sensor assembly connector is necessary.

1. Turn the ignition switch to the lock position.
2. Disconnect the negative (-) terminal cable from the battery, and wait for at least 90 seconds.

3. Disconnect the connector from the center airbag sensor assembly.
4. Disconnect the connectors from the steering pad.
5. Disconnect the connectors from the front passenger airbag assembly.
6. Disconnect the connector from the front seat outer belt assembly LH.
7. Disconnect the connector from the front seat outer belt assembly RH.
   HINT:
   Skip the following steps if side and curtain shield airbags are not fitted.
8. Disconnect the connector from the front seat side airbag assembly LH.
9. Disconnect the connector from the front seat side airbag assembly RH.
10. Disconnect the connector from the curtain shield airbag assembly LH.
11. Disconnect the connector from the curtain shield airbag assembly RH.

1 CHECK DTC

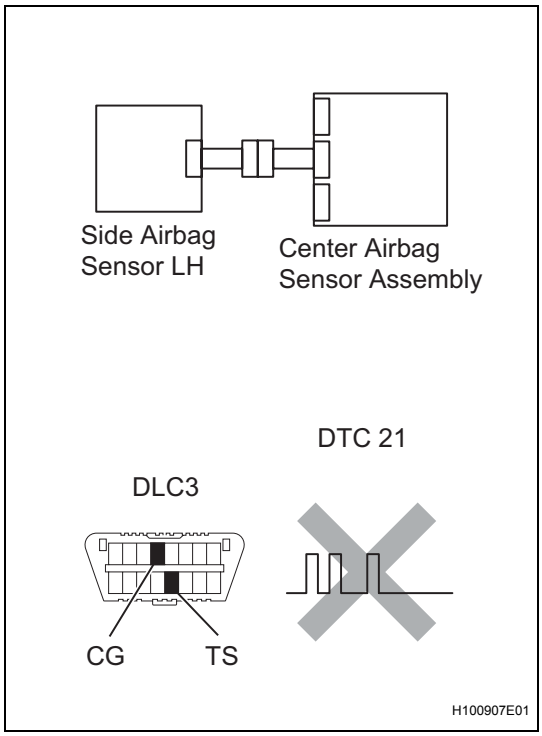

(a) Turn the ignition switch on, and wait for at least 60 seconds.
(b) Clear the DTCs stored in the memory (See page RS-38).
(c) Turn the ignition switch off.
(d) Turn the ignition switch on, and wait for at least 60 seconds.
(e) Check the DTCs (See page RS-38).
OK:
DTC B1620/21 is not output.
HINT:
DTCs other than DTC B1620/21 may be output at this time, but they are not related to this check.

OK → **USE SIMULATION METHOD TO CHECK**

NG

2 CHECK CONNECTION OF CONNECTORS

(a) Turn the ignition switch off.
(b) Disconnect the negative (-) terminal cable from the battery, and wait for at least 90 seconds.
(c) Check that the connectors are properly connected to the center airbag sensor assembly, rear airbag sensor LH and the side airbag sensor LH.
OK:
The connectors are properly connected.

NG → **CONNECT CONNECTORS**

OK

RS

3 CHECK FLOOR WIRE (FOR OPEN)

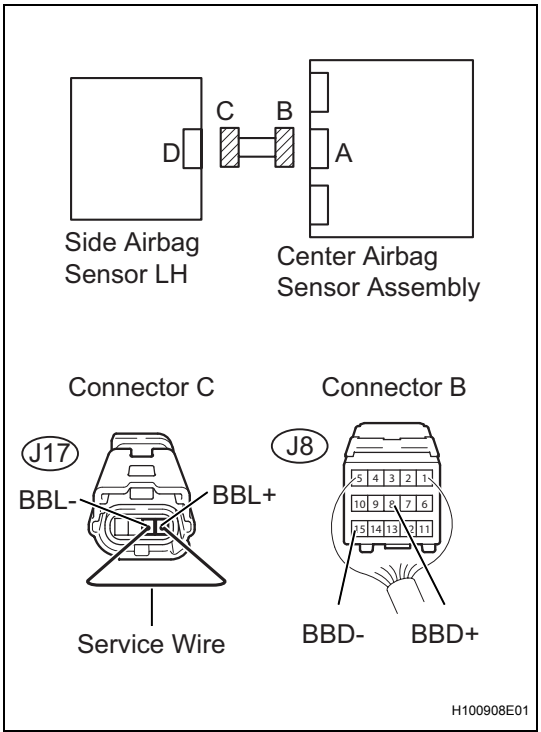

(a) Disconnect the connectors from the center airbag sensor assembly and the side airbag sensor LH.

(b) Using a service wire, connect J17-4 (BBL+) and J17-3 (BBL-) of connector C.

NOTICE:

Do not forcibly insert the service wire into the terminals of the connector when connecting.

(c) Measure the resistance.

Standard resistance

Tester Connection	Condition	Specified Condition
J8-8 (BBD+) - J8-15 (BBD-)	Always	Below 1 Ω

NG → **REPAIR OR REPLACE FLOOR WIRE**

OK

4 CHECK FLOOR WIRE (FOR SHORT)

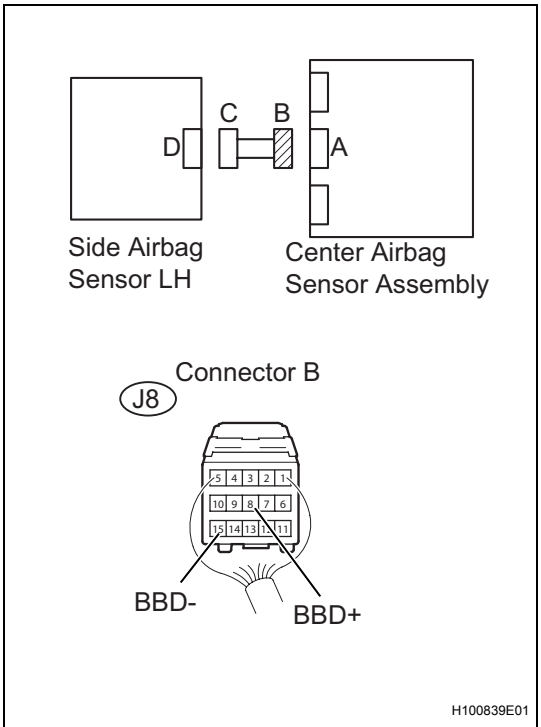

(a) Disconnect the service wire from connector C.

(b) Measure the resistance.

Standard resistance

Tester Connection	Condition	Specified Condition
J8-8 (BBD+) - J8-15 (BBD-)	Always	1 MΩ or Higher

NG → **REPAIR OR REPLACE FLOOR WIRE**

OK

RS

5 CHECK FLOOR WIRE (TO B+)

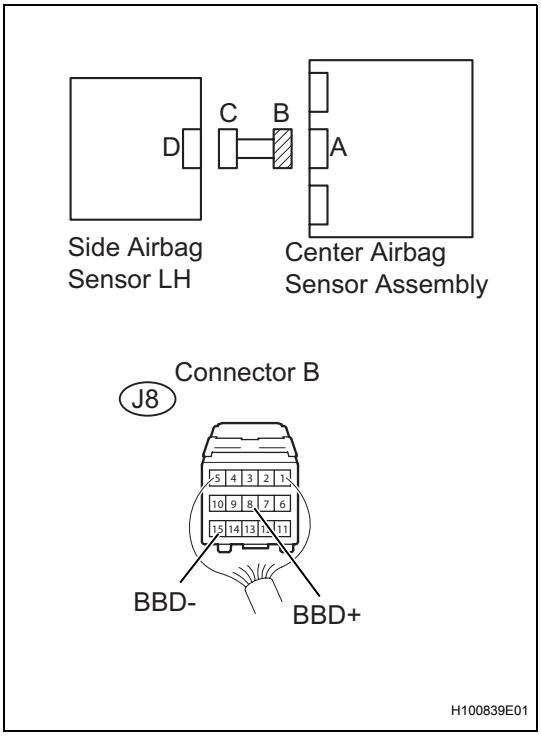

(a) Connect the negative (-) terminal cable to the battery, and wait for at least 2 seconds.
(b) Turn the ignition switch to the on position.
(c) Measure the voltage.
Standard voltage

Tester Connection	Condition	Specified Condition
J8-8 (BBD+) - Body ground	Ignition switch on	Below 1 V
J8-15 (BBD-) - Body ground	Ignition switch on	Below 1 V

NG → **REPAIR OR REPLACE FLOOR WIRE**

OK

6 CHECK FLOOR WIRE (TO GROUND)

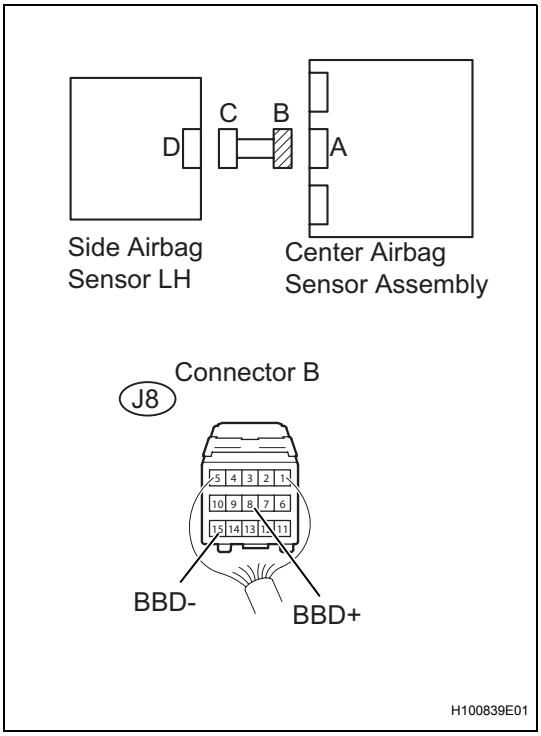

(a) Turn the ignition switch to the lock position.
(b) Disconnect the negative (-) terminal cable from the battery, and wait for at least 90 seconds.
(c) Measure the resistance.
Standard resistance

Tester Connection	Condition	Specified Condition
J8-8 (BBD+) - Body ground	Always	1 MΩ or Higher
J8-15 (BBD-) - Body ground	Always	1 MΩ or Higher

NG → **REPAIR OR REPLACE FLOOR WIRE**

OK

RS

7 CHECK SIDE AIRBAG SENSOR LH

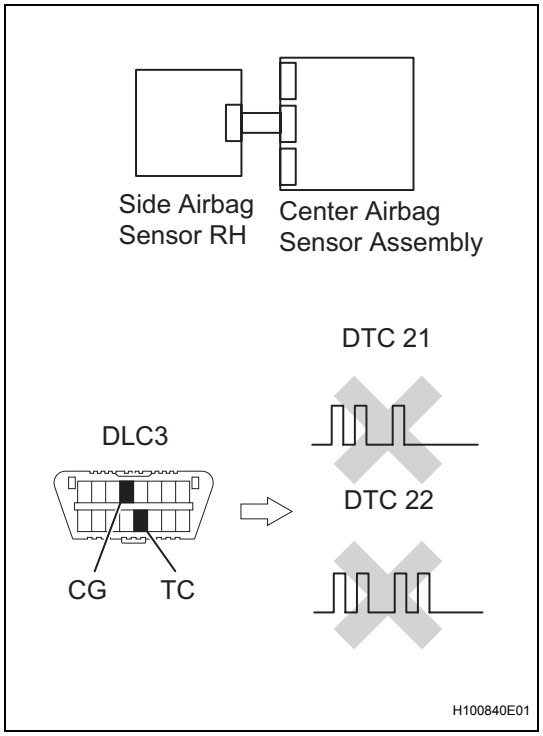

(a) Connect the connectors to the center airbag sensor assembly.
(b) Interchange the side airbag sensor RH with the side airbag sensor LH and connect the connectors to them.
(c) Connect the negative (-) terminal cable to the battery, and wait for at least 2 seconds.
(d) Turn the ignition switch to the on position, and wait for at least 60 seconds.
(e) Clear the DTCs stored in the memory (See page RS-38).
(f) Turn the ignition switch to the lock position.
(g) Turn the ignition switch to the on position, and wait for at least 60 seconds.
(h) Check for DTCs (See page RS-38).

Result

Result	Proceed to
DTC B1620/21 is output.	A
DTC B1625/22 is output.	B
Neither DTC B1620/21 nor B1625/22 is output.	C

A → **Go to step 8**

B → **REPLACE SIDE AIRBAG SENSOR LH**

C

USE SIMULATION METHOD TO CHECK

RS

8 CHECK FLOOR WIRE (FOR OPEN)

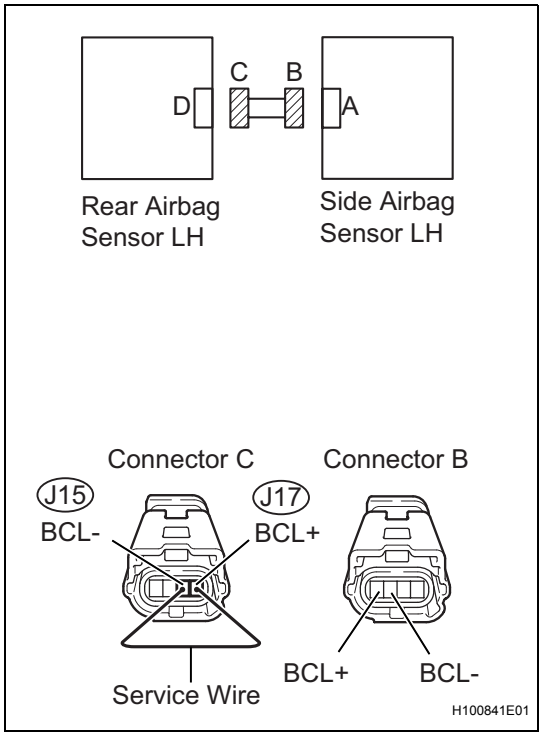

(a) Disconnect the connectors from the side airbag sensor LH and the rear airbag sensor LH.
(b) Using a service wire, connect J15-1 (BCL-) and J15-2 (BCL+) of connector C.
NOTICE:
Do not forcibly insert the service wire into the terminals of the connector when connecting.
(c) Measure the resistance.
Standard resistance

Tester Connection	Condition	Specified Condition
J17-1 (BCL+) - J17-2 (BCL-)	Always	Below 1 Ω

NG → **REPAIR OR REPLACE FLOOR WIRE**

OK

9 CHECK FLOOR WIRE (FOR SHORT)

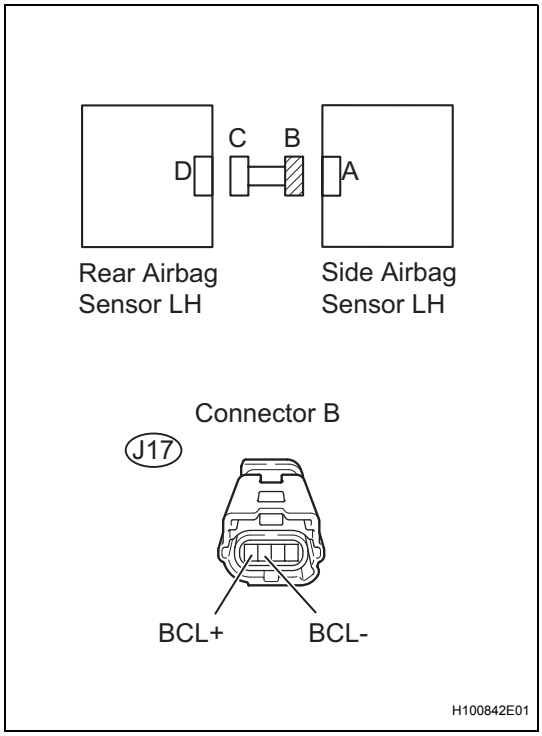

(a) Disconnect the service wire from connector C.
(b) Measure the resistance.
Standard resistance

Tester Connection	Condition	Specified Condition
J17-1 (BCL+) - J17-2 (BCL-)	Always	1 MΩ or Higher

NG → **REPAIR OR REPLACE FLOOR WIRE**

OK

RS

10 CHECK FLOOR WIRE (TO B+)

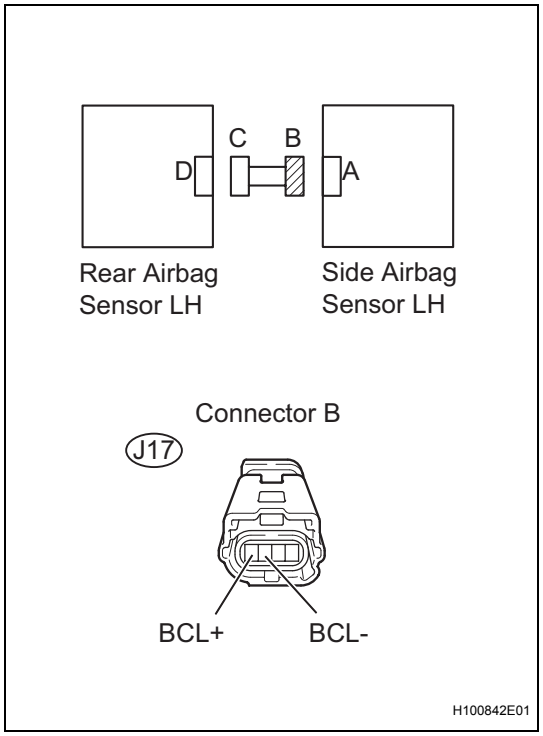

(a) Connect the negative (-) terminal cable to the battery, and wait for at least 2 seconds.
(b) Turn the ignition switch to the on position.
(c) Measure the voltage.
Standard voltage

Tester Connection	Condition	Specified Condition
J17-1 (BCL+) - Body ground	Ignition switch on	Below 1 V
J17-2 (BCL-) - Body ground	Ignition switch on	Below 1 V

NG → **REPAIR OR REPLACE FLOOR WIRE**

OK

11 CHECK FLOOR WIRE (TO GROUND)

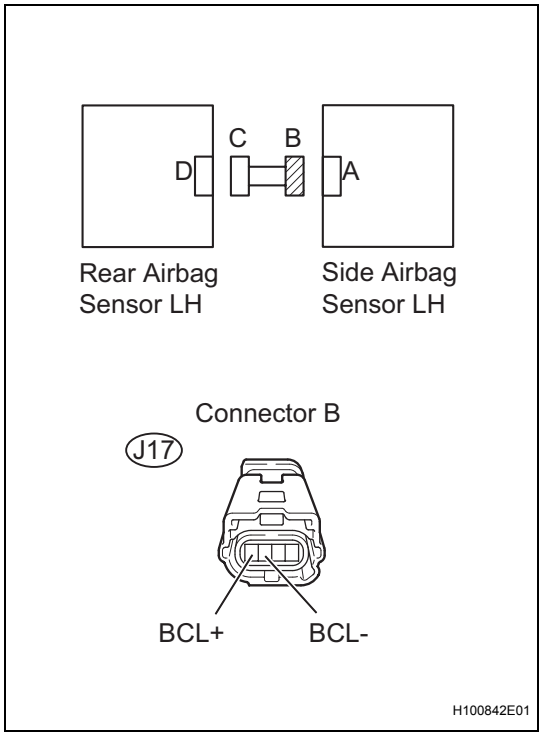

(a) Turn the ignition switch to the lock position.
(b) Disconnect the negative (-) terminal cable from the battery, and wait for at least 90 seconds.
(c) Measure the resistance.
Standard resistance

Tester Connection	Condition	Specified Condition
J17-1 (BCL+) - Body ground	Always	1 MΩ or Higher
J17-2 (BCL-) - Body ground	Always	1 MΩ or Higher

NG → **REPAIR OR REPLACE FLOOR WIRE**

OK

RS

12 CHECK REAR AIRBAG SENSOR LH

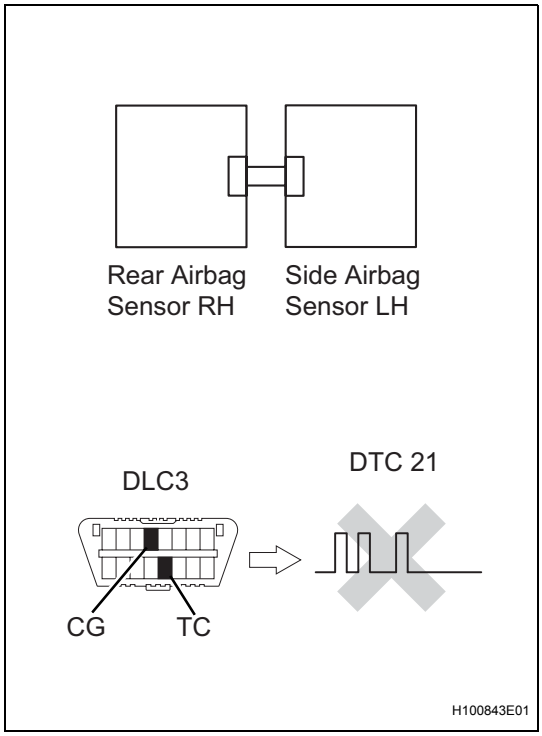

(a) Connect the connectors to the center airbag sensor assembly.
(b) Interchange the airbag sensor rear LH with the airbag sensor rear RH and connect the connectors to them.
(c) Connect the negative (-) terminal cable to the battery, and wait for at least 2 seconds.
(d) Turn the ignition switch to the on position, and wait for at least 60 seconds.
(e) Clear the DTCs stored in the memory (See page RS-38).
(f) Turn the ignition switch to the lock position.
(g) Turn the ignition switch to the on position, and wait for at least 60 seconds.
(h) Check for DTCs (See page RS-38).

Result

Result	Proceed to
DTC B1620/21 is output.	A
DTC B1625/22 is output.	B
Neither DTC B1620/21 nor B1625/22 is output.	C

HINT:
DTCs other than B1620/21 and B1625/22 may be output at this time, but they are not related to this check.

A → **REPLACE CENTER AIRBAG SENSOR ASSEMBLY**

B → **REPLACE REAR AIRBAG SENSOR LH**

C

USE SIMULATION METHOD TO CHECK

DTC	B1625/22	Front Passenger Side - Side Airbag Sensor Circuit Malfunction

DESCRIPTION

The side airbag sensor RH consists of parts including the diagnostic circuit and the lateral deceleration sensor.
When the center airbag sensor assembly receives signals from the lateral deceleration sensor, it determines whether or not the SRS should be activated.
DTC B1625/22 is set when a malfunction is detected in the side airbag sensor RH circuit.

DTC No.	DTC Detecting Condition	Trouble Area
B1625/22	• Center airbag sensor assembly detects open circuit signal in side airbag sensor RH circuit for 2 seconds. • Side airbag sensor RH malfunction • Center airbag sensor assembly malfunction	• Floor wire • Side airbag sensor RH • Center airbag sensor assembly

WIRING DIAGRAM

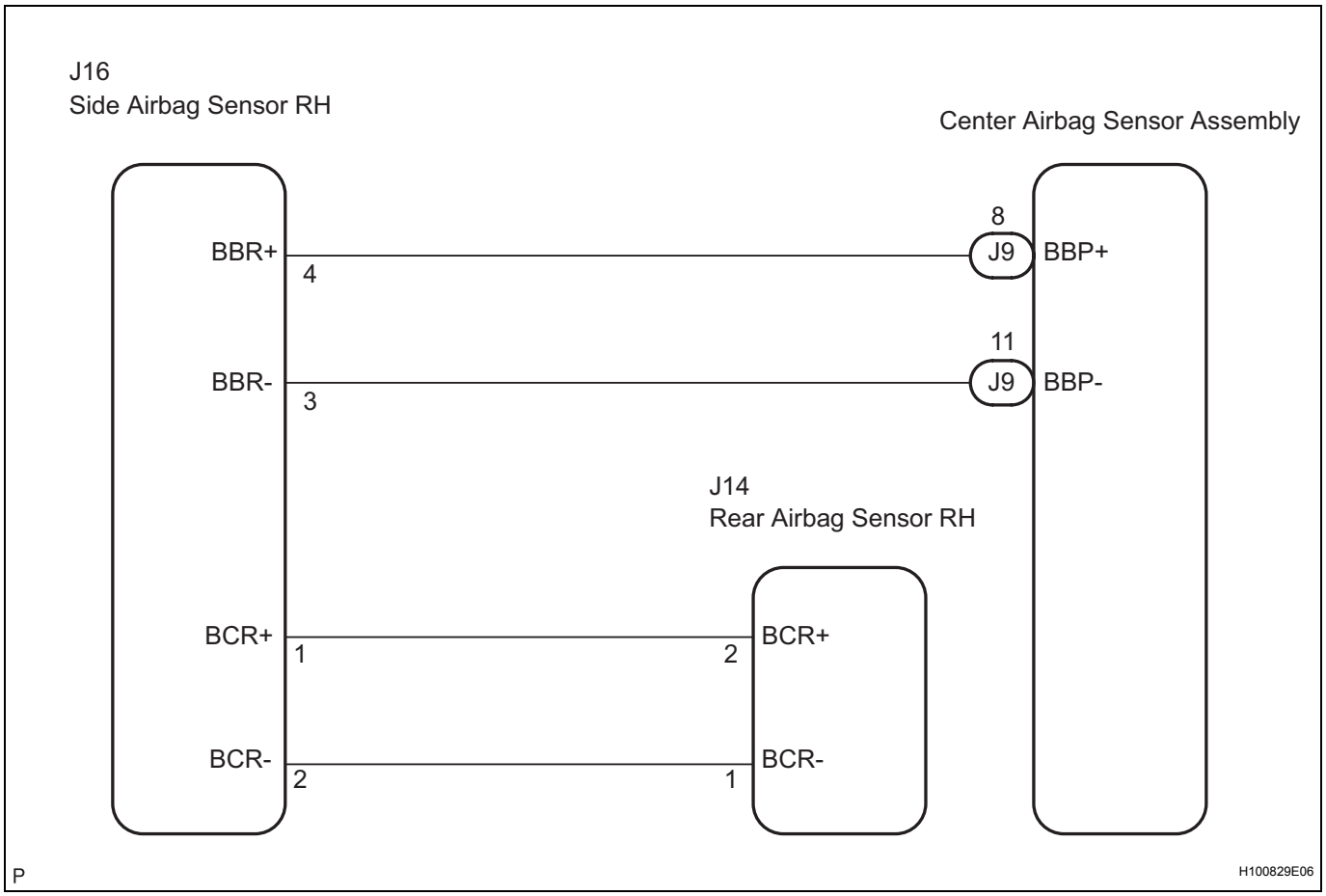

INSPECTION PROCEDURE

NOTICE:

In order to prevent unexpected airbag deployment, disconnect the following connectors before inspecting parts such as wire harnesses, if the application of tester probes to the center airbag sensor assembly connector is necessary.

1. Turn the ignition switch to the lock position.
2. Disconnect the negative (-) terminal cable from the battery, and wait for at least 90 seconds.

3. Disconnect the connector from the center airbag sensor assembly.
4. Disconnect the connectors from the steering pad.
5. Disconnect the connectors from the front passenger airbag assembly.
6. Disconnect the connector from the front seat outer belt assembly LH.
7. Disconnect the connector from the front seat outer belt assembly RH.
   HINT:
   Skip the following steps if side and curtain shield airbags are not fitted.
8. Disconnect the connector from the front seat side airbag assembly LH.
9. Disconnect the connector from the front seat side airbag assembly RH.
10. Disconnect the connector from the curtain shield airbag assembly LH.
11. Disconnect the connector from the curtain shield airbag assembly RH.

1 CHECK DTC

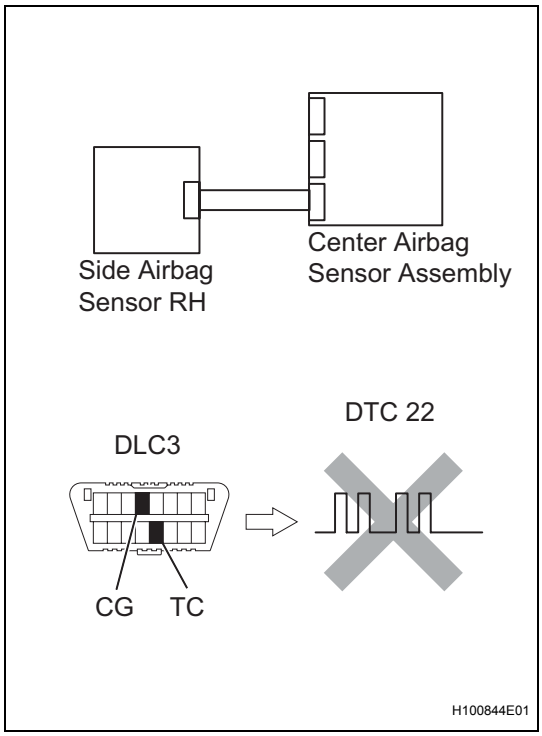

(a) Turn the ignition switch on, and wait for at least 60 seconds.
(b) Clear the DTCs stored in the memory (See page RS-38).
(c) Turn the ignition switch off.
(d) Turn the ignition switch on, and wait for at least 60 seconds.
(e) Check the DTCs (See page RS-38).
OK:
DTC B1625/22 is not output.
HINT:
DTCs other than DTC B1625/22 may be output at this time, but they are not related to this check.

OK → **USE SIMULATION METHOD TO CHECK**

NG

2 CHECK CONNECTION OF CONNECTORS

(a) Turn the ignition switch off.
(b) Disconnect the negative (-) terminal cable from the battery, and wait for at least 90 seconds.
(c) Check that the connectors are properly connected to the center airbag sensor, rear airbag sensor RH and the side airbag sensor RH.
OK:
The connectors are properly connected.

NG → **CONNECT CONNECTORS**

OK

RS

3 CHECK FLOOR WIRE (FOR OPEN)

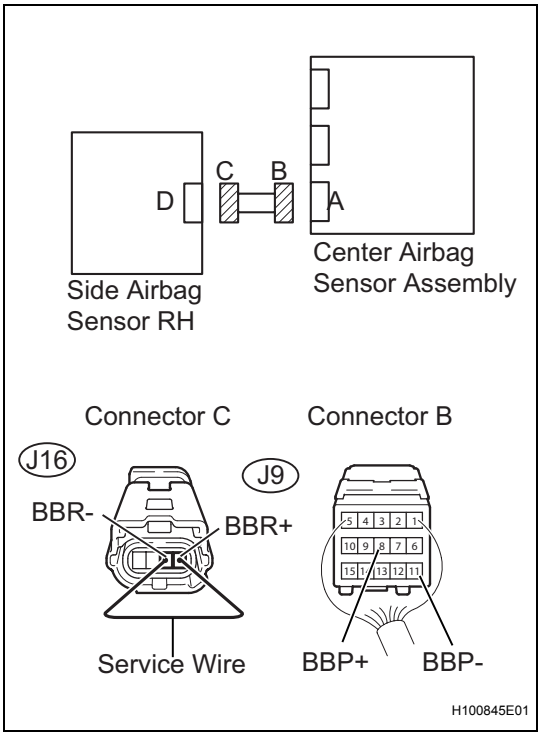

(a) Disconnect the connectors from the center airbag sensor assembly and the side airbag sensor RH.

(b) Using a service wire, connect J16-4 (BBR+) and J16-3 (BBR-) of connector C.

NOTICE:

Do not forcibly insert the service wire into the terminals of the connector when connecting.

(c) Measure the resistance.

Standard resistance

Tester Connection	Condition	Specified Condition
J9-8 (BBP+) - J9-11 (BBP-)	Always	Below 1 Ω

NG → **REPAIR OR REPLACE FLOOR WIRE**

OK

4 CHECK FLOOR WIRE (FOR SHORT)

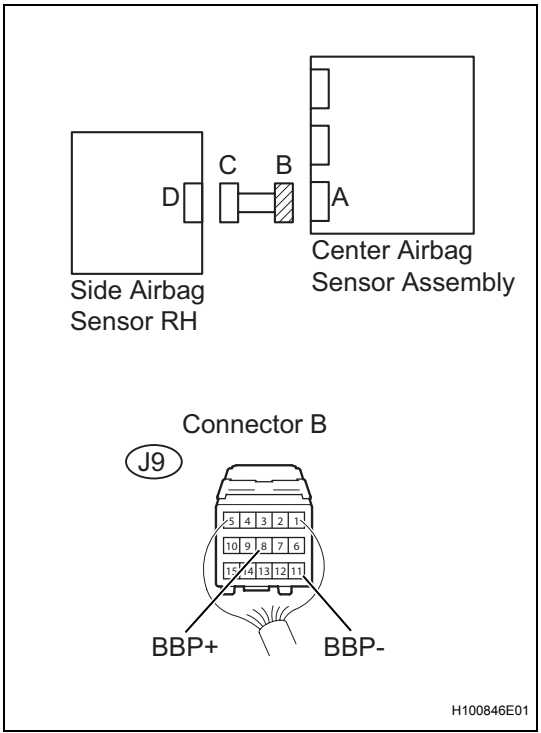

(a) Disconnect the service wire from connector C.

(b) Measure the resistance.

Standard resistance

Tester Connection	Condition	Specified Condition
J9-8 (BBP+) - J9-11 (BBP-)	Always	1 MΩ or Higher

NG → **REPAIR OR REPLACE FLOOR WIRE**

OK

RS

5 CHECK FLOOR WIRE (TO B+)

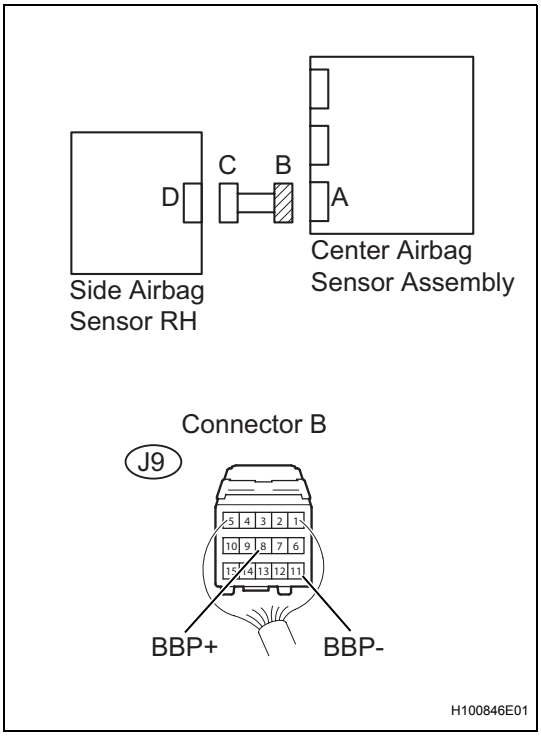

(a) Connect the negative (-) terminal cable to the battery, and wait for at least 2 seconds.
(b) Turn the ignition switch to the on position.
(c) Measure the voltage.
Standard voltage

Tester Connection	Condition	Specified Condition
J9-8 (BBP+) - Body ground	Ignition switch on	Below 1 V
J9-11 (BBP-) - Body ground	Ignition switch on	Below 1 V

NG → **REPAIR OR REPLACE FLOOR WIRE**

OK

6 CHECK FLOOR WIRE (TO GROUND)

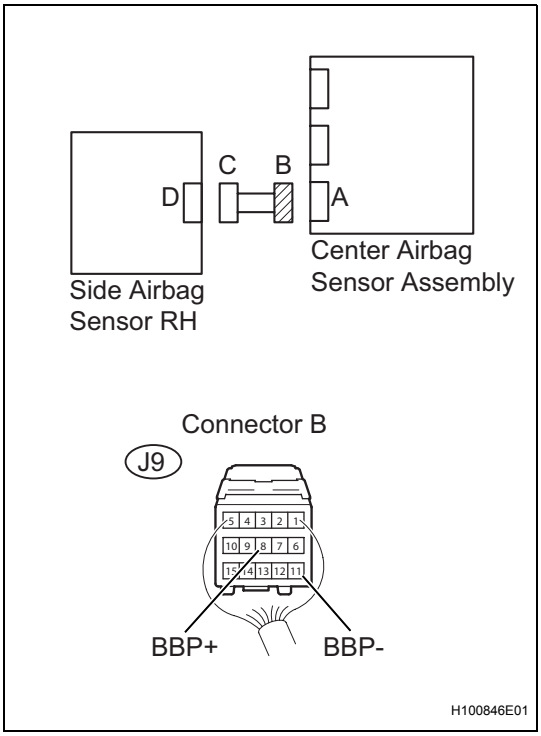

(a) Turn the ignition switch to the lock position.
(b) Disconnect the negative (-) terminal cable from the battery, and wait for at least 90 seconds.
(c) Measure the resistance.
Standard resistance

Tester Connection	Condition	Specified Condition
J9-8 (BBP+) - Body ground	Always	1 MΩ or Higher
J9-11 (BBP-) - Body ground	Always	1 MΩ or Higher

NG → **REPAIR OR REPLACE FLOOR WIRE**

OK

RS

7 CHECK SIDE AIRBAG SENSOR RH

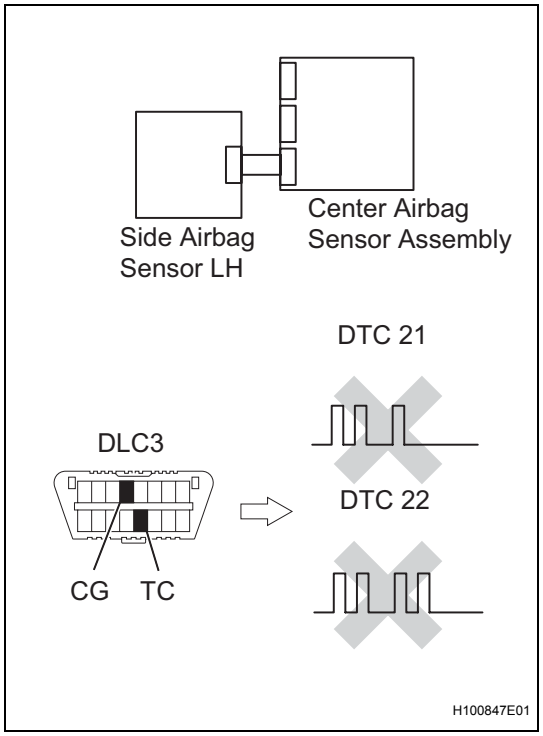

(a) Connect the connectors to the center airbag sensor assembly.
(b) Interchange the side airbag sensor RH with the side airbag sensor LH and connect the connectors to them.
(c) Connect the negative (-) terminal cable to the battery, and wait for at least 2 seconds.
(d) Turn the ignition switch to the on position, and wait for at least 60 seconds.
(e) Clear the DTCs stored in the memory (See page RS-38).
(f) Turn the ignition switch to the lock position.
(g) Turn the ignition switch to the on position, and wait for at least 60 seconds.
(h) Check for DTCs (See page RS-38).

Result

Result	Proceed to
DTC B1625/22 is output.	A
DTC B1620/21 is output.	B
Neither DTC B1620/21 nor B1625/22 is output.	C

A → **Go to step 8**

B → **REPLACE SIDE AIRBAG SENSOR RH**

C

USE SIMULATION METHOD TO CHECK

RS

8 CHECK FLOOR WIRE (FOR OPEN)

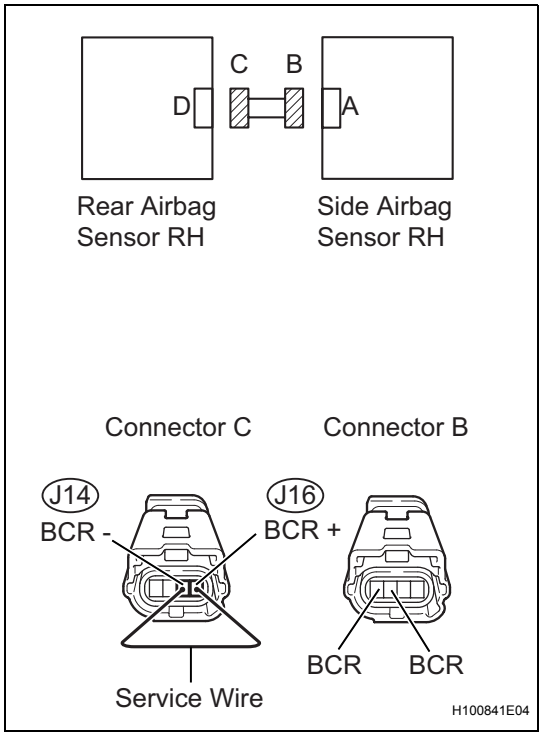

(a) Disconnect the connectors from the side airbag sensor RH and the rear airbag sensor RH.
(b) Using a service wire, connect J14-1 (BCR-) and J14-2 (BCR+) of connector C.
NOTICE:
Do not forcibly insert the service wire into the terminals of the connector when connecting.
(c) Measure the resistance.
Standard resistance

Tester Connection	Condition	Specified Condition
J16-1 (BCR+) - J16-2 (BCR-)	Always	Below 1 Ω

NG → **REPAIR OR REPLACE FLOOR WIRE**

OK

9 CHECK FLOOR WIRE (FOR SHORT)

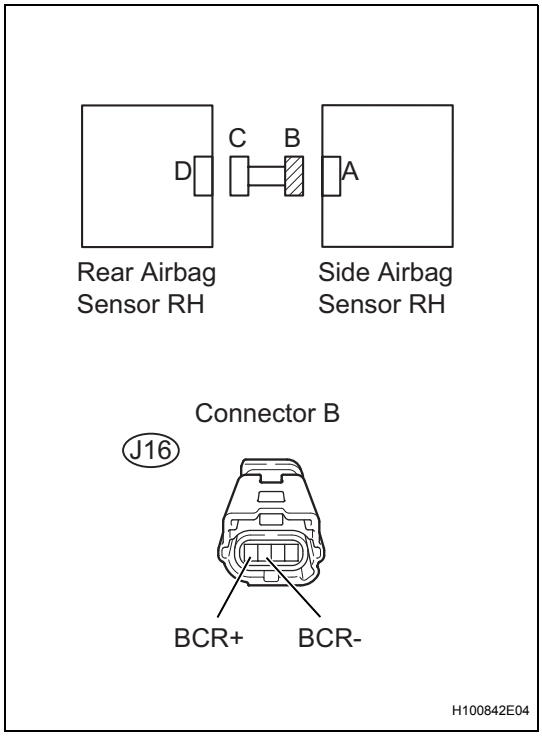

(a) Disconnect the service wire from connector C.
(b) Measure the resistance.
Standard resistance

Tester Connection	Condition	Specified Condition
J16-1 (BCR+) - J16-2 (BCR-)	Always	1 MΩ or Higher

NG → **REPAIR OR REPLACE FLOOR WIRE**

OK

RS

10 CHECK FLOOR WIRE (TO B+)

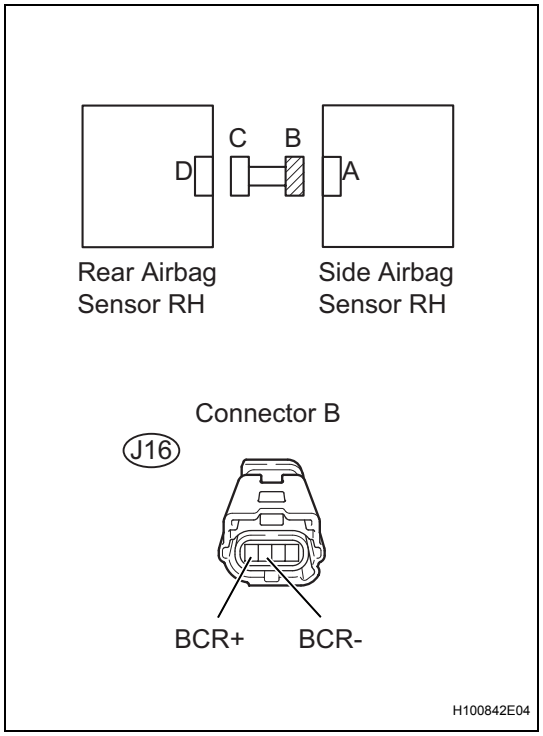

(a) Connect the negative (-) terminal cable to the battery, and wait for at least 2 seconds.
(b) Turn the ignition switch to the on position.
(c) Measure the voltage.
Standard voltage

Tester Connection	Condition	Specified Condition
J16-1 (BCR+) - Body ground	Ignition switch on	Below 1 V
J16-2 (BCR-) - Body ground	Ignition switch on	Below 1 V

NG → **REPAIR OR REPLACE FLOOR WIRE**

OK

11 CHECK FLOOR WIRE (TO GROUND)

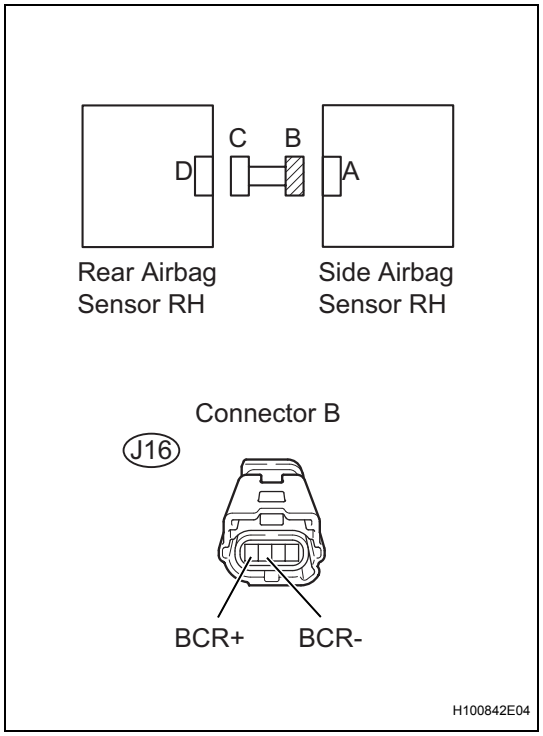

(a) Turn the ignition switch to the lock position.
(b) Disconnect the negative (-) terminal cable from the battery, and wait for at least 90 seconds.
(c) Measure the resistance.
Standard resistance

Tester Connection	Condition	Specified Condition
J16-1 (BCR+) - Body ground	Always	1 MΩ or Higher
J16-2 (BCR-) - Body ground	Always	1 MΩ or Higher

NG → **REPAIR OR REPLACE FLOOR WIRE**

OK

RS

12 CHECK REAR AIRBAG SENSOR RH

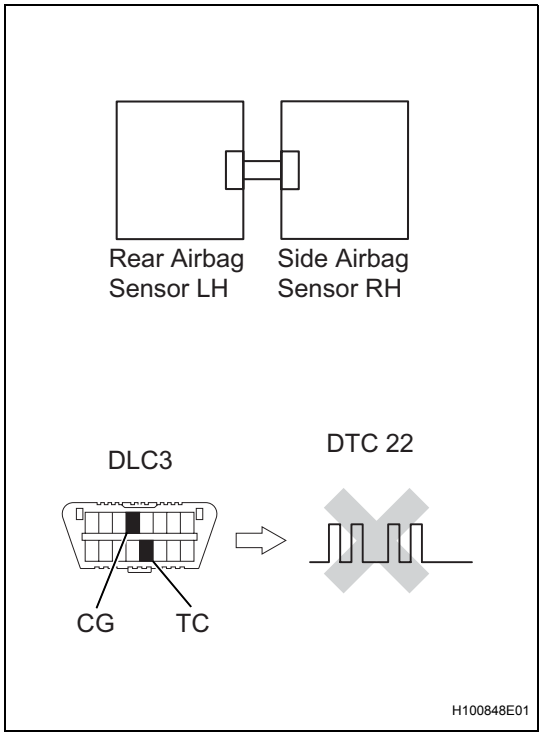

(a) Connect the connectors to the center airbag sensor assembly.
(b) Interchange the side airbag sensor LH with the side airbag sensor RH and connect the connectors to them.
(c) Connect the negative (-) terminal cable to the battery, and wait for at least 2 seconds.
(d) Turn the ignition switch to the on position, and wait for at least 60 seconds.
(e) Clear the DTCs stored in the memory (See page RS-38).
(f) Turn the ignition switch to the lock position.
(g) Turn the ignition switch to the on position, and wait for at least 60 seconds.
(h) Check for DTCs (See page RS-38).

Result

Result	Proceed to
DTC B1625/22 is output.	A
DTC B1620/21 is output.	B
Neither DTC B1620/21 nor B1625/22 is output.	C

HINT:
DTCs other than B1620/21 and B1625/22 may be output at this time, but they are not related to this check.

A → **REPLACE CENTER AIRBAG SENSOR ASSEMBLY**

B → **REPLACE REAR AIRBAG SENSOR RH**

C

USE SIMULATION METHOD TO CHECK

DTC	B1630/23	Driver Side Rear Airbag Sensor Circuit Malfunction

DESCRIPTION

The rear airbag sensor LH consists of parts including the diagnostic circuit and the lateral deceleration sensor.
When the center airbag sensor assembly receives signals from the lateral deceleration sensor, it determines whether or not the SRS should be activated.
DTC B1630/23 is recorded when a malfunction is detected in the rear airbag sensor LH circuit.

DTC No.	DTC Detecting Condition	Trouble Area
B1630/23	• Center airbag sensor assembly detects line short circuit signal, open circuit signal, short circuit to ground signal or short circuit to B+ signal in rear airbag sensor LH circuit for 2 seconds. • Rear airbag sensor LH malfunction • Center airbag sensor assembly malfunction	• Floor wire • Rear airbag sensor LH • Center airbag sensor assembly

WIRING DIAGRAM

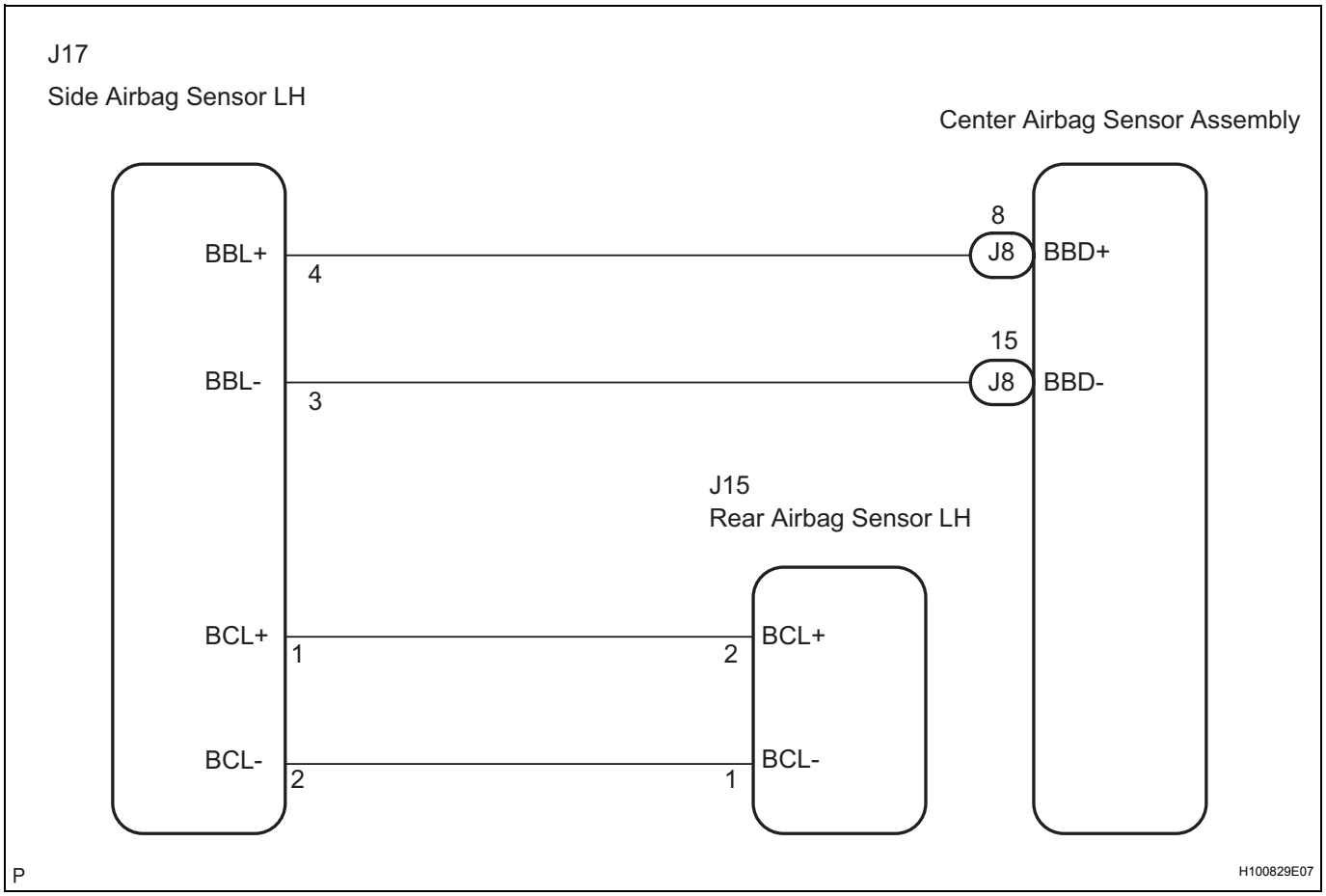

INSPECTION PROCEDURE

RS

1	CHECK DTC

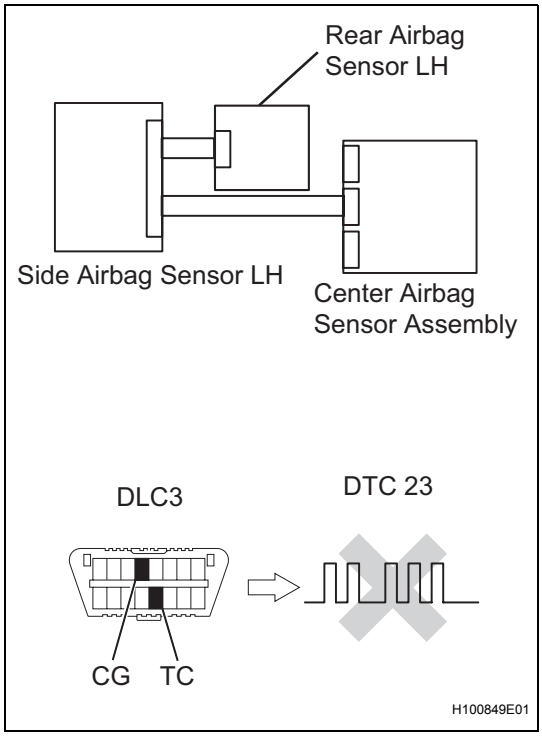

(a) Turn the ignition switch on, and wait for at least 60 seconds.
(b) Clear the DTCs stored in the memory (See page RS-38).
(c) Turn the ignition switch off.
(d) Turn the ignition switch on, and wait for at least 60 seconds.
(e) Check the DTCs (See page RS-38).
OK:
DTC B1630/23 is not output.
HINT:
DTCs other than DTC B1630/23 may be output at this time, but they are not related to this check.

OK → **USE SIMULATION METHOD TO CHECK**

NG

2	CHECK CONNECTION OF CONNECTORS

(a) Turn the ignition switch off.
(b) Disconnect the negative (-) terminal cable from the battery, and wait for at least 90 seconds.
(c) Check that the connectors are properly connected to the center airbag sensor assembly and the rear airbag sensor LH.
OK:
The connectors are properly connected.

NG → **CONNECT CONNECTORS**

OK

RS

3 CHECK FLOOR WIRE (FOR OPEN)

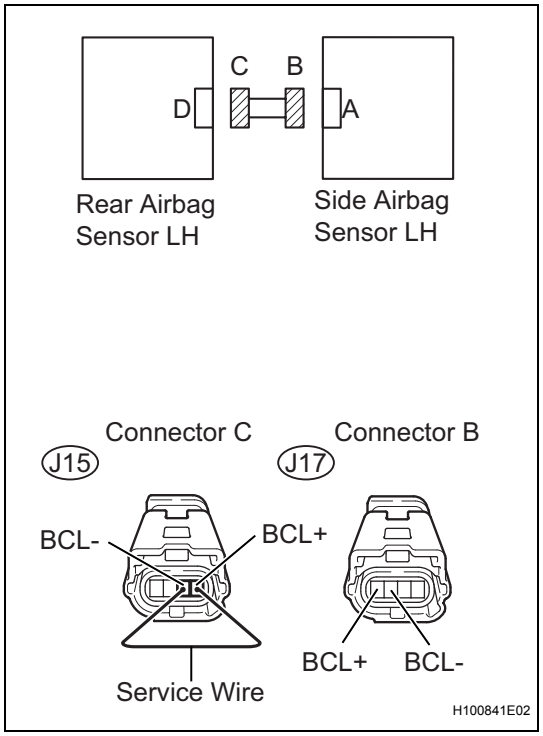

(a) Disconnect the connectors from the side airbag sensor LH and the rear airbag sensor LH.

(b) Using a service wire, connect J15-2 (BCL+) and J15-1 (BCL-) of connector C.

NOTICE:

Do not forcibly insert the service wire into the terminals of the connector when connecting.

(c) Measure the resistance.

Standard resistance

Tester Connection	Condition	Specified Condition
J17-1 (BCL+) - J17-2 (BCL-)	Always	Below 1 Ω

NG → **REPAIR OR REPLACE FLOOR WIRE**

OK

4 CHECK FLOOR WIRE (FOR SHORT)

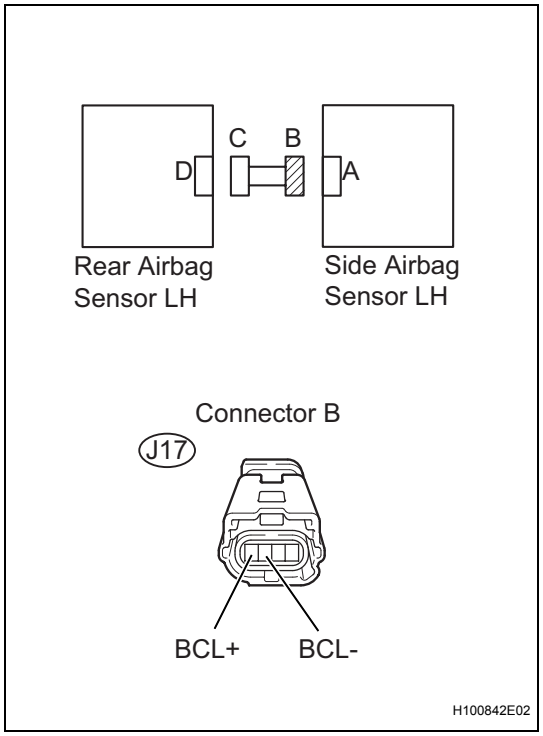

(a) Disconnect the service wire from connector C.

(b) Measure the resistance.

Standard resistance

Tester Connection	Condition	Specified Condition
J17-1 (BCL+) - J17-2 (BCL-)	Always	1 MΩ or higher

NG → **REPAIR OR REPLACE FLOOR WIRE**

OK

RS

5 CHECK FLOOR WIRE (TO B+)

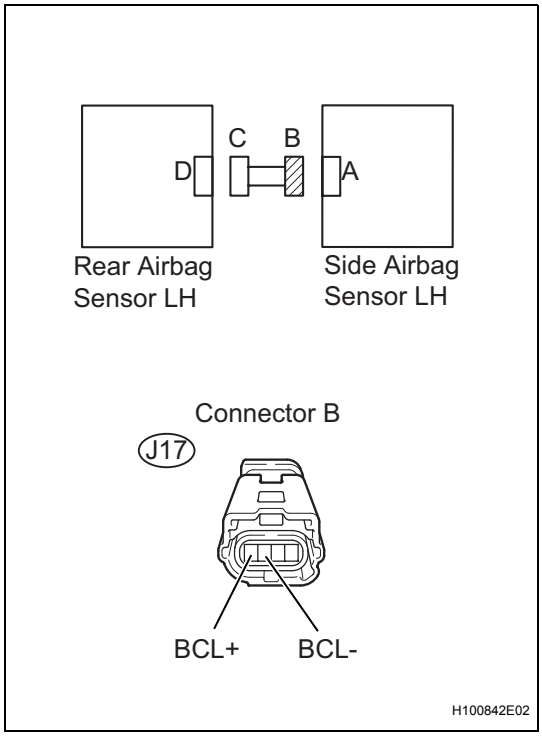

(a) Connect the negative (-) terminal cable to the battery, and wait for at least 2 seconds.
(b) Turn the ignition switch on.
(c) Measure the voltage.
Standard voltage

Tester Connection	Condition	Specified Condition
J17-1 (BCL+) - Body ground	Ignition switch on	Below 1 V
J17-2 (BCL-) - Body ground	Ignition switch on	Below 1 V

NG → **REPAIR OR REPLACE FLOOR WIRE**

OK

6 CHECK FLOOR WIRE (TO GROUND)

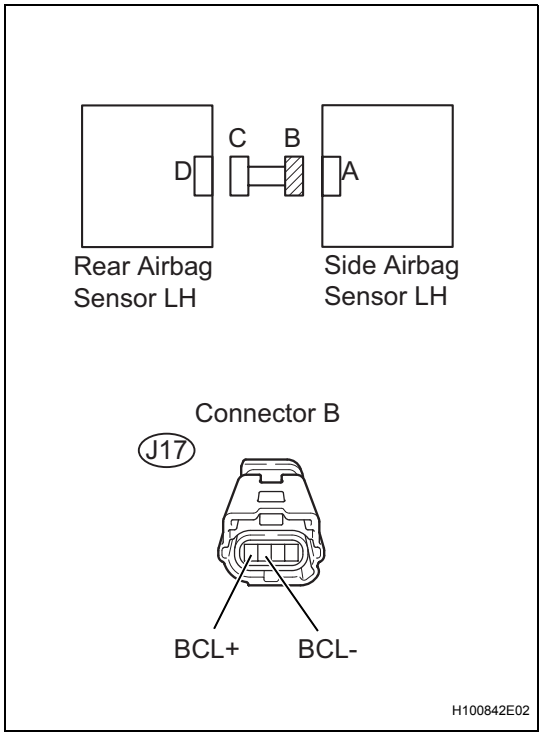

(a) Turn the ignition switch off.
(b) Disconnect the negative (-) terminal cable from the battery, and wait for at least 90 seconds.
(c) Measure the resistance.
Standard resistance

Tester Connection	Condition	Specified Condition
J17-1 (BCL+) - Body ground	Always	1 MΩ or higher
J17-2 (BCL-) - Body ground	Always	1 MΩ or higher

NG → **REPAIR OR REPLACE FLOOR WIRE**

OK

RS

7 CHECK REAR AIRBAG SENSOR LH

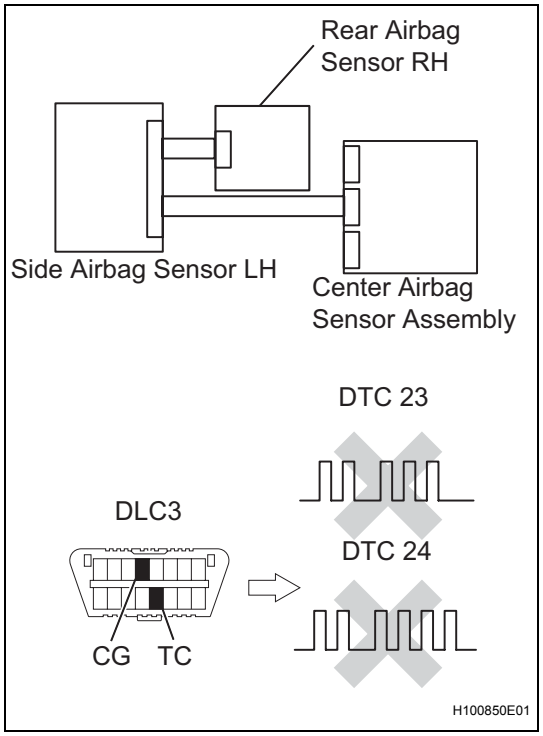

(a) Connect the connectors to the center airbag sensor assembly.
(b) Interchange the rear airbag sensor LH with the rear airbag sensor RH and connect the connectors to them.
(c) Connect the negative (-) terminal cable to the battery, and wait for at least 2 seconds.
(d) Turn the ignition switch on (IG), and wait for at least 60 seconds.
(e) Clear the DTCs stored in the memory (See page RS-38).
(f) Turn the ignition switch off.
(g) Turn the ignition switch on, and wait for at least 60 seconds.
(h) Check the DTCs (See page RS-38).

Result

Result	Proceed to
DTC B1630/23 is output.	A
DTC B1635/24 is output.	B
DTC B1630/23 and B1635/24 are not output.	C

HINT:
DTCs other than DTC B1630/23 and B1635/24 may be output at this time, but they are not related to this check.

A → **Go to step 8**

B → **REPLACE REAR AIRBAG SENSOR LH**

C

USE SIMULATION METHOD TO CHECK

RS

8	CHECK SIDE AIRBAG SENSOR LH

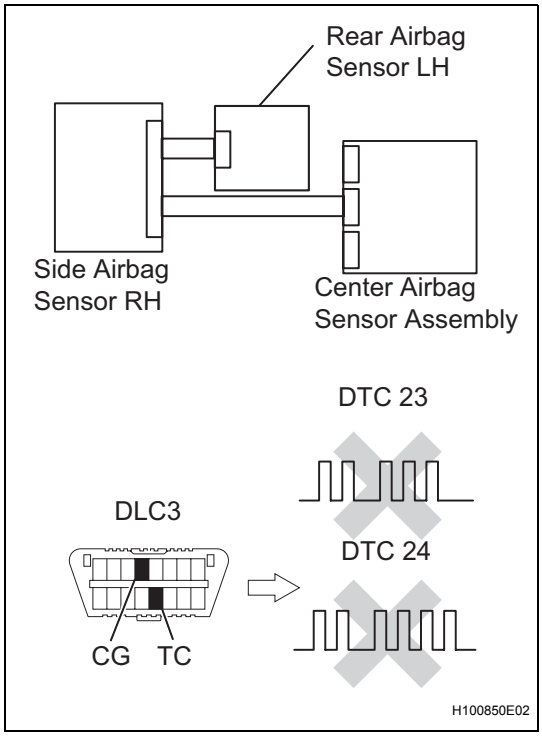

(a) Turn the ignition switch to the lock position.
(b) Disconnect the negative (-) terminal cable from the battery, and wait for at least 90 seconds.
(c) Return the airbag sensor rear LH and RH to their original positions and connect the connectors to them.
(d) Interchange the side airbag sensor LH with the side airbag sensor RH and connect the connectors to them.
(e) Connect the negative (-) terminal cable to the battery, and wait for at least 2 seconds.
(f) Turn the ignition switch to the on position, and wait for at least 60 seconds.
(g) Clear the DTCs stored in the memory (See page RS-38).
(h) Turn the ignition switch to the lock position.
(i) Turn the ignition switch to the on position, and wait for at least 60 seconds.
(j) Check for DTCs (See page RS-38).

Result

Result	Proceed to
DTC B1630/23 is output.	A
DTC B1635/24 is output.	B
Neither DTC B1630/23 nor B1635/24 is output.	C

HINT:
DTCs other than B1630/23 and B1635/24 may be output at this time, but they are not related to this check.

A → **REPLACE CENTER AIRBAG SENSOR ASSEMBLY**

B → **REPLACE SIDE AIRBAG SENSOR RH**

C

USE SIMULATION METHOD TO CHECK

DTC	B1635/24	Front Passenger Side Rear Airbag Sensor Circuit Malfunction

DESCRIPTION

The rear airbag sensor RH consists of parts including the diagnostic circuit and the lateral deceleration sensor.
When the center airbag sensor assembly receives signals from the lateral deceleration sensor, it determines whether or not the SRS should be activated.
DTC B1635/24 is recorded when a malfunction is detected in the rear airbag sensor RH circuit.

DTC No.	DTC Detecting Condition	Trouble Area
B1635/24	• Center airbag sensor assembly detects line short circuit signal, open circuit signal, short circuit to ground signal or short circuit to B+ signal in rear airbag sensor RH circuit for 2 seconds. • Rear airbag sensor RH malfunction • Center airbag sensor assembly malfunction	• Floor wire • Rear airbag sensor RH • Center airbag sensor assembly

WIRING DIAGRAM

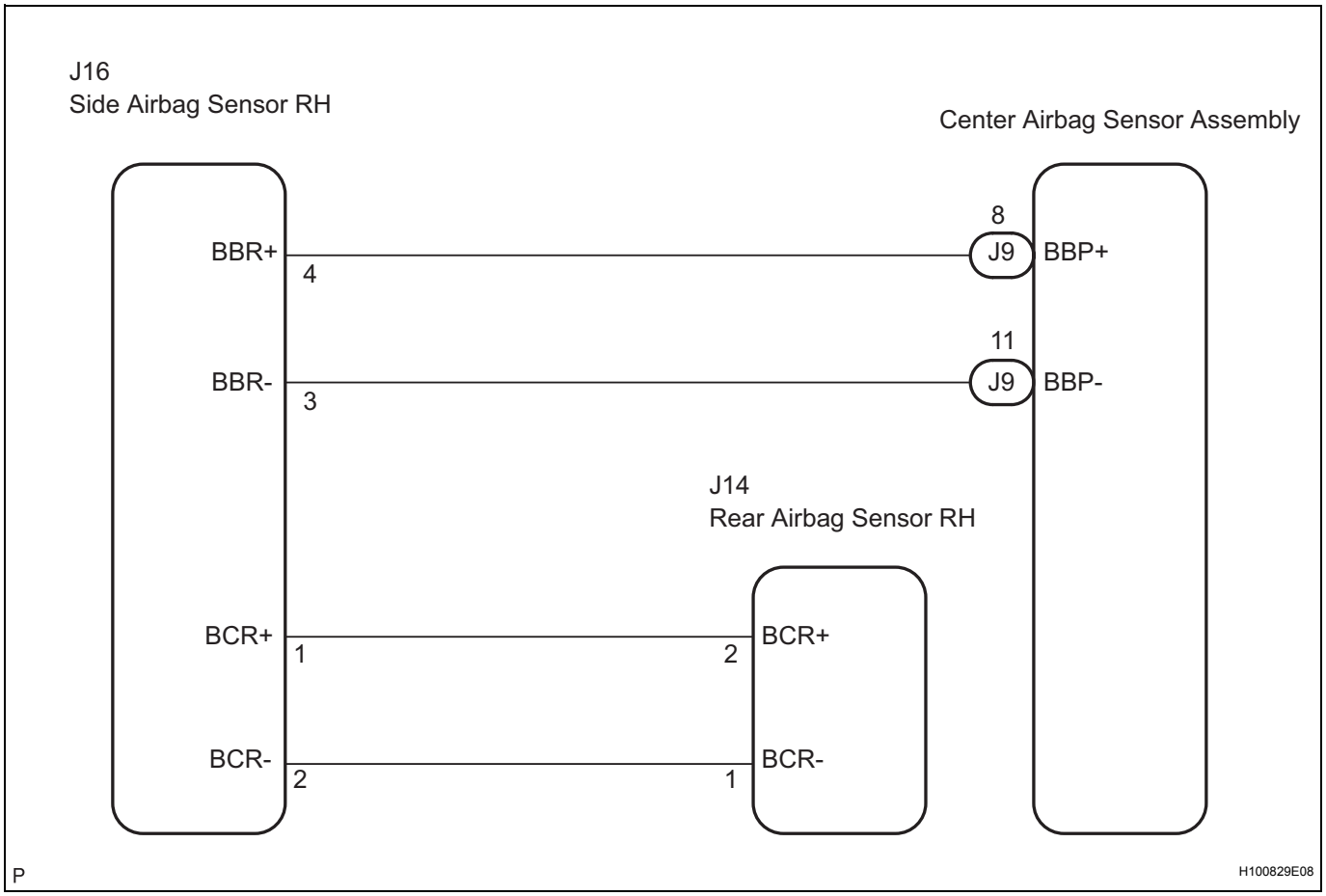

INSPECTION PROCEDURE

RS

1	CHECK DTC

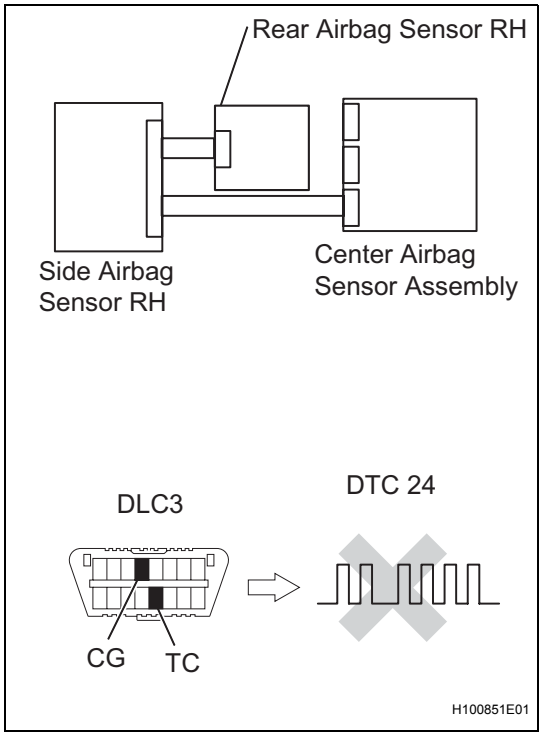

(a) Turn the ignition switch on, and wait for at least 60 seconds.
(b) Clear the DTCs stored in the memory (See page RS-38).
(c) Turn the ignition switch off.
(d) Turn the ignition switch on, and wait for at least 60 seconds.
(e) Check the DTCs (See page RS-38).
OK:
DTC B1635/24 is not output.
HINT:
DTCs other than DTC B1635/24 may be output at this time, but they are not related to this check.

OK → **USE SIMULATION METHOD TO CHECK**

NG

2	CHECK CONNECTION OF CONNECTORS

(a) Turn the ignition switch off.
(b) Disconnect the negative (-) terminal cable from the battery, and wait for at least 90 seconds.
(c) Check that the connectors are properly connected to the center airbag sensor assembly and the rear airbag sensor RH.
OK:
The connectors are properly connected.

NG → **CONNECT CONNECTORS**

OK

RS

3 CHECK FLOOR WIRE (FOR OPEN)

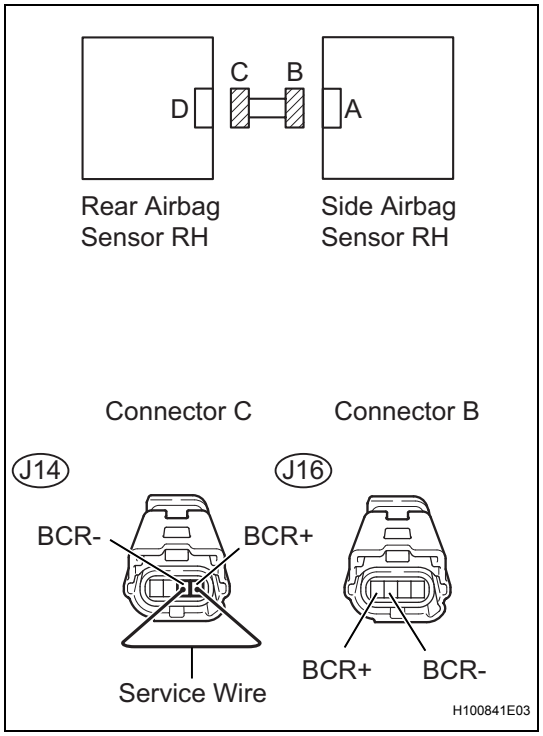

(a) Disconnect the connectors from the side airbag sensor RH and the rear airbag sensor RH.

(b) Using a service wire, connect J14-2 (BCR+) and J14-1 (BCR-) of connector C.

NOTICE:
Do not forcibly insert a service wire into the terminals of the connector when connecting.

(c) Measure the resistance.

Standard resistance

Tester Connection	Condition	Specified Condition
J16-1 (BCR+) - J16-2 (BCR-)	Always	Below 1 Ω

NG → **REPAIR OR REPLACE FLOOR WIRE**

OK

4 CHECK FLOOR WIRE (FOR SHORT)

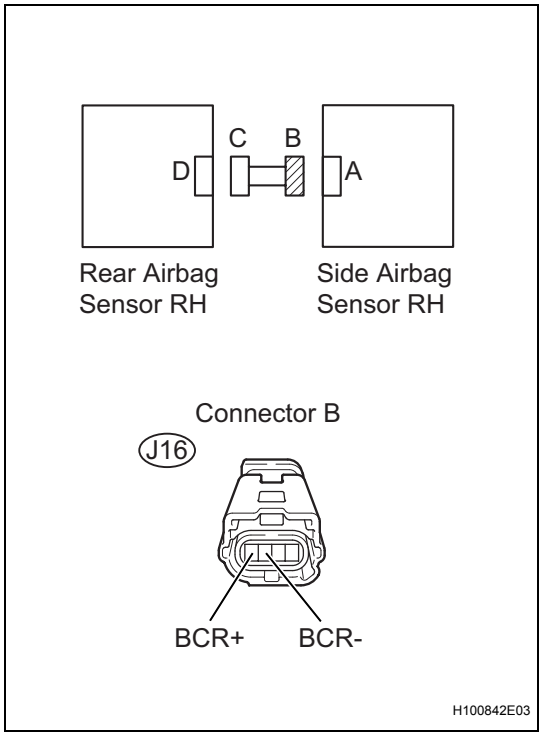

(a) Disconnect the service wire from connector C.

(b) Measure the resistance.

Standard resistance

Tester Connection	Condition	Specified Condition
J16-1 (BCR+) - J16-2 (BCR-)	Always	1 MΩ or higher

NG → **REPAIR OR REPLACE FLOOR WIRE**

OK

RS

5 CHECK FLOOR WIRE (TO B+)

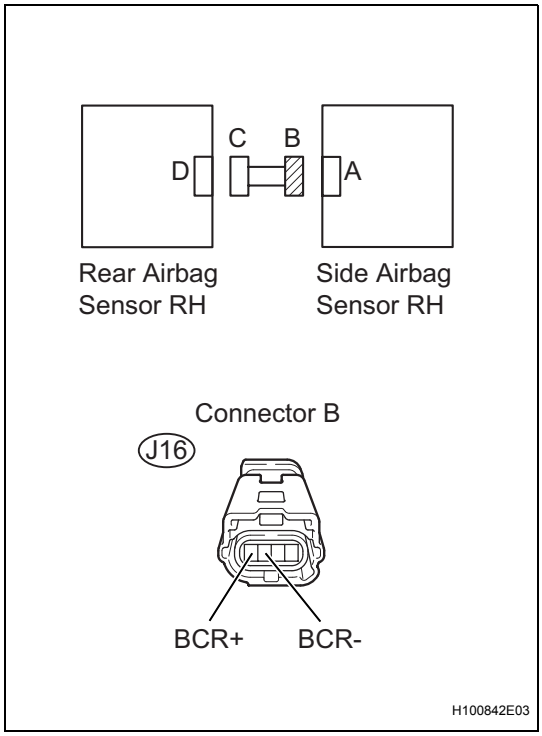

(a) Connect the negative (-) terminal cable to the battery, and wait for at least 2 seconds.
(b) Turn the ignition switch on.
(c) Measure the voltage.
Standard voltage

Tester Connection	Condition	Specified Condition
J16-1 (BCR+) - Body ground	Ignition switch on	Below 1 V
J16-2 (BCR-) - Body ground	Ignition switch on	Below 1 V

NG → **REPAIR OR REPLACE FLOOR WIRE**

OK

6 CHECK FLOOR WIRE (TO GROUND)

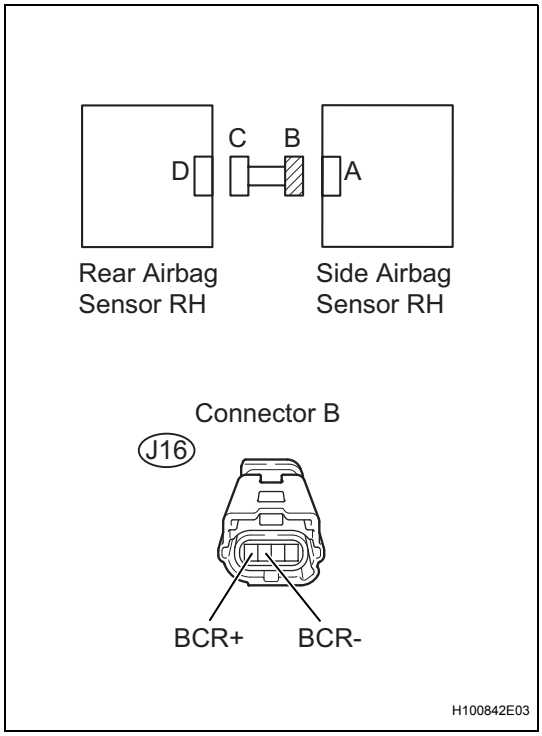

(a) Turn the ignition switch off.
(b) Disconnect the negative (-) terminal cable from the battery, and wait for at least 90 seconds.
(c) Measure the resistance.
Standard resistance

Tester Connection	Condition	Specified Condition
J16-1 (BCR+) - Body ground	Always	1 MΩ or higher
J16-2 (BCR-) - Body ground	Always	1 MΩ or higher

NG → **REPAIR OR REPLACE FLOOR WIRE**

OK

RS

7 CHECK REAR AIRBAG SENSOR RH

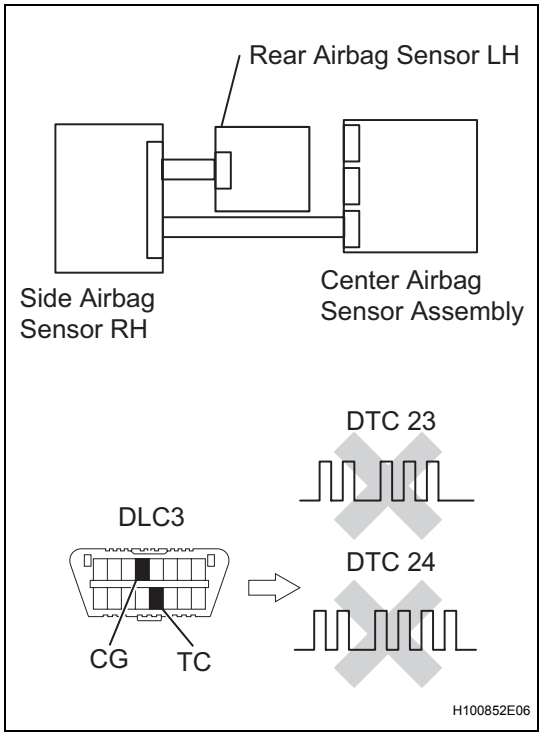

(a) Connect the connectors to the center airbag sensor assembly.
(b) Interchange the rear airbag sensor LH with the rear airbag sensor RH and connect the connectors to them.
(c) Connect the negative (-) terminal cable to the battery, and wait for at least 2 seconds.
(d) Turn the ignition switch on, and wait for at least 60 seconds.
(e) Clear the DTCs stored in the memory (See page RS-38).
(f) Turn the ignition switch off.
(g) Turn the ignition switch on, and wait for at least 60 seconds.
(h) Check the DTCs (See page RS-38).

Result

Result	Proceed to
DTC B1635/24 is output.	A
DTC B1630/23 is output.	B
DTC B1630/23 and B1635/24 are not output.	C

A → **Go to step 8**

B → **REPLACE REAR AIRBAG SENSOR RH**

C → **USE SIMULATION METHOD TO CHECK**

RS

8	CHECK SIDE AIRBAG SENSOR RH

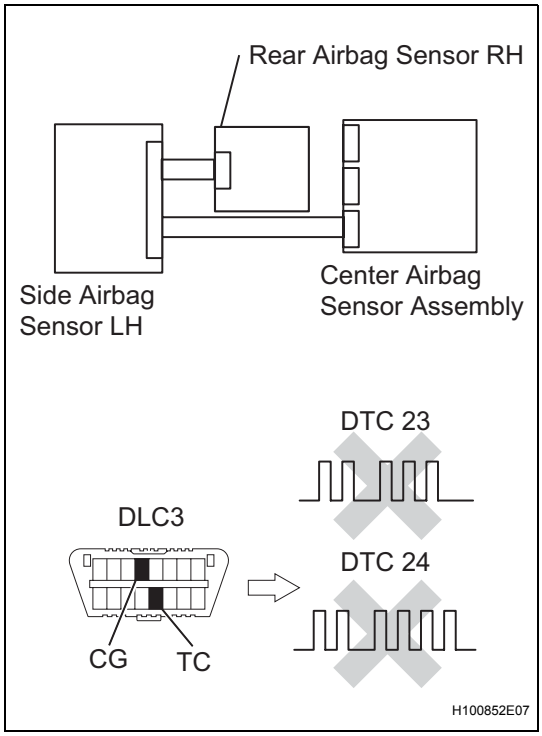

(a) Turn the ignition switch to the lock position.
(b) Disconnect the negative (-) terminal cable from the battery, and wait for at least 90 seconds.
(c) Return the airbag sensor rear LH and airbag sensor rear RH to their original positions and connect the connectors to them.
(d) Interchange the side airbag sensor RH with the side airbag sensor LH and connect the connectors to them.
(e) Connect the negative (-) terminal cable to the battery, and wait for at least 2 seconds.
(f) Turn the ignition switch to the on position, and wait for at least 60 seconds.
(g) Clear the DTCs stored in the memory (See page RS-38).
(h) Turn the ignition switch to the lock position.
(i) Turn the ignition switch to the on position, and wait for at least 60 seconds.
(j) Check for DTCs (See page RS-38).

Result

Result	Proceed to
DTC B1635/24 is output.	A
DTC B1630/23 is output.	B
Neither DTC B1630/23 nor B1635/24 is output.	C

A → **REPLACE CENTER AIRBAG SENSOR ASSEMBLY**

B → **REPLACE SIDE AIRBAG SENSOR RH**

C

USE SIMULATION METHOD TO CHECK

DTC	B1650/32	Occupant Classification System Malfunction

DESCRIPTION

The occupant classification system circuit consists of the center airbag sensor assembly and the occupant classification system.

When the center airbag sensor assembly receives signals from the occupant classification ECU, it determines whether or not the front passenger airbag, front seat side airbag assembly RH and seat belt pretensioner RH should be operated.

DTC B1650/32 is set when a malfunction is detected in the occupant classification system circuit.

DTC No.	DTC Detecting Conditions	Trouble Areas
B1650/32	• Occupant classification system malfunction • Center airbag sensor assembly detects line short circuit signal, open circuit signal, short circuit to ground signal or short circuit to B+ signal in occupant classification system circuit for 2 seconds • Center airbag sensor assembly malfunction	• Floor wire • Occupant classification system • Center airbag sensor assembly

WIRING DIAGRAM

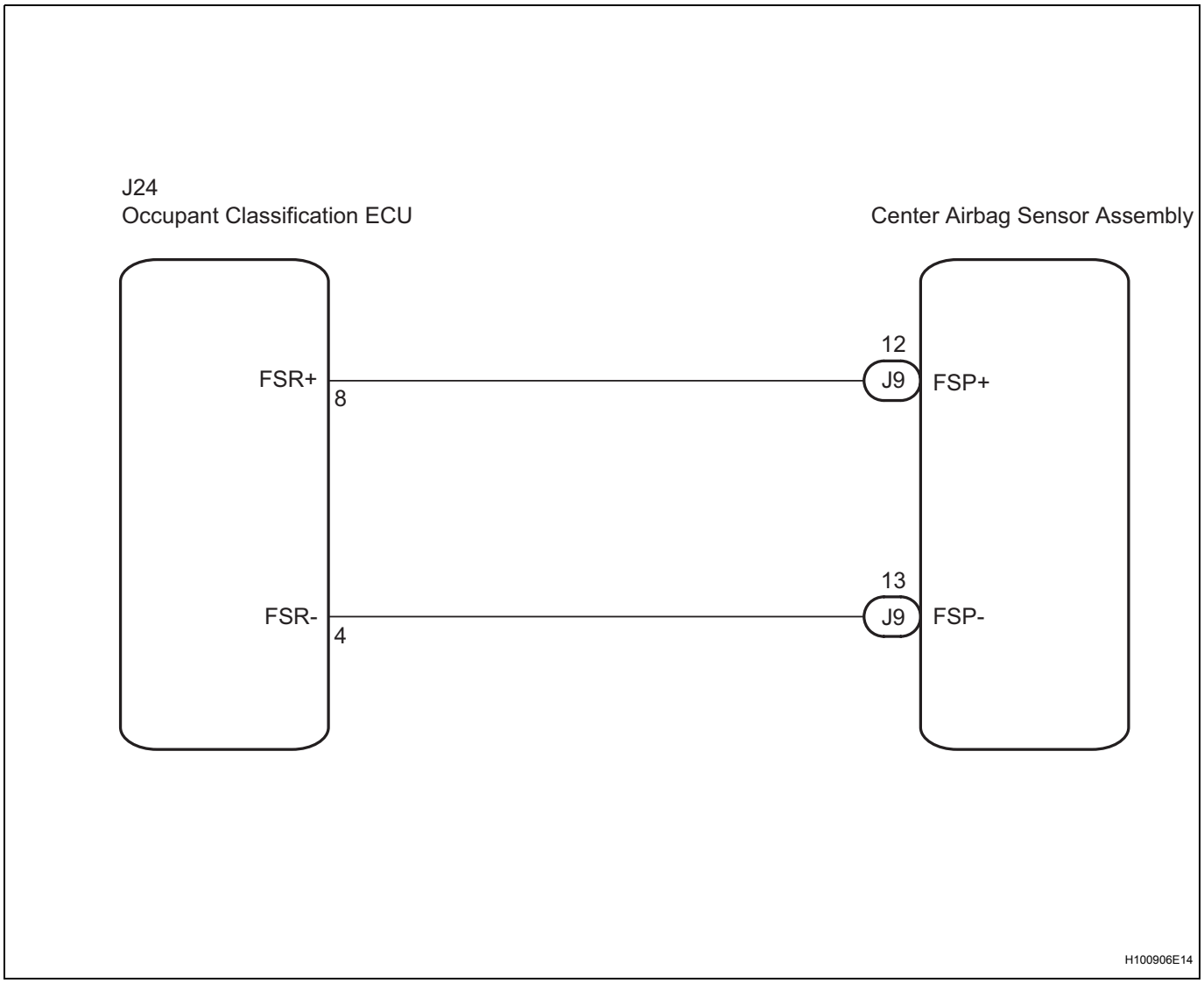

INSPECTION PROCEDURE

NOTICE:

In order to prevent unexpected airbag deployment, disconnect the following connectors before inspecting parts such as wire harnesses, if the application of tester probes to the center airbag sensor assembly connector is necessary.

RS

1. Turn the ignition switch to the lock position.
2. Disconnect the negative (-) terminal cable from the battery, and wait for at least 90 seconds.
3. Disconnect the connector from the center airbag sensor assembly.
4. Disconnect the connectors from the steering pad.
5. Disconnect the connectors from the front passenger airbag assembly.
6. Disconnect the connector from the front seat outer belt assembly LH.
7. Disconnect the connector from the front seat outer belt assembly RH.
   HINT:
   Skip the following steps if side and curtain shield airbags are not fitted.
8. Disconnect the connector from the front seat side airbag assembly LH.
9. Disconnect the connector from the front seat side airbag assembly RH.
10. Disconnect the connector from the curtain shield airbag assembly LH.
11. Disconnect the connector from the curtain shield airbag assembly RH.

1	CHECK DTC (CENTER AIRBAG SENSOR ASSEMBLY)

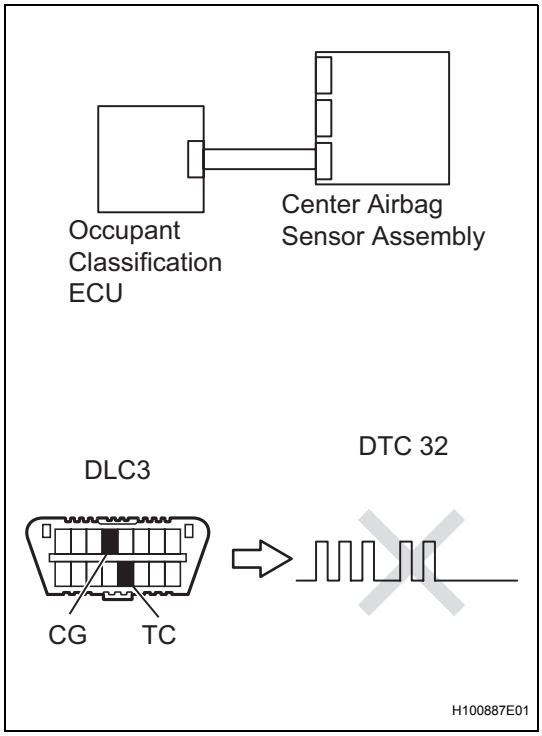

(a) Turn the ignition switch to the on position, and wait for at least 60 seconds.
(b) Clear the DTCs stored in the memory (See page RS-38).
(c) Turn the ignition switch to the lock position.
(d) Turn the ignition switch to the on position, and wait for at least 60 seconds.
(e) Check for DTCs (See page RS-38).
OK:
DTC B1650/32 is not output.
HINT:
DTCs other than B1650/32 may be output at this time, but they are not related to this check.

OK → **USE SIMULATION METHOD TO CHECK**

NG

2	CHECK DTC (OCCUPANT CLASSIFICATION ECU)

(a) Turn the ignition switch to the on position, and wait for at least 10 seconds.
(b) Using the intelligent tester, check for DTCs of the occupant classification ECU (See page RS-223).
OK:
DTC is not output.

NG → GO TO DTC CHART

OK

3 CHECK CONNECTION OF CONNECTORS

RS

(a) Turn the ignition switch to the lock position.
(b) Disconnect the negative (-) terminal cable from the battery, and wait for at least 90 seconds.
(c) Check that the connectors are properly connected to the center airbag sensor assembly and the occupant classification ECU.
OK:
The connectors are properly connected.

NG → CONNECT CONNECTORS

OK

4 CHECK FLOOR WIRE (FOR OPEN)

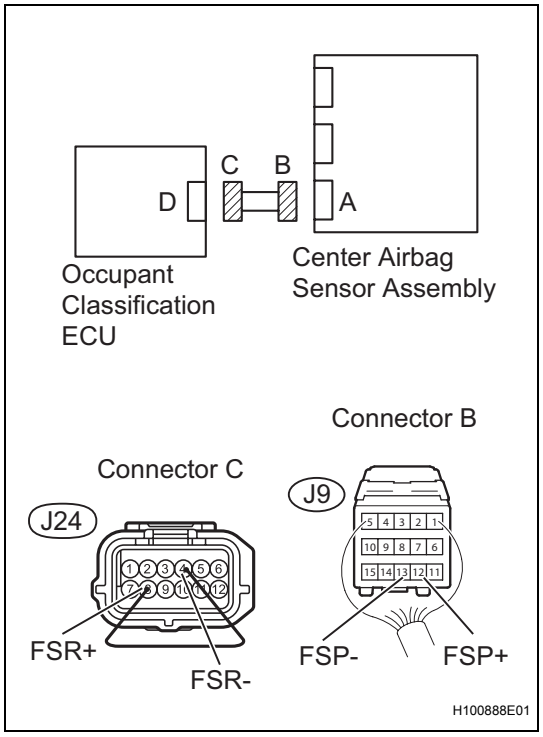

(a) Disconnect the connectors from the center airbag sensor assembly and the occupant classification ECU.
(b) Using a service wire, connect J24-8 (FSR+) and J24-4 (FSR-) of connector C.
NOTICE:
Do not forcibly insert the service wire into the terminals of the connector when connecting.
(c) Measure the resistance.
Standard resistance

Tester Connection	Condition	Specified Condition
J9-12 (FSP+) - J9-13 (FSP-)	Always	Below 1 Ω

NG → REPAIR OR REPLACE FLOOR WIRE

OK

RS

5 CHECK FLOOR WIRE (FOR SHORT)

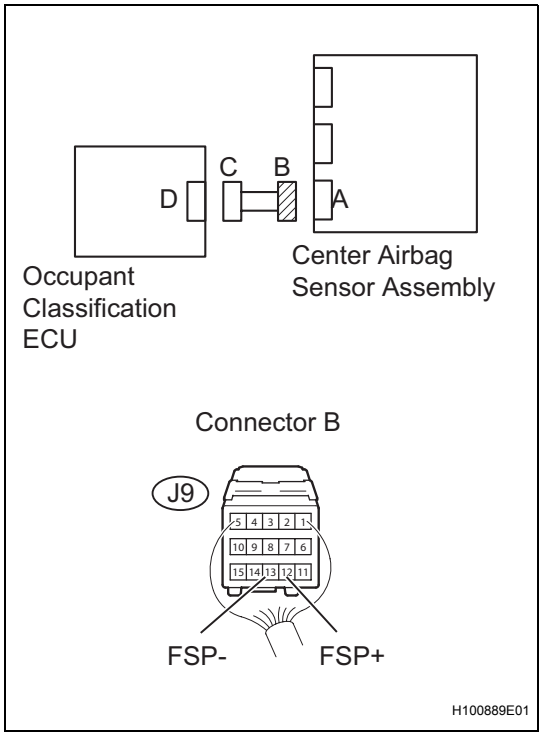

(a) Disconnect the service wire from connector C.
(b) Measure the resistance.
Standard resistance

Tester Connection	Condition	Specified Condition
J9-12 (FSP+) - J9-13 (FSP-)	Always	1 MΩ or Higher

NG → **REPAIR OR REPLACE FLOOR WIRE**

OK

6 CHECK FLOOR WIRE (TO B+)

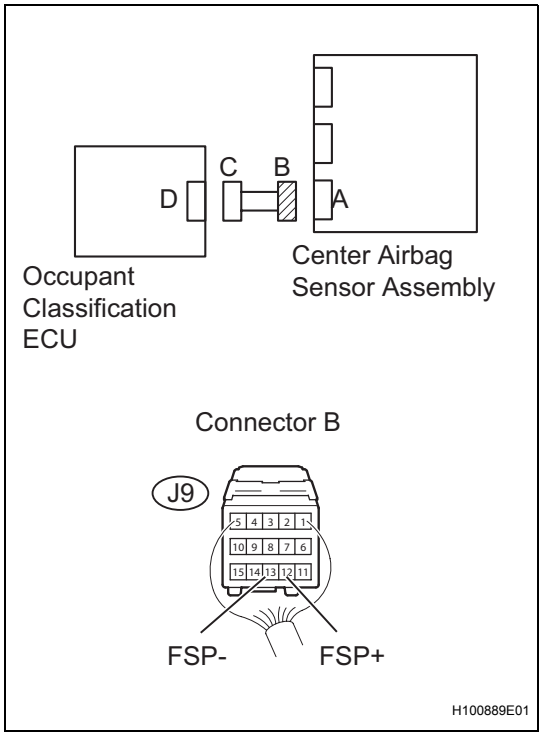

(a) Connect the negative (-) terminal cable to the battery, and wait for at least 2 seconds.
(b) Turn the ignition switch to the on position.
(c) Measure the voltage.
Standard voltage

Tester Connection	Condition	Specified Condition
J9-12 (FSP+) - Body ground	Ignition switch on	Below 1 V
J9-13 (FSP-) - Body ground	Ignition switch on	Below 1 V

NG → **REPAIR OR REPLACE FLOOR WIRE**

OK

RS

7 CHECK FLOOR WIRE (TO GROUND)

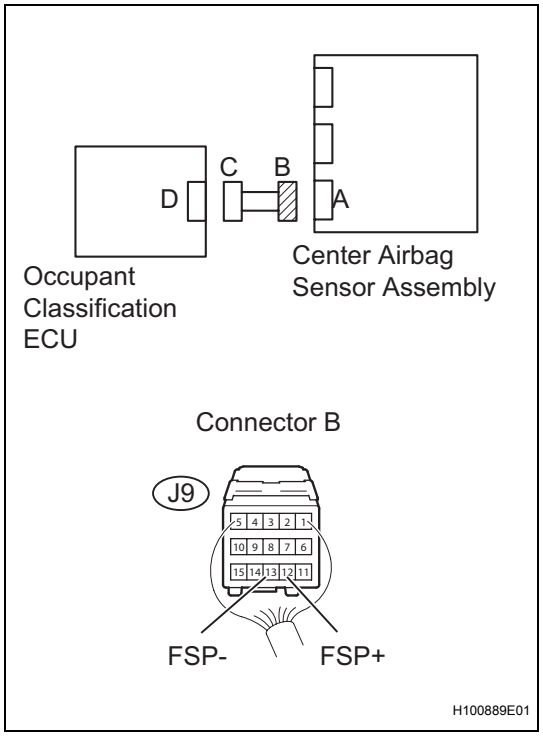

(a) Turn the ignition switch to the lock position.
(b) Disconnect the negative (-) terminal cable from the battery, and wait for at least 90 seconds.
(c) Measure the resistance.
Standard resistance

Tester Connection	Condition	Specified Condition
J9-12 (FSP+) - Body ground	Always	1 MΩ or Higher
J9-13 (FSP-) - Body ground	Always	1 MΩ or Higher

NG → **REPAIR OR REPLACE FLOOR WIRE**

OK

8 CHECK CENTER AIRBAG SENSOR ASSEMBLY

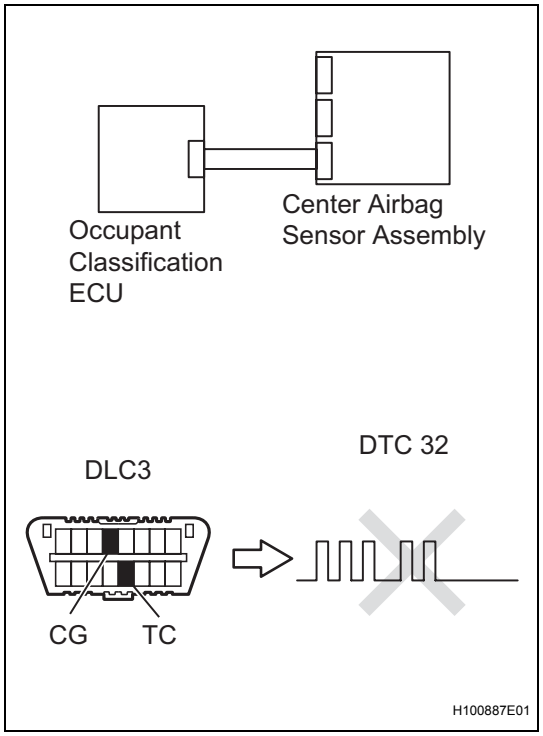

(a) Turn the ignition switch to the lock position.
(b) Disconnect the negative (-) terminal cable from the battery, and wait for at least 90 seconds.
(c) Replace the center airbag sensor assembly.
for Hatchback: (See page RS-437)
for Sedan: (See page RS-433)
HINT:
Perform the inspection using parts from a normal vehicle when possible.
(d) Connect the connectors to the center airbag sensor assembly.
(e) Connect the negative (-) terminal cable to the battery, and wait for at least 2 seconds.
(f) Turn the ignition switch to the on position, and wait for at least 60 seconds.
(g) Clear the DTCs stored in the memory (See page RS-38).
(h) Turn the ignition switch to the lock position.
(i) Turn the ignition switch to the on position, and wait for at least 60 seconds.
(j) Check for DTCs (See page RS-38).
OK:
DTC B1650/32 is not output.

HINT:
DTCs other than B1650/32 may be output at this time, but they are not related to this check.

OK → **USE SIMULATION METHOD TO CHECK**

RS

NG

9	REPLACE OCCUPANT CLASSIFICATION ECU

(a) Turn the ignition switch to the lock position.
(b) Disconnect the negative (-) terminal cable from the battery, and wait for at least 90 seconds.
(c) Replace the occupant classification ECU (See page RS-493).

NEXT

10	PERFORM ZERO POINT CALIBRATION

(a) Connect the negative (-) terminal cable to the battery.
(b) Connect the intelligent tester to the DLC3.
(c) Turn the ignition switch to the on position.
(d) Using the intelligent tester, perform the zero point calibration (See page RS-215).
OK:
COMPLETED is displayed on the tester.

NEXT

11	PERFORM SENSITIVITY CHECK

(a) Using the intelligent tester, perform the sensitivity check (See page RS-215).
(1) Confirm that nothing is placed on the passenger seat.
(2) Confirm that the first sensor reading is within the standard range.
Standard range:
-3.2 to 3.2 kg (-7 to 7 lb)
(3) Place a 30 kg (66.14 lb) weight (e.g. a lead mass) onto the front passenger seat.
(4) Confirm that the sensitivity is within the standard range.
Standard range:
27 to 33 kg (59.52 to 72.75 lb)
HINT:
When performing the sensitivity check, use a solid metal weight (the check result may not be accurate if a liquid weight is used).

NEXT

END

DTC	B1653/35	Seat Position Airbag Sensor Circuit Malfunction

DESCRIPTION

RS

The seat position sensor circuit consists of the center airbag sensor assembly and the seat position sensor.
DTC B1653/35 is recorded when a malfunction is detected in the seat position sensor circuit.

DTC No.	DTC Detecting Condition	Trouble Area
B1653/35	• Center airbag sensor assembly detects line short circuit signal, open circuit signal, short circuit to ground signal or short circuit to B+ signal in seat position sensor circuit for 2 seconds. • Seat position sensor malfunction • Center airbag sensor assembly malfunction	• Floor wire • Front seat inner belt assembly • Seat position sensor • Center airbag sensor assembly

WIRING DIAGRAM

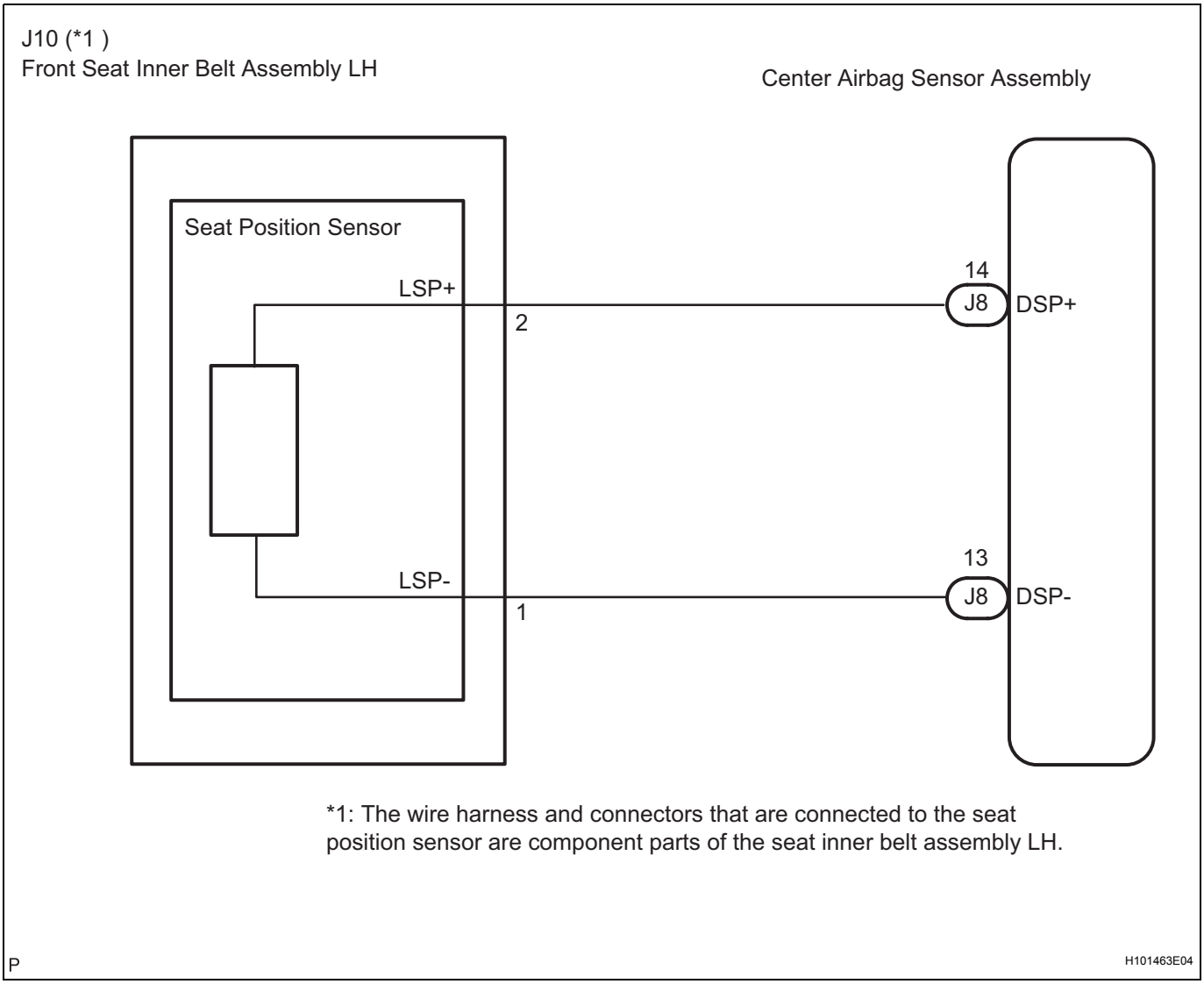

INSPECTION PROCEDURE

NOTICE:

In order to prevent unexpected airbag deployment, disconnect the following connectors before inspecting parts such as wire harnesses, if the application of tester probes to the center airbag sensor assembly connector is necessary.

1. Turn the ignition switch to the lock position.
2. Disconnect the negative (-) terminal cable from the battery, and wait for at least 90 seconds.
3. Disconnect the connector from the center airbag sensor assembly.
4. Disconnect the connectors from the steering pad.
5. Disconnect the connectors from the front passenger airbag assembly.
6. Disconnect the connector from the front seat outer belt assembly LH
7. Disconnect the connector from the front seat outer belt assembly RH.
   HINT:
   Skip the following steps if side and curtain shield airbags are not fitted.
8. Disconnect the connector from the front seat side airbag assembly LH.
9. Disconnect the connector from the front seat side airbag assembly RH.
10. Disconnect the connector from the curtain shield airbag assembly LH.
11. Disconnect the connector from the curtain shield airbag assembly RH.

1	CHECK DTC

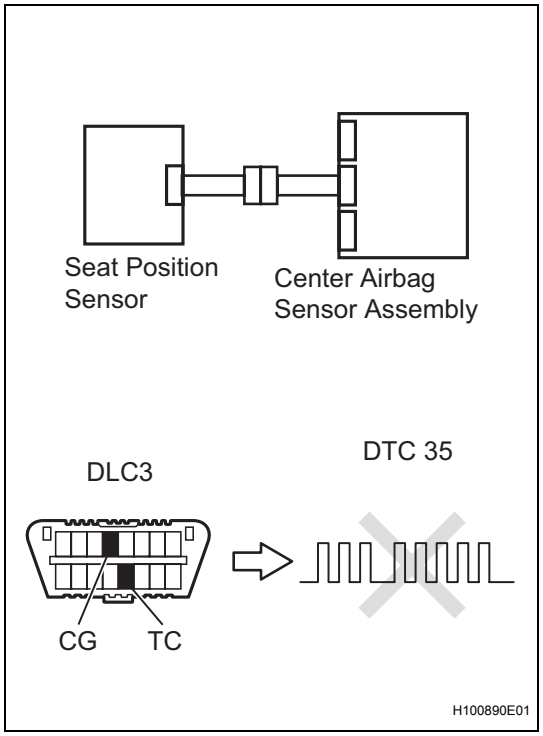

(a) Turn the ignition switch on, and wait for at least 60 seconds.
(b) Clear the DTCs stored in the memory (See page RS-38).
(c) Turn the ignition switch off.
(d) Turn the ignition switch on, and wait for at least 60 seconds.
(e) Check the DTCs (See page RS-38).
OK:
DTC B1653/35 is not output.
HINT:
DTCs other than DTC B1653/35 may be output at this time, but they are not related to this check.

OK → **USE SIMULATION METHOD TO CHECK**

NG

2	CHECK CONNECTION OF CONNECTORS

(a) Turn the ignition switch off.
(b) Disconnect the negative (-) terminal cable from the battery, and wait for at least 90 seconds.
(c) Check that the connectors are properly connected to the center airbag sensor assembly and the seat position sensor.

OK:
The connectors are properly connected.

NG → **CONNECT CONNECTORS**

OK

RS

3 CHECK SEAT POSITION SENSOR CIRCUIT (FOR OPEN)

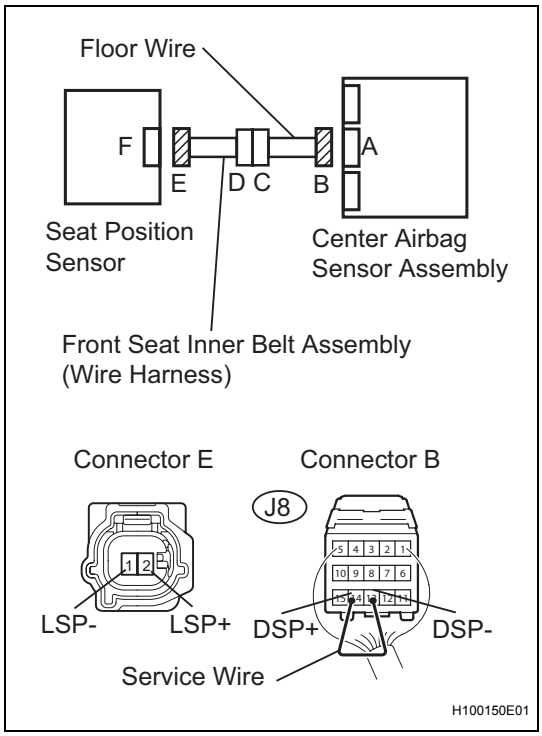

(a) Disconnect the connectors from the center airbag sensor assembly and the seat position sensor.

(b) Using a service wire, connect J8-14 (DSP+) and J8-13 (DSP-) of connector B.
NOTICE:
Do not forcibly insert the service wire into the terminals of the connector when connecting.

(c) Measure the resistance.
Standard resistance

Tester Connection	Condition	Specified Condition
2 (LSP+) - 1 (LSP-)	Always	Below 1 Ω

NG → **Go to step 10**

OK

RS

4 CHECK SEAT POSITION SENSOR CIRCUIT (FOR SHORT)

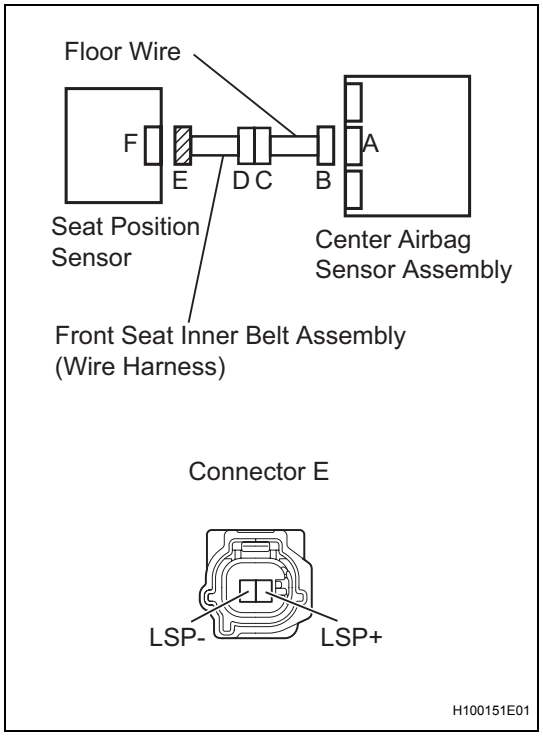

(a) Disconnect the service wire from connector B.
(b) Measure the resistance.
Standard resistance

Tester Connection	Condition	Specified Condition
2 (LSP+) - 1 (LSP-)	Always	1 MΩ or higher

NG → **Go to step 11**

OK

5 CHECK SEAT POSITION SENSOR CIRCUIT (TO B+)

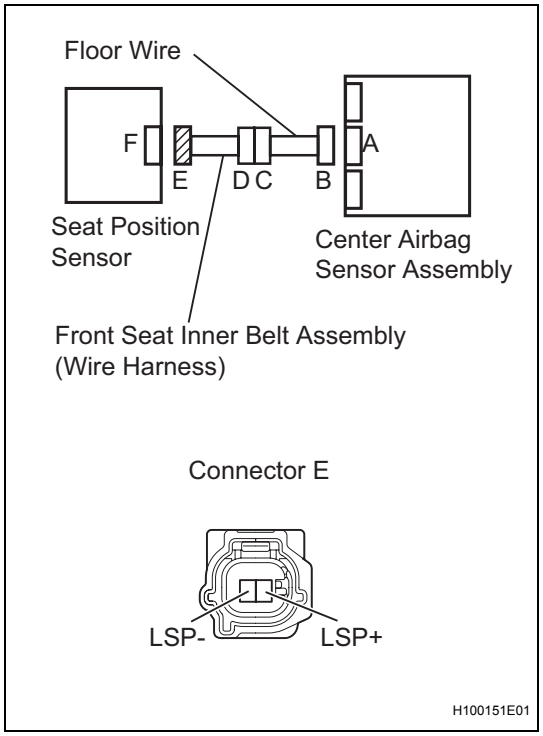

(a) Connect the negative (-) terminal cable to the battery, and wait for at least 2 seconds.
(b) Turn the ignition switch on.
(c) Measure the voltage.
Standard voltage

Tester Connection	Condition	Specified Condition
2 (LSP+) - Body ground	Ignition switch on	Below 1 V
1 (LSP-) - Body ground	Ignition switch on	Below 1 V

NG → **Go to step 12**

OK

RS

6 CHECK SEAT POSITION SENSOR CIRCUIT (TO GROUND)

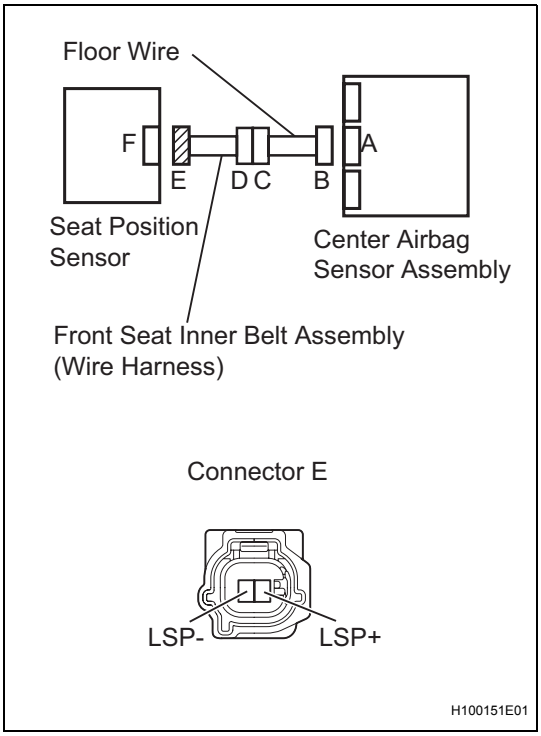

(a) Turn the ignition switch off.
(b) Disconnect the negative (-) terminal cable from the battery, and wait for at least 90 seconds.
(c) Measure the voltage.
Standard resistance

Tester Connection	Condition	Specified Condition
2 (LSP+) - Body ground	Always	1 MΩ or Higher
1 (LSP-) - Body ground	Always	1 MΩ or Higher

NG → **Go to step 13**

OK

7 CHECK SEAT POSITION SENSOR

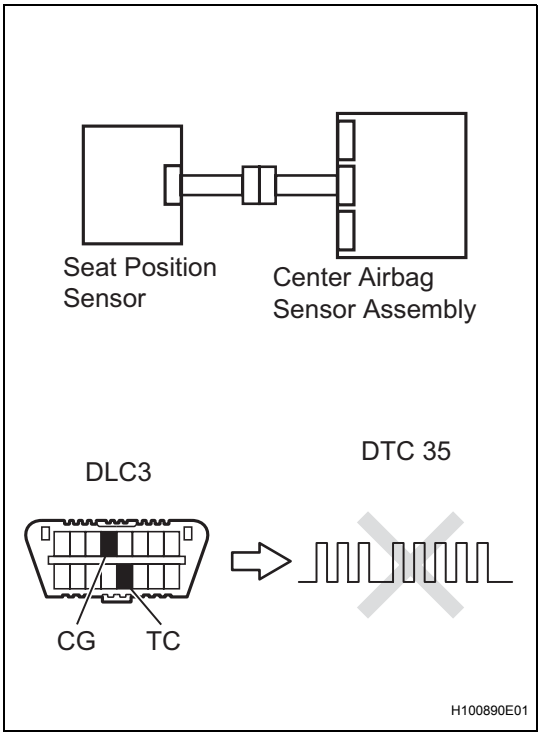

(a) Connect the connectors to the center airbag sensor assembly and the seat position sensor.
(b) Connect the negative (-) terminal cable to the battery, and wait for at least 2 seconds.
(c) Turn the ignition switch on, and wait for at least 60 seconds.
(d) Clear the DTCs stored in the memory (See page RS-38).
(e) Turn the ignition switch off.
(f) Turn the ignition switch on, and wait for at least 60 seconds.
(g) Check the DTCs (See page RS-38).
OK:
DTC B1653/35 is not output.
HINT:
DTCs other than DTC B1653/35 may be output at this time, but they are not related to this check.

OK → **USE SIMULATION METHOD TO CHECK**

NG

8	REPLACE SEAT POSITION SENSOR

(a) Turn the ignition switch off.
(b) Disconnect the negative (-) terminal cable from the battery, and wait for at least 90 seconds.
(c) Replace the seat position sensor (See page RS-488).
HINT:
Perform the inspection using parts from a normal vehicle if possible.

NEXT

9	CHECK CENTER AIRBAG SENSOR ASSEMBLY

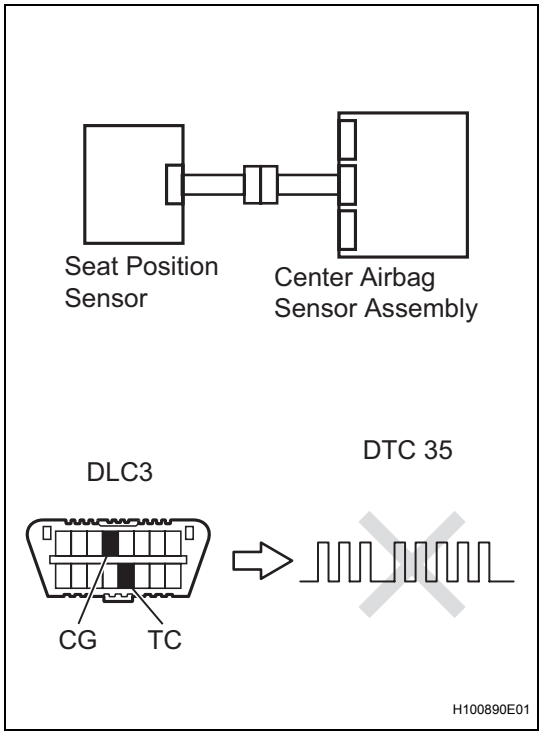

(a) Connect the negative (-) terminal cable to the battery, and wait for at least 2 seconds.
(b) Turn the ignition switch on, and wait for at least 60 seconds.
(c) Clear the DTCs stored in the memory (See page RS-38).
(d) Turn the ignition switch off.
(e) Turn the ignition switch on, and wait for at least 60 seconds.
(f) Check the DTCs (See page RS-38).
OK:
DTC B1653/35 is not output.
HINT:
DTCs other than DTC B1653/35 may be output at this time, but they are not related to this check.

NG → **REPLACE CENTER AIRBAG SENSOR ASSEMBLY**

OK

END

RS

10	CHECK FLOOR WIRE (FOR OPEN)

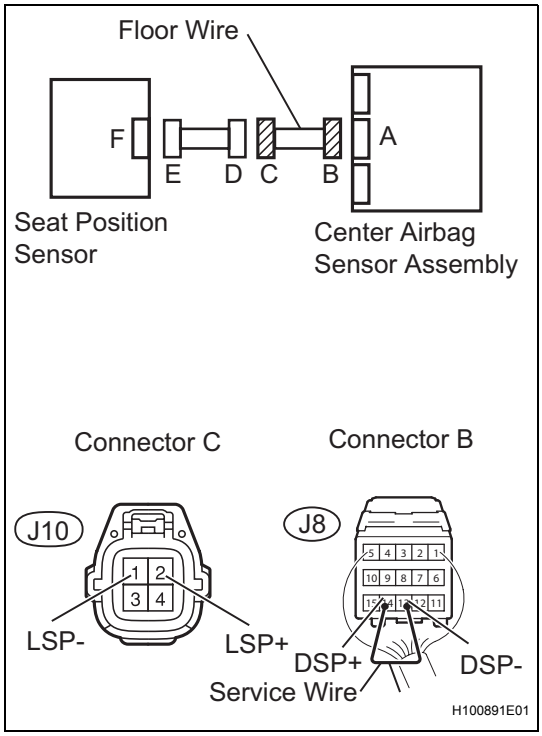

(a) Disconnect the connectors from the center airbag sensor assembly and the seat position sensor.

(b) Using a service wire, connect J8-14 (DSP+) and J8-13 (DSP-) of connector B.

NOTICE:

Do not forcibly insert the service wire into the terminals of the connector when connecting.

(c) Measure the resistance.

Standard resistance

Tester Connection	Condition	Specified Condition
J10-2 (LSP+) - J10-1 (LSP-)	Always	Below 1 Ω

NG → **REPAIR OR REPLACE FLOOR WIRE**

OK

REPLACE FRONT SEAT INNER BELT ASSEMBLY LH

RS

11 CHECK FLOOR WIRE (FOR SHORT)

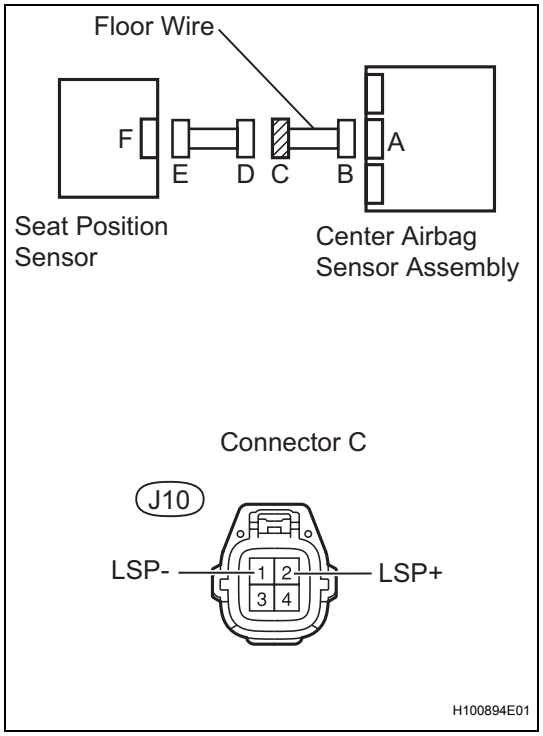

(a) Disconnect the service wire from connector B.
(b) Measure the resistance.
Standard resistance

Tester Connection	Condition	Specified Condition
J10-2 (LSP+) - J10-1 (LSP-)	Always	1 MΩ or higher

NG → **REPAIR OR REPLACE FLOOR WIRE**

OK

REPLACE FRONT SEAT INNER BELT ASSEMBLY LH

RS

12	CHECK FLOOR WIRE (TO B+)

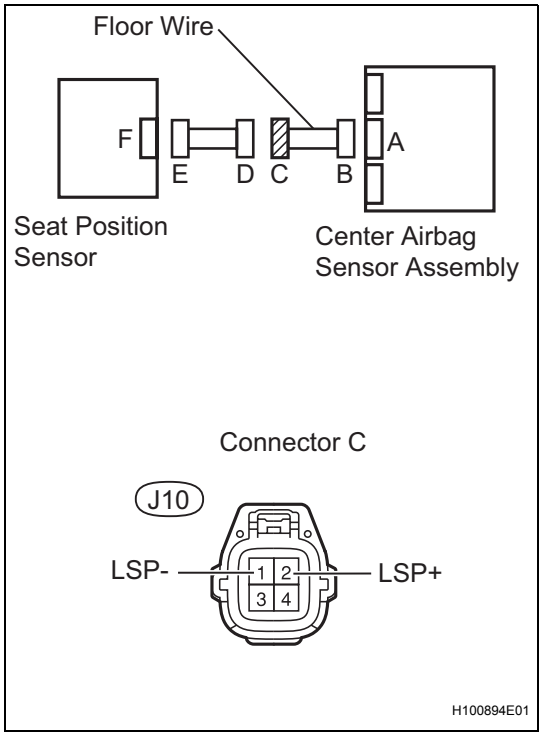

(a) Connect the negative (-) terminal cable to the battery, and wait for at least 2 seconds.
(b) Turn the ignition switch on.
(c) Measure the voltage.
Standard voltage

Tester Connection	Condition	Specified Condition
J10-2 (LSP+) - Body ground	Ignition switch on	Below 1 V
J10-1 (LSP-) - Body ground	Ignition switch on	Below 1 V

NG → **REPAIR OR REPLACE FLOOR WIRE**

OK

REPLACE FRONT SEAT INNER BELT ASSEMBLY LH

RS

13 CHECK FLOOR WIRE (TO GROUND)

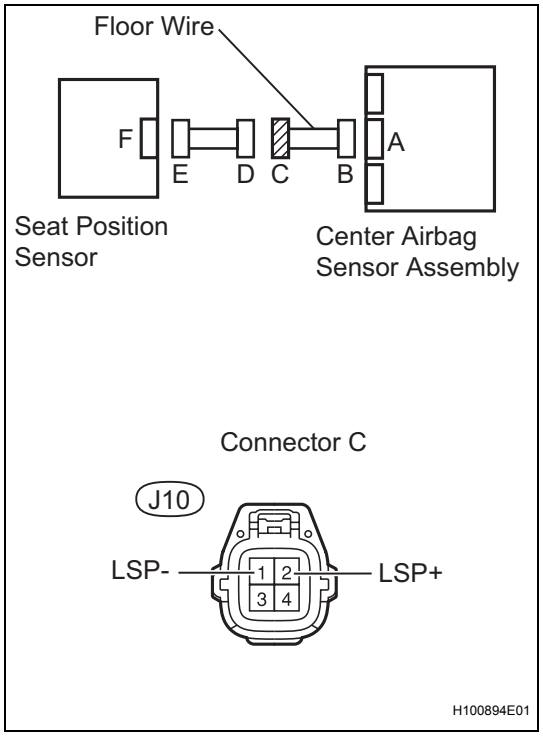

(a) Turn the ignition switch off.
(b) Disconnect the negative (-) terminal cable from the battery, and wait for at least 90 seconds.
(c) Measure the resistance.
Standard resistance

Tester Connection	Condition	Specified Condition
J10-2 (LSP+) - Body ground	Always	1 MΩ or higher
J10-1 (LSP-) - Body ground	Always	1 MΩ or higher

NG → **REPAIR OR REPLACE FLOOR WIRE**

OK

REPLACE FRONT SEAT INNER BELT ASSEMBLY LH

DTC	B1655/37	Driver Side Seat Belt Buckle Switch Circuit Malfunction

DESCRIPTION

RS

The driver side seat belt buckle switch circuit consists of the center airbag sensor assembly and the front seat inner belt assembly LH.
DTC B1655/37 is recorded when a malfunction is detected in the driver side seat belt buckle switch circuit.

DTC No.	DTC Detecting Condition	Trouble Area
B1655/37	• Center airbag sensor assembly detects line short circuit signal, open circuit signal, short circuit to ground signal or short circuit to B+ signal in driver side seat belt buckle switch circuit for 2 seconds. • Front seat inner belt assembly LH malfunction • Center airbag sensor assembly malfunction	• Floor wire • Front seat inner belt assembly LH • Center airbag sensor assembly

WIRING DIAGRAM

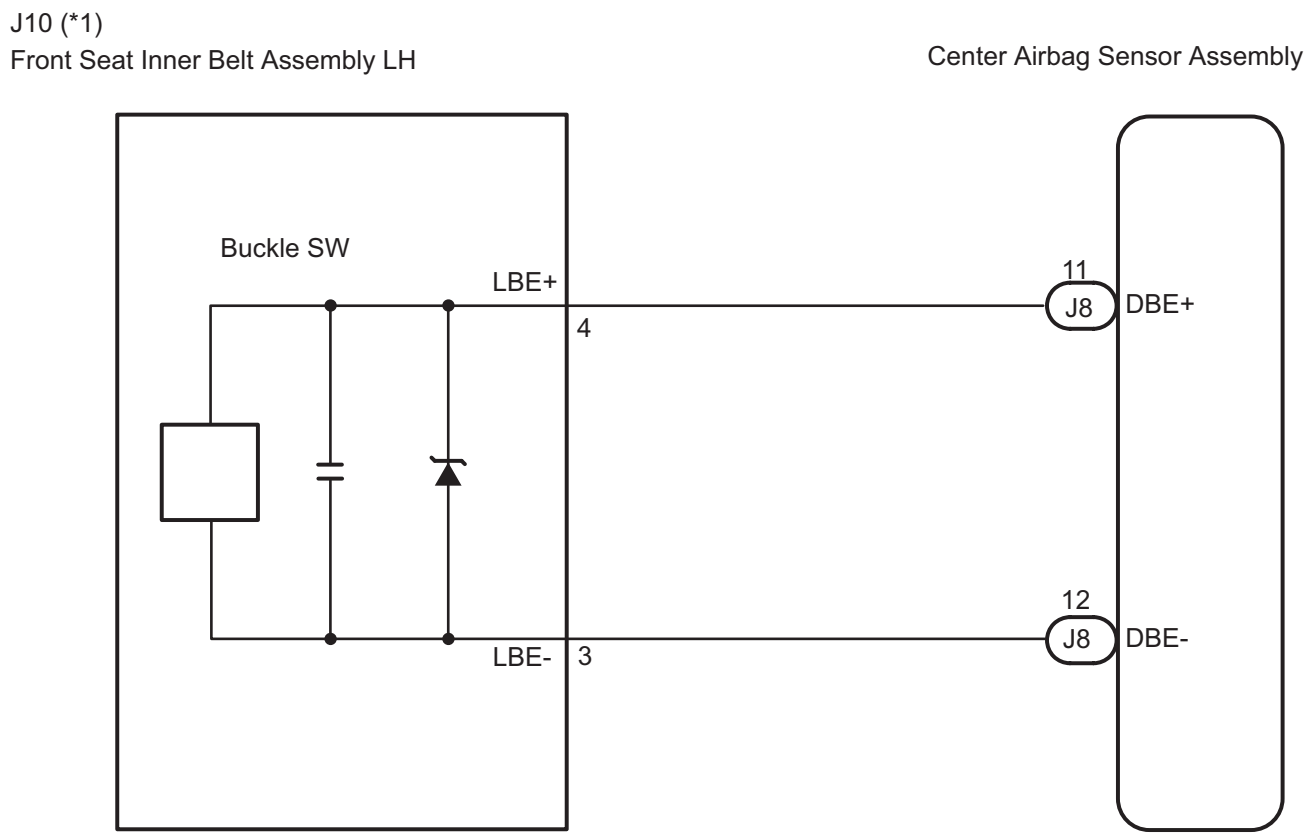

*1: The wire harness and connectors that are connected to the seat position sensor are component parts of the seat inner belt assembly LH.

P

H101464E05

INSPECTION PROCEDURE

NOTICE:

In order to prevent unexpected airbag deployment, disconnect the following connectors before inspecting parts such as wire harnesses, if the application of tester probes to the center airbag sensor assembly connector is necessary.

1. Turn the ignition switch to the lock position.
2. Disconnect the negative (-) terminal cable from the battery, and wait for at least 90 seconds.
3. Disconnect the connector from the center airbag sensor assembly.
4. Disconnect the connectors from the steering pad.
5. Disconnect the connectors from the front passenger airbag assembly.
6. Disconnect the connector from the front seat outer belt assembly LH.
7. Disconnect the connector from the front seat outer belt assembly RH.
   HINT:
   Skip the following steps if side and curtain shield airbags are not fitted.
8. Disconnect the connector from the front seat side airbag assembly LH.
9. Disconnect the connector from the front seat side airbag assembly RH.
10. Disconnect the connector from the curtain shield airbag assembly LH.
11. Disconnect the connector from the curtain shield airbag assembly RH.

1	CHECK DTC

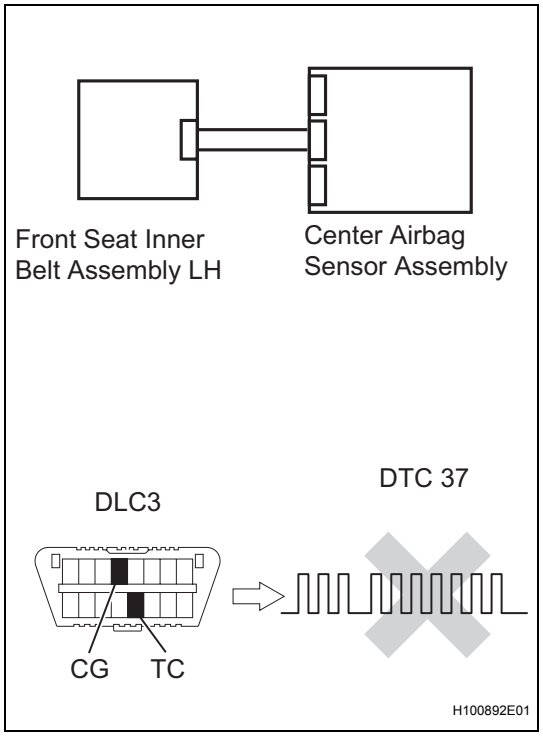

(a) Turn the ignition switch on, and wait for at least 60 seconds.
(b) Clear the DTCs stored in the memory (See page RS-38).
(c) Turn the ignition switch off.
(d) Turn the ignition switch on, and wait for at least 60 seconds.
(e) Check the DTCs (See page RS-38).
OK:
DTC B1655/37 is not output.
HINT:
DTCs other than DTC B1655/37 may be output at this time, but they are not related to this check.

OK → **USE SIMULATION METHOD TO CHECK**

NG

2	CHECK CONNECTION OF CONNECTORS

(a) Turn the ignition switch off.
(b) Disconnect the negative (-) terminal cable from the battery, and wait for at least 90 seconds.
(c) Check that the connectors are properly connected to the center airbag sensor assembly and the front seat inner belt assembly LH.

OK:
The connectors are properly connected.

NG → **CONNECT CONNECTORS**

OK

RS

3 CHECK FLOOR WIRE (FOR OPEN)

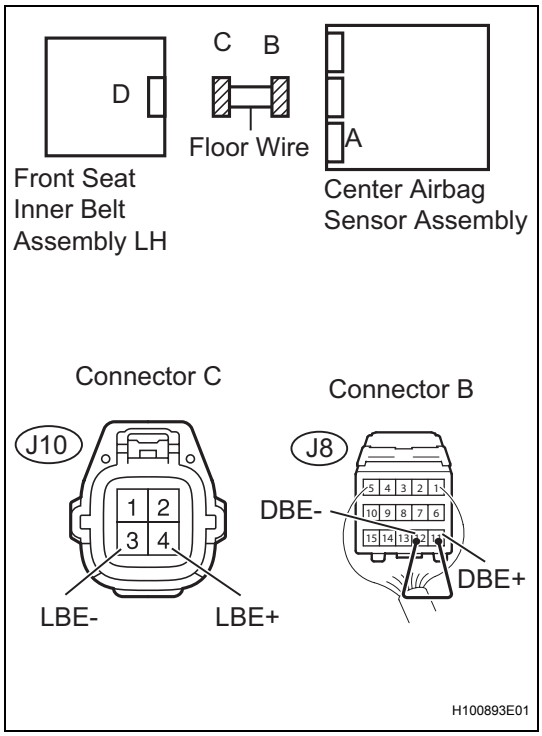

(a) Disconnect the connectors from the center airbag sensor assembly and the front seat inner belt assembly LH.

(b) Using a service wire, connect J8-11 (DBE+) and J8-12 (DBE-) of connector B.
NOTICE:
Do not forcibly insert the service wire into the terminals of the connector when connecting.

(c) Measure the resistance.
Standard resistance

Tester Connection	Condition	Specified Condition
J10-4 (LBE+) - J10-3 (LBE-)	Always	Below 1 Ω

NG → **REPAIR OR REPLACE FLOOR WIRE**

OK

RS

4 CHECK FLOOR WIRE (FOR GROUND)

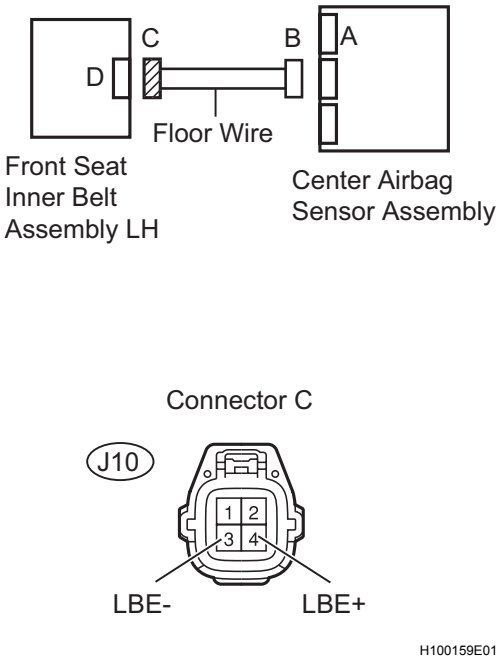

(a) Disconnect the service wire from connector B.
(b) Measure the resistance.
Standard resistance

Tester Connection	Condition	Specified Condition
J10-4 (LBE+) - J10-3 (LBE-)	Always	1 MΩ or higher

NG → **REPAIR OR REPLACE FLOOR WIRE**

OK

5 CHECK FLOOR WIRE (TO B+)

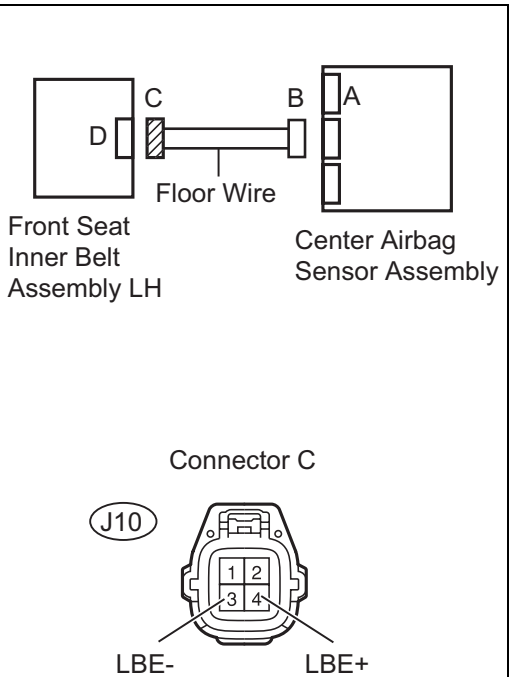

(a) Connect the negative (-) terminal cable to the battery, and wait for at least 2 seconds.
(b) Turn the ignition switch on.
(c) Measure the voltage.
Standard voltage

Tester Connection	Condition	Specified Condition
J10-4 (LBE+) - Body ground	ignition switch on	Below 1 V
J10-3 (LBE-) - Body ground	ignition switch on	Below 1 V

NG → **REPAIR OR REPLACE FLOOR WIRE**

OK

RS

6 CHECK FLOOR WIRE (TO GROUND)

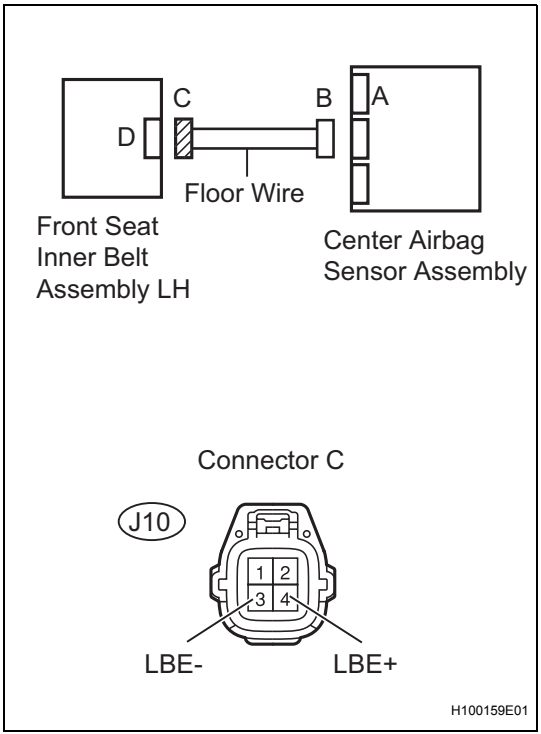

(a) Turn the ignition switch off.
(b) Disconnect the negative (-) terminal cable from the battery, and wait for at least 90 seconds.
(c) Measure the resistance.
Standard resistance

Tester Connection	Condition	Specified Condition
J10-4 (LBE+) - Body ground	Always	1 MΩ or higher
J10-3 (LBE-) - Body ground	Always	1 MΩ or higher

NG → **REPAIR OR REPLACE FLOOR WIRE**

OK

7 CHECK FRONT SEAT INNER BELT ASSEMBLY LH

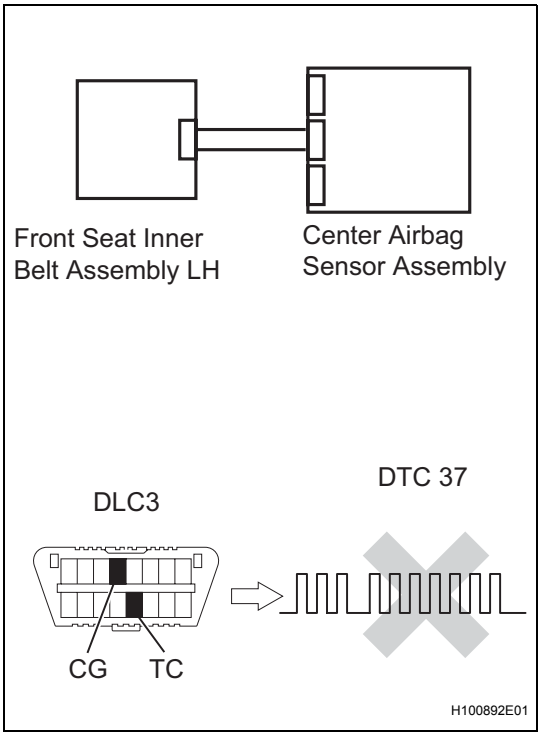

(a) Connect the connector to the center airbag sensor assembly and the front seat inner belt assembly LH.
(b) Connect the negative (-) terminal cable to the battery, and wait for at least 2 seconds.
(c) Turn the ignition switch on, and wait for at least 60 seconds.
(d) Clear the DTCs stored in the memory (See page RS-38).
(e) Turn the ignition switch off.
(f) Turn the ignition switch on, and wait for at least 60 seconds.
(g) Check the DTCs (See page RS-38).
OK:
DTC B1655/37 is not output.
HINT:
DTCs other than DTC B1655/37 may be output at this time, but they are not related to this check.

OK → **USE SIMULATION METHOD TO CHECK**

NG

RS

8	REPLACE FRONT SEAT INNER BELT ASSEMBLY LH

(a) Turn the ignition switch off.
(b) Disconnect the negative (-) terminal cable from the battery, and wait for at least 90 seconds.
(c) Replace the front seat inner belt assembly LH.
for Hatchback: (See page SB-39)
for Sedan: (See page SB-33)
HINT:
Perform the inspection using parts from a normal vehicle if possible.

NEXT

9	CHECK CENTER AIRBAG SENSOR ASSEMBLY

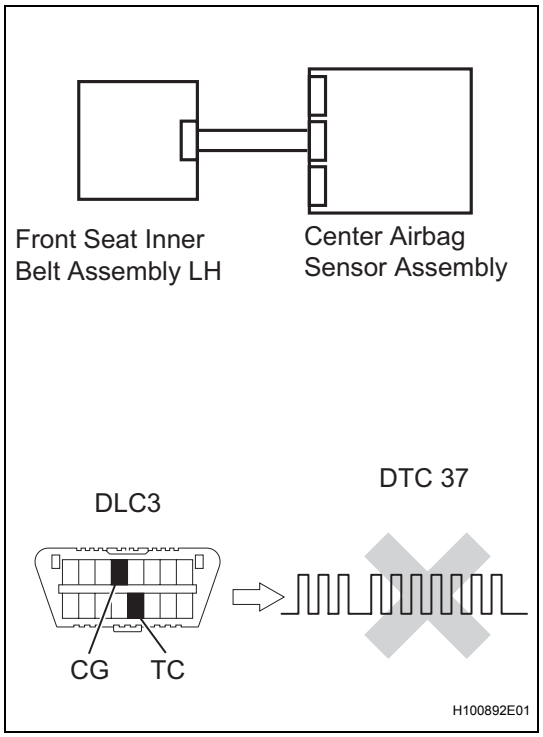

(a) Connect the negative (-) terminal cable to the battery, and wait for at least 2 seconds.
(b) Turn the ignition switch on, and wait for at least 60 seconds.
(c) Clear the DTCs stored in the memory (See page RS-38).
(d) Turn the ignition switch off.
(e) Turn the ignition switch on, and wait for at least 60 seconds.
(f) Check the DTCs (See page RS-38).
OK:
DTC B1655/37 is not output.
HINT:
DTCs other than DTC B1655/37 may be output at this time, but they are not related to this check.

NG → **REPLACE CENTER AIRBAG SENSOR ASSEMBLY**

OK

END

DTC	B1660/43	Passenger Airbag ON / OFF Indicator Circuit Malfunction

DESCRIPTION

The passenger airbag ON/OFF indicator circuit consists of the center airbag sensor assembly and the front passenger seat belt warning light.
This circuit indicates the operation condition of the front passenger airbag assembly, the front passenger side front seat side airbag assembly and passenger side seat belt pretensioner.
DTC B1660/43 is set when a malfunction is detected in the passenger airbag ON/OFF indicator circuit.

DTC No.	DTC Detecting Conditions	Trouble Areas
B1660/43	• Center airbag sensor assembly detects line short circuit signal, open circuit signal, short circuit to ground signal or short circuit to B+ signal in passenger airbag ON/OFF indicator circuit for 2 seconds • Front passenger seat belt warning light malfunction • Center airbag sensor assembly malfunction	• Instrument panel wire • Front passenger seat belt warning light (Passenger airbag ON/OFF Indicator) • Center airbag sensor assembly

WIRING DIAGRAM

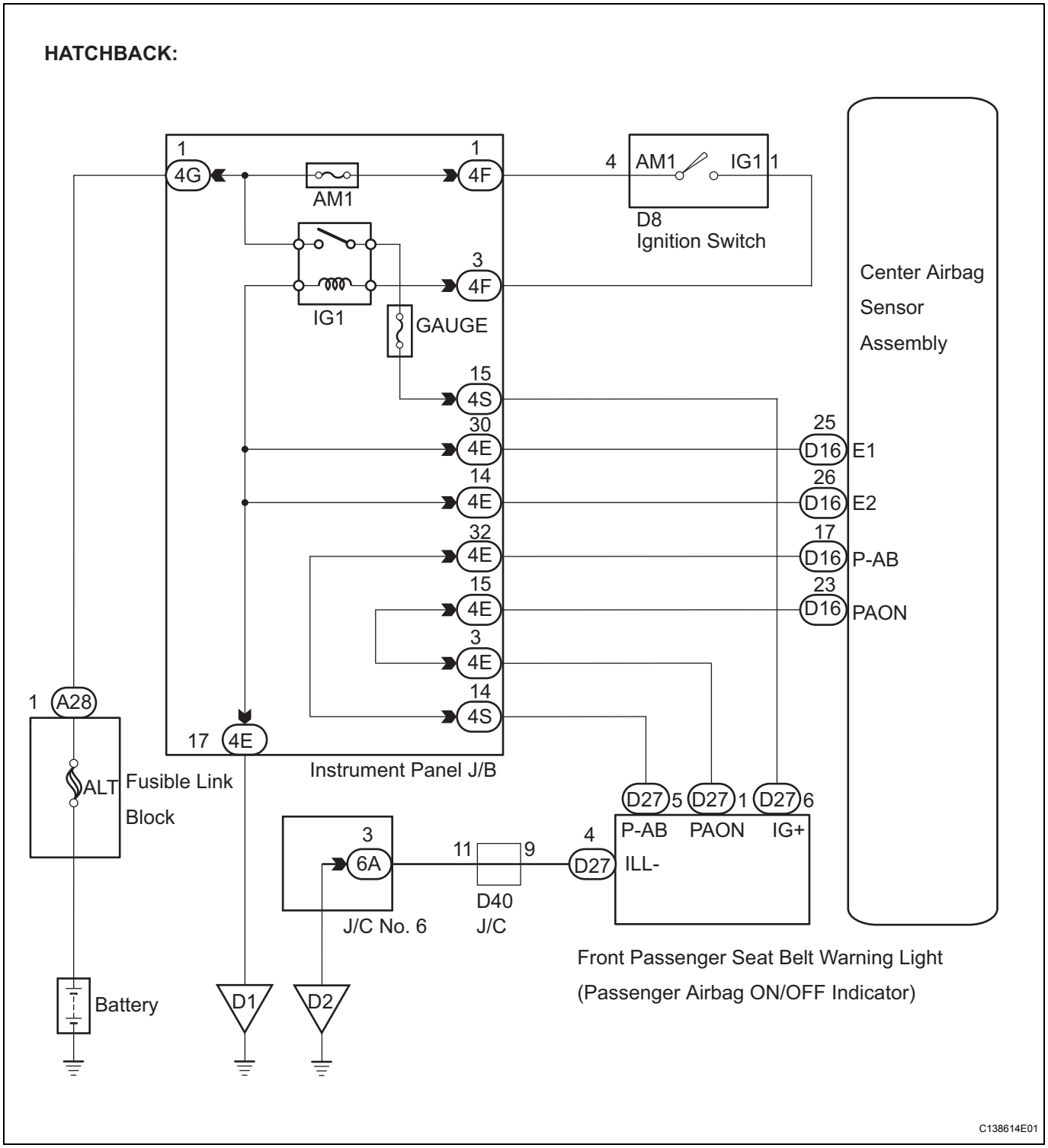

RS

RS

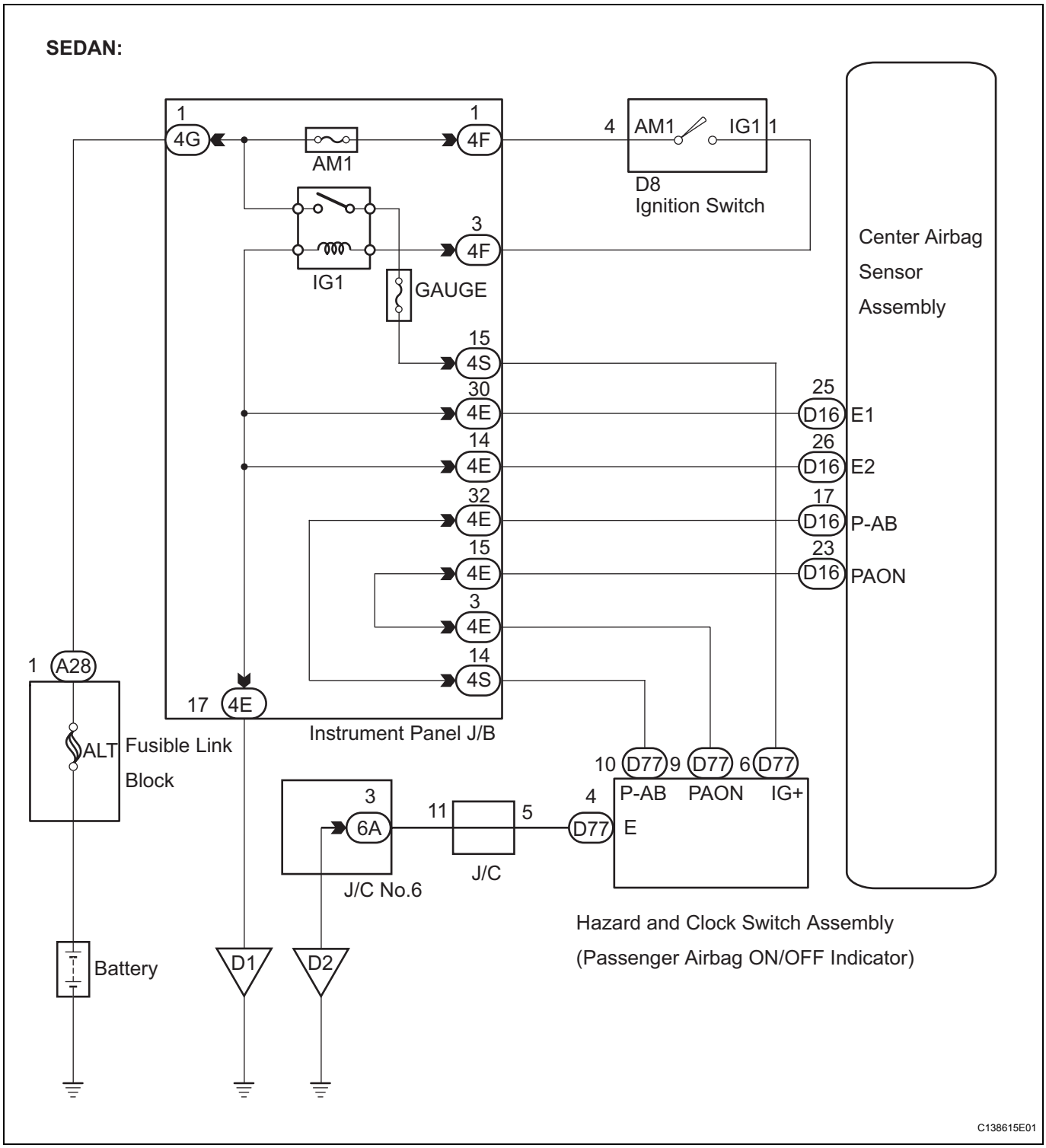

INSPECTION PROCEDURE

NOTICE:

In order to prevent unexpected airbag deployment, disconnect the following connectors before inspecting parts such as wire harnesses, if the application of tester probes to the center airbag sensor assembly connector is necessary.

1. Turn the ignition switch to the lock position.
2. Disconnect the negative (-) terminal cable from the battery, and wait for at least 90 seconds.
3. Disconnect the connector from the center airbag sensor assembly.
4. Disconnect the connectors from the steering pad.

5. Disconnect the connectors from the front passenger airbag assembly.
6. Disconnect the connector from the front seat outer belt assembly LH.
7. Disconnect the connector from the front seat outer belt assembly RH.
   HINT:
   Skip the following steps if side and curtain shield airbags are not fitted.
8. Disconnect the connector from the front seat side airbag assembly LH.
9. Disconnect the connector from the front seat side airbag assembly RH.
10. Disconnect the connector from the curtain shield airbag assembly LH.
11. Disconnect the connector from the curtain shield airbag assembly RH.

1 CHECK PASSENGER AIRBAG ON/OFF INDICATOR OPERATION

(a) Turn the ignition switch to the on position.
(b) Check the passenger airbag ON/OFF indicator operation.
HINT:
Refer to the normal condition of the passenger airbag ON/OFF indicator (See page RS-31).

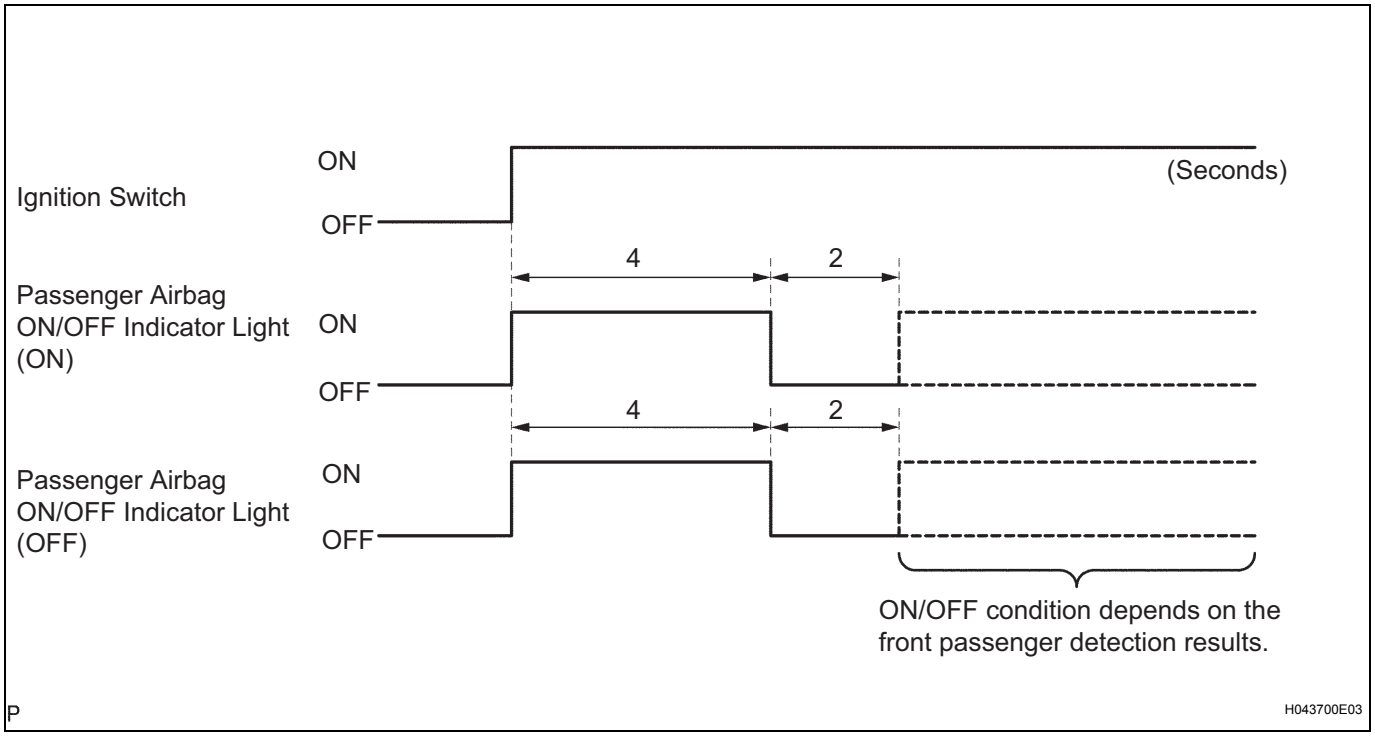

Result

ON/OFF Indicator Illumination	Proceed To
Always ON	A
OFF	B

B → Go to step 8

A

2 CHECK CONNECTION OF CONNECTORS

(a) Turn the ignition switch off.

(b) Disconnect the negative (-) terminal cable from the battery, and wait for at least 90 seconds.
(c) Check that the connectors are properly connected to the center airbag sensor assembly and the front passenger seat belt warning light.
OK:
The connectors are properly connected.

NG → **CONNECT CONNECTORS**

OK

3 CHECK FRONT PASSENGER SEAT BELT WARNING LIGHT

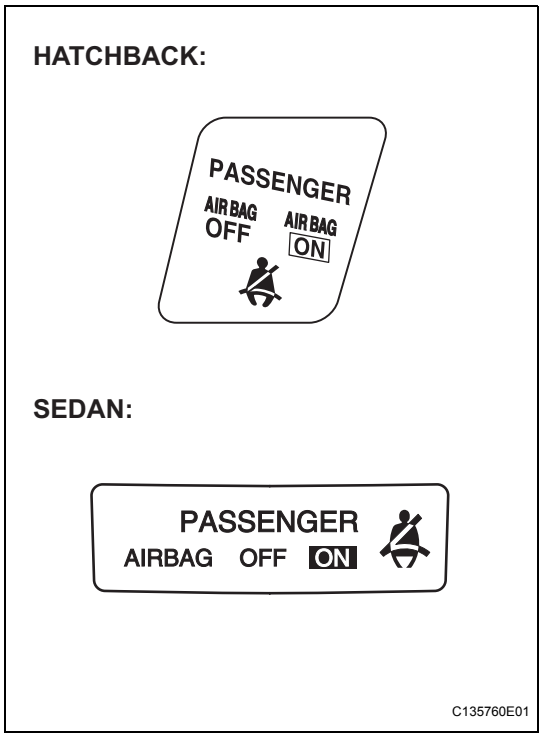

(a) Turn the ignition switch off.
(b) Disconnect the negative (-) terminal cable from the battery, and wait for at least 90 seconds.
(c) Disconnect the connector from the center airbag sensor assembly.
(d) Connect the negative (-) terminal cable to the battery, and wait for at least 2 seconds.
(e) Turn the ignition switch to the on position.
(f) Check the passenger airbag ON/OFF indicator operation.
OK:
Neither ON nor OFF passenger airbag ON/OFF indicator comes on.

OK → **Go to step 14**

NG

4 CHECK INSTRUMENT PANEL WIRE (FOR OPEN)

(a) Turn the ignition switch off.
(b) Disconnect the negative (-) terminal cable from the battery, and wait for at least 90 seconds.

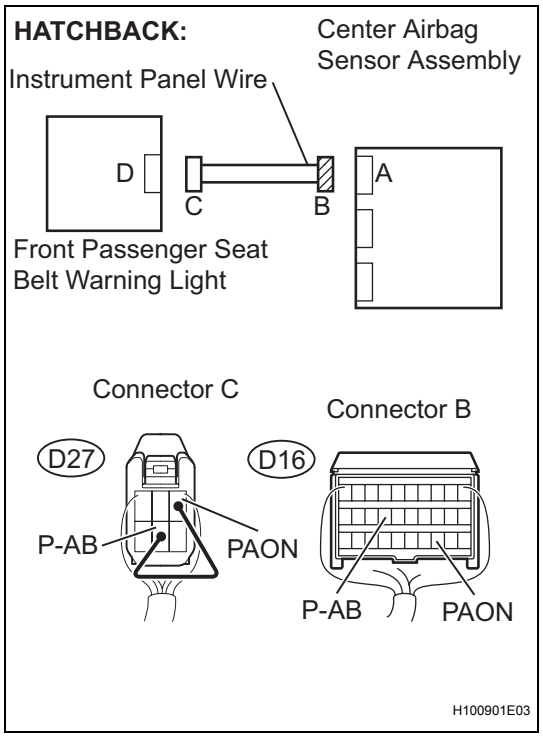

(c) For hatchback models:
(1) Disconnect the connector from the front passenger seat belt warning light.
(2) Using a service wire, connect D27-1 (PAON) and D27-5 (P-AB) of connector C.
NOTICE:
Do not forcibly insert the service wire into the terminals of the connector when connecting.
(3) Measure the resistance.
Standard resistance

Tester Connection	Condition	Specified Condition
D16-23 (PAON) - D16-17 (P-AB)	Always	Below 1 Ω

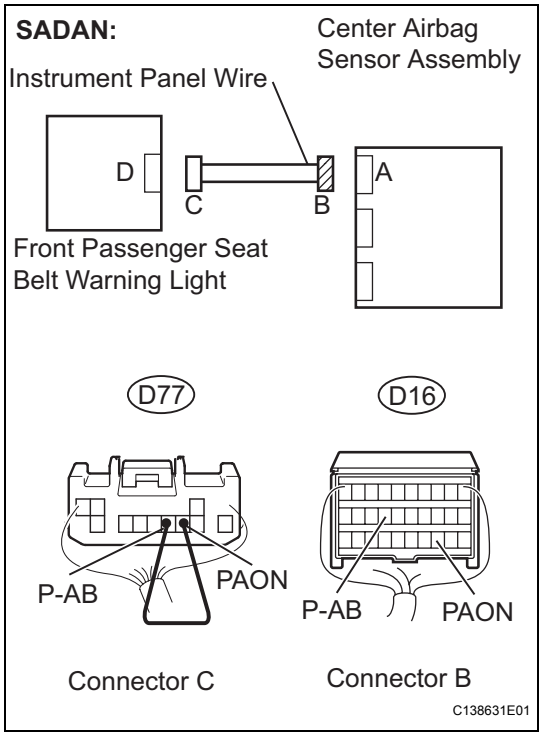

(d) For sedan models:
(1) Disconnect the connector from the front passenger seat belt warning light.
(2) Using a service wire, connect D77-9 (PAON) and D77-10 (P-AB) of connector C.
NOTICE:
Do not forcibly insert the service wire into the terminals of the connector when connecting.
(3) Measure the resistance.
Standard resistance

Tester Connection	Condition	Specified Condition
D16-23 (PAON) - D16-17 (P-AB)	Always	Below 1 Ω

NG → **REPAIR OR REPLACE INSTRUMENT PANEL WIRE**

OK

RS

5 CHECK INSTRUMENT PANEL WIRE (FOR SHORT)

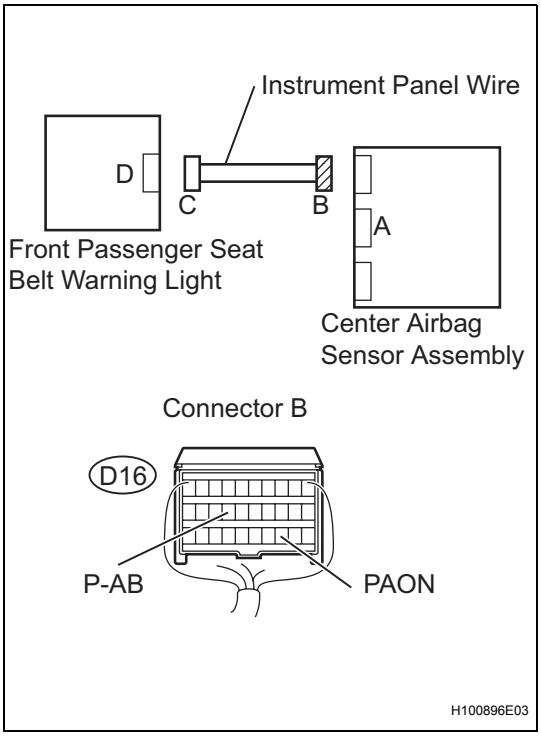

(a) Disconnect the service wire from connector C.
(b) Measure the resistance.
Standard resistance

Tester Connection	Condition	Specified Condition
D16-17 (P-AB) - D16-23 (PAON)	Always	1 MΩ or Higher

NG → **REPAIR OR REPLACE INSTRUMENT PANEL WIRE**

OK

6 CHECK INSTRUMENT PANEL WIRE (TO B+)

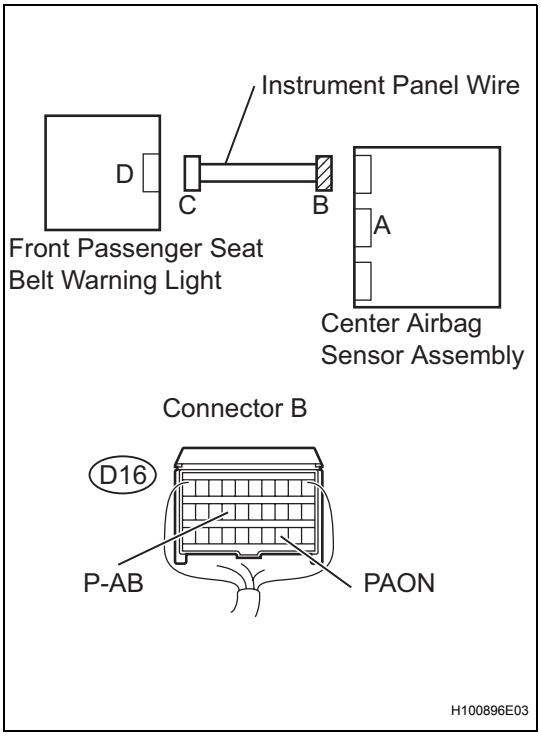

(a) Connect the negative (-) terminal cable to the battery, and wait for at least 2 seconds.
(b) Turn the ignition switch to the on position.
(c) Measure the voltage.
Standard voltage

Tester Connection	Condition	Specified Condition
D16-23 (PAON) - Body ground	Ignition switch on	Below 1 V
D16-17 (P-AB) -Body ground	Ignition switch on	Below 1 V

NG → **REPAIR OR REPLACE INSTRUMENT PANEL WIRE**

OK

RS

7 CHECK INSTRUMENT PANEL WIRE (TO GROUND)

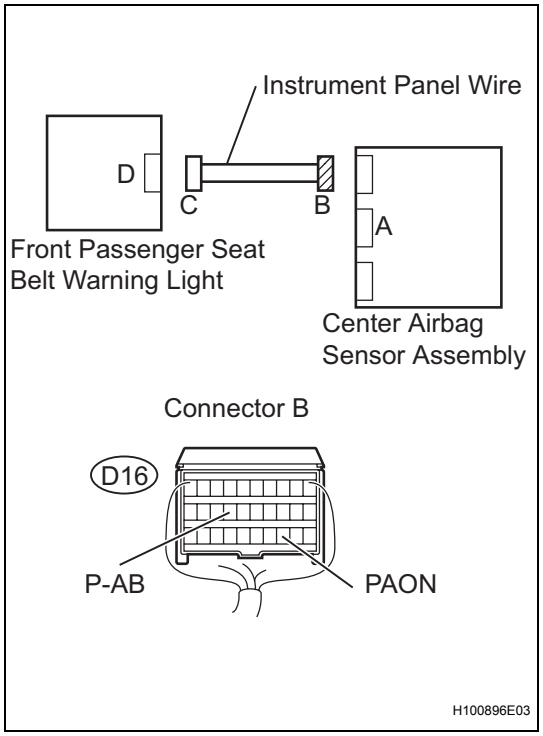

(a) Turn the ignition switch off.
(b) Disconnect the negative (-) terminal cable from the battery, and wait for at least 90 seconds.
(c) Measure the resistance.
Standard resistance

Tester Connection	Condition	Specified Condition
D16-17 (P-AB) -Body ground	Always	1 MΩ or Higher
D16-23 (PAON) -Body ground	Always	1 MΩ or Higher

NG → **REPAIR OR REPLACE INSTRUMENT PANEL WIRE**

OK

REPLACE FRONT PASSENGER SEAT BELT WARNING LIGHT

8 CHECK CONNECTION OF CONNECTORS

(a) Turn the ignition switch off.
(b) Disconnect the negative (-) terminal cable from the battery, and wait for at least 90 seconds.
(c) Check that the connectors are properly connected to the center airbag sensor assembly and the front passenger seat belt warning light.
OK:
The connectors are properly connected.

NG → **CONNECT CONNECTORS**

OK

9 CHECK INSTRUMENT PANEL WIRE (FOR OPEN)

(a) Turn the ignition switch off.
(b) Disconnect the negative (-) terminal cable from the battery, and wait for at least 90 seconds.

RS

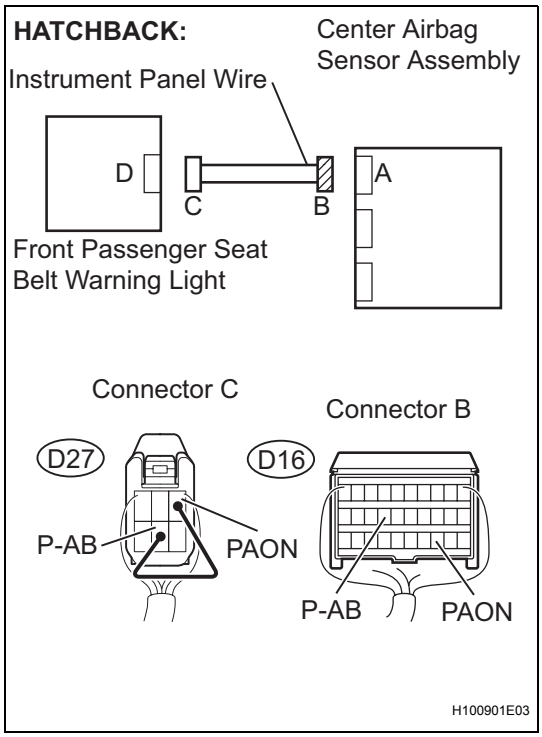

(c) For hatchback models:
(1) Disconnect the connector from the front passenger seat belt warning light.
(2) Using a service wire, connect D27-1 (PAON) and D27-5 (P-AB) of connector C.
NOTICE:
Do not forcibly insert the service wire into the terminals of the connector when connecting.
(3) Measure the resistance.
Standard resistance

Tester Connection	Condition	Specified Condition
D16-23 (PAON) - D16-17 (P-AB)	Always	Below 1 Ω

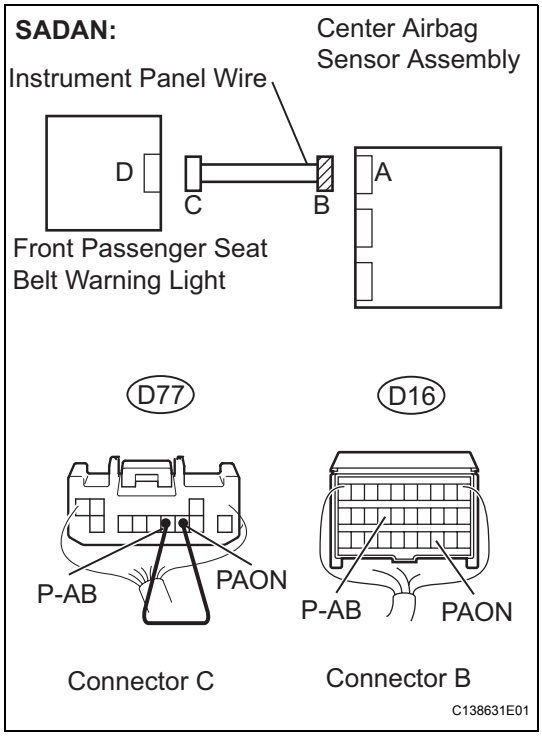

(d) For sedan models:
(1) Disconnect the connector from the front passenger seat belt warning light.
(2) Using a service wire, connect D77-9 (PAON) and D77-10 (P-AB) of connector C.
NOTICE:
Do not forcibly insert the service wire into the terminals of the connector when connecting.
(3) Measure the resistance.
Standard resistance

Tester Connection	Condition	Specified Condition
D16-23 (PAON) - D16-17 (P-AB)	Always	Below 1 Ω

NG → **REPAIR OR REPLACE INSTRUMENT PANEL WIRE**

OK

RS

10 CHECK INSTRUMENT PANEL WIRE (FOR SHROT)

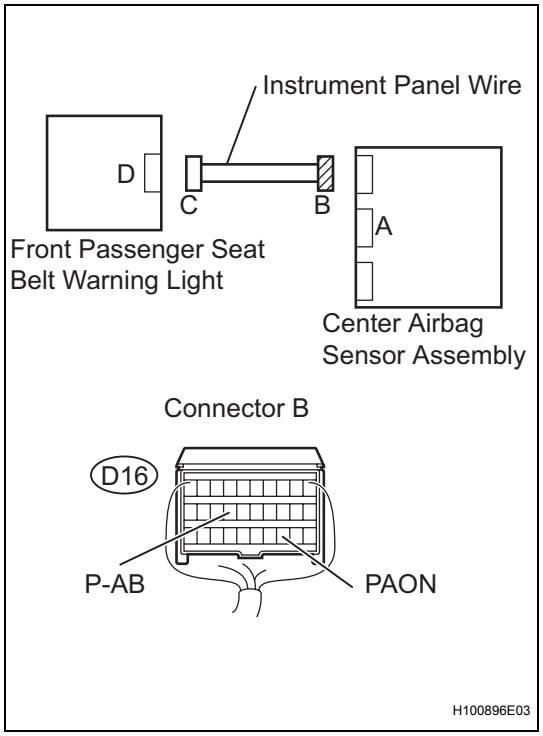

(a) Disconnect the service wire from connector B.
(b) Measure the resistance.
Standard resistance

Tester Connection	Condition	Specified Condition
D16-17 (P-AB) - D16-23 (PAON)	Always	1 MΩ or Higher

NG → **REPAIR OR REPLACE INSTRUMENT PANEL WIRE**

OK

11 CHECK INSTRUMENT PANEL WIRE (TO B+)

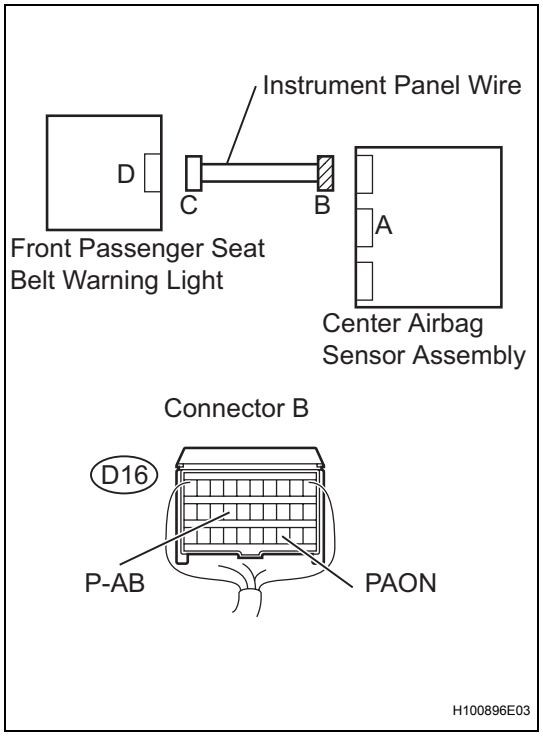

(a) Connect the negative (-) terminal cable to the battery, and wait for at least 2 seconds.
(b) Turn the ignition switch to the on position.
(c) Measure the voltage.
Standard voltage

Tester Connection	Condition	Specified Condition
D16-23 (PAON) - Body ground	Ignition switch on	Below 1 V
D16-17 (P-AB) - Body ground	Ignition switch on	Below 1 V

NG → **REPAIR OR REPLACE INSTRUMENT PANEL WIRE**

OK

RS

12 CHECK INSTRUMENT PANEL WIRE (TO GROUND)

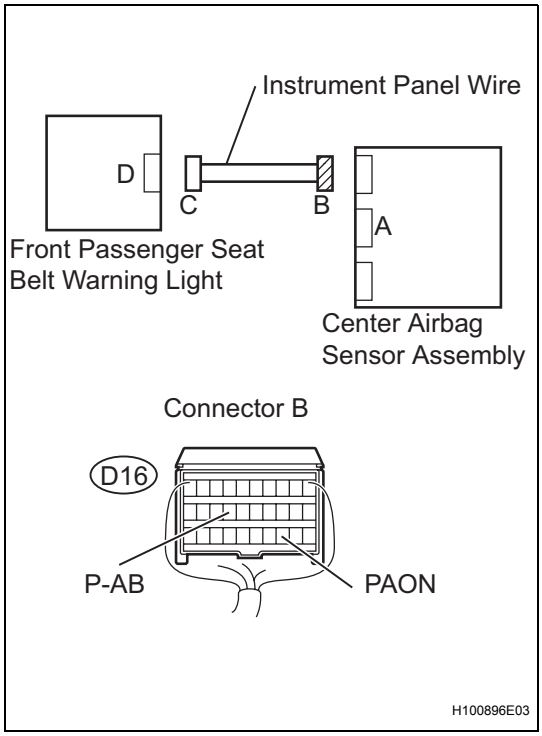

(a) Turn the ignition switch off.
(b) Disconnect the negative (-) terminal cable from the battery, and wait for at least 90 seconds.
(c) Measure the resistance.
Standard resistance

Tester Connection	Condition	Specified Condition
D16-17 (P-AB) - Body ground	Always	1 MΩ or Higher
D16-23 (PAON) - Body ground	Always	1 MΩ or Higher

NG → **REPAIR OR REPLACE INSTRUMENT PANEL WIRE**

OK

13 CHECK WIRE HARNESS (POWER SOURCE)

(a) Connect the negative (-) terminal cable to the battery, and wait for at least 2 seconds.
(b) Turn the ignition switch to the on position.

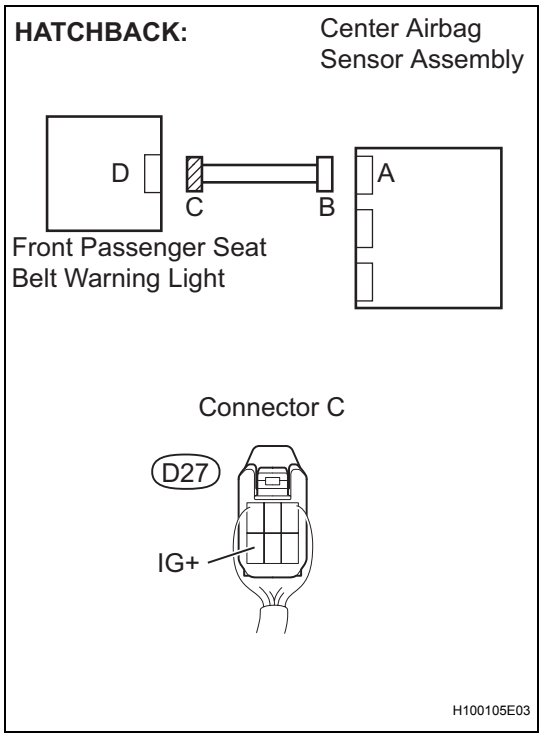

(c) Measure the voltage.

(1) For hatchback models:

Standard voltage (for HATCHBACK)

Tester Connection	Condition	Specified Condition
D27-6 (IG+) - Body ground	Ignition switch on	11 to 14 V

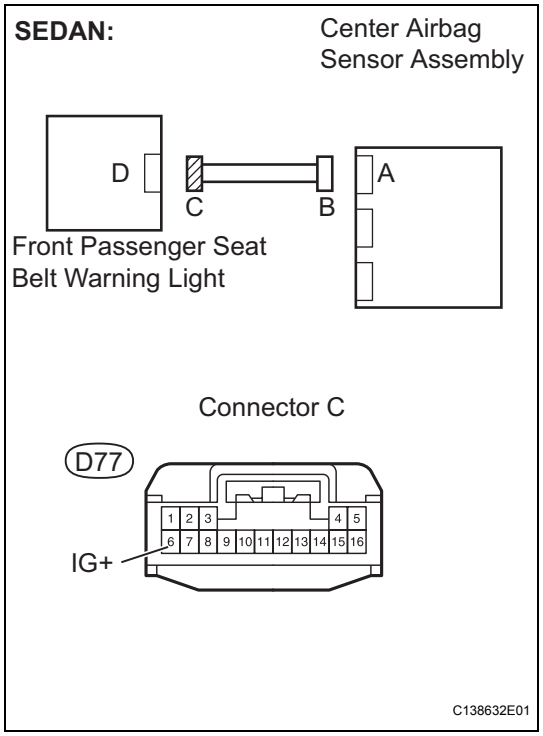

(2) For sedan models:

Standard voltage (for SEDAN)

Tester Connection	Condition	Specified Condition
D77-6 (IG+) - Body ground	Ignition switch on	11 to 14 V

NG → **REPAIR OR REPLACE POWER SOURCE CIRCUIT**

OK

14	CHECK FRONT PASSENGER SEAT BELT WARNING LIGHT

(a) Turn the ignition switch off.

RS

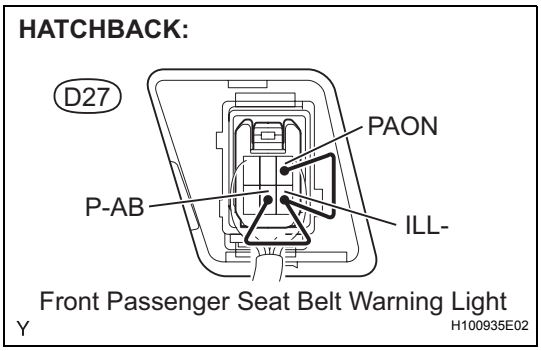

(b) For hatchback models:
  (1) Using a service wire, connect D27-1 (PAON) and D27-4 (ILL-) of the front passenger seat belt warning light connector.
  (2) Using a service wire, connect D27-5 (P-AB) and D27-4 (ILL-) of the front passenger seat belt warning light connector.

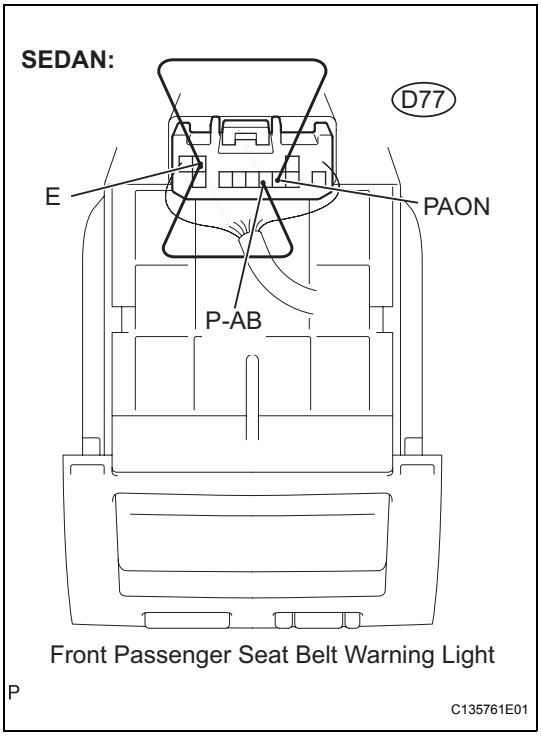

(c) For sedan models:
  (1) Using a service wire, connect D77-9 (PAON) and D77-4 (E) of the front passenger seat belt warning light connector.
  (2) Using a service wire, connect D77-10 (P-AB) and D77-4 (E) of the front passenger seat belt warning light connector.

(d) Turn the ignition switch to the on position.

(e) Check the passenger airbag ON/OFF indicator operation.

OK:

Passenger airbag ON/OFF indicator comes on

NG → **REPLACE FRONT PASSENGER SEAT BELT WARNING LIGHT**

OK

RS

15	CHECK CENTER AIRBAG SENSOR ASSEMBLY

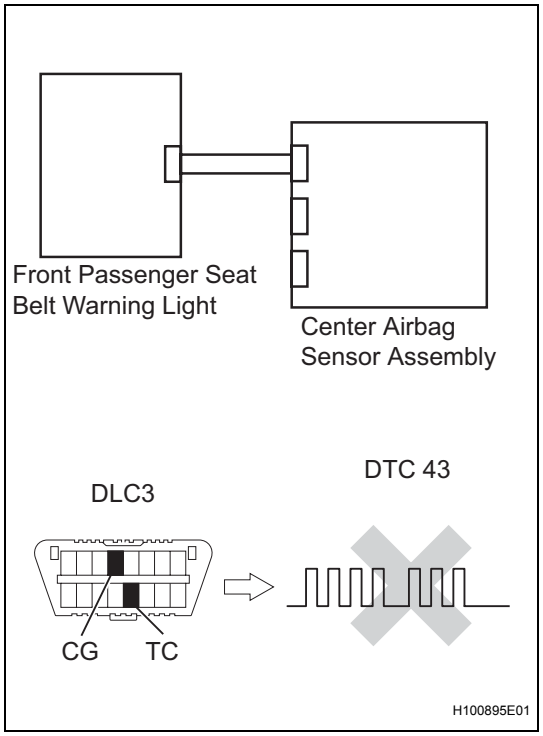

(a) Turn the ignition switch off.
(b) Disconnect the negative (-) terminal cable from the battery, and wait for at least 90 seconds.
(c) Connect the connector to the center airbag sensor assembly.
(d) Connect the connector to the front passenger seat belt warning light.
(e) Connect the negative (-) terminal cable to the battery, and wait for at least 2 seconds.
(f) Turn the ignition switch to the on position, and wait for at least 60 seconds.
(g) Clear the DTCs stored in the memory (See page RS-38).
(h) Turn the ignition switch to the lock position.
(i) Turn the ignition switch to the on position, and wait for at least 60 seconds.
(j) Check for DTCs (See page RS-38).
OK:
DTC B1660/43 is not output.
HINT:
DTCs other than B1660/43 may be output at this time, but they are not related to this check.

NG → **REPLACE CENTER AIRBAG SENSOR ASSEMBLY**

OK

USE SIMULATION METHOD TO CHECK

DTC	B1662/45	Indicator Light Circuit Malfunction

DESCRIPTION

The indicator light circuit consists of the center airbag sensor assembly and the combination meter. DTC B1662/45 is set when a malfunction is detected in the indicator light circuit.

DTC No.	DTC Detecting Conditions	Trouble Areas
B1662/45	• Center airbag sensor assembly detects line short circuit signal, open circuit signal, short circuit to ground signal or short circuit to B+ signal in indicator light circuit for 2 seconds • Indicator light circuit malfunction • Center airbag sensor assembly malfunction	• Combination meter • Center airbag sensor assembly • Instrument panel wire

WIRING DIAGRAM

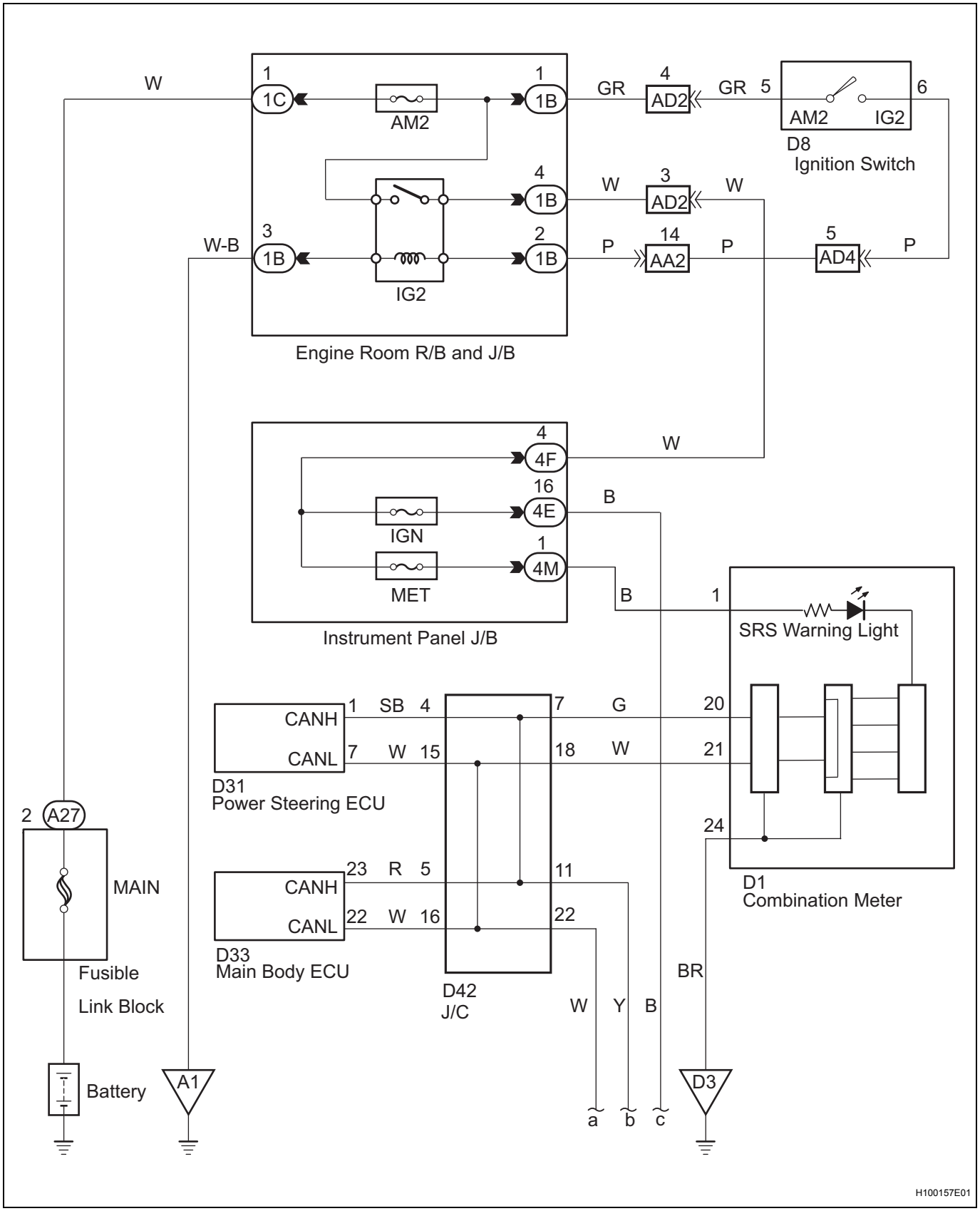

RS

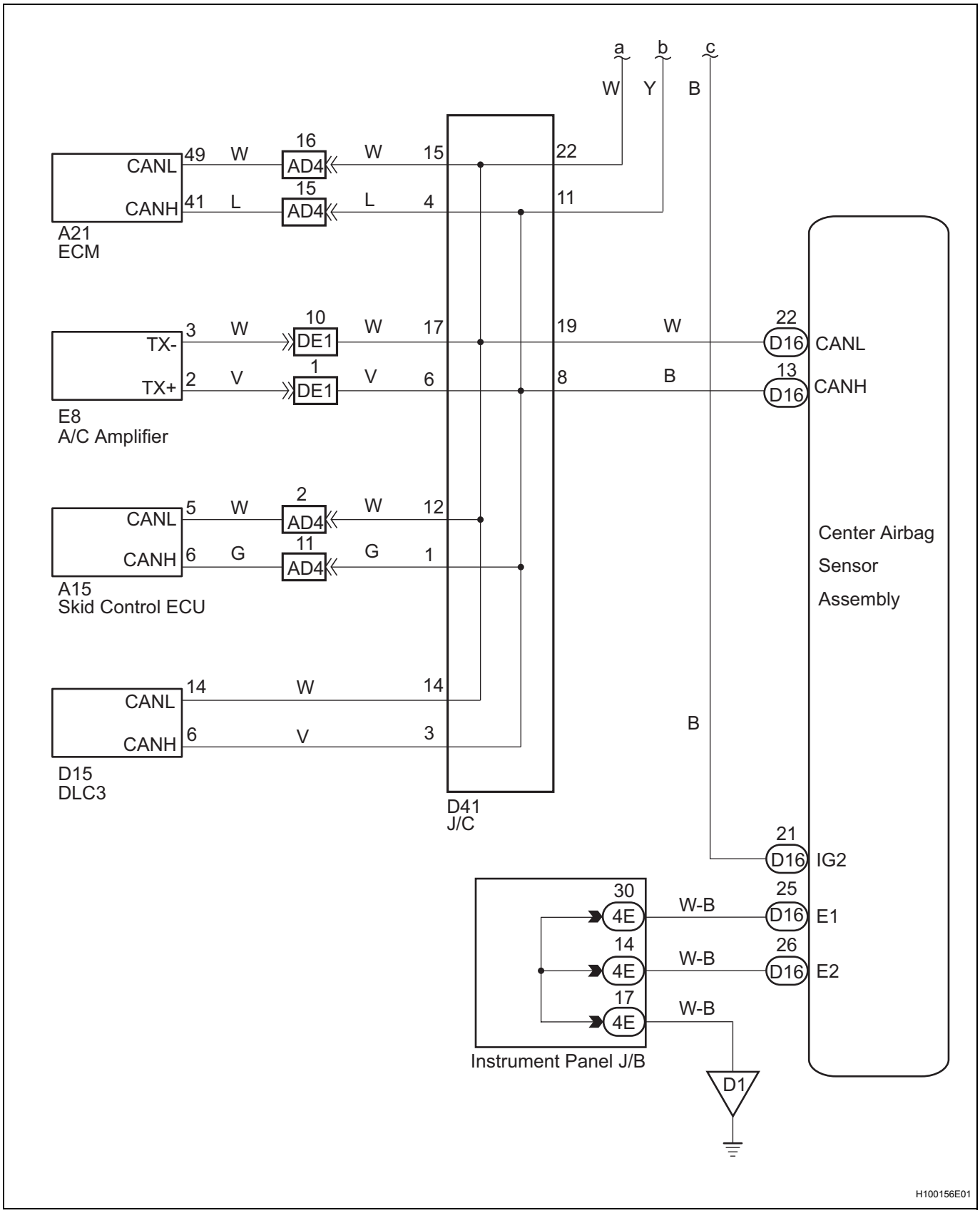
a
b
c
W
Y
B
CANL
CANH
49
41
W
L
16
15
AD4
AD4
W
L
15
4
22
11
A21
ECM
TX-
TX+
3
2
W
V
10
1
DE1
DE1
W
V
17
6
19
8
W
B
22
13
D16
D16
CANL
CANH
E8
A/C Amplifier
CANL
CANH
5
6
W
G
2
11
AD4
AD4
W
G
12
1
A15
Skid Control ECU
Center Airbag
Sensor
Assembly
CANL
CANH
14
6
W
V
14
3
B
D15
DLC3
D41
J/C
21
D16
IG2
30
14
17
4E
4E
4E
W-B
W-B
W-B
25
26
D16
D16
E1
E2
Instrument Panel J/B
D1
H100156E01

INSPECTION PROCEDURE

NOTICE:

In order to prevent unexpected airbag deployment, disconnect the following connectors before inspecting parts such as wire harnesses, if the application of tester probes to the center airbag sensor assembly connector is necessary.

1. Turn the ignition switch to the lock position.
2. Disconnect the negative (-) terminal cable from the battery, and wait for at least 90 seconds.
3. Disconnect the connector from the center airbag sensor assembly.
4. Disconnect the connectors from the steering pad.
5. Disconnect the connectors from the front passenger airbag assembly.
6. Disconnect the connector from the front seat outer belt assembly LH.
7. Disconnect the connector from the front seat outer belt assembly RH.
   HINT:
   Skip the following steps if side and curtain shield airbags are not fitted.
8. Disconnect the connector from the front seat side airbag assembly LH.
9. Disconnect the connector from the front seat side airbag assembly RH.
10. Disconnect the connector from the curtain shield airbag assembly LH.
11. Disconnect the connector from the curtain shield airbag assembly RH.

1	CHECK DTC (AIRBAG SYSTEM)

(a) Turn the ignition switch to the on position.
(b) Clear the DTCs stored in the memory (See page RS-38).
(c) Turn the ignition switch to the lock position.
(d) Turn the ignition switch to the on position and wait for at least 60 seconds.
(e) Check the DTCs (See page RS-38).
OK:
DTC B1662/45 is not output.
HINT:
DTCs other than B1662/45 may be output at this time, but they are not related to this check.

OK → **USE SIMULATION METHOD TO CHECK**

NG

2	CHECK DTC (CAN COMMUNICATION SYSTEM)

(a) Turn the ignition switch to the on position.
(b) Check the DTCs (See page CA-22).
OK:
DTC is not output.

NG → **CHECK CAN COMMUNICATION SYSTEM**

OK

3	CHECK CONNECTION OF CONNECTORS

(a) Turn the ignition switch off.
(b) Disconnect the negative (-) terminal cable from the battery, and wait for at least 90 seconds.

(c) Check that the connectors are properly connected to the center airbag sensor assembly and the combination meter.
OK:
The connectors are properly connected.

NG → **CONNECT CONNECTORS**

RS

OK

4	CHECK CENTER AIRBAG SENSOR ASSEMBLY

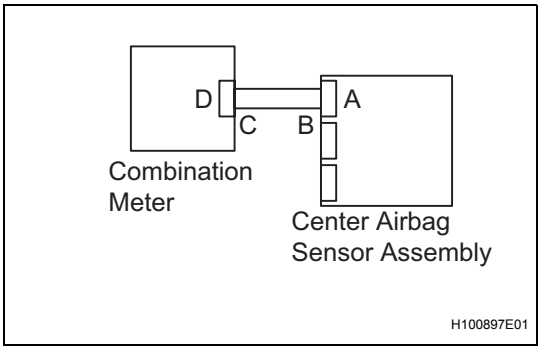

(a) Turn the ignition switch off.
(b) Disconnect the negative (-) terminal cable from the battery, and wait for at least 90 seconds.
(c) Replace the center airbag sensor assembly.
for Hatchback: (See page RS-437)
for Sedan: (See page RS-433)
HINT:
Perform the inspection using parts from a normal vehicle when possible.
(d) Connect the connectors to the center airbag sensor assembly and the combination meter.
(e) Connect the negative (-) terminal cable to the battery, and wait for at least 2 seconds.
(f) Turn the ignition switch to the on position, and wait for at least 60 seconds.
(g) Clear the DTCs stored in the memory (See page RS-38).
(h) Turn the ignition switch to the lock position.
(i) Turn the ignition switch to the on position, and wait for at least 60 seconds.
(j) Check for DTCs (See page RS-38).
OK:
DTC B1662/45 is not output.
HINT:
DTCs other than B1662/45 may be output at this time, but they are not related to this check.

NG → **GO TO METER / GAUGE SYSTEM**

OK

END

DTC	B1800/51	Short in Driver Side Squib Circuit

DTC	B1801/51	Open in Driver Side Squib Circuit

DTC	B1802/51	Short to GND in Driver Side Squib Circuit

DTC	B1803/51	Short to B+ in Driver Side Squib Circuit

DESCRIPTION

The driver side squib circuit consists of the center airbag sensor assembly, the spiral cable and the steering pad.
The circuit signals the SRS to deploy when deployment conditions are met.
These DTCs are recorded when a malfunction is detected in the driver side squib circuit.

DTC No.	DTC Detecting Condition	Trouble Area
B1800/51	• Center airbag sensor assembly detects line short circuit signal in driver side squib circuit 5 times during primary check. • Driver side squib malfunction • Spiral cable malfunction • Center airbag sensor assembly malfunction	• Instrument panel wire • Spiral cable • Steering pad (Driver side squib) • Center airbag sensor assembly
B1801/51	• Center airbag sensor assembly detects open circuit signal in driver side squib circuit for 2 seconds. • Driver side squib malfunction • Spiral cable malfunction • Center airbag sensor assembly malfunction	• Instrument panel wire • Spiral cable • Steering pad (Driver side squib) • Center airbag sensor assembly
B1802/51	• Center airbag sensor assembly detects short circuit to ground signal in driver side squib circuit for 0.5 seconds. • Driver side squib malfunction • Spiral cable malfunction • Center airbag sensor assembly malfunction	• Instrument panel wire • Spiral cable • Steering pad (Driver side squib) • Center airbag sensor assembly
B1803/51	• Center airbag sensor assembly detects short circuit to B+ signal in driver side squib circuit for 0.5 seconds. • Driver side squib malfunction • Spiral cable malfunction • Center airbag sensor assembly malfunction	• Instrument panel wire • Spiral cable • Steering pad (Driver side squib) • Center airbag sensor assembly

RS

WIRING DIAGRAM

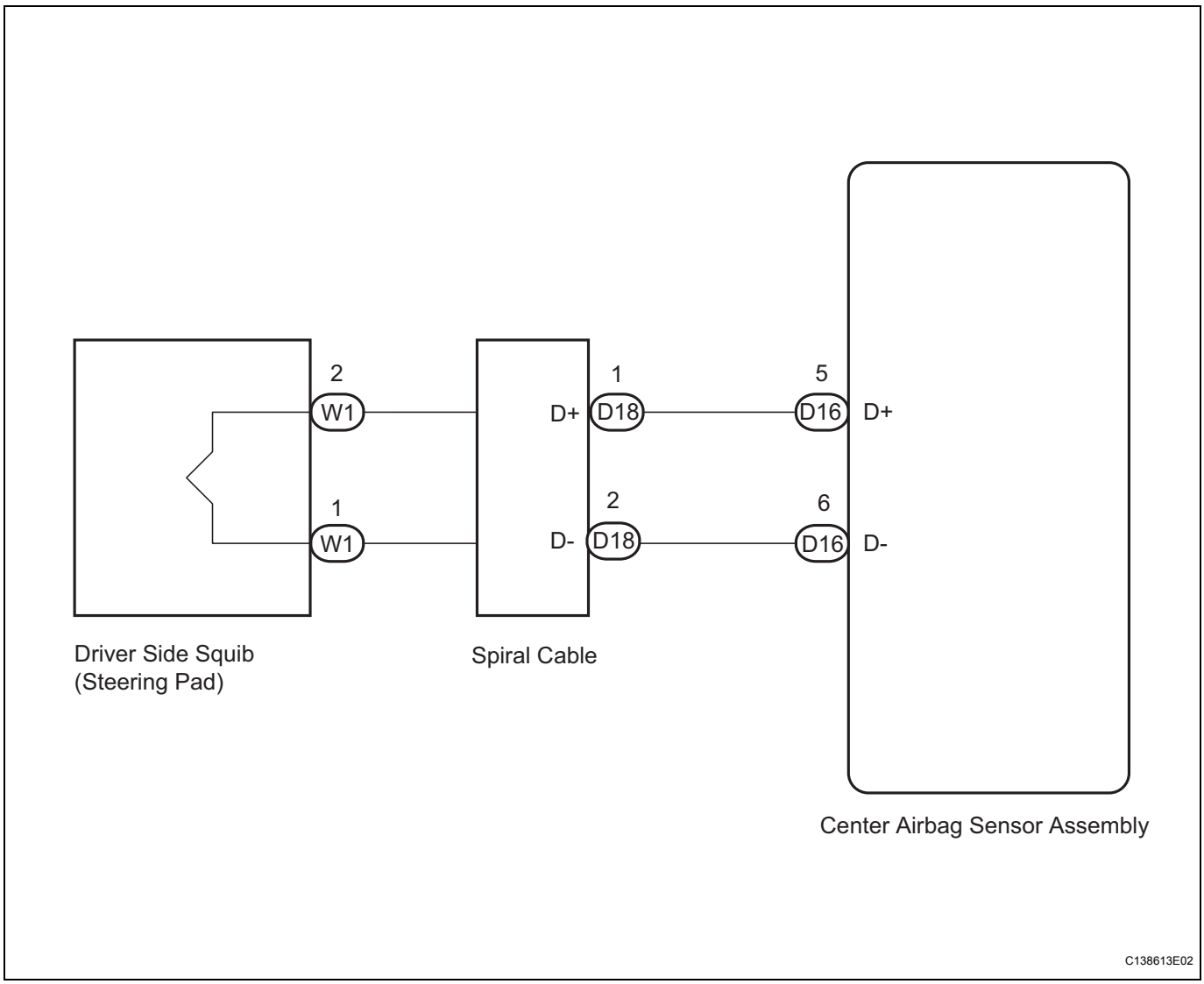

INSPECTION PROCEDURE

HINT:

- Perform the simulation method by selecting CHECK MODE (signal check) with the intelligent tester (See page RS-41).
- After selecting CHECK MODE (signal check), perform the simulation method by wiggling each connector of the airbag system or driving the vehicle on a city or rough road (See page RS-31).

1	**CHECK STEERING PAD (DRIVER SIDE SQUIB)**

SST 09843-18060

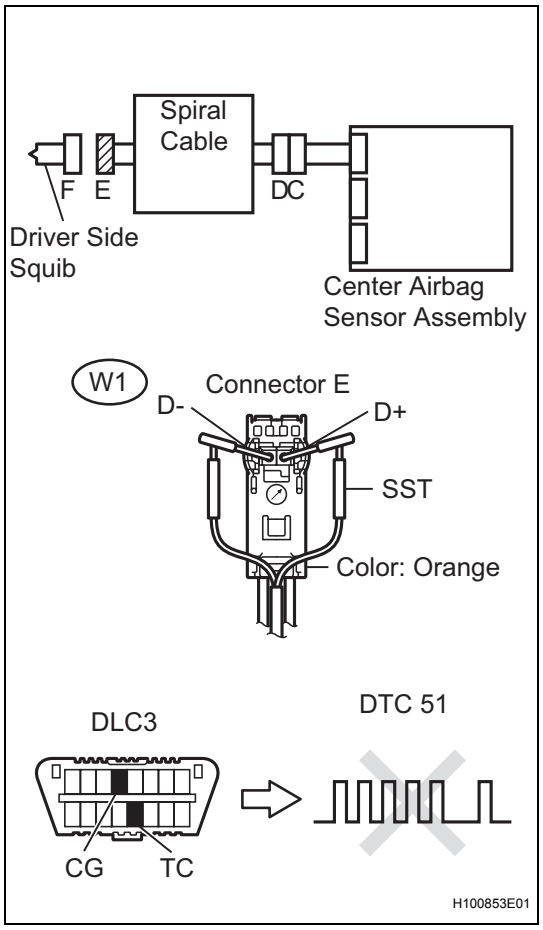

(a) Turn the ignition switch off.
(b) Disconnect the negative (-) terminal cable from the battery, and wait for at least 90 seconds.
(c) Disconnect the connectors from the steering pad.
(d) Connect the white wire side of SST (resistance 2.1 Ω) to connector E (orange connector).
CAUTION:
Never connect a tester to the steering pad (driver side squib) for measurement, as this may lead to a serious injury due to airbag deployment.
NOTICE:
- **Do not forcibly insert the SST into the terminals of the connector when connecting.**
- **Insert the SST straight into the terminals of the connector.**

(e) Connect the negative (-) terminal cable to the battery, and wait for at least 2 seconds.
(f) Turn the ignition switch on, and wait for at least 60 seconds.
(g) Clear the DTCs stored in the memory (See page RS-38).
(h) Turn the ignition switch off.
(i) Turn the ignition switch on, and wait for at least 60 seconds.
(j) Check the DTCs (See page RS-38).
OK:
DTC B1800, B1801, B1802, B1803 and 51 are not output.
HINT:
DTCs other than DTC B1800, B1801, B1802, B1803 and 51 may be output at this time, but they are not related to this check.

OK → **REPLACE STEERING PAD**

NG

2 CHECK CONNECTOR

(a) Turn the ignition switch off.
(b) Disconnect the negative (-) terminal cable from the battery, and wait for at least 90 seconds.
(c) Disconnect the SST from connector E.
(d) Check that the spiral cable connectors (on the steering pad side) are not damaged.
OK:
The lock button is not disengaged, and the claw of the lock is not deformed or damaged.

NG → **REPLACE SPIRAL CABLE**

OK

RS

3	CHECK DRIVER SIDE SQUIB CIRCUIT

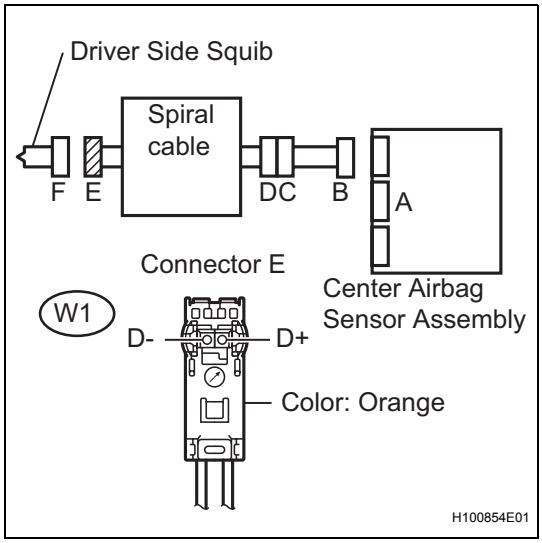

(a) Disconnect the connectors from the center airbag sensor assembly and steering pad.

(b) Check for short to B+ in the circuit.
  (1) Connect the negative (-) terminal cable to the battery, and wait for at least 2 seconds.
  (2) Turn the ignition switch on
  (3) Measure the voltage.
  Standard voltage

Tester Connection	Condition	Specified Condition
W1-1 (D+) - Body ground	Ignition switch on	Below 1 V
W1-2 (D-) - Body ground	Ignition switch on	Below 1 V

(c) Check for open in the circuit.
  (1) Turn the ignition switch off.
  (2) Disconnect the negative (-) terminal cable from the battery, and wait for at least 90 seconds.
  (3) Measure the resistance.
  Standard resistance

Tester Connection	Condition	Specified Condition
W1-1 (D+) - W1-2 (D-)	Always	Below 1 Ω

(d) Check for short to ground in the circuit.
  (1) Measure the resistance.
  Standard resistance

Tester Connection	Condition	Specified Condition
W1-1 (D+) - Body ground	Always	1 MΩ or higher
W1-2 (D-) - Body ground	Always	1 MΩ or higher

(e) Check for short in the circuit.
  (1) Release the activation prevention mechanism built into connector B (See page RS-31).
  (2) Measure the resistance.
  Standard resistance

Tester Connection	Condition	Specified Condition
W1-1 (D+) - W1-2 (D-)	Always	1 MΩ or higher

NG → **Go to step 5**

OK

RS

4 CHECK CENTER AIRBAG SENSOR ASSEMBLY

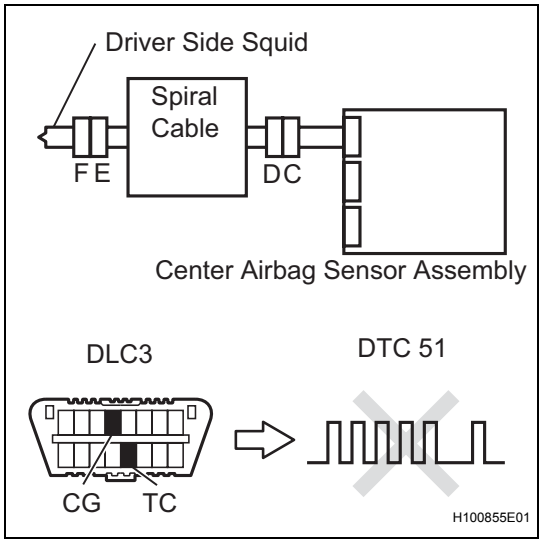

(a) Connect the connectors to the steering pad and the center airbag sensor assembly.
(b) Connect the negative (-) terminal cable to the battery, and wait for at least 2 seconds.
(c) Turn the ignition switch on, and wait for at least 60 seconds.
(d) Clear the DTCs stored in the memory (See page RS-38).
(e) Turn the ignition switch off.
(f) Turn the ignition switch on, and wait for at least 60 seconds.
(g) Check the DTCs (See page RS-38).
OK:
DTC B1800, B1801, B1802, B1803 and 51 are not output.
HINT:
DTCs other than DTC B1800, B1801, B1802, B1803 and 51 may be output at this time, but they are not related to this check.

NG → **REPLACE CENTER AIRBAG SENSOR ASSEMBLY**

OK

USE SIMULATION METHOD TO CHECK

5 CHECK INSTRUMENT PANEL WIRE

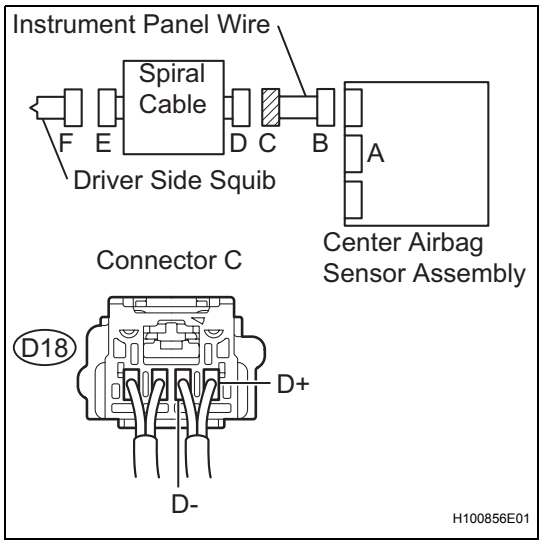

(a) Restore the released activation prevention mechanism of connector B to the original condition.
(b) Disconnect the instrument panel wire connector from the spiral cable.
(c) Check for short to B+ in the circuit.
(1) Connect the negative (-) terminal cable to the battery, and wait for at least 2 seconds.
(2) Turn the ignition switch on.
(3) Measure the voltage.
Standard voltage

Tester Connection	Condition	Specified Condition
D18-1 (D+) - Body ground	Ignition switch on	Below 1 V
D18-2 (D-) - Body ground	Ignition switch on	Below 1 V

(d) Check for open in the circuit.
(1) Turn the ignition switch off.
(2) Disconnect the negative (-) terminal cable from the battery, and wait for at least 90 seconds.
(3) Measure the resistance.

RS

Standard resistance

Tester Connection	Condition	Specified Condition
D18-1 (D+) - D18-2 (D-)	Always	Below 1 Ω

(e) Check for short to ground in the circuit.
(1) Measure the resistance.
Standard resistance

Tester Connection	Condition	Specified Condition
D18-1 (D+) - Body ground	Always	1 MΩ or higher
D18-2 (D-) - Body ground	Always	1 MΩ or higher

(f) Check for short in the circuit.
(1) Release the activation prevention mechanism built into connector B (See page RS-31).
(2) Measure the resistance.
Standard resistance

Tester Connection	Condition	Specified Condition
D18-1 (D+) - D18-2 (D-)	Always	1 MΩ or higher

NG → **REPAIR OR REPLACE INSTRUMENT PANEL WIRE**

OK

6 CHECK SPIRAL CABLE

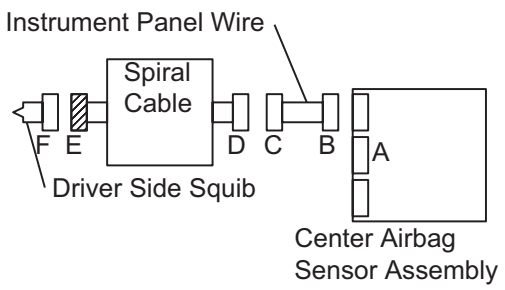

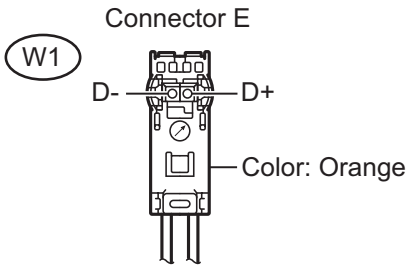

H100857E01

(a) Check for short to B+ in the circuit.
(1) Connect the negative (-) terminal cable to the battery, and wait for at least 2 seconds.
(2) Turn the ignition switch on.
(3) Measure the voltage.
Standard voltage

Tester Connection	Condition	Specified Condition
W1-1 (D+) - Body ground	Ignition switch on	Below 1 V
W1-2 (D-) - Body ground	Ignition switch on	Below 1 V

(b) Check for open in the circuit.
(1) Turn the ignition switch off.
(2) Disconnect the negative (-) terminal cable from the battery, and wait for at least 90 seconds.
(3) Measure the resistance.
Standard resistance

Tester Connection	Condition	Specified Condition
W1-1 (D+) - W1-2 (D-)	Always	Below 1 Ω

(c) Check for short to ground in the circuit.
(1) Measure the resistance.
Standard resistance

Tester Connection	Condition	Specified Condition
W1-1 (D+) - Body ground	Always	1 MΩ or higher

Tester Connection	Condition	Specified Condition
W1-2 (D-) - Body ground	Always	1 MΩ or higher

(d) Check for short in the circuit.
  (1) Release the activation prevention mechanism built into connector D (See page RS-31).
  (2) Measure the resistance.
  Standard resistance

Tester Connection	Condition	Specified Condition
W1-1 (D+) - W1-2 (D-)	Always	1 MΩ or higher

NG → **REPLACE SPIRAL CABLE**

OK

USE SIMULATION METHOD TO CHECK

DTC	B1805/52	Short in Front Passenger Side Squib Circuit

DTC	B1806/52	Open in Front Passenger Side Squib Circuit

RS

DTC	B1807/52	Short to GND in Front Passenger Side Squib Circuit

DTC	B1808/52	Short to B+ in Front Passenger Side Squib Circuit

DESCRIPTION

The front passenger side squib circuit consists of the center airbag sensor assembly and the front passenger airbag assembly.
The circuit signals the SRS to deploy when deployment conditions are met.
These DTCs are recorded when a malfunction is detected in the front passenger side squib circuit.

DTC No.	DTC Detection Condition	Trouble Area
B1805/52	• Center airbag sensor assembly detects line short circuit signal in front passenger side squib circuit 5 times during primary check. • Front passenger side squib malfunction • Center airbag sensor assembly malfunction	• Instrument panel wire • Instrument panel wire assembly • Front passenger airbag assembly (Front passenger side squib) • Center airbag sensor assembly
B1806/52	• Center airbag sensor assembly detects open circuit signal in front passenger side squib circuit for 2 seconds. • Front passenger side squib malfunction • Center airbag sensor assembly malfunction	• Instrument panel wire • Instrument panel wire assembly • Front passenger airbag assembly (Front passenger side squib) • Center airbag sensor assembly
B1807/52	• Center airbag sensor assembly detects short circuit to ground signal in front passenger side squib circuit for 0.5 seconds. • Front passenger side squib malfunction • Center airbag sensor assembly malfunction	• Instrument panel wire • Instrument panel wire assembly • Front passenger airbag assembly (Front passenger side squib) • Center airbag sensor assembly
B1808/52	• Center airbag sensor assembly detects short circuit to B+ signal in front passenger side squib circuit for 0.5 seconds. • Front passenger side squib malfunction • Center airbag sensor assembly malfunction	• Instrument panel wire • Instrument panel wire assembly • Front passenger airbag assembly (Front passenger side squib) • Center airbag sensor assembly

RS

WIRING DIAGRAM

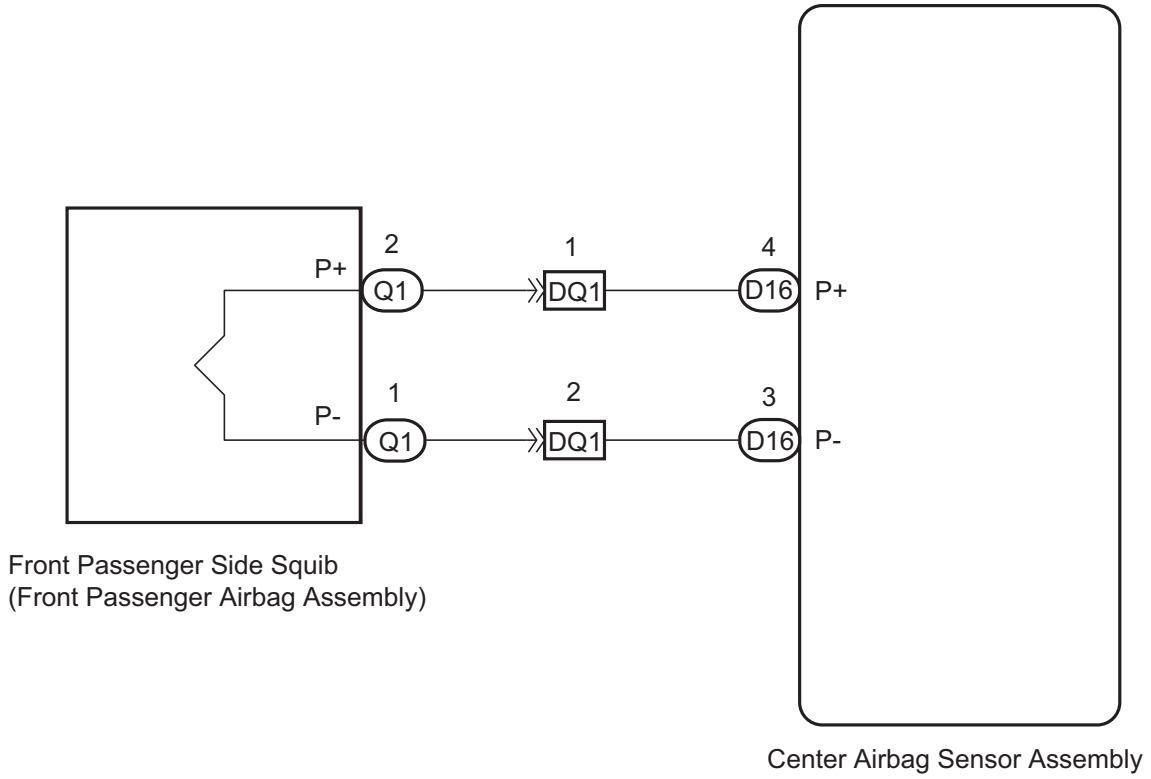

INSPECTION PROCEDURE

HINT:

- Perform the simulation method by selecting CHECK MODE (signal check) with the intelligent tester (See page RS-41).
- After selecting CHECK MODE (signal check), perform the simulation method by wiggling each connector of the airbag system or driving the vehicle on a city or rough road (See page RS-31).

1	**CHECK FRONT PASSENGER AIRBAG (FRONT PASSENGER SIDE SQUIB)**

SST 09843-18060

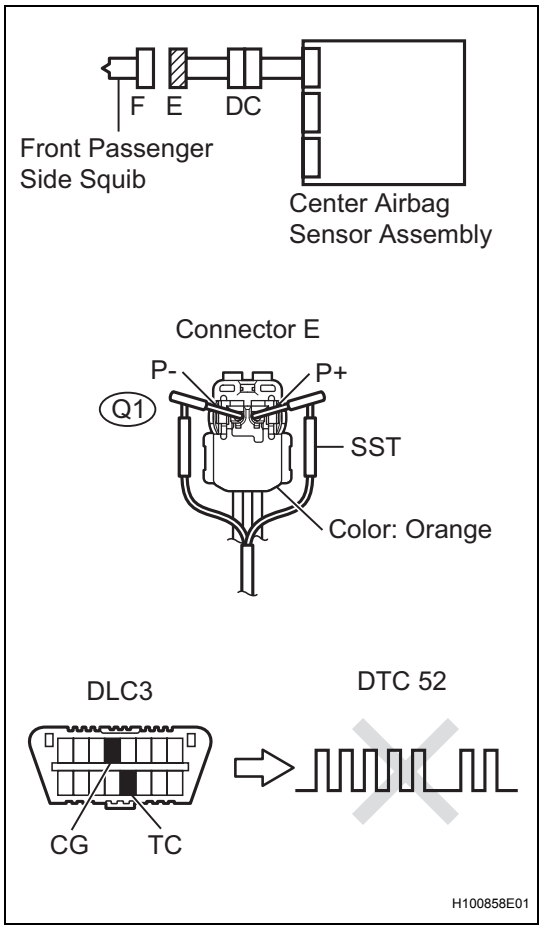

(a) Turn the ignition switch off.
(b) Disconnect the negative (-) terminal cable from the battery, and wait for at least 90 seconds.
(c) Disconnect the connectors from the front passenger airbag assembly.
(d) Connect the white wire side of SST (resistance 2.1 Ω) to connector E (orange connector).
CAUTION:
Never connect a tester to the front passenger airbag assembly (front passenger side squib) for measurement, as this may lead to a serious injury due to airbag deployment.
NOTICE:
- **Do not forcibly insert the SST into the terminals of the connector when connecting.**
- **Insert the SST straight into the terminals of the connector.**

(e) Connect the negative (-) terminal cable to the battery, and wait for at least 2 seconds.
(f) Turn the ignition switch on, and wait for at least 60 seconds.
(g) Clear the DTCs stored in the memory (See page RS-38).
(h) Turn the ignition switch off.
(i) Turn the ignition switch on, and wait for at least 60 seconds.
(j) Check the DTCs (See page RS-38).
OK:
DTC B1805, B1806, B1807, B1808 and 52 are not output.
HINT:
DTCs other than DTC B1805, B1806, B1807, B1808 and 52 may be output at this time, but they are not related to this check.

OK → **REPLACE FRONT PASSENGER AIRBAG**

NG

2	CHECK CONNECTOR

(a) Turn the ignition switch off.
(b) Disconnect the negative (-) terminal cable from the battery, and wait for at least 90 seconds.
(c) Disconnect the SST from connector E.
(d) Check that the instrument panel wire assembly connectors (on the front passenger airbag side) are not damaged.
OK:
The lock button is not disengaged, and the claw of the lock is not deformed or damaged.

NG → **REPAIR OR REPLACE INSTRUMENT PANEL WIRE ASSEMBLY**

OK

3	CHECK FRONT PASSENGER SIDE SQUIB CIRCUIT

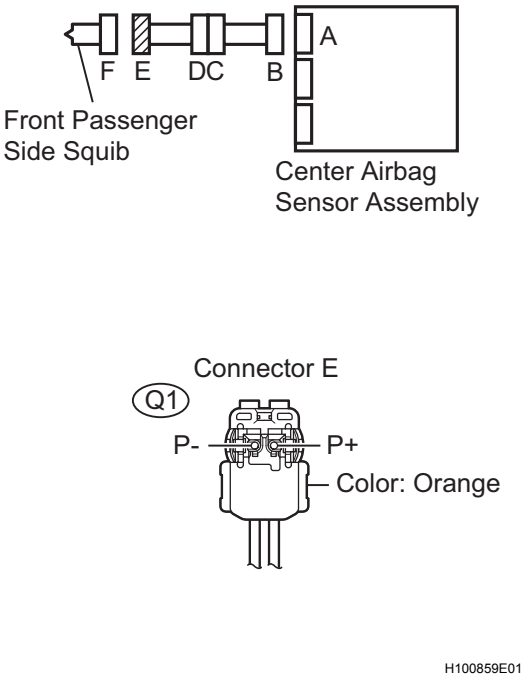

(a) Disconnect the connectors from the center airbag sensor assembly and front passenger airbag assembly.

(b) Check for short to B+ in the circuit.
  (1) Connect the negative (-) terminal cable to the battery, and wait for at least 2 seconds.
  (2) Turn the ignition switch on.
  (3) Measure the voltage.
  Standard voltage

Tester Connection	Condition	Specified Condition
Q1-2 (P+) - Body ground	Ignition switch on	Below 1 V
Q1-1 (P-) - Body ground	Ignition switch on	Below 1 V

(c) Check for open in the circuit.
  (1) Turn the ignition switch off.
  (2) Disconnect the negative (-) terminal cable from the battery, and wait for at least 90 seconds.
  (3) Measure the resistance.
  Standard resistance

Tester Connection	Condition	Specified Condition
Q1-2 (P+) - Q1-1 (P-)	Always	Below 1 Ω

(d) Check for short to ground in the circuit.
  (1) Measure the resistance.
  Standard resistance

Tester Connection	Condition	Specified Condition
Q1-2 (P+) - Body ground	Always	1 MΩ or higher
Q1-1 (P-) - Body ground	Always	1 MΩ or higher

(e) Check for short in the circuit.
  (1) Release the activation prevention mechanism built into connector B (See page RS-31).
  (2) Measure the resistance.
  Standard resistance

Tester Connection	Condition	Specified Condition
Q1-2 (P+) - Q1-1 (P-)	Always	1 MΩ or higher

NG → **Go to step 5**

OK

RS

4 CHECK CENTER AIRBAG SENSOR ASSEMBLY

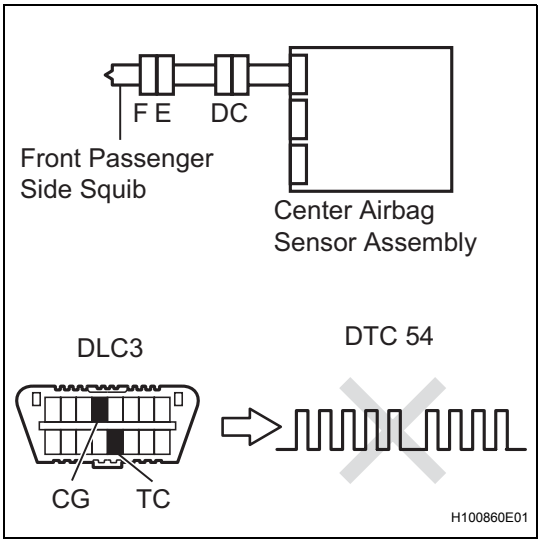

(a) Connect the connectors to the front passenger airbag assembly and the center airbag sensor assembly.
(b) Connect the negative (-) terminal cable to the battery, and wait for at least 2 seconds.
(c) Turn the ignition switch on, and wait for at least 60 seconds.
(d) Clear the DTCs stored in the memory (See page RS-38).
(e) Turn the ignition switch off.
(f) Turn the ignition switch on, and wait for at least 60 seconds.
(g) Check the DTCs (See page RS-38).
OK:
DTC B1805, B1806, B1807, B1808 and 52 are not output.
HINT:
DTCs other than DTC B1805, B1806, B1807, B1808 and 52 may be output at this time, but they are not related to this check.

NG → **REPLACE CENTER AIRBAG SENSOR ASSEMBLY**

OK

USE SIMULATION METHOD TO CHECK

5 CHECK INSTRUMENT PANEL WIRE

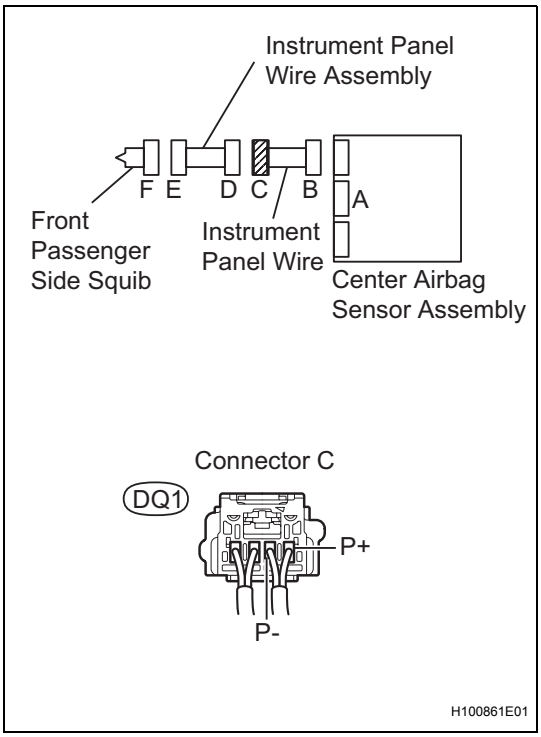

(a) Restore the released activation prevention mechanism of connector B to the original condition.
(b) Disconnect the instrument panel wire connector from the instrument panel wire assembly.
(c) Check for short to B+ in the circuit.
  (1) Connect the negative (-) terminal cable to the battery, and wait for at least 2 seconds.
  (2) Turn the ignition switch on.
  (3) Measure the voltage.
  Standard voltage

Tester Connection	Condition	Specified Condition
DQ1-1 (P+) - Body ground	Ignition switch on	Below 1 V
DQ1-2 (P-) - Body ground	Ignition switch on	Below 1 V

(d) Check for open in the circuit.
  (1) Turn the ignition switch off.
  (2) Disconnect the negative (-) terminal cable from the battery, and wait for at least 90 seconds.
  (3) Measure the resistance.

Standard resistance

Tester Connection	Condition	Specified Condition
DQ1-1 (P+) - DQ1-2 (P-)	Always	Below 1 Ω

(e) Check for short to ground in the circuit.
(1) Measure the resistance.
Standard resistance

Tester Connection	Condition	Specified Condition
DQ1-1 (P+) - Body ground	Always	1 MΩ or higher
DQ1-2 (P-) - Body ground	Always	1 MΩ or higher

(f) Check for short in the circuit.
(1) Release the activation prevention mechanism built into connector B (See page RS-31).
(2) Measure the resistance.
Standard resistance

Tester Connection	Condition	Specified Condition
DQ1-1 (P+) - DQ1-2 (P-)	Always	1 MΩ or higher

NG → **REPAIR OR REPLACE INSTRUMENT PANEL WIRE**

OK

6 CHECK INSTRUMENT PANEL WIRE ASSEMBLY

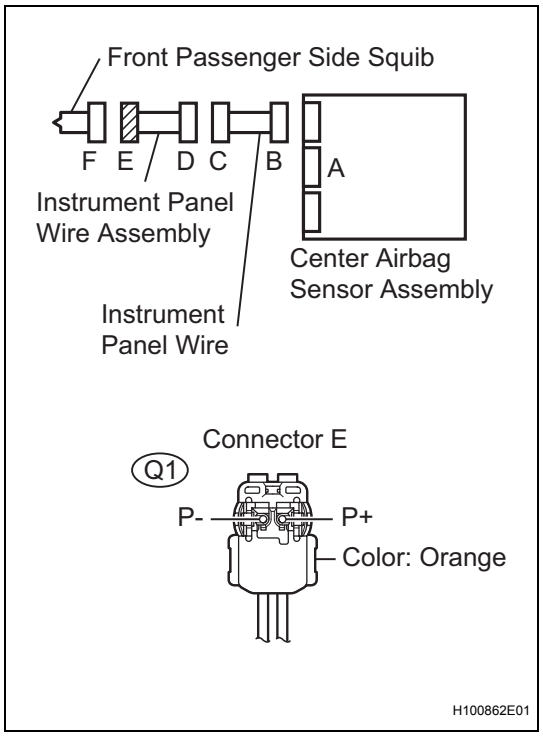

(a) Check for short to B+ in the circuit.
(1) Connect the negative (-) terminal cable to the battery, and wait for at least 2 seconds.
(2) Turn the ignition switch on.
(3) Measure the voltage.
Standard voltage

Tester Connection	Condition	Specified Condition
Q1-2 (P+) - Body ground	Ignition switch on	Below 1 V
Q1-1 (P-) - Body ground	Ignition switch on	Below 1 V

(b) Check for open in the circuit.
(1) Turn the ignition switch off.
(2) Disconnect the negative (-) terminal cable from the battery, and wait for at least 90 seconds.
(3) Measure the resistance.
Standard resistance

Tester Connection	Condition	Specified Condition
Q1-2 (P+) - Q1-1 (P-)	Always	Below 1 Ω

(c) Check for short to ground in the circuit.
(1) Measure the resistance.
Standard resistance

Tester Connection	Condition	Specified Condition
Q1-2 (P+) - Body ground	Always	1 MΩ or higher
Q1-1 (P-) - Body ground	Always	1 MΩ or higher

RS

(d) Check for short in the circuit.
  (1) Release the activation prevention mechanism built into connector D (See page RS-31).
  (2) Measure the resistance.
  Standard resistance

Tester Connection	Condition	Specified Condition
Q1-2 (P+) - Q1-1 (P-)	Always	1 MΩ or higher

NG → **REPAIR OR REPLACE INSTRUMENT PANEL WIRE ASSEMBLY**

OK

USE SIMULATION METHOD TO CHECK

DTC	B1810/53	Short in Driver Side Squib 2nd Step Circuit

DTC	B1811/53	Open in Driver Side Squib 2nd Step Circuit

DTC	B1812/53	Short to GND in Driver Side Squib 2nd Step Circuit

DTC	B1813/53	Short to B+ in Driver Side Squib 2nd Step Circuit

DESCRIPTION

The driver side squib 2nd step circuit consists of the center airbag sensor assembly, the spiral cable and the steering pad.
The circuit signals the SRS to deploy when deployment conditions are met.
These DTCs are recorded when a malfunction is detected in the driver side squib 2nd step circuit.

DTC No.	DTC Detecting Condition	Trouble Area
B1810/53	• Center airbag sensor assembly detects line short circuit signal in driver side squib 2nd step circuit 5 times during primary check. • Driver side squib 2nd step malfunction • Spiral cable malfunction • Center airbag sensor assembly malfunction	• Instrument panel wire • Spiral cable • Steering pad (Driver side squib 2nd step) • Center airbag sensor assembly
B1811/53	• Center airbag sensor assembly detects open circuit signal in driver side squib 2nd step circuit for 2 seconds. • Driver side squib 2nd step malfunction • Spiral cable malfunction • Center airbag sensor assembly malfunction	• Instrument panel wire • Spiral cable • Steering pad (Driver side squib 2nd step) • Center airbag sensor assembly
B1812/53	• Center airbag sensor assembly detects short circuit to ground signal in driver side 2nd step circuit for 0.5 seconds. • Driver side squib 2nd step malfunction • Spiral cable malfunction • Center airbag sensor assembly malfunction	• Instrument panel wire • Spiral cable • Steering pad (Driver side squib 2nd step) • Center airbag sensor assembly
B1813/53	• Center airbag sensor assembly detects short circuit to B+ signal in driver side squib 2nd step circuit for 0.5 seconds. • Driver side squib 2nd step malfunction • Spiral cable malfunction • Center airbag sensor assembly malfunction	• Instrument panel wire • Spiral cable • Steering pad (Driver side squib 2nd step) • Center airbag sensor assembly

RS

WIRING DIAGRAM

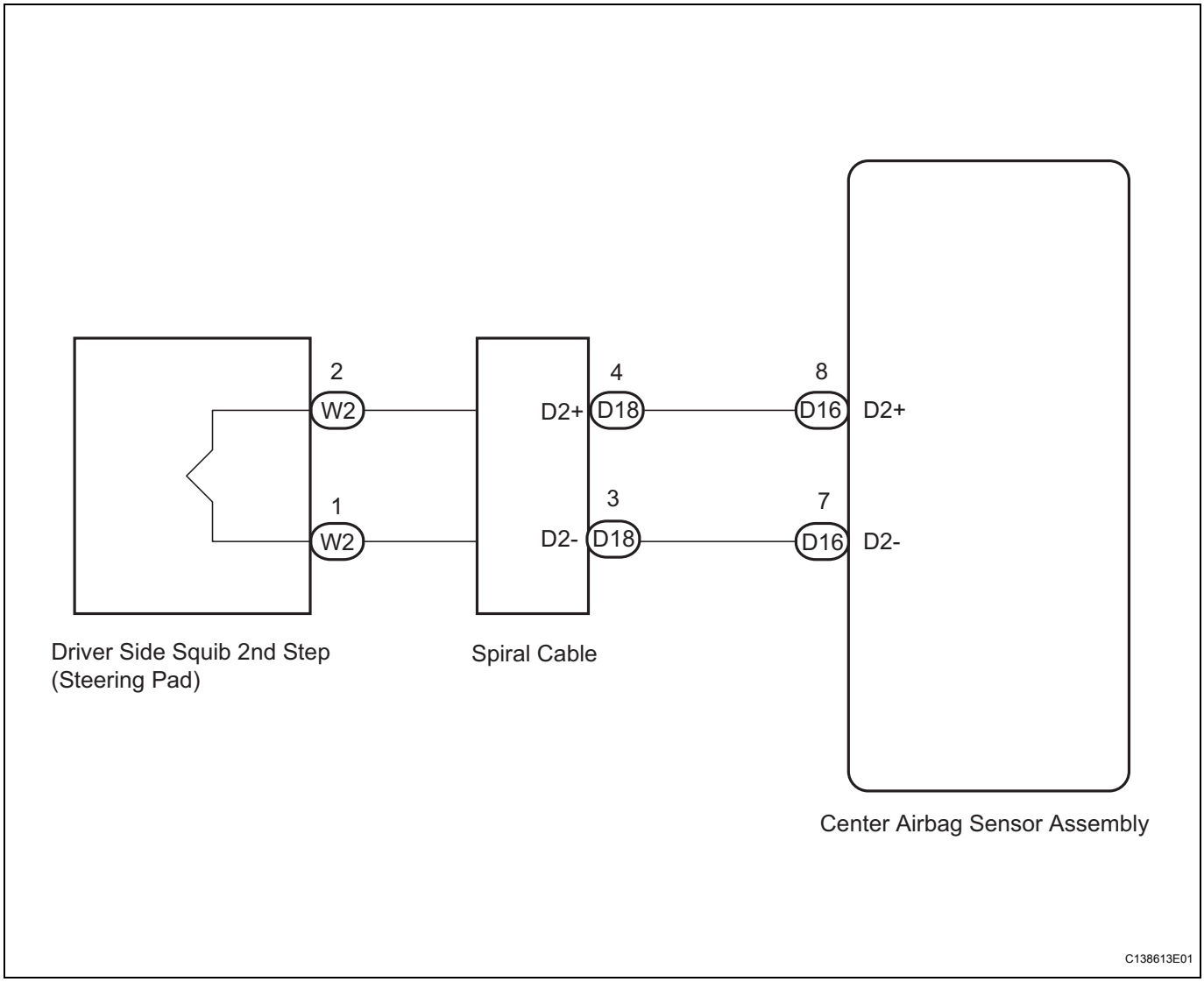

INSPECTION PROCEDURE

HINT:

- Perform the simulation method by selecting CHECK MODE (signal check) with the intelligent tester (See page RS-41).
- After selecting CHECK MODE (signal check), perform the simulation method by wiggling each connector of the airbag system or driving the vehicle on a city or rough road (See page RS-31).

1	**CHECK STEERING PAD (DRIVER SIDE SQUIB 2ND STEP)**

SST 09843-18060

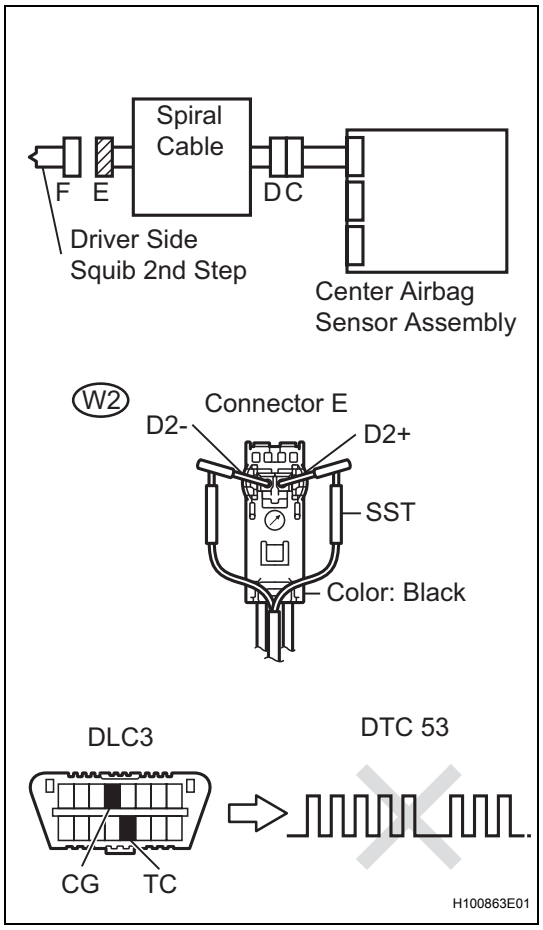

(a) Turn the ignition switch off.
(b) Disconnect the negative (-) terminal cable from the battery, and wait for at least 90 seconds.
(c) Disconnect the connectors from the steering pad.
(d) Connect the white wire side of SST (resistance 2.1 Ω) to connector E (black connector).
CAUTION:
Never connect a tester to the steering pad (driver side squib 2nd step) for measurement, as this may lead to a serious injury due to airbag deployment.
NOTICE:
- **Do not forcibly insert the SST into the terminals of the connector when connecting.**
- **Insert the SST straight into the terminals of the connector.**

(e) Connect the negative (-) terminal cable to the battery, and wait for at least 2 seconds.
(f) Turn the ignition switch on, and wait for at least 60 seconds.
(g) Clear the DTCs stored in the memory (See page RS-38).
(h) Turn the ignition switch off.
(i) Turn the ignition switch on, and wait for at least 60 seconds.
(j) Check the DTCs (See page RS-38).
OK:
DTC B1810, B1811, B1812, B1813 and 53 are not output.
HINT:
DTCs other than DTC B1810, B1811, B1812, B1813, and 53 may be output at this time, but they are not related to this check.

OK → **REPLACE STEERING PAD**

NG

2	CHECK CONNECTOR

(a) Turn the ignition switch off.
(b) Disconnect the negative (-) terminal cable from the battery, and wait for at least 90 seconds.
(c) Disconnect the SST from connector E.
(d) Check that the spiral cable connectors (on the steering pad side) are not damaged.
OK:
The lock button is not disengaged, and the claw of the lock is not deformed or damaged.

NG → **REPLACE SPIRAL CABLE**

OK

RS

3	CHECK DRIVER SIDE SQUIB 2ND STEP CIRCUIT

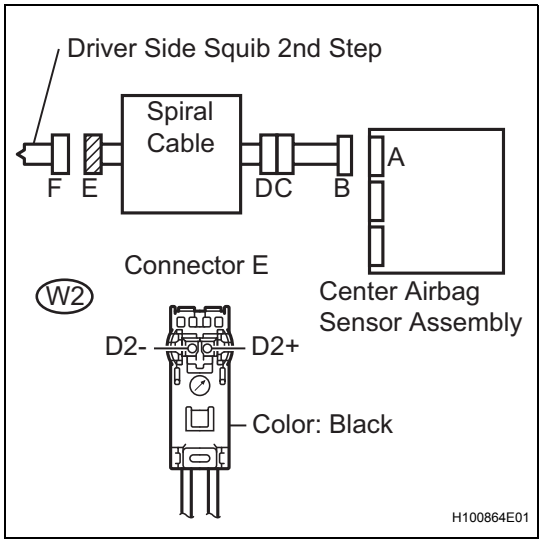

(a) Disconnect the connectors from the center airbag sensor assembly and steering pad.

(b) Check for short to B+ in the circuit.
  (1) Connect the negative (-) terminal cable to the battery, and wait for at least 2 seconds.
  (2) Turn the ignition switch on.
  (3) Measure the voltage.
  Standard voltage

Tester Connection	Condition	Specified Condition
W2-1 (D2+) - Body ground	Ignition switch on	Below 1 V
W2-2 (D2-) - Body ground	Ignition switch on	Below 1 V

(c) Check for open in the circuit.
  (1) Turn the ignition switch off.
  (2) Disconnect the negative (-) terminal cable from the battery, and wait for at least 90 seconds.
  (3) Measure the resistance.
  Standard resistance

Tester Connection	Condition	Specified Condition
W2-1 (D2+) - W2-2 (D2-)	Always	Below 1 Ω

(d) Check for short to ground in the circuit.
  (1) Measure the resistance.
  Standard resistance

Tester Connection	Condition	Specified Condition
W2-1 (D2+) - Body ground	Always	1 MΩ or higher
W2-2 (D2-) - Body ground	Always	1 MΩ or higher

(e) Check for short in the circuit.
  (1) Release the activation prevention mechanism built into connector B (See page RS-31).
  (2) Measure the resistance.
  Standard resistance

Tester Connection	Condition	Specified Condition
W2-1 (D2+) - W2-2 (D2-)	Always	1 MΩ or higher

NG → **CHECK INSTRUMENT PANEL WIRE**

OK

RS

4 CHECK CENTER AIRBAG SENSOR ASSEMBLY

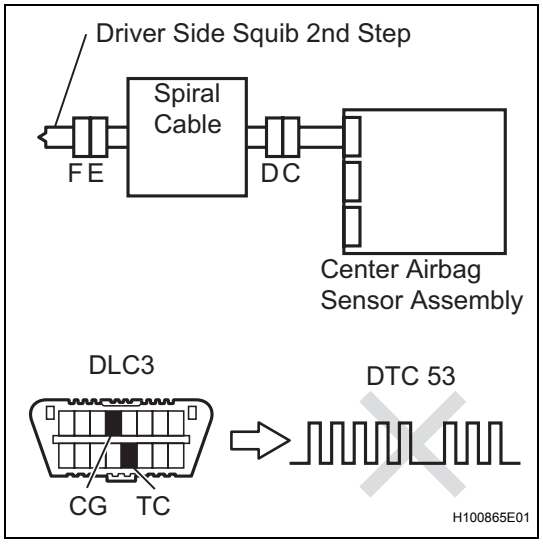

(a) Connect the connectors to the steering pad and the center airbag sensor assembly.
(b) Connect the negative (-) terminal cable to the battery, and wait for at least 2 seconds.
(c) Turn the ignition switch on, and wait for at least 60 seconds.
(d) Clear the DTCs stored in the memory (See page RS-38).
(e) Turn the ignition switch off.
(f) Turn the ignition switch on, and wait for at least 60 seconds.
(g) Check the DTCs (See page RS-38).
OK:
DTC B1810, B1811, B1812, B1813 and 53 are not output.
HINT:
DTCs other than DTC B1810, B1811, B1812, B1813 and 53 may be output at this time, but they are not related to this check.

NG → **REPLACE CENTER AIRBAG SENSOR ASSEMBLY**

OK

USE SIMULATION METHOD TO CHECK

5 CHECK INSTRUMENT PANEL WIRE

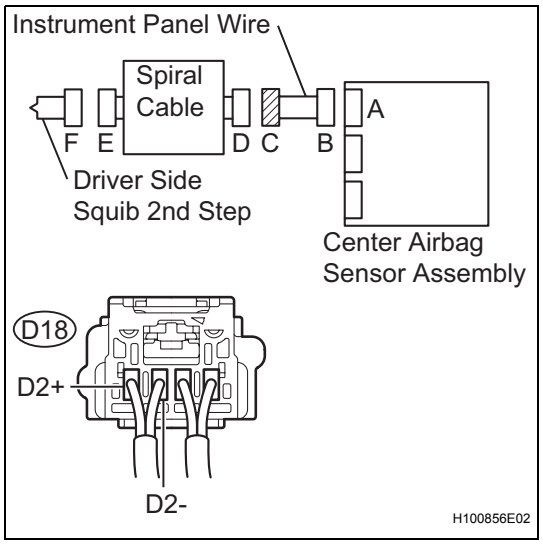

(a) Check for short to B+ in the circuit.
(1) Restore the released activation prevention mechanism of connector B to the original condition.
(2) Disconnect the instrument panel wire connector from the spiral cable.
(3) Connect the negative (-) terminal cable to the battery, and wait for at least 2 seconds.
(4) Turn the ignition switch on.
(5) Measure the voltage.
Standard voltage

Tester Connection	Condition	Specified Condition
D18-4 (D2+) - Body ground	Ignition switch on	Below 1 V
D18-3 (D2-) - Body ground	Ignition switch on	Below 1 V

(b) Check for open in the circuit.
(1) Turn the ignition switch off.
(2) Disconnect the negative (-) terminal cable from the battery, and wait for at least 90 seconds.
(3) Measure the resistance.

RS

Standard resistance

Tester Connection	Condition	Specified Condition
D18-4 (D2+) - D18-3 (D2-)	Always	Below 1 Ω

(c) Check for short to ground in the circuit.
(1) Measure the resistance.
Standard resistance

Tester Connection	Condition	Specified Condition
D18-4 (D2+) - Body ground	Always	1 MΩ or higher
D18-3 (D2-) - Body ground	Always	1 MΩ or higher

(d) Check for short in the circuit.
(1) Release the activation prevention mechanism built into connector B (See page RS-31).
(2) Measure the resistance.
Standard resistance

Tester Connection	Condition	Specified Condition
D18-4 (D2+) - D18-3 (D2-)	Always	1 MΩ or higher

NG → **REPAIR OR REPLACE INSTRUMENT PANEL WIRE ASSEMBLY**

OK

6 CHECK SPIRAL CABLE

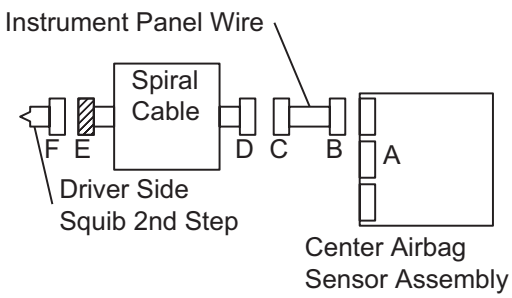

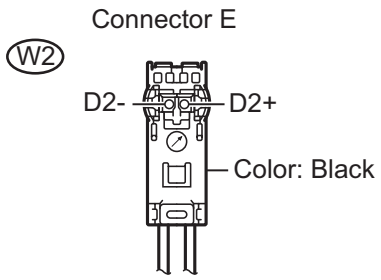

H100866E01

(a) Check for short to B+ in the circuit.
(1) Connect the negative (-) terminal cable from the battery, and wait for at least 2 seconds.
(2) Turn the ignition switch on.
(3) Measure the voltage.
Standard voltage

Tester Connection	Condition	Specified Condition
W2-1 (D2+) - Body ground	Ignition switch on	Below 1 V
W2-2 (D2-) - Body ground	Ignition switch on	Below 1 V

(b) Check for open in the circuit.
(1) Turn the ignition switch off.
(2) Disconnect the negative (-) terminal cable from the battery, and wait for at least 90 seconds.
(3) Measure the resistance.
Standard resistance

Tester Connection	Condition	Specified Condition
W2-1 (D2+) - W2-2 (D2-)	Always	Below 1 Ω

(c) Check for short to ground in the circuit.
(1) Measure the resistance.
Standard resistance

Tester Connection	Condition	Specified Condition
W2-1 (D2+) - Body ground	Always	1 MΩ or higher
W2-2 (D2-) - Body ground	Always	1 MΩ or higher

(d) Check for short in the circuit.
(1) Release the activation prevention mechanism built into connector D (See page RS-31).
(2) Measure the resistance.
Standard resistance

Tester Connection	Condition	Specified Condition
W2-1 (D2+) - W2-2 (D2-)	Always	1 MΩ or higher

RS

NG → **REPLACE SPIRAL CABLE**

OK

USE SIMULATION METHOD TO CHECK

RS

DTC	B1815/54	Short in Front Passenger Side Squib 2nd Step Circuit

DTC	B1816/54	Open in Front Passenger Side Squib 2nd Step Circuit

DTC	B1817/54	Short to GND in Front Passenger Side Squib 2nd Step Circuit

DTC	B1818/54	Short to B+ in Front Passenger Side Squib 2nd Step Circuit

DESCRIPTION

The front passenger side squib 2nd step circuit consists of the center airbag sensor assembly and the front passenger airbag assembly.
The circuit signals the SRS to deploy when deployment conditions are met.
These DTCs are recorded when a malfunction is detected in the front passenger side squib 2nd step circuit.

DTC No.	DTC Detecting Condition	Trouble Area
B1815/54	• Center airbag sensor assembly detects line short circuit signal in front passenger side squib 2nd step circuit 5 times during primary check. • Front passenger side squib 2nd step malfunction • Center airbag sensor assembly malfunction	• Instrument panel wire • Instrument panel wire assembly • Front passenger airbag assembly (Front passenger side squib 2nd step) • Center airbag sensor assembly
B1816/54	• Center airbag sensor assembly detects open circuit signal in front passenger side squib 2nd step circuit for 2 seconds. • Front passenger side squib 2nd step malfunction • Center airbag sensor assembly malfunction	• Instrument panel wire • Instrument panel wire assembly • Front passenger airbag assembly (Front passenger side squib 2nd step) • Center airbag sensor assembly
B1817/54	• Center airbag sensor assembly detects short circuit to ground signal in front passenger side squib 2nd step circuit for 0.5 seconds. • Front passenger side squib 2nd step malfunction • Center airbag sensor assembly malfunction	• Instrument panel wire • Instrument panel wire assembly • Front passenger airbag assembly (Front passenger side squib 2nd step) • Center airbag sensor assembly
B1818/54	• Center airbag sensor assembly detects short circuit to B+ signal in front passenger side squib 2nd step circuit for 0.5 seconds. • Front passenger side squib 2nd step malfunction • Center airbag sensor assembly malfunction	• Instrument panel wire • Instrument panel wire assembly • Front passenger airbag assembly (Front passenger side squib 2nd step) • Center airbag sensor assembly

RS

WIRING DIAGRAM

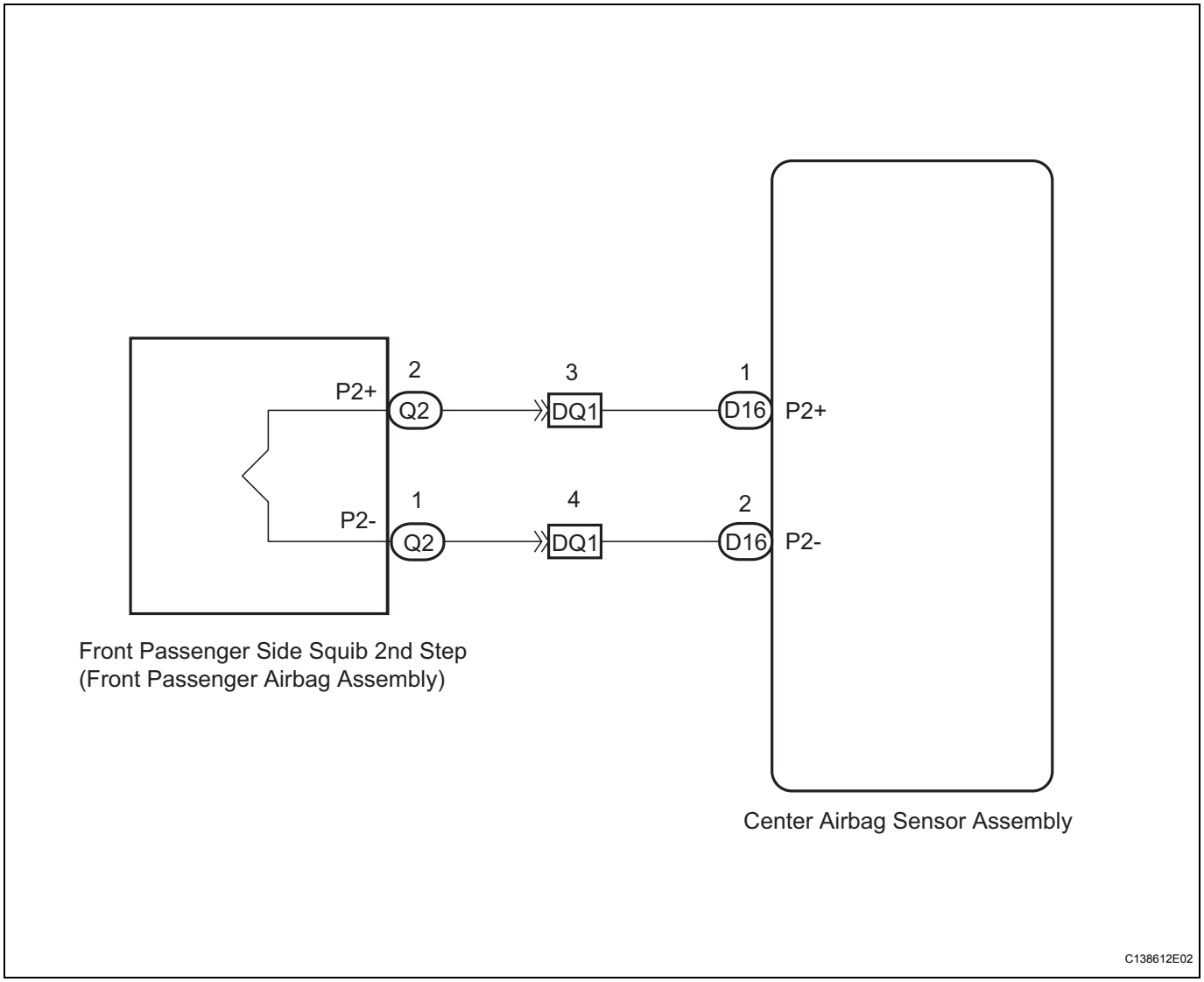

INSPECTION PROCEDURE

HINT:

- Perform the simulation method by selecting CHECK MODE (signal check) with the intelligent tester (See page RS-41).
- After selecting CHECK MODE (signal check), perform the simulation method by wiggling each connector of the airbag system or driving the vehicle on a city or rough road (See page RS-31).

1	**CHECK FRONT PASSENGER AIRBAG (FRONT PASSENGER SIDE SQUIB 2ND STEP)**

SST 09843-18060

RS

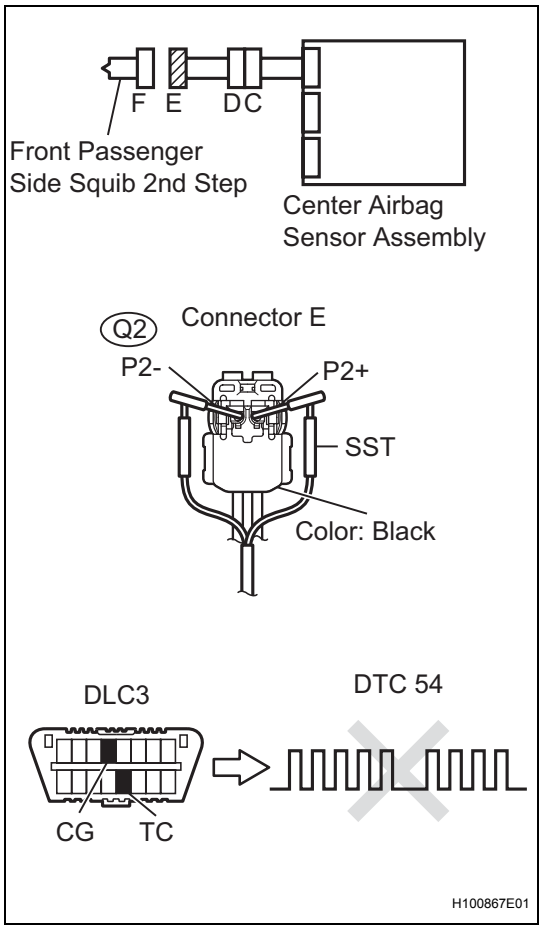

(a) Turn the ignition switch off.
(b) Disconnect the negative (-) terminal cable from the battery, and wait for at least 90 seconds.
(c) Disconnect the connectors from the front passenger airbag assembly.
(d) Connect the white wire side of SST (resistance 2.1 Ω) to connector E (black connector).
CAUTION:
Never connect a tester to the front passenger airbag assembly (front passenger side squib 2nd step) for measurement, as this may lead to a serious injury due to airbag deployment.
NOTICE:
- **Do not forcibly insert the SST into the terminals of the connector when connecting.**
- **Insert the SST straight into the terminals of the connector.**

(e) Connect the negative (-) terminal cable to the battery, and wait for at least 2 seconds.
(f) Turn the ignition switch on, and wait for at least 60 seconds.
(g) Clear the DTCs stored in the memory (See page RS-38).
(h) Turn the ignition switch off.
(i) Turn the ignition switch on, and wait for at least 60 seconds.
(j) Check the DTCs (See page RS-38).
OK:
DTC B1815, B1816, B1817, B1818 and 54 are not output.
HINT:
DTCs other than DTC B1815, B1816, B1817, B1818 and 54 may be output at this time, but they are not related to this check.

OK → **REPLACE FRONT PASSENGER AIRBAG**

NG

2 CHECK CONNECTOR

(a) Turn the ignition switch off.
(b) Disconnect the negative (-) terminal cable from the battery, and wait for at least 90 seconds.
(c) Disconnect the SST from connector E.
(d) Check that the instrument panel wire assembly connectors (on the front passenger airbag side) are not damaged.
OK:
The lock button is not disengaged, and the claw of the lock is not damaged or deformed.

NG → **REPAIR OR REPLACE INSTRUMENT PANEL WIRE ASSEMBLY**

OK

3	CHECK FRONT PASSENGER SIDE SQUIB 2ND STEP CIRCUIT

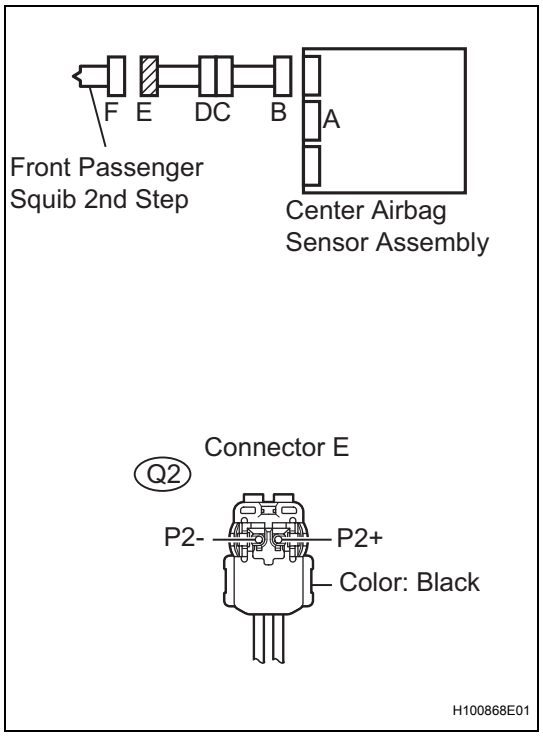

(a) Disconnect the connectors from the center airbag sensor assembly.

(b) Check for short to B+ in the circuit.
  (1) Connect the negative (-) terminal cable to the battery, and wait for at least 2 seconds.
  (2) Turn the ignition switch on.
  (3) Measure the voltage.
  Standard voltage

Tester Connection	Condition	Specified Condition
Q2-2 (P2+) - Body ground	Ignition switch on	Below 1 V
Q2-1 (P2-) - Body ground	Ignition switch on	Below 1 V

(c) Check for open in the circuit.
  (1) Turn the ignition switch off.
  (2) Disconnect the negative (-) terminal cable from the battery, and wait for at least 90 seconds.
  (3) Measure the resistance.
  Standard resistance

Tester Connection	Condition	Specified Condition
Q2-2 (P2+) - Q2-1 (P2-)	Always	Below 1 Ω

(d) Check for short to ground in the circuit.
  (1) Measure the resistance.
  Standard resistance

Tester Connection	Condition	Specified Condition
Q2-2 (P2+) - Body ground	Always	1 MΩ or higher
Q2-1 (P2-) - Body ground	Always	1 MΩ or higher

(e) Check for short in the circuit.
  (1) Release the activation prevention mechanism built into connector B (See page RS-31).
  (2) Measure the resistance.
  Standard resistance

Tester Connection	Condition	Specified Condition
Q2-2 (P2+) - Q2-1 (P2-)	Always	1 MΩ or higher

NG → **Go to step 5**

OK

RS

4 CHECK CENTER AIRBAG SENSOR ASSEMBLY

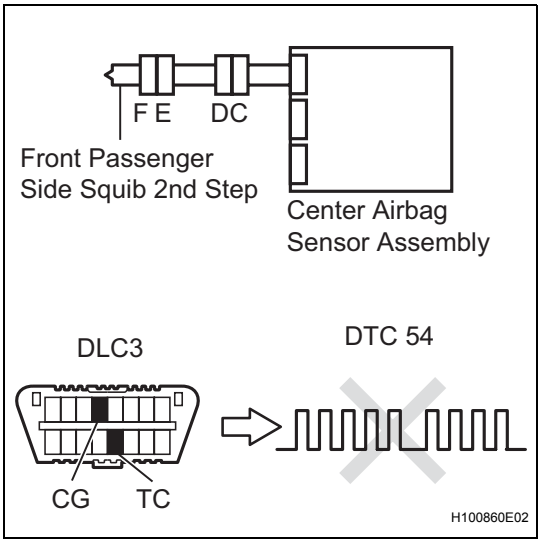

(a) Connect the connectors to the front passenger airbag assembly and the center airbag sensor assembly.
(b) Connect the negative (-) terminal cable to the battery, and wait for at least 2 seconds.
(c) Turn the ignition switch on, and wait for at least 60 seconds.
(d) Clear the DTCs stored in the memory (See page RS-38).
(e) Turn the ignition switch off.
(f) Turn the ignition switch on, and wait for at least 60 seconds.
(g) Check the DTCs (See page RS-38).
OK:
DTC B1815, B1816, B1817, B1818 and 54 are not output.
HINT:
DTCs other than DTC B1815, B1816, B1817, B1818 and 54 may be output at this time, but they are not related to this check.

NG → **REPLACE CENTER AIRBAG SENSOR ASSEMBLY**

OK

USE SIMULATION METHOD TO CHECK

5 CHECK INSTRUMENT PANEL WIRE

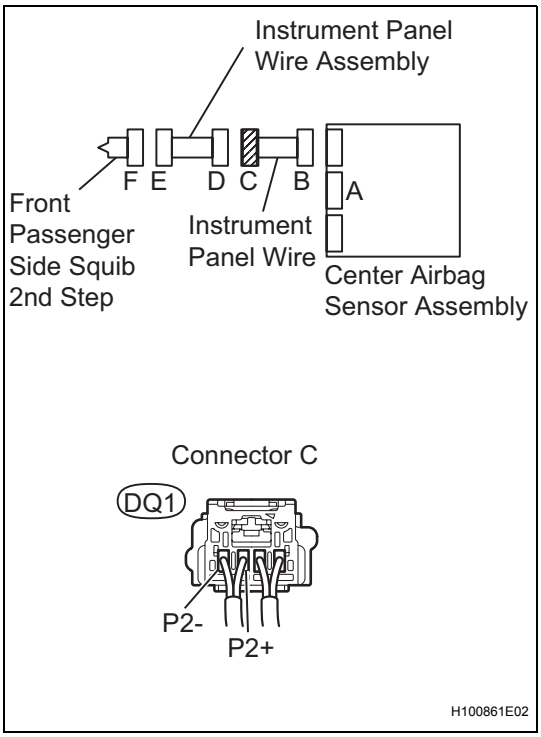

(a) Check for short to B+ in the circuit.
(1) Restore the released activation prevention mechanism of connector B to the original condition.
(2) Disconnect the instrument panel wire connector from the instrument panel wire assembly.
(3) Connect the negative (-) terminal cable to the battery, and wait for at least 2 seconds.
(4) Turn the ignition switch on.
(5) Measure the voltage.
Standard voltage

Tester Connection	Condition	Specified Condition
DQ1-3 (P2+) - Body ground	Ignition switch on	Below 1 V
DQ1-4 (P2-) - Body ground	Ignition switch on	Below 1 V

(b) Check for open in the circuit.
(1) Turn the ignition switch off.
(2) Disconnect the negative (-) terminal cable from the battery, and wait for at least 90 seconds.
(3) Measure the resistance.

Standard resistance

Tester Connection	Condition	Specified Condition
DQ1-3 (P2+) - DQ1-4 (P2-)	Always	Below 1 Ω

(c) Check for short to ground in the circuit.
(1) Measure the resistance.
Standard resistance

Tester Connection	Condition	Specified Condition
DQ1-3 (P2+) - Body ground	Always	1 MΩ or higher
DQ1-4 (P2-) - Body ground	Always	1 MΩ or higher

(d) Check for short in the circuit.
(1) Release the activation prevention mechanism built into connector B (See page RS-31).
(2) Measure the resistance.
Standard resistance

Tester Connection	Condition	Specified Condition
DQ1-3 (P2+) - DQ1-4 (P2-)	Always	1 MΩ or higher

NG → **REPAIR OR REPLACE INSTRUMENT PANEL WIRE**

OK

6 CHECK INSTRUMENT PANEL WIRE ASSEMBLY

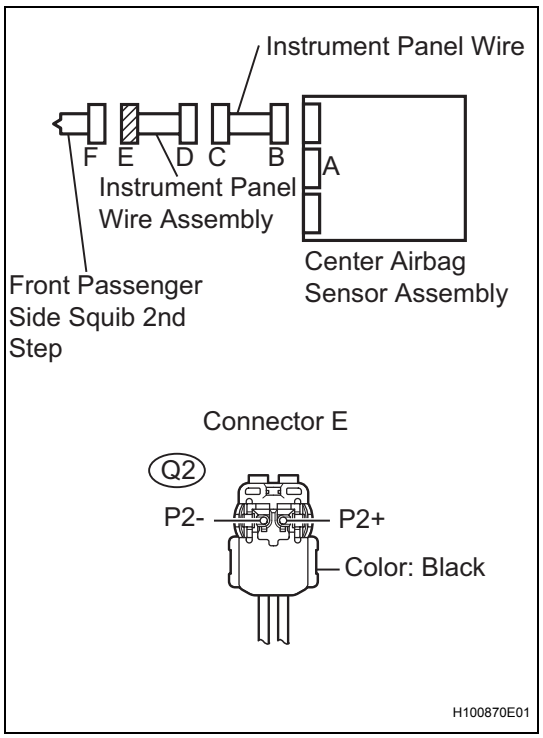

(a) Check for short to B+ in the circuit.
(1) Connect the negative (-) terminal cable to the battery, and wait for at least 2 seconds.
(2) Turn the ignition switch on.
(3) Measure the voltage.
Standard voltage

Tester Connection	Condition	Specified Condition
Q2-2 (P2+) - Body ground	Ignition switch on	Below 1 V
Q2-1 (P2-) - Body ground	Ignition switch on	Below 1 V

(b) Check for open in the circuit.
(1) Turn the ignition switch off.
(2) Disconnect the negative (-) terminal cable from the battery, and wait for at least 90 seconds.
(3) Measure the resistance.
Standard resistance

Tester Connection	Condition	Specified Condition
Q2-2 (P2+) - Q2-1 (P2-)	Always	Below 1 Ω

(c) Check for short to ground in the circuit.
(1) Measure the resistance.

RS

Standard resistance

Tester Connection	Condition	Specified Condition
Q2-2 (P2+) - Body ground	Always	1 MΩ or higher
Q2-1 (P2-) - Body ground	Always	1 MΩ or higher

(d) Check for short in the circuit.
   (1) Release the activation prevention mechanism built into connector D (See page RS-31).
   (2) Measure the resistance.
   Standard resistance

Tester Connection	Condition	Specified Condition
Q2-2 (P2+) - Q2-1 (P2-)	Always	1 MΩ or higher

NG → **REPAIR OR REPLACE INSTRUMENT PANEL WIRE ASSEMBLY**

OK

USE SIMULATION METHOD TO CHECK

DTC	B1820/55	Short in Front Driver Side - Side Squib Circuit

DTC	B1821/55	Open in Front Driver Side - Side Squib Circuit

DTC	B1822/55	Short to GND in Front Driver Side - Side Squib Circuit

DTC	B1823/55	Short to B+ in Front Driver Side - Side Squib Circuit

DESCRIPTION

The driver side - side squib circuit consists of the center airbag sensor assembly and the front seat side airbag assembly LH.
This circuit signals the SRS to deploy when deployment conditions are met.
These DTCs are recorded when a malfunction is detected in the driver side - side squib circuit.

DTC No.	DTC Detection Condition	Trouble Area
B1820/55	• Center airbag sensor assembly detects line short circuit signal in driver side - side squib circuit 5 times during primary check. • Driver side - side squib malfunction • Center airbag sensor assembly malfunction	• Floor wire • Front seat side airbag assembly LH (Driver side - side squib) • Center airbag sensor assembly
B1821/55	• Center airbag sensor assembly detects open circuit signal in driver side - side squib circuit for 2 seconds. • Driver side - side squib malfunction • Center airbag sensor assembly malfunction	• Floor wire • Front seat side airbag assembly LH (Driver side - side squib) • Center airbag sensor assembly
B1822/55	• Center airbag sensor assembly detects short circuit to ground signal in driver side - side squib circuit for 0.5 seconds. • Driver side - side squib malfunction • Center airbag sensor assembly malfunction	• Floor wire • Front seat side airbag assembly LH (Driver side - side squib) • Center airbag sensor assembly
B1823/55	• Center airbag sensor assembly detects short circuit to B+ signal in driver side - side squib circuit for 0.5 seconds. • Driver side - side squib malfunction • Center airbag sensor assembly malfunction	• Floor wire • Front seat side airbag assembly LH (Driver side - side squib) • Center airbag sensor assembly

RS

WIRING DIAGRAM

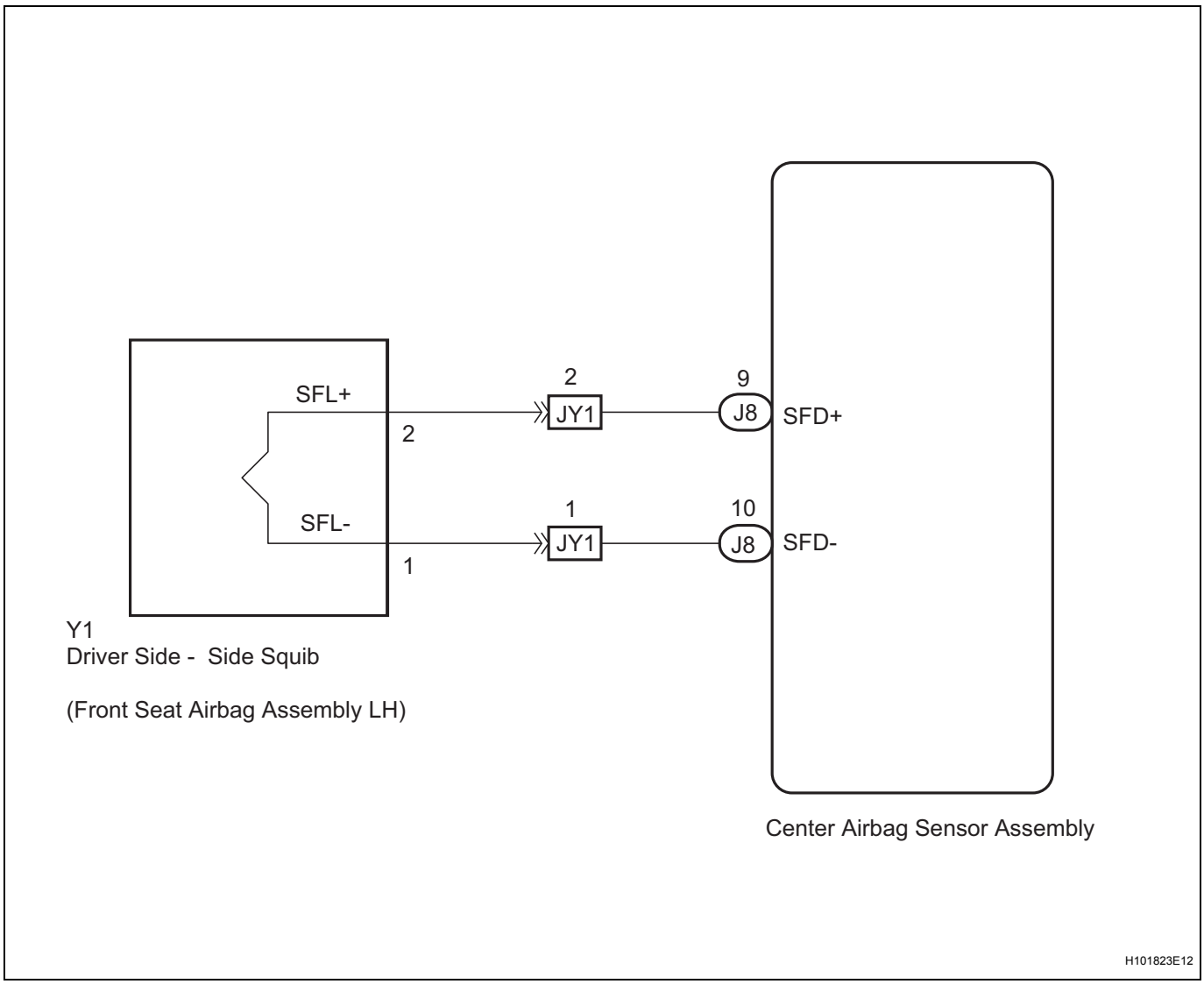

INSPECTION PROCEDURE

HINT:

- Perform the simulation method by selecting CHECK MODE (signal check) with the intelligent tester (See page RS-41).
- After selecting CHECK MODE (signal check), perform the simulation method by wiggling each connector of the airbag system or driving the vehicle on a city or rough road (See page RS-31).

RS

1 CHECK FRONT SEAT SIDE AIRBAG ASSEMBLY LH (DRIVER SIDE - SIDE SQUIB)

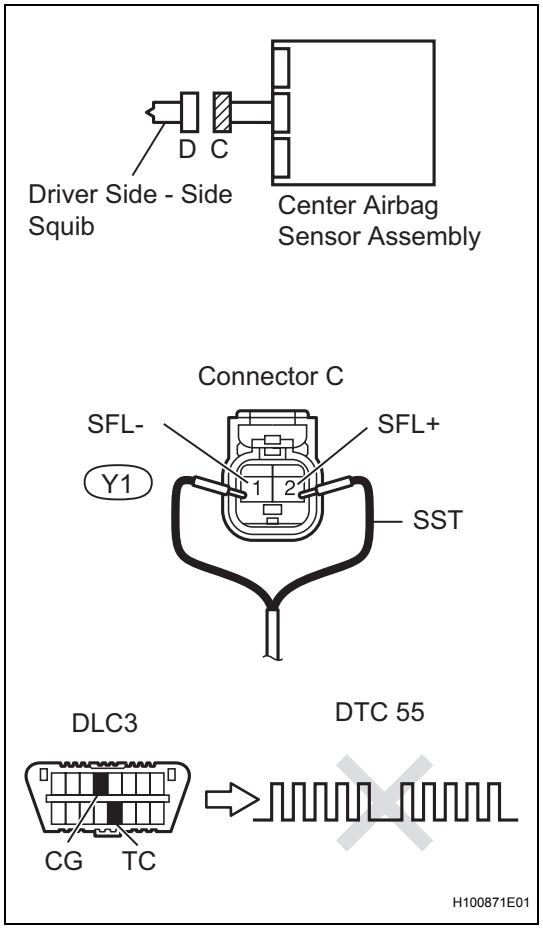

SST 09843-18060

(a) Turn the ignition switch off.
(b) Disconnect the negative (-) terminal cable from the battery, and wait for at least 90 seconds.
(c) Disconnect the connector from the front seat side airbag assembly LH.
(d) Connect the black wire side of SST (resistance 2.1 Ω) to connector C.
CAUTION:
Never connect a tester to the front seat side airbag assembly LH (driver side - side squib) for measurement, as this may lead to a serious injury due to airbag deployment.
NOTICE:
- **Do not forcibly insert the SST into the terminals of the connector when connecting.**
- **Insert the SST straight into the terminals of the connector.**

(e) Connect the negative (-) terminal cable to the battery, and wait for at least 2 seconds.
(f) Turn the ignition switch on, and wait for at least 60 seconds.
(g) Clear the DTCs stored in the memory (See page RS-38).
(h) Turn the ignition switch off.
(i) Turn the ignition switch on, and wait for at least 60 seconds.
(j) Check the DTCs (See page RS-38).
OK:
DTC B1820, B1821, B1822, B1823 and 55 are not output.
HINT:
DTCs other than DTC B1820, B1821, B1822, B1823 and 55 may be output at this time, but they are not related to this check.

OK → **REPLACE FRONT SEAT ASSEMBLY LH**

NG

2 CHECK CONNECTOR

(a) Turn the ignition switch off.
(b) Disconnect the negative (-) terminal cable from the battery, and wait for at least 90 seconds.
(c) Disconnect the SST from connector C.
(d) Check that the floor wire connectors (on the front seat side airbag assembly LH side) are not damaged.
OK:
The lock button is not disengaged, and the claw of the lock is not deformed or damaged.

NG → **REPAIR OR REPLACE FLOOR WIRE**

OK

RS

3 CHECK FLOOR WIRE (DRIVER SIDE - SIDE SQUIB CIRCUIT)

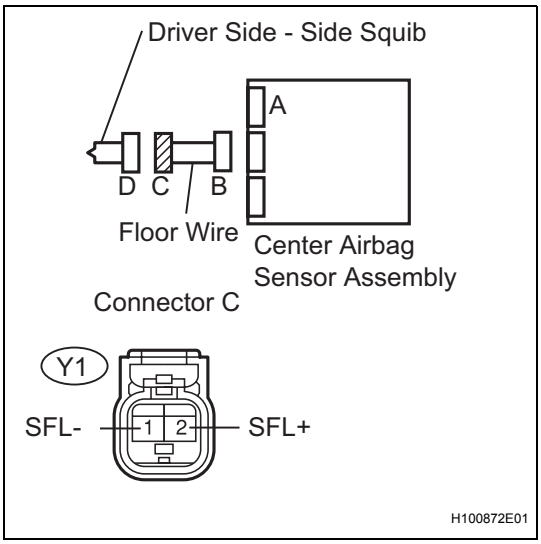

(a) Turn the ignition switch off.
(b) Disconnect the negative (-) terminal cable from the battery, and wait for at least 90 seconds.
(c) Disconnect the SST from connector C.
(d) Disconnect the connectors from the center airbag sensor assembly.
(e) Check for short to B+ in the circuit.
  (1) Connect the negative (-) terminal cable to the battery, and wait for at least 2 seconds.
  (2) Turn the ignition switch on.
  (3) Measure the voltage.
  Standard voltage

Tester Connection	Condition	Specified Condition
Y1-1 (SFL-) - Body ground	Ignition switch on	Below 1 V
Y1-2 (SFL+) - Body ground	Ignition switch on	Below 1 V

(f) Check for open in the circuit.
  (1) Turn the ignition switch off.
  (2) Disconnect the negative (-) terminal cable from the battery, and wait for at least 90 seconds.
  (3) Measure the resistance.
  Standard resistance

Tester Connection	Condition	Specified Condition
Y1-1 (SFL-) - Y1-2 (SFL+)	Always	Below 1 Ω

(g) Check for short to ground in the circuit.
  (1) Measure the resistance.
  Standard resistance

Tester Connection	Condition	Specified Condition
Y1-1 (SFL-) - Body ground	Always	1 MΩ or higher
Y1-2 (SFL+) Body ground	Always	1 MΩ or higher

(h) Check for short in the circuit.
  (1) Release the activation prevention mechanism built into connector B (See page RS-31).
  (2) Measure the resistance.
  Standard resistance

Tester Connection	Condition	Specified Condition
Y1-1 (SFL-) - Y1-2 (SFL+)	Always	1 MΩ or higher

NG → **REPAIR OR REPLACE FLOOR WIRE**

OK

4	CHECK CENTER AIRBAG SENSOR ASSEMBLY

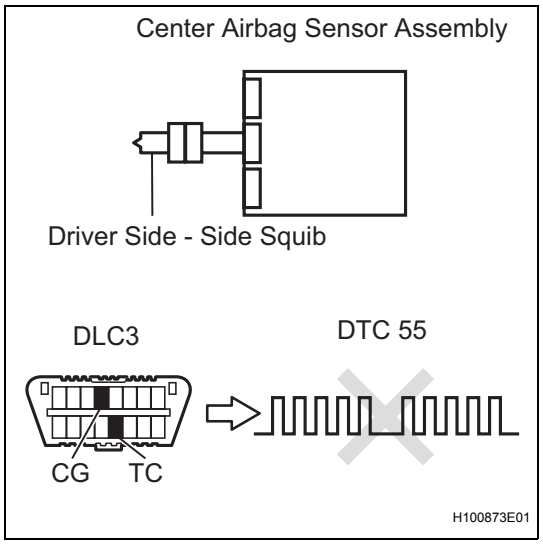

(a) Connect the connectors to the front seat side airbag assembly LH and the center airbag sensor assembly.
(b) Connect the negative (-) terminal cable to the battery, and wait for at least 2 seconds.
(c) Turn the ignition switch on, and wait for at least 60 seconds.
(d) Clear the DTCs stored in the memory (See page RS-38).
(e) Turn the ignition switch off.
(f) Turn the ignition switch on, and wait for at least 60 seconds.
(g) Check the DTCs (See page RS-38).
OK:
DTC B1820, B1821, B1822, B1823 and 55 are not output.
HINT:
DTCs other than DTC B1820, B1821, B1822, B1823 and 55 may be output at this time, but they are not related to this check.

NG → **REPLACE CENTER AIRBAG SENSOR ASSEMBLY**

OK

USE SIMULATION METHOD TO CHECK

RS

RS

DTC	B1825/56	Short in Front Passenger Side - Side Squib Circuit

DTC	B1826/56	Open in Front Passenger Side - Side Squib Circuit

DTC	B1827/56	Short to GND in Front Passenger Side - Side Squib Circuit

DTC	B1828/56	Short to B+ in Front Passenger Side - Side Squib Circuit

DESCRIPTION

The front passenger side - side squib circuit consists of the center airbag sensor assembly and the front seat side airbag assembly RH.
The circuit signals the SRS to deploy when deployment conditions are met.
These DTCs are recorded when a malfunction is detected in the front passenger side - side squib circuit.

DTC No.	DTC Detection Condition	Trouble Area
B1825/56	• Center airbag sensor assembly detects line short circuit signal in front passenger side - side squib circuit 5 times during primary check. • Front passenger side - side squib malfunction • Center airbag sensor assembly malfunction	• Floor wire • Front seat side airbag assembly RH (Front passenger side - side squib) • Center airbag sensor assembly
B1826/56	• Center airbag sensor assembly detects open circuit signal in front passenger side - side squib circuit for 2 seconds. • Front passenger side - side squib malfunction • Center airbag sensor assembly malfunction	• Floor wire • Front seat side airbag assembly RH (Front passenger side - side squib) • Center airbag sensor assembly
B1827/56	• Center airbag sensor assembly detects short circuit to ground signal in front passenger side - side squib circuit for 0.5 seconds. • Front passenger side - side squib malfunction • Center airbag sensor assembly malfunction	• Floor wire • Front seat side airbag assembly RH (Front passenger side - side squib) • Center airbag sensor assembly
B1828/56	• Center airbag sensor assembly detects short circuit to B+ signal in front passenger side - side squib circuit for 0.5 seconds. • Front passenger side - side squib malfunction • Center airbag sensor assembly malfunction	• Floor wire • Front seat side airbag assembly RH (Front passenger side - side squib) • Center airbag sensor assembly

RS

WIRING DIAGRAM

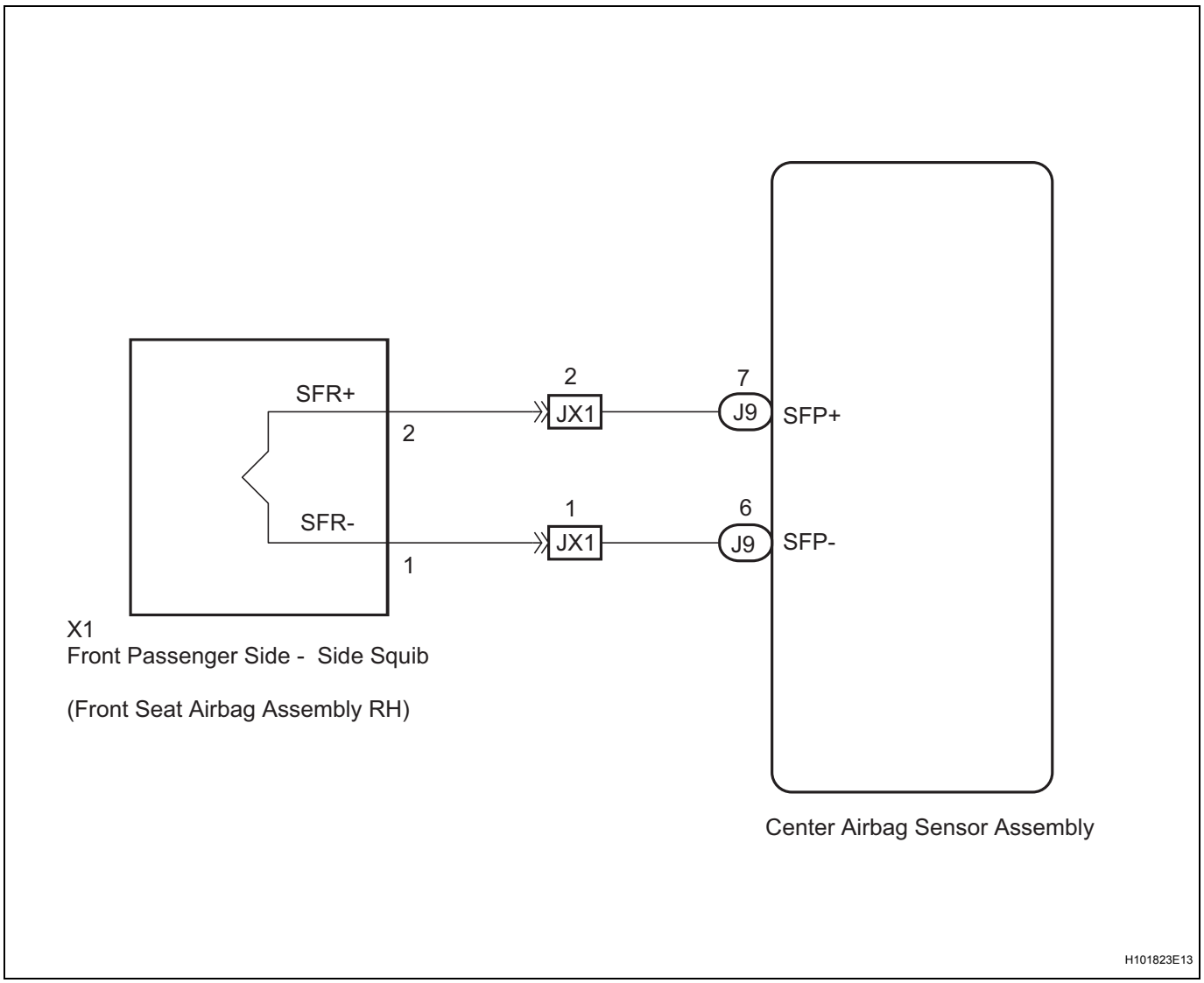

INSPECTION PROCEDURE

HINT:

- Perform the simulation method by selecting CHECK MODE (signal check) with the intelligent tester (See page RS-41).
- After selecting CHECK MODE (signal check), perform the simulation method by wiggling each connector of the airbag system or driving the vehicle on a city or rough road (See page RS-31).

1	**CHECK FRONT SEAT SIDE AIRBAG ASSEMBLY RH (FRONT PASSENGER SIDE - SIDE SQUIB)**

SST 09843-18060

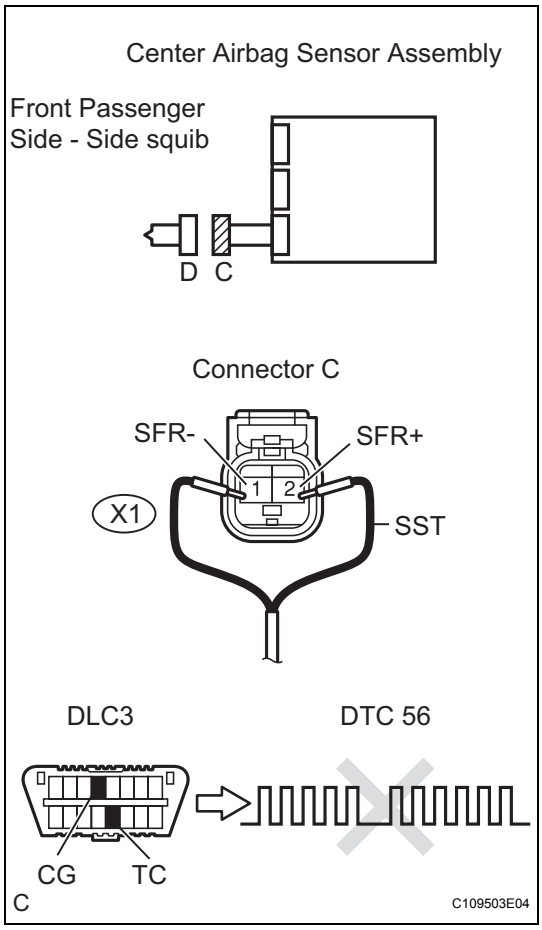

(a) Turn the ignition switch off.
(b) Disconnect the negative (-) terminal cable from the battery, and wait for at least 90 seconds.
(c) Disconnect the connector from the front seat side airbag assembly RH.
(d) Connect the black wire side of SST (resistance 2.1 Ω) to connector C.
CAUTION:
Never connect a tester to the front seat side airbag assembly RH (front passenger side - side squib) for measurement, as this may lead to a serious injury due to airbag deployment.
NOTICE:
- **Do not forcibly insert the SST into the terminals of the connector when connecting.**
- **Insert the SST straight into the terminals of the connector.**

(e) Connect the negative (-) terminal cable to the battery, and wait for at least 2 seconds.
(f) Turn the ignition switch on, and wait for at least 60 seconds.
(g) Clear the DTCs stored in the memory (See page RS-38).
(h) Turn the ignition switch off.
(i) Turn the ignition switch on, and wait for at least 60 seconds.
(j) Check the DTCs (See page RS-38).
OK:
DTC B1825, B1826, B1827, B1828 and 56 are not output.
HINT:
DTCs other than DTC B1825, B1826, B1827, B1828 and 56 may be output at this time, but they are not related to this check.

OK → **REPLACE FRONT SEAT ASSEMBLY RH**

NG

2	CHECK CONNECTOR

(a) Turn the ignition switch off.
(b) Disconnect the negative (-) terminal cable from the battery, and wait for at least 90 seconds.
(c) Disconnect the SST from connector C.
(d) Check that the floor wire connectors (on the front seat side airbag assembly RH side) are not damaged.
OK:
The lock button is not disengaged, and the claw of the lock is not deformed or damaged.

NG → **REPAIR OR REPLACE FLOOR WIRE**

OK

RS

3	CHECK FLOOR WIRE (FRONT PASSENGER SIDE - SIDE SQUIB CIRCUIT)

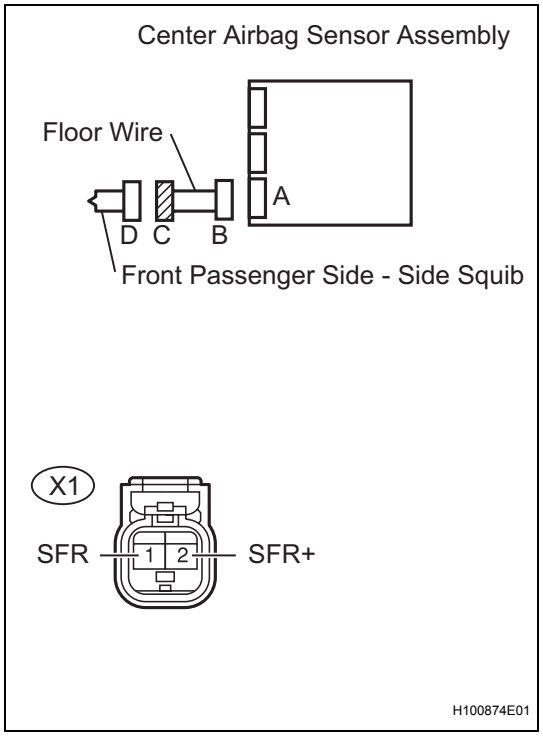

(a) Turn the ignition switch off.
(b) Disconnect the negative (-) terminal cable from the battery, and wait for at least 90 seconds.
(c) Disconnect the SST from connector C.
(d) Disconnect the connectors from the center airbag sensor assembly.
(e) Check for short to B+ in the circuit.
  (1) Connect the negative (-) terminal cable to the battery, and wait for at least 2 seconds.
  (2) Turn the ignition switch on.
  (3) Measure the voltage.
  Standard voltage

Tester Connection	Condition	Specified Condition
X1-1 (SFR-) - Body ground	Ignition switch on	Below 1 V
X1-2 (SFR+) - Body ground	Ignition switch on	Below 1 V

(f) Check for open in the circuit.
  (1) Turn the ignition switch off.
  (2) Disconnect the negative (-) terminal cable from the battery, and wait for at least 90 seconds.
  (3) Measure the resistance.
  Standard resistance

Tester Connection	Condition	Specified Condition
X1-1 (SFR-) - X1-2 (SFR+)	Always	Below 1 Ω

(g) Check for short to ground in the circuit.
  (1) Measure the resistance.
  Standard resistance

Tester Connection	Condition	Specified Condition
X1-1 (SFR-) - Body ground	Always	1 MΩ or higher
X1-2 (SFR+) Body ground	Always	1 MΩ or higher

(h) Check for short in the circuit.
  (1) Release the activation prevention mechanism built into connector B (See page RS-31).
  (2) Measure the resistance.
  Standard resistance

Tester Connection	Condition	Specified Condition
X1-1 (SFR-) - X1-2 (SFR+)	Always	1 MΩ or higher

NG → **REPAIR OR REPLACE FLOOR WIRE**

OK

RS

4	CHECK CENTER AIRBAG SENSOR ASSEMBLY

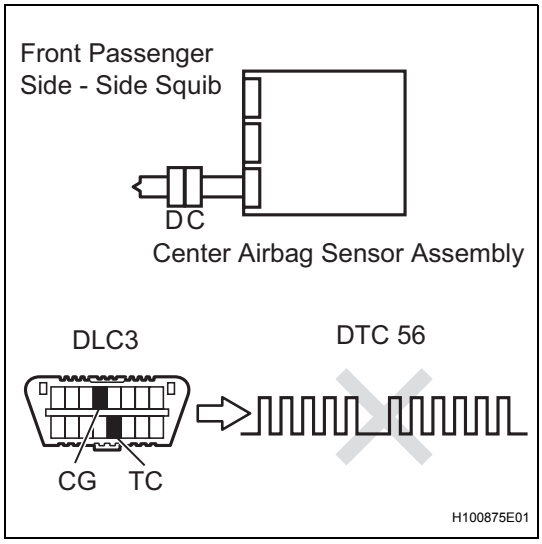

(a) Connect the connectors to the front seat side airbag assembly RH and the center airbag sensor assembly.
(b) Connect the negative (-) terminal cable to the battery, and wait for at least 2 seconds.
(c) Turn the ignition switch on, and wait for at least 60 seconds.
(d) Clear the DTCs stored in the memory (See page RS-38).
(e) Turn the ignition switch off.
(f) Turn the ignition switch on, and wait for at least 60 seconds.
(g) Check the DTCs (See page RS-38).
OK:
DTC B1825, B1826, B1827, B1828 and 56 are not output.
HINT:
DTCs other than DTC B1825, B1826, B1827, B1828 and 56 may be output at this time, but they are not related to this check.

NG → **REPLACE CENTER AIRBAG SENSOR ASSEMBLY**

OK

USE SIMULATION METHOD TO CHECK

DTC	B1830/57	Short in Driver Side Curtain Shield Squib Circuit

DTC	B1831/57	Open in Driver Side Curtain Shield Squib Circuit

DTC	B1832/57	Short to GND in Driver Side Curtain Shield Squib Circuit

DTC	B1833/57	Short to B+ in Driver Side Curtain Shield Squib Circuit

DESCRIPTION

The driver side curtain shield squib circuit consists of the center airbag sensor assembly and the curtain shield airbag assembly LH.
The circuit signals the SRS to deploy when deployment conditions are met.
These DTCs are recorded when a malfunction is detected in the driver side curtain shield squib circuit.

DTC No.	DTC Detection Condition	Trouble Area
B1830/57	• Center airbag sensor assembly detects line short circuit signal in driver side curtain shield squib circuit 5 times during primary check. • Driver side curtain shield squib malfunction • Center airbag sensor assembly malfunction	• Floor wire • Curtain shield airbag assembly LH (Driver side curtain shield squib) • Center airbag sensor assembly
B1831/57	• Center airbag sensor assembly detects open circuit signal in driver side curtain shield squib circuit for 2 seconds. • Driver side curtain shield squib malfunction • Center airbag sensor assembly malfunction	• Floor wire • Curtain shield airbag assembly LH (Driver side curtain shield squib) • Center airbag sensor assembly
B1832/57	• Center airbag sensor assembly detects short circuit to ground signal in driver side curtain shield squib circuit for 0.5 seconds. • Driver side curtain shield squib malfunction • Center airbag sensor assembly malfunction	• Floor wire • Curtain shield airbag assembly LH (Driver side curtain shield squib) • Center airbag sensor assembly
B1833/57	• Center airbag sensor assembly detects short circuit to B+ signal in driver side curtain shield squib circuit for 0.5 seconds. • Driver side curtain shield squib malfunction • Center airbag sensor assembly malfunction	• Floor wire • Curtain shield airbag assembly LH (Driver side curtain shield squib) • Center airbag sensor assembly

RS

WIRING DIAGRAM

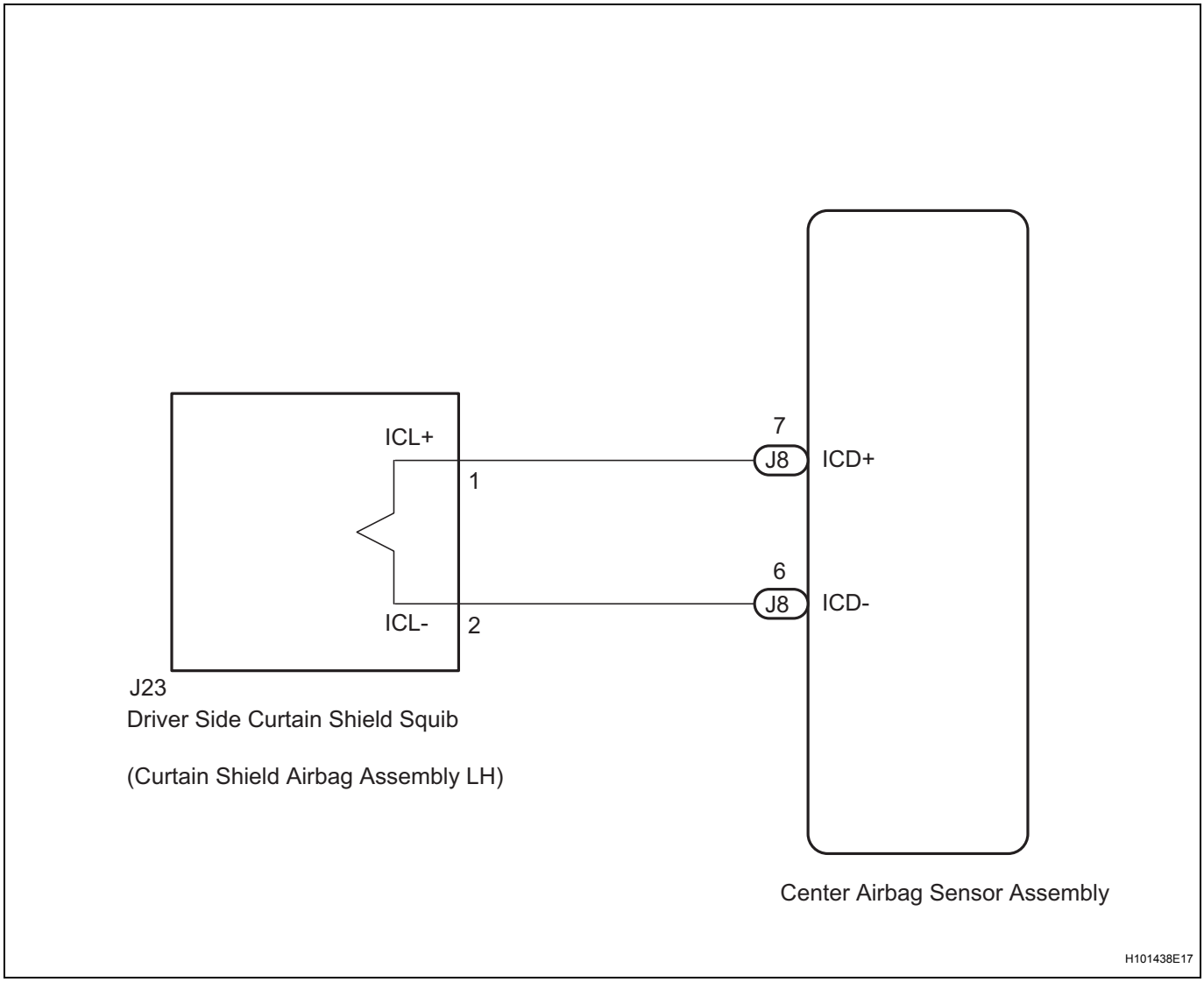

INSPECTION PROCEDURE

HINT:

- Perform the simulation method by selecting CHECK MODE (signal check) with the intelligent tester (See page RS-41).
- After selecting CHECK MODE (signal check), perform the simulation method by wiggling each connector of the airbag system or driving the vehicle on a city or rough road (See page RS-31).

RS

1	CHECK CURTAIN SHIELD AIRBAG ASSEMBLY LH (DRIVER SIDE CURTAIN SHIELD SQUIB)

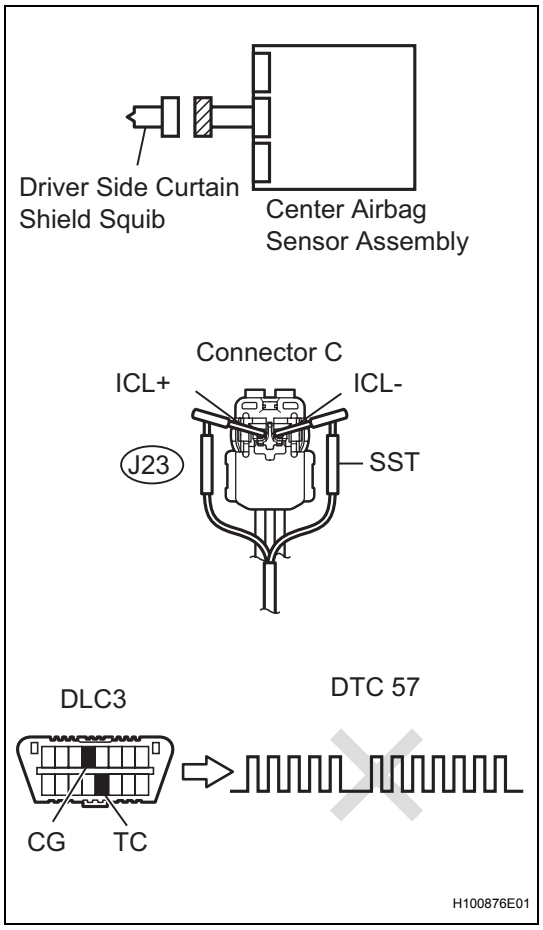

SST 09843-18060

(a) Turn the ignition switch off.
(b) Disconnect the negative (-) terminal cable from the battery, and wait for at least 90 seconds.
(c) Disconnect the connectors from the curtain shield airbag assembly LH.
(d) Connect the white wire side of SST (resistance 2.1 Ω) to connector C.
CAUTION:
Never connect a tester to the curtain shield airbag assembly LH (driver side curtain shield squib) for measurement, as this may lead to a serious injury due to airbag deployment.
NOTICE:
- **Do not forcibly insert the SST into the terminals of the connector when connecting.**
- **Insert the SST straight into the terminals of the connector.**

(e) Connect the negative (-) terminal cable to the battery, and wait for at least 2 seconds.
(f) Turn the ignition switch on, and wait for at least 60 seconds.
(g) Clear the DTCs stored in the memory (See page RS-38).
(h) Turn the ignition switch off.
(i) Turn the ignition switch on, and wait for at least 60 seconds.
(j) Check the DTCs (See page RS-38).
OK:
DTC B1830, B1831, B1832, B1833 and 57 are not output.
HINT:
DTCs other than DTC B1830, B1831, B1832, B1833 and 57 may be output at this time, but they are not related to this check.

OK → **REPLACE CURTAIN SHIELD AIRBAG ASSEMBLY LH**

NG

2	CHECK CONNECTOR

(a) Turn the ignition switch off.
(b) Disconnect the negative (-) terminal cable from the battery, and wait for at least 90 seconds.
(c) Disconnect the SST from connector C.
(d) Check that the floor wire connectors (on the curtain shield airbag assembly LH side) are not damaged.

OK:
The lock button is not disengaged, and the claw of the lock is not deformed or damaged.

NG → **REPAIR OR REPLACE FLOOR WIRE**

RS

OK

3 CHECK FLOOR WIRE (DRIVER SIDE CURTAIN SHIELD SQUIB CIRCUIT)

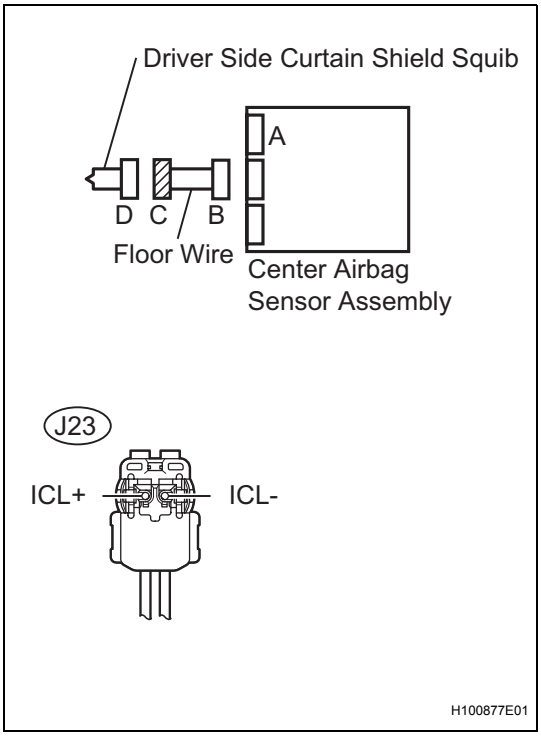

(a) Disconnect the connectors from the center airbag sensor assembly.

(b) Check for short to B+ in the circuit.
  (1) Connect the negative (-) terminal cable to the battery, and wait for at least 2 seconds.
  (2) Turn the ignition switch on.
  (3) Measure the voltage.
  Standard voltage

Tester Connection	Condition	Specified Condition
J23-1 (ICL+) - Body ground	Ignition switch on	Below 1 V
J23-2 (ICL-) - Body ground	Ignition switch on	Below 1 V

(c) Check for open in the circuit.
  (1) Turn the ignition switch off.
  (2) Disconnect the negative (-) terminal cable from the battery, and wait for at least 90 seconds.
  (3) Measure the resistance.
  Standard resistance

Tester Connection	Condition	Specified Condition
J23-1 (ICL+) - J23-2 (ICL-)	Always	Below 1 Ω

(d) Check for short to ground in the circuit.
  (1) Measure the resistance.
  Standard resistance

Tester Connection	Condition	Specified Condition
J23-1 (ICL+) - Body ground	Always	1 MΩ or higher
J23-2 (ICL-) Body ground	Always	1 MΩ or higher

(e) Check for short in the circuit.
  (1) Release the activation prevention mechanism built into connector B (See page RS-31).
  (2) Measure the resistance.
  Standard resistance

Tester Connection	Condition	Specified Condition
J23-1 (ICL+) - J23-2 (ICL-)	Always	1 MΩ or higher

NG → **REPAIR OR REPLACE FLOOR WIRE**

OK

4	CHECK CENTER AIRBAG SENSOR ASSEMBLY

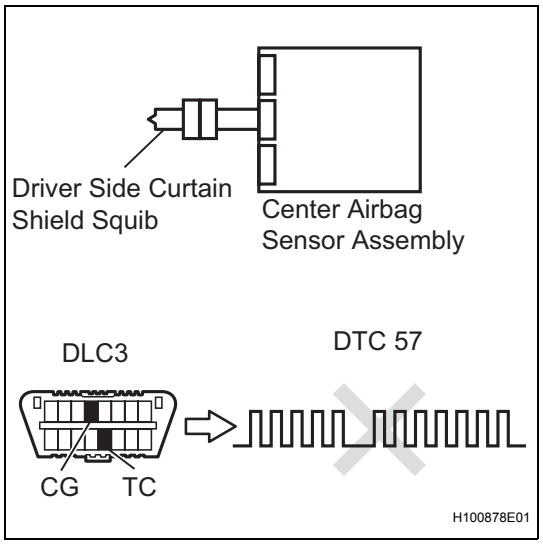

(a) Connect the connectors to the curtain shield airbag assembly LH and the center airbag sensor assembly.
(b) Connect the negative (-) terminal cable to the battery, and wait for at least 2 seconds.
(c) Turn the ignition switch on, and wait for at least 60 seconds.
(d) Clear the DTCs stored in the memory (See page RS-38).
(e) Turn the ignition switch off.
(f) Turn the ignition switch on, and wait for at least 60 seconds.
(g) Check the DTCs (See page RS-38).
OK:
DTC B1830, B1831, B1832, B1833 and 57 are not output.
HINT:
DTCs other than DTC B1830, B1831, B1832, B1833 and 57 may be output at this time, but they are not related to this check.

NG → **REPLACE CENTER AIRBAG SENSOR ASSEMBLY**

OK

USE SIMULATION METHOD TO CHECK

RS

RS

DTC	B1835/58	Short in Front Passenger Side Curtain Shield Squib Circuit

DTC	B1836/58	Open in Front Passenger Side Curtain Shield Squib Circuit

DTC	B1837/58	Short to GND in Front Passenger Side Curtain Shield Squib Circuit

DTC	B1838/58	Short to B+ in Front Passenger Side Curtain Shield Squib Circuit

DESCRIPTION

The front passenger side curtain shield squib circuit consists of the center airbag sensor assembly and the curtain shield airbag assembly RH.
The circuit signals the SRS to deploy when deployment conditions are met.
These DTCs are recorded when a malfunction is detected in the front passenger side curtain shield squib circuit.

DTC No.	DTC Detection Condition	Trouble Area
B1835/58	• Center airbag sensor assembly detects line short circuit signal in front passenger side curtain shield squib circuit 5 times during primary check. • Front passenger side curtain shield squib malfunction • Center airbag sensor assembly malfunction	• Floor wire • Curtain shield airbag assembly RH (Front passenger side curtain shield squib) • Center airbag sensor assembly
B1836/58	• Center airbag sensor assembly detects open circuit signal in front passenger side curtain shield squib circuit for 2 seconds. • Front passenger side curtain shield squib malfunction • Center airbag sensor assembly malfunction	• Floor wire • Curtain shield airbag assembly RH (Front passenger side curtain shield squib) • Center airbag sensor assembly
B1837/58	• Center airbag sensor assembly detects short circuit to ground signal in front passenger side curtain shield squib circuit for 0.5 seconds. • Front passenger side curtain shield squib malfunction • Center airbag sensor assembly malfunction	• Floor wire • Curtain shield airbag assembly RH (Front passenger side curtain shield squib) • Center airbag sensor assembly
B1838/58	• Center airbag sensor assembly detects short circuit to B+ signal in front passenger side curtain shield squib circuit for 0.5 seconds. • Front passenger side curtain shield squib malfunction • Center airbag sensor assembly malfunction	• Floor wire • Curtain shield airbag assembly RH (Front passenger side curtain shield squib) • Center airbag sensor assembly

RS

WIRING DIAGRAM

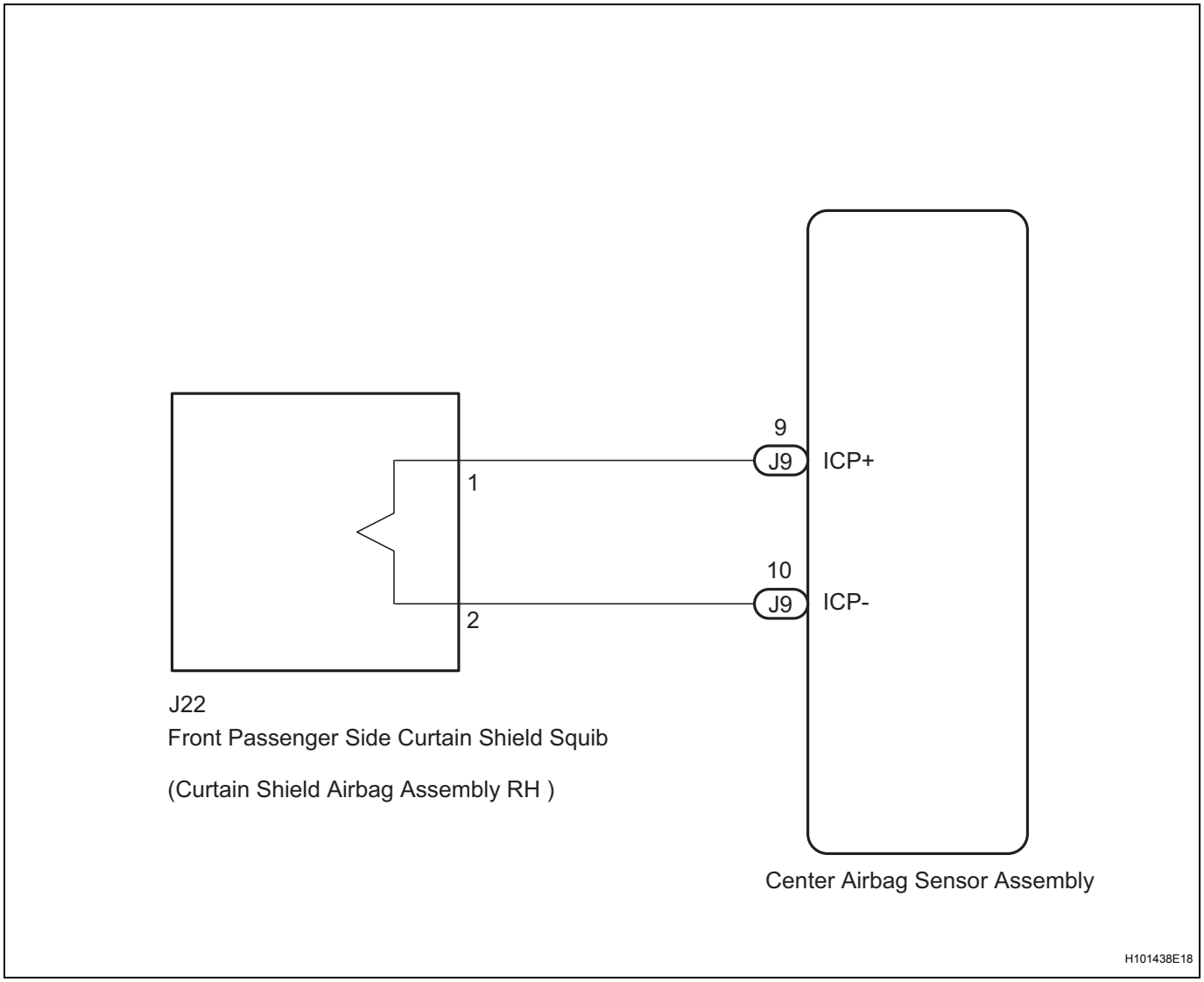

INSPECTION PROCEDURE

HINT:

- Perform the simulation method by selecting CHECK MODE (signal check) with the intelligent tester (See page RS-41).
- After selecting CHECK MODE (signal check), perform the simulation method by wiggling each connector of the airbag system or driving the vehicle on a city or rough road (See page RS-31).

RS

1	CHECK CURTAIN SHIELD AIRBAG ASSEMBLY RH (FRONT PASSENGER SIDE CURTAIN SHIELD SQUIB)

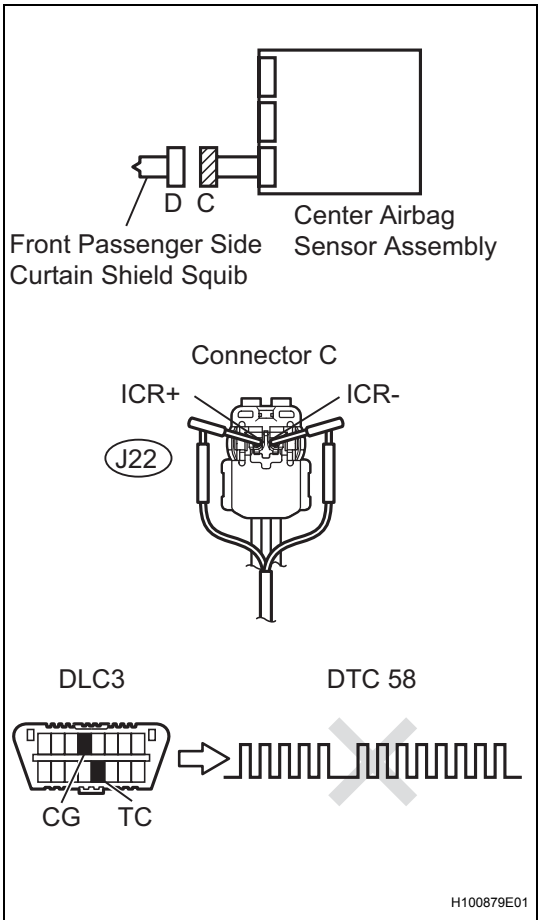

SST 09843-18060

(a) Turn the ignition switch off.
(b) Disconnect the negative (-) terminal cable from the battery, and wait for at least 90 seconds.
(c) Disconnect the connector from the curtain shield airbag assembly RH.
(d) Connect the white wire side of SST (resistance 2.1 Ω) to connector C.
CAUTION:
Never connect a tester to the curtain shield airbag assembly RH (front passenger side curtain shield squib) for measurement, as this may lead to a serious injury due to airbag deployment.
NOTICE:
- **Do not forcibly insert the SST into the terminals of the connector when connecting.**
- **Insert the SST straight into the terminals of the connector.**

(e) Connect the negative (-) terminal cable to the battery, and wait for at least 2 seconds.
(f) Turn the ignition switch on, and wait for at least 60 seconds.
(g) Clear the DTCs stored in the memory (See page RS-38).
(h) Turn the ignition switch off.
(i) Turn the ignition switch on, and wait for at least 60 seconds.
(j) Check the DTCs (See page RS-38).
OK:
DTC B1835, B1836, B1837, B1838 and 58 are not output.
HINT:
DTCs other than DTC B1835, B1836, B1837, B1838 and 58 may be output at this time, but they are not related to this check.

OK → **REPLACE CURTAIN SHIELD AIRBAG ASSEMBLY RH**

NG

2	CHECK CONNECTOR

(a) Turn the ignition switch off.
(b) Disconnect the negative (-) terminal cable from the battery, and wait for at least 90 seconds.
(c) Disconnect the SST from connector C.
(d) Check that the floor wire connector (on the curtain shield assembly RH side) is not damaged.

OK:
The lock button is not disengaged, and the claw of the lock is not deformed or damaged.

NG → **REPAIR OR REPLACE FLOOR WIRE**

OK

RS

3 CHECK FLOOR WIRE (FRONT PASSENGER SIDE CURTAIN SHIELD SQUIB CIRCUIT)

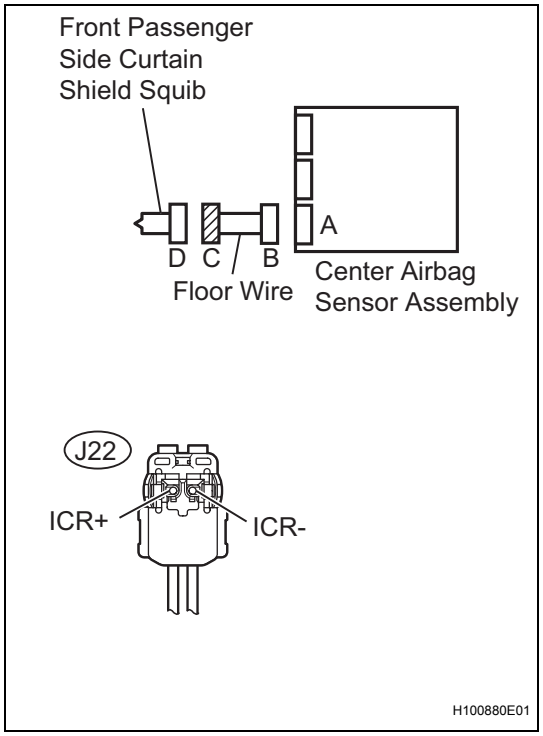

(a) Disconnect the connectors from the center airbag sensor assembly.

(b) Check for short to B+ in the circuit.
  (1) Connect the negative (-) terminal cable to the battery, and wait for at least 2 seconds.
  (2) Turn the ignition switch on.
  (3) Measure the voltage.
  Standard voltage

Tester Connection	Condition	Specified Condition
J22-1 (ICR+) - Body ground	Ignition switch on	Below 1 V
J22-2 (ICR-) - Body ground	Ignition switch on	Below 1 V

(c) Check for open in the circuit.
  (1) Turn the ignition switch off.
  (2) Disconnect the negative (-) terminal cable from the battery, and wait for at least 90 seconds.
  (3) Measure the resistance.
  Standard resistance

Tester Connection	Condition	Specified Condition
J22-1 (ICR+) - J22-2 (ICR-)	Always	Below 1 Ω

(d) Check for short to ground in the circuit.
  (1) Measure the resistance.
  Standard resistance

Tester Connection	Condition	Specified Condition
J22-1 (ICR+) - Body ground	Always	1 MΩ or higher
J22-2 (ICR-) Body ground	Always	1 MΩ or higher

(e) Check for short in the circuit.
  (1) Release the activation prevention mechanism built into connector B (See page RS-31).
  (2) Measure the resistance.
  Standard resistance

Tester Connection	Condition	Specified Condition
J22-1 (ICR+) - J22-2 (ICR-)	Always	1 MΩ or higher

NG → **REPAIR OR REPLACE FLOOR WIRE**

OK

4	CHECK CENTER AIRBAG SENSOR ASSEMBLY

RS

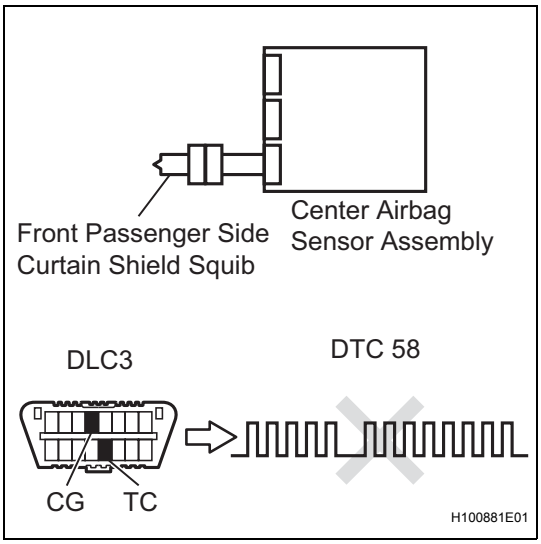

(a) Connect the connectors to the curtain shield airbag assembly RH and the center airbag sensor assembly.
(b) Connect the negative (-) terminal cable to the battery, and wait for at least 2 seconds.
(c) Turn the ignition switch on, and wait for at least 60 seconds.
(d) Clear the DTCs stored in the memory (See page RS-38).
(e) Turn the ignition switch off.
(f) Turn the ignition switch on, and wait for at least 60 seconds.
(g) Check the DTCs (See page RS-38).
OK:
DTC B1835, B1836, B1837, B1838 and 58 are not output.
HINT:
DTCs other than DTC B1835, B1836, B1837, B1838 and 58 may be output at this time, but they are not related to this check.

NG → **REPLACE CENTER AIRBAG SENSOR ASSEMBLY**

OK

USE SIMULATION METHOD TO CHECK

DTC	B1900/73	Short in Front Driver Side Pretensioner Squib Circuit

DTC	B1901/73	Open in Front Driver Side Pretensioner Squib Circuit

DTC	B1902/73	Short to GND in Front Driver Side Pretensioner Squib Circuit

DTC	B1903/73	Short to B+ in Front Driver Side Pretensioner Squib Circuit

DESCRIPTION

The driver side front pretensioner squib circuit consists of the center airbag sensor assembly and the front seat outer belt assembly LH.
This circuit signals the SRS to deploy when deployment conditions are met.
These DTCs are recorded when a malfunction is detected in the driver side front pretensioner squib circuit.

DTC No.	DTC Detection Condition	Trouble Area
B1900/73	• Center airbag sensor assembly detects line short circuit signal in driver side front pretensioner squib circuit 5 times during primary check. • Driver side front pretensioner squib malfunction • Center airbag sensor assembly malfunction	• Floor wire • Front seat outer belt assembly LH (Driver side front pretensioner squib) • Center airbag sensor assembly
B1901/73	• Center airbag sensor assembly detects open circuit signal in driver side front pretensioner squib circuit for 2 seconds. • Driver side front pretensioner squib malfunction • Center airbag sensor assembly malfunction	• Floor wire • Front seat outer belt assembly LH (Driver side front pretensioner squib) • Center airbag sensor assembly
B1902/73	• Center airbag sensor assembly detects short circuit to ground signal in driver side front pretensioner squib circuit for 0.5 seconds. • Driver side front pretensioner squib malfunction • Center airbag sensor assembly malfunction	• Floor wire • Front seat outer belt assembly LH (Driver side front pretensioner squib) • Center airbag sensor assembly
B1903/73	• Center airbag sensor assembly detects short circuit to B+ signal in driver side front pretensioner squib circuit for 0.5 seconds. • Driver side front pretensioner squib malfunction • Center airbag sensor assembly malfunction	• Floor wire • Front seat outer belt assembly LH (Driver side front pretensioner squib) • Center airbag sensor assembly

RS

WIRING DIAGRAM

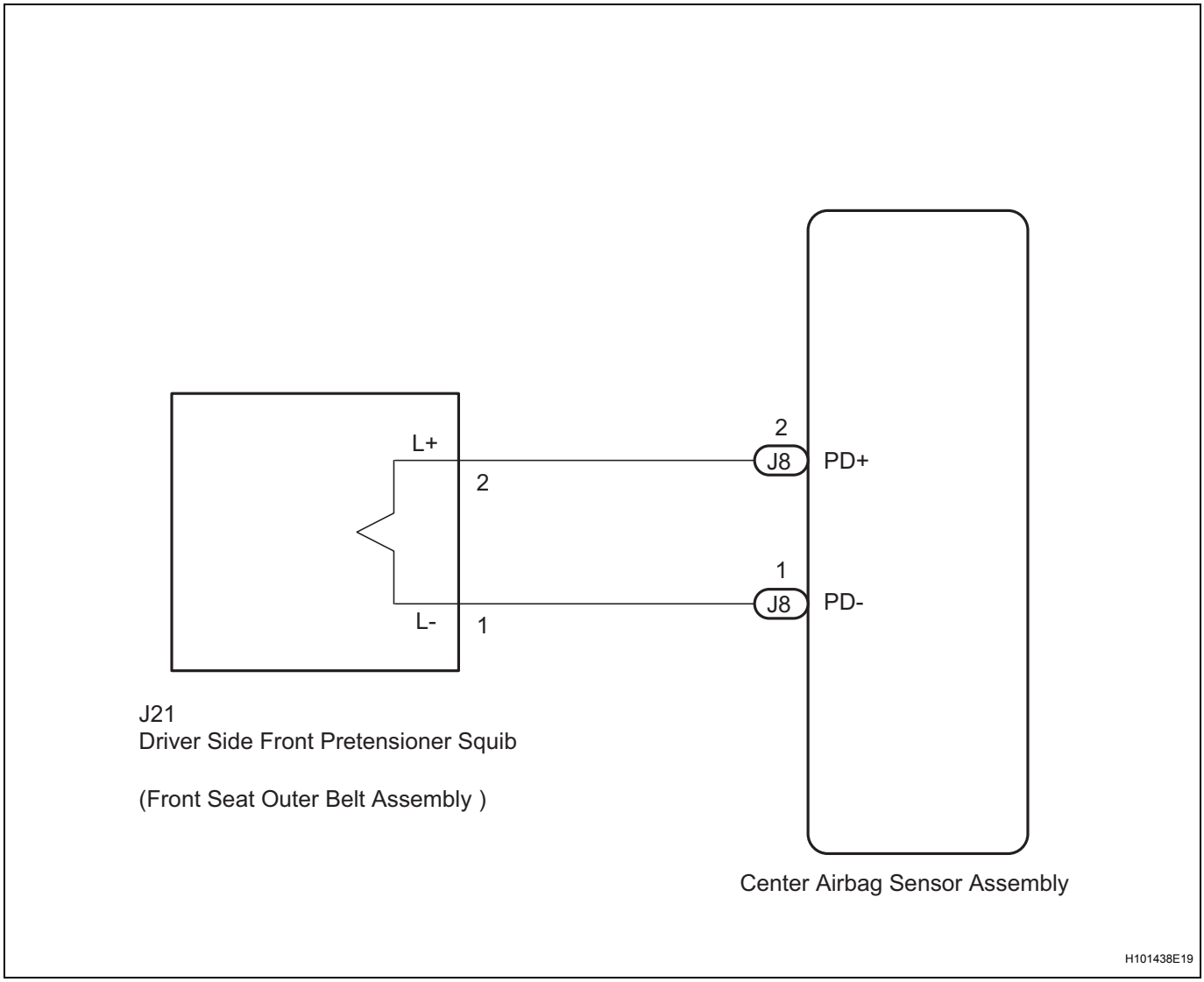

INSPECTION PROCEDURE

HINT:

- Perform the simulation method by selecting CHECK MODE (signal check) with the intelligent tester (See page RS-41).
- After selecting CHECK MODE (signal check), perform the simulation method by wiggling each connector of the airbag system or driving the vehicle on a city or rough road (See page RS-31).

RS

1	CHECK FRONT SEAT OUTER BELT ASSEMBLY LH (DRIVER SIDE FRONT PRETENSIONER SQUIB)

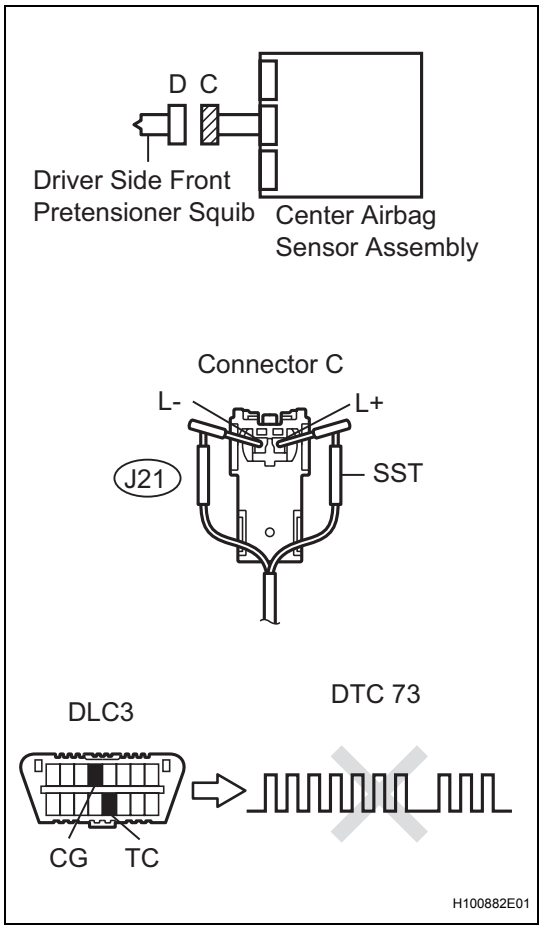

SST 09843-18060

(a) Turn the ignition switch off.
(b) Disconnect the negative (-) terminal cable from the battery, and wait for at least 90 seconds.
(c) Disconnect the connectors from the front seat outer belt assembly LH.
(d) Connect the white wire side of SST (resistance 2.1 Ω) to connector C.
CAUTION:
Never connect a tester to the front seat outer belt assembly LH (driver side front pretensioner squib) for measurement, as this may lead to a serious injury due to airbag deployment.
NOTICE:
- **Do not forcibly insert the SST into the terminals of the connector when connecting.**
- **Insert the SST straight into the terminals of the connector.**

(e) Connect the negative (-) terminal cable to the battery, and wait for at least 2 seconds.
(f) Turn the ignition switch on, and wait for at least 60 seconds.
(g) Clear the DTCs stored in the memory (See page RS-38).
(h) Turn the ignition switch off.
(i) Turn the ignition switch on, and wait for at least 60 seconds.
(j) Check the DTCs (See page RS-38).
OK:
DTC B1900, B1901, B1902, B1903 and 73 are not output.
HINT:
DTCs other than DTC B1900, B1901, B1902, B1903 and 73 may be output at this time, but they are not related to this check.

OK → **REPLACE FRONT SEAT OUTER BELT ASSEMBLY LH**

NG

2	CHECK CONNECTOR

(a) Turn the ignition switch off.
(b) Disconnect the negative (-) terminal cable from the battery, and wait for at least 90 seconds.
(c) Disconnect the SST from connector C.
(d) Check that the floor wire connector (on the front seat outer belt assembly LH side) is not damaged.

OK:
The lock button is not disengaged, and the claw of the lock is not deformed or damaged.

NG → **REPAIR OR REPLACE FLOOR WIRE**

RS

OK

3 CHECK FLOOR WIRE (DRIVER SIDE FRONT PRETENSIONER SQUIB CIRCUIT)

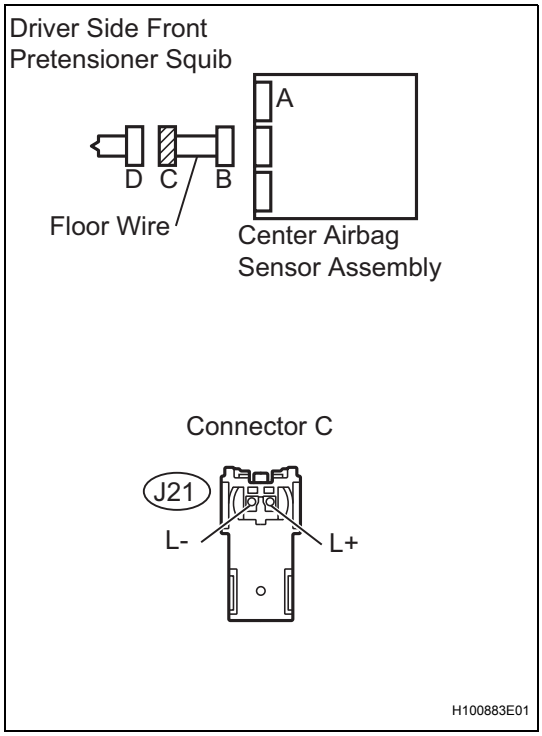

(a) Disconnect the connectors from the center airbag sensor assembly.

(b) Check for short to B+ in the circuit.
  (1) Connect the negative (-) terminal cable to the battery, and wait for at least 2 seconds.
  (2) Turn the ignition switch on.
  (3) Measure the voltage.
  Standard voltage

Tester Connection	Condition	Specified Condition
J21-1 (L-) - Body ground	Ignition switch on	Below 1 V
J21-2 (L+) - Body ground	Ignition switch on	Below 1 V

(c) Check for open in the circuit.
  (1) Turn the ignition switch off.
  (2) Disconnect the negative (-) terminal cable from the battery, and wait for at least 90 seconds.
  (3) Measure the resistance.
  Standard resistance

Tester Connection	Condition	Specified Condition
J21-1 (L-) - J21-2 (L+)	Always	Below 1 Ω

(d) Check for short to ground in the circuit.
  (1) Measure the resistance.
  Standard resistance

Tester Connection	Condition	Specified Condition
J21-1 (L-) - Body ground	Always	1 MΩ or higher
J21-2 (L+) - Body ground	Always	1 MΩ or higher

(e) Check for short in the circuit.
  (1) Release the activation prevention mechanism built into connector B (See page RS-31).
  (2) Measure the resistance.
  Standard resistance

Tester Connection	Condition	Specified Condition
J21-1 (L-) - J21-2 (L+)	Always	1 MΩ or higher

NG → **REPAIR OR REPLACE FLOOR WIRE**

OK

4	CHECK CENTER AIRBAG SENSOR ASSEMBLY

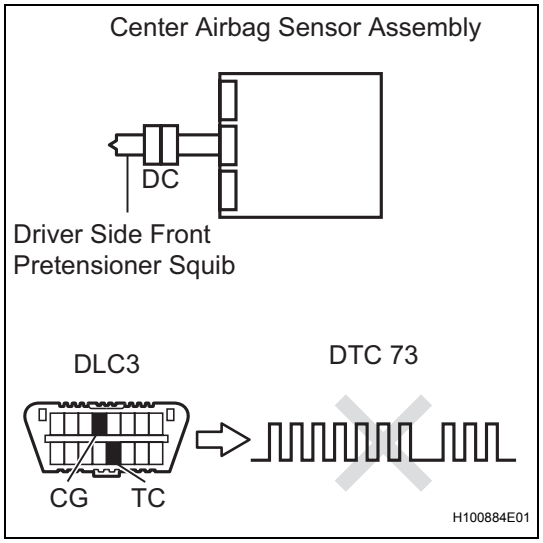

(a) Connect the connectors to the front seat outer belt assembly LH and the center airbag sensor assembly.
(b) Connect the negative (-) terminal cable to the battery, and wait for at least 2 seconds.
(c) Turn the ignition switch on, and wait for at least 60 seconds.
(d) Clear the DTCs stored in the memory (See page RS-38).
(e) Turn the ignition switch off.
(f) Turn the ignition switch on, and wait for at least 60 seconds.
(g) Check the DTCs (See page RS-38).
OK:
DTC B1900, B1901, B1902, B1903 and 73 are not output.
HINT:
DTCs other than DTC B1900, B1901, B1902, B1903 and 73 may be output at this time, but they are not related to this check.

NG → **REPLACE CENTER AIRBAG SENSOR ASSEMBLY**

OK

USE SIMULATION METHOD TO CHECK

RS

RS

DTC	B1905/74	Short in Front Passenger Side Pretensioner Squib Circuit

DTC	B1906/74	Open in Front Passenger Side Pretensioner Squib Circuit

DTC	B1907/74	Short to GND in Front Passenger Side Pretensioner Squib Circuit

DTC	B1908/74	Short to B+ in Front Passenger Side Front Pretensioner Squib Circuit

DESCRIPTION

The front passenger side front pretensioner squib circuit consists of the center airbag sensor assembly and the front seat outer belt assembly RH.
This circuit signals the SRS to deploy when deployment conditions are met.
These DTCs are recorded when a malfunction is detected in the front passenger side front pretensioner squib circuit.

DTC No.	DTC Detection Condition	Trouble Area
B1905/74	• Center airbag sensor assembly detects line short circuit signal in front passenger side front pretensioner squib circuit 5 times during primary check. • Front passenger side front pretensioner squib malfunction • Center airbag sensor assembly malfunction	• Floor wire • Front seat outer belt assembly RH (Front passenger side front pretensioner squib) • Center airbag sensor assembly
B1906/74	• Center airbag sensor assembly detects open circuit signal in front passenger side front pretensioner squib circuit for 2 seconds. • Front passenger side front pretensioner squib malfunction • Center airbag sensor assembly malfunction	• Floor wire • Front seat outer belt assembly RH (Front passenger side front pretensioner squib) • Center airbag sensor assembly
B1907/74	• Center airbag sensor assembly detects short circuit to ground signal in front passenger side front pretensioner squib circuit for 0.5 seconds. • Front passenger side front pretensioner squib malfunction • Center airbag sensor assembly malfunction	• Floor wire • Front seat outer belt assembly RH (Front passenger side front pretensioner squib) • Center airbag sensor assembly
B1908/74	• Center airbag sensor assembly detects short circuit to B+ signal in front passenger side front pretensioner squib circuit for 0.5 seconds. • Front passenger side front pretensioner squib malfunction • Center airbag sensor assembly malfunction	• Floor wire • Front seat outer belt assembly RH (Front passenger side front pretensioner squib) • Center airbag sensor assembly

RS

WIRING DIAGRAM

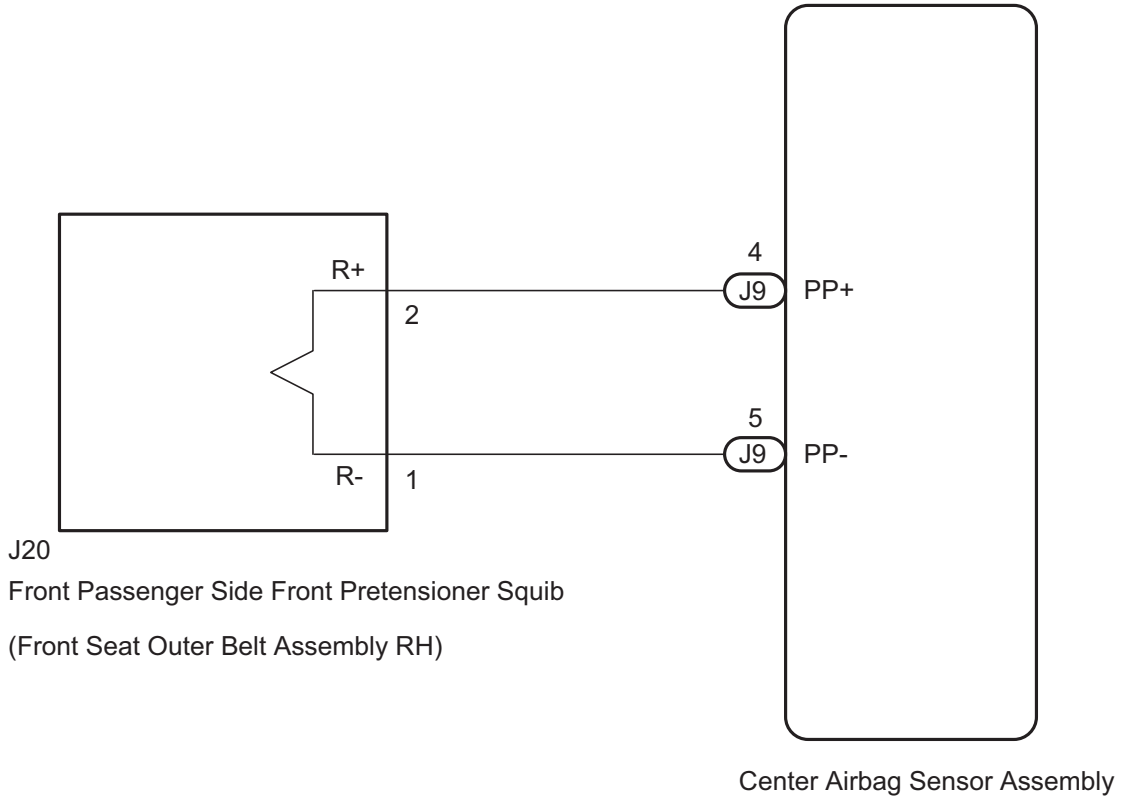

INSPECTION PROCEDURE

HINT:

- Perform the simulation method by selecting CHECK MODE (signal check) with the intelligent tester (See page RS-41).
- After selecting CHECK MODE (signal check), perform the simulation method by wiggling each connector of the airbag system or driving the vehicle on a city or rough road (See page RS-31).

RS

1	CHECK FRONT SEAT OUTER BELT ASSEMBLY RH (FRONT PASSENGER SIDE FRONT PRETENSIONER SQUIB)

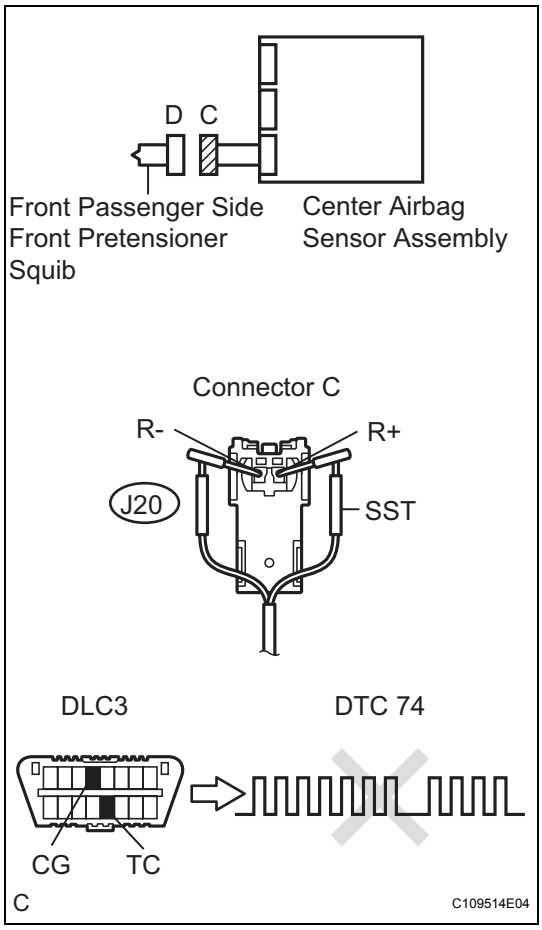

SST 09843-18060

(a) Turn the ignition switch off.

(b) Disconnect the negative (-) terminal cable from the battery, and wait for at least 90 seconds.

(c) Disconnect the connectors from the front seat outer belt assembly RH.

(d) Connect the white wire side of SST (resistance 2.1 Ω) to connector C.

CAUTION:

Never connect a tester to the front seat outer belt assembly RH (front passenger side front pretensioner squib) for measurement, as this may lead to a serious injury due to airbag deployment.

NOTICE:

- **Do not forcibly insert the SST into the terminals of the connector when connecting.**
- **Insert the SST straight into the terminals of the connector.**

(e) Connect the negative (-) terminal cable to the battery, and wait for at least 2 seconds.

(f) Turn the ignition switch on, and wait for at least 60 seconds.

(g) Clear the DTCs stored in the memory (See page RS-38).

(h) Turn the ignition switch off.

(i) Turn the ignition switch on, and wait for at least 60 seconds.

(j) Check the DTCs (See page RS-38).

OK:

DTC B1905, B1906, B1907, B1908 and 74 are not output.

HINT:

DTCs other than DTC B1905, B1906, B1907, B1908 and 74 may be output at this time, but they are not related to this check.

OK → **REPLACE FRONT SEAT OUTER BELT ASSEMBLY RH**

NG

2	CHECK CONNECTOR

(a) Turn the ignition switch off.

(b) Disconnect the negative (-) terminal cable from the battery, and wait for at least 90 seconds.

(c) Disconnect the SST from connector C.

(d) Check that the floor wire connector (on the front seat outer belt assembly RH side) is not damaged.

OK:
The lock button is not disengaged, and the claw of the lock is not deformed or damaged.

NG → **REPAIR OR REPLACE FLOOR WIRE**

OK

RS

3	CHECK FLOOR WIRE (FRONT PASSENGER SIDE FRONT PRETENSIONER SQUIB CIRCUIT)

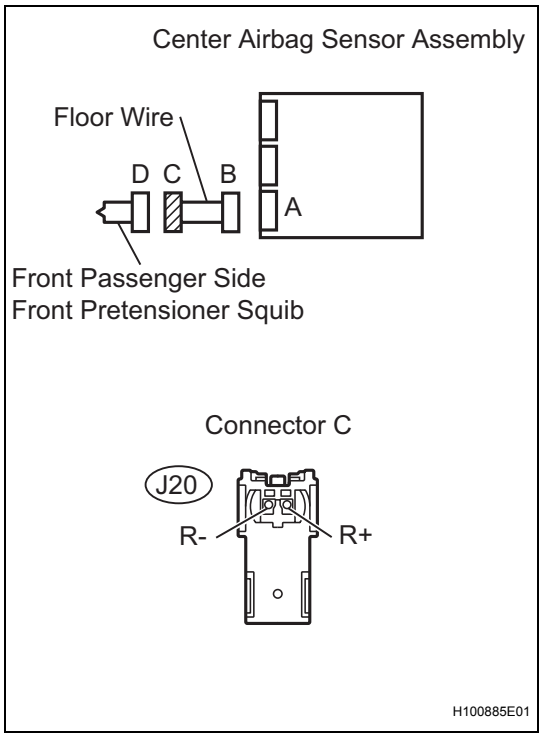

(a) Disconnect the connectors from the center airbag sensor assembly.

(b) Check for short to B+ in the circuit.
  (1) Connect the negative (-) terminal cable to the battery, and wait for at least 2 seconds.
  (2) Turn the ignition switch on.
  (3) Measure the voltage.
  Standard voltage

Tester Connection	Condition	Specified Condition
J20-1 (R-) - Body ground	Ignition switch on	Below 1 V
J20-2 (R+) - Body ground	Ignition switch on	Below 1 V

(c) Check for open in the circuit.
  (1) Turn the ignition switch off.
  (2) Disconnect the negative (-) terminal cable from the battery, and wait for at least 90 seconds.
  (3) Measure the resistance.
  Standard resistance

Tester Connection	Condition	Specified Condition
J20-1 (R-) - J20-2 (R+)	Always	Below 1 Ω

(d) Check for short to ground in the circuit.
  (1) Measure the resistance.
  Standard resistance

Tester Connection	Condition	Specified Condition
J20-1 (R-) - Body ground	Always	1 MΩ or higher
J20-2 (R+) - Body ground	Always	1 MΩ or higher

(e) Check for short in the circuit.
  (1) Release the activation prevention mechanism built into connector B (See page RS-31).
  (2) Measure the resistance.
  Standard resistance

Tester Connection	Condition	Specified Condition
J20-1 (R-) - J20-2 (R+)	Always	1 MΩ or higher

NG → **REPAIR OR REPLACE FLOOR WIRE**

OK

RS

4	CHECK CENTER AIRBAG SENSOR ASSEMBLY

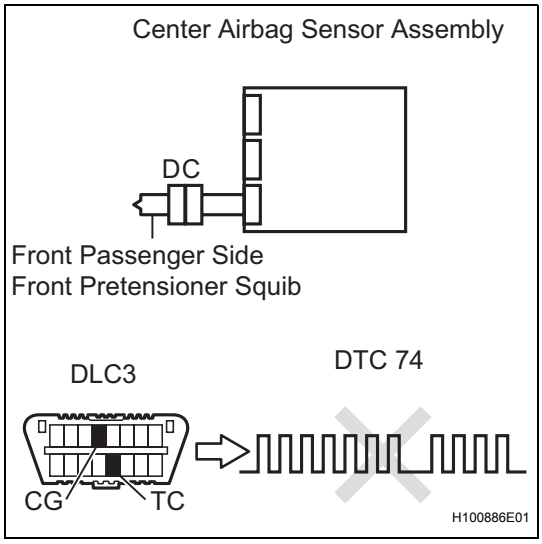

(a) Connect the connectors to the front seat outer belt assembly RH and the center airbag sensor assembly.
(b) Connect the negative (-) terminal cable to the battery, and wait for at least 2 seconds.
(c) Turn the ignition switch on, and wait for at least 60 seconds.
(d) Clear the DTCs stored in the memory (See page RS-38).
(e) Turn the ignition switch off.
(f) Turn the ignition switch on, and wait for at least 60 seconds.
(g) Check the DTCs (See page RS-38).
OK:
DTC B1905, B1906, B1907, B1908 and 74 are not output.
HINT:
DTCs other than DTC B1905, B1906, B1907, B1908 and 74 may be output at this time, but they are not related to this check.

NG → **REPLACE CENTER AIRBAG SENSOR ASSEMBLY**

OK

USE SIMULATION METHOD TO CHECK

SRS Warning Light Remains ON

DESCRIPTION

The SRS warning light is located on the combination meter.
When the SRS condition is normal, the SRS warning light illuminates for approximately 6 seconds after the ignition switch is turned from off to on, and then goes off automatically.
If there is a malfunction in the SRS, the SRS warning light illuminates or blinks to inform the driver of the problem. When terminals TC and CG of the DLC3 are connected, the SRS warning light blinks to indicate DTCs.
The center airbag sensor assembly is equipped with a voltage-increase circuit (DC-DC converter) in case the source voltage decreases. When the battery voltage decreases, the voltage-increase circuit (DC-DC converter) boosts the SRS voltage up to the normal level.
Malfunctions relating to battery voltage decreases cause the SRS warning light to illuminate, however, no DTCs are recorded in the center airbag sensor assembly. The SRS warning light goes off automatically when the source voltage returns to normal.
Signals to illuminate the SRS warning light are transmitted from the center airbag sensor assembly to the combination meter through the CAN communication system.

RS

WIRING DIAGRAM

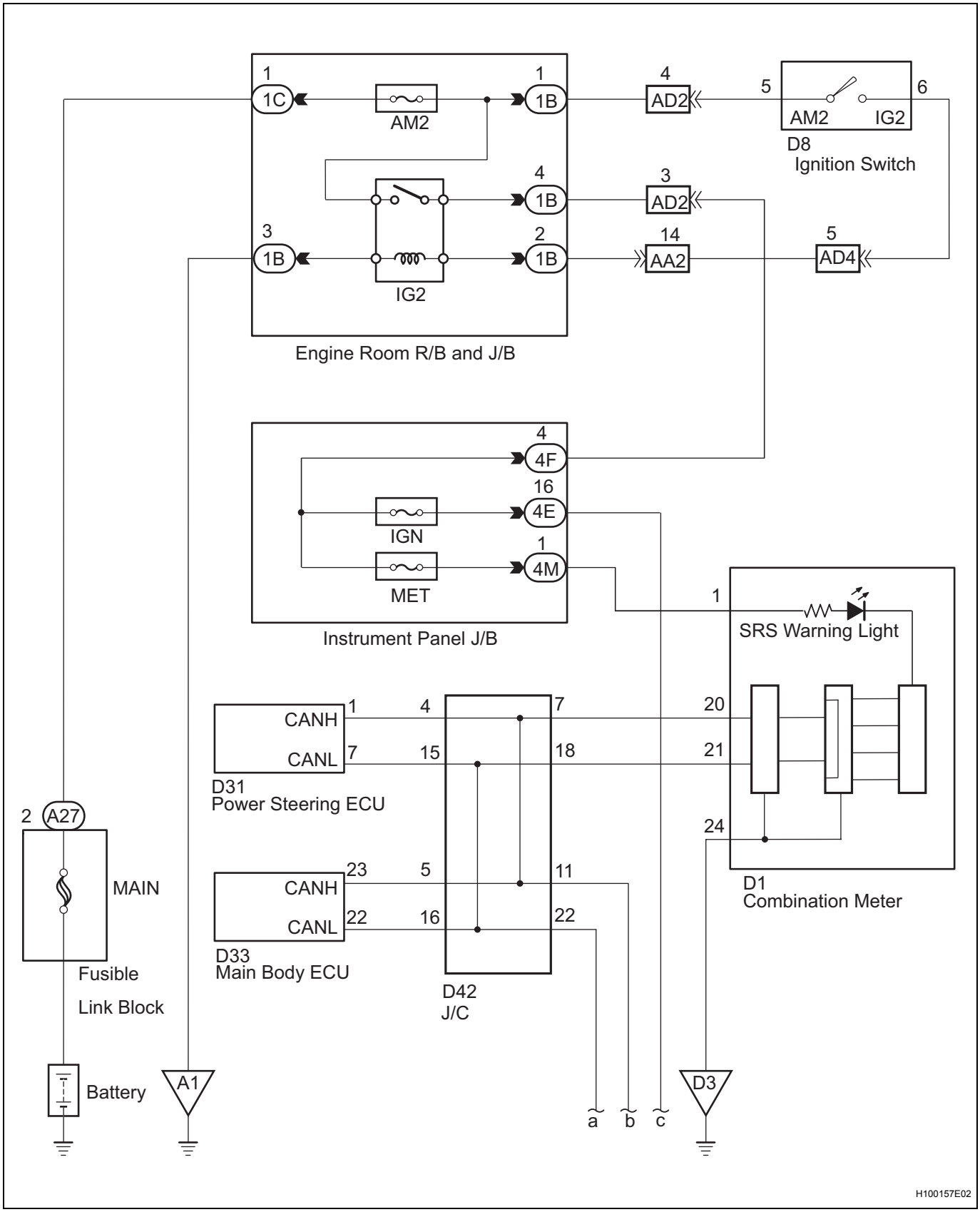

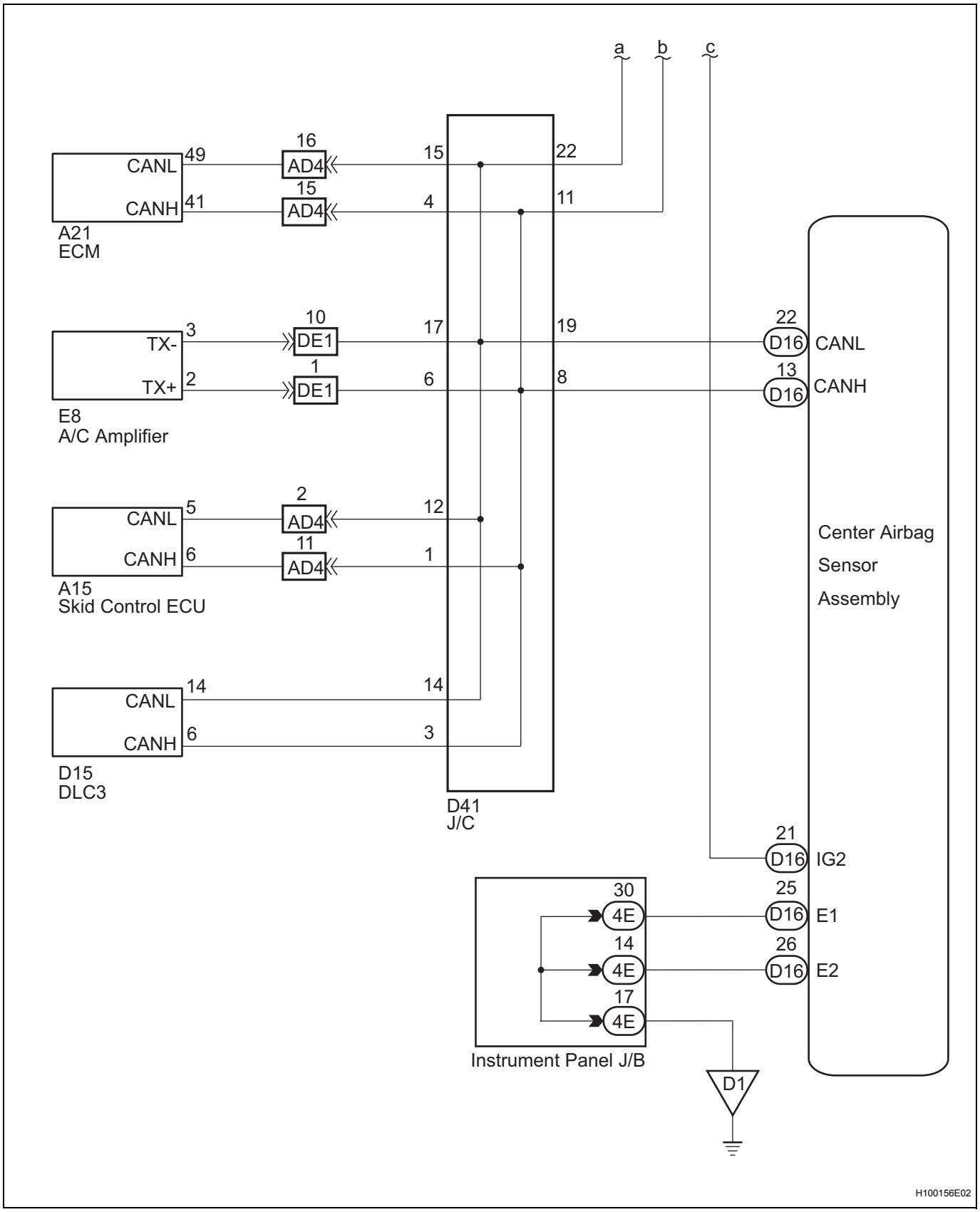
a
b
c
CANL
CANH
49
41
16
AD4
15
AD4
A21
ECM
TX-
TX+
3
2
10
DE1
1
DE1
E8
A/C Amplifier
CANL
CANH
5
6
2
AD4
11
AD4
A15
Skid Control ECU
CANL
CANH
14
6
D15
DLC3
15
4
17
6
12
1
14
3
22
11
19
8
D41
J/C
22
D16
CANL
13
D16
CANH
21
D16
IG2
25
D16
E1
26
D16
E2
Center Airbag
Sensor
Assembly
30
4E
14
4E
17
4E
Instrument Panel J/B
D1
H100156E02

INSPECTION PROCEDURE

NOTICE:

In order to prevent unexpected airbag deployment, disconnect the following connectors before inspecting parts such as wire harnesses, if the application of tester probes to the center airbag sensor assembly connector is necessary.

RS

1. Turn the ignition switch to the lock position.
2. Disconnect the negative (-) terminal cable from the battery, and wait for at least 90 seconds.
3. Disconnect the connector from the center airbag sensor assembly.
4. Disconnect the connectors from the steering pad.
5. Disconnect the connectors from the front passenger airbag assembly.
6. Disconnect the connector from the front seat outer belt assembly LH.
7. Disconnect the connector from the front seat outer belt assembly RH.
   HINT:
   Skip the following steps if side and curtain shield airbags are not fitted.
8. Disconnect the connector from the front seat side airbag assembly LH.
9. Disconnect the connector from the front seat side airbag assembly RH.
10. Disconnect the connector from the curtain shield airbag assembly LH.
11. Disconnect the connector from the curtain shield airbag assembly RH.

1	CHECK DTC (CAN COMMUNICATION SYSTEM)

(a) Turn the ignition switch to the on position.
(b) Check the DTCs (See page CA-22).
OK:
DTC is not output.

NG → **CHECK CAN COMMUNICATION SYSTEM**

OK

2	CHECK BATTERY

(a) Measure the voltage of the battery.
Standard voltage:
11 to 14 V

NG → **CHECK AND REPLACE BATTERY OR CHARGING SYSTEM**

OK

3	CHECK CONNECTION OF CONNECTORS

(a) Turn the ignition switch off.
(b) Disconnect the negative (-) terminal cable from the battery, and wait for at least 90 seconds.
(c) Check that the connectors are properly connected to the center airbag sensor assembly and combination meter.
OK:
The connectors are properly connected.

NG → **CONNECT CONNECTORS**

OK

4	CHECK HARNESS AND CONNECTOR (SOURCE VOLTAGE OF CENTER AIRBAG SENSOR ASSEMBLY)

RS

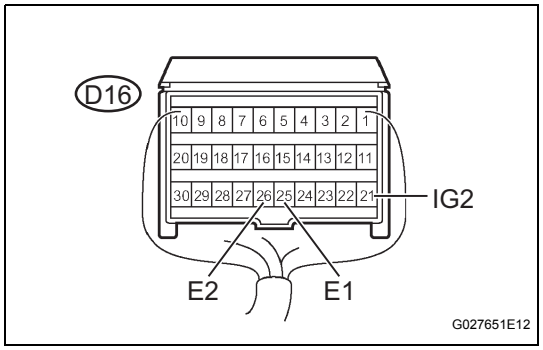

(a) Disconnect the connectors from the center airbag sensor assembly.
(b) Connect the negative (-) terminal cable to the battery, and wait for at least 2 seconds.
(c) Turn the ignition switch on.
(d) Operate all components of the electrical system (defogger, wipers, headlights, heater blower, etc.).
(e) Measure the voltage.

Standard voltage

Tester Connection	Condition	Specified Condition
D16-21 (IG2) - Body ground	Ignition switch on	11 to 14 V

(f) Turn the ignition switch off.
(g) Measure the resistance.

Standard resistance

Tester Connection	Condition	Specified Condition
D16-25 (E1) - Body ground	Always	Below 1 Ω
D16-26 (E2) - Body ground	Always	Below 1 Ω

NG → **REPAIR OR REPLACE HARNESS OR CONNECTOR**

OK

RS

5 CHECK HARNESS AND CONNECTOR (SOURCE VOLTAGE OF COMBINATION METER)

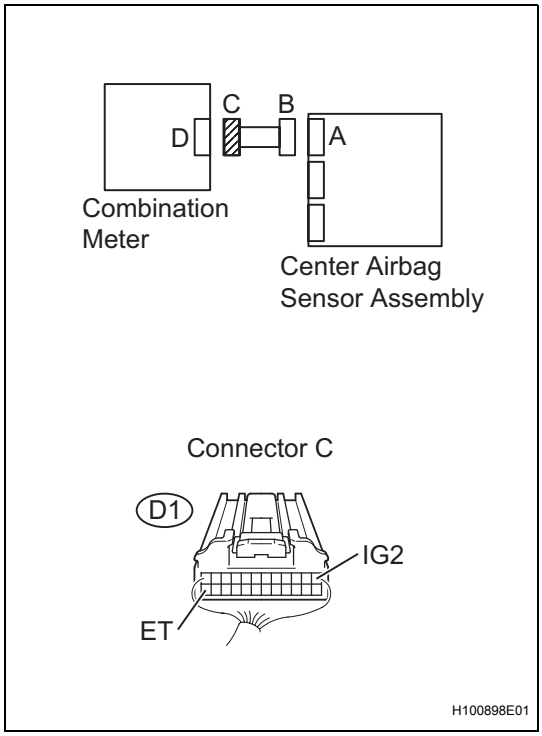

(a) Disconnect the negative (-) terminal cable from the battery, and wait for at least 90 seconds.
(b) Disconnect the connector from the combination meter.
(c) Connect the negative (-) terminal cable to the battery, and wait for at least 2 seconds.
(d) Turn the ignition switch on.
Measure the voltage.
Standard voltage

Tester Connection	Condition	Specified Condition
D1-1 (IG2) - Body ground	Ignition switch on	11 to 14 V

(e) Turn the ignition switch off.
(f) Measure the resistance.
Standard resistance

Tester Connection	Condition	Specified Condition
D1-24 (ET) - Body ground	Always	Below 1 Ω

NG → **REPAIR OR REPLACE HARNESS OR CONNECTOR**

OK

6 CHECK SRS WARNING LIGHT

(a) Turn the ignition switch off.
(b) Disconnect the negative (-) terminal cable from the battery, and wait for at least 90 seconds.
(c) Connect the connector to the combination meter.
(d) Connect the negative (-) terminal cable to the battery, and wait for at least 2 seconds.
(e) Turn the ignition switch on.
(f) Check the SRS warning light condition.
OK:
The SRS warning light goes off after the primary check period and comes on again after approximately 10 seconds.
HINT:
The primary check period lasts for approximately 6 seconds after the ignition switch is turned on.

NG → **GO TO COMBINATION METER SYSTEM**

OK

REPLACE CENTER AIRBAG SENSOR ASSEMBLY

SRS Warning Light does not Come ON

DESCRIPTION

See page RS-196.

WIRING DIAGRAM

See page RS-197.

RS

INSPECTION PROCEDURE

1	CHECK BATTERY

(a) Measure the voltage of the battery.
Standard voltage:
11 to 14 V

NG → **CHECK AND REPLACE BATTERY OR CHARGING SYSTEM**

OK ↓

2	CHECK CONNECTION OF CONNECTORS

(a) Turn the ignition switch off.
(b) Disconnect the negative (-) terminal cable from the battery, and wait for at least 90 seconds.
(c) Check that the connectors are properly connected to the center airbag sensor assembly and the combination meter.
OK:
The connectors are properly connected.

NG → **CONNECT CONNECTORS**

OK ↓

RS

3 CHECK HARNESS AND CONNECTOR (SOURCE VOLTAGE OF COMBINATION METER)

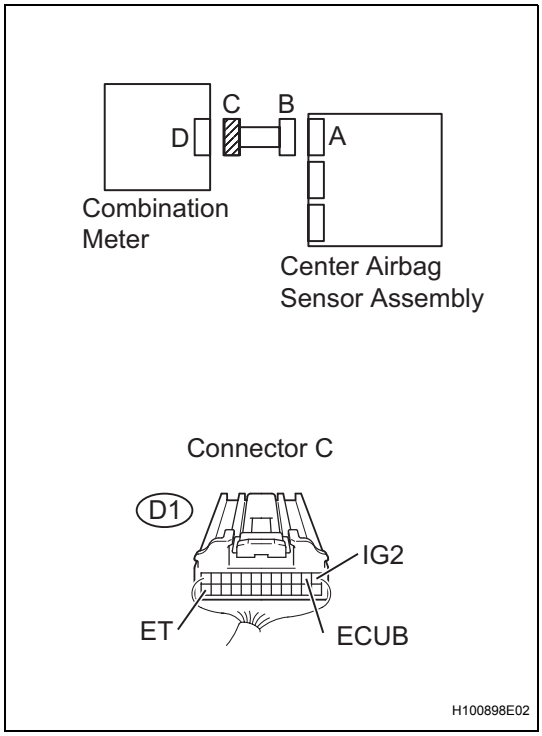

(a) Turn the ignition switch off.
(b) Disconnect the negative (-) terminal cable from the battery, and wait for at least 90 seconds.
(c) Disconnect the connectors from the combination meter and center airbag sensor assembly.
(d) Connect the negative (-) terminal cable to the battery, and wait for at least 2 seconds.
(e) Turn the ignition switch on.
(f) Measure the voltage.
Standard voltage

Tester Connection	Condition	Specified Condition
D1-1 (IG2) - Body ground	Ignition switch on	11 to 14 V
D1-2 (ECUB) - Body ground	Always	11 to 14 V

(g) Turn the ignition switch off.
(h) Measure the resistance.
Standard resistance

Tester Connection	Condition	Specified Condition
D1-24 (ET) - Body ground	Always	Below 1 Ω

NG → **REPAIR OR REPLACE HARNESS OR CONNECTOR**

OK

4 CHECK SRS WARNING LIGHT

(a) Turn the ignition switch off.
(b) Disconnect the negative (-) terminal cable from the battery, and wait for at least 90 seconds.
(c) Connect the connector to the combination meter.
(d) Connect the negative (-) terminal cable to the battery, and wait for at least 2 seconds.
(e) Turn the ignition switch on.
(f) Check the SRS warning light condition.
OK:
The SRS warning light goes off after the primary check period and comes on again after approximately 10 seconds.
HINT:
The primary check period lasts for approximately 6 seconds after the ignition switch is turned on.

NG → **GO TO COMBINATION METER SYSTEM**

OK

REPLACE CENTER AIRBAG SENSOR ASSEMBLY

TC and CG Terminal Circuit

DESCRIPTION

DTC output mode is set by connecting terminals TC and CG of the DLC3.
The DTCs are displayed by blinking the SRS warning light.

HINT:

- Make sure that DTCs which relate to the CAN communication system are not output. If any of these DTCs are output, check the CAN communication system (See page CA-22).
- When a warning light keeps blinking, a short to ground in the wiring of terminal TC of the DLC3 or an internal ground short in an ECU is suspected.
- The DTC output mode signal is transmitted through the CAN to each ECU including the center airbag sensor assembly. Thus when no systems enter DTC output mode, the ECM may have a malfunction.

RS

WIRING DIAGRAM

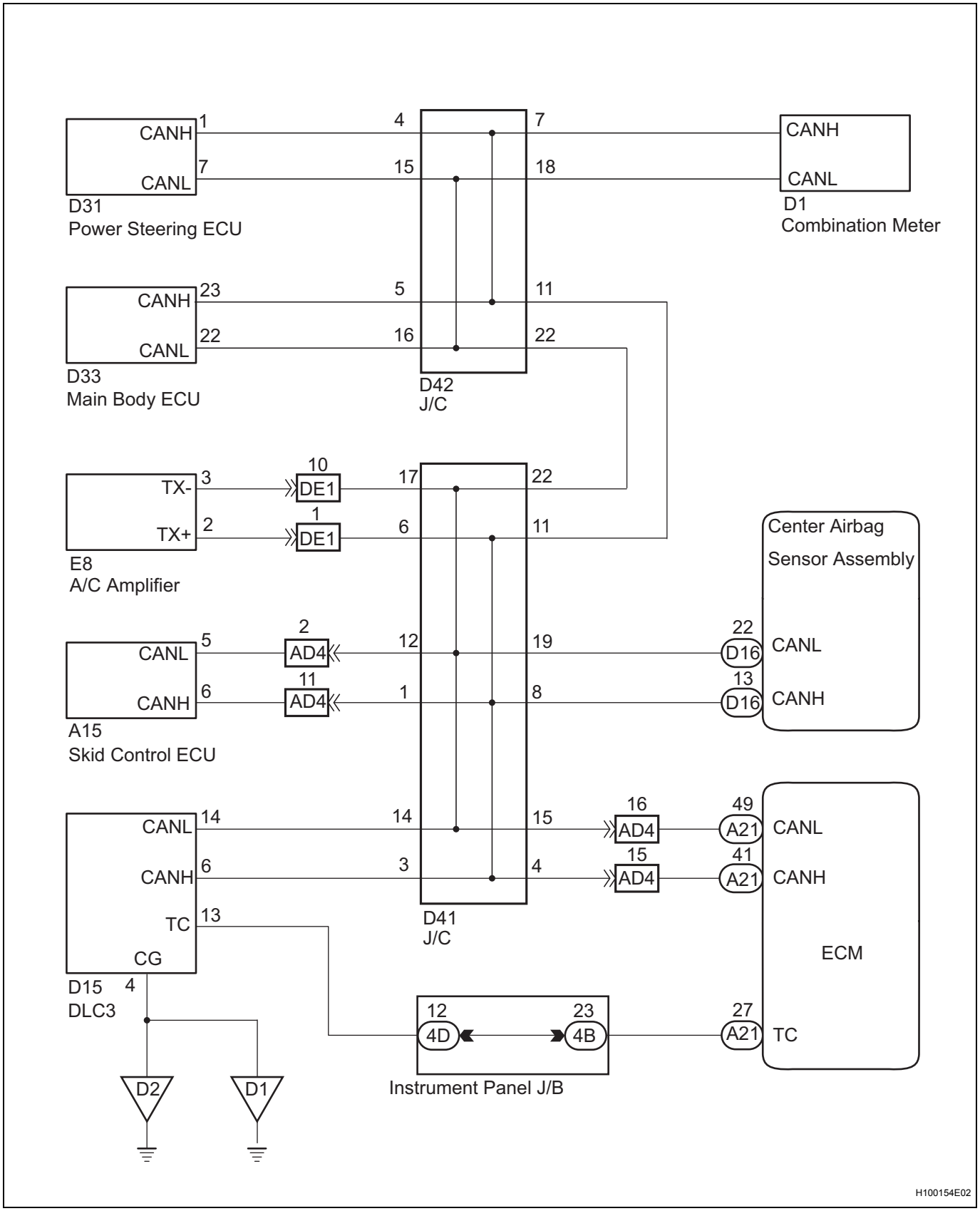

INSPECTION PROCEDURE

RS

1 CHECK HARNESS AND CONNECTOR (DLC3 - ECM)

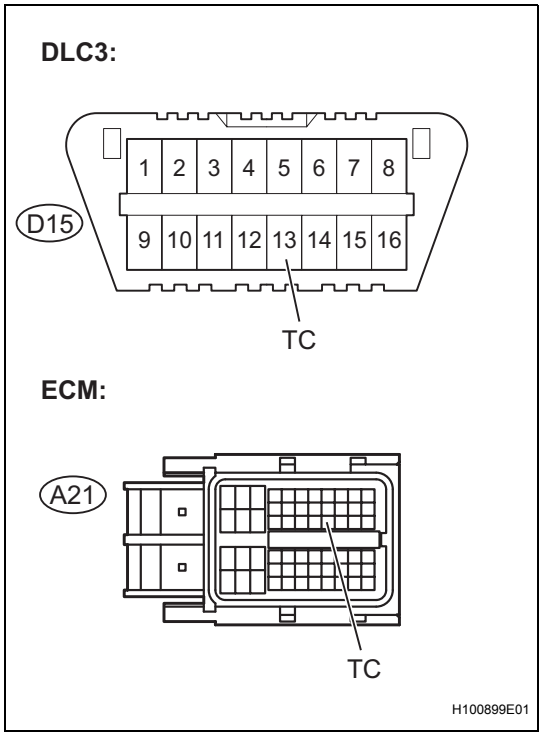

(a) Turn the ignition switch off.
(b) Disconnect the connector from the ECM.
(c) Measure the resistance.
Standard resistance

Tester Connection	Condition	Specified Condition
D15-13 (TC) - A21-27 (TC)	Always	Below 1 Ω

NG → **REPAIR OR REPLACE HARNESS OR CONNECTOR (TC OF DLC3 - TC OF ECM)**

OK

2 CHECK HARNESS AND CONNECTOR (CG OF DLC3 - BODY GROUND)

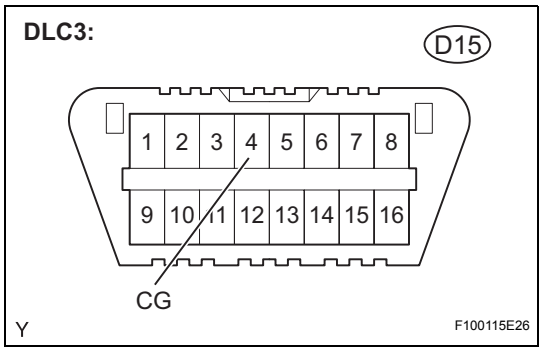

(a) Measure the resistance.
Standard resistance

Tester Connection	Condition	Specified Condition
D15-4 (CG) - Body ground	Always	Below 1 Ω

NG → **REPAIR OR REPLACE HARNESS OR CONNECTOR (CG OF DLC3 - BODY GROUND)**

OK

RS

3 CHECK HARNESS AND CONNECTOR (TC OF ECM)

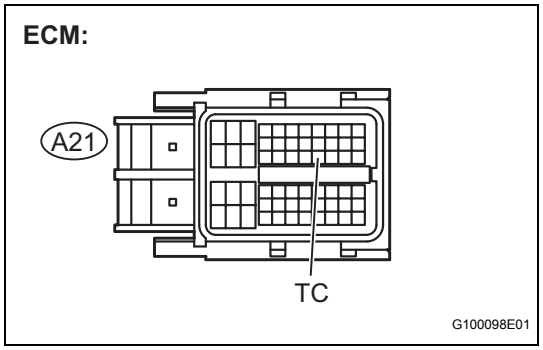

(a) Measure the resistance.
Standard resistance

Tester Connection	Condition	Specified Condition
A21-27 (TC) - Body ground	Always	1 MΩ or higher

NG → **REPAIR OR REPLACE HARNESS OR CONNECTOR**

OK

4 REPLACE ECM

(a) Replace the ECM.
(b) Check for DTCs of the ECM (See page ES-34).
Result

Result	Proceed to
Normal system code is output	A
DTC is output	B
DTC output mode is set (except center airbag sensor assembly)	C

A → **END**

B → **GO TO INSPECTION PROCEDURE OF DTC OUTPUT**

C

REPLACE CENTER AIRBAG SENSOR ASSEMBLY

OCCUPANT CLASSIFICATION SYSTEM

PRECAUTION

1. INSPECTION PROCEDURE FOR VEHICLE INVOLVED IN ACCIDENT

(a) Perform the zero point calibration and sensitivity check if any of the following conditions apply.
- The occupant classification ECU is replaced.
- Accessories (seatback tray and seat cover, etc.) are installed.
- The front passenger seat is removed from the vehicle.
- The passenger airbag ON/OFF indicator (OFF) comes on when the front passenger seat is not occupied.
- The vehicle is brought to the workshop for repair due to an accident or a collision.

NOTICE:
When an accident vehicle is brought into the workshop for repair, check the flatness of the floor where the front passenger seat is mounted. If the flatness is not within +- 3.0 mm (0.118 in.), adjust it to the specified range.

PARTS LOCATION

HATCHBACK:

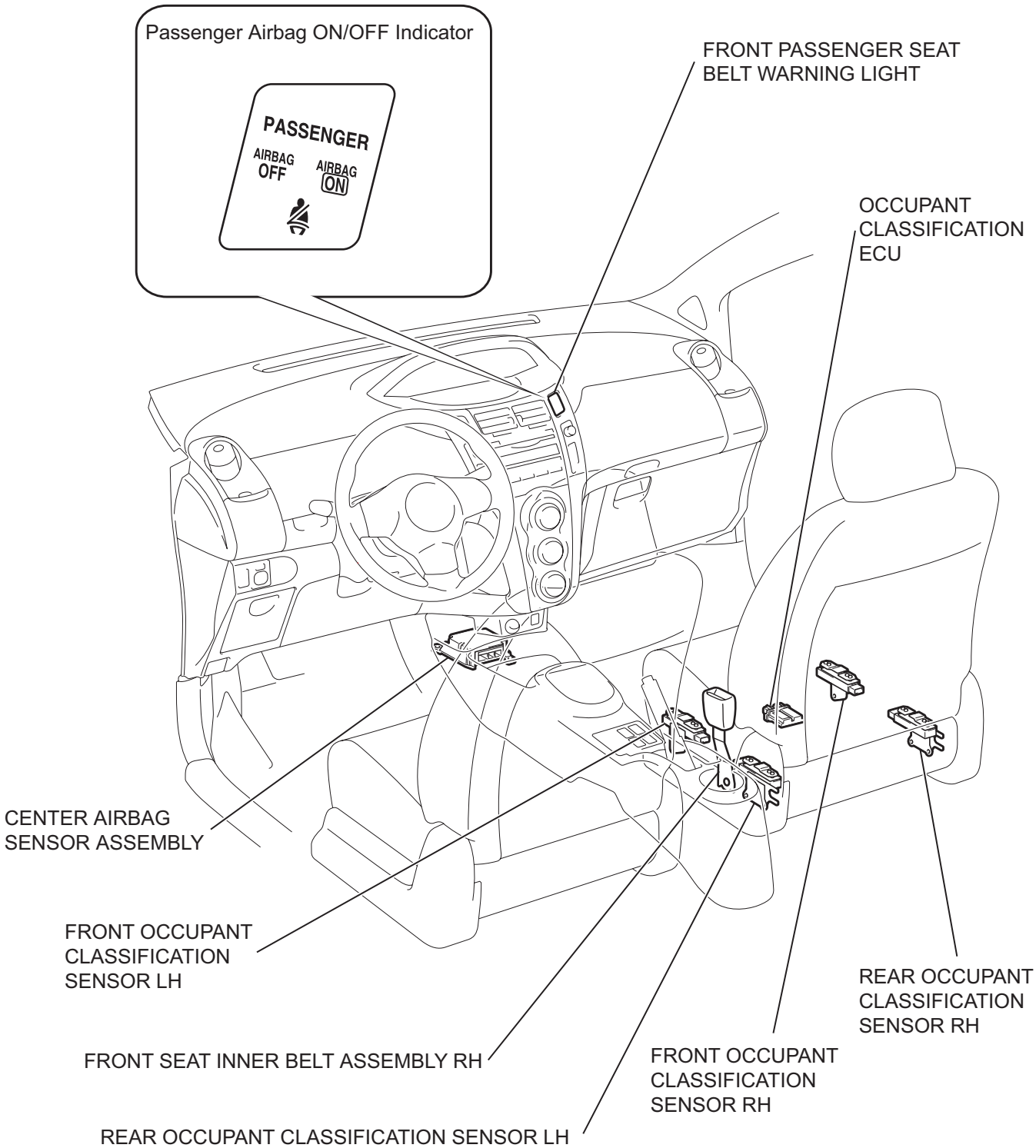

RS

SEDAN:

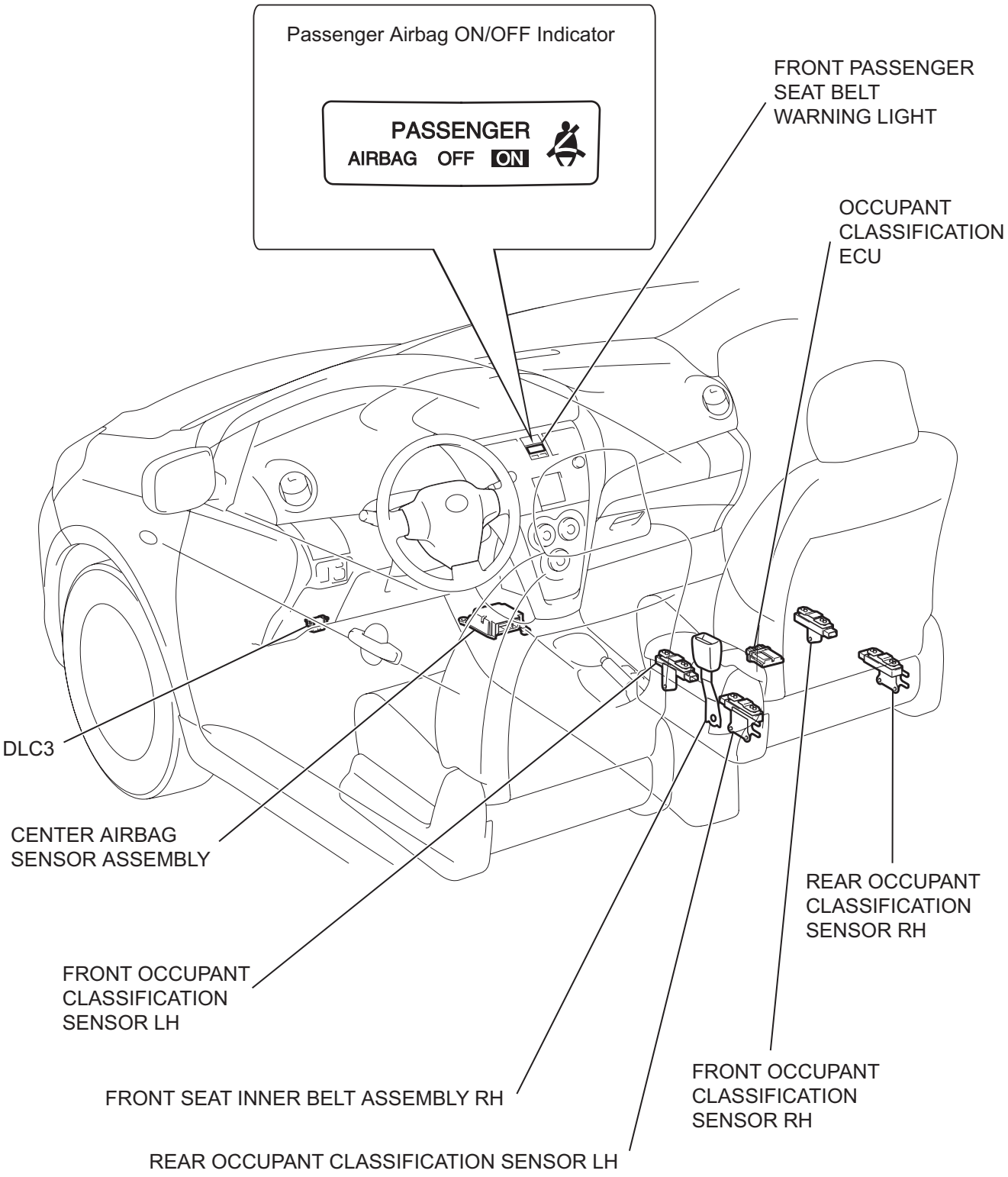

C135762E01

RS

SYSTEM DIAGRAM

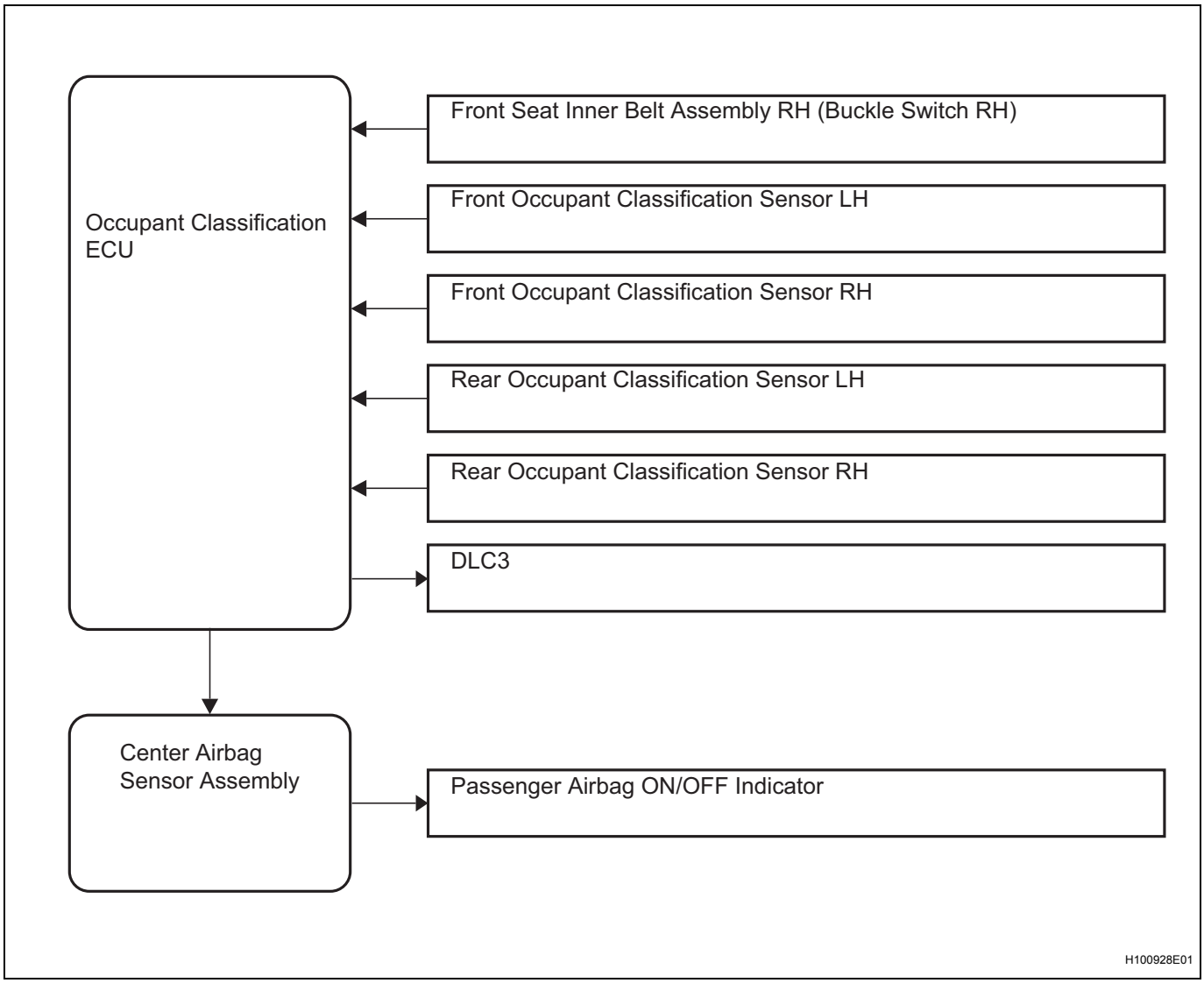

SYSTEM DESCRIPTION

1. GENERAL

(a) The front passenger occupant classification system judges whether the front passenger seat is occupied by an adult or child (with child seat) or is unoccupied, in accordance with the load that is applied to the front passenger seat and whether the seat belt is buckled. Thus, when appropriate, it restricts the deployment of the front passenger airbag, front passenger side airbag, and the front passenger seat belt pretensioner. In addition, the system informs the driver of the result of the judgment through the use of the airbag ON/ OFF indicator.

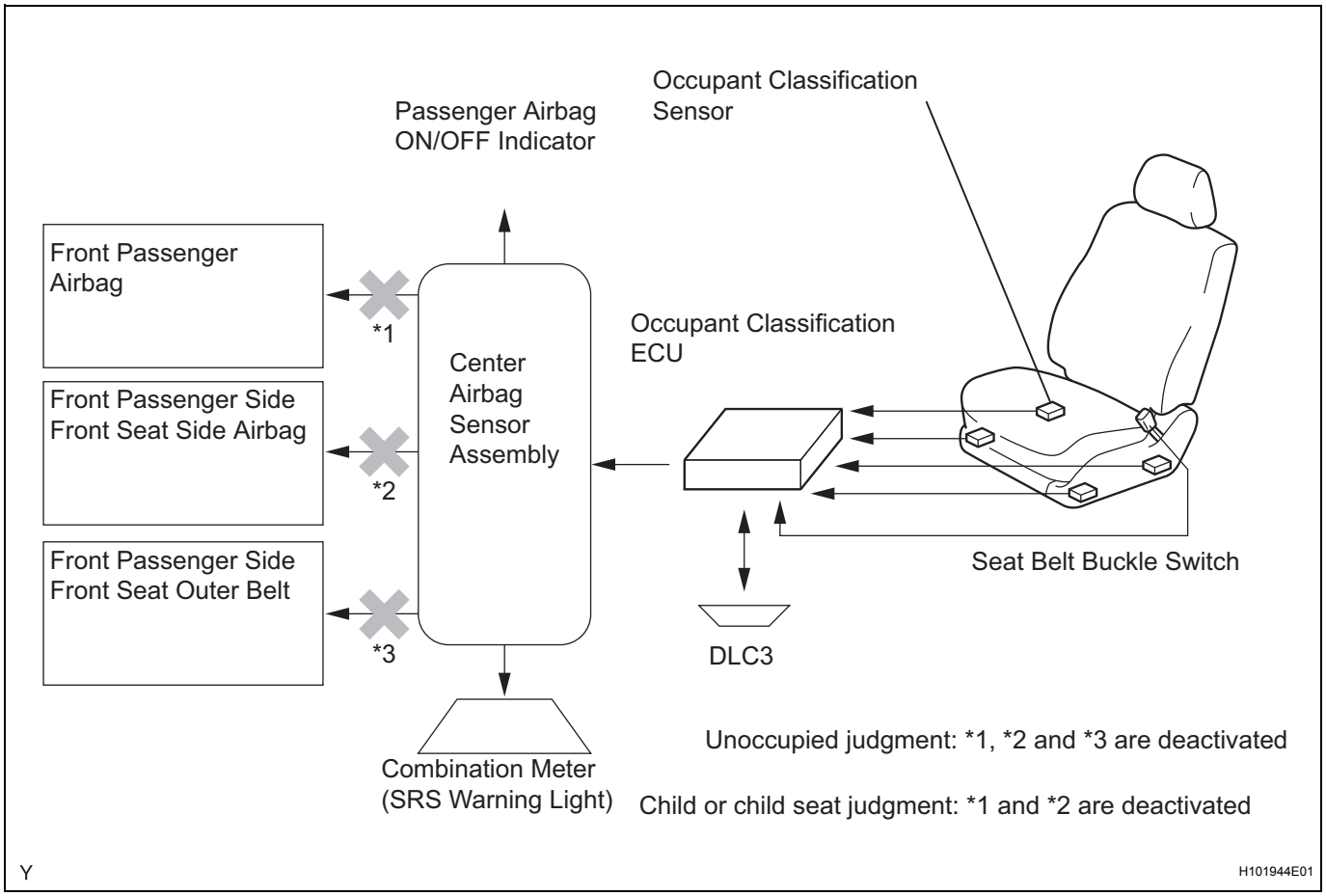

2. MAIN COMPONENTS

Component	Description
Occupant Classification Sensor	Outputs voltages to occupant classification ECU in accordance with load applied to sensor
Occupant Classification ECU	Constantly monitors weight of front passenger seat load, and judges occupancy condition in accordance with signals from occupant classification sensors and seat belt buckle switch
Airbag ON/OFF Indicator	Airbag ON indicator illuminates when front passenger and front passenger side airbags activated. Airbag OFF indicator illuminates when front passenger and front passenger side airbags deactivated.
Seat Belt Buckle Switch	Detects whether seat belt fastened and outputs appropriate signals to occupant classification ECU

RS

HOW TO PROCEED WITH TROUBLESHOOTING

1	VEHICLE BROUGHT TO WORKSHOP

NEXT

2	CUSTOMER PROBLEM ANALYSIS (See page IN-26)

NEXT

3	PASSENGER AIRBAG ON/OFF INDICATOR CHECK (See page RS-220)

NEXT

4	DTCs CHECK (Present and Past DTCs) (See page RS-223)

(a) Check for DTCs.

Result

Result	Proceed to
DTC is output.	A
DTC is not output.	B

B → GO TO PROBLEM SYMPTOMS TABLE

A

5	DTCs CHART (See page RS-226)

NEXT

6	CIRCUIT INSPECTION

NEXT

7	REPAIR OR REPLACEMENT

NEXT

8	DTC CLEARANCE (Present and Past DTCs) (See page RS-223)

(a) Clear the DTCs.

NEXT

9	DTC CHECK (Present and Past DTCs) (See page RS-223)

(a) Check for DTCs.

Result

Result	Proceed to
DTC is not output.	A
DTC is output.	B

B → Go to step 5

A

10	SYMPTOM SIMULATION (See page RS-220)

(a) Check the passenger airbag ON/OFF indicator condition.

Result

Result	Proceed to
Passenger airbag ON/OFF indicator is operating normally.	A
Passenger airbag ON/OFF indicator (OFF) and SRS warning light come on.	B

B → Go to step 5

A

11	CONFIRMATION TEST

NEXT

END

RS

INITIALIZATION

1. ZERO POINT CALIBRATION

NOTICE:

Make sure that the front passenger seat is not occupied before performing the operation.

HINT:

Perform the zero point calibration and sensitivity check if any of the following conditions apply.

- The occupant classification ECU is replaced.
- Accessories (seatback tray and seat cover, etc.) are installed.
- The front passenger seat is removed from the vehicle.
- The passenger airbag ON/OFF indicator (OFF) comes on when the front passenger seat is not occupied.
- The vehicle is brought to the workshop for repair due to an accident or a collision.

(a) Zero point calibration and sensitivity check procedures

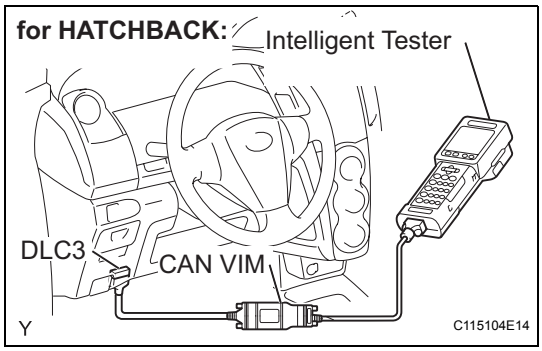

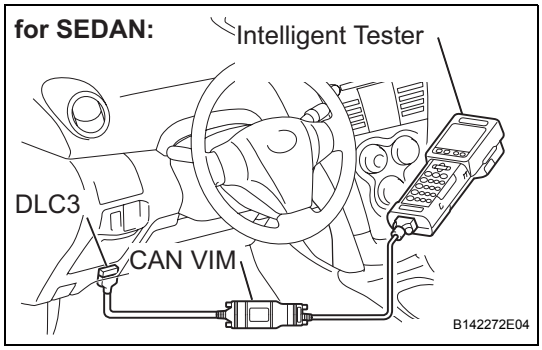

HINT:

Make sure that the zero point calibration has finished normally, and then perform the sensitivity check.

(1) Adjust the seat position in accordance with the table below.

Adjustment Item	Position
Slide Direction	Rearmost position
Reclining Angle	Upright position
Headrest Height	Lowest position
Lifter Height	Lowest position

(2) Connect the intelligent tester to the DLC3.

(3) Turn the ignition switch to the ON position.

(4) Perform the zero point calibration by following the prompts on the tester screen.
Refer to the following screen flow.

ZERO POINT CALIBRATION PROCEDURE

1:DIAGNOSIS - 1: OBD/MOBD - MODEL YEAR - MODEL SELECTION - 9: OCCUPANT DETECT

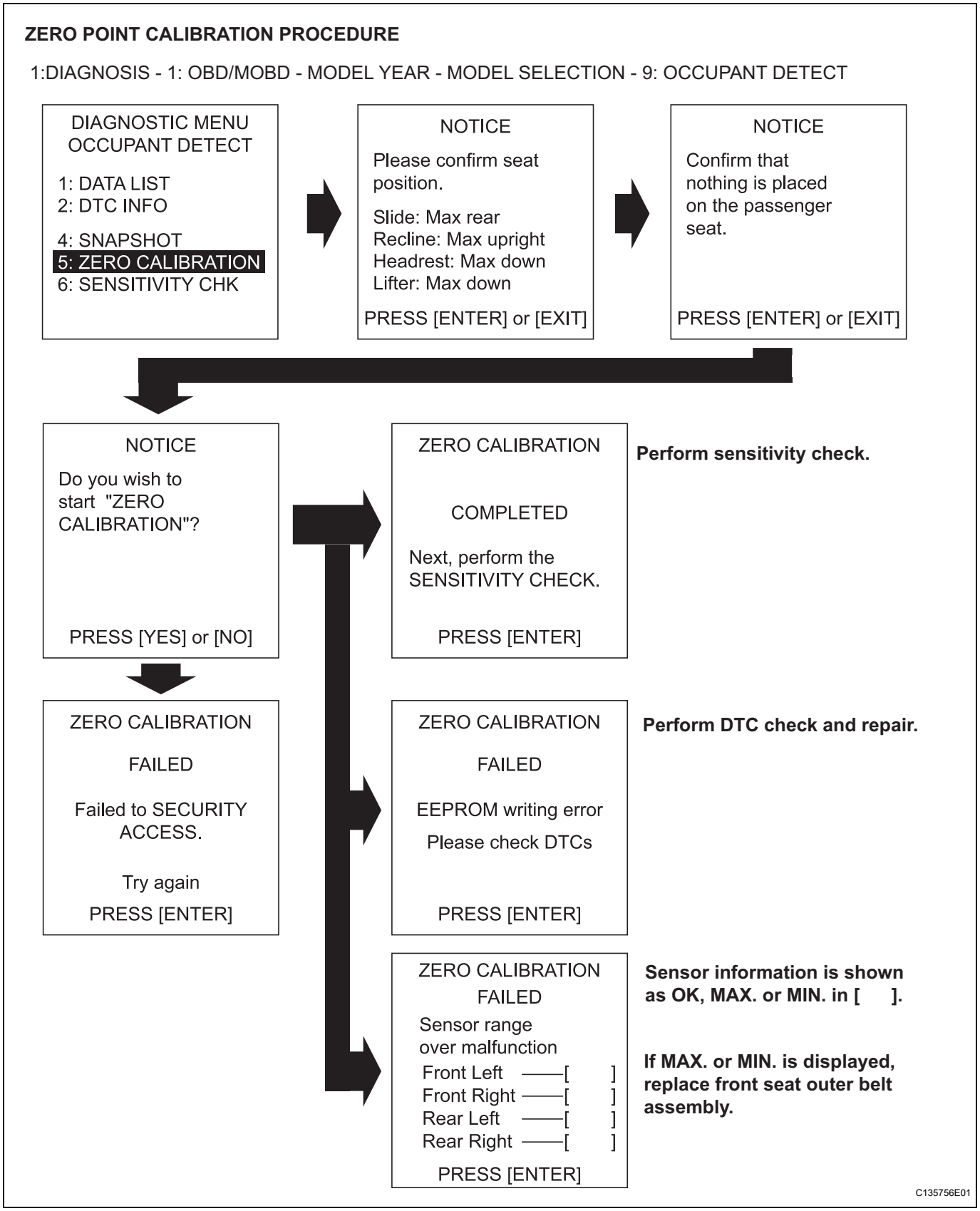

RS

HINT:
Refer to the intelligent tester operator's manual for further details.
OK:
COMPLETED is displayed.

(5) Perform the sensitivity check by following the prompts on the tester screen.
(6) Confirm that the beginning sensor reading is within the standard range.
Standard range:
-3.2 to 3.2 kg (-7 to 7 lb)
(7) Place a 30 kg (66.14 lb) weight (e.g. a lead mass) onto the front passenger seat.
(8) Confirm that the sensitivity is within the standard range.

SENSITIVITY CHECK PROCEDURE

1: DIAGNOSIS → 1: OBD/MOBD → MODEL YEAR → MODEL SELECTION → 9: OCCUPANT DETECT

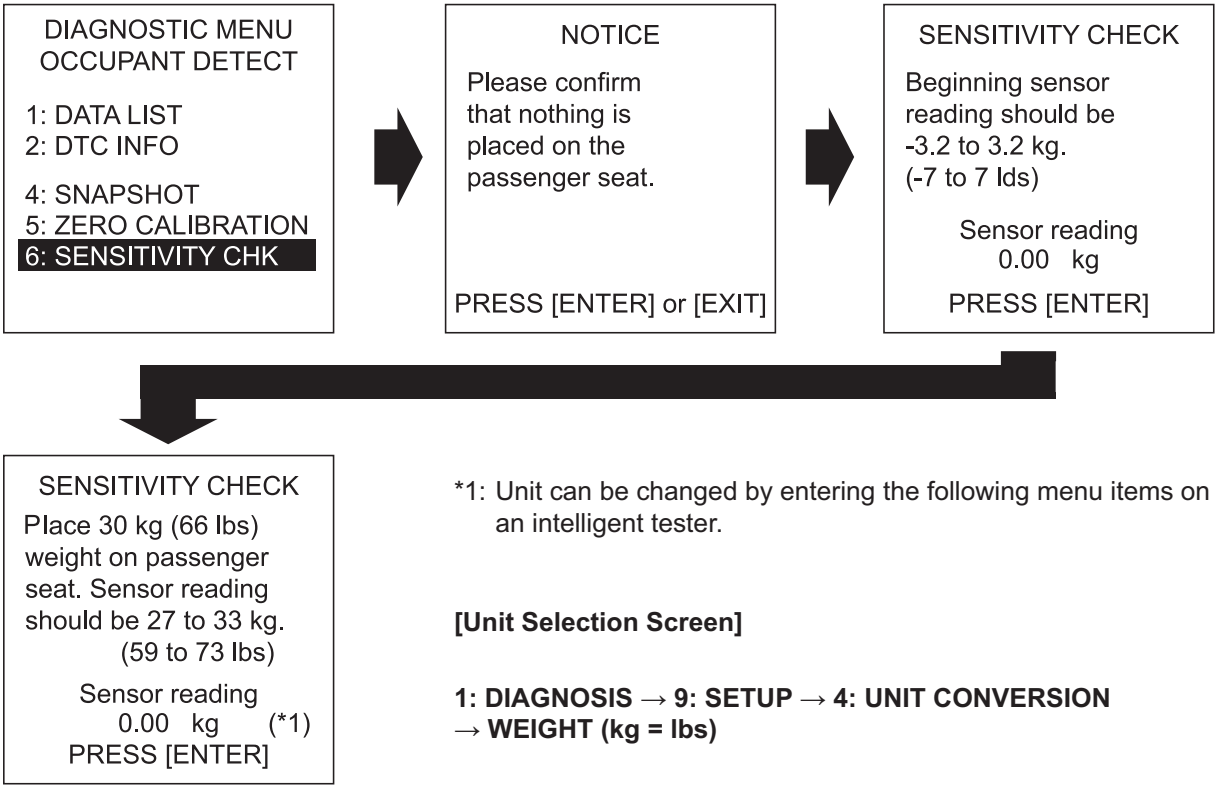

Standard range:
27 to 33 kg (59.52 to 72.75 lb)
HINT:
- When performing the sensitivity check, use a solid metal weight (the check result may not be accurate if a liquid weight is used).

- If the sensitivity deviates from the standard range, retighten the bolts of the front passenger seat taking care not to deform the seat rail. After performing this procedure, if the sensitivity is not within the standard range, replace the front seat assembly RH.
- If the zero point calibration has not finished normally, replace the front seat assembly RH.

PROBLEM SYMPTOMS TABLE

HINT:
Proceed to the troubleshooting for each circuit in the table below.

Symptom	Suspected area	See page
The front passenger seat condition differs from the indication by the passenger airbag ON/OFF indicator (DTC is not output).	Trouble in Passenger Airbag ON/OFF Indicator	RS-301

TERMINALS OF ECU

1. OCCUPANT CLASSIFICATION ECU

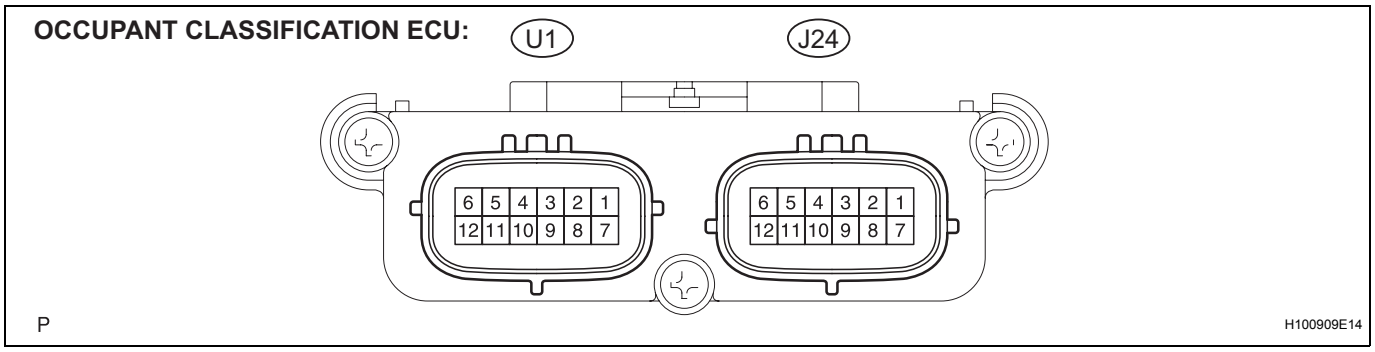

Symbols (Terminal No.)	Wiring Color	Terminal Description	Condition	Specification
+B (J24-1) - GND (J24-3)	V - W-B	Power source (ECU-B Fuse)	Always	11 to 14 V
DIA (J24-2) - GND (J24-3)	G - W-B	Diagnosis (DLC3)	Ignition switch on	Pulse generation
GND (J24-3) - Body ground	W-B - Body ground	Ground	Always	Below 1 Ω
FSR- (J24-4) - GND (J24-3)	Y - W-B	Center airbag sensor assembly communication line (-)	Always	Below 1 Ω
BGND (J24-5) - GND (J24-3)	P - W-B	Passenger side buckle switch ground line	Always	Below 1 Ω
IG (J24-7) - GND (J24-3)	O - W-B	Power source (IG2 Fuse)	Ignition switch on	11 to 14 V
FSR+ (J24-8) - FSR- (J24-4)	GR - Y	Center airbag sensor assembly communication line	Ignition switch on	Pulse generation
BSW (J24-9) - BGND (J24-5)	O - P	Passenger side buckle switch line	Buckle switch ON Buckle switch OFF	Pulse generation
SGD1 (U1-1) - GND (J24-3)	G - W-B	Occupant classification sensor front LH ground line	Always	Below 1 Ω
SGD2 (U1-2) - GND (J24-3)	O - W-B	Occupant classification sensor front RH ground line	Always	Below 1 Ω
SGD3 (U1-3) - GND (J24-3)	W - W-B	Occupant classification sensor rear LH ground line	Always	Below 1 Ω
SGD4 (U1-4) - GND (J24-3)	BR - W-B	Occupant classification sensor rear RH ground line	Always	Below 1 Ω
SVC1 (U1-11) - SGD1 (U1-1)	R - G	Occupant classification sensor front LH power supply line	Ignition switch on, load is applied to occupant classification sensor front LH	4.5 to 5.1 V
SVC2 (U1-12) - SGD2 (U1-2)	W - O	Occupant classification sensor front RH power supply line	Ignition switch on, load is applied to occupant classification sensor front RH	4.5 to 5.1 V
SVC3 (U1-5) - SGD3 (U1-3)	GR - W	Occupant classification sensor rear LH power supply line	Ignition switch on, load is applied to occupant classification sensor rear LH	4.5 to 5.1 V
SVC4 (U1-6) - SGD4 (U1-4)	V - BR	Occupant classification sensor rear RH power supply line	Ignition switch on, load is applied to occupant classification sensor rear RH	4.5 to 5.1 V

RS

Symbols (Terminal No.)	Wiring Color	Terminal Description	Condition	Specification
SIG1 (U1-7) - SGD1 (U1-1)	SB - G	Occupant classification sensor front LH signal line	Ignition switch on, load is applied to occupant classification sensor front LH	0.2 to 4.7 V
SIG2 (U1-8) - SGD2 (U1-2)	L - O	Occupant classification sensor front RH signal line	Ignition switch on, load is applied to occupant classification sensor front RH	0.2 to 4.7 V
SIG3 (U1-9) - SGD3 (U1-3)	Y - W	Occupant classification sensor rear LH signal line	Ignition switch on, load is applied to occupant classification sensor rear LH	0.2 to 4.7 V
SIG4 (U1-10) - SGD4 (U1-4)	R - BR	Occupant classification sensor rear RH signal line	Ignition switch on, load is applied to occupant classification sensor rear RH	0.2 to 4.7 V

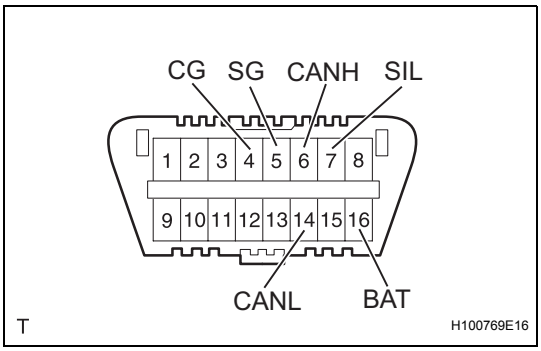

DIAGNOSIS SYSTEM

1. CHECK DLC3

(a) The ECU uses ISO 15765-4 for communication. The terminal arrangement of the DLC3 complies with SAE J1962 and matches the ISO 15765-4 format.

Symbols (Terminal No.)	Terminal Description	Condition	Specified Condition
SIL (7) - SG (5)	Bus "+" line	During transmission	Pulse generation
CG (4) - Body ground	Chassis ground	Always	Below 1 Ω
SG (5) - Body ground	Signal ground	Always	Below 1 Ω
BAT (16) - Body ground	Battery positive	Always	11 to 14 V
CANH (6) - CANL (14)	CAN bus line	Ignition switch OFF*	54 to 69 Ω
CANH (6) - CG (4)	HIGH-level CAN bus line	Ignition switch OFF*	200 Ω or higher
CANL (14) - CG (4)	LOW-level CAN bus line	Ignition switch OFF*	200 Ω or higher
CANH (6) - BAT (16)	HIGH-level CAN bus line	Ignition switch OFF*	6 kΩ or higher
CANL (14) - BAT (16)	LOW-level CAN bus line	Ignition switch OFF*	6 kΩ or higher

NOTICE:

***: Before measuring the resistance, leave the vehicle as is for at least 1 minute and do not operate the ignition switch, any other switches or the doors.**

If the result is not as specified, the DLC3 may have a malfunction. Repair or replace the harness and connector.

HINT:

Connect the cable of the intelligent tester to the CAN VIM, connect the CAN VIM to the DLC3, turn the ignition switch ON and attempt to use the tester. If the display indicates that a communication error has occurred, there is a problem either with the vehicle or with the tester.

- If communication is normal when the tester is connected to another vehicle, inspect the DLC3 of the original vehicle.
- If communication is still not possible when the tester is connected to another vehicle, the problem may be in the tester itself. Consult the Service Department listed in the tester's instruction manual.

2. SYMPTOM SIMULATION

HINT:
The most difficult case in troubleshooting is when no symptoms occur. In such cases, a thorough customer problem analysis must be carried out. Then the same or similar conditions and environment in which the problem occurred in the customer's vehicle should be simulated. Regardless of the technician's experience or skill, if troubleshooting proceeds without confirmation of the problem symptoms, something important is likely to be overlooked and incorrect guesses may be made at some points in the repair operation.
This leads to a standstill in troubleshooting.

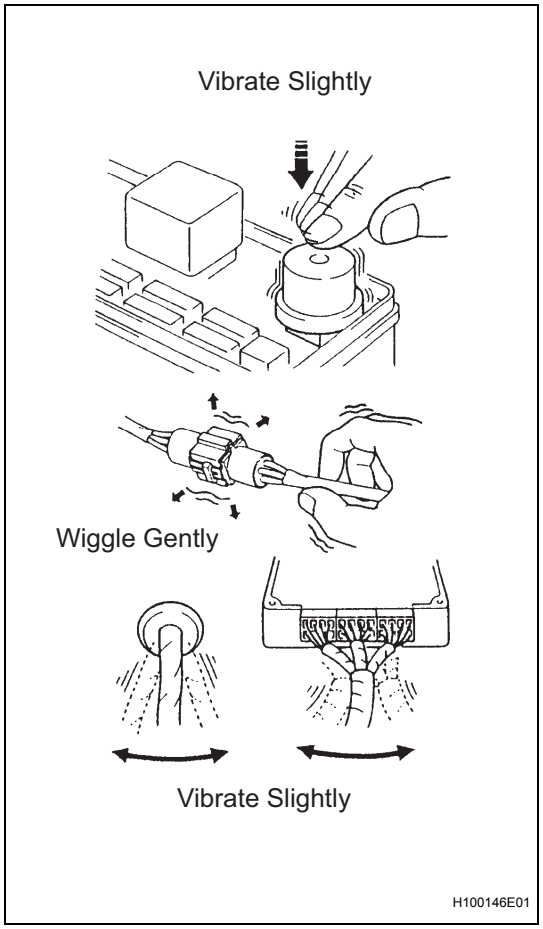

(a) Vibration method: When vibration seems to be the major cause.
HINT:
Perform the simulation method only during the primary check period (for approximately 6 seconds after the ignition switch is turned to the on position).
(1) Slightly vibrate the part of the sensor considered to be the cause of the problem with your fingers and check whether the malfunction occurs.
HINT:
Shaking the relays too strongly may result in open relays.
(2) Slightly shake the connector vertically and horizontally.
(3) Slightly shake the wire harness vertically and horizontally.
The connector joint and fulcrum of the vibration are the major areas to be checked thoroughly.

(b) Simulation method for DTC B1795: Turn the ignition switch from the lock to the on position, hold for 10 seconds, and then back to the lock position again 50 times in a row.
HINT:
DTC B1795 is output if the occupant classification ECU receives the ignition switch lock-on-lock signal 50 times in a row when a malfunction occurs in the power circuit for the occupant classification system.

3. FUNCTION OF PASSENGER AIRBAG ON/OFF INDICATOR

(a) Initial check
(1) Turn the ignition switch to the on position.

RS

(2) The passenger airbag ON/OFF indicator (ON and OFF) comes on for approximately 4 seconds, then goes off for approximately 2 seconds.
(3) Approximately 6 seconds after the ignition switch is turned to the on position, the passenger airbag ON/OFF indicator will be ON/OFF depending on the conditions listed below.

Condition	ON Indicator	OFF Indicator
Vacant	OFF	OFF
Adult is seated	ON	OFF
Child is seated	OFF	ON
Child restraint system is set	OFF	ON
Front passenger occupant classification system failure	OFF	ON

HINT:
- The passenger airbag ON/OFF indicator operates based on the timing chart below in order to check the indicator light circuit.

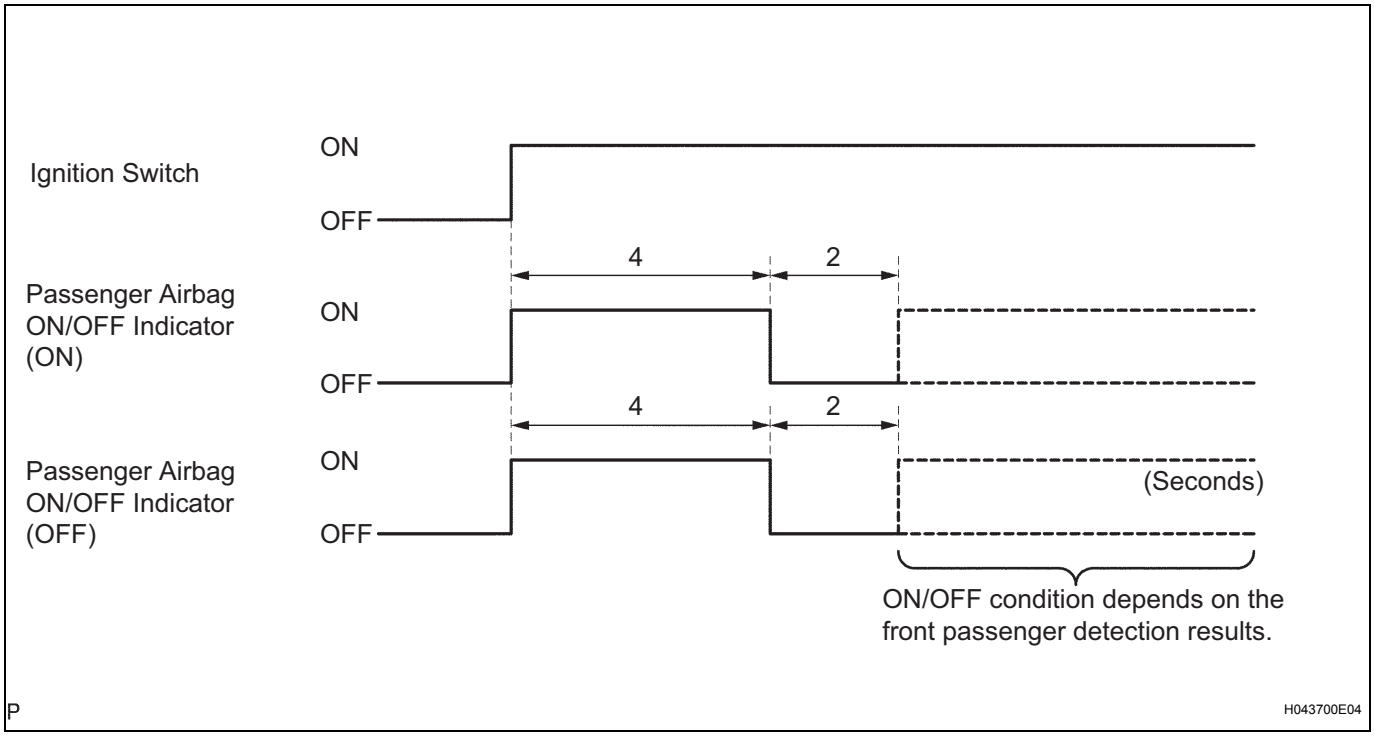

- When the occupant classification system has trouble, both the SRS warning light and the passenger airbag ON/OFF indicator (OFF) come on. In this case, check the DTCs in the airbag system first.

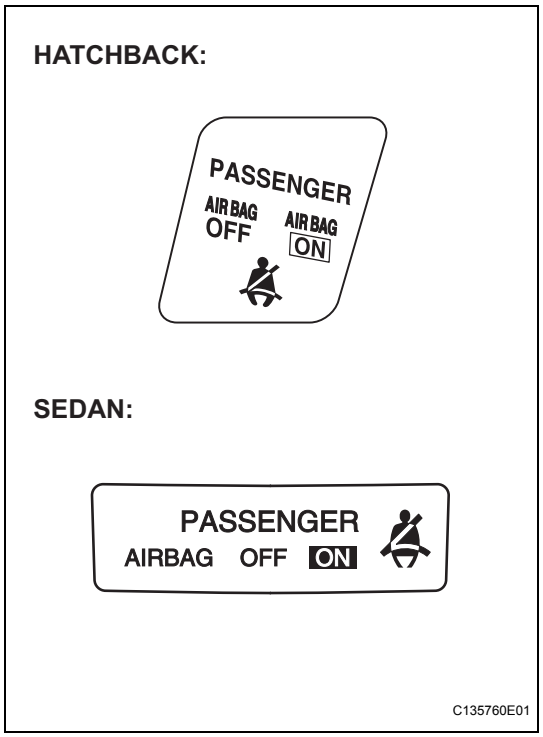

4. PASSENGER AIRBAG ON/OFF INDICATOR CHECK

(a) Turn the ignition switch to the on position.

(b) Check that the passenger airbag ON/OFF indicator (ON and OFF) comes on for approximately 4 seconds, then goes off for approximately 2 seconds.

HINT:

Refer to the table in the previous step regarding the passenger airbag ON/OFF indicator when approximately 6 seconds have elapsed after the ignition switch is turned to the on position.

RS

DTC CHECK / CLEAR

1. DTC CHECK

HINT:

- When DTC B1650/23 is detected as a result of troubleshooting for the airbag system, troubleshoot the occupant classification system.
- Use the intelligent tester to read and clear DTCs, otherwise the DTCs cannot be read and cleared.

(a) Check for DTCs.

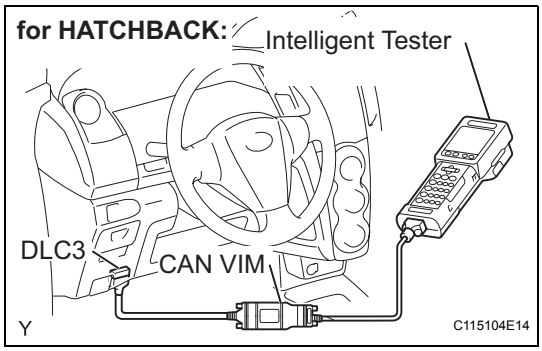

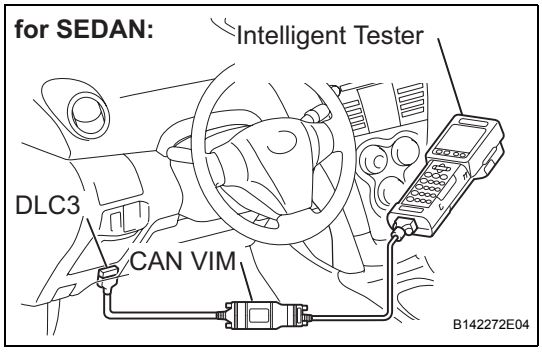

(1) Connect the intelligent tester to the DLC3.
(2) Turn the ignition switch to the on position.
(3) Check for DTCs by following the prompts on the tester screen.
HINT:
Refer to the intelligent tester operator's manual for further details.

(b) Clear the DTCs.
(1) Connect the intelligent tester to the DLC3.
(2) Turn the ignition switch to the on position.
(3) Clear the DTCs by following the prompts on the tester screen.
HINT:
Refer to the intelligent tester operator's manual for further details.

DATA LIST / ACTIVE TEST

HINT:
By accessing the DATA LIST displayed by the intelligent tester, you can check values of switches and sensors without removing any parts. Reading the DATA LIST as the first step of troubleshooting is one method to shorten diagnostic time.

RS

1. DATA LIST FOR OCCUPANT CLASSIFICATION ECU

(a) Connect the intelligent tester to the DLC3.

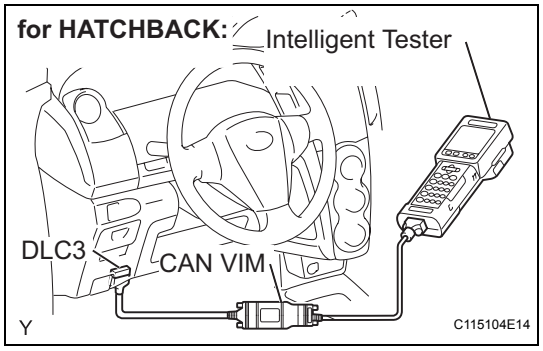

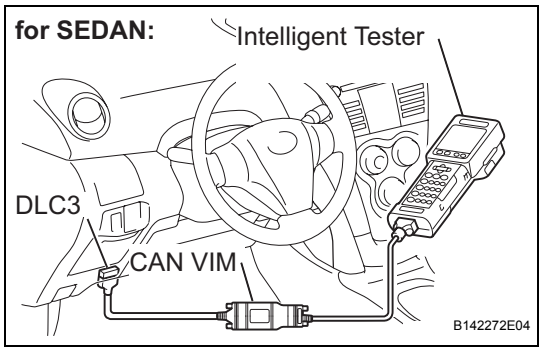

(b) Turn the ignition switch to the on position.

(c) Following the display on the tester screen, read the DATA LIST.

Item	Measurement Item/ Range (Display)	Normal Condition	Diagnostic Note
IG SW	Ignition switch condition/ ON: Ignition switch ON OFF: Ignition switch OFF	ON/OFF	-
P BUCKLE SW	Buckle switch (Front passenger side)/ UNSET: Front passenger side seat belt is unfastened SET: Front passenger side seat belt is fastened NG: Front passenger side seat belt is malfunctioning	UNSET/SET	-
Front passenger CLASS	Front passenger classification/ AF05: Adult (36 to 54 kg (79.37 to 119.05 lb)) is seated AM50: Adult (more than 54 kg (119.05 lb)) is seated CHILD: Child (less than 36 kg (79.37 lb)) is seated CRS: Child restraint system and front passenger side buckle switch ON, then 7 to 36 kg (15.43 to 79.37 lb) is set OFF: Vacant	AF05/AM50/CHILD/CRS/OFF	-
SENS RANGE INF	Sensor range information/ OK: Sensor value is within range NG: Sensor value is outside range	OK	-

Item	Measurement Item/ Range (Display)	Normal Condition	Diagnostic Note
FL SENS RANGE	Front left sensor range information/ OK: Sensor range is -17 to 27 kg (-37.48 to 59.52 lb) Min.: Less than -17 kg (-37.48 lb) Max.: More than 27 kg (59.52 lb)	OK	-
FR SENS RANGE	Front right sensor range information/ OK: Sensor range is -17 to 27 kg (-37.48 to 59.52 lb) Min.: Less than -17 kg (-37.48 lb) Max.: More than 27 kg (59.52 lb)	OK	-
RL SENS RANGE	Rear left sensor range information/ OK: Sensor range is -17 to 37 kg (-37.48 to 81.57 lb) Min.: Less than -17 kg (-37.48 lb) Max.: More than 37 kg (81.57 lb)	OK	-
RR SENS RANGE	Rear right sensor range information/ OK: Sensor range is -17 to 37 kg (-37.48 to 81.57 lb) Min.: Less than -17 kg (-37.48 lb) Max.: More than 37 kg (81.57 lb)	OK	-
FL SENS VOL	Front left sensor voltage/ Min.: 0 V Max.: 19.8 V	0 to 4.7 V	-
FR SENS VOL	Front right sensor voltage/ Min.: 0 V Max.: 19.8 V	0 to 4.7 V	-
RL SENS VOL	Rear left sensor voltage/ Min.: 0 V Max.: 19.8 V	0 to 4.7 V	-
RR SENS VOL	Rear right sensor voltage/ Min.: 0 V Max.: 19.8 V	0 to 4.7 V	-
FL SENS WEIGHT	Front left sensor weight information/ Min.: -17 kg (-37.48 lb) Max.: 27 kg (59.52 lb)	-17 to 27 kg (-37.48 to 59.52 lb)	-
FR SENS WEIGHT	Front right sensor weight information/ Min.: -17 kg (-37.48 lb) Max.: 27 kg (59.52 lb)	-17 to 27 kg (-37.48 to 59.52 lb)	-
RL SENS WEIGHT	Rear left sensor weight information/ Min.: -17 kg (-37.48 lb) Max.: 37 kg (81.57 lb)	-17 to 37 kg (-37.48 to 81.57 lb)	-
RR SENS WEIGHT	Rear right sensor weight information/ Min.: -17 kg (-37.48 lb) Max.: 37 kg (81.57 lb)	-17 to 37 kg (-37.48 to 81.57 lb)	-
TOTAL WEIGHT	Total weight information/ Min.: -68 kg (-149.91 lb) Max.: 128 kg (282.19 lb)	-68 to 128 kg (-149.91 to 282.19 lb)	-
#PRESENT CODES	Number of present DTCs Min.: 0, Max.: 255	0	-
#PAST CODES	Number of past DTCs Min.: 0, Max.: 255	0	-

DIAGNOSTIC TROUBLE CODE CHART

If a trouble code is displayed during the DTC check, check the circuit listed for the code in the table below (proceed to the page listed for that circuit).

Occupant Classification ECU

DTC No.	Detection Item	Trouble Area	See page
B1771	Passenger Side Buckle Switch Circuit Malfunction	1. Floor wire 2. Front seat inner belt assembly (Buckle switch RH) 3. Occupant classification ECU	RS-228
B1780	Front Occupant Classification Sensor LH Circuit Malfunction	1. Front seat wire RH 2. Front seat assembly RH (Front occupant classification sensor LH) 3. Occupant classification ECU	RS-234
B1781	Front Occupant Classification Sensor RH Circuit Malfunction	1. Front seat wire RH 2. Front seat assembly RH (Front occupant classification sensor RH) 3. Occupant classification ECU	RS-241
B1782	Rear Occupant Classification Sensor LH Circuit Malfunction	1. Front seat wire RH 2. Front seat assembly RH (Rear occupant classification sensor LH) 3. Occupant classification ECU	RS-248
B1783	Rear Occupant Classification Sensor RH Circuit Malfunction	1. Front seat wire RH 2. Front seat assembly RH (Rear occupant classification sensor RH) 3. Occupant classification ECU	RS-255
B1785	Front Occupant Classification Sensor LH Collision Detection	1. Front seat assembly RH (Front occupant classification sensor LH) 2. Occupant classification ECU	RS-262
B1786	Front Occupant Classification Sensor RH Collision Detection	1. Front seat assembly RH (Front occupant classification sensor RH) 2. Occupant classification ECU	RS-266
B1787	Rear Occupant Classification Sensor LH Collision Detection	1. Front seat assembly RH (Rear occupant classification sensor LH) 2. Occupant classification ECU	RS-270
B1788	Rear Occupant Classification Sensor RH Collision Detection	1. Front seat assembly RH (Rear occupant classification sensor RH) 2. Occupant classification ECU	RS-274
B1790	Center Airbag Sensor Assembly Communication Circuit Malfunction	1. Floor wire 2. Occupant classification ECU 3. Center airbag sensor assembly	RS-278
B1793	Occupant Classification Sensor Power Supply Circuit Malfunction	1. Front seat wire RH 2. Front seat assembly RH (Occupant classification sensors) 3. Occupant classification ECU	RS-284
B1794	Open in Occupant Classification ECU Battery Positive Line	1. Wire harness 2. Occupant classification ECU	RS-292
B1795	Occupant Classification ECU Malfunction	1. Occupant classification ECU	RS-297
B1796	Sleep Operation Failure of Occupant Classification ECU	1. Occupant classification ECU	RS-299

DTC	B1771	Passenger Side Buckle Switch Circuit Malfunction

DESCRIPTION

RS

The passenger side buckle switch circuit consists of the occupant classification ECU and the front seat inner belt assembly RH.
DTC B1771 is recorded when a malfunction is detected in the passenger side buckle switch circuit.
Troubleshoot DTC B1771 first when DTCs B1771 and B1795 are output simultaneously.

DTC No.	DTC Detecting Condition	Trouble Area
B1771	• Occupant classification ECU detects line short circuit signal, open circuit signal, short circuit to ground signal or short circuit to B+ signal in passenger side buckle switch circuit for 2 seconds • Passenger side buckle switch malfunction • Occupant classification ECU malfunction	• Floor wire • Front seat inner belt assembly RH (Buckle switch RH) • Occupant classification ECU

WIRING DIAGRAM

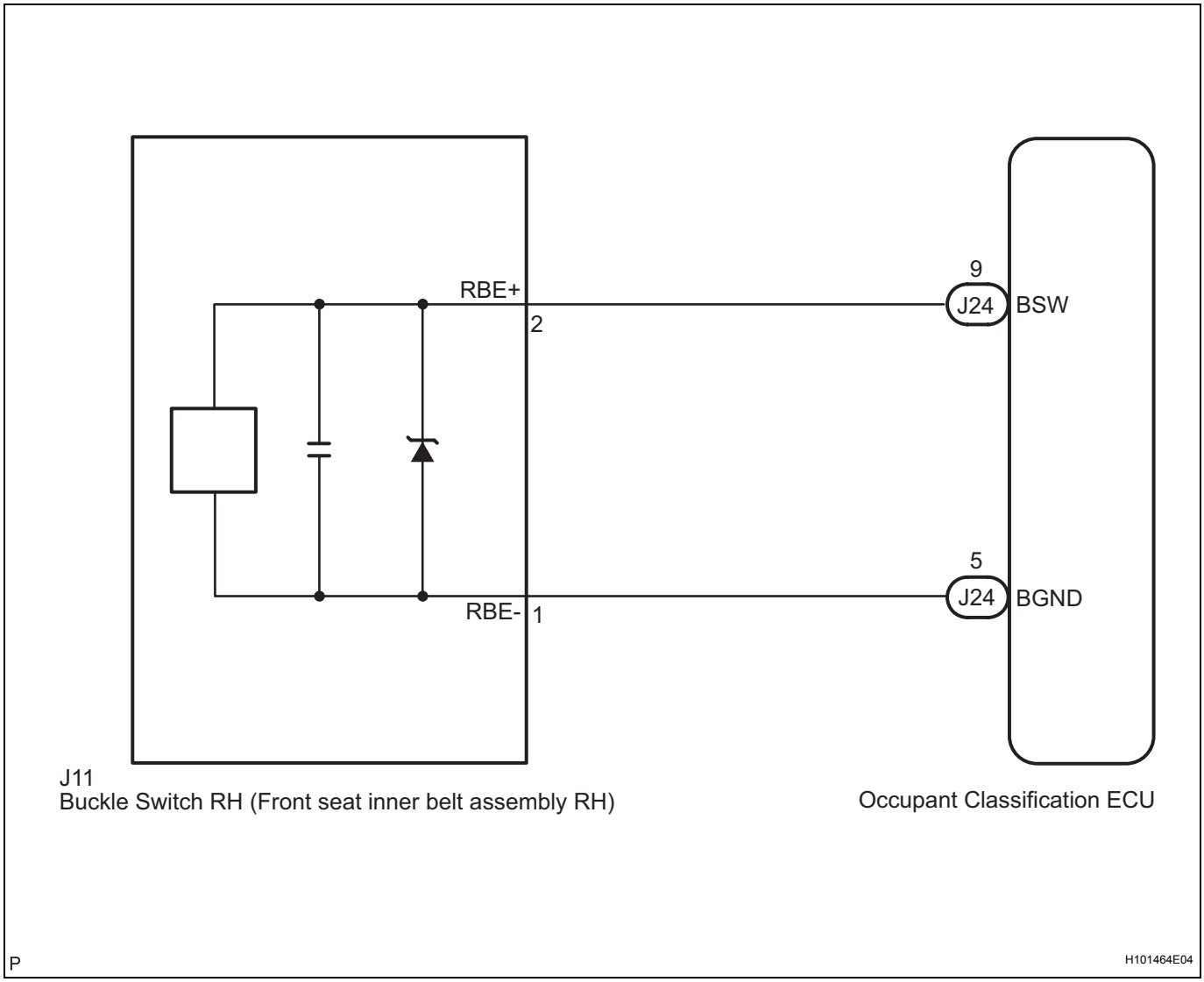

INSPECTION PROCEDURE

HINT:

- If troubleshooting (wire harness inspection) is difficult to perform, remove the front passenger seat installation bolts to see the under surface of the seat cushion.
- In the above case, hold the seat so that it does not tip over. Holding the seat for a long period of time may cause a problem, such as seat rail deformation. Hold the seat up only for as long as necessary.

1	CHECK DTC

(a) Turn the ignition switch to the on position.
(b) Clear the DTCs stored in the memory (See page RS-223).
HINT:
First clear DTCs stored in the occupant classification ECU and then in the center airbag sensor assembly.
(c) Turn the ignition switch to the lock position.
(d) Turn the ignition switch to the on position.
(e) Check the DTCs (See page RS-223).
OK:
DTC B1771 is not output.
HINT:
Codes other than DTC B1771 may be output at this time, but they are not related to this check.

OK → **USE SIMULATION METHOD TO CHECK**

NG

2	CHECK CONNECTION OF CONNECTORS

(a) Turn the ignition switch to the lock position.
(b) Disconnect the negative (-) terminal cable from the battery, and wait for at least 90 seconds.
(c) Check that the connectors are properly connected to the occupant classification ECU and the front seat inner belt assembly RH.
OK:
The connectors are properly connected.

NG → **CONNECT CONNECTORS**

OK

RS

3 CHECK FLOOR WIRE (TO B+)

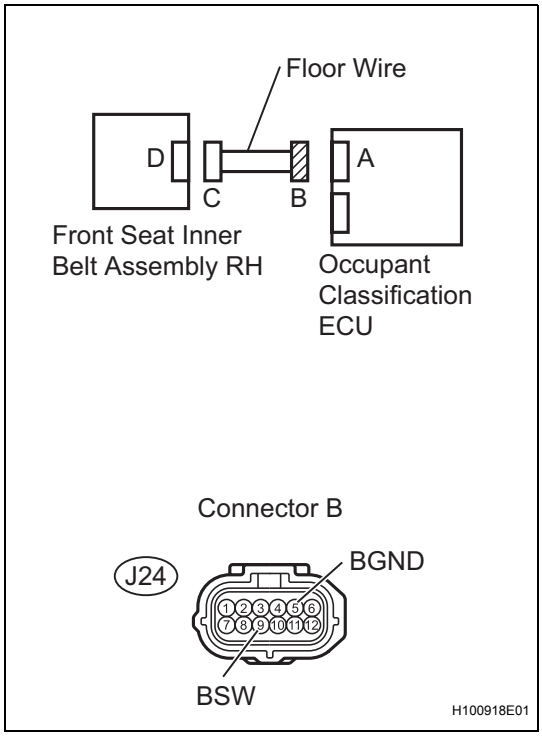

(a) Disconnect the connectors from the occupant classification ECU and the front seat inner belt assembly RH.
(b) Connect the negative (-) terminal cable to the battery.
(c) Turn the ignition switch to the on position.
(d) Measure the voltage.
Standard voltage

Tester connection	Condition	Specified condition
J24-9 (BSW) - Body ground	Ignition switch on	Below 1 V
J24-5 (BGND) - Body ground	Ignition switch on	Below 1 V

NG → **REPAIR OR REPLACE FLOOR WIRE**

OK

4 CHECK FLOOR WIRE (FOR OPEN)

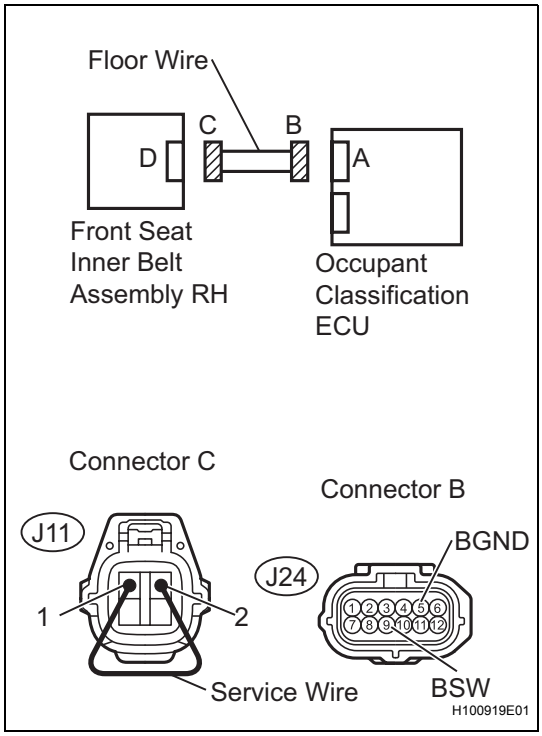

(a) Turn the ignition switch to the lock position.
(b) Disconnect the negative (-) terminal cable from the battery, and wait for at least 90 seconds.
(c) Using a service wire, connect J11-2 and J11-1 of connector C.
NOTICE:
Do not forcibly insert the service wire into the terminals of the connector when connecting.
(d) Measure the resistance.
Standard resistance

Tester connection	Condition	Specified condition
J24-9 (BSW) - J24-5 (BGND)	Always	Below 1 Ω

NG → **REPAIR OR REPLACE FLOOR WIRE**

OK

RS

5 CHECK FLOOR WIRE (FOR SHORT)

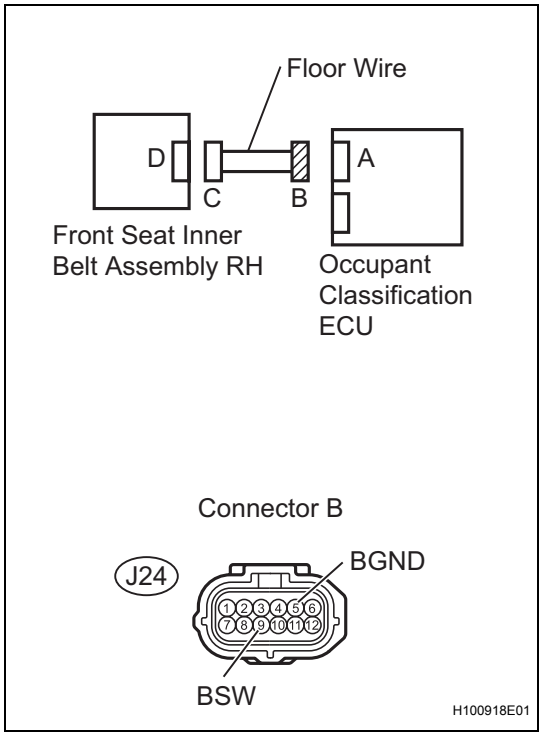

(a) Disconnect the service wire from connector C.
(b) Measure the resistance.
Standard resistance

Tester connection	Condition	Specified condition
J24-9 (BSW) - J24-5 (BGND)	Always	1 MΩ or higher

NG → **REPAIR OR REPLACE FLOOR WIRE**

OK

6 CHECK FLOOR WIRE (TO GROUND)

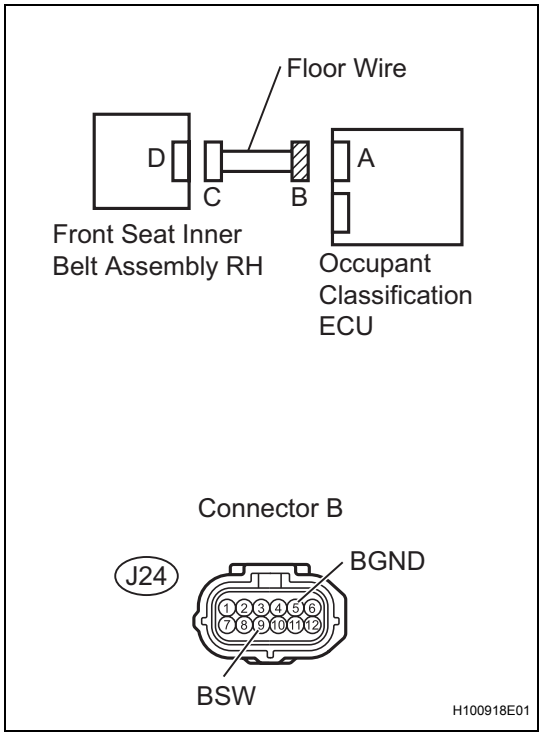

(a) Measure the resistance.
Standard resistance

Tester connection	Condition	Specified condition
J24-9 (BSW) - Body ground	Always	1 MΩ or higher
J24-5 (BGND) - Body ground	Always	1 MΩ or higher

NG → **REPAIR OR REPLACE FLOOR WIRE**

OK

RS

7	CHECK DTC

(a) Connect the connectors to the occupant classification ECU and the front seat inner belt assembly RH.
(b) Connect the negative (-) terminal cable to the battery.
(c) Turn the ignition switch to the on position.
(d) Clear the DTCs stored in the memory (See page RS-223).
HINT:
First clear DTCs stored in the occupant classification ECU and then in the center airbag sensor assembly.
(e) Turn the ignition switch to the lock position.
(f) Turn the ignition switch to the on position.
(g) Check the DTCs (See page RS-223).
OK:
DTC B1771 is not output.
HINT:
Codes other than DTC B1771 may be output at this time, but they are not related to this check.

OK → **USE SIMULATION METHOD TO CHECK**

NG

8	REPLACE FRONT SEAT INNER BELT ASSEMBLY RH

(a) Turn the ignition switch to the lock position.
(b) Disconnect the negative (-) terminal cable from the battery, and wait for at least 90 seconds.
(c) Replace the front seat inner belt assembly RH.
for Hatchback: (See page SB-39)
for Sedan: (See page SB-33)
HINT:
Perform the inspection using parts from a normal vehicle if possible.
(d) Connect the negative (-) terminal cable to the battery.
(e) Turn the ignition switch to the on position.
(f) Clear the DTCs stored in the memory (See page RS-223).
HINT:
First clear DTCs stored in the occupant classification ECU and then in the center airbag sensor assembly.
(g) Turn the ignition switch to the lock position.
(h) Turn the ignition switch to the on position.
(i) Check the DTCs (See page RS-223).
OK:
DTC B1771 is not output.
HINT:
Codes other than DTC B1771 may be output at this time, but they are not related to this check.

OK → **END**

NG

9	REPLACE OCCUPANT CLASSIFICATION ECU

(a) Turn the ignition switch to the lock position.
(b) Disconnect the negative (-) terminal cable from the battery, and wait for at least 90 seconds.
(c) Replace the occupant classification ECU (See page RS-493).

NEXT

10	PERFORM ZERO POINT CALIBRATION

(a) Connect the negative (-) terminal cable to the battery.
(b) Connect the intelligent tester to the DLC3.
(c) Turn the ignition switch to the on position.
(d) Using the intelligent tester, perform the zero point calibration (See page RS-215).
OK:
COMPLETED is displayed on the tester.

NEXT

11	PERFORM SENSITIVITY CHECK

(a) Using the intelligent tester, perform the sensitivity check (See page RS-215).
(1) Confirm that nothing is placed on the passenger seat.
(2) Confirm that the beginning sensor reading is within the standard range.
Standard range:
-3.2 to 3.2 kg (-7 to 7 lb)
(3) Place a 30 kg (66.14 lb) weight (e.g. a lead mass) onto the front passenger seat.
(4) Confirm that the sensitivity is within the standard range.
Standard range:
27 to 33 kg (59.52 to 72.75 lb)
HINT:
When performing the sensitivity check, use a solid metal weight (the check result may not be accurate if a liquid weight is used).

NEXT

END

RS

DTC	B1780	Front Occupant Classification Sensor LH Circuit Malfunction

DESCRIPTION

RS

The front occupant classification sensor LH circuit consists of the occupant classification ECU and the front occupant classification sensor LH.
DTC B1780 is recorded when a malfunction is detected in the front occupant classification sensor LH circuit.

DTC No.	DTC Detecting Condition	Trouble Area
B1780	• Occupant classification ECU detects line short circuit signal, open circuit signal, short circuit to ground signal or short circuit to B+ signal in front occupant classification sensor LH circuit for 2 seconds • Front occupant classification sensor LH malfunction • Occupant classification ECU malfunction	• Front seat wire RH • Front seat assembly RH (Front occupant classification sensor LH) • Occupant classification ECU

WIRING DIAGRAM

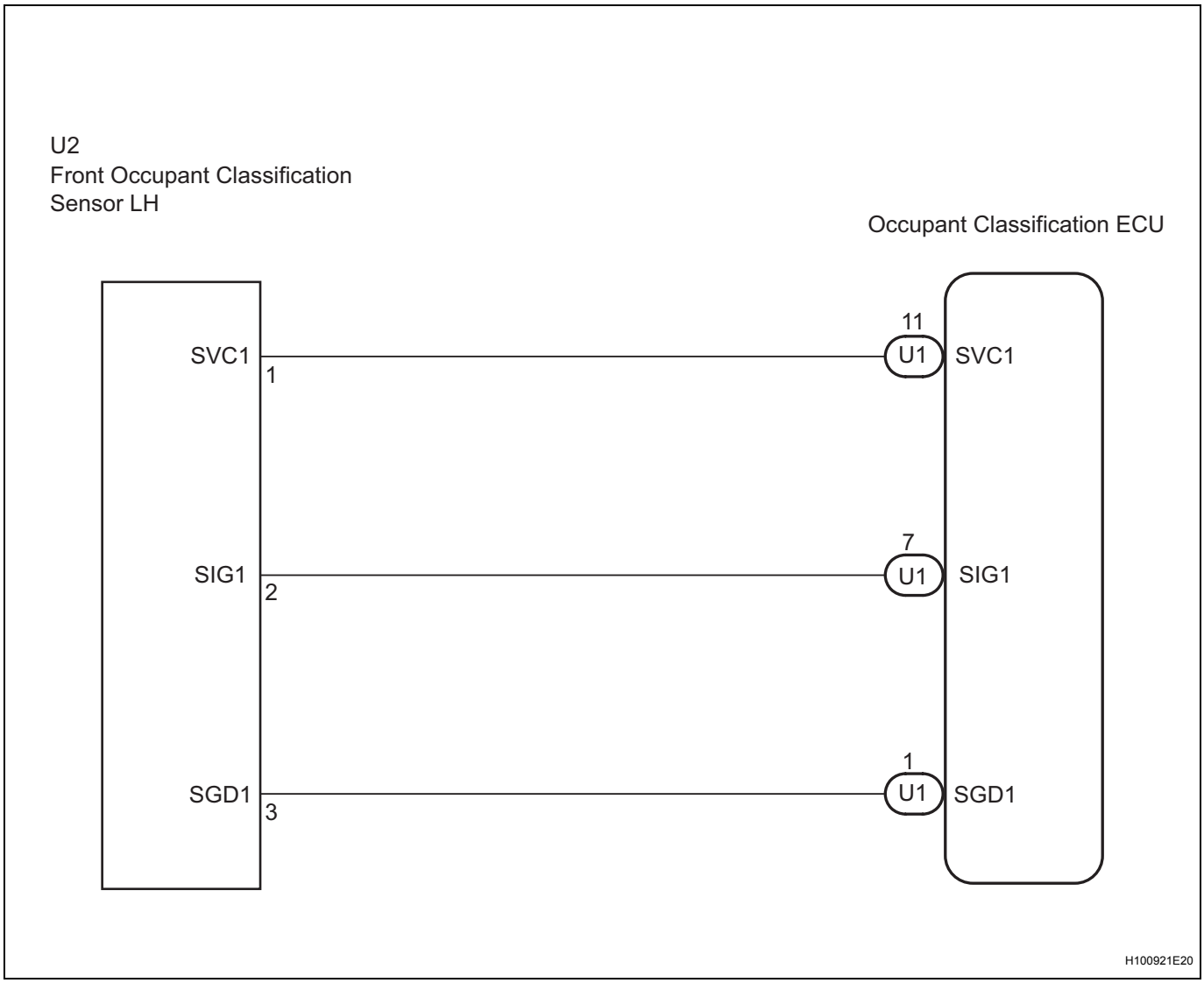

INSPECTION PROCEDURE

HINT:

- If troubleshooting (wire harness inspection) is difficult to perform, remove the front passenger seat installation bolts to see the under surface of the seat cushion.
- In the above case, hold the seat so that it does not tip over. Holding the seat for a long period of time may cause a problem, such as seat rail deformation. Hold the seat up only for as long as necessary.

1	CHECK DTC

(a) Turn the ignition switch to the on position.
(b) Clear the DTCs stored in the memory (See page RS-223).
HINT:
First clear DTCs stored in the occupant classification ECU and then in the center airbag sensor assembly.
(c) Turn the ignition switch to the lock position.
(d) Turn the ignition switch to the on position.
(e) Check the DTCs (See page RS-223).
OK:
DTC B1780 is not output.
HINT:
Codes other than DTC B1780 may be output at this time, but they are not related to this check.

OK → **USE SIMULATION METHOD TO CHECK**

NG ↓

2	CHECK CONNECTION OF CONNECTORS

(a) Turn the ignition switch to the lock position.
(b) Disconnect the negative (-) terminal cable from the battery, and wait for at least 90 seconds.
(c) Check that the connectors are properly connected to the occupant classification ECU and the front occupant classification sensor LH.
OK:
The connectors are properly connected.

NG → **CONNECT CONNECTORS**

OK ↓

RS

3 CHECK FRONT SEAT WIRE RH (TO B+)

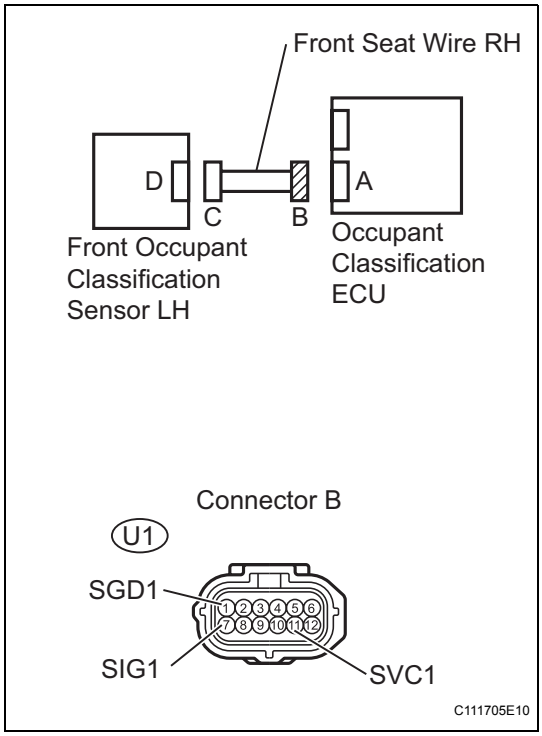

(a) Disconnect the connectors from the occupant classification ECU and the front occupant classification sensor LH.
(b) Connect the negative (-) terminal cable to the battery.
(c) Turn the ignition switch to the on position.
(d) Measure the voltage.
Standard voltage

Tester connection	Condition	Specified condition
U1-1 (SGD1) - Body ground	Ignition switch on	Below 1 V
U1-7 (SIG1) - Body ground	Ignition switch on	Below 1 V
U1-11 (SVC1) - Body ground	Ignition switch on	Below 1 V

NG → **REPAIR OR REPLACE FRONT SEAT WIRE RH**

OK

4 CHECK FRONT SEAT WIRE RH (FOR OPEN)

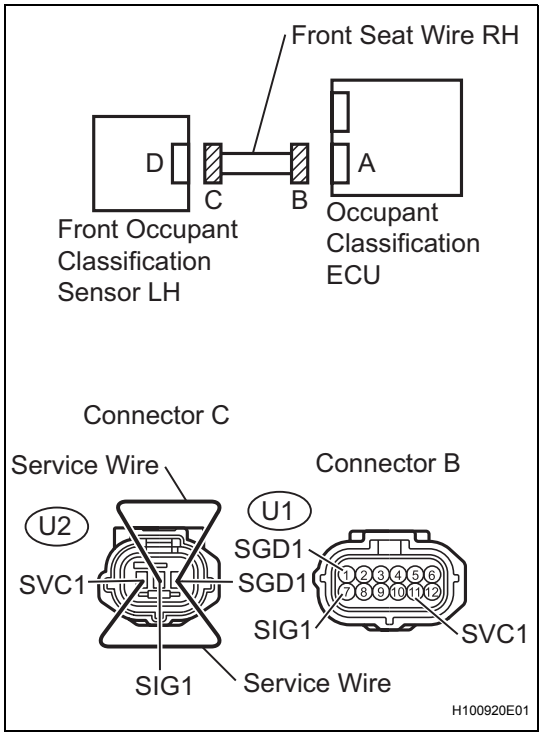

(a) Turn the ignition switch to the lock position.
(b) Disconnect the negative (-) terminal cable from the battery, and wait for at least 90 seconds.
(c) Using a service wire, connect U2-1 (SVC1) and U2-3 (SGD1), and connect U2-2 (SIG1) and U2-3 (SGD1) of connector C.
NOTICE:
Do not forcibly insert the service wire into the terminals of the connector when connecting.
(d) Measure the resistance.
Standard resistance

Tester connection	Condition	Specified condition
U1-7 (SIG1) - U1-1 (SGD1)	Always	Below 1 Ω
U1-11 (SVC1) - U1-1 (SGD1)	Always	Below 1 Ω

NG → **REPAIR OR REPLACE FRONT SEAT WIRE RH**

OK

RS

5 CHECK FRONT SEAT WIRE RH (FOR SHORT)

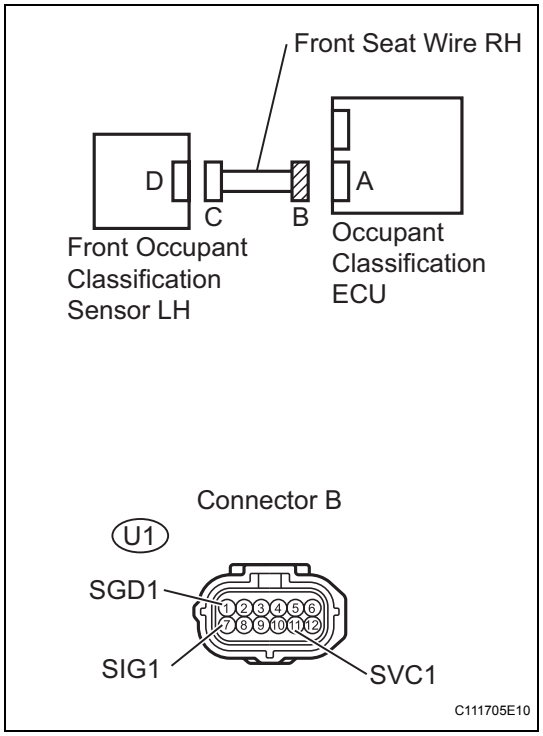

(a) Disconnect the service wire from connector C.

(b) Measure the resistance.

Standard resistance

Tester connection	Condition	Specified condition
U1-7 (SIG1) - U1-1 (SGD1)	Always	1 MΩ or higher
U1-11 (SVC1) - U1-1 (SGD1)	Always	1 MΩ or higher
U1-7 (SIG1) - U1-11 (SVC1)	Always	1 MΩ or higher

NG → **REPAIR OR REPLACE FRONT SEAT WIRE RH**

OK

6 CHECK FRONT SEAT WIRE RH (TO GROUND)

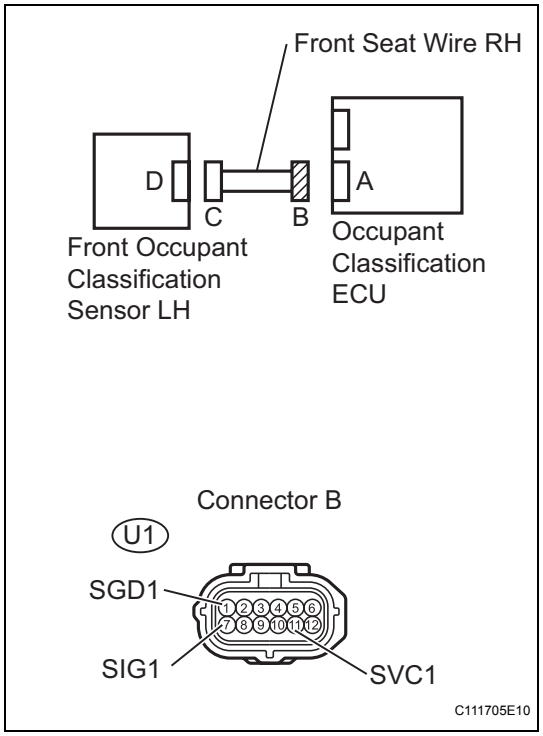

(a) Measure the resistance.

Standard resistance

Tester connection	Condition	Specified condition
U1-1 (SGD1) - Body ground	Always	1 MΩ or higher
U1-7 (SIG1) - Body ground	Always	1 MΩ or higher
U1-11 (SVC1) - Body ground	Always	1 MΩ or higher

NG → **REPAIR OR REPLACE FRONT SEAT WIRE RH**

OK

RS

7	CHECK DTC

(a) Connect the connectors to the occupant classification ECU and the front occupant classification sensor LH.
(b) Connect the negative (-) terminal cable to the battery.
(c) Turn the ignition switch to the on position.
(d) Clear the DTCs stored in the memory (See page RS-223).
HINT:
First clear DTCs stored in the occupant classification ECU and then in the center airbag sensor assembly.
(e) Turn the ignition switch to the lock position.
(f) Turn the ignition switch to the on position.
(g) Check the DTCs (See page RS-223).
OK:
DTC B1780 is not output.
HINT:
Codes other than DTC B1780 may be output at this time, but they are not related to this check.

OK → **USE SIMULATION METHOD TO CHECK**

NG ↓

8	REPLACE OCCUPANT CLASSIFICATION ECU

(a) Turn the ignition switch to the lock position.
(b) Disconnect the negative (-) terminal cable from the battery, and wait for at least 90 seconds.
(c) Replace the occupant classification ECU (See page RS-493).
HINT:
Perform the inspection using parts from a normal vehicle if possible.

NEXT ↓

9	PERFORM ZERO POINT CALIBRATION

(a) Connect the negative (-) terminal cable to the battery.
(b) Connect the intelligent tester to the DLC3.
(c) Turn the ignition switch to the on position.
(d) Using the intelligent tester, perform the zero point calibration (See page RS-215).
OK:
COMPLETED is displayed.

NG → **Go to step 12**

OK ↓

10	PERFORM SENSITIVITY CHECK

(a) Using the intelligent tester, perform the sensitivity check (See page RS-215).
  (1) Confirm that nothing is placed on the passenger seat.
  (2) Confirm that the beginning sensor reading is within the standard range.
  Standard range:
  -3.2 to 3.2 kg (-7 to 7 lb)
  (3) Place a 30 kg (66.14 lb) weight (e.g. a lead mass) onto the front passenger seat.
  (4) Confirm that the sensitivity is within the standard range.
  Standard range:
  27 to 33 kg (59.52 to 72.75 lb)
  HINT:
  When performing the sensitivity check, use a solid metal weight (the check result may not be accurate if a liquid weight is used).

NG → **Go to step 12**

OK

11	CHECK DTC

(a) Connect the negative (-) terminal cable to the battery.
(b) Turn the ignition switch to the on position.
(c) Clear the DTCs stored in the memory (See page RS-223).
  HINT:
  First clear DTCs stored in the occupant classification ECU and then in the center airbag sensor assembly.
(d) Turn the ignition switch to the lock position.
(e) Turn the ignition switch to the on position.
(f) Check the DTCs (See page RS-223).
  OK:
  DTC B1780 is not output.
  HINT:
  Codes other than DTC B1780 may be output at this time, but they are not related to this check.

OK → **END**

NG

12	REPLACE FRONT SEAT ASSEMBLY RH

(a) Turn the ignition switch to the lock position.
(b) Disconnect the negative (-) terminal cable from the battery, and wait for at least 90 seconds.
(c) Replace the front seat assembly RH.

for Hatchback: (See page SE-28)
for Sedan: (See page SE-5)

NEXT

RS

13	PERFORM ZERO POINT CALIBRATION

(a) Connect the negative (-) terminal cable to the battery.
(b) Connect the intelligent tester to the DLC3.
(c) Turn the ignition switch to the on position.
(d) Using the intelligent tester, perform the zero point calibration (See page RS-215).
OK:
COMPLETED is displayed.

NEXT

14	PERFORM SENSITIVITY CHECK

(a) Using the intelligent tester, perform the sensitivity check (See page RS-215).
(1) Confirm that nothing is placed on the passenger seat.
(2) Confirm that the beginning sensor reading is within the standard range.
Standard range:
-3.2 to 3.2 kg (-7 to 7 lb)
(3) Place a 30 kg (66.14 lb) weight (e.g. a lead mass) onto the front passenger seat.
(4) Confirm that the sensitivity is within the standard range.
Standard range:
27 to 33 kg (59.52 to 72.75 lb)
HINT:
When performing the sensitivity check, use a solid metal weight (the check result may not be accurate if a liquid weight is used).

NEXT

END

DTC	B1781	Front Occupant Classification Sensor RH Circuit Malfunction

DESCRIPTION

The front occupant classification sensor RH circuit consists of the occupant classification ECU and the front occupant classification sensor RH.
DTC B1781 is recorded when a malfunction is detected in the front occupant classification sensor RH circuit.

RS

DTC No.	DTC Detecting Condition	Trouble Area
B1781	• Occupant classification ECU detects line short circuit signal, open circuit signal, short circuit to ground signal or short circuit to B+ signal in front occupant classification sensor RH circuit for 2 seconds • Front occupant classification sensor RH malfunction • Occupant classification ECU malfunction	• Front seat wire RH • Front seat assembly RH (Front occupant classification sensor RH) • Occupant classification ECU

WIRING DIAGRAM

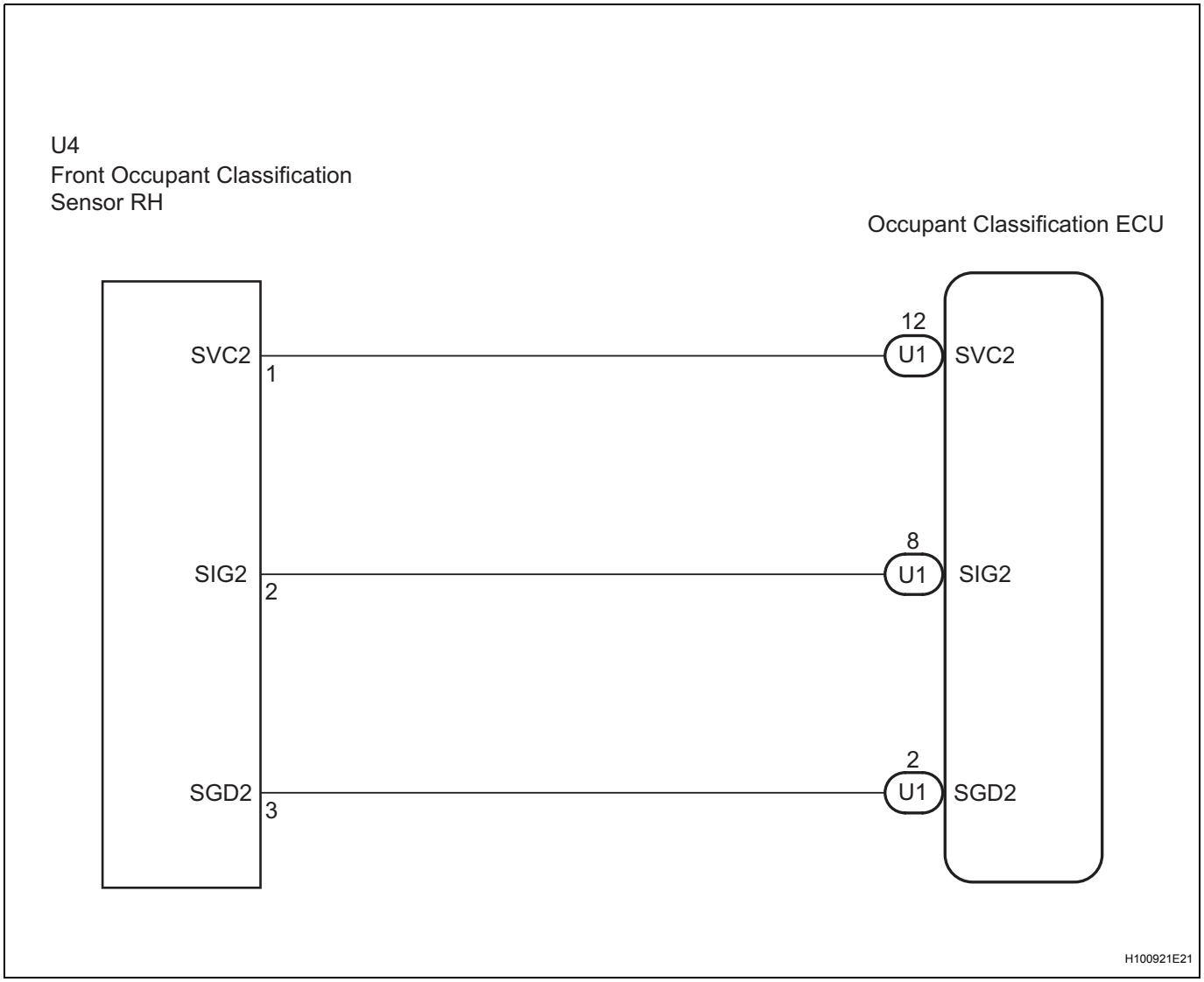

INSPECTION PROCEDURE

HINT:

- If troubleshooting (wire harness inspection) is difficult to perform, remove the front passenger seat installation bolts to see the under surface of the seat cushion.
- In the above case, hold the seat so that it does not tip over. Holding the seat for a long period of time may cause a problem, such as seat rail deformation. Hold the seat up only for as long as necessary.

RS

1	CHECK DTC

(a) Turn the ignition switch to the on position.
(b) Clear the DTCs stored in the memory (See page RS-223).
HINT:
First clear DTCs stored in the occupant classification ECU and then in the center airbag sensor assembly.
(c) Turn the ignition switch to the lock position.
(d) Turn the ignition switch to the on position.
(e) Check the DTCs (See page RS-223).
OK:
DTC B1781 is not output.
HINT:
Codes other than DTC B1781 may be output at this time, but they are not related to this check.

OK → **USE SIMULATION METHOD TO CHECK**

NG ↓

2	CHECK CONNECTION OF CONNECTORS

(a) Turn the ignition switch to the lock position.
(b) Disconnect the negative (-) terminal cable from the battery, and wait for at least 90 seconds.
(c) Check that the connectors are properly connected to the occupant classification ECU and the front occupant classification sensor RH.
OK:
The connectors are properly connected.

NG → **CONNECT CONNECTORS**

OK ↓

RS

3 CHECK FRONT SEAT WIRE RH (TO B+)

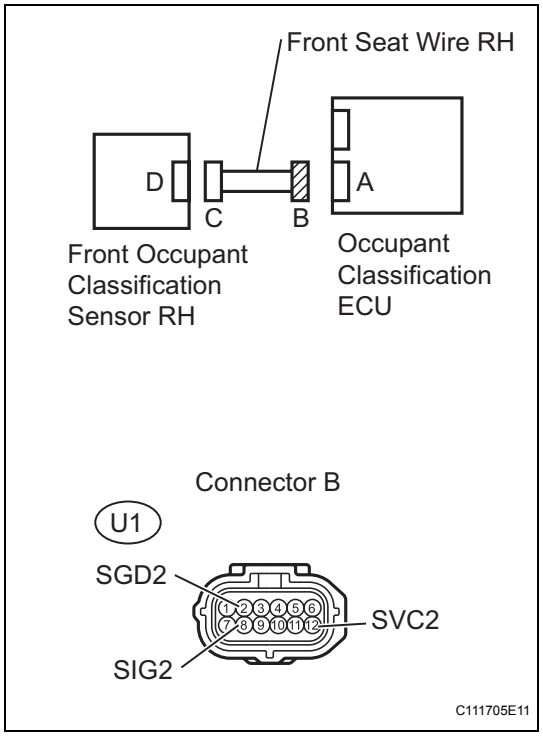

(a) Disconnect the connectors from the occupant classification ECU and the front occupant classification sensor RH.
(b) Connect the negative (-) terminal cable to the battery.
(c) Turn the ignition switch to the on position.
(d) Measure the voltage.
Standard voltage

Tester connection	Condition	Specified condition
U1-2 (SGD2) - Body ground	Ignition switch on	Below 1 V
U1-8 (SIG2) - Body ground	Ignition switch on	Below 1 V
U1-12 (SVC2) - Body ground	Ignition switch on	Below 1 V

NG → **REPAIR OR REPLACE FRONT SEAT WIRE RH**

OK

4 CHECK FRONT SEAT WIRE RH (FOR OPEN)

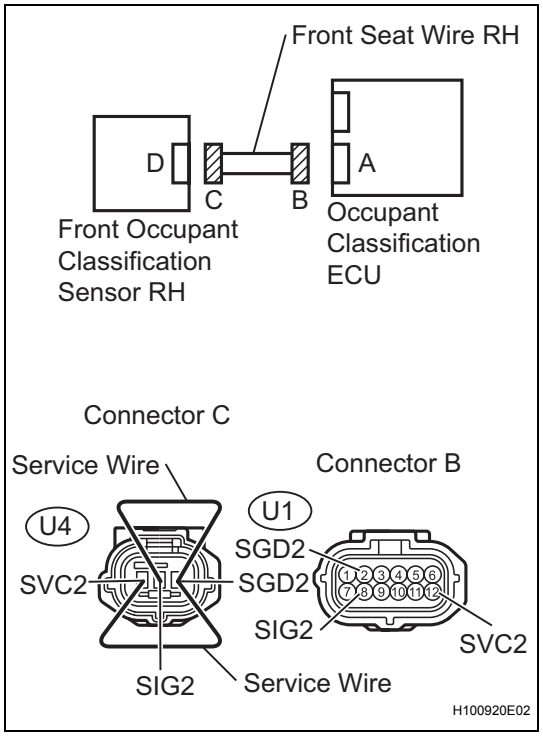

(a) Turn the ignition switch to the lock position.
(b) Disconnect the negative (-) terminal cable from the battery, and wait for at least 90 seconds.
(c) Using a service wire, connect U4-1 (SVC2) and U4-3 (SGD2), and connect U4-2 (SIG2) and U4-3 (SGD2) of connector C.
NOTICE:
Do not forcibly insert the service wire into the terminals of the connector when connecting.
(d) Measure the resistance.
Standard resistance

Tester connection	Condition	Specified condition
U1-8 (SIG2) - U1-2 (SGD2)	Always	Below 1 Ω
U1-12 (SVC2) - U1-2 (SGD2)	Always	Below 1 Ω

NG → **REPAIR OR REPLACE FRONT SEAT WIRE RH**

OK

RS

5 CHECK FRONT SEAT WIRE RH (FOR SHORT)

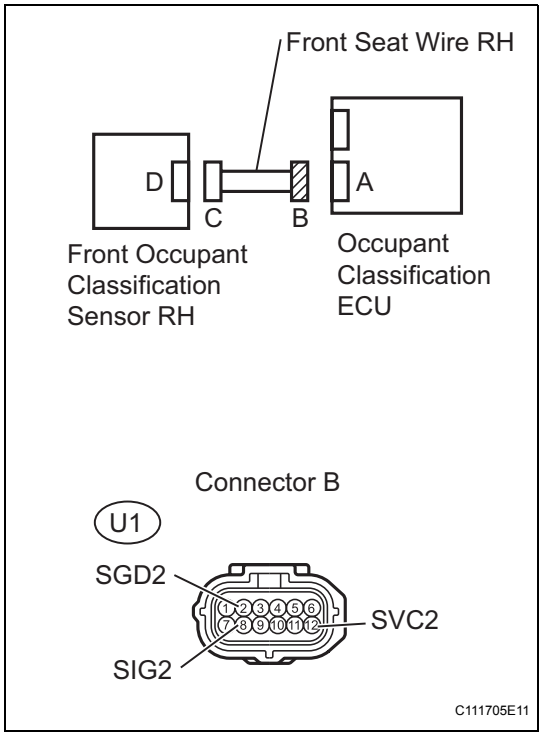

(a) Disconnect the service wire from connector C.
(b) Measure the resistance.
Standard resistance

Tester connection	Condition	Specified condition
U1-8 (SIG2) - U1-2 (SGD2)	Always	1 MΩ or higher
U1-12 (SVC2) - U1-2 (SGD2)	Always	1 MΩ or higher
U1-8 (SIG2) - U1-12 (SVC2)	Always	1 MΩ or higher

NG → **REPAIR OR REPLACE FRONT SEAT WIRE RH**

OK

6 CHECK FRONT SEAT WIRE RH (TO GROUND)

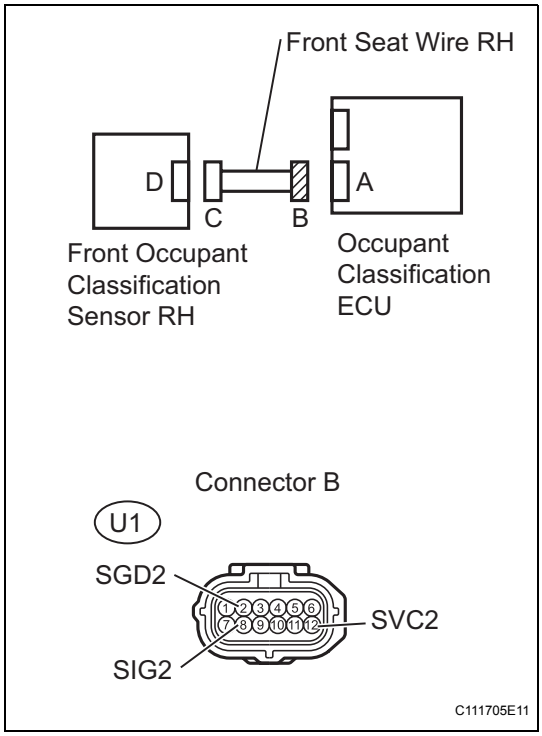

(a) Measure the resistance.
Standard resistance

Tester connection	Condition	Specified condition
U1-2 (SGD2) - Body ground	Always	1 MΩ or higher
U1-8 (SIG2) - Body ground	Always	1 MΩ or higher
U1-12 (SVC2) - Body ground	Always	1 MΩ or higher

NG → **REPAIR OR REPLACE FRONT SEAT WIRE RH**

OK

7	CHECK DTC

(a) Connect the connectors to the occupant classification ECU and the front occupant classification sensor RH.
(b) Connect the negative (-) terminal cable to the battery.
(c) Turn the ignition switch to the on position.
(d) Clear the DTCs stored in the memory (See page RS-223).
HINT:
First clear DTCs stored in the occupant classification ECU and then in the center airbag sensor assembly.
(e) Turn the ignition switch to the lock position.
(f) Turn the ignition switch to the on position.
(g) Check the DTCs (See page RS-223).
OK:
DTC B1781 is not output.
HINT:
Codes other than DTC B1781 may be output at this time, but they are not related to this check.

OK → **USE SIMULATION METHOD TO CHECK**

NG ↓

8	REPLACE OCCUPANT CLASSIFICATION ECU

(a) Turn the ignition switch to the lock position.
(b) Disconnect the negative (-) terminal cable from the battery, and wait for at least 90 seconds.
(c) Replace the occupant classification ECU (See page RS-493).
HINT:
Perform the inspection using parts from a normal vehicle if possible.

NEXT ↓

9	PERFORM ZERO POINT CALIBRATION

(a) Connect the negative (-) terminal cable to the battery.
(b) Connect the intelligent tester to the DLC3.
(c) Turn the ignition switch to the on position.
(d) Using the intelligent tester, perform the zero point calibration (See page RS-215).
OK:
COMPLETED is displayed.

NG → **Go to step 12**

OK ↓

RS

10	PERFORM SENSITIVITY CHECK

(a) Using the intelligent tester, perform the sensitivity check (See page RS-215).
  (1) Confirm that nothing is placed on the passenger seat.
  (2) Confirm that the beginning sensor reading is within the standard range.
  Standard range:
  -3.2 to 3.2 kg (-7 to 7 lb)
  (3) Place a 30 kg (66.14 lb) weight (e.g. a lead mass) onto the front passenger seat.
  (4) Confirm that the sensitivity is within the standard range.
  Standard range:
  27 to 33 kg (59.52 to 72.75 lb)
  HINT:
  When performing the sensitivity check, use a solid metal weight (the check result may not be accurate if a liquid weight is used).

NG → **Go to step 12**

OK

11	CHECK DTC

(a) Connect the negative (-) terminal cable to the battery.
(b) Turn the ignition switch to the on position.
(c) Clear the DTCs stored in the memory (See page RS-223).
  HINT:
  First clear DTCs stored in the occupant classification ECU and then in the center airbag sensor assembly.
(d) Turn the ignition switch to the lock position.
(e) Turn the ignition switch to the on position.
(f) Check the DTCs (See page RS-223).
  OK:
  DTC B1781 is not output.
  HINT:
  Codes other than DTC B1781 may be output at this time, but they are not related to this check.

OK → **END**

NG

12	REPLACE FRONT SEAT ASSEMBLY RH

(a) Turn the ignition switch to the lock position.
(b) Disconnect the negative (-) terminal cable from the battery, and wait for at least 90 seconds.
(c) Replace the front seat assembly RH.

for Hatchback: (See page SE-28)
for Sedan: (See page SE-5)

NEXT

13	PERFORM ZERO POINT CALIBRATION

RS

(a) Connect the negative (-) terminal cable to the battery.
(b) Connect the intelligent tester to the DLC3.
(c) Turn the ignition switch to the on position.
(d) Using the intelligent tester, perform the zero point calibration (See page RS-215).
OK:
COMPLETED is displayed.

NEXT

14	PERFORM SENSITIVITY CHECK

(a) Using the intelligent tester, perform the sensitivity check (See page RS-215).
(1) Confirm that nothing is placed on the passenger seat.
(2) Confirm that the beginning sensor reading is within the standard range.
Standard range:
-3.2 to 3.2 kg (-7 to 7 lb)
(3) Place a 30 kg (66.14 lb) weight (e.g. a lead mass) onto the front passenger seat.
(4) Confirm that the sensitivity is within the standard range.
Standard range:
27 to 33 kg (59.52 to 72.75 lb)
HINT:
When performing the sensitivity check, use a solid metal weight (the check result may not be accurate if a liquid weight is used).

NEXT

END

DTC	B1782	Rear Occupant Classification Sensor LH Circuit Malfunction

DESCRIPTION

RS

The rear occupant classification sensor LH circuit consists of the occupant classification ECU and the rear occupant classification sensor LH.
DTC B1782 is recorded when a malfunction is detected in the rear occupant classification sensor LH circuit.

DTC No.	DTC Detecting Condition	Trouble Area
B1782	• Occupant classification ECU detects line short circuit signal, open circuit signal, short circuit to ground signal or short circuit to B+ signal in rear occupant classification sensor LH circuit for 2 seconds • Rear occupant classification sensor LH malfunction • Occupant classification ECU malfunction	• Front seat wire RH • Front seat assembly RH (Rear occupant classification sensor LH) • Occupant classification ECU

WIRING DIAGRAM

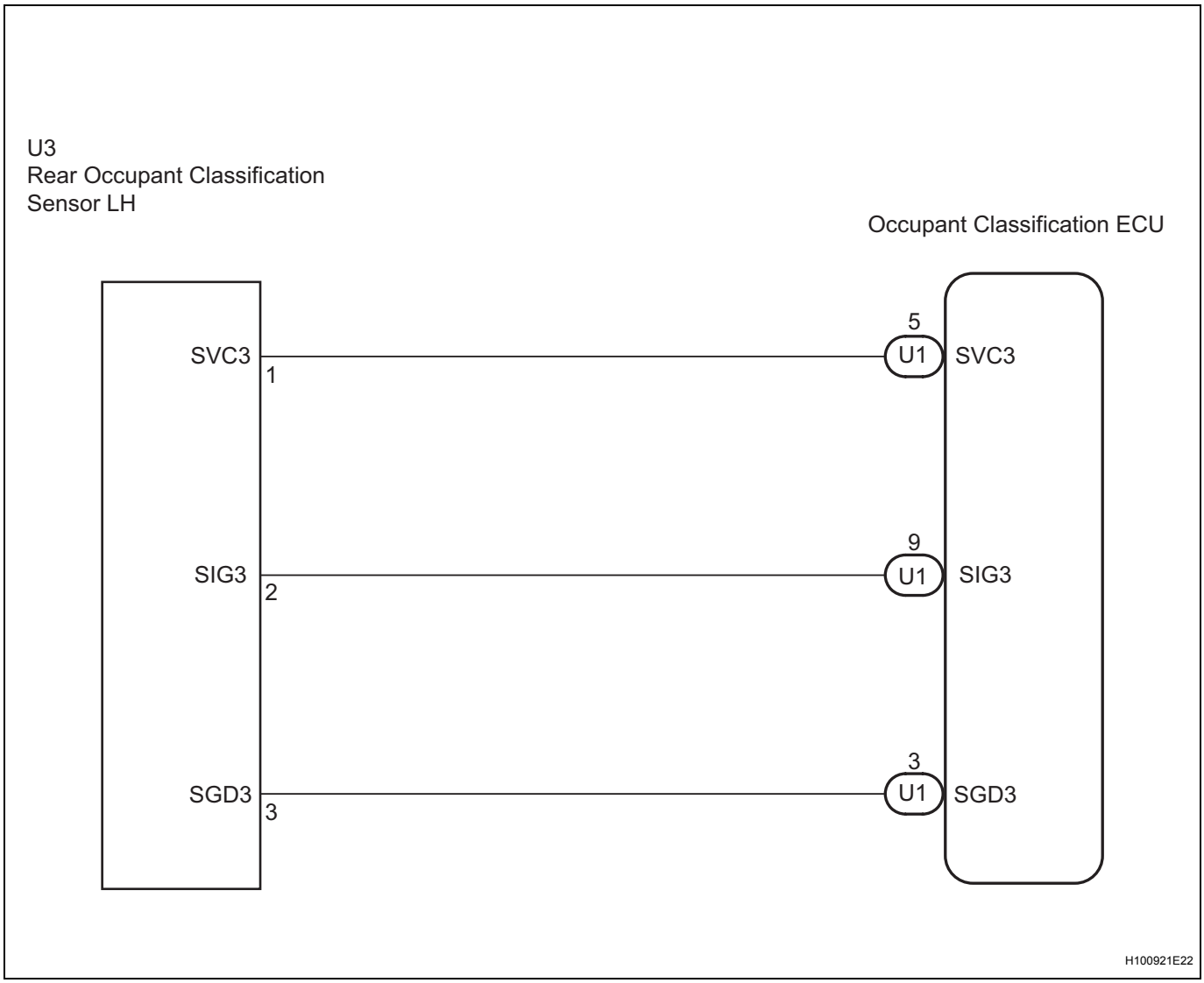

INSPECTION PROCEDURE

HINT:

- If troubleshooting (wire harness inspection) is difficult to perform, remove the front passenger seat installation bolts to see the under surface of the seat cushion.
- In the above case, hold the seat so that it does not tip over. Holding the seat for a long period of time may cause a problem, such as seat rail deformation. Hold the seat up only for as long as necessary.

1	CHECK DTC

(a) Turn the ignition switch to the on position.
(b) Clear the DTCs stored in the memory (See page RS-223).
HINT:
First clear DTCs stored in the occupant classification ECU and then in the center airbag sensor assembly.
(c) Turn the ignition switch to the lock position.
(d) Turn the ignition switch to the on position.
(e) Check the DTCs (See page RS-223).
OK:
DTC B1782 is not output.
HINT:
Codes other than DTC B1782 may be output at this time, but they are not related to this check.

OK → **USE SIMULATION METHOD TO CHECK**

NG

2	CHECK CONNECTION OF CONNECTORS

(a) Turn the ignition switch to the lock position.
(b) Disconnect the negative (-) terminal cable from the battery, and wait for at least 90 seconds.
(c) Check that the connectors are properly connected to the occupant classification ECU and the rear occupant classification sensor LH.
OK:
The connectors are properly connected.

NG → **CONNECT CONNECTORS**

OK

RS

3 CHECK FRONT SEAT WIRE RH (TO B+)

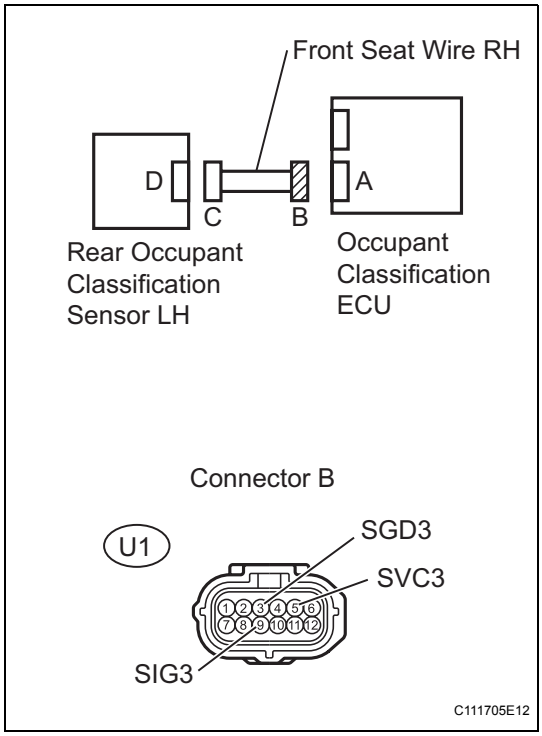

(a) Disconnect the connectors from the occupant classification ECU and the rear occupant classification sensor LH.
(b) Connect the negative (-) terminal cable to the battery.
(c) Turn the ignition switch to the on position.
(d) Measure the voltage.
Standard voltage

Tester connection	Condition	Specified condition
U1-3 (SGD3) - Body ground	Ignition switch on	Below 1 V
U1-5 (SVC3) - Body ground	Ignition switch on	Below 1 V
U1-9 (SIG3) - Body ground	Ignition switch on	Below 1 V

NG → **REPAIR OR REPLACE FRONT SEAT WIRE RH**

OK

4 CHECK FRONT SEAT WIRE RH (FOR OPEN)

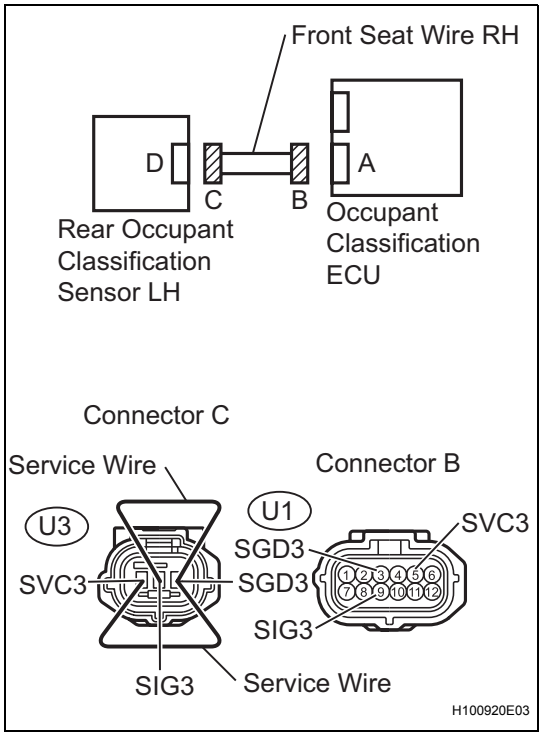

(a) Turn the ignition switch to the lock position.
(b) Disconnect the negative (-) terminal cable from the battery, and wait for at least 90 seconds.
(c) Using a service wire, connect U3-1 (SVC3) and U3-3 (SGD3), and connect U3-2 (SIG3) and U3-3 (SGD3) of connector C.
NOTICE:
Do not forcibly insert the service wire into the terminals of the connector when connecting.
(d) Measure the resistance.
Standard resistance

Tester connection	Condition	Specified condition
U1-5 (SVC3) - U1-3 (SGD3)	Always	Below 1 Ω
U1-9 (SIG3) - U1-3 (SGD3)	Always	Below 1 Ω

NG → **REPAIR OR REPLACE FRONT SEAT WIRE RH**

OK

RS

5 CHECK FRONT SEAT WIRE RH (FOR SHORT)

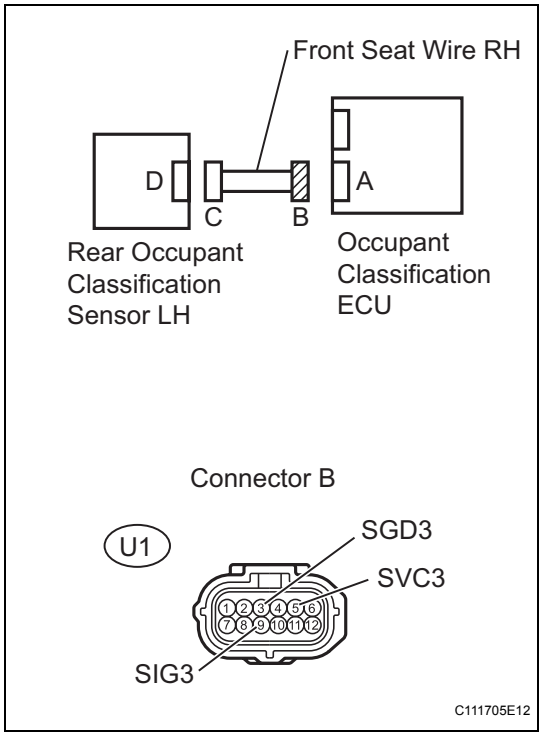

(a) Disconnect the service wire from connector C.
(b) Measure the resistance.
Standard resistance

Tester connection	Condition	Specified condition
U1-5 (SVC3) - U1-3 (SGD3)	Always	1 MΩ or higher
U1-9 (SIG3) - U1-3 (SGD3)	Always	1 MΩ or higher
U1-5 (SVC3) - U1-9 (SIG3)	Always	1 MΩ or higher

NG → **REPAIR OR REPLACE FRONT SEAT WIRE RH**

OK

6 CHECK FRONT SEAT WIRE RH (TO GROUND)

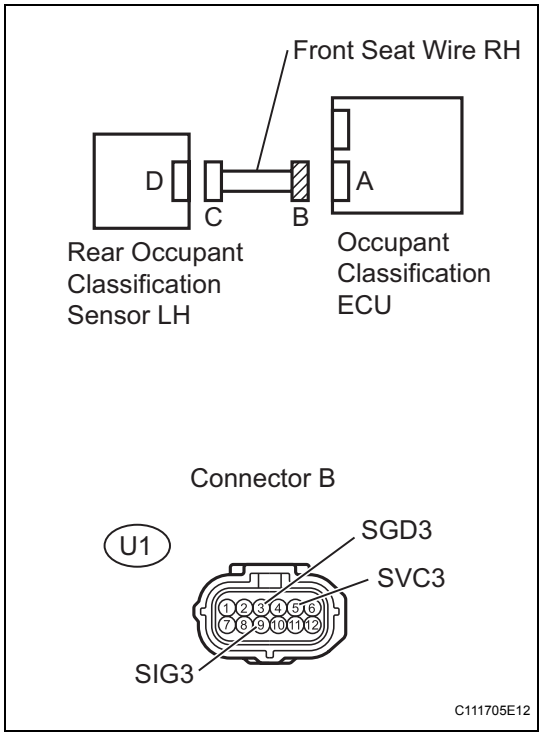

(a) Measure the resistance.
Standard resistance

Tester connection	Condition	Specified condition
U1-3 (SGD3) - Body ground	Always	1 MΩ or higher
U1-5 (SVC3) - Body ground	Always	1 MΩ or higher
U1-9 (SIG3) - Body ground	Always	1 MΩ or higher

NG → **REPAIR OR REPLACE FRONT SEAT WIRE RH**

OK

RS

7	CHECK DTC

(a) Connect the connectors to the occupant classification ECU and the rear occupant classification sensor LH.
(b) Connect the negative (-) terminal cable to the battery.
(c) Turn the ignition switch to the on position.
(d) Clear the DTCs stored in the memory (See page RS-223).
HINT:
First clear DTCs stored in the occupant classification ECU and then in the center airbag sensor assembly.
(e) Turn the ignition switch to the lock position.
(f) Turn the ignition switch to the on position.
(g) Check the DTCs (See page RS-223).
OK:
DTC B1782 is not output.
HINT:
Codes other than DTC B1782 may be output at this time, but they are not related to this check.

OK → **USE SIMULATION METHOD TO CHECK**

NG ↓

8	REPLACE OCCUPANT CLASSIFICATION ECU

(a) Turn the ignition switch to the lock position.
(b) Disconnect the negative (-) terminal cable from the battery, and wait for at least 90 seconds.
(c) Replace the occupant classification ECU (See page RS-493).
HINT:
Perform the inspection using parts from a normal vehicle if possible.

NEXT ↓

9	PERFORM ZERO POINT CALIBRATION

(a) Connect the negative (-) terminal cable to the battery.
(b) Connect the intelligent tester to the DLC3.
(c) Turn the ignition switch to the on position.
(d) Using the intelligent tester, perform the zero point calibration (See page RS-215).
OK:
COMPLETED is displayed.

NG → **Go to step 12**

OK ↓

10	PERFORM SENSITIVITY CHECK

(a) Using the intelligent tester, perform the sensitivity check (See page RS-215).
  (1) Confirm that nothing is placed on the passenger seat.
  (2) Confirm that the beginning sensor reading is within the standard range.
  Standard range:
  -3.2 to 3.2 kg (-7 to 7 lb)
  (3) Place a 30 kg (66.14 lb) weight (e.g. a lead mass) onto the front passenger seat.
  (4) Confirm that the sensitivity is within the standard range.
  Standard range:
  27 to 33 kg (59.52 to 72.75 lb)
  HINT:
  When performing the sensitivity check, use a solid metal weight (the check result may not be accurate if a liquid weight is used).

NG → **Go to step 12**

OK

11	CHECK DTC

(a) Connect the negative (-) terminal cable to the battery.
(b) Turn the ignition switch to the on position.
(c) Clear the DTCs stored in the memory (See page RS-223).
  HINT:
  First clear DTCs stored in the occupant classification ECU and then in the center airbag sensor assembly.
(d) Turn the ignition switch to the lock position.
(e) Turn the ignition switch to the on position.
(f) Check the DTCs (See page RS-223).
  OK:
  DTC B1782 is not output.
  HINT:
  Codes other than DTC B1782 may be output at this time, but they are not related to this check.

OK → **END**

NG

12	REPLACE FRONT SEAT ASSEMBLY RH

(a) Turn the ignition switch to the lock position.
(b) Disconnect the negative (-) terminal cable from the battery, and wait for at least 90 seconds.
(c) Replace the front seat assembly RH.

for Hatchback: (See page SE-28)
for Sedan: (See page SE-5)

NEXT

RS

13	PERFORM ZERO POINT CALIBRATION

(a) Connect the negative (-) terminal cable to the battery.
(b) Connect the intelligent tester to the DLC3.
(c) Turn the ignition switch to the on position.
(d) Using the intelligent tester, perform the zero point calibration (See page RS-215).
OK:
COMPLETED is displayed.

NEXT

14	PERFORM SENSITIVITY CHECK

(a) Using the intelligent tester, perform the sensitivity check (See page RS-215).
(1) Confirm that nothing is placed on the passenger seat.
(2) Confirm that the beginning sensor reading is within the standard range.
Standard range:
-3.2 to 3.2 kg (-7 to 7 lb)
(3) Place a 30 kg (66.14 lb) weight (e.g. a lead mass) onto the front passenger seat.
(4) Confirm that the sensitivity is within the standard range.
Standard range:
27 to 33 kg (59.52 to 72.75 lb)
HINT:
When performing the sensitivity check, use a solid metal weight (the check result may not be accurate if a liquid weight is used).

NEXT

END

DTC	B1783	Rear Occupant Classification Sensor RH Circuit Malfunction

DESCRIPTION

The rear occupant classification sensor RH circuit consists of the occupant classification ECU and the rear occupant classification sensor RH.
DTC B1783 is recorded when a malfunction is detected in the rear occupant classification sensor RH circuit.

DTC No.	DTC Detecting Condition	Trouble Area
B1783	• Occupant classification ECU detects line short circuit signal, open circuit signal, short circuit to ground signal or short circuit to B+ signal in rear occupant classification sensor RH circuit for 2 seconds • Rear occupant classification sensor RH malfunction • Occupant classification ECU malfunction	• Front seat wire RH • Front seat assembly RH (Rear occupant classification sensor RH) • Occupant classification ECU

WIRING DIAGRAM

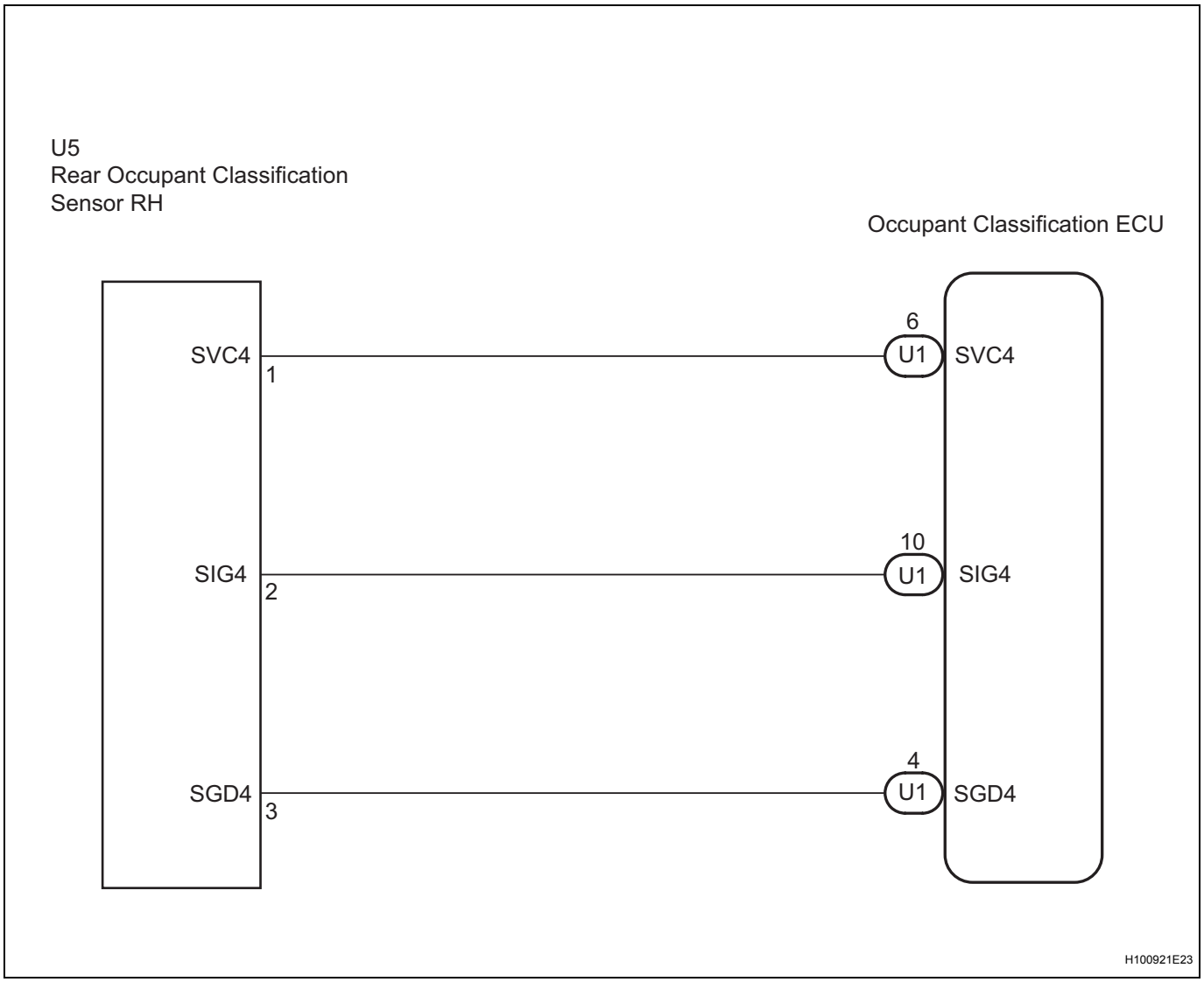

INSPECTION PROCEDURE

HINT:

- If troubleshooting (wire harness inspection) is difficult to perform, remove the front passenger seat installation bolts to see the under surface of the seat cushion.
- In the above case, hold the seat so that it does not tip over. Holding the seat for a long period of time may cause a problem, such as seat rail deformation. Hold the seat up only for as long as necessary.

RS

1	CHECK DTC

(a) Turn the ignition switch to the on position.
(b) Clear the DTCs stored in the memory (See page RS-223).
HINT:
First clear DTCs stored in the occupant classification ECU and then in the center airbag sensor assembly.
(c) Turn the ignition switch to the lock position.
(d) Turn the ignition switch to the on position.
(e) Check the DTCs (See page RS-223).
OK:
DTC B1783 is not output.
HINT:
Codes other than DTC B1783 may be output at this time, but they are not related to this check.

OK → **USE SIMULATION METHOD TO CHECK**

NG ↓

2	CHECK CONNECTION OF CONNECTORS

(a) Turn the ignition switch to the lock position.
(b) Disconnect the negative (-) terminal cable from the battery, and wait for at least 90 seconds.
(c) Check that the connectors are properly connected to the occupant classification ECU and the rear occupant classification sensor RH.
OK:
The connectors are properly connected.

NG → **CONNECT CONNECTORS**

OK ↓

RS

3 CHECK FRONT SEAT WIRE RH (TO B+)

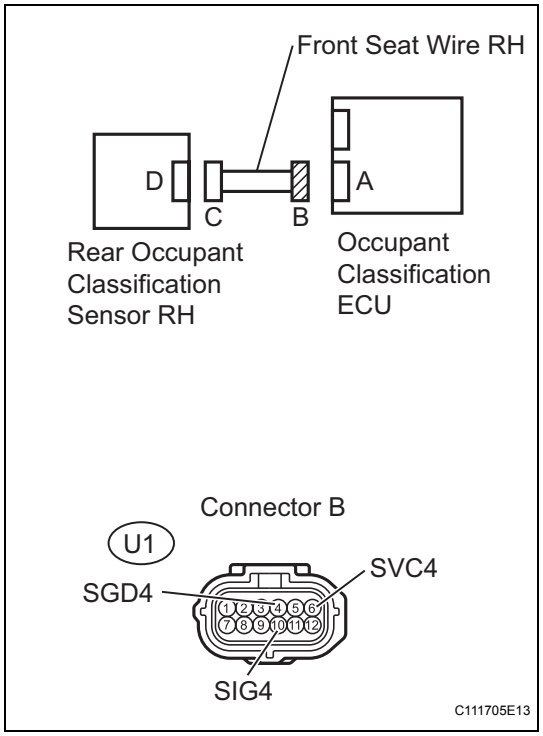

(a) Disconnect the connectors from the occupant classification ECU and the rear occupant classification sensor RH.
(b) Connect the negative (-) terminal cable to the battery.
(c) Turn the ignition switch to the on position.
(d) Measure the voltage.
Standard voltage

Tester connection	Condition	Specified condition
U1-4 (SGD4) - Body ground	Ignition switch on	Below 1 V
U1-6 (SVC4) - Body ground	Ignition switch on	Below 1 V
U1-10 (SIG4) - Body ground	Ignition switch on	Below 1 V

NG → **REPAIR OR REPLACE FRONT SEAT WIRE RH**

OK

4 CHECK FRONT SEAT WIRE RH (FOR OPEN)

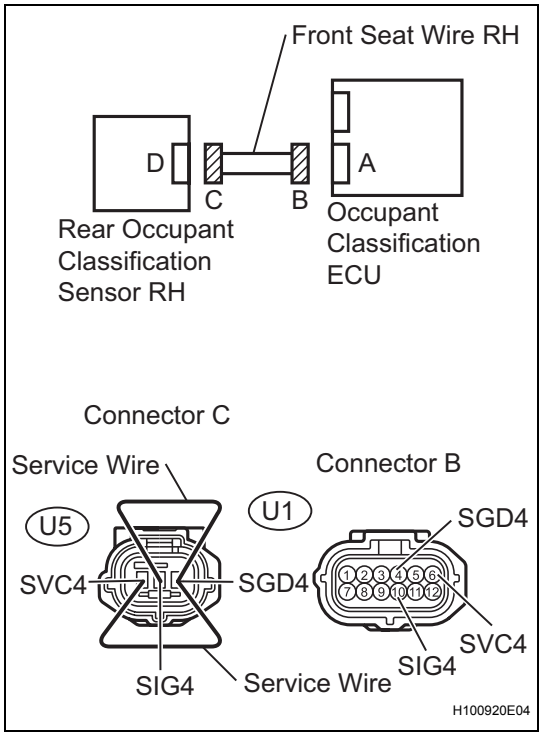

(a) Turn the ignition switch to the lock position.
(b) Disconnect the negative (-) terminal cable from the battery, and wait for at least 90 seconds.
(c) Using a service wire, connect U5-1 (SVC4) and U5-3 (SGD4), and connect U5-2 (SIG4) and U5-3 (SGD4) of connector C.
NOTICE:
Do not forcibly insert the service wire into the terminals of the connector when connecting.
(d) Measure the resistance.
Standard resistance

Tester connection	Condition	Specified condition
U1-6 (SVC4) - U1-4 (SGD4)	Always	Below 1 Ω
U1-10 (SIG4) - U1-4 (SGD4)	Always	Below 1 Ω

NG → **REPAIR OR REPLACE FRONT SEAT WIRE RH**

OK

RS

5 CHECK FRONT SEAT WIRE RH (FOR SHORT)

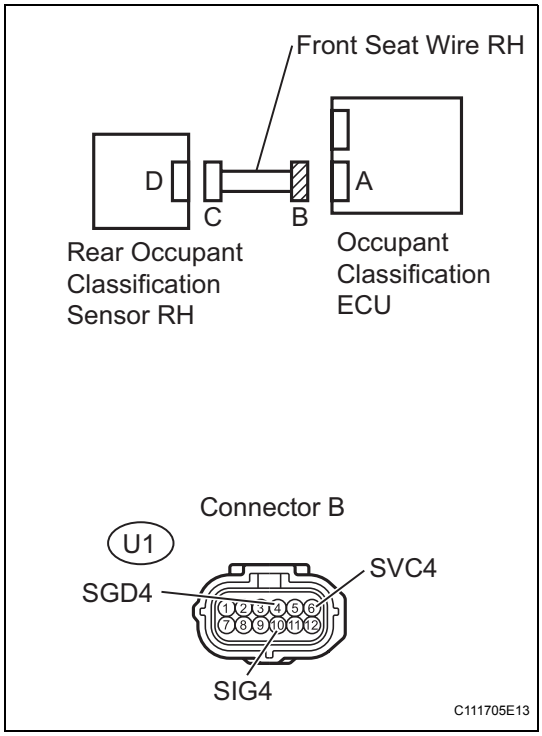

(a) Disconnect the service wire from connector C.
(b) Measure the resistance.
Standard resistance

Tester connection	Condition	Specified condition
U1-6 (SVC4) - U1-4 (SGD4)	Always	1 MΩ or higher
U1-10 (SIG4) - U1-4 (SGD4)	Always	1 MΩ or higher
U1-6 (SVC4) - U1-10 (SIG4)	Always	1 MΩ or higher

NG → **REPAIR OR REPLACE FRONT SEAT WIRE RH**

OK

6 CHECK FRONT SEAT WIRE RH (TO GROUND)

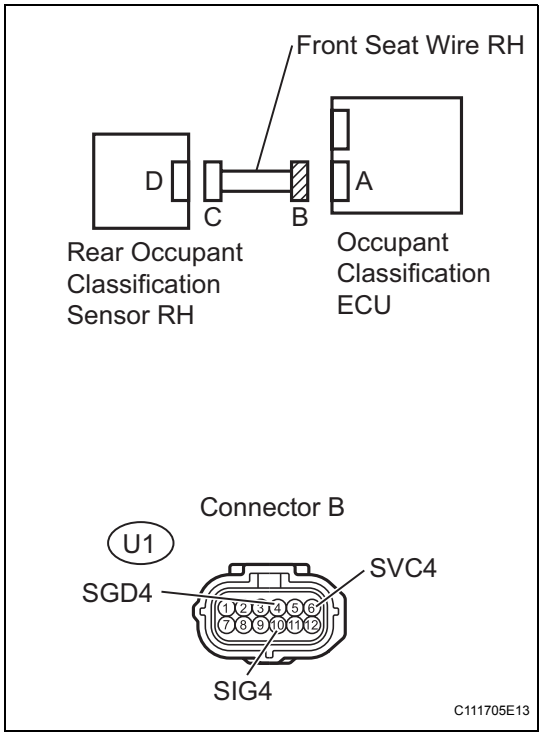

(a) Measure the resistance.
Standard resistance

Tester connection	Condition	Specified condition
U1-4 (SGD4) - Body ground	Always	1 MΩ or higher
U1-6 (SVC4) - Body ground	Always	1 MΩ or higher
U1-10 (SIG4) - Body ground	Always	1 MΩ or higher

NG → **REPAIR OR REPLACE FRONT SEAT WIRE RH**

OK

7	CHECK DTC

(a) Connect the connectors to the occupant classification ECU and the rear occupant classification sensor RH.
(b) Connect the negative (-) terminal cable to the battery.
(c) Turn the ignition switch to the on position.
(d) Clear the DTCs stored in the memory (See page RS-223).
HINT:
First clear DTCs stored in the occupant classification ECU and then in the center airbag sensor assembly.
(e) Turn the ignition switch to the lock position.
(f) Turn the ignition switch to the on position.
(g) Check the DTCs (See page RS-223).
OK:
DTC B1783 is not output.
HINT:
Codes other than DTC B1783 may be output at this time, but they are not related to this check.

OK → **USE SIMULATION METHOD TO CHECK**

NG ↓

8	REPLACE OCCUPANT CLASSIFICATION ECU

(a) Turn the ignition switch to the lock position.
(b) Disconnect the negative (-) terminal cable from the battery, and wait for at least 90 seconds.
(c) Replace the occupant classification ECU (See page RS-493).
HINT:
Perform the inspection using parts from a normal vehicle if possible.

NEXT ↓

9	PERFORM ZERO POINT CALIBRATION

(a) Connect the negative (-) terminal cable to the battery.
(b) Connect the intelligent tester to the DLC3.
(c) Turn the ignition switch to the on position.
(d) Using the intelligent tester, perform the zero point calibration (See page RS-215).
OK:
COMPLETED is displayed.

NG → **Go to step 12**

OK ↓

RS

10	PERFORM SENSITIVITY CHECK

(a) Using the intelligent tester, perform the sensitivity check (See page RS-215).
  (1) Confirm that nothing is placed on the passenger seat.
  (2) Confirm that the beginning sensor reading is within the standard range.
  Standard range:
  -3.2 to 3.2 kg (-7 to 7 lb)
  (3) Place a 30 kg (66.14 lb) weight (e.g. a lead mass) onto the front passenger seat.
  (4) Confirm that the sensitivity is within the standard range.
  Standard range:
  27 to 33 kg (59.52 to 72.75 lb)
  HINT:
  When performing the sensitivity check, use a solid metal weight (the check result may not be accurate if a liquid weight is used).

NG → **Go to step 12**

OK

11	CHECK DTC

(a) Connect the negative (-) terminal cable to the battery.
(b) Turn the ignition switch to the on position.
(c) Clear the DTCs stored in the memory (See page RS-223).
  HINT:
  First clear DTCs stored in the occupant classification ECU and then in the center airbag sensor assembly.
(d) Turn the ignition switch to the lock position.
(e) Turn the ignition switch to the on position.
(f) Check the DTCs (See page RS-223).
  OK:
  DTC B1783 is not output.
  HINT:
  Codes other than DTC B1783 may be output at this time, but they are not related to this check.

OK → **END**

NG

12	REPLACE FRONT SEAT ASSEMBLY RH

(a) Turn the ignition switch to the lock position.
(b) Disconnect the negative (-) terminal cable from the battery, and wait for at least 90 seconds.
(c) Replace the front seat assembly RH.

for Hatchback: (See page SE-28)
for Sedan: (See page SE-5)

NEXT

13	PERFORM ZERO POINT CALIBRATION

RS

(a) Connect the negative (-) terminal cable to the battery.
(b) Connect the intelligent tester to the DLC3.
(c) Turn the ignition switch to the on position.
(d) Using the intelligent tester, perform the zero point calibration (See page RS-215).
OK:
COMPLETED is displayed.

NEXT

14	PERFORM SENSITIVITY CHECK

(a) Using the intelligent tester, perform the sensitivity check (See page RS-215).
(1) Confirm that nothing is placed on the passenger seat.
(2) Confirm that the beginning sensor reading is within the standard range.
Standard range:
-3.2 to 3.2 kg (-7 to 7 lb)
(3) Place a 30 kg (66.14 lb) weight (e.g. a lead mass) onto the front passenger seat.
(4) Confirm that the sensitivity is within the standard range.
Standard range:
27 to 33 kg (59.52 to 72.75 lb)
HINT:
When performing the sensitivity check, use a solid metal weight (the check result may not be accurate if a liquid weight is used).

NEXT

END

DTC	B1785	Front Occupant Classification Sensor LH Collision Detection

DESCRIPTION

RS

DTC B1785 is output when the occupant classification ECU receives a collision detection signal sent by the front occupant classification sensor LH when an accident occurs.
DTC B1785 is also output when the front seat assembly RH is subjected to a strong impact, even if an actual accident does not occur.
However, when the front occupant classification sensor LH outputs a collision detection signal, even if the vehicle is not in a collision, DTC B1785 can be cleared by performing the zero point calibration and sensitivity check.
Therefore, when DTC B1785 is output, first perform the zero point calibration and sensitivity check.

DTC No.	DTC Detecting Condition	Trouble Area
B1785	• Front seat assembly RH malfunction • Occupant classification ECU malfunction • Front occupant classification sensor LH detects large load	• Occupant classification ECU • Front seat assembly RH (Front occupant classification sensor LH)

WIRING DIAGRAM

See page RS-234.

INSPECTION PROCEDURE

1	PERFORM ZERO POINT CALIBRATION

(a) Connect the intelligent tester to the DLC3.
(b) Turn the ignition switch to the on position.
(c) Using the intelligent tester, perform the zero point calibration (See page RS-215).
OK:
COMPLETED is displayed.

NG → **Go to step 4**

OK

2	PERFORM SENSITIVITY CHECK

(a) Using the intelligent tester, perform the sensitivity check (See page RS-215).
(1) Confirm that nothing is placed on the passenger seat.
(2) Confirm that the beginning sensor reading is within the standard range.
Standard range:
-3.2 to 3.2 kg (-7 to 7 lb)
(3) Place a 30 kg (66.14 lb) weight (e.g. a lead mass) onto the front passenger seat.
(4) Confirm that the sensitivity is within the standard range.
Standard range:
27 to 33 kg (59.52 to 72.75 lb)

HINT:
When performing the sensitivity check, use a solid metal weight (the check result may not be accurate if a liquid weight is used).

NG → **Go to step 4**

OK

RS

3	CHECK DTC

(a) Turn the ignition switch to the on position.
(b) Clear the DTCs stored in the memory (See page RS-223).
HINT:
First clear DTCs stored in the occupant classification ECU and then in the center airbag sensor assembly.
(c) Turn the ignition switch to the lock position.
(d) Turn the ignition switch to the on position.
(e) Check the DTCs (See page RS-223).
OK:
DTC B1785 is not output.
HINT:
Codes other than DTC B1785 may be output at this time, but they are not related to this check.

OK → **USE SIMULATION METHOD TO CHECK**

NG

4	REPLACE FRONT SEAT ASSEMBLY RH

(a) Turn the ignition switch to the lock position.
(b) Disconnect the negative (-) terminal cable from the battery, and wait for at least 90 seconds.
(c) Replace the front seat assembly RH.
for Hatchback: (See page SE-28)
for Sedan: (See page SE-5)
HINT:
Perform the inspection using parts from a normal vehicle if possible.

NEXT

5	PERFORM ZERO POINT CALIBRATION

(a) Connect the negative (-) terminal cable to the battery.
(b) Connect the intelligent tester to the DLC3.
(c) Turn the ignition switch to the on position.
(d) Using the intelligent tester, perform the zero point calibration (See page RS-215).
OK:
COMPLETED is displayed.

NG → **Go to step 8**

OK

RS

6	PERFORM SENSITIVITY CHECK

(a) Using the intelligent tester, perform the sensitivity check (See page RS-215).
  (1) Confirm that nothing is placed on the passenger seat.
  (2) Confirm that the beginning sensor reading is within the standard range.
  Standard range:
  -3.2 to 3.2 kg (-7 to 7 lb)
  (3) Place a 30 kg (66.14 lb) weight (e.g. a lead mass) onto the front passenger seat.
  (4) Confirm that the sensitivity is within the standard range.
  Standard range:
  27 to 33 kg (59.52 to 72.75 lb)
  HINT:
  When performing the sensitivity check, use a solid metal weight (the check result may not be accurate if a liquid weight is used).

NG → **Go to step 8**

OK

7	CHECK DTC

(a) Turn the ignition switch to the on position.
(b) Clear the DTCs stored in the memory (See page RS-223).
  HINT:
  First clear DTCs stored in the occupant classification ECU and then in the center airbag sensor assembly.
(c) Turn the ignition switch to the lock position.
(d) Turn the ignition switch to the on position.
(e) Check the DTCs (See page RS-223).
  OK:
  DTC B1785 is not output.
  HINT:
  Codes other than DTC B1785 may be output at this time, but they are not related to this check.

OK → **USE SIMULATION METHOD TO CHECK**

NG

8	REPLACE OCCUPANT CLASSIFICATION ECU

(a) Turn the ignition switch to the lock position.

(b) Disconnect the negative (-) terminal cable from the battery, and wait for at least 90 seconds.
(c) Replace the occupant classification ECU (See page RS-493).

NEXT

RS

9	PERFORM ZERO POINT CALIBRATION

(a) Connect the negative (-) terminal cable to the battery.
(b) Connect the intelligent tester to the DLC3.
(c) Turn the ignition switch to the on position.
(d) Using the intelligent tester, perform the zero point calibration (See page RS-215).
OK:
COMPLETED is displayed.

NEXT

10	PERFORM SENSITIVITY CHECK

(a) Using the intelligent tester, perform the sensitivity check (See page RS-215).
(1) Confirm that nothing is placed on the passenger seat.
(2) Confirm that the beginning sensor reading is within the standard range.
Standard range:
-3.2 to 3.2 kg (-7 to 7 lb)
(3) Place a 30 kg (66.14 lb) weight (e.g. a lead mass) onto the front passenger seat.
(4) Confirm that the sensitivity is within the standard range.
Standard range:
27 to 33 kg (59.52 to 72.75 lb)
HINT:
When performing the sensitivity check, use a solid metal weight (the check result may not be accurate if a liquid weight is used).

NEXT

END

DTC	B1786	Front Occupant Classification Sensor RH Collision Detection

DESCRIPTION

RS

DTC B1786 is output when the occupant classification ECU receives a collision detection signal sent by the front occupant classification sensor RH when an accident occurs.
DTC B1786 is also output when the front seat assembly RH is subjected to a strong impact, even if an actual accident does not occur.
However, when the front occupant classification sensor RH outputs a collision detection signal, even if the vehicle is not in a collision, DTC B1786 can be cleared by performing the zero point calibration and sensitivity check.
Therefore, when DTC B1786 is output, first perform the zero point calibration and sensitivity check.

DTC No.	DTC Detection Condition	Trouble Area
B1786	• Front seat assembly RH malfunction • Occupant classification ECU malfunction • Front occupant classification sensor RH detects large load	• Occupant classification ECU • Front seat assembly RH (Front occupant classification sensor RH)

WIRING DIAGRAM

See page RS-241.

INSPECTION PROCEDURE

1	PERFORM ZERO POINT CALIBRATION

(a) Connect the intelligent tester to the DLC3.
(b) Turn the ignition switch to the on position.
(c) Using the intelligent tester, perform the zero point calibration (See page RS-215).
OK:
COMPLETED is displayed.

NG → **Go to step 4**

OK

2	PERFORM SENSITIVITY CHECK

(a) Using the intelligent tester, perform the sensitivity check (See page RS-215).
(1) Confirm that nothing is placed on the passenger seat.
(2) Confirm that the beginning sensor reading is within the standard range.
Standard range:
-3.2 to 3.2 kg (-7 to 7 lb)
(3) Place a 30 kg (66.14 lb) weight (e.g. a lead mass) onto the front passenger seat.
(4) Confirm that the sensitivity is within the standard range.
Standard range:
27 to 33 kg (59.52 to 72.75 lb)

HINT:
When performing the sensitivity check, use a solid metal weight (the check result may not be accurate if a liquid weight is used).

NG → **Go to step 4**

OK

RS

3	CHECK DTC

(a) Turn the ignition switch to the on position.
(b) Clear the DTCs stored in the memory (See page RS-223).
HINT:
First clear DTCs stored in the occupant classification ECU and then in the center airbag sensor assembly.
(c) Turn the ignition switch to the lock position.
(d) Turn the ignition switch to the on position.
(e) Check the DTCs (See page RS-223).
OK:
DTC B1786 is not output.
HINT:
Codes other than DTC B1786 may be output at this time, but they are not related to this check.

OK → **USE SIMULATION METHOD TO CHECK**

NG

4	REPLACE FRONT SEAT ASSEMBLY RH

(a) Turn the ignition switch to the lock position.
(b) Disconnect the negative (-) terminal cable from the battery, and wait for at least 90 seconds.
(c) Replace the front seat assembly RH.
for Hatchback: (See page SE-28)
for Sedan: (See page SE-5)
HINT:
Perform the inspection using parts from a normal vehicle if possible.

NEXT

5	PERFORM ZERO POINT CALIBRATION

(a) Connect the negative (-) terminal cable to the battery.
(b) Connect the intelligent tester to the DLC3.
(c) Turn the ignition switch to the on position.
(d) Using the intelligent tester, perform the zero point calibration (See page RS-215).
OK:
COMPLETED is displayed.

NG → **Go to step 8**

OK

RS

6	PERFORM SENSITIVITY CHECK

(a) Using the intelligent tester, perform the sensitivity check (See page RS-215).
  (1) Confirm that nothing is placed on the passenger seat.
  (2) Confirm that the beginning sensor reading is within the standard range.
  Standard range:
  -3.2 to 3.2 kg (-7 to 7 lb)
  (3) Place a 30 kg (66.14 lb) weight (e.g. a lead mass) onto the front passenger seat.
  (4) Confirm that the sensitivity is within the standard range.
  Standard range:
  27 to 33 kg (59.52 to 72.75 lb)
  HINT:
  When performing the sensitivity check, use a solid metal weight (the check result may not be accurate if a liquid weight is used).

NG → **Go to step 8**

OK

7	CHECK DTC

(a) Turn the ignition switch to the on position.
(b) Clear the DTCs stored in the memory (See page RS-223).
  HINT:
  First clear DTCs stored in the occupant classification ECU and then in the center airbag sensor assembly.
(c) Turn the ignition switch to the lock position.
(d) Turn the ignition switch to the on position.
(e) Check the DTCs (See page RS-223).
  OK:
  DTC B1786 is not output.
  HINT:
  Codes other than DTC B1786 may be output at this time, but they are not related to this check.

OK → **USE SIMULATION METHOD TO CHECK**

NG

8	REPLACE OCCUPANT CLASSIFICATION ECU

(a) Turn the ignition switch to the lock position.

(b) Disconnect the negative (-) terminal cable from the battery, and wait for at least 90 seconds.
(c) Replace the occupant classification ECU (See page RS-493).

NEXT

RS

9	PERFORM ZERO POINT CALIBRATION

(a) Connect the negative (-) terminal cable to the battery.
(b) Connect the intelligent tester to the DLC3.
(c) Turn the ignition switch to the on position.
(d) Using the intelligent tester, perform the zero point calibration (See page RS-215).
OK:
COMPLETED is displayed.

NEXT

10	PERFORM SENSITIVITY CHECK

(a) Using the intelligent tester, perform the sensitivity check (See page RS-223).
(1) Confirm that nothing is placed on the passenger seat.
(2) Confirm that the beginning sensor reading is within the standard range.
Standard range:
-3.2 to 3.2 kg (-7 to 7 lb)
(3) Place a 30 kg (66.14 lb) weight (e.g. a lead mass) onto the front passenger seat.
(4) Confirm that the sensitivity is within the standard range.
Standard range:
27 to 33 kg (59.52 to 72.75 lb)
HINT:
When performing the sensitivity check, use a solid metal weight (the check result may not be accurate if a liquid weight is used).

NEXT

END

DTC	B1787	Rear Occupant Classification Sensor LH Collision Detection

DESCRIPTION

RS

DTC B1787 is output when the occupant classification ECU receives a collision detection signal sent by the rear occupant classification sensor LH when an accident occurs.
DTC B1787 is also output when the front seat assembly RH is subjected to a strong impact, even if an actual accident does not occur.
However, when the rear occupant classification sensor LH outputs a collision detection signal, even if the vehicle is not in a collision, DTC B1787 can be cleared by performing the zero point calibration and sensitivity check.
Therefore, when DTC B1787 is output, first perform the zero point calibration and sensitivity check.

DTC No.	DTC Detecting Condition	Trouble Area
B1787	• Front seat assembly RH malfunction • Occupant classification ECU malfunction • Rear occupant classification sensor LH detects large load	• Occupant classification ECU • Front seat assembly RH (Rear occupant classification sensor LH)

WIRING DIAGRAM

See page RS-248.

INSPECTION PROCEDURE

1	PERFORM ZERO POINT CALIBRATION

(a) Connect the intelligent tester to the DLC3.
(b) Turn the ignition switch to the on position.
(c) Using the intelligent tester, perform the zero point calibration (See page RS-215).
OK:
COMPLETED is displayed.

NG → **Go to step 4**

OK

2	PERFORM SENSITIVITY CHECK

(a) Using the intelligent tester, perform the sensitivity check (See page RS-215).
(1) Confirm that nothing is placed on the passenger seat.
(2) Confirm that the beginning sensor reading is within the standard range.
Standard range:
-3.2 to 3.2 kg (-7 to 7 lb)
(3) Place a 30 kg (66.14 lb) weight (e.g. a lead mass) onto the front passenger seat.
(4) Confirm that the sensitivity is within the standard range.
Standard range:
27 to 33 kg (59.52 to 72.75 lb)

HINT:
When performing the sensitivity check, use a solid metal weight (the check result may not be accurate if a liquid weight is used).

NG → **Go to step 4**

OK

RS

3	CHECK DTC

(a) Turn the ignition switch to the on position.
(b) Clear the DTCs stored in the memory (See page RS-223).
HINT:
First clear DTCs stored in the occupant classification ECU and then in the center airbag sensor assembly.
(c) Turn the ignition switch to the lock position.
(d) Turn the ignition switch to the on position.
(e) Check the DTCs (See page RS-223).
OK:
DTC B1787 is not output.
HINT:
Codes other than DTC B1787 may be output at this time, but they are not related to this check.

OK → **USE SIMULATION METHOD TO CHECK**

NG

4	REPLACE FRONT SEAT ASSEMBLY RH

(a) Turn the ignition switch to the lock position.
(b) Disconnect the negative (-) terminal cable from the battery, and wait for at least 90 seconds.
(c) Replace the front seat assembly RH.
for Hatchback: (See page SE-28)
for Sedan: (See page SE-5)
HINT:
Perform the inspection using parts from a normal vehicle if possible.

NEXT

5	PERFORM ZERO POINT CALIBRATION

(a) Connect the negative (-) terminal cable to the battery.
(b) Connect the intelligent tester to the DLC3.
(c) Turn the ignition switch to the on position.
(d) Using the intelligent tester, perform the zero point calibration (See page RS-215).
OK:
COMPLETED is displayed.

NG → **Go to step 8**

OK

RS

6	PERFORM SENSITIVITY CHECK

(a) Using the intelligent tester, perform the sensitivity check (See page RS-215).
  (1) Confirm that nothing is placed on the passenger seat.
  (2) Confirm that the beginning sensor reading is within the standard range.
  Standard range:
  -3.2 to 3.2 kg (-7 to 7 lb)
  (3) Place a 30 kg (66.14 lb) weight (e.g. a lead mass) onto the front passenger seat.
  (4) Confirm that the sensitivity is within the standard range.
  Standard range:
  27 to 33 kg (59.52 to 72.75 lb)
  HINT:
  When performing the sensitivity check, use a solid metal weight (the check result may not be accurate if a liquid weight is used).

NG → **Go to step 8**

OK

7	CHECK DTC

(a) Turn the ignition switch to the on position.
(b) Clear the DTCs stored in the memory (See page RS-223).
  HINT:
  First clear DTCs stored in the occupant classification ECU and then in the center airbag sensor assembly.
(c) Turn the ignition switch to the lock position.
(d) Turn the ignition switch to the on position.
(e) Check the DTCs (See page RS-223).
  OK:
  DTC B1787 is not output.
  HINT:
  Codes other than DTC B1787 may be output at this time, but they are not related to this check.

OK → **USE SIMULATION METHOD TO CHECK**

NG

8	REPLACE OCCUPANT CLASSIFICATION ECU

(a) Turn the ignition switch to the lock position.

(b) Disconnect the negative (-) terminal cable from the battery, and wait for at least 90 seconds.
(c) Replace the occupant classification ECU (See page RS-493).

NEXT

9	PERFORM ZERO POINT CALIBRATION

(a) Connect the negative (-) terminal cable to the battery.
(b) Connect the intelligent tester to the DLC3.
(c) Turn the ignition switch to the on position.
(d) Using the intelligent tester, perform the zero point calibration (See page RS-215).
OK:
COMPLETED is displayed.

NEXT

10	PERFORM SENSITIVITY CHECK

(a) Using the intelligent tester, perform the sensitivity check (See page RS-215).
(1) Confirm that nothing is placed on the passenger seat.
(2) Confirm that the beginning sensor reading is within the standard range.
Standard range:
-3.2 to 3.2 kg (-7 to 7 lb)
(3) Place a 30 kg (66.14 lb) weight (e.g. a lead mass) onto the front passenger seat.
(4) Confirm that the sensitivity is within the standard range.
Standard range:
27 to 33 kg (59.52 to 72.75 lb)
HINT:
When performing the sensitivity check, use a solid metal weight (the check result may not be accurate if a liquid weight is used).

NEXT

END

DTC	B1788	Rear Occupant Classification Sensor RH Collision Detection

DESCRIPTION

RS

DTC B1788 is output when the occupant classification ECU receives a collision detection signal sent by the rear occupant classification sensor RH when an accident occurs.
DTC B1788 is also output when the front seat assembly RH is subjected to a strong impact, even if an actual accident does not occur.
However, when the rear occupant classification sensor RH outputs a collision detection signal, even if the vehicle is not in a collision, DTC B1788 can be cleared by performing the zero point calibration and sensitivity check.
Therefore, when DTC B1788 is output, first perform the zero point calibration and sensitivity check.

DTC No.	DTC Detection Condition	Trouble Area
B1788	• Front seat assembly RH malfunction • Occupant classification ECU malfunction • Rear occupant classification sensor RH detects large load	• Occupant classification ECU • Front seat assembly RH (Rear occupant classification sensor RH)

WIRING DIAGRAM

See page RS-255.

INSPECTION PROCEDURE

1	PERFORM ZERO POINT CALIBRATION

(a) Connect the intelligent tester to the DLC3.
(b) Turn the ignition switch to the on position.
(c) Using the intelligent tester, perform the zero point calibration (See page RS-215).
OK:
COMPLETED is displayed.

NG → **Go to step 4**

OK

2	PERFORM SENSITIVITY CHECK

(a) Using the intelligent tester, perform the sensitivity check (See page RS-215).
(1) Confirm that nothing is placed on the passenger seat.
(2) Confirm that the beginning sensor reading is within the standard range.
Standard range:
-3.2 to 3.2 kg (-7 to 7 lb)
(3) Place a 30 kg (66.14 lb) weight (e.g. a lead mass) onto the front passenger seat.
(4) Confirm that the sensitivity is within the standard range.
Standard range:
27 to 33 kg (59.52 to 72.75 lb)

HINT:
When performing the sensitivity check, use a solid metal weight (the check result may not be accurate if a liquid weight is used).

NG → **Go to step 4**

OK

RS

3	CHECK DTC

(a) Turn the ignition switch to the on position.
(b) Clear the DTCs stored in the memory (See page RS-223).
HINT:
First clear DTCs stored in the occupant classification ECU and then in the center airbag sensor assembly.
(c) Turn the ignition switch to the lock position.
(d) Turn the ignition switch to the on position.
(e) Check the DTCs (See page RS-223).
OK:
DTC B1788 is not output.
HINT:
Codes other than DTC B1788 may be output at this time, but they are not related to this check.

OK → **USE SIMULATION METHOD TO CHECK**

NG

4	REPLACE FRONT SEAT ASSEMBLY RH

(a) Turn the ignition switch to the lock position.
(b) Disconnect the negative (-) terminal cable from the battery, and wait for at least 90 seconds.
(c) Replace the front seat assembly RH.
for Hatchback: (See page SE-28)
for Sedan: (See page SE-5)
HINT:
Perform the inspection using parts from a normal vehicle if possible.

NEXT

5	PERFORM ZERO POINT CALIBRATION

(a) Connect the negative (-) terminal cable to the battery.
(b) Connect the intelligent tester to the DLC3.
(c) Turn the ignition switch to the on position.
(d) Using the intelligent tester, perform the zero point calibration (See page RS-215).
OK:
COMPLETED is displayed.

NG → **Go to step 8**

OK

RS

6	PERFORM SENSITIVITY CHECK

(a) Using the intelligent tester, perform the sensitivity check (See page RS-215).
  (1) Confirm that nothing is placed on the passenger seat.
  (2) Confirm that the beginning sensor reading is within the standard range.
  Standard range:
  -3.2 to 3.2 kg (-7 to 7 lb)
  (3) Place a 30 kg (66.14 lb) weight (e.g. a lead mass) onto the front passenger seat.
  (4) Confirm that the sensitivity is within the standard range.
  Standard range:
  27 to 33 kg (59.52 to 72.75 lb)
  HINT:
  When performing the sensitivity check, use a solid metal weight (the check result may not be accurate if a liquid weight is used).

NG → **Go to step 8**

OK

7	CHECK DTC

(a) Turn the ignition switch to the on position.
(b) Clear the DTCs stored in the memory (See page RS-223).
  HINT:
  First clear DTCs stored in the occupant classification ECU and then in the center airbag sensor assembly.
(c) Turn the ignition switch to the lock position.
(d) Turn the ignition switch to the on position.
(e) Check the DTCs (See page RS-223).
  OK:
  DTC B1788 is not output.
  HINT:
  Codes other than DTC B1788 may be output at this time, but they are not related to this check.

OK → **USE SIMULATION METHOD TO CHECK**

NG

8	REPLACE OCCUPANT CLASSIFICATION ECU

(a) Turn the ignition switch to the lock position.

(b) Disconnect the negative (-) terminal cable from the battery, and wait for at least 90 seconds.
(c) Replace the occupant classification ECU (See page RS-493).

NEXT

RS

9	PERFORM ZERO POINT CALIBRATION

(a) Connect the negative (-) terminal cable to the battery.
(b) Connect the intelligent tester to the DLC3.
(c) Turn the ignition switch to the on position.
(d) Using the intelligent tester, perform the zero point calibration (See page RS-215).
OK:
COMPLETED is displayed.

NEXT

10	PERFORM SENSITIVITY CHECK

(a) Using the intelligent tester, perform the sensitivity check (See page RS-215).
(1) Confirm that nothing is placed on the passenger seat.
(2) Confirm that the beginning sensor reading is within the standard range.
Standard range:
-3.2 to 3.2 kg (-7 to 7 lb)
(3) Place a 30 kg (66.14 lb) weight (e.g. a lead mass) onto the front passenger seat.
(4) Confirm that the sensitivity is within the standard range.
Standard range:
27 to 33 kg (59.52 to 72.75 lb)
HINT:
When performing the sensitivity check, use a solid metal weight (the check result may not be accurate if a liquid weight is used).

NEXT

END

DTC	B1790	Center Airbag Sensor Assembly Communication Circuit Malfunction

DESCRIPTION

RS

The center airbag sensor assembly communication circuit consists of the occupant classification ECU and the center airbag sensor assembly.
DTC B1790 is recorded when a malfunction is detected in the center airbag sensor assembly communication circuit.

DTC No.	DTC Detecting Condition	Trouble Area
B1790	• Occupant classification ECU detects line short circuit signal, open circuit signal, short circuit to ground signal or short circuit to B+ signal in center airbag sensor assembly communication circuit for 2 seconds • Center airbag sensor assembly malfunction • Occupant classification ECU malfunction	• Floor wire • Occupant classification ECU • Center airbag sensor assembly

WIRING DIAGRAM

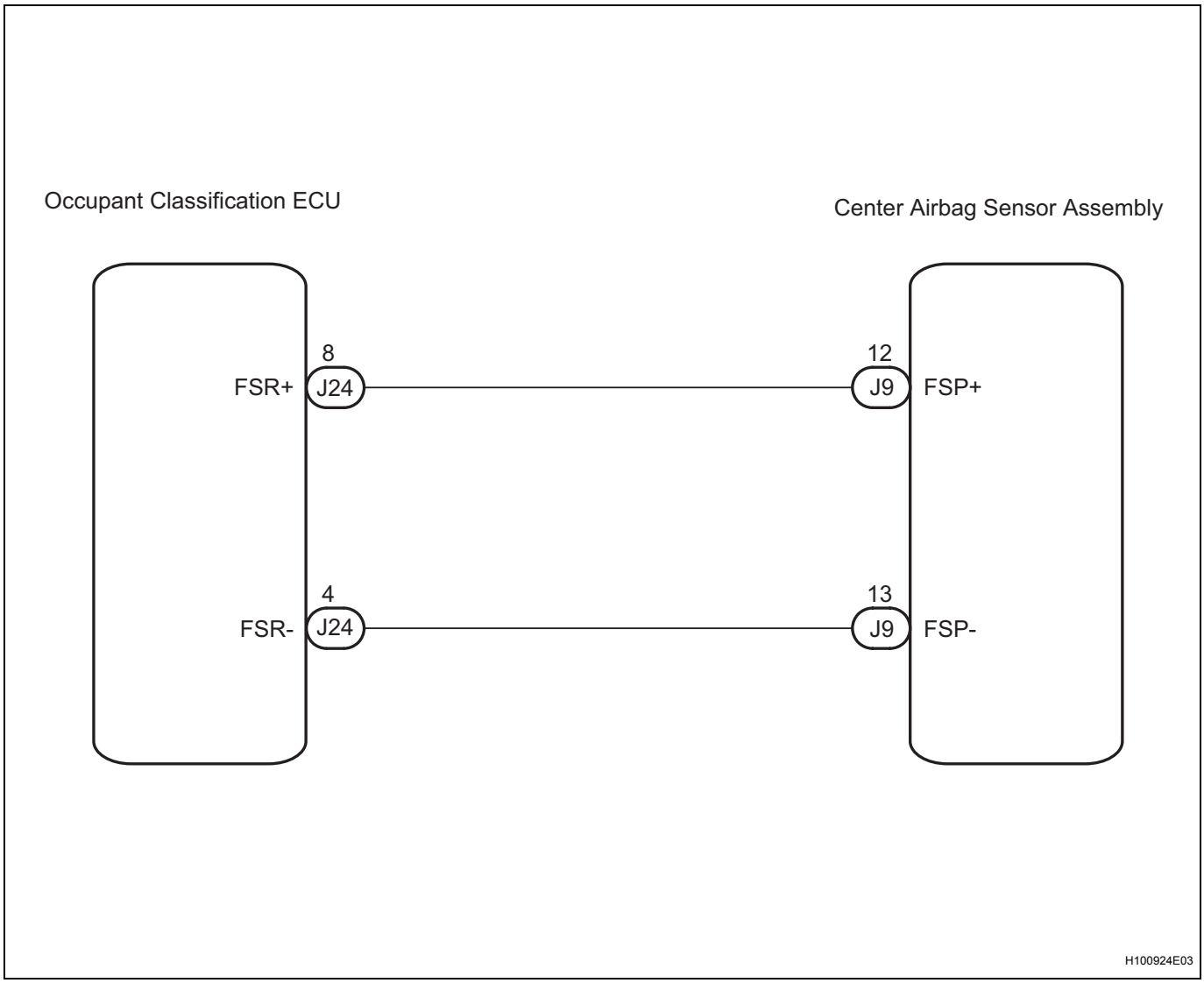

INSPECTION PROCEDURE

HINT:

- If troubleshooting (wire harness inspection) is difficult to perform, remove the front passenger seat installation bolts to see the under surface of the seat cushion.
- In the above case, hold the seat so that it does not tip over. Holding the seat for a long period of time may cause a problem, such as seat rail deformation. Hold the seat up only for as long as necessary.

1	CHECK DTC

(a) Turn the ignition switch to the on position.
(b) Clear the DTCs stored in the memory (See page RS-223).
HINT:
First clear DTCs stored in the occupant classification ECU and then in the center airbag sensor assembly.
(c) Turn the ignition switch to the lock position.
(d) Turn the ignition switch to the on position.
(e) Check the DTCs (See page RS-223).
OK:
DTC B1790 is not output.
HINT:
Codes other than DTC B1790 may be output at this time, but they are not related to this check.

OK → **USE SIMULATION METHOD TO CHECK**

NG

2	CHECK CONNECTION OF CONNECTORS

(a) Turn the ignition switch to the lock position.
(b) Disconnect the negative (-) terminal cable from the battery, and wait for at least 90 seconds.
(c) Check that the connectors are properly connected to the occupant classification ECU and the center airbag sensor assembly.
OK:
The connectors are properly connected.

NG → **CONNECT CONNECTORS**

OK

RS

3 CHECK FLOOR WIRE (TO B+)

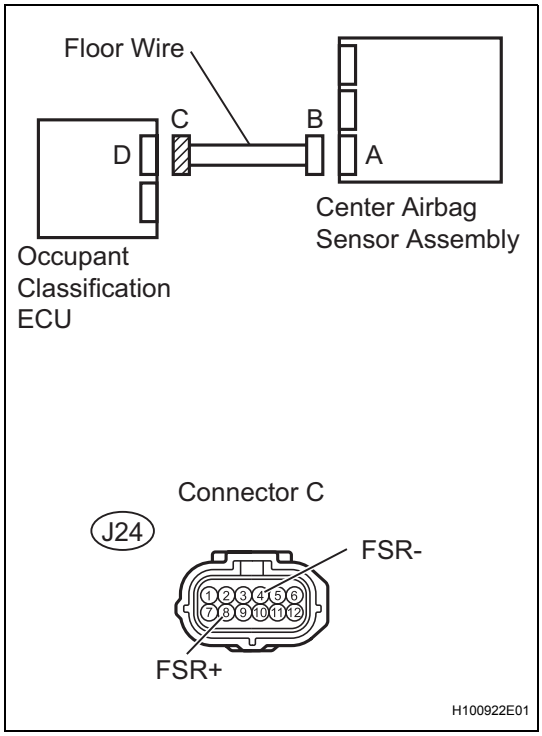

(a) Disconnect the connectors from the occupant classification ECU and the center airbag sensor assembly.
(b) Connect the negative (-) terminal cable to the battery.
(c) Turn the ignition switch to the on position.
(d) Measure the voltage.
Standard voltage

Tester connection	Condition	Specified condition
J24-8 (FSR+) - Body ground	Ignition switch on	Below 1 V
J24-4 (FSR-) - Body ground	Ignition switch on	Below 1 V

NG → **REPAIR OR REPLACE FLOOR WIRE**

OK

4 CHECK FLOOR WIRE (FOR OPEN)

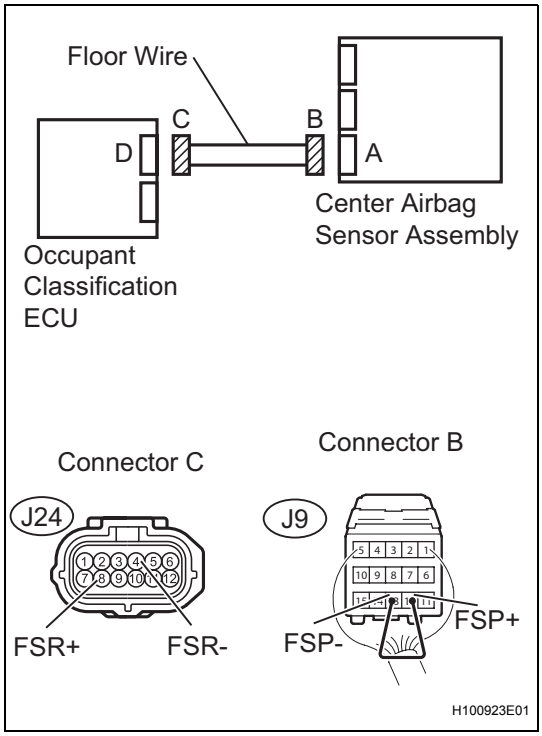

(a) Turn the ignition switch to the lock position.
(b) Disconnect the negative (-) terminal cable from the battery, and wait for at least 90 seconds.
(c) Using a service wire, connect J9-12 (FSP+) and J9-13 (FSP-) of connector B.
NOTICE:
Do not forcibly insert the service wire into the terminals of the connector when connecting.
(d) Measure the resistance.
Standard resistance

Tester connection	Condition	Specified condition
J24-8 (FSR+) - J24-4 (FSR-)	Always	Below 1 Ω

NG → **REPAIR OR REPLACE FLOOR WIRE**

OK

RS

5 CHECK FLOOR WIRE (FOR SHORT)

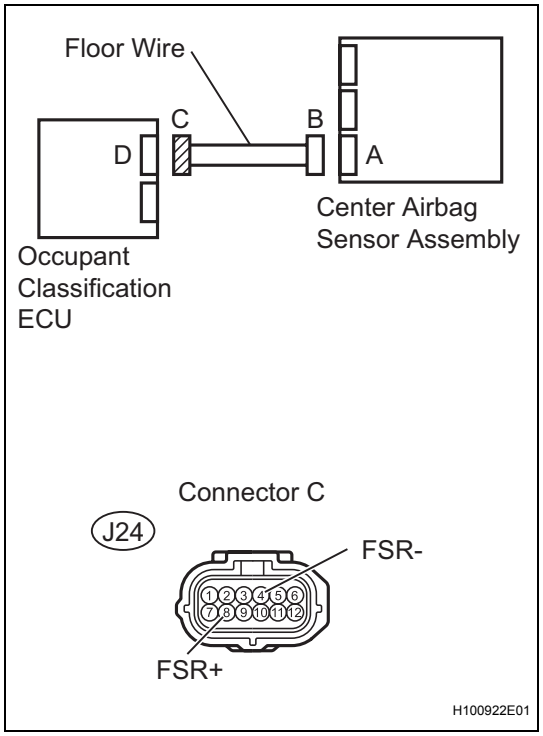

(a) Disconnect the service wire from connector B.
(b) Measure the resistance.
Standard resistance

Tester connection	Condition	Specified condition
J24-8 (FSR+) - J24-4 (FSR-)	Always	1 MΩ or higher

NG → **REPAIR OR REPLACE FLOOR WIRE**

OK

6 CHECK FLOOR WIRE (TO GROUND)

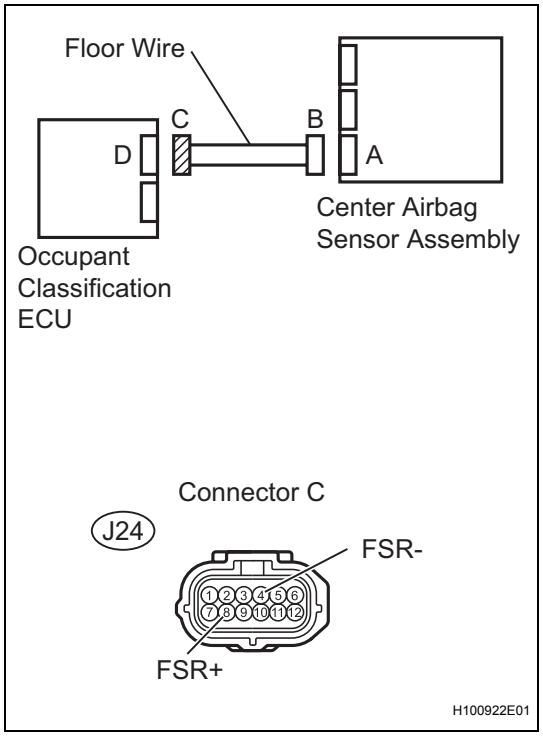

(a) Measure the resistance.
Standard resistance

Tester connection	Condition	Specified condition
J24-8 (FSR+) - Body ground	Always	1 MΩ or higher
J24-4 (FSR-) - Body ground	Always	1 MΩ or higher

NG → **REPAIR OR REPLACE FLOOR WIRE**

OK

RS

7	CHECK DTC

(a) Connect the connectors to the occupant classification ECU and the center airbag sensor assembly.
(b) Connect the negative (-) terminal cable to the battery.
(c) Turn the ignition switch to the on position.
(d) Clear the DTCs stored in the memory (See page RS-223).
HINT:
First clear DTCs stored in the occupant classification ECU and then in the center airbag sensor assembly.
(e) Turn the ignition switch to the lock position.
(f) Turn the ignition switch to the on position.
(g) Check the DTCs (See page RS-223).
OK:
DTC B1790 is not output.
HINT:
Codes other than DTC B1790 may be output at this time, but they are not related to this check.

OK → **USE SIMULATION METHOD TO CHECK**

NG ↓

8	REPLACE OCCUPANT CLASSIFICATION ECU

(a) Turn the ignition switch to the lock position.
(b) Disconnect the negative (-) terminal cable from the battery, and wait for at least 90 seconds.
(c) Replace the occupant classification ECU (See page RS-493).
HINT:
Perform the inspection using parts from a normal vehicle if possible.

NEXT ↓

9	PERFORM ZERO POINT CALIBRATION

(a) Connect the negative (-) terminal cable to the battery.
(b) Connect the intelligent tester to the DLC3.
(c) Turn the ignition switch to the on position.
(d) Using the intelligent tester, perform the zero point calibration (See page RS-215).
OK:
COMPLETED is displayed.

NEXT ↓

RS

10	PERFORM SENSITIVITY CHECK

(a) Using the intelligent tester, perform the sensitivity check (See page RS-215).
  (1) Confirm that nothing is placed on the passenger seat.
  (2) Confirm that the beginning sensor reading is within the standard range.
  Standard range:
  -3.2 to 3.2 kg (-7 to 7 lb)
  (3) Place a 30 kg (66.14 lb) weight (e.g. a lead mass) onto the front passenger seat.
  (4) Confirm that the sensitivity is within the standard range.
  Standard range:
  27 to 33 kg (59.52 to 72.75 lb)
  HINT:
  When performing the sensitivity check, use a solid metal weight (the check result may not be accurate if a liquid weight is used).

NEXT

11	CHECK DTC

(a) Turn the ignition switch to the on position.
(b) Clear the DTCs stored in the memory (See page RS-223).
  HINT:
  First clear DTCs stored in the occupant classification ECU and then in the center airbag sensor assembly.
(c) Turn the ignition switch to the lock position.
(d) Turn the ignition switch to the on position.
(e) Check the DTCs (See page RS-223).
  OK:
  DTC B1790 is not output.
  HINT:
  Codes other than DTC B1790 may be output at this time, but they are not related to this check.

NG → **REPLACE CENTER AIRBAG SENSOR ASSEMBLY**

OK

END

DTC	B1793	Occupant Classification Sensor Power Supply Circuit Malfunction

DESCRIPTION

The occupant classification sensor power supply circuit consists of the occupant classification ECU and the occupant classification sensors.
DTC B1793 is recorded when a malfunction is detected in the occupant classification sensor power supply circuit.

DTC No.	DTC Detecting Condition	Trouble Area
B1793	• Occupant classification ECU detects line short circuit signal, open circuit signal, short circuit to ground signal or short circuit to B+ signal in occupant classification sensor power supply circuit for 2 seconds • Occupant classification ECU malfunction	• Front seat wire RH • Front seat assembly RH (Occupant classification sensors) • Occupant classification ECU

WIRING DIAGRAM

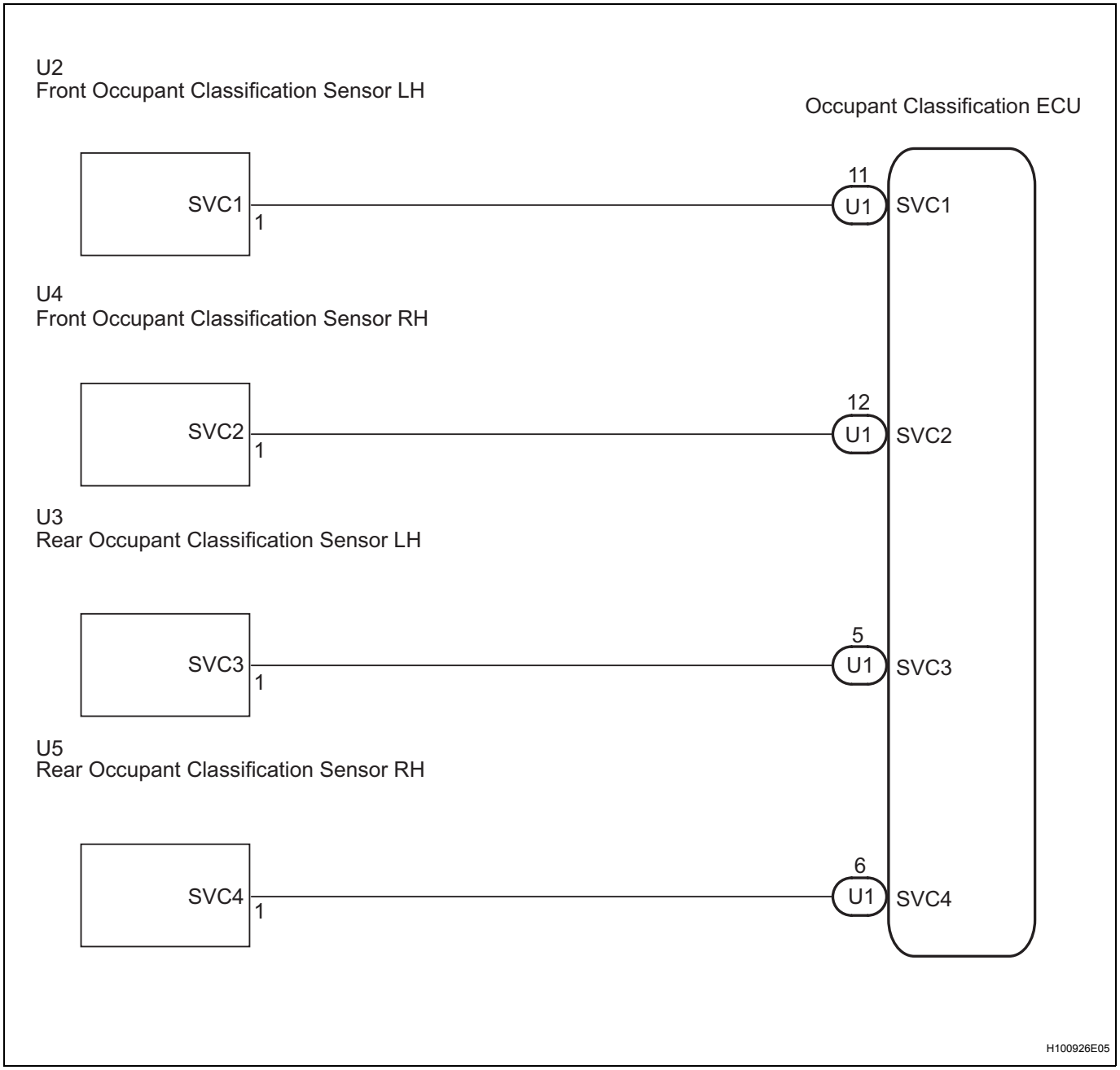

INSPECTION PROCEDURE

HINT:

- If troubleshooting (wire harness inspection) is difficult to perform, remove the front passenger seat installation bolts to see the under surface of the seat cushion.
- In the above case, hold the seat so that it does not tip over. Holding the seat for a long period of time may cause a problem, such as seat rail deformation. Hold the seat up only for as long as necessary.

1	CHECK DTC

(a) Turn the ignition switch to the on position.
(b) Clear the DTCs stored in the memory (See page RS-223).

RS

HINT:
First clear DTCs stored in the occupant classification ECU and then in the center airbag sensor assembly.

(c) Turn the ignition switch to the lock position.
(d) Turn the ignition switch to the on position.
(e) Check the DTCs (See page RS-223).
OK:
DTC B1793 is not output.
HINT:
Codes other than DTC B1793 may be output at this time, but they are not related to this check.

OK → **USE SIMULATION METHOD TO CHECK**

NG

2 CHECK CONNECTION OF CONNECTORS

(a) Turn the ignition switch to the lock position.
(b) Disconnect the negative (-) terminal cable from the battery, and wait for at least 90 seconds.
(c) Check that the connectors are properly connected to the occupant classification ECU and the occupant classification sensors.
OK:
The connectors are properly connected.

NG → **CONNECT CONNECTORS**

OK

3 CHECK FRONT SEAT WIRE RH (TO B+)

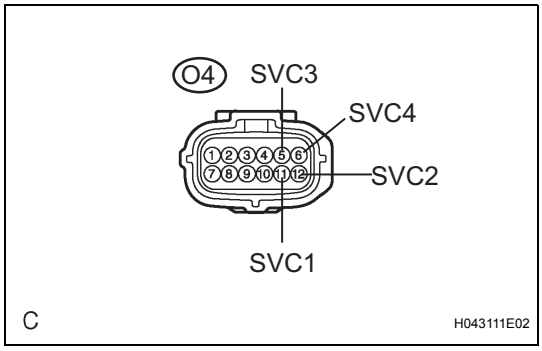

(a) Disconnect the connectors from the occupant classification ECU and the 4 occupant classification sensors.
(b) Connect the negative (-) terminal cable to the battery.
(c) Turn the ignition switch to the on position.
(d) Measure the voltage.
Standard voltage

Tester connection	Condition	Specified condition
O4-11 (SVC1) - Body ground	Ignition switch on	Below 1 V
O4-12 (SVC2) - Body ground	Ignition switch on	Below 1 V
O4-5 (SVC3) - Body ground	Ignition switch on	Below 1 V
O4-6 (SVC4) - Body ground	Ignition switch on	Below 1 V

NG → **REPAIR OR REPLACE FRONT SEAT WIRE RH**

OK

4	CHECK FRONT SEAT WIRE RH (TO GROUND)

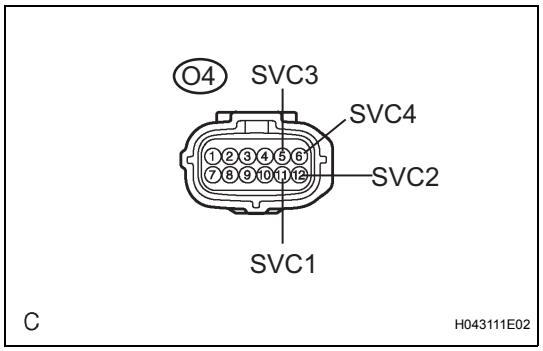

(a) Turn the ignition switch to the lock position.
(b) Disconnect the negative (-) terminal cable from the battery, and wait for at least 90 seconds.
(c) Measure the resistance.

Standard resistance

Tester connection	Condition	Specified condition
O4-11 (SVC1) - Body ground	Always	1 MΩ or higher
O4-12 (SVC2) - Body ground	Always	1 MΩ or higher
O4-5 (SVC3) - Body ground	Always	1 MΩ or higher
O4-6 (SVC4) - Body ground	Always	1 MΩ or higher

NG → **REPAIR OR REPLACE FRONT SEAT WIRE RH**

OK

RS

RS

5 CHECK FRONT SEAT WIRE RH (FOR OPEN)

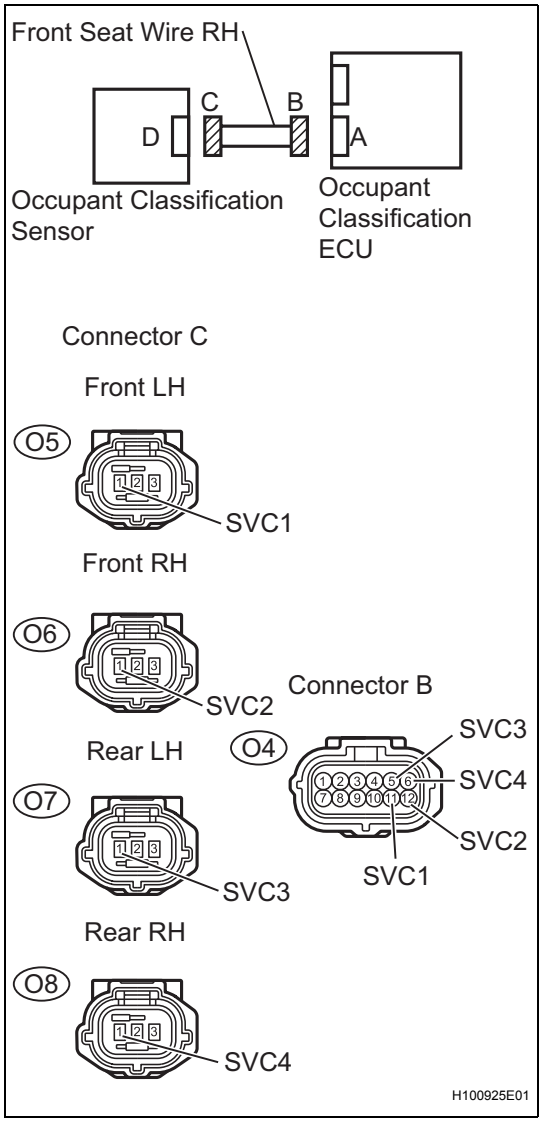

(a) Measure the resistance.
Standard resistance

Tester connection	Condition	Specified condition
O4-11 (SVC1) - O5-1 (SVC1)	Always	Below 1 Ω
O4-12 (SVC2) - O6-1 (SVC2)	Always	Below 1 Ω
O4-5 (SVC3) - O7-1 (SVC3)	Always	Below 1 Ω
O4-6 (SVC4) - O8- 1 (SVC4)	Always	Below 1 Ω

NG → **REPAIR OR REPLACE FRONT SEAT WIRE RH**

OK

6 CHECK FRONT SEAT WIRE RH (FOR SHORT)

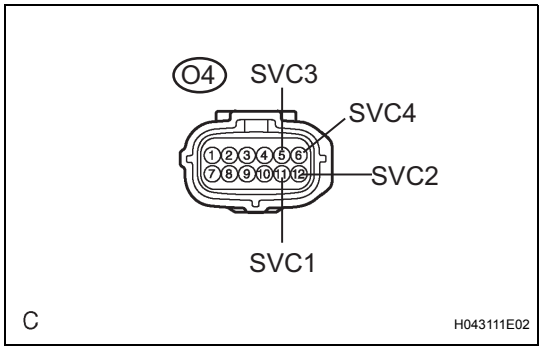

(a) Measure the resistance.
Standard resistance

Tester connection	Condition	Specified condition
O4-5 (SVC3) - O4-6 (SVC4)	Always	1 MΩ or higher
O4-6 (SVC4) - O4-11 (SVC1)	Always	1 MΩ or higher
O4-11 (SVC1) - O4-12 (SVC2)	Always	1 MΩ or higher
O4-12 (SVC2) - O4-5 (SVC3)	Always	1 MΩ or higher
O4-12 (SVC2) - O4-6 (SVC4)	Always	1 MΩ or higher

Tester connection	Condition	Specified condition
O4-11 (SVC1) - O4-5 (SVC3)	Always	1 MΩ or higher

NG → **REPAIR OR REPLACE FRONT SEAT WIRE RH**

OK

7 CHECK DTC

(a) Connect the connectors to the occupant classification ECU and the 4 occupant classification sensors.
(b) Connect the negative (-) terminal cable to the battery.
(c) Turn the ignition switch to the on position.
(d) Clear the DTCs stored in the memory (See page RS-223).
HINT:
First clear DTCs stored in the occupant classification ECU and then in the center airbag sensor assembly.
(e) Turn the ignition switch to the lock position.
(f) Turn the ignition switch to the on position.
(g) Check the DTCs (See page RS-223).
OK:
DTC B1793 is not output.
HINT:
Codes other than DTC B1793 may be output at this time, but they are not related to this check.

OK → **USE SIMULATION METHOD TO CHECK**

NG

8 REPLACE OCCUPANT CLASSIFICATION ECU

(a) Turn the ignition switch to the lock position.
(b) Disconnect the negative (-) terminal cable from the battery, and wait for at least 90 seconds.
(c) Replace the occupant classification ECU (See page RS-493).
HINT:
Perform the inspection using parts from a normal vehicle if possible.

NEXT

9 PERFORM ZERO POINT CALIBRATION

(a) Connect the negative (-) terminal cable to the battery.
(b) Connect the intelligent tester to the DLC3.
(c) Turn the ignition switch to the on position.
(d) Using the intelligent tester, perform the zero point calibration (See page RS-215).

OK:
COMPLETED is displayed.

NG → **Go to step 12**

OK

RS

10	PERFORM SENSITIVITY CHECK

(a) Using the intelligent tester, perform the sensitivity check (See page RS-215).
  (1) Confirm that nothing is placed on the passenger seat.
  (2) Confirm that the beginning sensor reading is within the standard range.
  Standard range:
  -3.2 to 3.2 kg (-7 to 7 lb)
  (3) Place a 30 kg (66.14 lb) weight (e.g. a lead mass) onto the front passenger seat.
  (4) Confirm that the sensitivity is within the standard range.
  Standard range:
  27 to 33 kg (59.52 to 72.75 lb)
  HINT:
  When performing the sensitivity check, use a solid metal weight (the check result may not be accurate if a liquid weight is used).

NG → **Go to step 12**

OK

11	CHECK DTC

(a) Connect the negative (-) terminal cable to the battery.
(b) Turn the ignition switch to the on position.
(c) Clear the DTCs stored in the memory (See page RS-223).
  HINT:
  First clear DTCs stored in the occupant classification ECU and then in the center airbag sensor assembly.
(d) Turn the ignition switch to the lock position.
(e) Turn the ignition switch to the on position.
(f) Check the DTCs (See page RS-223).
  OK:
  DTC B1793 is not output.
  HINT:
  Codes other than DTC B1793 may be output at this time, but they are not related to this check.

OK → **END**

NG

12	REPLACE FRONT SEAT ASSEMBLY RH

(a) Turn the ignition switch to the lock position.
(b) Disconnect the negative (-) terminal cable from the battery, and wait for at least 90 seconds.
(c) Replace the front seat assembly RH.
for Hatchback: (See page SE-28)
for Sedan: (See page SE-5)

NEXT

13	PERFORM ZERO POINT CALIBRATION

(a) Connect the negative (-) terminal cable to the battery.
(b) Connect the intelligent tester to the DLC3.
(c) Turn the ignition switch to the on position.
(d) Using the intelligent tester, perform the zero point calibration (See page RS-215).
OK:
COMPLETED is displayed.

NEXT

14	PERFORM SENSITIVITY CHECK

(a) Using the intelligent tester, perform the sensitivity check (See page RS-223).
(1) Confirm that nothing is placed on the passenger seat.
(2) Confirm that the beginning sensor reading is within the standard range.
Standard range:
-3.2 to 3.2 kg (-7 to 7 lb)
(3) Place a 30 kg (66.14 lb) weight (e.g. a lead mass) onto the front passenger seat.
(4) Confirm that the sensitivity is within the standard range.
Standard range:
27 to 33 kg (59.52 to 72.75 lb)
HINT:
When performing the sensitivity check, use a solid metal weight (the check result may not be accurate if a liquid weight is used).

NEXT

END

DTC	B1794	Open in Occupant Classification ECU Battery Positive Line

DESCRIPTION

DTC B1794 is set when a malfunction is detected in the occupant classification ECU battery positive line.

DTC No.	DTC Detecting Conditions	Trouble Areas
B1794	• Occupant classification ECU circuit malfunction • Occupant classification ECU malfunction • Occupant classification ECU detects short circuit to ground signal in passenger side buckle switch circuit for 2 seconds	• Wire harness • Occupant classification ECU

RS

WIRING DIAGRAM

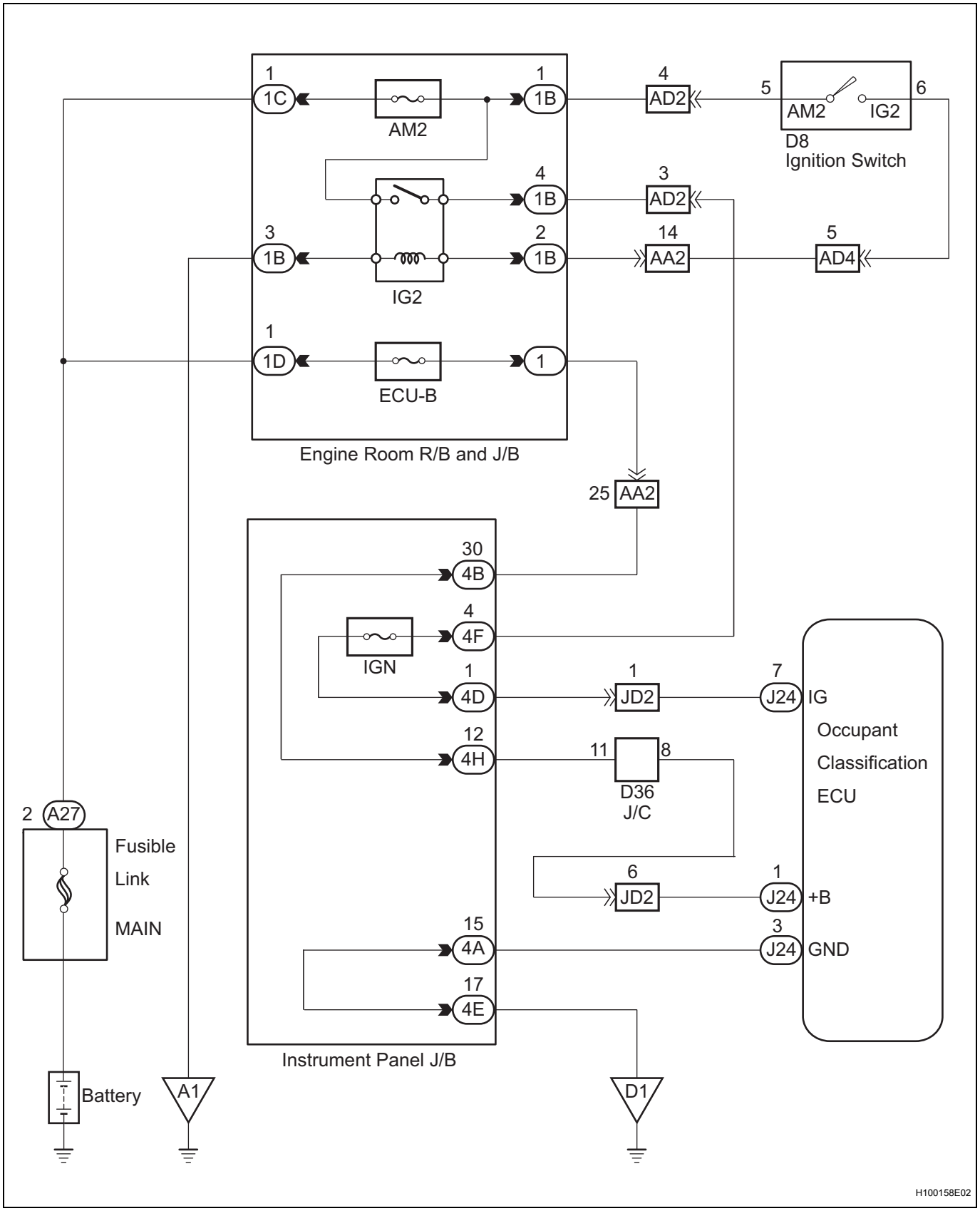

INSPECTION PROCEDURE

RS

1	CHECK DTC

(a) Turn the ignition switch to the on position.
(b) Clear the DTCs stored in the memory (See page RS-223).
HINT:
First clear DTCs stored in the occupant classification ECU and then in the center airbag sensor assembly.
(c) Turn the ignition switch to the lock position, and wait for at least 10 seconds.
(d) Turn the ignition switch to the on position.
(e) Check the DTCs (See page RS-223).
OK:
DTC B1794 is not output.
HINT:
DTCs other than B1794 may be output at this time, but they are not related to this check.

OK → **USE SIMULATION METHOD TO CHECK**

NG ↓

2	CHECK CONNECTION OF CONNECTORS

(a) Turn the ignition switch to the lock position.
(b) Disconnect the negative (-) terminal cable from the battery, and wait for at least 90 seconds.
(c) Check that the connectors are properly connected to the occupant classification ECU.
OK:
The connectors are properly connected.

NG → **CONNECT CONNECTORS**

OK ↓

3	CHECK WIRE HARNESS (SOURCE VOLTAGE)

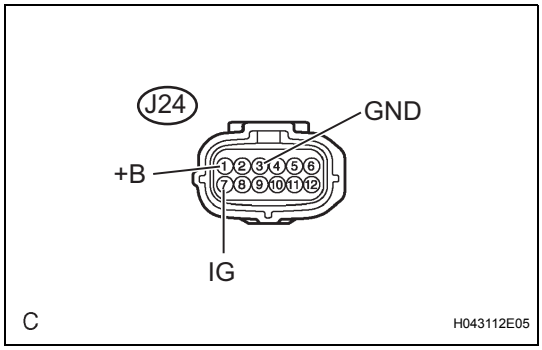

(a) Turn the ignition switch to the lock position.
(b) Disconnect the negative (-) terminal cable from the battery, and wait for at least 90 seconds.
(c) Disconnect the J24 connector from the occupant classification ECU.
(d) Connect the negative (-) terminal cable to the battery.
(e) Turn the ignition switch to the on position.
(f) Measure the voltage.
Standard voltage

Tester Connection	Condition	Specified Condition
J24-1 (+B) - Body ground	Ignition switch on	11 to 14 V

Tester Connection	Condition	Specified Condition
J24-7 (IG) - Body ground	Ignition switch on	11 to 14 V

(g) Measure the resistance.
Standard resistance

Tester Connection	Condition	Specified Condition
J24-3 (GND) - Body ground	Always	Below 1 Ω

RS

NG → **REPAIR OR REPLACE HARNESS OR CONNECTOR (BATTERY - OCCUPANT CLASSIFICATION ECU)**

OK

4 CHECK DTC

(a) Turn the ignition switch to the lock position.
(b) Disconnect the negative (-) terminal cable from the battery, and wait for at least 90 seconds.
(c) Connect the connectors to the occupant classification ECU.
(d) Connect the negative (-) terminal cable to the battery.
(e) Turn the ignition switch to the on position.
(f) Clear any DTCs stored in the memory (See page RS-223).
HINT:
First clear DTCs stored in the occupant classification ECU and then in the center airbag sensor assembly.
(g) Turn the ignition switch to the lock position, and wait for at least 10 seconds.
(h) Turn the ignition switch to the on position.
(i) Using the intelligent tester, check for DTCs of the occupant classification ECU (See page RS-223).
OK:
DTC B1794 is not output.
HINT:
DTCs other than B1794 may be output at this time, but they are not related to this check.

OK → **USE SIMULATION METHOD TO CHECK**

NG

5 REPLACE OCCUPANT CLASSIFICATION ECU

(a) Turn the ignition switch to the lock position.
(b) Disconnect the negative (-) terminal cable from the battery, and wait for at least 90 seconds.
(c) Replace the occupant classification ECU (See page RS-493).

HINT:
Perform the inspection using parts from a normal vehicle when possible.

NEXT

RS

6	PERFORM ZERO POINT CALIBRATION

(a) Connect the negative (-) terminal cable to the battery.
(b) Connect the intelligent tester to the DLC3.
(c) Turn the ignition switch to the on position.
(d) Using the intelligent tester, perform the zero point calibration (See page RS-215).
OK:
COMPLETED is displayed on the tester.

NEXT

7	PERFORM SENSITIVITY CHECK

(a) Using the intelligent tester, perform the sensitivity check (See page RS-215).
(1) Confirm that nothing is placed on the passenger seat.
(2) Confirm that the beginning sensor reading is within the standard range.
Standard range:
-3.2 to 3.2 kg (-7 to 7 lb)
(3) Place a 30 kg (66.14 lb) weight (e.g. a lead mass) onto the front passenger seat.
(4) Confirm that the sensitivity is within the standard range.
Standard range:
27 to 33 kg (59.52 to 72.75 lb)
HINT:
When performing the sensitivity check, use a solid metal weight (the check result may not be accurate if a liquid weight is used).

NEXT

END

DTC	B1795	Occupant Classification ECU Malfunction

DESCRIPTION

DTC B1795 is recorded when a malfunction is detected in the occupant classification ECU.

DTC No.	DTC Detecting Condition	Trouble Area
B1795	• Occupant classification ECU malfunction	• Occupant classification ECU

INSPECTION PROCEDURE

1 CHECK DTC

(a) Turn the ignition switch to the on position.
(b) Clear the DTCs stored in the memory (See page RS-223).
HINT:
First clear DTCs stored in the occupant classification ECU and then in the center airbag sensor assembly.
(c) Turn the ignition switch to the lock position and wait for at least 10 seconds.
(d) Turn the ignition switch to the on position.
(e) Check the DTCs (See page RS-223).
OK:
DTC B1795 is not output.
HINT:
Codes other than DTC B1795 may be output at this time, but they are not related to this check.

OK → **USE SIMULATION METHOD TO CHECK**

NG ↓

2 REPLACE OCCUPANT CLASSIFICATION ECU

(a) Turn the ignition switch to the lock position.
(b) Disconnect the negative (-) terminal cable from the battery, and wait for at least 90 seconds.
(c) Replace the occupant classification ECU (See page RS-493).
HINT:
Perform the inspection using parts from a normal vehicle if possible.

NEXT ↓

3 PERFORM ZERO POINT CALIBRATION

(a) Connect the negative (-) terminal cable to the battery.
(b) Connect the intelligent tester to the DLC3.
(c) Turn the ignition switch to the on position.
(d) Using the intelligent tester, perform the zero point calibration (See page RS-215).

OK:
COMPLETED is displayed.

NEXT

RS

4	PERFORM SENSITIVITY CHECK

(a) Using the intelligent tester, perform the sensitivity check (See page RS-215).
   (1) Confirm that nothing is placed on the passenger seat.
   (2) Confirm that the beginning sensor reading is within the standard range.
   Standard range:
   -3.2 to 3.2 kg (-7 to 7 lb)
   (3) Place a 30 kg (66.14 lb) weight (e.g. a lead mass) onto the front passenger seat.
   (4) Confirm that the sensitivity is within the standard range.
   Standard range:
   27 to 33 kg (59.52 to 72.75 lb)
   HINT:
   When performing the sensitivity check, use a solid metal weight (the check result may not be accurate if a liquid weight is used).

NEXT

END

DTC	B1796	Sleep Operation Failure of Occupant Classification ECU

DESCRIPTION

During sleep mode, the occupant classification ECU reads the condition of each sensor while the ignition switch is off.
In this mode, if the occupant classification ECU detects an internal malfunction, DTC B1796 is output.

RS

DTC No.	DTC Detecting Condition	Trouble Area
B1796	• Occupant classification ECU malfunction	• Occupant classification ECU

INSPECTION PROCEDURE

1 CHECK DTC

(a) Turn the ignition switch to the on position.
(b) Clear the DTCs stored in the memory (See page RS-223).
HINT:
First clear DTCs stored in the occupant classification ECU and then in the center airbag sensor assembly.
(c) Turn the ignition switch to the lock position, and wait for at least 2 seconds.
(d) Turn the ignition switch to the on position.
(e) Check the DTCs (See page RS-223).
OK:
DTC B1796 is not output.
HINT:
Codes other than DTC B1796 may be output at this time, but they are not related to this check.

OK → **USE SIMULATION METHOD TO CHECK**

NG ↓

2 REPLACE OCCUPANT CLASSIFICATION ECU

(a) Turn the ignition switch to the lock position.
(b) Disconnect the negative (-) terminal cable from the battery, and wait for at least 90 seconds.
(c) Replace the occupant classification ECU (See page RS-493).
HINT:
Perform the inspection using parts from a normal vehicle if possible.

NEXT ↓

3 PERFORM ZERO POINT CALIBRATION

(a) Connect the negative (-) terminal cable to the battery.
(b) Connect the intelligent tester to the DLC3.

(c) Turn the ignition switch to the on position.
(d) Using the intelligent tester, perform the zero point calibration (See page RS-215).
OK:
COMPLETED is displayed.

RS

NEXT

4	PERFORM SENSITIVITY CHECK

(a) Using the intelligent tester, perform the sensitivity check (See page RS-215).
(1) Confirm that nothing is placed on the passenger seat.
(2) Confirm that the beginning sensor reading is within the standard range.
Standard range:
-3.2 to 3.2 kg (-7 to 7 lb)
(3) Place a 30 kg (66.14 lb) weight (e.g. a lead mass) onto the front passenger seat.
(4) Confirm that the sensitivity is within the standard range.
Standard range:
27 to 33 kg (59.52 to 72.75 lb)
HINT:
When performing the sensitivity check, use a solid metal weight (the check result may not be accurate if a liquid weight is used).

NEXT

END

Trouble in Passenger Airbag ON / OFF Indicator

DESCRIPTION

The occupant classification system detects the front passenger seat condition and then indicates whether the front passenger airbag is activated or not through the passenger airbag ON/OFF indicator illumination. The passenger airbag ON/OFF indicator illumination changes depending on the front passenger seat condition as shown in the table below.

Front passenger seat condition	ON Indicator	OFF Indicator
Vacant	OFF	OFF
Adult is seated	ON	OFF
Child is seated	OFF	ON
Child restraint system is set	OFF	ON
Front passenger occupant classification system failure	OFF	ON

RS

WIRING DIAGRAM

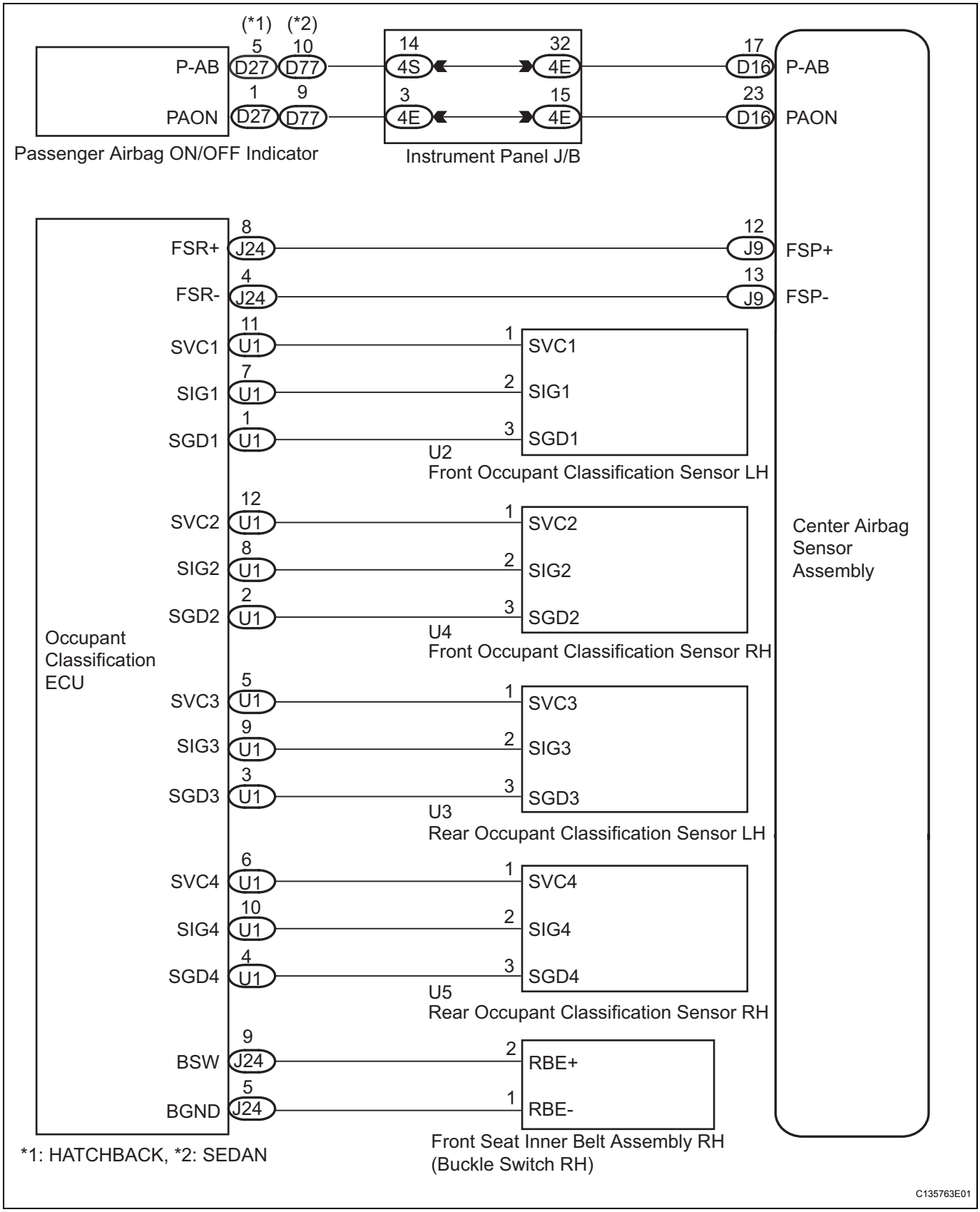

INSPECTION PROCEDURE

1 CHECK SRS WARNING LIGHT

(a) Turn the ignition switch to the on position, and check the SRS warning light condition.
OK:
The SRS warning light does not come on.

NG → **Go to step 9**

OK

2 CHECK PASSENGER AIRBAG ON/OFF INDICATOR CONDITION

(a) Turn the ignition switch to the on position.
(b) Check if the passenger airbag ON/OFF indicator correctly indicates the front passenger seat condition.

OK

Front passenger seat condition	ON Indicator	OFF Indicator
Vacant	OFF	OFF
Adult is seated	ON	OFF
Child is seated	OFF	ON
Child restraint system is set	OFF	ON
Front passenger occupant classification system failure	OFF	ON

OK → **END**

NG

3 PERFORM ZERO POINT CALIBRATION

(a) Turn the ignition switch to the lock position.
(b) Connect the intelligent tester to the DLC3.
(c) Turn the ignition switch to the on position.
(d) Using the intelligent tester, perform the zero point calibration (See page RS-215).
OK:
COMPLETE is displayed.

NG → **Go to step 5**

OK

4 PERFORM SENSITIVITY CHECK

(a) Using the intelligent tester, perform the sensitivity check (See page RS-215).
(1) Confirm that nothing is placed on the passenger seat.

(2) Confirm that the beginning sensor reading is within the standard range.
Standard range:
-3.2 to 3.2 kg (-7 to 7 lb)

(3) Place a 30 kg (66.14 lb) weight (e.g. a lead mass) onto the front passenger seat.

(4) Confirm that the sensitivity is within the standard range.
Standard range:
27 to 33 kg (59.52 to 72.75 lb)
HINT:
When performing the sensitivity check, use a solid metal weight (the check result may not be accurate if a liquid weight is used).

NG → **Go to step 5**

OK

END

5	RETIGHTEN FRONT SEAT ASSEMBLY RH BOLT

(a) Turn the ignition switch to the lock position.

(b) Loosen the 4 installation bolts of the front seat assembly RH.

(c) Tighten the 4 installation bolts of the front seat assembly RH to the specified torque.
Torque: 37 N*m (375 kgf*cm, 27 ft.*lbf)

NG → **Go to step 8**

OK

6	PERFORM ZERO POINT CALIBRATION

(a) Connect the intelligent tester to the DLC3.

(b) Turn the ignition switch to the on position.

(c) Using the intelligent tester, perform the zero point calibration (See page RS-215).
OK:
COMPLETE is displayed.

NG → **Go to step 8**

OK

7	PERFORM SENSITIVITY CHECK

(a) Using the intelligent tester, perform the sensitivity check (See page RS-215).

(1) Confirm that nothing is placed on the passenger seat.

(2) Confirm that the beginning sensor reading is within the standard range.
Standard range:
-3.2 to 3.2 kg (-7 to 7 lb)

(3) Place a 30 kg (66.14 lb) weight (e.g. a lead mass) onto the front passenger seat.

(4) Confirm that the sensitivity is within the standard range.
Standard range:
27 to 33 kg (59.52 to 72.75 lb)
HINT:
When performing the sensitivity check, use a solid metal weight (the check result may not be accurate if a liquid weight is used).

NG → **Go to step 8**

OK

8	CHECK CONNECTORS

(a) Turn the ignition switch to the lock position.

(b) Disconnect the negative (-) terminal cable from the battery, and wait for at least 90 seconds.

(c) Check that the connectors are properly connected to the occupant classification ECU and the 4 occupant classification sensors.
OK:
The connectors are connected.

(d) Disconnect the connectors from the occupant classification ECU and the 4 occupant classification sensors.

(e) Check that the connectors are not damaged or deformed.
OK:
The connectors are normal.

NG → **REPAIR OR REPLACE WIRE HARNESS AND CONNECTOR**

OK

9	CHECK DTC

(a) Connect the connectors to the occupant classification ECU and the 4 occupant classification sensors.

(b) Connect the negative (-) terminal cable to the battery.

(c) Turn the ignition switch to the on position, and wait for at least 60 seconds.

(d) Turn the ignition switch to the lock position.

(e) Clear the DTCs stored in the memory (See page RS-223).

(f) Turn the ignition switch to the on position, and wait for at least 60 seconds.

(g) Check the DTCs (See page RS-223).
OK:
DTC is not output.

NG → **REPLACE CENTER AIRBAG SENSOR ASSEMBLY**

RS

OK

10	REPLACE OCCUPANT CLASSIFICATION ECU

(a) Turn the ignition switch to the lock position.
(b) Disconnect the negative (-) terminal cable from the battery, and wait for at least 90 seconds.
(c) Replace the occupant classification ECU (See page RS-493).
HINT:
Perform the inspection using parts from a normal vehicle if possible.

NEXT

11	PERFORM ZERO POINT CALIBRATION

(a) Connect the negative (-) terminal cable to the battery.
(b) Connect the intelligent tester to the DLC3.
(c) Turn the ignition switch to the on position.
(d) Using the intelligent tester, perform the zero point calibration (See page RS-215).
OK:
COMPLETE is displayed.

NEXT

12	PERFORM SENSITIVITY CHECK

(a) Using the intelligent tester, perform the sensitivity check (See page RS-215).
(1) Confirm that nothing is placed on the passenger seat.
(2) Confirm that the beginning sensor reading is within the standard range.
Standard range:
-3.2 to 3.2 kg (-7 to 7 lb)
(3) Place a 30 kg (66.14 lb) weight (e.g. a lead mass) onto the front passenger seat.
(4) Confirm that the sensitivity is within the standard range.
Standard range:
27 to 33 kg (59.52 to 72.75 lb)
HINT:
When performing the sensitivity check, use a solid metal weight (the check result may not be accurate if a liquid weight is used).

NEXT

END

STEERING PAD

COMPONENTS

RS

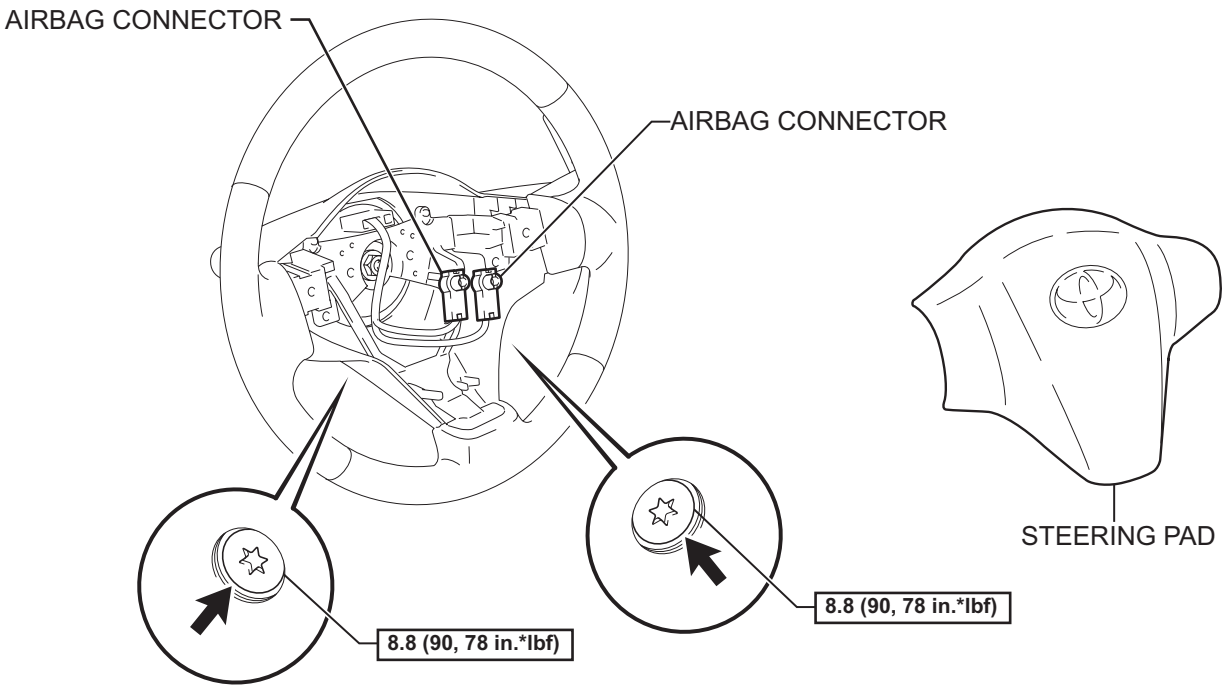

N*m (kgf*cm, ft*lbf) : Specified torque

P

C137494E01

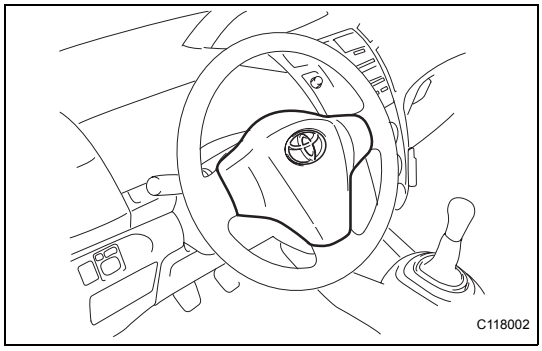

ON-VEHICLE INSPECTION

1. **INSPECT STEERING PAD (for Vehicle not Involved in Collision)**
   (a) Perform a diagnostic system check (See page RS-38).
   (b) With the steering pad installed on the vehicle, perform a visual check. If there are any defects, such as those mentioned below, replace the steering pad with a new one:
   Any cuts, minute cracks or marked discoloration on the steering pad top surface or in the grooved portion.

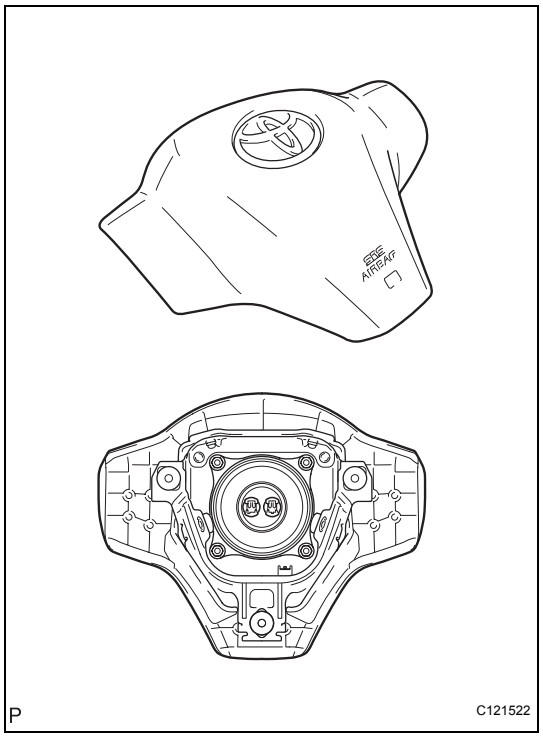

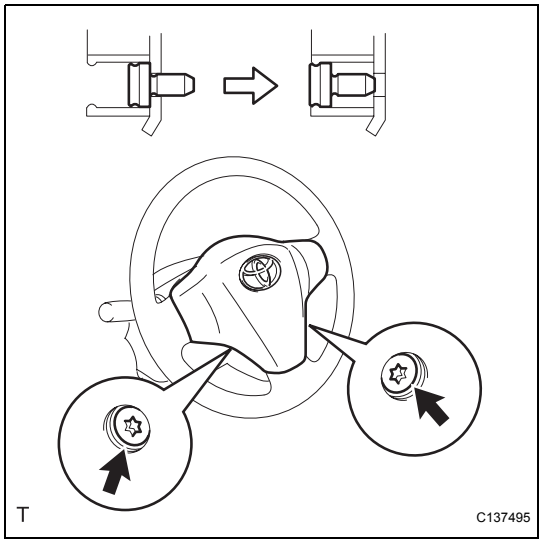

2. INSPECT STEERING PAD (for Vehicle Involved in Collision and Airbag not Deployed)

CAUTION:

For steering pad removal and installation procedures, see pages RS-309 and RS-310, and carefully follow the correct procedure.

(a) Perform a diagnostic system check (See page RS-38).

(b) With the steering pad removed from the vehicle, perform a visual check. If there are any defects, such as those mentioned below, replace the steering pad or steering wheel with a new one:

- Any cuts, minute cracks or marked discoloration on the steering pad top surface or in the grooved portion.
- Any cracks or other damage to the connectors.
- Deformation of the steering wheel.
- Deformation of the horn button contact plate of the steering pad.

- There should be no interference between the steering pad and steering wheel, and the clearance should be uniform all the way around when a new steering pad is installed on the steering wheel.

RS

REMOVAL

CAUTION:
Some of these service operations affect the SRS airbag system. Read the precautionary notices concerning the SRS airbag system before servicing (See page RS-1).

1. DISCONNECT CABLE FROM NEGATIVE BATTERY TERMINAL

2. REMOVE STEERING PAD

(a) Using "Torx" socket wrench T30, loosen the 2 bolts completely.
(b) Pull the steering pad toward you.

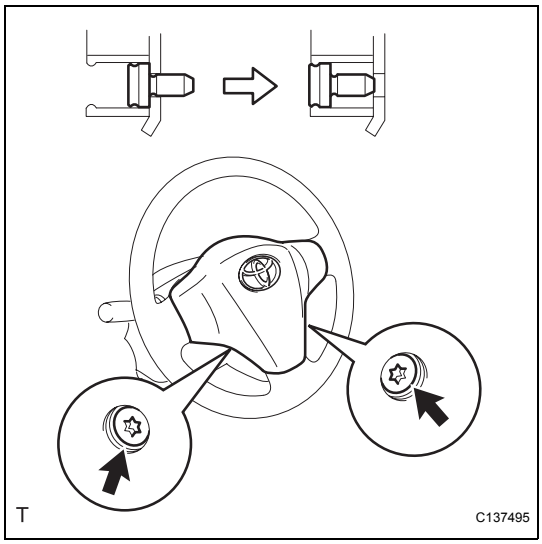

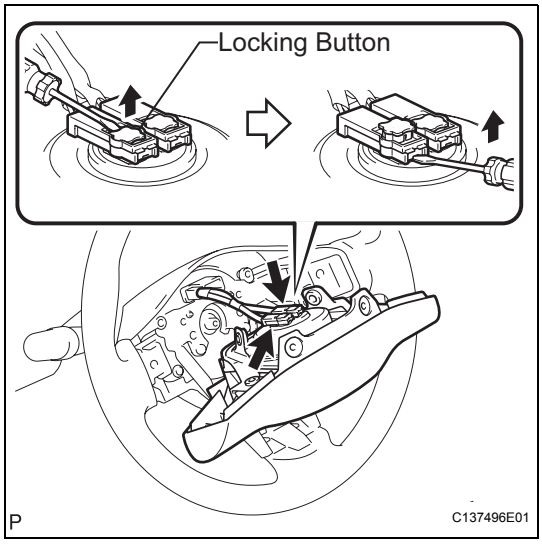

(c) Using a thin-bladed screwdriver, release the locking button.
(d) Using a thin-bladed screwdriver, disconnect the 2 connectors.
(e) Detach the horn terminal.

INSTALLATION

CAUTION:
Some of these service operations affect the SRS airbag system. Read the precautionary notices concerning the SRS airbag system before servicing (See page RS-1).

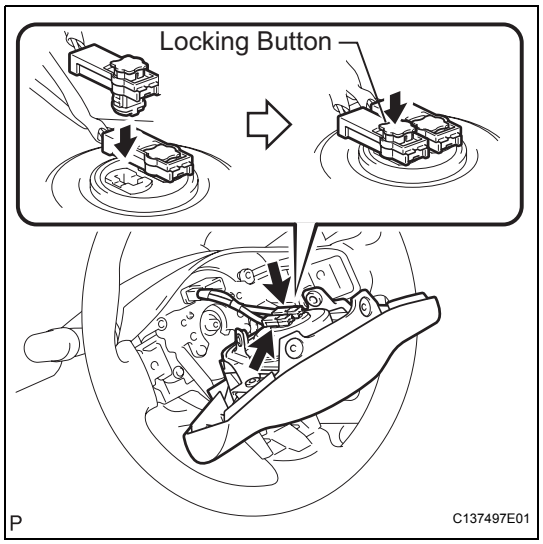

1. **INSTALL STEERING PAD**
   NOTICE:
   Do not use a steering pad that has been dropped.
   (a) Confirm that the ignition switch is turned to OFF.
   (b) Confirm that the negative battery terminal is detached.
   CAUTION:
   Do not begin the operation for at least 90 seconds after the negative battery terminal is detached.
   (c) Connect the horn terminal.
   (d) Connect the airbag connector.
   NOTICE:
   - **Match the color of the airbag connector with that of the steering pad assembly, and install the airbag connector.**
   - **Securely lock the locking button.**

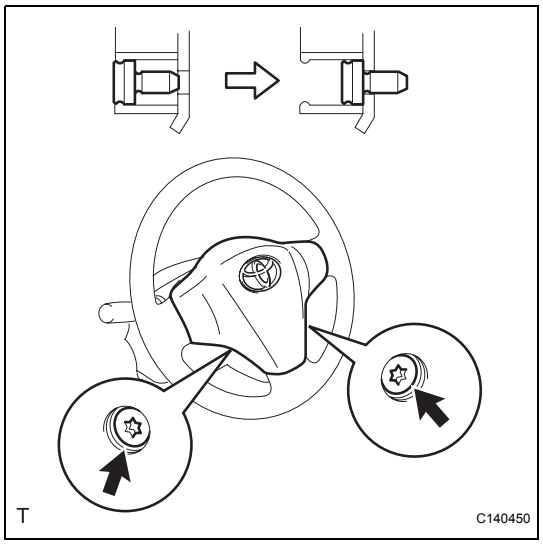

   (e) Install the steering pad.
   (f) Using "Torx" socked wrench T30, tighten the 2 bolts.
   Torque: 8.8 N*m (90 kgf*cm, 78 in.*lbf)
   NOTICE:
   Tighten the 2 bolts while holding the steering pad to prevent it moving upward.

2. **CONNECT CABLE TO NEGATIVE BATTERY TERMINAL**
   Torque: 5.4 N*m (55 kgf*cm, 48 in.*lbf)

3. **INSPECT SRS WARNING LIGHT**
   (See page RS-31)

RS

DISPOSAL

HINT:
When scrapping a vehicle equipped with the SRS or disposing of a steering pad, deploy the airbag first in accordance with the procedure described below. If any abnormality occurs with the airbag deployment, contact the SERVICE DEPT. of the DISTRIBUTOR.

CAUTION:

- **Never dispose of a steering pad that has an undeployed airbag.**
- **The airbag emits an exploding sound when it is deployed, so perform the operation outdoors, and where it will not create a nuisance to nearby residents.**
- **When deploying the airbag, always use the specified SST (SRS Airbag Deployment Tool). Perform the operation in a place away from electrical noise.**
- **When deploying the airbag, perform the operation at least 10 m (33 ft) away from the steering pad.**
- **The steering pad becomes extremely hot when the airbag is deployed, so do not touch it for at least 30 minutes after deployment.**
- **Use gloves and safety glasses when handling a steering pad with a deployed airbag.**
- **Do not apply water, etc. to a steering pad with a deployed airbag.**
- **Always wash your hands with water after completing the operation.**

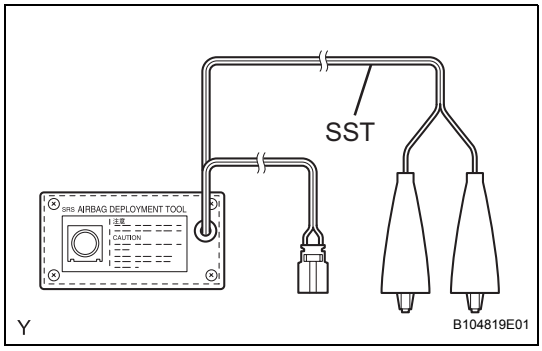

1. DISPOSE OF STEERING PAD (WHEN INSTALLED IN VEHICLE)

HINT:
Prepare a battery as the power source to deploy the airbag.

(a) Check the function of SST.
SST 09082-00700
CAUTION:
Always use the specified SST (SRS Airbag Deployment Tool) when deploying the airbag.

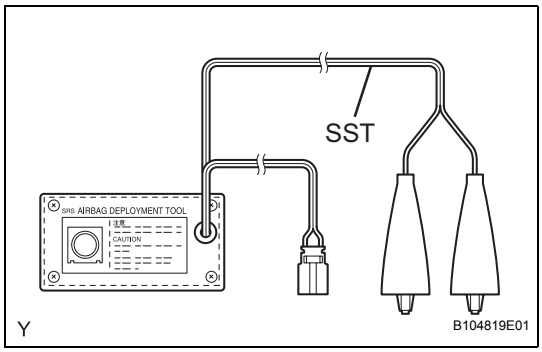

(1) Connect the red clip of SST to the positive battery terminal and the black clip of SST to the negative battery terminal.

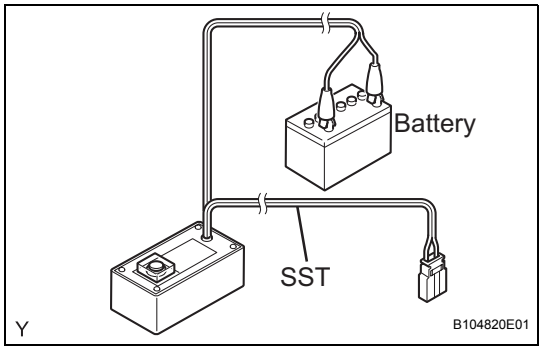

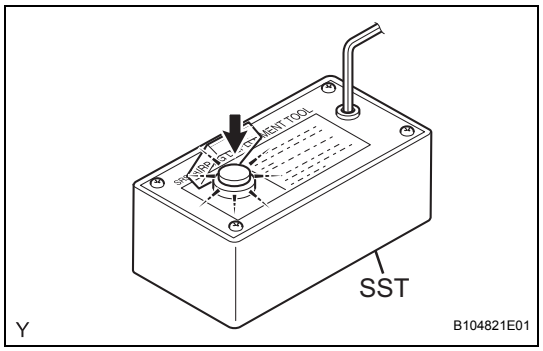

(2) Press the SST activation switch, and check that the LED of the SST activation switch illuminates.
CAUTION:
- **Do not connect the SST connector (yellow colored one) to the airbag.**
- **If the LED illuminates when the activation switch is not being pressed, SST may be malfunctioning. Do not use SST.**

(3) Disconnect SST from the battery.

(b) Disconnect the cable from the negative battery terminal.

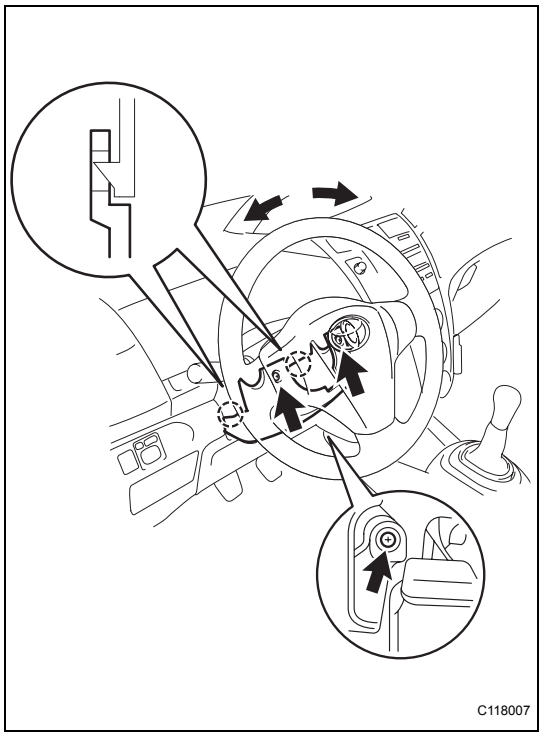

(c) Remove the steering column cover.
(1) Turn the steering wheel 90 degrees in both directions and remove the 2 screws.
(2) Remove the screw from the lower portion of the steering cover lower.
(3) Remove the steering column cover lower.

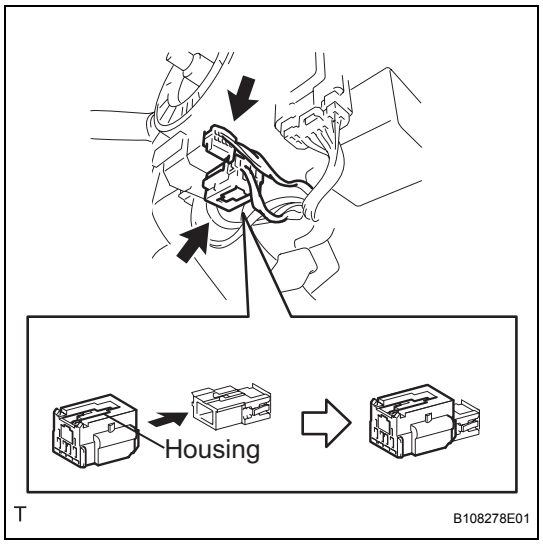

(d) Connect SST.
CAUTION:
Check that there is no slack in the steering wheel and steering pad.
(1) Disconnect the airbag connector, as shown in the illustration.
NOTICE:
Do not damage the airbag wire harness when handling the airbag connector.

RS

RS

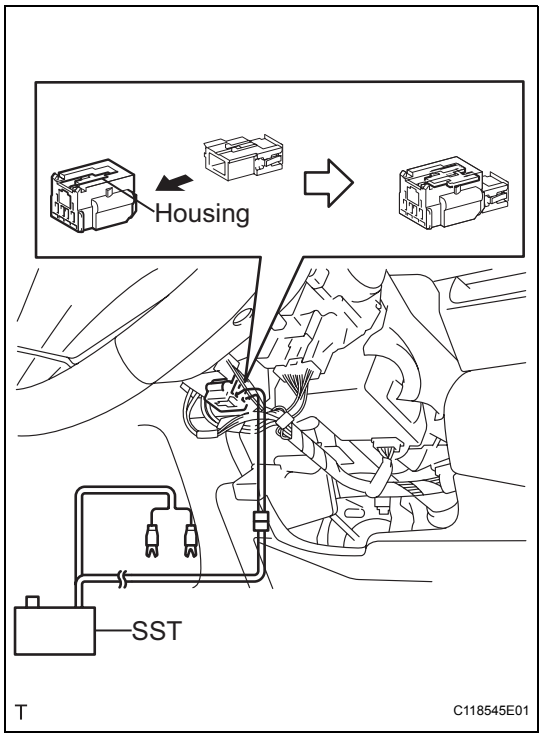

(2) Connect SST.
SST 09082-00700, 09082-00780
NOTICE:
Do not lock the secondary lock of the twin lock to avoid damaging the SST connector and wire harness.

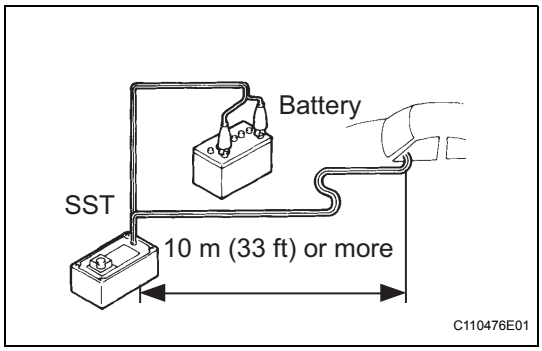

(3) Move SST to at least 10 m (33 ft) away from the vehicle front side window.
(4) Maintaining enough clearance for the SST wire harness in the front side window, close all doors and windows of the vehicle.
NOTICE:
Do not damage SST wire harness.
(5) Connect the red clip of SST to the positive battery terminal and the black clip of SST to the negative battery terminal.

(e) Deploy the airbag.
(1) Check that no one is inside the vehicle or within a 10 m (33 ft) radius of the vehicle.
(2) Press the SST activation switch and deploy the airbag.
CAUTION:
- **Make sure that no one is near the vehicle when deploying the airbag.**
- **The steering pad becomes extremely hot when the airbag is deployed, so do not touch it for at least 30 minutes after deployment.**
- **Use gloves and safety glasses when handling a steering pad with a deployed airbag.**
- **Always wash your hands with water after completing the operation.**
- **Do not apply water, etc. to a steering pad with a deployed airbag.**

HINT:
The airbag is deployed as the LED of the SST activation switch illuminates.

2. DISPOSE OF STEERING PAD (WHEN NOT INSTALLED IN VEHICLE)

NOTICE:

- **Never use the customer's vehicle to deploy the airbag when disposing of the steering pad.**
- **Follow the procedure detailed below when deploying the airbag.**

HINT:

Prepare a battery as the power source to deploy the airbag.

(a) Check the function of SST.

SST 09082-00700

CAUTION:

Always use the specified SST (SRS Airbag Deployment Tool) when deploying the airbag.

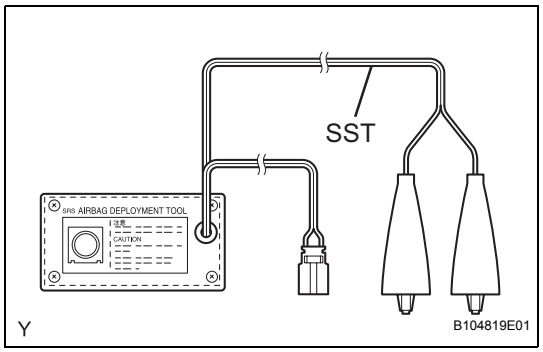

(1) Connect the red clip of SST to the positive battery terminal and the black clip of SST to the negative battery terminal.

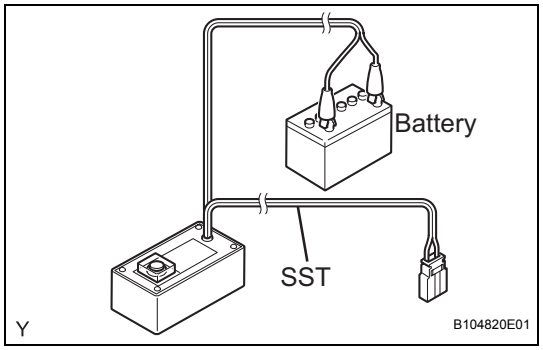

(2) Press the SST activation switch, and check that the LED of the SST activation switch illuminates.

CAUTION:

- **Do not connect the SST connector (yellow colored one) to the airbag.**
- **If the LED illuminates when the activation switch is not being pressed, SST may be malfunctioning. Do not use SST.**

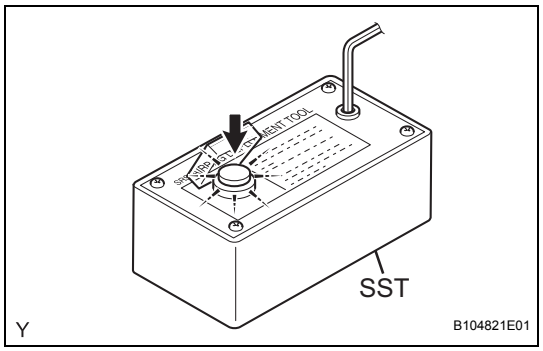

(3) Disconnect SST from the battery.

(b) Disconnect the cable from the negative battery terminal.

(c) Remove the steering pad (See page RS-309).

CAUTION:

- **When removing the steering pad, work must be started at least 90 seconds after the power switch is turned off and the cable is disconnected from the negative battery terminal.**
- **When storing the steering pad, keep the upper surface of the airbag deployment side facing upward.**

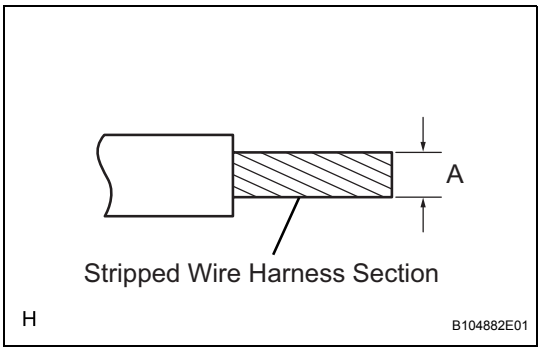

(d) Using a service-purpose wire harness for the vehicle, tie the steering pad to the disc wheel.
Stripped wire harness section:

Area	Measurement
A	1.25 mm^2 or more (0.0019 $in.^2$ or more)

CAUTION:
Do not use wire harness that is too thin or any other object to tie the steering pad because it may snap due to the shock when the airbag is deployed. Always use a wire harness for vehicle use with a cross section of at least 1.25 mm^2 (0.0019 $in.^2$).
HINT:
To calculate the area of the stripped wire harness cross section:
Area = 3.14 x $(Diameter)^2$ divided by 4

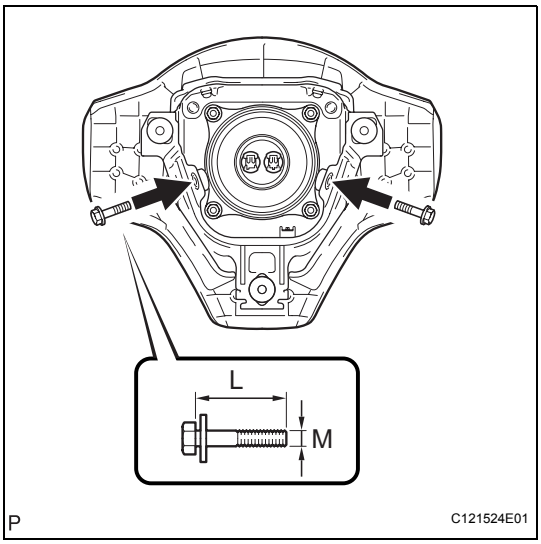

(1) Install the 2 bolts with washers into the 2 bolt holes in the steering pad.
Bolt size:

Area	Specification
L	35.0 mm (1.378 in.)
M	6.0 mm (0.236 in.)
Pitch	1.0 mm (0.039 in.)

NOTICE:
- **Tighten the bolts by hand until they become difficult to turn.**
- **Do not tighten the bolts excessively.**

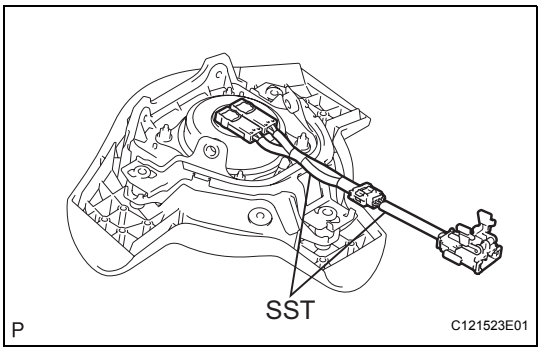

(2) After connecting SST, connect it to the horn button.
SST 09082-00802 (09082-10801, 09082-30801)
NOTICE:
Do not lock the secondary lock of the twin lock to avoid damaging the SST connector and wire harness.

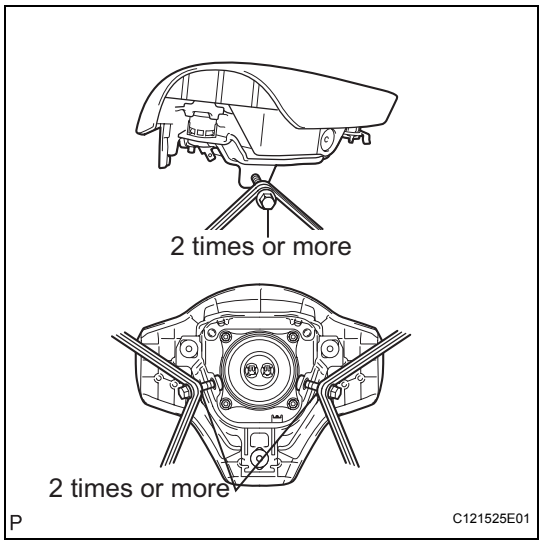

(3) Using 3 wire harnesses, wind the wire harnesses at least 2 times each around the bolts installed on the left and right sides of the steering pad.

CAUTION:

- **Tightly wind the wire harnesses around the bolts so that there is no slack.**
- **Make sure that the wire harnesses are tight. If there is any slack in the wire harnesses, the steering pad may become loose due to the shock when the airbag is deployed.**

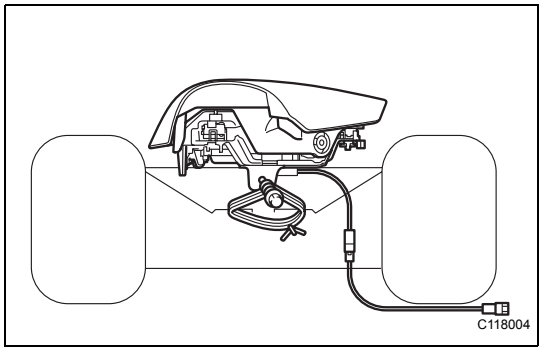

(4) Face the airbag deployment side of the steering pad upward. Using wire harnesses, separately tie the left and right sides of the steering pad to the disc wheel through the hub nut holes. Position the SST connector so that it hangs downward through the hub hole in the disc wheel.

CAUTION:

- **Make sure that the wire harnesses are tight. If there is any slack in the wire harnesses, the steering pad may become loose due to the shock when the airbag is deployed.**
- **Always tie the steering pad with the airbag deployment side facing upward. It is highly dangerous if the steering pad is tied with the airbag deployment side facing downward as the wire harnesses will be cut by the shock caused by the airbag deployment and the steering pad will be thrown into the air.**

NOTICE:

The disc wheel will be marked by the airbag deployment, so use a waste disc wheel.

RS

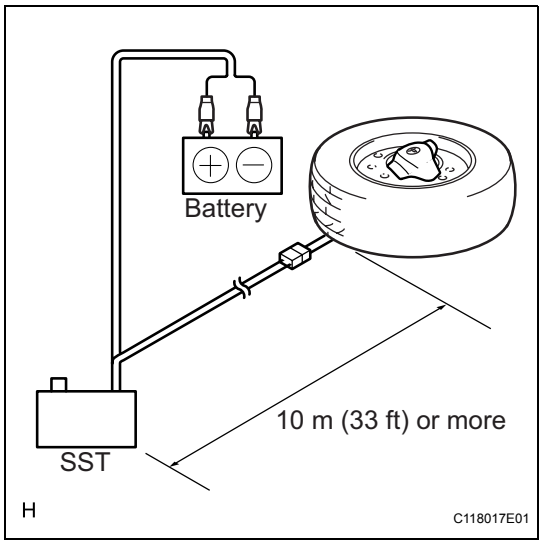

(e) Connect SST.
SST 09082-00700
CAUTION:
Place the disc wheel on a level ground.
(1) Connect the SST connector.
NOTICE:
Do not lock the secondary lock of the twin lock to avoid damaging the SST connector and wire harness. Also, secure some slack for the SST wire harness inside the disc wheel.
(2) Move SST to at least 10 m (33 ft) away from the steering pad tied to the disc wheel.

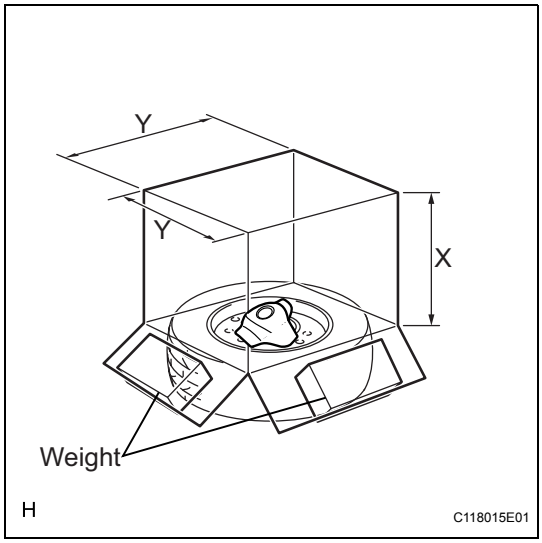

(f) Cover the steering pad with a cardboard box or tires.
(1) Covering method using a cardboard box:
Cover the steering pad with the cardboard box and place weights of at least 190 N (19 kg, 43 lb) on the cardboard box in 4 places.
Cardboard box size:

Area	Measurement
X	460 mm (18.11 in.)
Y	650 mm (25.59 in.)

NOTICE:
- **When dimension Y of the cardboard box exceeds the diameter of the disc wheel and tire to which the steering pad is tied, X should be the following size.**
X = 460 mm (18.11 in.) + width of tire
- **If a cardboard box which is smaller than the specified size is used, the cardboard box will be broken by the shock from the airbag deployment.**

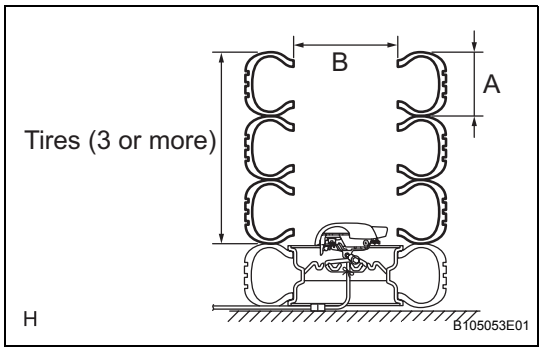

(2) Covering method using tires:
Place at least 3 tires without disc wheels on top of the tire with a disc wheel to which the steering pad is tied.
Tire size:

Area	Measurement
A	185 mm (7.28 in.)
B	360 mm (14.17 in.)

CAUTION:
Do not use tires with disc wheels.
NOTICE:
- **The tires may be marked by the airbag deployment, so use waste tires.**
- **Do not place the SST connector under the tire because it could be damaged.**

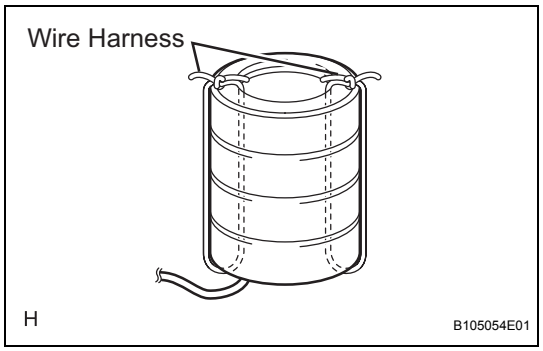

(3) Tie the tires together with 2 wire harnesses.
CAUTION:
Make sure that the wire harnesses are tight. It is highly dangerous when a loose wire harness results in the tires coming free due to the shock when the airbag is deployed.

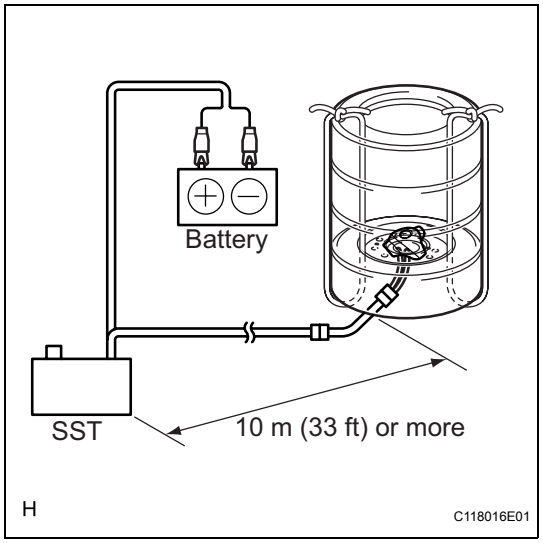

(g) Deploy the airbag.
(1) Connect the red clip of SST to the positive battery terminal and the black clip of SST to the negative battery terminal.
(2) Check that no one is within a 10 m (33 ft) radius of the disc wheel to which the steering pad is tied.
(3) Press the SST activation switch and deploy the airbag.
CAUTION:
Make sure that no one is near the tires when deploying the airbag.
HINT:
The airbag is deployed as the LED of the SST activation switch illuminates.

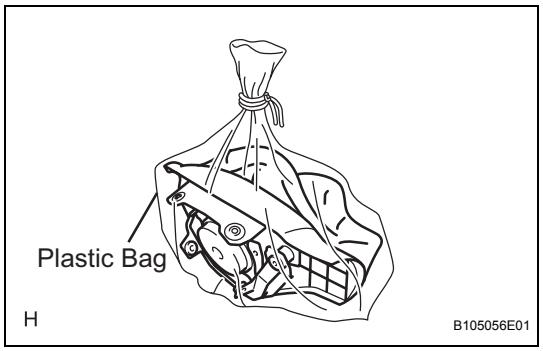

(h) Dispose of the steering pad.
CAUTION:
- **The steering pad becomes extremely hot when the airbag is deployed, so do not touch it for at least 30 minutes after deployment.**
- **Use gloves and safety glasses when handling a steering pad with a deployed airbag.**
- **Do not apply water, etc. to a horn button with a deployed airbag.**
- **Always wash your hands with water after completing the operation.**

(1) Remove the steering pad from the disc wheel.
(2) Place the steering pad in a plastic bag, tie it tightly and dispose of it in the same way as other general parts.

SPIRAL CABLE

COMPONENTS

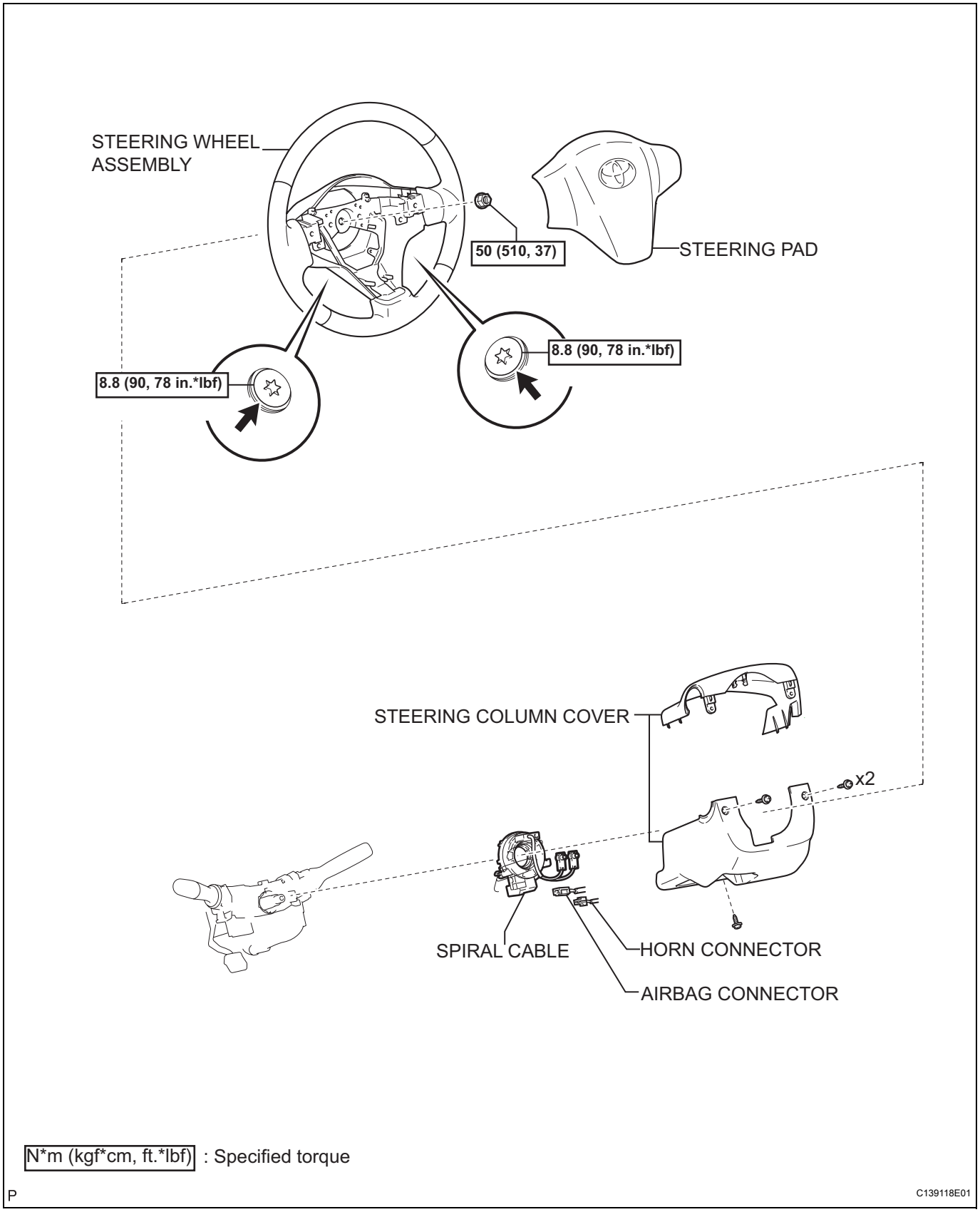

RS

REMOVAL

CAUTION:
Some of these service operations affect the SRS airbag system. Read the precautionary notices concerning the SRS airbag system before servicing (See page RS-1).

1. DISCONNECT CABLE FROM NEGATIVE BATTERY TERMINAL

2. REMOVE STEERING PAD

(a) Using "Torx" socket wrench T30, loosen the 2 bolts completely.
(b) Pull the steering pad toward you.

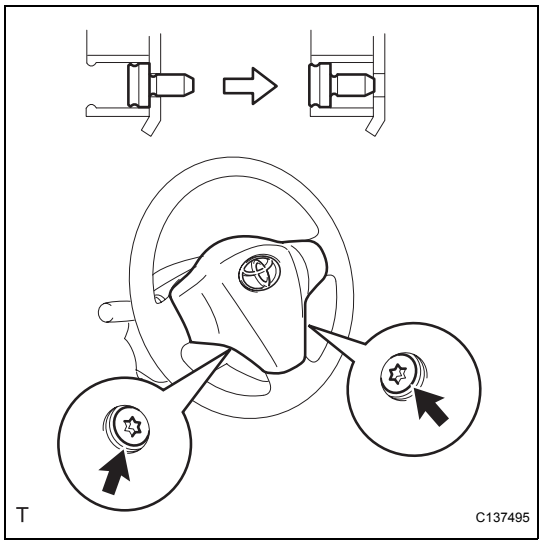

(c) Using a thin-bladed screwdriver, release the locking button.
(d) Using a thin-bladed screwdriver, disconnect the 2 airbag connectors.
(e) Detach the horn connector.

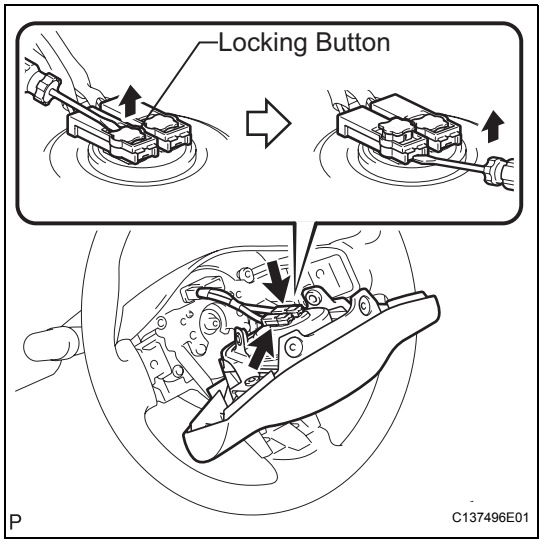

3. REMOVE STEERING WHEEL ASSEMBLY (See page SR-30)

4. REMOVE STEERING COLUMN COVER

(a) Remove the 3 screws.
(b) Disengage the 2 claws and remove the steering column cover (lower).
(c) Disengage the 2 claws and remove the steering column cover (upper).

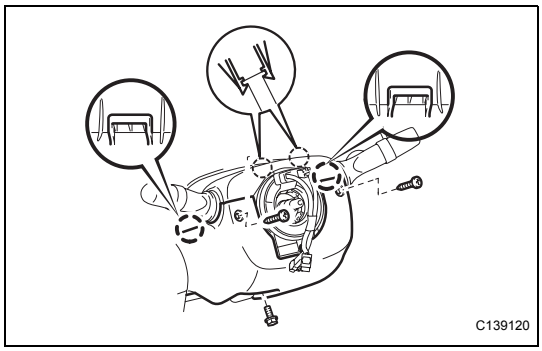

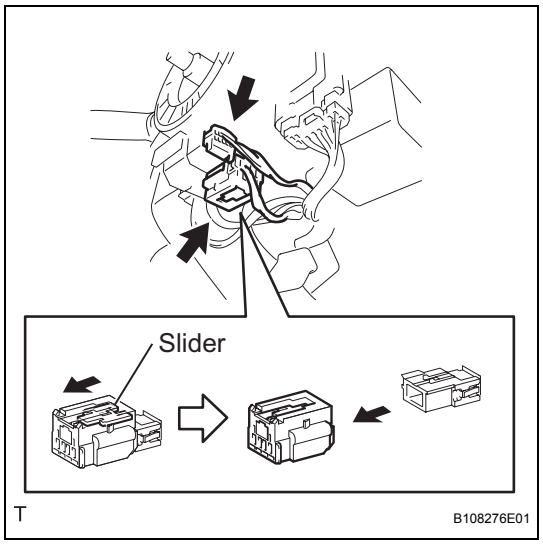

5. REMOVE SPIRAL CABLE

(a) Detach the horn connector.

(b) Slide the slider and detach the airbag connector.

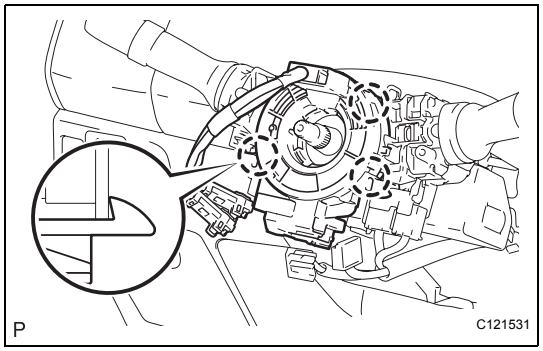

(c) Disengage the 3 claws and remove the spiral cable.

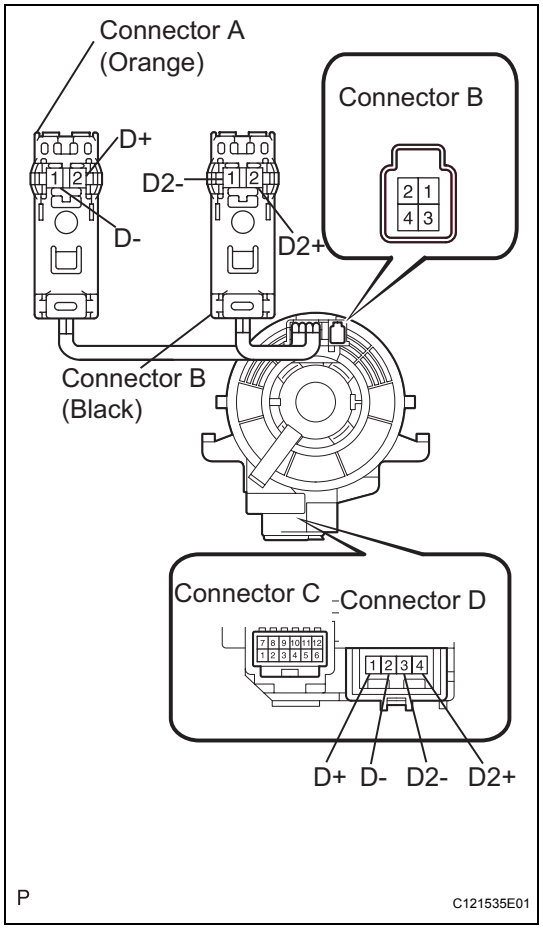

INSPECTION

1. INSPECT SPIRAL CABLE

(a) Check the spiral cable.

(1) Using an ohmmeter, measure the resistance between the terminals.

SST 09082-00030

1. Set the spiral cable in the center, and measure the resistance in each position where the spiral cable is turned 2.5 times clockwise and counterclockwise.
2. Turn the spiral cable 2.5 times clockwise from its original position and measure the resistance while turning it 5 times counterclockwise.

Standard resistance

Tester Connection	Specified Condition
A1(D-) - D2(D-)	Below 1 Ω
A2(D+) - D1(D+)	Below 1 Ω
B1(D2-) - D3(D2-)	Below 1 Ω
A2(D2+) - D4(D2+)	Below 1 Ω

NOTICE:
To avoid breakage of the spiral cable, do not turn the spiral cable more than necessary. If the result is not as specified, replace the spiral cable.

RS

INSTALLATION

CAUTION:
Some of these service operations affect the SRS airbag system. Read the precautionary notices concerning the SRS airbag system before servicing (See page RS-1).

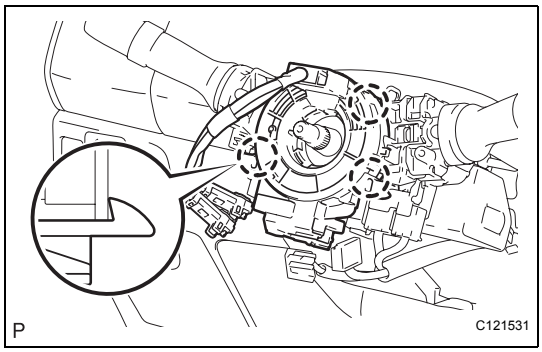

1. INSTALL SPIRAL CABLE

(a) Check that the ignition switch is turned to OFF.

(b) Confirm that the negative battery terminal is detached.
CAUTION:
Do not begin the operation for at least 90 seconds after the negative battery terminal is detached.

(c) Confirm that the front tires face straight forward.

(d) Confirm that the turn signal switch is in the neutral position.
NOTICE:
Perform the operation when the turn signal switch is in the neutral position. Otherwise, the pin of the turn signal will break.

(e) Engage the 3 claws and install the spiral cable.
NOTICE:
Pull the lock pin out before installing the steering wheel, when replacing the spiral cable with a new one.

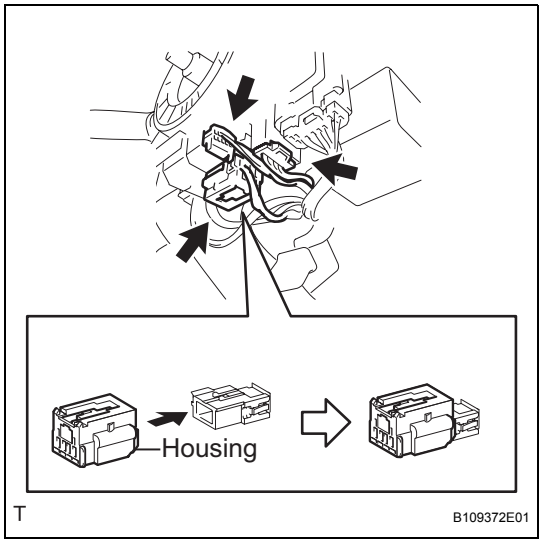

(f) Connect the airbag connector.

(g) Connect the horn connector.

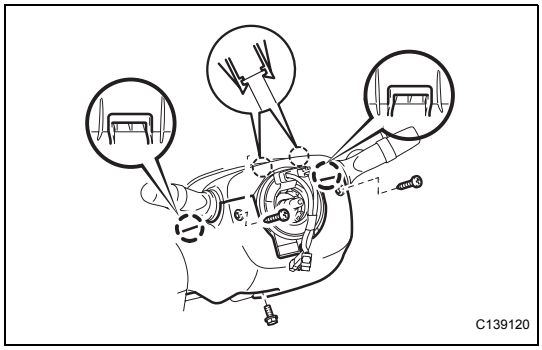

2. INSTALL STEERING COLUMN COVER

(a) Engage the 2 claws and install the steering column cover (upper).

(b) Engage the 2 claws and install the steering column cover (lower).

(c) Tighten the 3 screws.

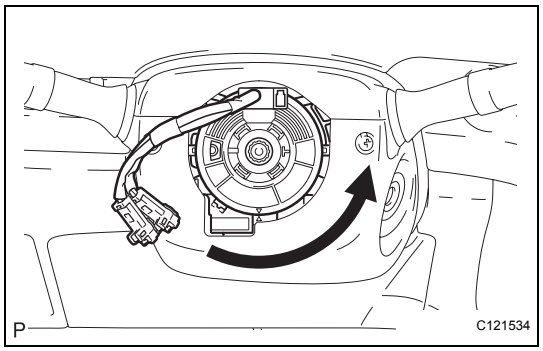

3. ADJUST SPIRAL CABLE

(a) Center the spiral cable.

(1) Turn the spiral cable counterclockwise until it locks.
HINT:
The spiral cable turns a maximum of approximately 5 times.

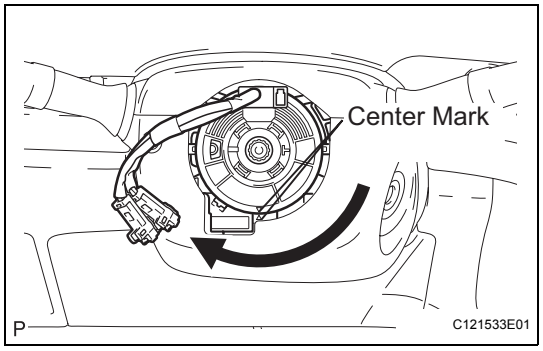

(2) Turn the spiral cable 2.5 times clockwise from its locked position and align the center marks.

4. INSTALL STEERING WHEEL ASSEMBLY (See page SR-41)

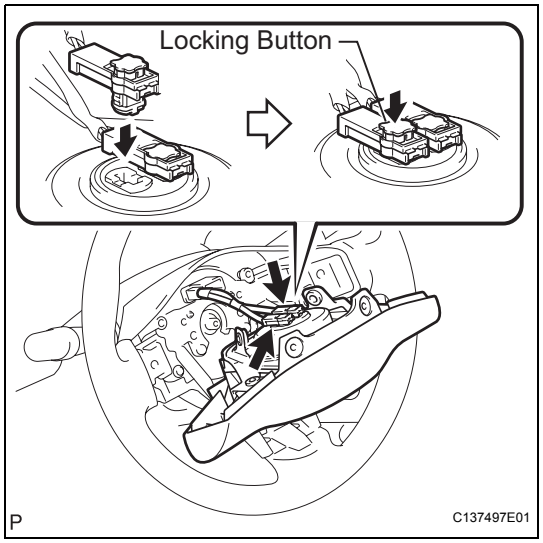

5. INSTALL STEERING PAD

(a) Connect the horn connector.

(b) Connect the airbag connector.
NOTICE:
- **Align the color of the airbag connector with that of the steering pad assembly, and install the airbag connector.**
- **Securely lock the locking button.**

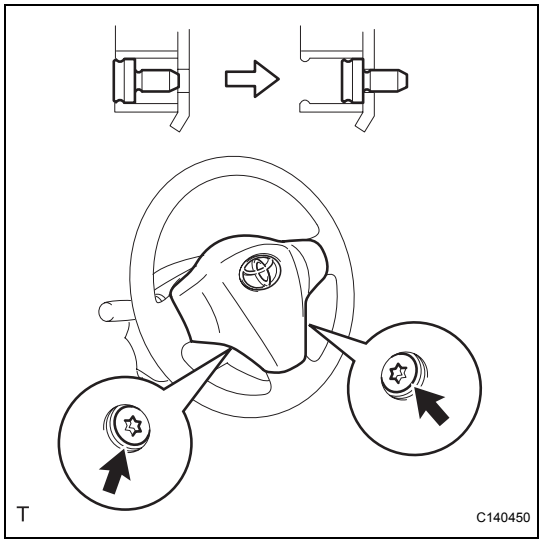

(c) Install the steering pad.

(d) Using "Torx" socket wrench T30, tighten the 2 bolts.
Torque: 8.8 N*m (90 kgf*cm, 78 in.*lbf)

6. CONNECT CABLE TO NEGATIVE BATTERY TERMINAL
Torque: 5.4 N*m (55 kgf*cm, 48 in.*lbf)

7. INSPECT SRS WARNING LIGHT
(See page RS-31)

FRONT PASSENGER AIRBAG ASSEMBLY (for Sedan)

COMPONENTS

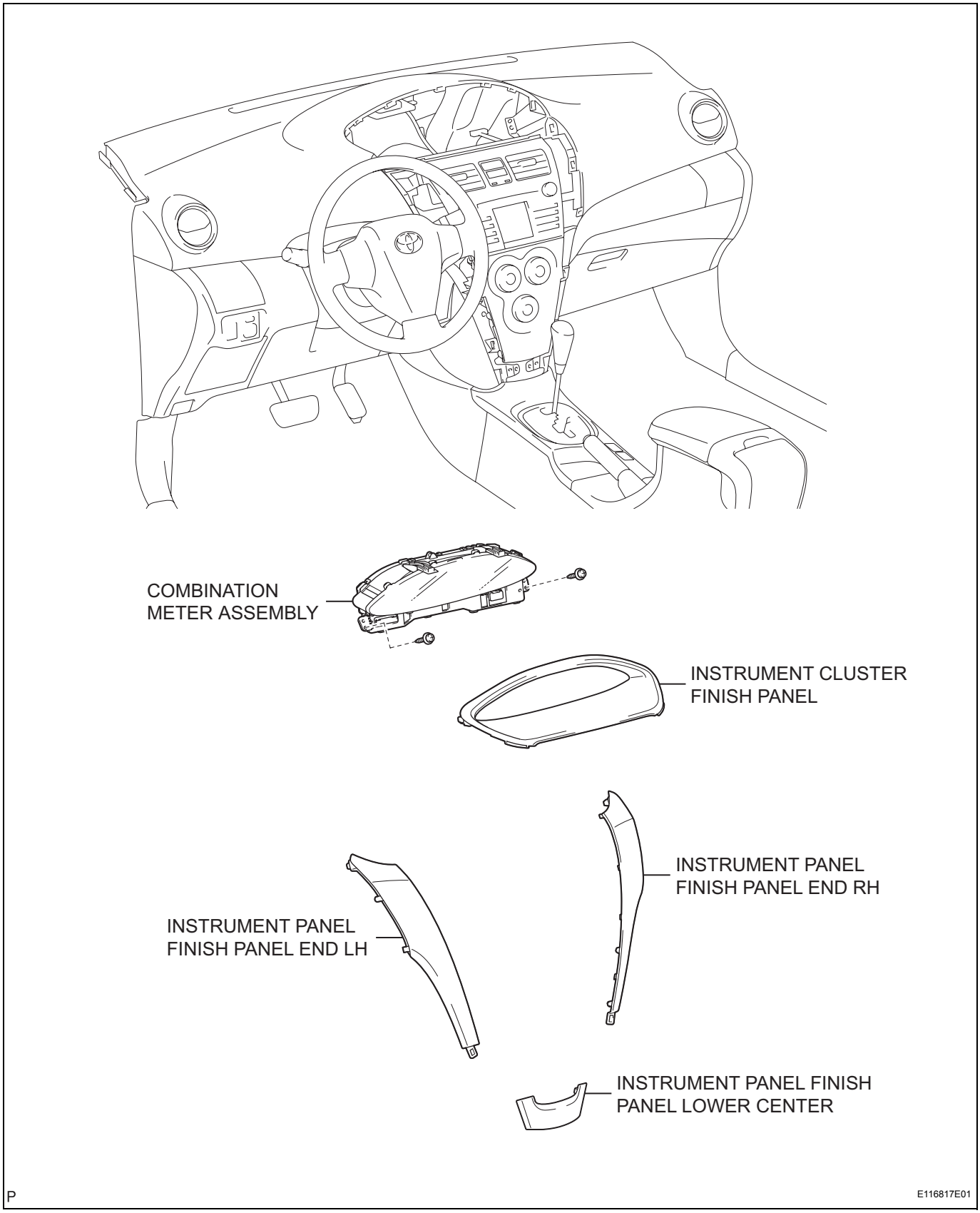

RS

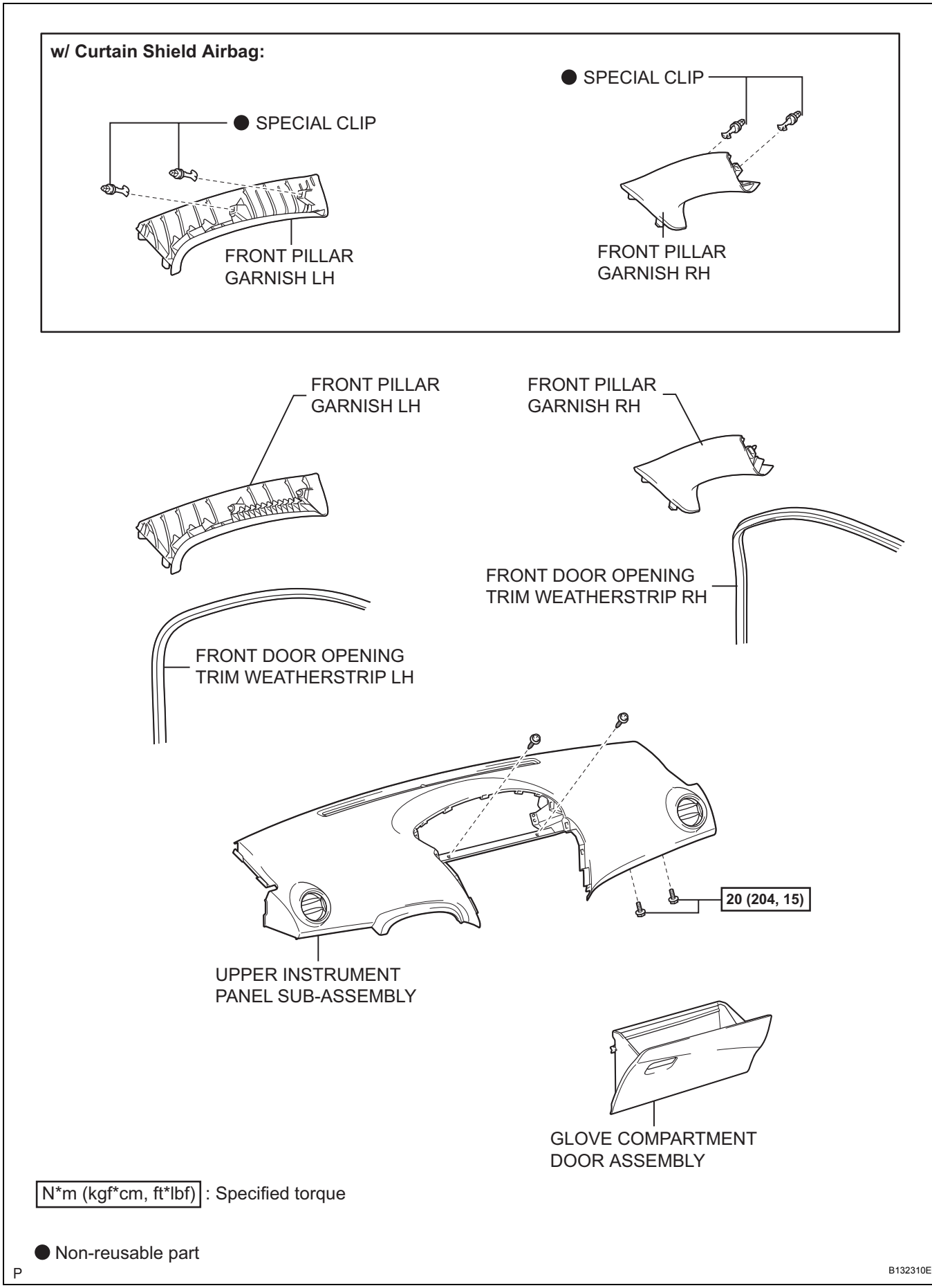
w/ Curtain Shield Airbag:
● SPECIAL CLIP
FRONT PILLAR GARNISH LH
● SPECIAL CLIP
FRONT PILLAR GARNISH RH
FRONT PILLAR GARNISH LH
FRONT PILLAR GARNISH RH
FRONT DOOR OPENING TRIM WEATHERSTRIP RH
FRONT DOOR OPENING TRIM WEATHERSTRIP LH
20 (204, 15)
UPPER INSTRUMENT PANEL SUB-ASSEMBLY
GLOVE COMPARTMENT DOOR ASSEMBLY
N*m (kgf*cm, ft*lbf) : Specified torque
● Non-reusable part
P
B132310E05

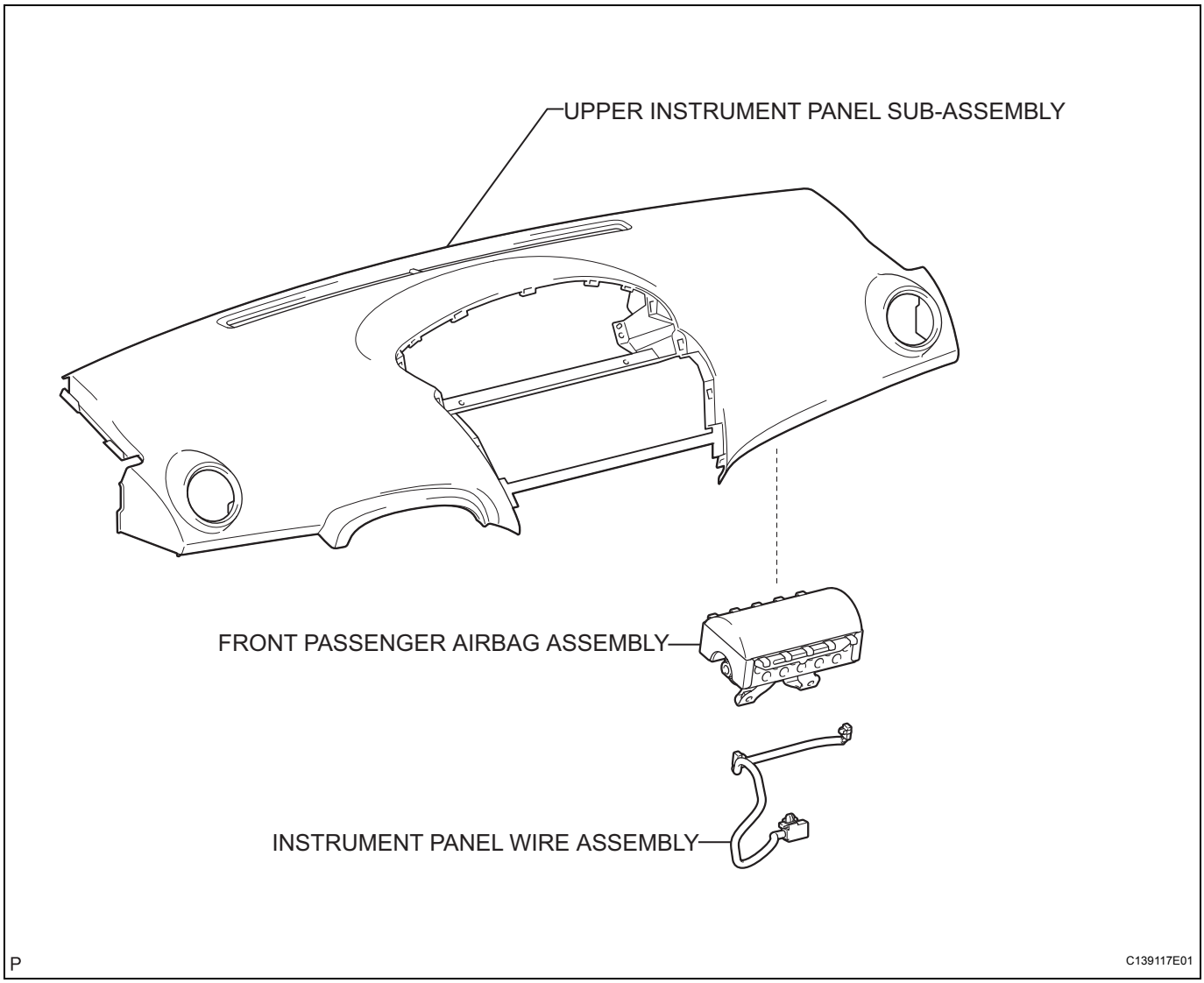

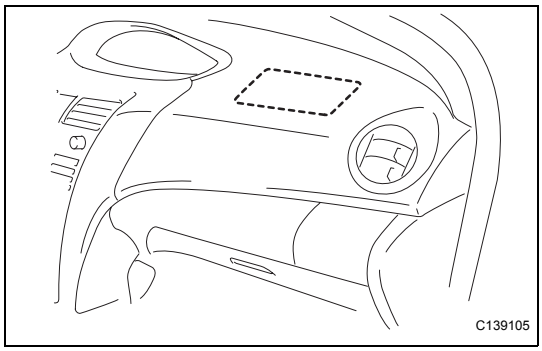

ON-VEHICLE INSPECTION

1. **INSPECT FRONT PASSENGER AIRBAG ASSEMBLY (for Vehicle not Involved in Collision)**
   (a) Perform a diagnostic system check (See page RS-38).
   (b) With the front passenger airbag installed on the vehicle, perform a visual check. If there are any defects, such as those mentioned below, replace the instrument panel with a new one:
   Any cuts, minute cracks or marked discoloration on the instrument panel around the front passenger airbag.

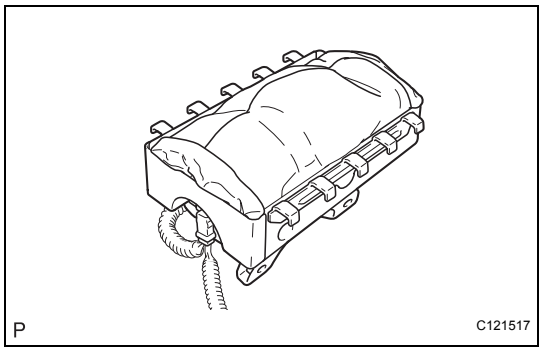

2. INSPECT FRONT PASSENGER AIRBAG ASSEMBLY (for Vehicle Involved in Collision and Airbag not Deployed)

CAUTION:

For front passenger airbag removal and installation procedures, see pages RS-327 and ,RS-328 and carefully follow the correct procedure.

(a) Perform a diagnostic system check (See page RS-38).

(b) With the front passenger airbag removed from the vehicle, perform a visual check. If there are any defects, such as those mentioned below, replace the front passenger airbag, instrument panel or instrument panel reinforcement with new ones:
- Any cuts, minute cracks or marked discoloration on the front passenger airbag.
- Any cracks or other damage to the connector.
- Deformation or cracks on the instrument panel or instrument panel reinforcement.

RS

REMOVAL

CAUTION:
Some of these service operations affect the SRS airbag system. Read the precautionary notices concerning the SRS airbag system before servicing (See page RS-1).

1. **DISCONNECT CABLE FROM NEGATIVE BATTERY TERMINAL**
   (a) Wait for at least 90 seconds after disconnecting the cable to prevent the airbag from working.
2. **REMOVE INSTRUMENT PANEL FINISH PANEL LOWER CENTER (See page ME-138)**
3. **REMOVE INSTRUMENT PANEL FINISH PANEL END LH (See page ME-138)**
4. **REMOVE INSTRUMENT PANEL FINISH PANEL END RH (See page ME-138)**
5. **REMOVE INSTRUMENT CLUSTER FINISH PANEL (See page ME-139)**
6. **REMOVE COMBINATION METER ASSEMBLY (See page ME-139)**
7. **SEPARATE FRONT DOOR OPENING TRIM WEATHERSTRIP RH (See page IP-5)**
8. **SEPARATE FRONT DOOR OPENING TRIM WEATHERSTRIP LH (See page IP-5)**
9. **REMOVE FRONT PILLAR GARNISH RH (See page IR-18)**
10. **REMOVE FRONT PILLAR GARNISH LH (See page IR-19)**
11. **REMOVE GLOVE COMPARTMENT DOOR ASSEMBLY (See page IP-6)**
12. **REMOVE UPPER INSTRUMENT PANEL SUB-ASSEMBLY (See page IP-6)**
13. **REMOVE FRONT PASSENGER AIRBAG ASSEMBLY**
    (a) Remove the wire harness from the 2 claws of the instrument panel.
    (b) Disengage the 10 hooks and remove the instrument panel passenger airbag.

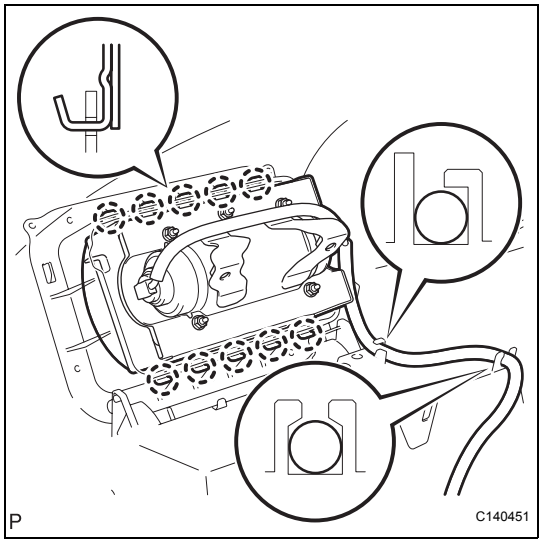

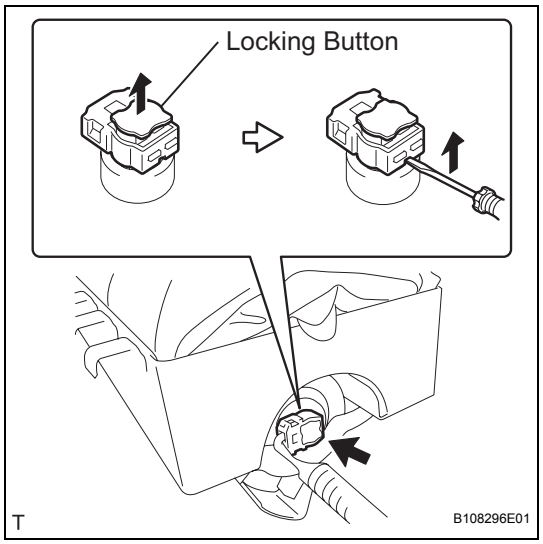

14. REMOVE INSTRUMENT PANEL WIRE ASSEMBLY

(a) Using a thin-bladed screwdriver, release the locking button.

(b) Using a thin-bladed screwdriver, disconnect the 2 airbag connectors and remove the instrument panel wire.

RS

INSTALLATION

CAUTION:
Some of these service operations affect the SRS airbag system. Read the precautionary notices concerning the SRS airbag system before servicing (See page RS-1).

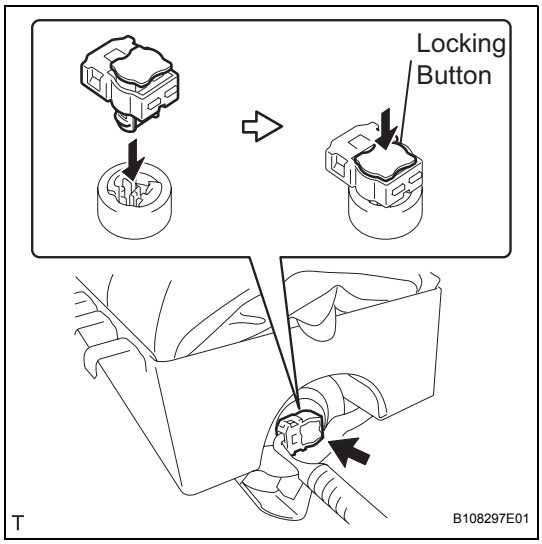

1. **REMOVE INSTRUMENT PANEL WIRE ASSEMBLY**
   (a) Connect the 2 airbag connectors to install the instrument panel wire.
   NOTICE:
   Lock the locking button securely.

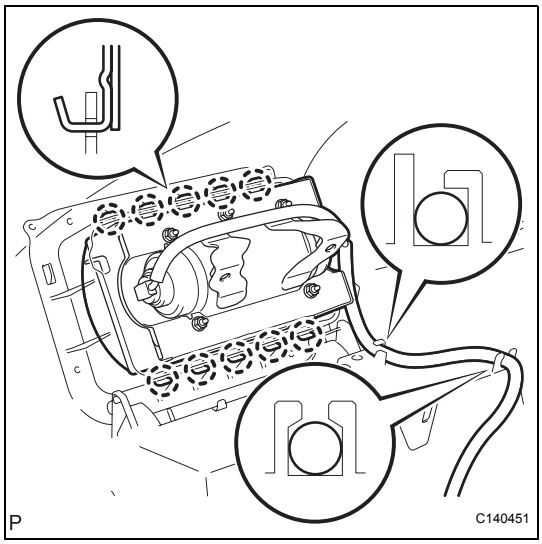

2. **INSTALL FRONT PASSENGER AIRBAG ASSEMBLY (w/ Front Passenger Airbag)**
   (a) Engage the 10 hooks so that the connector side faces the outside of the vehicle, and install the instrument panel passenger airbag.
   (b) Install the wire harness onto the 2 claws of the instrument panel.
3. **INSTALL UPPER INSTRUMENT PANEL SUB-ASSEMBLY (See page IP-11)**
4. **INSTALL GLOVE COMPARTMENT DOOR ASSEMBLY (See page IP-13)**
5. **INSTALL FRONT PILLAR GARNISH RH (See page IR-29)**
6. **INSTALL FRONT PILLAR GARNISH LH (See page IR-30)**
7. **INSTALL FRONT DOOR OPENING TRIM WEATHERSTRIP RH (See page IP-14)**
8. **INSTALL FRONT DOOR OPENING TRIM WEATHERSTRIP LH (See page IP-14)**
9. **INSTALL COMBINATION METER ASSEMBLY (See page ME-140)**
10. **INSTALL INSTRUMENT CLUSTER FINISH PANEL (See page ME-140)**
11. **INSTALL INSTRUMENT PANEL FINISH PANEL END RH (See page ME-141)**
12. **INSTALL INSTRUMENT PANEL FINISH PANEL END LH (See page ME-141)**

13. **INSTALL INSTRUMENT PANEL FINISH PANEL LOWER CENTER (See page ME-142)**
14. **CONNECT CABLE TO NEGATIVE BATTERY TERMINAL**
    Torque: 5.4 N*m (55 kgf*cm, 48 in.*lbf)
15. **CHECK SRS WARNING LIGHT**
    (See page RS-31)

RS

DISPOSAL

HINT:
When scrapping a vehicle equipped with the SRS or disposing of an instrument panel passenger airbag, deploy the airbag first in accordance with the procedure described below. If any abnormality occurs with the airbag deployment, contact the SERVICE DEPT. of the DISTRIBUTOR.

CAUTION:

- **Never dispose of a front passenger airbag that has an undeployed airbag.**
- **The airbag emits an exploding sound when it is deployed, so perform the operation outdoors and where it will not create a nuisance to nearby residents.**
- **When deploying the airbag, always use the specified SST (SRS Airbag Deployment Tool). Perform the operation in a place away from electrical noise.**
- **When deploying the airbag, perform the operation at least 10 m (33 ft) away from the front passenger airbag.**
- **The front passenger airbag becomes extremely hot when the airbag is deployed, so do not touch it for at least 30 minutes after deployment.**
- **Use gloves and safety glasses when handling a front passenger airbag which has been deployed.**
- **Do not apply water, etc. to a front passenger airbag which has been deployed.**
- **Always wash your hands with water after completing the operation.**

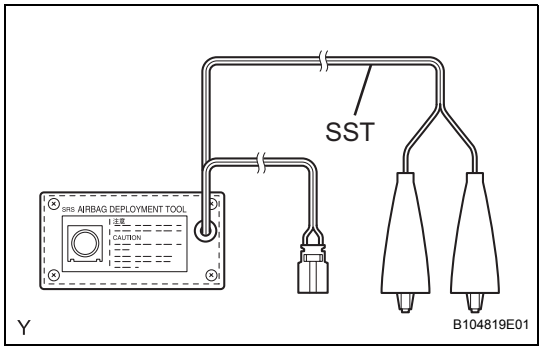

1. DISPOSE OF FRONT PASSENGER AIRBAG ASSEMBLY (WHEN INSTALLED IN VEHICLE)

HINT:
Prepare a battery as the power source to deploy the airbag.

(a) Check the function of SST.
SST 09082-00700
CAUTION:
Always use the specified SST (SRS Airbag Deployment Tool) when deploying the airbag.

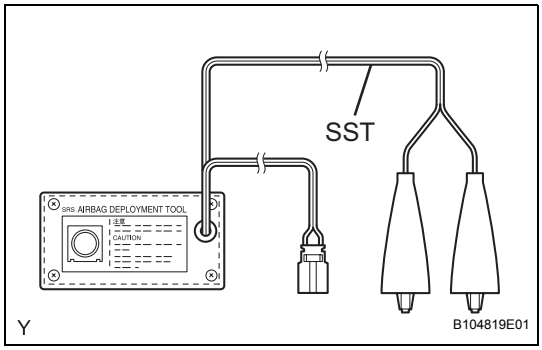

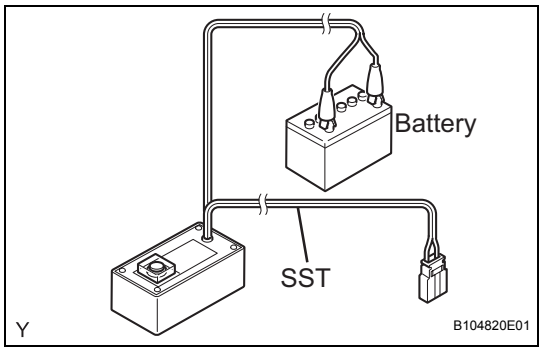

(1) Connect the red clip of SST to the positive battery terminal and the black clip of SST to the negative battery terminal.

(2) Press the SST activation switch, and check that the LED of the SST activation switch illuminates.

CAUTION:

- **Do not connect the SST connector (yellow colored one) to the airbag.**
- **If the LED illuminates when the activation switch is not being pressed, SST may be malfunctioning. Do not use SST.**

(3) Disconnect SST from the battery.

(b) Disconnect the cable from the negative battery terminal.

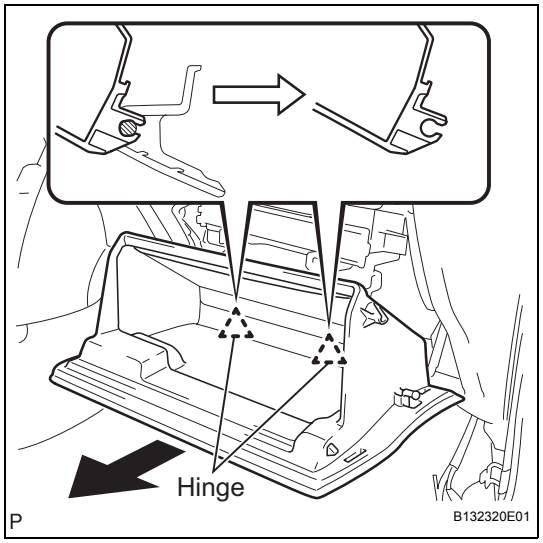

(c) Disengage the 2 claws and open the cover.

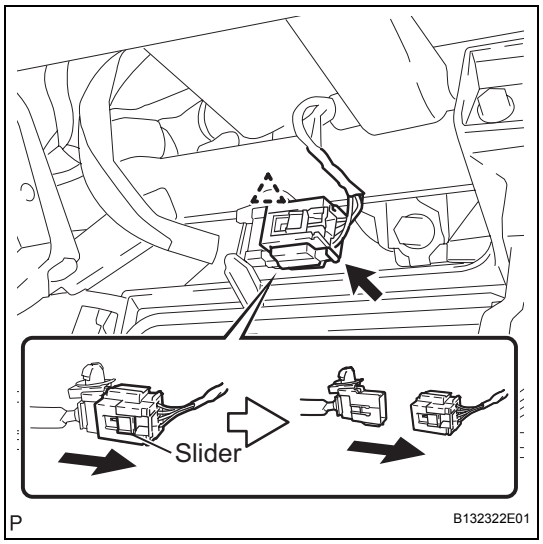

(d) Disconnect the airbag connector, as shown in the illustration.

NOTICE:

Do not damage the airbag wire harness when handling the airbag connector.

RS

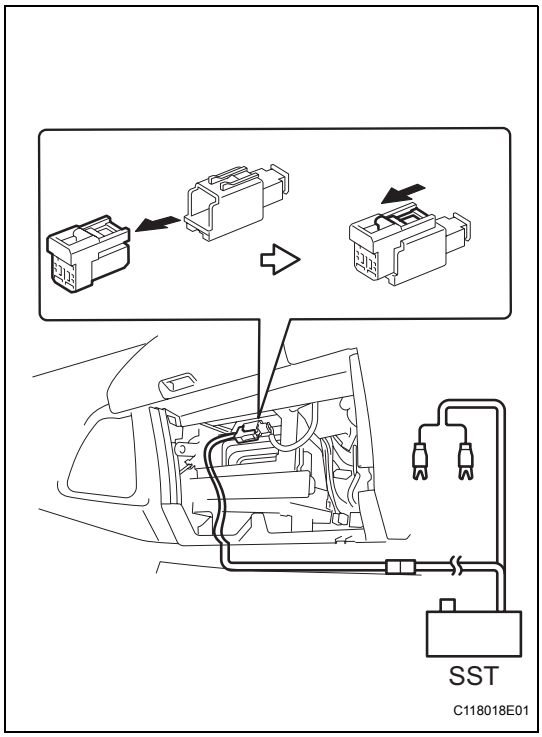

(e) Connect SST.

(1) Connect the SST connector to the front passenger airbag.

SST 09082-00700, 09082-00780

NOTICE:

Do not lock the secondary lock of the twin lock to avoid damaging the SST connector and wire harness.

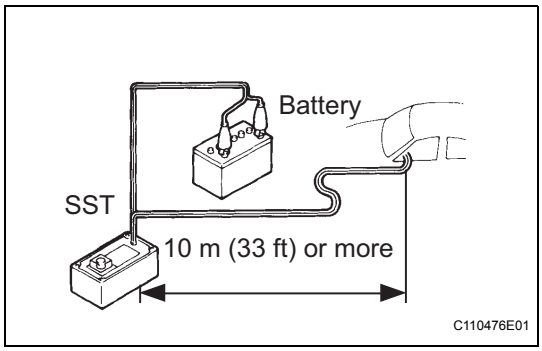

(2) Move SST to at least 10 m (33 ft) away from the vehicle.

(3) Close all doors and windows of the vehicle.

NOTICE:

Do not damage the SST wire harness.

(4) Connect the red clip of SST to the positive battery terminal and the black clip of SST to the negative battery terminal.

(f) Deploy the airbag.

(1) Check that no one is inside the vehicle or within a 10 m (33 ft) radius of the vehicle.

(2) Press the SST activation switch and deploy the airbag.

CAUTION:

- **Make sure that no one is near the vehicle when deploying the airbag.**
- **The front passenger airbag becomes extremely hot when the airbag is deployed, so do not touch it for at least 30 minutes after deployment.**
- **Use gloves and safety glasses when handling a front passenger airbag which has been deployed.**
- **Do not apply water, etc. to a front passenger airbag which has been deployed.**
- **Always wash your hands with water after completing the operation.**

HINT:

The airbag is deployed as the LED of the SST activation switch illuminates.

2. DISPOSE OF FRONT PASSENGER AIRBAG ASSEMBLY (WHEN NOT INSTALLED IN VEHICLE)

NOTICE:

- **Never use the customer's vehicle to deploy the airbag when disposing of the front passenger airbag.**
- **Follow the procedure detailed below when deploying the airbag.**

HINT:

Prepare a battery as the power source to deploy the airbag.

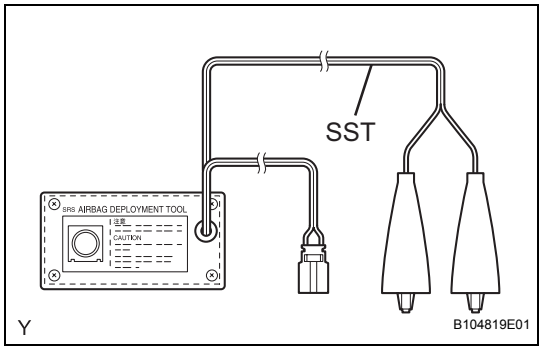

(a) Check the function of SST.

SST 09082-00700

CAUTION:

Always use the specified SST (SRS Airbag Deployment Tool) when deploying the airbag.

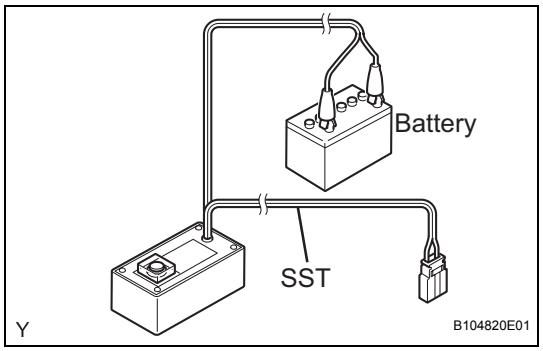

(1) Connect the red clip of SST to the positive battery terminal and the black clip of SST to the negative battery terminal.

(2) Press the SST activation switch, and check that the LED of the SST activation switch illuminates.

CAUTION:

- **Do not connect the SST connector (yellow colored one) to the airbag.**
- **If the LED illuminates when the activation switch is not being pressed, SST may be malfunctioning. Do not use SST.**

(3) Disconnect SST from the battery.

(b) Remove the front passenger airbag (see page RS-327).

CAUTION:

- **When removing the front passenger airbag, work must be started at least 90 seconds after the ignition switch is turned to OFF and the cable is disconnected from the negative battery terminal.**
- **When storing the front passenger airbag, keep the upper surface of the airbag deployment side facing upward.**

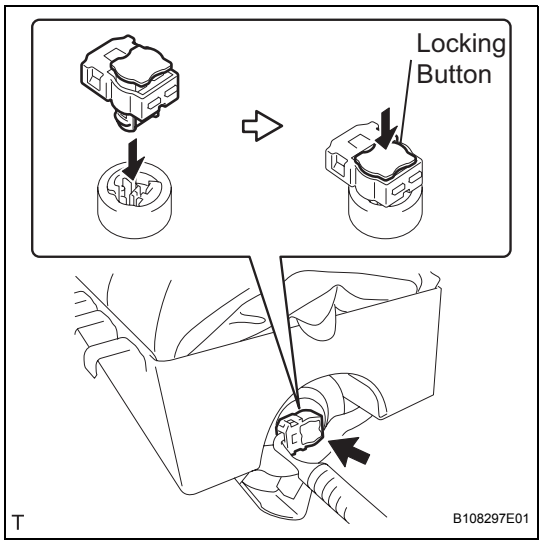

(c) Connect SST.
SST 09082-00802 (09082-10801, 09082-30801)
NOTICE:
Do not lock the secondary lock of the twin lock to avoid damaging the SST connector and wire harness.

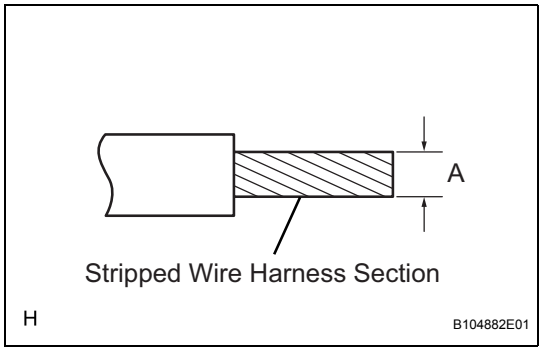

(d) Using a service-purpose wire harness for the vehicle, tie the front passenger airbag to the tire.
Stripped wire harness section:

Area	Measurement
A	1.25 mm^2 or more (0.0019 $in.^2$ or more)

CAUTION:
Do not use wire harness that is too thin or any other object to tie the front passenger airbag because it may snap due to the shock when the airbag is deployed. Always use a wire harness for vehicle use with a cross section of at least 1.25 mm^2 (0.0019 $in.^2$).
HINT:
To calculate the area of the stripped wire harness cross section:
Area = 3.14 x $(Diameter)^2$ divided by 4

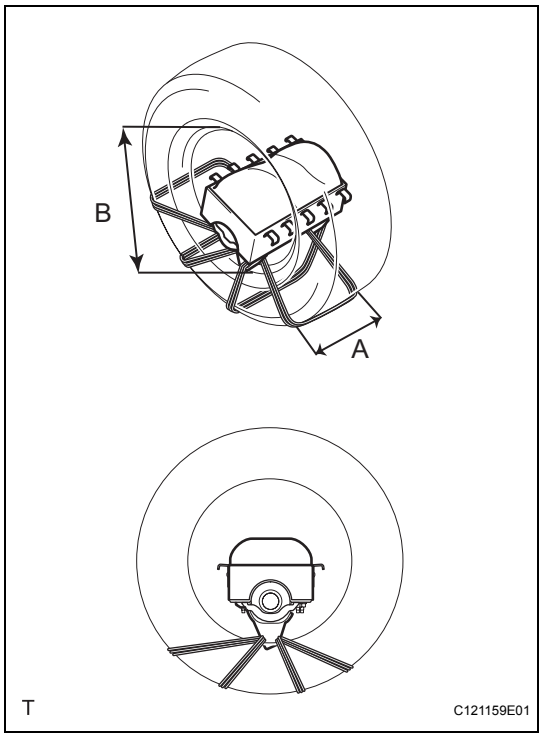

(1) Position the front passenger airbag inside the tire, as shown in the illustration.
Tire size:

Area	Measurement
A	185 mm (7.28 in.)
B	360 mm (14.17 in.)

CAUTION:
- **Make sure that the wire harnesses are tight. If there is any slack in the wire harnesses, the front passenger airbag may become loose due to the shock when the airbag is deployed.**
- **Always tie the front passenger airbag with the airbag deployment side facing inside the tire.**

NOTICE:
The tire will be marked by the airbag deployment, so use a waste tire.

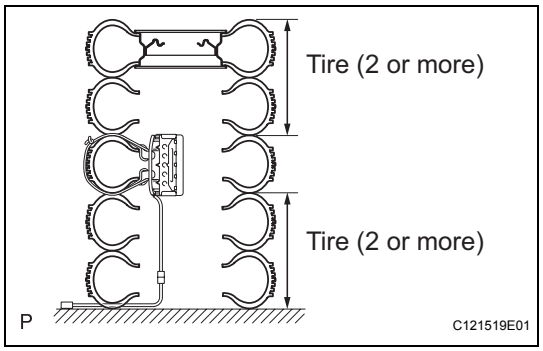

(e) Place the tires.
(1) Place at least 2 tires under the tire to which the front passenger airbag is tied.
(2) Place at least 2 tires over the tire to which the front passenger airbag is tied. The disc wheel should be installed onto the top tire.
NOTICE:
Do not place the SST connector under the tire because it could be damaged.

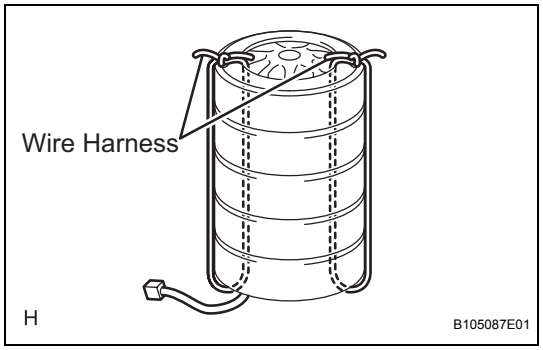

(3) Tie the tires together with 2 wire harnesses.
CAUTION:
Make sure that the wire harnesses are tight. It is highly dangerous when a loose wire harness results in the tires coming free due to the shock when the airbag is deployed.

RS

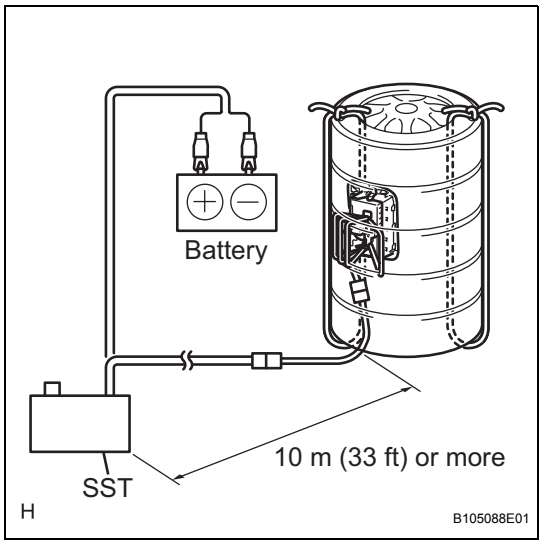

(f) Connect SST.
SST 09082-00700
NOTICE:
Do not lock the secondary lock of the twin lock to avoid damaging the SST connector and wire harness. Also, secure some slack for SST wire harness inside the tire.

(g) Deploy the airbag.
(1) Connect the red clip of SST to the positive battery terminal and the black clip of SST to the negative battery terminal.
(2) Check that no one is within a 10 m (33 ft) radius of the tire to which the front passenger airbag is tied.
(3) Press the SST activation switch and deploy the airbag.
CAUTION:
Make sure that no one is near the tires when deploying the airbag.
HINT:
The airbag is deployed as the LED of the SST activation switch illuminates.

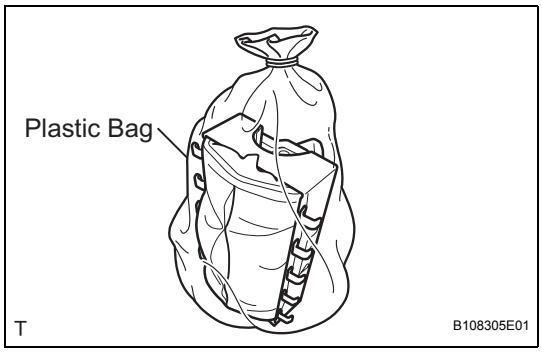

(h) Dispose of the front passenger airbag.
CAUTION:
- **The front passenger airbag becomes extremely hot when the airbag is deployed, so do not touch it for at least 30 minutes after deployment.**
- **Use gloves and safety glasses when handling a front passenger airbag which has been deployed.**
- **Do not apply water, etc. to a front passenger airbag which has been deployed.**
- **Always wash your hands with water after completing the operation.**

(1) Remove the front passenger airbag from the tire.
(2) Place the front passenger airbag in a plastic bag, tie it tightly and dispose of it in the same way as other general parts.

FRONT PASSENGER AIRBAG ASSEMBLY (for Hatchback)

COMPONENTS

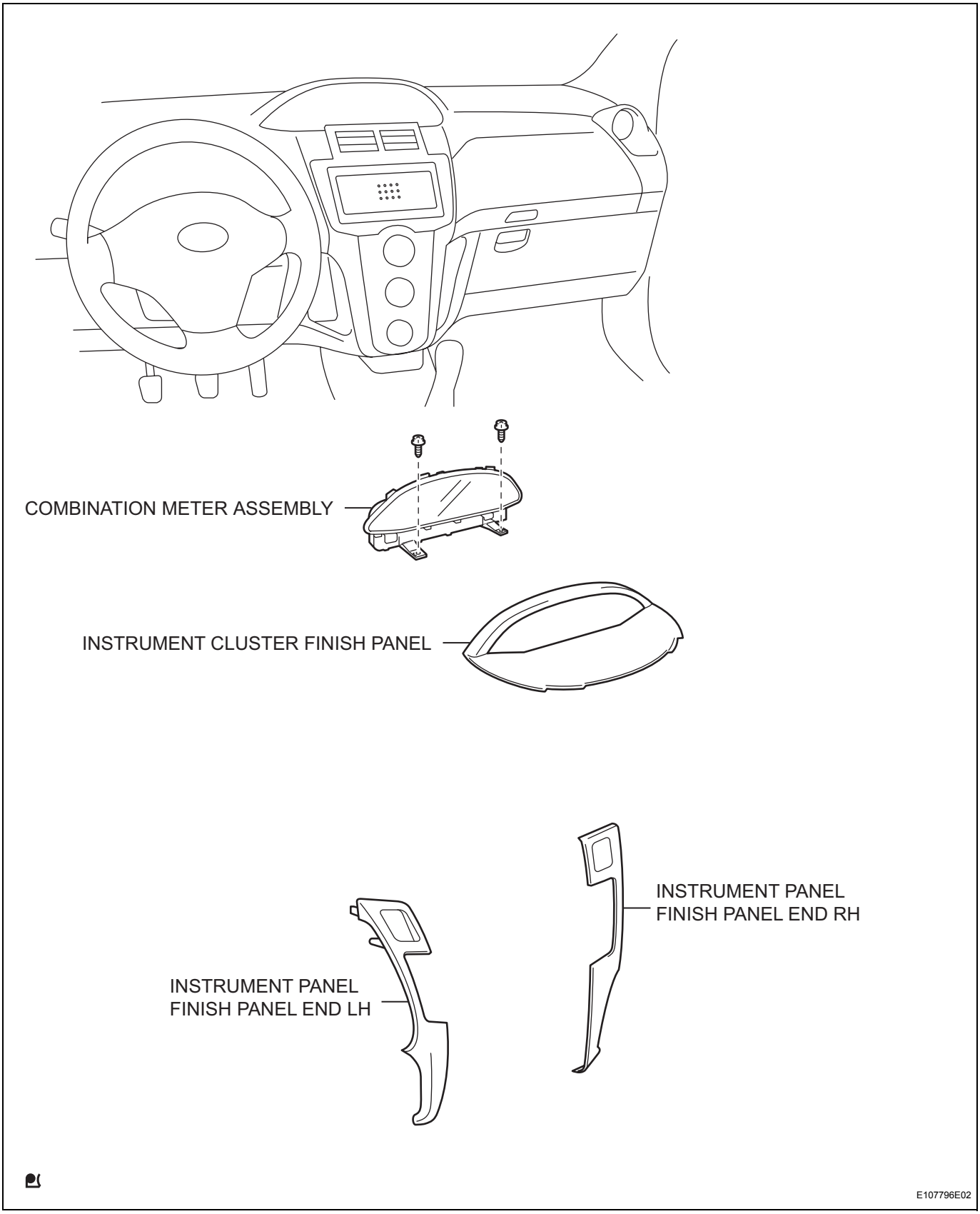

RS

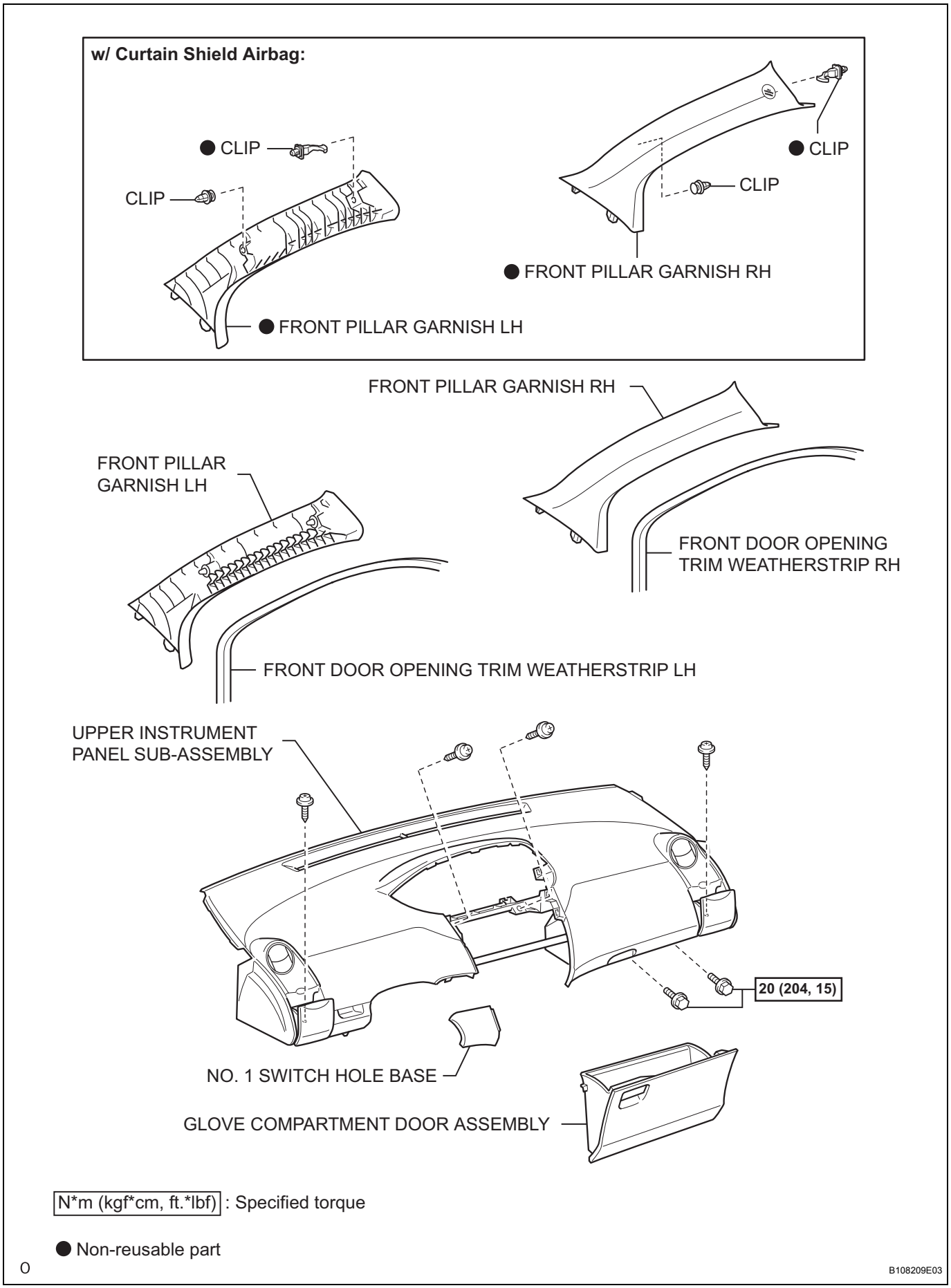
w/ Curtain Shield Airbag:
● CLIP
CLIP
● CLIP
CLIP
● FRONT PILLAR GARNISH RH
● FRONT PILLAR GARNISH LH
FRONT PILLAR GARNISH RH
FRONT PILLAR GARNISH LH
FRONT DOOR OPENING TRIM WEATHERSTRIP RH
FRONT DOOR OPENING TRIM WEATHERSTRIP LH
UPPER INSTRUMENT PANEL SUB-ASSEMBLY
20 (204, 15)
NO. 1 SWITCH HOLE BASE
GLOVE COMPARTMENT DOOR ASSEMBLY
N*m (kgf*cm, ft.*lbf) : Specified torque
● Non-reusable part
O
B108209E03

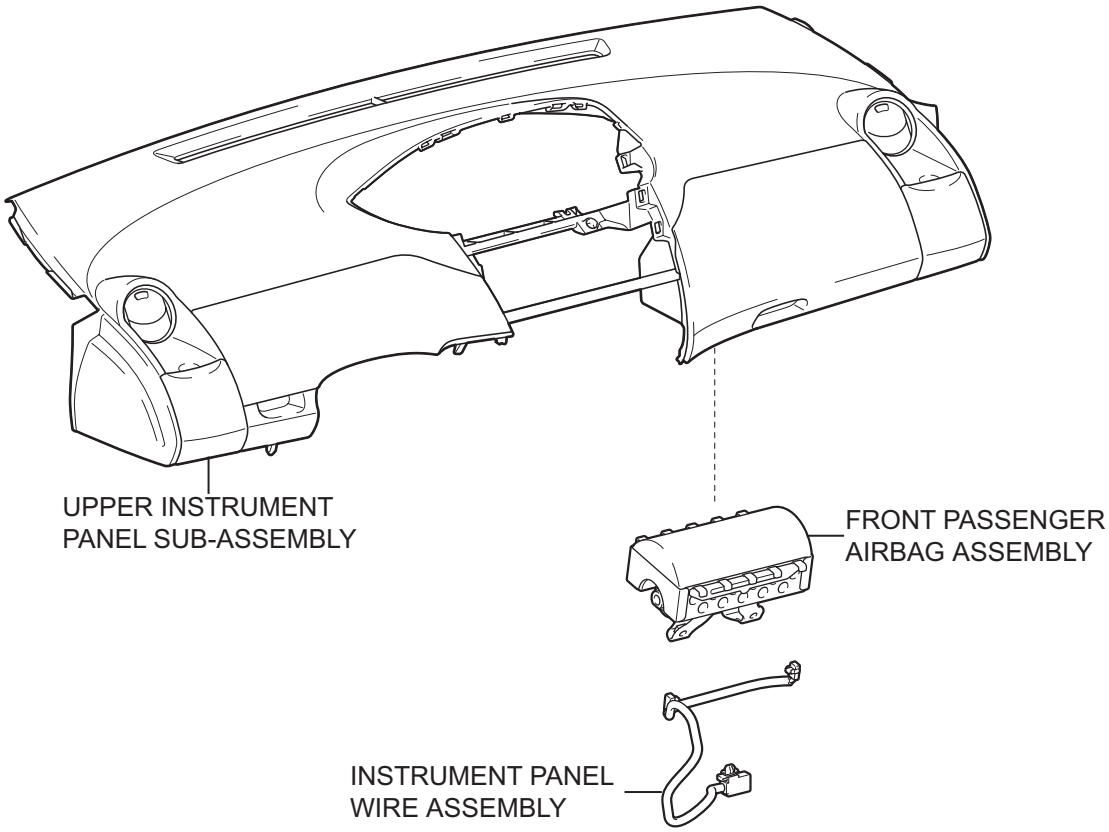

P C121516E01

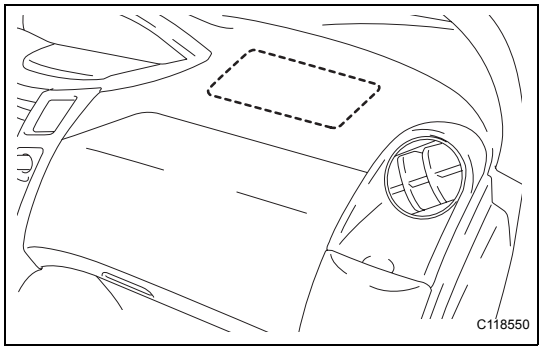

ON-VEHICLE INSPECTION

1. **INSPECT FRONT PASSENGER AIRBAG ASSEMBLY (for Vehicle not Involved in Collision)**
   (a) Perform a diagnostic system check (See page RS-38).
   (b) With the front passenger airbag installed on the vehicle, perform a visual check. If there are any defects, such as those mentioned below, replace the instrument panel with a new one:
   Any cuts, minute cracks or marked discoloration on the instrument panel around the front passenger airbag.

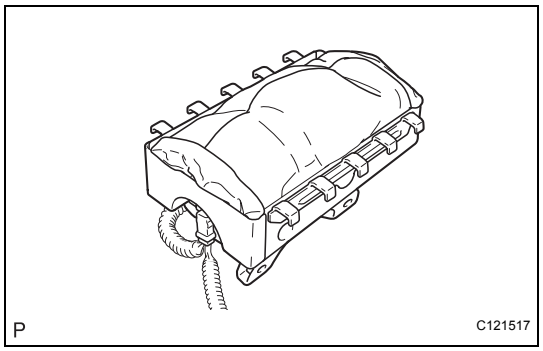

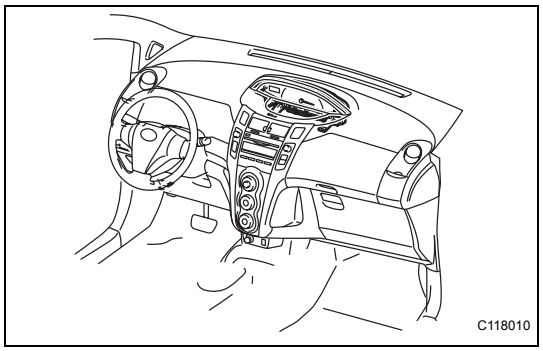

2. INSPECT FRONT PASSENGER AIRBAG ASSEMBLY (for Vehicle Involved in Collision and Airbag not Deployed)

CAUTION:

For front passenger airbag removal and installation procedures, see pages RS-339 and RS-340, and carefully follow the correct procedure.

(a) Perform a diagnostic system check (See page RS-38).

(b) With the front passenger airbag removed from the vehicle, perform a visual check. If there are any defects, such as those mentioned below, replace the front passenger airbag, instrument panel or instrument panel reinforcement with new ones:
- Any cuts, minute cracks or marked discoloration on the front passenger airbag.
- Any cracks or other damage to the connector.
- Deformation or cracks on the instrument panel or instrument panel reinforcement.

RS

REMOVAL

CAUTION:
Some of these service operations affect the SRS airbag system. Read the precautionary notices concerning the SRS airbag system before servicing (See page RS-1).

1. **DISCONNECT CABLE FROM NEGATIVE BATTERY TERMINAL**
2. **REMOVE INSTRUMENT PANEL FINISH PANEL END LH (See page ME-145)**
3. **REMOVE INSTRUMENT PANEL FINISH PANEL END RH (See page ME-145)**
4. **REMOVE INSTRUMENT CLUSTER FINISH PANEL (See page ME-145)**
5. **REMOVE COMBINATION METER ASSEMBLY (See page ME-146)**
6. **REMOVE FRONT DOOR OPENING TRIM WEATHERSTRIP RH (See page IR-50)**
7. **REMOVE FRONT DOOR OPENING TRIM WEATHERSTRIP LH (See page IR-50)**
8. **REMOVE FRONT PILLAR GARNISH RH (See page IR-58)**
9. **REMOVE FRONT PILLAR GARNISH LH (See page IR-59)**
10. **REMOVE NO. 1 SWITCH HOLE BASE (See page IP-20)**
11. **REMOVE GLOVE COMPARTMENT DOOR ASSEMBLY (See page IP-20)**
12. **REMOVE UPPER INSTRUMENT PANEL SUB-ASSEMBLY (See page IP-21)**
13. **REMOVE FRONT PASSENGER AIRBAG ASSEMBLY**
    (a) Remove the wire harness from the 2 claws of the instrument panel.
    (b) Disengage the 10 hooks and remove the instrument panel passenger airbag.

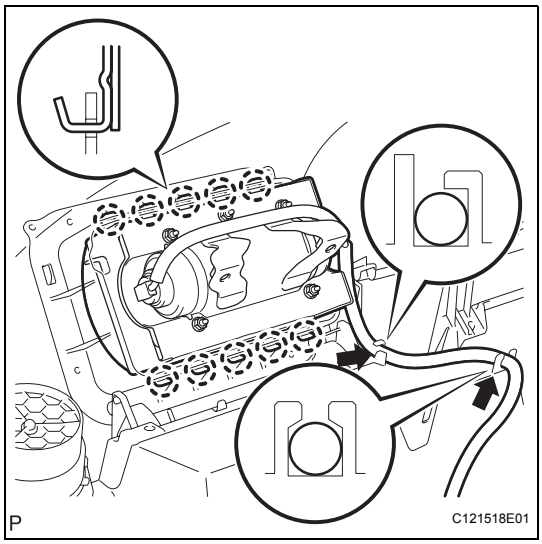

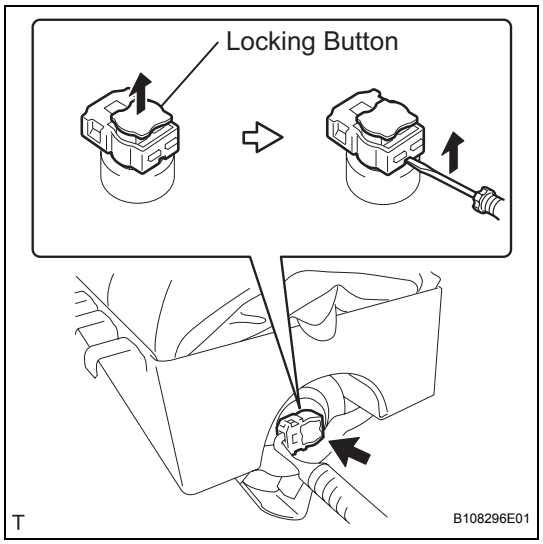

14. REMOVE INSTRUMENT PANEL WIRE ASSEMBLY

(a) Using a thin-bladed screwdriver, release the locking button.

(b) Using a thin-bladed screwdriver, disconnect the 2 airbag connectors and remove the instrument panel wire assembly.

RS

INSTALLATION

CAUTION:
Some of these service operations affect the SRS airbag system. Read the precautionary notices concerning the SRS airbag system before servicing (See page RS-1).

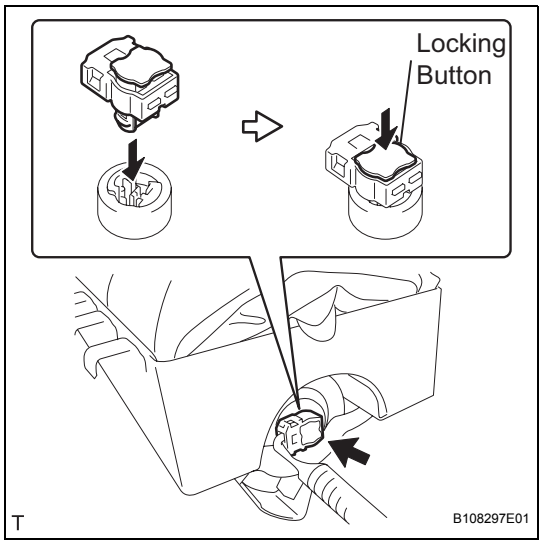

1. **INSTALL INSTRUMENT PANEL WIRE ASSEMBLY**
   (a) Connect the airbag connector to install the instrument panel wire.
   NOTICE:
   - **Match the color of the connector of the instrument panel wire assembly with that of the connector of the front passenger assembly and install the airbag connector.**
   - **Lock the locking button securely.**

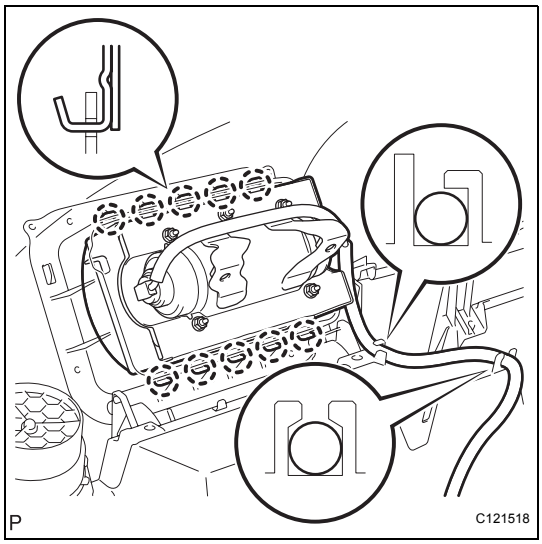

2. **INSTALL FRONT PASSENGER AIRBAG ASSEMBLY**
   (a) Engage the 10 hooks so that the connector side faces the outside of the vehicle, and install the instrument panel passenger airbag.
   (b) Install the wire harness onto the 2 claws of the instrument panel.
3. **INSTALL UPPER INSTRUMENT PANEL SUB-ASSEMBLY (See page IP-29)**
4. **INSTALL FRONT PILLAR GARNISH RH (See page IR-71)**
5. **INSTALL FRONT PILLAR GARNISH LH (See page ME-149)**
6. **INSTALL FRONT DOOR OPENING TRIM WEATHERSTRIP RH (See page IR-81)**
7. **INSTALL FRONT DOOR OPENING TRIM WEATHERSTRIP LH (See page IR-81)**
8. **INSTALL GLOVE COMPARTMENT DOOR ASSEMBLY (See page IP-32)**
9. **INSTALL NO. 1 SWITCH HOLE BASE (See page IP-32)**
10. **INSTALL COMBINATION METER ASSEMBLY (See page ME-148)**
11. **INSTALL INSTRUMENT CLUSTER FINISH PANEL (See page ME-148)**
12. **INSTALL INSTRUMENT PANEL FINISH PANEL END RH (See page ME-149)**

13. **INSTALL INSTRUMENT PANEL FINISH PANEL END LH (See page ME-149)**
14. **CONNECT CABLE TO NEGATIVE BATTERY TERMINAL**
    Torque: 5.4 N*m (55 kgf*cm, 48 in.*lbf)
15. **INSPECT SRS WARNING LIGHT**
    (See page RS-31)

RS

DISPOSAL

HINT:
When scrapping a vehicle equipped with the SRS or disposing of an instrument panel passenger airbag, deploy the airbag first in accordance with the procedure described below. If any abnormality occurs with the airbag deployment, contact the SERVICE DEPT. of the DISTRIBUTOR.

CAUTION:

- **Never dispose of a front passenger airbag that has an undeployed airbag.**
- **The airbag emits an exploding sound when it is deployed, so perform the operation outdoors and where it will not create a nuisance to nearby residents.**
- **When deploying the airbag, always use the specified SST (SRS Airbag Deployment Tool). Perform the operation in a place away from electrical noise.**
- **When deploying the airbag, perform the operation at least 10 m (33 ft) away from the front passenger airbag.**
- **The front passenger airbag becomes extremely hot when the airbag is deployed, so do not touch it for at least 30 minutes after deployment.**
- **Use gloves and safety glasses when handling a front passenger airbag which has been deployed.**
- **Do not apply water, etc. to a front passenger airbag which has been deployed.**
- **Always wash your hands with water after completing the operation.**

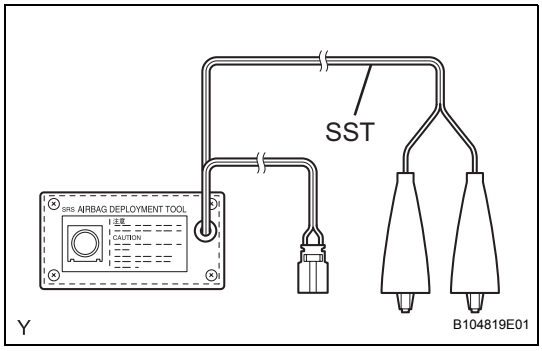

1. DISPOSE OF FRONT PASSENGER AIRBAG ASSEMBLY (WHEN INSTALLED IN VEHICLE)

HINT:
Prepare a battery as the power source to deploy the airbag.

(a) Check the function of SST.
SST 09082-00700
CAUTION:
Always use the specified SST (SRS Airbag Deployment Tool) when deploying the airbag.

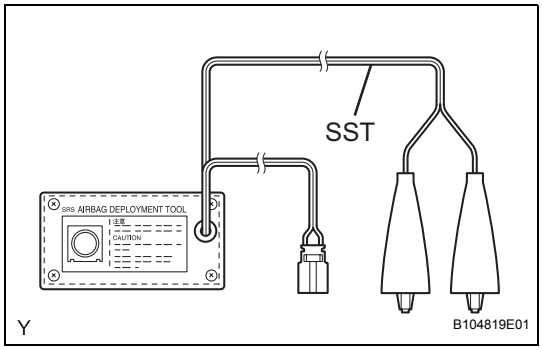

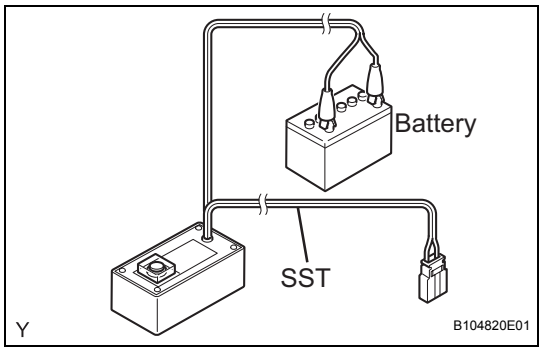

(1) Connect the red clip of SST to the positive battery terminal and the black clip of SST to the negative battery terminal.
(2) Press the SST activation switch, and check that the LED of the SST activation switch illuminates.
CAUTION:
- **Do not connect the SST connector (yellow colored one) to the airbag.**
- **If the LED illuminates when the activation switch is not being pressed, SST may be malfunctioning. Do not use SST.**

(3) Disconnect SST from the battery.

(b) Disconnect the cable from the negative battery terminal.

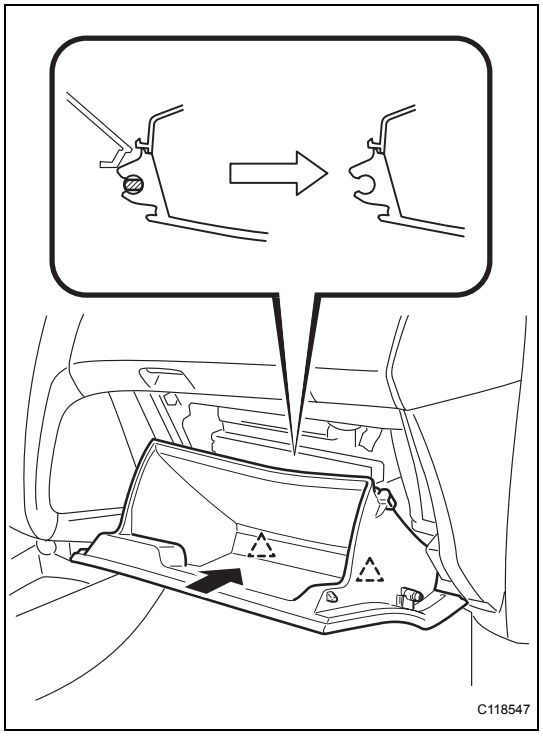

(c) Disengage the 2 claws and open the cover.

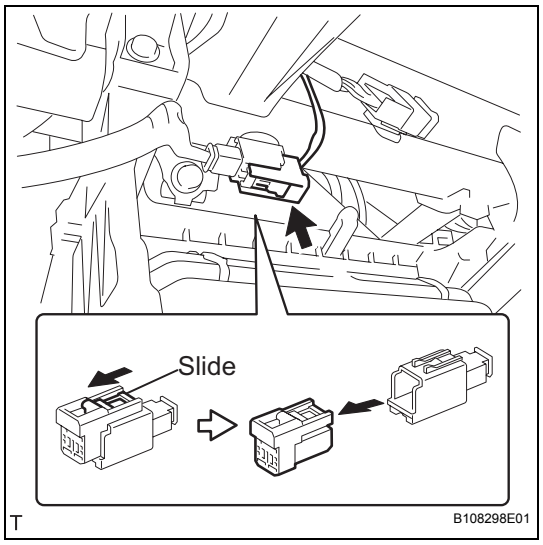

(d) Disconnect the airbag connector, as shown in the illustration.
NOTICE:
Do not damage the airbag wire harness when handling the airbag connector.

RS

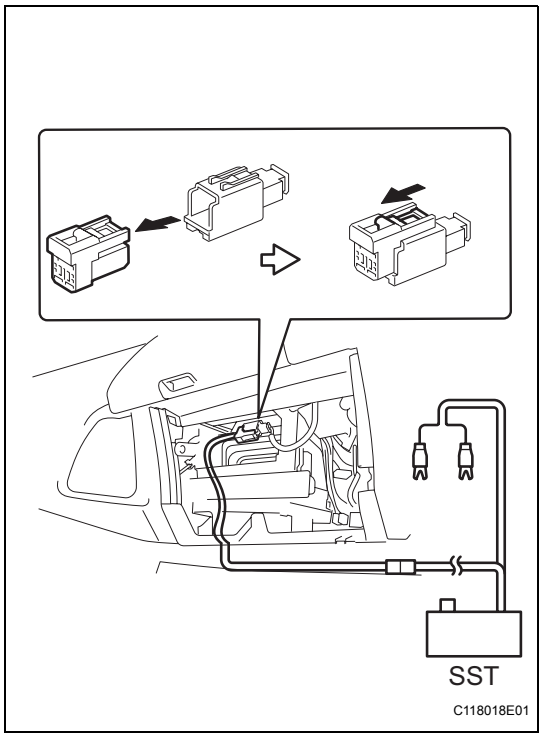

(e) Connect SST.

(1) Connect the SST connector to the front passenger airbag.

SST 09082-00700, 09082-00780

NOTICE:

Do not lock the secondary lock of the twin lock to avoid damaging the SST connector and wire harness.

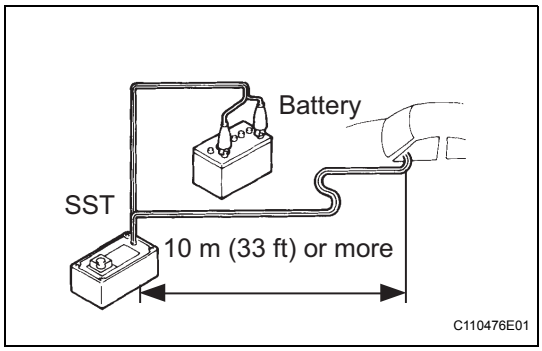

(2) Move SST to at least 10 m (33 ft) away from the vehicle.

(3) Close all doors and windows of the vehicle.

NOTICE:

Do not damage the SST wire harness.

(4) Connect the red clip of SST to the positive battery terminal and the black clip of SST to the negative battery terminal.

(f) Deploy the airbag.

(1) Check that no one is inside the vehicle or within a 10 m (33 ft) radius of the vehicle.

(2) Press the SST activation switch and deploy the airbag.

CAUTION:

- **Make sure that no one is near the vehicle when deploying the airbag.**
- **The front passenger airbag becomes extremely hot when the airbag is deployed, so do not touch it for at least 30 minutes after deployment.**
- **Use gloves and safety glasses when handling a front passenger airbag which has been deployed.**
- **Do not apply water, etc. to a front passenger airbag which has been deployed.**
- **Always wash your hands with water after completing the operation.**

HINT:

The airbag is deployed as the LED of the SST activation switch illuminates.

2. DISPOSE OF FRONT PASSENGER AIRBAG ASSEMBLY (WHEN NOT INSTALLED IN VEHICLE)

NOTICE:

- **Never use the customer's vehicle to deploy the airbag when disposing of the front passenger airbag.**
- **Follow the procedure detailed below when deploying the airbag.**

HINT:

Prepare a battery as the power source to deploy the airbag.

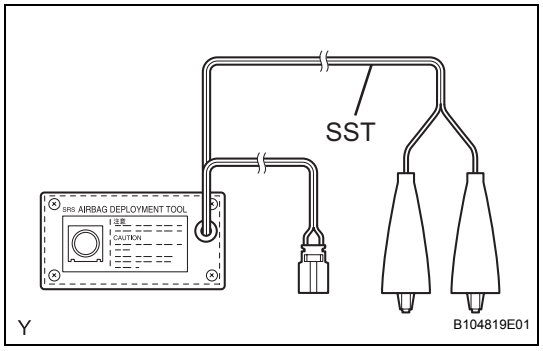

(a) Check the function of SST.

SST 09082-00700

CAUTION:

Always use the specified SST (SRS Airbag Deployment Tool) when deploying the airbag.

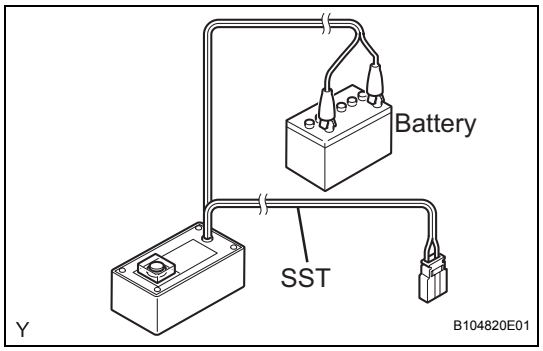

(1) Connect the red clip of SST to the positive battery terminal and the black clip of SST to the negative battery terminal.

(2) Press the SST activation switch, and check that the LED of the SST activation switch illuminates.

CAUTION:

- **Do not connect the SST connector (yellow colored one) to the airbag.**
- **If the LED illuminates when the activation switch is not being pressed, SST may be malfunctioning. Do not use SST.**

(3) Disconnect SST from the battery.

(b) Remove the front passenger airbag (see page RS-339).

CAUTION:

- **When removing the front passenger airbag, work must be started at least 90 seconds after the ignition switch is turned to OFF and the cable is disconnected from the negative battery terminal.**
- **When storing the front passenger airbag, keep the upper surface of the airbag deployment side facing upward.**

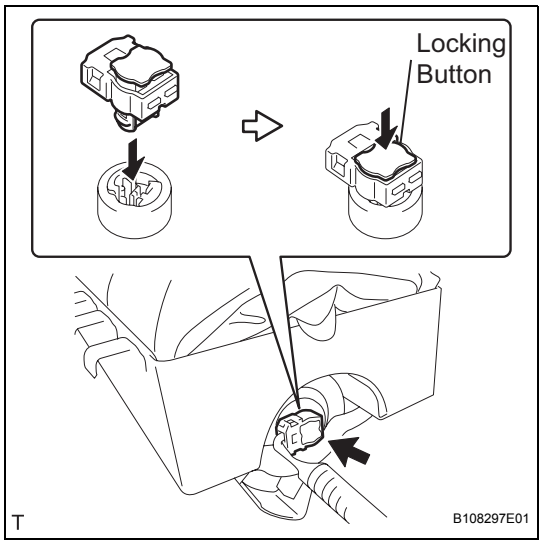

(c) Connect SST.
SST 09082-00802 (09082-10801, 09082-30801)
NOTICE:
Do not lock the secondary lock of the twin lock to avoid damaging the SST connector and wire harness.

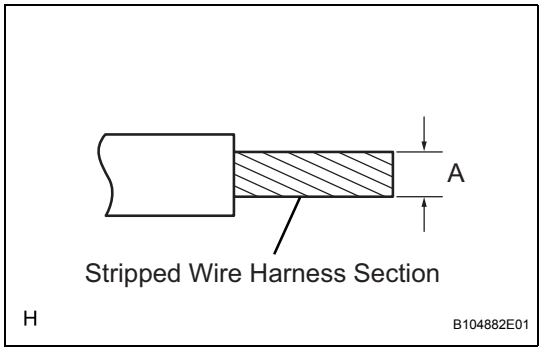

(d) Using a service-purpose wire harness for the vehicle, tie the front passenger airbag to the tire.
Stripped wire harness section:

Area	Measurement
A	1.25 mm^2 or more (0.0019 $in.^2$ or more)

CAUTION:
Do not use wire harness that is too thin or any other object to tie the front passenger airbag because it may snap due to the shock when the airbag is deployed. Always use a wire harness for vehicle use with a cross section of at least 1.25 mm^2 (0.0019 $in.^2$).
HINT:
To calculate the area of the stripped wire harness cross section:
Area = 3.14 x $(Diameter)^2$ divided by 4

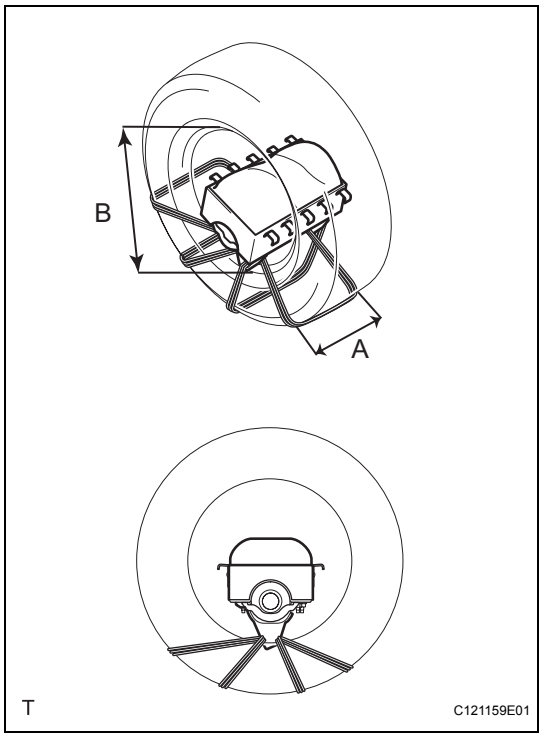

(1) Position the front passenger airbag inside the tire, as shown in the illustration.
Tire size:

Area	Measurement
A	185 mm (7.28 in.)
B	360 mm (14.17 in.)

CAUTION:
- **Make sure that the wire harnesses are tight. If there is any slack in the wire harnesses, the front passenger airbag may become loose due to the shock when the airbag is deployed.**
- **Always tie the front passenger airbag with the airbag deployment side facing inside the tire.**

NOTICE:
The tire will be marked by the airbag deployment, so use a waste tire.

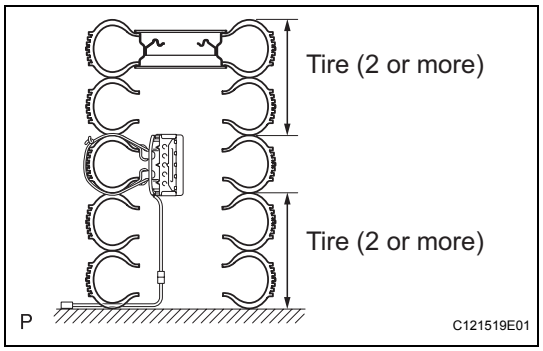

(e) Place the tires.
(1) Place at least 2 tires under the tire to which the front passenger airbag is tied.
(2) Place at least 2 tires over the tire to which the front passenger airbag is tied. The disc wheel should be installed onto the top tire.
NOTICE:
Do not place the SST connector under the tire because it could be damaged.

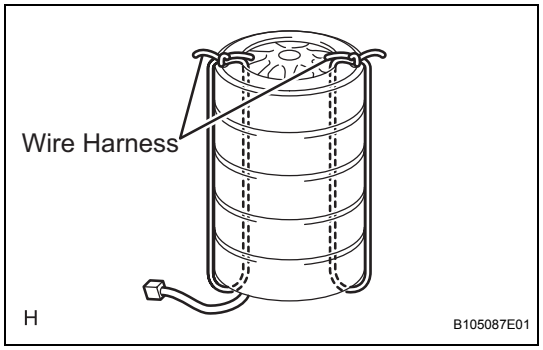

(3) Tie the tires together with 2 wire harnesses.
CAUTION:
Make sure that the wire harnesses are tight. It is highly dangerous when a loose wire harness results in the tires coming free due to the shock when the airbag is deployed.

RS

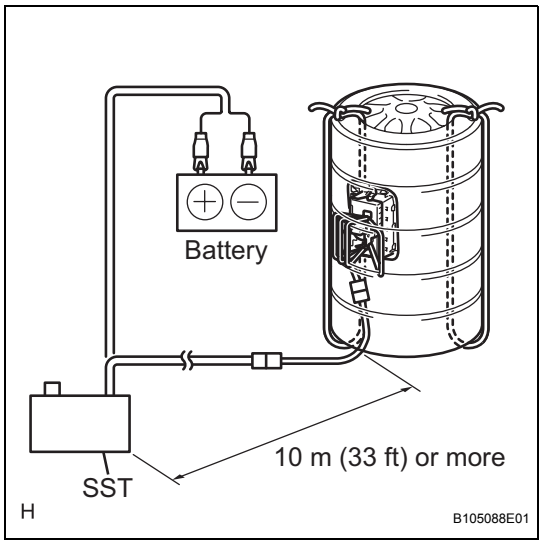

(f) Connect SST.
SST 09082-00700
NOTICE:
Do not lock the secondary lock of the twin lock to avoid damaging the SST connector and wire harness. Also, secure some slack for SST wire harness inside the tire.

(g) Deploy the airbag.
(1) Connect the red clip of SST to the positive battery terminal and the black clip of SST to the negative battery terminal.
(2) Check that no one is within a 10 m (33 ft) radius of the tire to which the front passenger airbag is tied.
(3) Press the SST activation switch and deploy the airbag.
CAUTION:
Make sure that no one is near the tires when deploying the airbag.
HINT:
The airbag is deployed as the LED of the SST activation switch illuminates.

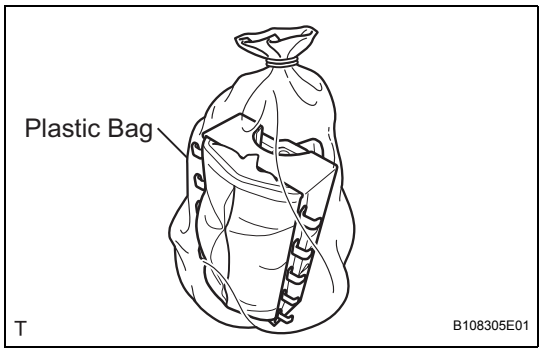

(h) Dispose of the front passenger airbag.
CAUTION:
- **The front passenger airbag becomes extremely hot when the airbag is deployed, so do not touch it for at least 30 minutes after deployment.**
- **Use gloves and safety glasses when handling a front passenger airbag which has been deployed.**
- **Do not apply water, etc. to a front passenger airbag which has been deployed.**
- **Always wash your hands with water after completing the operation.**

(1) Remove the front passenger airbag from the tire.
(2) Place the front passenger airbag in a plastic bag, tie it tightly and dispose of it in the same way as other general parts.

CURTAIN SHIELD AIRBAG ASSEMBLY (for Sedan)

COMPONENTS

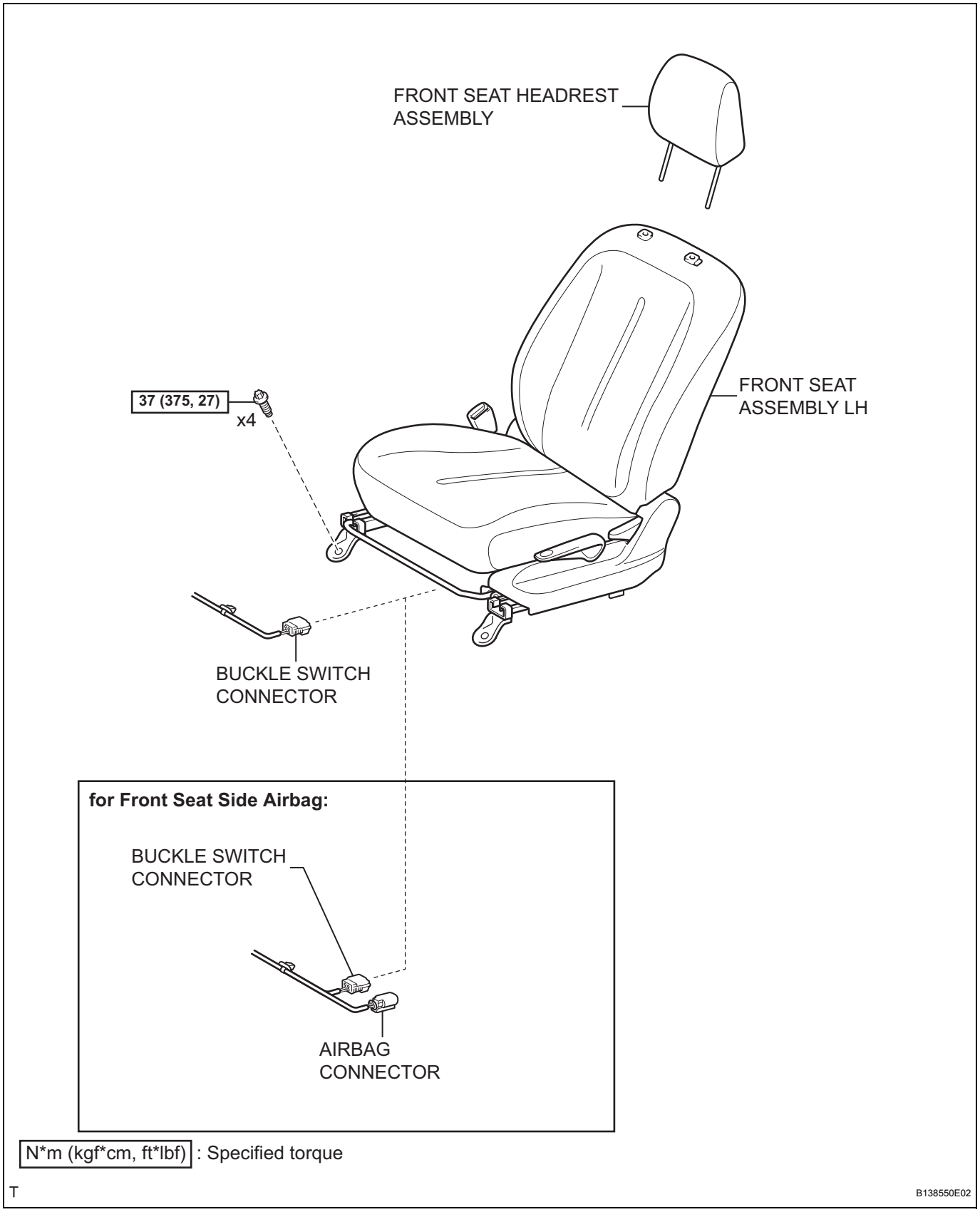

RS

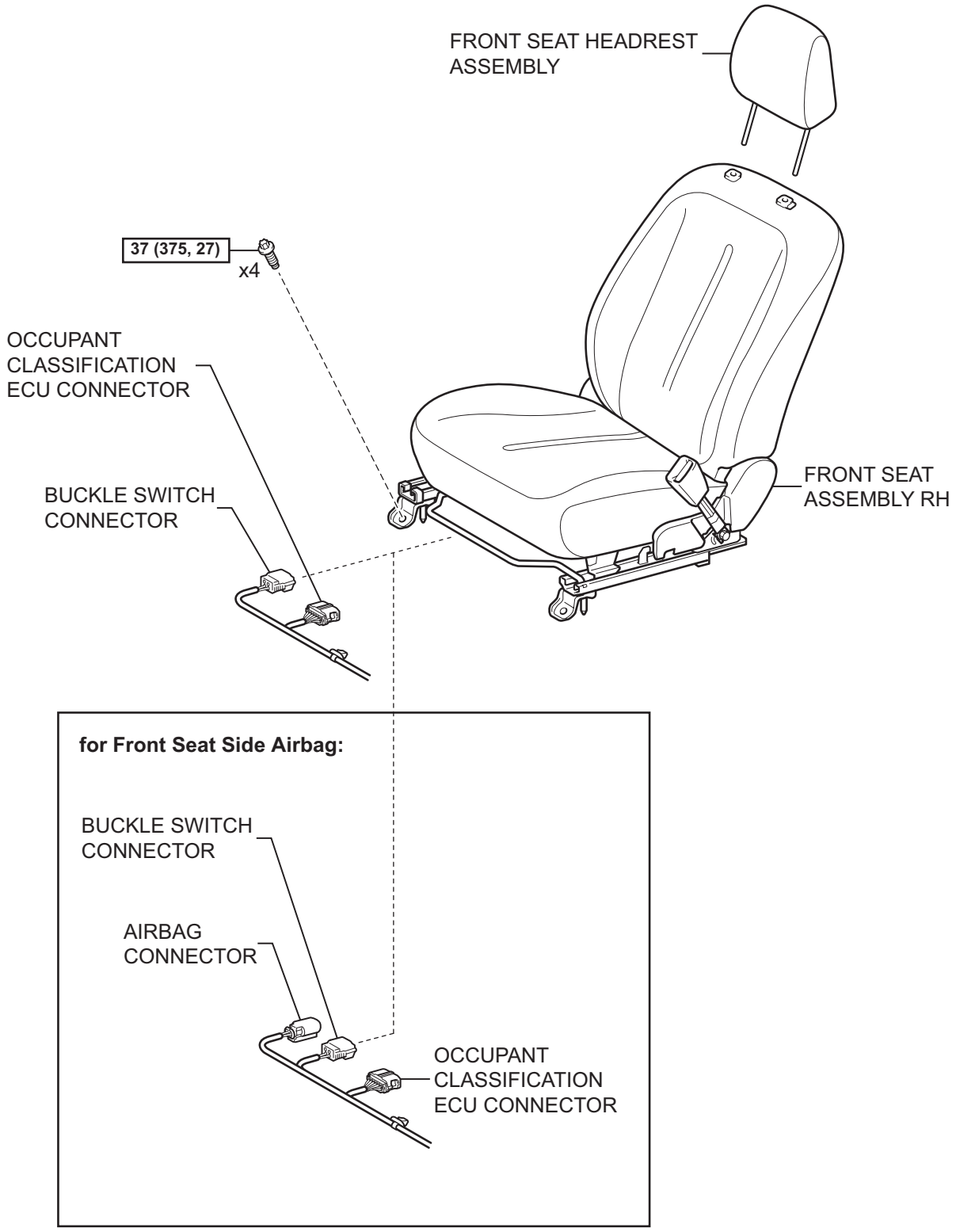

N*m (kgf*cm, ft*lbf) : Specified torque

T

B138551E01

RS

for 60/40 Split Seat Type:

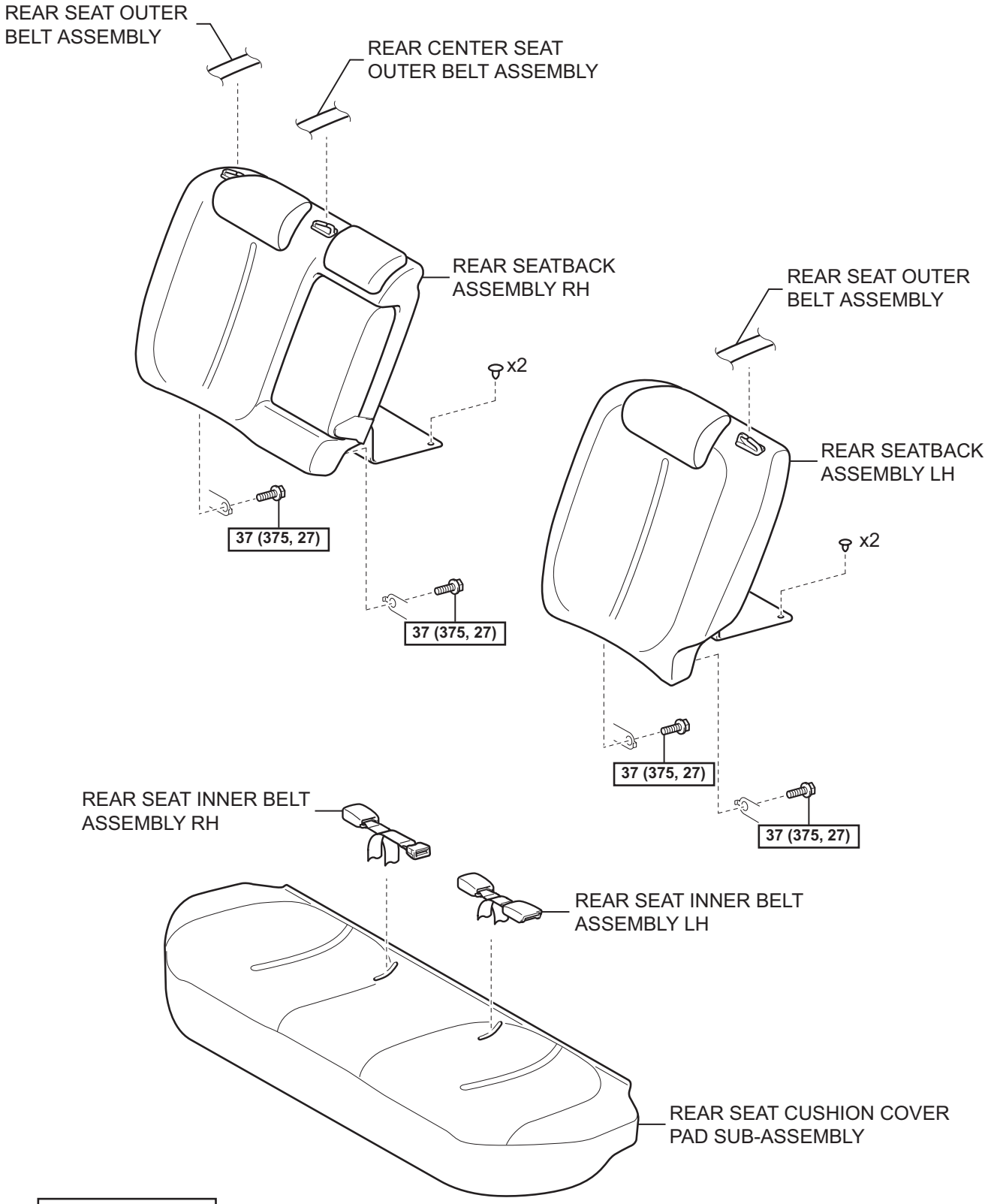

N*m (kgf*cm, ft*lbf) : Specified torque

T

B138442E02

RS

for Fixed Seat Type:

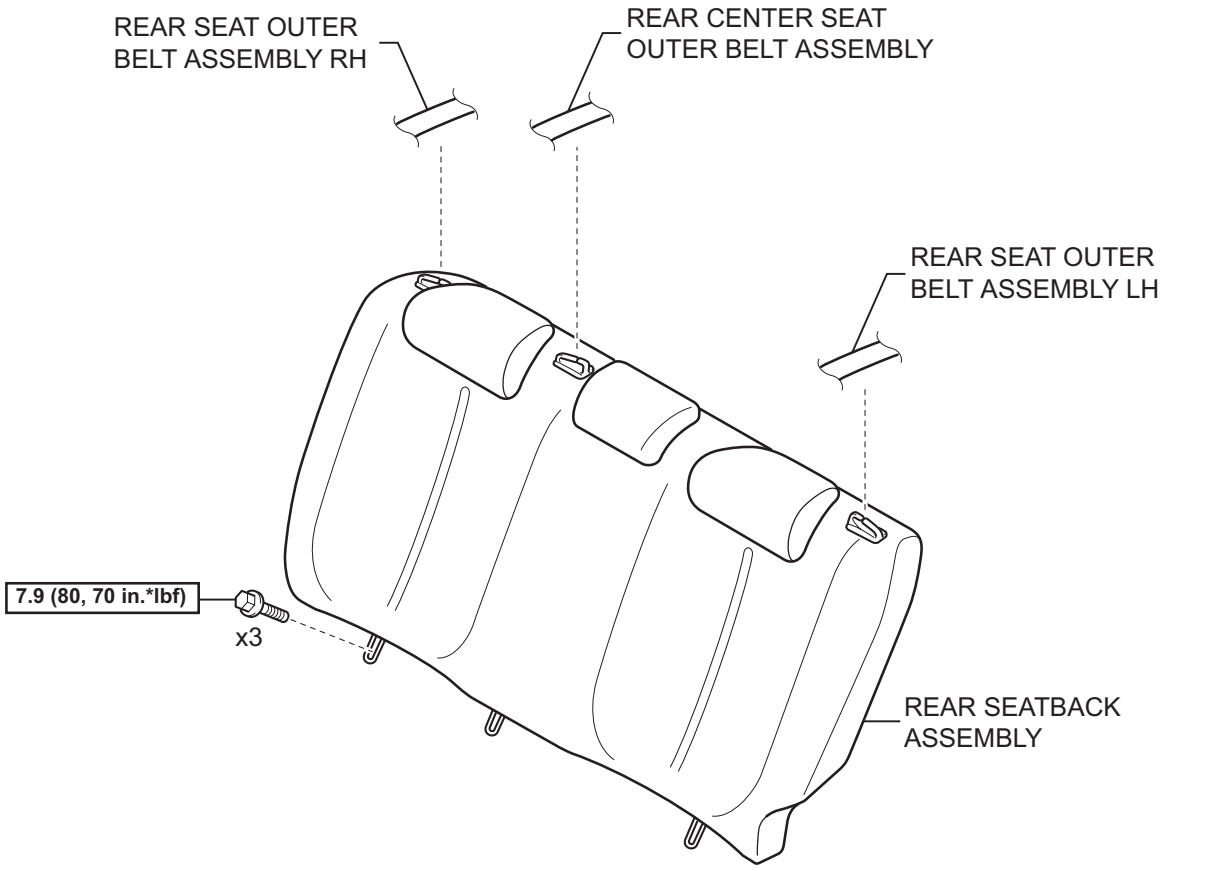

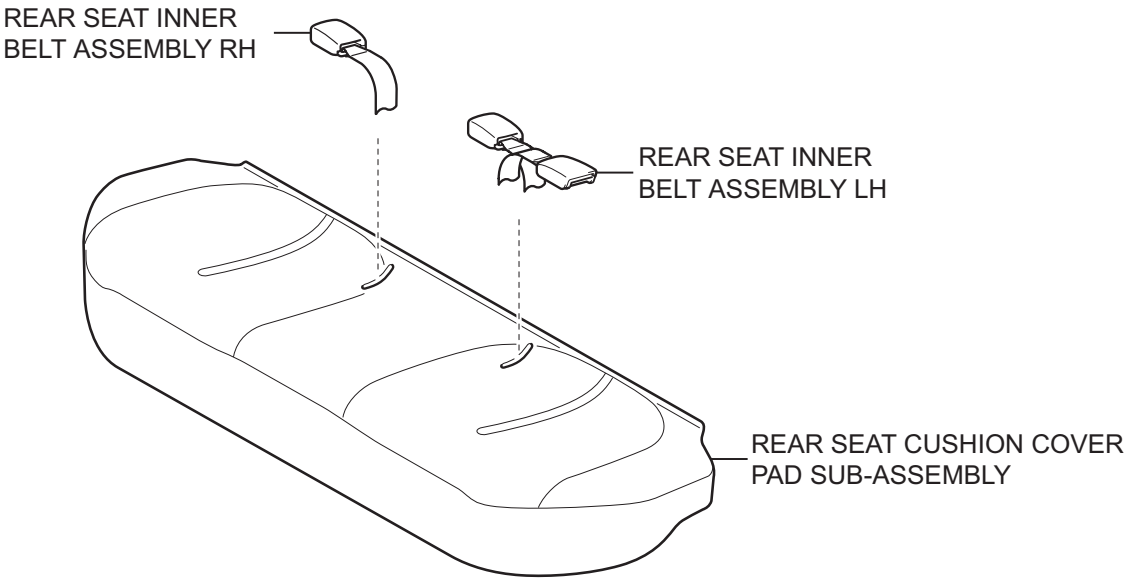

N*m (kgf*cm, ft*lbf) : Specified torque

T

B138611E01

RS

for 60/40 Split Seat Type:

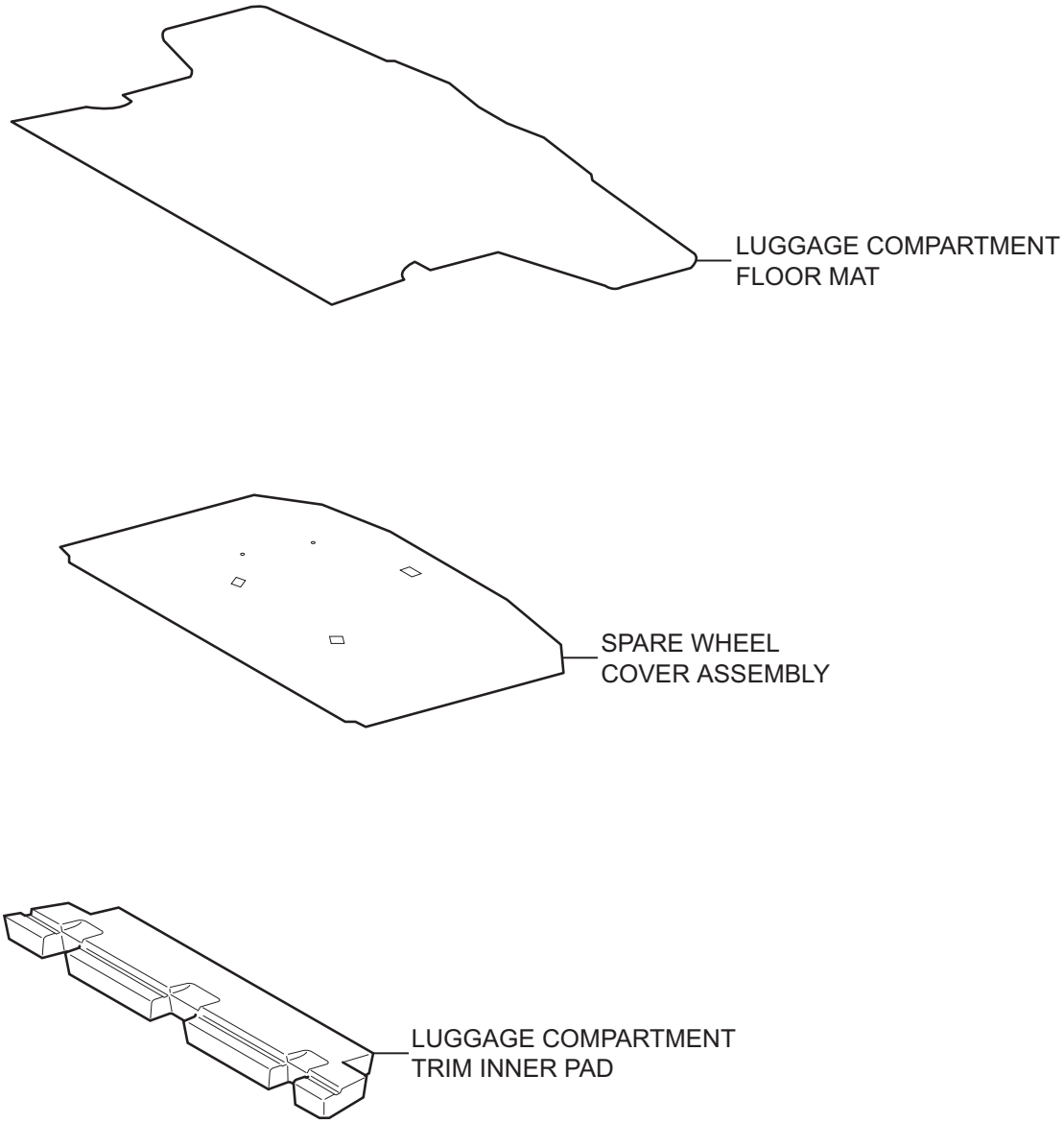

for Grand Tire:

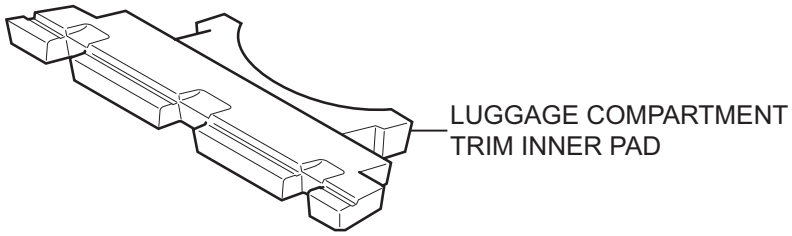

T

B138565E01

RS

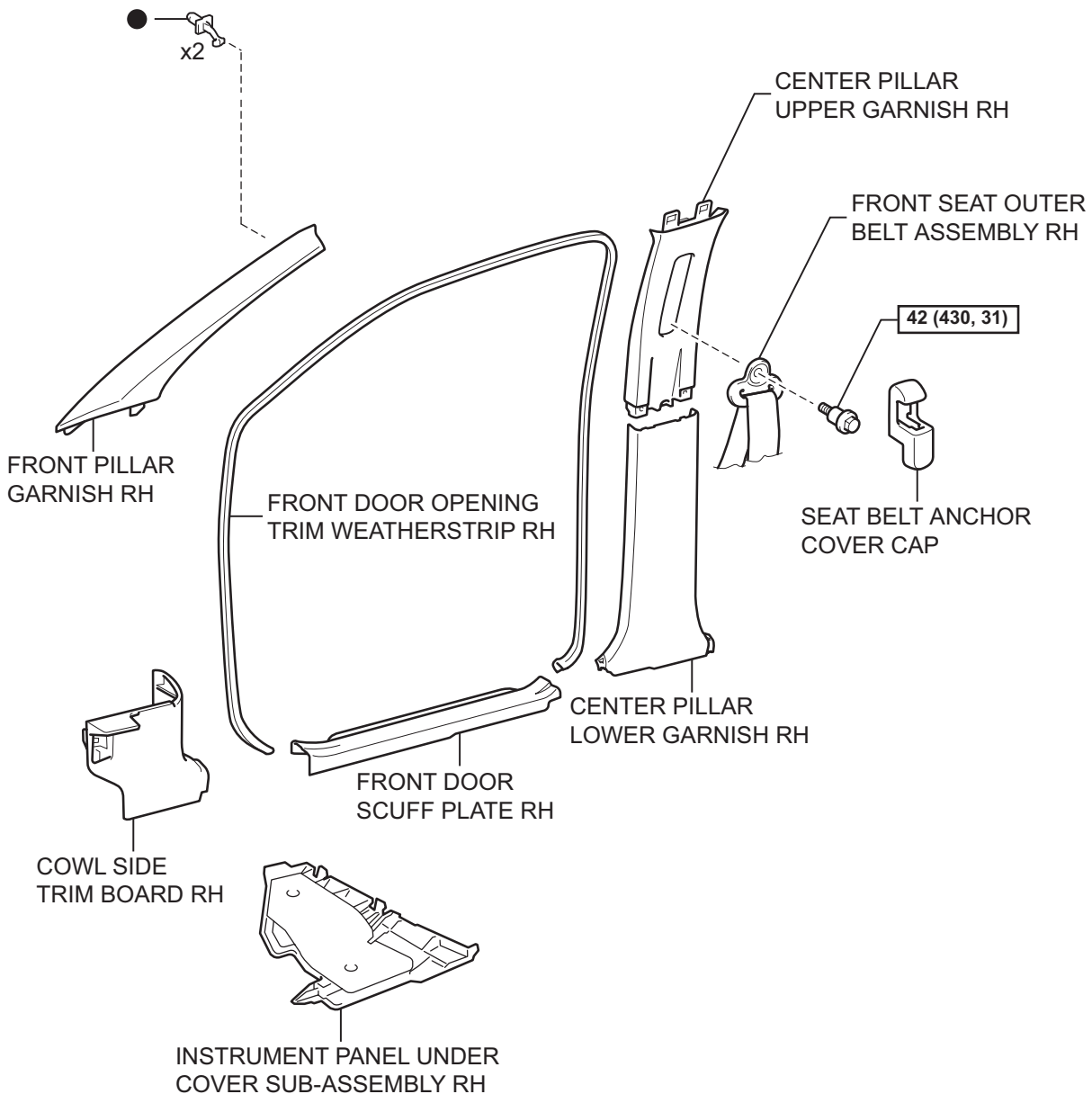

N*m (kgf*cm, ft*lbf) : Specified torque

● Non-reusable part

T

B138593E03

RS

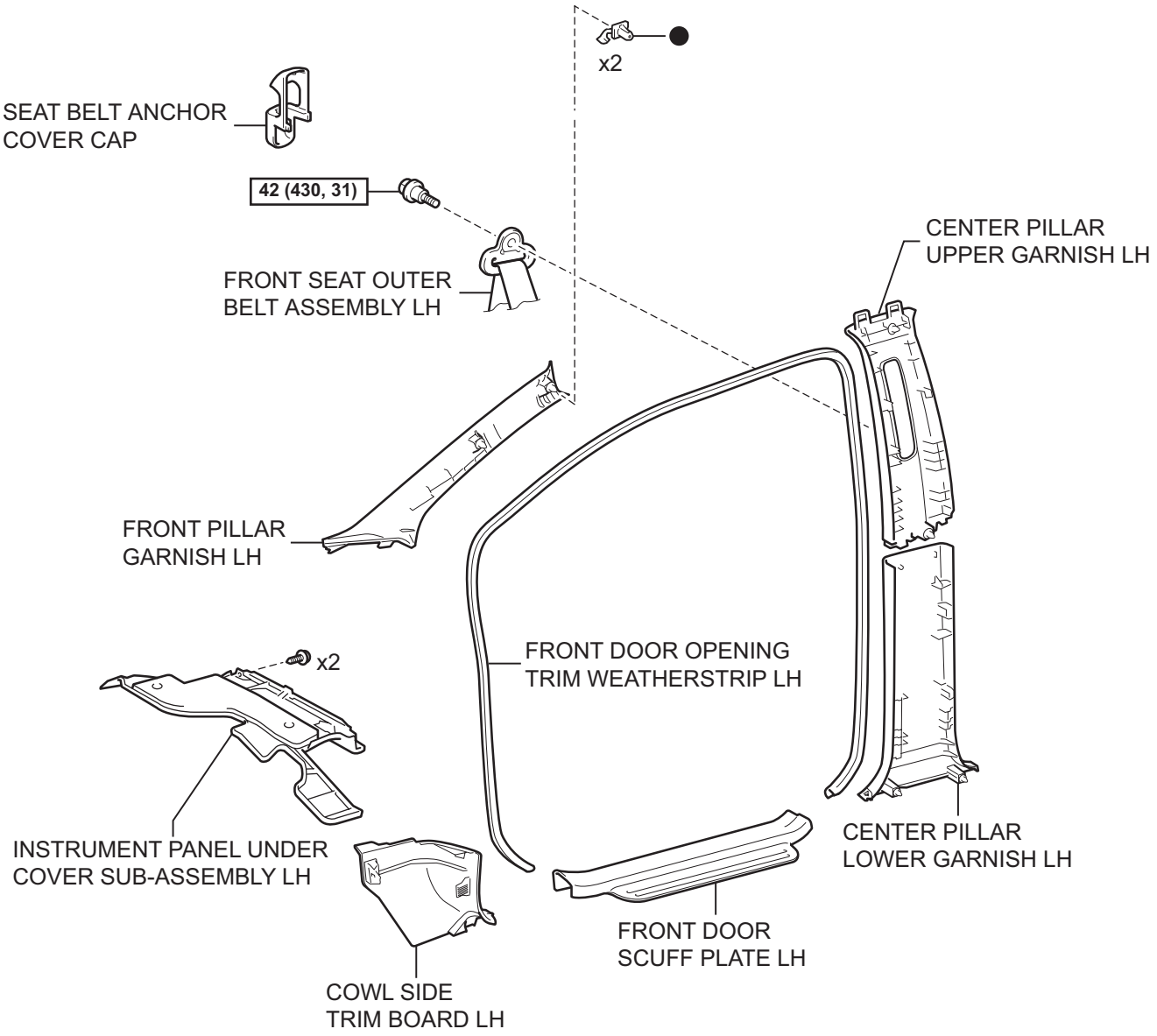

N*m (kgf*cm, ft*lbf) : Specified torque

● Non-reusable part

T

B138594E02

RS

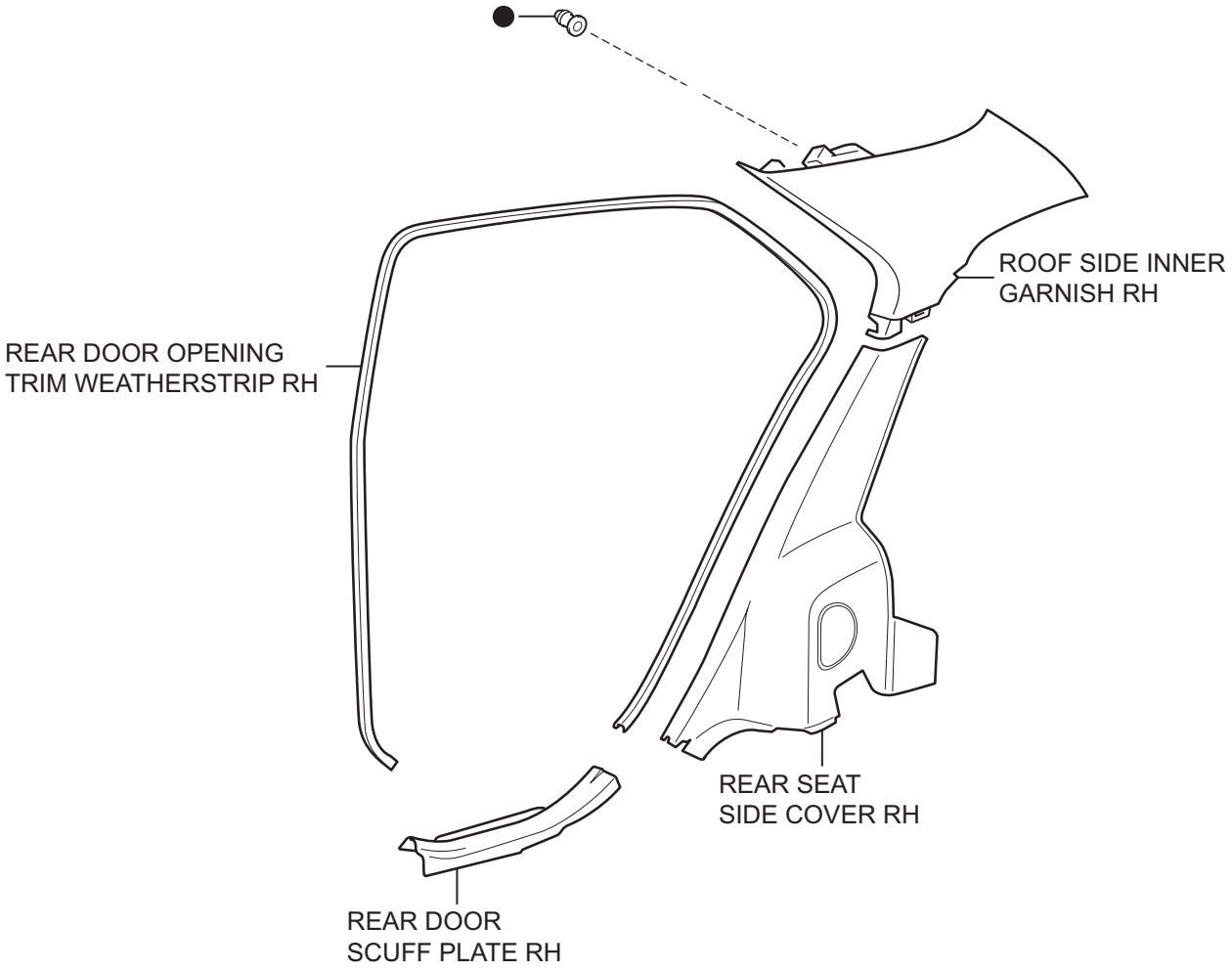

● Non-reusable part

T

B134769E04

RS

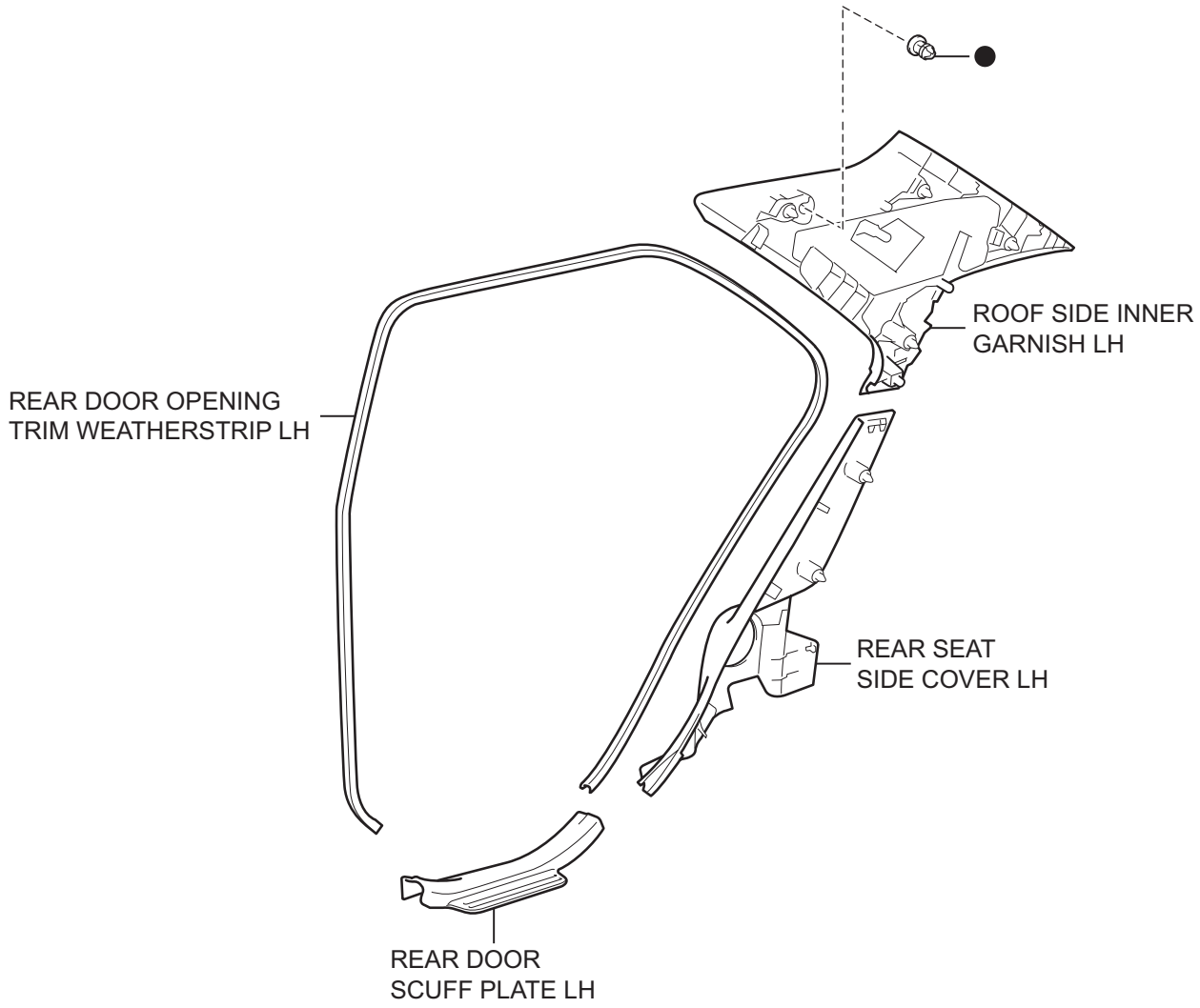

● Non-reusable part

T

B134770E03

RS

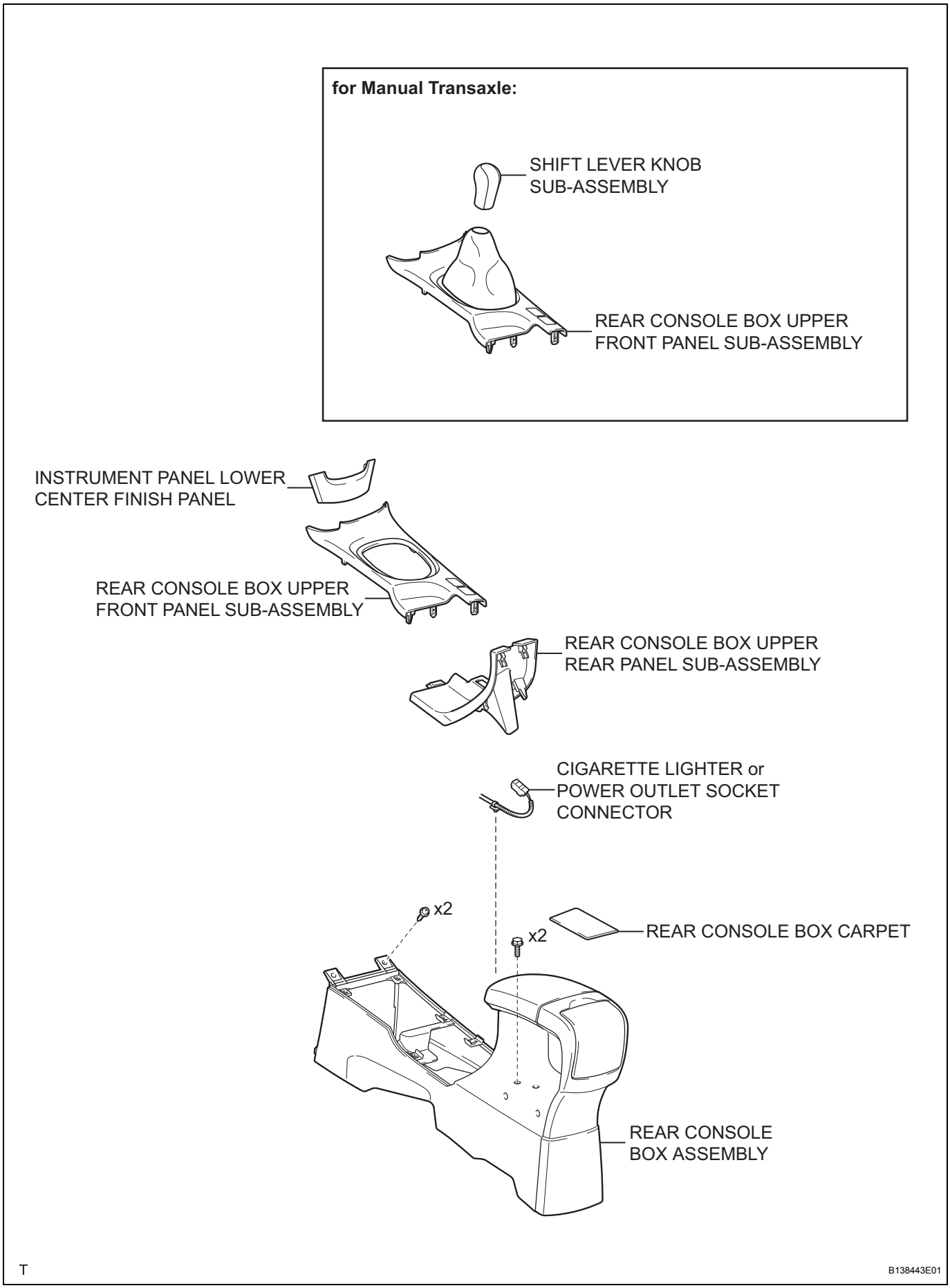
for Manual Transaxle:
SHIFT LEVER KNOB SUB-ASSEMBLY
REAR CONSOLE BOX UPPER FRONT PANEL SUB-ASSEMBLY
INSTRUMENT PANEL LOWER CENTER FINISH PANEL
REAR CONSOLE BOX UPPER FRONT PANEL SUB-ASSEMBLY
REAR CONSOLE BOX UPPER REAR PANEL SUB-ASSEMBLY
CIGARETTE LIGHTER or POWER OUTLET SOCKET CONNECTOR
x2
x2
REAR CONSOLE BOX CARPET
REAR CONSOLE BOX ASSEMBLY
T
B138443E01

RS

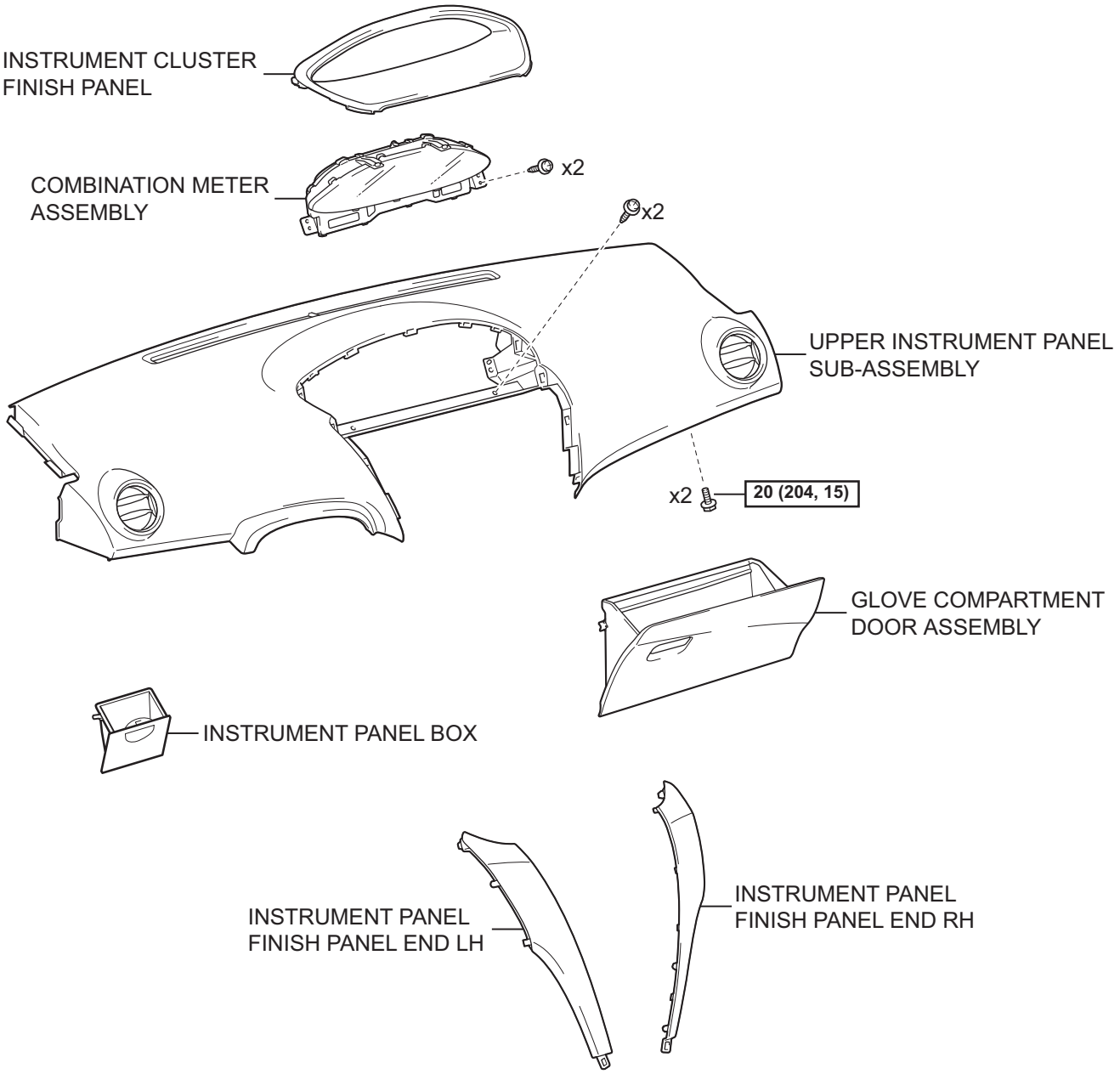

N*m (kgf*cm, ft*lbf) : Specified torque

P

B138444E02

RS

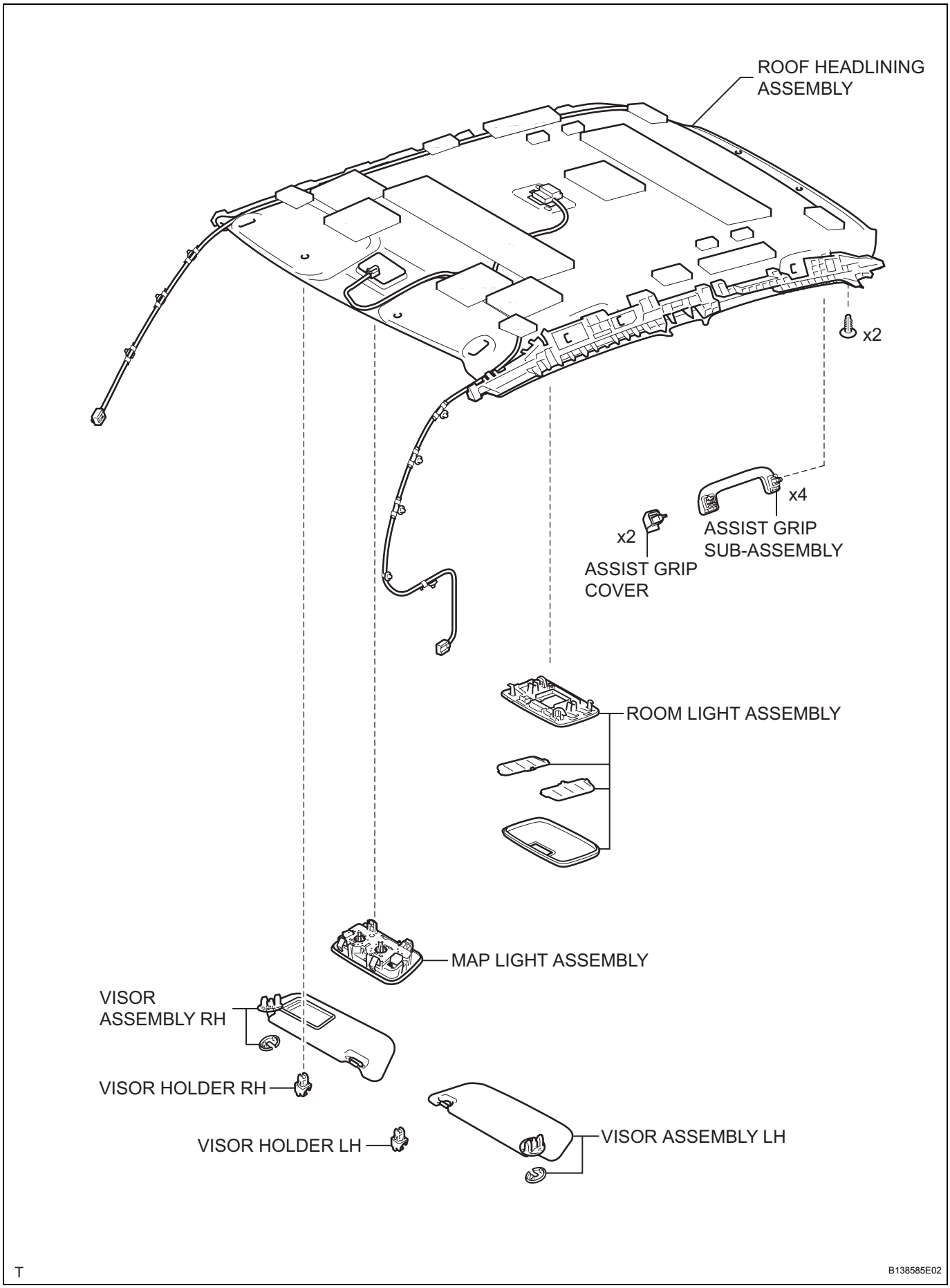
ROOF HEADLINING ASSEMBLY
x2
x4
ASSIST GRIP SUB-ASSEMBLY
x2
ASSIST GRIP COVER
ROOM LIGHT ASSEMBLY
MAP LIGHT ASSEMBLY
VISOR ASSEMBLY RH
VISOR HOLDER RH
VISOR HOLDER LH
VISOR ASSEMBLY LH
T
B138585E02

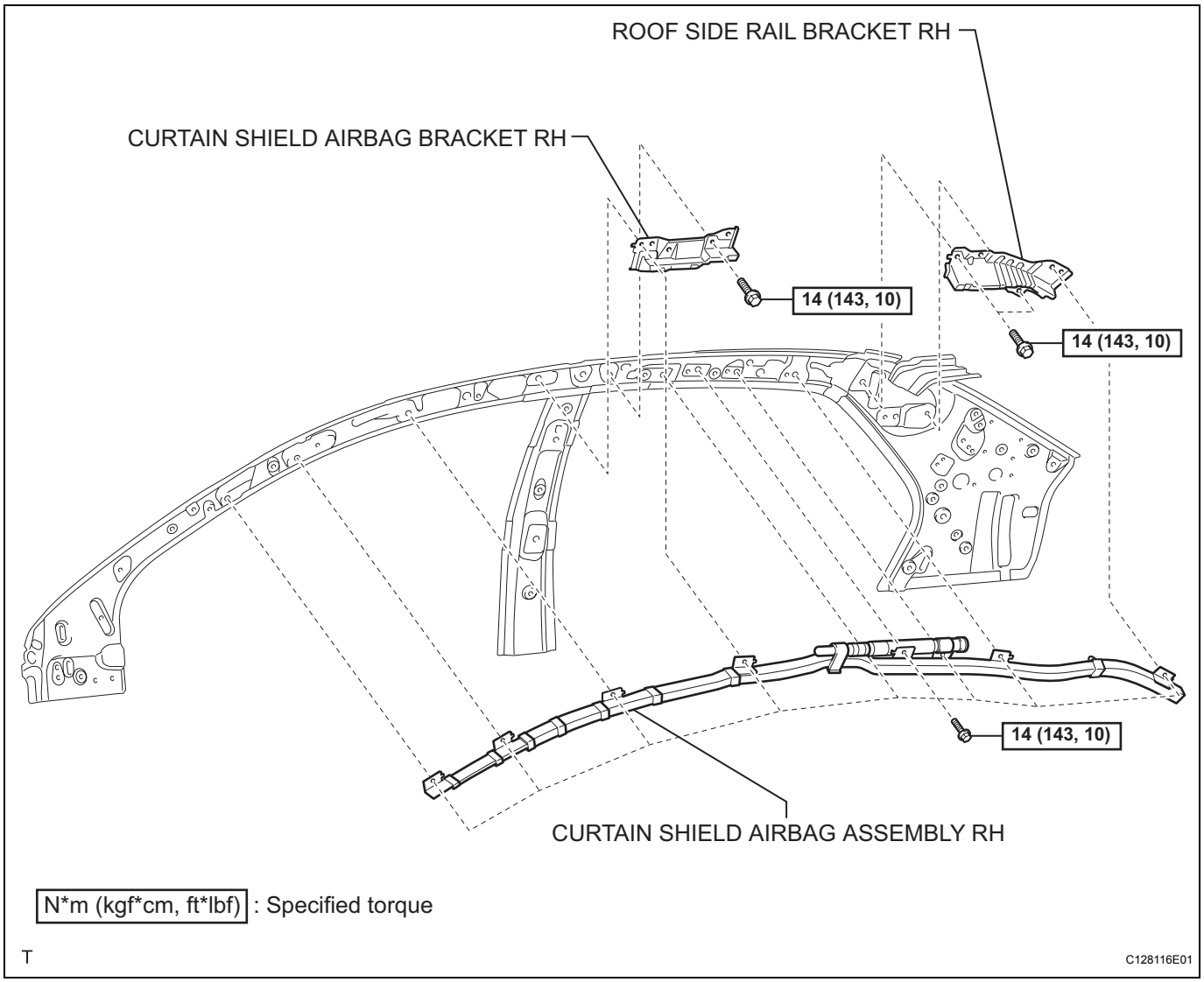
ROOF SIDE RAIL BRACKET RH
CURTAIN SHIELD AIRBAG BRACKET RH
14 (143, 10)
14 (143, 10)
14 (143, 10)
CURTAIN SHIELD AIRBAG ASSEMBLY RH
N*m (kgf*cm, ft*lbf) : Specified torque
T
C128116E01

RS

ON-VEHICLE INSPECTION

1. **INSPECT CURTAIN SHIELD AIRBAG ASSEMBLY (for Vehicle not Involved in Collision)**
   (a) Perform a diagnostic system check (See page RS-38).
   (b) With the curtain shield airbag installed on the vehicle, perform a visual check. If there are any defects, such as those mentioned below, replace the front pillar garnish or roof headlining with a new one:
   Any cuts, minute cracks or marked discoloration on the front pillar garnish and roof headlining around the curtain shield airbag.

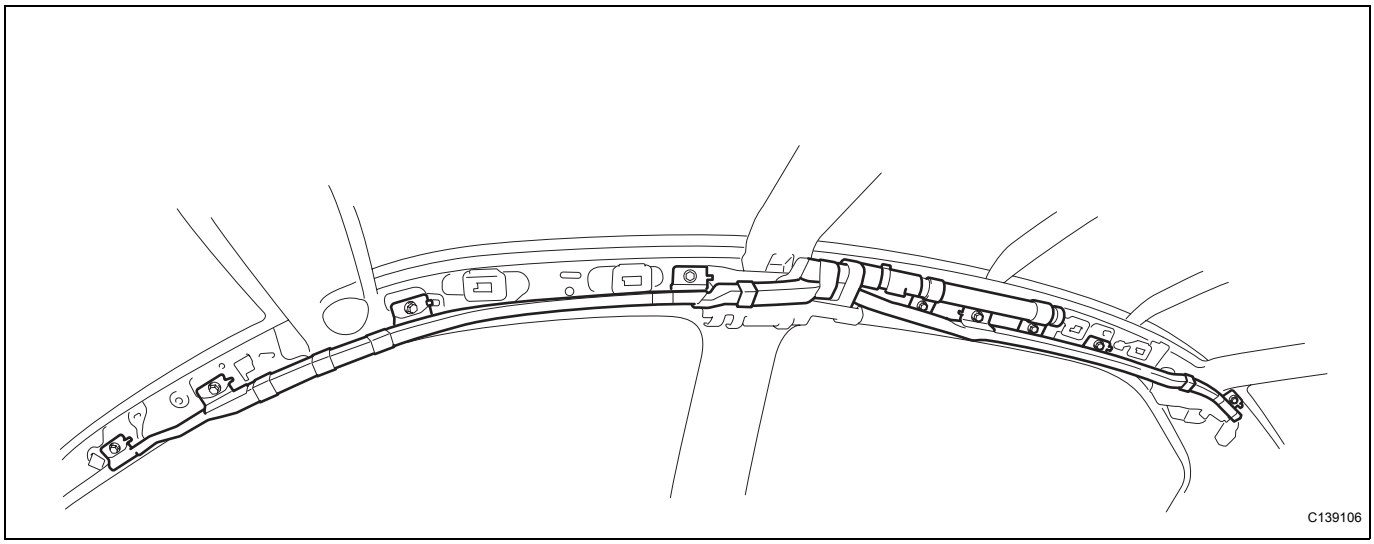

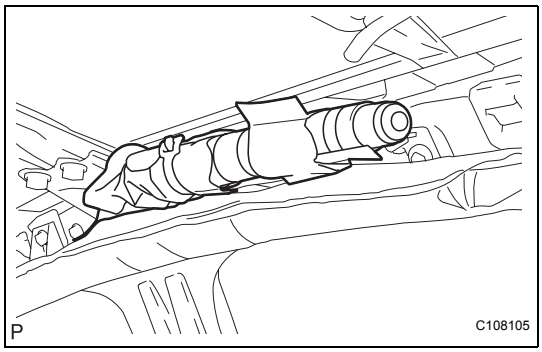

2. **INSPECT CURTAIN SHIELD AIRBAG ASSEMBLY (for Vehicle Involved in Collision and Airbag not Deployed)**
   CAUTION:
   For curtain shield airbag removal and installation procedures, see pages RS-362 and ,RS-366 and carefully follow the correct procedure.
   (a) Perform a diagnostic system check (See page RS-38).
   (b) With the curtain shield airbag removed from the vehicle, as mentioned below, replace the curtain shield airbag with a new one:
   - Any cuts, minute cracks or marked discoloration on the curtain shield airbag.
   - Any cracks or other damage to the connector.

REMOVAL

CAUTION:
Some of these service operations affect the SRS airbag system. Read the precautionary notices concerning the SRS airbag system before servicing (See page RS-1).
HINT:
The procedure described below is for the RH side. Use the same procedure for both the RH and LH sides, unless otherwise specified.

1. **DISCONNECT BATTERY NEGATIVE TERMINAL**
2. **REMOVE FRONT SEAT HEADREST ASSEMBLY (See page IR-13)**
3. **REMOVE FRONT SEAT ASSEMBLY LH (See page SE-5)**
4. **REMOVE FRONT SEAT ASSEMBLY RH (See page IR-13)**
5. **REMOVE REAR SEAT CUSHION COVER PAD SUB-ASSEMBLY (See page IR-13)**
6. **REMOVE REAR SEATBACK ASSEMBLY (for Fixed Seat Type) (See page SE-106)**
7. **REMOVE REAR SEATBACK ASSEMBLY LH (for 60/40 Split Seat Type) (See page SE-46)**
8. **REMOVE REAR SEATBACK ASSEMBLY RH (for 60/40 Split Seat Type) (See page SE-57)**
9. **REMOVE LUGGAGE COMPARTMENT FLOOR MAT (for 60/40 Split Seat Type) (See page ED-133)**
10. **REMOVE SPARE WHEEL COVER ASSEMBLY (for 60/40 Split Seat Type) (See page ED-133)**
11. **REMOVE LUGGAGE COMPARTMENT TRIM INNER PAD (for 60/40 Split Seat Type) (See page ED-134)**
12. **REMOVE FRONT DOOR SCUFF PLATE RH (See page IR-14)**
13. **REMOVE FRONT DOOR SCUFF PLATE LH (See page IR-14)**
14. **REMOVE INSTRUMENT PANEL UNDER COVER SUB-ASSEMBLY RH (See page IR-14)**
15. **REMOVE INSTRUMENT PANEL UNDER COVER SUB-ASSEMBLY LH (See page IR-14)**
16. **REMOVE COWL SIDE TRIM BOARD RH (See page IR-15)**
17. **REMOVE COWL SIDE TRIM BOARD LH (See page IR-15)**
18. **REMOVE FRONT DOOR OPENING TRIM WEATHERSTRIP RH (See page IR-15)**

19. **REMOVE FRONT DOOR OPENING TRIM WEATHERSTRIP LH (See page IR-15)**
20. **REMOVE REAR DOOR SCUFF PLATE RH (See page IR-15)**
21. **REMOVE REAR DOOR SCUFF PLATE LH (See page IR-15)**
22. **REMOVE REAR DOOR OPENING TRIM WEATHERSTRIP RH (See page IR-15)**
23. **REMOVE REAR DOOR OPENING TRIM WEATHERSTRIP LH (See page IR-15)**
24. **REMOVE REAR SEAT SIDE COVER RH (See page IR-16)**
25. **REMOVE REAR SEAT SIDE COVER LH (See page IR-16)**
26. **REMOVE ROOF SIDE INNER GARNISH RH (See page IR-16)**
27. **REMOVE ROOF SIDE INNER GARNISH LH (See page IR-16)**
28. **REMOVE CENTER PILLAR LOWER GARNISH RH (See page IR-16)**
29. **REMOVE CENTER PILLAR LOWER GARNISH LH (See page IR-16)**
30. **REMOVE SEAT BELT ANCHOR COVER CAP (See page IR-17)**
31. **REMOVE FRONT SEAT OUTER BELT ASSEMBLY RH (See page IR-17)**
32. **REMOVE FRONT SEAT OUTER BELT ASSEMBLY LH (See page IR-17)**
33. **REMOVE CENTER PILLAR UPPER GARNISH RH (See page IR-17)**
34. **REMOVE CENTER PILLAR UPPER GARNISH LH (See page IR-17)**
35. **REMOVE FRONT PILLAR GARNISH RH (See page IR-18)**
36. **REMOVE FRONT PILLAR GARNISH LH (See page IR-19)**
37. **REMOVE INSTRUMENT PANEL LOWER CENTER FINISH PANEL (See page ME-138)**
38. **REMOVE SHIFT LEVER KNOB SUB-ASSEMBLY (for Manual Transaxle) (See page IP-84)**
39. **REMOVE REAR CONSOLE BOX UPPER FRONT PANEL SUB-ASSEMBLY (See page IP-84)**
40. **REMOVE REAR CONSOLE BOX UPPER REAR PANEL SUB-ASSEMBLY (See page IP-84)**

41. **REMOVE REAR CONSOLE BOX CARPET (See page IP-85)**
42. **REMOVE REAR CONSOLE BOX ASSEMBLY (See page IP-85)**
43. **REMOVE INSTRUMENT PANEL FINISH PANEL END RH (See page ME-138)**
44. **REMOVE INSTRUMENT PANEL FINISH PANEL END LH (See page ME-138)**
45. **REMOVE INSTRUMENT CLUSTER FINISH PANEL (See page ME-139)**
46. **REMOVE COMBINATION METER ASSEMBLY (See page ME-139)**
47. **REMOVE GLOVE COMPARTMENT DOOR ASSEMBLY (See page IP-6)**
48. **REMOVE UPPER INSTRUMENT PANEL SUB-ASSEMBLY (See page IP-6)**
49. **REMOVE INSTRUMENT PANEL BOX (See page IP-45)**
50. **REMOVE ASSIST GRIP COVER (See page IR-21)**
51. **REMOVE ASSIST GRIP SUB-ASSEMBLY (See page IR-21)**
52. **REMOVE VISOR ASSEMBLY RH (See page IR-21)**
53. **REMOVE VISOR ASSEMBLY LH (See page IR-22)**
54. **REMOVE VISOR HOLDER RH (See page IR-22)**
55. **REMOVE VISOR HOLDER LH (See page IR-22)**
56. **REMOVE ROOM LIGHT ASSEMBLY (See page IR-22)**
57. **REMOVE MAP LIGHT ASSEMBLY (See page IR-23)**
58. **REMOVE ROOF HEADLINING ASSEMBLY (See page IR-24)**
59. **REMOVE CURTAIN SHIELD AIRBAG ASSEMBLY RH**
    (a) Using a thin-bladed screwdriver, release the locking button.
    (b) Using a thin-bladed screwdriver, detach the airbag connector.

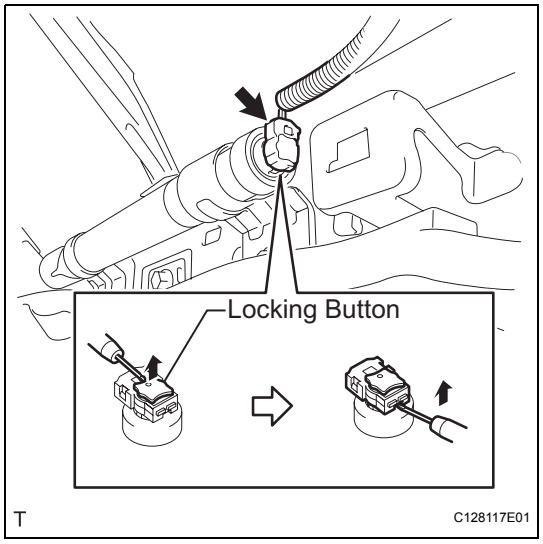

(c) Remove the 9 bolts, disengage the 3 hooks and remove the curtain shield airbag.

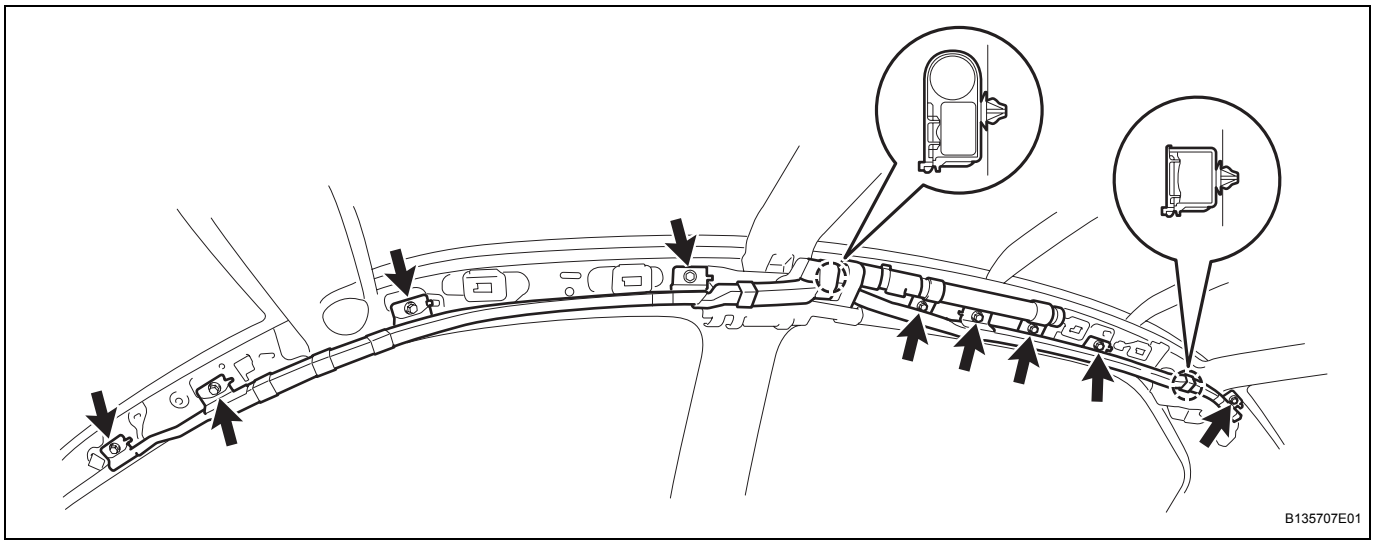

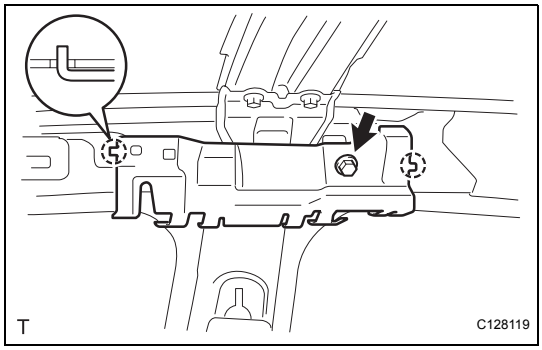

60. REMOVE CURTAIN SHIELD AIRBAG BRACKET RH

(a) Remove the bolt, disengage the 2 hooks and remove the curtain shield airbag bracket.

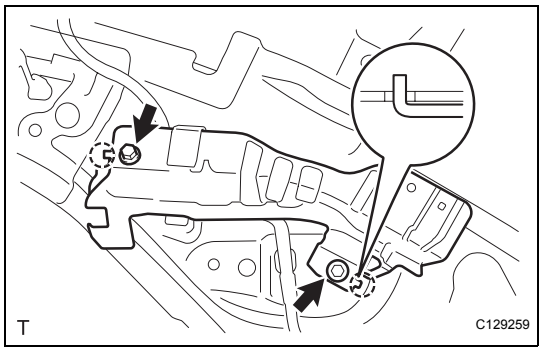

61. REMOVE ROOF SIDE RAIL BRACKET RH

(a) Remove the 2 bolts, disengage the 2 hooks and remove the roof side rail bracket.

INSTALLATION

CAUTION:
Some of these service operations affect the SRS airbag system. Read the precautionary notices concerning the SRS airbag system before servicing (See page RS-1).
HINT:
The procedure described below is for the RH side. Use the same procedure for both the RH and LH sides, unless otherwise specified.

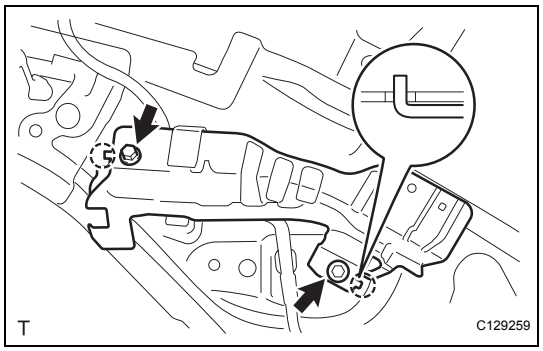

1. INSTALL ROOF SIDE RAIL BRACKET RH
(a) Insert the 2 hooks into the body holes and install the roof side rail bracket and tighten 2 the bolts.
Torque: 14 N*m (143 kgf*cm, 10 ft.*lbf)

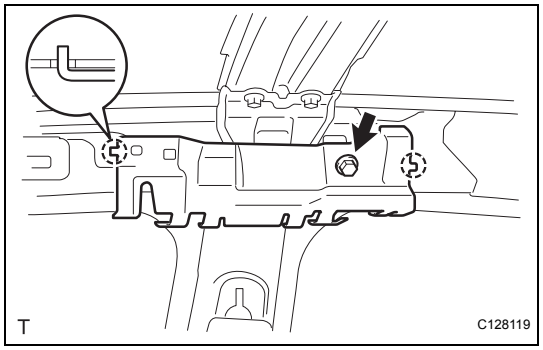

2. INSTALL CURTAIN SHIELD AIRBAG BRACKET RH
(a) Insert the 2 hooks into the body holes and install the curtain shield back bracket and tighten 1 the bolt.
Torque: 14 N*m (143 kgf*cm, 10 ft.*lbf)

3. INSTALL CURTAIN SHIELD AIRBAG ASSEMBLY RH
(a) Insert the 3 hooks into the body holes and install the curtain shield back bracket and tighten 9 the bolts.
Torque: 14 N*m (143 kgf*cm, 10 ft.*lbf)

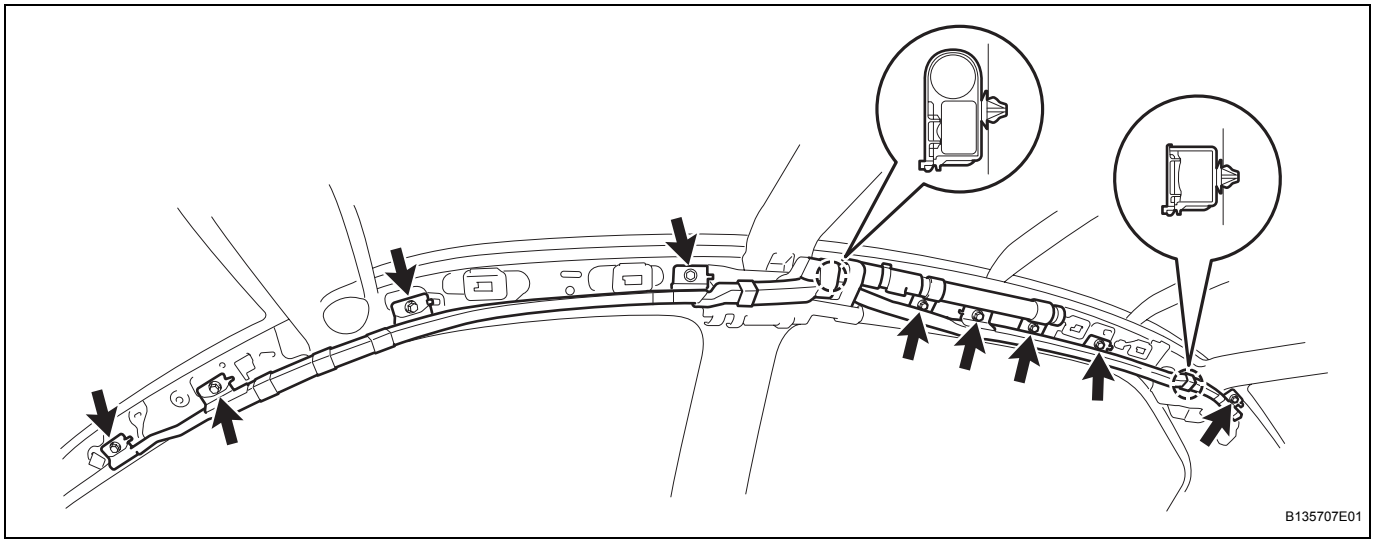

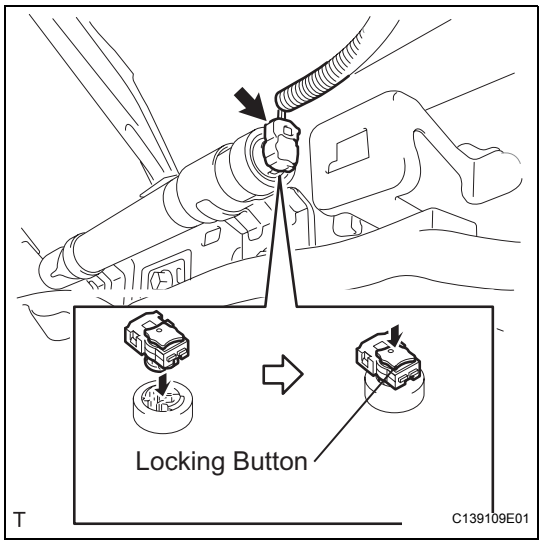

(b) Connect the airbag connector.
NOTICE:
Lock the locking button securely.

4. **INSTALL ROOF HEADLINING ASSEMBLY (See page IR-25)**
5. **INSTALL MAP LIGHT ASSEMBLY (See page IR-26)**
6. **INSTALL ROOM LIGHT ASSEMBLY (See page IR-27)**
7. **INSTALL VISOR HOLDER RH (See page IR-28)**
8. **INSTALL VISOR HOLDER LH (See page IR-28)**
9. **INSTALL VISOR ASSEMBLY RH (See page IR-28)**
10. **INSTALL VISOR ASSEMBLY LH (See page IR-28)**
11. **INSTALL ASSIST GRIP COVER (See page IR-29)**
12. **INSTALL INSTRUMENT PANEL BOX (See page IP-53)**
13. **INSTALL UPPER INSTRUMENT PANEL SUB-ASSEMBLY (See page IP-11)**
14. **INSTALL GLOVE COMPARTMENT DOOR ASSEMBLY (See page IP-13)**
15. **INSTALL COMBINATION METER ASSEMBLY (See page ME-140)**
16. **INSTALL INSTRUMENT CLUSTER FINISH PANEL (See page ME-140)**
17. **INSTALL INSTRUMENT PANEL FINISH PANEL END RH (See page ME-141)**
18. **INSTALL INSTRUMENT PANEL FINISH PANEL END LH (See page ME-141)**
19. **INSTALL REAR CONSOLE BOX ASSEMBLY (See page IP-88)**
20. **INSTALL REAR CONSOLE BOX CARPET (See page IP-88)**
21. **INSTALL REAR CONSOLE BOX UPPER REAR PANEL SUB-ASSEMBLY (See page IP-89)**
22. **INSTALL REAR CONSOLE BOX UPPER FRONT PANEL SUB-ASSEMBLY (See page IP-89)**
23. **INSTALL SHIFT LEVER KNOB SUB-ASSEMBLY (for Manual Transaxle) (See page IP-89)**
24. **INSTALL INSTRUMENT PANEL LOWER CENTER FINISH PANEL (See page ME-142)**
25. **INSTALL FRONT PILLAR GARNISH RH (See page IR-29)**
26. **INSTALL FRONT PILLAR GARNISH LH (See page IR-30)**
27. **INSTALL CENTER PILLAR UPPER GARNISH RH (See page IR-31)**

28. **INSTALL CENTER PILLAR UPPER GARNISH LH (See page IR-31)**
29. **INSTALL FRONT SEAT OUTER BELT ASSEMBLY RH (See page IR-31)**
30. **INSTALL FRONT SEAT OUTER BELT ASSEMBLY LH (See page IR-31)**
31. **INSTALL SEAT BELT ANCHOR COVER CAP (See page IR-32)**
32. **INSTALL CENTER PILLAR LOWER GARNISH RH (See page IR-32)**
33. **INSTALL CENTER PILLAR LOWER GARNISH LH (See page IR-32)**
34. **INSTALL ROOF SIDE INNER GARNISH RH (See page IR-32)**
35. **INSTALL ROOF SIDE INNER GARNISH LH (See page IR-33)**
36. **INSTALL REAR SEAT SIDE COVER RH (See page IR-33)**
37. **INSTALL REAR SEAT SIDE COVER LH (See page IR-33)**
38. **INSTALL REAR DOOR OPENING TRIM WEATHERSTRIP RH (See page IR-33)**
39. **INSTALL REAR DOOR OPENING TRIM WEATHERSTRIP LH (See page IR-33)**
40. **INSTALL REAR DOOR SCUFF PLATE RH (See page IR-34)**
41. **INSTALL REAR DOOR SCUFF PLATE LH (See page IR-34)**
42. **INSTALL FRONT DOOR OPENING TRIM WEATHERSTRIP RH (See page IR-34)**
43. **INSTALL FRONT DOOR OPENING TRIM WEATHERSTRIP LH (See page IR-34)**
44. **INSTALL COWL SIDE TRIM BOARD RH (See page IR-34)**
45. **INSTALL COWL SIDE TRIM BOARD LH (See page IR-34)**
46. **INSTALL INSTRUMENT PANEL UNDER COVER SUB-ASSEMBLY RH (See page IR-35)**
47. **INSTALL INSTRUMENT PANEL UNDER COVER SUB-ASSEMBLY LH (See page IR-35)**
48. **INSTALL FRONT DOOR SCUFF PLATE RH (See page IR-35)**
49. **INSTALL FRONT DOOR SCUFF PLATE LH (See page IR-35)**

50. **INSTALL LUGGAGE COMPARTMENT TRIM INNER PAD (for 60/40 Split Seat Type) (See page ED-136)**
51. **INSTALL SPARE WHEEL COVER ASSEMBLY (for 60/40 Split Seat Type) (See page ED-137)**
52. **INSTALL LUGGAGE COMPARTMENT FLOOR MAT (for 60/40 Split Seat Type) (See page ED-137)**
53. **INSTALL REAR SEATBACK ASSEMBLY (for Fixed Seat Type) (See page SE-108)**
54. **INSTALL REAR SEATBACK ASSEMBLY LH (for 60/40 Split Seat Type) (See page SE-52)**
55. **INSTALL REAR SEATBACK ASSEMBLY RH (for 60/40 Split Seat Type) (See page SE-65)**
56. **INSTALL REAR SEAT CUSHION COVER PAD SUB-ASSEMBLY (See page IR-36)**
57. **INSTALL FRONT SEAT ASSEMBLY LH (See page SE-20)**
58. **INSTALL FRONT SEAT ASSEMBLY RH (See page IR-36)**
59. **INSTALL FRONT SEAT HEADREST ASSEMBLY (See page IR-36)**
60. **CONNECT CABLE TO NEGATIVE BATTERY TERMINAL**
    Torque: 5.4 N*m (55 kgf*cm, 48 in.*lbf)
61. **INSPECT SRS WARNING LIGHT**
    (See page RS-31)

DISPOSAL

HINT:
- Disposal procedure for the RH side is the same as that for the LH side.
- The procedures described below are for the RH side.
- When scrapping a vehicle equipped with the SRS or disposing of a curtain shield airbag, deploy the airbag first in accordance with the procedure described below. If any abnormality occurs with the airbag deployment, contact the SERVICE DEPT. of the DISTRIBUTOR.

CAUTION:
- **Never dispose of a curtain shield airbag that has an undeployed airbag.**
- **The airbag emits an exploding sound when it is deployed, so perform the operation outdoors and where it will not create a nuisance to nearby residents.**
- **When deploying the airbag, always use the specified SST (SRS Airbag Deployment Tool). Perform the operation in a place away from electrical noise.**
- **When deploying the airbag, perform the operation at least 10 m (33 ft) away from the curtain shield airbag.**
- **The curtain shield airbag becomes extremely hot when the airbag is deployed, so do not touch it for at least 30 minutes after deployment.**
- **Use gloves and safety glasses when handling a curtain shield airbag which has been deployed.**
- **Do not apply water, etc. to a curtain shield airbag which has been deployed.**
- **Always wash your hands with water after completing the operation.**

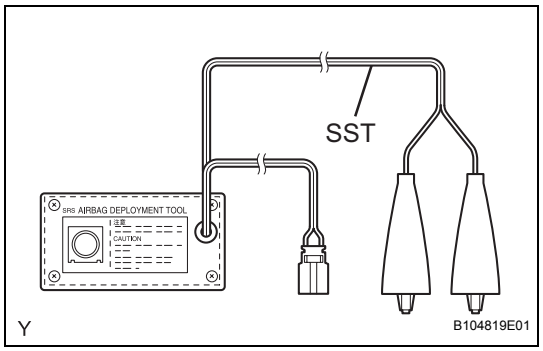

1. DISPOSE OF CURTAIN SHIELD AIRBAG ASSEMBLY (WHEN INSTALLED IN VEHICLE)

HINT:
Prepare a battery as the power source to deploy the airbag.

(a) Check the function of SST.
SST 09082-00700
CAUTION:
Always use the specified SST (SRS Airbag Deployment Tool) when deploying the airbag.

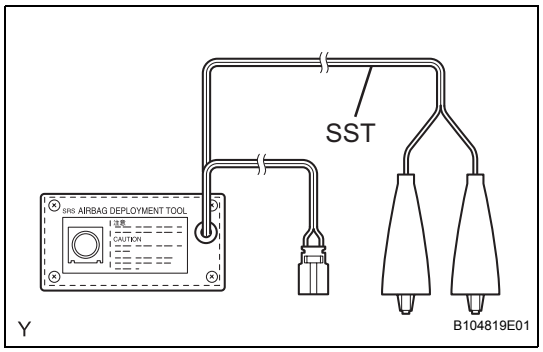

RS

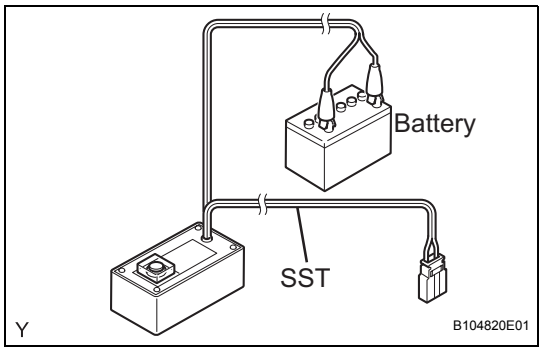

(1) Connect the red clip of SST to the positive battery terminal and the black clip of SST to the negative battery terminal.

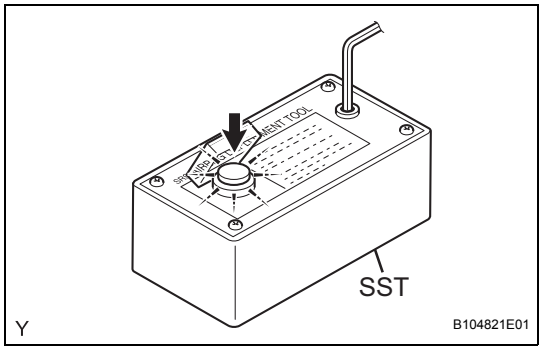

(2) Press the SST activation switch, and check that the LED of the SST activation switch illuminates.
CAUTION:
- **Do not connect the SST connector (yellow colored one) to the airbag.**
- **If the LED illuminates when the activation switch is not pressed, SST may be malfunctioning. Do not use SST.**

(3) Disconnect SST from the battery.

(b) Disconnect the cable from the negative battery terminal.

(c) Remove the roof headlining (See page IR-13).

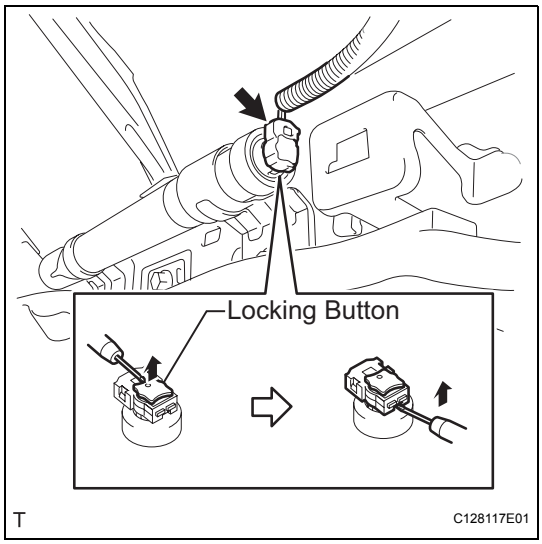

(d) Disconnect the airbag connector, as shown in the illustration.
NOTICE:
Do not damage the airbag wire harness when handling the airbag connector.

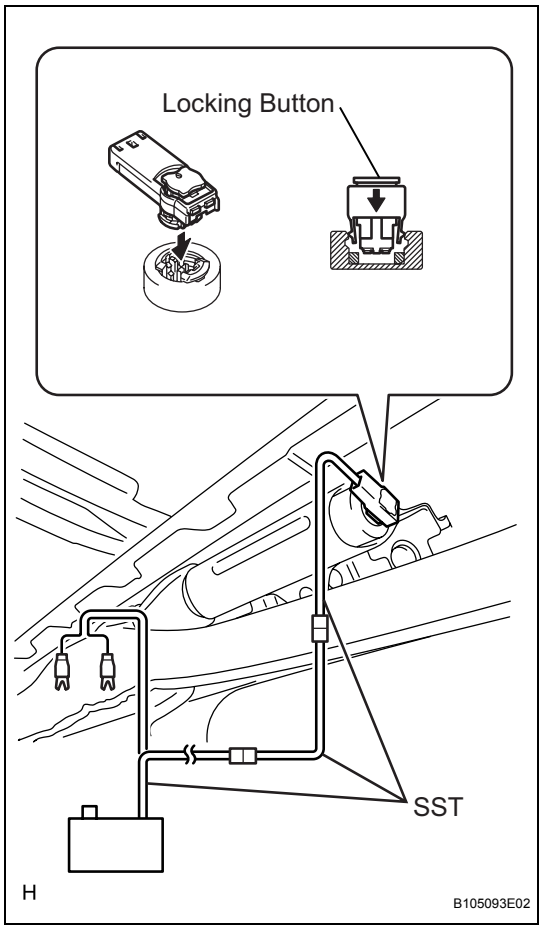

(e) Connect SST.
SST 09082-00700, 09082-00802 (09082-10801, 09082-20801)
(1) After connecting SST, connect it to the curtain shield airbag.
NOTICE:
Do not lock the secondary lock of the twin lock to avoid damaging the SST connector and wire harness.

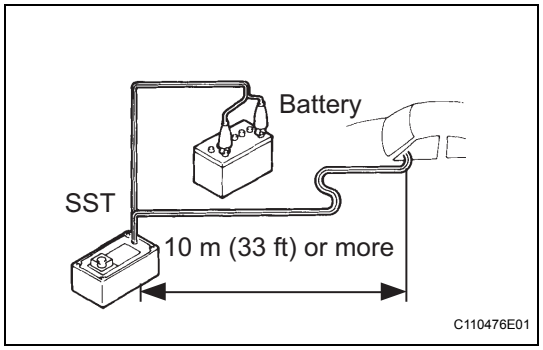

(2) Move SST to at least 10 m (33 ft) away from the vehicle.
(3) Close all doors and windows of the vehicle.
NOTICE:
Do not damage the SST wire harness.
(4) Connect the red clip of SST to the positive battery terminal and the black clip of SST to the negative battery terminal.

(f) Deploy the airbag.
(1) Check that no one is inside the vehicle or within a 10 m (33 ft) radius of the vehicle.
(2) Press the SST activation switch and deploy the airbag.
CAUTION:
- **When deploying the airbag, make sure that no one is near the vehicle.**
- **The curtain shield airbag becomes extremely hot when the airbag is deployed, so do not touch it for at least 30 minutes after deployment.**
- **Use gloves and safety glasses when handling a curtain shield airbag which has been deployed.**
- **Do not apply water, etc. to a curtain shield airbag which has been deployed.**
- **Always wash your hands with water after completing the operation.**

RS

RS

HINT:
The airbag is deployed as the LED of the SST activation switch illuminates.

2. DISPOSE OF CURTAIN SHIELD AIRBAG ASSEMBLY (WHEN NOT INSTALLED IN VEHICLE)

NOTICE:

- **Never use the customer's vehicle to deploy the airbag when only disposing of the curtain shield airbag.**
- **Follow the procedure detailed below when deploying the airbag.**

HINT:
Prepare a battery as the power source to deploy the airbag.

(a) Check the function of SST.
SST 09082-00700
CAUTION:
Always use the specified SST (SRS Airbag Deployment Tool) when deploying the airbag.

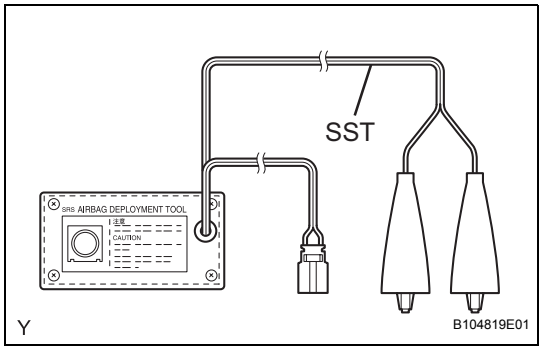

(1) Connect the red clip of SST to the positive battery terminal and the black clip of SST to the negative battery terminal.

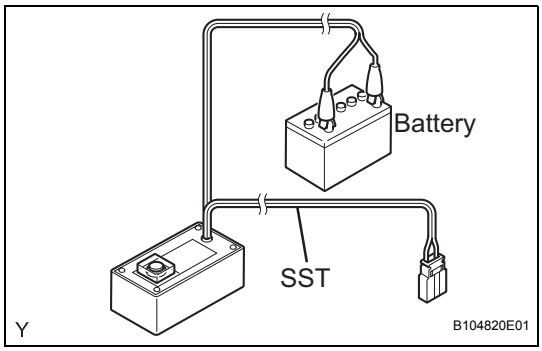

(2) Press the SST activation switch, and check that the LED of the SST activation switch illuminates.
CAUTION:
- **Do not connect the SST connector (yellow colored one) to the airbag.**
- **If the LED illuminates when the activation switch is not pressed, SST may be malfunctioning. Do not use SST.**

(3) Disconnect SST from the battery.

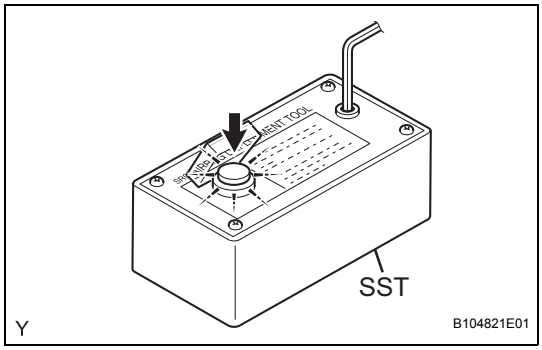

(b) Remove the curtain shield airbag (See page RS-362).

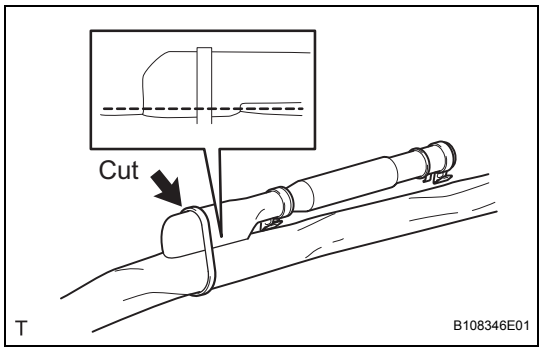

(c) Cut off the deployment section of the curtain shield airbag.

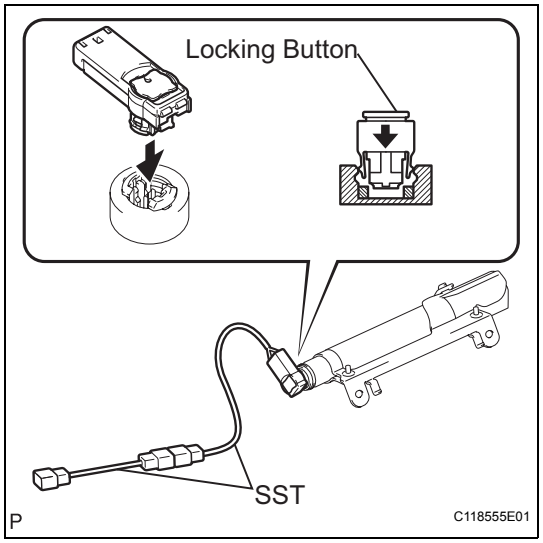

(d) Connect SST.
SST 09082-00802 (09082-10801, 09082-20801)
(1) After connecting SST, connect it to the curtain shield airbag.
NOTICE:
Do not lock the secondary lock of the twin lock to avoid damaging the SST connector and wire harness.

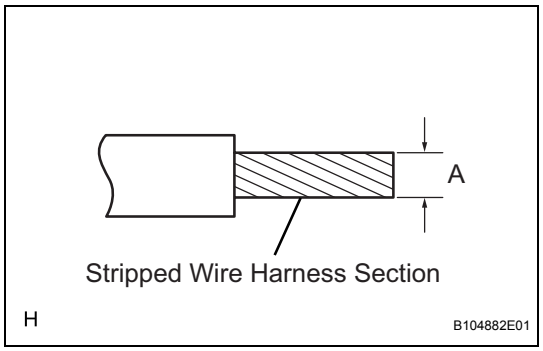

(e) Using a service-purpose wire harness for the vehicle, tie the curtain shield airbag to the tire.
Stripped wire harness section:

Area	Measurement
A	1.25 mm^2 or more (0.0019 $in.^2$ or more)

CAUTION:
Do not use wire harness is too thin or any other object to tie the curtain shield airbag because it may snap due to the shock when the airbag is deployed. Always use a wire harness for vehicle use with a cross sectionof at least 1.25 mm^2 (0.0019 in^2).
HINT:
To calculate the area of the stripped wire harness cross section:
Area = 3.14 x $(Diameter)^2$ divided by 4

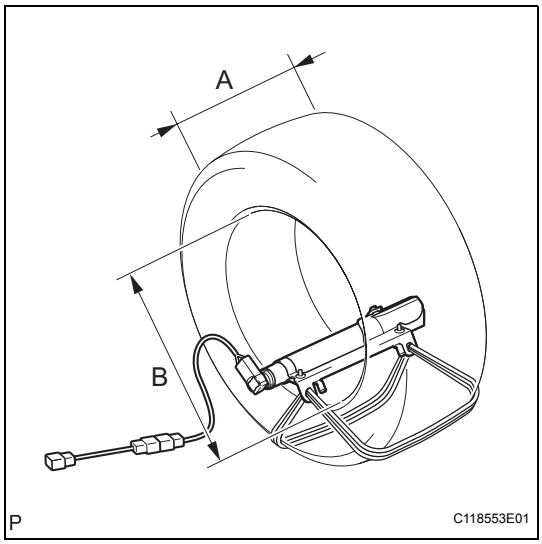

(1) Position the curtain shield airbag inside the tire, as shown in the illustration.
Tire size:

Area	Measurement
A	185 mm (7.28 in.)
B	360 mm (14.17 in.)

CAUTION:
Make sure that the wire harnesses are tight. If there is any slack in the wire harness, the curtain shield airbag may become loose due to the shock when the airbag is deployed.
NOTICE:
The tire will be marked by the airbag deployment, so use a waste tire.

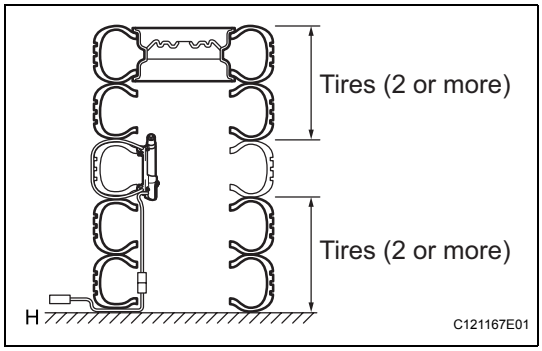

(f) Place the tires.
CAUTION:
Do not place the curtain shield airbag with the deployment direction facing toward the ground.
(1) Place at least 2 tires under the tire to which the curtain shield airbag is tied.
(2) Place at least 2 tires over the tire to which the curtain shield airbag is tied. The disc wheel should be installed onto the top tire.
NOTICE:
Do not place the SST connector under the tire because it could be damaged.

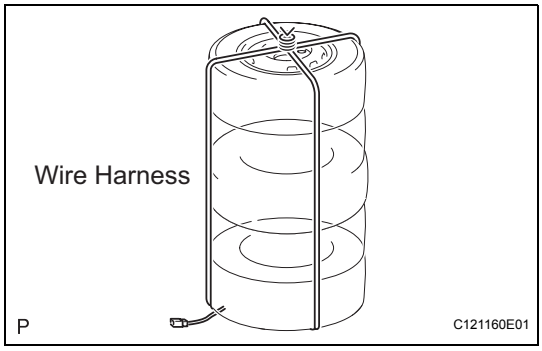

(3) Tie the tires together with 2 wire harnesses.
CAUTION:
Make sure that the wire harnesses are tight. It is highly dangerous when a loose wire harness results in the tires coming free due to the shock when the airbag is deployed.

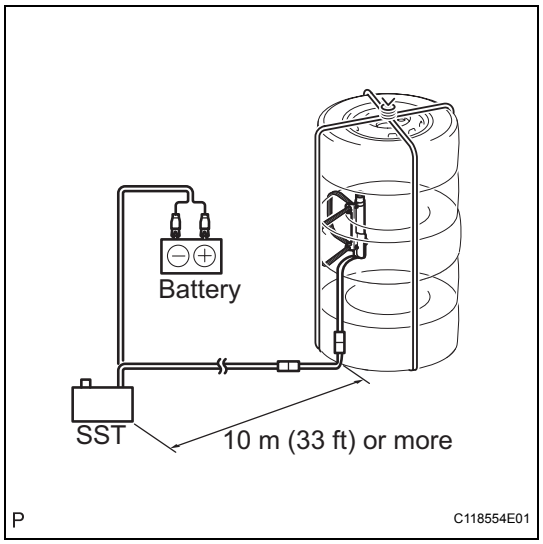

(g) Connect SST.
SST 09082-00700
NOTICE:
To avoid damaging the SST connector and wire harness, do not lock the secondary lock of the twin lock. Also, secure some slack for the SST wire harness inside the tire.

(h) Deploy the airbag.
(1) Connect the red clip of SST to the positive battery terminal and the black clip of SST to the negative battery terminal.
(2) Check that no one is within a 10 m (33 ft) radius of the tire to which the curtain shield airbag is tied.
(3) Press the SST activation switch and deploy the airbag.
CAUTION:
Make sure that no one is near the tire when deploying the airbag.
HINT:
The airbag is deployed as the LED of the SST activation switch illuminates.

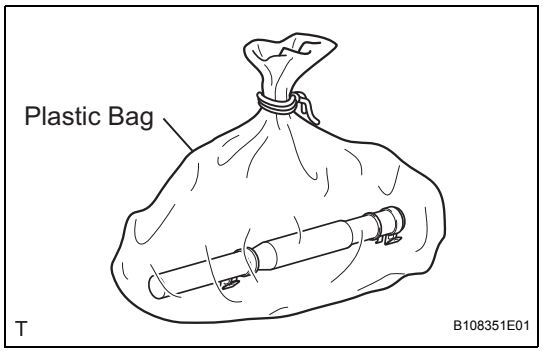

(i) Dispose of the curtain shield airbag.
CAUTION:
- **The curtain shield airbag becomes extremely hot when the airbag is deployed, so do not touch it for at least 30 minutes after deployment.**
- **Use gloves and safety glasses when handling a curtain shield airbag which has been deployed.**
- **Always wash your hands with water after completing the operation.**
- **Do not apply water, etc. to a curtain shield airbag which has been deployed.**

(1) Remove the curtain shield airbag from the tire.
(2) Place the curtain shield airbag in a plastic bag, tie it tightly and dispose of it in the same way as other general parts.

RS

CURTAIN SHIELD AIRBAG ASSEMBLY (for 5 Door)

COMPONENTS

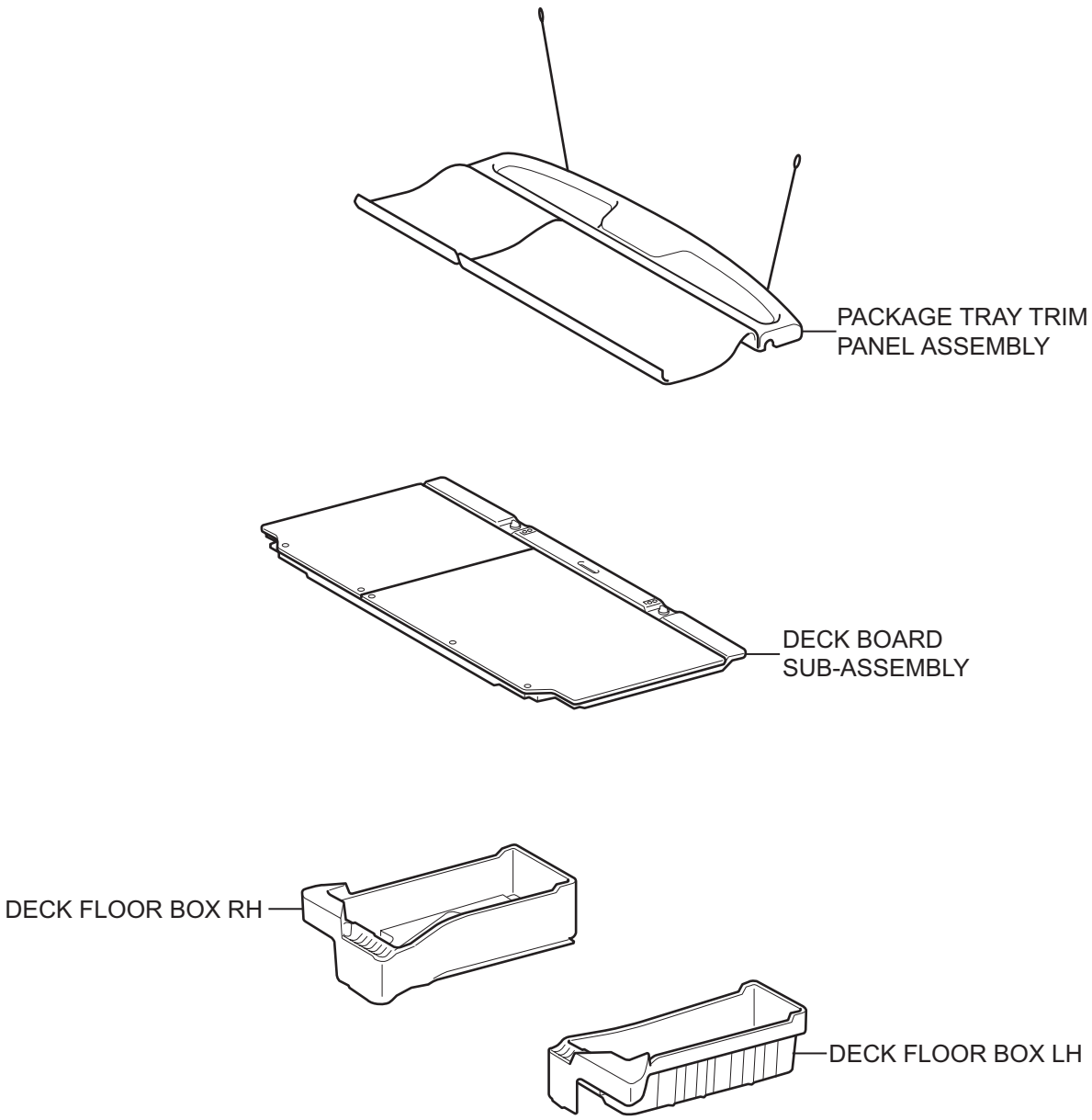

T

B114273E01

RS

for 60/40 Split Seat Type:

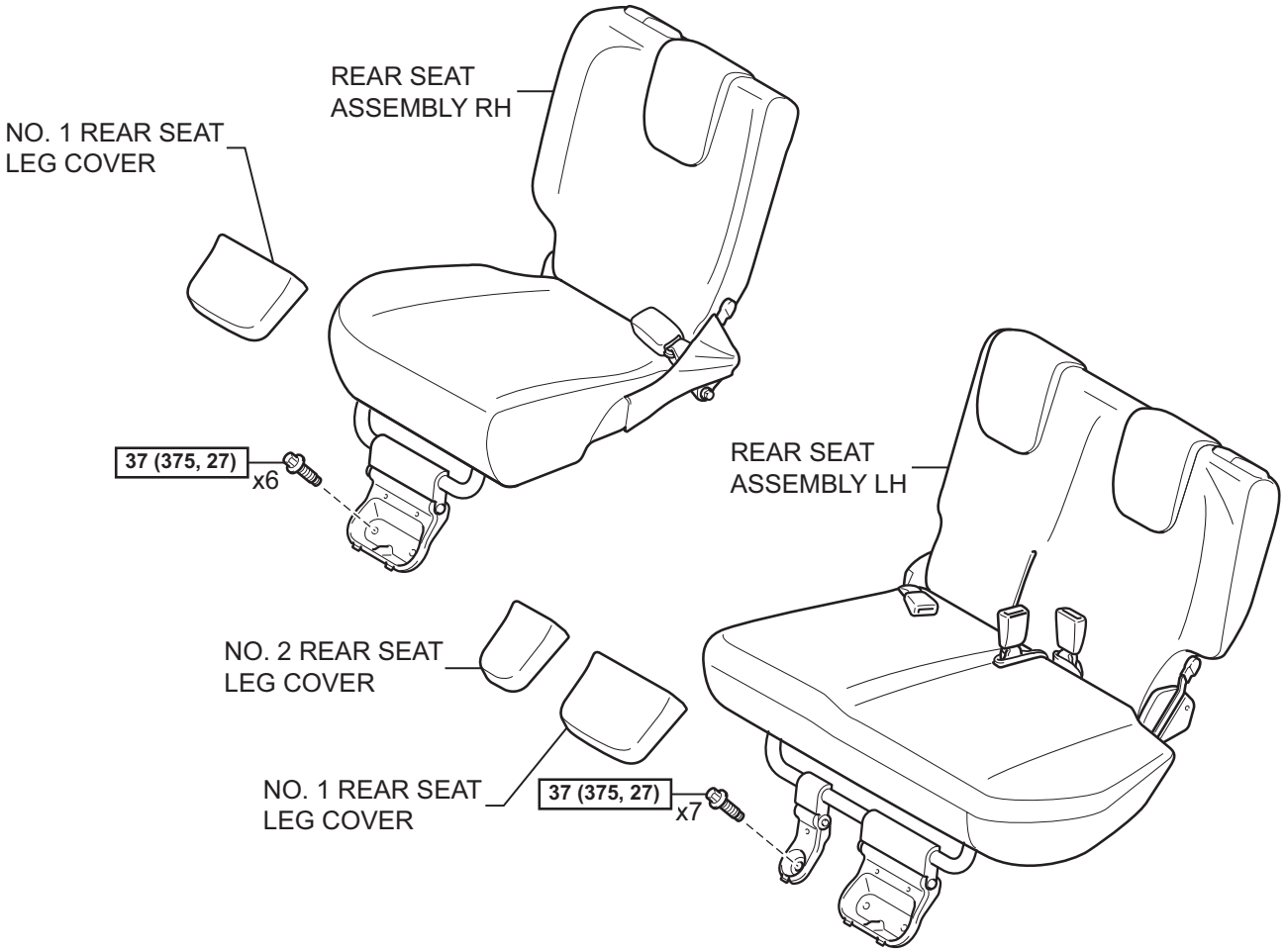

for Hold Down Seat Type:

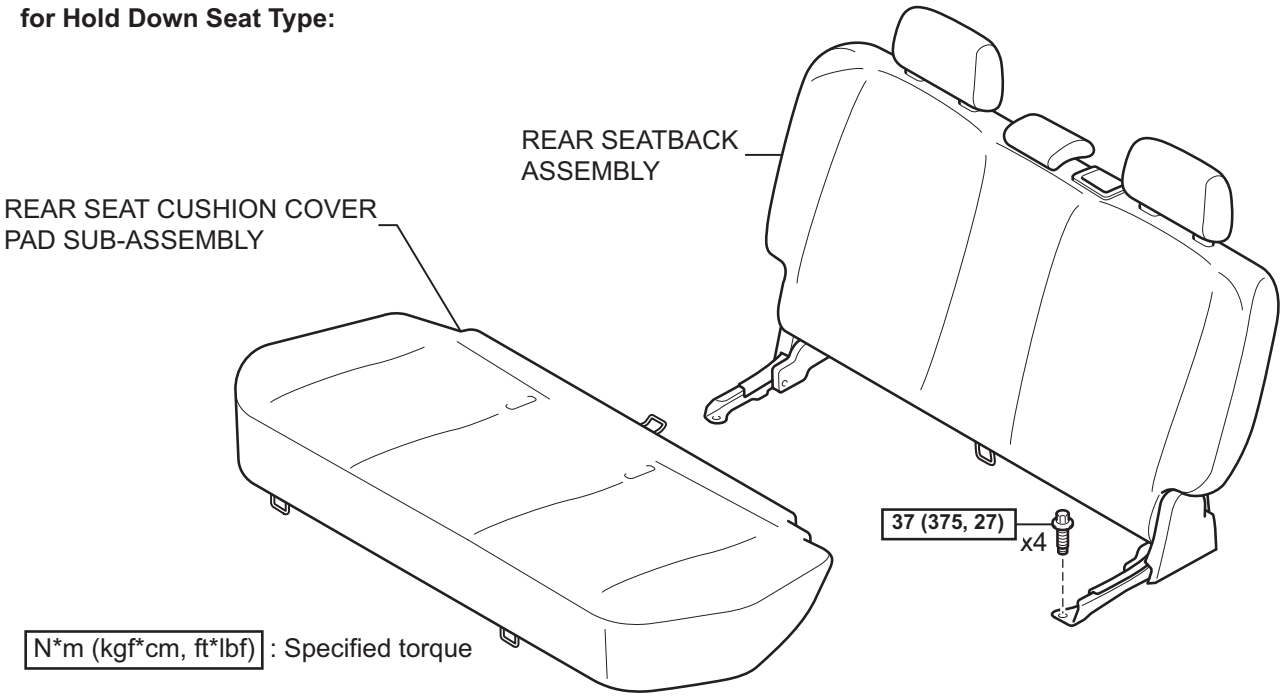

N*m (kgf*cm, ft*lbf) : Specified torque

T

B121713E03

RS

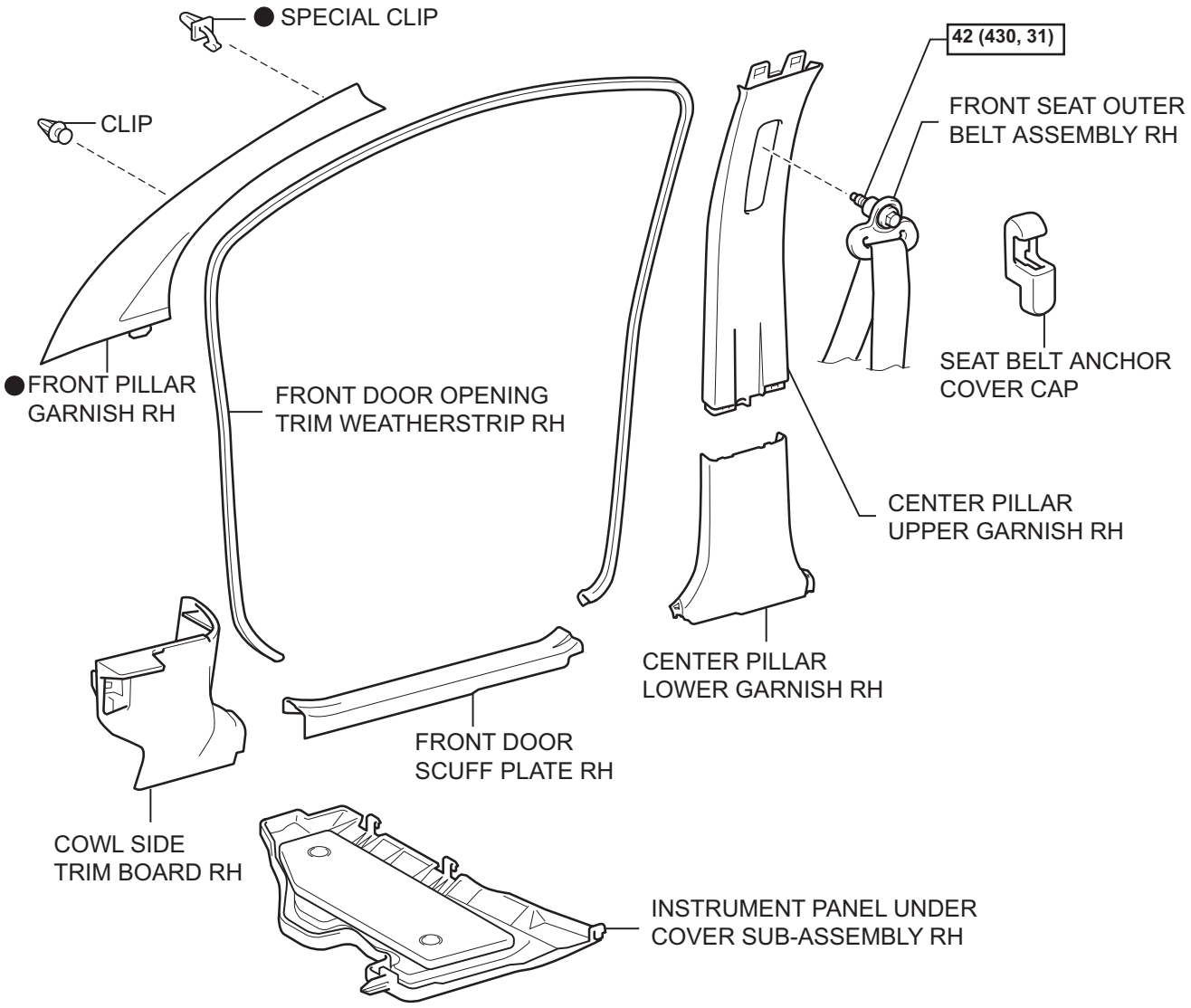

N*m (kgf*cm, ft*lbf) : Specified torque

● Non-reusable part

T

C123144E01

RS

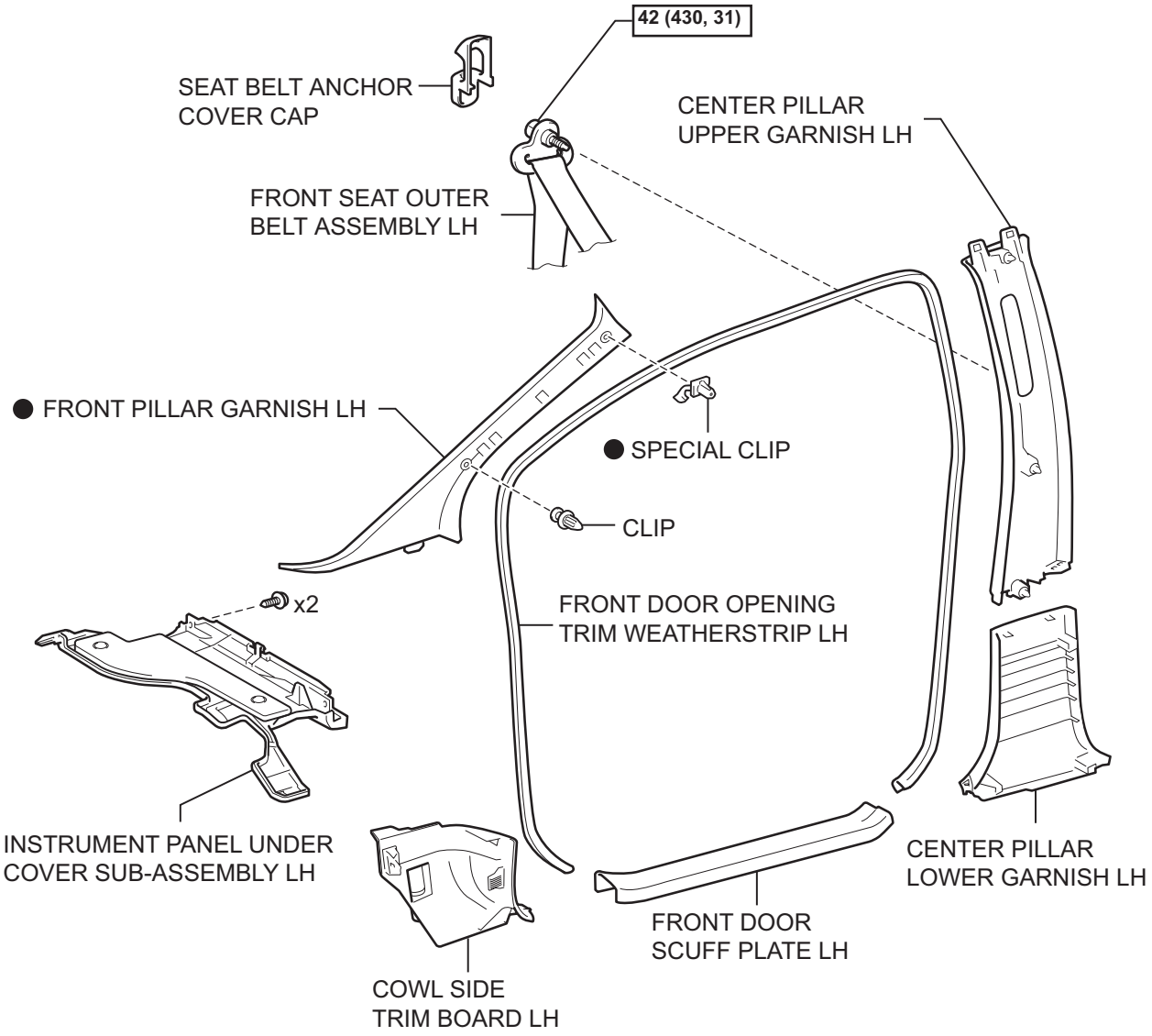

N*m (kgf*cm, ft*lbf) : Specified torque

● Non-reusable part

T

C123143E01

RS

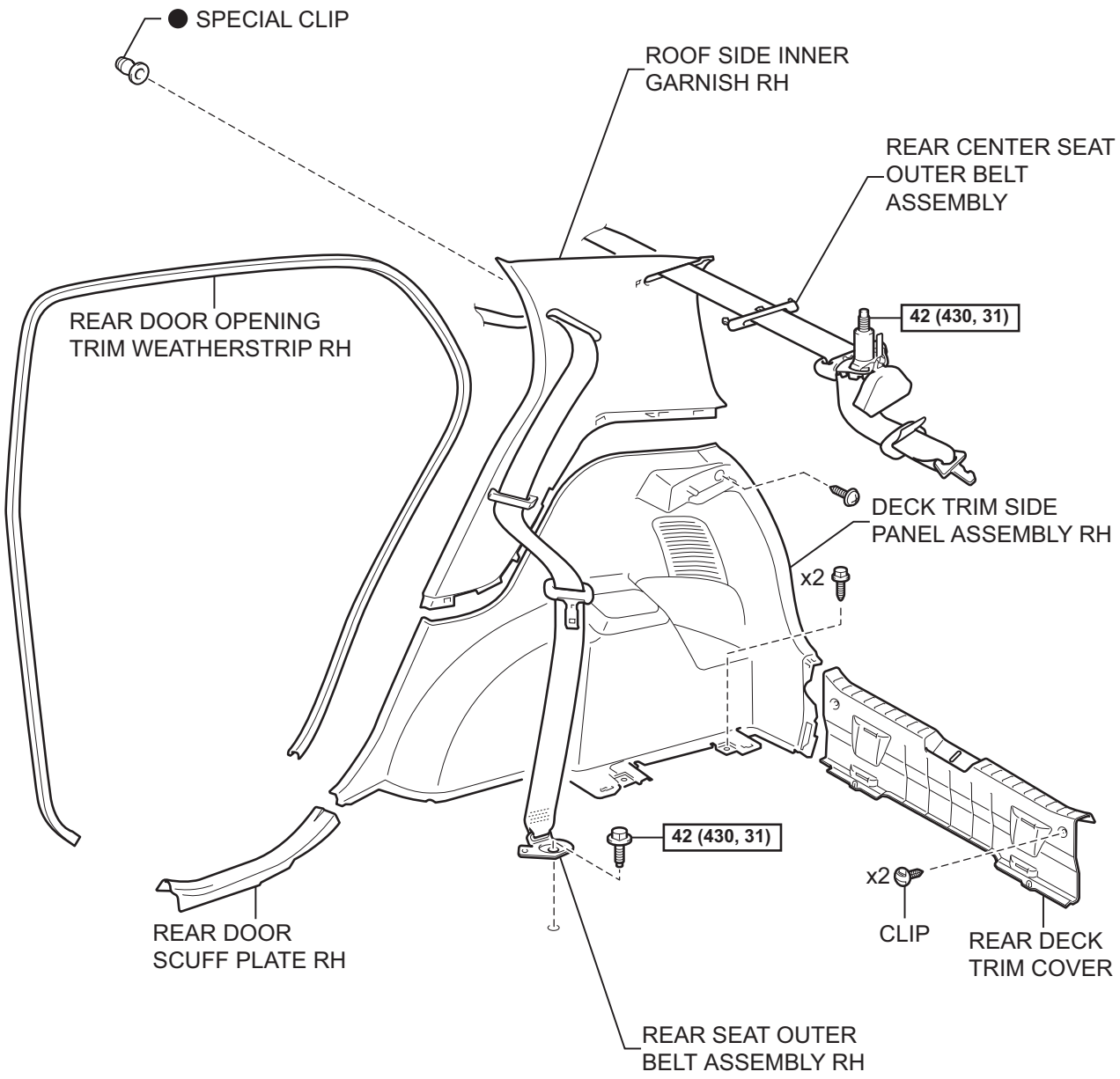

N*m (kgf*cm, ft*lbf) : Specified torque

● Non-reusable part

T

B114274E06

RS

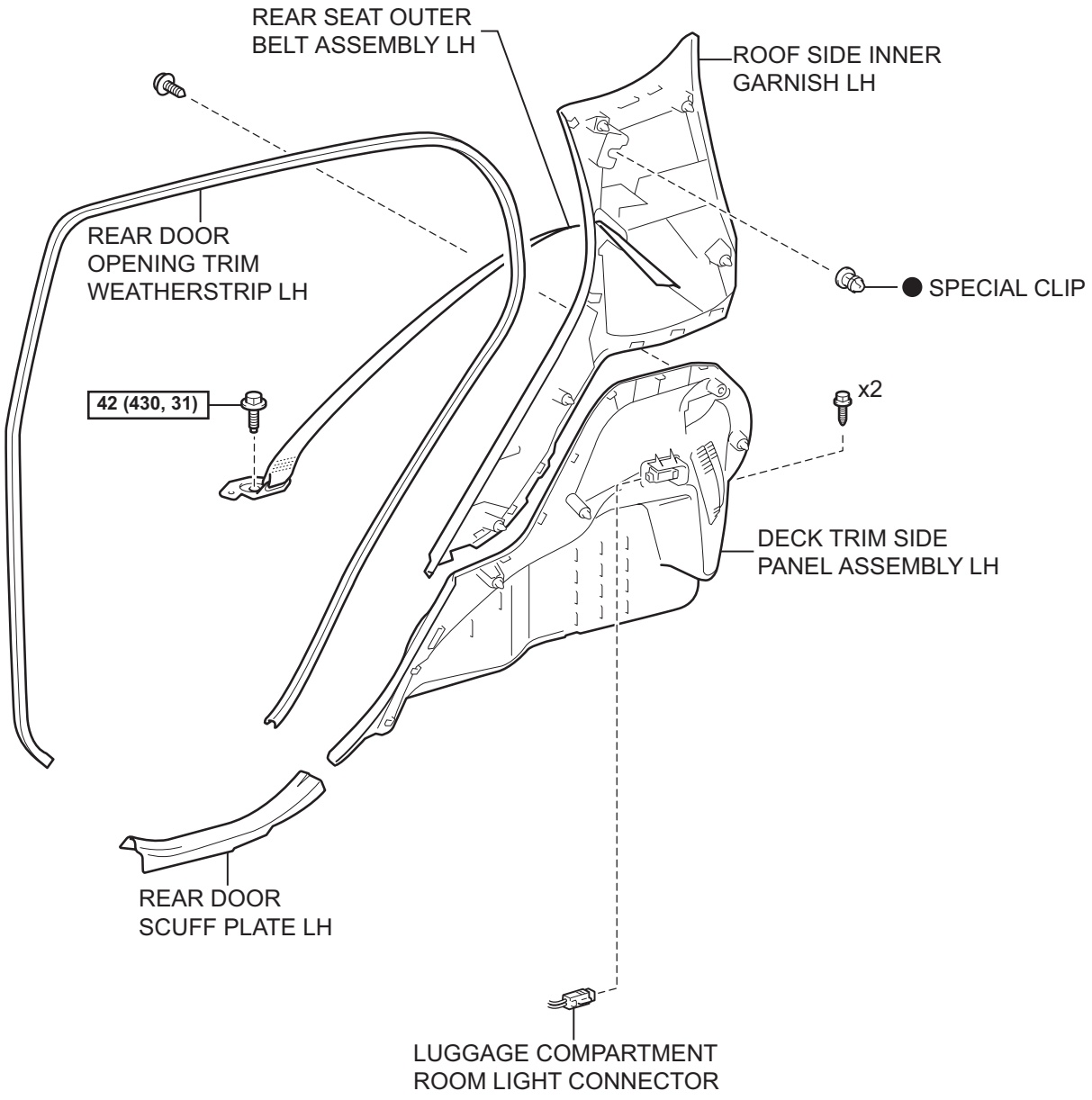

N*m (kgf*cm, ft*lbf) : Specified torque

● Non-reusable part

T

B114275E09

RS

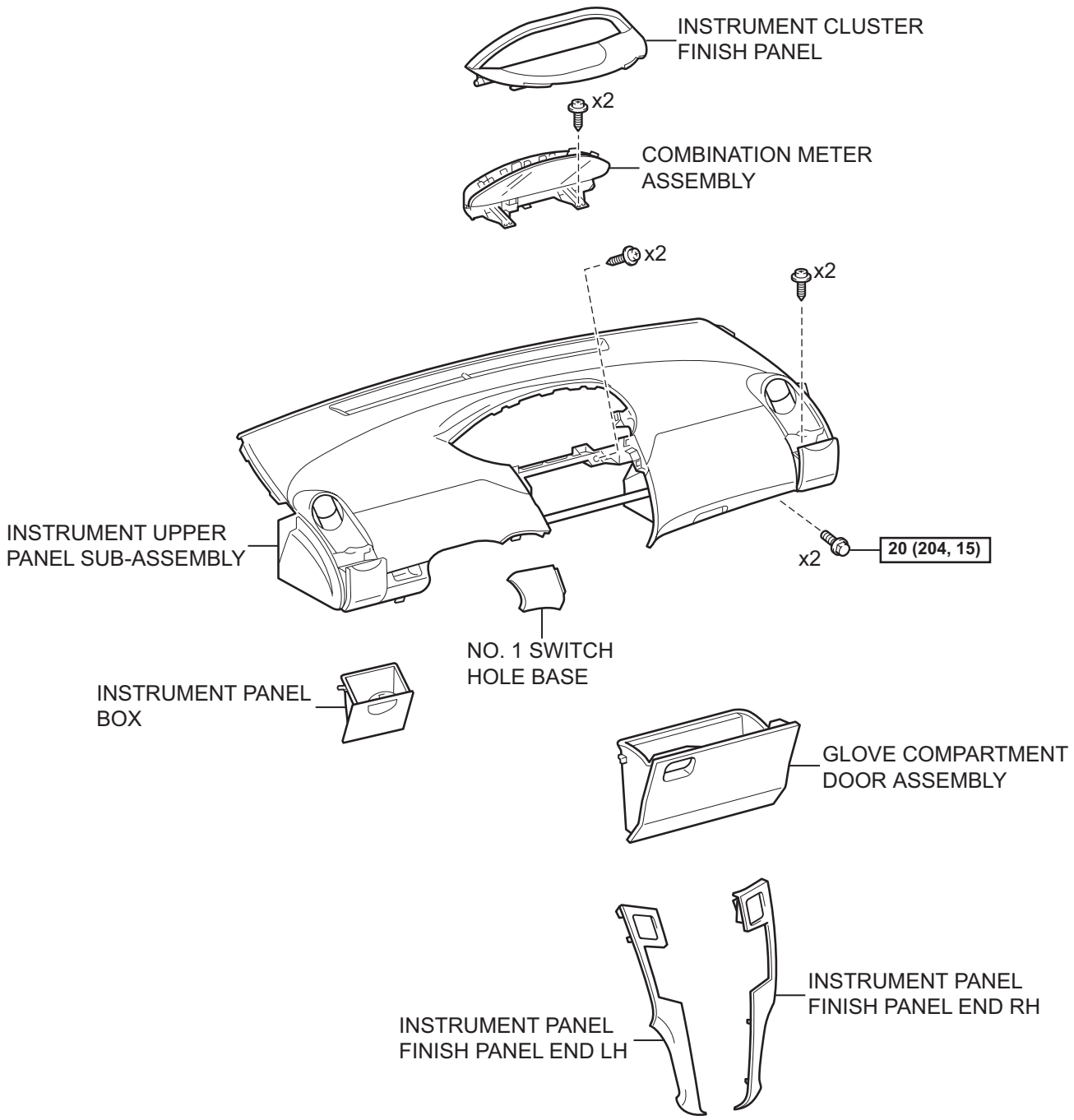

N*m (kgf*cm, ft*lbf) : Specified torque

T

B117770E01

RS

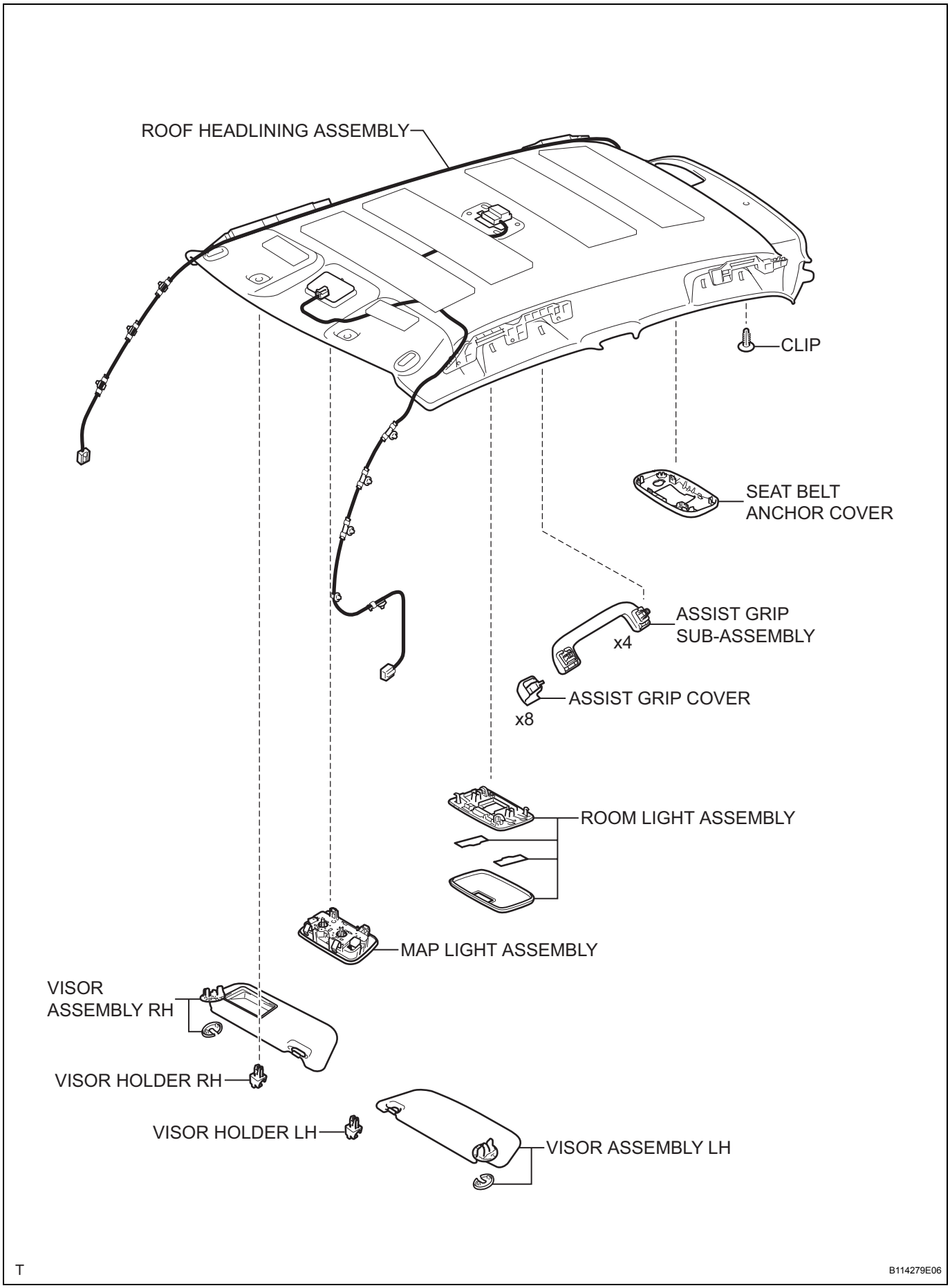
ROOF HEADLINING ASSEMBLY
CLIP
SEAT BELT ANCHOR COVER
ASSIST GRIP SUB-ASSEMBLY
x4
ASSIST GRIP COVER
x8
ROOM LIGHT ASSEMBLY
MAP LIGHT ASSEMBLY
VISOR ASSEMBLY RH
VISOR HOLDER RH
VISOR HOLDER LH
VISOR ASSEMBLY LH
T
B114279E06

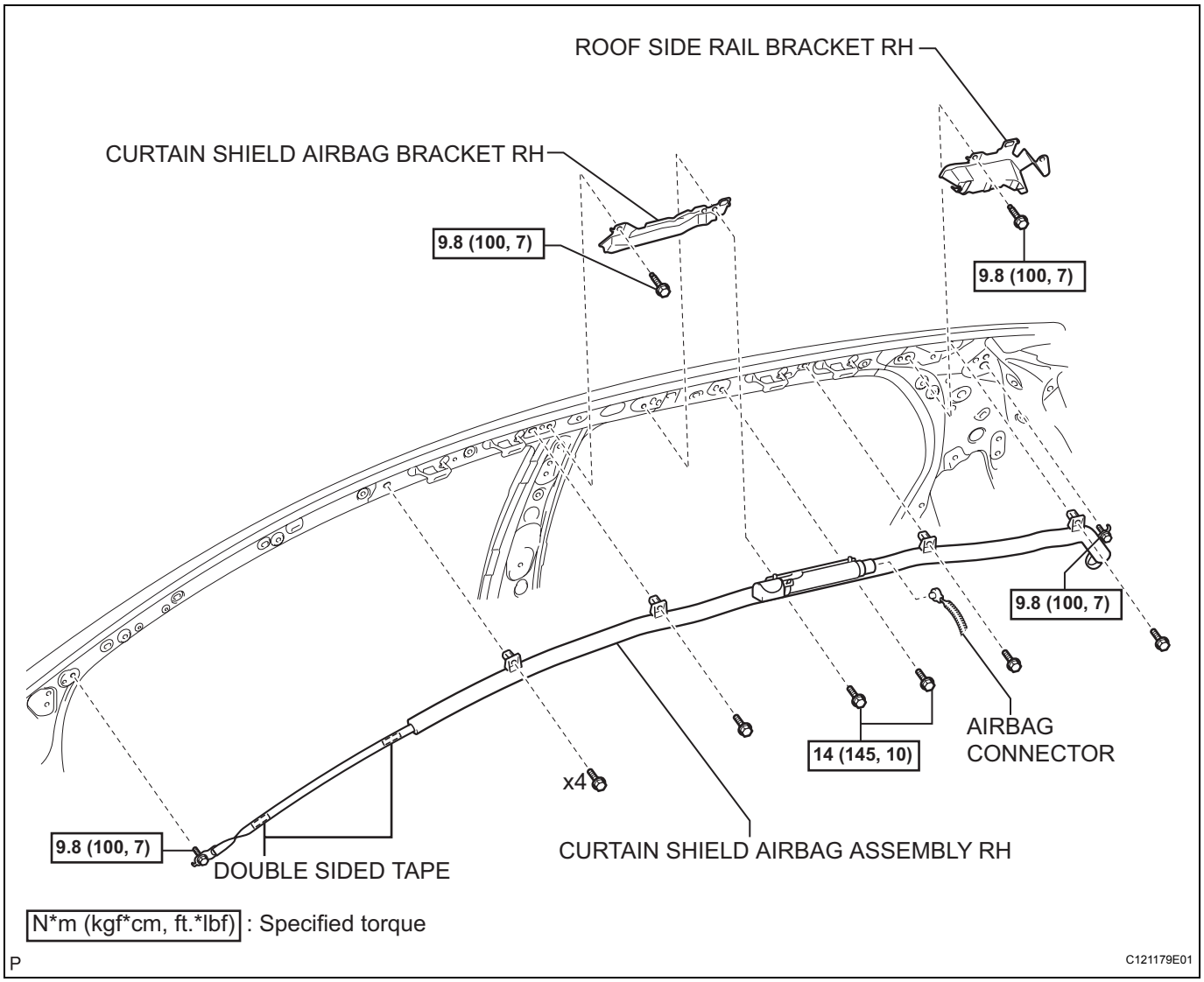
ROOF SIDE RAIL BRACKET RH
CURTAIN SHIELD AIRBAG BRACKET RH
9.8 (100, 7)
9.8 (100, 7)
9.8 (100, 7)
AIRBAG CONNECTOR
14 (145, 10)
x4
9.8 (100, 7)
DOUBLE SIDED TAPE
CURTAIN SHIELD AIRBAG ASSEMBLY RH
N*m (kgf*cm, ft.*lbf) : Specified torque
P
C121179E01

RS

ON-VEHICLE INSPECTION

1. **INSPECT CURTAIN SHIELD AIRBAG ASSEMBLY (for Vehicle not Involved in Collision)**
   (a) Perform a diagnostic system check (See page RS-38).
   (b) With the curtain shield airbag installed on the vehicle, perform a visual check. If there are any defects, such as those mentioned below, replace the front pillar garnish or roof headlining with a new one:
   Any cuts, minute cracks or marked discoloration on the front pillar garnish and roof headlining around the curtain shield airbag.

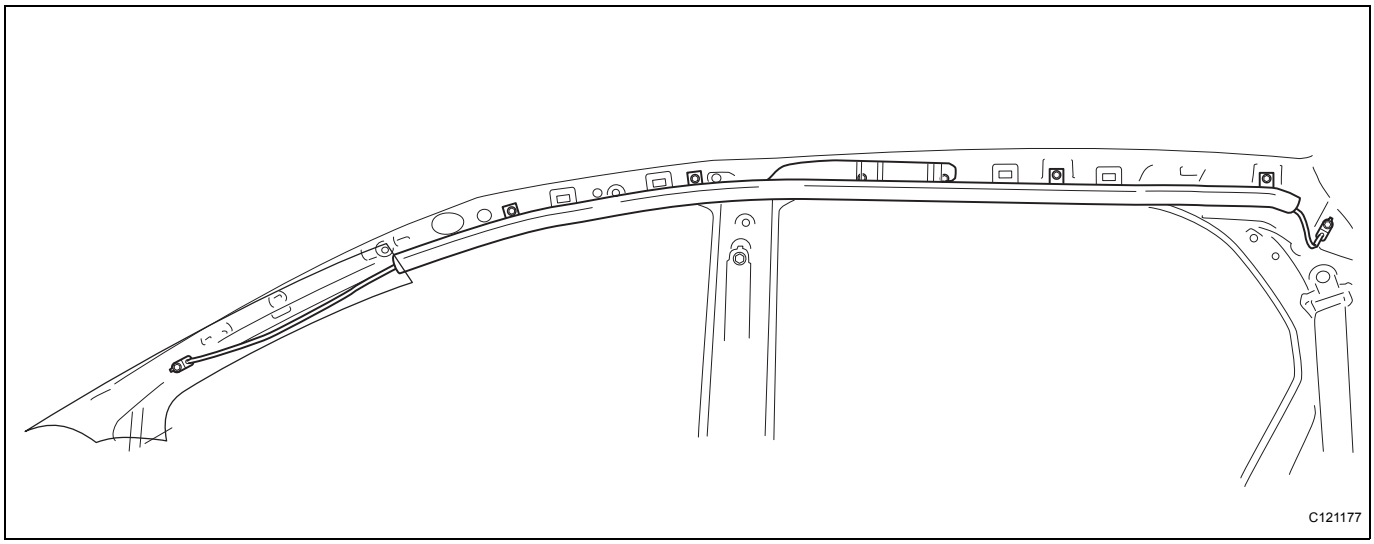

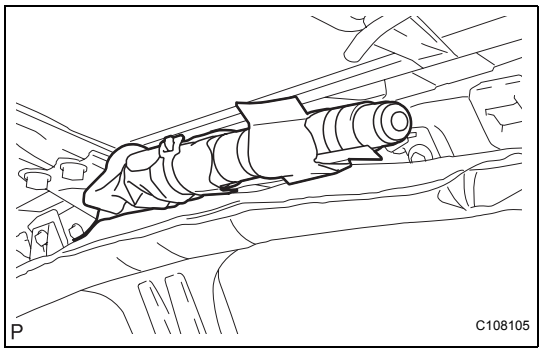

2. **INSPECT CURTAIN SHIELD AIRBAG ASSEMBLY (for Vehicle Involved in Collision and Airbag not Deployed)**
   CAUTION:
   For curtain shield airbag removal and installation procedures, see pages RS-386 and RS-390, and carefully follow the correct procedure.
   (a) Perform a diagnostic system check (See page RS-38).
   (b) With the curtain shield airbag removed from the vehicle, as mentioned below, replace the curtain shield airbag with a new one:
   - Any cuts, minute cracks or marked discoloration on the curtain shield airbag.
   - Any cracks or other damage to the connector.

REMOVAL

CAUTION:
Some of these service operations affect the SRS airbag system. Read the precautionary notices concerning the SRS airbag system before servicing (See page RS-1).
NOTICE:
Always use "Torx" socket wrench E10 when removing the rear seat.
HINT:
The procedure described below is for the LH side. Use the same procedure for both the RH and LH sides, unless otherwise specified.

1. **DISCONNECT CABLE FROM NEGATIVE BATTERY TERMINAL**
2. **REMOVE PACKAGE TRAY TRIM PANEL ASSEMBLY (See page IR-48)**
3. **REMOVE DECK BOARD SUB-ASSEMBLY (See page IR-48)**
4. **REMOVE DECK FLOOR BOX RH (See page IR-48)**
5. **REMOVE DECK FLOOR BOX LH (See page IR-48)**
6. **REMOVE NO. 1 REAR SEAT LEG COVER (for 60/40 Split Seat Type) (See page IR-48)**
7. **REMOVE NO. 2 REAR SEAT LEG COVER (for 60/40 Split Seat Type) (See page SE-85)**
8. **REMOVE REAR SEAT ASSEMBLY RH (for 60/40 Split Seat Type) (See page SE-89)**
9. **REMOVE REAR SEAT ASSEMBLY LH (for 60/40 Split Seat Type) (See page SE-71)**
10. **REMOVE REAR SEAT CUSHION COVER PAD SUB-ASSEMBLY (for Bench Seat Type) (See page SE-114)**
11. **REMOVE REAR SEATBACK ASSEMBLY (for Bench Seat Type) (See page SE-115)**
12. **REMOVE REAR DECK TRIM COVER (See page IR-49)**
13. **REMOVE FRONT DOOR SCUFF PLATE RH (See page IR-49)**
14. **REMOVE FRONT DOOR SCUFF PLATE LH**
    HINT:
    Use the same procedure as for the RH side.
15. **REMOVE INSTRUMENT PANEL UNDER COVER SUB-ASSEMBLY RH (See page IR-50)**
16. **REMOVE INSTRUMENT PANEL UNDER COVER SUB-ASSEMBLY LH (See page IR-50)**
17. **REMOVE COWL SIDE TRIM BOARD RH (See page IR-50)**
18. **REMOVE COWL SIDE TRIM BOARD LH (See page IR-50)**

19. **REMOVE FRONT DOOR OPENING TRIM WEATHERSTRIP RH (See page IR-50)**

20. **REMOVE FRONT DOOR OPENING TRIM WEATHERSTRIP LH (See page IR-50)**

21. **REMOVE REAR DOOR SCUFF PLATE RH (See page IR-51)**

22. **REMOVE REAR DOOR SCUFF PLATE LH**
    HINT:
    Use the same procedure as for the RH side.

23. **REMOVE REAR DOOR OPENING TRIM WEATHERSTRIP RH (See page IR-51)**

24. **REMOVE REAR DOOR OPENING TRIM WEATHERSTRIP LH**
    HINT:
    Use the same procedure as for the RH side.

25. **REMOVE REAR SEAT OUTER BELT ASSEMBLY RH (See page IR-51)**

26. **REMOVE REAR SEAT OUTER BELT ASSEMBLY LH**
    HINT:
    Use the same procedure as for the RH side.

27. **REMOVE DECK TRIM SIDE PANEL ASSEMBLY RH (See page IR-52)**

28. **REMOVE DECK TRIM SIDE PANEL ASSEMBLY LH (See page IR-52)**

29. **REMOVE REAR CENTER SEAT OUTER BELT ASSEMBLY (See page IR-52)**

30. **REMOVE ROOF SIDE INNER GARNISH RH (See page IR-53)**

31. **REMOVE ROOF SIDE INNER GARNISH LH (See page IR-54)**

32. **REMOVE SEAT BELT ANCHOR COVER CAP (See page IR-54)**

33. **INSTALL FRONT SEAT OUTER BELT ASSEMBLY RH (See page IR-51)**

34. **REMOVE FRONT SEAT OUTER BELT ASSEMBLY LH (See page IR-55)**

35. **REMOVE CENTER PILLAR LOWER GARNISH RH (See page IR-55)**

36. **REMOVE CENTER PILLAR LOWER GARNISH LH**
    HINT:
    Use the same procedure as for the RH side.

37. **REMOVE CENTER PILLAR UPPER GARNISH RH (See page IR-55)**

38. **REMOVE CENTER PILLAR UPPER GARNISH LH**
    HINT:
    Use the same procedure as for the RH side.

39. **REMOVE SEAT BELT ANCHOR COVER (See page SB-159)**
40. **REMOVE ASSIST GRIP SUB-ASSEMBLY (See page IR-56)**
41. **REMOVE VISOR ASSEMBLY RH (See page IR-56)**
42. **REMOVE VISOR ASSEMBLY LH**
    HINT:
    Use the same procedure as for the RH side.
43. **REMOVE VISOR HOLDER RH (See page IR-56)**
44. **REMOVE VISOR HOLDER LH**
    HINT:
    Use the same procedure as for the RH side.
45. **REMOVE ROOM LIGHT ASSEMBLY (See page IR-57)**
46. **REMOVE MAP LIGHT ASSEMBLY (See page IR-58)**
47. **REMOVE FRONT PILLAR GARNISH RH (See page IR-58)**
48. **REMOVE FRONT PILLAR GARNISH LH (See page IR-59)**
49. **REMOVE INSTRUMENT PANEL FINISH PANEL END LH (See page ME-145)**
50. **REMOVE INSTRUMENT PANEL FINISH PANEL END RH (See page ME-145)**
51. **REMOVE INSTRUMENT CLUSTER FINISH PANEL (See page ME-145)**
52. **REMOVE COMBINATION METER ASSEMBLY (See page ME-146)**
53. **REMOVE GLOVE COMPARTMENT DOOR ASSEMBLY (See page IP-20)**
54. **REMOVE NO. 1 SWITCH HOLE BASE (See page IP-20)**
55. **REMOVE INSTRUMENT UPPER PANEL SUB-ASSEMBLY (See page IP-21)**
56. **REMOVE INSTRUMENT PANEL BOX (See page IP-70)**
57. **REMOVE ROOF HEADLINING ASSEMBLY (See page IR-61)**

RS

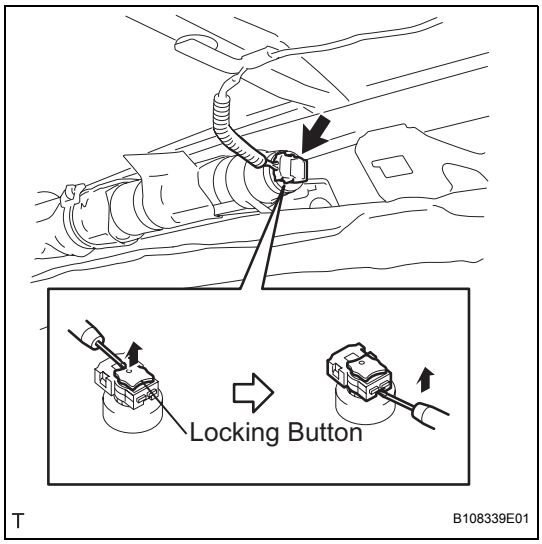

58. REMOVE CURTAIN SHIELD AIRBAG ASSEMBLY RH

(a) Using a thin-bladed screwdriver, release the locking button.
(b) Using a thin-bladed screwdriver, detach the airbag connector.
(c) Loosen the 2 bolts.
(d) Disengage the 2 hooks.
(e) Remove the 2 bolts and 4 screws.

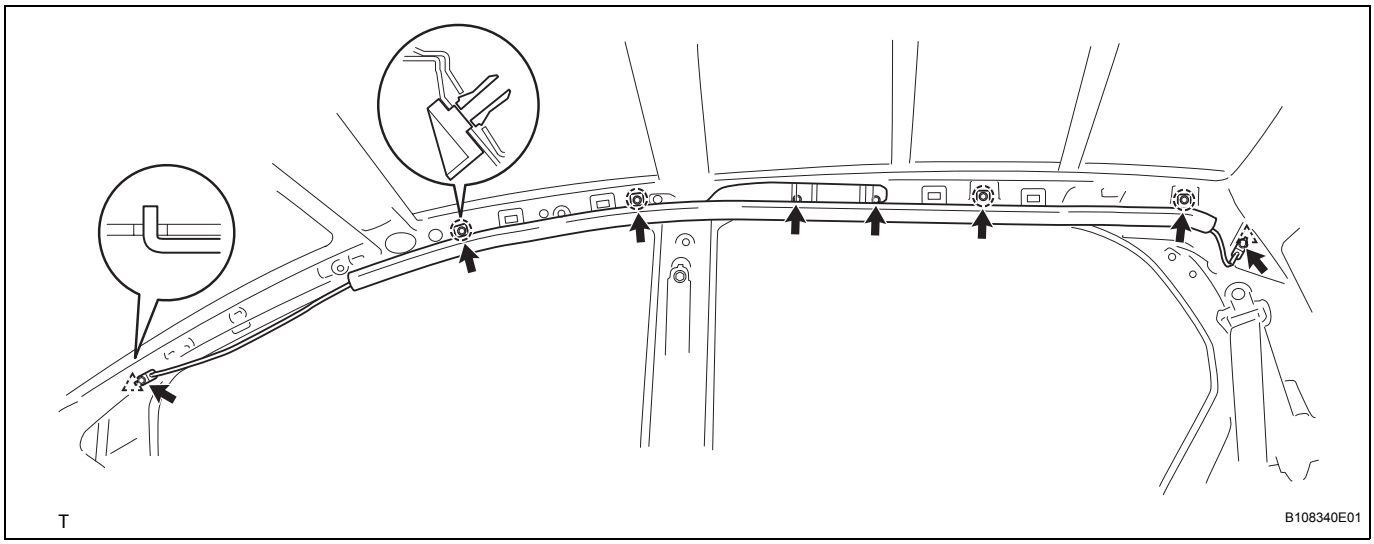

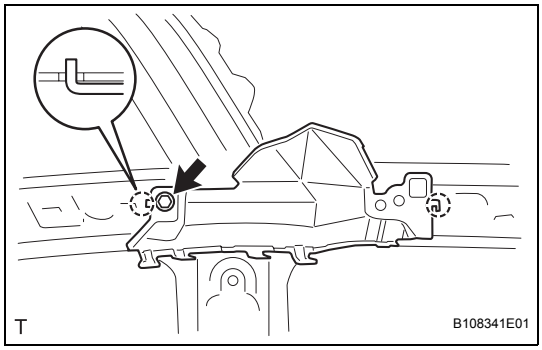

59. REMOVE CURTAIN SHIELD AIRBAG BRACKET RH

(a) Using a screwdriver, disengage the 2 hooks and remove the curtain shield airbag bracket.

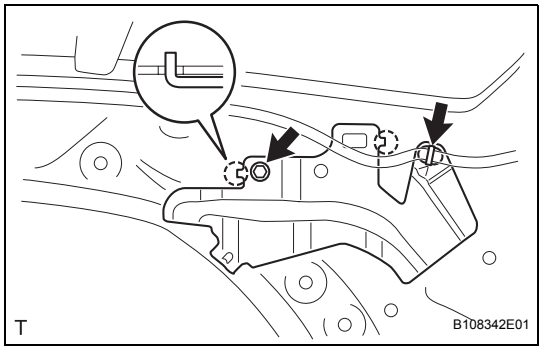

60. REMOVE ROOF SIDE RAIL BRACKET RH

(a) Remove the wire harness clamp.
(b) Remove the bolt, disengage the 2 hooks and remove the roof side rail bracket.

INSTALLATION

CAUTION:
Some of these service operations affect the SRS airbag system. Read the precautionary notices concerning the SRS airbag system before servicing (See page RS-1).
NOTICE:
Always use "Torx" socket wrench E10 when installing the rear seat.
HINT:
The procedure described below is for the RH side. Use the same procedure for both the RH and LH sides, unless otherwise specified.

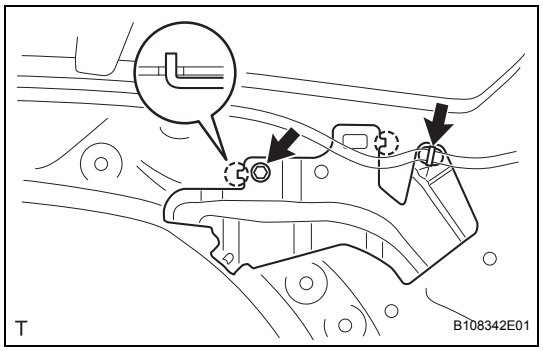

1. INSTALL ROOF SIDE RAIL BRACKET RH
(a) Insert the 2 hooks into the body holes and install the roof side rail bracket.
Torque: 9.8 N*m (100 kgf*cm, 7 ft.*lbf)
(b) Install the wire harness clamp.

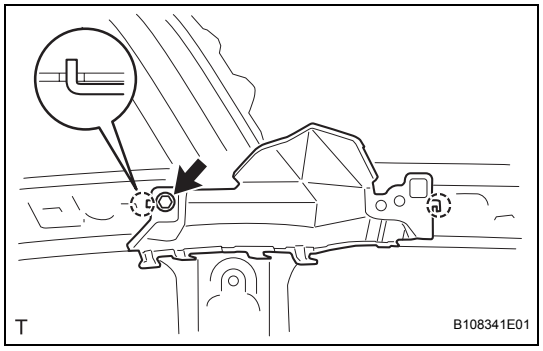

2. INSTALL CURTAIN SHIELD AIRBAG BRACKET RH
(a) Insert the 2 hooks into the body holes and install the curtain shield back bracket.
Torque: 9.8 N*m (100 kgf*cm, 7 ft.*lbf)

3. INSTALL CURTAIN SHIELD AIRBAG ASSEMBLY RH
(a) Tighten the 2 bolts A.
Torque: 14 N*m (145 kgf*cm, 10 ft.*lbf)
(b) Tighten the 4 screws B.

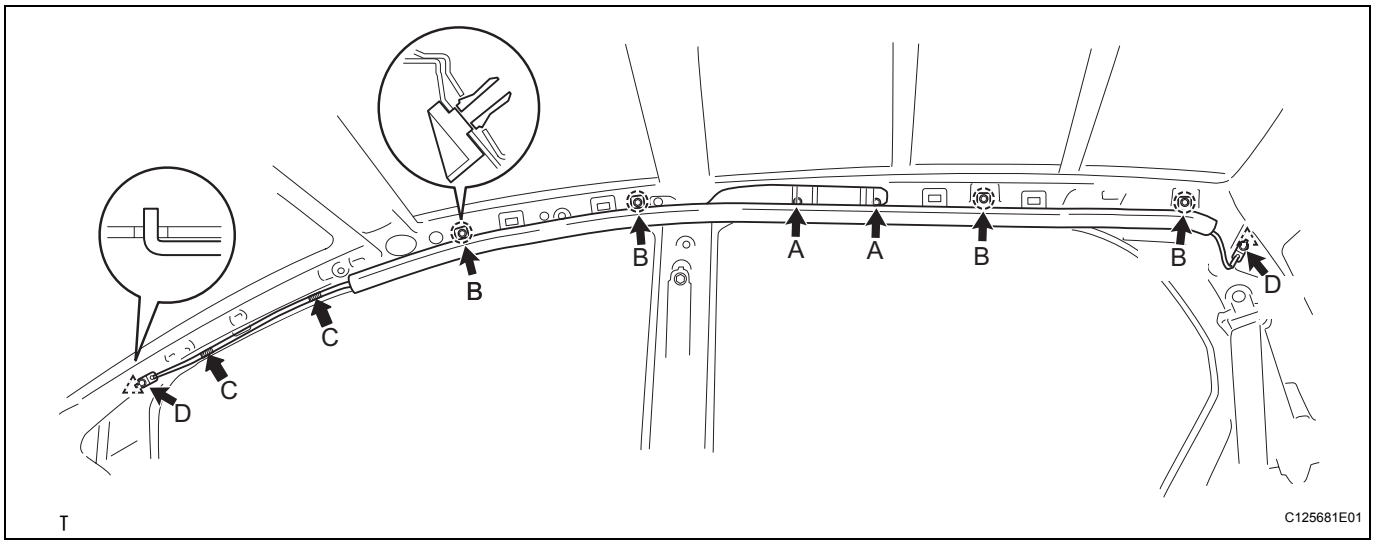

RS

(c) Install the front strap.
NOTICE:
Attach double sided tape to the indicated area, with the strap pulled downward. When installing the strap, make sure that the front pillar garnish installation holes are not hidden by the strap of the curtain shield airbag.

(d) Tighten the 2 bolts D.
Torque: 9.8 N*m (100 kgf*cm, 7 ft.*lbf)

(e) Connect the airbag connector.
NOTICE:
Securely lock the locking button.

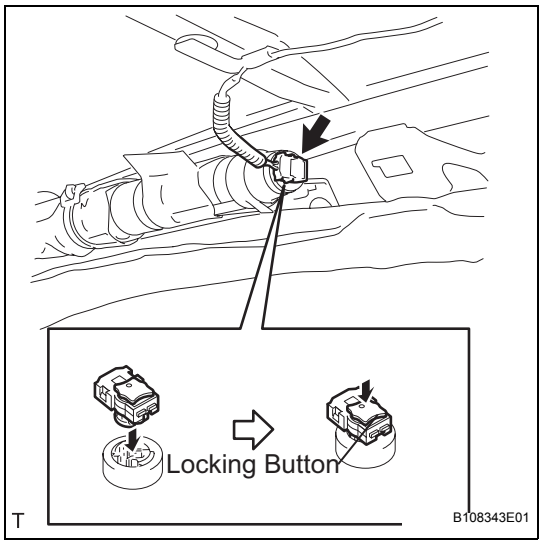

4. **INSTALL ROOF HEADLINING ASSEMBLY (See page IR-69)**
5. **INSTALL INSTRUMENT PANEL BOX (See page IP-78)**
6. **INSTALL INSTRUMENT UPPER PANEL SUB-ASSEMBLY (See page IP-29)**
7. **INSTALL NO. 1 SWITCH HOLE BASE (See page IP-32)**
8. **INSTALL GLOVE COMPARTMENT DOOR ASSEMBLY (See page IP-32)**
9. **INSTALL COMBINATION METER ASSEMBLY (See page ME-148)**
10. **INSTALL INSTRUMENT CLUSTER FINISH PANEL (See page ME-148)**
11. **INSTALL INSTRUMENT PANEL FINISH PANEL END RH (See page ME-149)**
12. **INSTALL INSTRUMENT PANEL FINISH PANEL END LH (See page ME-149)**
13. **INSTALL FRONT PILLAR GARNISH RH (See page IR-71)**
14. **INSTALL FRONT PILLAR GARNISH LH (See page IR-72)**
15. **INSTALL MAP LIGHT ASSEMBLY (See page IR-73)**
16. **INSTALL ROOM LIGHT ASSEMBLY (See page IR-74)**
17. **INSTALL VISOR HOLDER RH (See page IR-75)**
18. **INSTALL VISOR HOLDER LH (See page IR-75)**
19. **INSTALL VISOR ASSEMBLY RH (See page IR-75)**
20. **INSTALL VISOR ASSEMBLY LH (See page IR-75)**
21. **INSTALL ASSIST GRIP SUB-ASSEMBLY (See page IR-75)**
22. **INSTALL SEAT BELT ANCHOR COVER (See page IR-75)**
23. **INSTALL CENTER PILLAR UPPER GARNISH RH (See page IR-76)**

24. **INSTALL CENTER PILLAR UPPER GARNISH LH (See page IR-76)**
25. **INSTALL CENTER PILLAR LOWER GARNISH RH (See page IR-76)**
26. **INSTALL CENTER PILLAR LOWER GARNISH LH (See page IR-76)**
27. **INSTALL FRONT SEAT OUTER BELT ASSEMBLY RH (See page IR-76)**
28. **INSTALL FRONT SEAT OUTER BELT ASSEMBLY LH (See page IR-76)**
29. **INSTALL SEAT BELT ANCHOR COVER CAP (See page IR-76)**
30. **INSTALL ROOF SIDE INNER GARNISH RH (See page IR-77)**
31. **INSTALL ROOF SIDE INNER GARNISH LH (See page IR-77)**
32. **INSTALL REAR CENTER SEAT OUTER BELT ASSEMBLY (See page IR-78)**
33. **INSTALL DECK TRIM SIDE PANEL ASSEMBLY RH (See page IR-79)**
34. **INSTALL DECK TRIM SIDE PANEL ASSEMBLY LH (See page IR-79)**
35. **INSTALL REAR SEAT OUTER BELT ASSEMBLY RH (See page IR-76)**
36. **INSTALL REAR SEAT OUTER BELT ASSEMBLY LH (See page IR-80)**
37. **INSTALL REAR DOOR OPENING TRIM WEATHERSTRIP RH (See page IR-80)**
38. **INSTALL REAR DOOR OPENING TRIM WEATHERSTRIP LH (See page IR-80)**
39. **INSTALL REAR DOOR SCUFF PLATE RH (See page IR-80)**
40. **INSTALL REAR DOOR SCUFF PLATE LH (See page IR-80)**
41. **INSTALL FRONT DOOR OPENING TRIM WEATHERSTRIP RH (See page IR-81)**
42. **INSTALL FRONT DOOR OPENING TRIM WEATHERSTRIP LH (See page IR-81)**
43. **INSTALL COWL SIDE TRIM BOARD RH (See page IR-81)**
44. **INSTALL COWL SIDE TRIM BOARD LH (See page IR-81)**
45. **INSTALL INSTRUMENT PANEL UNDER COVER SUB-ASSEMBLY RH (See page IR-81)**

46. **INSTALL INSTRUMENT PANEL UNDER COVER SUB-ASSEMBLY LH (See page IR-82)**
47. **INSTALL FRONT DOOR SCUFF PLATE RH (See page IR-82)**
48. **INSTALL FRONT DOOR SCUFF PLATE LH (See page IR-82)**
49. **INSTALL REAR DECK TRIM COVER (See page IR-82)**
50. **INSTALL REAR SEAT ASSEMBLY LH (for 60/40 Split Seat Type) (See page SE-84)**
51. **INSTALL REAR SEAT ASSEMBLY RH (for 60/40 Split Seat Type) (See page SE-102)**
52. **INSTALL NO. 2 REAR SEAT LEG COVER (for 60/40 Split Seat Type) (See page SE-85)**
53. **INSTALL NO. 1 REAR SEAT LEG COVER (for 60/40 Split Seat Type) (See page SE-85)**
54. **INSTALL REAR SEATBACK ASSEMBLY (for Bench Seat Type) (See page SE-122)**
55. **INSTALL REAR SEAT CUSHION COVER PAD SUB-ASSEMBLY (for Bench Seat Type) (See page SE-123)**
56. **INSTALL DECK FLOOR BOX RH (See page IR-83)**
57. **INSTALL DECK FLOOR BOX LH (See page IR-83)**
58. **INSTALL DECK BOARD SUB-ASSEMBLY (See page IR-83)**
59. **INSTALL PACKAGE TRAY TRIM PANEL ASSEMBLY (See page IR-83)**
60. **CONNECT CABLE TO NEGATIVE BATTERY TERMINAL**
    Torque: 5.4 N*m (55 kgf*cm, 48 in.*lbf)
61. **INSPECT SRS WARNING LIGHT**
    (See page RS-31)

DISPOSAL

HINT:
- Disposal procedure for the RH side is the same as that for the LH side.
- The procedure described below are for the RH side.
- When scrapping a vehicle equipped with the SRS or disposing of a curtain shield airbag, deploy the airbag first in accordance with the procedure described below. If any abnormality occurs with the airbag deployment, contact the SERVICE DEPT. of the DISTRIBUTOR.

CAUTION:
- **Never dispose of a curtain shield airbag that has an undeployed airbag.**
- **The airbag emits an exploding sound when it is deployed, so perform the operation outdoors and where it will not create a nuisance to nearby residents.**
- **When deploying the airbag, always use the specified SST (SRS Airbag Deployment Tool). Perform the operation in a place away from electrical noise.**
- **When deploying the airbag, perform the operation at least 10 m (33 ft) away from the curtain shield airbag.**
- **The curtain shield airbag becomes extremely hot when the airbag is deployed, so do not touch it for at least 30 minutes after deployment.**
- **Use gloves and safety glasses when handling a curtain shield airbag which has been deployed.**
- **Do not apply water, etc. to a curtain shield airbag which has been deployed.**
- **Always wash your hands with water after completing the operation.**

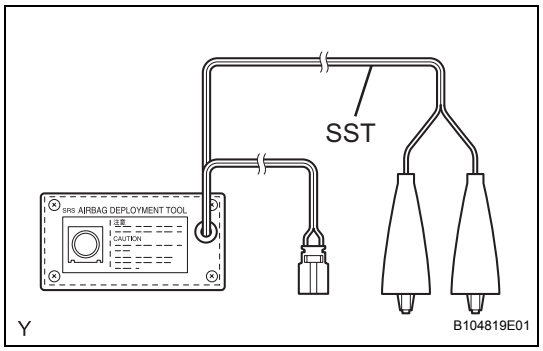

1. DISPOSE OF CURTAIN SHIELD AIRBAG ASSEMBLY (WHEN INSTALLED IN VEHICLE)

HINT:
Prepare a battery as the power source to deploy the airbag.

(a) Check the function of SST.
SST 09082-00700
CAUTION:
Always use the specified SST (SRS Airbag Deployment Tool) when deploying the airbag.

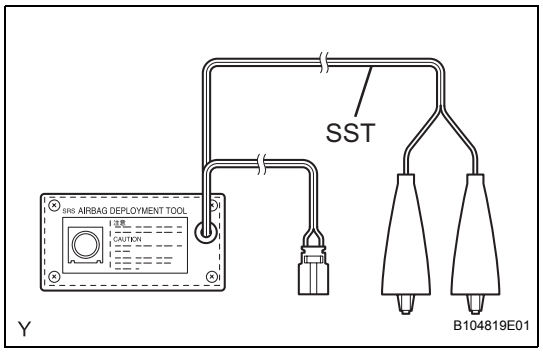

RS

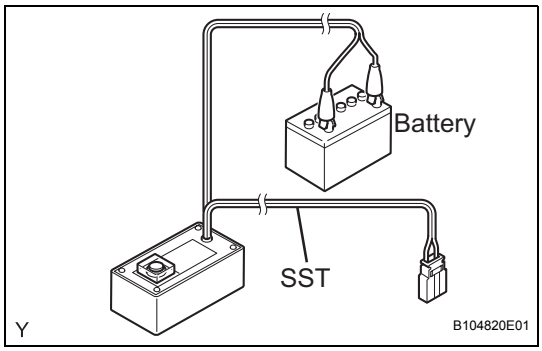

(1) Connect the red clip of SST to the positive battery terminal and the black clip of SST to the negative battery terminal.

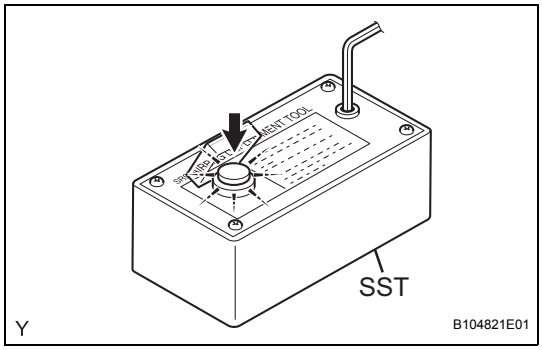

(2) Press the SST activation switch, and check that the LED of the SST activation switch illuminates.
CAUTION:
- **Do not connect the SST connector (yellow colored one) to the airbag.**
- **If the LED illuminates when the activation switch is not pressed, SST may be malfunctioning. Do not use SST.**

(3) Disconnect SST from the battery.

(b) Disconnect the cable from the negative battery terminal.

(c) Remove the roof headlining (See page RS-386).

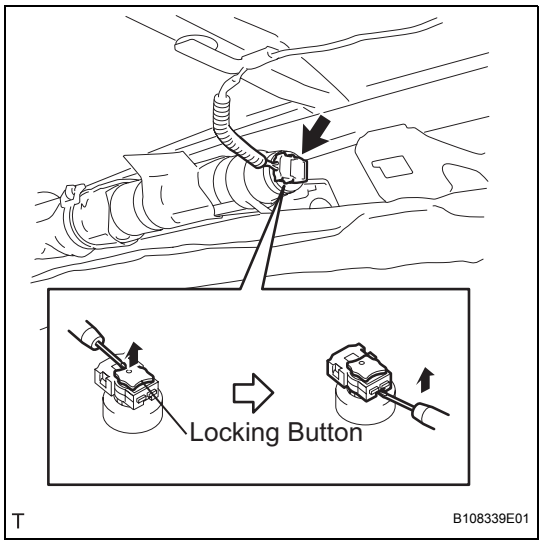

(d) Disconnect the airbag connector, as shown in the illustration.
NOTICE:
Do not damage the airbag wire harness when handling the airbag connector.

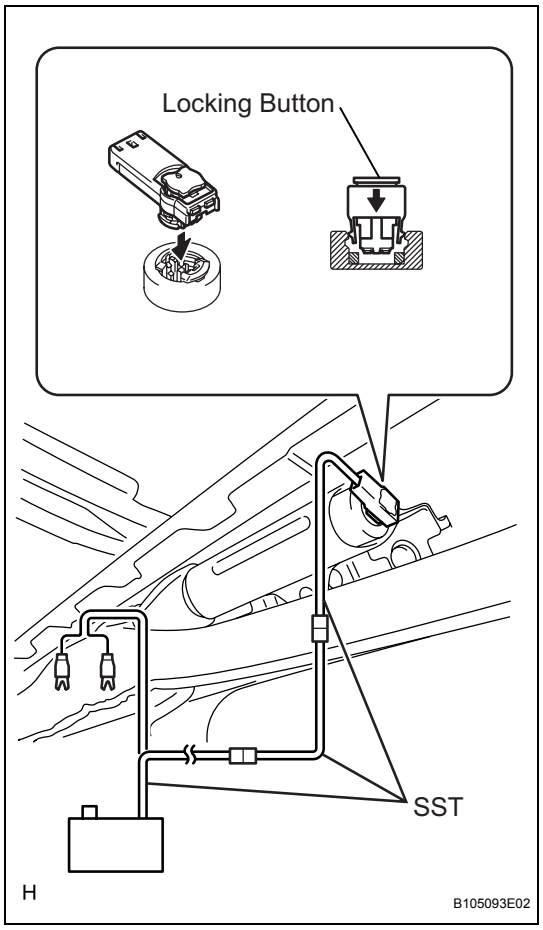

(e) Connect SST.
SST 09082-00700, 09082-00802 (09082-10801, 09082-20801)
(1) After connecting SST, connect it to the curtain shield airbag.
NOTICE:
Do not lock the secondary lock of the twin lock to avoid damaging the SST connector and wire harness.

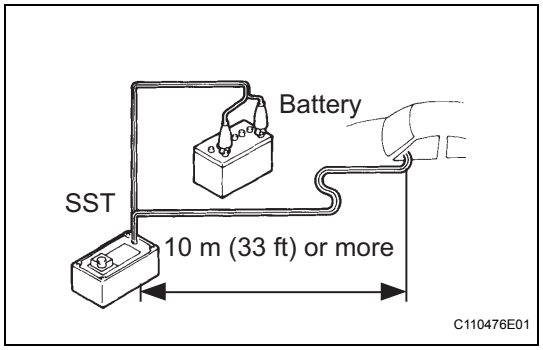

(2) Move SST to at least 10 m (33 ft) away from the vehicle.
(3) Close all doors and windows of the vehicle.
NOTICE:
Do not damage the SST wire harness.
(4) Connect the red clip of SST to the positive battery terminal and the black clip of SST to the negative battery terminal.

(f) Deploy the airbag.
(1) Check that no one is inside the vehicle or within a 10 m (33 ft) radius of the vehicle.
(2) Press the SST activation switch and deploy the airbag.
CAUTION:
- **When deploying the airbag, make sure that no one is near the vehicle.**
- **The curtain shield airbag becomes extremely hot when the airbag is deployed, so do not touch it for at least 30 minutes after deployment.**
- **Use gloves and safety glasses when handling a curtain shield airbag which has been deployed.**
- **Do not apply water, etc. to a curtain shield airbag which has been deployed.**
- **Always wash your hands with water after completing the operation.**

RS

RS

HINT:
The airbag is deployed as the LED of the SST activation switch illuminates.

2. DISPOSE OF CURTAIN SHIELD AIRBAG ASSEMBLY (WHEN NOT INSTALLED IN VEHICLE)

NOTICE:

- **Never use the customer's vehicle to deploy the airbag when only disposing of the curtain shield airbag.**
- **Follow the procedure detailed below when deploying the airbag.**

HINT:
Prepare a battery as the power source to deploy the airbag.

(a) Check the function of SST.
SST 09082-00700
CAUTION:
Always use the specified SST (SRS Airbag Deployment Tool) when deploying the airbag.

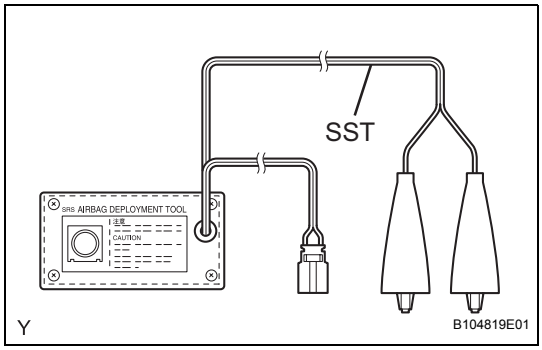

(1) Connect the red clip of SST to the positive battery terminal and the black clip of SST to the negative battery terminal.

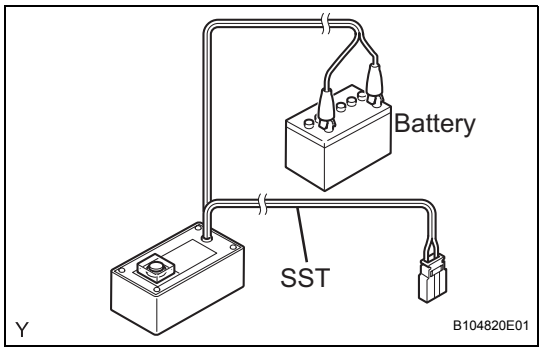

(2) Press the SST activation switch, and check that the LED of the SST activation switch illuminates.
CAUTION:
- **Do not connect the SST connector (yellow colored one) to the airbag.**
- **If the LED illuminates when the activation switch is not pressed, SST may be malfunctioning. Do not use SST.**

(3) Disconnect SST from the battery.

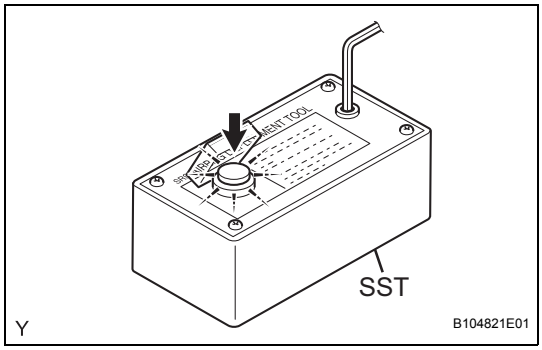

(b) Remove the curtain shield airbag (See page RS-386).

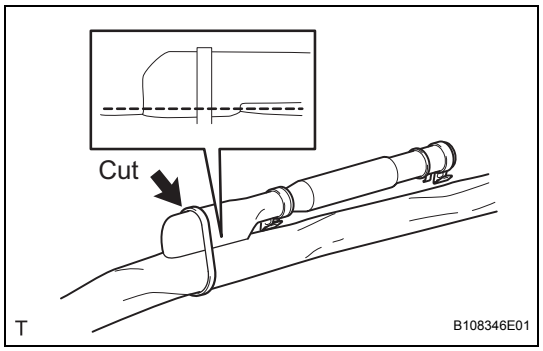

(c) Cut off the deployment section of the curtain shield airbag.

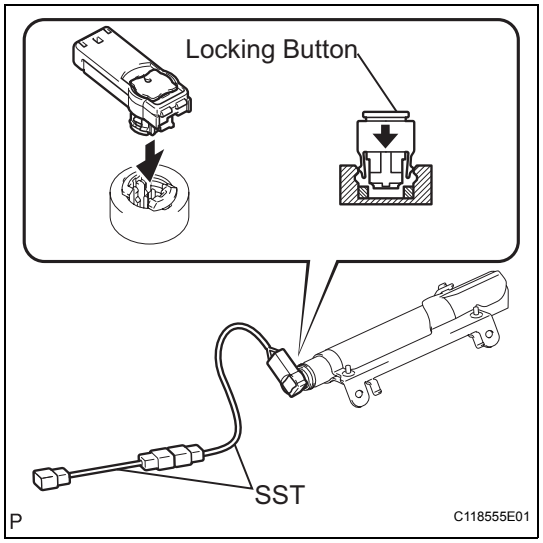

(d) Connect SST.
SST 09082-00802 (09082-10801, 09082-20801)
(1) After connecting SST, connect it to the curtain shield airbag.
NOTICE:
Do not lock the secondary lock of the twin lock to avoid damaging the SST connector and wire harness.

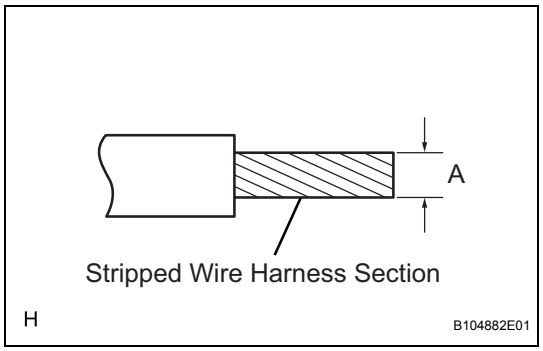

(e) Using a service-purpose wire harness for the vehicle, tie the curtain shield airbag to the tire.
Stripped wire harness section:

Area	Measurement
A	1.25 mm^2 or more (0.0019 $in.^2$ or more)

CAUTION:
Do not use wire harness that is too thin or any other object to tie the curtain shield airbag because it may snap due to the shock when the airbag is deployed. Always use a wire harness for vehicle use with a cross section of at least 1.25 mm^2 (0.0019 in^2).
HINT:
To calculate the area of the stripped wire harness cross section:
Area = 3.14 x $(Diameter)^2$ divided by 4

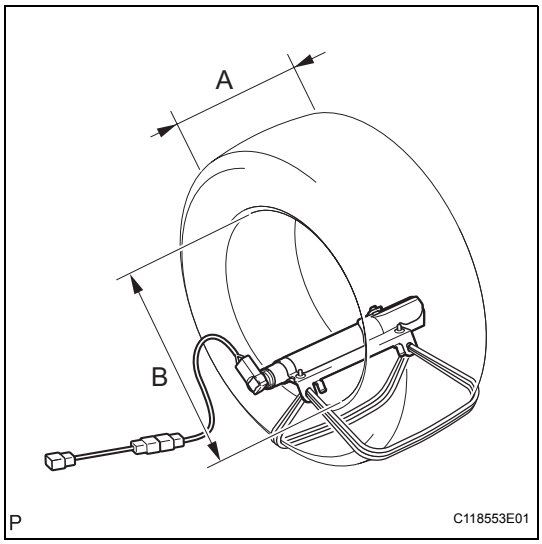

(1) Position the curtain shield airbag inside the tire, as shown in the illustration.
Tire size:

Area	Measurement
A	185 mm (7.28 in.)
B	360 mm (14.17 in.)

CAUTION:
Make sure that the wire harnesses are tight. If there is any slack in the wire harnesses, the curtain shield airbag may become loose due to the shock when the airbag is deployed.
NOTICE:
The tire will be marked by the airbag deployment, so use a waste tire.

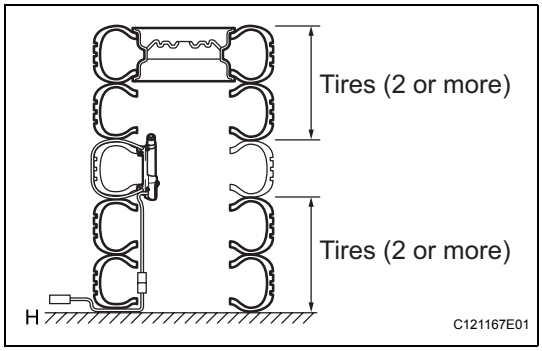

(f) Place the tires.
CAUTION:
Do not place the curtain shield airbag with the deployment direction facing toward the ground.
(1) Place at least 2 tires under the tire to which the curtain shield airbag is tied.
(2) Place at least 2 tires over the tire to which the curtain shield airbag is tied. The disc wheel should be installed onto the top tire.
NOTICE:
Do not place the SST connector under the tire because it could be damaged.

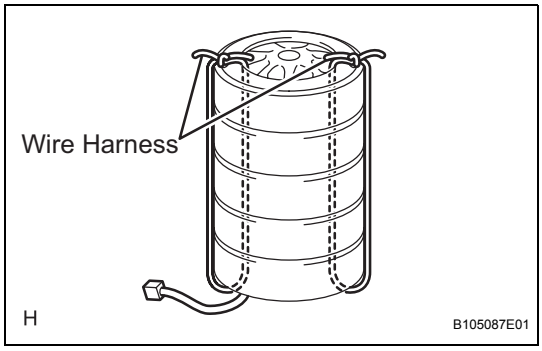

(3) Tie the tires together with 2 wire harnesses.
CAUTION:
Make sure that the wire harnesses are tight. It is highly dangerous when a loose wire harness results in the tires coming free due to the shock when the airbag is deployed.

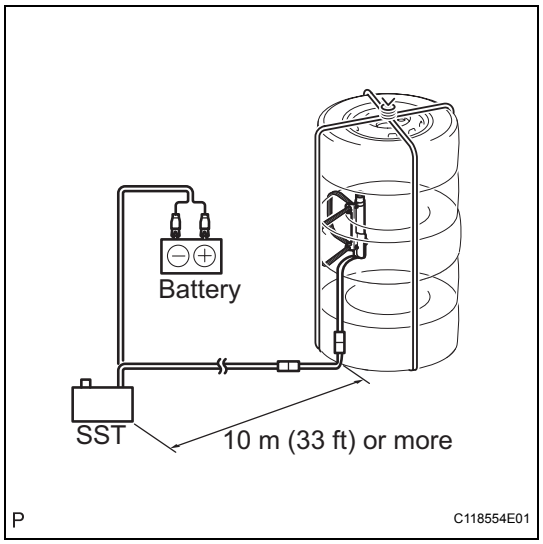

(g) Connect SST.
SST 09082-00700
NOTICE:
To avoid damaging the SST connector and wire harness, do not lock the secondary lock of the twin lock. Also, secure some slack for the SST wire harness inside the tire.

(h) Deploy the airbag.
(1) Connect the red clip of SST to the positive battery terminal and the black clip of SST to the negative battery terminal.
(2) Check that no one is within a 10 m (33 ft) radius of the tire to which the curtain shield airbag is tied.
(3) Press the SST activation switch and deploy the airbag.
CAUTION:
Make sure that no one is near the tire when deploying the airbag.
HINT:
The airbag is deployed as the LED of the SST activation switch illuminates.

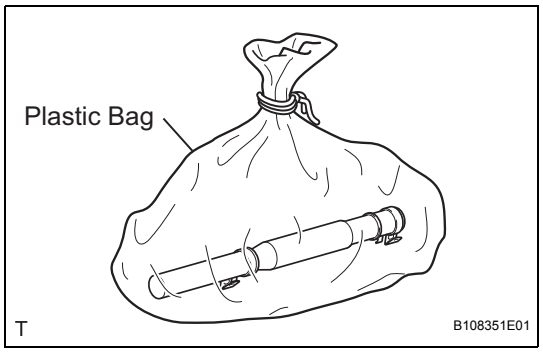

(i) Dispose of the curtain shield airbag.
CAUTION:
- **The curtain shield airbag becomes extremely hot when the airbag is deployed, so do not touch it for at least 30 minutes after deployment.**
- **Use gloves and safety glasses when handling a curtain shield airbag which has been deployed.**
- **Always wash your hands with water after completing the operation.**
- **Do not apply water, etc. to a curtain shield airbag which has been deployed.**

(1) Remove the curtain shield airbag from the tire.
(2) Place the curtain shield airbag in a plastic bag, tie it tightly and dispose of it in the same way as other general parts.

CURTAIN SHIELD AIRBAG ASSEMBLY (for 3 Door)

COMPONENTS

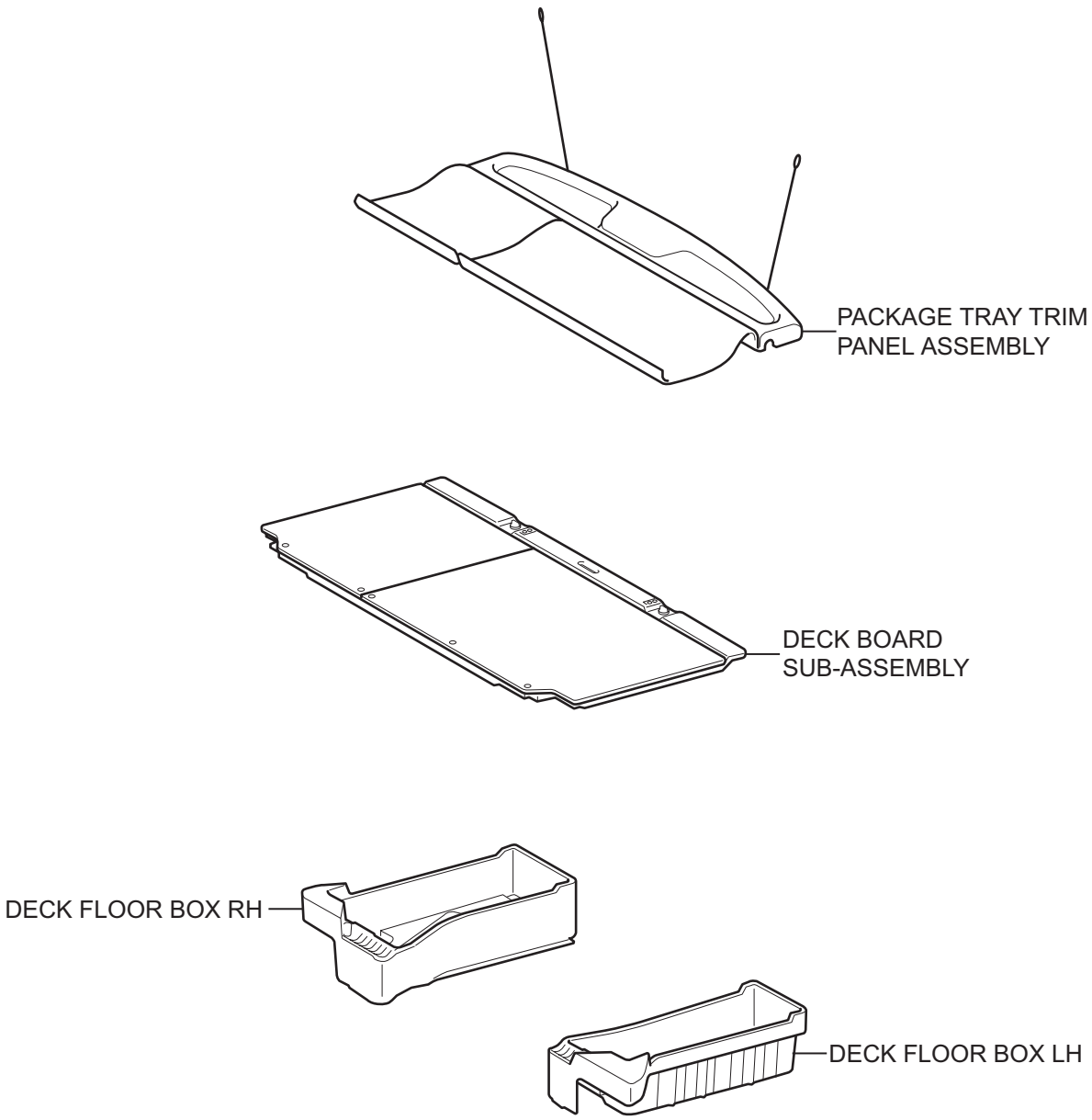

T

B114273E01

RS

for 60/40 Split Seat Type:

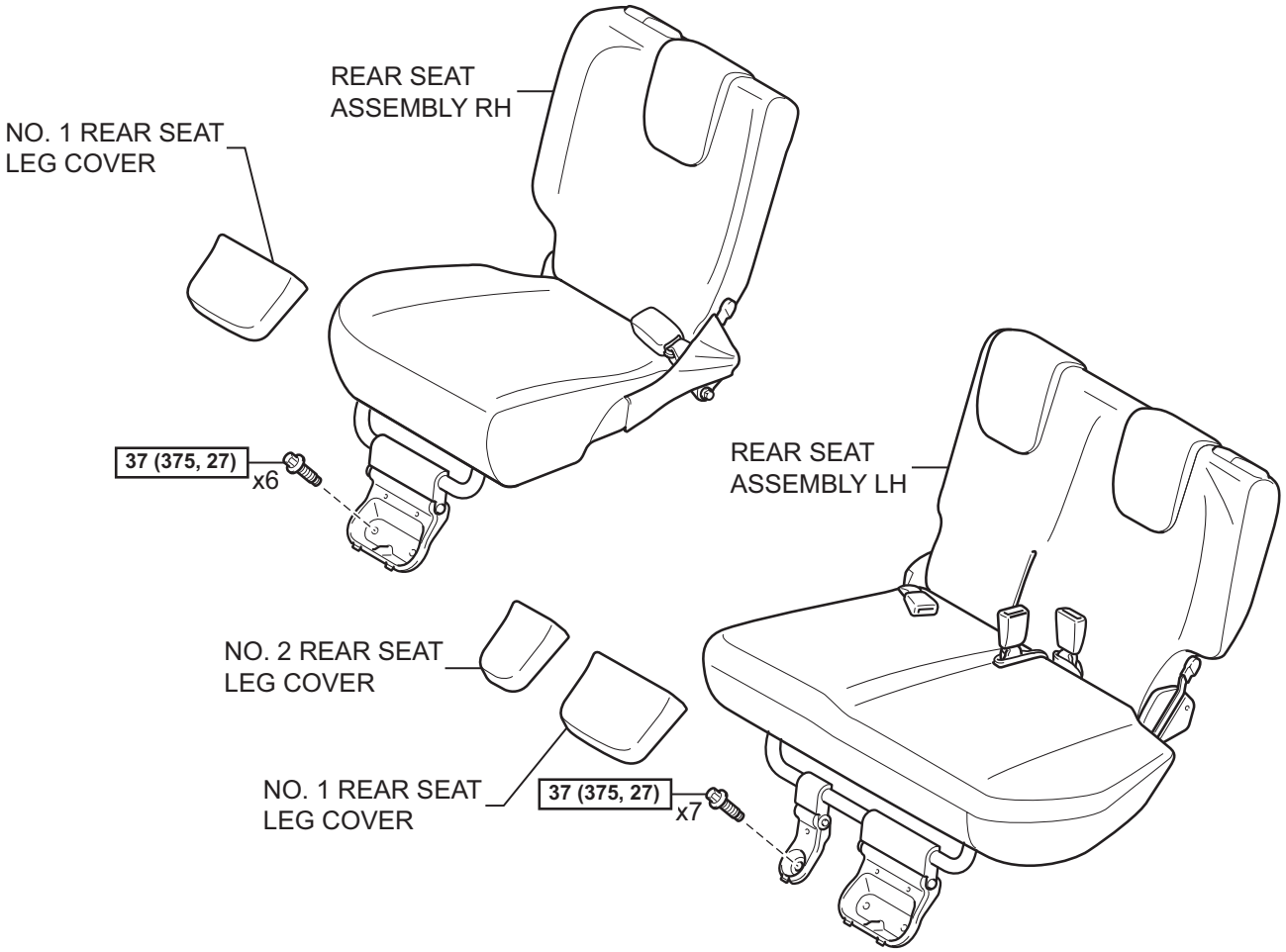

for Hold Down Seat Type:

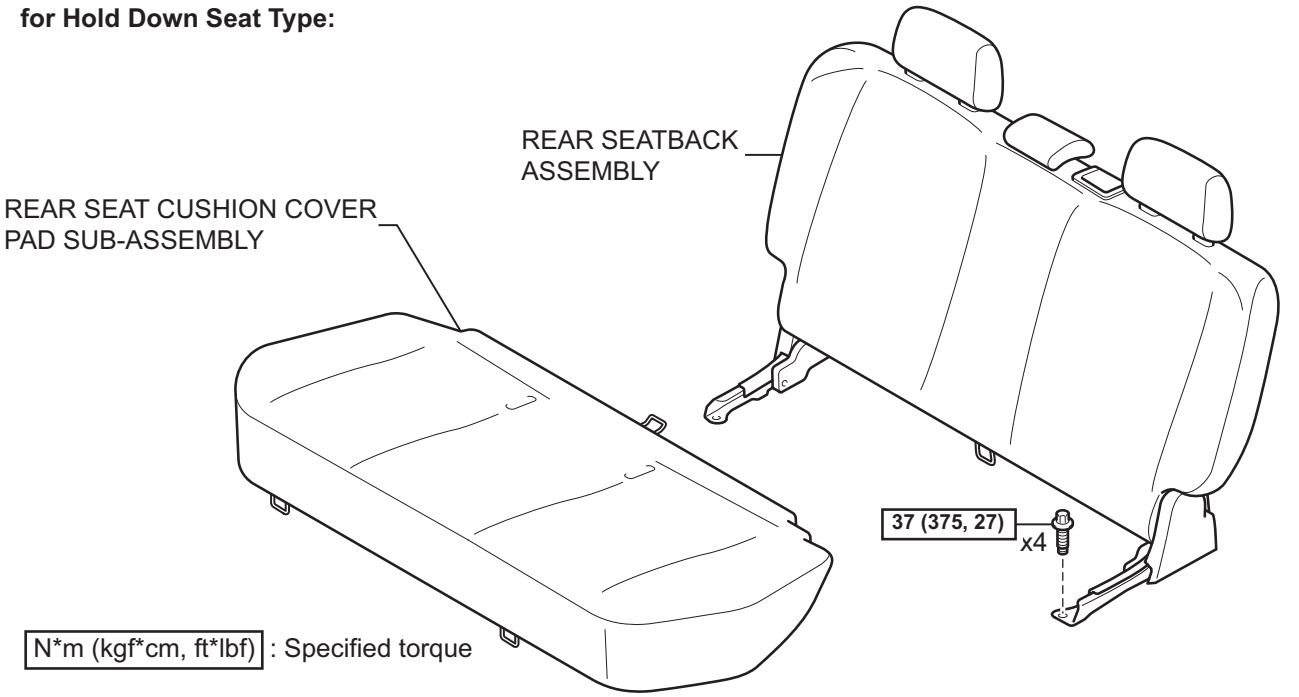

N*m (kgf*cm, ft*lbf) : Specified torque

T

B121713E03

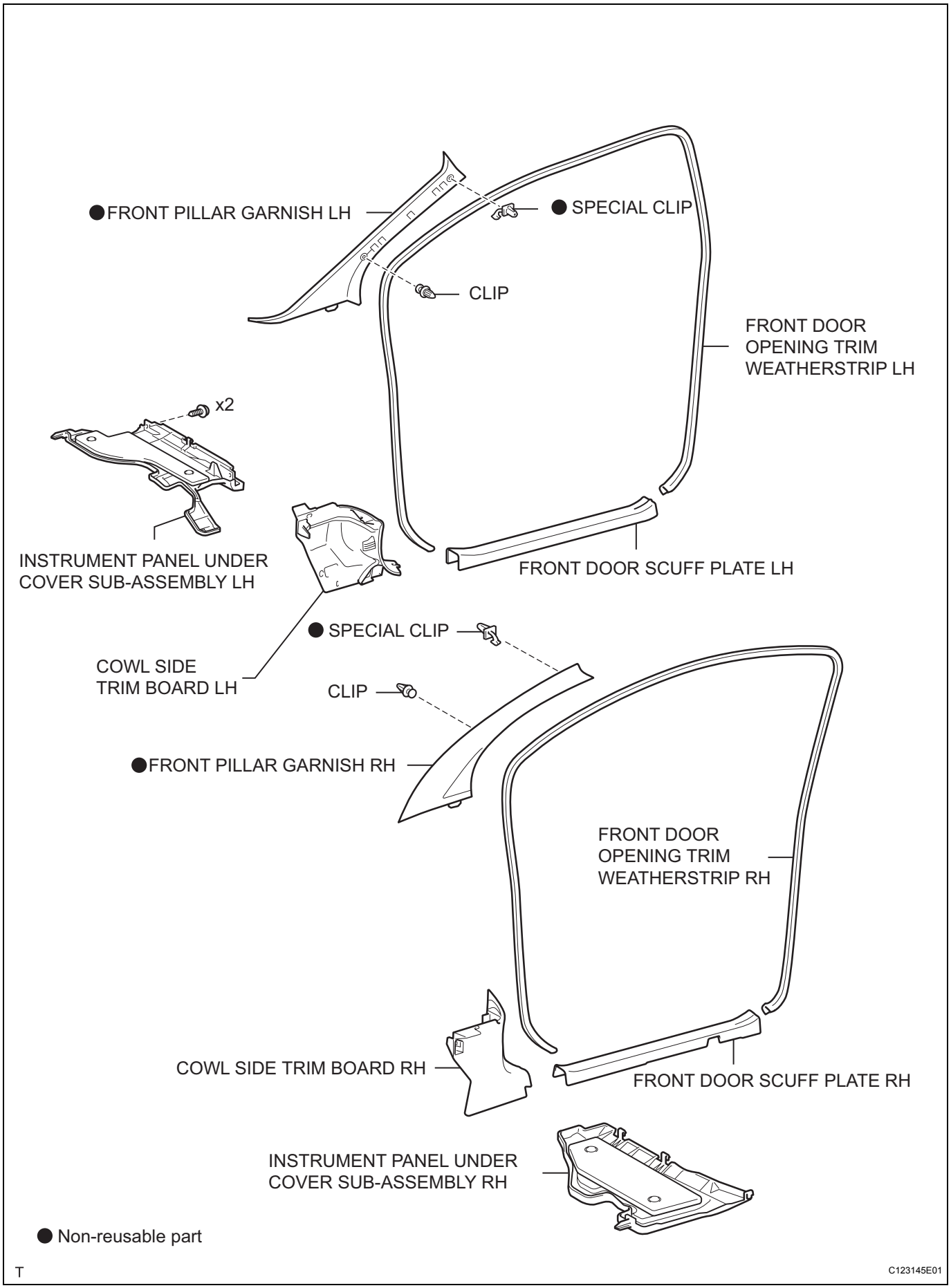
● FRONT PILLAR GARNISH LH
● SPECIAL CLIP
CLIP
FRONT DOOR OPENING TRIM WEATHERSTRIP LH
x2
INSTRUMENT PANEL UNDER COVER SUB-ASSEMBLY LH
FRONT DOOR SCUFF PLATE LH
● SPECIAL CLIP
COWL SIDE TRIM BOARD LH
CLIP
● FRONT PILLAR GARNISH RH
FRONT DOOR OPENING TRIM WEATHERSTRIP RH
COWL SIDE TRIM BOARD RH
FRONT DOOR SCUFF PLATE RH
INSTRUMENT PANEL UNDER COVER SUB-ASSEMBLY RH
● Non-reusable part
T
C123145E01

RS

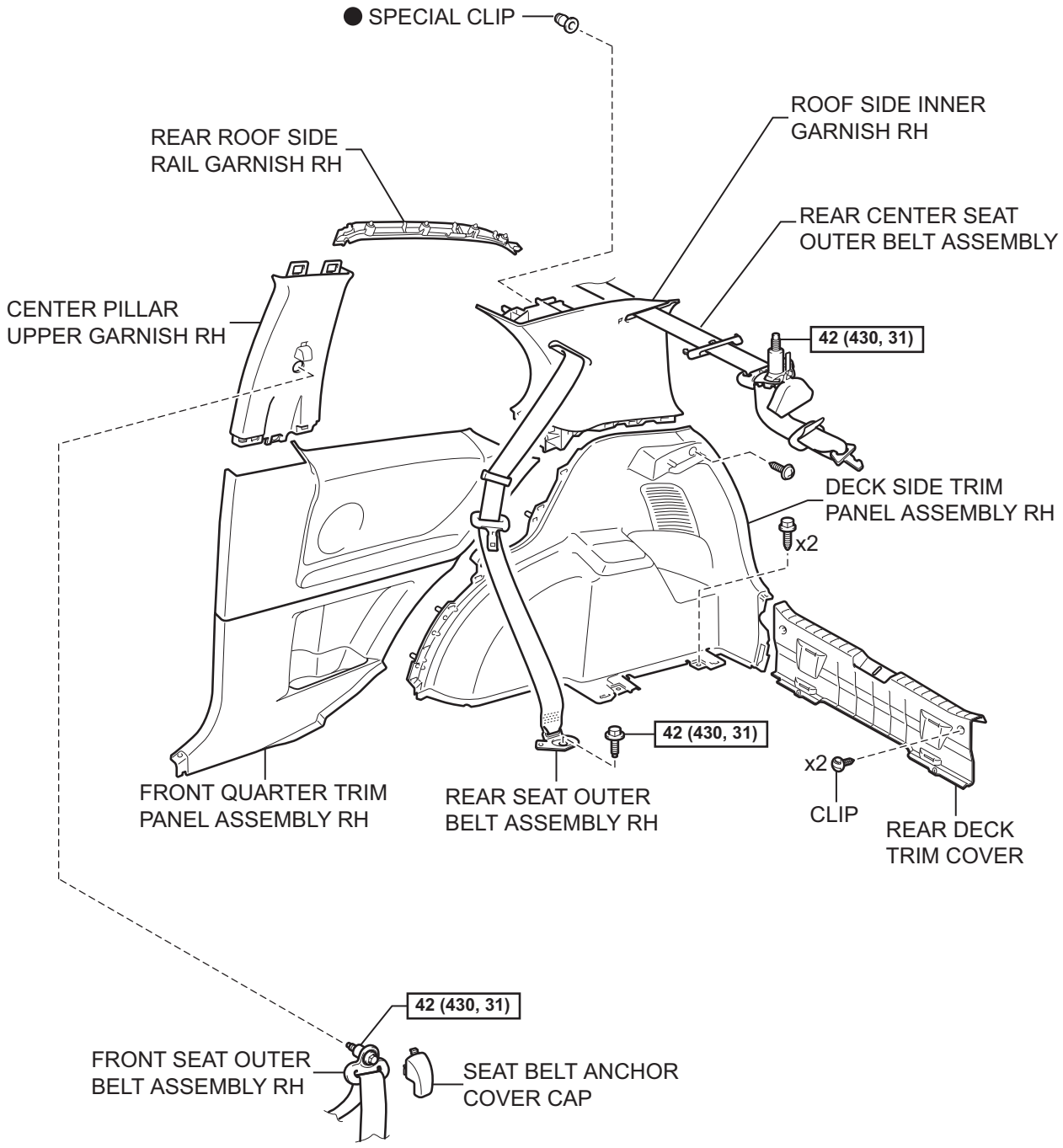

N*m (kgf*cm, ft*lbf) : Specified torque

● Non-reusable part

T

B117699E05

RS

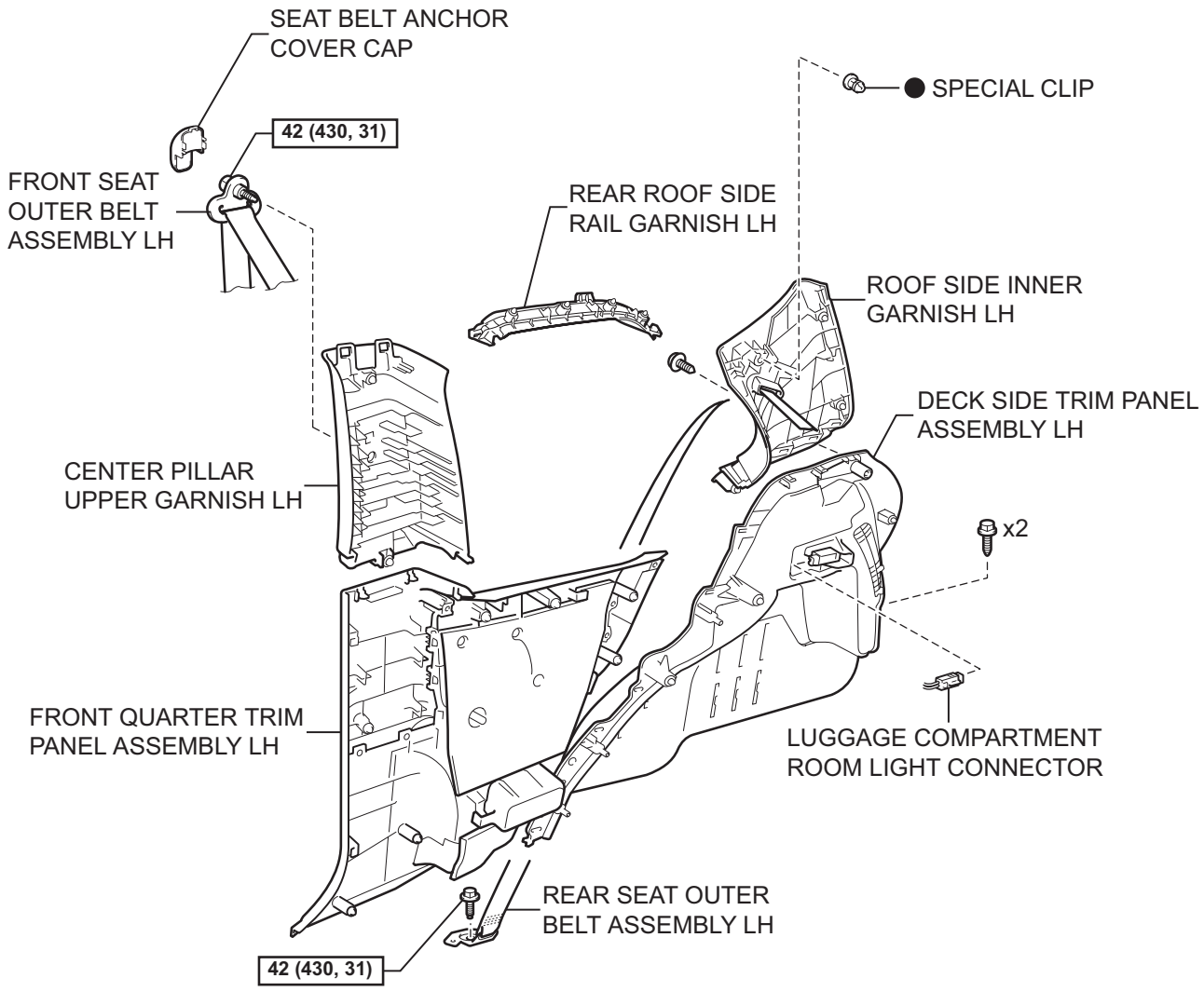

N*m (kgf*cm, ft*lbf) : Specified torque

● Non-reusable part

T

B117700E06

RS

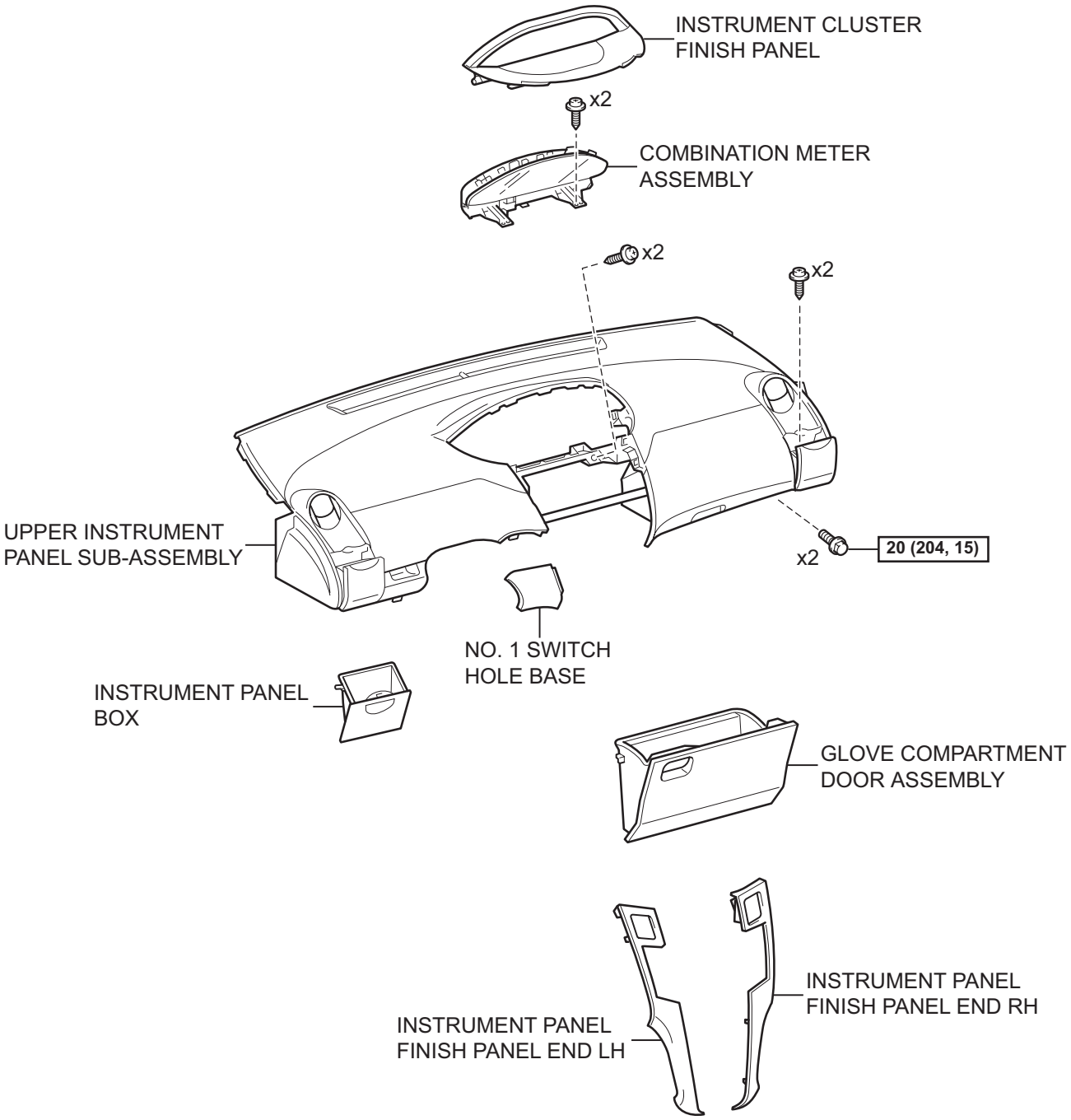

N*m (kgf*cm, ft*lbf) : Specified torque

T

B117770E02

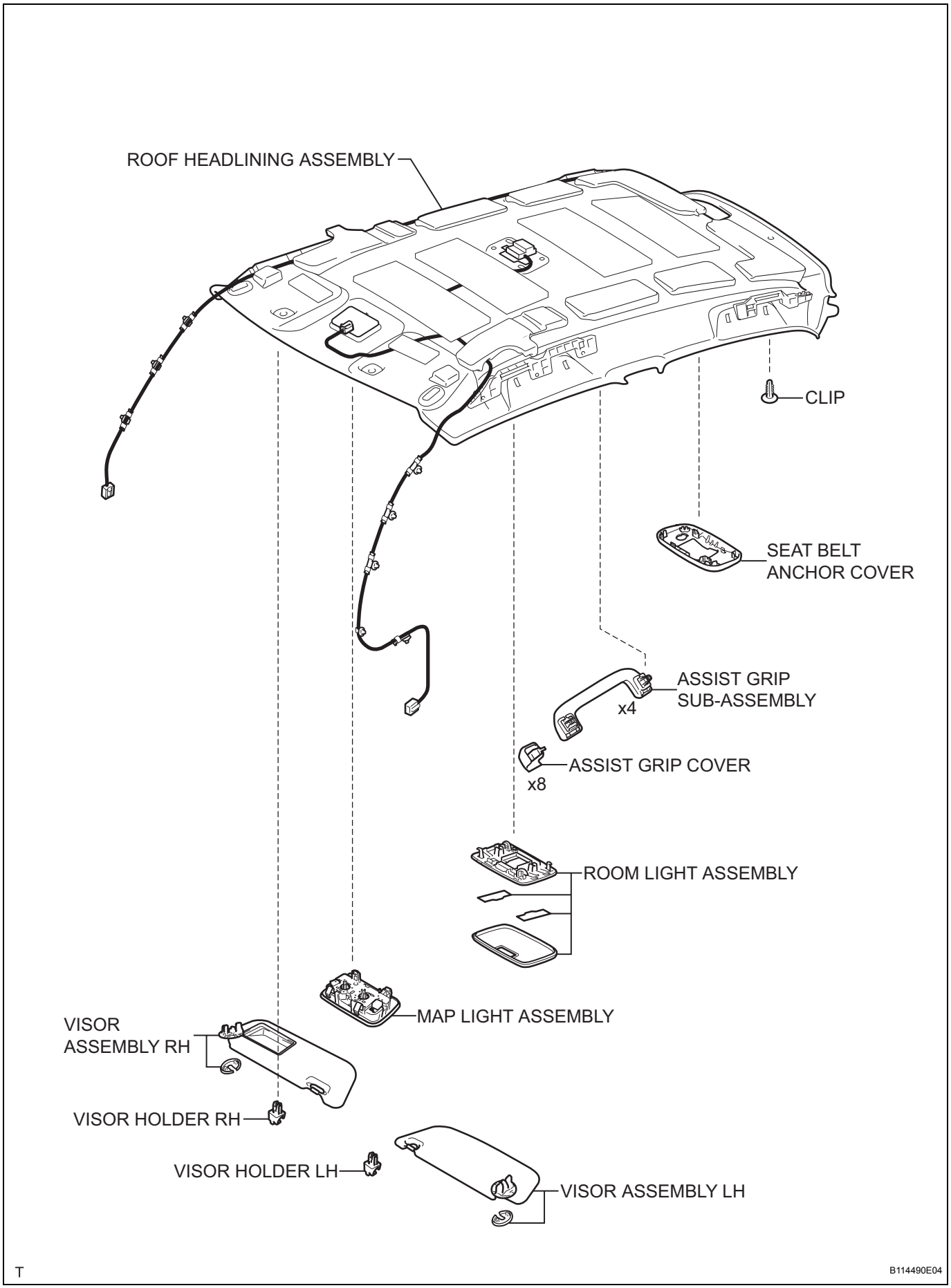
ROOF HEADLINING ASSEMBLY
CLIP
SEAT BELT
ANCHOR COVER
ASSIST GRIP
SUB-ASSEMBLY
x4
ASSIST GRIP COVER
x8
ROOM LIGHT ASSEMBLY
MAP LIGHT ASSEMBLY
VISOR
ASSEMBLY RH
VISOR HOLDER RH
VISOR HOLDER LH
VISOR ASSEMBLY LH
T
B114490E04

RS

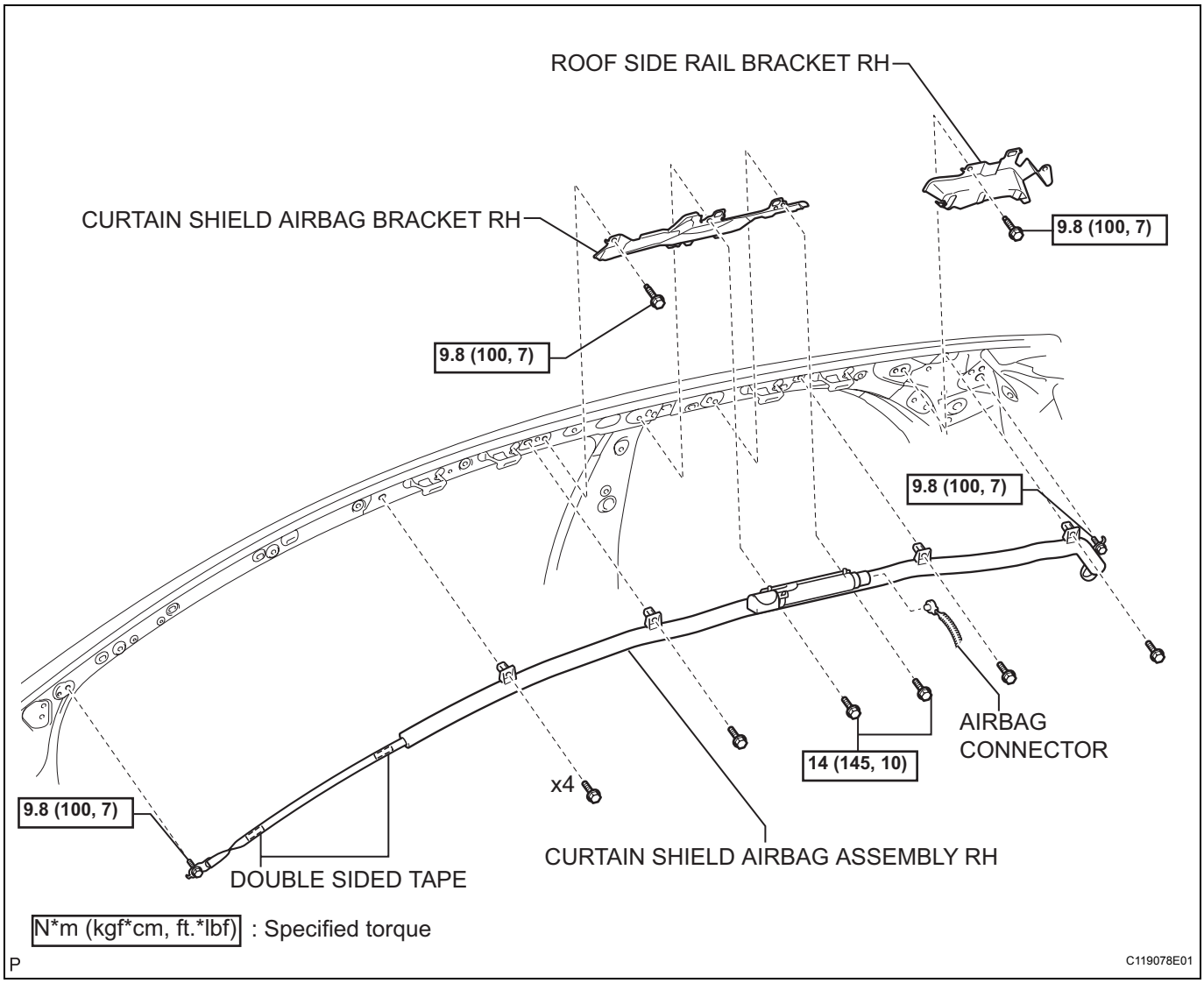
ROOF SIDE RAIL BRACKET RH
CURTAIN SHIELD AIRBAG BRACKET RH
9.8 (100, 7)
9.8 (100, 7)
9.8 (100, 7)
9.8 (100, 7)
AIRBAG CONNECTOR
14 (145, 10)
x4
CURTAIN SHIELD AIRBAG ASSEMBLY RH
DOUBLE SIDED TAPE
N*m (kgf*cm, ft.*lbf) : Specified torque
P
C119078E01

ON-VEHICLE INSPECTION

1. INSPECT CURTAIN SHIELD AIRBAG ASSEMBLY (for Vehicle not Involved in Collision)

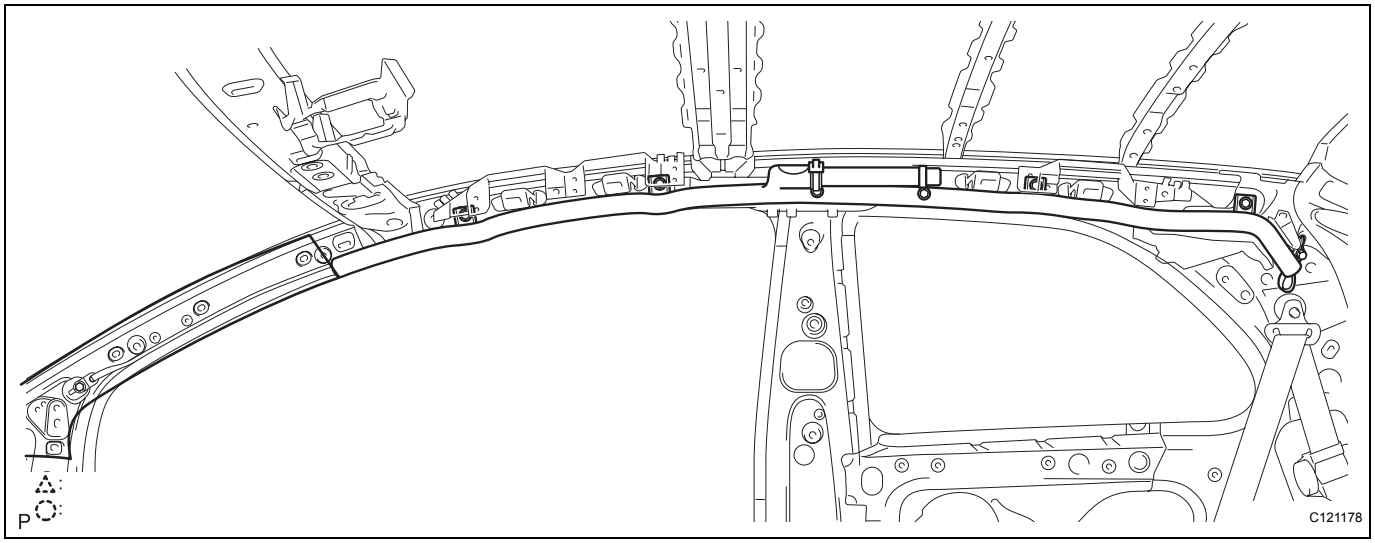

(a) Perform a diagnostic system check (See page RS-38).

(b) With the curtain shield airbag installed on the vehicle, perform a visual check. If there are any defects, such as those mentioned below, replace the front pillar garnish or roof headlining with a new one:
Any cuts, minute cracks or marked discoloration on the front pillar garnish and roof headlining around the curtain shield airbag.

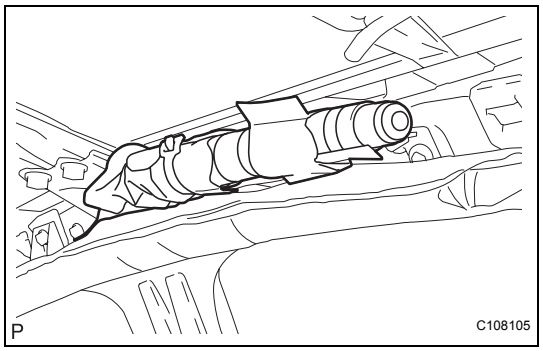

2. INSPECT CURTAIN SHIELD AIRBAG ASSEMBLY (for Vehicle Involved in Collision and Airbag not Deployed)

CAUTION:
For curtain shield airbag removal and installation procedures, see pages RS-409 and RS-413, and carefully follow the correct procedure.

(a) Perform a diagnostic system check (See page RS-38).

(b) With the curtain shield airbag removed from the vehicle, perform a visual check. If there are any defects, such as those mentioned below, replace the curtain shield airbag with a new one:
- Any cuts, minute cracks or marked discoloration on the curtain shield airbag.
- Any cracks or other damage to the connector.

REMOVAL

CAUTION:
Some of these service operations affect the SRS airbag system. Read the precautionary notices concerning the SRS airbag system before servicing (See page RS-1).
NOTICE:
Always use "Torx" socket wrench E10 when removing the rear seat.
HINT:
The procedure described below is for the RH side. Use the same procedure for both the RH and LH sides, unless otherwise specified.

1. **DISCONNECT CABLE FROM NEGATIVE BATTERY TERMINAL**
2. **REMOVE PACKAGE TRAY TRIM PANEL ASSEMBLY (See page IR-48)**
3. **REMOVE DECK BOARD SUB-ASSEMBLY (See page IR-48)**
4. **REMOVE DECK FLOOR BOX RH (See page IR-48)**
5. **REMOVE DECK FLOOR BOX LH (See page IR-48)**
6. **REMOVE NO. 1 REAR SEAT LEG COVER (for 60/40 Split Seat Type) (See page IR-96)**
7. **REMOVE NO. 2 REAR SEAT LEG COVER (for 60/40 Split Seat Type) (See page SE-70)**
8. **REMOVE REAR SEAT ASSEMBLY RH (for 60/40 Split Seat Type) (See page SE-89)**
9. **REMOVE REAR SEAT ASSEMBLY LH (for 60/40 Split Seat Type) (See page SE-71)**
10. **REMOVE REAR SEAT CUSHION COVER PAD SUB-ASSEMBLY (for Hold Down Seat Type) (See page SE-114)**
11. **REMOVE REAR SEATBACK ASSEMBLY (for Hold Down Seat Type) (See page SE-115)**
12. **REMOVE FRONT DOOR SCUFF PLATE RH (See page IR-97)**
13. **REMOVE FRONT DOOR SCUFF PLATE LH (See page IR-97)**
14. **REMOVE INSTRUMENT PANEL UNDER COVER SUB-ASSEMBLY RH (See page IR-50)**
15. **REMOVE INSTRUMENT PANEL UNDER COVER SUB-ASSEMBLY LH (See page IR-50)**
16. **REMOVE COWL SIDE TRIM BOARD RH (See page IR-50)**
17. **REMOVE COWL SIDE TRIM BOARD LH (See page IR-50)**

18. **REMOVE FRONT DOOR OPENING TRIM WEATHERSTRIP RH (See page IR-97)**
19. **REMOVE FRONT DOOR OPENING TRIM WEATHERSTRIP LH (See page IR-97)**
20. **REMOVE FRONT QUARTER TRIM PANEL ASSEMBLY RH (See page IR-97)**
21. **REMOVE FRONT QUARTER TRIM PANEL ASSEMBLY LH (See page IR-97)**
22. **REMOVE REAR DECK TRIM COVER (See page IR-49)**
23. **REMOVE REAR SEAT OUTER BELT ASSEMBLY RH (See page IR-98)**
24. **REMOVE REAR SEAT OUTER BELT ASSEMBLY LH (See page IR-98)**
25. **REMOVE DECK SIDE TRIM PANEL ASSEMBLY RH (See page IR-98)**
26. **REMOVE DECK SIDE TRIM PANEL ASSEMBLY LH (See page IR-98)**
27. **REMOVE SEAT BELT ANCHOR COVER CAP (See page IR-99)**
28. **REMOVE FRONT SEAT OUTER BELT ASSEMBLY RH (See page IR-99)**
29. **REMOVE FRONT SEAT OUTER BELT ASSEMBLY LH (See page IR-99)**
30. **REMOVE CENTER PILLAR UPPER GARNISH RH (See page IR-99)**
31. **REMOVE CENTER PILLAR UPPER GARNISH LH (See page IR-99)**
32. **REMOVE REAR CENTER SEAT OUTER BELT ASSEMBLY (See page IR-52)**
33. **REMOVE ROOF SIDE INNER GARNISH RH (See page IR-99)**
34. **REMOVE ROOF SIDE INNER GARNISH LH (See page IR-100)**
35. **REMOVE REAR ROOF SIDE RAIL GARNISH RH (See page IR-100)**
36. **REMOVE REAR ROOF SIDE RAIL GARNISH LH (See page IR-100)**
37. **REMOVE SEAT BELT ANCHOR COVER (See page SB-159)**
38. **REMOVE ASSIST GRIP COVER (See page IR-55)**
39. **REMOVE ASSIST GRIP SUB-ASSEMBLY (See page IR-56)**
40. **REMOVE VISOR ASSEMBLY RH (See page IR-56)**
41. **REMOVE VISOR ASSEMBLY LH (See page IR-56)**

RS

42. **REMOVE VISOR HOLDER RH (See page IR-56)**
43. **REMOVE VISOR HOLDER LH (See page IR-56)**
44. **REMOVE ROOM LIGHT ASSEMBLY (See page IR-57)**
45. **REMOVE MAP LIGHT ASSEMBLY (See page IR-58)**
46. **REMOVE FRONT PILLAR GARNISH RH (See page IR-58)**
47. **REMOVE FRONT PILLAR GARNISH LH (See page IR-59)**
48. **REMOVE INSTRUMENT PANEL FINISH PANEL END LH (See page ME-145)**
49. **REMOVE INSTRUMENT PANEL FINISH PANEL END RH (See page ME-145)**
50. **REMOVE INSTRUMENT CLUSTER FINISH PANEL (See page ME-145)**
51. **REMOVE COMBINATION METER ASSEMBLY (See page ME-146)**
52. **REMOVE GLOVE COMPARTMENT DOOR ASSEMBLY (See page IP-20)**
53. **REMOVE NO. 1 SWITCH HOLE BASE (See page IP-20)**
54. **REMOVE UPPER INSTRUMENT PANEL SUB-ASSEMBLY (See page IP-21)**
55. **REMOVE INSTRUMENT PANEL BOX (See page IP-70)**
56. **REMOVE ROOF HEADLINING ASSEMBLY (See page IR-101)**
57. **REMOVE CURTAIN SHIELD AIRBAG ASSEMBLY RH**
    (a) Using a thin-bladed screwdriver, release the locking button.
    (b) Using a thin-bladed screwdriver, detach the airbag connector.
    (c) Loosen the 2 bolts.
    (d) Disengage the 2 hooks.
    (e) Remove the 2 bolts and 4 screws.

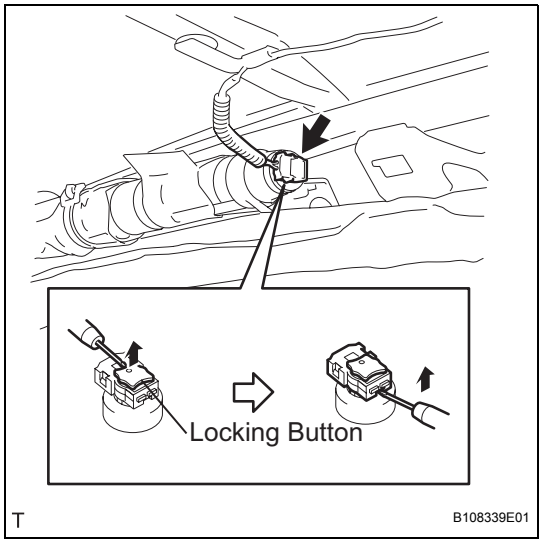

(f) Using a screwdriver, disengage the 4 clips and remove the curtain airbag.

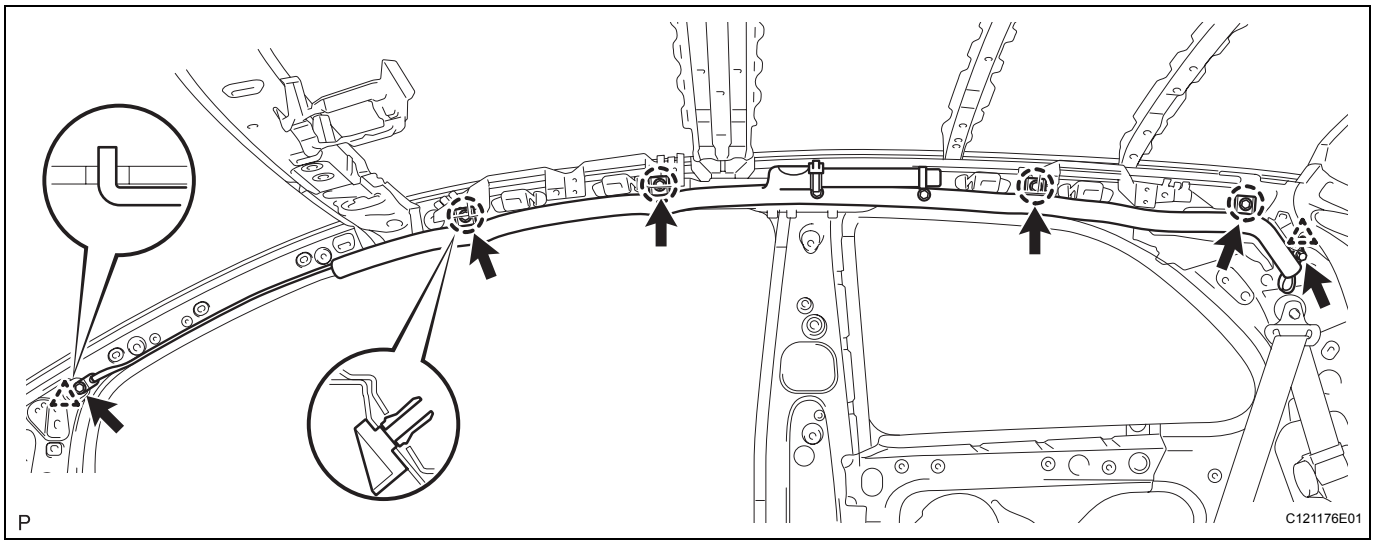

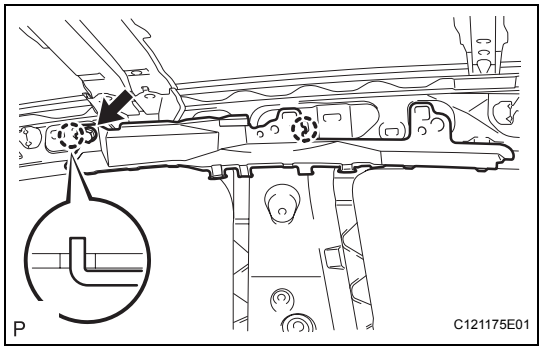

58. REMOVE CURTAIN SHIELD AIRBAG BRACKET RH

(a) Remove the bolt, disengage the 2 hooks and remove the curtain shield airbag bracket.

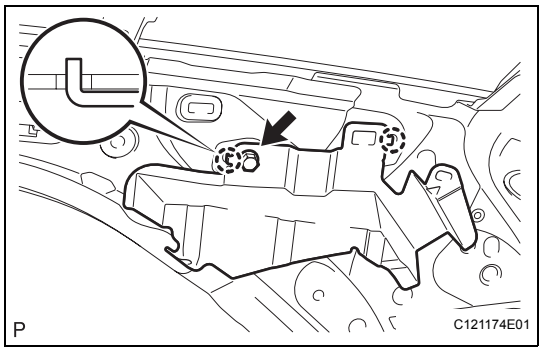

59. REMOVE ROOF SIDE RAIL BRACKET RH

(a) Remove the wire harness clamp.

(b) Remove the bolt, disengage the 2 hooks and remove the roof side rail bracket.

RS

INSTALLATION

CAUTION:
Some of these service operations affect the SRS airbag system. Read the precautionary notices concerning the SRS airbag system before servicing (See page RS-1).
NOTICE:
Always use "Torx" socket wrench E10 when installing the rear seat.
HINT:
The procedure described below is for the RH side. Use the same procedure for both the RH and LH sides, unless otherwise specified.

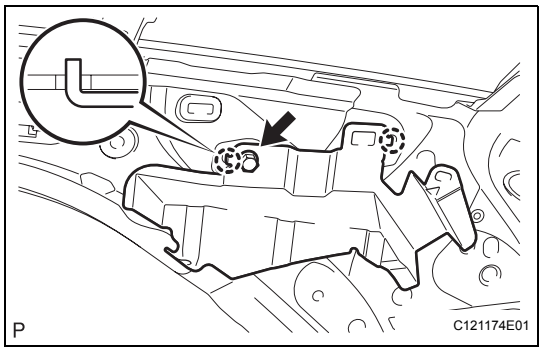

1. INSTALL ROOF SIDE RAIL BRACKET RH
(a) Insert the 2 hooks into the body holes and install the roof side rail bracket.
Torque: 9.8 N*m (100 kgf*cm, 7 ft.*lbf)
(b) Install the wire harness clamp.

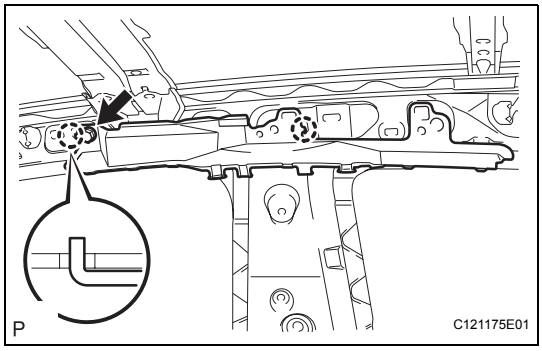

2. INSTALL CURTAIN SHIELD AIRBAG BRACKET RH
(a) Insert the 2 hooks into the body holes and install the curtain shield airbag bracket.
Torque: 9.8 N*m (100 kgf*cm, 7 ft.*lbf)

3. INSTALL CURTAIN SHIELD AIRBAG ASSEMBLY RH
(a) Tighten the 2 bolts A.
Torque: 14 N*m (145 kgf*cm, 10 ft.*lbf)
(b) Tighten the 4 screws B.
(c) Install front strap C.
NOTICE:
Attach double sided tape to the indicated area, with the strap pulled downward. When installing the strap, make sure that the front pillar garnish installation holes are not hidden by the strap of the curtain shield airbag.

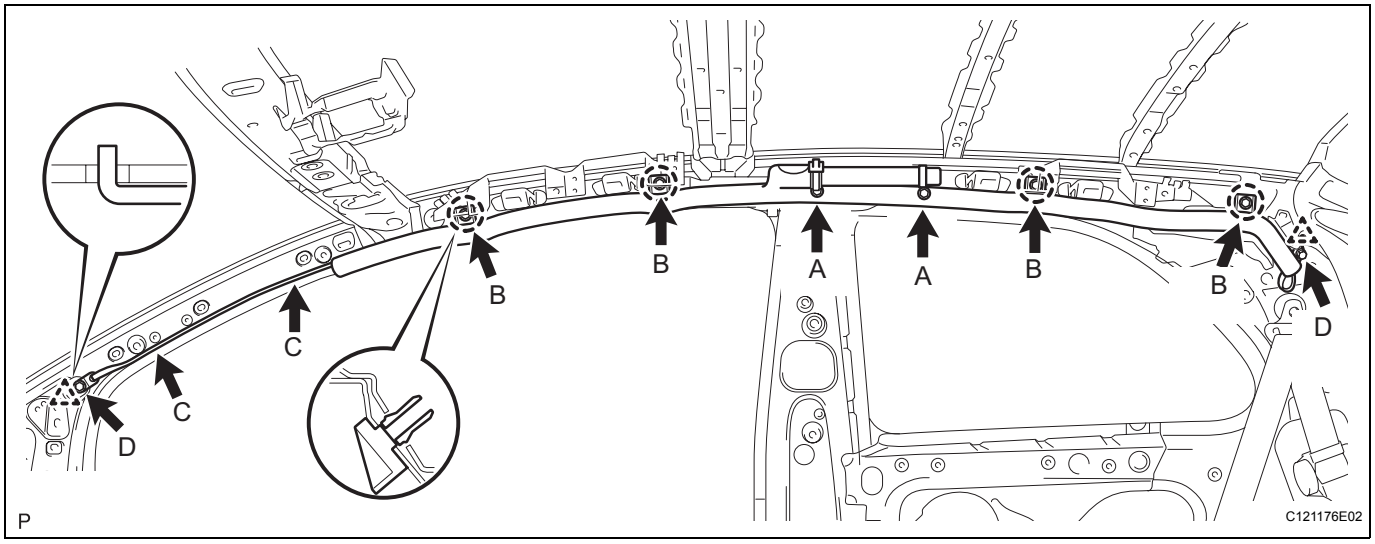

(d) Tighten the 2 bolts D.
Torque: 9.8 N*m (100 kgf*cm, 7 ft.*lbf)

(e) Connect the airbag connector.
NOTICE:
Lock the locking button securely.

4. **INSTALL ROOF HEADLINING ASSEMBLY (See page IR-113)**
5. **INSTALL INSTRUMENT PANEL BOX (See page IP-78)**
6. **INSTALL UPPER INSTRUMENT PANEL SUB-ASSEMBLY (See page IP-29)**
7. **INSTALL NO. 1 SWITCH HOLE BASE (See page IP-32)**
8. **INSTALL GLOVE COMPARTMENT DOOR ASSEMBLY (See page IP-32)**
9. **INSTALL COMBINATION METER ASSEMBLY (See page ME-148)**
10. **INSTALL INSTRUMENT CLUSTER FINISH PANEL (See page ME-148)**
11. **INSTALL INSTRUMENT PANEL FINISH PANEL END RH (See page ME-149)**
12. **INSTALL INSTRUMENT PANEL FINISH PANEL END LH (See page ME-149)**
13. **INSTALL FRONT PILLAR GARNISH RH (See page IR-71)**
14. **INSTALL FRONT PILLAR GARNISH LH (See page IR-72)**
15. **INSTALL MAP LIGHT ASSEMBLY (See page IR-73)**
16. **INSTALL ROOM LIGHT ASSEMBLY (See page IR-74)**
17. **INSTALL VISOR HOLDER RH (See page IR-75)**
18. **INSTALL VISOR HOLDER LH (See page IR-75)**
19. **INSTALL VISOR ASSEMBLY RH (See page IR-75)**

20. **INSTALL VISOR ASSEMBLY LH (See page IR-75)**
21. **INSTALL ASSIST GRIP SUB-ASSEMBLY (See page IR-75)**
22. **INSTALL SEAT BELT ANCHOR COVER (See page IR-75)**
23. **INSTALL REAR ROOF SIDE RAIL GARNISH RH (See page IR-115)**
24. **INSTALL REAR ROOF SIDE RAIL GARNISH LH (See page IR-115)**
25. **INSTALL ROOF SIDE INNER GARNISH RH (See page IR-115)**
26. **INSTALL ROOF SIDE INNER GARNISH LH (See page IR-116)**
27. **INSTALL REAR CENTER SEAT OUTER BELT ASSEMBLY (See page IR-78)**
28. **INSTALL CENTER PILLAR UPPER GARNISH RH (See page IR-116)**
29. **INSTALL CENTER PILLAR UPPER GARNISH LH (See page IR-116)**
30. **INSTALL FRONT SEAT OUTER BELT ASSEMBLY RH (See page IR-117)**
31. **INSTALL FRONT SEAT OUTER BELT ASSEMBLY LH (See page IR-117)**
32. **INSTALL SEAT BELT ANCHOR COVER CAP (See page IR-117)**
33. **INSTALL DECK SIDE TRIM PANEL ASSEMBLY RH (See page IR-117)**
34. **INSTALL DECK SIDE TRIM PANEL ASSEMBLY LH (See page IR-118)**
35. **INSTALL REAR SEAT OUTER BELT ASSEMBLY RH (See page IR-118)**
36. **INSTALL REAR SEAT OUTER BELT ASSEMBLY LH (See page IR-118)**
37. **INSTALL REAR DECK TRIM COVER (See page IR-82)**
38. **INSTALL FRONT QUARTER TRIM PANEL ASSEMBLY RH (See page IR-118)**
39. **INSTALL FRONT QUARTER TRIM PANEL ASSEMBLY LH (See page IR-119)**
40. **INSTALL FRONT DOOR OPENING TRIM WEATHERSTRIP RH (See page IR-119)**
41. **INSTALL FRONT DOOR OPENING TRIM WEATHERSTRIP LH (See page IR-119)**
42. **INSTALL COWL SIDE TRIM BOARD RH (See page IR-81)**

43. **INSTALL COWL SIDE TRIM BOARD LH (See page IR-81)**
44. **INSTALL INSTRUMENT PANEL UNDER COVER SUB-ASSEMBLY RH (See page IR-81)**
45. **INSTALL INSTRUMENT PANEL UNDER COVER SUB-ASSEMBLY LH (See page IR-82)**
46. **INSTALL FRONT DOOR SCUFF PLATE RH (See page IR-119)**
47. **INSTALL FRONT DOOR SCUFF PLATE LH (See page IR-119)**
48. **INSTALL REAR SEAT ASSEMBLY LH (for 60/40 Split Seat Type) (See page SE-84)**
49. **INSTALL REAR SEAT ASSEMBLY RH (for 60/40 Split Seat Type) (See page SE-102)**
50. **INSTALL NO. 2 REAR SEAT LEG COVER (for 60/40 Split Seat Type) (See page SE-85)**
51. **INSTALL NO. 1 REAR SEAT LEG COVER (for 60/40 Split Seat Type) (See page SE-85)**
52. **INSTALL REAR SEAT CUSHION COVER PAD SUB-ASSEMBLY (for Hold Down Seat Type) (See page SE-123)**
53. **INSTALL REAR SEATBACK ASSEMBLY (for Hold Down Seat Type) (See page SE-122)**
54. **INSTALL DECK FLOOR BOX RH (See page IR-83)**
55. **INSTALL DECK FLOOR BOX LH (See page IR-83)**
56. **INSTALL DECK BOARD SUB-ASSEMBLY (See page IR-83)**
57. **INSTALL PACKAGE TRAY TRIM PANEL ASSEMBLY (See page IR-83)**
58. **CONNECT CABLE TO NEGATIVE BATTERY TERMINAL**
    Torque: 5.4 N*m (55 kgf*cm, 48 in.*lbf)
59. **INSPECT SRS WARNING LIGHT**
    (See page RS-31)

RS

DISPOSAL

HINT:
- Disposal procedure for the RH side is the same as that for the LH side.
- The procedure described below is for the RH side.
- When scrapping a vehicle equipped with the SRS or disposing of a curtain shield airbag, deploy the airbag first, in accordance with the procedure described below. If any abnormality occurs with the airbag deployment, contact the SERVICE DEPT. of the DISTRIBUTOR.

CAUTION:
- **Never dispose of a curtain shield airbag that has an undeployed airbag.**
- **The airbag emits an exploding sound when it is deployed, so perform the operation outdoors and where it will not create a nuisance to nearby residents.**
- **When deploying the airbag, always use the specified SST (SRS Airbag Deployment Tool). Perform the operation in a place away from electrical noise.**
- **When deploying the airbag, perform the operation at least 10 m (33 ft) away from the curtain shield airbag.**
- **The curtain shield airbag becomes extremely hot when the airbag is deployed, so do not touch it for at least 30 minutes after deployment.**
- **Use gloves and safety glasses when handling a curtain shield airbag which has been deployed.**
- **Do not apply water, etc. to a curtain shield airbag which has been deployed.**
- **Always wash your hands with water after completing the operation.**

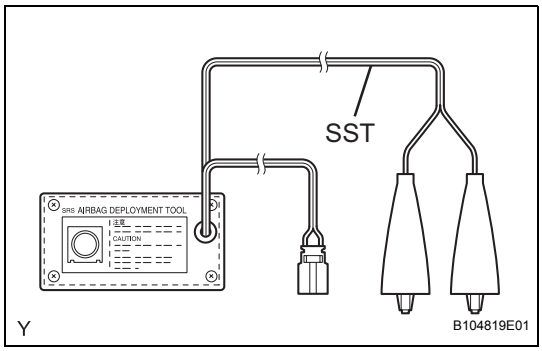

1. DISPOSE OF CURTAIN SHIELD AIRBAG ASSEMBLY (WHEN INSTALLED IN VEHICLE)

HINT:
Prepare a battery as the power source to deploy the airbag.

(a) Check the function of SST.
SST 09082-00700
CAUTION:
Always use the specified SST (SRS Airbag Deployment Tool) when deploying the airbag.

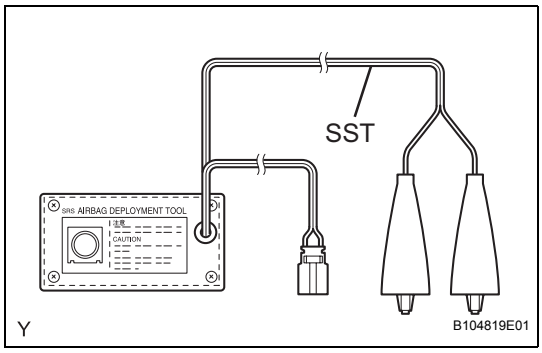

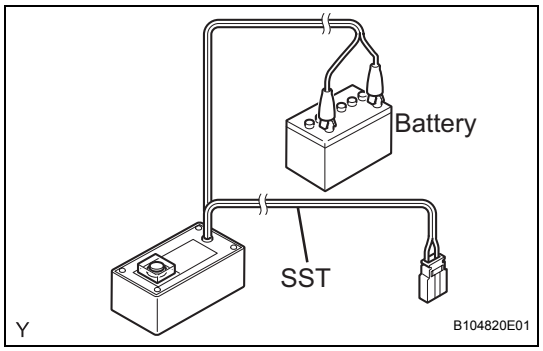

(1) Connect the red clip of SST to the positive battery terminal and the black clip of SST to the negative battery terminal.

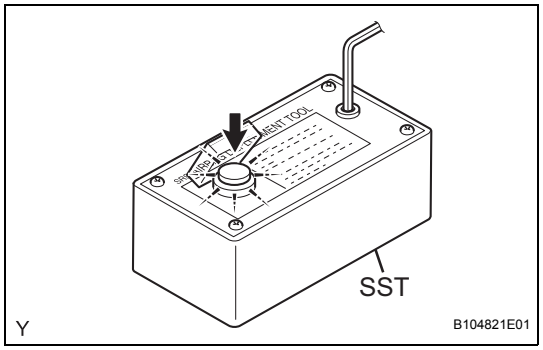

(2) Press the SST activation switch, and check that the LED of the SST activation switch illuminates.
NOTICE:
- **Do not connect the SST connector (yellow colored one) to the airbag.**
- **If the LED illuminates when the activation switch is not pressed, SST may be malfunctioning. Do not use SST.**

(3) Disconnect SST from the battery.

(b) Disconnect the cable from the negative battery terminal.

(c) Remove the roof headlining (See page IR-96).

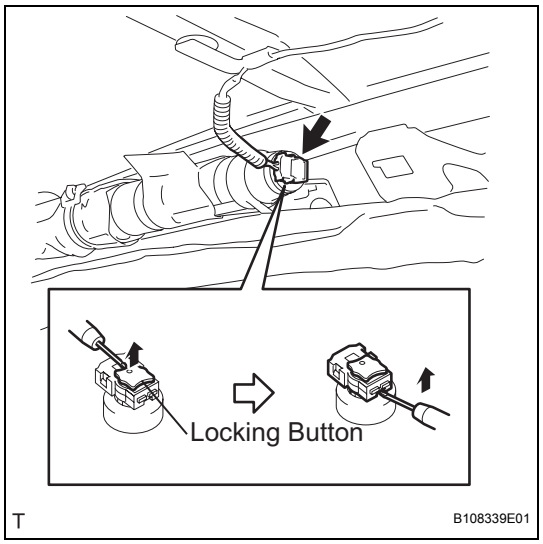

(d) Disconnect the airbag connector, as shown in the illustration.
NOTICE:
Do not damage the airbag wire harness when handling the airbag connector.

RS

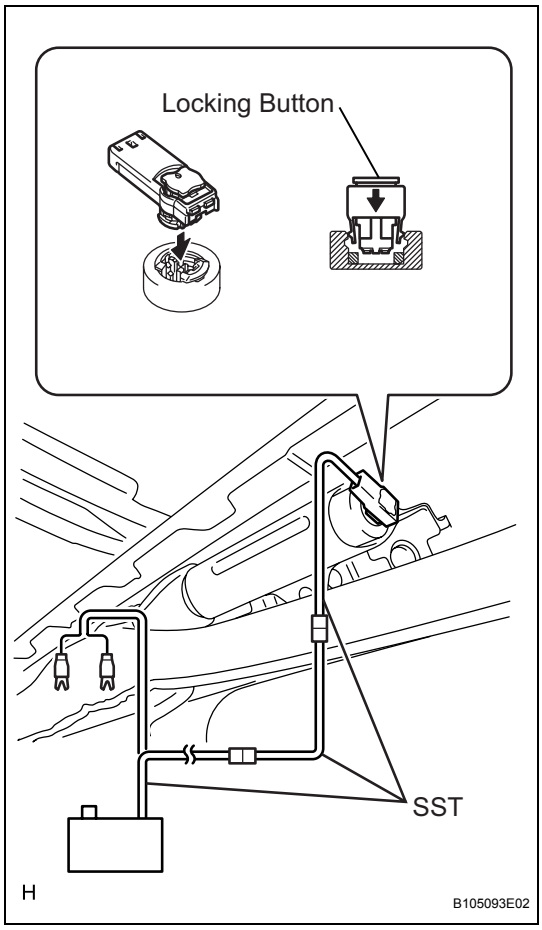

(e) Connect SST.

SST 09082-00700, 09082-00802 (09082-10801, 09082-20801)

(1) After connecting SST, connect it to the curtain shield airbag.

NOTICE:

Do not lock the secondary lock of the twin lock to avoid damaging the SST connector and wire harness.

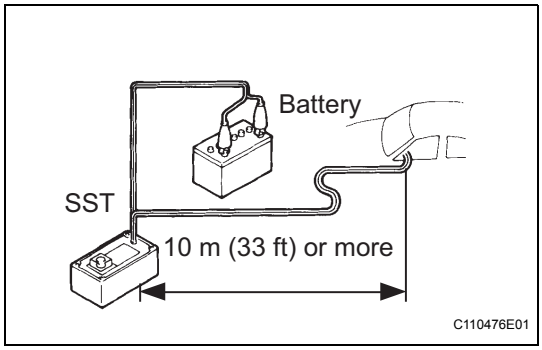

(2) Move SST to at least 10 m (33 ft) away from the vehicle.

(3) Close all doors and windows of the vehicle.

NOTICE:

Do not damage the SST wire harness.

(4) Connect the red clip of SST to the positive battery terminal and the black clip of SST to the negative battery terminal.

(f) Deploy the airbag.

(1) Check that no one is inside the vehicle or within a 10 m (33 ft) radius of the vehicle.

(2) Press the SST activation switch and deploy the airbag.

CAUTION:

- **When deploying the airbag, make sure that no one is near the vehicle.**
- **The curtain shield airbag becomes extremely hot when the airbag is deployed, so do not touch it for at least 30 minutes after deployment.**
- **Use gloves and safety glasses when handling a curtain shield airbag which has been deployed.**
- **Do not apply water, etc. to a curtain shield airbag which has been deployed.**
- **Always wash your hands with water after completing the operation.**

HINT:
The airbag is deployed as the LED of the SST activation switch illuminates.

2. DISPOSE OF CURTAIN SHIELD AIRBAG ASSEMBLY (WHEN NOT INSTALLED IN VEHICLE)

NOTICE:

- **Never use the customer's vehicle to deploy the airbag when disposing of a curtain shield airbag.**
- **Follow the procedure detailed below when deploying the airbag.**

HINT:
Prepare a battery as the power source to deploy the airbag.

(a) Check the function of SST.
SST 09082-00700
CAUTION:
Always use the specified SST (SRS Airbag Deployment Tool) when deploying the airbag.

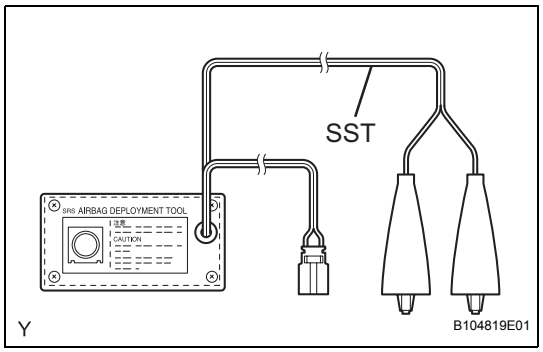

(1) Connect the red clip of SST to the positive battery terminal and the black clip of SST to the negative battery terminal.

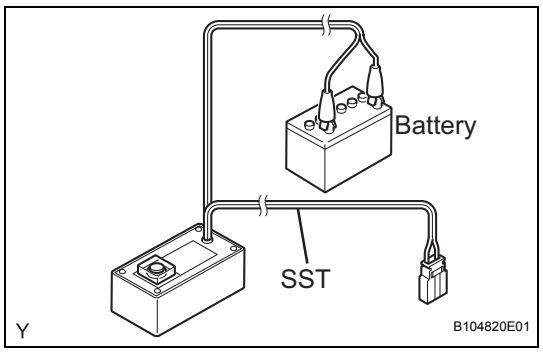

(2) Press the SST activation switch, and check that the LED of the SST activation switch illuminates.
NOTICE:
- **Do not connect the SST connector (yellow colored one) to the airbag.**
- **If the LED illuminates when the activation switch is not pressed, SST may be malfunctioning. Do not use SST.**

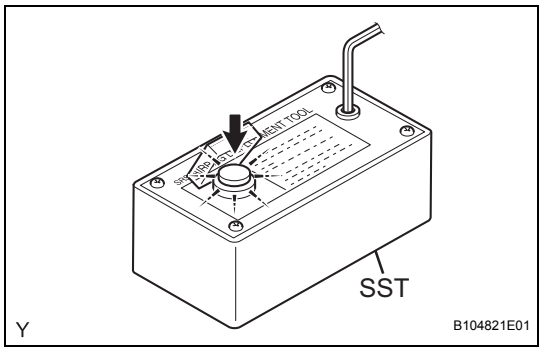

(3) Disconnect SST from the battery.

(b) Remove the curtain shield airbag (see page RS-409).

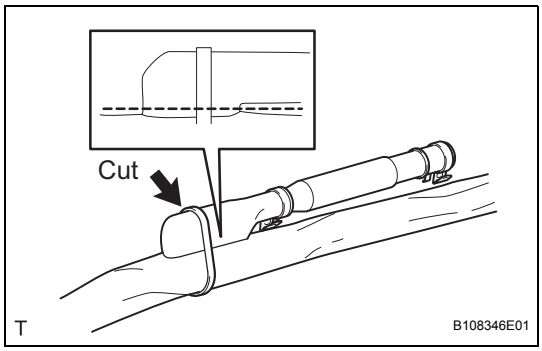

(c) Cut off the deployment section of the curtain shield airbag.

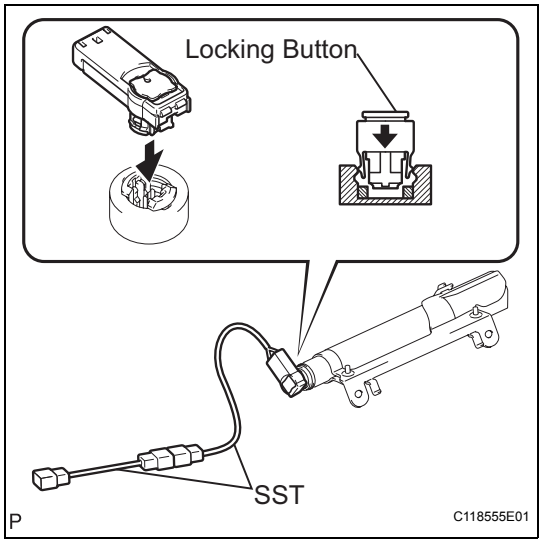

(d) Connect SST.
SST 09082-00802 (09082-10801, 09082-20801)
(1) After connecting SST, connect it to the curtain shield airbag.
NOTICE:
Do not lock the secondary lock of the twin lock to avoid damaging the SST connector and wire harness.

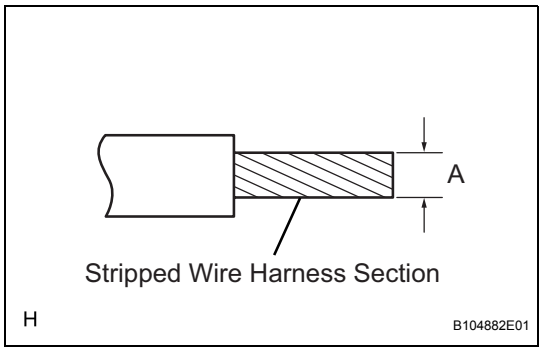

(e) Using a service-purpose wire harness for the vehicle, tie the curtain shield airbag to the tire.
Stripped wire harness section:

Area	Measurement
A	1.25 mm^2 or more (0.0019 $in.^2$ or more)

CAUTION:
Do not use wire harness that is too thin or any other object to tie the curtain shield airbag because it may snap due to the shock when the airbag is deployed. Always use a wire harness for vehicle use with a cross section of at least 1.25 mm^2 (0.0019 $in.^2$).
HINT:
To calculate the area of the stripped wire harness cross section:
Area = 3.14 x $(Diameter)^2$ divided by 4

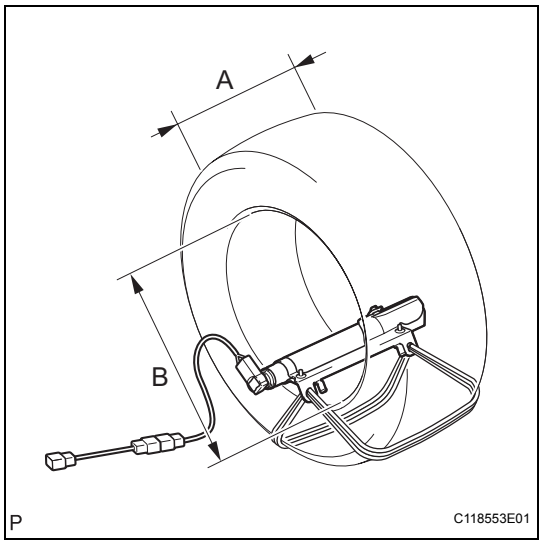

(1) Position the curtain shield airbag inside the tire, as shown in the illustration.
Tire size:

Area	Measurement
A	185 mm (7.28 in.)
B	360 mm (14.17 in.)

CAUTION:
Make sure that the wire harnesses are tight. If there is any slack in the wire harnesses, the curtain shield airbag may become loose due to the shock when the airbag is deployed.
NOTICE:
The tire will be marked by the airgbag deployment, so use a waste tire.

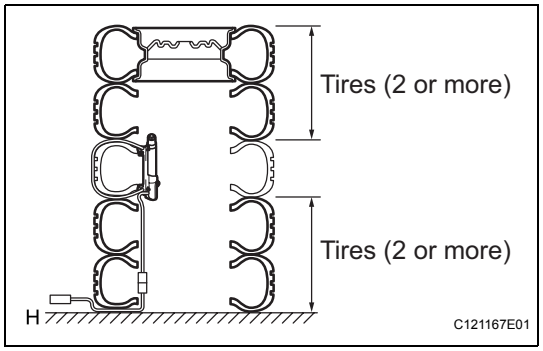

(f) Place the tires.
CAUTION:
Do not place the curtain shield airbag with the deployment direction facing toward the ground.
(1) Place at least 2 tires under the tire to which the curtain shield airbag is tied.
(2) Place at least 2 tires over the tire to which the curtain shield airbag is tied. The disc wheel should be installed on the top tire.
NOTICE:
Do not place the SST connector under the tire because it could be damaged.

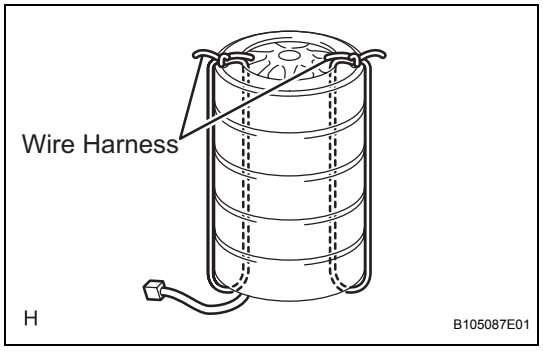

(3) Tie the tires together with 2 wire harnesses.
CAUTION:
Make sure that the wire harnesses are tight. It is highly dangerous when a loose wire harness results in the tires coming free due to the shock when the airbag is deployed.

RS

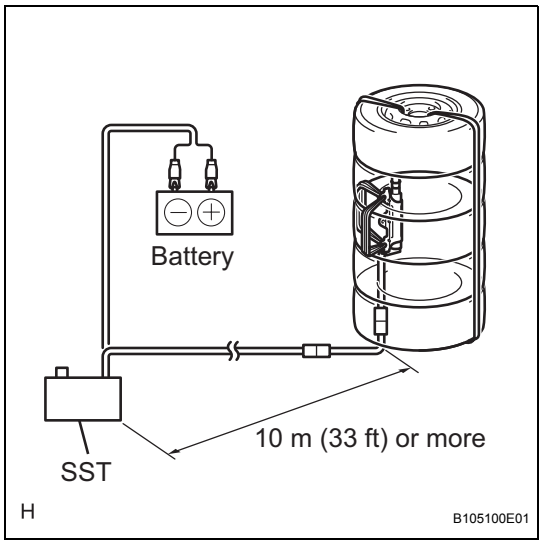

(g) Connect SST.
SST 09082-00700
NOTICE:
Do not lock the secondary lock of the twin lock to avoid damaging the SST connector and wire harness. Also, secure some slack for the SST wire harness inside the tire.

(h) Deploy the airbag.
(1) Connect the red clip of SST to the positive battery terminal and the black clip of SST to the negative battery terminal.
(2) Check that no one is within a 10 m (33 ft) radius of the tire to which the curtain shield airbag is tied.
(3) Press the SST activation switch and deploy the airbag.
CAUTION:
Make sure that no one is near the tire when deploying the airbag.
HINT:
The airbag is deployed as the LED of the SST activation switch illuminates.

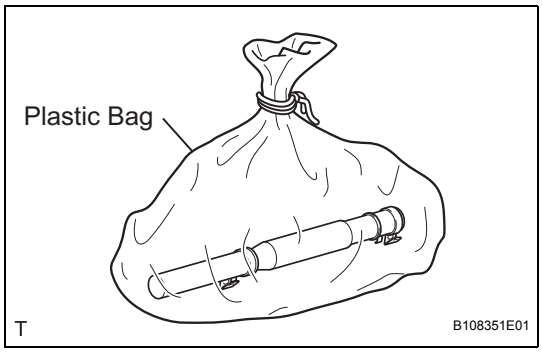

(i) Dispose of the curtain shield airbag.
CAUTION:
- **The curtain shield airbag becomes extremely hot when the airbag is deployed, so do not touch it for at least 30 minutes after deployment.**
- **Use gloves and safety glasses when handling a curtain shield airbag which has been deployed.**
- **Always wash your hands with water after completing the operation.**
- **Do not apply water, etc. to a curtain shield airbag which has been deployed.**

(1) Remove the curtain shield airbag from the tire.
(2) Place the curtain shield airbag in a plastic bag, tie it tightly and dispose of it in the same way as other general parts.

RS

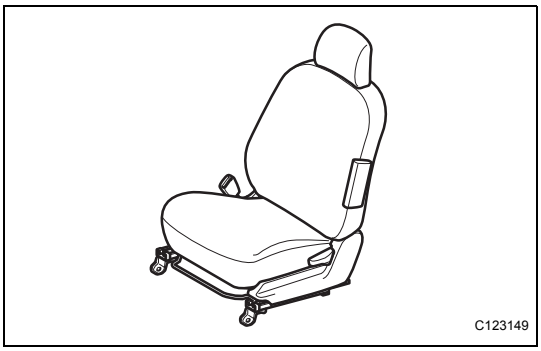

FRONT SEAT SIDE AIRBAG ASSEMBLY

ON-VEHICLE INSPECTION

1. **INSPECT FRONT SEAT SIDE AIRBAG ASSEMBLY (for Vehicle not Involved in Collision)**
   (a) Perform a diagnostic system check (See page RS-38).
   (b) With the front seat side airbag installed on the vehicle, perform a visual check. If there are any defects, such as those mentioned below, replace the front seat side airbag with a new one:
   Any cuts, minute cracks or marked discoloration on the front seat airbag.

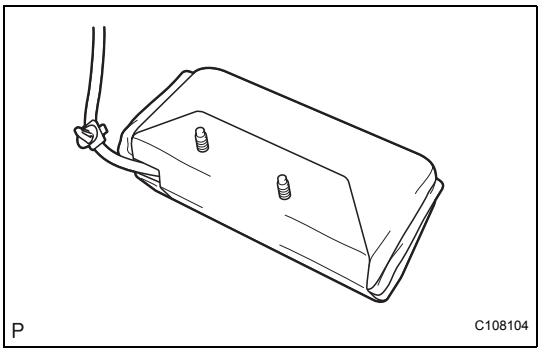

2. **INSPECT FRONT SEAT SIDE AIRBAG ASSEMBLY (for Vehicle Involved in Collision and Airbag not Deployed)**
   (a) Perform a diagnostic system check (See page RS-38).
   (b) With the front seat side airbag removed from the vehicle, perform a visual check. If there are any defects, such as those mentioned below, replace the front seat side airbag with a new one:
   - Any cuts, minute cracks or marked discoloration on the front seat airbag.
   - Any cracks or other damage to the wire harness or connector.

DISPOSAL

HINT:
- Disposal procedure for the RH side is the same as that for the LH side.
- The procedure described below is for the LH side.
- When scrapping a vehicle equipped with the SRS or disposing of the front seat side airbag, deploy the airbag first in accordance with the procedure described below. If any abnormality occurs with the airbag deployment, contact the SERVICE DEPT. of the DISTRIBUTOR.

CAUTION:
- **Never dispose of a front seat side airbag that has an undeployed airbag.**
- **The airbag emits an exploding sound when it is deployed, so perform the operation outdoors and where it will not create a nuisance to nearby residents.**
- **When deploying the airbag, always use the specified SST (SRS Airbag Deployment Tool). Perform the operation in a place away from electrical noise.**
- **When deploying the airbag, perform the operation at least 10 m (33 ft) away from the airbag.**
- **The front seat side airbag becomes extremely hot when the airbag is deployed, so do not touch it for at least 30 minutes after deployment.**
- **Use gloves and safety glasses when handling a front seat side airbag which has been deployed.**
- **Always wash your hands with water after completing the operation.**
- **Do not apply water, etc. to a front seat airbag which has been deployed.**

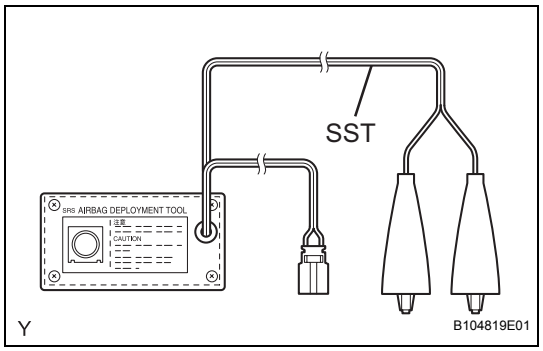

1. DISPOSE OF FRONT SEAT SIDE AIRBAG ASSEMBLY (WHEN INSTALLED IN VEHICLE)

HINT:
Prepare a battery as the power source to deploy the airbag.

(a) Check the function of SST.
SST 09082-00700
CAUTION:
Always use the specified SST (SRS Airbag Deployment Tool) when deploying the airbag.

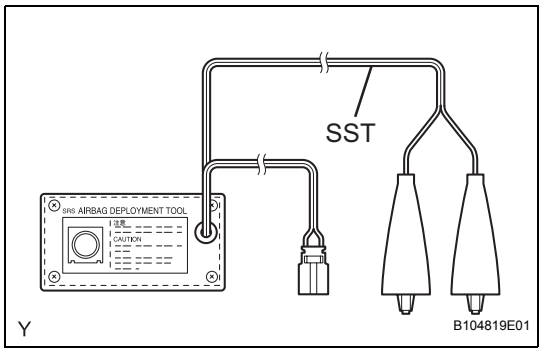

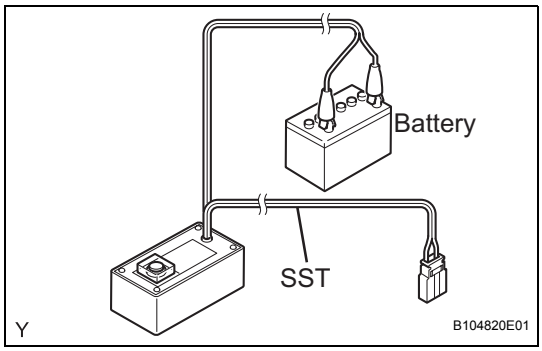

(1) Connect the red clip of SST to the positive battery terminal and the black clip of SST to the negative battery terminal.

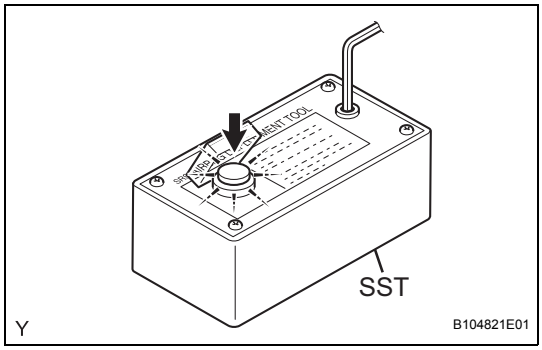

(2) Press the SST activation switch, and check that the LED of the SST activation switch illuminates.
CAUTION:
- **Do not connect the SST connector (yellow colored one) to the airbag.**
- **If the LED illuminates when the activation switch is not being pressed, SST may be malfunctioning. Do not to use SST.**

(3) Disconnect SST from the battery.

(b) Disconnect the cable from the negative battery terminal.

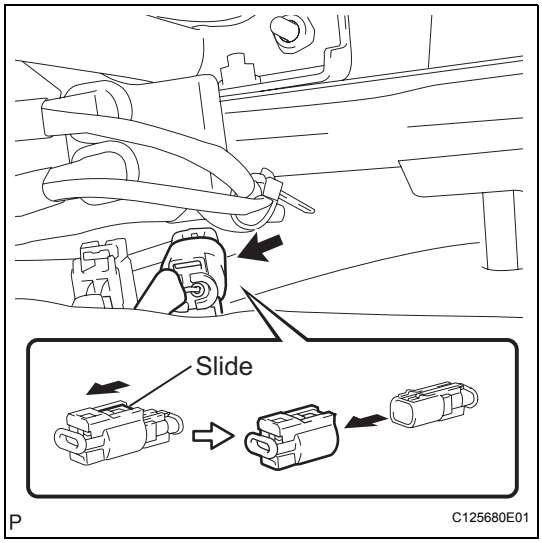

(c) Remove the connector clamp.

(d) Disconnect the airbag connector, as shown in the illustration.
NOTICE:
Do not damage the airbag wire harness when handling the airbag connector.

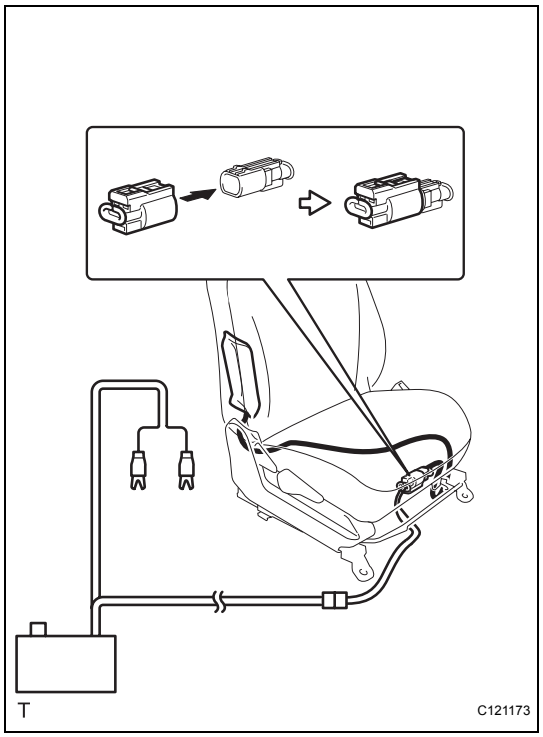

(e) Connect SST.
SST 09082-00700, 09082-00810
(1) Connect the SST connector to the front seat side airbag.
NOTICE:
Do not lock the secondary lock of the twin lock to avoid damaging SST connector and wire harness.

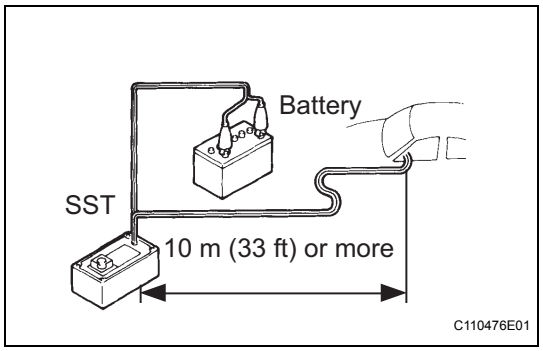

(2) Move SST to at least 10 m (33 ft) away from the vehicle.
(3) Close all doors and windows of the vehicle.
NOTICE:
Do not damage the SST wire harness.
(4) Connect the red clip of SST to the positive battery terminal and the black clip of SST to the negative battery terminal.

(f) Deploy the airbag.
(1) Check that no one is inside the vehicle or within a 10 m (33 ft) radius of the vehicle.
(2) Press the SST activation switch and deploy the airbag.
CAUTION:
- **Make sure that no one is near the vehicle when deploying the airbag.**
- **The front seat side airbag becomes extremely hot when the airbag is deployed, so do not touch it for at least 30 minutes after deployment.**
- **Use gloves and safety glasses when handling a front seat side airbag which has been deployed.**
- **Do not apply water, etc. to a front seat side airbag which has been deployed.**
- **Always wash your hands with water after completing the operation.**

HINT:
The airbag is deployed as the LED of the SST activation switch illuminations.

RS

2. DISPOSE OF FRONT SEAT SIDE AIRBAG ASSEMBLY (WHEN NOT INSTALLED IN VEHICLE)
SST 09082-00700, 09082-00760
NOTICE:
- **Never use the customer's vehicle to deploy the airbag when disposing of a front seat side airbag.**
- **Follow the procedure detailed below when deploying the airbag.**

HINT:
Prepare a battery as the power source to deploy the airbag.

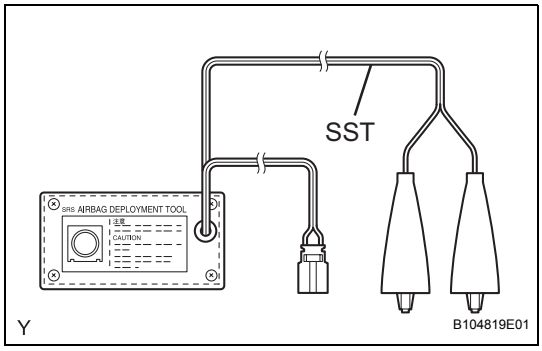

(a) Check the function of SST.
SST 09082-00700
CAUTION:
Always use the specified SST (SRS Airbag Deployment Tool) when deploying the airbag.

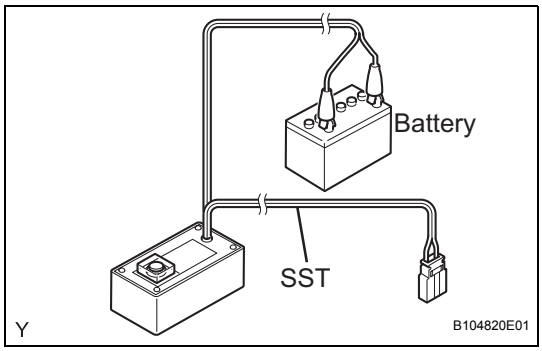

(1) Connect the red clip of SST to the positive battery terminal and the black clip of SST to the negative battery terminal.

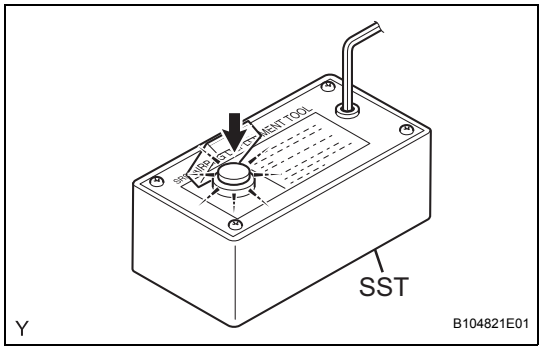

(2) Press the SST activation switch, and check that the LED of the SST activation switch illuminates.
CAUTION:
- **Do not connect the SST connector (yellow colored one) to the airbag.**
- **If the LED illuminates when the activation switch is not being pressed, SST may be malfunctioning. Do not use SST.**

(3) Disconnect SST from the battery.

(b) Remove the front seat side airbag (See page SE-29).

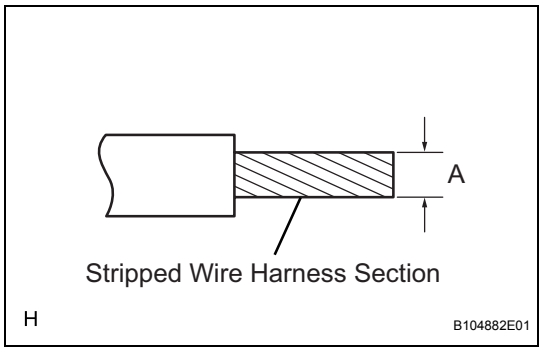

(c) Using a service-purpose wire harness for the vehicle, tie the front seat side airbag.

Stripped wire harness section:

Area	Measurement
A	1.25 mm^2 or more (0.0019 $in.^2$ or more)

HINT:
To calculate the area of the stripped wire harness cross section:
Area = 3.14 x $(Diameter)^2$ divided by 4

CAUTION:
Do not use wire harness that is too thin or any other object to tie the front seat side airbag because it may snap due to the shock when the airbag is deployed. Always use a wire harness for vehicle use with a cross section of at least 1.25 mm^2 (0.0019 in^2).

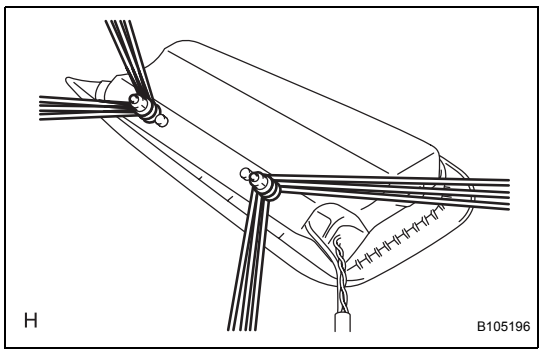

(1) Install the 2 nuts onto the front seat side airbag.
(2) Wind the wire harnesses around the stud bolts of the front seat side airbag, as shown in the illustration.

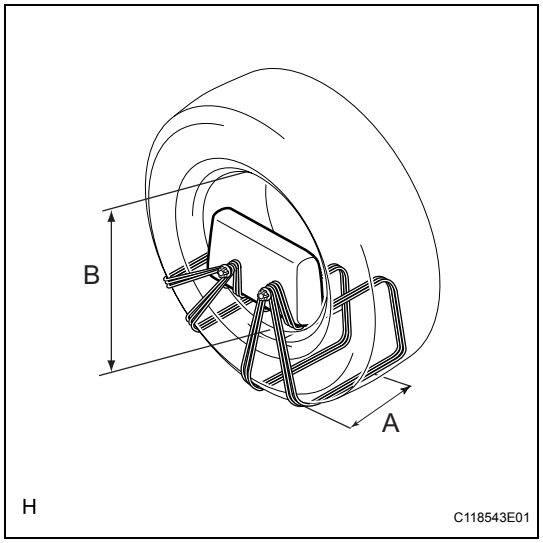

(3) Position the front seat side airbag inside the tire, as shown in the illustration.

Tire size:

Area	Measurement
A	185 mm (7.28 in.)
B	360 mm (14.17 in.)

CAUTION:
- **Make sure that the wire harnesses are tight. If there is any slack in the wire harnesses, the front seat side airbag may become loose due to the shock when the airbag is deployed.**
- **Always tie the front seat side airbag with the airbag deployment direction facing inside the tire.**

NOTICE:
The tire will be marked by the airbag deployment, so use a waste tire.

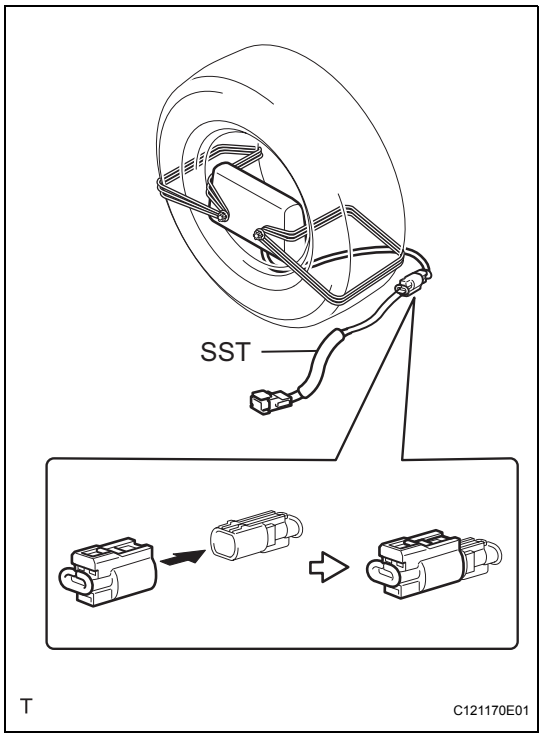

(d) Connect SST.
  (1) Connect the SST connector to the front seat side airbag connector.

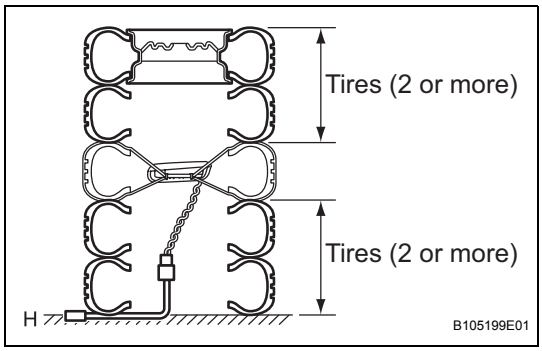

(e) Place the tires.
  (1) Place at least 2 tires under the tire to which the front seat side airbag is tied.
  (2) Place at least 2 tires over the tire to which the front seat side airbag is tied. The disc wheel should be installed onto the top tire.
  NOTICE:
  Do not place the SST connector under the tire because it could be damaged.

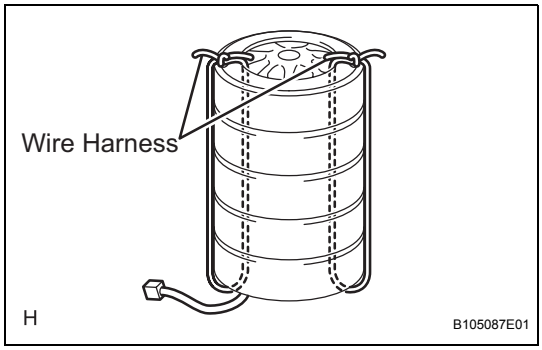

  (3) Tie the tires together with 2 wire harnesses.
  CAUTION:
  Make sure that the wire harnesses are tight. It is highly dangerous when a loose wire harness results in the tires coming free due to the shock when the airbag is deployed.

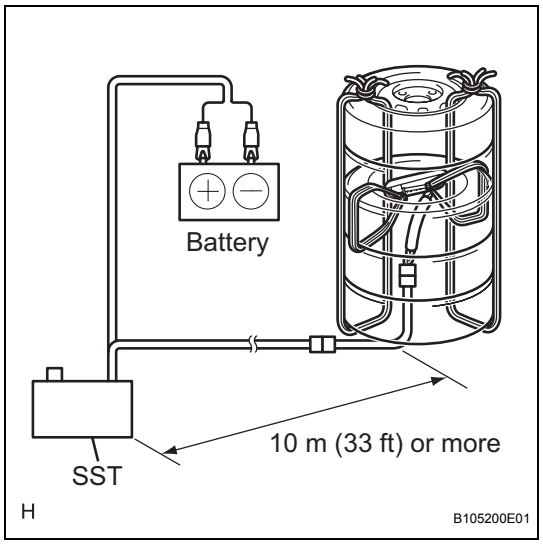

(f) Install SST.
  (1) Connect the SST connector.
  NOTICE:
  Do not lock the secondary lock of the twin lock to avoid damaging the SST connector and wire harness. Also, secure some slack for the SST wire harness inside the tire.

(g) Deploy the airbag.
  (1) Connect the red clip of SST to the positive battery terminal and the black clip of SST to the negative battery terminal.
  (2) Check that no one is within a 10 m (33 ft) radius of the tire to which the front seat side airbag is tied.
  (3) Press the SST activation switch and deploy the airbag.
  CAUTION:
  Make sure that no one is near the tires when deploying the airbag.
  HINT:
  The airbag is deployed as the LED of the SST activation switch illuminates.

(h) Dispose of the front seat side airbag.
  CAUTION:
  - **The front seat side airbag becomes extremely hot when the airbag is deployed, so do not touch it for at least 30 minutes after deployment.**
  - **Use gloves and safety glasses when handling a front seat side airbag which has been deployed.**
  - **Always wash your hands with water after completing the operation.**
  - **Do not apply water, etc. to a front seat side airbag which has been deployed.**
  (1) Remove the front seat side airbag from the tire.
  (2) Place the front seat side airbag in a plastic bag, tie it tightly and dispose of it in the same way as other general parts.

RS

CENTER AIRBAG SENSOR ASSEMBLY (for Sedan)

COMPONENTS

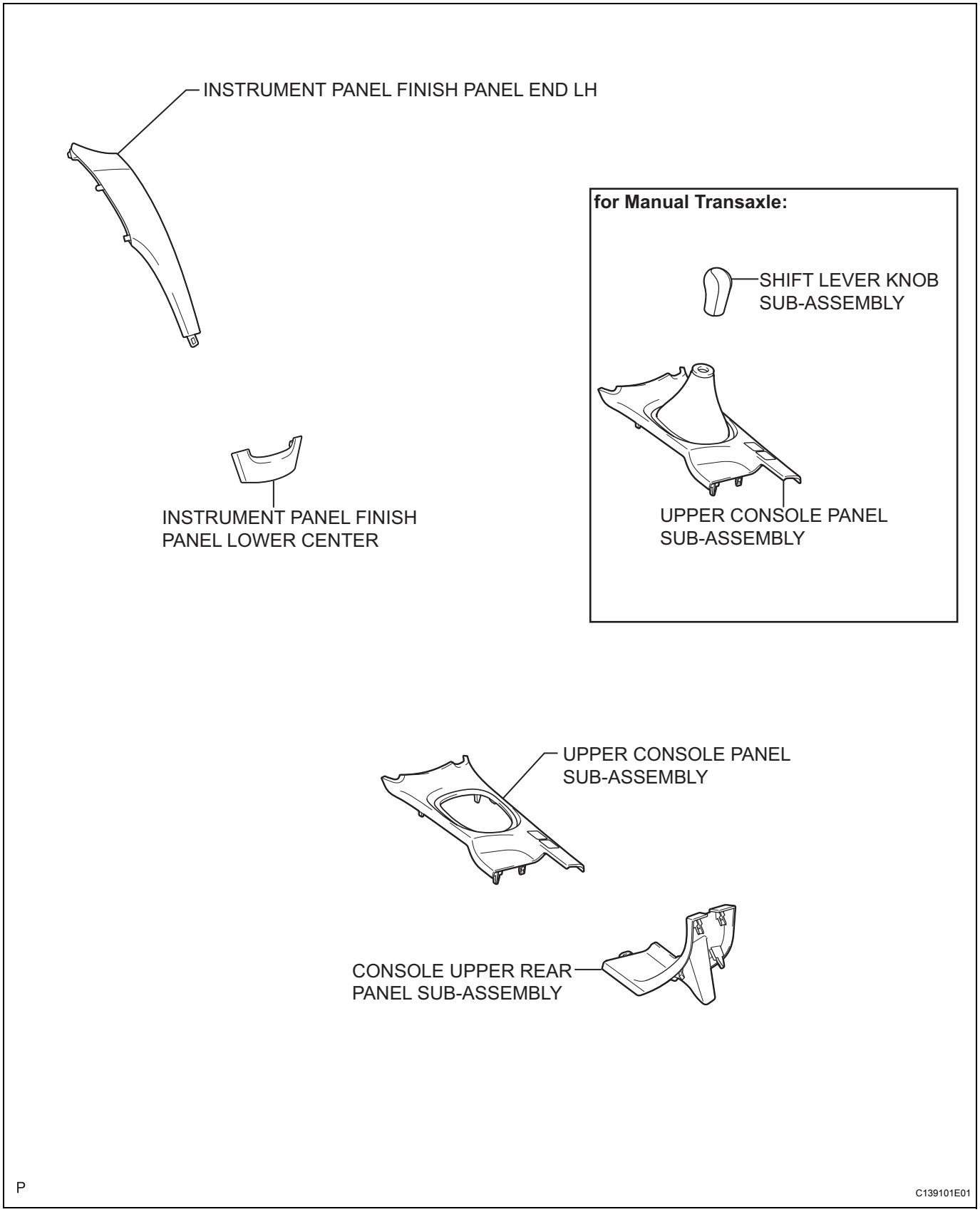

RS

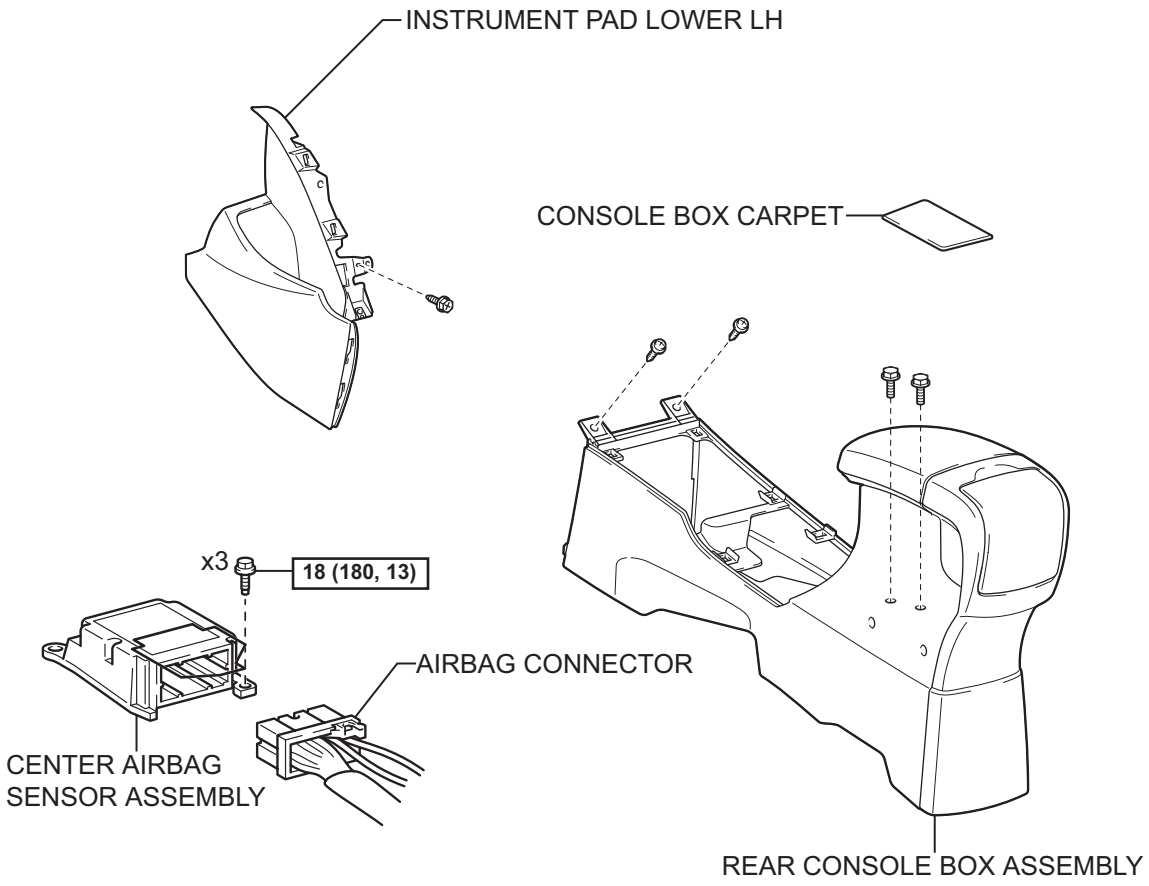

N*m (kgf*cm, ft*lbf) : Specified torque

P

C139102E01

ON-VEHICLE INSPECTION

1. **INSPECT CENTER AIRBAG SENSOR ASSEMBLY (for Vehicle not Involved in Collision)**
   (a) Perform a diagnostic system check (See page RS-38).

2. **INSPECT CENTER AIRBAG SENSOR ASSEMBLY (for Vehicle Involved in Collision and Airbag not Deployed)**
   (a) Perform a diagnostic system check (See page RS-38).

3. **INSPECT CENTER AIRBAG SENSOR ASSEMBLY (for Vehicle Involved in Collision)**
   CAUTION:
   For center airbag sensor assembly removal and installation procedure, see pages RS-433 and RS-434 , and follow the correct procedure.
   (a) Replace the center airbag sensor assembly.

RS

REMOVAL

CAUTION:
Some of these service operations affect the SRS airbag system. Read the precautionary notices concerning the SRS airbag system before servicing (See page RS-1).

1. **REMOVE INSTRUMENT PANEL FINISH PANEL LOWER CENTER (See page ME-138)**
2. **REMOVE INSTRUMENT PANEL FINISH PANEL END LH (See page ME-138)**
3. **REMOVE SHIFT LEVER KNOB SUB-ASSEMBLY (for Manual Transaxle) (See page IP-84)**
4. **REMOVE UPPER CONSOLE PANEL SUB-ASSEMBLY (See page IP-84)**
5. **REMOVE CONSOLE UPPER REAR PANEL SUB-ASSEMBLY (See page IP-84)**
6. **REMOVE CONSOLE BOX CARPET (See page IP-85)**
7. **REMOVE REAR CONSOLE BOX ASSEMBLY (See page IP-85)**
8. **REMOVE INSTRUMENT PAD LOWER LH (See page IP-44)**
9. **REMOVE CENTER AIRBAG SENSOR ASSEMBLY**
   CAUTION:
   Confirm that the negative battery terminal is disconnected before performing the operation. Even an impact to only the airbag sensor will cause the airbag to deploy.
   (a) Pull the lever down and detach the connector holder.

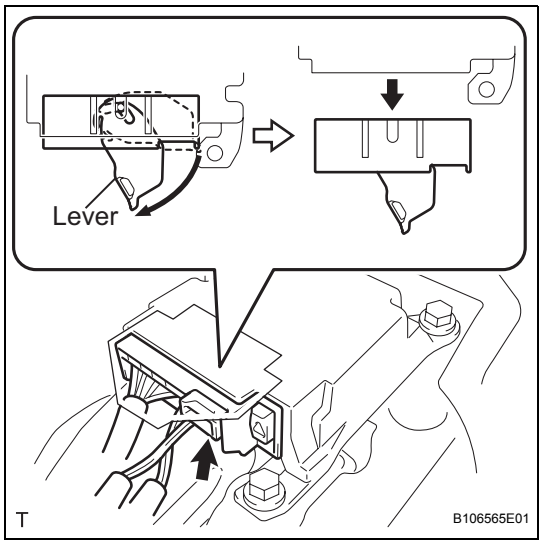

   (b) Remove the 3 bolts and remove the airbag sensor.

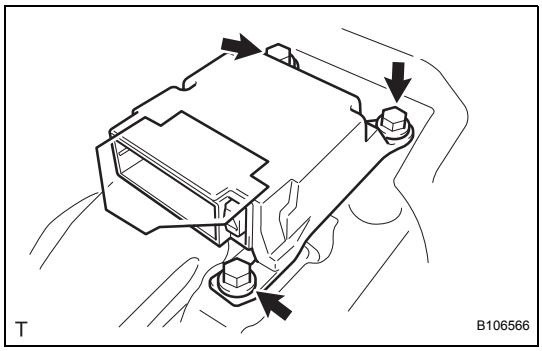

INSTALLATION

CAUTION:
Some of these service operations affect the SRS airbag system. Be sure to read the precautionary notices concerning the SRS airbag system before servicing (See page RS-1).

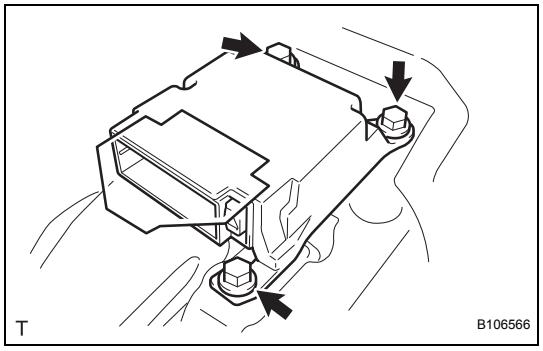

1. INSTALL CENTER AIRBAG SENSOR ASSEMBLY

(a) Confirm that the ignition switch is turned to off.

(b) Confirm that the negative battery terminal is detached.
CAUTION:
- **Confirm that the negative battery terminal is disconnected before performing the operation. Even an impact to only the airbag sensor will cause the airbag to deploy.**
- **Do not start the operation for at least 90 seconds after disconnecting the negative battery terminal.**

(c) Remove the 3 bolts and remove the airbag sensor.
Torque: 18 N*m (180 kgf*cm, 13 ft.*lbf)
NOTICE:
- **Do not use an airbag sensor that has been dropped.**
- **Do not subject the airbag sensor to any impact or force.**
- **Confirm that the carpet does not interfere with the installation plane.**

(d) Confirm that there is no looseness by shaking the front airbag sensor.

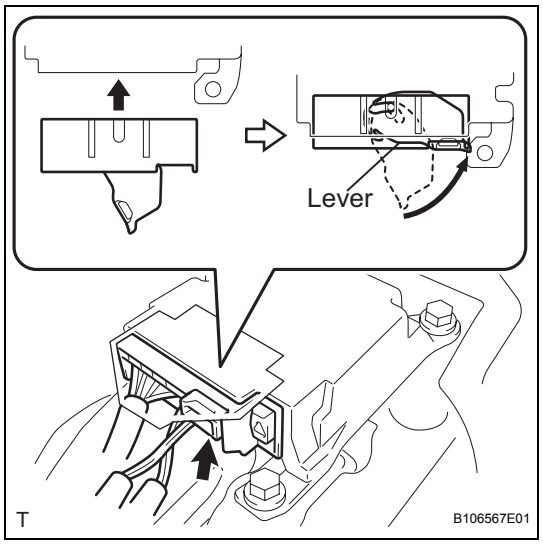

(e) Connect the connector holder to lock the lever.
NOTICE:
Confirm that the lever is locked.

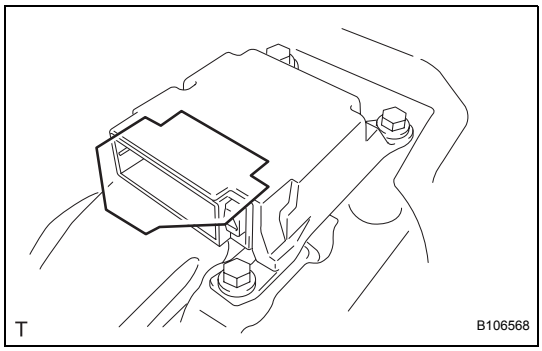

(f) Confirm that the drip-proof sheet has not been removed and does not cut into the connectors.

2. **INSTALL INSTRUMENT PAD LOWER LH (See page IP-55)**
3. **INSTALL REAR CONSOLE BOX ASSEMBLY (See page IP-88)**
4. **INSTALL CONSOLE BOX CARPET (See page IP-88)**
5. **INSTALL CONSOLE UPPER REAR PANEL SUB-ASSEMBLY (See page IP-89)**
6. **INSTALL UPPER CONSOLE PANEL SUB-ASSEMBLY (See page IP-89)**
7. **INSTALL SHIFT LEVER KNOB SUB-ASSEMBLY (for Manual Transaxle) (See page IP-89)**
8. **REMOVE INSTRUMENT PANEL FINISH PANEL END LH (See page ME-141)**
9. **INSTALL INSTRUMENT PANEL FINISH PANEL LOWER CENTER (See page ME-142)**
10. **CONNECT CABLE TO NEGATIVE BATTERY TERMINAL**
    Torque: 5.4 N*m (55 kgf*cm, 48 in.*lbf)
11. **INSPECT SRS WARNING LIGHT**
    (See page RS-31)

CENTER AIRBAG SENSOR ASSEMBLY (for Hatchback)

COMPONENTS

RS

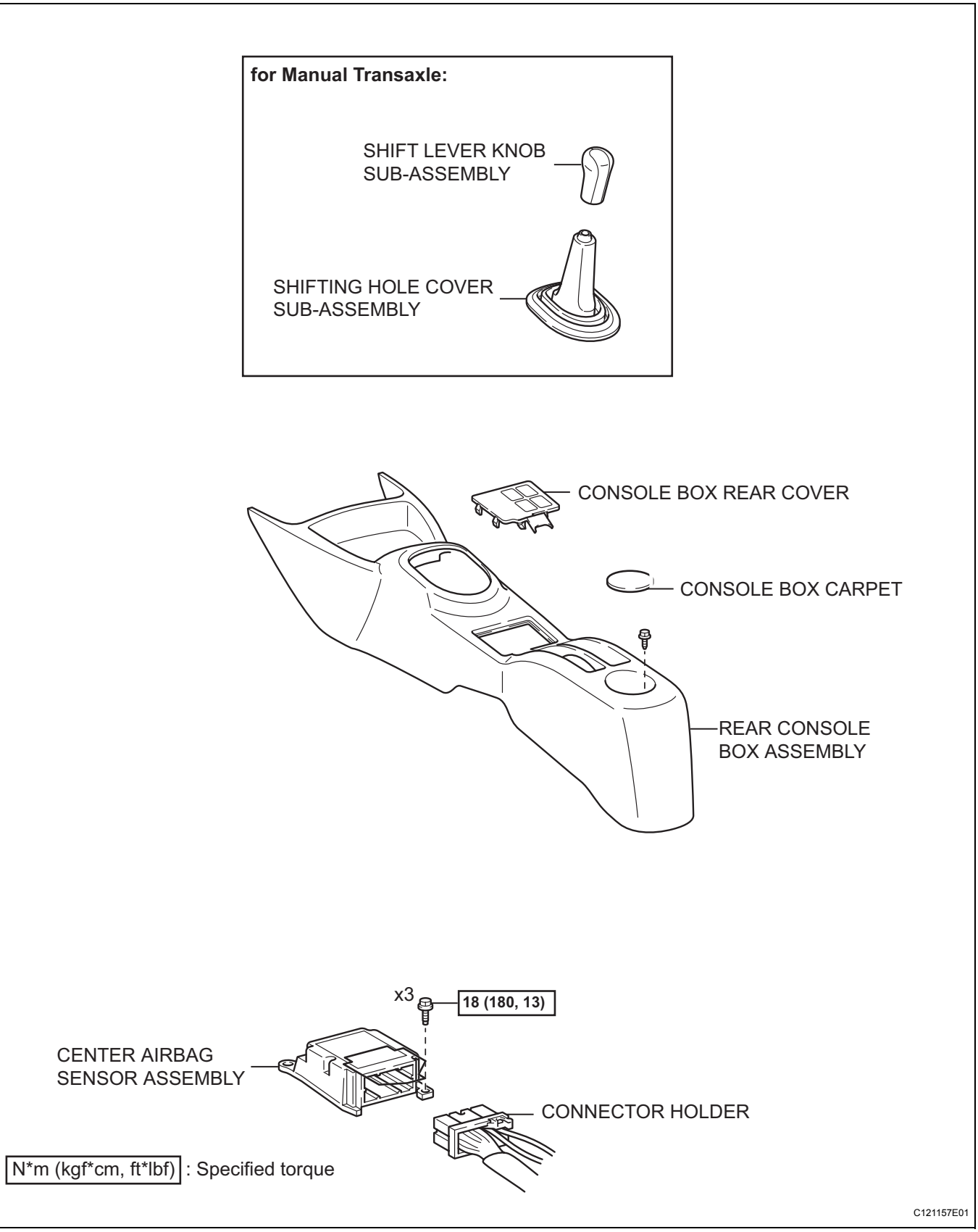

ON-VEHICLE INSPECTION

1. **INSPECT CENTER AIRBAG SENSOR ASSEMBLY (for Vehicle not Involved in Collision)**
   (a) Perform a diagnostic system check (See page RS-38).

2. **INSPECT CENTER AIRBAG SENSOR ASSEMBLY (for Vehicle Involved in Collision and Airbag not Deployed)**
   (a) Perform a diagnostic system check (See page RS-38).

3. **INSPECT CENTER AIRBAG SENSOR ASSEMBLY (for Vehicle Involved in Collision)**
   CAUTION:
   For center airbag sensor removal and installation procedures, see pages RS-437 and RS-438 , and follow the correct procedure.
   (a) Replace the center airbag sensor.

RS

REMOVAL

CAUTION:
Some of these service operations affect the SRS airbag system. Read the precautionary notices concerning the SRS airbag system before servicing (See page RS-1).

1. **DISCONNECT CABLE FROM NEGATIVE BATTERY TERMINAL**
2. **REMOVE SHIFT LEVER KNOB SUB-ASSEMBLY (for Manual Transaxle)**
3. **REMOVE SHIFTING HOLE COVER SUB-ASSEMBLY (for Manual Transaxle) (See page PB-6)**
4. **REMOVE CONSOLE BOX REAR COVER (See page PB-6)**
5. **REMOVE CONSOLE BOX CARPET (See page PB-7)**
6. **REMOVE REAR CONSOLE BOX ASSEMBLY (See page PB-8)**
7. **REMOVE CENTER AIRBAG SENSOR ASSEMBLY**
   CAUTION:
   Confirm that the negative battery terminal is disconnected before performing the operation. Even an impact to only the airbag sensor will cause the airbag to deploy.
   (a) Pull the lever down and detach the connector holder.

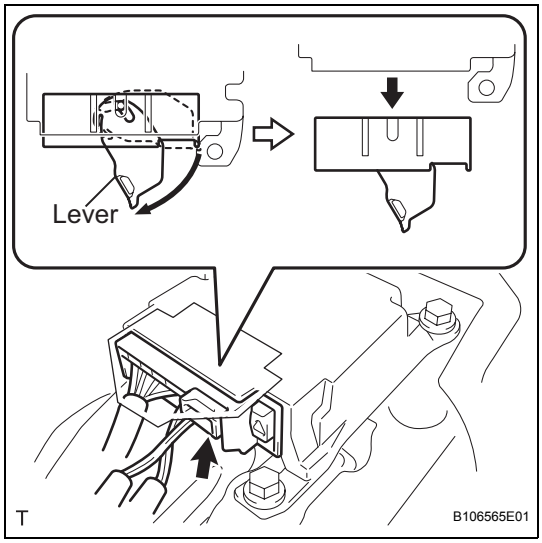

   (b) Remove the 3 bolts and remove the airbag sensor.

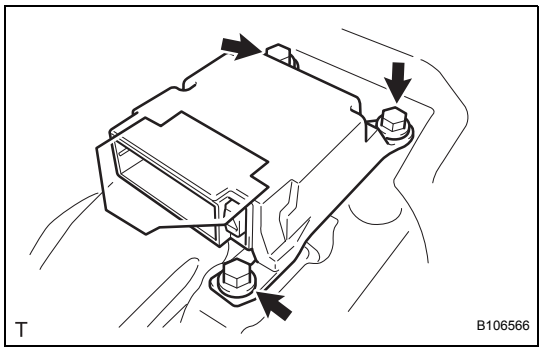

INSTALLATION

CAUTION:
Some of these service operations affect the SRS airbag system. Read the precautionary notices concerning the SRS airbag system before servicing (See page RS-1).

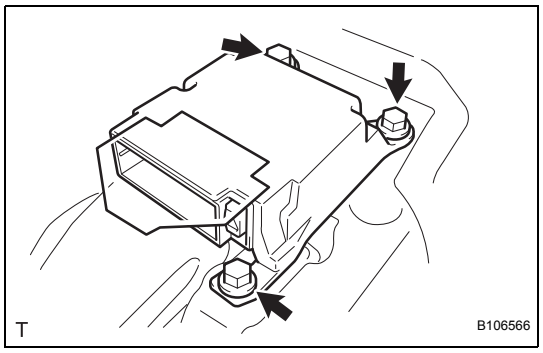

1. INSTALL CENTER AIRBAG SENSOR ASSEMBLY

(a) Confirm that the ignition switch is turned to OFF.

(b) Confirm that the negative battery terminal is detached.
CAUTION:
- **Confirm that the negative battery terminal is disconnected before performing the operation. Even an impact to only the airbag sensor will cause the airbag to deploy.**
- **Do not start the operation for at least 90 seconds after disconnecting the negative battery terminal.**

(c) Remove the 3 bolts and remove the airbag sensor.
Torque: 18 N*m (180 kgf*cm, 13 ft.*lbf)
NOTICE:
- **Do not use an airbag sensor that has been dropped.**
- **Do not subject the airbag sensor to any impact or force.**
- **Confirm that the carpet does not interfere with the installation plane.**

(d) Confirm that there is no looseness by shaking the front airbag sensor.

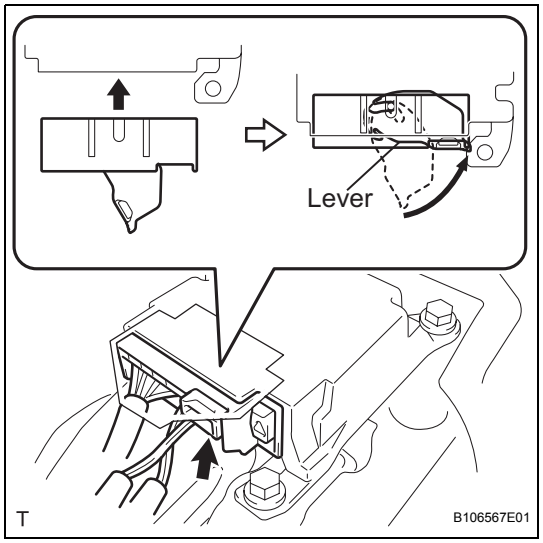

(e) Connect the connector holder to lock the lever.
NOTICE:
Confirm that the lever is locked.

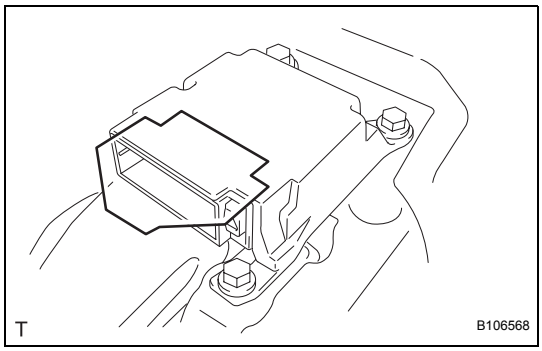

(f) Confirm that the drip-proof sheet has not been removed and does not cut into the connectors.

2. **INSTALL REAR CONSOLE BOX ASSEMBLY (See page PB-10)**
3. **INSTALL CONSOLE BOX CARPET (See page PB-11)**
4. **INSTALL CONSOLE BOX REAR COVER (See page PB-11)**
5. **INSTALL SHIFTING HOLE COVER SUB-ASSEMBLY (for Manual Transaxle) (See page PB-12)**
6. **INSTALL SHIFT LEVER KNOB SUB-ASSEMBLY (for Manual Transaxle)**
7. **CONNECT CABLE TO NEGATIVE BATTERY TERMINAL**
   Torque: 5.4 N*m (55 kgf*cm, 48 in.*lbf)
8. **INSPECT SRS WARNING LIGHT**
   (See page RS-31)

FRONT AIRBAG SENSOR (for Sedan)

COMPONENTS

RS

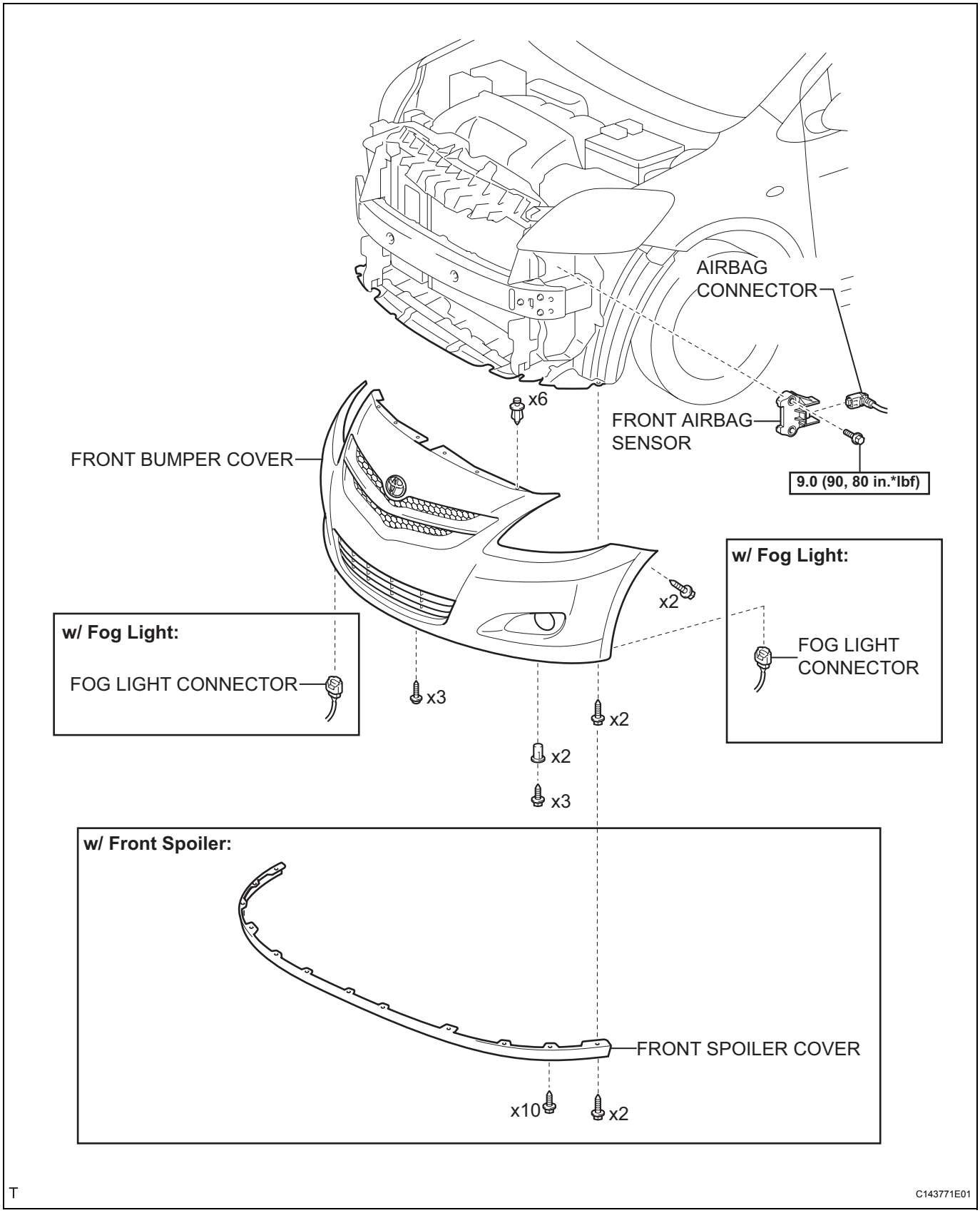

ON-VEHICLE INSPECTION

1. **INSPECT FRONT AIRBAG SENSOR (for Vehicle not Involved in Collision)**
   (a) Perform a diagnostic system check (See page RS-38).

2. **INSPECT FRONT AIRBAG SENSOR ASSEMBLY (for Vehicle Involved in Collision and Airbag not Deployed)**
   CAUTION:
   For front airbag sensor removal and installation procedures, see pages RS-441 and RS-442, and carefully follow the correct procedure.
   (a) Perform a diagnostic system check (See page RS-38).
   (b) When the center front bumper or its periphery is damaged, check whether there is any damage to the front airbag sensor. If there are any defects, such as those mentioned below, replace the front airbag sensor with a new one:
   - Any cracks, dents or chips in the case.
   - Any cracks or other damage to the connector.
   - Peeling of the label or damage to the serial number.

3. **INSPECT FRONT AIRBAG SENSOR ASSEMBLY (for Vehicle Involved in Collision)**
   CAUTION:
   For front airbag sensor removal and installation procedures, see pages RS-441 and RS-442, and carefully follow the correct procedure.
   (a) Replace the front airbag sensor.

RS

REMOVAL

CAUTION:
Some of these service operations affect the SRS airbag system. Read the precautionary notices concerning the SRS airbag system before servicing (See page RS-1).
HINT:
The procedure described below is for the LH side. Use the same procedure for both the RH and LH sides, unless otherwise specified.

1. **DISCONNECT CABLE FROM NEGATIVE BATTERY TERMINAL**
2. **REMOVE FRONT SPOILER COVER (w/ Front Spoiler) (See page ET-6)**
3. **REMOVE FRONT BUMPER COVER (See page ET-6)**
4. **REMOVE FRONT AIRBAG SENSOR**
   CAUTION:
   Confirm that the negative battery terminal is disconnected before performing the operation. Even an impact to only the airbag sensor will cause the airbag to deploy.
   (a) Remove the 2 bolts.
   (b) Disengage the 2 claws and remove the front airbag sensor.

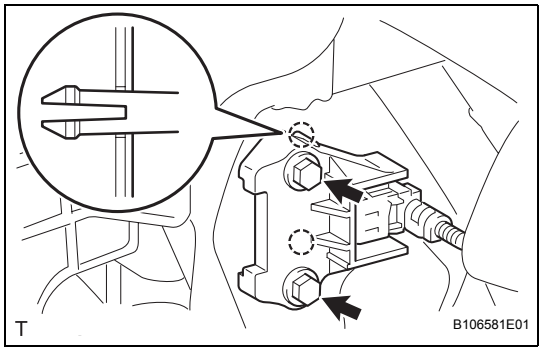

   (c) Disconnect the airbag connector.
   NOTICE:
   - **Do not disconnect the airbag connector by pulling the wire harness.**
   - **Release the lock without holding the upper side of CPA.**
   (1) While pushing the housing, slide only the CPA backward (from a provisionally locked state).
   (2) Detach the connector while pushing the housing in the provisionally locked state.
   NOTICE:
   - **Do not disconnect the airbag connector by pulling the wire harness.**
   - **Release the lock without holding the upper side of CPA.**

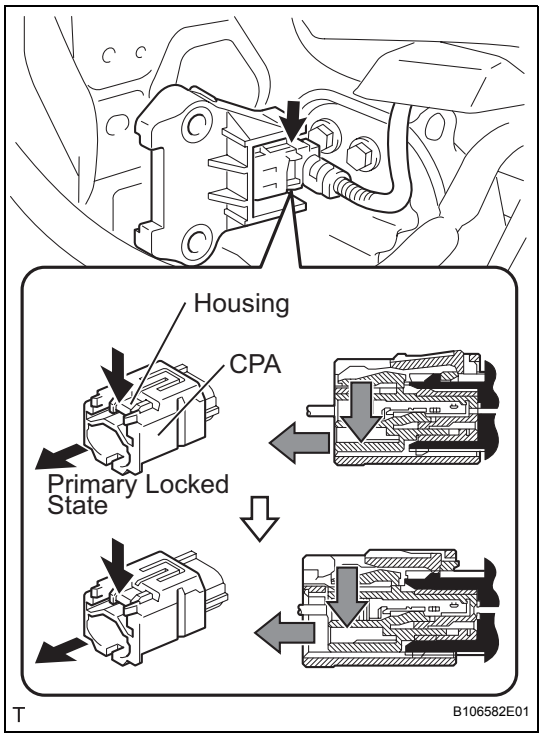

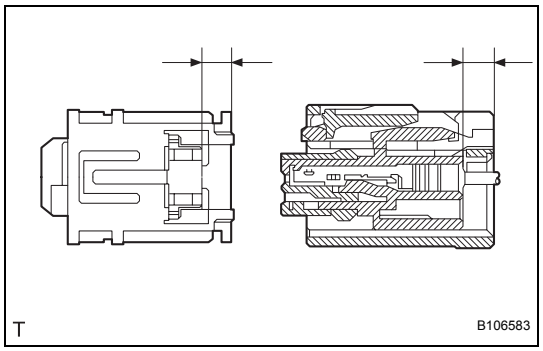

(3) After detaching the connector, confirm that the CPA protrudes beyond the rear of the housing.

RS

INSTALLATION

CAUTION:
Some of these service operations affect the SRS airbag system. Read the precautionary notices concerning the SRS airbag system before servicing (See page RS-1).
HINT:
The procedure described below is for the LH side. Use the same procedure for both the LH and RH sides, unless otherwise specified.

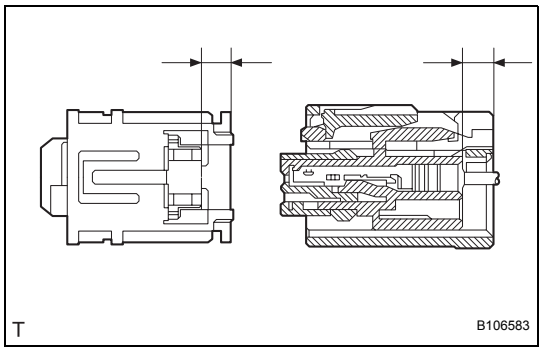

1. INSTALL FRONT AIRBAG SENSOR
NOTICE:
- **Do not use a front airbag sensor that has been dropped.**
- **Do not subject the front airbag sensor any impact or force.**

(a) Confirm that the ignition switch is turned to off.
(b) Confirm that the negative battery terminal is detached.
CAUTION:
- **Confirm that the negative battery terminal is disconnected before performing the operation. Even an impact to only the airbag sensor will cause the airbag to deploy.**
- **Do not start the operation for at least 90 seconds after disconnecting the negative battery terminal.**

(c) Connect the airbag connector.
(1) Check that the CPA is in the provisionally locked condition.
(2) Push the CPA until it makes a click sound.
NOTICE:
- **Engage the connector by pushing it straight.**
- **Hold the CPA when engaging the connector.**
- **Do not engage the CPA while pressing the CPA upper portion, otherwise, the half connection prevention mechanism will not function.**

(3) Confirm that the rear side of the housing and the CPA rear surface are tightly fitted together.

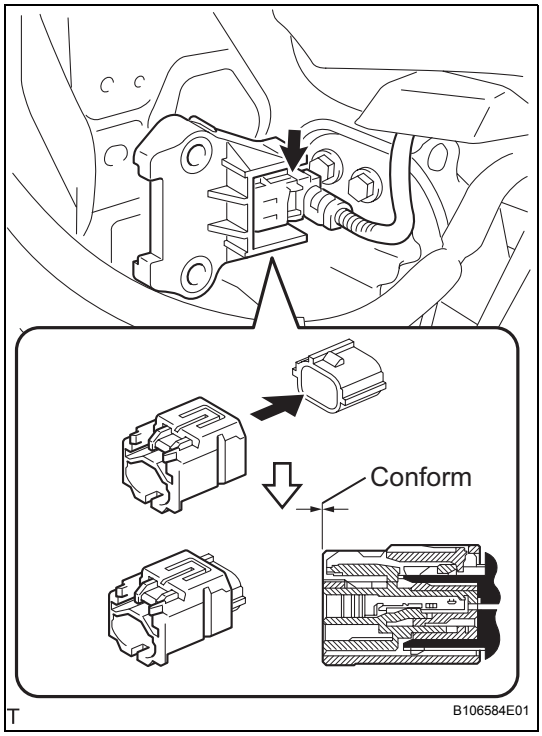

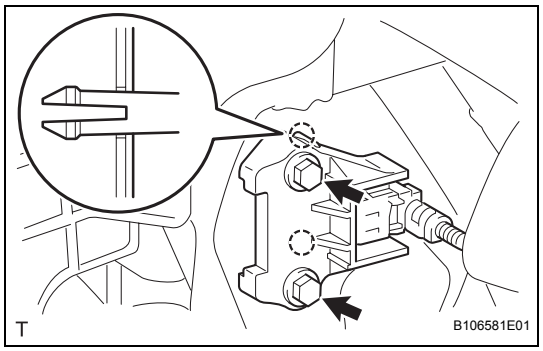

(d) Install the front airbag sensor with the 2 bolts.
Torque: 9.0 N*m (90 kgf*cm, 80 in.*lbf)

(e) Confirm that there is no looseness by shaking the front airbag sensor.

2. INSTALL FRONT BUMPER COVER (See page ET-16)

3. INSTALL FRONT SPOILER COVER (w/ Front Spoiler) (See page ET-19)

4. CONNECT CABLE TO NEGATIVE BATTERY TERMINAL
Torque: 5.4 N*m (55 kgf*cm, 48 in.*lbf)

5. INSPECT SRS WARNING LIGHT
(See page RS-31)

FRONT AIRBAG SENSOR (for Hatchback)

COMPONENTS

RS

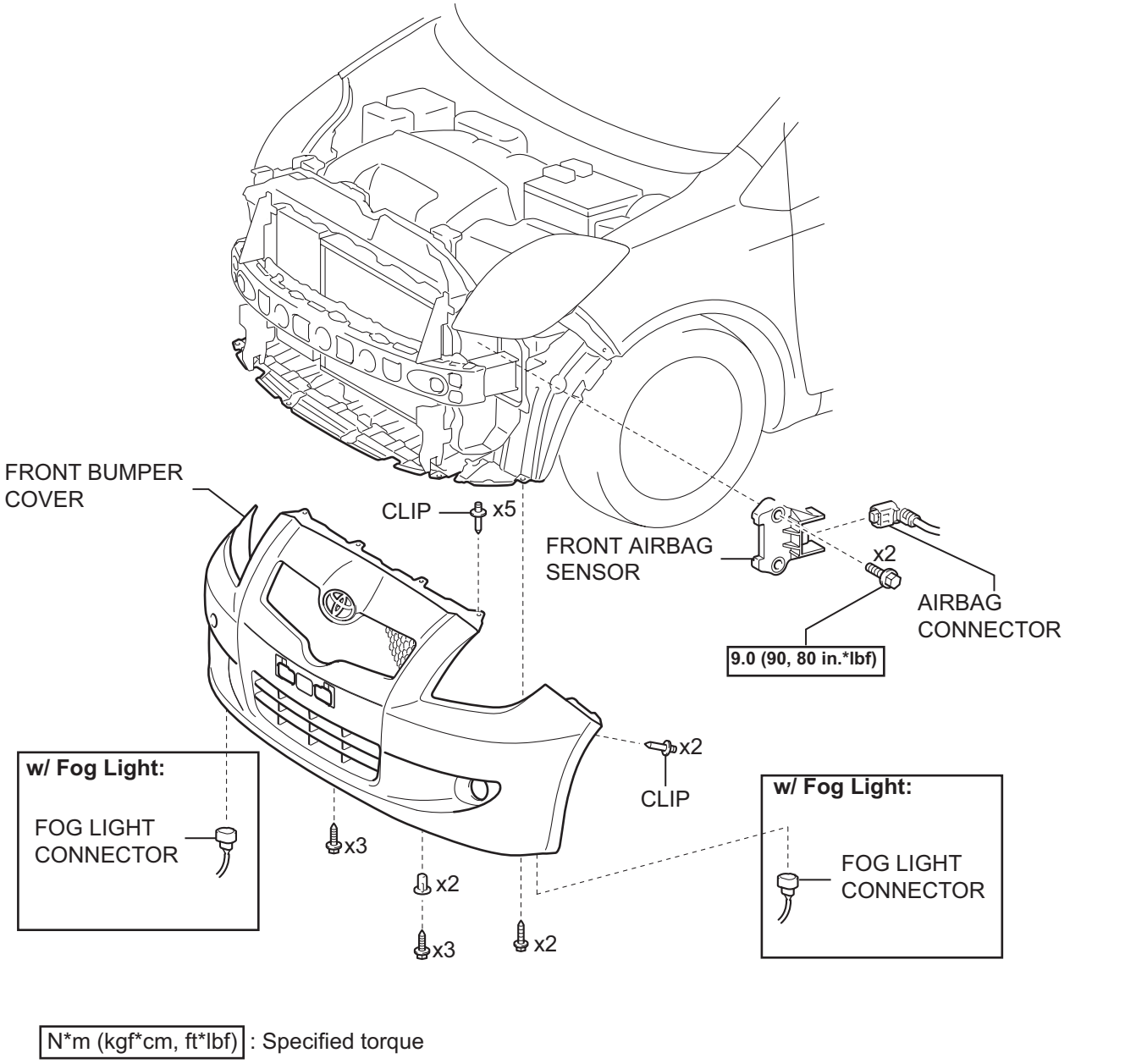

N*m (kgf*cm, ft*lbf) : Specified torque

T

C121544E01

ON-VEHICLE INSPECTION

1. **INSPECT FRONT AIRBAG SENSOR (for Vehicle not Involved in Collision)**
   (a) Perform a diagnostic system check (See page RS-38).

2. **INSPECT FRONT AIRBAG SENSOR ASSEMBLY (for Vehicle Involved in Collision and Airbag not Deployed)**
   CAUTION:
   For front airbag sensor removal and installation procedures, see pages RS-446 and RS-447, and carefully follow the correct procedure.
   (a) Perform a diagnostic system check (See page RS-38).
   (b) When the center front bumper or its periphery is damaged, check whether there is any damage to the front airbag sensor. If there are any defects, such as those mentioned below, replace the front airbag sensor with a new one:
   - Any cracks, dents or chips in the case.
   - Any cracks or other damage to the connector.
   - Peeling of the label or damage to the serial number.

3. **INSPECT FRONT AIRBAG SENSOR ASSEMBLY (for Vehicle Involved in Collision)**
   CAUTION:
   For front airbag sensor removal and installation procedures, see pages RS-446 and RS-447, and carefully follow the correct procedure.
   (a) Replace the front airbag sensor.

REMOVAL

CAUTION:
Some of these service operations affect the SRS airbag system. Read the precautionary notices concerning the SRS airbag system before servicing (See page RS-1).
HINT:
The procedure described below is for the LH side. Use the same procedure for both the RH and LH sides, unless otherwise specified.

1. **DISCONNECT CABLE FROM NEGATIVE BATTERY TERMINAL**

2. **REMOVE FRONT BUMPER COVER (See page ET-24)**

3. **REMOVE FRONT AIRBAG SENSOR**
   CAUTION:
   Confirm that the negative battery terminal is disconnected before performing the operation. Even an impact to only the airbag sensor will cause the airbag to deploy.
   (a) Remove the 2 bolts.
   (b) Disengage the 2 claws and remove the front airbag sensor.

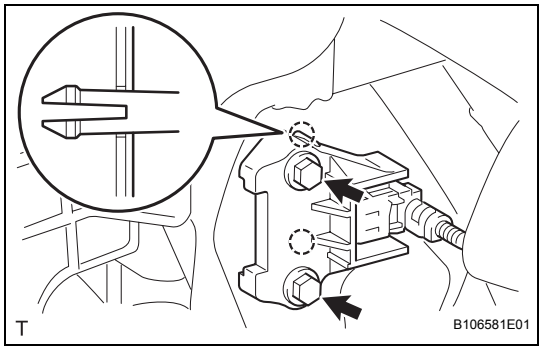

   (c) Disconnect the airbag connector.
   NOTICE:
   - **Do not disconnect the airbag connector by pulling the wire harness.**
   - **Release the lock without holding the upper side of CPA.**
   (1) While pushing the housing, slide only the CPA backward (from its provisionally locked state).
   (2) Detach the connector while pushing the housing in the provisionally locked state.

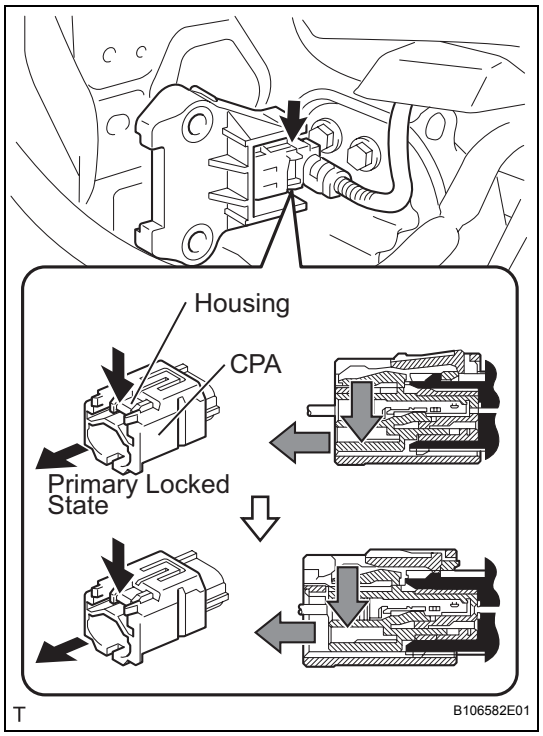

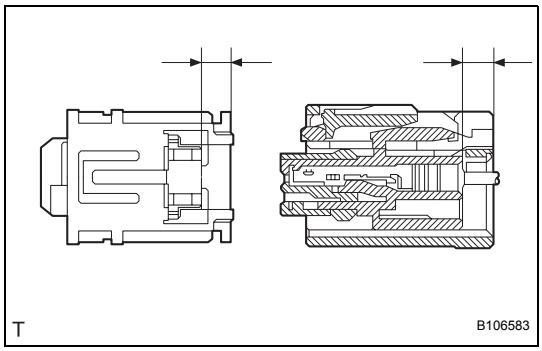

(3) After detaching the connector, confirm that the CPA protrudes beyond the rear of the housing.

INSTALLATION

CAUTION:
Some of these service operations affect the SRS airbag system. Read the precautionary notices concerning the SRS airbag system before servicing (See page RS-1).

HINT:
The procedure described below is for the LH side. Use the same procedure for both the LH and RH sides, unless otherwise specified.

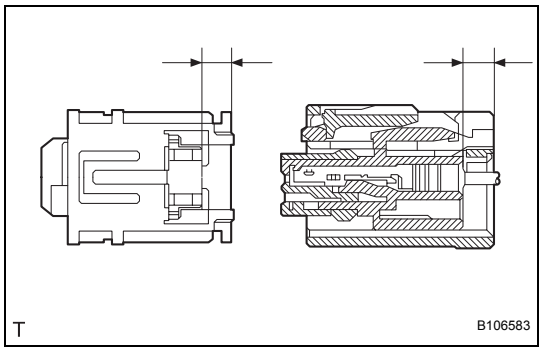

1. INSTALL FRONT AIRBAG SENSOR

NOTICE:
- **Do not use a front airbag sensor that has been dropped.**
- **Do not subject the front airbag sensor to any impact or force.**

(a) Confirm that the ignition switch is turned to OFF.

(b) Confirm that the negative battery terminal is detached.

CAUTION:
- **Confirm that the negative battery terminal is disconnected before performing the operation. Even an impact to only the airbag sensor will cause the airbag to deploy.**
- **Do not start the operation for at least 90 seconds after disconnecting the negative battery terminal.**

(c) Connect the airbag connector.

(1) Check that the CPA is in the provisionally locked state.

(2) Push the CPA until it makes a click sound.

NOTICE:
- **Engage the connector by pushing it straight.**
- **Hold the CPA when engaging the connector.**
- **Do not engage the CPA while pressing the CPA upper portion, otherwise, the half connection prevention mechanism will not function.**

(3) Confirm that the rear side of the housing and the CPA rear surface are tightly fitted together.

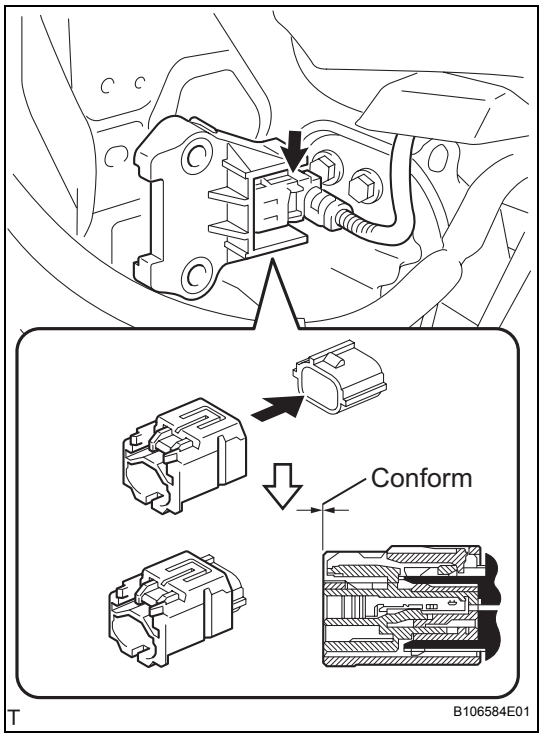

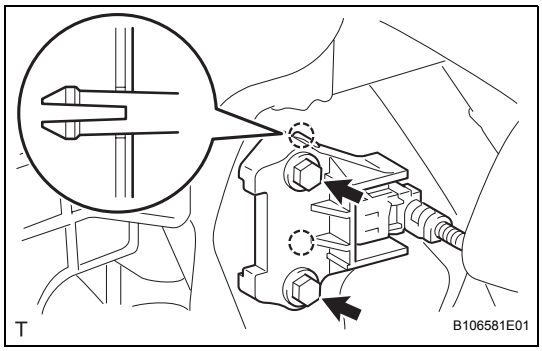

(d) Install the front airbag sensor with the 2 bolts.
Torque: 9.0 N*m (90 kgf*cm, 80 in.*lbf)

(e) Confirm that there is no looseness by shaking the front airbag sensor.

2. INSTALL FRONT BUMPER COVER (See page ET-33)

3. CONNECT CABLE TO NEGATIVE BATTERY TERMINAL
Torque: 5.4 N*m (55 kgf*cm, 48 in.*lbf)

4. INSPECT SRS WARNING LIGHT
(See page RS-31)

SIDE AIRBAG SENSOR (for Sedan)

COMPONENTS

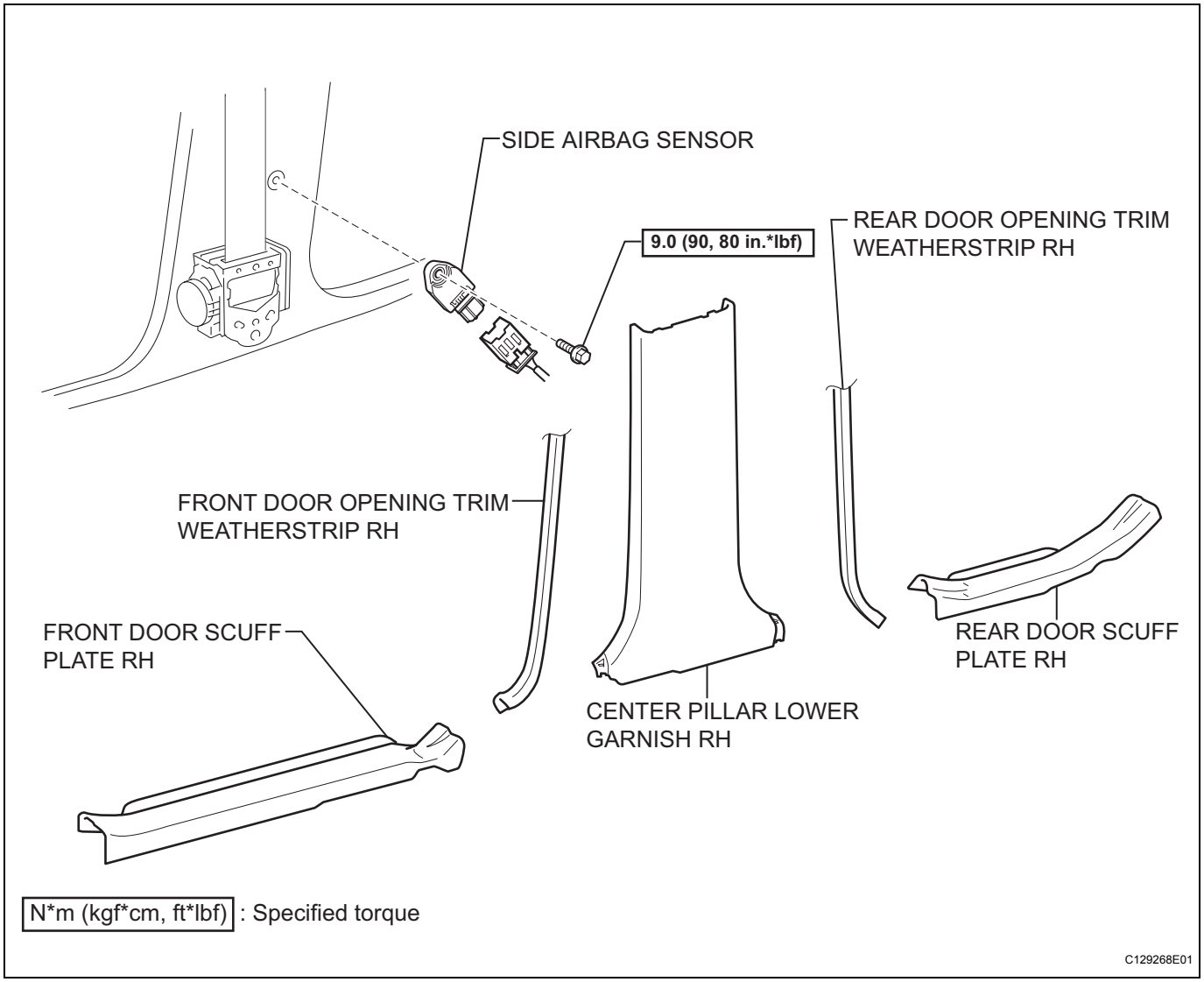

RS

ON-VEHICLE INSPECTION

1. **INSPECT SIDE AIRBAG SENSOR ASSEMBLY (for Vehicle not Involved in Collision)**
   (a) Perform a diagnostic system check (See page RS-38).

2. **INSPECT SIDE AIRBAG SENSOR ASSEMBLY (for Vehicle Involved in Collision and Airbag not Deployed)**
   CAUTION:
   For side airbag sensor removal and installation procedures, see pages RS-450 and RS-451, and carefully follow the correct procedure.
   (a) Perform a diagnostic system check (See page RS-38).
   (b) When the center pillar of the vehicle or its periphery is damaged, check whether there is any damage to the side airbag sensor. If there are any defects, such as those mentioned below, replace the side airbag sensor with a new one:
   - Any cracks, dents or chips in the case.
   - Any cracks or other damage to the connector.
   - Peeling of the label or damage to the serial number.

3. **INSPECT SIDE AIRBAG SENSOR ASSEMBLY (for Vehicle Involved in Collision)**
   CAUTION:
   For side airbag sensor removal and installation procedures, see pages RS-450 and RS-451, and carefully follow the correct procedure.
   (a) Replace the side airbag sensor.

REMOVAL

CAUTION:
Some of these service operations affect the SRS airbag system. Read the precautionary notices concerning the SRS airbag system before servicing (See page RS-1).
HINT:
The procedure described below is for the RH side. Use the same procedure for both the RH and LH sides, unless otherwise specified.

1. **REMOVE FRONT DOOR SCUFF PLATE RH (See page IR-14)**
2. **REMOVE FRONT DOOR OPENING TRIM WEATHERSTRIP RH (See page IR-15)**
3. **REMOVE REAR DOOR SCUFF PLATE RH (See page IR-15)**
4. **REMOVE REAR DOOR OPENING TRIM WEATHERSTRIP RH (See page IR-15)**
5. **REMOVE CENTER PILLAR LOWER GARNISH RH (See page IR-16)**
6. **REMOVE SIDE AIRBAG SENSOR**
   CAUTION:
   Confirm that the negative battery terminal is disconnected before performing the operation. Even an impact to only the airbag sensor will cause the airbag to deploy.
   (a) Slide the outer housing and detach the airbag connector.

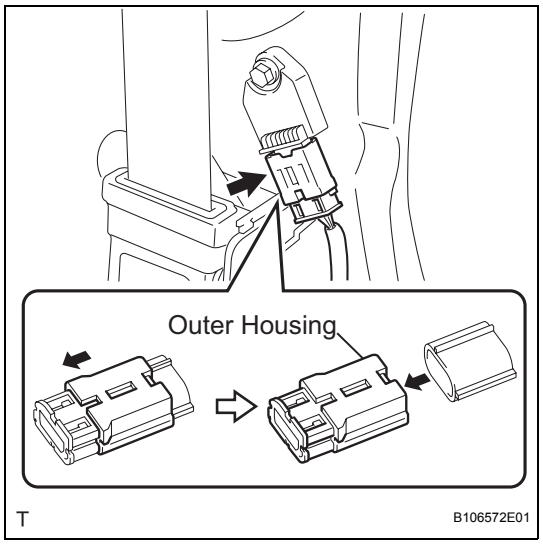

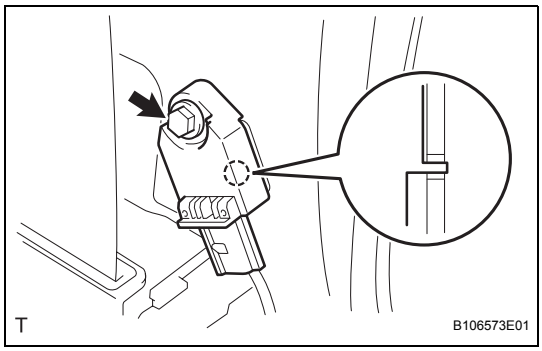

(b) Remove the bolt, disengage the hook and remove the side airbag sensor.

INSTALLATION

CAUTION:
Some of these service operations affect the SRS airbag system. Read the precautionary notices concerning the SRS airbag system before servicing (See page RS-1).
HINT:
The procedure described below is for the RH side. Use the same procedure for both the RH and LH sides, unless otherwise specified.

1. INSTALL SIDE AIRBAG SENSOR

(a) Confirm that the ignition switch is turned to off.

(b) Confirm that the negative battery terminal is detached.
CAUTION:
Confirm that the negative battery terminal is disconnected before performing the operation. Even an impact to only the airbag sensor will cause the airbag to deploy.

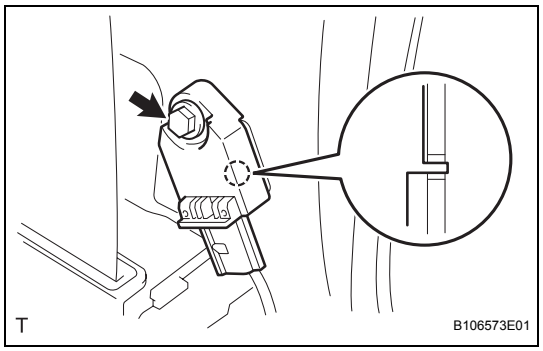

(c) Insert the hook into the body hole and install the airbag sensor with the bolt.
Torque: 9.0 N*m (90 kgf*cm, 80 in.*lbf)
NOTICE:
- **Do not use a side airbag sensor that has been dropped.**
- **Do not subject the side airbag sensor to any impact or force.**

(d) Confirm that there is no looseness by shaking the side airbag sensor.

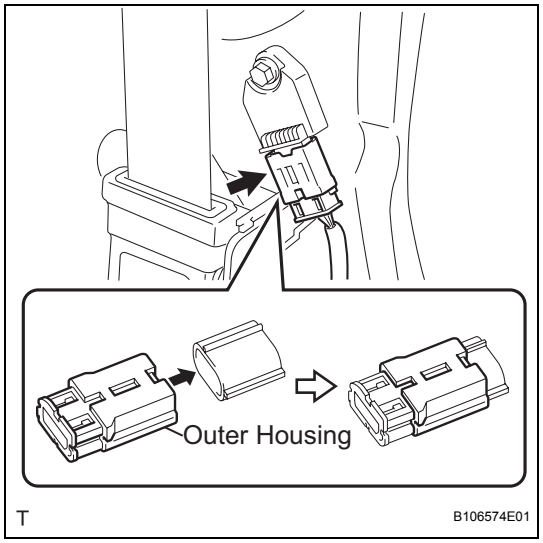

(e) Connect the airbag connector.

2. INSTALL CENTER PILLAR LOWER GARNISH RH (See page IR-32)

3. INSTALL REAR DOOR OPENING TRIM WEATHERSTRIP RH (See page IR-33)

4. INSTALL REAR DOOR SCUFF PLATE RH (See page IR-34)

5. INSTALL FRONT DOOR OPENING TRIM WEATHERSTRIP RH (See page IR-34)

6. INSTALL FRONT DOOR SCUFF PLATE RH (See page IR-34)

7. CONNECT CABLE TO NEGATIVE BATTERY TERMINAL
Torque: 5.4 N*m (55 kgf*cm, 48 in.*lbf)

8. INSPECT SRS WARNING LIGHT
(See page RS-31)

SIDE AIRBAG SENSOR (for 5 Door)

COMPONENTS

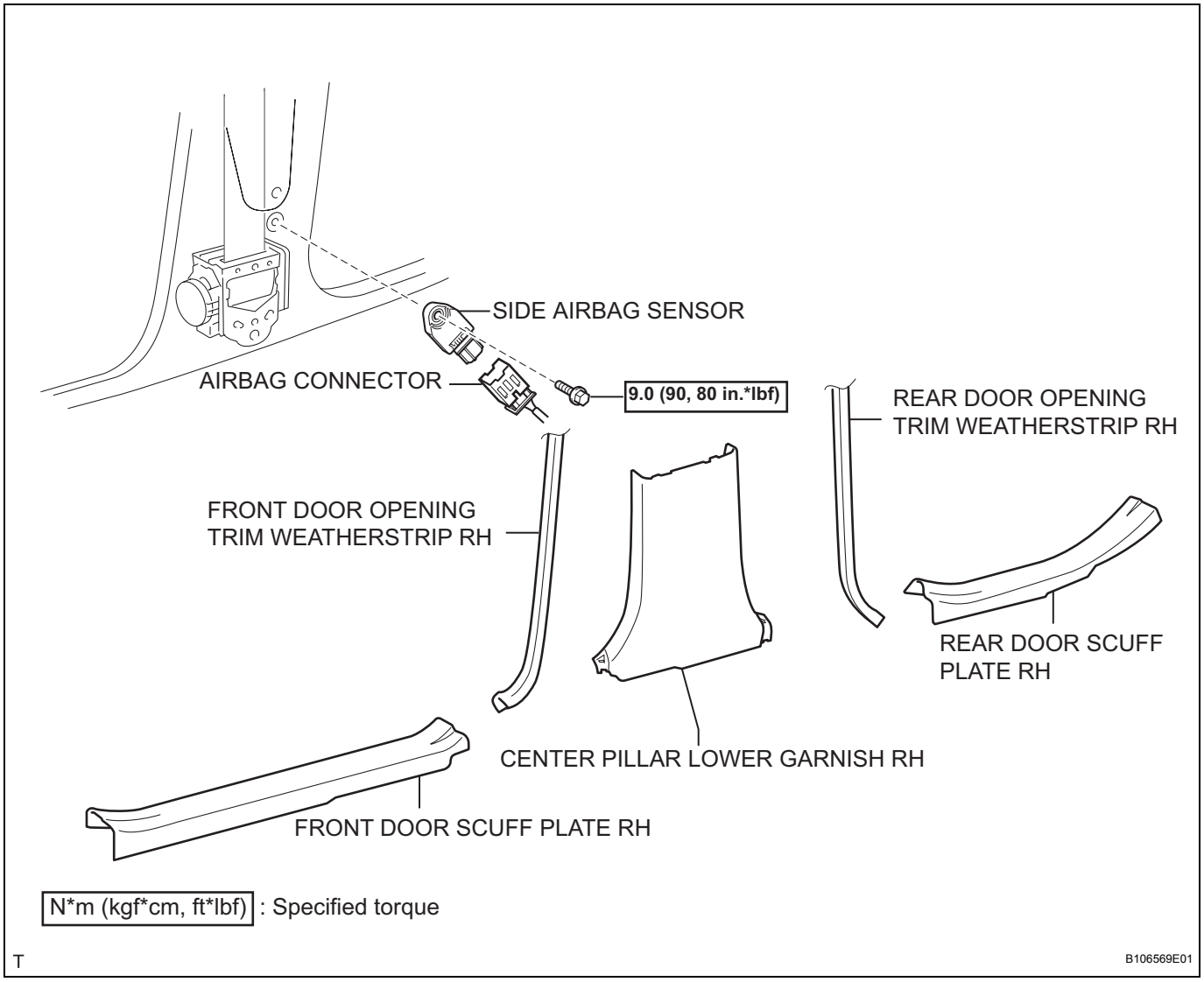

ON-VEHICLE INSPECTION

1. **INSPECT SIDE AIRBAG SENSOR ASSEMBLY (for Vehicle not Involved in Collision)**
   (a) Perform a diagnostic system check (See page RS-38).

2. **INSPECT SIDE AIRBAG SENSOR ASSEMBLY (for Vehicle Involved in Collision and Airbag not Deployed)**
   CAUTION:
   For side airbag sensor removal and installation procedures, see pages RS-454 and RS-455, and carefully follow the correct procedure.
   (a) Perform a diagnostic system check (See page RS-38).
   (b) When the center pillar of the vehicle or its periphery is damaged, check whether there is any damage to the side airbag sensor. If there are any defects, such as those mentioned below, replace the side airbag sensor with a new one:
   - Any cracks, dents or chips in the case.
   - Any cracks or other damage to the connector.
   - Peeling of the label or damage to the serial number.

3. **INSPECT SIDE AIRBAG SENSOR ASSEMBLY (for Vehicle Involved in Collision)**
   CAUTION:
   For side airbag sensor removal and installation procedures, see pages RS-454 and RS-455, and carefully follow the correct procedure.
   (a) Replace the side airbag sensor.

REMOVAL

CAUTION:
Some of the these service operations affect the SRS airbag system. Read the precautionary notices concerning the SRS airbag system before servicing (See page RS-1).

HINT:
The procedure described below is for the RH side. Use the same procedure for both the RH and LH sides, unless otherwise specified.

1. **DISCONNECT CABLE FROM NEGATIVE BATTERY TERMINAL**
2. **REMOVE FRONT DOOR SCUFF PLATE RH (See page IR-49)**
3. **REMOVE REAR DOOR SCUFF PLATE RH (See page IR-51)**
4. **REMOVE FRONT DOOR OPENING TRIM WEATHERSTRIP RH (See page IR-50)**
5. **REMOVE REAR DOOR OPENING TRIM WEATHERSTRIP RH (See page IR-51)**
6. **REMOVE CENTER PILLAR LOWER GARNISH RH (See page IR-55)**
7. **REMOVE SIDE AIRBAG SENSOR**
   CAUTION:
   Confirm that the negative battery terminal is disconnected before performing the operation. Even an impact to only the airbag sensor will cause the airbag to deploy.
   (a) Slide the outer housing and detach the airbag connector.

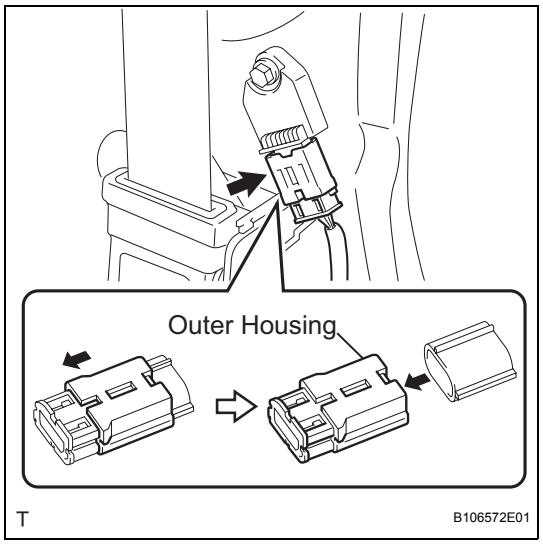

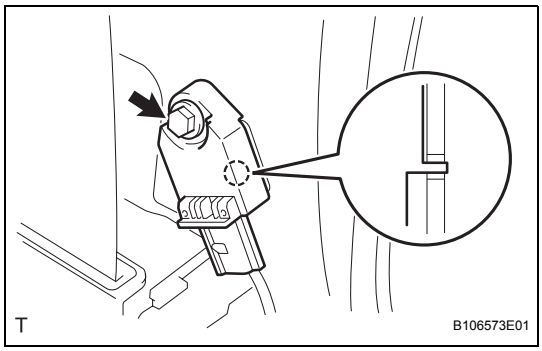

(b) Remove the bolt, disengage the hook and remove the side airbag sensor.

INSTALLATION

CAUTION:
Some of these service operations affect the SRS airbag system. Read the precautionary notices concerning the SRS airbag system before servicing.
HINT:
The procedure described below is for the RH side. Use the same procedure for both the RH and LH sides, unless otherwise specified.

1. INSTALL SIDE AIRBAG SENSOR

(a) Confirm that the ignition switch is turned to OFF.

(b) Confirm that the negative battery terminal is detached.
CAUTION:
- **Confirm that the negative battery terminal is disconnected before performing the operation. Even an impact to only the airbag sensor will cause the airbag to deploy.**

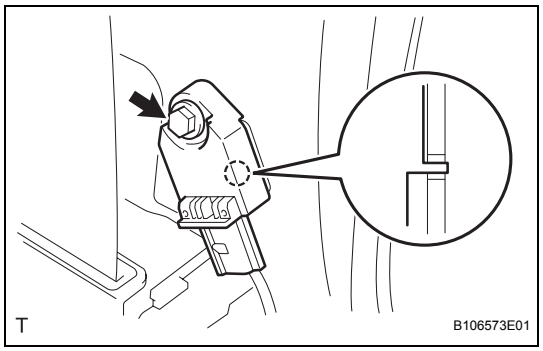

(c) Insert the hook into the body hole and install the airbag sensor with the bolt.
Torque: 9.0 N*m (90 kgf*cm, 80 ft.*lbf)
NOTICE:
- **Do not use a side airbag sensor that has been dropped.**
- **Do not subject the side airbag sensor to any impact or force.**

(d) Confirm that there is no looseness by shaking the side airbag sensor.

(e) Connect the airbag connector.

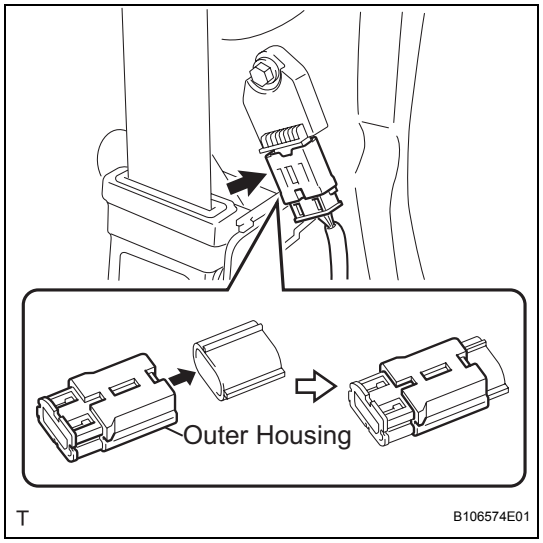

2. INSTALL CENTER PILLAR LOWER GARNISH RH (See page IR-76)

3. INSTALL REAR DOOR OPENING TRIM WEATHERSTRIP RH (See page IR-80)

4. INSTALL FRONT DOOR OPENING TRIM WEATHERSTRIP RH (See page IR-81)

5. INSTALL REAR DOOR SCUFF PLATE RH (See page IR-80)

6. INSTALL FRONT DOOR SCUFF PLATE RH (See page IR-82)

7. CONNECT CABLE TO NEGATIVE BATTERY TERMINAL
Torque: 5.4 N*m (55 kgf*cm, 48 in.*lbf)

8. INSPECT SRS WARNING LIGHT
(See page RS-31)

SIDE AIRBAG SENSOR (for 3 Door)

COMPONENTS

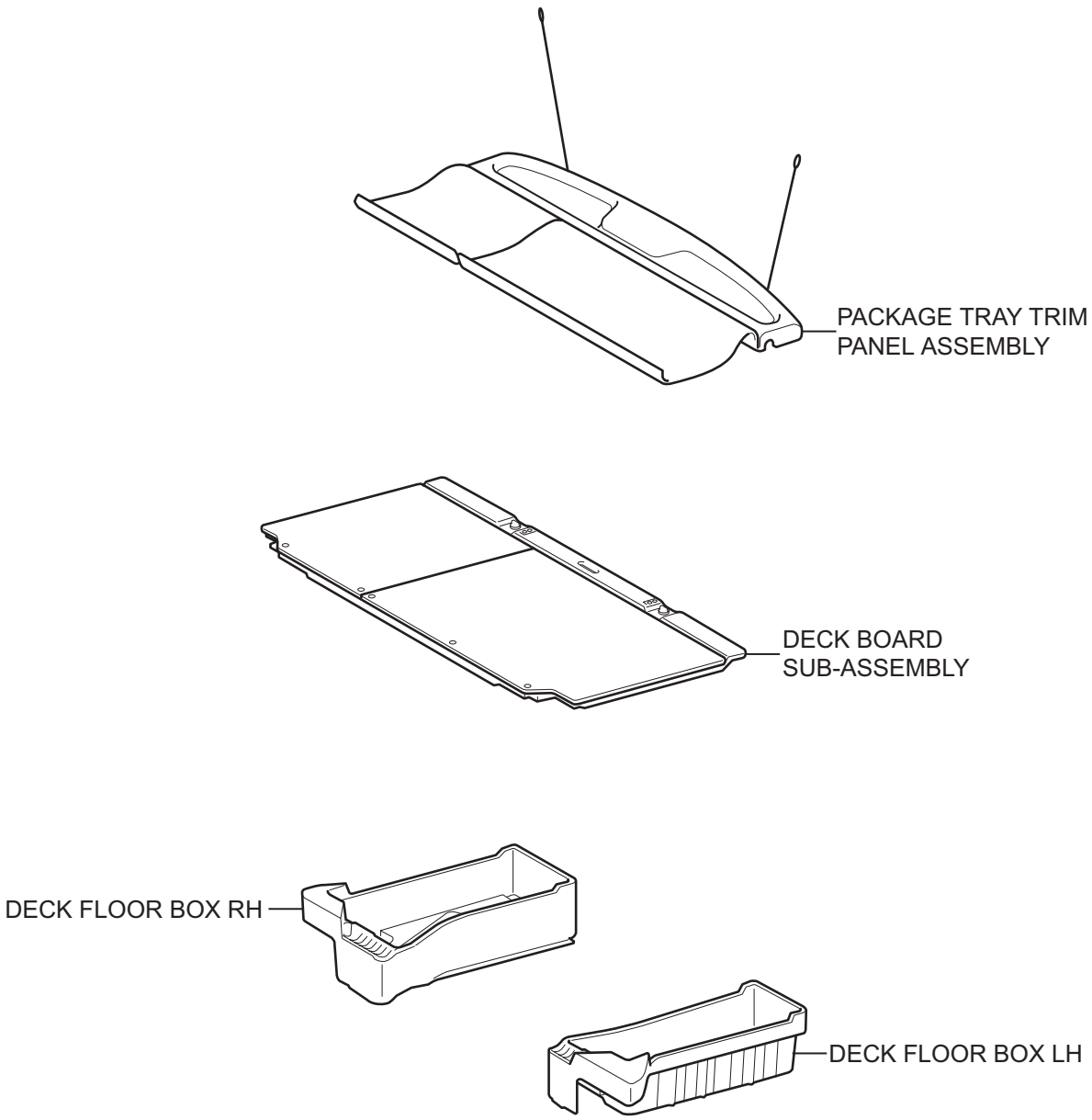

T

B114273E01

RS

for 60/40 Split Seat Type:

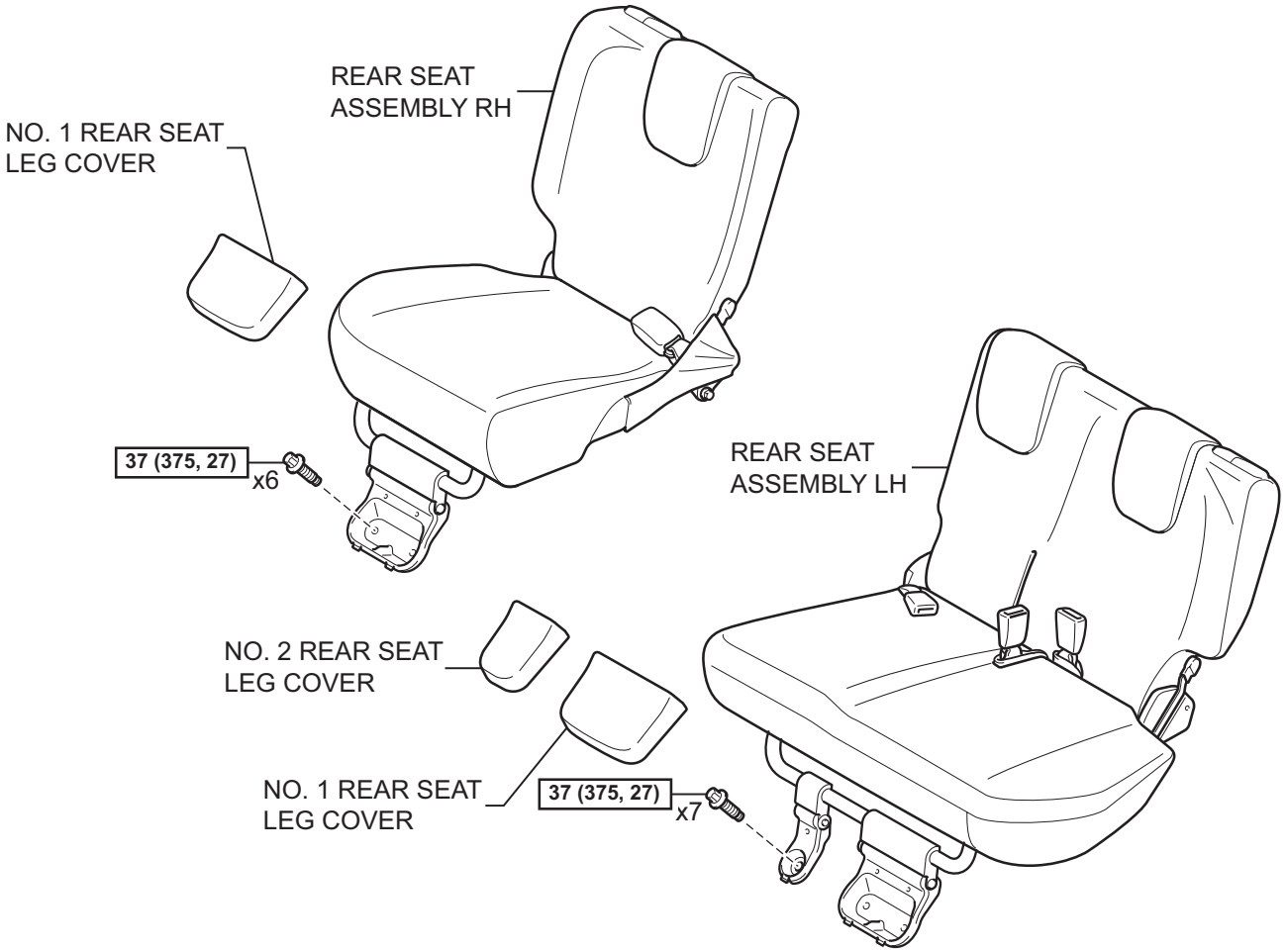

for Hold Down Seat Type:

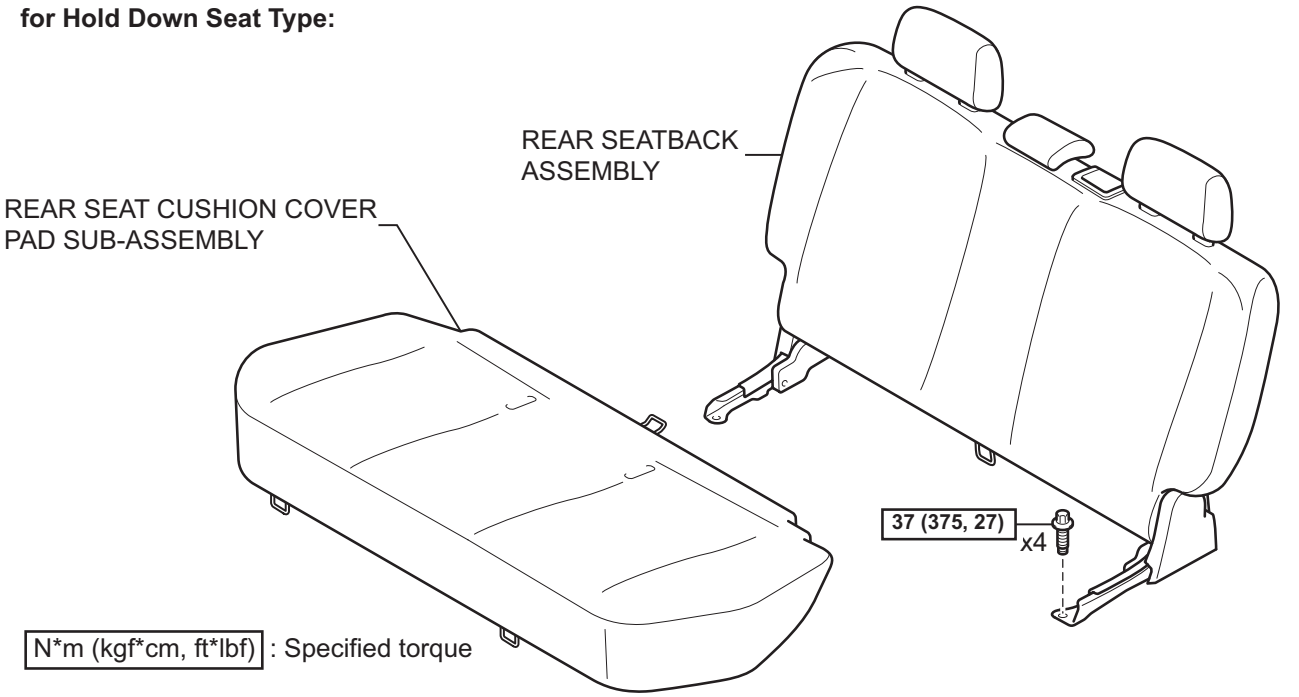

T

B121713E03

RS

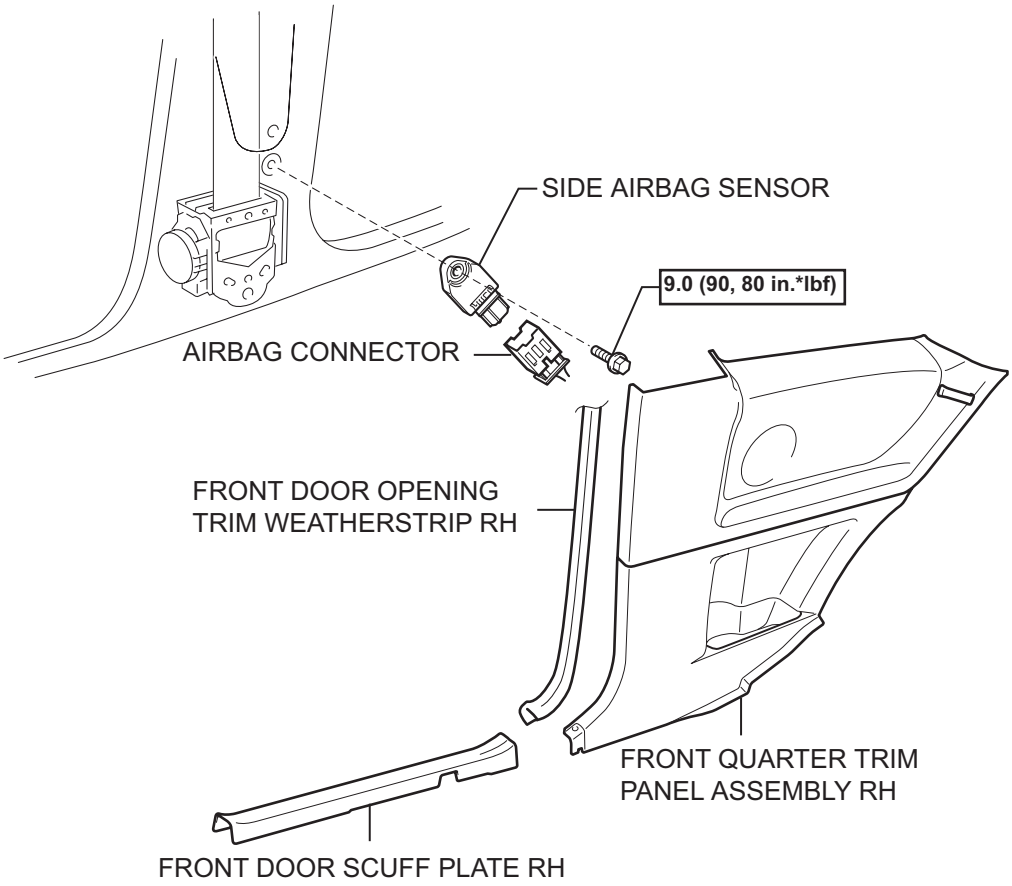

N*m (kgf*cm, ft*lbf) : Specified torque

C119849E01

ON-VEHICLE INSPECTION

1. **INSPECT SIDE AIRBAG SENSOR ASSEMBLY (for Vehicle not Involved in Collision)**
   (a) Perform a diagnostic system check (See page RS-38).

2. **INSPECT SIDE AIRBAG SENSOR ASSEMBLY (for Vehicle Involved in Collision and Airbag not Deployed)**
   CAUTION:
   For side airbag sensor removal and installation procedures, see pages RS-460 and RS-462, and carefully follow the correct procedure.
   (a) Perform a diagnostic system check (See page RS-38).
   (b) When the center pillar of the vehicle or its periphery is damaged, check whether there is any damage to the side airbag sensor. If there are any defects, such as those mentioned below, replace the side airbag sensor with a new one:
   - Any cracks, dents or chips in the case.
   - Any cracks or other damage to the connector.
   - Peeling of the label or damage to the serial number.

3. **INSPECT SIDE AIRBAG SENSOR ASSEMBLY (for Vehicle Involved in Collision)**
   CAUTION:
   For side airbag sensor removal and installation procedures, see pages RS-460 and RS-462, and carefully follow the correct procedure.
   (a) Replace the side airbag sensor.

REMOVAL

CAUTION:
Some of the these service operations affect the SRS airbag system. Read the precautionary notices concerning the SRS airbag system before servicing (See page RS-1).
NOTICE:
Always use "Torx" socket wrench E10 when removing the rear seat.
HINT:
The procedure described below is for the RH side. Use the same procedure for both the RH and LH sides, unless otherwise specified.

1. **DISCONNECT CABLE FROM NEGATIVE BATTERY TERMINAL**
2. **REMOVE PACKAGE TRAY TRIM PANEL ASSEMBLY (See page IR-48)**
3. **REMOVE DECK BOARD SUB-ASSEMBLY (See page IR-48)**
4. **REMOVE DECK FLOOR BOX RH (See page IR-48)**
5. **REMOVE DECK FLOOR BOX LH (See page IR-48)**
6. **REMOVE NO. 1 REAR SEAT LEG COVER (for 60/40 Split Seat Type) (See page IR-96)**
7. **REMOVE NO. 2 REAR SEAT LEG COVER (See page SE-70)**
8. **REMOVE REAR SEAT ASSEMBLY RH (for 60/40 Split Seat Type) (See page SE-89)**
9. **REMOVE REAR SEAT ASSEMBLY LH (for 60/40 Split Seat Type) (See page SE-71)**
10. **REMOVE REAR SEAT CUSHION COVER PAD SUB-ASSEMBLY (for Hold Down Seat Type) (See page SE-114)**
11. **REMOVE REAR SEATBACK ASSEMBLY (for Hold Down Seat Type) (See page SE-115)**
12. **REMOVE FRONT DOOR SCUFF PLATE RH (See page IR-97)**
13. **REMOVE FRONT DOOR OPENING TRIM WEATHERSTRIP RH (See page IR-97)**
14. **REMOVE FRONT QUARTER TRIM PANEL ASSEMBLY RH (See page IR-97)**
15. **REMOVE SIDE AIRBAG SENSOR**
    CAUTION:
    Confirm that the negative battery terminal is disconnected before performing the operation. Even an impact to only the airbag sensor will cause the airbag to deploy.

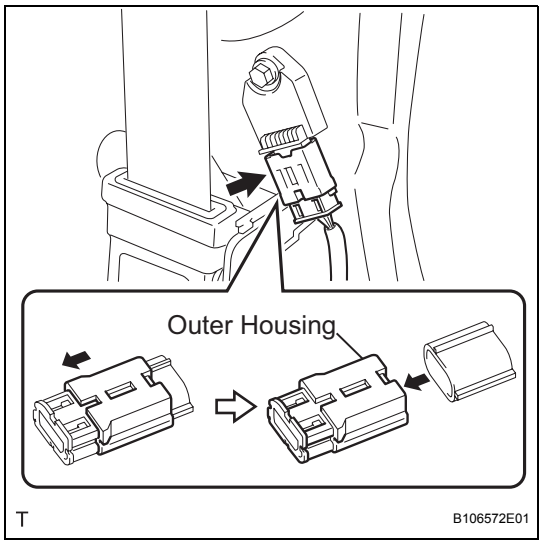

(a) Slide the outer housing and detach the airbag connector.

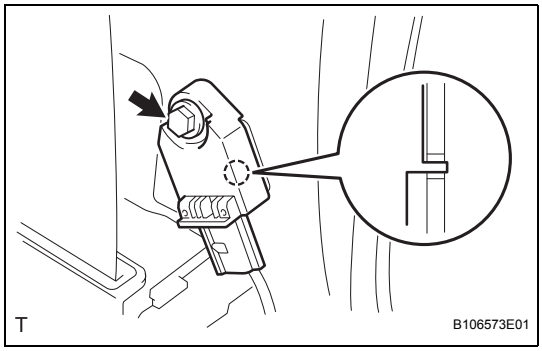

(b) Remove the bolt, disengage the hook and remove the side airbag sensor.