# Table of Contents

**Subject** **Page**

**Ignition Management** . . . . . .35
Principle of Operation . . . . . .38

**Emissions Management** . . . . . 41
Evaporative Emissions . . . . . 41
Exhaust Emissions . . . . . .45
Bosch LSU Oxygen Sensor . . . . . 46
Secondary Air Injection. . . . . 50
Principle of Operation . . . . . 53

**Performance Controls** . . . . . .62
Bi-VANOS . . . . . 62
Oil Condition . . . . . 66
Electric Cooling Fan . . . . . .67
Alternator . . . . . 68
Electronic Box Cooling Fan . . . . . .70
Comfort Start . . . . . .70
Cruise Control . . . . . .73

**Review Questions** . . . . . 76

cardiagn.com

## Ignition Management

**Ignition Coils:** The high voltage supply required to ignite the mixture in the combustion chambers is determined by the stored energy in the ignition coils. The stored energy contributes to the ignition duration, ignition current and rate of high voltage increase. The Coil circuit including primary and secondary components consists of:

1. Coil Assembly
2. Insulator Boot
3. Spark Plug
4. ECM Final Stage Transistor
5. Secondary Coil Ground

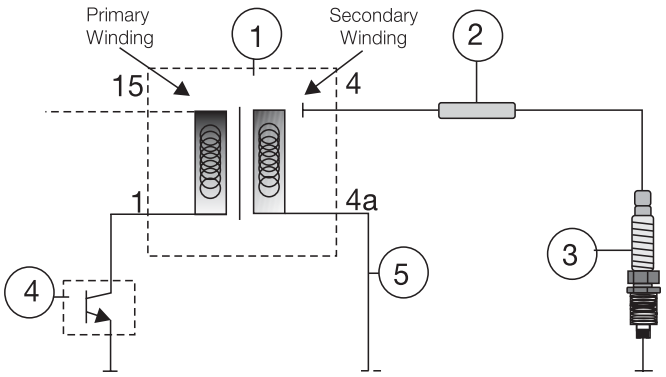


**Ignition Coil**

42-04-00

The Coil Assembly contains two copper windings insulated from each other. One winding is the primary winding, formed by a few turns of thick wire. The secondary winding is formed by a great many turns of thin wire.

The primary winding receives battery voltage from the Ignition Coil Relay (in the IVM) which is activated by the CAS Module. The ECM provides a ground path for the primary coil (Coil Terminal 1) by activating a Final Stage transistor. The length of time that current flows through the primary winding is the “dwell” which allows the coil to “saturate” or build up a magnetic field. After this storage process, the ECM will interrupt the primary circuit at the point of ignition by deactivating the Final Stage transistor. The magnetic field built up within the primary winding collapses and induces the ignition voltage in the secondary winding.

The high voltage generated in the secondary winding is discharged through Coil Terminal 4 to the spark plug (insulated by the boot connector).

The primary and secondary windings are uncoupled, therefore, the secondary winding requires a ground supply (Coil Terminal 4a).

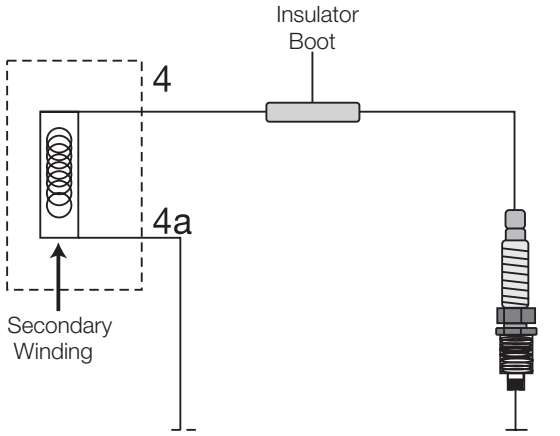


42-04-01



cardiagn.com

There is an individual ignition circuit and coil for each cylinder on the ME 9.2 system. The ME 9.2 uses “pencil type” ignition coils manufactured by Bremi. The eight individual ignition coils are integrated with the insulated connector (boot).

42-04-02

The coils are removed by lifting the swivel latch connector retainer to release the wiring harness, apply a slight twist and lift the assembly upwards. The primary ignition cables are routed on the top of the cylinder head covers.

**Spark Plugs:** The spark plugs introduce the ignition energy into the combustion chamber. The high voltage “arcs” across the air gap in the spark plug from the positive electrode to the negative electrodes. This creates a spark which ignites the combustible air/fuel mixture.

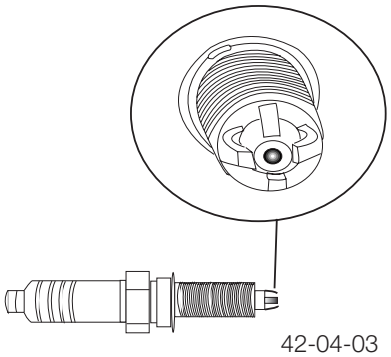

42-04-03

The spark plugs are located in the center of the combustion area (on the top of the cylinder heads) which is the most suitable point for igniting the compressed air/fuel mixture. The correct spark plugs for the ME 9.2 are the *NGK BKR6EQUP* quad electrode (non-adjustable gap).

*The Ignition System is monitored by the ECM via the Crankshaft Position/RPM Sensor.* If a Misfire fault is present, the ECM will deactivate the corresponding fuel injector for that cylinder. Engine operation will still be possible.

**Knock Sensors:** These are required to prevent detonation (pinging) from damaging the engine. The Knock Sensor is a piezoelectric sound conductor microphone. The ECM will retard the ignition timing (cylinder selective) based on the input of these sensors.

There are four Knock Sensors bolted to the cylinder heads between cylinders 1 & 2, 3 & 4, 5 & 6 and 7 & 8. If the signal value exceeds the threshold, the ECM identifies the “knock” and retards the ignition timing for that cylinder.

If a fault is detected with the sensor(s), the ECM deactivates Knock Control the ignition timing will be set to a conservative basic setting based on intake air temperature and a fault will be stored.

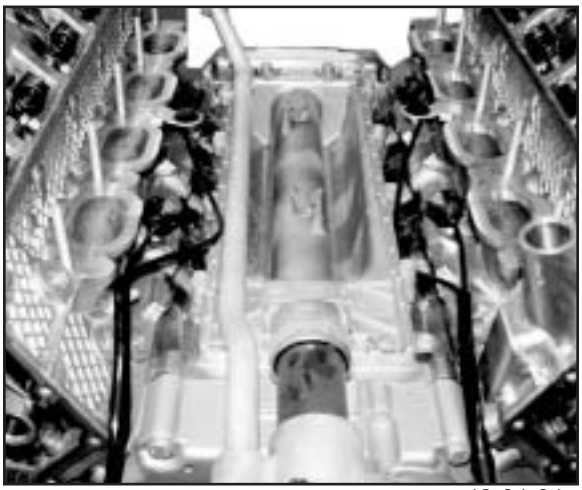

42-04-04

cardiagn.com

**Camshaft Position Sensor (Cylinder Identification):** The camshaft sensors (Hall type) inputs allows the ECM to determine camshaft positions in relation to crankshaft position. It is used by the ECM to establish the "working cycle" of the engine for precise ignition timing. For details about the sensor, refer to the Fuel Management section.

**Accelerator Pedal Position (PWG):** As the accelerator pedal is actuated, the ECM will advance the ignition timing. The "full throttle" position indicates maximum acceleration to the ECM, the ignition will be advanced for maximum torque. For details about the sensor, refer to the Air Management section.

**Hot-Film Air Mass Meter (HFM):** The air volume input signal is used by the ECM to determine the amount of ignition timing advance. For details about the sensor, refer to the Air Management section.

**Air Temperature:** This signal allows the ECM to make a calculation of air density. The sensor is located in the HFM. The ECM will adjust the ignition timing based on air temperature. If the intake air is hot the ECM retards the ignition timing to reduce the risk of detonation. If the intake air is cooler, the ignition timing will be advanced. If this input is defective, a fault code will be set and the ignition timing will be set to a conservative basic setting. For details about the sensor, refer to the Air Management section.

*Notes:*

cardiagn.com

## Principle of Operation

Ignition Management provides ignition to the combustion chambers with the required voltage at the correct time. Based on the combination of inputs, the ECM calculates and controls the **ignition timing** and **secondary output voltage** by regulating the activation and dwell of the **primary ignition circuit.** The ECM controls and monitors the primary ignition circuit as well as the secondary ignition output (Misfire Detection).

The ECM has a very “broad” range of ignition timing. This is possible by using a Direct Ignition System, or sometimes referred to as “Static Ignition System”. Reliability is also increased by having separate individual ignition circuits.

**The Ignition Control** is determined by the ECM (load dependent). The ECM will calculate the engine “load” based on a combination of the following:

The dwell time will be regulated based on battery voltage. When cranking, the voltage is low and the ECM will increase the dwell to compensate for saturation “lag time”. When the engine is running and the battery voltage is higher, the ECM will decrease the dwell due to a faster saturation time.

The Crankshaft Position/RPM signals the ECM to start ignition in *firing order (1-5-4-8-6-3-7-2)* as well as providing information about the engine operation. This input is used in combination with other inputs to determine engine load which advances/retards the ignition timing. Without this input, the ECM will not activate the ignition.

Cold start is determined by the ECM based on the engine coolant temperature and rpm during start up. A cold engine will crank over slower than a warm engine, the ignition timing will range between top dead center to slightly retarded providing optimum starting.

When starting a warm engine, the rpm is higher which results in slightly advanced timing. If the engine coolant and intake air temperature is hot, the ignition timing will not be advanced reducing starter motor “load”.

During cranking, the ECM recognizes the Camshaft Position (compression stroke) and activates the ignition per cylinder (firing order).

*Multiple Ignition Pulses* ensure good spark quality during engine start up. The ECM will activate the ignition coils multiple times (1) per 720º of crankshaft revolution.

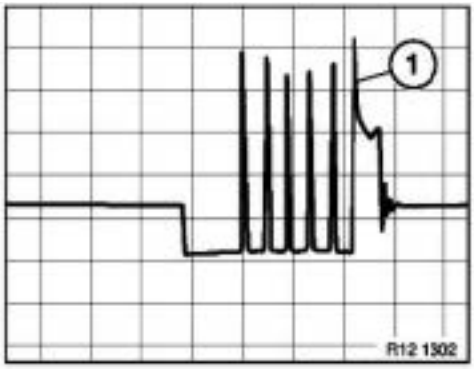


cardiagn.com

The ignition timing will be progressively advanced assisting the engine in coming up to speed. As the engine speed approaches idle rpm, the timing remains slightly advanced to boost torque. When the engine is at idle speed, minimum timing advance is required. This will allow faster engine and catalyst warm up. The multiple pulsing switches to single pulse when engine speed >1350 RPM (varied with engine temperature).

The timing will be advanced when the ECM observes low engine rpm and increasing accelerator/air volume inputs (acceleration torque). As the Valvetronic valve lift is increased, the ECM advances the timing based on the engine acceleration request (and at what rate). The ECM will fully advance timing for the “full throttle” position indicating maximum acceleration (torque).

The Air Flow Volume signal provides the measured amount of intake air volume. This input is used by the ECM to determine the amount of timing advance to properly combust the air/fuel mixture.

The Air Temperature Signal assists the ECM in reducing the risk of detonation (ping). If the intake air is hot the ECM retards the ignition timing. If the intake air is cooler, the ignition timing will be advanced.

As the Valvetronic valve lift is decreased, the ECM decreases the ignition timing if the rpm is above idle speed (coasting). This feature lowers the engine torque for deceleration. When the engine rpm approaches idle speed, the timing is slightly advanced to prevent the engine from stalling. The amount of advance is dependent upon the engine temperature and the rate of deceleration.

**Emission Optimized - IGNITION KEY OFF**

“Emission Optimized Ignition Key Off” is a programmed feature of the CAS Module. After the CAS Module detects KL 15 is switched “off”, the ignition coil relay (in the IVM) stays active (CAS voltage supply) for two more individual coil firings. This means that just two cylinders are fired - not two revolutions.

This feature allows residual fuel injected into the cylinders, as the ignition key is switched off, to be combusted as the engine runs down.

When **KL15** is switched “off” the ECM removes the operating voltage from the fuel injection relay (in the IVM). The CAS Module will maintain power to the ignition coil relay for a few seconds to maintain ignition coil activation (by the ECM).

cardiagn.com

## Knock Control

The use of Knock Control allows the ECM to further advance the ignition timing under load for increased torque. This system uses four Knock Sensors located between cylinders 1 & 2, cylinders 3 & 4, cylinders 5 & 6 and cylinders 7 & 8. Knock Control is only in affect when the engine temperature is greater than 35 ºC and there is a load on the engine. This will disregard false signals while idling or from a cold engine.

Based on the firing order, the ECM monitors the Knock Sensors after each ignition for a normal (low) signal. If the signal value exceeds the threshold, the ECM identifies the “knock” and retards the ignition timing (3º) for that cylinder the next time it is fired.

This process is repeated in 3º increments until the knock ceases. The ignition timing will be advanced again in increments right up to the knock limit and maintain the timing at that point.

If a fault is detected with the Knock Sensor(s) or circuits, the ECM deactivates Knock Control. The ignition timing will be set to a conservative basic setting (to reduce the risk of detonation) and a fault will be stored.

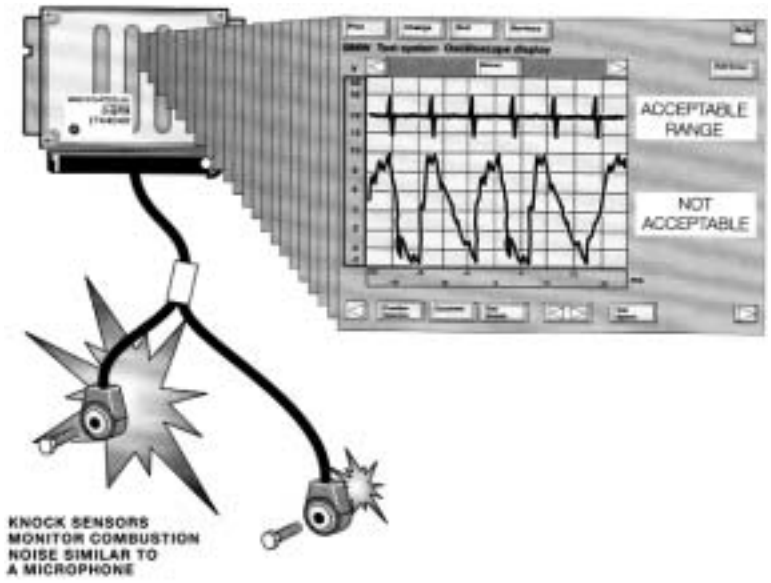


42-04-05

cardiagn.com

## Emissions Management

**Evaporative Emissions:** The control of the evaporative fuel vapors (Hydrocarbons) from the fuel tank is important for the overall reduction in vehicle emissions.

The evaporative system has been combined with the ventilation of the fuel tank, which allows the tank to breath (equalization). The overall operation provides:

- An inlet vent, to an otherwise "sealed" fuel tank, for the entry of air to replace the fuel consumed during engine operation.

- An outlet vent with a storage canister to "trap and hold" fuel vapors that are produced by the expansion/evaporation of fuel in the tank, when the vehicle is stationary.

The canister is then "purged" using the engine vacuum to draw the fuel vapors into the combustion chamber. This "cleans" the canister allowing for additional storage. Like any other form of combustible fuel, the introduction of these vapors on a running engine must be controlled. The ECM controls the Evaporative Emission Valve which regulates purging of evaporative vapors.

**On-Board Refueling Vapor Recovery (ORVR):** The ORVR system recovers and stores hydrocarbon fuel vapor during refueling. Non ORVR vehicles vent fuel vapors from the tank venting line back to the filler neck and in many states reclaimed by a vacuum receiver on the filling station's fuel pump nozzle.

When refueling, the pressure of the fuel entering the tank forces the hydrocarbon vapors through the tank refuelling breather hose (24 on the following page) to the liquid/vapor expansion tank and into the active charcoal canister.

The HC vapors are stored in the active charcoal canister and the system can then "breath" through the DM TL and the air filter.

cardiagn.com

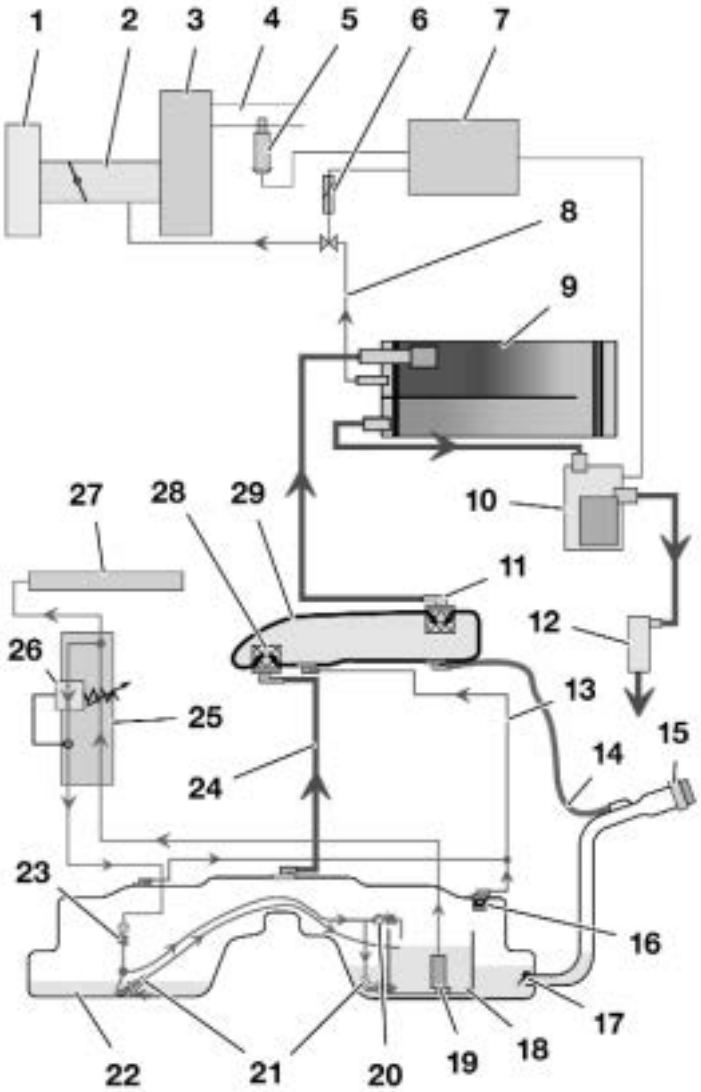


42-04-00

**Fuel System**

1. Air Cleaner
2. Intake manifold
3. Engine
4. Exhaust system
5. Oxygen Sensor
6. Evaporative emission valve (TEV)
7. ECM
8. Purge vapors
9. Carbon canister
10. Fuel tank leak diagnostic module (DM-TL)
11. Roll-over valve
12. Dust filter
13. Service ventilation
14. Pressure test lead
15. Fuel tank cap
16. Service vent valve (float valve)
17. Anti-spitback flap
18. Surge chamber (fuel pump baffling)
19. Electric fuel pump (EKP)
20. Pressure relief valve
21. Suction jet pump
22. Fuel tank
23. Outlet protection valve
24. Refueling breather
25. Fuel Filter
26. Fuel pressure regulator (3.5 bar)
27. Injection rail
28. Float valve
29. Liquid/vapor expansion tank
30. Filler vent valve

cardiagn.com

**Liquid/Vapor Expansion Tank:** Fuel vapors are routed from the refuelling breather hose and the Service Ventilation hose to the Liquid/Vapor Expansion Tank (1) located in the right rear fender well.

The vapors cool when exiting the fuel tank, condense and drain back to the fuel tank. The remaining vapors exit the Liquid/Vapor Expansion Tank to the Active Carbon Canister.

**Active Carbon Canister:** As the fuel vapors enter the canister, they will be absorbed by the active carbon. The remaining air will be vented to the atmosphere through the end of the canister (passing through the DM TL and filter) allowing the fuel tank to “breath”.

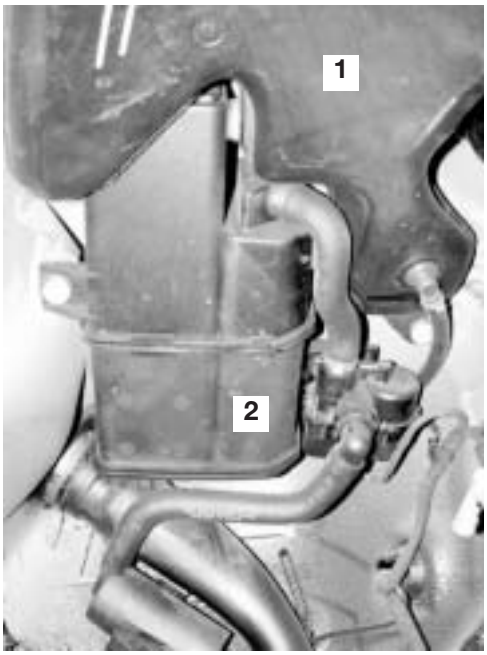

42-04-01

When the engine is running, the canister is then "purged" using intake manifold vacuum to draw fresh air through the canister which extracts the hydrocarbon vapors into the combustion chamber. This cleans the canister for additional storage. The Active Carbon Canister (2) is combined with the DM TL Pump and is located in the right rear fender well.

**Evaporative Emission Valve:** This ECM controlled solenoid valve (located on the front of the engine) regulates the purge flow from the Active Carbon Canister through the air inlet pipe into the intake manifold.

The ECM Relay (in the IVM) provides operating voltage, and the ECM controls the valve by regulating the ground circuit. The valve is powered open and closed by an internal spring.

If the Evaporative Emission Valve circuit is defective, a fault code will be set. If the valve is “mechanically” defective, a driveability complaint could be encountered and a mixture related fault code will be set.

42-04-02

cardiagn.com

**DMTL (Diagnosis Module - Evaporative Leakage Detection):** This component ensures accurate fuel system leak detection for leaks as small as 0.5 mm (.020”) by slightly pressurizing the fuel tank and evaporative components. The DM TL pump contains an integral DC motor which is activated directly by the ECM. The ECM monitors the pump motor operating current as the measurement for detecting leaks.

The pump also contains an ECM controlled change over valve that is energized closed during a Leak Diagnosis test. The change over valve is open during all other periods of operation allowing the fuel system to “breath” through the inlet filter. The DM TL is located with the Active Carbon Canister.

1. In its inactive state, filtered fresh air enters the evaporative system through the sprung open valve of the DM TL.

2. When the ECM activates the DM TL for leak testing, it first activates only the pump motor. This pumps air through a restricted orifice (0.5 mm) which causes the electric motor to draw a specific amperage value (20-30 mA). This value is equivalent to the size of the restriction.

3. The solenoid valve is then energized which seals the evaporative system and directs the pump output to pressurize the evaporative system.

- A large leak is detected in the evaporative system if the amperage value is not achieved.

- A small leak is detected if the same reference amperage is achieved.

- The system is sealed if the amperage value is higher than the reference amperage.

1

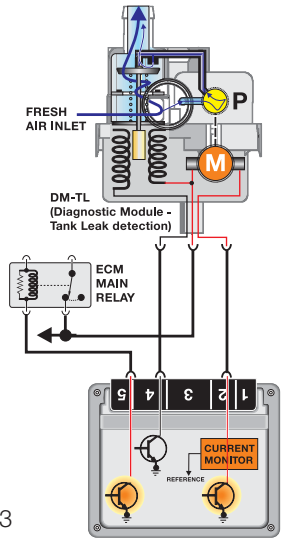


42-04-03

2

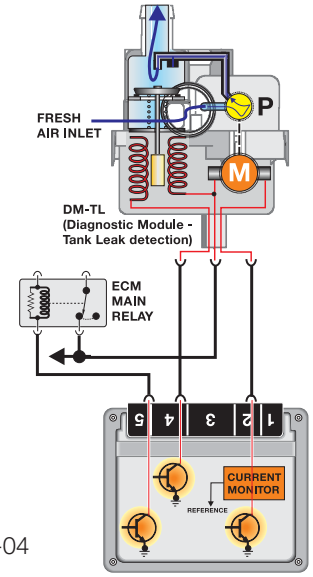


42-04-04

3

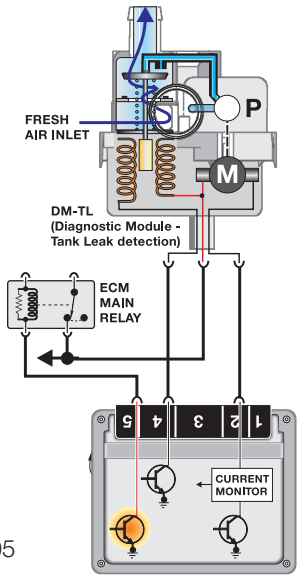


42-04-05

cardiagn.com

**Exhaust Emissions:** The combustion process of a gasoline powered engine produces Carbon Monoxide (CO), Hydrocarbons (HC) and Oxides of Nitrogen (NOx).

- *Carbon Monoxide* is a product of incomplete combustion under conditions of air deficiency. CO emissions are strongly dependent on the air/fuel ratio.

- *Hydrocarbons* are also a product of incomplete combustion which results in unburned fuel. HC emissions are dependent on air/fuel ratio and the ignition of the mixture.

- *Oxides of Nitrogen* are a product of peak combustion temperature (and temperature duration). NOx emissions are dependent on internal cylinder temperatures affected by the air/fuel ratio and ignition of the mixture.

Control of exhaust emissions is accomplished by the engine and engine management design as well as after-treatment.

- The ECM manages exhaust emissions by controlling the air/fuel ratio and ignition.

- The ECM controlled Secondary Air Injection further dilutes exhaust emissions leaving the engine and reduces the catalysts warm up time.

- The Catalytic Converter further reduces exhaust emissions leaving the engine.

**Oxygen Sensors:** The N62 engine is fitted with a total of four oxygen sensors. One planar broadband oxygen sensor (constant characteristic curve), which regulates the fuel-air mixture, is located upstream (2) of each of the two catalytic converters. The catalytic converter assemblies are integral with the exhaust manifolds (1).

There is a post catalytic converter sensor (Bosch LSH25) for each cylinder bank positioned downstream of the catalytic converter (3) which monitors the catalyst efficiency.

This monitoring means that if the exhaust gas concentration is too high, a fault code is stored. The post catalyst sensors can also detect an emission relevant fault in a pre-catalyst oxygen sensor.

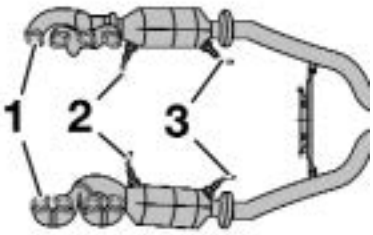

43-02-06

cardiagn.com

**Bosch LSU Planar Wideband Oxygen Sensor:** The N62 engine is equipped with new planar wideband oxygen sensors (pre-catalyst). The sensor is planar shaped (type of construction) which is more compact and is made up of thin layers of zirconium dioxide ($ZrO_2$) ceramic films. This modular lamination structure enables the integration of several functions including the heating element which ensures the minimum operating temperature (750 ºC) is reached rapidly.

In contrast to conventional oxygen sensors, the wideband features can measure not only at Lambda=1, but also in the rich and extremely lean range (Lambda=0.7 to complete atmospheric oxygen) very rapidly.

To operate effectively, the oxygen sensor requires ambient air as the “reference gas” inside the sensor. ***The ambient air reaches the inside of the sensor through the plug connection and through the harness.*** The plug connection socket must therefore be protected from contamination (wax, preservatives, engine degreasers, engine washing, etc.). In the event of the oxygen sensor malfunctioning, the connector should always be checked first with regard to contamination and cleaned if necessary. The plug connection must be disconnected and then reconnected to remove any oxidation from the connector pins.

1. Exhaust gas
2. Pump cell
3. Platinum electrode, reference cell
4. Heating element
5. Heating element
6. Reference air gap
7. Zirconium ceramic layer
8. Measuring gap
9. Reference Cell
10. Platinum electrode, reference cell
11. Platinum electrode, pump cell
12. Platinum electrode, pump cell

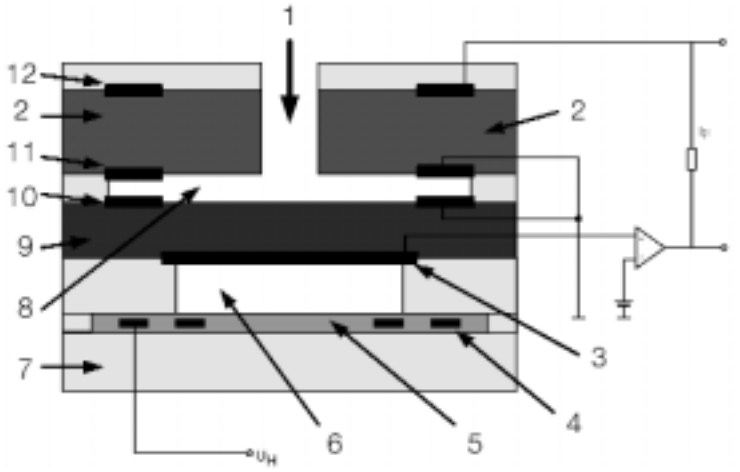


42-04-07

**Sensor Element Design**

The pump cell (2) and reference cell (9) are made of zirconium dioxide and each coated with two porous platinum electrodes. They are arranged so that there is a measuring gap (8) of approx. 10 to 50 microns between them. This measuring gap is connected by an inlet opening to the exhaust gas (1). The pump cell is controlled by the ECM applying voltage to the electrodes to initiate oxygen ion pumping across the porous membrane of the reference cell, providing a quicker response time.

cardiagn.com

If the exhaust gas content is lean, the pump cell pumps oxygen away from the measuring gap to the outside. The direction of flow is reversed for rich exhaust gas content, then oxygen is pumped from the exhaust gas into the measuring gap. The pump current flow is proportional to the oxygen concentration (lean) or the oxygen requirement (rich). The pump is constantly working to maintain that the gas composition in the measuring gap is constantly at Lambda=1. The required current of the pump cell is evaluated by the ECM as a signal that represents oxygen content in the exhaust gas.

*Oxygen Sensor Signals*

The sensor conductivity is efficient when the oxygen sensor is hot (750º C). For this reason, the sensor contains a heating element. This reduces warm up time, and retains the heat during low engine speed when the exhaust temperature is cooler. The oxygen sensor heating elements receive power from the IVM (12 V) and the ground sypply is pulse width modulated by the ECM.

The monitored voltage signal is constantly changing due to combustion variations and normal exhaust pulsations.

- At a value of Lambda =1, the pump cell requires approx. 3 mA.
  The oxygen sensor signal voltage is approx. 1.5V
  The reference cell voltage is approx. 450mV

- At a Lambda value <1 (rich), the oxygen sensor signal voltage is approx. 0.3V

- At a Lambda value >1 (lean), the oxygen sensor signal voltage is approx. 4.3V

If necessary, the ECM will “correct” the air/fuel ratio by regulating the ms injection time. The ECM monitors the length of time the sensors are operating in the lean, rich and rest conditions. The evaluation period of the sensors is over a predefined number of oscillation cycles and pump cell amperage.

**Catalytic Converter Monitoring:** The efficiency of catalyst operation is determined by evaluating the oxygen storage capability of the ceramic monolyth catalytic converters using the pre and post oxygen sensor signals.

A properly operating catalyst consumes or stores most of the $O_2$ (oxygen) that is present in the exhaust gas (input to catalyst). The gases that flow into the catalyst are converted from CO, HC and NOx to $CO_2$, $H_2O$ and $N_2$ respectively.

cardiagn.com

In order to determine if the catalysts are working correctly, post catalyst oxygen sensors are installed to monitor exhaust gas content exiting the catalysts. The signal of the post cat. O2 sensor is evaluated over the course of several pre cat. O2 sensor oscillations.

During the evaluation period, the signal of the post cat. sensor must remain within a relatively constant voltage range (700 - 800 mV).

The post cat. O2 voltage remains high with a very slight fluctuation. This indicates a further lack of oxygen when compared to the pre cat. sensor. If this signal decreased in voltage and/or increased in fluctuation, a fault code will be set for Catalyst Efficiency.

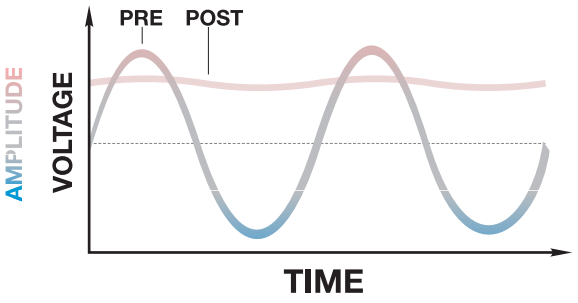


42-04-08

**Bosch LSH 25 Oxygen Sensors:** The post catalyst oxygen sensors produces a low voltage (0-1000 mV) proportional to the oxygen content exiting the catalytic converters.

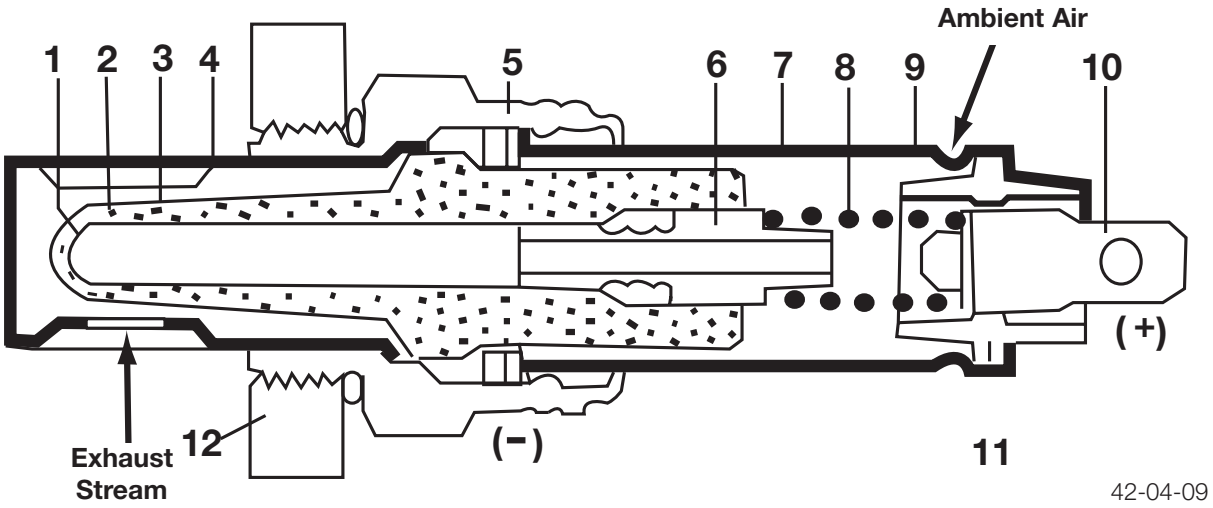


42-04-09

**Oxygen Sensors**

1. Electrode (+)
2. Electrode (-)
3. Porous Ceramic Coating (encasing electrolyte)
4. Protective Metal Cage (Ventilated)
5. Casing
6. Contact Sleeve
7. External Body (Ventilated)
8. Contact Spring
9. Vent Opening
10. Ouput Lead
11. Insulator
12. Exhaust Pipe Wall

cardiagn.com

The “tip” of the sensor contains a microporous platinum coating (electrodes) which conduct current. The platinum electrodes are separated by solid electrolyte which conducts oxygen ions. The platinum conductors are covered with a highly porous ceramic coating and the entire tip is encased in a ventilated metal “cage”.

This assembly is submersed in the exhaust stream. The sensor body (external) has a small vent opening in the housing that allows ambient air to enter the inside of the tip.

The ambient air contains a constant level of oxygen content (21%) and the exhaust stream has a much lower oxygen content. The oxygen ions (which contain small electrical charges) are “purged” through the solid electrolyte by the hot exhaust gas flow. The electrical charges (low voltage) are conducted by the platinum electrodes to the sensor signal wire that is monitored by the ECM.

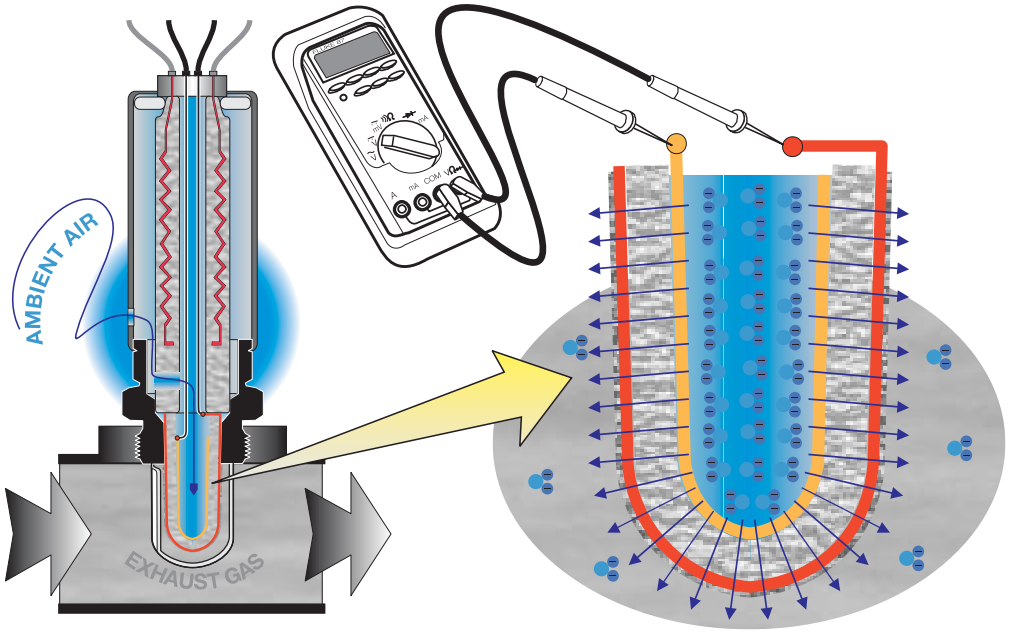


42-04-10

If the exhaust has a lower oxygen content (rich mixture), there will be a large ion “migration” through the sensor generating a higher voltage (950 mV).

If the exhaust has a higher oxygen content (lean mixture), there will be a small ion “migration” through the sensor generating a lower voltage (080 mV).

This conductivity is efficient when the oxygen sensor is hot (250° - 300° C). For this reason, the sensor contains a heating element. This “heated” sensor reduces warm up time, and retains the heat during low engine speed when the exhaust temperature is cooler.

cardiagn.com

**Secondary Air Injection:** Injecting ambient air into the exhaust stream after a cold engine start reduces the warm up time of the catalysts and reduces HC and CO emissions. The ECM controls and monitors the Secondary Air Injection.

An Electric Air Pump and Air Injection Valves direct fresh air through internal channels in the cylinder heads into the exhaust ports.

1. Air Intake Duct
2. Air Cleaner housing with Intake Air Silencer
3. Intake Pipe with HFM
   (Hot-Film Air Mass Flow Sensor)
4. Secondary Air Valves
5. Secondary Air Pump

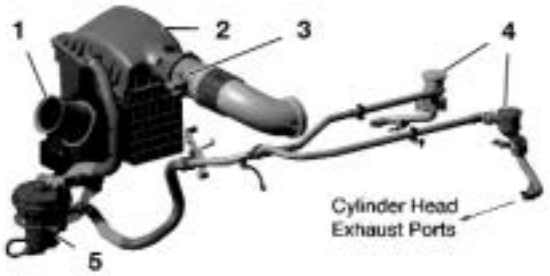


43-04-05

**Secondary Air System**

**Secondary Air Pump (SLP):** The electrically-operated secondary air pump is mounted to the vehicle body. The pump draws out filtered fresh air from the air cleaner housing during the warm-up phase and supplies it to the two secondary air injection valves.

Once the engine has been started, the secondary air pump is supplied with voltage by the *Secondary Air Pump Relay (located in front of the glovebox)* which is activated by the ECM. It remains switched on until the engine has taken in a certain amount of air. The *ON* period may be a maximum of 90 seconds and it depends on the following engine operating conditions:

- Coolant temperature (from -10 ºC to approximately 60 ºC)
- Ambient air temperature (from the HFM)
- Engine speed

The power is supplied from the fuse junction (#102 - 50 Amp) located on the right inner fender of the engine compartment (under the remote charging post) for the relay to energize the SLP.

cardiagn.com

**Non-return Valves (SLV):** One non-return valve is mounted on each cylinder head.

1. Cylinder Head Lead
2. Non-return Valve (SLV)
3. Secondary Air Pump Connection

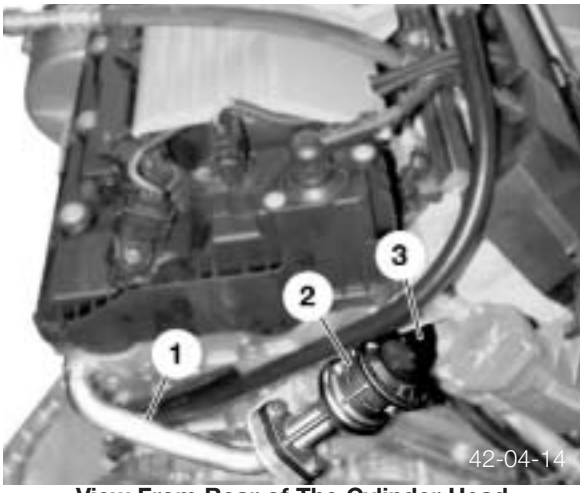


**View From Rear of The Cylinder Head**

The Non-return valves are opened by the air pressure generated from the secondary air pump. The secondary air is led through a pipe to the secondary air ducts (integral in the cylinder heads) for distribution into the exhaust ports. There are two outlets in each exhaust port next to the exhaust valve guides.

The Non-return valves are sprung closed as soon as the secondary air pump is switched off. This prevents exhaust vapors, pressure and condensation from flowing back to the secondary air pump.

**Misfire Detection:** As part of the OBD II regulations the ECM must determine misfire and also identify the specific cylinder(s), the severity of the misfire and whether it is emissions relevant or catalyst damaging based on monitoring crankshaft acceleration.

In order to accomplish these tasks the ECM monitors the crankshaft for acceleration by the impulse wheel segments of cylinder specific firing order. The misfire/engine roughness calculation is derived from the differences in the period duration of individual increment gear segments. If the expected period duration is greater than the permissible value a misfire fault for the particular cylinder is stored in the fault memory of the ECM.

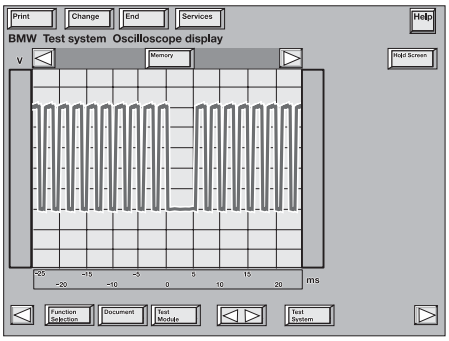


**SMOOTH RUNNING ENGINE (NOTE SQUARE WAVE SIGNAL)**

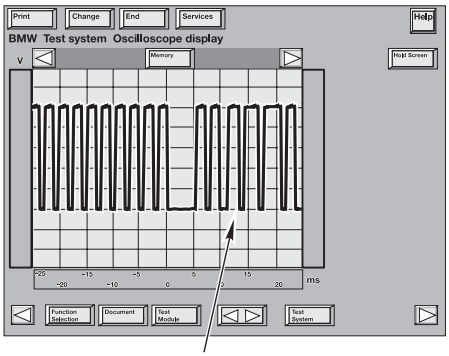


**ENGINE MISFIRE DETECTED**

42-02-13



cardiagn.com

Depending on the level of misfire rate measured the ECM will illuminate the "Malfunction Indicator Light", deactivate the specific fuel injector to the particular cylinder and switch lambda operation to open-loop.

In order to eliminate misfire faults that can occur as a result of varying flywheel tolerances (manufacturing process) an internal adaptation of the flywheel is made. The adaptation is made during periods of decel fuel cut-off in order to avoid any rotational irregularities which the engine can cause during combustion. This adaptation is used to correct segment duration periods prior to evaluation for a misfire event.

If the sensor wheel adaptation has not been completed the misfire thresholds are limited to engine speed dependent values only and misfire detection is less sensitive. The crankshaft sensor adaptation is stored internally and if the limit is exceeded a fault will be set.

*Notes:*

cardiagn.com

## Principle of Operation

Emissions Management controls evaporative and exhaust emissions. The ECM monitors the fuel storage system for **evaporative leakage** and controls the **purging** of evaporative fuel. The ECM monitors and controls the exhaust emissions by regulating the **combustible mixture** and after treating by injecting **fresh air** into the exhaust system. The catalytic converters further break down remaining combustible exhaust gases and is monitored by the ECM for **catalyst efficiency**.

**The Evaporative Leakage Detection** is performed on the fuel storage system by the DM TL pump which contains an integral DC motor that is activated by the ECM. The ECM monitors the pump motor operating current as the measurement for detecting leaks.

The DM TL generates a pressure of 20-30 mbar in the fuel tank and evaporative system. The electrical current required for this is calculated by the ECM serves as the indirect value for the tank pressure.

The DM TL carries out a reference measurement before each measurement. This is performed by building up a pressure for 10-15 seconds using an internal orifice of 0.5 mm as a reference and the ECM monitors the current required by the pump motor (20-30 mA).

If a lower pressure is detected in the pressure build-up (low current draw) as compared to the reference measurement, this indicates a leak in the fuel tank/evaporative system. If a higher pressure is detected (higher current draw), the system does not have a leak.

The pump also contains an ECM controlled change over valve that is energized closed during a Leak Diagnosis test. The ECM only initiates a leak diagnosis test every second time the criteria is met. The criteria is as follows:

- Engine **OFF** with ignition switched **OFF**.
- ECM still in active state or what is known as “follow up mode” (ECM Relay energized, ECM and components online for extended period after key off).
- Prior to Engine/Ignition switch OFF condition, vehicle must have been driven for a minimum of 20 minutes.
- Prior to minimum 20 minute drive, the vehicle must have been OFF for a minimum of 5 hours.
- No faults in the ECM for DM TL / tank venting system.

cardiagn.com

- Fuel Tank Capacity must be between **10 and 90%** (safe approximation between 1/4 - 3/4 of a tank).

- Ambient Air Temperature between **-7°C & 35°C**

- Altitude **< 2500m** (8,202 feet).

- Battery Voltage between **11.5 and 14.5 Volts**

When these criteria are satisfied every second time, the ECM will start the Fuel System Leak Diagnosis Test. The test will typically be carried out once a day ie:, once after driving to work in the morning, when driving home in the evening, the criteria are once again met but the test is not initiated. The following morning, the test will run again.

**PHASE 1 - REFERENCE MEASUREMENT**

The ECM activates the pump motor. The pump pulls air from the filtered air inlet and passes it through a precise 0.5 mm reference orifice in the pump assembly.

The ECM simultaneously monitors the pump motor current flow. The motor current raises quickly and levels off (stabilizes) due to the orifice restriction. The ECM stores the stabilized amperage value in memory. The stored amperage value is the electrical equivalent of a 0.5 mm (0.020") leak.

**PHASE 2 - LEAK DETECTION**

The ECM energizes the Change Over Valve allowing the pressurized air to enter the fuel system through the Charcoal Canister. The ECM monitors the current flow and compares it with the stored reference measurement over a duration of time.

The time taken for the measurement is:
- 60-220 seconds if there are no leaks
- 200-360 seconds if there is a leak measuring 0.5 mm (small leak)
- 30-80 seconds if there is a leak measuring over 1 mm (large leak)

The evaporative emission valve is closed during the measurement. The time taken for the measurement is dependant on how much fuel there is in the tank.

Once the test is concluded, the ECM stops the pump motor and immediately de-energizes the change over valve. This allows the stored pressure to vent thorough the charcoal canister trapping hydrocarbon vapor and venting air to atmosphere through the filter.

cardiagn.com

## Test Results

The time duration varies between 30 & 360 seconds depending on the resulting leak diagnosis test results (developed tank pressure "amperage" within a specific time period).

When the ECM detects a leak, a fault will be stored and the "Malfunction Indicator Light" will be illuminated. Depending on the amperage measurement detected by the ECM, the fault code displayed will be "small leak" or "large leak".

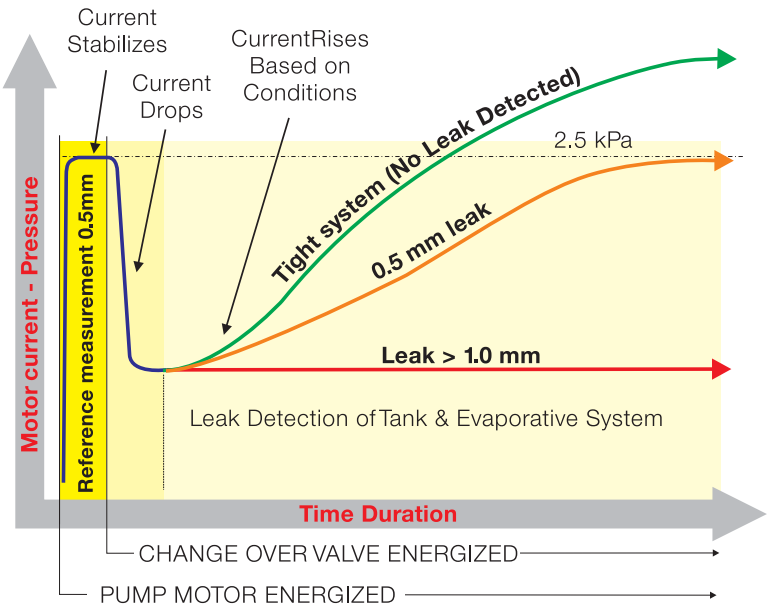


42-02-14

**Refuelling While a Leak Diagnosis is Taking Place:** The ECM detects refuelling during a leak diagnosis as a result of the pressure drop when the fuel filler cap is opened and the increase pressure while filling the tank is being filled.

In this case, the leakage diagnosis is interrupted. The solenoid valve in the DM TL is switched off and the tank pressure escapes through the activated carbon canister.

If refuelling does not take place immediately after the fuel filler cap has been opened, the system will detect a large leak and the a fault will be stored in the ECM. If refuelling is detected in the next driving cycle (increase in fuel level), the fault is cleared.

The ECM detects refueling from a change in the fuel tank sending unit level. If the filler cap was not properly installed, when the leakage test is performed and leakage is detected; the *variable indicator lamp* (shown to the right) and the **"Please Close Filler Cap"** Check Control message will be displayed.

42-02-15

If the filler cap is correctly installed and leakage is not present the next time the test is performed, the "Malfunction Indicator Light" will not be illuminated.

cardiagn.com

**Starting with 2002 MY,** a heating element was added to the DM TL pump to eliminate condensation.

The heater is provided battery voltage when KL15 is switched “on” and the ECM provides the ground path.

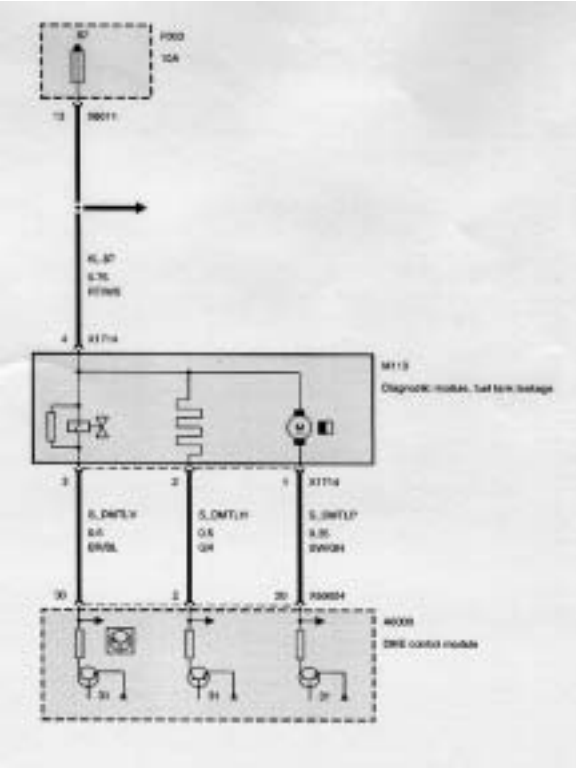

**Catalyst Monitoring** is performed by the ECM under oxygen sensor closed loop operation. The changing air/fuel ratio in the exhaust gas results in lambda oscillations at the pre-catalyst sensors. These oscillations are dampened by the oxygen storage activity of the catalysts and are reflected at the post catalyst sensors as a fairly stable signal (indicating oxygen has been consumed). Conditions for Catalyst Monitoring:

| Requirements | Status/Condition |
|---|---|
| • Closed loop operation | YES |
| • Engine coolant temperature | Operating Temp. |
| • Vehicle road speed | 3 - 50 MPH (5 to 80 km/h) |
| • Catalyst temperature (calculated)* | 350°C to 650°C |
| • Valvetronic position deviation | Steady |
| • Engine speed deviation | Steady/stable engine speed |
| • Average lambda value deviation | Steady/stable load |

* Catalyst temperature is an ECM calculated value based on load/air mass and time.

*Note:* The catalyst efficiency is monitored once per trip while the vehicle is in closed loop operation.

cardiagn.com

As part of the monitoring process, the pre and post $O_2$ sensor signals are evaluated by the ECM to determine the length of time each sensor is operating in the rich and lean range.

If the catalyst is defective the post $O_2$ sensor signal will reflect the pre $O_2$ sensor signal (minus a phase shift/time delay), since the catalyst is no longer able to store/comsume oxygen. The catalyst monitoring process is stopped once the predetermined number of cycles are completed, until the engine is shut-off and started again. After completing the next "customer driving cycle" whereby the specific conditions are met and a fault is again set, the "Malfunction Indicator Light" will be illuminated.

**Secondary Air Injection Monitoring** is performed by the ECM via the use of the pre-catalyst oxygen sensors. Once the air pump is active and is air injected into the exhaust system the oxygen sensor signals will indicate a lean condition. If the oxygen sensor signals do not change within a predefined time a fault will be set and identify the faulty bank(s). When diagnosing a Secondary Air Injection fault, in addition to the electric air pump and non-return valves always consider the following:

- Restricted air inlet to the pump.
- Restricted supply hoses to the non-return valves.
- Internal restrictions in the cylinder head passages into the exhaust ports.

**Misfire Detection** is part of the OBD II regulations the ECM must determine misfire and also identify the specific cylinder(s), the severity of the misfire and whether it is emissions relevant or catalyst damaging based on monitoring crankshaft acceleration.

*Emission Increase:*

- Within an interval of 1000 crankshaft revolutions, the ECM adds the detected misfire events for each cylinder. If the sum of all cylinder misfire incidents exceeds the predetermined value, a fault code will be stored.

- If more than one cylinder is misfiring, all misfiring cylinders will be specified and the individual fault codes for all misfiring cylinders and for multiple cylinder will be stored.

*Catalyst Damage:*

- Within an interval of 200 crankshaft revolutions the detected number of misfiring events is calculated for each cylinder. The ECM monitors this based on load/rpm. If the sum of cylinder misfire incidents exceeds a predetermined value, a fault code is stored and the "Malfunction Indicator Light" will be illuminated.

cardiagn.com

If the cylinder misfire count exceeds the predetermined threshold the ECM will take the following measures:

- The oxygen sensor control will be switched to open loop.
- The cylinder selective fault code is stored.
- If more than one cylinder is misfiring the fault code for all individual cylinders and for multiple cylinders will be stored.
- The fuel injector to the respective cylinder(s) is deactivated.

**The Integrated Ambient Barometric Pressure Sensor** of the ME 9.2 is part of the ECM and is not serviceable. The internal sensor is supplied with 5 volts. In return it provides a linear voltage of approx. 2.4 to 4.5 volts representative of barometric pressure (altitude).

The ME 9.2 monitors barometric pressure for the following reasons:

- The barometric pressure signal along with calculated air mass provides an additional correction factor to further refine injection “on” time.

- Provides a base value to calculate the air mass being injected into the exhaust system by the Secondary Air Injection System. This correction factor alters the secondary air injection “on” time, optimizing the necessary air flow into the exhaust system.

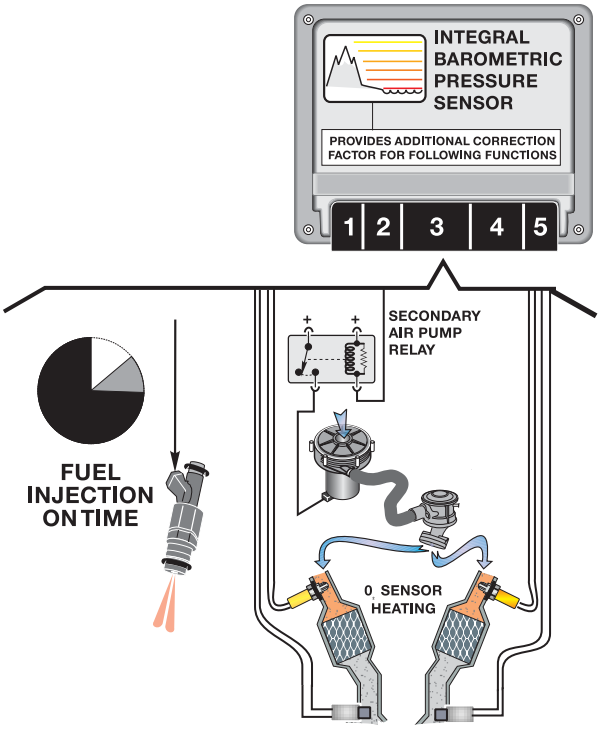


42-04-16



cardiagn.com

**The Malfunction Indicator Light** is illuminated when the OBD system (integral in the ECM) determines that a problem exists and a corresponding “Diagnostic Trouble Code” is stored in the ECM’s memory. The Malfunction Indicator appears both in the instrument cluster upper center section (fixed) and in the Check Control Display (variable indicator). This light informs the driver of the need for service with a Check Control message displayed.

After fixing the problem the fault code is deleted to turn off the light. If the conditions that caused a problem are no longer present, the OBD system can turn off the light automatically. If the OBD system evaluates the component or system three consecutive times and no longer detects the initial problem, the dashboard light will turn off automatically.

The Malfunction Indicator Light will illuminate for the following reasons:

- Pre-drive check when the ignition is switched on (in the fixed location)
- Increased emissions (both fixed and variable indicator locations with message displayed)
- Engine fault - drive with moderation (variable indicator location with message displayed)

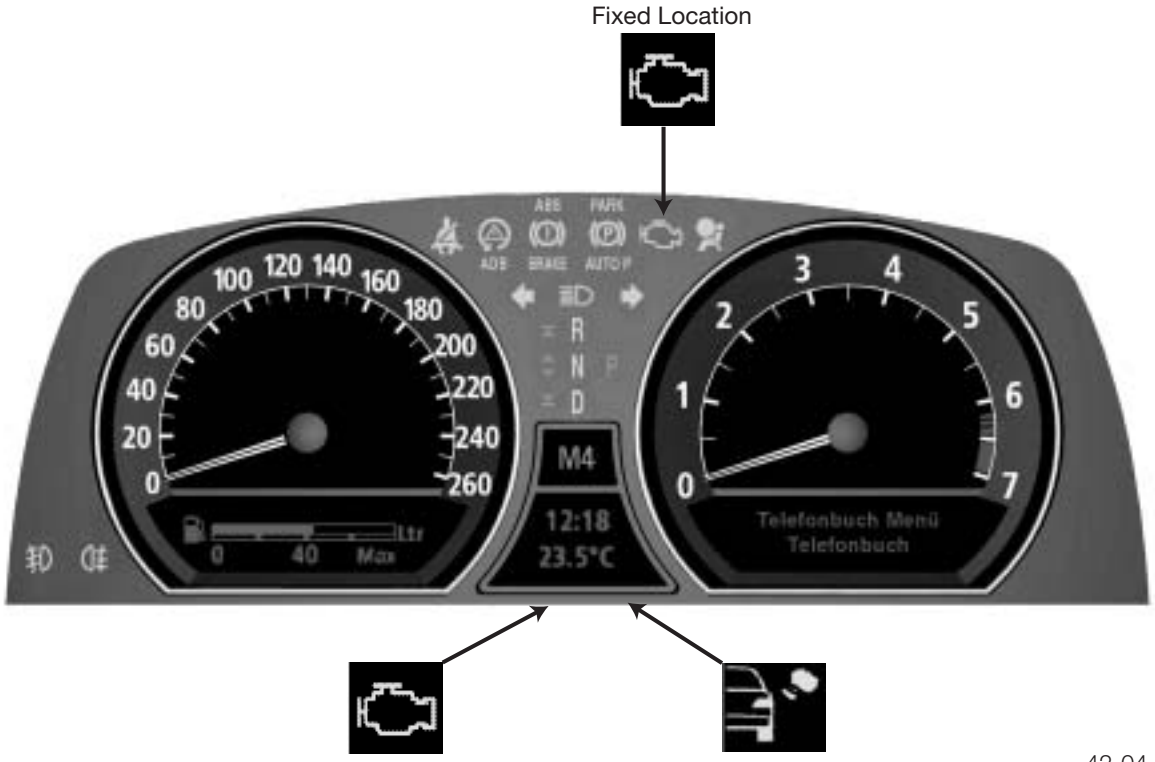


42-04-18

cardiagn.com

The Malfunction Indicator Light will illuminate with a “half shading” in the variable indicator location for the following reasons:

- Engine fault - with reduced power (with message displayed)
- *Engine damage possible!* (with message displayed)

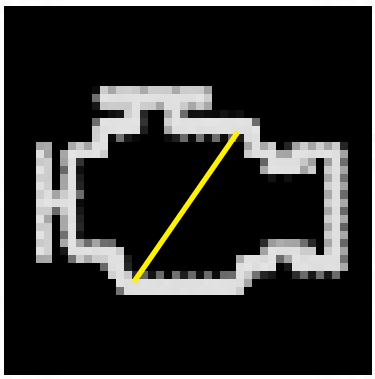

42-04-18

## Emissions Diagnosis

The "BMW Fast" (BMW fast access for service and testing) diagnosis concept is used in the E65 for ME 9.2 ECM. This concept is based on the "Keyword Protocol 2000" (KWP 2000) diagnosis protocol defined as part of the ISO 14230 standard. Diagnosis communication takes place entirely on the basis of a transport protocol on the CAN bus. The Diagnosis bus is connected to the Central Gateway Module (ZGM).

### *Vehicle Diagnosis Access Point*

The diagnosis tool is connected to the vehicle at the OBD diagnosis connector (On-Board Diagnosis). The connector is located behind a small cover in the drivers side kick panel trim. There is a black plastic cap that bridges KL30 to the D-bus when the connector is not being used. This cap must be removed before installing the diagnosis cable.

The TxD lead is located in pin 7 of the OBD socket and is connected directly to the ZGM.

The ZGM detects by means of the data transmission speed whether a BMW diagnosis tool (DISplus, MoDiC, GT-1) or an aftermarket scanner is connected.

The ECM allows access to different data depending on the diagnosis tool connected.

42-04-20

*Note: When using an OBD scan tool for diagnosis, the transmission speed is 10.4 KBit/s.*

cardiagn.com

## Diagnosis Bus

The aim of diagnosis is to enable a Technician to reliably identify a defective component. By the use of appropriate hardware and monitoring software, the microprocessor of the diagnosis tool is able to detect faults in the ECM and its peripherals.

Faults identified are stored in the fault memory and can be read out using the Diagnosis Program. Data transfer between the vehicle and the diagnosis tool takes place via the Diagnosis bus (D bus).

The new features of the diagnosis bus are:

- Faster data transmission speed of 115 kBd.
- Central diagnosis access point (OBD connector).
- Single diagnostic cable (TxD II) for the entire vehicle.
- Omission of the TxD1 cable.
- Access to diagnosis functions requires “Authorization”.
- Diagnosis protocol "KWP 2000" (Keyword Protocol 2000).
- Standardized diagnosis structure for all control units.

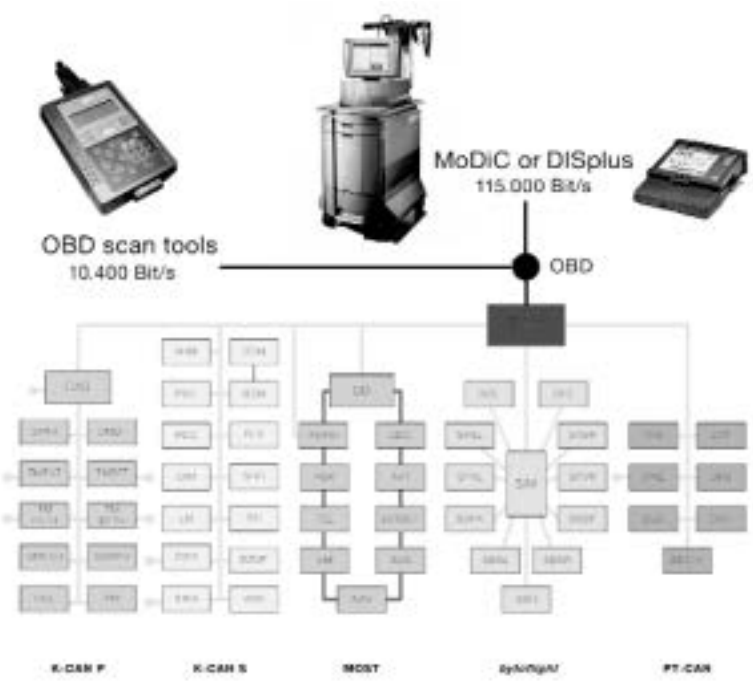


42-04-21

The ECM is not directly connected to the OBD diagnostic connector. The OBD diagnostic connector is connected to the ZGM. The ECM is connected to the ZGM (central gateway module) by the PT CAN bus. The ECM is also connected to the Valvetronic control module by the Lo CAN (local) bus. Valvetronic faults are stored in the ECM.

cardiagn.com

## Performance Controls

### Bi-VANOS Control (Variable Camshaft Adjustment)

Performance, torque, idle characteristics and exhaust emissions reduction are improved by Variable Camshaft Timing (Bi-VANOS). The VANOS units are mounted directly on the front of the camshafts and adjusts the timing of the **Intake and Exhaust** camshafts from retarded to advanced. The ECM controls the operation of the Bi-VANOS solenoids which regulates the oil pressure required to move the VANOS units. Engine RPM, load and temperature are used to determine Bi-VANOS activation.

42-04-00

The Bi-VANOS mechanical operation is dependent on engine oil pressure applied to position the VANOS units. When oil pressure is applied to the units (via ports in the camshafts regulated by the solenoids), the camshaft hubs are rotated in the drive sprockets changing the position which advances/retards the intake/exhaust camshafts timing. The Bi-VANOS system is “fully variable”. When the ECM detects that the camshafts are in the optimum positions, the solenoids maintain oil pressure on the units to hold the camshaft timing.

The operation of the VANOS solenoids are monitored in accordance with the OBD II requirements for emission control. The ECM monitors the final stage output control and the signals from the Camshaft Position Sensors for Bi-VANOS operation.

cardiagn.com

**Solenoid Valves:** The Bi-VANOS solenoid valves are mounted through the upper timing case front cover. There are two solenoids per cylinder head to control the oil flow to the camshaft ports for the intake and exhaust VANOS units.

The 4/3 way proportional solenoid valve is activated by the ECM to direct oil flow. The solenoid valve is sealed to the front cover by a radial seal and secured by a retaining plate.

42-02-41

## Hydraulic Actuation

When oil pressure is applied to chamber A, the blades are forced away from the VANOS housing (counterclockwise). The blades are keyed into the hub which results in the hub position being rotated in relation to the housing (with sprocket). The hub is secured to the camshaft which changes the camshaft to sprocket relationship (timing). The example below shows the *adjustment* procedure together with the pressure progression based on the VANOS unit for the exhaust camshaft.

1. Front View of VANOS Unit
2. Side View of VANOS Unit
3. Camshaft Oil Port (Chamber B)
4. Solenoid Valve
5. Engine Oil Pump
6. Supplied Oil (Switched Through Solenoid)
7. Supplied Oil Pressure (From Engine Oil Pump)

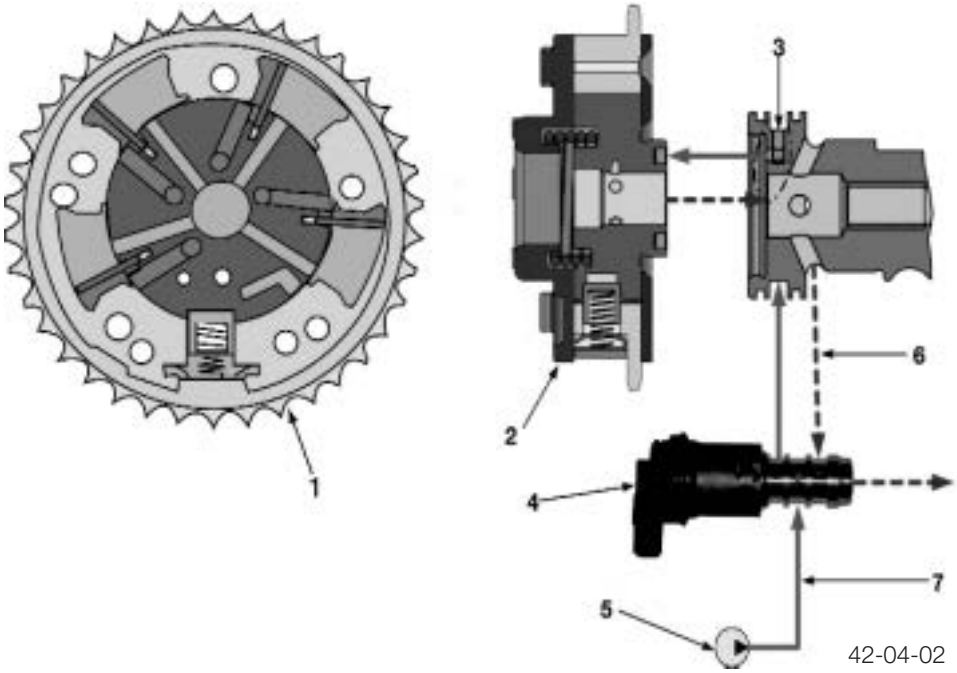


42-04-02

**VANOS**

During this adjustment chamber B is open (through the solenoid) to allow the oil to drain back through the cylinder head (internal reservoir).

cardiagn.com

When the solenoid valve switches over, oil pressure is applied to chamber B. This forces the blades (and hub) in a clockwise direction back to the initial position, again changing the camshaft timing.

The example below shows the *reset* procedure together with the pressure progression based on the VANOS unit for the exhaust camshafts.

1. Front View of VANOS Unit
2. Side View of VANOS Unit
3. Camshaft Oil Port (Chamber B)
4. Solenoid Valve
5. Engine Oil Pump
6. Oil Return (Switched through Solenoid)
7. Supplied Oil Pressure (From Engine Oil Pump)

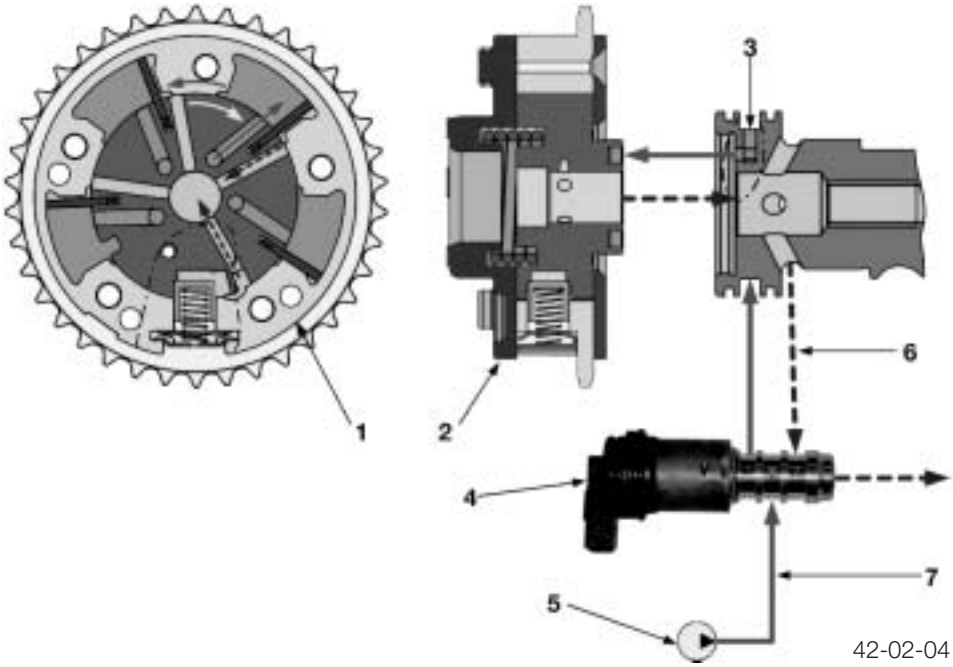


42-02-04

**VANOS**

During this adjustment chamber A is open (through the solenoid) to allow the oil to drain back through the cylinder head (internal reservoir).

**Camshaft Sensors:** The camshaft sensors (Hall effect) are mounted through the cylinder head cover. There are two sensors per cylinder head to monitor the intake and exhaust camshaft positions. The sensors monitor the impulse wheels attached to the ends of the camshafts.

1. Valvetronic Position Sensor
2. Intake Camshaft Position Sensor
3. Exhaust Camshaft Position Sensor

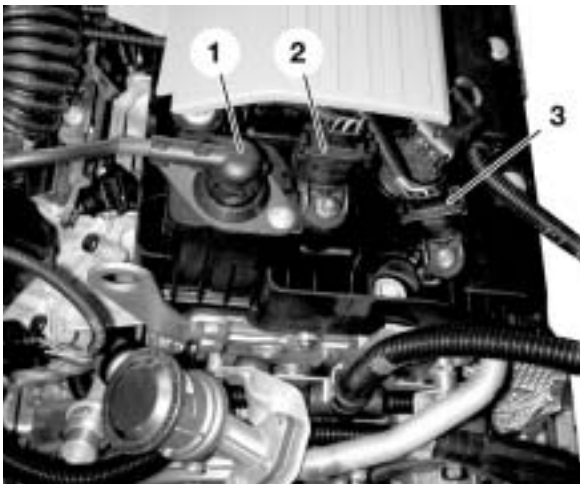


42-02-48

cardiagn.com

The chart below shows the Bi-VANOS unit camshaft adjustment possibilities. The valve lift adjustment has also been incorporated.

The special feature of Valvetronic is that the air mass drawn in the cylinders can be easily determined by the valve lift and closing time. The air mass can then be limited, thus the term “load control”.

With the help of VANOS, the closing point can be easily selected within a defined range. With valve lift control, the opening duration and cross section of the valve opening can also be easily selected within a defined range.

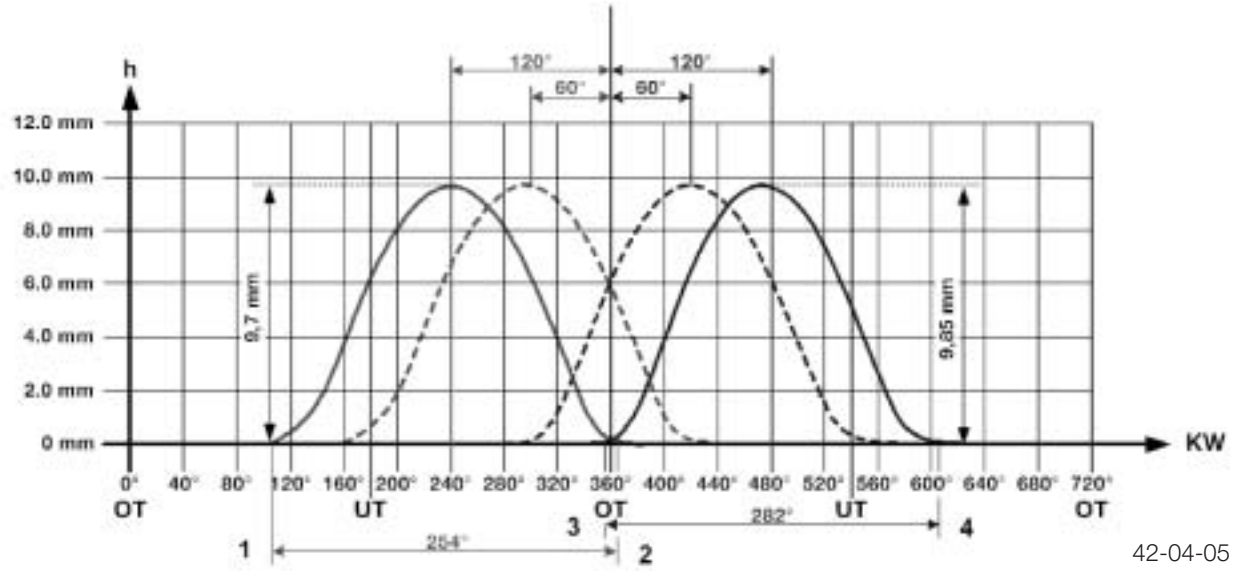


**Exhaust & Intake Valve**

1. Exhaust Valve Open
2. Exhaust Valve Closed
3. Intake Valve Open
4. Intake Valve Closed

## Vacuum pump

The N62 engine requires a vacuum pump for the vacuum assisted brake booster. With the throttle valve open while the car is being driven, additional vacuum is needed. The vacuum pump is driven by cylinders 1-4 exhaust camshaft via the VANOS unit. The pump is lubricated through an oil gallery from the cylinder head.

cardiagn.com

## Oil Condition

An oil condition sensor records the exact engine oil level, oil temperature and the condition of the engine oil. Recording the engine oil level protects the engine from having a level which is too low which will result in engine damage. Recording the condition of the oil means that it is possible to determine exactly when an oil change is required.

**Oil Condition Sensor (OZS):** The electronic condition sensor is located in the engine sump mounted to the engine oil pan.

1. Electronic Sensor
2. Housing
3. Lower section of the oil sump (inverted view)

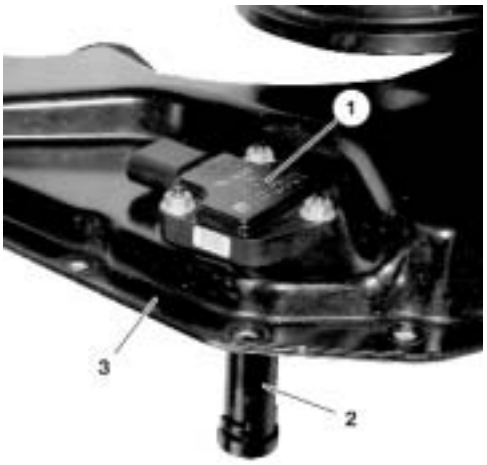


42-04-06

The sensor consists of two connected cylinder capacitors. The smaller capacitor (6) records the oil condition. Two metal tubes (2+3) act as capacitor electrodes located inside the sensor. The engine oil (4) dielectric is located between the electrodes.

With increased wear and additive deterioration, the electrical material properties of the engine oil change.

1. Housing
2. Outer metal tube
3. Inner metal tube
4. Engine oil
5. Oil level sensor
6. Oil condition sensor
7. Sensor electronics
8. Oil sump
9. Temperature sensor

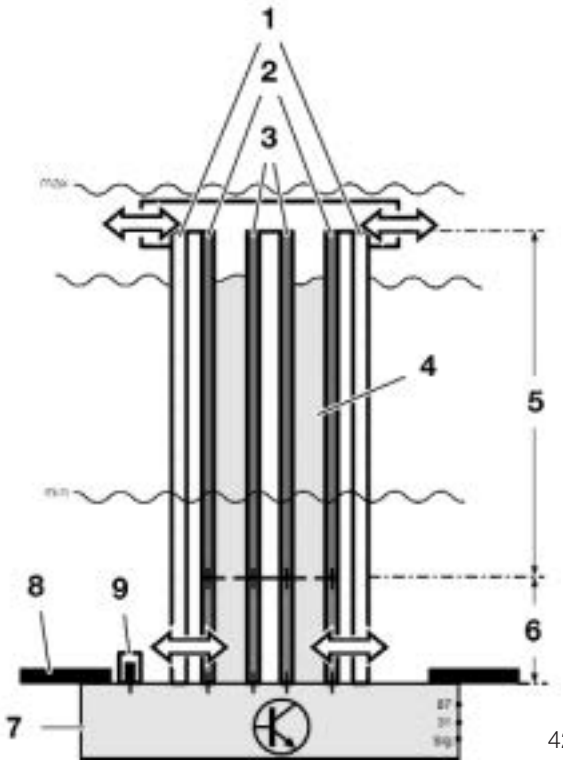


42-04-07

**Oil Condition Sensor**

cardiagn.com

The different electrical material properties of the engine oil (dielectric) change the capacitance of the oil condition sensor. This capacitance value is processed to a digital square wave signal in the evaluation electronics (7) which is integrated in the sensor. This signal is sent to the ECM over the BSD interface as a “statement” about the engine oil condition. The ECM processes this sensor value to calculate the next oil change service.

The engine oil level is determined in the upper section of the sensor (5). This part of the sensor is located on the top of the oil level in the oil sump. As the oil level lowers (dielectric), the capacitance of the sensor also changes. The sensor electronics process this capacitance value into a digital square wave signal which is also sent over the BSD interface to the ECM.

A platinum temperature sensor (9) is integrated at the base of the oil condition sensor to measure the oil temperature. The engine oil level, oil temperature and engine oil condition are constantly recorded when voltage is supplied (KL15). The oil condition sensor is supplied with voltage from the IVM.

The oil condition sensor electronics performs its own diagnostics. A fault in the OEZS results in a corresponding error message that is transmitted over the BSD interface to the ECM for fault storage.

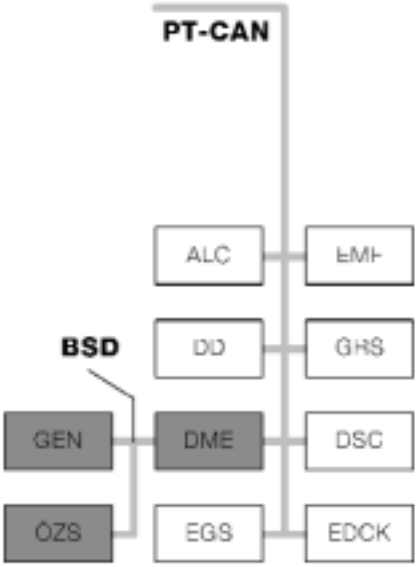

42-04-08

## Electric Cooling Fan

The variable speed electric cooling fan is controlled by the ECM. The ECM uses a remote power output final stage (mounted on the fan housing). The power output stage receives power from the fuse (50 amp) junction located on the right inner fender of the engine compartment (under the remote charging post). The electric fan is controlled by a pulse width modulated signal from the ECM.

The fan is activated based on the ECM calculation of:

- Coolant outlet temperature (monitored by the Outlet Temperature Sensor in the thermostat housing)
- Catalyst temperature
- Vehicle speed
- Battery voltage
- Air Conditioning high side pressure (calculated by IHKA via a bus signal to the ECM)

cardiagn.com

## Alternator

Due to the high power capacity of 180 A, the alternator is cooled by the engine's cooling system to enhance heat dissipation. The brushless Bosch alternator is installed in an aluminum housing which is mounted to the engine block. The exterior alternator walls are surrounded with circulated engine coolant. The function and design of the alternator is the same as in the M62, with only minor modifications. The BSD interface (bit-serial data interface) for the ECM is new.

1. Watertight Housing
2. Rotor
3. Stator
4. Seal

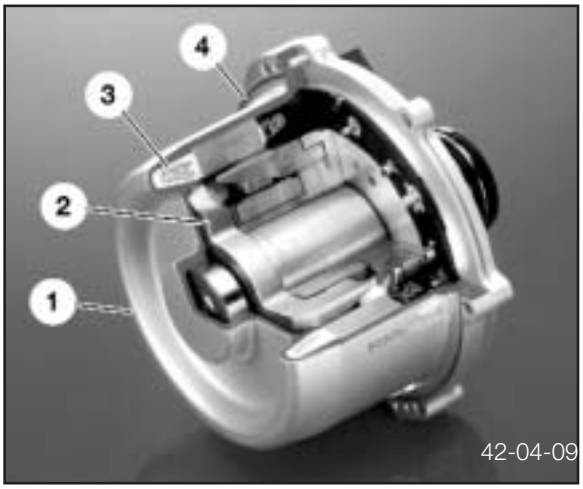


**Altenator**

## Regulation

The alternator can actively communicate with the ECM via the BSD (bit-serial data interface). The alternator conveys data to the ECM.

This is necessary to allow the ECM to adapt its calculations and specific control to the alternator output.

The connection with the ECM makes it possible to almost completely equalize the alternator load torque. This supports the engine idling speed control and the battery load balance.

In addition, the ECM receives information from the Power Module about the battery's calculated temperature and charge status. This means that alternator output can be adapted precisely to the temperature and load status of the battery which increases the battery service life.

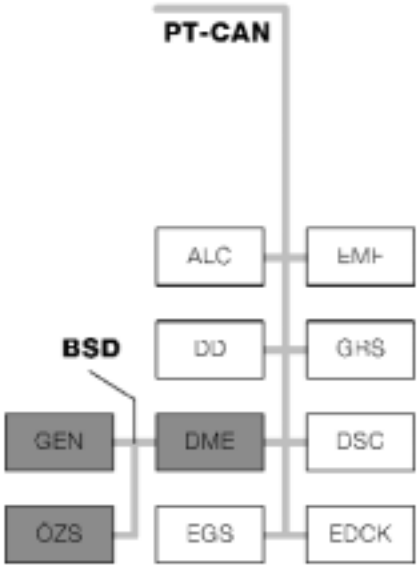


42-04-08

cardiagn.com

The ECM takes on the following functions:

- Activation/deactivation of the alternator.
- Informing the alternator regulator of the nominal voltage value to be set.
- Controlling the alternator's response to load.
- Diagnosing the data line between the alternator and the ECM.
- Storing alternator fault codes.
- Activating the charge indicator lamp in the instrument cluster.

The charge indicator display strategy has not changed in comparison with the alternators currently in use. Regulating the alternator output is particularly important when activating Valvetronic operating motors.

A temperature protection function is implemented in the voltage regulator. If the alternator overheats, the alternator voltage is reduced until an appropriate temperature has been reached.

*The ECM can recognize the following faults:*

- Mechanical faults such as blockages or belt drive failure.
- Electrical faults such as exciter diode defects or over/under voltage caused by regulation defects.
- Connection defects between the ECM and the alternator.

*Coil breaks and short-circuits cannot be recognized. The basic alternator function is in operation even if the BSD interface fails.*

*Note:* The alternator regulator voltage is influenced by the ECM - BSD interface. The battery charge voltage can therefore be up to 15.5 V, depending on the battery temperature. If a battery charge voltage of up to 15.5 V is measured, the regulator is not faulty. A high charge voltage indicates a low battery temperature.

cardiagn.com

## Electronic Box Cooling Fan

42-04-21

The E-box develops very high temperatures caused by engine heat and the energy dissipated by the control units. The ECM controls an electric cooling fan in the base of the electronic box to draw in cool air from the passenger compartment.

Since electronic control modules need to operate at a reduced temperature, the air temperature in the E-box must be kept as low as possible. Lower temperatures extend the life expectancy of electronic control modules.

## Comfort Start

42-04-11

The comfort start makes easy engine starting possible because the starter remains automatically activated until the engine is running (rpm signal). Security is enhanced by using the CAS Module with coded keys and the ignition starting button (integral).

When starting to the engine, the CAS contains the data for the EWS code which is transferred to the ECM. The transmission of EWS data between the CAS and the ECM is over the data line D - EWS. Terminal R and terminal 15 is directed by the CAS for all electrical systems. The CAS also activates KL15 WUP (Wake UP) for control modules on the PT-CAN.

When KL15 WUP is activated, the control modules change from the state of rest into the operating condition. During the starting procedure, KL 50L for the comfort starting relay (in the IVM) and KL 50E is switched to the ECM for the starting request. The ECM will activate a ground signal to the comfort starting relay to energize the starter motor.

The brake light switch is monitored by the ECM for the comfort start feature as well as cruise control. An engine start is possible only if the brake pedal is pressed. For safety reasons, the CAS monitors both signals of the brake light switch (the actual brake light switch and the brake light test switch).

The selector lever of automatic transmission must be in position P or N. The position of the selector lever is detected from the direct hardwire signal or via a CAN signal.

cardiagn.com

## Comfort Start - Block Diagram

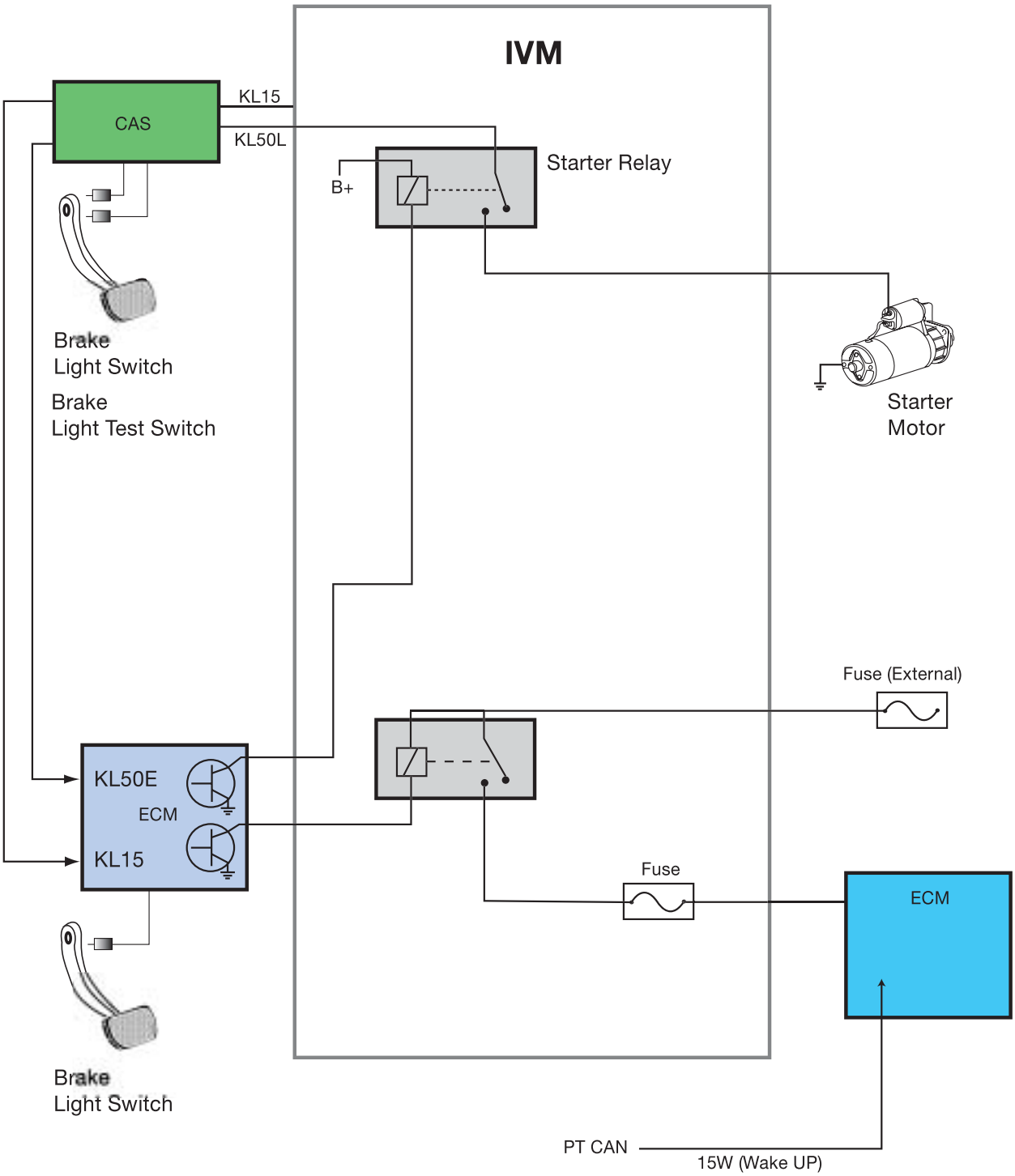


cardiagn.com

**Actuation Time of Terminal 50:** The monitored actuating times of terminal 50 protects the starter against overloading. The actuation times of terminal 50 are:

- A maximum of 21 seconds. A repetition is possible immediately.
- The actuation time is reduced for each repetition by 2 seconds until the minimum actuation time of 3 seconds is reached.
- If the start/stop button is pressed for longer than the preceding actuation time, the actuation time is increased by 2 seconds again (up to a maximum of 21 seconds).

**Switching off the Engine:** The vehicle engine is switched off when the vehicle is stopped and the start/stop button is pressed. If the start/stop button is pressed for longer than 2 seconds, the vehicle engine is switched off and then the key is automatically released and pushed out with spring pressure ("convenience off").

**Incorrect Operation and "Emergency On":** To ensure the safety of the vehicle in the case of an accidental engine shutdown during driving, the "Emergency On" function is available. An engine shutdown during driving can be caused by accidentally pressing the start/stop button (the button must be pressed for at least 1 second or 3 times consecutively).

The "Emergency On" function enables the starter to be actuated again without brake operation at a vehicle speed above 5 km/h (3 mph). The "Emergency On" function also prevents terminal R from being switched off during driving.

**Service Functions:** When replacing the ECM and/or CAS Module, the following must be completed:

The Service Function "DME/DDE - CAS alignment" in the DISplus. After the alignment the two modules are rigidly assigned to each other and the vehicle.

*Note:* It is not possible to exchange these control modules with another vehicle for testing purposes.

cardiagn.com

## Cruise Control

The cruise control (FGR) is a function of the ECM and has multi-speed capability on the E65. This multi-speed function allows the driver to program and store multiple speed settings which can then be activated as required.

This means that speed settings such as 30, 50, or 65 mph can be selected directly at the touch of a button without having to drive the vehicle precisely at that speed beforehand. This is a considerable added convenience. Those preset cruise control speeds are programmed by the driver in advance and then activated when driving.

*Speedometer in Instrument Cluster:*

1. Preset speeds
2. Cruise control active: illuminated pointer
3. Cruise control not active: silhouette pointer

Briefly press/pull the lever to illuminate the cruise control mask in the speedometer. The memory will accept and store up to 6 preset speeds. When the cruise control is not active, the silhouette pointer indicates the last speed at which it was activated.

When the cruise control is active, the illuminated pointer indicates the speed that is currently being maintained. The cruise control can be activated at any speed from approximately 20 mph upwards.

When the ignition is switched OFF, the cruise control is switched off at the same time. Moving the lever up/dn will deactivate the cruise control and delete the mask in the speedometer. The cruise control function is overridden by braking, selecting transmission setting "N" or active DSC intervention.

cardiagn.com

**Cruise Control Lever:** The cruise control is operated by the left lower steering column lever.

When the lever is pressed forward to (but not beyond) the detent, the current road speed is stored and maintained.

Flicking the lever forwards increases the vehicle road speed by approx. 1 mph at a time. If the lever is pressed and held, the vehicle accelerates. When the lever is then released, the speed is stored and maintained.

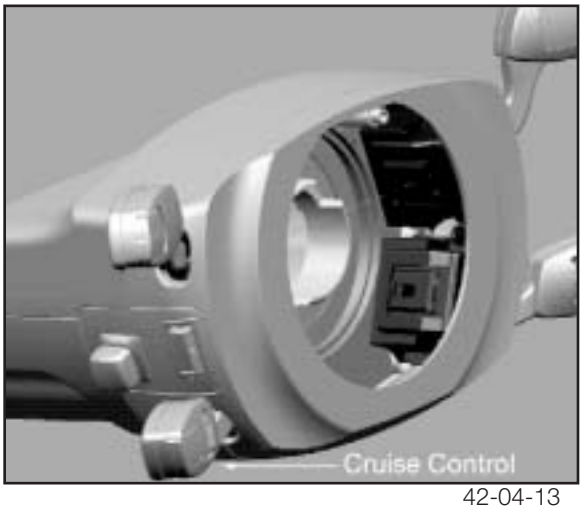

42-04-13

When decelerating, flicking the lever backwards repeatedly reduces the vehicle road speed by approx. 1 mph at a time. When the multi-speed function is activated, the preset speed indicators on the speedometer can be hidden. This is done by pressing and holding the cruise control lever up or down for more than 3 seconds.

*Programming/Deleting Preset Speeds*

Programming of preset speeds should be performed while the vehicle is stationary with KL15 switched “on”. It is also possible to program the preset speeds while driving. However, altering the preset speed also alters the current speed being maintained.

To program a preset speed, the cruise control lever is pressed forwards or backwards beyond the detent. A pointer then appears on the speedometer that indicates the preset speed. To increase the preset speed, the cruise control lever must be pressed forward to the detent. To reduce the preset speed, the cruise control lever must be pulled backwards to the detent.

To store the preset speed, the slide switch (in the end of the lever) must be pressed and held in for at least 3 seconds. The stored preset speed is indicated by a pointer on the speedometer. A preset speed is deleted by selecting it using the cruise control lever and then pressing and holding the slide switch in for at least 3 seconds. The speed pointer then disappears.

*Note:* The preset cruise control speeds are a Vehicle Memory function.

cardiagn.com

| Function | Operated By |
| --- | --- |
| Activate cruise control accelerate/set | Move lever forwards |
| Decelerate/set | Move lever backwards |
| Activate multi-speed function | Pressing lever forwards past detent |
| Select next higher preset speed | Pressing lever forwards past detent |
| Select next lower preset speed | Pressing lever backwards past detent |
| Cancel cruise control | Move lever up/down |
| Recall/set/delete preset speeds while cruise control active | Press slide switch inwards |

*Notes:*

cardiagn.com

## Review Questions

1. Describe the Integrated Voltage Supply Module (IVM) for the Fuel Injectors and Ignition Coils: _____

2. List the three signal operations required to detect Valvetronic Positon.

3. Describe how the Electric Fuel Pump is activated. _____

4. What type of Ignition Coils are used in the N62? _____

5. Where is the Active Charcoal Canister and DM TL located? _____

6. What are the advantages of the Bosch LSU Planar Wideband Oxygen Sensors?

7. List the functions of the Oil Condition Sensor. _____

8. Explain the Comfort Start feature. _____

9. How are the Cruise Control preset speeds programmed and deleted? _____

cardiagn.com