SECTION FSU
FRONT SUSPENSION

CONTENTS

SYMPTOM DIAGNOSIS 2

NOISE, VIBRATION AND HARSHNESS (NVH) TROUBLESHOOTING 2
- NVH Troubleshooting Chart 2

PRECAUTION 3

PRECAUTIONS 3
- Precaution for Supplemental Restraint System (SRS) "AIR BAG" and "SEAT BELT PRE-TENSIONER" 3
- Precautions for Suspension 3
- Precautions for Removing of Battery Terminal 3

PREPARATION 5

PREPARATION 5
- Special Service Tool 5
- Commercial Service Tool 5

PERIODIC MAINTENANCE 6

FRONT SUSPENSION ASSEMBLY 6
- Inspection 6

WHEEL ALIGNMENT 7
- Inspection 7
- Adjustment 7

REMOVAL AND INSTALLATION 9

FRONT COIL SPRING AND STRUT 9
- Exploded View 9
- Removal and Installation 9
- Disassembly and Assembly 10
- Inspection 11
- Disposal 11

TRANSVERSE LINK 13
- Exploded View 13
- Removal and Installation 13
- Inspection 13

FRONT STABILIZER 15
- Exploded View 15
- Removal and Installation 15
- Inspection 16

FRONT SUSPENSION MEMBER 17
- Exploded View 17
- Removal and Installation 17
- Inspection 18

SERVICE DATA AND SPECIFICATIONS (SDS) 19

SERVICE DATA AND SPECIFICATIONS (SDS) 19
- Wheel Alignment 19
- Ball Joint 19
- Wheelarch Height 20

SYMPTOM DIAGNOSIS

NOISE, VIBRATION AND HARSHNESS (NVH) TROUBLESHOOTING

NVH Troubleshooting Chart

INFOID:0000000009948813

Use chart below to find the cause of the symptom. If necessary, repair or replace these parts.

Possible cause and SUSPECTED PARTS			Improper installation, looseness	Shock absorber deformation, damage or deflection	Bushing or mounting deterioration	Parts interference	Spring fatigue	Suspension looseness	Incorrect wheel alignment	Stabilizer bar fatigue	DIFFERENTIAL	FRONT AXLE AND FRONT SUSPENSION	TIRE	ROAD WHEEL	DRIVE SHAFT	BRAKE	STEERING
Reference			FSU-9, FSU-13, FSU-15, FSU-17	FSU-11	—	—	—	FSU-9, FSU-13, FSU-15, FSU-17	FSU-7	FSU-16	NVH in DLN section	NVH in FAX and FSU sections	NVH in WT section	NVH in WT section	NVH in FAX section	NVH in BR section	NVH in ST section
Symptom	FRONT SUSPENSION	Noise	×	×	×	×	×	×			×	×	×	×	×	×	×
		Shake	×	×	×	×		×				×	×	×	×	×	×
		Vibration	×	×	×	×	×					×	×		×		×
		Shimmy	×	×	×	×			×			×	×	×		×	×
		Judder	×	×	×							×	×	×		×	×
		Poor quality ride or handling	×	×	×	×	×		×	×		×	×	×			

×: Applicable

PRECAUTION

PRECAUTIONS

Precaution for Supplemental Restraint System (SRS) "AIR BAG" and "SEAT BELT PRE-TENSIONER"

INFOID:0000000009948814

The Supplemental Restraint System such as “AIR BAG” and “SEAT BELT PRE-TENSIONER”, used along with a front seat belt, helps to reduce the risk or severity of injury to the driver and front passenger for certain types of collision. This system includes seat belt switch inputs and dual stage front air bag modules. The SRS system uses the seat belt switches to determine the front air bag deployment, and may only deploy one front air bag, depending on the severity of a collision and whether the front occupants are belted or unbelted.
Information necessary to service the system safely is included in the “SRS AIR BAG” and “SEAT BELT” of this Service Manual.

WARNING:
Always observe the following items for preventing accidental activation.
- **To avoid rendering the SRS inoperative, which could increase the risk of personal injury or death in the event of a collision that would result in air bag inflation, all maintenance must be performed by an authorized NISSAN/INFINITI dealer.**
- **Improper maintenance, including incorrect removal and installation of the SRS, can lead to personal injury caused by unintentional activation of the system. For removal of Spiral Cable and Air Bag Module, see “SRS AIR BAG”.**
- **Never use electrical test equipment on any circuit related to the SRS unless instructed to in this Service Manual. SRS wiring harnesses can be identified by yellow and/or orange harnesses or harness connectors.**

PRECAUTIONS WHEN USING POWER TOOLS (AIR OR ELECTRIC) AND HAMMERS

WARNING:
Always observe the following items for preventing accidental activation.
- **When working near the Air Bag Diagnosis Sensor Unit or other Air Bag System sensors with the ignition ON or engine running, never use air or electric power tools or strike near the sensor(s) with a hammer. Heavy vibration could activate the sensor(s) and deploy the air bag(s), possibly causing serious injury.**
- **When using air or electric power tools or hammers, always switch the ignition OFF, disconnect the battery, and wait at least 3 minutes before performing any service.**

Precautions for Suspension

INFOID:0000000009948815

- When installing rubber bushings, the final tightening must be carried out under unladen conditions with tires on ground. Spilled oil might shorten the life of rubber bushings. Be sure to wipe off any spilled oil.
- Unladen conditions mean that fuel, engine coolant and lubricant are full. Spare tire, jack, hand tools and mats are in designated positions.
- After servicing suspension parts, be sure to check wheel alignment.
- Self-lock nuts are not reusable. Always use new ones when installing. Since new self-lock nuts are pre-oiled, tighten as they are.

Precautions for Removing of Battery Terminal

INFOID:0000000010085530

- When removing the 12V battery terminal, turn OFF the ignition switch and wait at least 30 seconds.
  NOTE:
  ECU may be active for several tens of seconds after the ignition switch is turned OFF. If the battery terminal is removed before ECU stops, then a DTC detection error or ECU data corruption may occur.
- For vehicles with the 2-batteries, be sure to connect the main battery and the sub battery before turning ON the ignition switch.
  NOTE:
  If the ignition switch is turned ON with any one of the terminals of main battery and sub battery disconnected, then DTC may be detected.

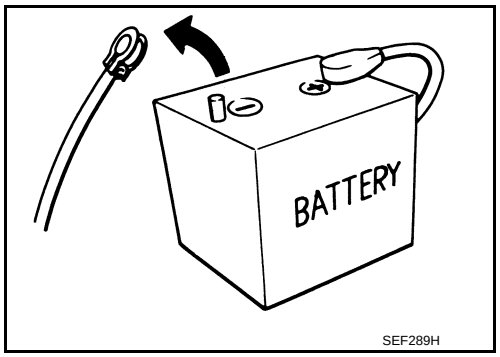

< PRECAUTION >

- After installing the 12V battery, always check "Self Diagnosis Result" of all ECUs and erase DTC.
  NOTE:
  The removal of 12V battery may cause a DTC detection error.

PREPARATION

PREPARATION

Special Service Tool

INFOID:0000000009948816

The actual shapes of Kent-More tools may differ from those of special service tools illustrated here.

Tool number (Kent-More No.) Tool name		Description
ST35652000 (—) Strut attachment	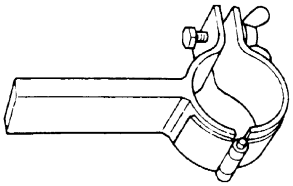 ZZA0807D	Disassembling and assembling strut

Commercial Service Tool

INFOID:0000000009948817

Tool name		Description
Power tool	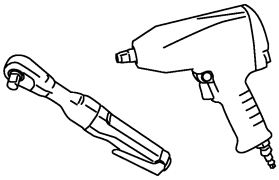 PBIC0190E	Loosening bolts and nuts
Spring compressor	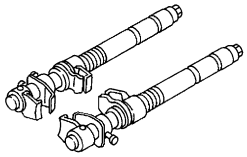 S-NT717	Removing and installing coil spring
Ball joint remover	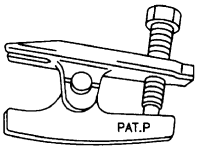 NT146	Removing ball joint for steering knuckle

PERIODIC MAINTENANCE

FRONT SUSPENSION ASSEMBLY

Inspection

INFOID:0000000009948818

COMPONENT PART

Check the mounting conditions (looseness, backlash) of each component and component conditions (wear, damage) are normal.

Ball Joint Axial End Play

1. Set front wheels in a straight-ahead position.
2. Move axle side of transverse link in the axial direction by hand. Check there is no end play.

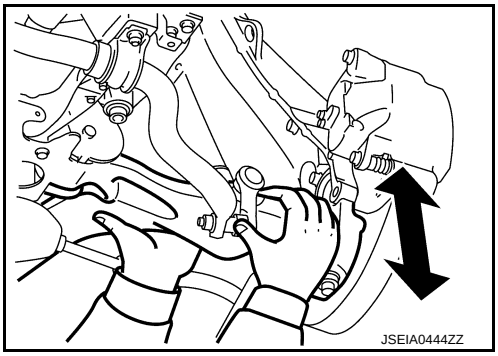

Axial end play : Refer to FSU-19, "Ball Joint".

CAUTION:
- **Never depress brake pedal when measuring.**
- **Never perform with tires on level ground.**
- **Be careful not to damage ball joint boot. Never damage the installation position by applying excessive force.**

STRUT ASSEMBLY

Check for oil leakage, damage, and replace if necessary.

WHEEL ALIGNMENT

Inspection

INFOID:0000000009948819

DESCRIPTION

CAUTION:
- **Camber, caster, kingpin inclination angles cannot be adjusted.**
- **If camber, caster, or kingpin inclination angle is outside the standard, check front suspension parts for wear and damage. Replace suspect parts if a malfunction is detected.**
- **Kingpin inclination angle is reference value, no inspection is required.**
- **Measure wheel alignment under unladen conditions.**

NOTE:
"Unladen conditions" means that fuel, engine coolant, and lubricant are full. Spare tire, jack, hand tools and mats are in designated positions.

PRELIMINARY CHECK

Check the following:
- Tires for improper air pressure and wear. Refer to WT-54, "Tire Air Pressure".
- Road wheels for runout.
- Wheel bearing axial end play. Refer to FAX-7, "Inspection".
- Transverse link ball joint axial end play. Refer to FSU-6, "Inspection".
- Strut operation.
- Each mounting part of axle and suspension for looseness and deformation.
- Each of suspension member, strut assembly and transverse link for cracks, deformation and other damage.
- Vehicle height (posture).

GENERAL INFORMATION AND RECOMMENDATIONS

- A four-wheel thrust alignment should be performed.
  - This type of alignment is recommended for any NISSAN/INFINITI vehicle.
  - The four-wheel "thrust" process helps ensure that the vehicle is properly aligned and the steering wheel is centered.
  - The alignment rack itself should be capable of accepting any NISSAN/INFINITI vehicle.
  - The rack should be checked to ensure that it is level.
- Check the machine is properly calibrated.
  - Your alignment equipment should be regularly calibrated in order to give correct information.
  - Check with the manufacturer of your specific equipment for their recommended Service/Calibration Schedule.

ALIGNMENT PROCESS

IMPORTANT:
Use only the alignment specifications listed in this Service Manual.
- When displaying the alignment settings, many alignment machines use "indicators": (Green/red, plus or minus, Go/No Go). **Never use these indicators.**
  - The alignment specifications programmed into your machine that operate these indicators may not be correct.
  - This may result in an ERROR.
- Most camera-type alignment machines are equipped with both "Rolling Compensation" method and optional "Jacking Compensation" method to "compensate" the alignment targets or head units. "Rolling Compensation" is the preferred method.
  - If using the "Rolling Compensation" method, after installing the alignment targets or head units, push or pull on the rear wheel to move the vehicle. **Do not push or pull on the vehicle body.**
  - If using the "Jacking Compensation" method, after installing the alignment targets or head units, raise the vehicle and rotate the wheels 1/2 turn both ways.

    NOTE:
    Do not use the "Rolling Compensation" method if you are using sensor-type alignment equipment.
  - Follow all instructions for the alignment machine you're using for more information.

Adjustment

INFOID:0000000009948820

TOE-IN

- Loosen the steering outer socket, and then adjust the length using steering inner socket.

Toe-in : Refer to FSU-19, "Wheel Alignment".

CAUTION:
- **Always evenly adjust both toe-in alternately and adjust the difference between the left and right to the standard.**
- **Always fix the steering inner socket when tightening the steering outer socket.**
- After toe-in adjustment, adjust neutral position of steering angle sensor. Refer to BRC-9, "Special Repair Requirement".

REMOVAL AND INSTALLATION

FRONT COIL SPRING AND STRUT

Exploded View

INFOID:0000000009948821

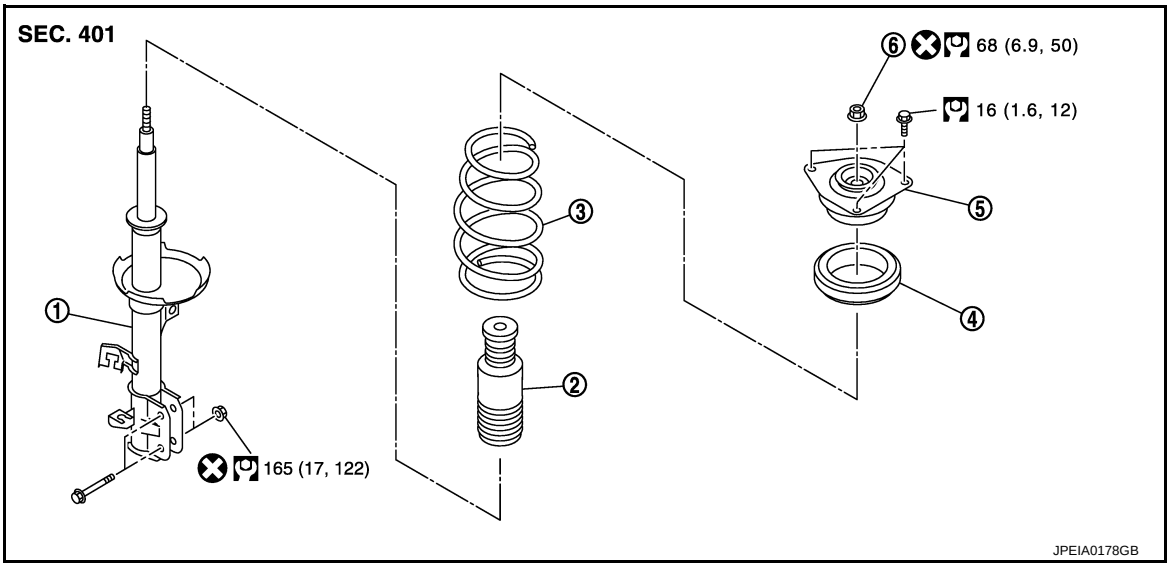

1. Strut
2. Bound bumper
3. Coil spring
4. Strut mounting bearing
5. Strut mounting insulator
6. Piston rod lock nut

Refer to GI-4, "Components" for symbols in the figure.

Removal and Installation

INFOID:0000000009948822

REMOVAL

1. Remove tires with power tool. Refer to WT-46, "Exploded View".
2. Remove lock plate. Refer to BR-20, "FRONT : Exploded View".
3. Remove wheel sensor. Refer to BRC-110, "FRONT WHEEL SENSOR : Exploded View".
4. Remove stabilizer connecting rod from strut assembly. Refer to FSU-15, "Exploded View".
5. Remove strut assembly from steering knuckle.
6. Remove cowl top cover rid (A).
7. Remove mounting bolts of strut mounting insulator with power tool, and then remove strut assembly.

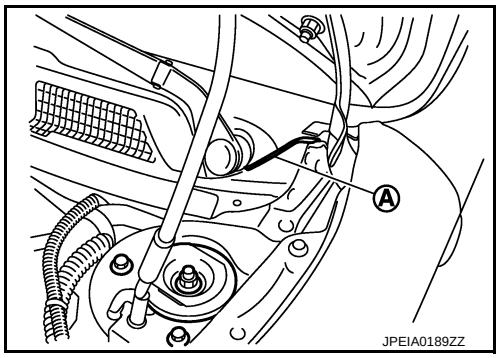

INSTALLATION

Note the following, and install in the reverse order of removal.

- Become it in ID letter (A) an illustration to the body front side.

  ⇦ : Vehicle front

- Perform final tightening of bolts and nuts, under unladen conditions with tires on level ground.

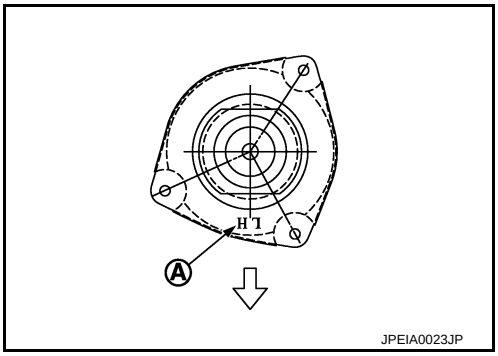

JPEIA0023JP

Disassembly and Assembly

INFOID:0000000009948823

DISASSEMBLY

CAUTION:

Never damage strut assembly piston rod when removing components from strut assembly.

1. Install strut attachment (A) [SST: ST35652000 (—)] to strut assembly and secure it in a vise.
   CAUTION:
   When installing the strut attachment to strut assembly, wrap a shop cloth around strut to protect from damage.

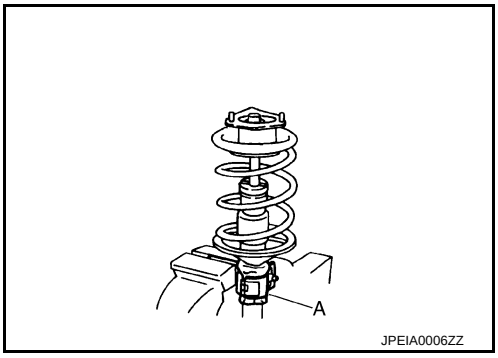

JPEIA0006ZZ

2. Using a spring compressor (A) (commercial service tool), compress coil spring between strut mounting bearing and lower seat (strut assembly) until coil spring with a spring compressor is free.
   CAUTION:
   Be sure a spring compressor is securely attached to coil spring. Compress coil spring.
3. Check coil spring with a spring compressor between strut mounting bearing and lower seat (strut assembly) is free. And then remove piston rod lock nut while securing the piston rod tip so that piston rod does not turn.

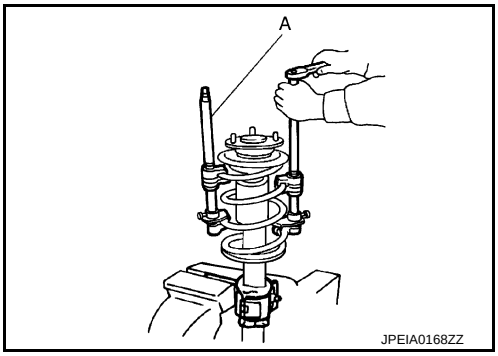

JPEIA0168ZZ

4. Remove strut mounting insulator and strut mounting bearing, and bound bumper from strut.
5. After removing coil spring with a spring compressor (commercial service tool), then gradually release a spring compressor.
   CAUTION:
   Loosen while making sure coil spring attachment position does not move.
6. Remove the strut attachment [SST: ST35652000 (—)] from strut.

ASSEMBLY

1. Install strut attachment [SST: ST35652000 (—)] to strut and secure it in a vise.
   CAUTION:
   When installing the strut attachment to strut assembly, wrap a shop cloth around strut to protect from damage.
2. Install bound bumper onto strut mounting insulator.
3. Compress coil spring using a spring compressor (commercial service tool), and install it onto strut assembly.
   CAUTION:

- **Face tube side of coil spring (1) downward. Align the lower end (A) to lower seat (strut assembly) (2).**
- **Be sure a compressor is securely attached to coil spring. Compress coil spring.**

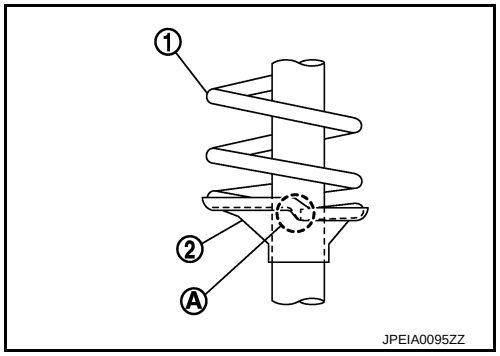

4. Install strut mounting bearing and strut mounting insulator with bound bumper to strut.
   - Installation position of strut mounting insulator is shown in the figure.

   ⇦ : Vehicle front

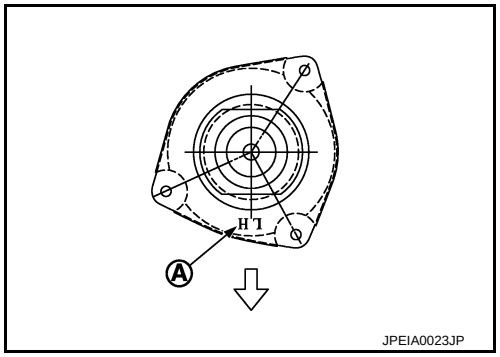

5. Secure piston rod tip so that piston rod does not turn, then tighten piston rod lock nut with specified torque.
   CAUTION:
   Never reuse piston rod lock nut.
6. Gradually release a spring compressor (commercial service tool), and remove coil spring.
   CAUTION:
   Loosen while making sure coil spring attachment position does not move.
7. Remove the strut attachment [SST: ST35652000 (—)] from strut assembly.

Inspection

INFOID:0000000009948824

INSPECTION AFTER DISASSEMBLY

Strut

Check the following items, and replace the parts if necessary.
- Strut for deformation, cracks or damage.
- Piston rod for damage, uneven wear or distortion.
- Oil leakage.

Strut Mounting Insulator and bound bumper Inspection

Check strut mounting insulator and bound bumper for cracks, wear or damage. Replace it if necessary.

Coil Spring

Check coil spring for cracks, wear or damage. Replace it if necessary.

INSPECTION AFTER INSTALLATION

1. Check wheel sensor harness for proper connector. Refer to BRC-110, "FRONT WHEEL SENSOR : Exploded View".
2. Check wheel alignment. Refer to FSU-7, "Inspection".
3. Adjust neutral position of steering angle sensor. Refer to BRC-9, "Special Repair Requirement".

Disposal

INFOID:0000000009948825

1. Set strut assembly horizontally to the ground with the piston rod fully extracted.

2. Drill 2 – 3 mm (0.08 – 0.12 in) hole at the position (●) from top as shown in the figure to release gas gradually.
   CAUTION:
   - **Wear eye protection (safety glasses).**
   - **Wear gloves.**
   - **Be careful with metal chips or oil blown out by the compressed gas.**

   NOTE:
   - Drill vertically in this direction (⬅).
   - Directly to the outer tube avoiding brackets.
   - The gas is clear, colorless, odorless, and harmless.

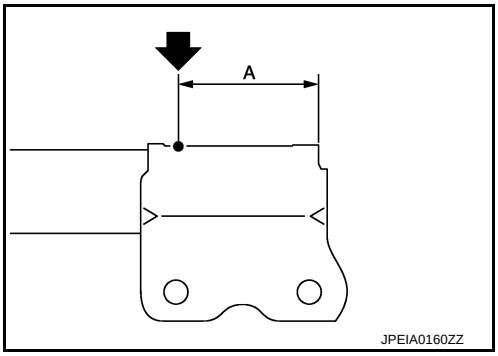

   A : 20 – 30 mm (0.79 – 1.18 in)

3. Position the drilled hole downward and drain oil by moving the piston rod several times.
   CAUTION:
   Dispose of drained oil according to the law and local regulations.

TRANSVERSE LINK

Exploded View

INFOID:0000000009948826

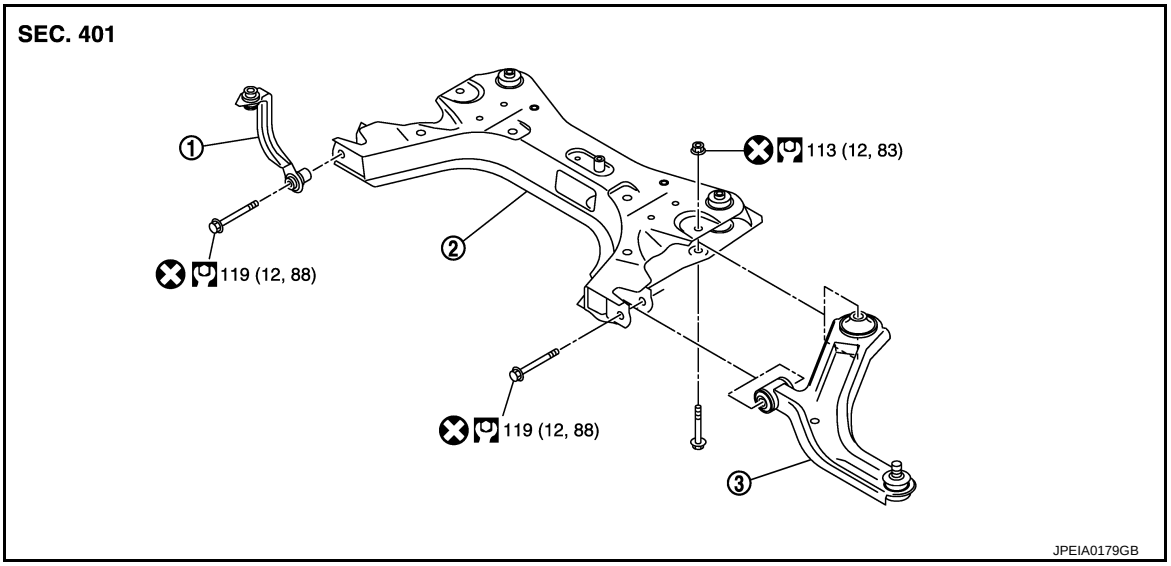

1. Upper link (right side)
2. Front suspension member
3. Transverse link

Refer to GI-4, "Components" for symbols in the figure.

Removal and Installation

INFOID:0000000009948827

REMOVAL

1. Remove tires with power tool. Refer to WT-46, "Exploded View".
2. Remove under cover. Refer to EXT-22, "Exploded View".
3. Remove transverse link from steering knuckle. Refer to FAX-9, "Exploded View".
4. Remove transverse link from suspension member.
   NOTE:
   Support the point around from upper link (right side) with a jack when removing transverse link (right side).

INSTALLATION

Note the following, and install in the reverse order of removal.

- Perform final tightening of bolts and nuts at the front suspension member, under unladen conditions with tires on level ground.

Inspection

INFOID:0000000009948828

INSPECTION AFTER REMOVAL

Transverse Link

Check the following items, and replace the part it necessary.

- Transverse link and bushing for deformation, cracks or damage.
- Ball joint boot for cracks or other damage, and also for grease leakage.

Swing Torque

1. Manually move ball stud to confirm it moves smoothly with no binding.
2. Move ball stud at least ten times by hand to check for smooth movement.

3. Hook a spring balance (A) at cutout on ball stud (B). Confirm spring balance measurement value is within specifications when ball stud begins moving.

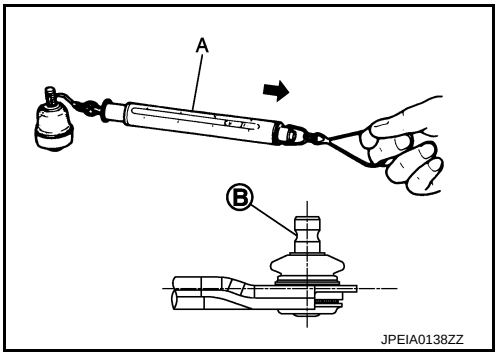

Swing torque	**: Refer to FSU-19, "Ball Joint".**
Measurement on spring balance	**: Refer to FSU-19, "Ball Joint".**

- If swing torque exceeds standard range, replace transverse link assembly.

Axial End Play

1. Move ball stud at least ten times by hand to check for smooth movement.
2. Move tip of ball stud in axial direction to check for looseness.

Axial end play	**: Refer to FSU-19, "Ball Joint".**

- If axial end play exceeds the standard value, replace transverse link assembly.

INSPECTION AFTER INSTALLATION

1. Check wheel sensor harness for proper connector. Refer to BRC-110, "FRONT WHEEL SENSOR : Exploded View".
2. Check wheel alignment. Refer to FSU-7, "Inspection".
3. Adjust neutral position of steering angle sensor. Refer to BRC-9, "Special Repair Requirement".

FRONT STABILIZER

Exploded View

INFOID:0000000009948829

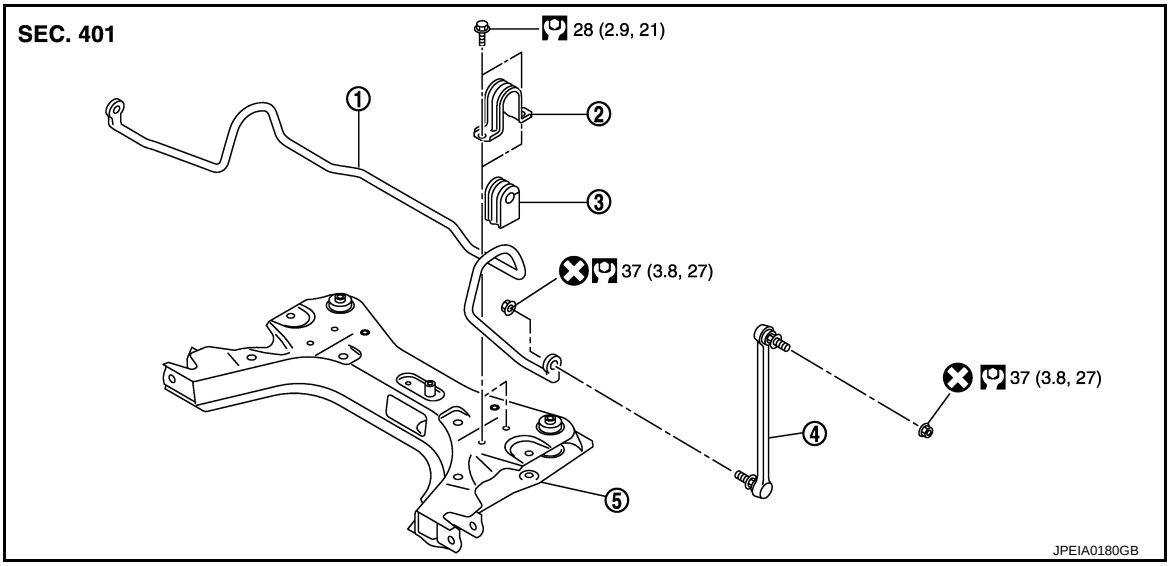

1. Stabilizer bar
2. Stabilizer clamp
3. Stabilizer bushing
4. Stabilizer connecting rod
5. Front suspension member

Refer to GI-4, "Components" for symbols in the figure.

Removal and Installation

INFOID:0000000009948830

REMOVAL

1. Remove tires power tool. Refer to WT-46, "Exploded View".
2. Remove front suspension member. Refer to FSU-17, "Exploded View".
3. Remove stabilizer connecting rod.
4. Remove mounting bolts (⬅) of stabilizer clamp, and then remove stabilizer clamp and stabilizer bushing from front suspension member.
5. Remove stabilizer bar.

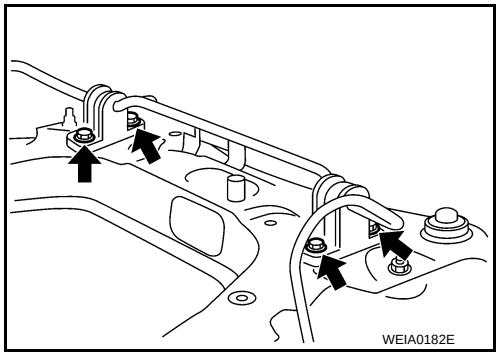

INSTALLATION

Note the following, and install in the reverse order of removal.

- Install stabilizer clamp that a linear hole (A) becomes vehicle front side (⇦).
- Install stabilizer bushing that slit (B) becomes vehicle rear side.

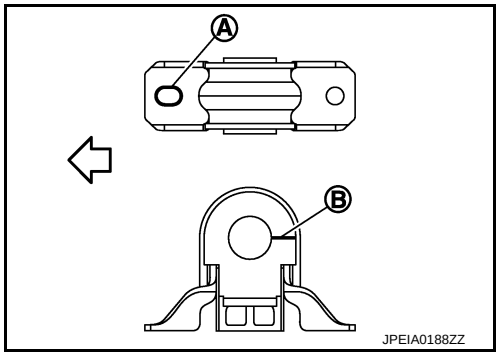

- Tighten the mounting nut to the specified torque while holding a hexagonal part of stabilizer connecting rod side.
- Perform final tightening of bolts and nuts at the vehicle installation position (rubber bushing), under unladen conditions with tires on level ground.

Inspection

INFOID:0000000009948831

INSPECTION AFTER REMOVAL

Check stabilizer bar, stabilizer connecting rod, stabilizer bushing and stabilizer clamp for deformation, cracks or damage. Replace it if necessary.

INSPECTION AFTER INSTALLATION

1. Check wheel sensor harness for proper connector. Refer to BRC-110, "FRONT WHEEL SENSOR : Exploded View".
2. Check wheel alignment. Refer to FSU-7, "Inspection".
3. Adjust neutral position of steering angle sensor. Refer to BRC-9, "Special Repair Requirement".

FRONT SUSPENSION MEMBER

Exploded View

INFOID:0000000009948832

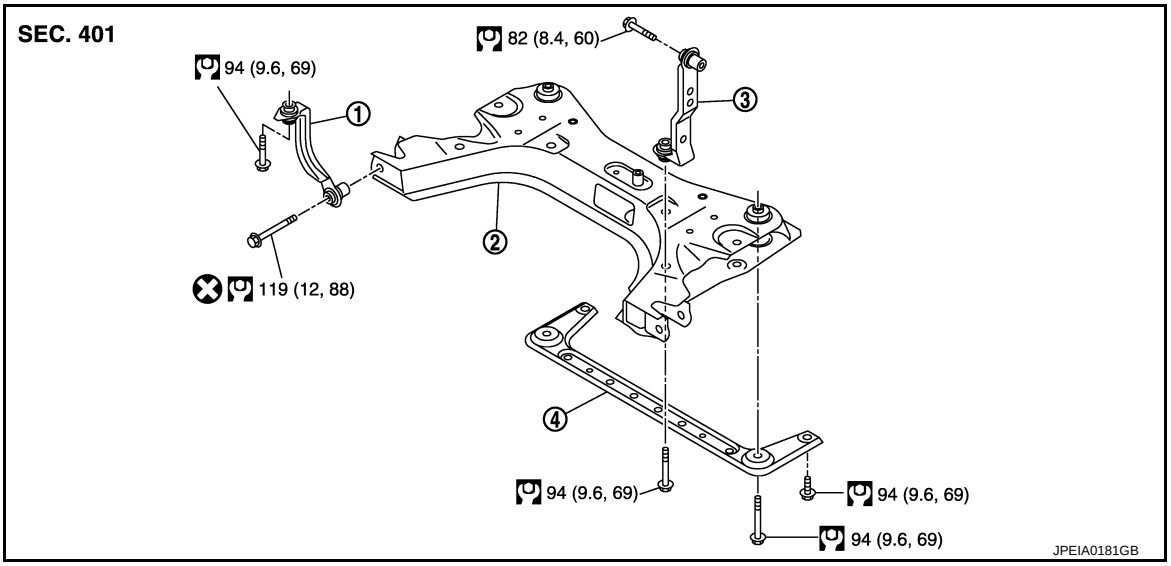

1. Upper link (right side)
2. Front suspension member
3. Upper link (left side)
4. Member stay

Refer to GI-4, "Components" for symbols in the figure.

Removal and Installation

INFOID:0000000009948833

REMOVAL

1. Remove tires with power tool. Refer to WT-46, "Exploded View".
2. Remove under cover. Refer to EXT-22, "Exploded View".
3. Remove wheel sensor. Refer to BRC-110, "FRONT WHEEL SENSOR : Exploded View".
4. Remove stabilizer connecting rod from strut assembly. Refer to FSU-15, "Exploded View".
5. Remove rear torque rod. Refer to EM-74, "Exploded View".
6. Remove transverse link from steering knuckle. Refer to FAX-9, "Exploded View".
7. Remove steering outer socket from steering knuckle. Refer to ST-14, "Exploded View".
8. Remove intermediate shaft from steering gear assembly. Refer to ST-11, "Exploded View".
9. Set suitable jack under front suspension member.
   CAUTION:
   Check the stable condition when using a jack.
10. Remove member stay rear mounting bolts.
11. Remove upper link mounting bolts (right side: vehicle body side, left side: suspension member side), and suspension member mounting bolts.
12. Gradually lower the jack to remove front suspension member from vehicle body.
    CAUTION:
    Check the stable condition when using a jack.
13. Remove upper link (left side) from vehicle body.
14. Remove upper link (right side), transverse links, stabilizer assembly from suspension member.
15. Remove steering gear assembly from suspension member. Refer to ST-14, "Exploded View".

INSTALLATION

Note the following, and install in the reverse order of removal.

- Perform final tightening of bolts and nuts, under unladen conditions with tires on level ground.

Inspection

INFOID:0000000009948834

INSPECTION AFTER DISASSEMBLY

Check front suspension member for cracks, wear or damage. Replace it if necessary.

INSPECTION AFTER INSTALLATION

1. Check wheel sensor harness for proper connector. Refer to BRC-110, "FRONT WHEEL SENSOR : Exploded View".
2. Check wheel alignment. Refer to FSU-7, "Inspection".
3. Adjust neutral position of steering angle sensor. Refer to BRC-9, "Special Repair Requirement".

SERVICE DATA AND SPECIFICATIONS (SDS)

SERVICE DATA AND SPECIFICATIONS (SDS)

Wheel Alignment

INFOID:0000000009948835

Item			Standard
Camber Degree minute (Decimal degree)		Minimum	–0° 55′ (–0.92°)
		Nominal	–0° 10′ (–0.17°)
		Maximum	0° 35′ (0.58°)
		Left and right difference	0° 45′ (0.75°)
Caster Degree minute (Decimal degree)		Minimum	3° 55′ (3.92°)
		Nominal	4° 40′ (4.67°)
		Maximum	5° 25′ (5.41°)
		Left and right difference	0° 45′ (0.75°)
Kingpin inclination Degree minute (Decimal degree)		Minimum	9° 10′ (9.17°)
		Nominal	9° 55′ (9.92°)
		Maximum	10° 40′ (10.66°)
Toe-in	Total toe-in Distance	Minimum	Out 1.0 mm (Out 0.03 in)
		Nominal	In 1.0 mm (In 0.04 in)
		Maximum	In 3.0 mm (In 0.11 in)
	Total toe-angle Degree minute (Decimal degree)	Minimum	Out 0° 06′ (Out 0.10°)
		Nominal	In 0° 06′ (In 0.10°)
		Maximum	In 0° 17′ (In 0.28°)

Measure value under unladen* conditions.

*: Fuel, engine coolant and lubricant are full. Spare tire, jack, hand tools and mats are in designated positions.

Ball Joint

INFOID:0000000009948836

Item	Standard
Swing torque	0.5 – 4.9 N·m (0.05 – 0.5 kg-m, 5 – 43 in-lb)
Measurement on spring balance	15.4 – 150.8 N (1.6 – 15.4 kg, 3.6 – 33.9 lb)
Axial end play	0 mm (0 in)

Wheelarch Height

INFOID:0000000009948837

Item	Standard	
Tire size	195/60R15	195/55R16
Front (Hf)	679 mm (26.73 in)	684 mm (26.93 in)
Rear (Hr)		683 mm (26.89 in)

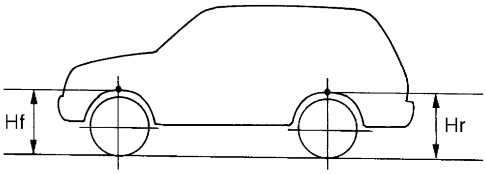

SFA746B

Measure value under unladen* conditions.

*: Fuel, engine coolant and lubricant are full. Spare tire, jack, hand tools and mats are in designated positions.