■ D-CAT SYSTEM

1. General

The D-CAT (Diesel Clean Advanced Technology) system controls the intake & exhaust, fuel and engine control systems to reduce PM (Particulate Matter), NOx (Oxides of Nitrogen), and sulfur emitted by this diesel engine.

- Along with the adoption of the D-CAT system, catalyst support control is used. For details, see page EG-144.

▶ System Diagram ◀

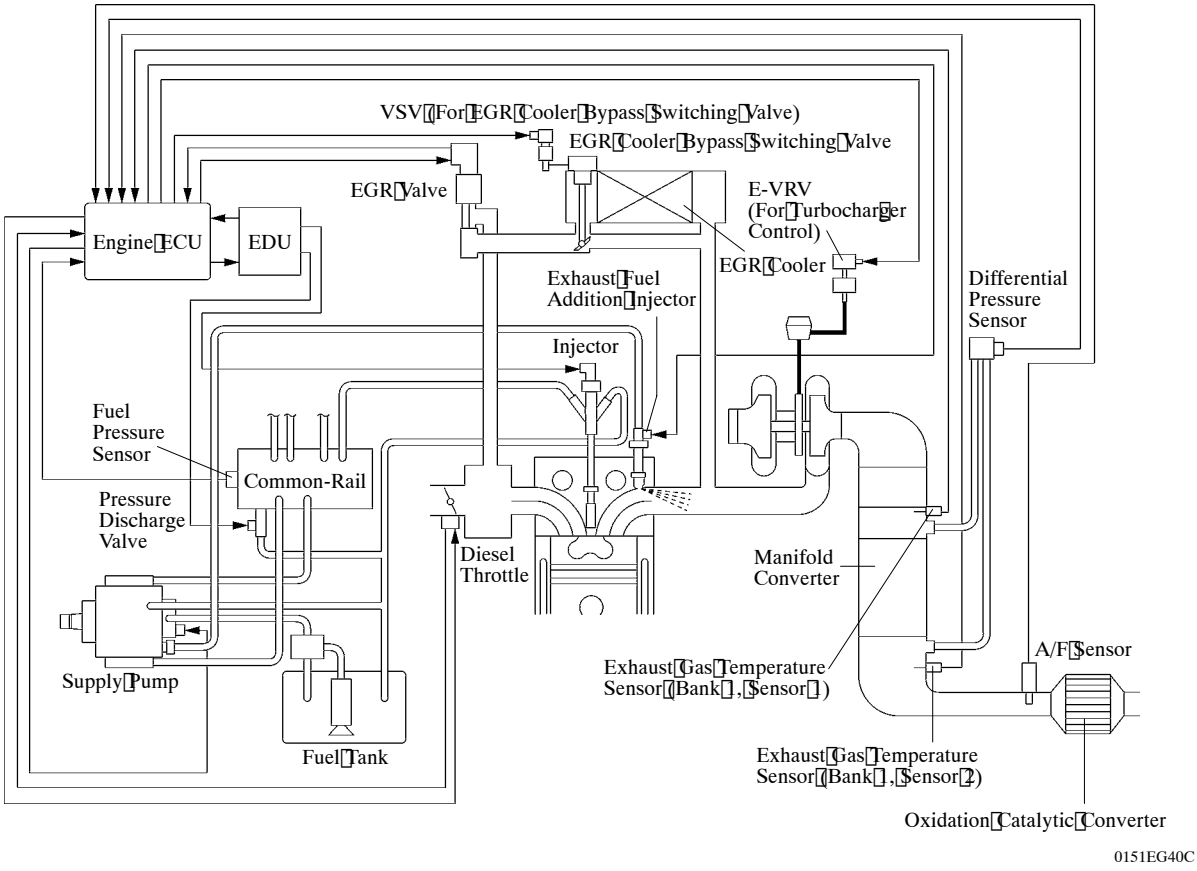

For construction and operation of major parts for each system, refer to the following page according to each system:

- Intake and Exhaust System: See page EG-106.
- Fuel System: See page EG-113.
- Engine Control System: See page EG-126.