TABLE OF CONTENTS

Subject Page

M62TU Engine 2

Vanos Operation 3-12

Engine Cooling System. 13

IHKA System Auxilary Pump. 14

DME-ME 7.2 Engine Management. 15

IPO ME 7.2. 16

Integral Electronic Throttle System (EML). 17

Input Signal/Components. 19
- Camshaft Position Sensors. 19
- Hot Film Air Mass Sensor (HFM 5). 20
- Integrated Ambient Barometeric Pressure Sensor. 21
- Radiator Outlet Temperature Sensor. 22
- DSC III Road Speed Signal. 22
- Accelerator Pedal Sensor (PWG). 23
- EDK Throttle Position Feedback Signal. 24
- MFL Cruise Control Data Signal. 25
- Brake Light Switch. 25

Can Bus. 26

Output Control Functions. 27
- E-Box. 27
- Secondary Air Injection. 28
- Auxiliary Fan Control. 29
- Electric Throttle Control. 30

DM-TL. 31

Leak Diagnosis Test Precondition. 34

M62TU Engine / ME7.2

The 4.4i X5 is equipped with the M62 TU B44 (4.4 liter) engine. Features of the M62 TU engine include:

- Digital motor Electronics Control ME 7.2.
- Variable positioned intake camshaft VANOS system.
- “EML” Electronic Throttle Control System identified as EDK.
- Compact water cooled generator (F-alternator).
- Thermostat controlled transmission fluid/engine coolant heat exchanger system for automatic transmission equipped vehicles.
- Non Return Fuel Rail (Running Loss Compliance).
- IHKA Auxillary Water Pump.

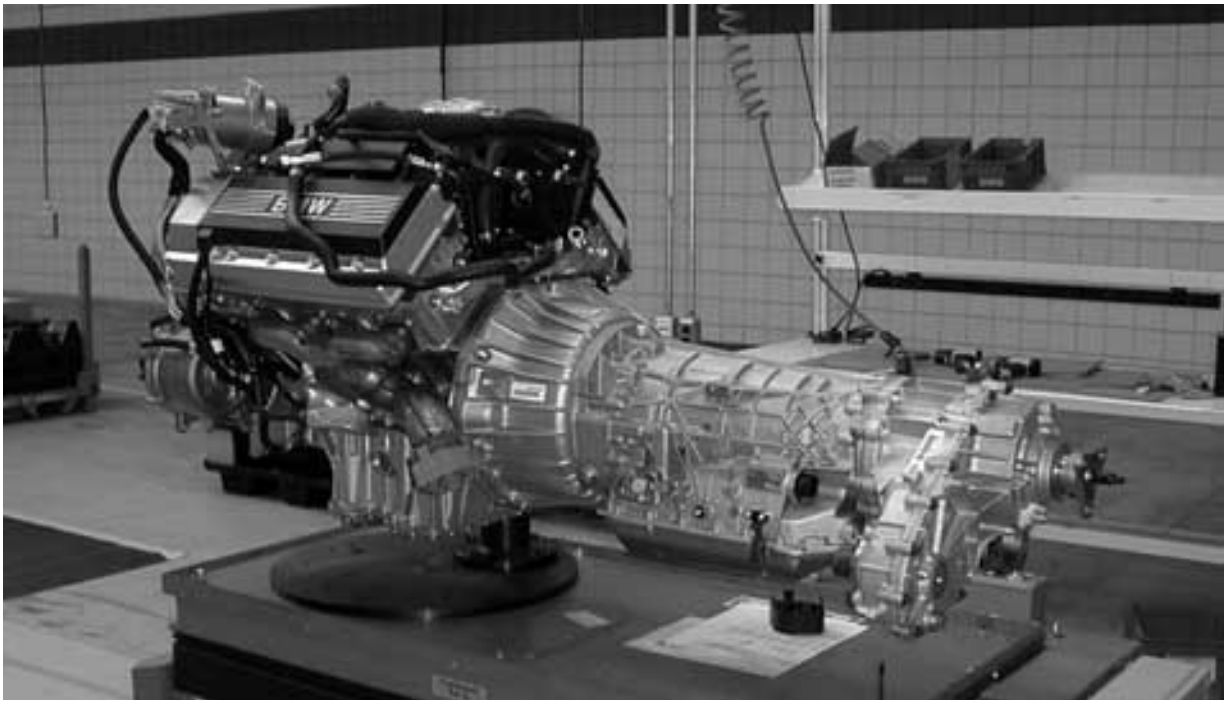

M62 TU VANOS

OVERVIEW

The variable intake valve timing system on the M62 TU continues to be identified as VANOS. This acronym comes from the German words; *VAriable NOckenwellen Steuerung,* which means Variable Camshaft Control.

The M62 TU VANOS system is a new variant providing stepless VANOS functionality on each intake camshaft. The system is continuously variable within its range of adjustment providing optimized camshaft positioning for all engine operating conditions.

While the engine is running, both intake camshafts are continuously adjusted to their optimum positions. This enhances engine performance and reduces tailpipe emissions.

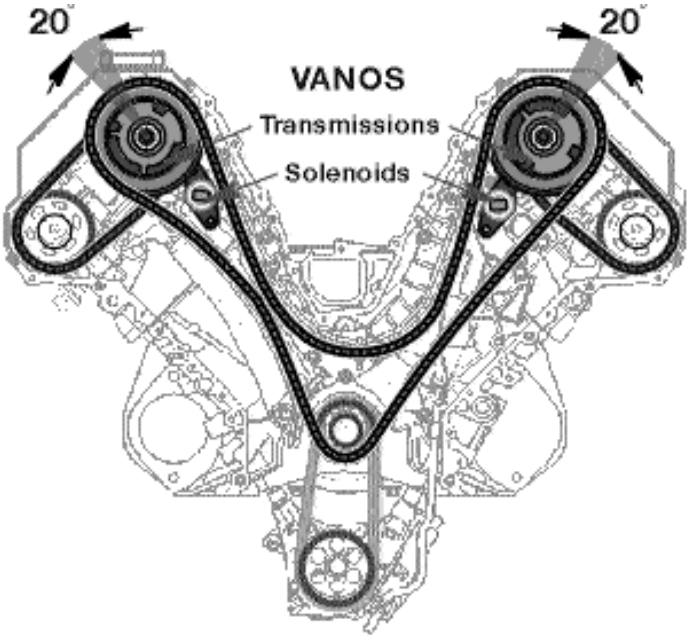

Both camshafts are adjusted simultaneously within 20° (maximum) of the camshafts rotational axis.

This equates to a maximum span of 40° crankshaft rotation. The camshaft spread angles for both banks are as follows.

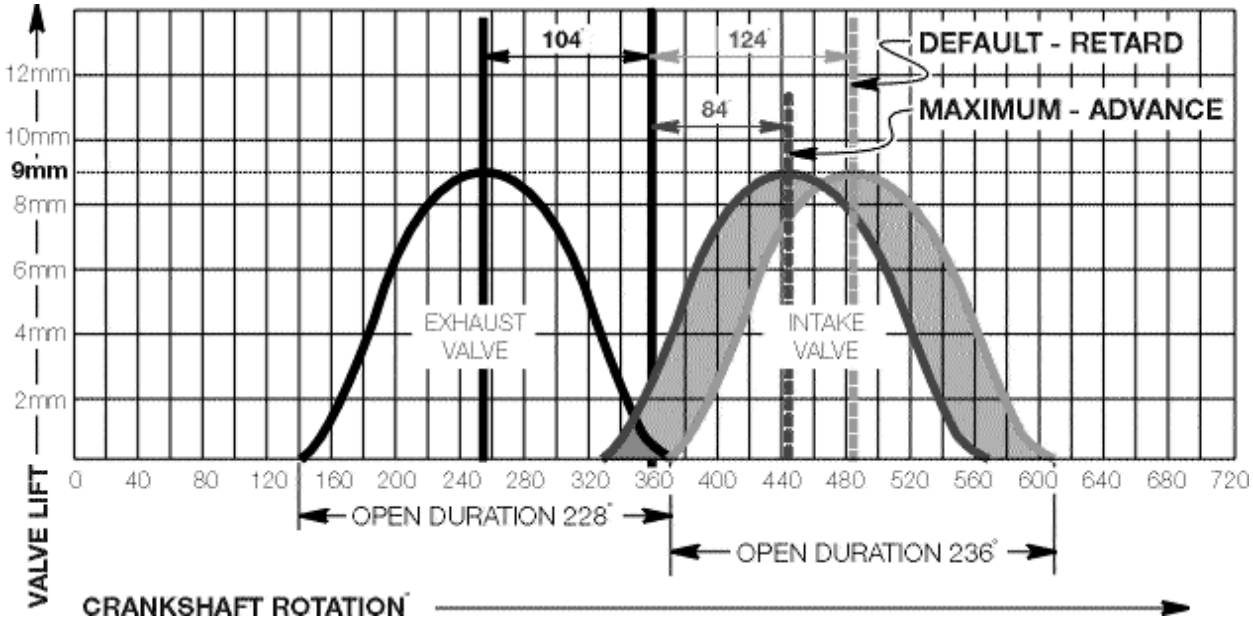

VANOS BENEFITS

The design of a camshaft for a non adjustable valve timing system is limited to the required **overall** performance of the engine.

- An intake camshaft with an **advanced** (early) profile will provide a higher performing power curve at a lower engine speed. But at idle speed the the advanced position will create a large area of intake/exhaust overlap that causes a rough, unstable idle.
- On the other hand, an intake camshaft with a **retarded** (late) profile will provide a very smooth, stable idle but will lack the cylinder filling dynamics needed for performance characteristics at mid range engine speeds.

The ability to **adjust** the valve timing improves the engines power dynamics and reduces tailpipe emissions by optimizing the camshaft angle for all ranges of engine operation. VANOS provides the following benefits:

- Increased torque at lower to mid range engine speeds without a loss of power in the upper range engine speeds.
- Increased fuel economy due to optimized valve timing angles.
- Reduction of exhaust emissions due to optimized valve overlap.
- Smoother idle quality due to optimized valve overlap.

BASIC FUNCTION OF BMW VANOS SYSTEMS

All BMW VANOS systems are operated through electric/hydraulic/mechanical control.

Electric Control: The engine control module is responsible for activating a VANOS solenoid valve based on DME program mapping. The activation parameters are influenced by the following input signals:

- Engine speed
- Load (intake air mass)
- Engine temperature
- Camshaft position
- Oil temperature (MS 42.0 only)

Depending on the specific VANOS system, the solenoid valve is one of two types:

- Basic black/white (on/off) solenoid valve. Found on M50 TU and M52 engines.
- Variable position solenoid valve. Found on the M52 TU and M62 TU engines.

Hydraulic Control: The position of the solenoid valve directs the hydraulic flow of engine oil. The controlled oil flow acts on the mechanical components of VANOS system to position the camshaft.

Mechanical Control: The mechanical components of all VANOS systems operate under the same principle. The controlled hydraulic engine oil flow is directed through advance or retard activation oil ports. Each port exits into a sealed chamber on the opposite sides of a control piston.

- The control piston on six cylinder engine systems (M50TU, M52 & M52TU) is connected to a separate helical gear cup.
- The control piston on the M62TU VANOS system incorporates the helical gear.

In its default position the oil flow is directed to the rear surface of the piston. This pulls the helical gear forward and maintains the retarded valve timing position.

When the oil flow is directed to the front surface of the piston, the oil **pushes** the helical gear in the opposite direction which rotates the matched helical gearing connected to the camshaft.

The angled teeth of the helical gears cause the **pushing** movement to be converted into a **rotational** movement. The rotational movement is added to the turning of the camshaft providing the variable camshaft positioning.

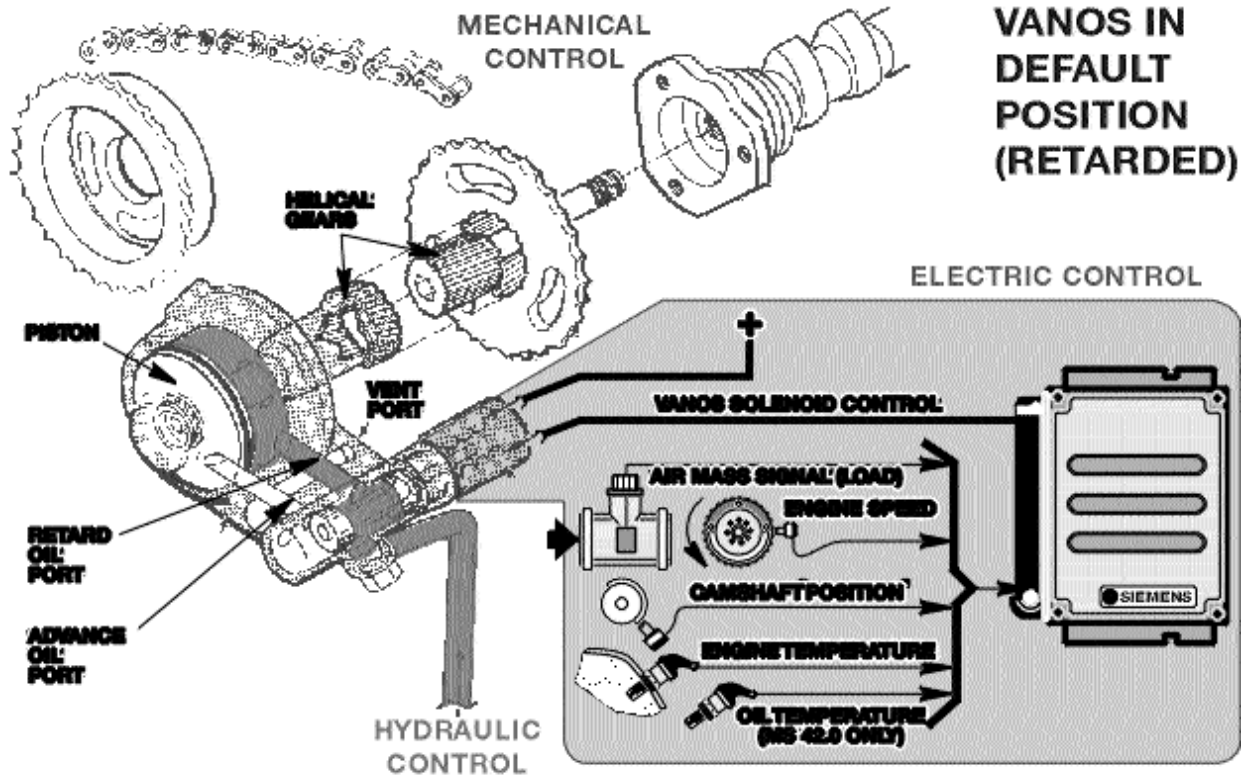
MECHANICAL CONTROL
VANOS IN DEFAULT POSITION (RETARDED)
HELICAL GEARS
ELECTRIC CONTROL
PISTON
VENT PORT
VANOS SOLENOID CONTROL
AIR MASS SIGNAL (LOAD)
ENGINE SPEED
RETARD OIL PORT
CAMSHAFT POSITION
ADVANCE OIL PORT
ENGINE TEMPERATURE
OIL TEMPERATURE (M5 42.0 ONLY)
SIEMENS
HYDRAULIC CONTROL

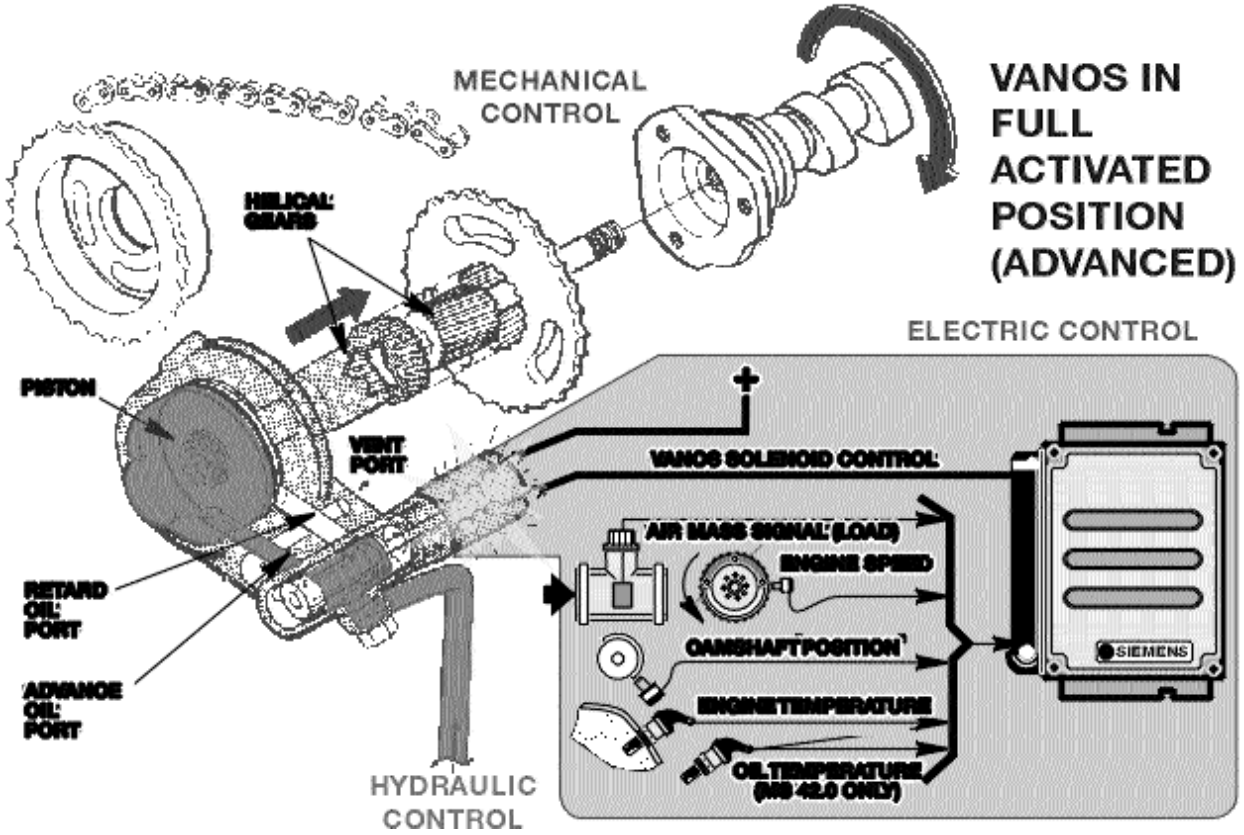
MECHANICAL CONTROL
VANOS IN FULL ACTIVATED POSITION (ADVANCED)
HELICAL GEARS
ELECTRIC CONTROL
PISTON
VENT PORT
VANOS SOLENOID CONTROL
AIR MASS SIGNAL (LOAD)
ENGINE SPEED
RETARD OIL PORT
CAMSHAFT POSITION
ADVANCE OIL PORT
ENGINE TEMPERATURE
OIL TEMPERATURE (M5 42.0 ONLY)
SIEMENS
HYDRAULIC CONTROL

M62 TU VANOS COMPONENTS

M62 TU VANOS components include the following for each cylinder bank:

- New cylinder heads with oil ports for VANOS
- VANOS transmission with sprockets
- Oil distribution flange
- PWM controlled solenoid valve
- Oil check valve
- Camshaft position impulse

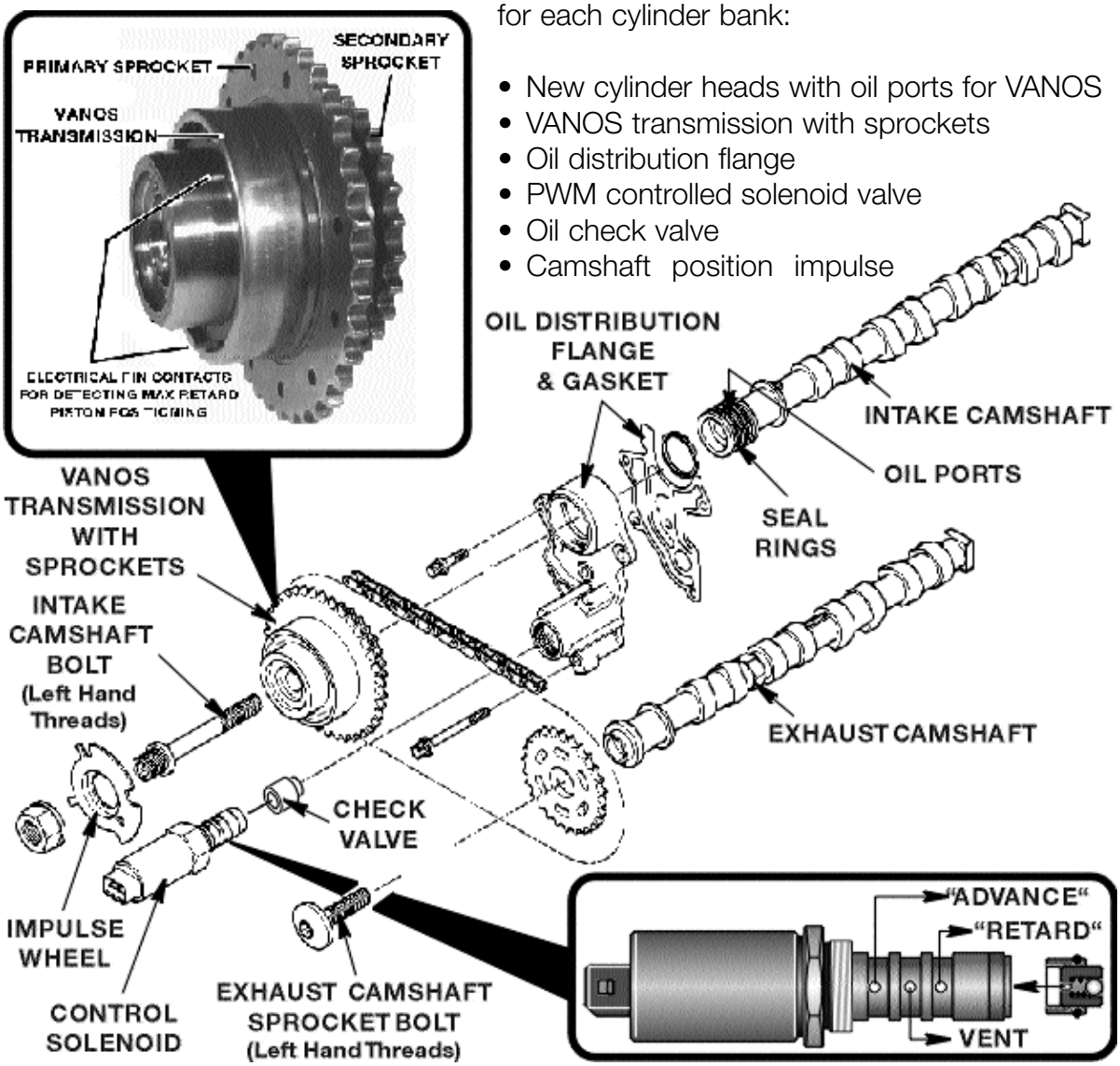

VANOS CONTROL SOLENOID & CHECK VALVE: The VANOS solenoid is a two wire, pulse width modulated, oil pressure control valve. The valve has four ports;

1. Input Supply Port - Engine Oil Pressure
2. Output Retard Port - To rear of piston/helical gear (retarded camshaft position)
3. Output Advance Port - To front of piston/helical gear (advanced camshaft position)
4. Vent - Released oil pressure

A check valve is positioned forward of the solenoid in the cylinder head oil gallery. The check valve maintains an oil supply in the VANOS transmission and oil circuits after the engine is turned off. This prevents the possibility of piston movement (noise) within the VANOS transmission system on the next engine start.

VANOS TRANSMISSION: The primary and secondary timing chain sprockets are integrated with the VANOS transmission. The transmission is a self contained unit.

The controlled adjustment of the camshaft occurs inside the “transmission”. Similar in principle to the six cylinder engine VANOS systems, controlled oil pressure moves the piston axially.

The helical gear cut of the piston acts on the helical gears on the inside surface of the transmission and rotates the camshaft to the specific advanced or retarded angle position.

Three electrical pin contacts are located on the front surface to verify the default maximum retard position using an ohmmeter. This is required during assembly and adjustment. (see service notes further on).

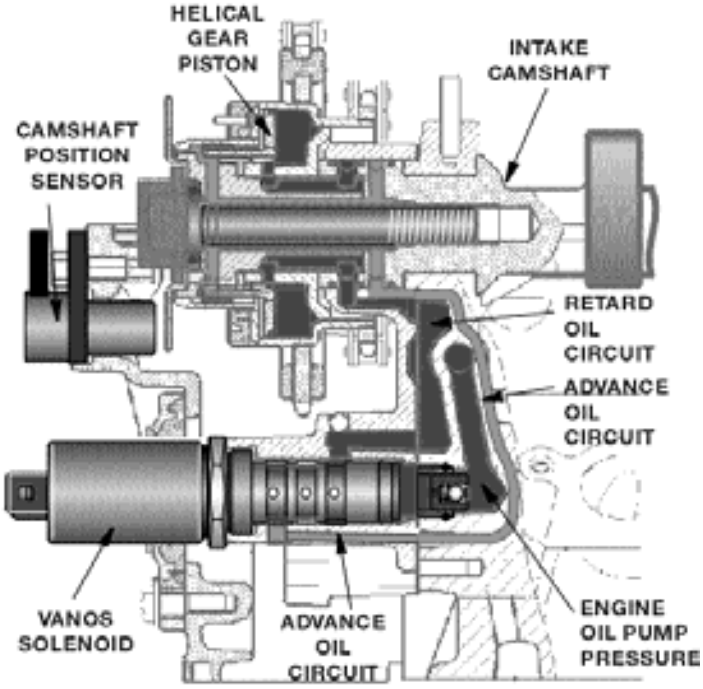

OIL DISTRIBUTION FLANGES: The oil distribution flanges are bolted to the front surface of each cylinder head. They provide a mounting location for the VANOS solenoids as well as the advance-retard oil ports from the solenoids to the intake camshafts.

CAMSHAFTS: Each intake camshaft has two oil ports separated by three sealing rings on their forward ends.

The ports direct pressurized oil from the oil distribution flange to the inner workings of the VANOS transmission.

Each camshaft has ***REVERSE*** threaded bores in their centers for the attachment of the timing chain sprockets on the exhaust cams and the VANOS transmissions for each intake camshaft as shown.

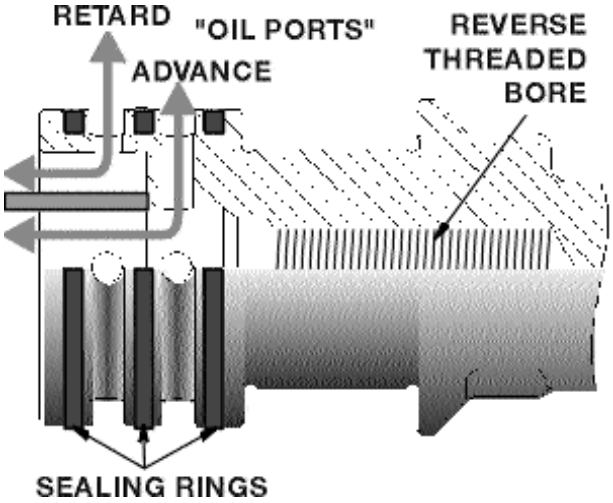

CAMSHAFT POSITION IMPULSE WHEELS: The camshaft position impulse wheels provide camshaft position status to the engine control module via the camshaft position sensors. The asymmetrical placement of the sensor wheel pulse plates provides the engine control module with cylinder specific position ID in conjunction with crankshaft position.

M62 TU VANOS CONTROL

As the engine camshafts are rotated by the primary and secondary timing chains, the ME7.2 control module activates the VANOS solenoids via a PWM (pulse width modulated) ground signal based on a program map. The program is influenced by engine speed, load, and engine temperature.

- **Shown below:** In its inactive or default position, the valves direct 100% engine oil pressure flow to achieve max “retard” VANOS positioning

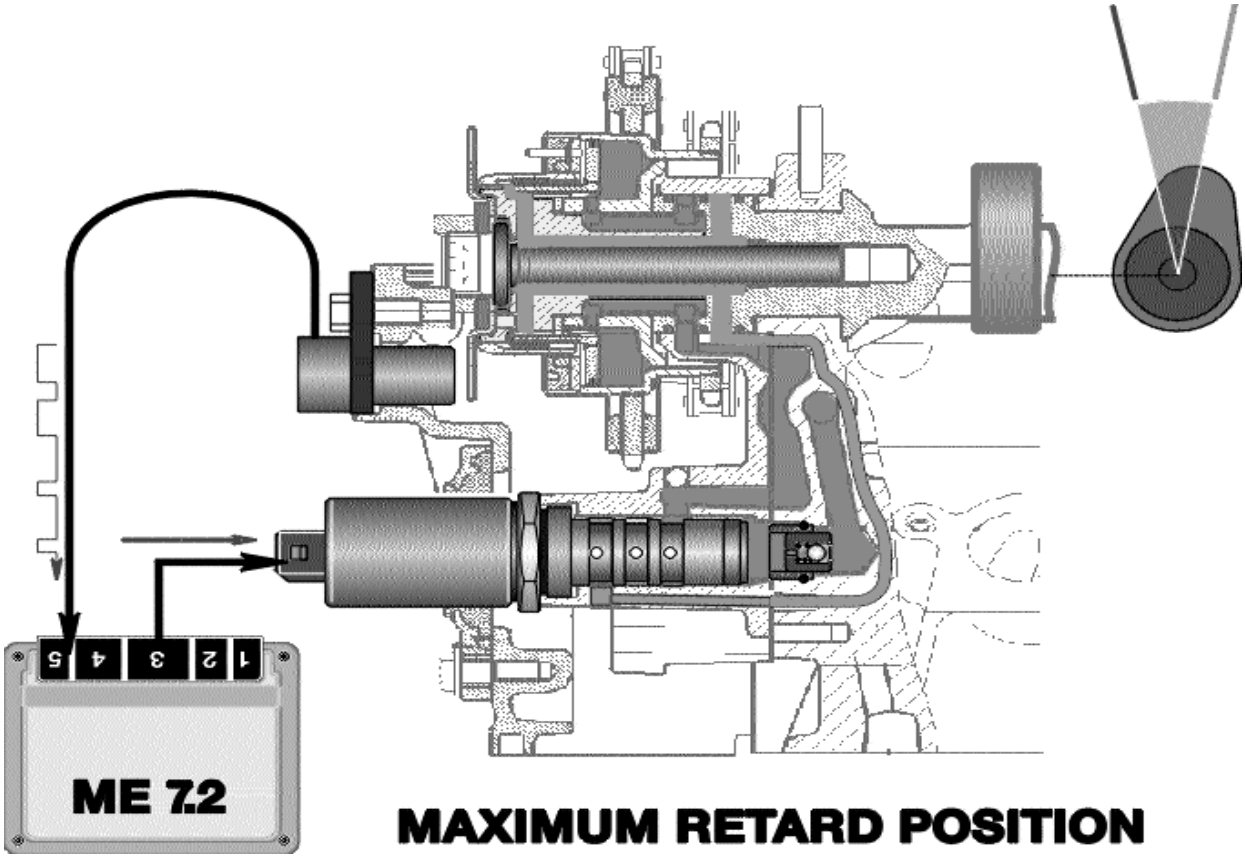

- **Top of next page**: As the Pulse Width Modulation (PWM) increases on the control signal, the valve progressively opens the advance oil port and proportionately closes the retarded oil port.

  Oil pressure pushes the piston toward the advance position. Simultaneously the oil pressure on the retarded side (rear) of the piston is decreased and directed to the vent port in the solenoid valve and drains into the cylinder head.

- **Bottom of next page:** At maximum PWM control, 100% oil flow is directed to the front surface of the piston pushing it rearward to maximum advance.

Varying the pulse width (on time) of the solenoids control signals proportionately regulates the oil pressures on each side of the pistons to achieve the desired VANOS advance angle.

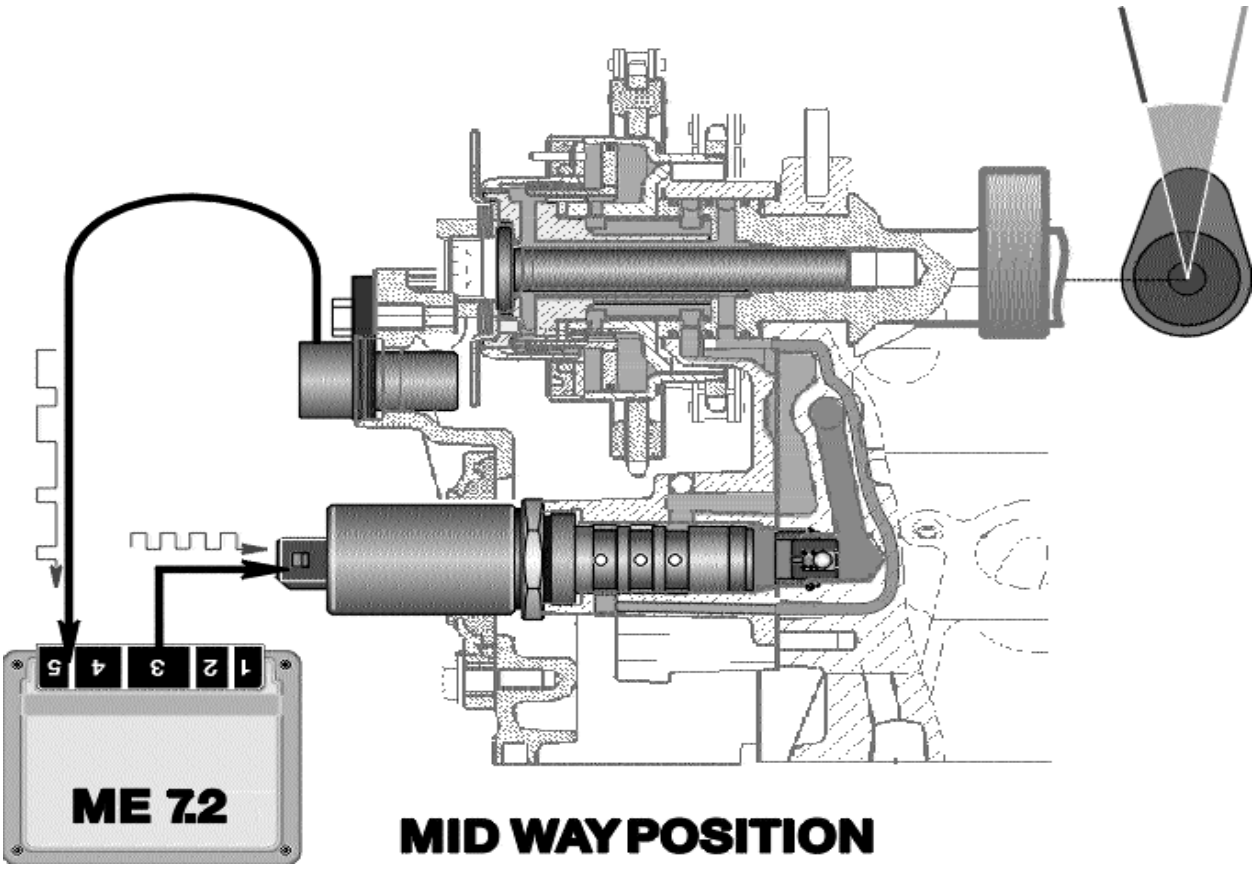

MID WAY POSITION

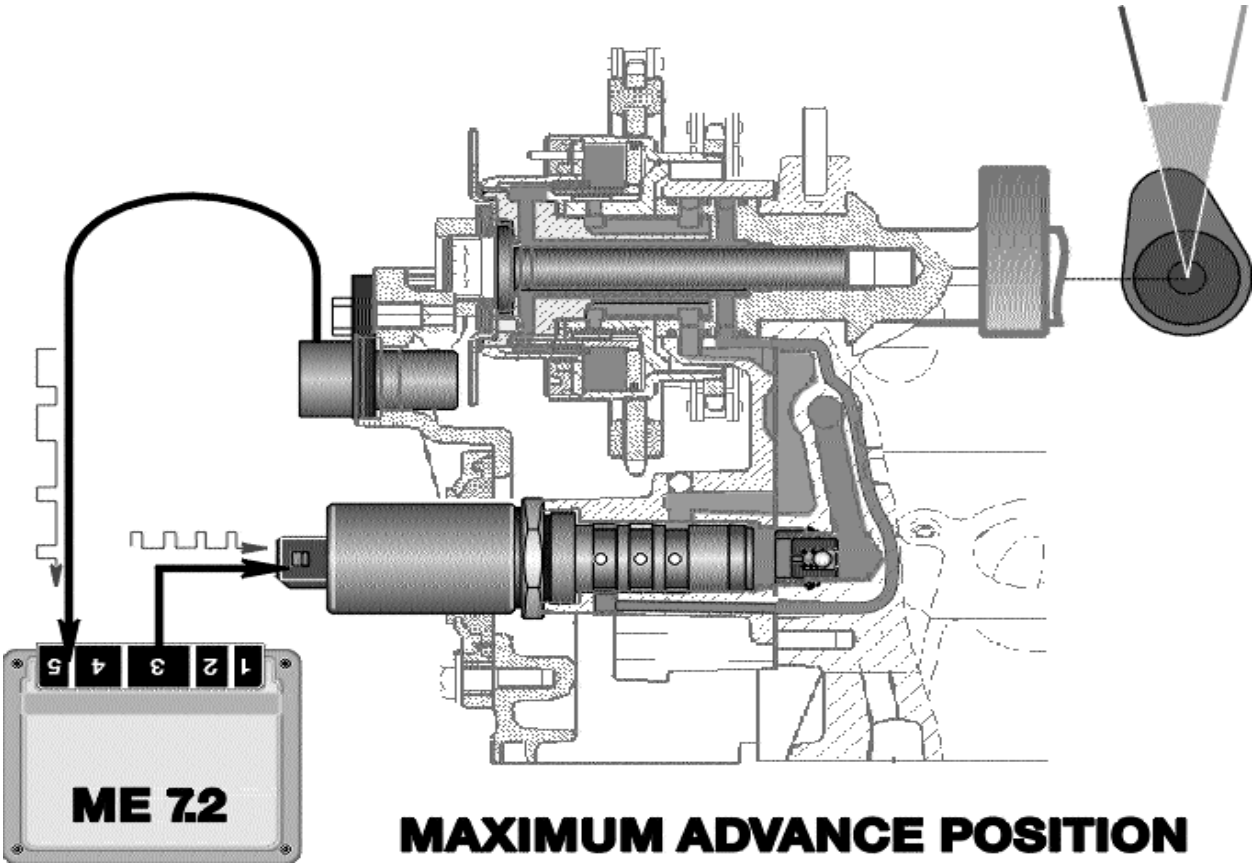

MAXIMUM ADVANCE POSITION

VANOS SERVICE NOTES

VALVE TIMING PROCEDURES

Refer to TIS for complete Valve Timing Procedures. M62 TU valve timing adjustment is similar to the previous non VANOS M62 engine ***with the exception*** of setting the VANOS transmissions to their max retard positions with an ohmmeter and attaching the camshaft gears to each camshaft with single reverse threaded bolts.

- After locking the crankshaft at TDC, the camshaft alignment tools (P/N 90 88 6 112 440) are placed on the square blocks on the rear of the camshafts locking them in place.

- The exhaust camshaft sprockets and VANOS transmission units with timing chains are placed onto their respective camshafts.

- The exhaust camshaft sprockets and VANOS transmissions are secured to the camshafts with their respective single, reverse threaded bolt. Finger tighten only at this point. Install the chain tensioner into the timing chain case and tension the chain.

- Connect an ohmmeter across two of the three pin contacts on the front edge of one of the VANOS transmissions. Twist the inner hub of transmission to the left (counter clockwise). Make sure the ohmmeter indicates closed circuit. This verifies that the transmission in the default max retard position.

- Using an open end wrench on the camshaft to hold it in place, torque the VANOS transmission center bolt to specification.

CAMSHAFT IMPULSE WHEEL POSITION TOOLS

The camshaft impulse wheels require a special tool set to position them correctly prior to torquing the retaining nuts.

The impulse wheels are identical for each cylinder bank. The alignment hole in each wheel must align with the tool's alignment pin. Therefore the tools are different and must be used specifically for their bank.

The tool rests on the upper edge of the cylinder head and is held in place by the timing case bolts.

Refer to the TIS repair manual section for complete information.

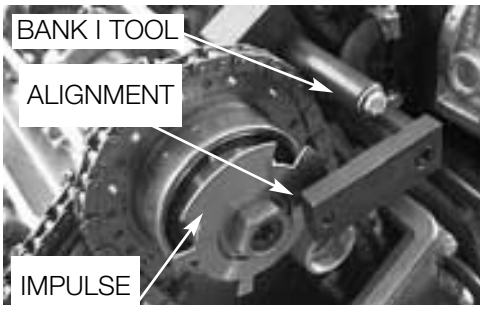

VANOS SOLENOID REPLACEMENT

Refer to TIS repair manual section for complete solenoid replacement procedures.

The solenoids are threaded into the oil distribution flanges through a small opening in the upper timing case covers.

Special Tool 11 6 420 is required.

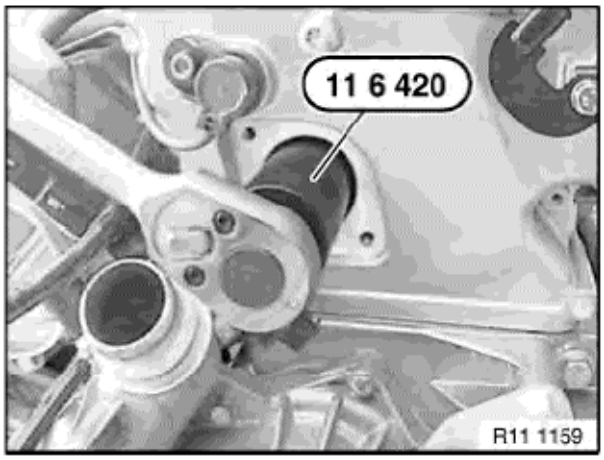

VANOS TRANSMISSION RETARD POSITION SET UP TOOLS

Special Tool 11 6 440 is used to rotate the transmission to the full retard position when checking the piston position with an ohmmeter.

This tool engages the inner hub of the transmission provides an easy method of twisting it to the left for the ohmmeter test.

Refer to SI Bulletin 04 12 98 for additional special tool information.

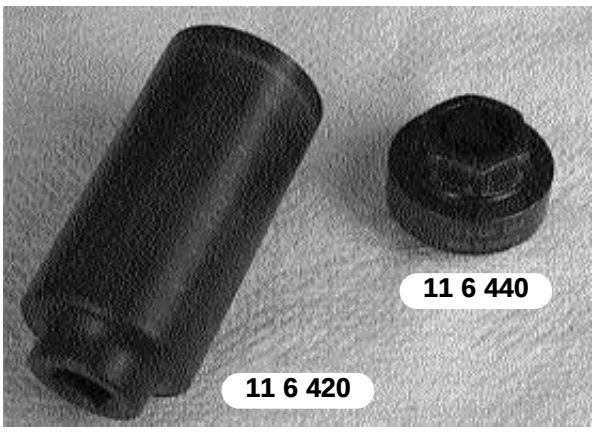

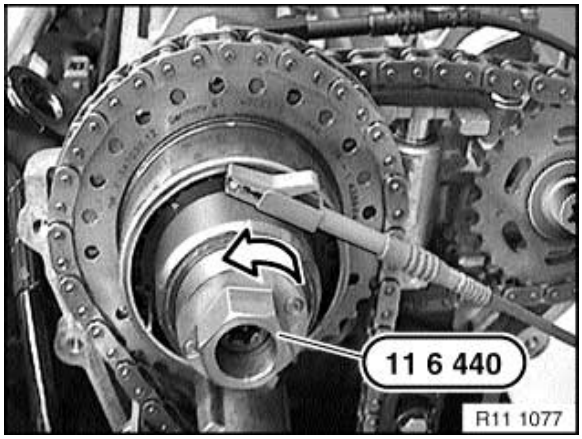

DIAGNOSIS

The VANOS is fully compatible with the diagnostic software providing specific fault codes and test modules. Additionally, diagnostic requests section provides status of the PWM of the VANOS solenoids and camshaft position feedback via the camshaft position sensors. The Service Functions section of the DIS/MoDiC also provides a VANOS system test.

ENGINE COOLING SYSTEM

The cooling system concepts introduced in the 1999 Model year including the automatic transmission heat exchanger and the the water cooled alternator have been retained for the X5.

The component locations have however been changed:

- Thermostat for heat exchanger mounted directly on radiator
- Transmission heat exchanger - right side of radiator.

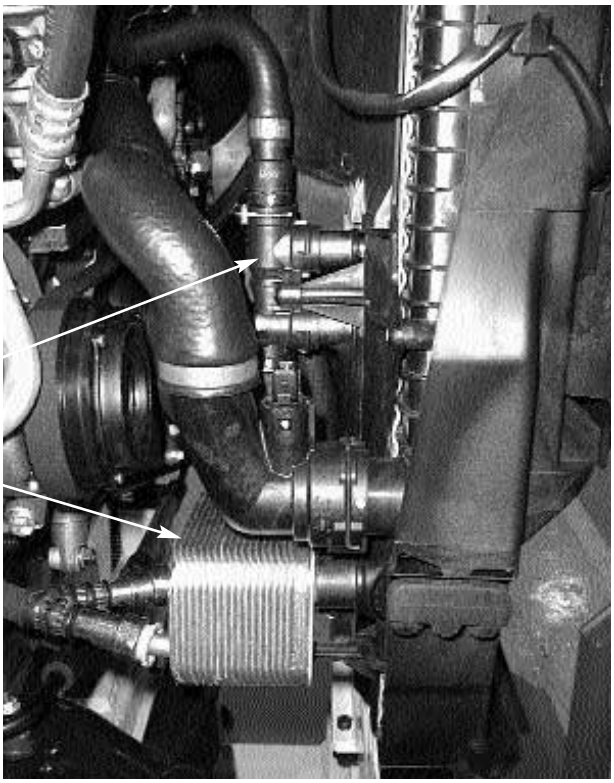

IHKA SYSTEM AUXILIARY PUMP

The auxiliary water pump for the IHKA is mounted on the left side of the radiator. The function of the pump remains the same as follows:

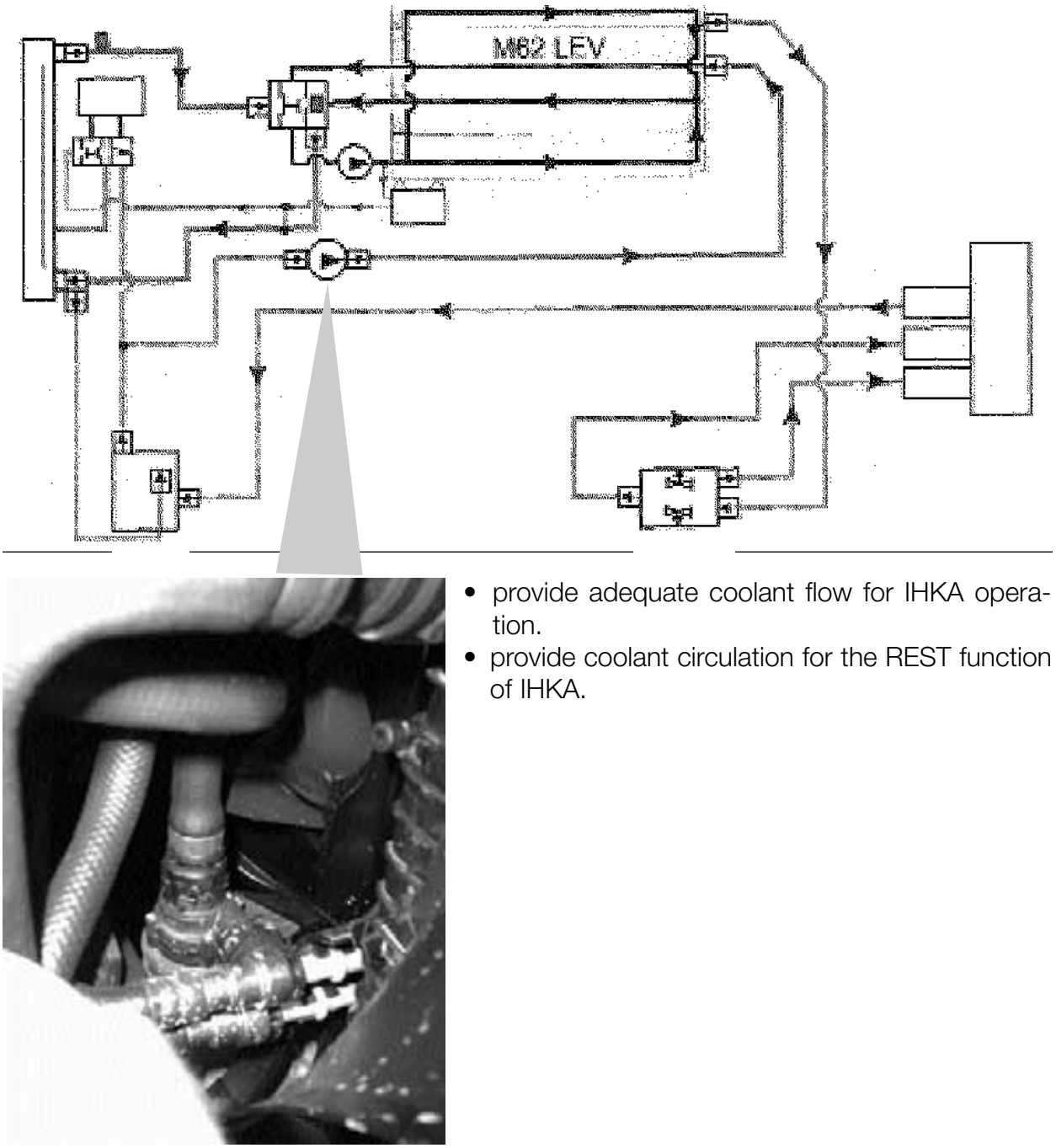

- provide adequate coolant flow for IHKA operation.
- provide coolant circulation for the REST function of IHKA.

DME-ME 7.2 ENGINE MANAGEMENT SYSTEM

The “ME” designation identifies the system as “M” = Motronic, “E” = EML.

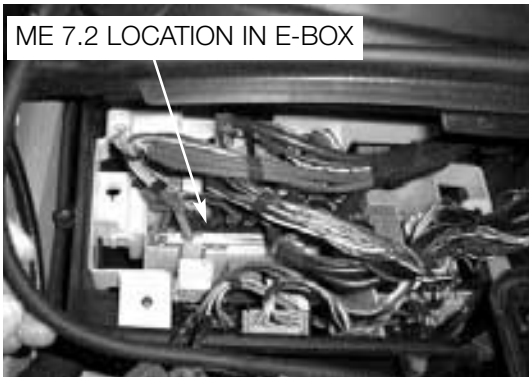

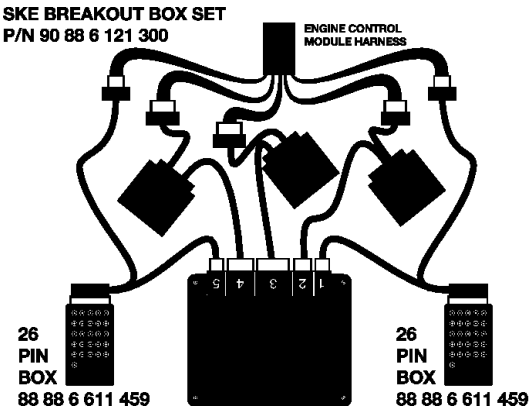

- Manufactured by Bosch to BMW specifications
- 134 pin SKE (standard shell construction) control module located in E box
- Diagnostic communication protocol-KWP2000
- Uses break-out box set (P/N 90 88 6 121 300)
- Integral EML throttle control system
  - monitors an interior installed PWG
  - actuates an electric throttle valve (EDK)
- Integral Cruise control functionality
  - monitors cruise control requests
  - monitors brake pedal and clutch switches
  - carries out throttle control directly via EDK
- Carries out DSC III torque reduction requests.
- VANOS control
- Integrated altitude sensor
- Integrated temp sensor for monitoring E box temperatures
- Control of E-box fan
- One touch engine start control
- Oxygen Sensor heating
- Engine overrev & Max speed limitation
- Active Hall sensor for camshaft position monitoring
- Single speed secondary air injection system
- Electrically heated coolant system thermostat
- Longlife spark plugs
- IHKA Auxiliary Fan control
- ***DM-TL (Diagnostic Module - Tank Leak Diagnosis System)***

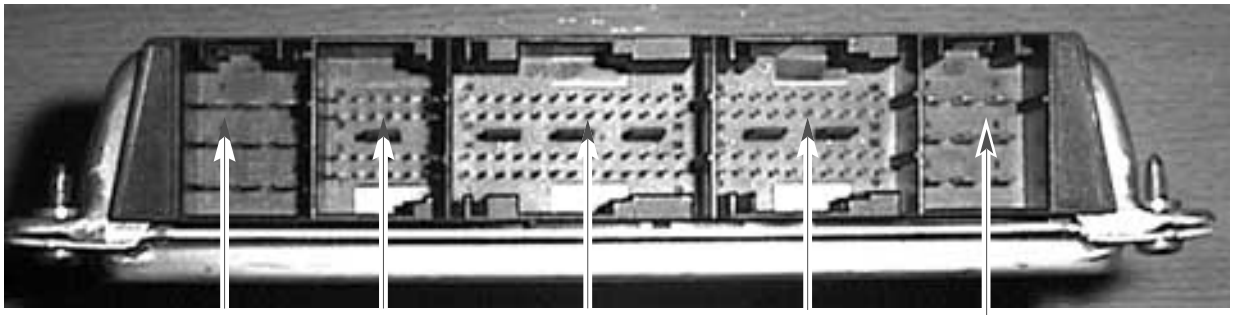

1	2	3	4	5
(9 pins)	(24 pins)	(52 pins)	(40 pins)	(9 pins)

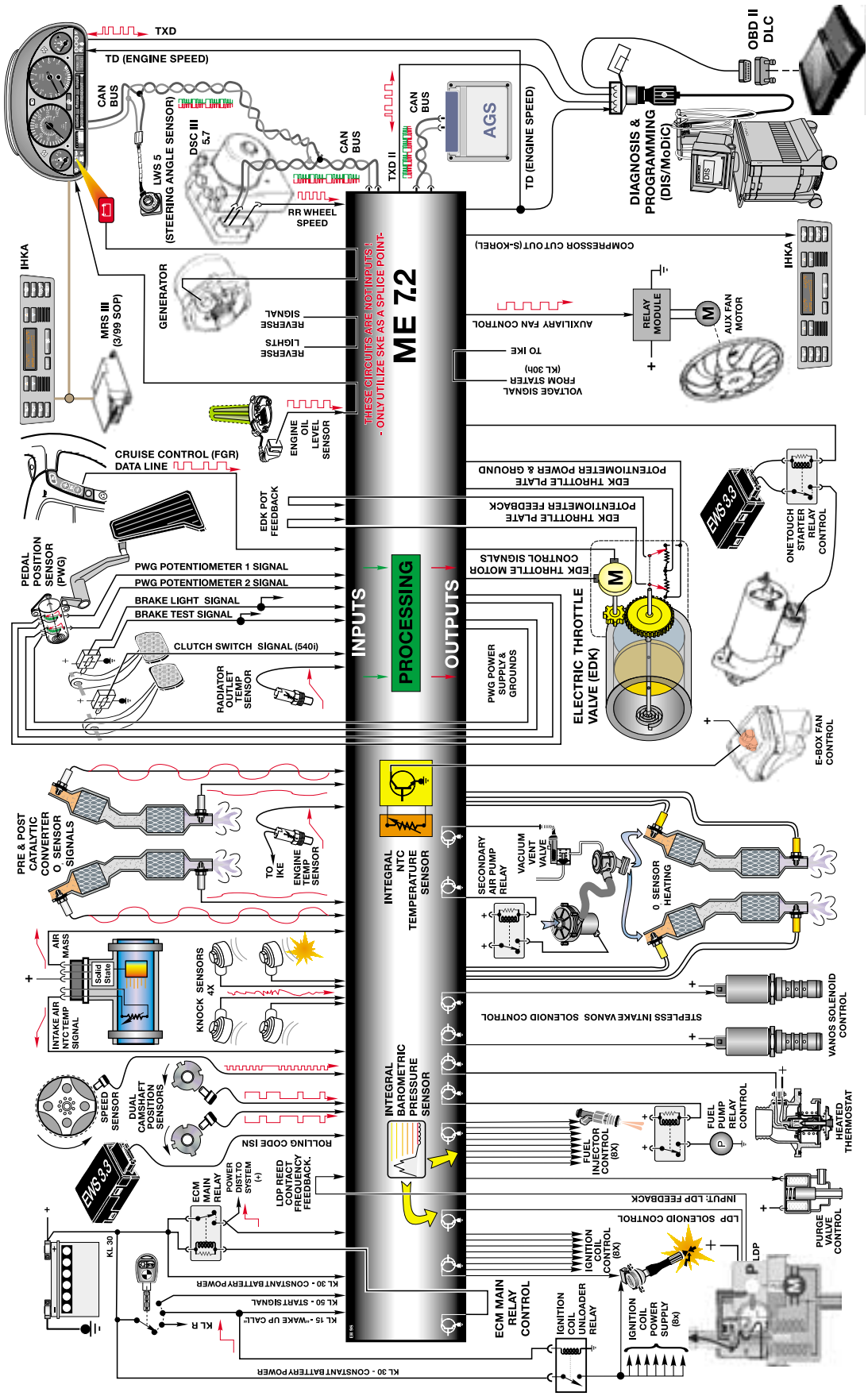
ME 7.2
THESE CIRCUITS ARE NOT INPUTS !
- ONLY UTILIZE SKE AS A SPLICE POINT-
INPUTS
PROCESSING
OUTPUTS
TXD
TD (ENGINE SPEED)
CAN BUS
LWS 5 (STEERING ANGLE SENSOR)
DSC III 5.7
RR WHEEL SPEED
TXD II
AGS
TD (ENGINE SPEED)
DIAGNOSIS & PROGRAMMING (DIS/MoDiC)
OBD II DLC
IHKA
MRS III (3/99 SOP)
GENERATOR
REVERSE SIGNAL
REVERSE LIGHTS
ENGINE OIL LEVEL SENSOR
CRUISE CONTROL (FGR) DATA LINE
EDK POT FEEDBACK
PEDAL POSITION SENSOR (PWG)
PWG POTENTIOMETER 1 SIGNAL
PWG POTENTIOMETER 2 SIGNAL
BRAKE LIGHT SIGNAL
BRAKE TEST SIGNAL
CLUTCH SWITCH SIGNAL (540i)
RADIATOR OUTLET TEMP SENSOR
PWG POWER SUPPLY & GROUNDS
COMPRESSOR CUT OUT (S-KOREL)
AUXILIARY FAN CONTROL
RELAY MODULE
AUX FAN MOTOR
VOLTAGE SIGNAL FROM STATER (KL 30h)
TO IKE
EDK THROTTLE PLATE POTENTIOMETER POWER & GROUND
EDK THROTTLE PLATE POTENTIOMETER FEEDBACK
EDK THROTTLE MOTOR CONTROL SIGNALS
ELECTRIC THROTTLE VALVE (EDK)
EMS 3.3
ONETOUCH STARTER RELAY CONTROL
E-BOX FAN CONTROL
PRE & POST CATALYTIC CONVERTER O SENSOR SIGNALS
TO IKE
ENGINE TEMP SENSOR
INTEGRAL NTC TEMPERATURE SENSOR
SECONDARY AIR PUMP RELAY
VACUUM VENT VALVE
O SENSOR HEATING
AIR MASS
Solid State
INTAKE AIR NTC TEMP SIGNAL
KNOCK SENSORS 4X
STEPLESS INTAKE VANOS SOLENOID CONTROL
VANOS SOLENOID CONTROL
SPEED SENSOR
DUAL CAMSHAFT POSITION SENSORS
INTEGRAL BAROMETRIC PRESSURE SENSOR
ROLLING CODE ISN
FUEL INJECTOR CONTROL (8X)
FUEL PUMP RELAY CONTROL
HEATED THERMOSTAT
EMS 3.3
ECM MAIN RELAY
POWER DIST. TO SYSTEM (+)
LDP REED CONTACT FREQUENCY FEEDBACK.
INPUT: LDP FEEDBACK
LDP SOLENOID CONTROL
PURGE VALVE CONTROL
LDP
IGNITION COIL CONTROL (8X)
KL 30
KL 30 - CONSTANT BATTERY POWER
KL 50 - START SIGNAL
KL 15 - "WAKE UP CALL"
KL R
ECM MAIN RELAY CONTROL
IGNITION COIL UNLOADER RELAY
IGNITION COIL POWER SUPPLY (8X)
KL 30 - CONSTANT BATTERY POWER

INTEGRAL ELECTRIC THROTTLE SYSTEM (EML)

FUNCTIONAL DESCRIPTION

When the accelerator pedal is moved, the PWG provides a change in the monitored signals. The ME 7.2 compares the input signal to a programmed map and appropriately activates the EDK motor via proportionally high/low switching circuits. The control module self-checks it's activation of the EDK motor via the EDK feedback potentiometers.

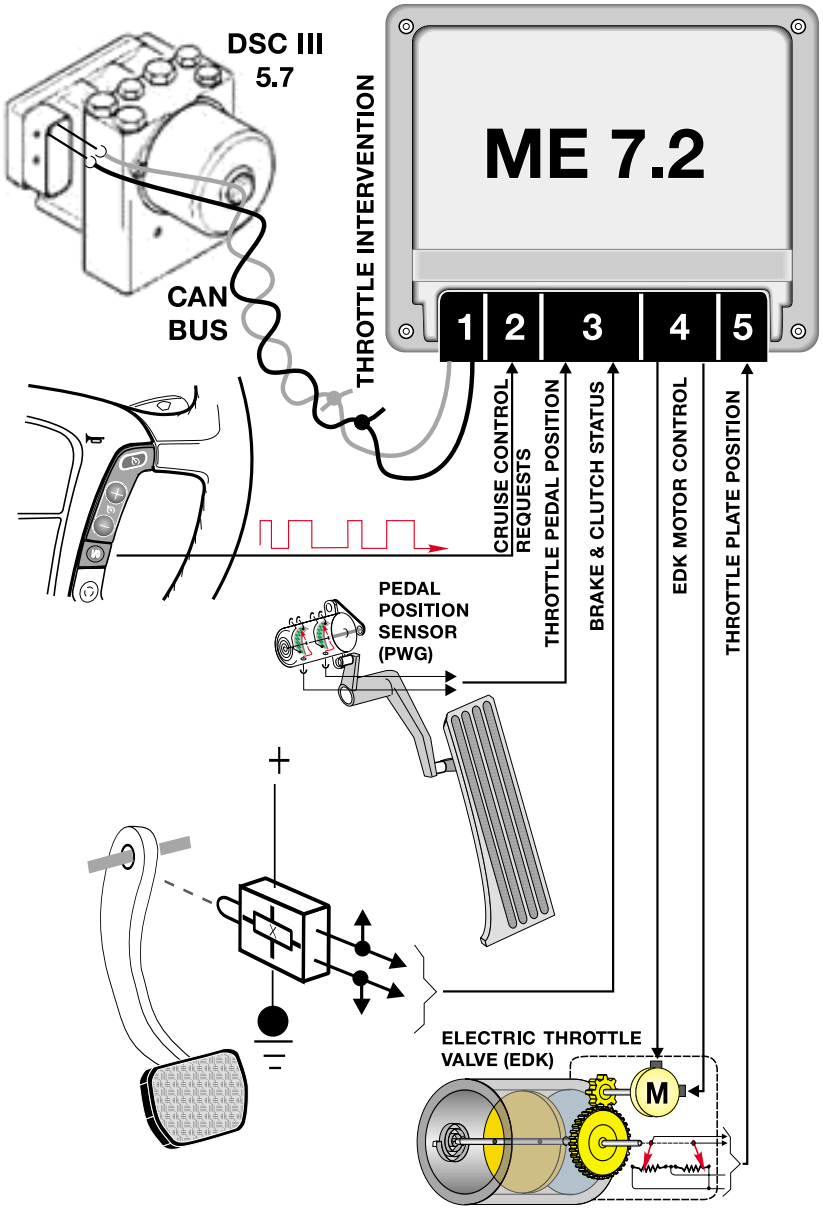

Requirements placed on the Electric Throttle System:

- Regulate the calculated intake air load based on PWG input signals and programmed mapping.
- Control idle air when LL detected with regard to road speed as per previous systems.
- Monitor the driver's input request for cruise control operation.
- Automatically position the EDK for accurate cruise control (FGR) operation.
- Perform all DSC III throttle control interventions.
- Monitor and carryout max engine and road speed cutout.

PWG SIGNAL MONITORING & PWG FAILSAFE OPERATION:

- As a redundant safety feature the PWG provides two separate signals from two integral potentiometers (Pot 1 and Pot 2) representing the driver's request for throttle activation.
- If the monitored PWG potentiometer signals are not plausible, ME 7.2 will only use the lower of the two signals as the driver's pedal request input providing failsafe operation. Throttle response will be slower and maximum throttle position will be reduced.
- When in PWG failsafe operation, ME 7.2 sets the EDK throttle plate and injection time to idle (LL) whenever the brake pedal is depressed.
- When the system is in PWG failsafe operation, the instrument cluster matrix display will post "Engine Emergency Program" and PWG specific fault(s) will be stored in memory.

EDK FEEDBACK SIGNAL MONITORING & EDK FAILSAFE OPERATION:

- The EDK provides two separate signals from two integral potentiometers (Pot 1 and Pot 2) representing the exact position of the throttle plate.
- EDK Pot 1 provides the primary throttle plate position feedback. As a redundant safety feature, Pot 2 is continuously cross checked with Pot 1 for signal plausibility.
- If plausibility errors are detected between Pot 1 and Pot 2, ME 7.2 will calculate the inducted engine air mass (from HFM signal) and only utilize the potentiometer signal that closely matches the detected intake air mass.
  - The ME 7.2 uses the air mass signalling as a "virtual potentiometer" (pot 3) for a comparative source to provide failsafe operation.
  - If ME 7.2 cannot calculate a plausible conclusion from the monitored pots (1 or 2 and virtual 3) the EDK motor is switched off and fuel injection cut out is activated (no failsafe operation possible).
- The EDK is continuously monitored during all phases of engine operation. It is also briefly activated when KL 15 is initially switched on as a "pre-flight check" to verify it's mechanical integrity (no binding, appropriate return spring tension, etc). This is accomplished by monitoring both the motor control amperage and the reaction speed of the EDK feedback potentiometers. If faults are detected the EDK motor is switched off and fuel injection cut off is activated (no failsafe operation possible). The engine does however continue to run extremely rough at idle speed.
- When a replacement EDK is installed, the ME 7.2 adapts to the new component (required amperage draw for motor control, feedback pot tolerance differences, etc). This occurs immediately after the next cycle of KL 15 for approximately 30 seconds. During this period of adaptation, the maximum opening of the throttle plate is 25%.

INPUT SIGNALS/COMPONENTS

CAMSHAFT POSITION SENSORS

Located on the upper timing case covers, the camshaft position sensors monitor the position of the camshafts to establish start of ignition firing order, set up sequential fuel injection triggering and for accurate camshaft advance-retard (VANOS) timing feedback.

Each intake camshaft's advance-retard angles are adjusted simultaneously yet independently. For this reason ME 7.2 requires a camshaft position sensor on each cylinder bank for accurate feedback to monitor the VANOS controlled camshaft positioning.

The sensors are provided with operating power from the ECM main relay. The sensors produce a unique asymmetrical square-wave signal representative of the impulse wheel shape. The sensors are new in the fact that they are "active" hall effect sensors. Active hall sensors provide:

- low signal when a tooth of the camshaft impulse wheel is located in front of the sensor
- high signal when an air gap is present.

The active hall sensors supply a signal representative of camshaft position even before the engine is running. The ME 7.2 determines an approximate location of the camshafts positions prior to engine start up optimizing cold start injection (reduced emissions.)

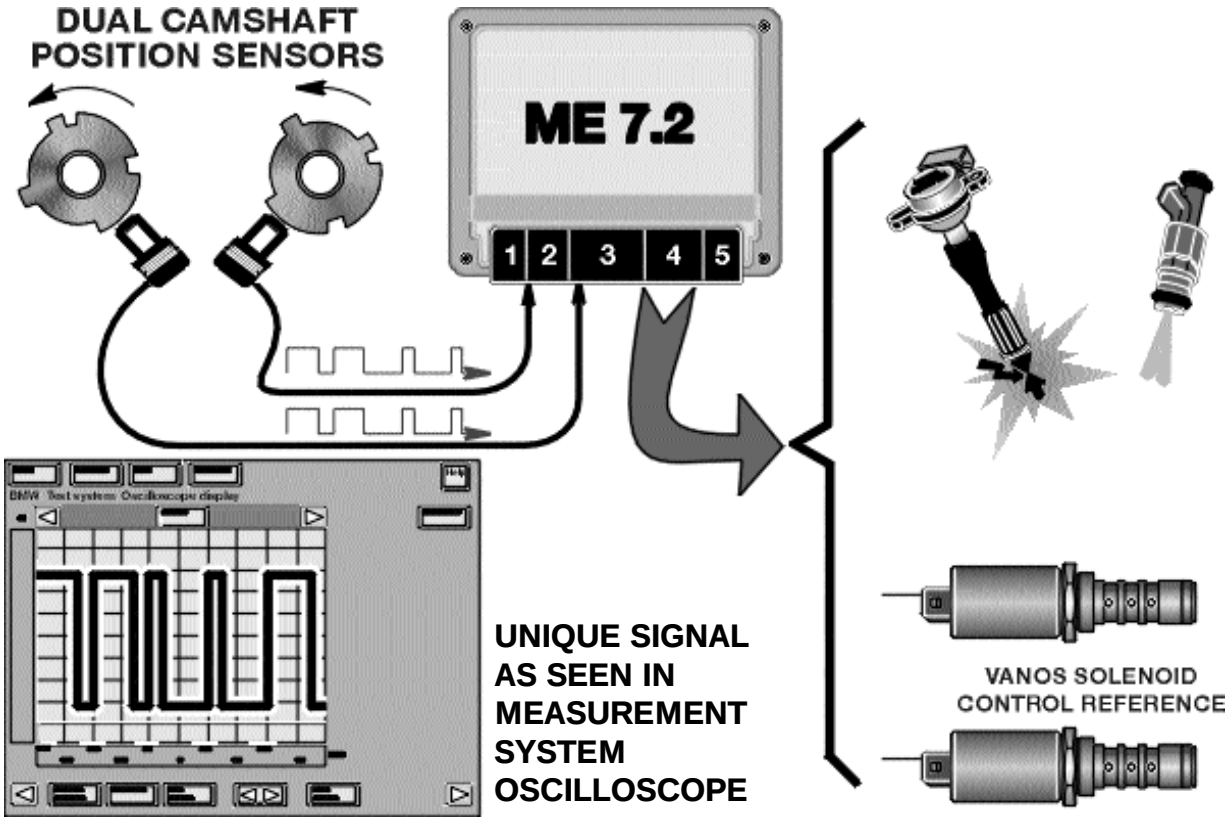

HOT FILM AIR MASS SENSOR (HFM 5)

The M62 TU is equipped with a new Hot Film Air Mass Sensor identified as HFM 5. It is a combined air mass/intake air temperature sensor. The separate intake air temperature sensor is no longer used on the M62 TU.

The HFM 5 is provided with operating power from the ECM main relay. Based on calculated intake air mass, the HFM 5 generates a varying voltage between 0.5 and 4.5 volts as an input signal to the ME 7.2

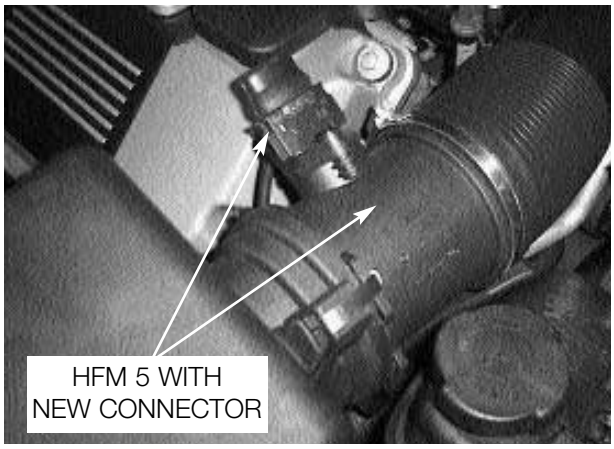

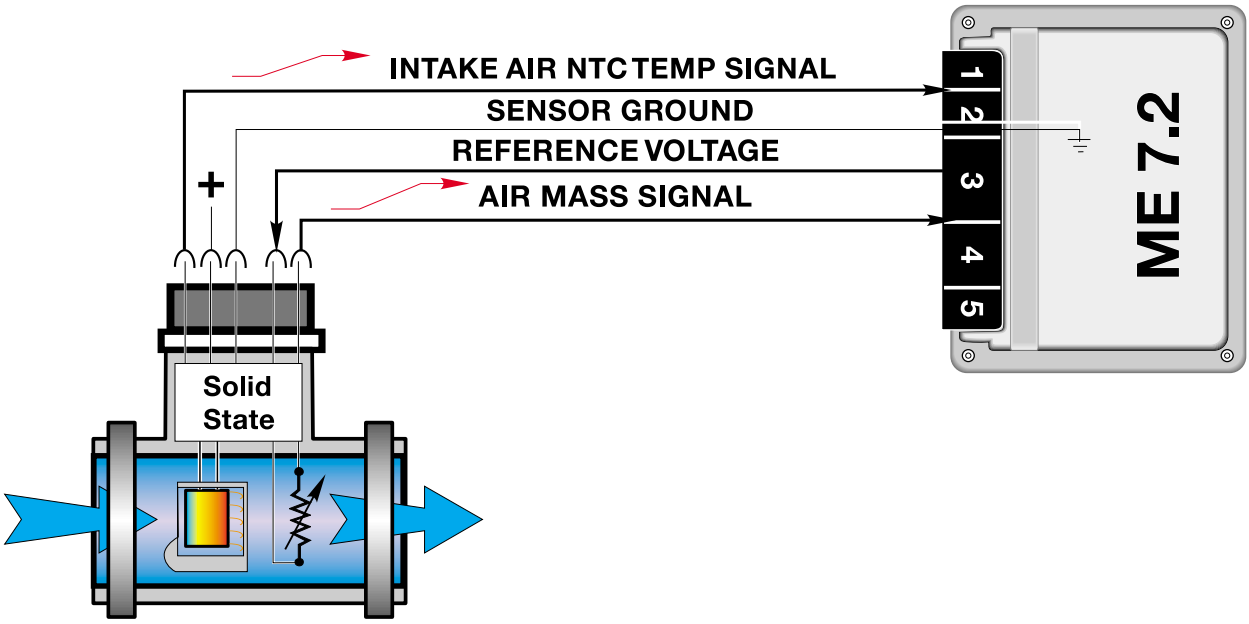

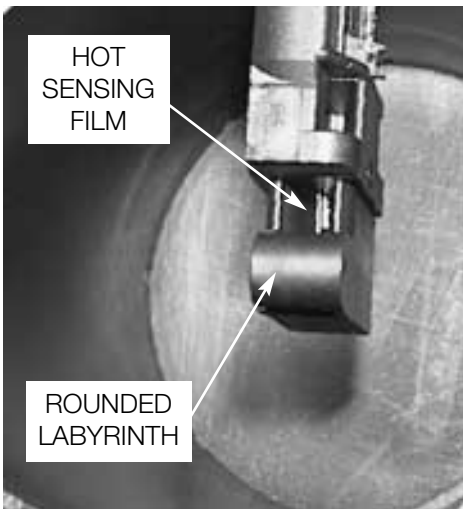

An additional improvement of the HFM 5 is that the hot film element is not openly suspended in the center bore of the sensor as with previous HFMs. It is shrouded by a round fronted plastic labyrinth which isolates it from intake air charge pulsations.

This feature allows the HFM to monitor and calculate the intake air volume with more accuracy. This feature adds further correction for calculating fuel injection “on” time (ti) which reduces emissions further.

INTEGRATED AMBIENT BAROMETRIC PRESSURE SENSOR

The ME 7.2 Control Module contains an integral ambient barometric pressure sensor. The sensor is part of the SKE and is not serviceable. The internal sensor is supplied with 5 volts. In return it provides a linear voltage of approx. 2.4 to 4.5 volts representative of barometric pressure (altitude).

The ME 7.2 monitors barometric pressure for the following reasons:

- The barometric pressure signal along with calculated air mass provides an additional correction factor to further refine injection “on” time.

- Provides a base value to calculate the air mass being injected into the exhaust system by the secondary air injection system. This correction factor alters the secondary air injection “on” time, optimizing the necessary air flow into the exhaust system.

- Recognition of altitude above the accepted criteria postponing DM-TL activation for evaporative emission leak diagnosis.

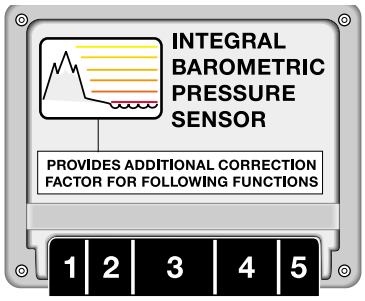

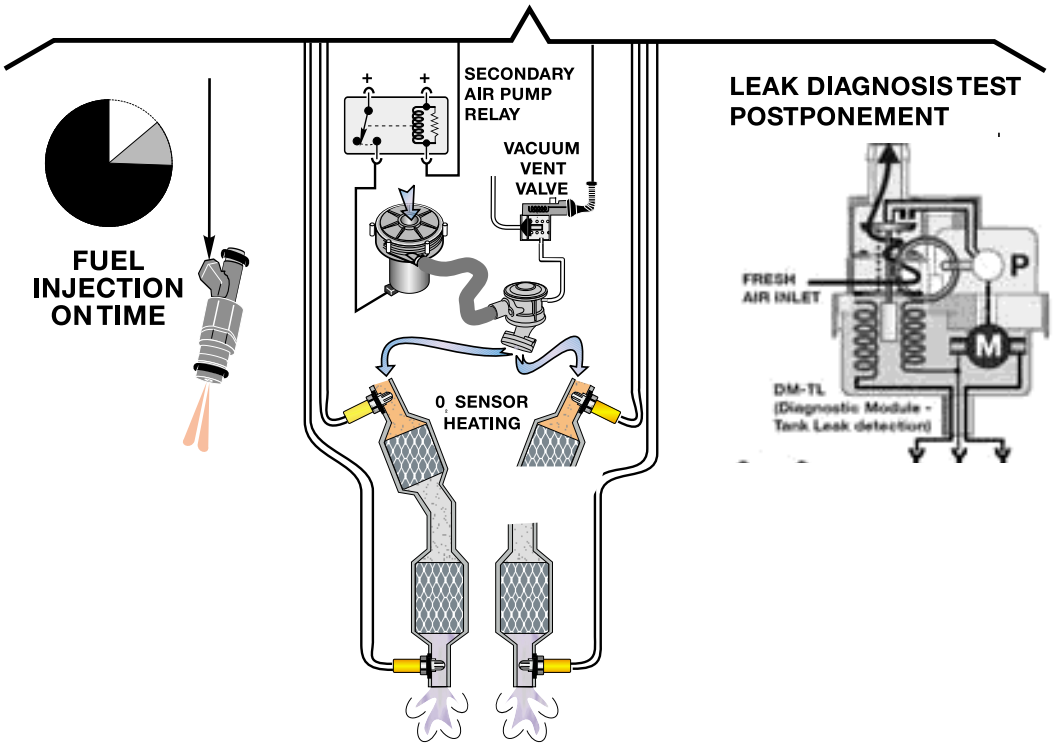

RADIATOR OUTLET TEMP SENSOR

First seen on the MS 42.0 control system, the ME 7.2 uses an additional water temperature sensor located on the radiator outlet.

ME 7.2 requires this signal to monitor the water temperature leaving the radiator for precise activation of the IHKA auxiliary fan.

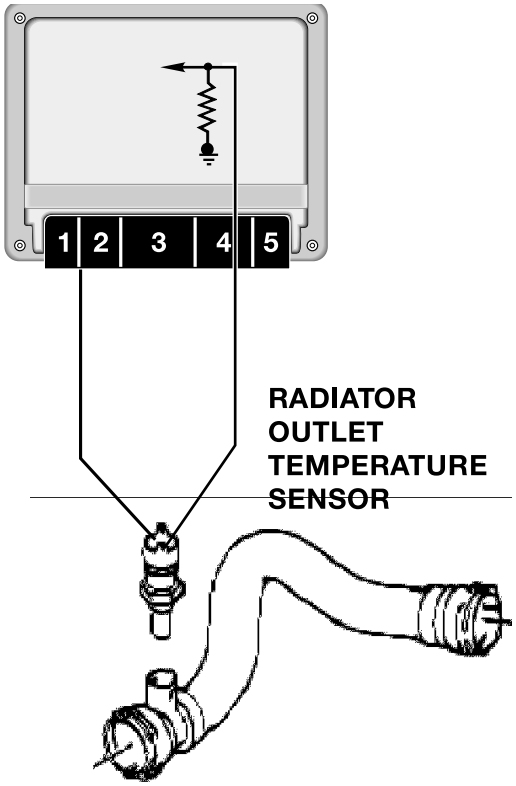

DSC III - ROAD SPEED SIGNAL

ME 7.2 receives the road speed signal directly from the DSC III control module for maximum vehicle speed management. The DSC control module provides a processed output of the right rear wheel speed sensor as a digital square wave signal. The frequency of the signal is proportional to the speed of the vehicle (48 pulses per one revolution of the wheel).

The cruise control function (FGR) of the ME 7.2 also monitors vehicle speed from the redundant vehicle speed CAN bus signal. The CAN bus speed signal is provided by the DSC III control module and based on the combined average of both front wheel speed signals.

Additionally, ME 7.2 monitors all four wheel speed signals via CAN bus signalling to detect abrupt fluctuations in vehicle speed signals for the purpose of detecting rough road surfaces. This is continuously monitored as part of the OBD II emission requirements providing a correction factor for misfire detection plausibility. Earlier systems only monitored the right rear speed signal input from DSC.

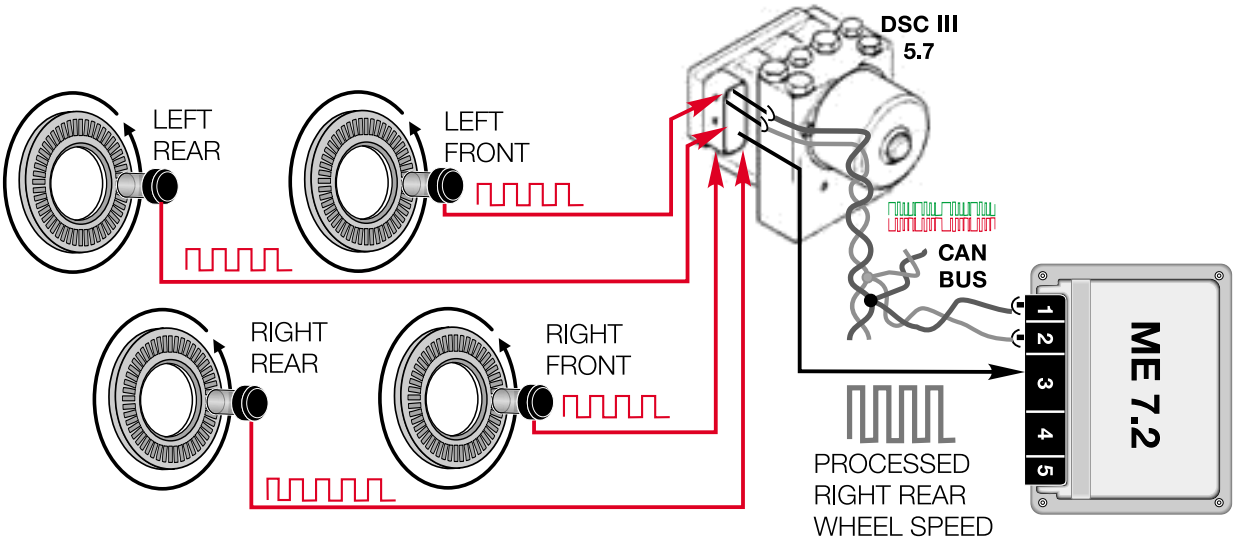

ACCELERATOR PEDAL SENSOR (PWG)

The driver's application of the accelerator pedal is monitored by a PWG sensor in the driver's footwell as with previous non-bowden cable EML systems.

The PWG provides two separate variable voltage signals to the ME 7.2 control module for determining the request for operating the Electric Throttle Valve (EDK) as well as providing a kickdown request with automatic transmission vehicles.

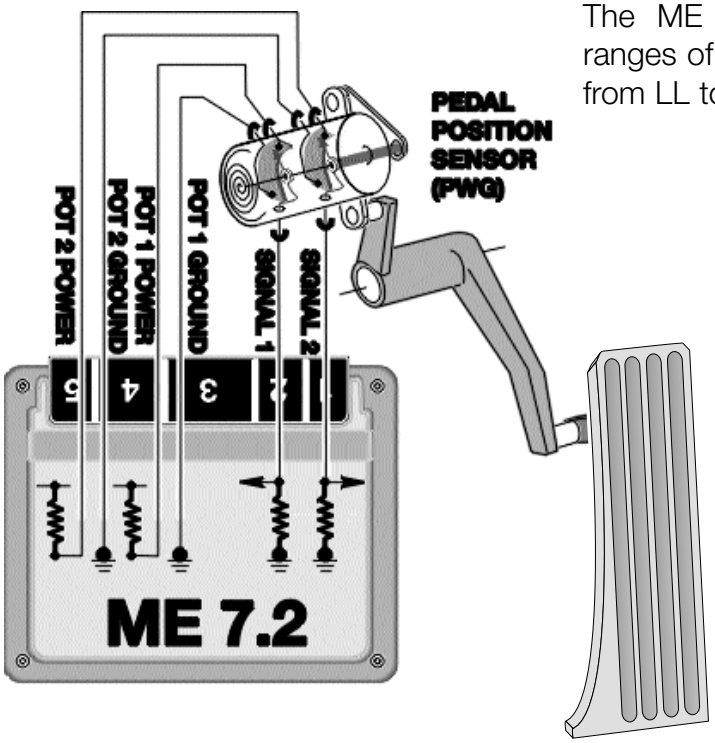

The ME 7.2 monitors the changing signal ranges of both circuits as the pedal is pressed from LL to VL.

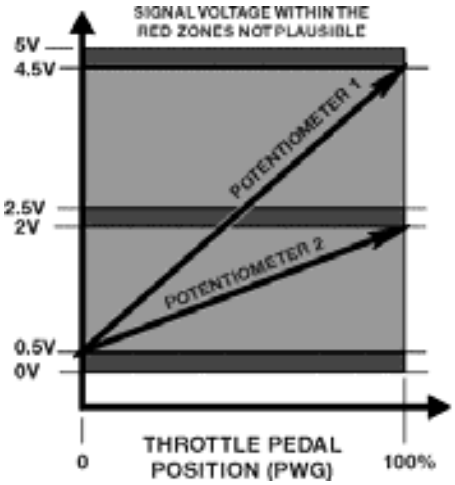

- In vehicles equipped with an automatic transmission (A5S 440Z), the ME 7.2 recognizes the max pedal value (4.5V) as a kickdown request and signals the AGS via CAN bus.

PWG SIGNAL MONITORING & PWG FAILSAFE OPERATION:

- If the monitored PWG potentiometer signals are not plausible, ME 7.2 will only use the lower of the two signals as the driver's pedal request input providing failsafe operation. Throttle response will be slower and maximum throttle position will be reduced.
- When in PWG failsafe operation, ME 7.2 sets the EDK throttle plate and injection time to idle (LL) whenever the brake pedal is depressed.
- When the system is in PWG failsafe operation, the instrument cluster matrix display will post "Engine Emergency Program" and PWG specific fault(s) will be stored in memory.

EDK THROTTLE POSITION FEEDBACK SIGNALS

The EDK throttle plate position is monitored by two integrated potentiometers. The potentiometers provide DC voltage feedback signals as input to the ME 7.2 for throttle and idle control functions.

Potentiometer signal 1 is the primary signal, Potentiometer signal 2 is used as a plausibility cross-check through the total range of throttle plate movement.

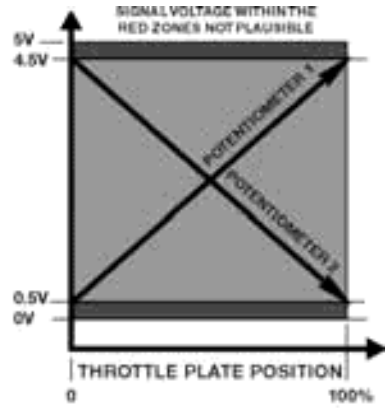

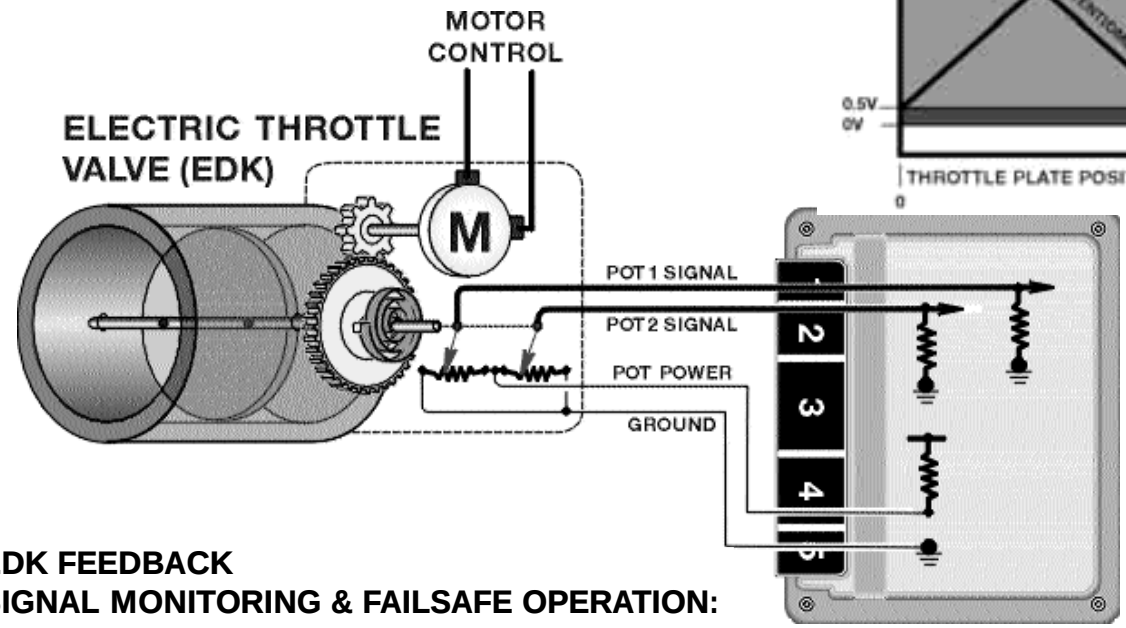

EDK FEEDBACK SIGNAL MONITORING & FAILSAFE OPERATION:

- If plausibility errors are detected between Pot 1 and Pot 2, ME 7.2 will calculate the inducted engine air mass (from HFM signal) and only utilize the potentiometer signal that closely matches the detected intake air mass.
  - The ME 7.2 uses the air mass signalling as a “virtual potentiometer” (pot 3) for a comparative source to provide failsafe operation.
  - If ME 7.2 cannot calculate a plausible conclusion from the monitored pots (1 or 2 and virtual 3) the EDK motor is switched off and fuel injection cut out is activated (no failsafe operation possible).
- The EDK is continuously monitored during all phases of engine operation. It is also briefly activated when KL 15 is initially switched on as a “pre-flight check” to verify it’s mechanical integrity (no binding, appropriate return spring tension) by monitoring the motor control amperage and the reaction speed of the EDK feedback potentiometers.

  If faults are detected the EDK motor is switched off and fuel injection cut off is activated (no failsafe operation possible). The engine does however continue to run extremely rough at idle speed.

MFL CRUISE CONTROL DATA SIGNAL

The ME 7.2 control module provides the FGR cruise control function. Throttle activation is provided by ME 7.2 automatic control of the EDK and monitoring of the throttle plate position feedback potentiometer signals.

All of the familiar driver requested cruise control function requests are provided to the ME 7.2 control module via the MFL control module on a single FGR data signal wire.

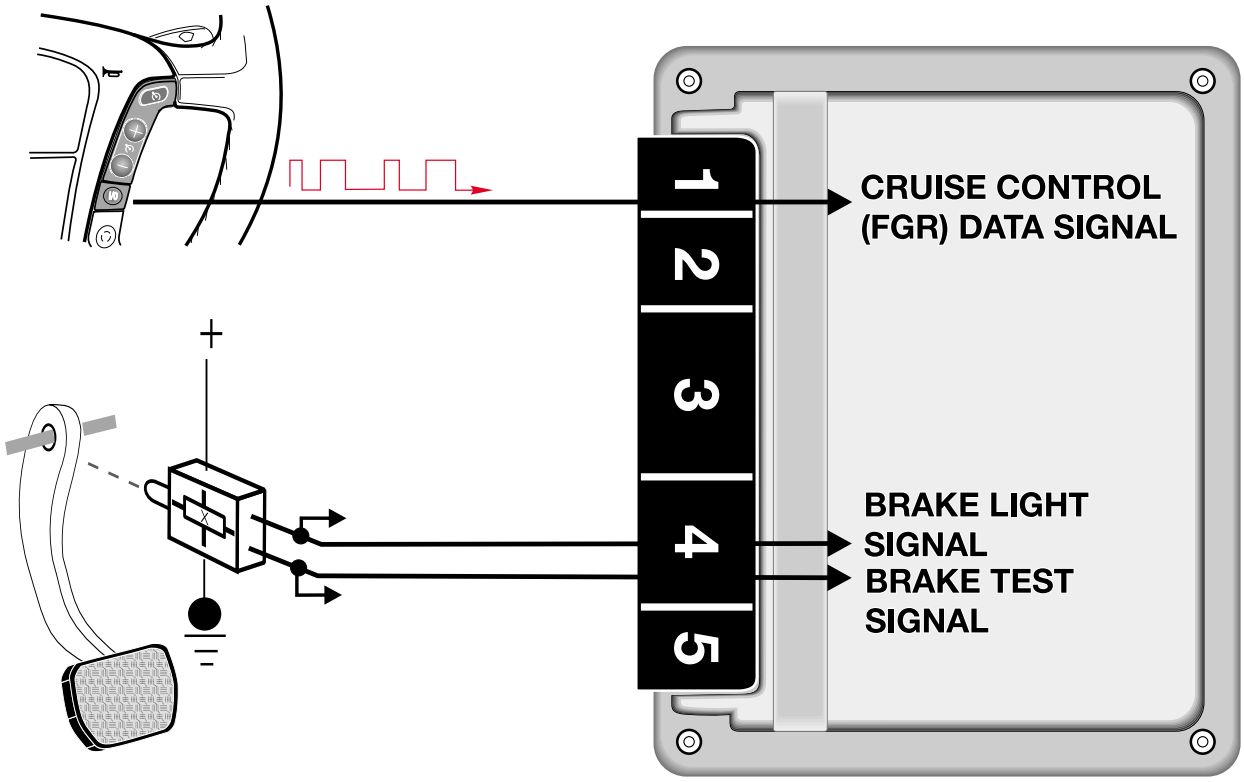

BRAKE LIGHT SWITCH

The Electronic Brake Switch (Hall effect) provides brake pedal position status to the ME 7.2. The control module monitors both the brake light and a separate brake light test switch circuits for plausibility.

When the brake pedal is pressed the brake light segment of the switch provides a ground signal. Simultaneously, the brake light test switch (located in the same housing) provides a high signal.

CAN BUS

- The CAN bus consists entirely of a twisted pair wire set. This configuration eliminates the need for a ground shield.
- The Engine Control Module has two CAN bus communication ports, one dedicated to AGS and the other for the balance of the vehicle's CAN bus control modules.
- This configuration improves the reliability of CAN bus signalling. If an open occurs in one area, the other control systems can still communicate on either side of the open.
- However, signals not reaching their intended recipients will cause CAN bus faults to be stored in the affected systems.

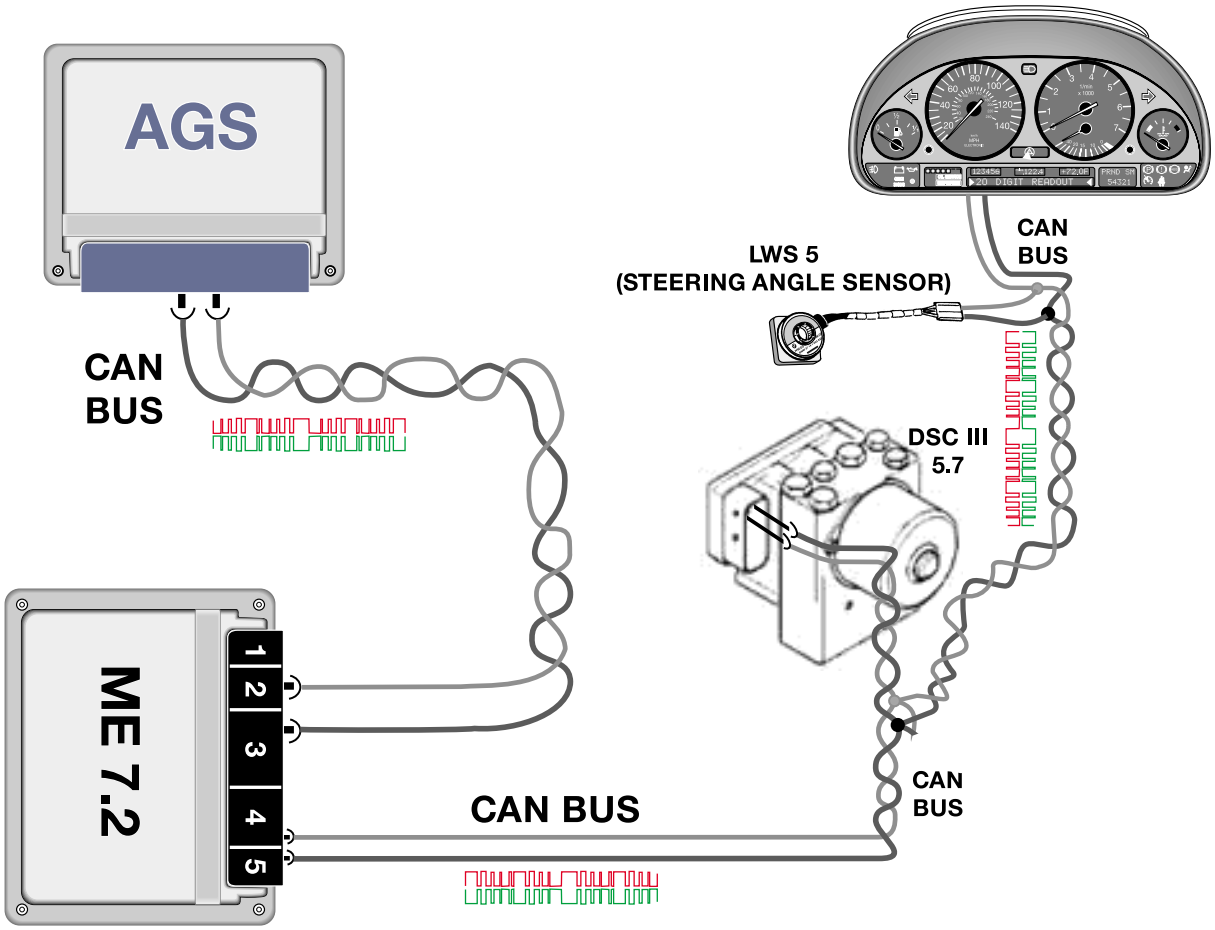

OUTPUT CONTROL FUNCTIONS

FUEL PUMP RELAY CONTROL

ME 7.2 controls the fuel pump relay as with previous systems with regard to engine speed input for continual activation of the relay.

The ME 7.2 will switch off the fuel pump relay when an airbag is activated as an additional safety function. The signal is passed from the MRS III control module to the ME 7.2 over the CAN line

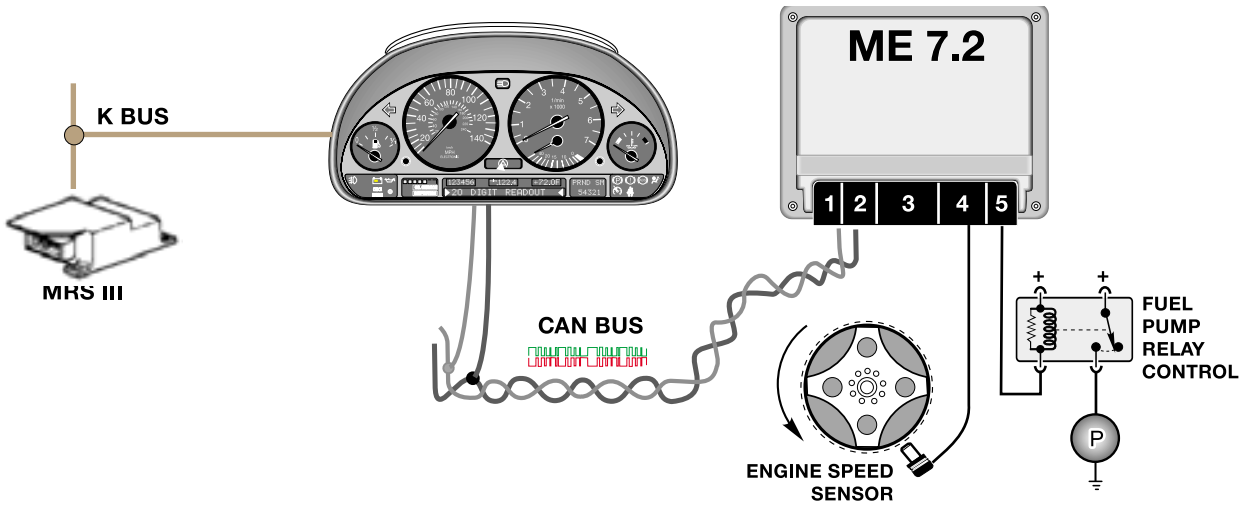

E BOX FAN CONTROL

The E Box fan is controlled by ME 7.2. The control module contains an integral NTC temperature sensor for the purpose of monitoring the E box temperature and activating the fan.

When the temperature in the E-Box exceeds predetermined values, ME 7.2 provides a switched ground for the E Box fan to cool the E box located control modules.

With every engine start-up, ME 7.2 briefly activates the fan ensuring continued fan motor operation for the service life of the vehicle. This feature is intended to prevent fan motor “lock up” from lack of use due to pitting or corrosion over time.

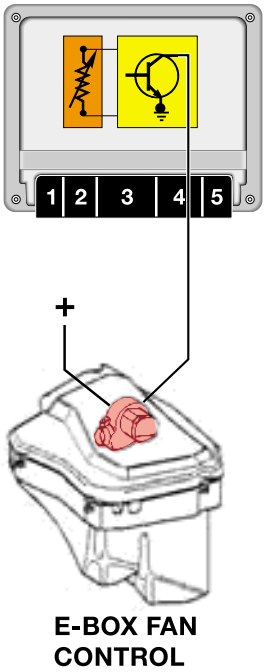

SECONDARY AIR INJECTION

Secondary air injections required to pre-heat the catalytic converters for OBD II compliance. The system consists of the same components as previous systems with V8 specific locations.

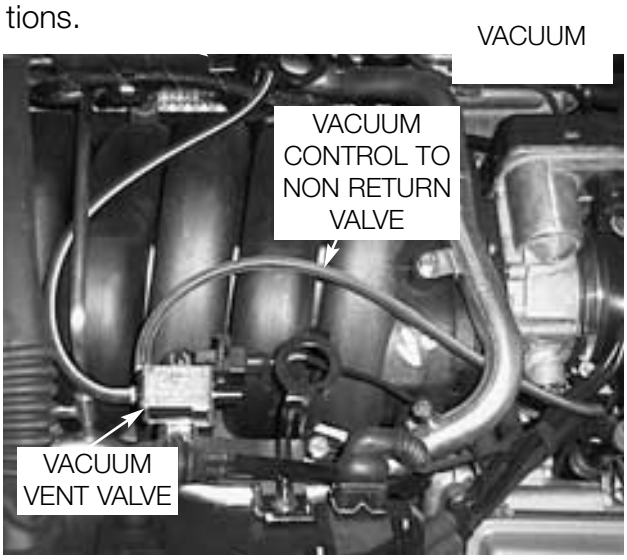

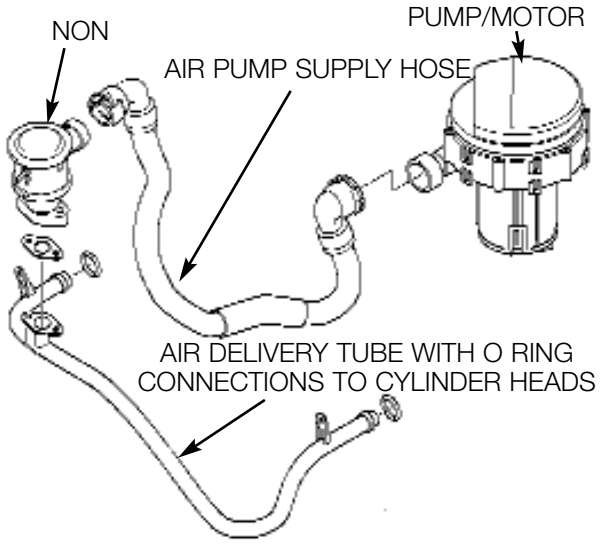

The DME ME7.2 control unit controls the vacuum vent valve and the secondary air injection pump relay separately but simultaneously.

The secondary air pump operates at a start temperature of between 10°C and 40°C. It continues to operate for a max. of 2 minutes at idle speed.

ME 7.2 contributes an additional correction factor for secondary air “on” time with the additional input from the integral ambient barometric pressure sensor.

This sensor provides a base value to calculate the air mass being injected into the exhaust system. This helps to “fine tune” the secondary air injection “on” time, optimizing the necessary air flow into the exhaust system which reduces the time to catalytic converter light-off.

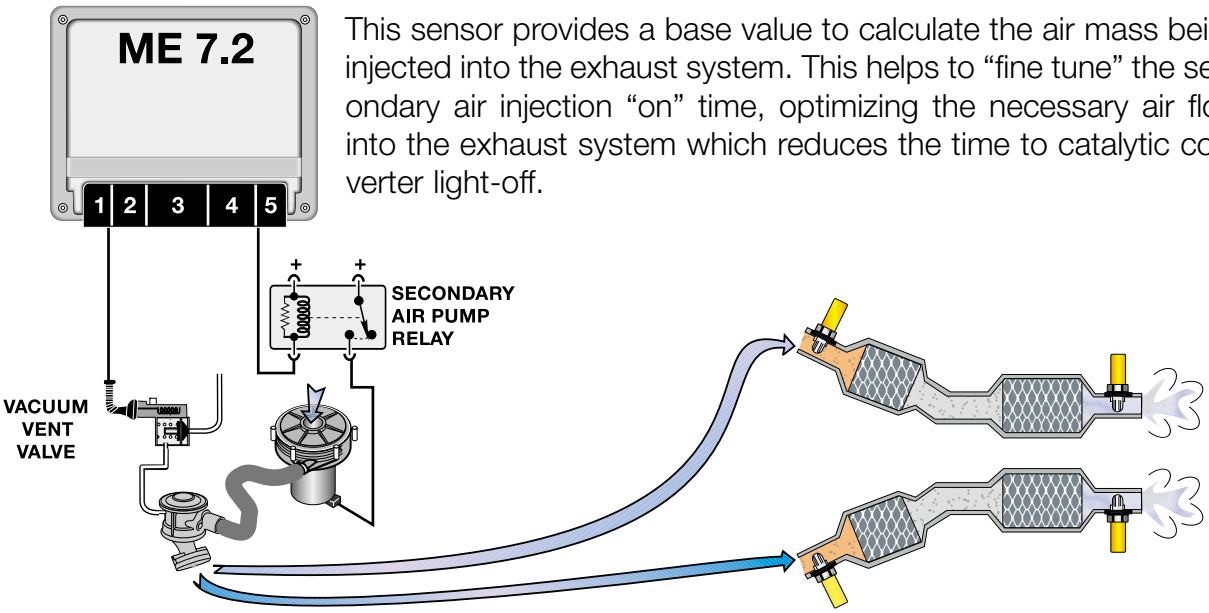

AUXILIARY FAN CONTROL

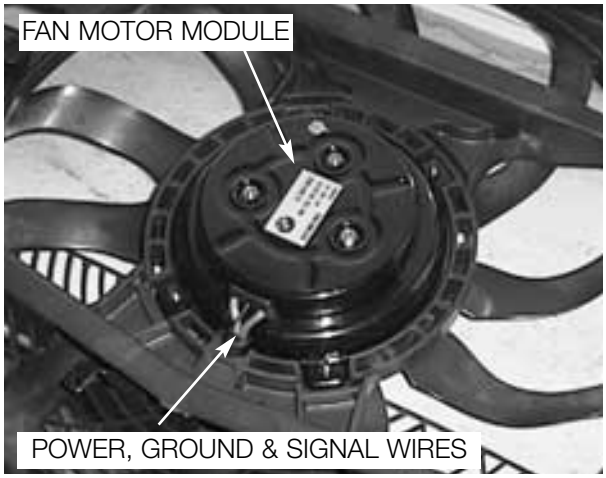

The Auxiliary Fan motor incorporates an output final stage that activates the fan motor at variable speeds.

The auxiliary fan is controlled by ME 7.2. The motor output stage receives power and ground and activates the motor based on a PWM signal (10 - 100 Hz) received from the ME 7.2.

Similar to the aux fan in the E46 with MS 42.0 control, the fan is activated based on the following factors:

- Radiator outlet temperature sensor input exceeds a preset temperature.
- IHKA signalling via the K and CAN bus based on calculated refrigerant pressures.
- Vehicle speed
- Battery voltage level

When the over temperature light in the instrument cluster is on (120°C) the fan is run in the overrun function. This signal is provided to the DME via the CAN bus. When this occurs the fan is run at a frequency of 10 Hz.

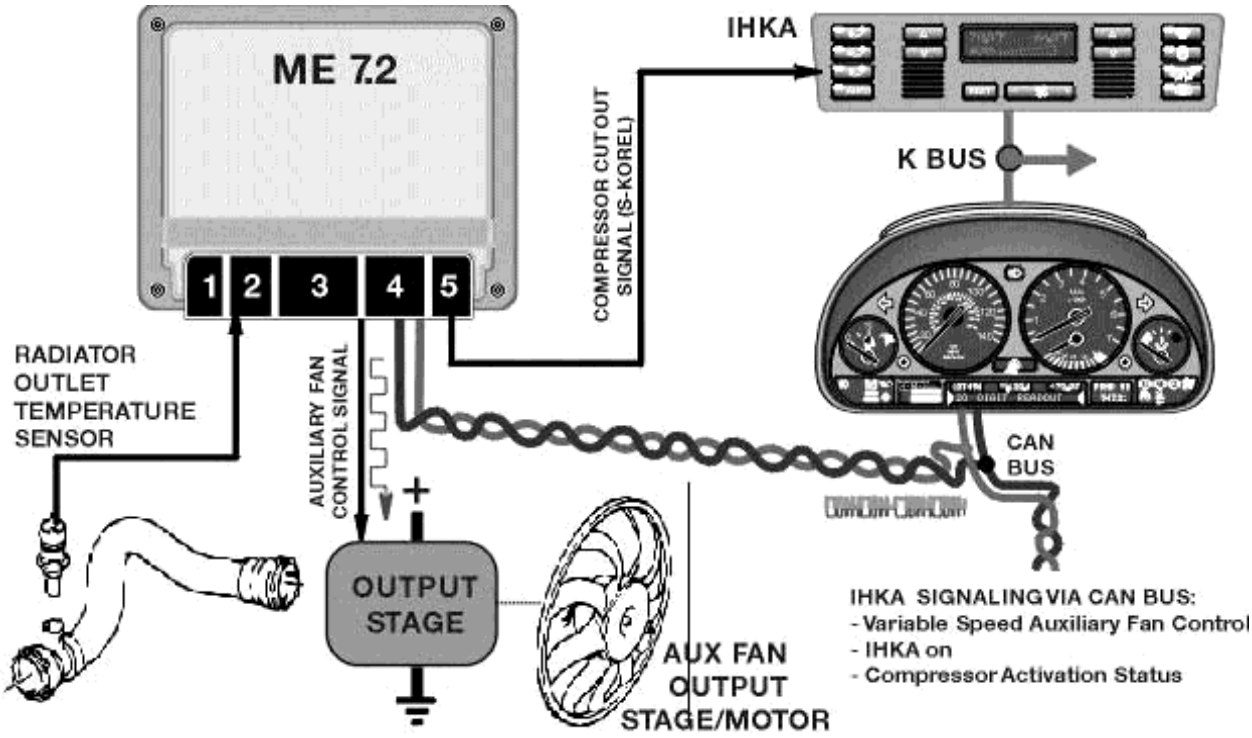

ELECTRIC THROTTLE VALVE (EDK) CONTROL

- The throttle valve assembly of the M62 TU is an electric throttle valve (EDK) controlled by an integral EML function of the ME 7.2.
- The throttle plate is positioned by a gear reduction DC motor drive.
- The motor is controlled by proportionately switched high/low PWM signals at a basic frequency of 2000 Hz.
- Engine idle speed control is a function of the EDK. Therefore, the M62 TU does not require a separate idle control valve.

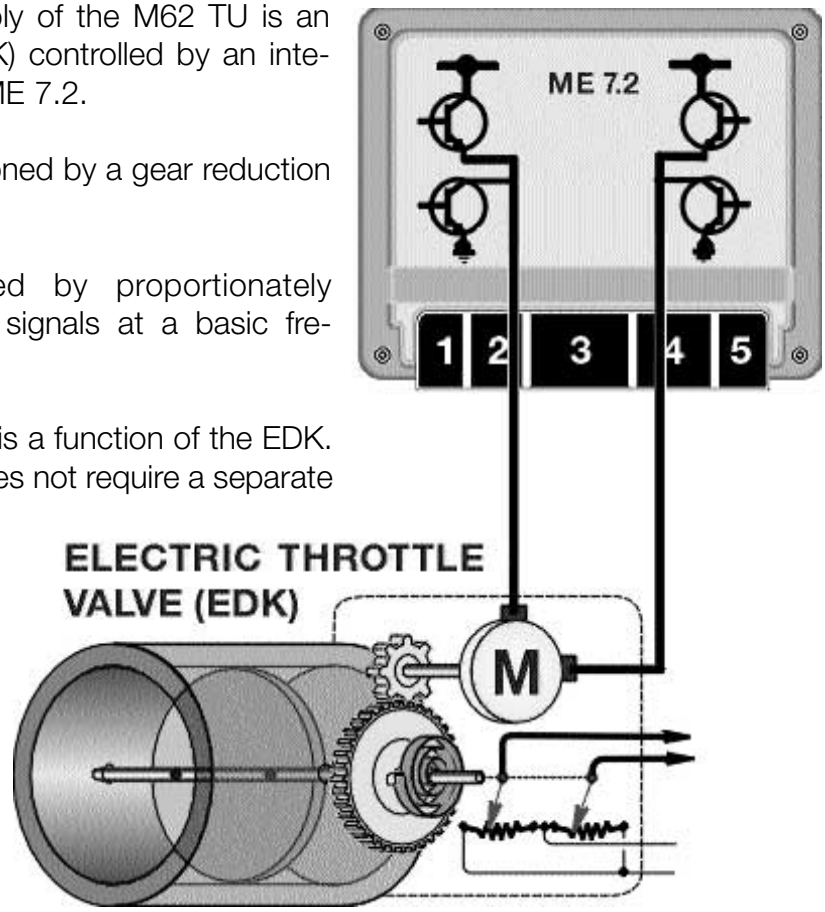

EDK ADAPTATION PROCEDURE:

When a replacement EDK is installed the adaptation values of the previous EDK must be cleared from the ME 7.2 control module.

1. From the Service Function Menu of the DIS/MoDiC, clear adaptation values.
2. Switch the ignition OFF for 10 seconds.
3. Switch the ignition ON (KL 15). At approximately 30 seconds the EDK is briefly activated allowing the ME 7.2 to "electrically learn" the new component.

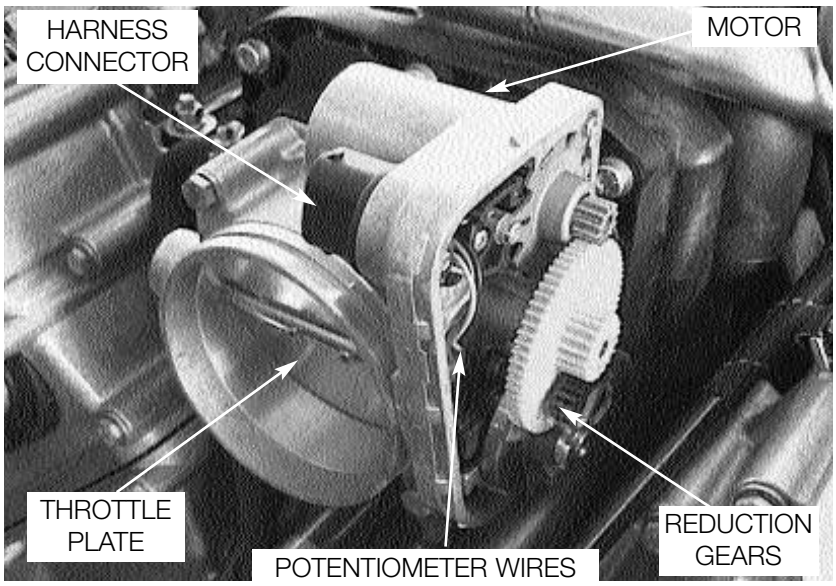

This procedure is also necessary after replacing an ME 7.2 control module. However, the adaptation values do not require clearing since they have not yet been established.

DM-TL (DIAGNOSIS MODULE - TANK LEAKAGE)

INTRODUCTION

A new Fuel System Leak Diagnosis Pump is equipped on the X5. The pump will eventually replace the current vacuum LDP on all vehicles.

The pump is manufactured by Bosch to BMW specifications.

- Bosch ECMs identify the electrical function of the pump as DM-TL.

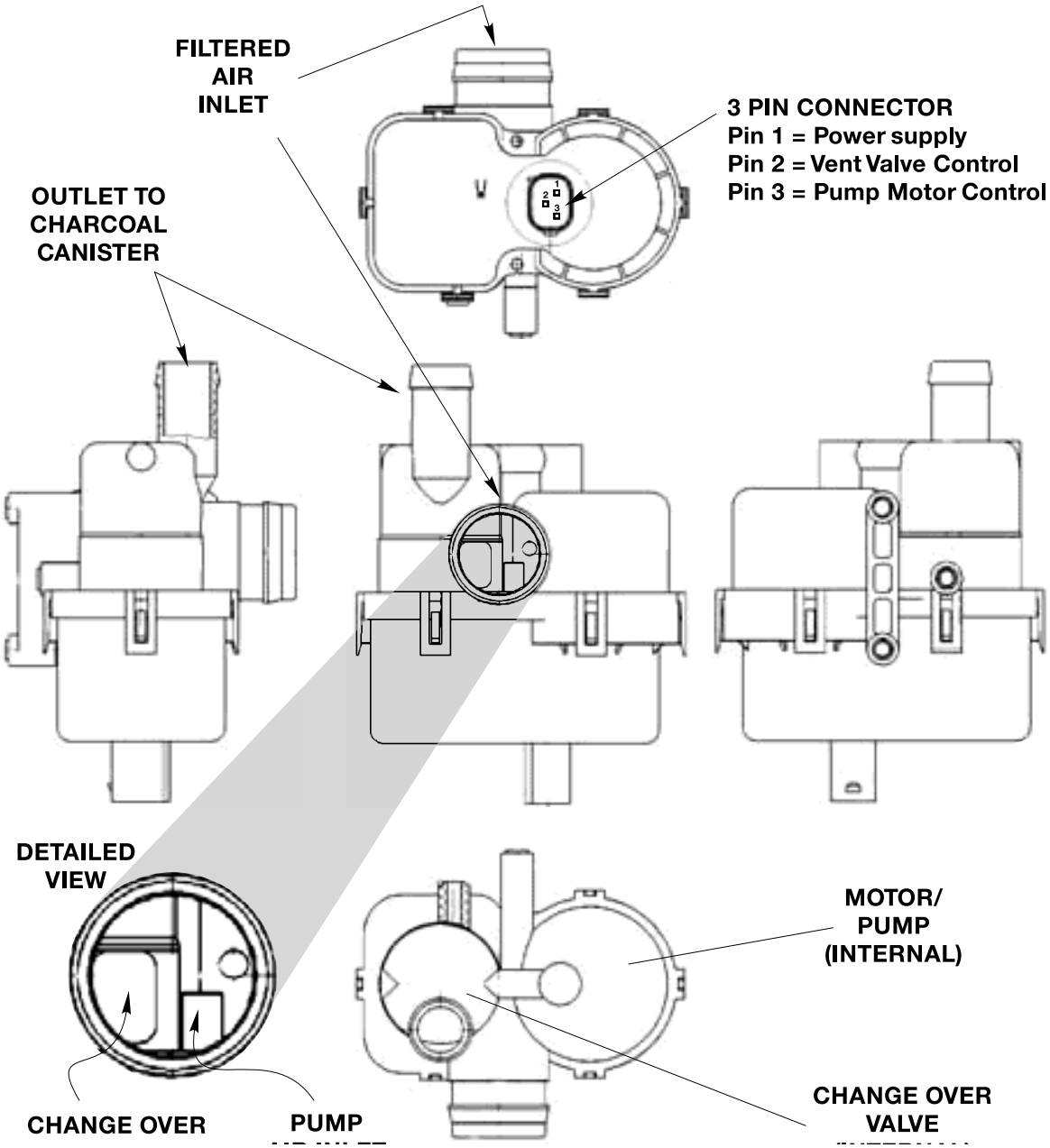

Functional Overview:

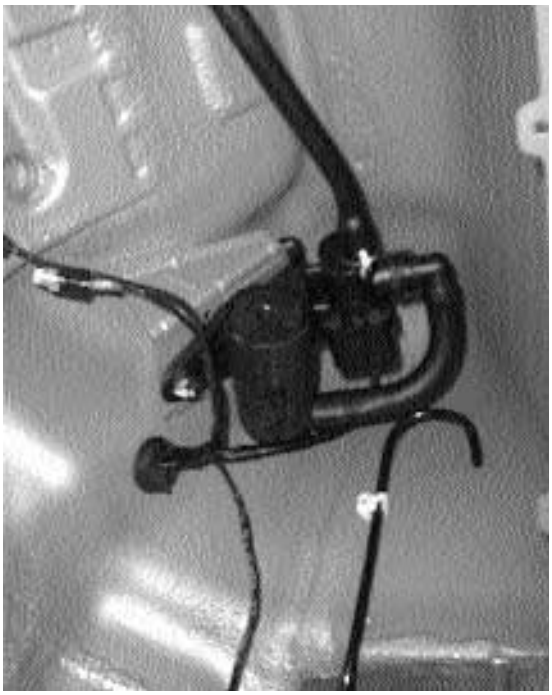

The DM-TL is located in the drivers side rear wheel well in the X5.

1. In it's inactive state, filtered fresh air enters the evaporative system through the sprung open valve of the DM-TL.

2. When the DME activates the DM-TL for leak testing, it first activates only the pump motor. This pumps air through a restricter orifice (1.0 or 0.5 mm) which causes the electric motor to draw a specific amperage value. This value is equivalent to the size of the restricter.

3. The solenoid valve is then energized which seals the evap system and directs the pump output to pressurize the evap system.

The evap system is detected as having a large leak if the amperage value is not realized, a small leak if the same reference amperage is realized or no leak if the amperage value is

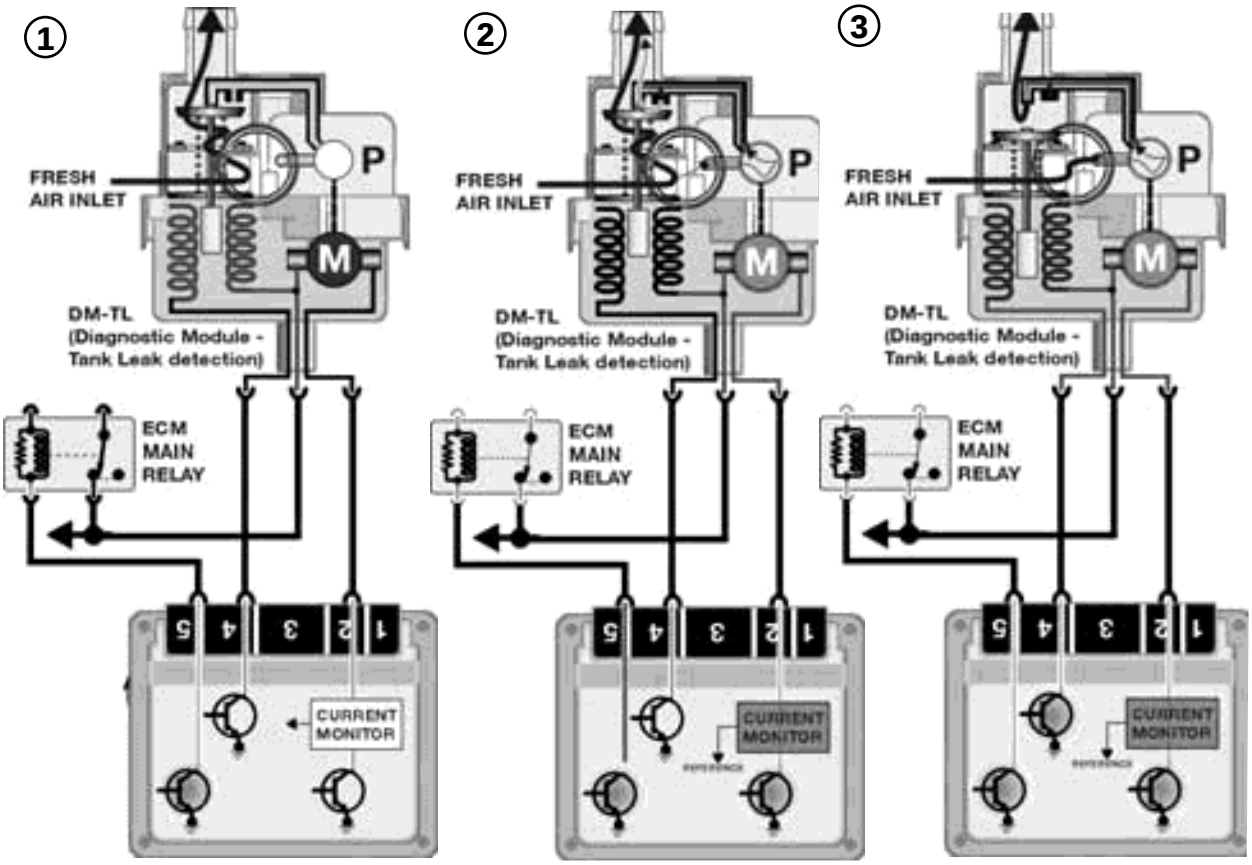

FUNCTION

The DC Motor LDP ensures accurate fuel system leak detection for leaks as small as 0.5mm (.020”). The pump contains an integral DC motor which is activated directly by the engine control module. The ECM monitors the pump motor operating current as the measurement for detecting leaks.

The pump also contains an ECM controlled change over valve that is energized closed during a Leak Diagnosis test. The change over valve is open during all other periods of operation allowing the fuel system to “breath” through the inlet filter (similar to the full down stroke of the current vacuum operated LDP).

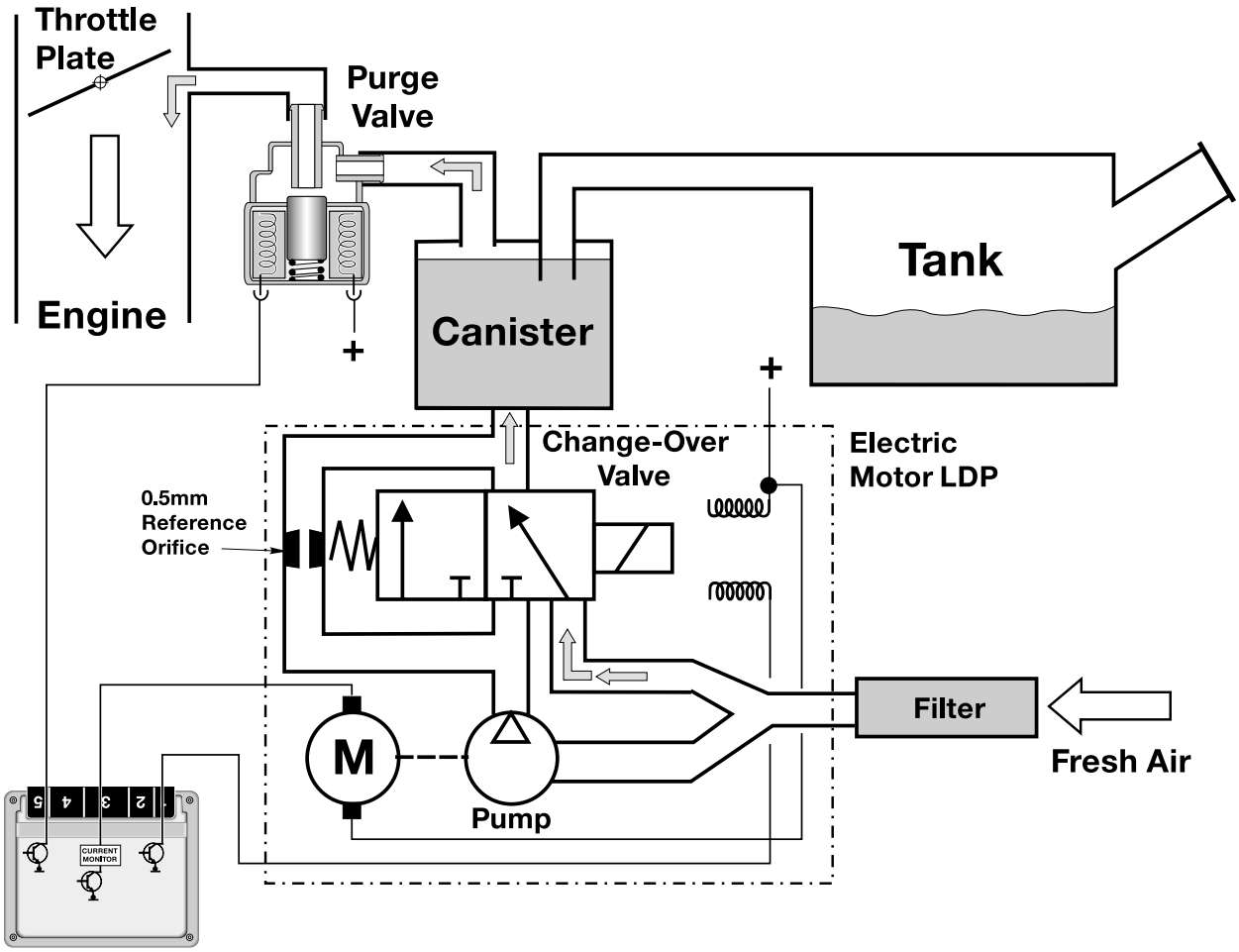

DC MOTOR LDP INACTIVE -- NORMAL PURGE VALVE OPERATION

In it’s inactive state the pump motor and the change over valve of the DC Motor LDP are not energized. When purge valve operation occurs filtered air enters the fuel system compensating for engine vacuum drawing on the hydrocarbon vapors stored in the charcoal canister.

LEAK DIAGNOSIS TEST PRECONDITIONS

The DME only initiates a leak diagnosis test every second time the criteria are met. The criteria is as follows:

- Engine **OFF** with ignition switched **OFF**.
- Engine Control Module still in active state or what is known as “follow up mode” (Main Relay energized, control module and DME components online for extended period after key off).
- Prior to Engine/Ignition switch OFF condition, vehicle must have been driven for a minimum of 20 minutes.
- Prior to minimum 20 minute drive, the vehicle must have been OFF for a minimum of 5 hours.
- Fuel Tank Capacity must be between **15 and 85%** (safe approximation between 1/4 - 3/4 of a tank).
- Ambient Air Temperature between **-7°C & 35°C** (20°F & 95°F)
- Altitude **< 2500m** (8,202 feet).
- Battery Voltage between **11.5 and 14.5 Volts**

When these criteria are satisfied every second time, the ECM will start the Fuel System Leak Diagnosis Test. The test will typically be carried out once a day i.e. once after driving to work in the morning, when driving home in the evening, the criteria are once again met but the test is not initiated. The following morning, the test will run again.

LEAK DIAGNOSIS TEST

PHASE 1 - REFERENCE MEASUREMENT

The ECM activates the pump motor. The pump pulls air from the filtered air inlet and passes it through a precise 0.5mm reference orifice in the pump assembly.

The ECM simultaneously monitors the pump motor current flow . The motor current raises quickly and levels off (stabilizes) due to the orifice restriction. The ECM stores the stabilized amperage value in memory. The stored amperage value is the electrical equivalent of a 0.5 mm (0.020”) leak.

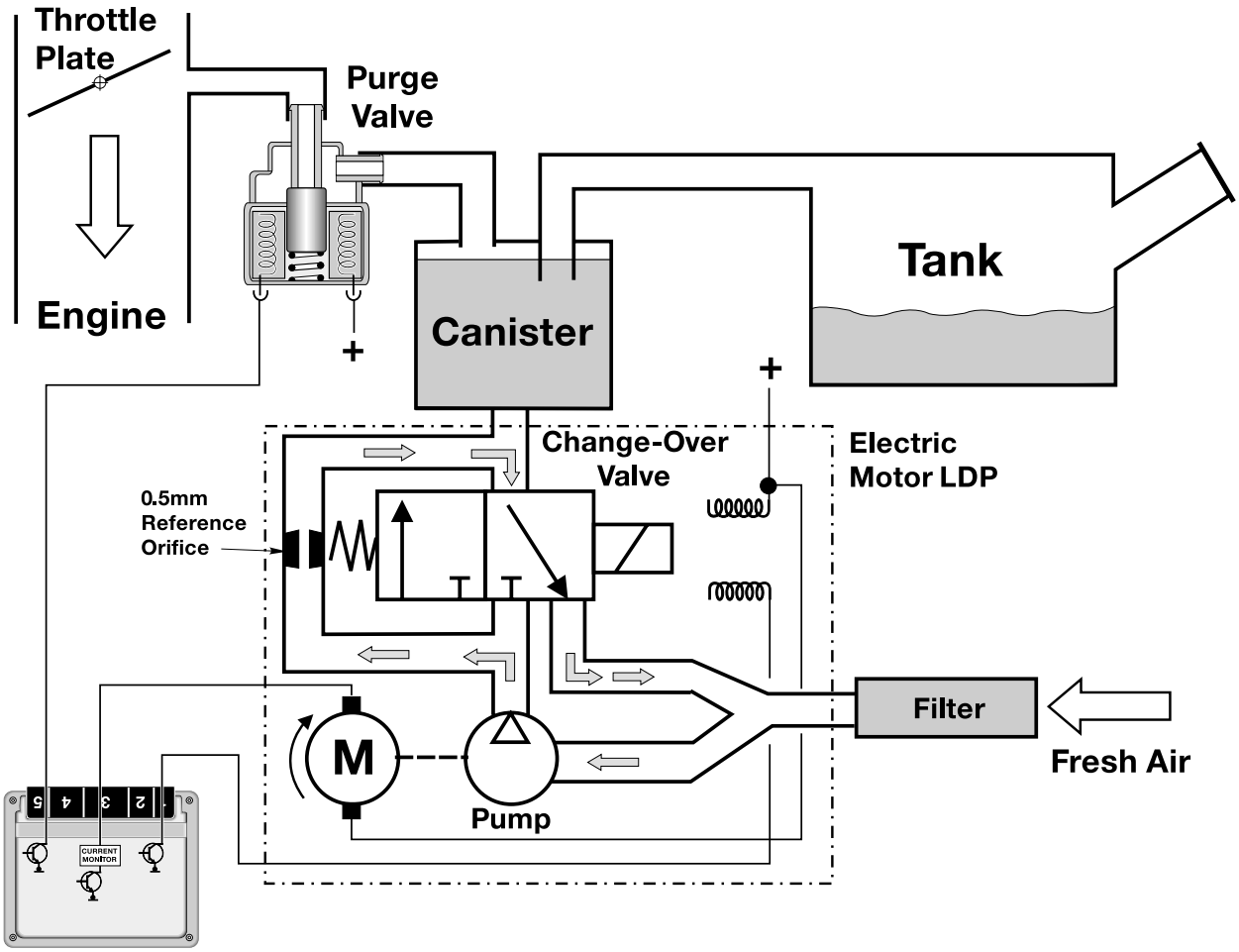

PHASE 2 - LEAK DETECTION

The ECM energizes the Change Over Valve allowing the pressurized air to enter the fuel system through the Charcoal Canister, The ECM monitors the current flow and compares it with the stored reference measurement over a duration of time.

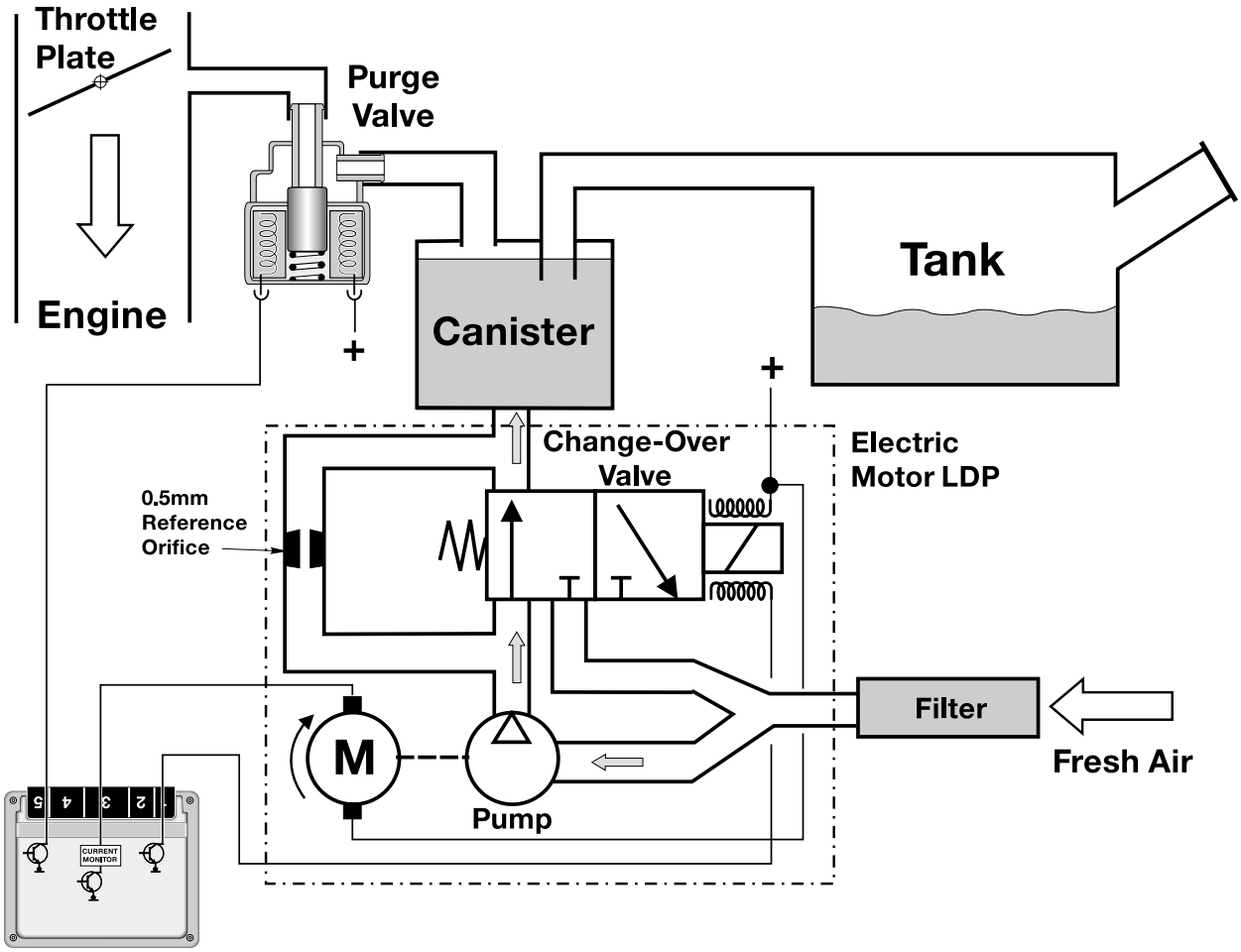

Once the test is concluded, the ECM stops the pump motor and immediately de-energizes the change over valve. This allows the stored pressure to vent thorough the charcoal canister trapping hydrocarbon vapor and venting air to atmosphere through the filter.

TEST RESULTS
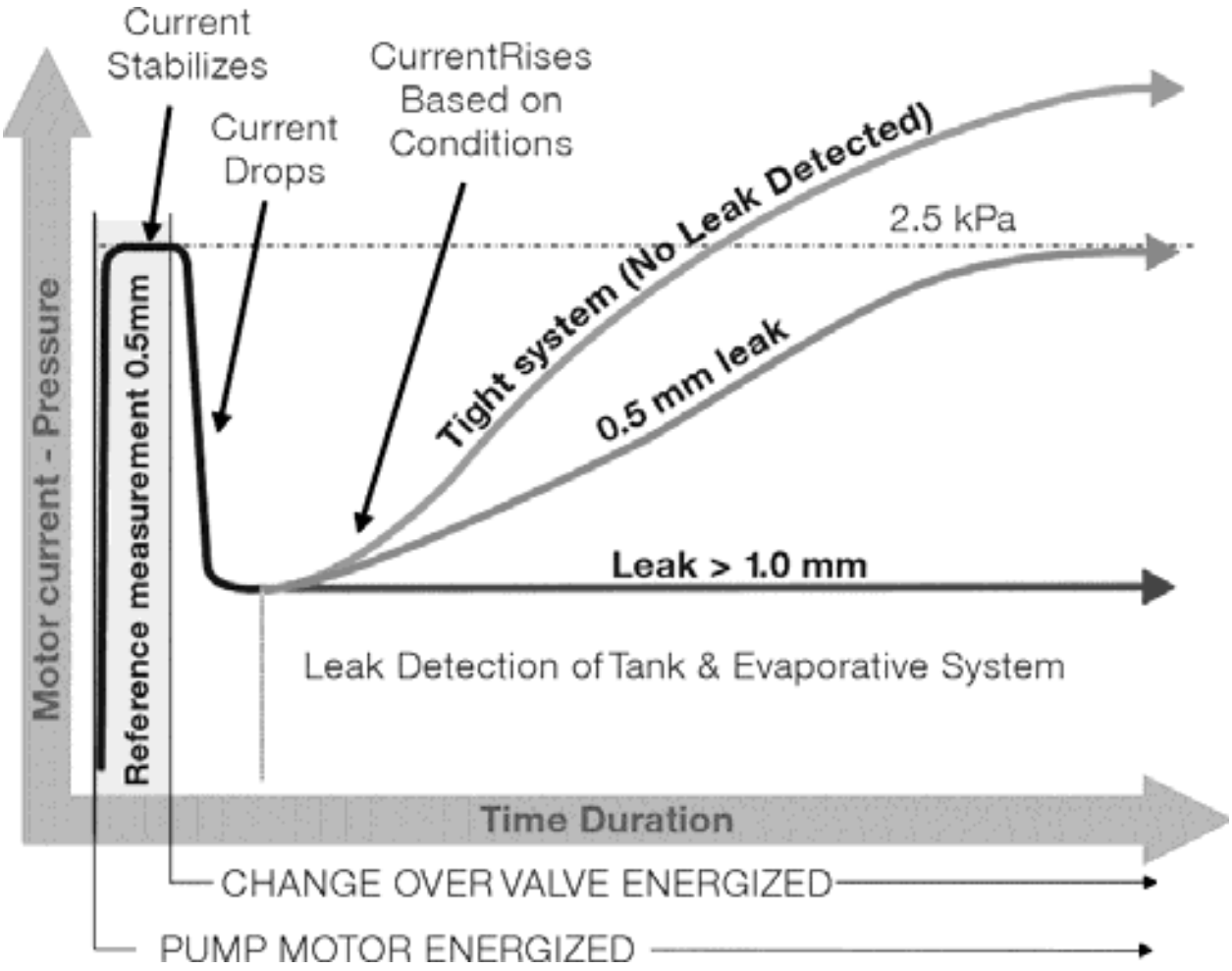
The time duration varies between 45 & 270 seconds depending on the resulting leak diagnosis test results (developed tank pressure "amperage" / within a specific time period). However the chart below depicts the logic used to determine fuel system leaks.