POWER MIRROR CONTROL SYSTEM

PARTS LOCATION

HATCHBACK:

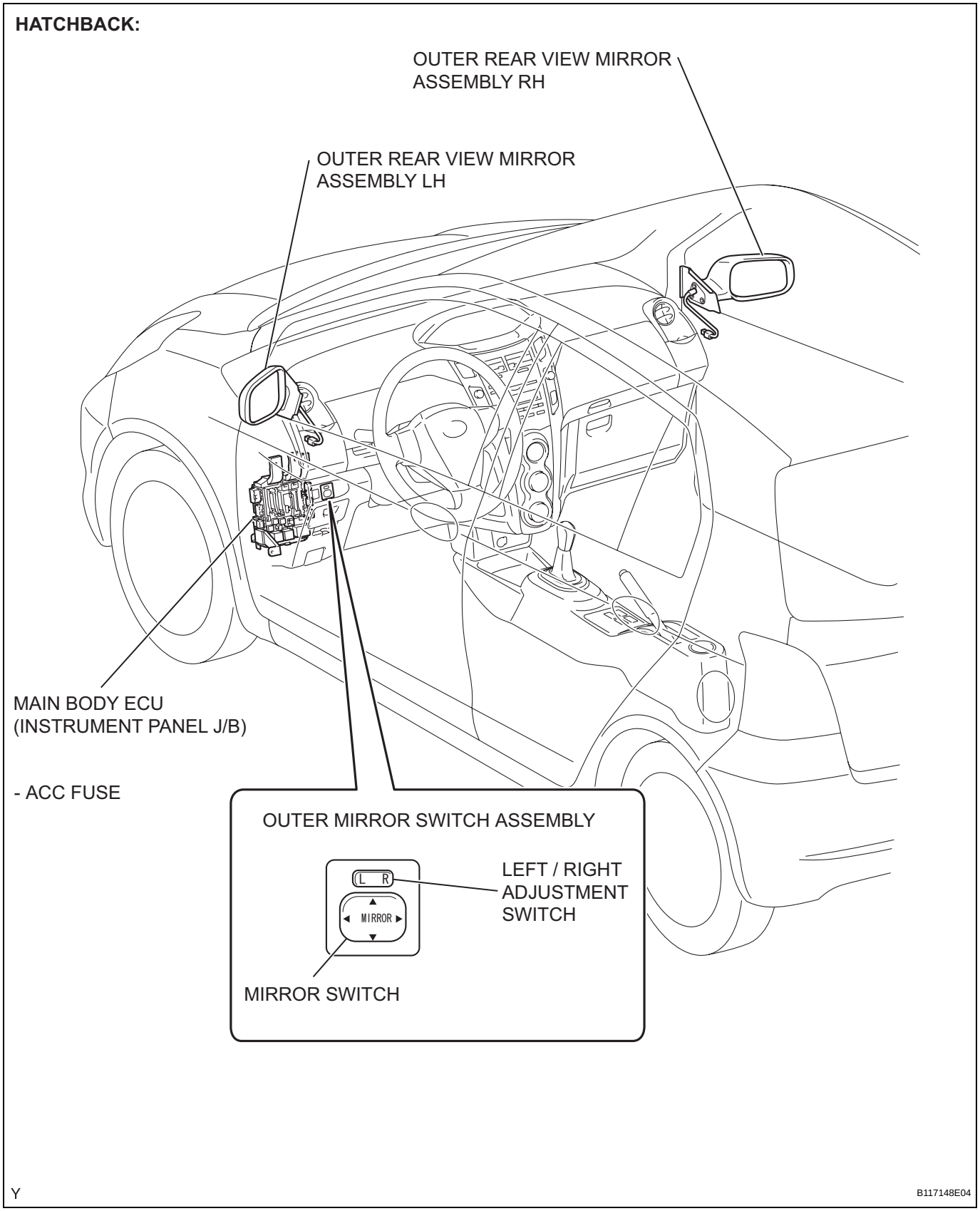

Y

B117148E04

MI

SEDAN:

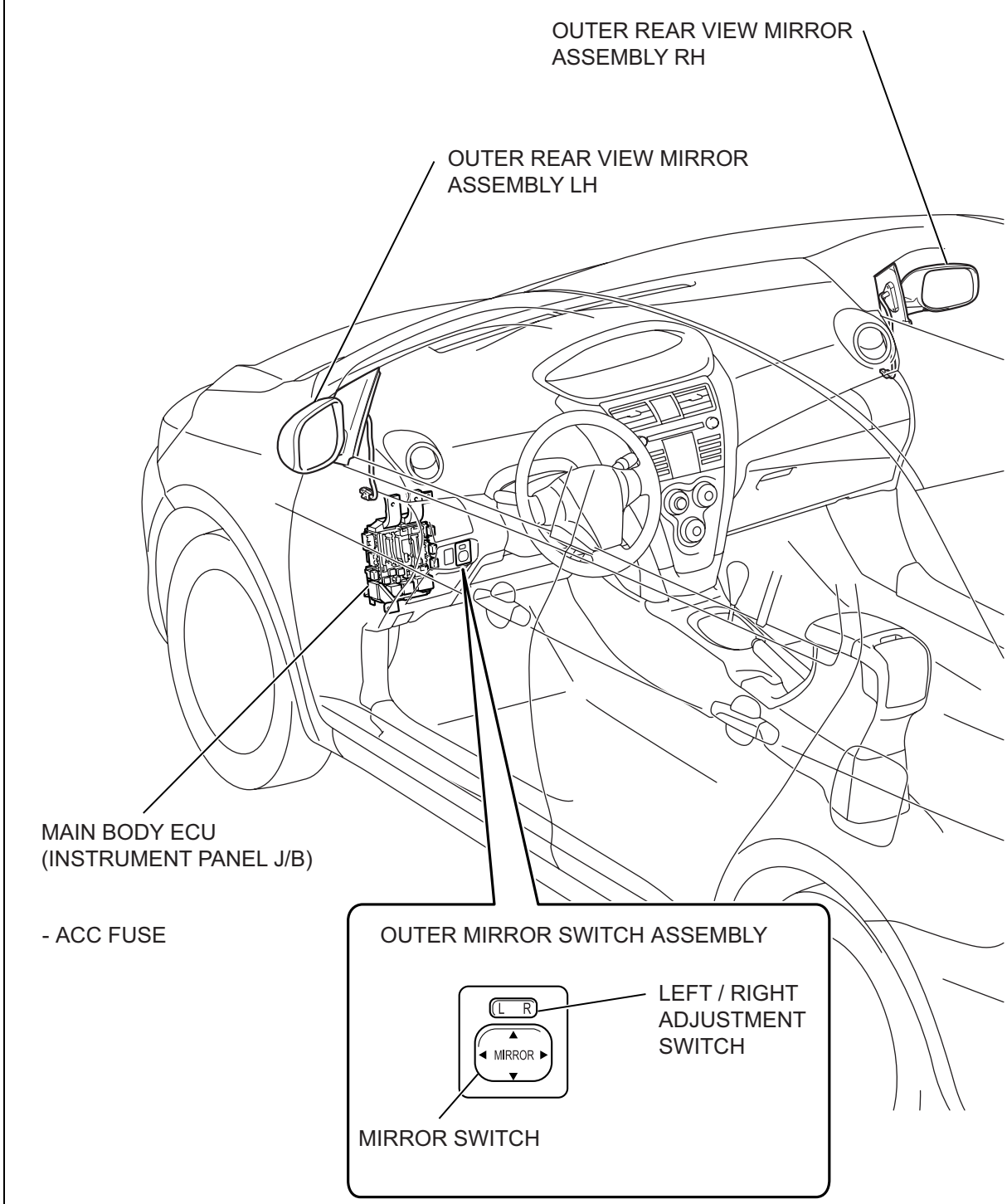

B142260E01

SYSTEM DIAGRAM

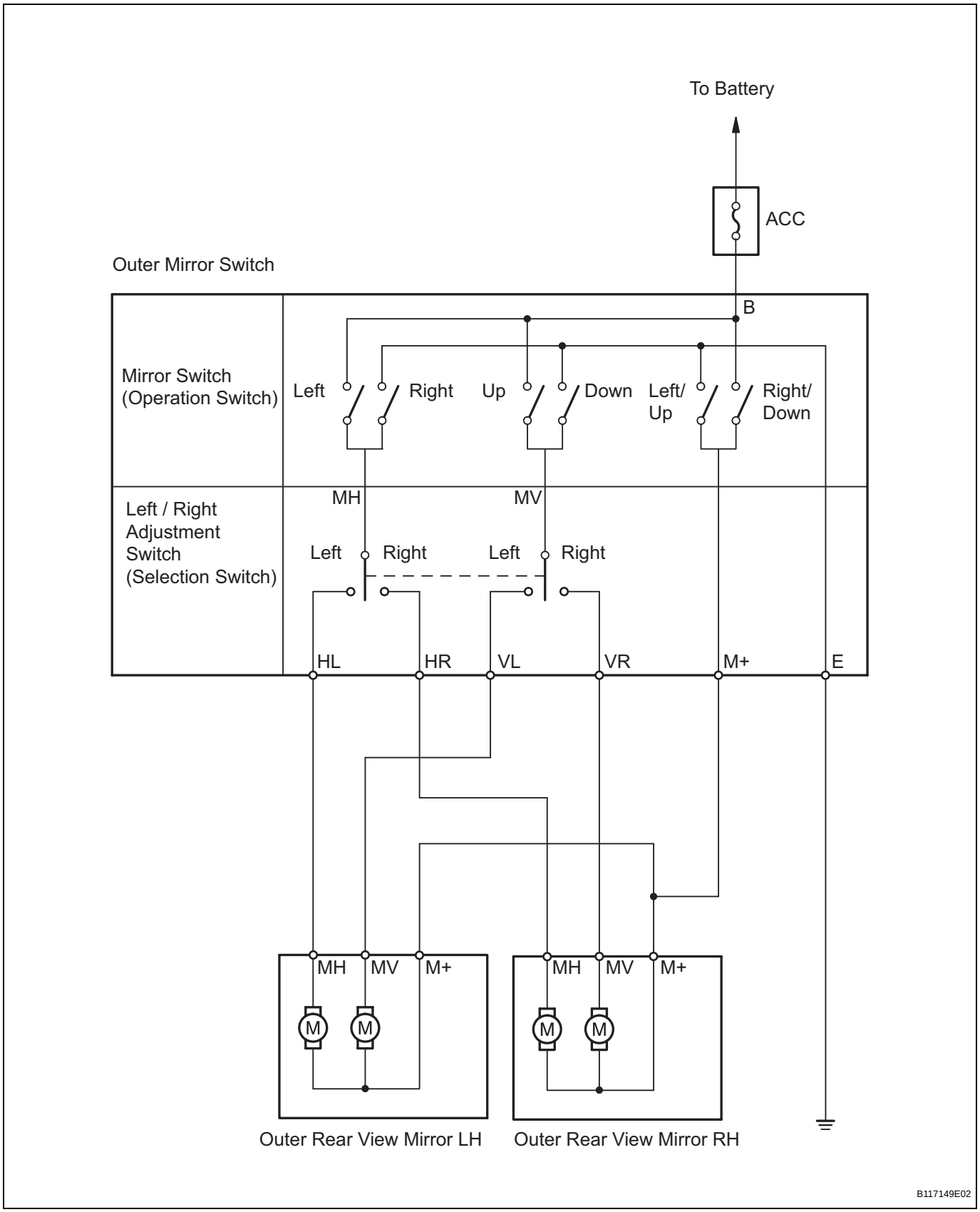

PROBLEM SYMPTOMS TABLE

HINT:
Use the table below to help determine the causes of the problem symptom. The potential causes of the symptoms are listed in order of probability in the "Suspected Area" column of the table. Check each symptom by checking the suspected areas in the order they are listed. Replace parts as necessary.

Power mirror control system

Symptom	Suspected area	See page
Mirror does not operate	ACC fuse	MI-1
	Outer mirror switch assembly (for hatchback)	MI-21
	Outer mirror switch assembly (for sedan)	MI-18
	Outer rear view mirror assembly (for hatchback)	MI-14
	Outer rear view mirror assembly (for sedan)	MI-9
	Wire harness	-
Mirror operates abnormally	Outer mirror switch assembly (for hatchback)	MI-21
	Outer mirror switch assembly (for sedan)	MI-18
	Outer rear view mirror assembly (for hatchback)	MI-14
	Outer rear view mirror assembly (for sedan)	MI-9
	Wire harness	-

INNER REAR VIEW MIRROR

COMPONENTS

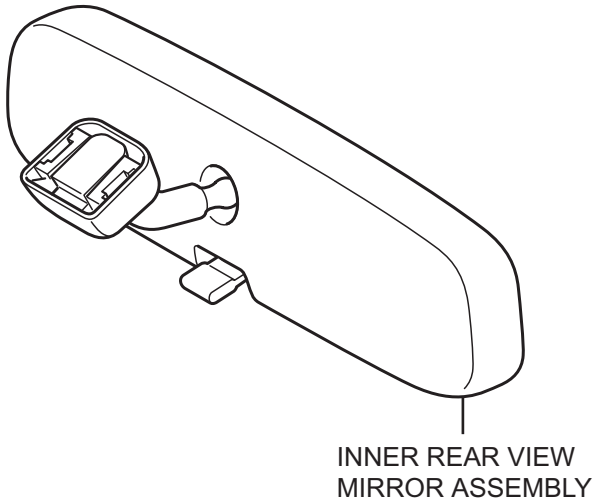

G

B101911E01

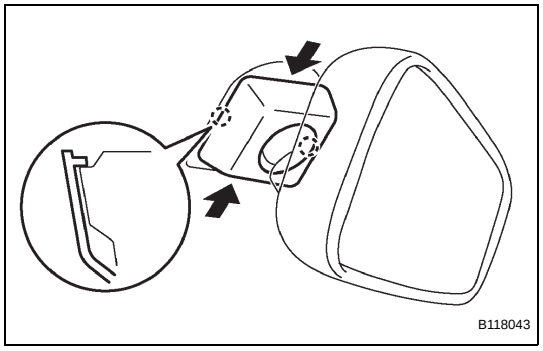

REMOVAL

1. REMOVE INNER REAR VIEW MIRROR ASSEMBLY

(a) Pinch the cover, disengage the 2 claws and remove the cover.

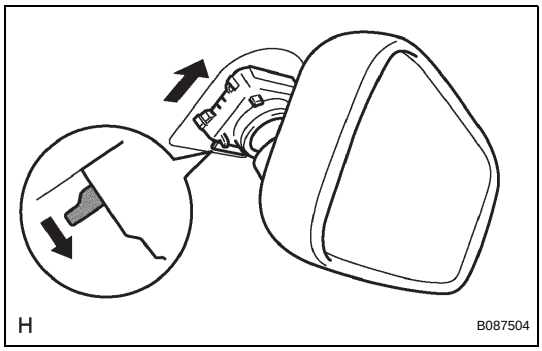

(b) Push the lever, and slide and remove the inner rear view mirror.

INSTALLATION

1. INSTALL INNER REAR VIEW MIRROR ASSEMBLY

(a) Slide and install the inner rear view mirror.

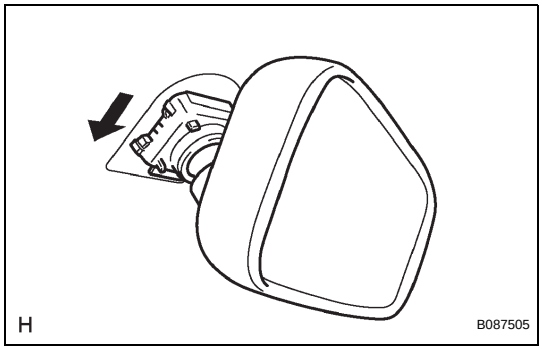

(b) Engage the 2 claws and install the cover.

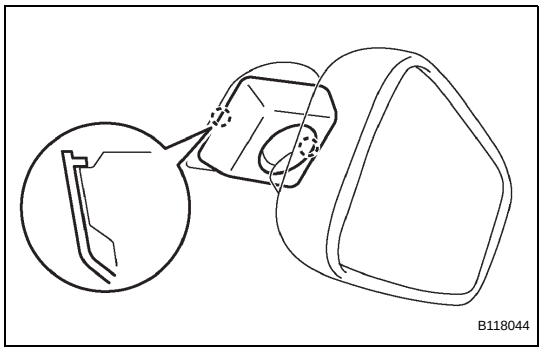

OUTER REAR VIEW MIRROR (for Sedan)

COMPONENTS

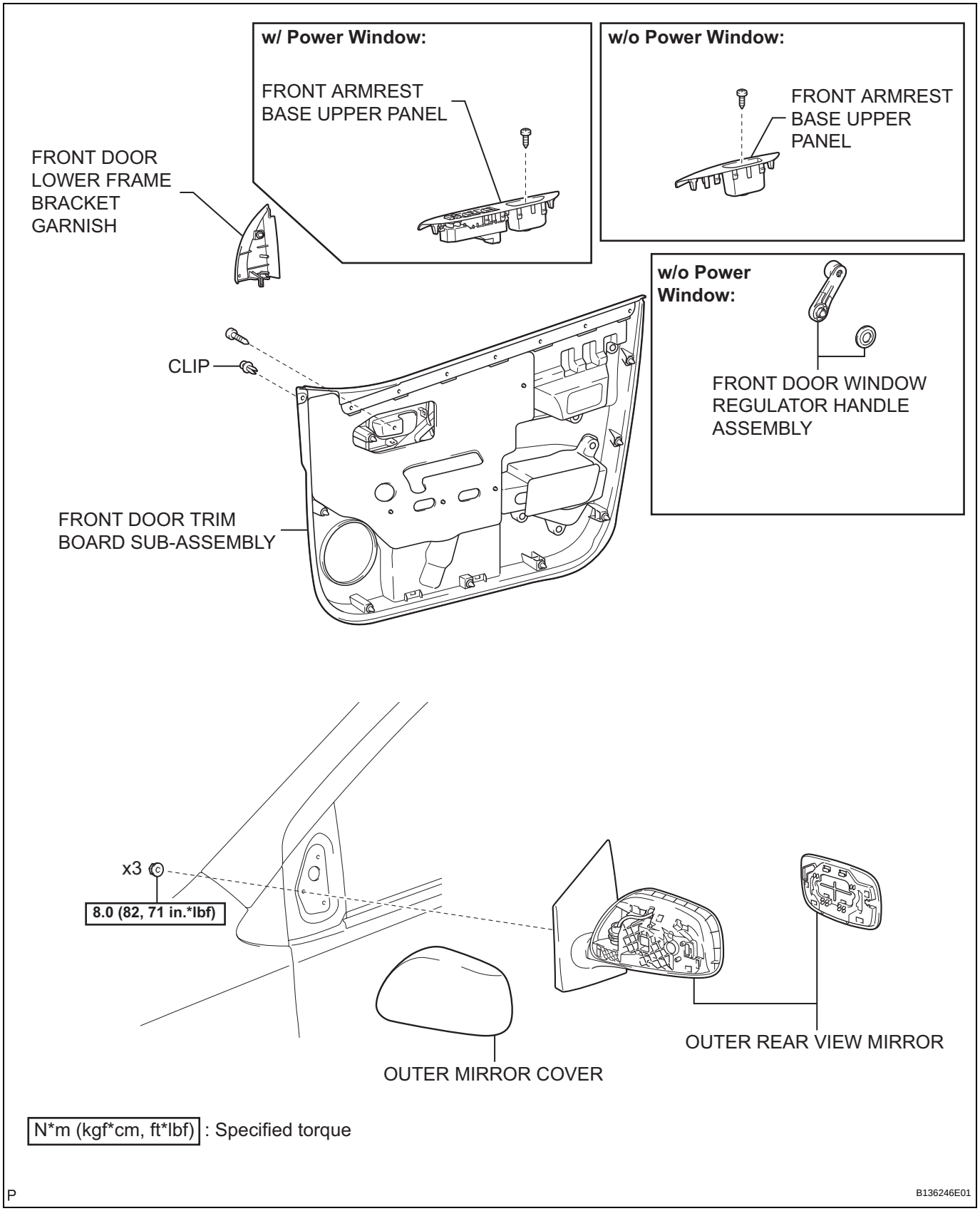

MI

REMOVAL

HINT:
- Use the same procedure for both the RH and LH sides.
- The procedure described below is for the LH side.

1. REMOVE CABLE FROM NEGATIVE BATTERY TERMINAL

2. REMOVE FRONT DOOR WINDOW REGULATOR HANDLE ASSEMBLY (w/o Power Window) (See page ED-9)

3. REMOVE FRONT ARMREST BASE UPPER PANEL (See page ED-9)

4. REMOVE FRONT DOOR LOWER FRAME BRACKET GARNISH (See page ED-9)

5. REMOVE FRONT DOOR TRIM BOARD SUB-ASSEMBLY (See page ED-11)

6. REMOVE OUTER REAR VIEW MIRROR

(a) w/ Power mirror:
Disconnect the connector.

(b) Remove the 3 nuts, disengage the claw and remove the outer rear view mirror.

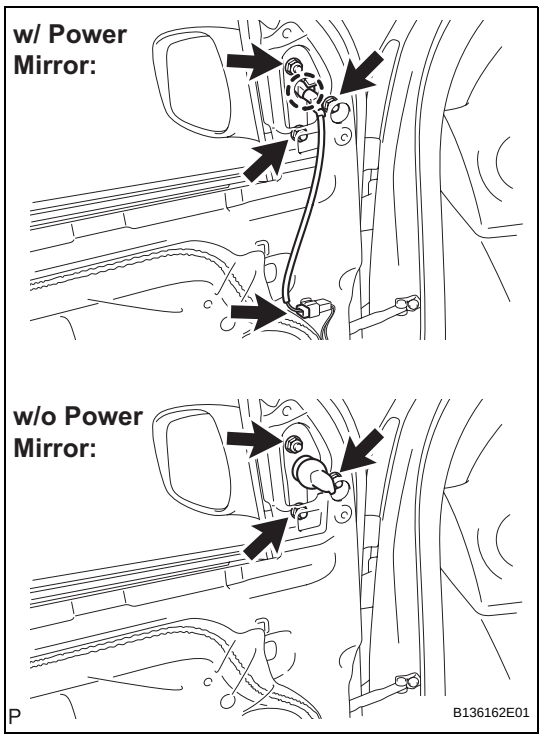

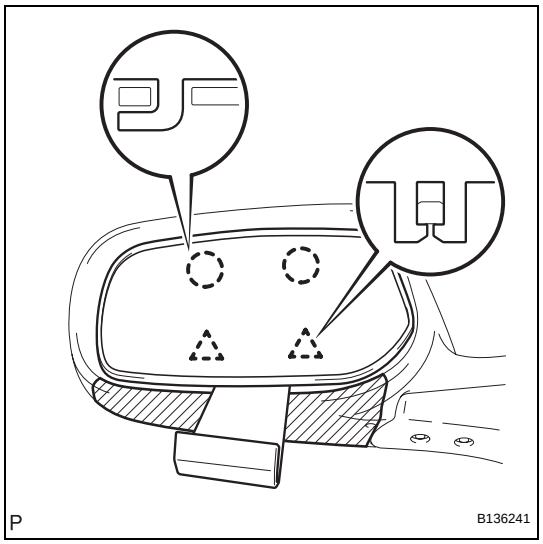

7. REMOVE OUTER MIRROR COVER

(a) Apply protective tape to the lower part of the mirror body.

(b) Press down the upper part of the mirror and tilt the mirror.

(c) Insert a moulding remover into the 2 clip installation positions on the lower part of the mirror to disengage the 2 clips.

(d) Remove the mirror by pulling it downward.

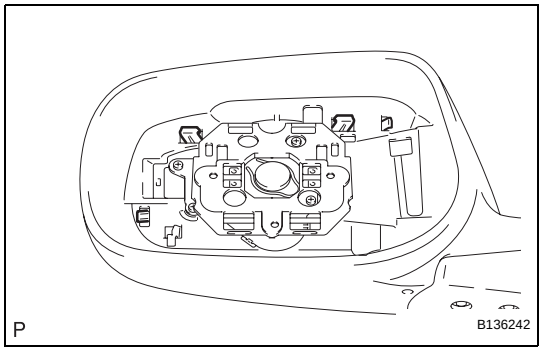

(e) Disengage the 4 claws from the inside of the mirror body.

(f) Push the upper part of the mirror cover forward to tilt it, and then disengage the claw on the lower part to remove the outer mirror cover.

INSPECTION

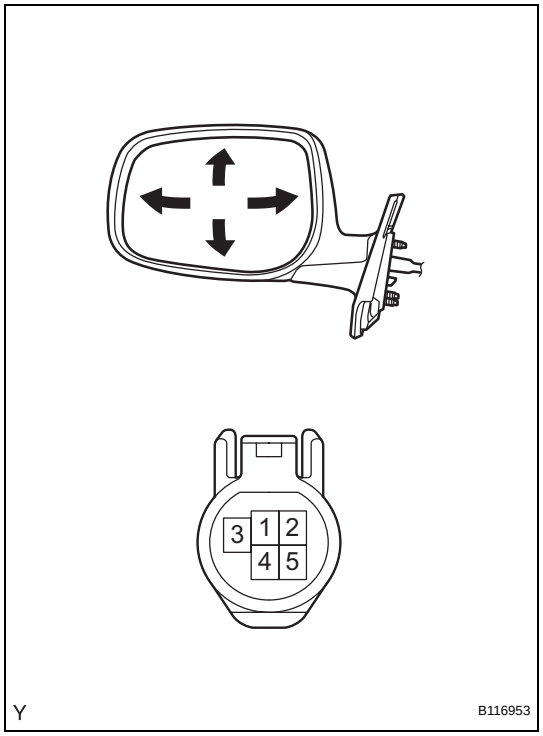

1. INSPECT OUTER REAR VIEW MIRROR ASSEMBLY LH

(a) Check the operation.

(1) Apply battery voltage to the outer rear view mirror and check the operation of the outer rear view mirror.

Standard

Measurement Condition	Mirror Assembly Operation
Battery positive (+) - Terminal 5 (MV) Battery negative (-) - Terminal 4 (COM)	Turns upward
Battery positive (+) - Terminal 4 (COM) Battery negative (-) - Terminal 5 (MV)	Turns downward
Battery positive (+) - Terminal 3 (MH) Battery negative (-) - Terminal 4 (COM)	Turns left
Battery positive (+) - Terminal 4 (COM) Battery negative (-) - Terminal 3 (MH)	Turns right

If the result is not as specified, replace the outer rear view mirror.

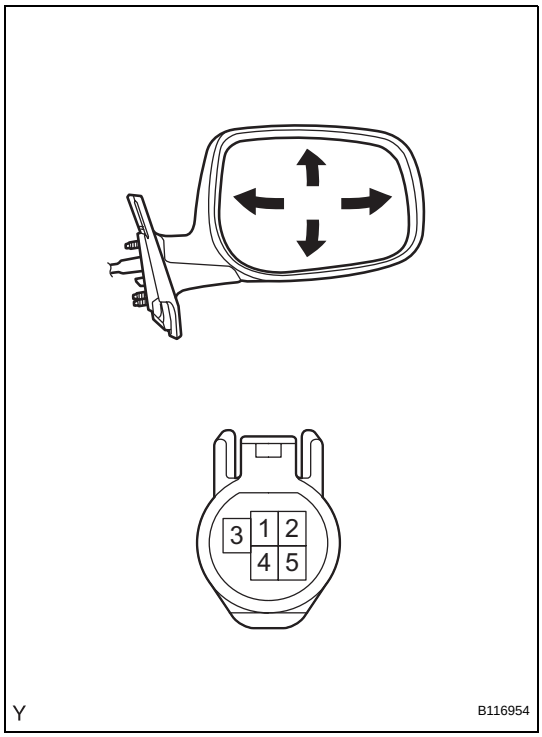

2. INSPECT OUTER REAR VIEW MIRROR ASSEMBLY RH

(a) Check the operation.

(1) Apply battery voltage to the outer rear view mirror and check the operation of the outer rear view mirror.

Standard

Measurement Condition	Mirror Assembly Operation
Battery positive (+) - Terminal 5 (MV) Battery negative (-) - Terminal 4 (COM)	Turns upward
Battery positive (+) - Terminal 4 (COM) Battery negative (-) - Terminal 5 (MV)	Turns downward
Battery positive (+) - Terminal 3 (MH) Battery negative (-) - Terminal 4 (COM)	Turns left
Battery positive (+) - Terminal 4 (COM) Battery negative (-) - Terminal 3 (MH)	Turns right

If the result is not as specified, replace the outer rear view mirror.

INSTALLATION

1. INSTALL OUTER MIRROR COVER

(a) Engage the claw on the lower part of the mirror cover.

(b) Engage the claw on the upper part of the mirror cover.

(c) After installing the outer mirror cover, check that there are no gaps between the cover and the mirror body.

NOTICE:

If there is a gap between the cover and the mirror body, it may cause noise during driving.

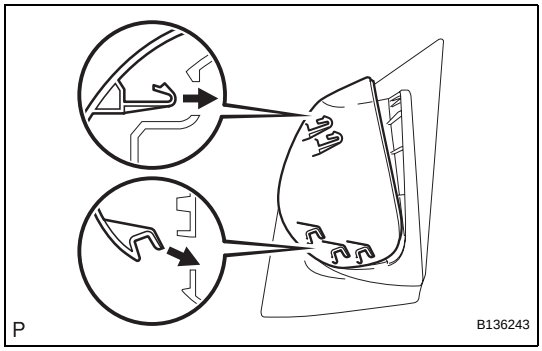

(d) Engage the 2 claws of the outer rear view mirror.

(e) Engage the 2 clips and install the mirror.

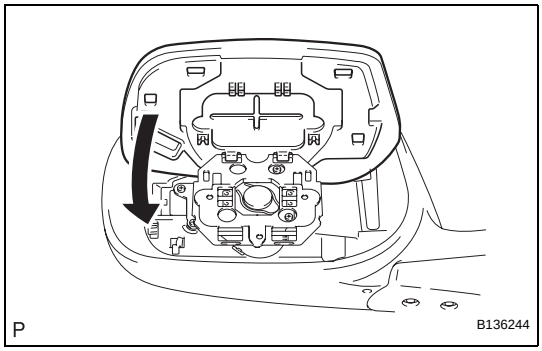

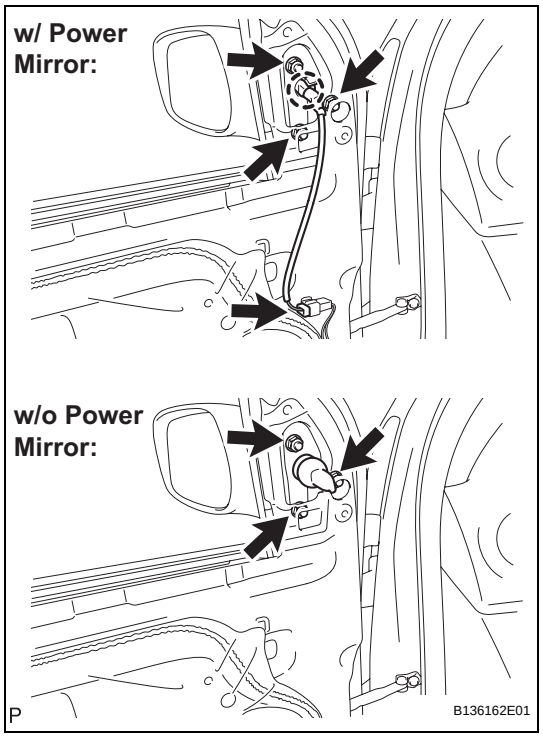

2. INSTALL OUTER REAR VIEW MIRROR

(a) Engage the claw and install the outer rear view mirror with the 3 nuts.
Torque: 8.0 N*m (82 kgf*cm, 71 in.*lbf)

(b) w/ Power mirror:
Connect the connector.

3. INSTALL FRONT DOOR TRIM BOARD SUB-ASSEMBLY (See page ED-26)

4. INSTALL FRONT DOOR LOWER FRAME BRACKET GARNISH (See page ED-28)

5. INSTALL FRONT ARMREST BASE UPPER PANEL (See page ED-28)

6. INSTALL FRONT DOOR WINDOW REGULATOR HANDLE ASSEMBLY (w/o Power Window) (See page ED-29)

7. CONNECT CABLE TO NEGATIVE BATTERY TERMINAL
Torque: 5.4 N*m (55 kgf*cm, 48 in.*lbf)

OUTER REAR VIEW MIRROR (for Hatchback)

COMPONENTS

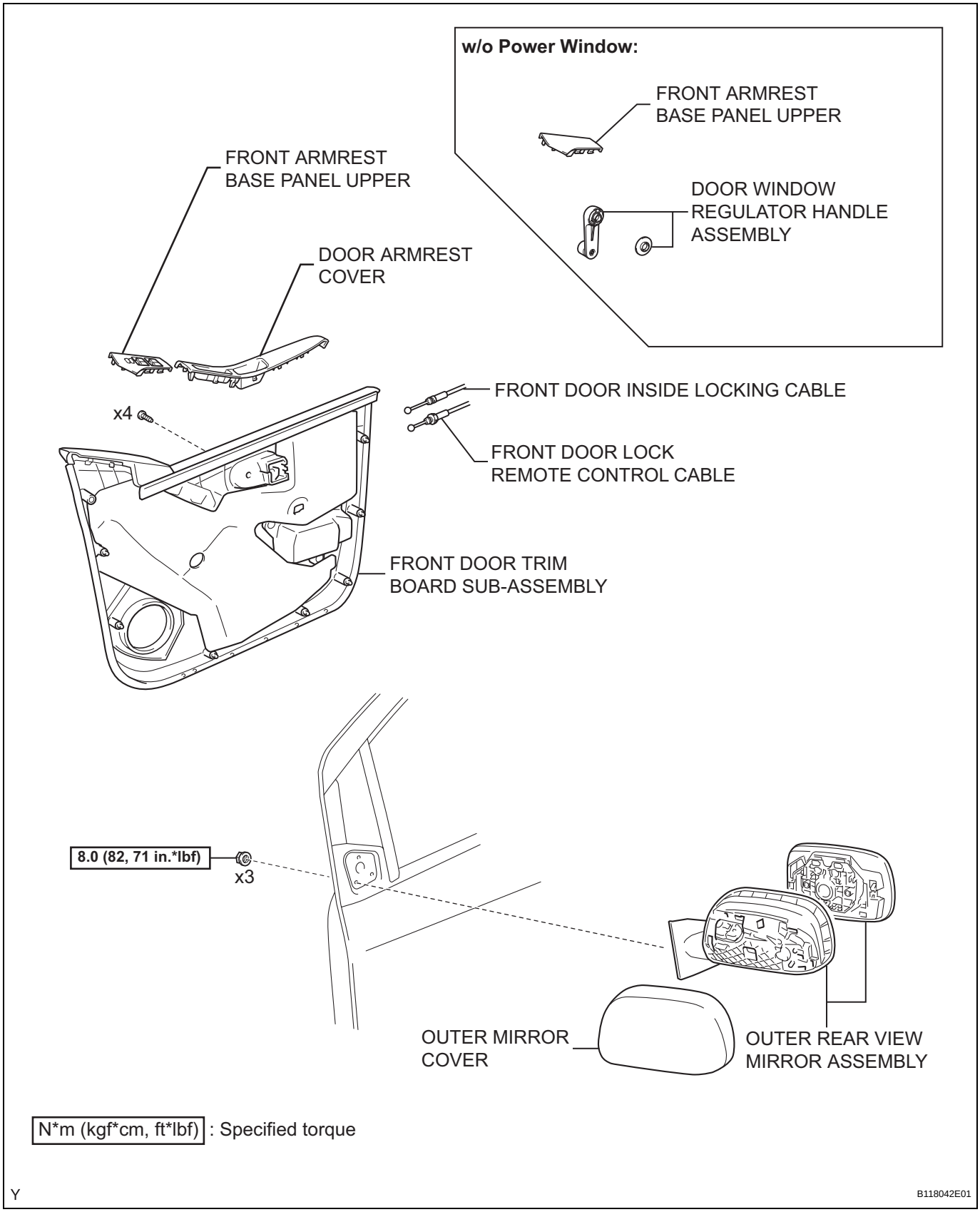

MI

REMOVAL

HINT:
- Use the same procedure for both the RH and LH sides.
- The procedure described below is for the LH side.

1. DISCONNECT CABLE FROM NEGATIVE BATTERY TERMINAL

2. REMOVE DOOR WINDOW REGULATOR HANDLE ASSEMBLY (w/o Power Window) (See page ED-57)

3. REMOVE DOOR ARMREST COVER (See page ED-33)

4. REMOVE FRONT ARMREST BASE PANEL UPPER (w/ Power Window) (See page ED-33)

5. REMOVE FRONT ARMREST BASE PANEL UPPER (w/o Power Window) (See page ED-57)

6. REMOVE FRONT DOOR TRIM BOARD SUB-ASSEMBLY (See page ED-34)

7. REMOVE OUTER REAR VIEW MIRROR ASSEMBLY

(a) w/ Power mirror:
Disconnect the connector.

(b) Remove the 3 nuts, disengage the claw and remove the outer rear view mirror.

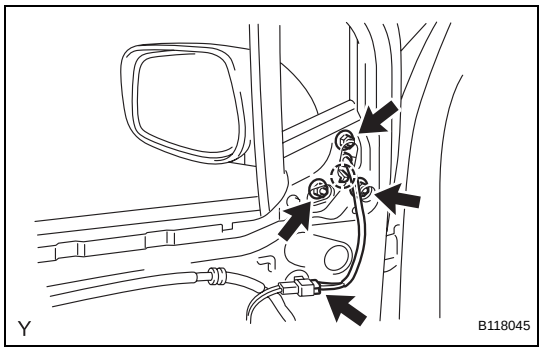

8. REMOVE OUTER MIRROR COVER

(a) Apply protective tape to the lower part of the mirror body.

(b) Press down the upper part of the mirror and tilt the mirror.

(c) Insert a moulding remover into the 2 clip installation positions on the lower part of the mirror to disengage the 2 clips.

(d) Remove the mirror by pulling it downward.

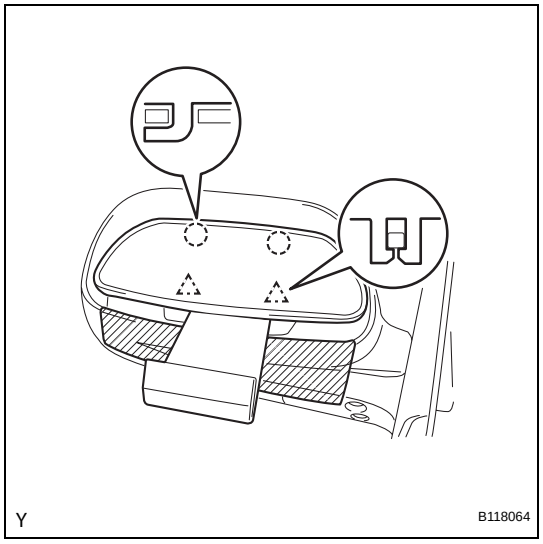

MI

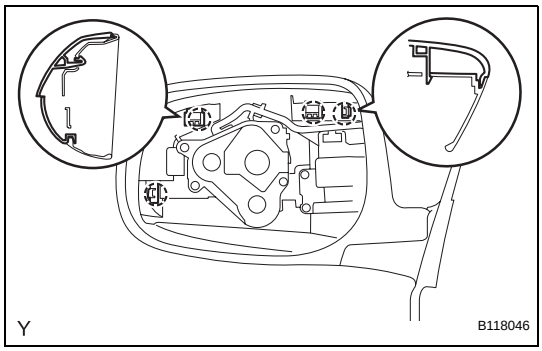

(e) Disengage the 4 claws from the inside of the mirror body.

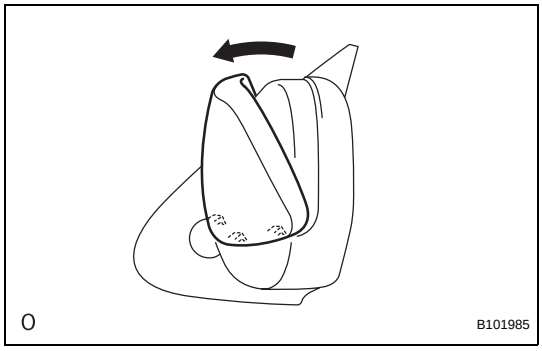

(f) Push the upper part of the mirror cover forward to tilt it, and then disengage the claw on the lower part to remove the outer mirror cover.

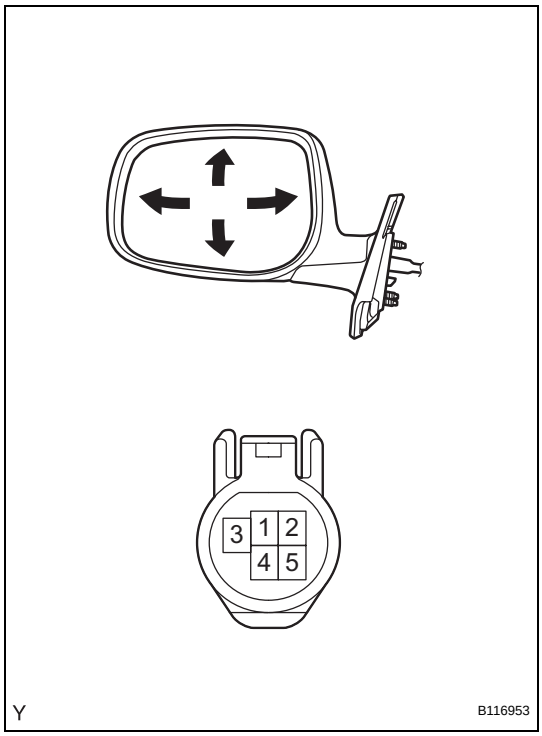

INSPECTION

1. INSPECT OUTER REAR VIEW MIRROR ASSEMBLY LH

(a) Check the operation.

(1) Apply battery voltage to the outer rear view mirror and check the operation of the outer rear view mirror.

Standard

Measurement Condition	Mirror Assembly Operation
Battery positive (+) - Terminal 5 (MV) Battery negative (-) - Terminal 4 (COM)	**Turns upward**
Battery positive (+) - Terminal 4 (COM) Battery negative (-) - Terminal 5 (MV)	**Turns downward**
Battery positive (+) - Terminal 3 (MH) Battery negative (-) - Terminal 4 (COM)	**Turns left**
Battery positive (+) - Terminal 4 (COM) Battery negative (-) - Terminal 3 (MH)	**Turns right**

If the result is not as specified, replace the outer rear view mirror.

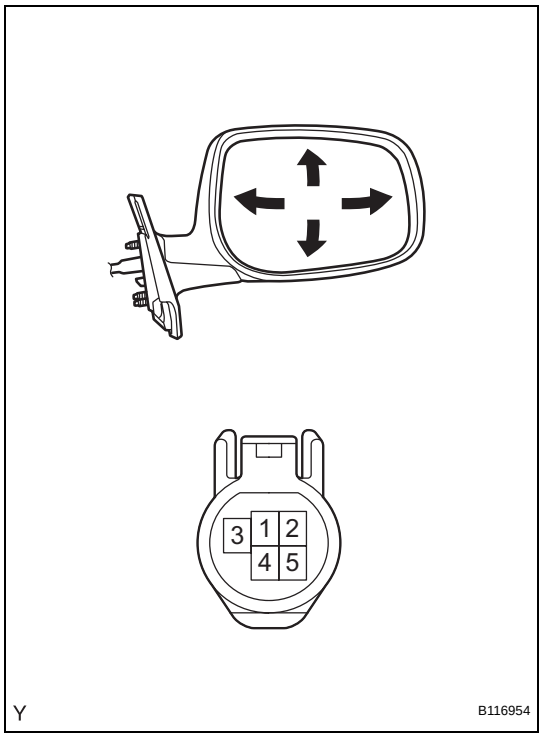

2. INSPECT OUTER REAR VIEW MIRROR ASSEMBLY RH

(a) Check the operation.

(1) Apply battery voltage to the outer rear view mirror and check the operation of the outer rear view mirror.

Standard

Measurement Condition	Mirror Assembly Operation
Battery positive (+) - Terminal 5 (MV) Battery negative (-) - Terminal 4 (COM)	**Turns upward**
Battery positive (+) - Terminal 4 (COM) Battery negative (-) - Terminal 5 (MV)	**Turns downward**
Battery positive (+) - Terminal 3 (MH) Battery negative (-) - Terminal 4 (COM)	**Turns left**
Battery positive (+) - Terminal 4 (COM) Battery negative (-) - Terminal 3 (MH)	**Turns right**

If the result is not as specified, replace the outer rear view mirror.

INSTALLATION

1. INSTALL OUTER MIRROR COVER

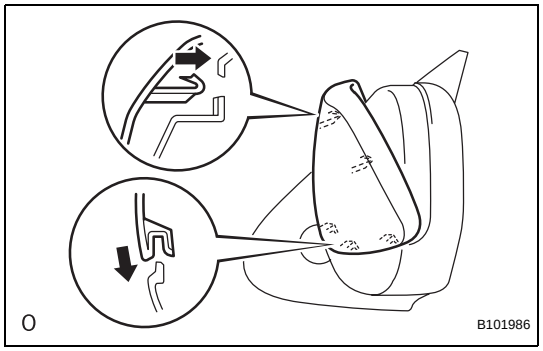

(a) Engage the claw on the lower part of the mirror cover.

(b) Engage the claw on the upper part of the mirror cover and install it.

(c) After installing the outer mirror cover, check that there are no gaps between the cover and the mirror body.

NOTICE:

If there is a gap between the cover and the mirror body, it may cause noise during driving.

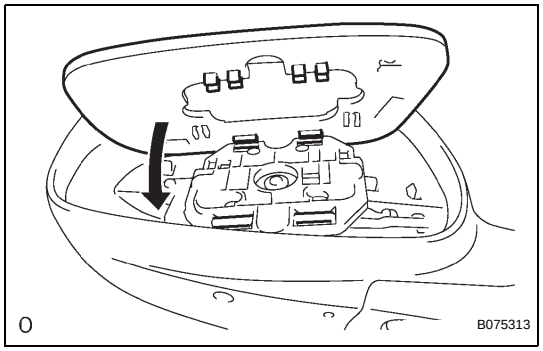

(d) Engage the 2 claws of the outer rear view mirror.

(e) Engage the 2 clips and install the mirror.

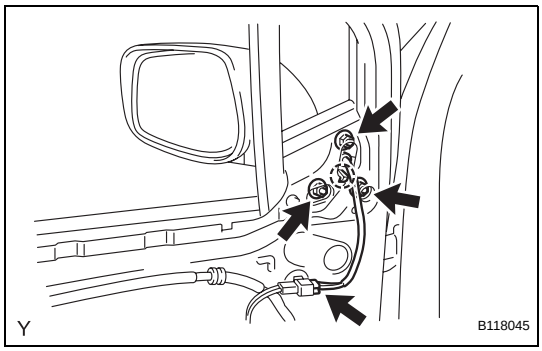

2. INSTALL OUTER REAR VIEW MIRROR ASSEMBLY

(a) Engage the claw, then install the outer rear view mirror with the 3 nuts.
Torque: 8.0 N*m (82 kgf*cm, 71 in.*lbf)

(b) w/ Power mirror:
Connect the connector.

3. INSTALL FRONT DOOR TRIM BOARD SUB-ASSEMBLY (See page ED-51)

4. INSTALL FRONT ARMREST BASE PANEL UPPER (w/ Power Window) (See page ED-53)

5. INSTALL FRONT ARMREST BASE PANEL UPPER (w/o Power Window) (See page ED-74)

6. INSTALL DOOR ARMREST COVER (See page ED-53)

7. INSTALL DOOR WINDOW REGULATOR HANDLE ASSEMBLY (w/o Power Window) (See page ED-75)

8. CONNECT CABLE TO NEGATIVE BATTERY TERMINAL
Torque: 5.4 N*m (55 kgf*cm, 48 in.*lbf)

OUTER MIRROR SWITCH (for Sedan)

COMPONENTS

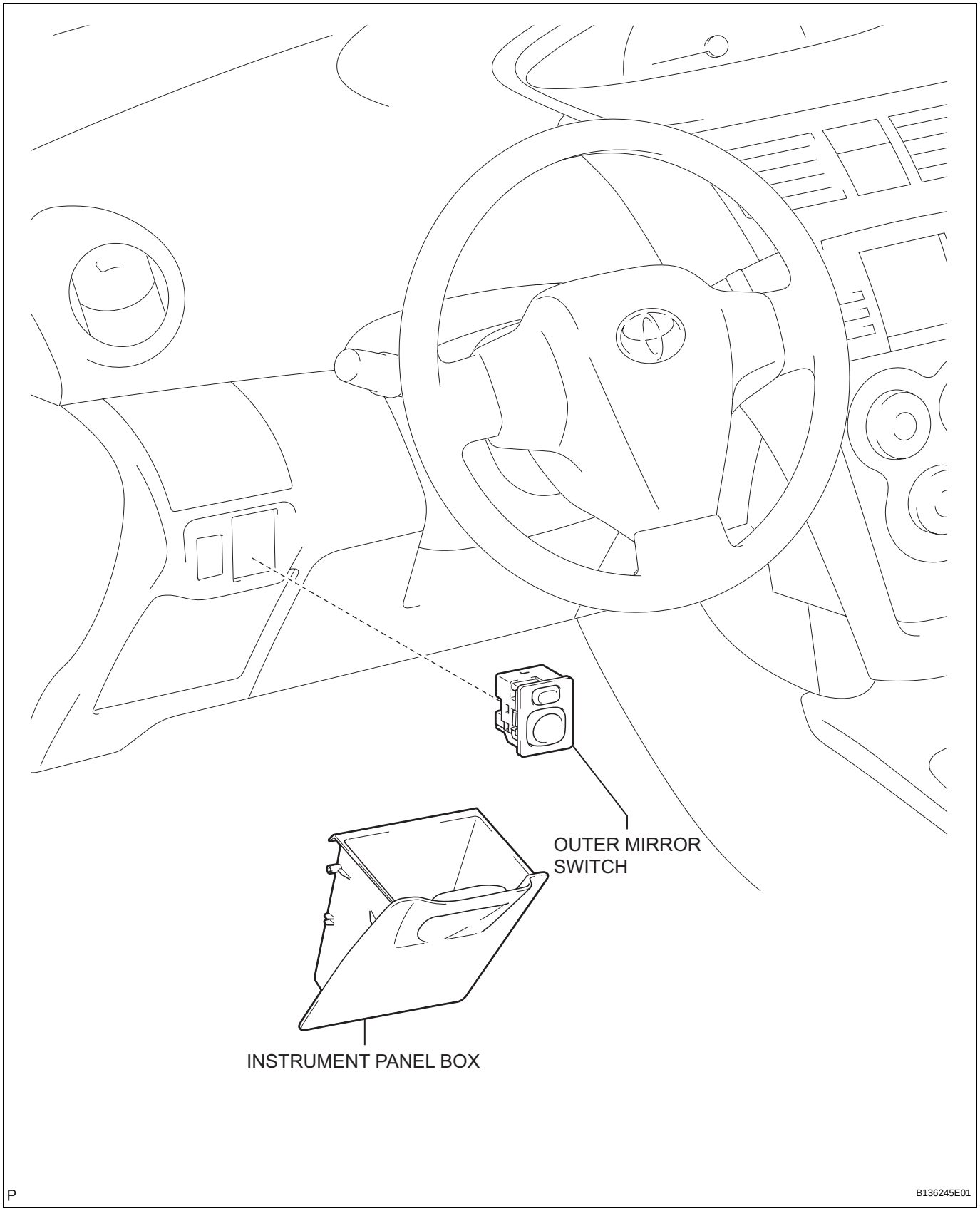

REMOVAL

1. DISCONNECT CABLE FROM NEGATIVE BATTERY TERMINAL

2. REMOVE INSTRUMENT PANEL BOX (See page IP-45)

3. REMOVE OUTER MIRROR SWITCH

(a) Disconnect the connector.

(b) Disengage the 2 claws and remove the outer mirror switch.

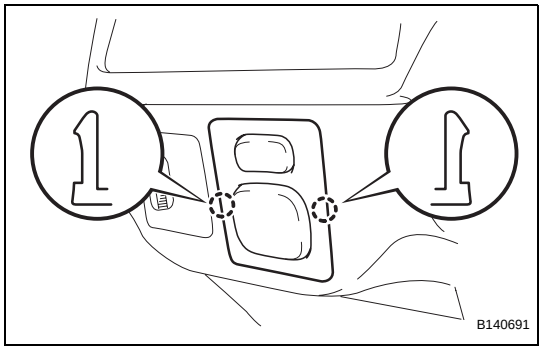

INSPECTION

1. INSPECT OUTER MIRROR SWITCH

(a) Check the resistance.

(1) Select L on the left/right adjustment switch.

(2) Using an ohmmeter, measure the resistance and check the results in accordance with the value(s) in the table below.

Standard Resistance

Tester Connection	Condition	Specified Condition
-	OFF	10 kΩ or higher
4 (VL) - 8 (B) 6 (M+) - 7 (E)	UP	Below 1 Ω
4 (VL) - 7 (E) 6 (M+) - 8 (B)	DOWN	Below 1 Ω
5 (HL) - 8 (B) 6 (M+) - 7 (E)	LEFT	Below 1 Ω
5 (HL) - 7 (E) 6 (M+) - 8 (B)	RIGHT	Below 1 Ω

If the result is not as specified, replace the outer mirror switch.

(3) Select R on the left/right adjustment switch.

(4) Using an ohmmeter, measure the resistance and check the results in accordance with the value(s) in the table below.

Standard Resistance

Tester Connection	Condition	Specified Condition
-	OFF	10 kΩ or higher
3 (VR) - 8 (B) 6 (M+) - 7 (E)	UP	Below 1 Ω
3 (VR) - 7 (E) 6 (M+) - 8 (B)	DOWN	Below 1 Ω
2 (HR) - 8 (B) 6 (M+) - 7 (E)	LEFT	Below 1 Ω
2 (HR) - 7 (E) 6 (M+) - 8 (B)	RIGHT	Below 1 Ω

If the result is not as specified, replace the outer mirror switch.

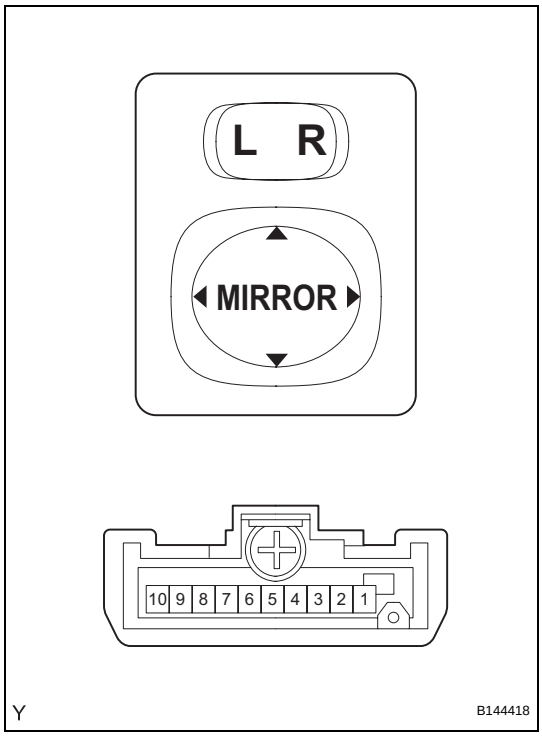

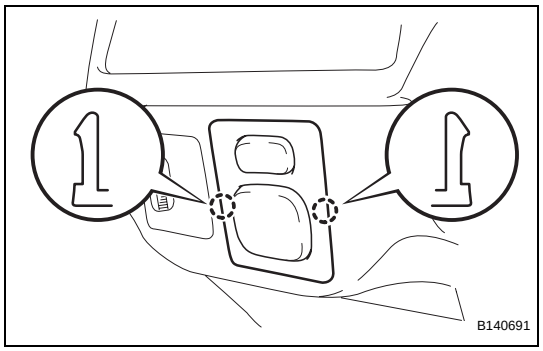

INSTALLATION

1. **INSTALL OUTER MIRROR SWITCH**
   (a) Engage the 2 claws and install the outer mirror switch.
   (b) Connect the connector.
2. **INSTALL INSTRUMENT PANEL BOX (See page IP-53)**
3. **CONNECT CABLE TO NEGATIVE BATTERY TERMINAL**
   Torque: 5.4 N*m (55 kgf*cm, 48 in.*lbf)

OUTER MIRROR SWITCH (for Hatchback)

COMPONENTS

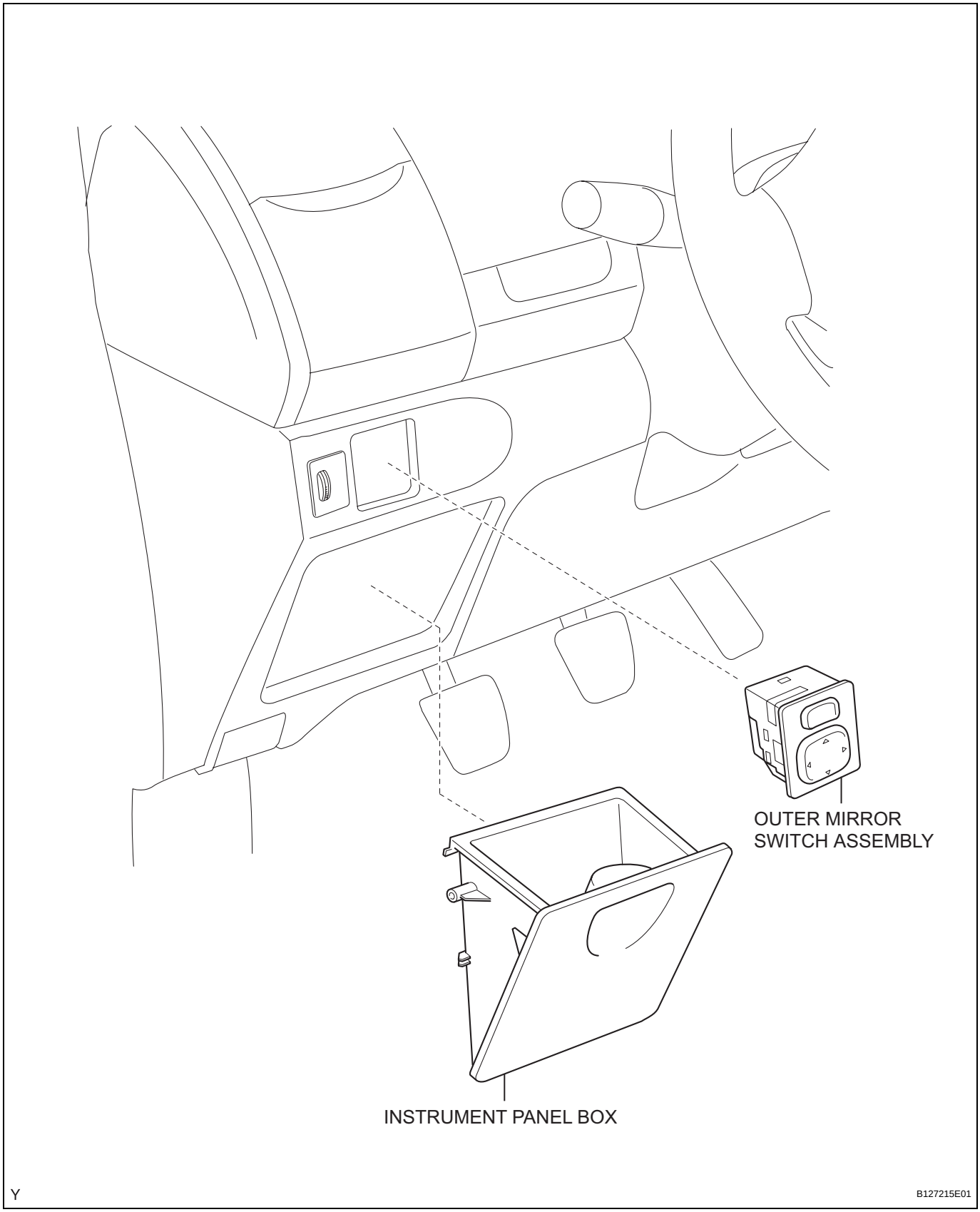

REMOVAL

1. DISCONNECT CABLE FROM NEGATIVE BATTERY TERMINAL

2. REMOVE INSTRUMENT PANEL BOX (See page IP-70)

3. REMOVE OUTER MIRROR SWITCH ASSEMBLY

(a) Disconnect the connector.

(b) Disengage the 2 claws and remove the outer mirror switch.

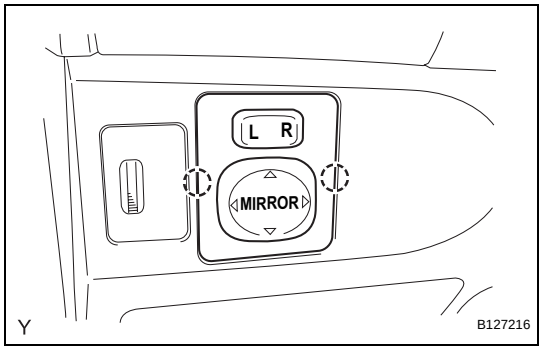

INSPECTION

1. INSPECT OUTER MIRROR SWITCH ASSEMBLY

(a) Check the resistance.

(1) Select L on the left/right adjustment switch.

(2) Using an ohmmeter, measure the resistance and check the results in accordance with the value(s) in the table below.

Standard Resistance

Tester Connection	Condition	Specified Condition
-	OFF	10 kΩ or higher
4 (VL) - 8 (B) 6 (M+) - 7 (E)	UP	Below 1 Ω
4 (VL) - 7 (E) 6 (M+) - 8 (B)	DOWN	Below 1 Ω
5 (HL) - 8 (B) 6 (M+) - 7 (E)	LEFT	Below 1 Ω
5 (HL) - 7 (E) 6 (M+) - 8 (B)	RIGHT	Below 1 Ω

If the result is not as specified, replace the outer mirror switch.

(3) Select R on the left/light adjustment switch.

(4) Using an ohmmeter, measure the resistance and check the results in accordance with the value(s) in the table below.

Standard Resistance

Tester Connection	Condition	Specified Condition
-	OFF	10 kΩ or higher
3 (VR) - 8 (B) 6 (M+) - 7 (E)	UP	Below 1 Ω
3 (VR) - 7 (E) 6 (M+) - 8 (B)	DOWN	Below 1 Ω
2 (HR) - 8 (B) 6 (M+) - 7 (E)	LEFT	Below 1 Ω
2 (HR) - 7 (E) 6 (M+) - 8 (B)	RIGHT	Below 1 Ω

If the result is not as specified, replace the outer mirror switch.

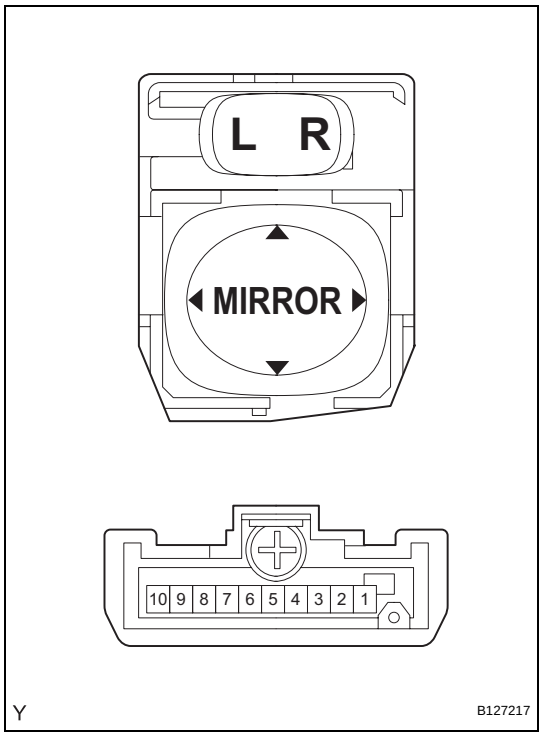

MI

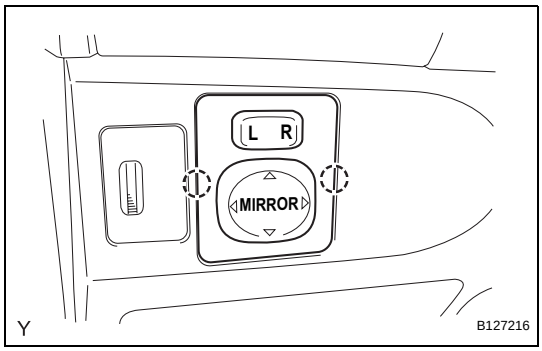

INSTALLATION

1. INSTALL OUTER MIRROR SWITCH ASSEMBLY

(a) Engage the 2 claws and install the outer mirror switch.

(b) Connect the connector.

2. INSTALL INSTRUMENT PANEL BOX (See page IP-78)

3. CONNECT CABLE TO NEGATIVE BATTERY TERMINAL
Torque: 5.4 N*m (55 kgf*cm, 48 in.*lbf)