IGNITION SYSTEM

IG0KF–02

ON–VEHICLE INSPECTION

NOTICE:

"Cold" and "Hot" in these sentences express the temperature of the coils and sensors themselves. "Cold" is from –10°C (14°F) to 50°C (122°F) and "Hot" is from 50°C (122°F) to 100°C (212°F).

1. INSPECT IGNITER AND SPARK TEST

Check that the spark occurs.

Disconnect the 6 injector connectors.

Remove the ignition coil (See page IG–7).

Remove the spark plug.

Install the spark plug to the ignition coil, and connect the ignition coil connector.

Ground the spark plug.

Check if spark occurs while engine is being cranked.

NOTICE:

To prevent excess fuel being injected from the injectors during this test, do not crank the engine for more 5 – 10 seconds at a time.

If the spark does not occur, do the test as follows:

SPARK TEST

↓ NO

CHECK CONNECTION OF IGNITION COIL AND IGNITER → BAD → Connect securely.

↓ OK

CHECK RESISTANCE OF HIGH–TENSION CORD (See step 2)
Maximum resistance: 25 kΩ per cord → BAD → Replace the cord(s).

↓ OK

CHECK POWER SUPPLY TO IGNITION COIL AND IGNITER
1. Turn ignition switch to ON.
2. Check that there is battery positive voltage at ignition coil positive (+) terminal.

→ BAD → Check wiring between ignition switch to ignition coil and igniter.

↓ OK

CHECK RESISTANCE OF IGNITION COIL (See step 4)

Resistance:	**Cold**	**Hot**
Primary	**0.33 – 0.52 Ω**	**0.42 – 0.61 Ω**
Secondary	**8.5 – 14.7 kΩ**	**10.8 – 17.2 kΩ**

→ BAD → Replace the ignition coil.

↓ OK

CHECK RESISTANCE OF CAMSHAFT POSITION SENSOR (See step 5)

Resistance:	**Cold**	**Hot**
	835 – 1,400 Ω	**1,060 – 1,645 Ω**

→ BAD → Replace the camshaft position sensor.

↓ OK

CHECK RESISTANCE OF CRANKSHAFT POSITION SENSOR (See step 6)

Resistance:	**Cold**	**Hot**
	1,630 – 2,740 Ω	**2,065 – 3,225 Ω**

→ BAD → Replace the crankshaft position sensor.

↓ OK

CHECK IGT SIGNAL FROM ENGINE ECU (See page DI–125) → BAD → Check wiring between ENGINE ECU and igniter, and then try another ENGINE ECU

↓ OK

TRY ANOTHER IGNITER

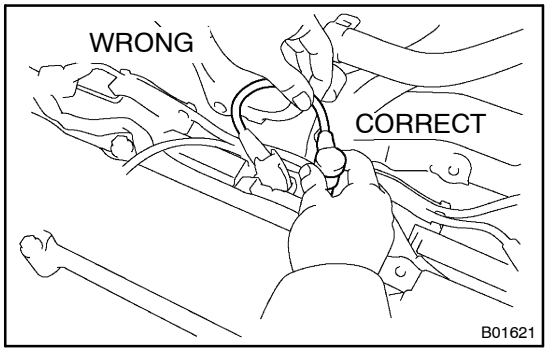

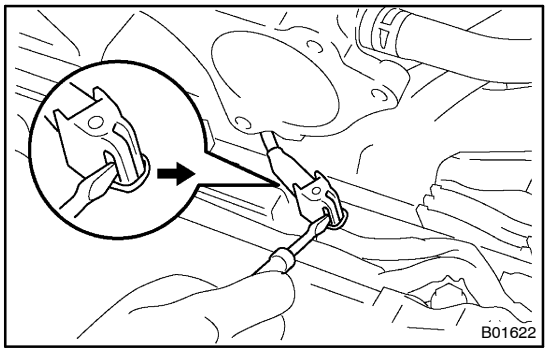

2. INSPECT HIGH–TENSION CORDS

(a) Remove the No.3 timing belt cover.

(b) Remove the throttle body gasket (See page IG–7).

(c) Disconnect the high–tension cord set from the spark plugs.
Disconnect the high–tension cords at the rubber boot.
DO NOT pull on the cords.

NOTICE:

Pulling on or bending the cords may damage the conductor inside.

(d) Disconnect the high–tension cord set from the ignition coils.
(1) Using a screwdriver, lift up the lock claw and disconnect the holder from the ignition coils.
(2) Disconnect the high–tension cord at the grommet.
DO NOT pull on the cord.

NOTICE:

- **Pulling on or bending the cords may damage the conductor inside.**
- **Do not wipe any of the oil from the grommet after the high–tension cord is disconnected.**

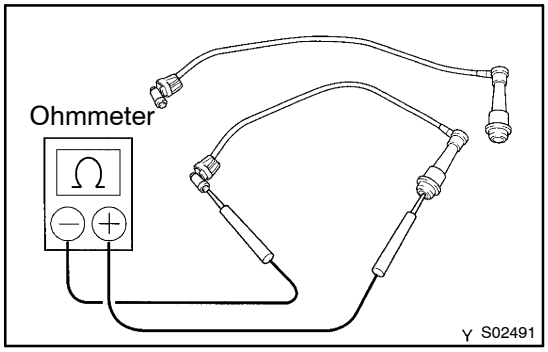

(e) Using an ohmmeter, measure the resistance.
Maximum resistance: 25 kΩ per cord

If the resistance is greater than the maximum, check the terminals. If necessary, replace the high–tension cord.

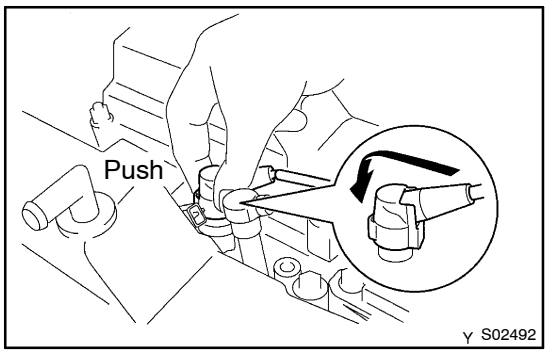

(f) Reconnect the high–tension cord set to the ignition coils.
(1) Assemble the holder and grommet.
(2) Align the spline of the ignition coil with the spline of the holder, and push in the cord.

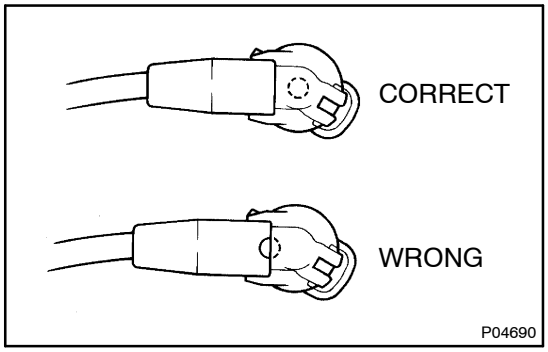

NOTICE:
Check that the holder is correctly installed to the grommet as shown in the illustration.

(3) Check that the lock claw of the holder is engaged by lightly pulling the holder.

(g) Reconnect the high–tension cord set to the spark plugs.

(h) Reinstall the throttle body gasket (See page IG–9).

(i) Reinstall the No. 3 timing belt cover.

3. INSPECT SPARK PLUGS

NOTICE:

- **Never use a wire brush for cleaning.**
- **Never attempt to adjust the electrode gap on used a spark plug.**

(a) Remove the ignition coils and high–tension cord set assembly (See page IG–7).

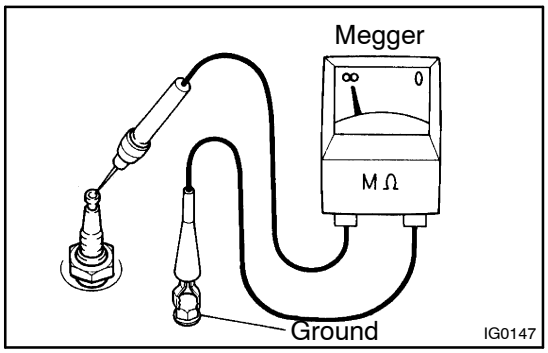

(b) Inspect the electrode.

- Using a megger (insulation resistance meter), measure the insulation resistance.

Standard correct insulation resistance:
10 MΩ or more

If the resistance is less than specified, proceed to step (d).

HINT:
If a megger is not available, the following simple method of inspection provides fairly accurate results.

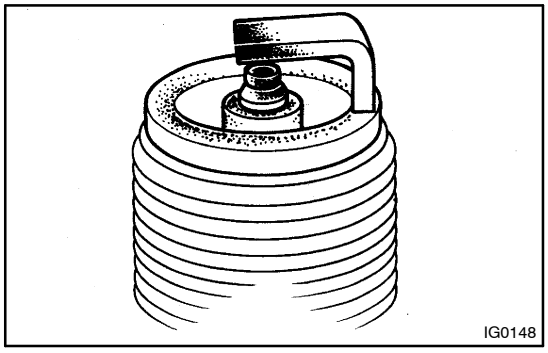

- Simple Method:
  - Quickly race the engine 5 times to 4,000 rpm.
  - Remove the spark plug. (See step c)
  - Visually check the spark plug.
    If the electrode is dry...OK
    If the electrode is wet...Proceed to step (d)
  - Reinstall the spark plug. (See step g)

(c) Using a 16 mm plug wrench, remove the 6 spark plugs.

(d) Visually check the spark plug for thread damage and insulator damage.

If abnormal, replace the spark plug.

Recommended spark plug:
DENSO made: SK16R–P11

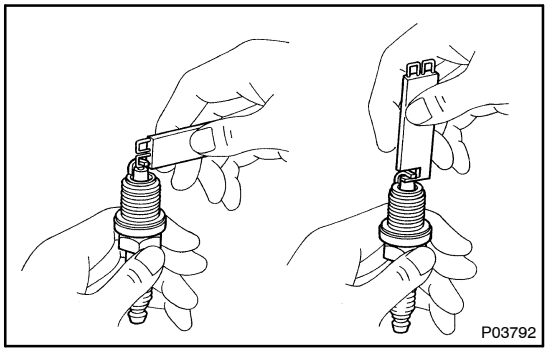

(e) Inspect the electrode gap.

Maximum electrode gap for used spark plug:
1.2 mm (0.047 in.)

If the gap is greater than maximum, replace the spark plug.

Correct electrode gap for new spark plug:
1.0 – 1.1 mm (0.039 – 0.043 in.)

NOTICE:

If adjusting the gap of a new spark plug, bend only the base of the ground electrode. Do not touch the tip. Never attempt to adjust the gap on the used plug.

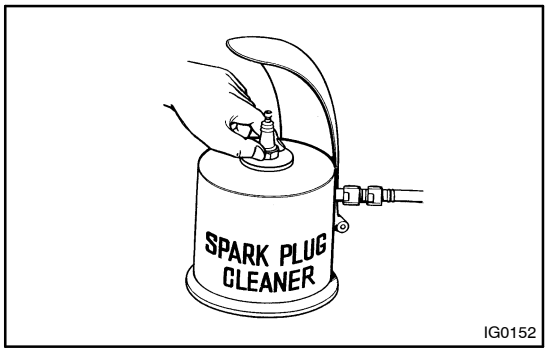

(f) Clean the spark plugs.

If the electrode has traces of wet carbon, allow it to dry and then clean with a spark plug cleaner.

Air pressure: Below 588 kPa (6 kgf/cm², 85 psi)
Duration: 20 seconds or less

HINT:

If there are traces of oil, remove it with gasoline before using the spark plug cleaner.

(g) Using a 16 mm plug wrench, reinstall the 6 spark plugs.

Torque: 18 N·m (180 kgf·cm, 13 ft·lbf)

(h) Reinstall the ignition coils and high–tension cord set assembly (See page IG–9).

4. INSPECT IGNITION COILS

(a) Remove the ignition coil assembly (See page IG–7).

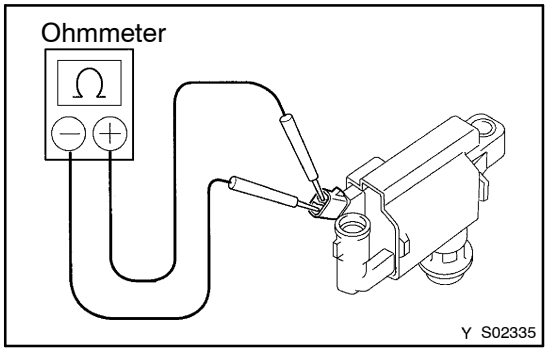

(b) Using an ohmmeter, measure the resistance between the positive (+) and negative (–) terminals.

Primary coil resistance:

Cold	0.33 – 0.52 Ω
Hot	0.42 – 0.61 Ω

If the resistance is not as specified, replace the ignition coil.

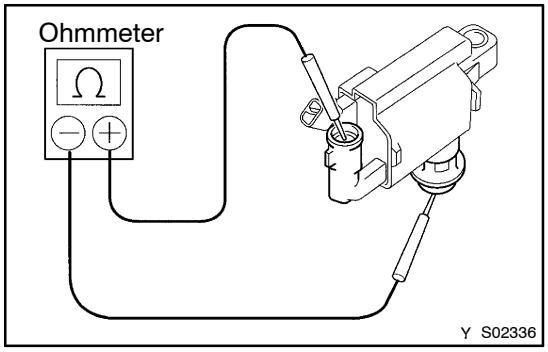

(c) Using an ohmmeter, measure the resistance between the positive (+) and high–tension terminal.

Secondary coil resistance:

Cold	8.5 – 14.7 kΩ
Hot	10.8 – 17.2 kΩ

If the resistance is not as specified, replace the ignition coil.

(d) Reinstall the ignition coil assembly (See page IG–9).

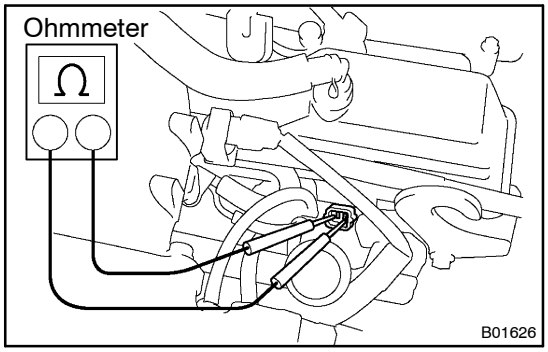

5. INSPECT CAMSHAFT POSITION SENSOR

(a) Disconnect the camshaft position sensor connector.

(b) Using an ohmmeter, measure the resistance between terminals.

Resistance:

Cold	835 – 1,400 Ω
Hot	1,060 – 1,645 Ω

If the resistance is not as specified, replace the camshaft position sensor.

(c) Reconnect the camshaft position sensor connector.

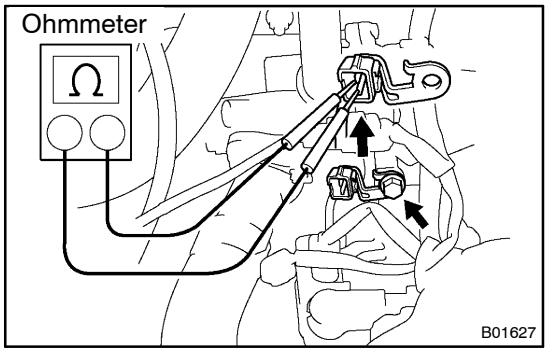

6. INSPECT CRANKSHAFT POSITION SENSOR

(a) Disconnect the crankshaft position sensor connector.

(b) Remove the bolt holding the connector bracket to the water pump.

(c) Using an ohmmeter, measure the resistance between terminals.

Resistance:

Cold	1,630 – 2,740 Ω
Hot	2,065 – 3,225 Ω

If the resistance is not as specified, replace the sensor.

(d) Reinstall the bolt holding the connector bracket to the water pump.

(e) Reconnect the crankshaft position sensor connector.

IGNITION COIL

COMPONENTS

IG05T–06

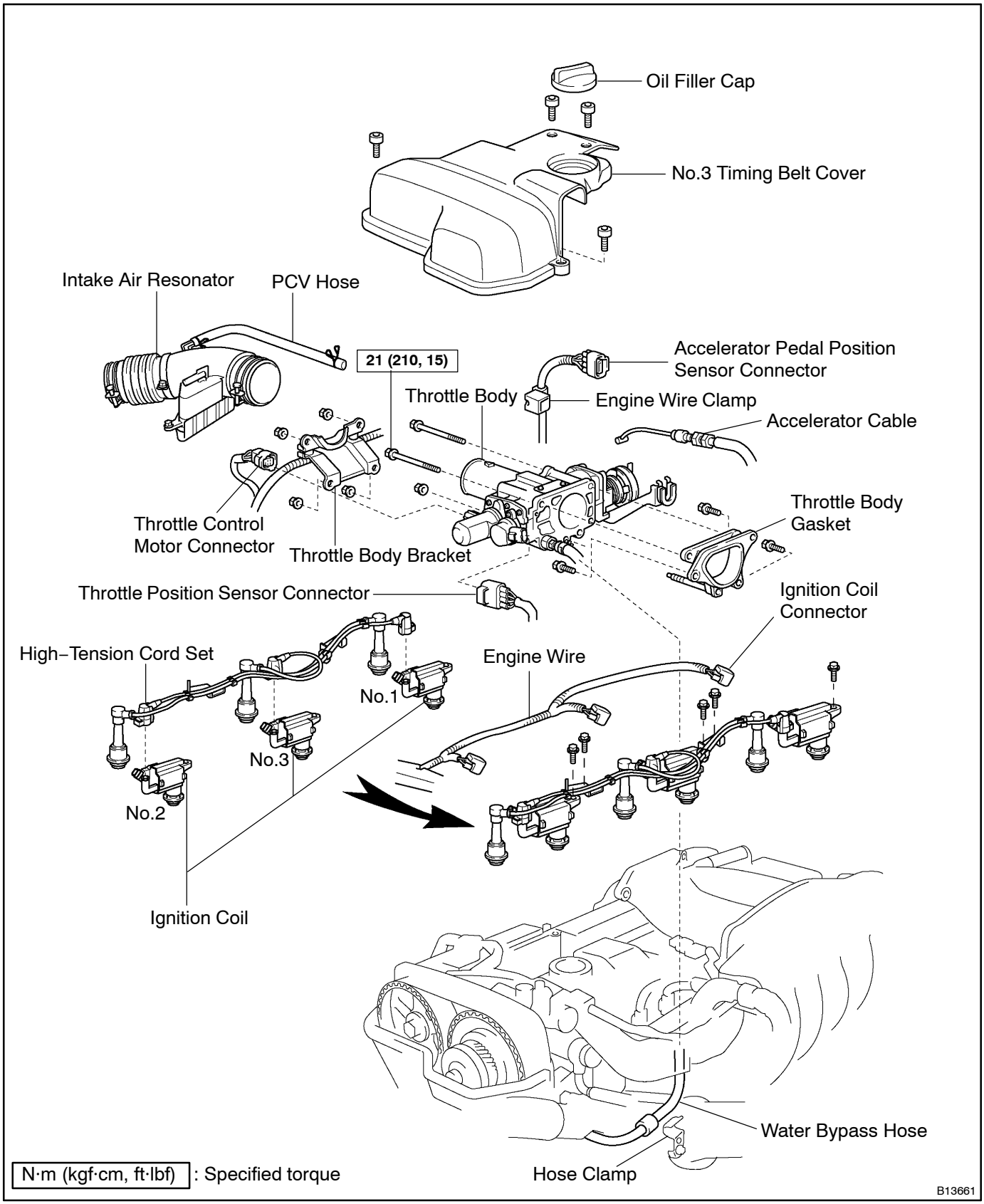

IG05U–05

REMOVAL

1. REMOVE INTAKE AIR RESONATOR

2. REMOVE NO.3 TIMING BELT COVER

Using a 5 mm hexagon wrench, remove the 4 bolts, oil filler cap, No.3 timing belt cover and gasket.

3. DISCONNECT THROTTLE BODY FROM INTAKE AIR CONNECTOR WITHOUT DISCONNECTING WATER BYPASS HOSES

(a) Disconnect the accelerator cable.

(b) Disconnect the throttle position sensor connector.

(c) Disconnect the throttle control motor connector.

(d) Disconnect the accelerator pedal position sensor connector.

(e) Disconnect the engine wire clamp from the clamp bracket of the throttle body.

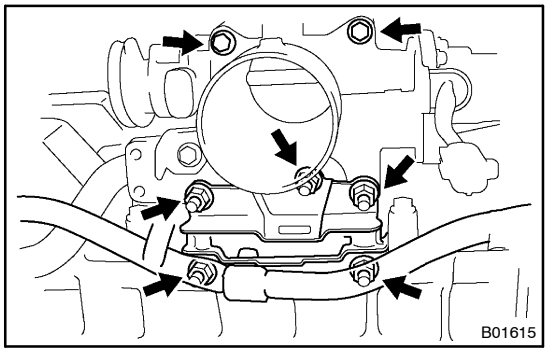

(f) Remove the 2 bolts and nut holding the throttle body to the intake air connector.
Torque: 21 N·m (210 kgf·cm, 15 ft·lbf)

(g) Remove the 4 nuts and the throttle body bracket.
Torque: 21 N·m (210 kgf·cm, 15 ft·lbf)

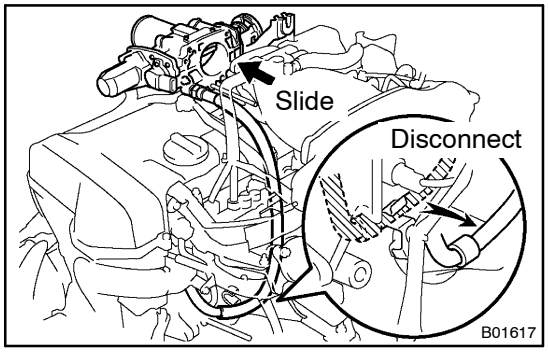

(h) Disconnect the water bypass hose from the hose clamp on the oil filter bracket.

(i) Slightly slide the throttle body away from the intake air connector.

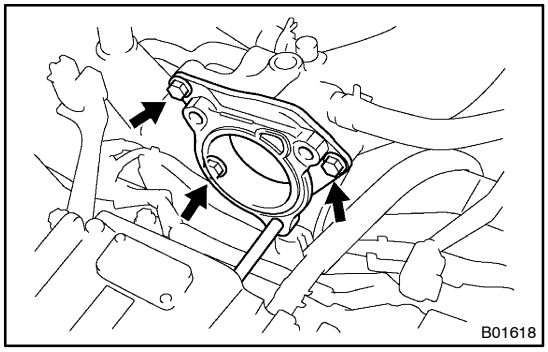

4. REMOVE THROTTLE BODY GASKET

Remove the 3 bolts and throttle body gasket.
Torque: 21 N·m (210 kgf·cm, 15 ft·lbf)

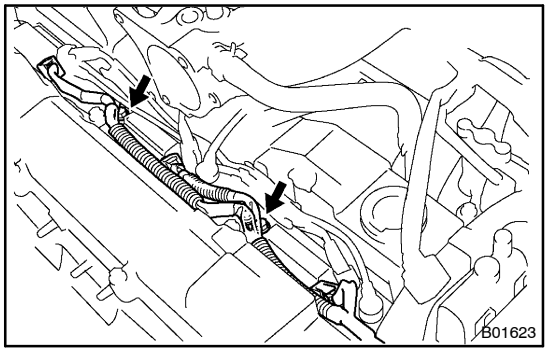

5. REMOVE IGNITION COILS AND HIGH – TENSION CORDS SET ASSEMBLY

(a) Disconnect the 3 connectors from the ignition coils.

(b) Remove the 2 bolts, and disconnect the clamps from the engine wire.

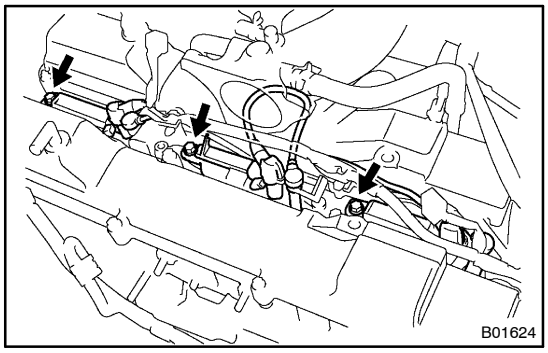

(c) Remove the 3 bolts, the ignition coils and high – tension cord set assembly.
Torque: 8.0 N·m (80 kgf·cm, 71 in.·lbf)

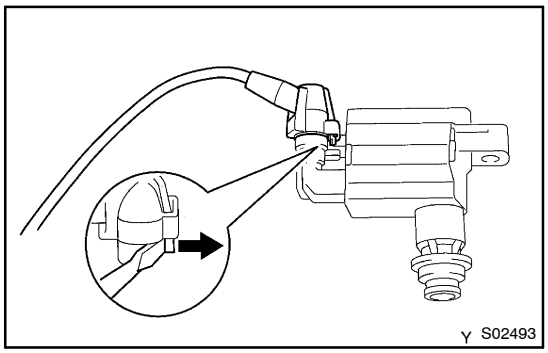

6. REMOVE IGNITION COILS FROM HIGH – TENSION CORD SET

IG0LN–01

INSTALLATION

Installation is in the reverse order of removal (See page IG–7).

CAMSHAFT POSITION SENSOR

IG05V–06

COMPONENTS

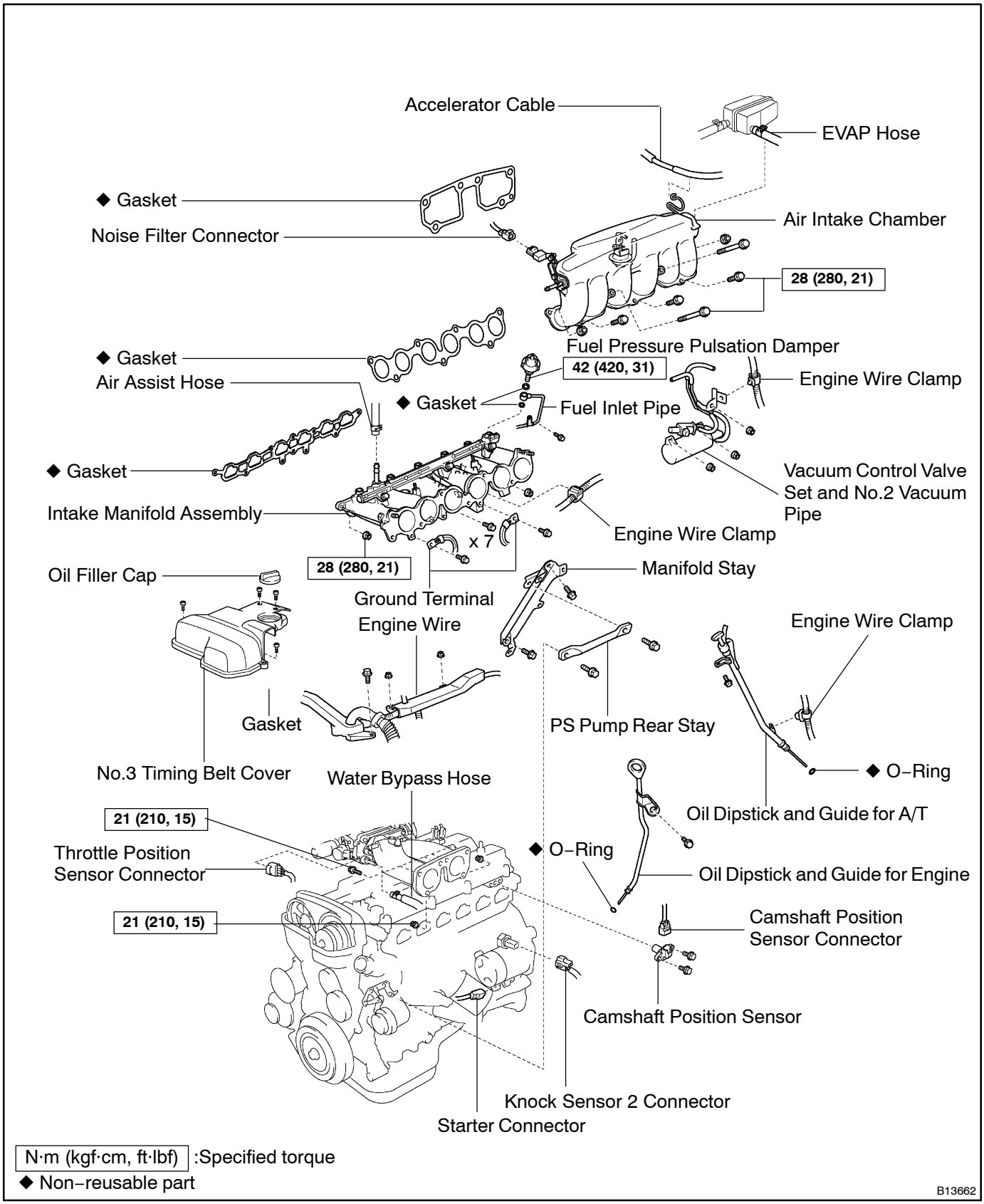

IG05W–05

REMOVAL

1. DRAIN ENGINE COOLANT

2. REMOVE OIL DIPSTICK AND GUIDE FOR ENGINE (See page EM–64)

3. REMOVE OIL DIPSTICK AND GUIDE FOR A/T (See page EM–64)

4. REMOVE AIR INTAKE CHAMBER (See page FI–46)

5. REMOVE VACUUM CONTROL VALVE SET AND NO.2 VACUUM PIPE (See page EM–34)

6. REMOVE NO.3 TIMING BELT COVER

7. DISCONNECT HOSES AND ENGINE WIRE

(a) Disconnect the air assist hose from the intake manifold.

(b) Disconnect the water bypass hose (from the water outlet) from the throttle body.

(c) Disconnect the 2 ground terminals from the intake manifold.

HINT:
At time of the installation, please refer to the following item. Tighten so that each calking part should inside.

(d) Disconnect the throttle position sensor connector.

(e) Disconnect the 6 injector connectors.

(f) Disconnect the camshaft position sensor connector.

(g) Disconnect the knock sensor 2 connector.

(h) Disconnect the starter connector.

(i) Disconnect the engine wire clamp from the clamp bracket on the intake manifold.

(j) Remove the 3 nuts, and disconnect the engine wire protector from the intake manifold.

8. REMOVE FUEL PRESSURE PULSATION DAMPER (See page FI–26)

9. REMOVE PS PUMP REAR STAY
Torque: 39.2 N·m (400 kgf·cm, 29 ft·lbf)

10. REMOVE INTAKE MANIFOLD ASSEMBLY (See page EM–53)

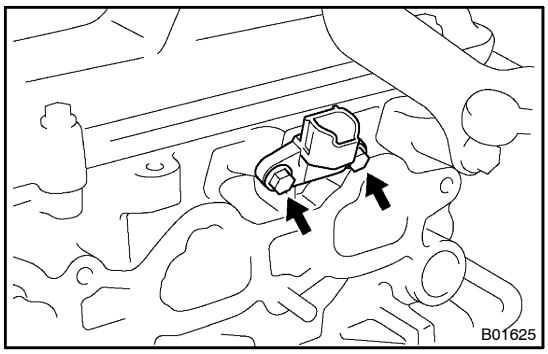

11. REMOVE CAMSHAFT POSITION SENSOR

Remove the 2 bolts and camshaft position sensor.
Torque: 9.0 N·m (90 kgf·cm, 80 in.·lbf)

IG05X–01

INSTALLATION

Installation is in the reverse order of removal (See page IG–11).

CRANKSHAFT POSITION SENSOR

COMPONENTS

IG060–07

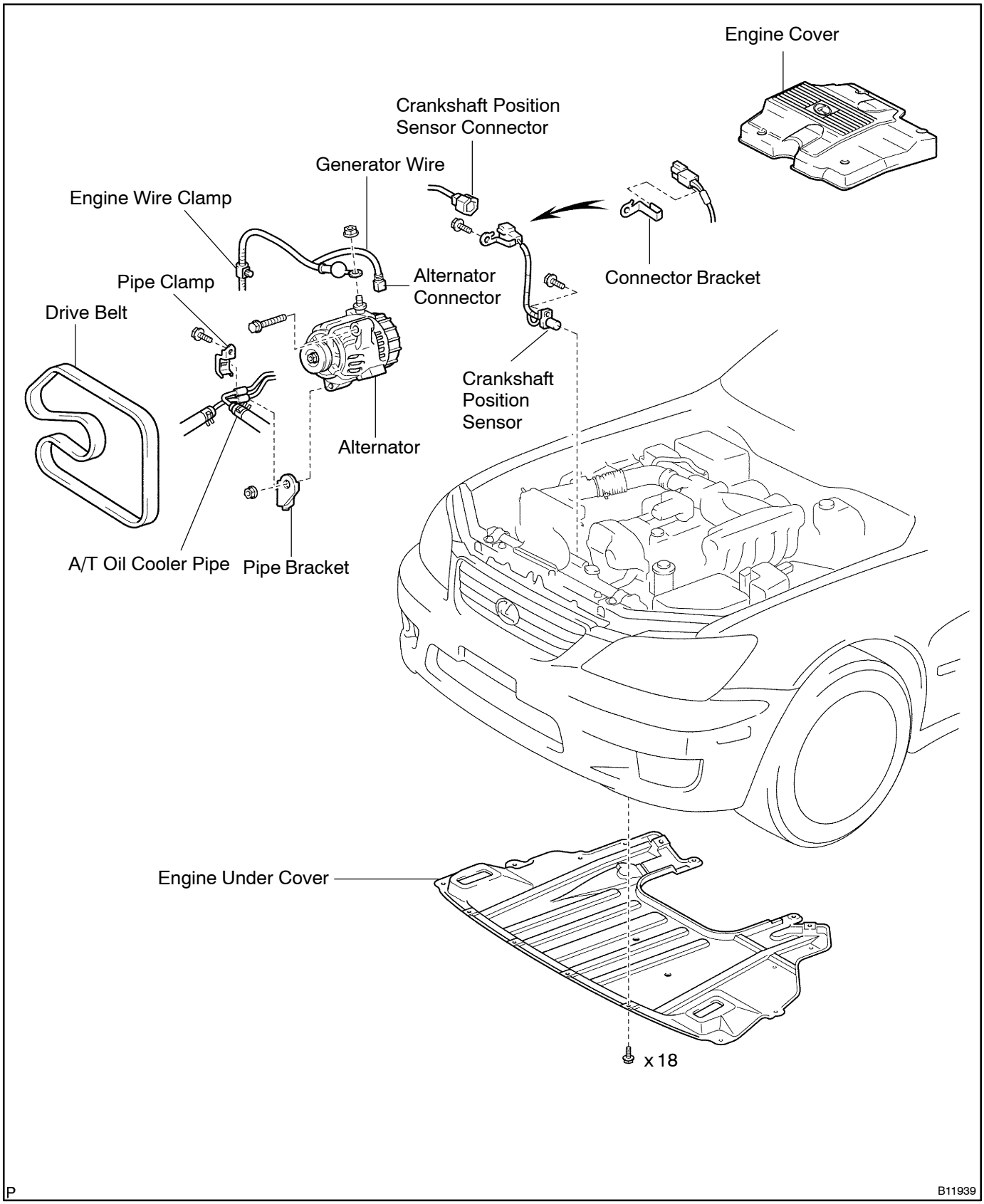

IG05Y–07

REMOVAL

1. REMOVE ALTERNATOR (See page CH–6)

2. DISCONNECT CRANKSHAFT POSITION SENSOR CONNECTOR

(a) Disconnect the sensor connector.

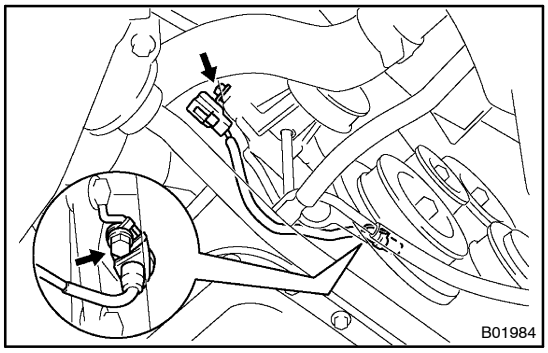

(b) Remove the bolt holding the connector bracket to the water pump.

3. REMOVE CRANKSHAFT POSITION SENSOR

(a) Remove the bolt and crankshaft position sensor.
Torque: 9.0 N·m (90 kgf·cm, 80 in.·lbf)

(b) Remove the connector bracket from the connector.

IG05Z–05

INSTALLATION

Installation is in the reverse order of removal (See page IG–14).