COOLING FAN SYSTEM

PARTS LOCATION

ILLUSTRATION

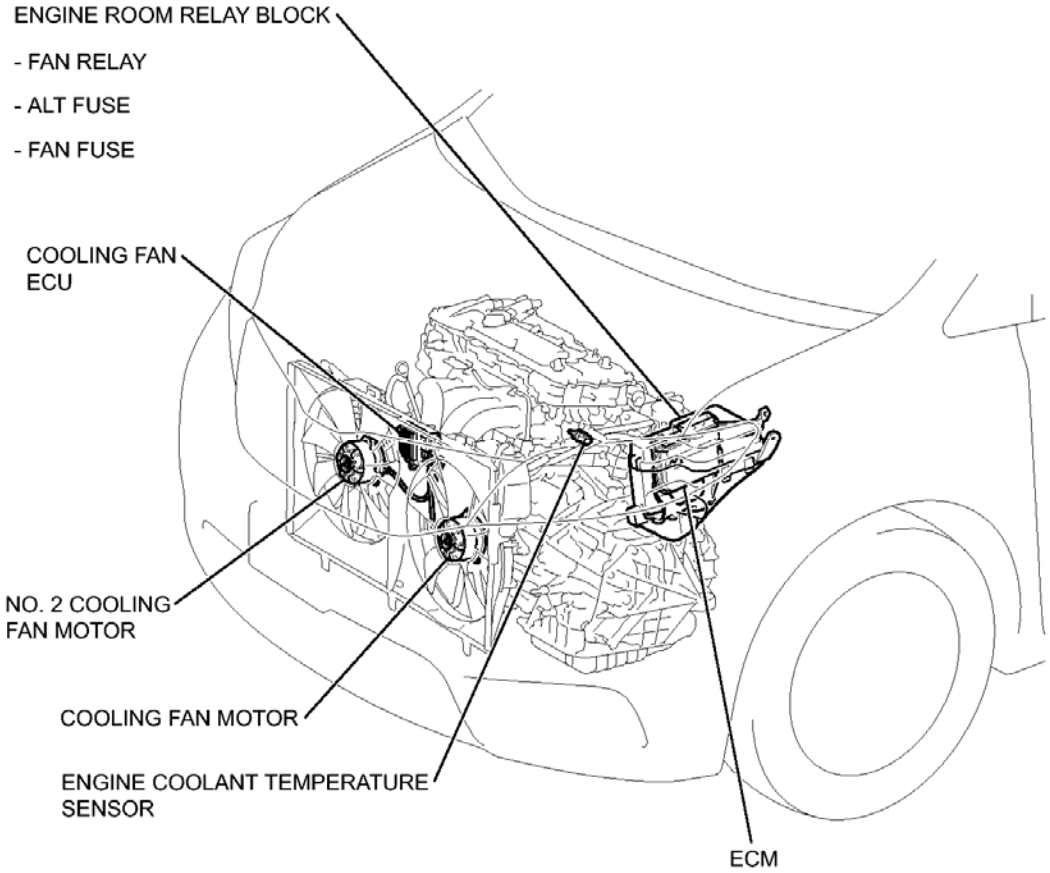

P

Fig. 1: Cooling Fan System Components Location (1 Of 2)
Courtesy of TOYOTA MOTOR SALES, U.S.A., INC.

ILLUSTRATION

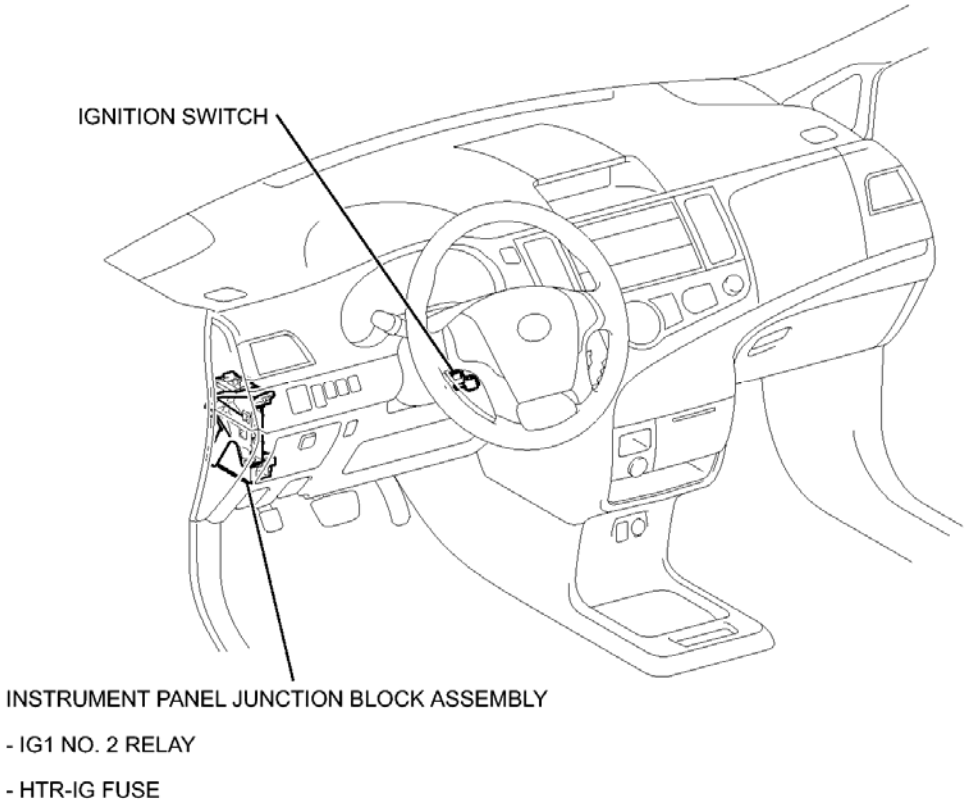

T

Fig. 2: Cooling Fan System Components Location (2 Of 2)
Courtesy of TOYOTA MOTOR SALES, U.S.A., INC.

SYSTEM DIAGRAM

SYSTEM DIAGRAM

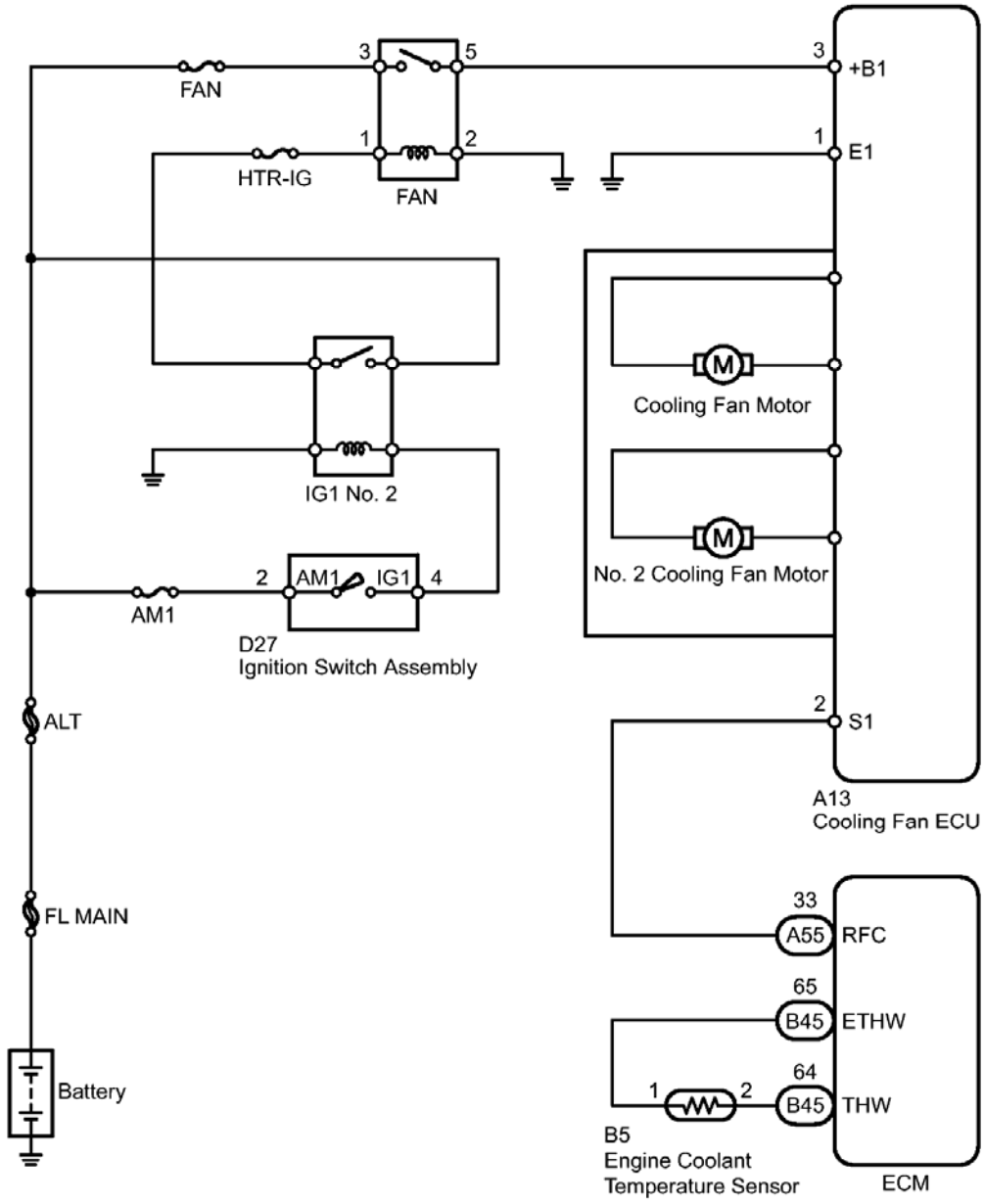

P

Fig. 3: Cooling Fan System Circuit Diagram
Courtesy of TOYOTA MOTOR SALES, U.S.A., INC.

PROBLEM SYMPTOMS TABLE

PROBLEM SYMPTOMS TABLE

HINT:

- Use the table below to help determine the cause of problem symptoms. If multiple suspected areas are listed, the potential causes of the symptoms are listed in order of probability in the "Suspected Area" column of the table. Check each symptom by checking the suspected areas in the order they are listed. Replace parts as necessary.
- Inspect the fuses and relays related to this system before inspecting the suspected areas below.

COOLING FAN SYSTEM

Symptom	Suspected Area	See
Cooling fans do not operate	Engine coolant temperature sensor	Refer to **INSPECTION**
	Cooling fan motor	Refer to **ON-VEHICLE INSPECTION**
	No. 2 Cooling fan motor	Refer to **ON-VEHICLE INSPECTION**
	Cooling fan relay (FAN)	Refer to **ON-VEHICLE INSPECTION**
	Cooling fan circuit	Refer to **Cooling Fan Circuit**
	ECM	Refer to **REMOVAL**
Cooling fans do not stop (continue to operate)	Engine coolant temperature sensor	Refer to **INSPECTION**
	Cooling fan circuit	Refer to **Cooling Fan Circuit**
	Cooling fan ECU	Refer to **ON-VEHICLE INSPECTION**
	ECM	Refer to **REMOVAL**
Cooling fan speed does not change	Cooling fan circuit	Refer to **Cooling Fan Circuit**
	ECM	Refer to **REMOVAL**

ON-VEHICLE INSPECTION

ON-VEHICLE INSPECTION

1. **INSPECT COOLING FAN SYSTEM**
   a. Connect the Techstream to the DLC3.
   b. Turn the ignition switch to ON.
   c. Turn the Techstream on.
   d. Enter the following menus: Powertrain / Engine / Active Test / Control the Electric Cooling Fan.
   e. Check operation of the cooling fans while operating them using the Techstream.

   If the cooling fans do not operate, check the cooling fan circuit. Refer to **Cooling Fan Circuit**.

CIRCUIT TESTS

Cooling Fan Circuit

DESCRIPTION

The ECM calculates an appropriate cooling fan speed based on the engine coolant temperature, air conditioning switch condition, refrigerant pressure, engine speed, and vehicle speed and sends the signals to the cooling fan

ECU to regulate the cooling fans. The cooling fan ECU controls the cooling fan speed based on the duty ratio signal sent from the ECM. By basing its control on the operating conditions, the ECM can control the fan speed optimally using the cooling fan ECU, achieving both high cooling performance and quietness. The cooling fan speed is determined based on engine coolant temperature, air conditioner operating conditions, engine speed, and vehicle speed.

WIRING DIAGRAM

Refer to System Diagram. Refer to **SYSTEM DIAGRAM**.

INSPECTION PROCEDURE

NOTE: Inspect the fuses for circuits related to this system before performing the following inspection procedure.

PROCEDURE

1. **PERFORM ACTIVE TEST USING TECHSTREAM (CONTROL THE COOLING FAN)**
   a. Connect the Techstream to the DLC3.
   b. Turn the ignition switch to ON.
   c. Turn the Techstream on.
   d. Enter the following menus: Powertrain / Engine / Active Test / Control the Electric Cooling Fan.
   e. Check the operation of the cooling fans while operating them using the Techstream.

   OK

Techstream Operation	Specified Condition
ON	Cooling fans operated
OFF	Cooling fans stopped

RESULT

Result	Proceed to
OK	A
NG (Cooling fans do not operate)	B
NG	

(Cooling fans do not stop)	C

B --> See step 2

C --> See step 10

A --> See step 11

2. **INSPECT COOLING FAN MOTOR (COOLING FAN MOTOR AND NO. 2 COOLING FAN MOTOR)**
   a. Disconnect the cooling fan motor and No. 2 cooling fan motor connectors.

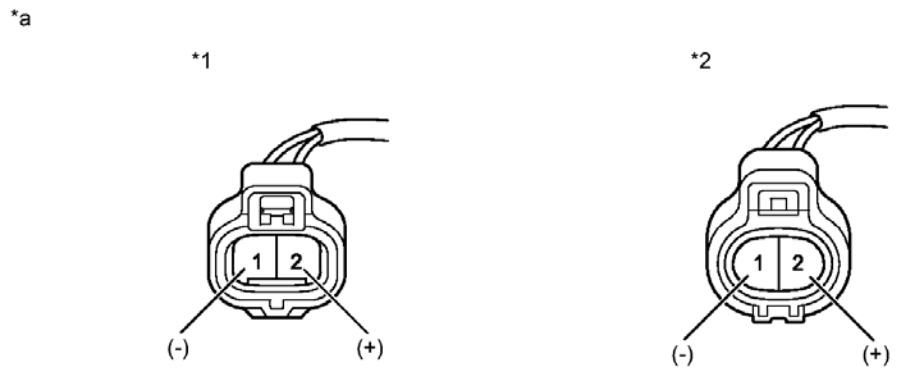

Fig. 4: Inspecting Cooling Fan Motor (Cooling Fan Motor And No. 2 Cooling Fan Motor)
Courtesy of TOYOTA MOTOR SALES, U.S.A., INC.

TEXT IN ILLUSTRATION

*1	Cooling Fan Motor	*2	No. 2 Cooling Fan Motor
*a	Front view of wire harness connector (to Cooling Fan ECU)	-	-

   b. Connect a positive (+) battery lead to each terminal 2 of the cooling fan motor and No. 2 cooling fan motor connectors, and connect a negative (-) battery lead to each terminal 1 of the cooling fan

motor and No. 2 cooling fan motor connectors.

OK

The cooling fan motor and No. 2 cooling fan motors operate.

RESULT

Result	Proceed to
OK	A
NG (cooling fan motor)	B
NG (No. 2 cooling fan motor)	C

B --> See step 12

C --> See step 13

A: Go to next step

3. **CHECK HARNESS AND CONNECTOR (COOLING FAN ECU POWER SOURCE)**
   a. Disconnect the cooling fan ECU connector.

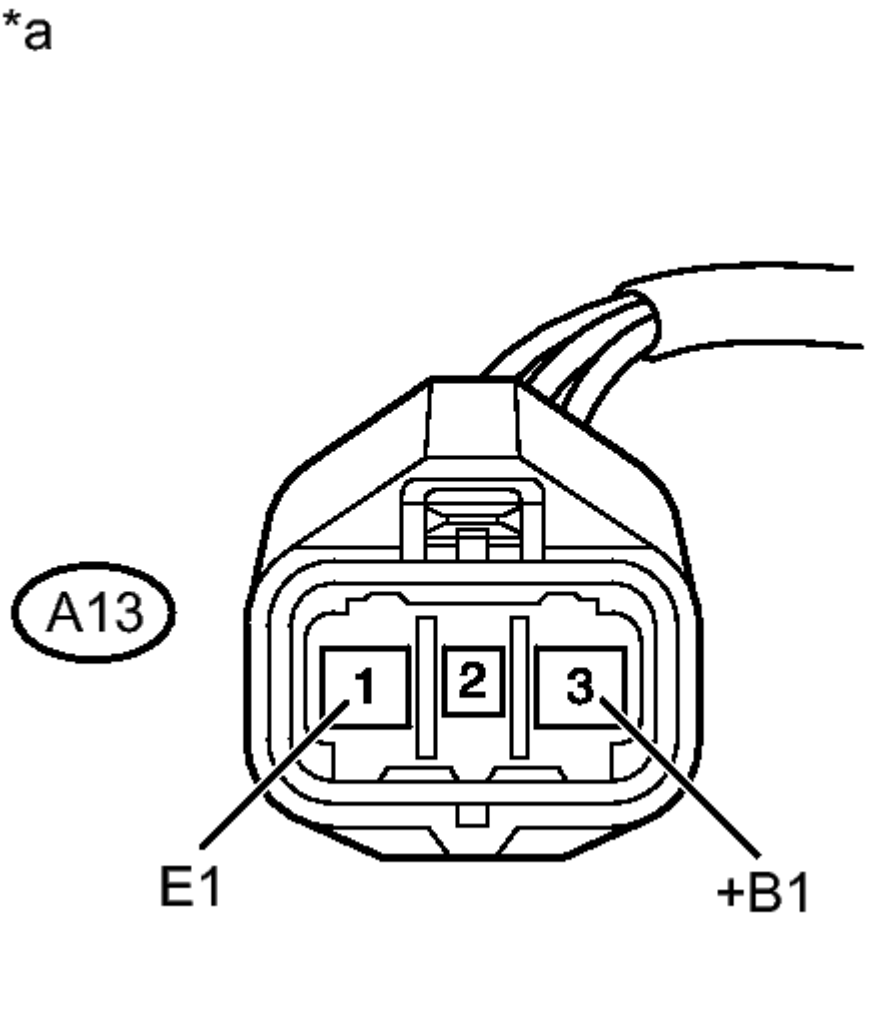

Fig. 5: Measuring Voltage Of Cooling Fan ECU
Courtesy of TOYOTA MOTOR SALES, U.S.A., INC.

TEXT IN ILLUSTRATION

*a	Front view of wire harness connector (to Cooling Fan ECU)

b. Turn the ignition switch to ON.

c. Measure the voltage according to the value(s) in the table below.

Standard Voltage

Tester Connection	Switch Condition	Specified Condition
A13-3 (+B1) - A13-1 (E1)	Ignition switch ON	11 to 14 V

d. Reconnect the cooling fan ECU connector.

NG --> See step 5

OK: Go to next step

4. **CHECK HARNESS AND CONNECTOR (ECM - COOLING FAN ECU)**
   a. Disconnect the ECM connector.

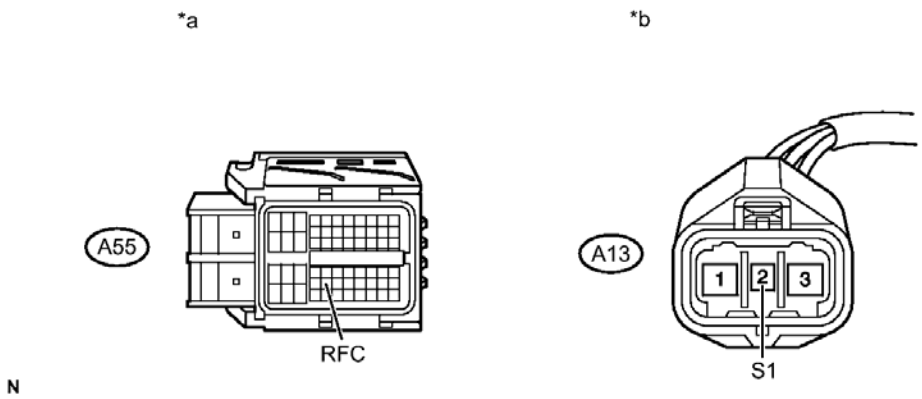

Fig. 6: Checking Harness And Connector (ECM - Cooling Fan ECU)
Courtesy of TOYOTA MOTOR SALES, U.S.A., INC.

TEXT IN ILLUSTRATION

*a	Front view of wire harness connector (to ECM)	*b	Front view of wire harness connector (to Cooling Fan ECU)

   b. Disconnect the cooling fan ECU connector.
   c. Measure the resistance according to the value(s) in the table below.

Standard Resistance (Check for Short)

Tester Connection	Condition	Specified Condition
A55-33 (RFC) or A13-2 (S1) - Body ground	Always	10 kohms or higher

d. Reconnect the cooling fan ECU connector.
e. Reconnect the ECM connector.

NG --> REPAIR OR REPLACE HARNESS OR CONNECTOR

OK --> REPLACE COOLING FAN ECU

5. **CHECK HARNESS AND CONNECTOR (COOLING FAN ECU - BODY GROUND)**
   a. Disconnect the cooling fan ECU connector.

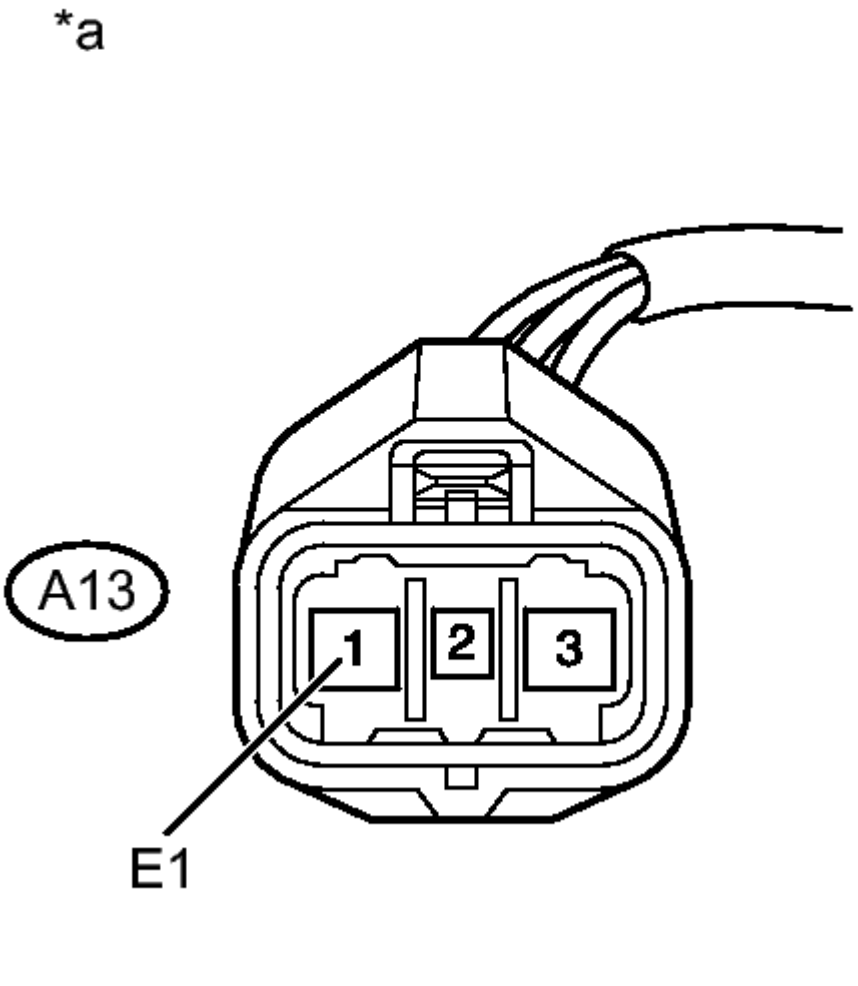

Fig. 7: Measuring Resistance Of Cooling Fan ECU
Courtesy of TOYOTA MOTOR SALES, U.S.A., INC.

TEXT IN ILLUSTRATION

*a	Front view of wire harness connector (to Cooling Fan ECU)

b. Measure the resistance according to the value(s) in the table below.

Standard Resistance (Check for Open)

Tester Connection	Condition	Specified Condition
A13-1 (E1) - Body ground	Always	Below 1 ohms

c. Reconnect the cooling fan ECU connector.

NG --> REPAIR OR REPLACE HARNESS OR CONNECTOR

OK: Go to next step

6. **INSPECT RELAY (FAN)**
   a. Remove the FAN relay from the engine room relay block.

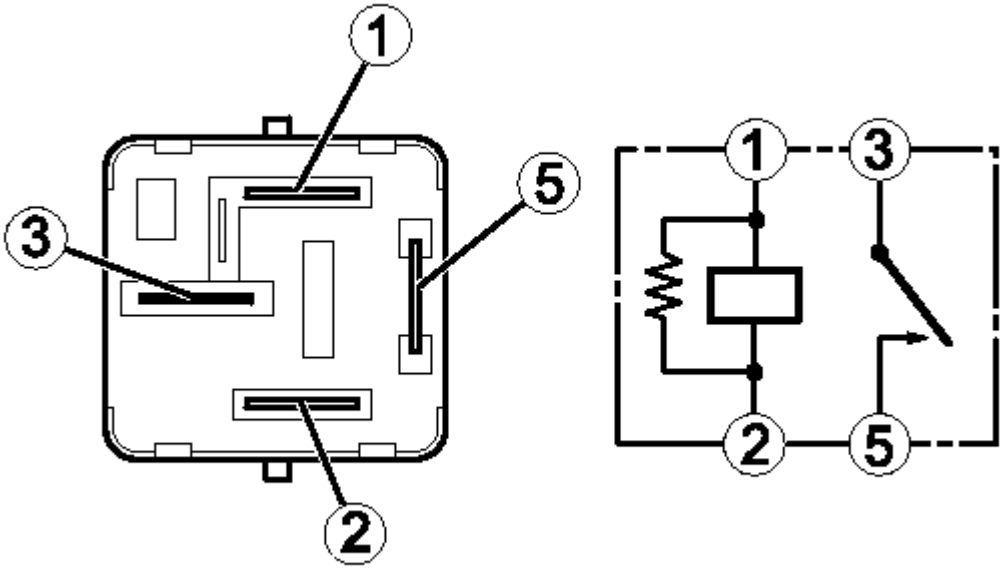

Fig. 8: Inspecting Fan No. 1 Relay
Courtesy of TOYOTA MOTOR SALES, U.S.A., INC.

b. Measure the resistance according to the value(s) in the table below.

Standard Resistance

Tester Connection	Condition	Specified Condition

3 - 5	Battery voltage not applied	10 kohms or higher
3 - 5	Battery voltage applied to terminals 1 and 2	Below 1 ohms

c. Reinstall the FAN relay.

NG --> REPLACE RELAY (FAN RELAY)

OK: Go to next step

7. **CHECK HARNESS AND CONNECTOR (FAN RELAY POWER SOURCE)**
   a. Remove the FAN relay from the engine room relay block.

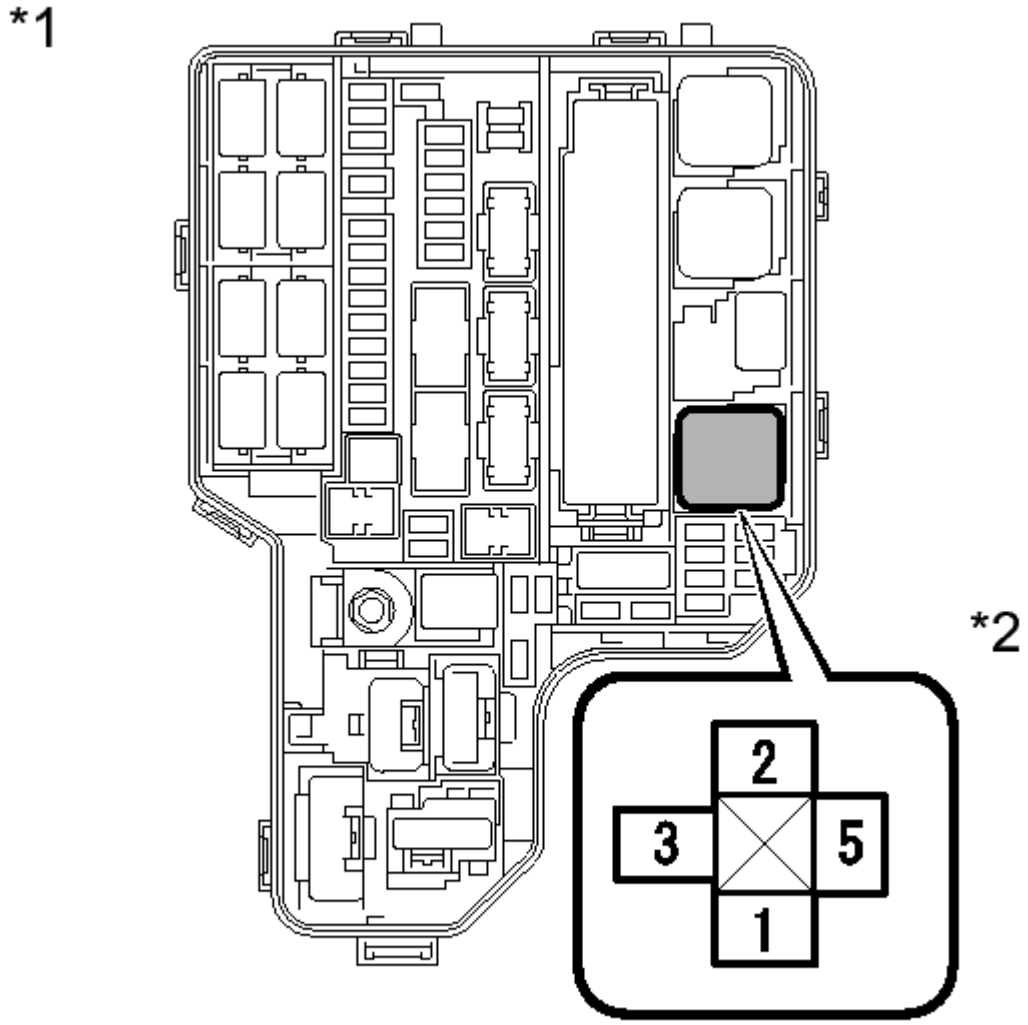

P

Fig. 9: Identifying FAN Relay At Engine Room Relay Block
Courtesy of TOYOTA MOTOR SALES, U.S.A., INC.

TEXT IN ILLUSTRATION

*1	Engine Room Relay Block
*2	FAN Relay Holder

b. Measure the voltage according to the value(s) in the table below.

Standard Voltage

Tester Connection	Condition	Specified Condition
3 (FAN relay holder) - Body ground	Always	11 to 14 V

c. Reinstall the FAN relay.

NG --> REPAIR OR REPLACE HARNESS OR CONNECTOR (FAN RELAY - BATTERY)

OK: Go to next step

8. **CHECK HARNESS AND CONNECTOR (COOLING FAN ECU - FAN RELAY)**
   a. Remove the FAN relay from the engine room relay block.

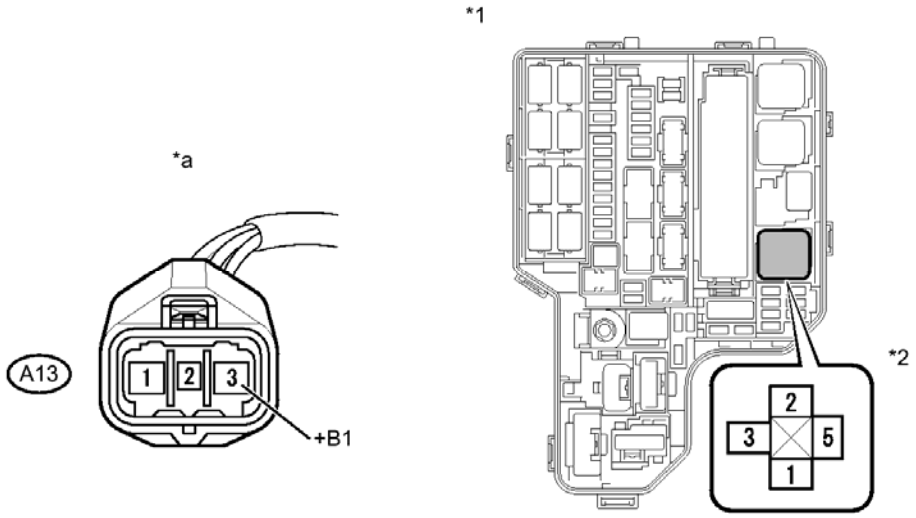

P

Fig. 10: Checking Harness And Connector (Cooling Fan ECU - Fan Relay)
Courtesy of TOYOTA MOTOR SALES, U.S.A., INC.

TEXT IN ILLUSTRATION

*1	Engine Room Relay Block	*2	FAN Relay Holder
	Front view of wire harness		

*a	connector (to Cooling Fan ECU)	-	-

b. Disconnect the cooling fan ECU connector.
c. Measure the resistance according to the value(s) in the table below.

Standard Resistance (Check for Open)

Tester Connection	Condition	Specified Condition
A13-3 (+B1) - 5 (FAN relay holder)	Always	Below 1 ohms

Standard Resistance (Check for Short)

Tester Connection	Condition	Specified Condition
A13-3 (+B1) or 5 (FAN relay holder) - Body ground	Always	10 kohms or higher

d. Reconnect the cooling fan ECU connector.
e. Reinstall the FAN relay.

NG --> REPAIR OR REPLACE HARNESS OR CONNECTOR

OK: Go to next step

9. **CHECK HARNESS AND CONNECTOR (FAN RELAY - BODY GROUND)**
   a. Remove the FAN relay from the engine room relay block.

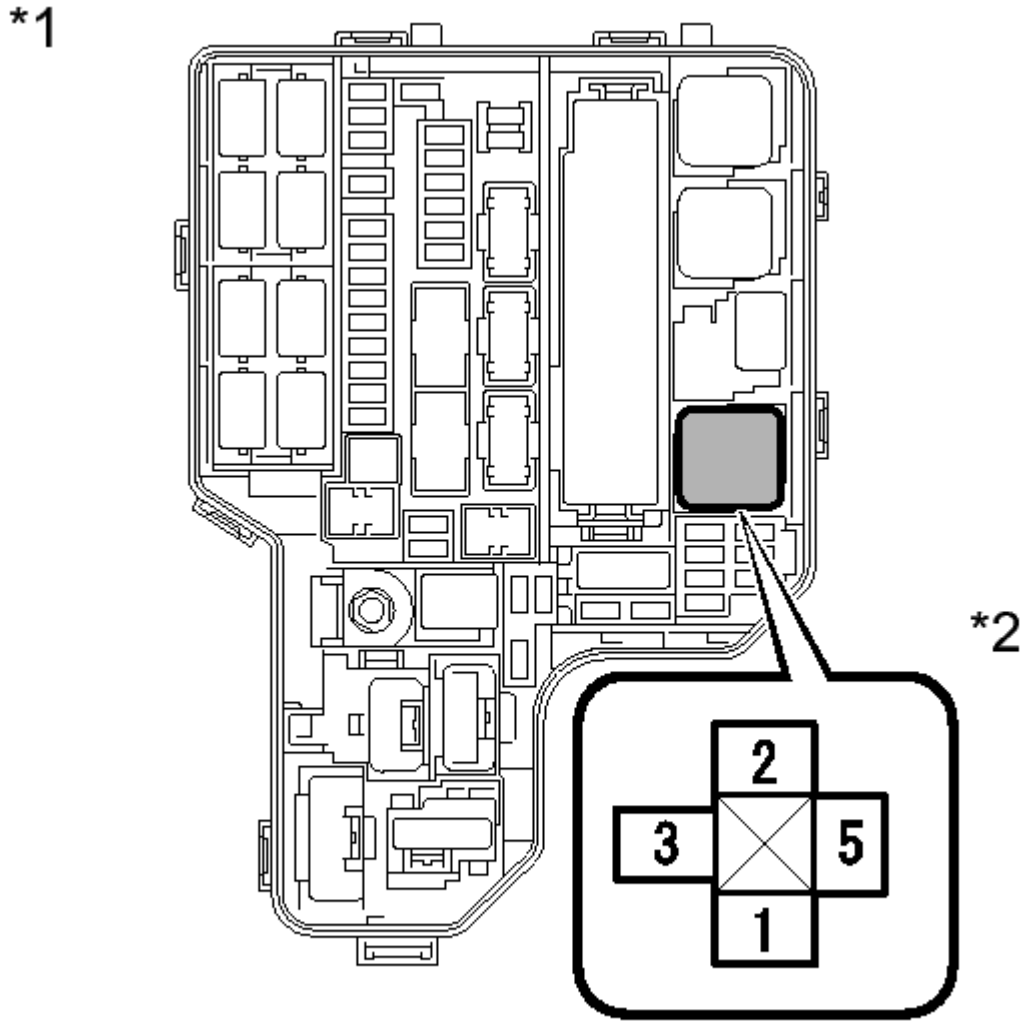

P

Fig. 11: Identifying FAN Relay At Engine Room Relay Block
Courtesy of TOYOTA MOTOR SALES, U.S.A., INC.

TEXT IN ILLUSTRATION

*1	Engine Room Relay Block
*2	FAN Relay Holder

b. Measure the resistance according to the value(s) in the table below.

Standard Resistance (Check for Open)

Tester Connection	Condition	Specified Condition
2 (FAN relay holder) - Body ground	Always	Below 1 ohms

c. Reinstall the FAN relay.

NG --> REPAIR OR REPLACE HARNESS OR CONNECTOR

OK --> REPAIR OR REPLACE HARNESS OR CONNECTOR (FAN RELAY - IG1 NO. 2 RELAY)

10. **CHECK HARNESS AND CONNECTOR (ECM - COOLING FAN ECU)**
    a. Disconnect the ECM connector.

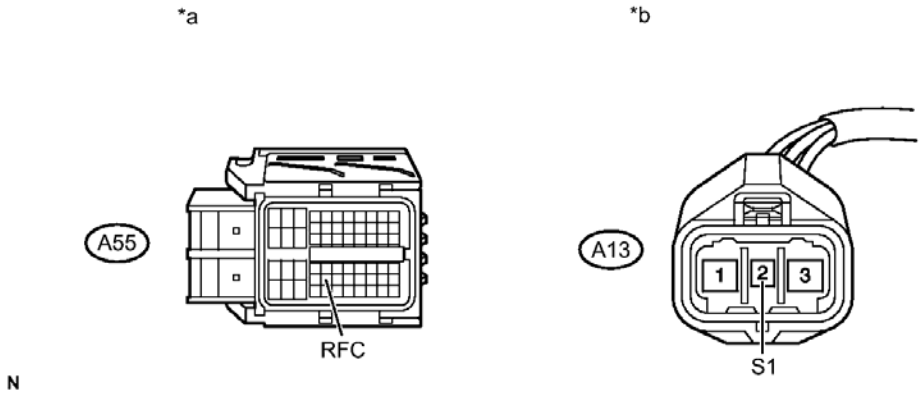

Fig. 12: Checking Harness And Connector (ECM - Cooling Fan ECU)
Courtesy of TOYOTA MOTOR SALES, U.S.A., INC.

TEXT IN ILLUSTRATION

*a	Front view of wire harness connector (to ECM)	*b	Front view of wire harness connector (to Cooling Fan ECU)

b. Disconnect the cooling fan ECU connector.
c. Measure the resistance according to the value(s) in the table below.

Standard Resistance (Check for Open)

Tester Connection	Condition	Specified Condition
A55-33 (RFC) - A13-2 (S1)	Always	Below 1 ohms

d. Reconnect the cooling fan ECU.
e. Reconnect the ECM.

NG --> REPAIR OR REPLACE HARNESS OR CONNECTOR

OK --> REPLACE COOLING FAN ECU

11. **PROCEED TO NEXT SUSPECTED AREA SHOWN IN PROBLEM SYMPTOMS TABLE. Refer to PROBLEM SYMPTOMS TABLE**
12. **REPLACE COOLING FAN MOTOR. Refer to REMOVAL**
13. **REPLACE NO. 2 COOLING FAN MOTOR. Refer to REMOVAL**