ANTI-LOCK BRAKES

Fig 1: Anti-lock Brakes Circuit

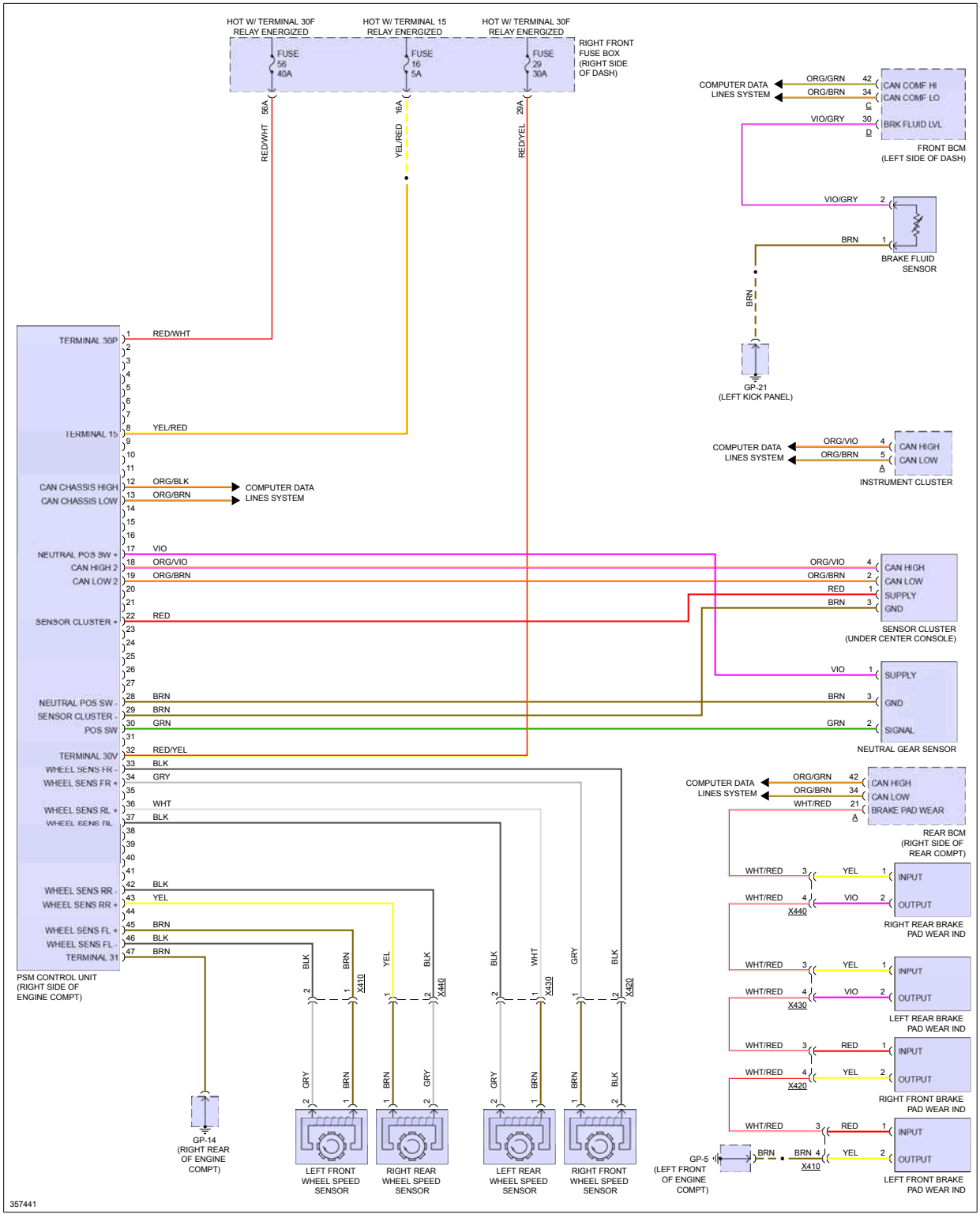

cardiagn.com