Repair Manual

Audi 100 1991 ➤ , Audi 80 1992 ➤ ,
Audi A1 2011 ➤ , Audi A2 2001 ➤ ,
Audi A3 1997 ➤ , Audi A3 2004 ➤ ,
Audi A4 1995 ➤ , Audi A4 2001 ➤ ,
Audi A4 2008 ➤ ,
Audi A4 Cabriolet 2003 ➤ ,
Audi A5 Cabriolet 2009 ➤ ,
Audi A5 Coupé 2008 ➤ , Audi A6 1995 ➤ ,
Audi A6 1998 ➤ , Audi A6 2005 ➤ ,
Audi A6 2011 ➤ ,
Audi A7 Sportback 2011 ➤ ,
Audi A8 1994 ➤ , Audi A8 2003 ➤ ,
Audi A8 2010 ➤ , Audi Cabriolet 1991 ➤ ,
Audi Q5 2008 ➤ , Audi Q7 2007 ➤ ,
Audi R8 2007 ➤ , Audi TT 1999 ➤ ,
Audi TT 2007 ➤

Wheel and Tire Guide

Edition 11.2010

Protected by copyright. Copying for private or commercial purposes, in part or in whole, is not permitted unless authorised by AUDI AG. AUDI AG does not guarantee or accept any liability with respect to the correctness of information in this document. Copyright by AUDI AG.

Downloaded from www.Manualslib.com manuals search engine

List of Workshop Manual Repair GroupsList of Workshop Manual Repair GroupsList of Workshop Manual Repair Groups

Repair Group

44 - Wheels, Tires, Wheel Alignment

Protected by copyright. Copying for private or commercial purposes, in part or in whole, is not permitted unless authorised by AUDI AG. AUDI AG does not guarantee or accept any liability with respect to the correctness of information in this document. Copyright by AUDI AG.

Technical information should always be available to the foremen and mechanics, because their careful and constant adherence to the instructions is essential to ensure vehicle road-worthiness and safety. In addition, the normal basic safety precautions for working on motor vehicles must, as a matter of course, be observed.

All rights reserved.
No reproduction without prior agreement from publisher.

Copyright © 2011 Audi AG, Ingolstadt

D3E80023161

Downloaded from www.Manualslib.com manuals search engine

Contents

44 - Wheels, Tires, Wheel Alignment . . . 1

1 General Information . . . 1
1.1 Wheels and Tires . . . 1
1.2 Documents and Designations . . . 3
1.3 Legal and Technical Requirements for Retrofitting Wheel and Tire Combinations . . . 5
1.4 Run-Flat Tire Safety Precautions . . . 6
1.5 Run-Flat Tire Installation Instructions . . . 7
1.6 Rolling Resistance Tires . . . 8
1.7 Additional Wheel Housing Enlargement, FLAPS . . . 8
1.8 Wheel Rims with Glued-On Wheel Trim . . . 9
1.9 Multipart Composite Wheels . . . 9
1.10 Wheel Bolts . . . 9
1.11 Wheel Rims, Preparing . . . 11
1.12 Tire Requirement and Maintenance . . . 12
1.13 Tire Wear and Service Life . . . 26
1.14 Tires, Rolling Noises . . . 30
1.15 Wheels and Tires, Vibration . . . 33
1.16 Balancing . . . 34
1.17 Vehicle Pulls to One Side . . . 42
1.18 Tire Damage . . . 44
1.19 Wheel Repair Kit . . . 52
1.20 Tire Pressure Monitoring System . . . 52
1.21 Emergency Wheels . . . 54
1.22 Tires with Emergency Running Characteristics, PAX . . . 54
1.23 Tires with Emergency Running Characteristics, SST (Self-Supporting Tire) . . . 61

2 Description and Operation . . . 65
2.1 Disc Wheel Design Overview, Wheel Rims . . . 65
2.2 Light Alloy Wheels Component Overview . . . 67
2.3 Tires with Emergency Running Characteristics (PAX) Component Overview . . . 69
2.4 Tire Side Wall Lettering Overview . . . 70
2.5 Tire Pressure Monitoring System Assembly Overview . . . 73

3 Specifications . . . 75
3.1 Fastener Tightening Specifications . . . 75
3.2 Wheel Bolt Tightening Specifications . . . 75

4 Diagnosis and Testing . . . 77
4.1 Vehicle Pulls to One Side, Correcting . . . 77
4.2 Wheel Rotation, Non-Directional Tires . . . 78
4.3 Wheel Rotation, Directional Tires . . . 79
4.4 Wheels and Tires, Radial and Lateral Run-Out, Checking with VAG 1435 . . . 80
4.5 Wheels and Tires, Radial and Lateral Run Out, Checking with Tire Dial Gauge . . . 80
4.6 Rim Radial and Lateral Run Out, Checking . . . 81

5 Removal and Installation . . . 83
5.1 Wheel, Changing and Mounting . . . 83
5.2 Metal Valve Body . . . 87
5.3 Wheel Electronics, TPMS, Beru System . . . 92
5.4 Wheel Electronics, TPMS, Siemens System . . . 92
5.5 Wheel Rims with Replaceable Decorative Trim, Attached with Bolts . . . 93
5.6 Wheel Rims with Replaceable Decorative Trim, Glued . . . 93
5.7 Tires, Changing . . . 96
5.8 Tires, with Run-Flat Tires . . . 98
5.9 Tires, Sealed with Sealant . . . 102

6 Special Tools . . . 104

Protected by copyright. Copying for private or commercial purposes, in part or in whole, is not permitted unless authorised by AUDI AG. AUDI AG does not guarantee or accept any liability with respect to the correctness of information in this document. Copyright by AUDI AG.

Downloaded from www.Manualslib.com manuals search engine

Protected by copyright. Copying for private or commercial purposes, in part or in whole, is not permitted unless authorised by AUDI AG. AUDI AG does not guarantee or accept any liability with respect to the correctness of information in this document. Copyright by AUDI AG.

Downloaded from www.Manualslib.com manuals search engine

44 – Wheels, Tires, Wheel Alignment

1 General Information

⇒ "1.1 Wheels and Tires", page 1

⇒ "1.2 Documents and Designations", page 3

⇒ "1.3 Legal and Technical Requirements for Retrofitting Wheel and Tire Combinations", page 5

⇒ "1.4 Run-Flat Tire Safety Precautions", page 6

⇒ "1.5 Run-Flat Tire Installation Instructions", page 7

⇒ "1.6 Rolling Resistance Tires", page 8

⇒ "1.7 Additional Wheel Housing Enlargement, FLAPS", page 8

⇒ "1.8 Wheel Rims with Glued-On Wheel Trim", page 9

⇒ "1.9 Multipart Composite Wheels", page 9

⇒ "1.10 Wheel Bolts", page 9

⇒ "1.11 Wheel Rims, Preparing", page 11

⇒ "1.12 Tire Requirement and Maintenance", page 12

⇒ "1.13 Tire Wear and Service Life", page 26

⇒ "1.14 Tires, Rolling Noises", page 30

⇒ "1.15 Wheels and Tires, Vibration", page 33

⇒ "1.16 Balancing", page 34

⇒ "1.17 Vehicle Pulls to One Side", page 42

⇒ "1.18 Tire Damage", page 44

⇒ "1.19 Wheel Repair Kit", page 52

⇒ "1.20 Tire Pressure Monitoring System", page 52

⇒ "1.21 Emergency Wheels", page 54

⇒ "1.22 Tires with Emergency Running Characteristics, PAX", page 54

⇒ "1.23 Tires with Emergency Running Characteristics, SST (Self-Supporting Tire)", page 61

1.1 Wheels and Tires

This guide provides you with important information in the event of tire damage or concerns.

This chapter contains general information on tires and wheels.

Wheels are high-tech products which have been optimally matched to the operating conditions of modern vehicles.

As for all technically highly developed products, careful handling, care and maintenance are required for tires as well. Only then are the safety, performance and driving comfort guaranteed for the entire service life of the tire.

The tires are subject to a process of constant further development. As a result of modern construction techniques, finishing processes and constant quality checks, high-quality tires are produced. All tires recommended by Audi have been tested by technical development and matched to the respective vehicle type in cooperation with the tire manufacturers.

Protected by copyright. Copying for private or commercial purposes, in part or in whole, is not permitted unless authorised by AUDI AG. AUDI AG does not guarantee or accept any liability with respect to the correctness of information in this document. Copyright by AUDI AG.

Downloaded from www.Manualslib.com manuals search engine

Note

We recommend using Audi Original Parts when replacing tires and rims.

Vehicle safety always has the highest priority. With regard to the various operating conditions, such as:

- Different speed ranges.
- Winter and summer use.
- Wet and dry roads.

An optimal compromise must be found to ensure driver safety.

Note

We recommend using tires that have "AO" on them. These tires are suited for each Audi model.

Every tire faces many different types of stress over distance and time. Therefore, it is important that the basic requirements for optimal use of tires are fulfilled.

The correct adjustment of the axle geometry while performing a vehicle alignment is an important requirement for an optimal service life of the tire. Therefore, the adjustment of the axle geometry must lie within the specified tolerance range.

Information for vehicle alignment, refer to ⇒ Suspension, Wheels, Steering; Rep. Gr. 44 ; General Information .

Note

There are many causes for tire damage and complaints. Therefore, it is very important to recognize whether the complaint arises from the tires or from other components.

The running characteristics of the tire change in the course of normal wear. Rolling noises and vibrations can result from this. These are not damage in the sense of tire defects, but rather symptoms resulting from use. These can be corrected, at least partially, by specific measures. In certain cases, rolling noise cannot be completely eliminated.

Protected by copyright. Copying for private or commercial purposes, in part or in whole, is not permitted unless authorised by AUDI AG. AUDI AG does not guarantee or accept any liability with respect to the correctness of information in this document. Copyright by AUDI AG.

Special Models

Special models are only partially included in the approval certificate tables. The retrofitting possibility for these vehicles depends on the motorization of the respective base model.

Wheels and Tires

Only install tires with the same manufacturer, construction type and tread on all wheels.

Always replace rubber valve when replacing steel wheel or rim.

Install tires with DOT identification facing toward outside of wheel. Only applies to left side of vehicle with directional tires.

With directional tires, a wheel/tire combination for the right side should be installed as a spare wheel.

Downloaded from www.Manualslib.com manuals search engine

1.2 Documents and Designations

⇒ "1.2.1 New Vehicle Registration Documents Since October 1, 2005", page 3

⇒ "1.2.2 Certificate of Conformity", page 4

⇒ "1.2.3 EU Type Approval Number, Sales Type and Sales or Trade Name", page 4

1.2.1 New Vehicle Registration Documents Since October 1, 2005

Protected by copyright. Copying, reproduction or commercial purposes, in part or in whole, is not permitted unless authorized by AUDI AG. AUDI AG does not guarantee or accept any liability with respect to the correctness of information in this document. Copyright by AUDI AG.

The implementation of EU guideline 1999/37/EG "Vehicle registration documents" in national legislation and legal data protection requirements have made the introduction of new, fraud resistant registration documents necessary.

Since 01.10.2005, the new documents are issued by the authorities in the case of new registrations, change of owner, entry of technical changes and all other changes.

The new registration documents consist of:

- The registration certificate part I, which replaces the vehicle registration.
- The registration certificate part II that supersedes the vehicle title.

Registration Certificate Part I (Vehicle Registration)

- Contains all technical vehicle data that must be present to register a vehicle in Europe but only a standard approved wheel/tire combination is specified.
- Has the EU-wide alphanumeric codes allocated to the technical data so that the German registration document can be converted without problems in the foreign countries of the EU into the registration document required there.
- Contains a field to document the temporary or final decommissioning of the vehicle and is no longer drawn in the case of a temporary or final decommissioning.

Registration Certificate Part II (Vehicle Title)

- Contains information that the bearer of the registration certificate is not declared the owner.
- Only contains the current and, if available, last vehicle owner, the actual number of previous owners is indicated numerically.
- Only contains a small portion of the technical vehicle data.
- Does not document temporary vehicle decommissioning In the future, the vehicle and body type listed under digit 1 in the old vehicle documentation will no longer exist. It is replaced in the new documents with EU-standardized vehicle classes with body type.

The introduction of the new registration documents results in hardly any changes for the driver.

As with the old vehicle registration the registration certificate part I (vehicle registration) should be kept in the vehicle and presented to responsible persons upon request.

Downloaded from www.Manualslib.com manuals search engine

Note

It is not necessary to install the wheel/tire combination specified in the registration certification Part I (vehicle registration). All combinations approved according to the vehicle general type approval or EU type approval maybe be used.

The permissibility of a wheel/tire combination that deviates from the vehicle general type approval or EU type approval must be verified with an entry in the registration certificate part I (vehicle registration), an installation certificate due to a parts certificate or a general type approval for the wheel/tire combination.

1.2.2 Certificate of Conformity

The vehicle manufacturer must request an EU type approval for all passenger vehicles (vehicle class M1).

A certificate of conformity is produced based on this type approval.

This document confirms that the vehicle conforms to the EU operating license and is registered in every EU country without the need for individual approval.

The issuing applies to all vehicles that were produced in accordance with the EU operating license.

These vehicles have an EU type plate (black sticker) in the driver door area or in the engine compartment on older vehicles.

Protected by copyright. Copying for private or commercial purposes, in part or in whole, is not permitted unless authorised by AUDI AG. AUDI AG does not guarantee or accept any liability with respect to the correctness of information in this document. Copyright by AUDI AG.

The certificate of conformity has the same importance as the operating license, so the original should not be kept in the vehicle.

The certificate of conformity contains the EU type approval number and detailed technical information about the vehicle such as the emissions category and all permitted wheel/tire combinations.

1.2.3 EU Type Approval Number, Sales Type and Sales or Trade Name

Since 01/01/1998, all passenger vehicles licensed for road use within the European Union must possess type approval according to EU guidelines. Vehicles licensed for road use with single-vehicle approval according to 21 StVZO in Germany are excepted.

Therefore, the same guidelines apply to all automobile manufacturers. Consequently, international trade within the EU has been simplified.

The certificate of conformity contains the EU type approval number and detailed technical information about the vehicle such as the emissions category and all permitted wheel/tire combinations.

Downloaded from www.Manualslib.com manuals search engine

1.3 Legal and Technical Requirements for Retrofitting Wheel and Tire Combinations

⇒ "1.3.1 Legal Requirements, Retrofitting Wheel and Tire Combinations", page 5

⇒ "1.3.2 Technical Requirements, Retrofitting Wheel and Tire Combinations", page 6

1.3.1 Legal Requirements, Retrofitting Wheel and Tire Combinations

Technical requirements, refer to
⇒ "1.3.2 Technical Requirements, Retrofitting Wheel and Tire Combinations", page 6

The manufacturer is granted general type approval for the whole vehicle including all parts and for specific retrofitting (general type approval according to 20 StVZO (Motor Vehicle Construction and Use Regulations or EU type approval).

Retrofitting to wheels and tires can only be made under certain circumstances. The following points must be taken into consideration:

- If the wheel and tires sizes along with the load index and speed symbol are contained in the general type approval or EU type approval, then this tire/wheel combination can be mounted on the vehicle.

Note

It is not necessary to install the wheel/tire combination specified in the registration certification Part I (vehicle registration). All combinations in the general type approval or EU type approval can be mounted on the vehicle.

- If the wheels and/or tires are not contained in the general type approval or EU type approval, then vehicle cannot be retrofitted according to the StVZO specifications.

Note

These statements refer to legal requirements in the European Union. No claims are made as to their completeness. Other legal requirements apply outside the European Union.

The possible retrofittings shown here are combinations which meet Audi AG's requirements for handling and road safety. They are the results of practical tests and for this reason, Audi AG recommends them.

Note

Observe the information regarding new vehicle certification documents since October 1, 2005.

Protected by copyright. Copying for private or commercial purposes, in part or in whole, is not permitted unless authorised by AUDI AG. AUDI AG does not guarantee or accept any liability with respect to the correctness of information in this document. Copyright by AUDI AG.

Downloaded from www.Manualslib.com manuals search engine

1.3.2 Technical Requirements, Retrofitting Wheel and Tire Combinations

Legal requirement, refer to
⇒ "1.3.1 Legal Requirements, Retrofitting Wheel and Tire Combinations", page 5

- The wheel and tire combinations or retrofittings listed in the individual vehicle tables refer exclusively to Audi original disc wheels.
- Release of wheel/tire combinations or retrofittings with disc wheels from the accessories trade is not possible with the enclosed approval certificate.
- Tubeless radial tires may only be used with stepped rims with a bead retaining contour, e.g. a round hump.
- Run-flat tires (reinforced sidewall) may only be used on disc wheels with extended hump and vehicles with a tire pressure monitoring system.
- The correct tire inflation pressure values must be observed when the specified wheel and tire combinations are used. The tire inflation pressure values for summer tires are shown on the sticker on the inside of the fuel tank flap or in the individual vehicle tables.
- Sufficient clearance between the wheels and tires and the wheel housing, suspension and brake components is ensured if the instructions and conditions specified in the approval certificate are observed under all operating conditions.
- If not otherwise specified, snow chains may be mounted only on the drive wheels. Only the front wheels on all wheel drive vehicles and also the back wheels on the Audi Q5 are equipped with snow chains.

Copyright by AUDI AG. Copying for private or commercial purposes, in part or in whole, is not permitted unless authorised by AUDI AG. AUDI AG does not guarantee or accept any liability with respect to the correctness of information in this document. Copyright by AUDI AG.

1.4 Run-Flat Tire Safety Precautions

- Work for removing and mounting tires with emergency running characteristics must only be performed by mechanics specially trained for it.
- The special tools necessary must be in proper working order and not damaged! Contact manufacturer of tire mounting device found in the workshop directly for suitable additional tools. Additional tools are offered as recommended accessories for the tire mounting devices listed with VAS numbers.
- If necessary, use a mounting paste recommended by the tire manufacturer.
- The description of work procedure for removing and mounting may vary depending on the device manufacturer and type of device.
- The following work procedure described explains the principal procedure for removing and mounting tires with emergency running characteristics. It is important to recognize run-flat tires before starting the removal and mounting process as it will be different from the process used with standard tires.
- Distinguishing characteristic: Such tires can be recognized by one of the following listed abbreviations: DSST, Euforia, RFT, ROF, RSC, SSR or ZP. These abbreviations are located on the tire flank behind tire designation of the respective tire manufacturer.
- Always note the instructions and danger warnings identified in the following description!

Downloaded from www.Manualslib.com manuals search engine

- Check whether tire pressure sensor should be replaced (if equipped) using the Vehicle diagnosis, testing and information system -VAS 5051- .

Note

- ♦ *During removal and mounting work, make sure that no contact is made between tires and tire pressure sensor.*
- ♦ *When cleaning disc wheel (rim), tire pressure monitor sensor must not come into contact with water or be blown with pressurized air.*

1.5 Run-Flat Tire Installation Instructions

Protected by Copyright. Copying for private or commercial purposes, in part or in whole, is not permitted unless authorised by AUDI AG. AUDI AG does not guarantee or accept any liability with respect to the correctness of information in this document. Copyright by AUDI AG.

Warm up cold tires to the minimum mounting temperature.

Note

This applies also to ultra high performance tires (height- / width ration smaller/same 45% and speed rating symbol larger than/ same as V).

WARNING

The minimum mounting temperature for a tire may not be below 59.00°F or above 86.00°F in the center of the tire.

- For injury-free mounting, the upper sidewall and the upper bead inside must be minimum 59.00 °F.
- The internal temperature is called the core temperature.
- Rubber is a poor heat conductor, and for this reason, a cold tire must exposed to a temperature controlled environment until the inner rubber layers have warmed up to at least 15 ° C.
- The tire surface temperature during the warm-up phase is not a measure the inside temperature.
- So that the cold tires warm up as quickly as possible, never stack them one on top of the other; store them separated from each other so that the warm air can “circulate“ around them.
- Never us a room heater or a hot air gun to warm up tires because the surface temperature will heat up very quickly to a critical temperature.
- To prevent damage, only warm water or warm air (maximum 122.00 °F) can be used to warm up a tire!
- If cold tires (below 32.00 °F) are brought into a warm room (above 32.00 °F), a layer of ice will start to form on the tires. This layer of ice means that humidity in the warm air is condensing on the tire.
- Once the layer of ice starts to melt, wipe up the water with a rag so that the warming up process will not be slowed down.

Warm-up Time

- ♦ Using the example of a room temperature of at least 66.20 °F and a tire temperature of 32.00 °F or higher, the tires should be stored for at least 2 hours at least 66.20 °F.

Downloaded from www.Manualslib.com manuals search engine

- If the room temperature is minimum 66.20 °F and the tire temperature is below 0 °C , then the tires should be stored for at least 2.5 hours at a minimum room temperature of 66.20 °F.

Recommendations

- If possible, let the tires stand in the workshop for 1 day before mounting them.
- Store the tires as high as possible on an insulated surface, pallet or something similar.
- Position the tires so that they can be "surrounded" by the warm air
- Wipe off the sweat.
- Never heat the tires with a room heater or a hot air gun!

Copyright by AUDI AG. The use of this document for commercial purposes, in part or in whole, is not permitted unless authorised by AUDI AG. AUDI AG does not guarantee or accept any liability with respect to the correctness of information in this document. Copyright by AUDI AG.

1.6 Rolling Resistance Tires

Tire deformation when rolling causes the vehicle to loose energy that makes the rolling resistance noticeable.

Deformation is significantly lowered on rolling resistance tires due to new construction and low-wear surface mixtures.

Tires approved by Audi for " e-Model" Technology vehicles are rolling resistant and conform to all safety and customer relevant properties.

1.7 Additional Wheel Housing Enlargement, FLAPS

On some vehicles with certain wheel/tire combinations, wheel housing enlargements (FLAPS) must be attached on the fenders or bumper for technical reasons -arrows-.

Please check whether FLAPS must be installed.

The necessary wheel/tire combination information can be found in the overview table for the respective vehicle.

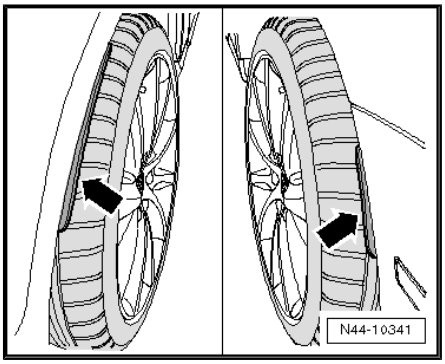

Downloaded from www.Manualslib.com manuals search engine

1.8 Wheel Rims with Glued-On Wheel Trim

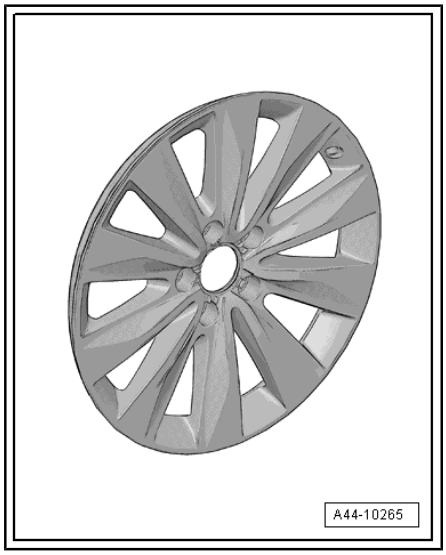

Note

- *Be careful not to scratch off the glued- on wheel trim on these rims.*
- *The surface of the wheel trim is very sensitive.*
- *The rim will have be replaced if the wheel trim is damaged.*
- *The wheel trim cannot be replaced.*

1.9 Multipart Composite Wheels

Composite wheels consist of various parts.

The primary components are rims and wheel discs. These components are fastened to each other with special screws and a special procedure. This ensures the wheel's function, proper seal, safety and true running. These important requirements cannot be guaranteed under shop conditions and using shop tools.

WARNING

Composite wheels must not be disassembled or repaired!

1.10 Wheel Bolts

Note

- *Make sure the correct wheel bolts are installed. Allocation, refer to the Electronic Parts Catalog (ETKA)*
- *Only the same wheel bolts may be installed on all four wheel rims for every vehicle.*

Protected by copyright. Copying for private or commercial purposes, in part or in whole, is not permitted unless authorised by AUDI AG. AUDI AG does not guarantee or accept any liability with respect to the correctness of information in this document. Copyright by AUDI AG.

Downloaded from www.Manualslib.com manuals search engine

One-Piece Wheel Bolt

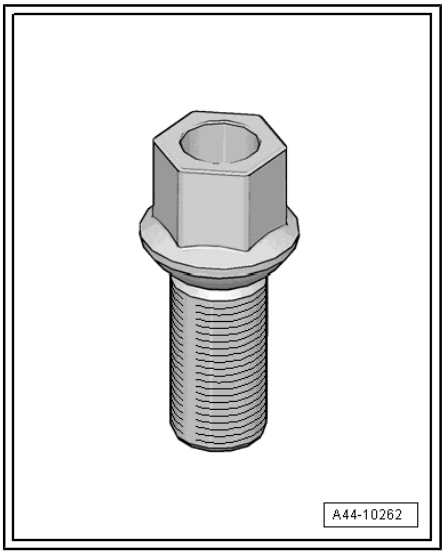

Two-Piece Wheel Bolt, Short Turnable Spherical Calotte, Primarily for S Models

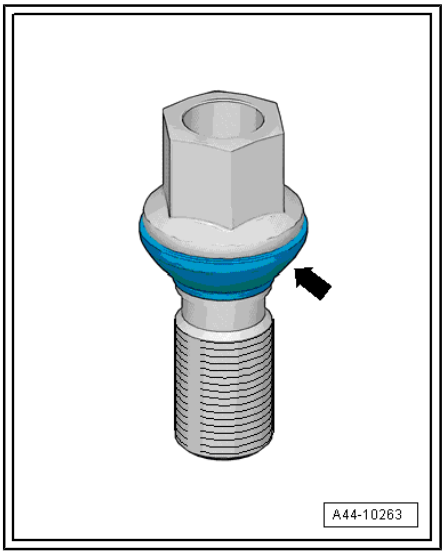

Two-Piece Wheel Bolt, Short Turnable Spherical Calotte, Primarily for S Models

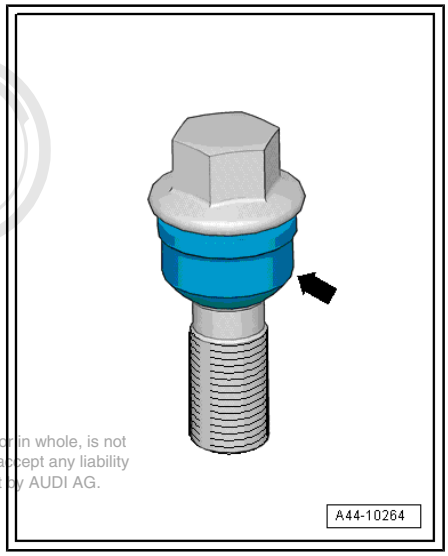

Protected by copyright. Copying for private or commercial purposes, in part or in whole, is not permitted unless authorised by AUDI AG. AUDI AG does not guarantee or accept any liability with respect to the correctness of information in this document. Copyright by AUDI AG.

Downloaded from www.Manualslib.com manuals search engine

Anti-Theft Wheel Bolts

1 - Anti-theft wheel bolts

2 - Cap

3 - Wheel bolt adapter

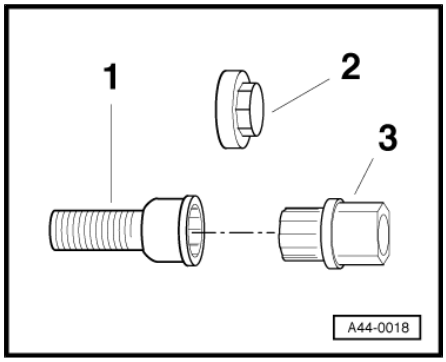

1.11 Wheel Rims, Preparing

WARNING

- *Do not repair damaged rims by heating, welding or adding or removing material.*
- *Do not repair damaged or deformed rims or rims with cracked or deformed bolt holes.*
- *Only prepare wheels with tested and specified original paint materials.*
- *No warranty claims can be made against the manufacturer after preparing rims.*

Do not repair rims that have cracks forming on the edges. Replace them immediately.

Cutting work, application of heat and welding applications of any kind are not permitted.

Reshaping material is not permitted.

The true running and axial run-out deviations before preparation must not exceed the manufacturing tolerance of 0.8 mm.

Only cast light alloy wheels may be primed. These wheels have the material identification Alsi xx on the inside.

Forged wheels may only be painted.

Preparation is limited to the painted surfaces.

Wheels that have been worn smooth that only have a clear coat may not be repaired.

Only surface damage on the visible side of the wheel may be prepared.

Damage must not be more than 1 mm deep.

Up to 50 mm of the rim flange may be removed and filled.

Protected by copyright. Copying for private or commercial purposes, in part or in whole, is not permitted unless authorised by AUDI AG. AUDI AG does not guarantee or accept any liability with respect to the correctness of information in this document. Copyright by AUDI AG.

Downloaded from www.Manualslib.com manuals search engine

1.12 Tire Requirement and Maintenance

⇒ “1.12.1 Introduction“, page 12

⇒ “1.12.2 Tire Requirements“, page 14

⇒ “1.12.3 Tire Service Life, Influences“, page 14

⇒ “1.12.4 Maintenance (Tire Air Pressure)“, page 15

⇒ “1.12.5 Driving Style“, page 16

⇒ “1.12.6 Tread Depth, Measuring“, page 17

⇒ “1.12.7 Tires with Emergency Running Characteristics (PAX) Side Wall Lettering“, page 18

⇒ “1.12.8 80 Series Tires “, page 19

⇒ “1.12.9 Speed Code/High Speed“, page 19

⇒ “1.12.10 Tires, Speed Ratings“, page 19

⇒ “1.12.11 Winter Tires with Speed Rating V “, page 20

⇒ “1.12.12 Load Index (LI)“, page 21

⇒ “1.12.13 Tires, Reinforced, Extra Load“, page 22

⇒ “1.12.14 Winter Tires, Extra Load, Speed Rating V“, page 22

⇒ “1.12.15 Snow Chains“, page 22

⇒ “1.12.16 Rubber Valve“, page 23

⇒ “1.12.17 Tires, Storing“, page 24

⇒ “1.12.18 Tires, Aging“, page 24

⇒ “1.12.19 Tires, Replacing“, page 25

⇒ “1.12.20 Light Alloy Wheels, Care and Maintenance“, page 25

⇒ “1.12.21 Tires with Rim Protector“, page 26

Protected by copyright. Copying for private or commercial purposes, in part or in whole, is not permitted unless authorised by AUDI AG. AUDI AG does not guarantee or accept any liability with respect to the correctness of information in this document. Copyright by AUDI AG.

1.12.1 Introduction

This revised information should supplement the knowledge and experience you already have.

Our customers should receive complete and plausible reasoning on the topic of “Wheels/Tires“.

With this information, we want to help you make as clear and certain a statement as possible concerning tire damage and complaints.

This chapter contains general information on tires and wheels.

Wheels are high-tech products which have been optimally matched to the operating conditions of modern vehicles.

As for all technically highly developed products, careful handling, care and maintenance are required for tires as well. Only then are the safety, performance and driving comfort guaranteed for the entire service life of the tire.

The tires are subject to a process of constant further development. As a result of modern construction techniques, finishing processes and constant quality checks, high-quality tires are produced. All tires approved by AUDI have been tested by technical development and matched to the respective vehicle type in cooperation with the tire manufacturers.

Downloaded from www.Manualslib.com manuals search engine

Therefore, when replacing the tires, we recommend always to mount the approved and recommended tire brands.

Vehicle safety always has the highest priority. With regard to the various operating conditions, such as:

- Different speed ranges.
- Winter and summer use.
- Wet and dry roads.

An optimal compromise must be found to ensure driver safety.

Every tire faces many different types of stress over distance and time. Therefore, it is important that the basic requirements for optimal use of tires are fulfilled.

The correct adjustment of the axle geometry is an important requirement for optimum service life of the tire. Therefore, the adjustment of the axle geometry must lie within the specified tolerance range.

Note

There are many causes for tire damage and complaints. Therefore, it is very important to recognize whether the complaint arises from the tires or from other components.

The running characteristics of the tire change in the course of normal wear. Rolling noises and vibrations can result from this. These are not damage in the sense of tire defects, but rather symptoms resulting from use. These can be corrected, at least partially, by specific measures. In certain cases, rolling noise cannot be completely eliminated.

Protected by copyright. Copying for private or commercial purposes, in part or in whole, is not permitted unless authorised by AUDI AG. AUDI AG does not guarantee or accept any liability with respect to the correctness of information in this document. Copyright by AUDI AG.

Downloaded from www.Manualslib.com manuals search engine

1.12.2 Tire Requirements

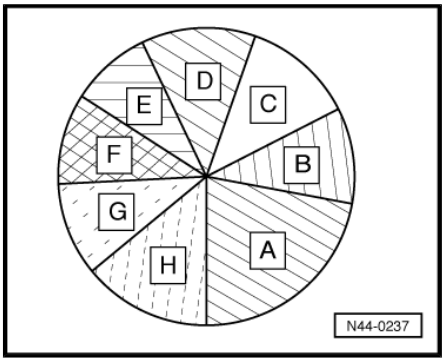

A - Wet braking behavior

B - Comfort

C - Steering precision

D - Driving stability

E - Tire weight

F - Service life expectancy

G - Rolling resistance

H - Hydroplaning

The pie chart represents the tire's performance. It shows how the extent of the demands A through H could be distributed in tire construction and rubber compound.

The improvement of one characteristic leads to the worsening of another one.

Example:

The improvement of wet braking behavior -A- leads to losses in comfort -B-, rolling resistance -G- and service life expectancy -F-.

The service life expectancy of car tires depends not only on the rubber compound and the tire construction. The operating conditions, circumstances specific to the vehicle and the driving style all have a strong influence on the tire's service life.

With modern vehicles and appropriate engines, especially gentle and economical but also extremely sporty driving is possible. Service life of 5.000 to 40.000 km and even more is possible.

Note

Driving style is the decisive influencing factor on the life of the tires.

1.12.3 Tire Service Life, Influences

The following factors influence the service life of a tire in varying degrees:

- Speed
- Brakes
- Acceleration
- Cornering
- Driving Style
- Maintenance
- Tire Pressure

Area

- Paving
- Exterior temperature/climate

Vehicle

- Weight

Protected by copyright. Copying for private or commercial purposes, in part or in whole, is not permitted unless authorised by AUDI AG. AUDI AG does not guarantee or accept any liability with respect to the correctness of information in this document. Copyright by AUDI AG.

Downloaded from www.Manualslib.com manuals search engine

- Tire Pressure
- Dynamic toe and camber values

Tire operating conditions

Speed range, wet or dry

Tire Construction

Winter/summer

1.12.4 Maintenance (Tire Air Pressure)

The weight of the vehicle flattens the tire's contact patch. When the tire rolls, this results in deformation all around the circumference of the tread and the entire belt assembly. With low pressure, there is a greater deformation which results in more intense warming and greater rolling resistance. This all results in a greater wear and a greater safety risk.

Example: Specified series production tire pressure depending on load on cold tires

Air Pressure (Bar)	Air Pressure (%)	Service Life (%)
2,3	100	100
1,9	80	85
1,4	60	60
1,0	40	25

Excessive air pressure leads to greater wear at the center of the tire and reduced rolling comfort. It is recommended always to maintain the air pressure indicated by the manufacturer.

Diagram 1

Tread depth over service life for vehicles with front wheel drive and V tires.

P - Tread depth

S - Distance driven

1 - Front axle

2 - Rear axle

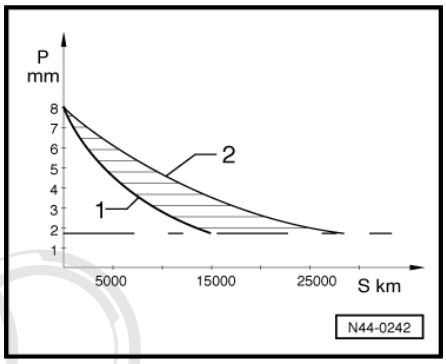

Protected by copyright. Copying for private or commercial purposes, in part or in whole, is not permitted unless authorised by AUDI AG. AUDI AG does not guarantee or accept any liability with respect to the correctness of information in this document. Copyright by AUDI AG.

Downloaded from www.Manualslib.com manuals search engine

Diagram 2

Tread depth over service life for vehicles with all wheel drive and V tires.

P - Tread depth

S - Distance driven

1 - Front axle

2 - Rear axle

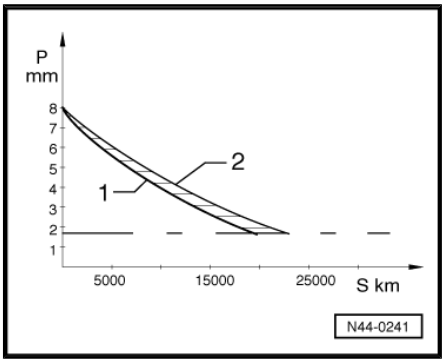

Note

- *The diagrams presented cannot be applied in general.*
- *They only illustrate the wear characteristics on the front and rear axles as well as wear characteristics of front and all-wheel drive vehicles.*
- *Depending on operating conditions and chassis, the service life that can be attained may deviate substantially.*

As can be seen in diagrams 1 and 2, for a given distance, more tread wears off tires with a complete tread than off tires which are quite worn. After the first 5.000 km, no conclusion can be made about the total service life because the wear curve is not linear.

On front-wheel drive vehicles, the front wheels must transmit the major portion of the lateral and braking forces as well as the steering and traction forces. Due to these demands, the front tires on front wheel vehicles wear more quickly than rear tires. Even usage of all tires is achieved by regularly exchanging front and rear tires. Refer to ⇒ page 25 .

Protected by copyright. Copying for private or commercial purposes, in part or in whole, is not permitted unless authorised by AUDI AG. AUDI AG does not guarantee or accept any liability with respect to the correctness of information in this document. Copyright by AUDI AG.

1.12.5 Driving Style

1. Constant driving without deceleration and acceleration.

Example:

Speed (km/h)	Slip	Abrasion
100	1	1
180	3	9

2. Brakes

The highest abrasion is achieved when braking.

Example: Braking from a speed of 50 km/h.

Braking Distance (Meters)	Transverse Acceleration in g[3)]	Slip	Abrasion
Coasting vehicle		0	0
100	0,1 g	4	1
50	0,2 g	8	4
12,5	0,4 g [2)]	32	2000-3000

1) g = gravitational acceleration: 9.81 m/s^2

2) A deceleration with 0.4 g corresponds to heavy braking.

3. Acceleration (Driving Style)

The slip that occurs during a gentle acceleration from a stop is approximately the same as the slip that occurs at a steady speed of approximately 100 km/h.

Downloaded from www.Manualslib.com manuals search engine

Example:

	Slip	Abrasion
Gentle acceleration	1-2	1
Normal acceleration	7-8	5
Acceleration with driving wheels	20 and more	100-200

Cornering (Driving Style)

A »sporty« driving style and driving at higher speeds also cause greater wear when driving around curves.

In practice, this means doubling the speed in a curve leads to an increased abrasion by a factor of 16. This is the »"extra charge"« for driving faster.

Example: Driving around a curve with a radius of 150 m.

Speed (km/h)	Transverse Acceleration in g[3)]	Abrasion
50	1 = 0.13 g	1
80	2,5 = 0,33 g	6,5
100	4 = 0,53 g	16

3) g = gravitational acceleration: 9.81 m/s^2

1.12.6 Tread Depth, Measuring

Protected by copyright. Copying for private or commercial purposes, in part or in whole, is not permitted unless authorised by AUDI AG. AUDI AG does not guarantee or accept any liability with respect to the correctness of information in this document. Copyright by AUDI AG.

Note

- *When measuring tread depth, take measurements in the main grooves.*
- *Do not measure on the TWI (tread wear indicator).*

Tread depth of a tire must be measured in the main grooves at the points showing the most wear. Main tread grooves can be recognized by the TWI. The positions of the tread wear indicators are visible several times along the tire shoulder. The TWI protrusions are 1.6 mm tall. This is the minimum tread depth legally prescribed in Germany.

Different values may apply in other countries.

Downloaded from www.Manualslib.com manuals search engine

Tread Wear Indicators (TWI) must not be included in the measurement. The deepest point of the groove must be used for the measurement.

A - Tread wear indicators (TWIs) in main tread grooves. Items can be identified 6 times on the circumference of the tire shoulder.

B - Tread depth -P- in the main tread groove.

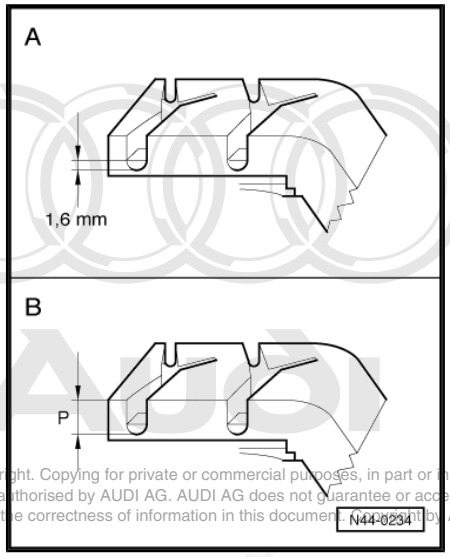

Protected by copyright. Copying for private or commercial purposes, in part or in whole, is not permitted unless authorised by AUDI AG. AUDI AG does not guarantee or accept any liability with respect to the correctness of information in this document. Copyright by AUDI AG.

Tread Wear Indicators - TWI

TWI[4)] is visible 6 times on the circumference of the tire shoulder.

4) TWI means: Tread Wear Indicator

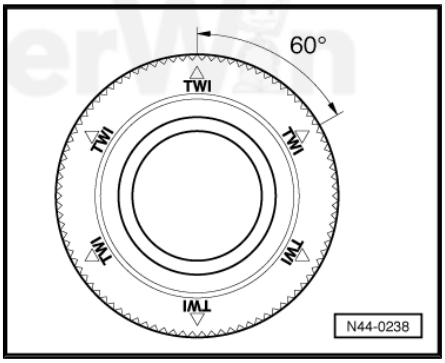

1.12.7 Tires with Emergency Running Characteristics (PAX) Side Wall Lettering

		1	2	3	4	5	6	7
Summer Tires	up to 240 km/h	195	65	R	15	91	V	
Winter Tires	up to 160 km/h	195	65	R	15	91	Q	M+S
Winter Tires	up to 190 km/h	195	65	R	15	91	T	M+S
High Speed Tires	over 240 km/h	225	50	ZR	16	19	Z	

1 - Tire width

2 - Aspect ratio in %

3 - Tire construction code “R“ means radial

4 - Rim diameter designation

5 - Load index

6 - Speed code

7 - Winter tire/designation for all-season tire

Downloaded from www.Manualslib.com manuals search engine

1.12.8 80 Series Tires

Tires of the “80“ series (e.g. 145/80 R 13 74S) will replace the “82“ series (e.g. 145/82 R 13). All tires of the “82“ series may be replaced by tires of the “80“ series without any entry in the registration documents.

For this, the tires of the “80“ series require to have the same section width, tire design (diagonal or radial ply tires), and the same or a higher load-carrying capacity characteristic number.

The “80“ and “82“ series tires may only be used if they are entered in the vehicle registration documents.

1.12.9 Speed Code/High Speed

Code on the Sidewall	Permissible Maximum Tire Speed in km/h
L	120
M	130
N	140
P	150
Q	160
R	170
S	180
T	190
U	200
H	210
V	240
W	270
Y	300
ZR	over 240

Protected by copyright. Copying for private or commercial purposes, in part or in whole, is not permitted unless authorized by AUDI AG. AUDI AG does not guarantee or accept any liability with respect to the correctness of information in this document. Copyright by AUDI AG.

Winter tires with speed rating “V“, refer to
⇒ “1.12.11 Winter Tires with Speed Rating V “, page 20 .

1.12.10 Tires, Speed Ratings

Table, refer to ⇒ “1.12.9 Speed Code/High Speed“, page 19 .

The speed rating (e.g.:“T“) behind the tire size specification (e.g.: 185/65 R 14 86T) indicates the maximum permissible speed (v_{max}) for the tire.

When selecting the tires for a vehicle, ensure that their maximal permissible speed lies above the maximum speed attainable by the vehicle (“design-related“).

Vehicles with National Type Approval

For all vehicles with national type approval, the maximum speed is calculated using the following formula:

Formula for Vehicles with Speed “v“ $_{maximum}$ up to 150 km/h

$$v_{max} = 1.03 \times v + 3.5 \text{ km/h}$$

Example: Indicated maximum speed v = 145 km/h

$$v_{max} = 1.03 \times 145 \text{ km/h} + 3.5 \text{ km/h} = 152.85 \text{ km/h}$$

In this example, a “Q“ tire or a tire with a higher-order speed rating must be used.

Downloaded from www.Manualslib.com manuals search engine

Formula for Vehicles with Speed Rating "v" from 151 km/h

v_{max} = 1,01 x v + 6,5 km/h

Example: Indicated maximum speed v = 163 km/h

v_{max} = 1,01 x 163 km/h + 6,5 km/h = 171,13 km/h

In this example, a "S" tire or a tire with a higher-order speed rating must be used.

Vehicles with EU Type Approval

For all vehicles with EU-registration, the maximum speed is calculated using the following formula:

v_{max} = 1.05 x v

Example: Indicated maximum speed v = 172 km/h

v_{max} = 1.05 x 172 km/h = 180.60 km/h

In this example, a "T" tire or a tire with a higher-order speed rating must be used.

Using tires with a higher-order speed rating is permitted. The same applies for tires with higher-order load-carrying capacity characteristic number (load index).

Note

For the letter "v", enter the specified maximum speed in the vehicle registration Part I or II in the field "T" or in the vehicle title under number 6. This conversion is necessary, because due to technical reasons, all vehicles reach different maxim speeds within a legally permissible range.

Protected by copyright. Copying for private or commercial purposes, in part or in whole, is not permitted unless authorised by AUDI AG. AUDI AG does not guarantee or accept any liability with respect to the correctness of information in this document. Copyright by AUDI AG.

1.12.11 Winter Tires with Speed Rating V

Table, refer to ⇒ "1.12.9 Speed Code/High Speed", page 19 .

The tire industry delivers winter tires with V-rating also. These tires can be applied up to the maximum permissible speed v_{max} = 240 km/h only under certain conditions.

Vehicles with V-Tires

Vehicles that require V-tires according to vehicle registration, can be driven with V winter tires without limitations up to speed rating "v" $_{max}$ = 240 km/h.

Vehicles with W-, Y- or ZR-Tires

Vehicles that require W, Y, or ZR tires according to vehicle registration, cannot be driven with V winter tires up to "v" $_{max}$ = 240 km/h under certain conditions.

Why?

V summer tires and V winter tires without special designation guarantee 100% of the load capacity indicated by their Load Index ("LI") only up to a speed of 210 km/h.

Speeds above 210 km/h are only possible if the maximum load capacity of the tire is not exceeded. The load capacity of the tire decreases as the speed increases.

The maximum permissible axle load and the attainable maximum speed of certain Audi vehicles are so high that the load capacity of V tires is not sufficient for speeds above 240 km/h.

Downloaded from www.Manualslib.com manuals search engine

Example: Tire 205/55 R 16 91V

The Load index (LI) 91 for this tire indicates a load capacity of 615 kg per tire up to 210 km/h.

At 240 km/h, the load capacity of this tire is reduced to only 560 kg. For this reason, the axle load can only be maximum 1,120 kg.

The vehicle has an additional axle load of 1,150 kg and an attainable maximum speed of 232 km/h. This vehicle can be driven with V winter tires up to a speed of 230 km/h.

This applies to all V winter tires that do not have a special designation.

Winter tires identified with Extra Load XL. Refer to
⇒ “1.12.14 Winter Tires, Extra Load, Speed Rating V“, page 22

Permission Stipulations in Germany

Only when using winter tires is it permitted that the highest speed attainable by the vehicle lies above the highest speed of winter tires specified by the speed rating.

In this case, a warning sign in the view of the driver must be applied with the following content:

Protected by copyright. Copying for private or commercial purposes, in part or in whole, is not permitted unless authorised by AUDI AG. AUDI AG does not guarantee or accept any liability with respect to the correctness of information in this document. Copyright by AUDI AG.

Attention, Winter Tires!
Maximum permissible speed ...km/h

1.12.12 Load Index (LI)

The load capacity index can be found on the sidewall of the tire. It provides information about the maximum load that the tire can bear.

The load capacity index is located in the size designation, e.g. 195/15 R 91 91T, of the tire. It is indicated on the tire as a code according to ETRTO. The following table shows the load capacity index used at Audi with the corresponding load capacity of the tires.

Load Index	Maximum Tire Load in kg
76	400
77	412
78	425
79	437
80	450
81	462
82	475
83	487
84	500
85	515
86	530
87	545
88	560
89	580
90	600
91	615
92	630
93	650
95	690

Downloaded from www.Manualslib.com manuals search engine

Load Index	Maximum Tire Load in kg
96	710
97	730
98	750
99	775
100	800
101	825
102	850
103	875
104	900
105	925
106	950
107	975
108	1000
109	1030
110	1060
111	1090
112	1120

1.12.13 Tires, Reinforced, Extra Load

Tires with XL designation have a higher load capacity than the tires without this designation.

Some time ago, the designation “Reinforced“ was replaced with the designation “Extra Load“ by some tire manufacturers. In countries outside Europe, this designation has been conventional for some time. There are no technical differences.

Some tire manufacturers also use the “XL“ designation for Extra Load tires.

Tires with the designations “Reinforced“ or “Extra Load (XL)“ are the same.

1.12.14 Winter Tires, Extra Load, Speed Rating V

V winter tires with XL designation have a higher load capacity than the V winter tires without this designation.

Higher speeds can be attained with XL V-winter tires, but the maximum speed of the V tires of 240 km/h is not permissible for every vehicle.

The same conditions apply for these tires as for V winter tires without special designation! Refer to
⇒ “1.12.11 Winter Tires with Speed Rating V “, page 20 .

1.12.15 Snow Chains

Protected by copyright. Copying for private or commercial purposes, in part or in whole, is not permitted unless authorised by AUDI AG. AUDI AG does not guarantee or accept any liability with respect to the correctness of information in this document. Copyright by AUDI AG.

Snow chains may be mounted only on the drive wheels.

Only the front wheels on all wheel drive vehicles and also the back wheels on the Audi Q5 are equipped with snow chains.

Snow chains are not possible with all wheel/tire combinations.

If no special snow chain type is specified, a snow chain with small chain links can be used. Only chains which do not stand up more than 15 mm, including chain lock, may be applied on tire tread and inner sides.

Downloaded from www.Manualslib.com manuals search engine

With some models and certain wheel/tire combinations, only snow chains with small chain links can be used.

Note

The legally permitted maximum speed when driving with snow chains is 50 km/h.

Remove the snow chains before driving on snow-free roads. The drive characteristics will decrease. During this, the tires are stressed unnecessarily and the chain wear is particularly high.

1.12.16 Rubber Valve

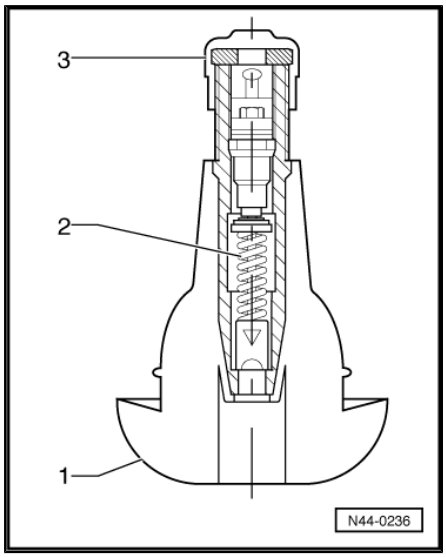

1 - Valve body

2 - Valve core

3 - Valve cap

1. The Valve Body

The rubber valve for tubeless tires is designed to seal air-tight in the hole in the rim. The elastic material of the rubber body presses itself tightly into the hole in the rim.

When valves with threaded metal feet are used, a rubber seal is used to seal the rim. The area around the edge of the valve hole is a sealing area. Therefore, they must be free of rust, dirt and damage.

2. The Valve Insert

The valve core has the most important job in the valve: It creates a seal and enables the regulation of the air pressure. The small plate seal on the valve core can only do its job when it is free of impurities, dirt and moisture.

3. Valve Cap

A valve cap must always be screwed onto the valves. It prevents dirt from getting into the valve. Dirt which may be in the valve would reach the seal of the valve plate when the tire is inflated and cause a leak.

The valve must be replaced every time a new tire is fitted.

If the vehicle is driven without caps on the valves, there is the danger that dirt may get into the valve. This leads to gradual loss of air and therefore lead to the destruction of the tire.

- Separation of carcass and rubber.
- Wide circumferential furrows in the area of the bead.
- Disintegrated tread or torn-out tread.

Caution

An air-tight seal is ensured only if the valve cap is secured tightly.

Do not use valve caps made of aluminum on a valve body made of steel.

Protected by copyright. Copying for private or commercial purposes, in part or in whole, is not permitted unless authorised by AUDI AG. AUDI AG does not guarantee or accept any liability with respect to the correctness of information in this document. Copyright by AUDI AG.

Downloaded from www.Manualslib.com manuals search engine

1.12.17 Tires, Storing

The Storage Room

Tire storage must be:

- Dark
- Dry
- Cool
- ventilated

Stored tires must not come in contact with fuel, oil, grease or chemicals under any circumstances. Otherwise, the material in the tire will be damaged by chemical reactions which are not always visible.

This may lead to life-threatening situations when the car is driven. However, tire damage occurs only when the reaction time of the chemicals is long. If a few drops of fuel land on a tire during a fill-up, this is harmless.

Complete Wheels

Tires mounted on wheels can be stored flat, stacked on upon another. The air pressure should be raised to a maximum of 3 bar.

Tires without Wheels

Tires without wheels are best stored standing vertically. If tires lie stacked upon another for longer periods of time, they will be strongly pressed together. This makes mounting more difficult because the tires do not lie on the bead seat. If the tires are stored standing vertically, it is recommended to turn them every 14 days to avoid severe flattening.

1.12.18 Tires, Aging

Tires age as a result of physical and chemical processes whereby the function can be impaired. Tires which are stored for longer periods of time become harder and brittle faster than tires which are constantly in use on a vehicle. Older tires may develop hairline cracks from aging. When tires are in constant use, the kneading activates softeners in the rubber, preventing hardening and the development of cracks.

Therefore, one should note not just the tread depth but also the age of spare tires, stored tires and tires which are not permanently in use. Tire age can be determined from the DOT code which contains, among other things, the tire's production date.

Protected by copyright. Copying for private or commercial purposes, in part or in whole, is not permitted unless authorised by AUDI AG. AUDI AG does not guarantee or accept any liability with respect to the correctness of information in this document. Copyright by AUDI AG.

Example of a DOT number:

DOT	.....	5	0	0	2	<
						stands for 2002
				Production year		
		Calendar week				

In this example, the production date is the 50th week in 2002. Through 12/31/1999, the DOT number was a three-digit number.

Recommendation:

- ♦ It is recommended using tires more than 6 years old only in emergencies and only with a cautious driving style.
- ♦ When new tires are fitted, the spare tire may also be used if it is in flawless condition and is not more than 6 years old. The age of the tire has a great influence on the high-speed capability of the tire. The combination of a spare tire which is several

Downloaded from www.Manualslib.com manuals search engine

years old with new tires is possible, but it can influence the car's handling.

- Tires are constantly being further developed, this can lead, for example, to slight changes in the rubber compound, even if the tires are of the same make, size and tread.
- For driving safety reasons, tires of the same make and with the same tread should be mounted on one axle. All Audi vehicles are factory-fitted with four identical tires and wheels.
- Vehicles with AWD always must be equipped with four wheels that have tires of the same size, construction, tread pattern and make.

1.12.19 Tires, Replacing

We recommend using tires that have “AO“ on them. These tires are suited for each Audi model.

Tires must be changed when:

- The legal minimum tread depth of 1.6 mm is reached.
- There is visible damage from mechanical damage.
- The tires are more than 6 years old.

1.12.20 Light Alloy Wheels, Care and Maintenance

To maintain the decorative appearance of light alloy wheels for a long time, regular care is necessary.

In particular, road salt and dust from brake abrasion must be thoroughly washed off every 2 weeks. Otherwise, the paint of the light alloy wheel will be attacked.

The following are appropriate cleaning agents:

- Water or water and soft soap.
- Water and vinegar essence.
- Light alloy wheel cleaning agents without acids or harsh solvents.

Do not exceed the soaking time of the cleaning agent.

The shorter the specified soaking time is, the stronger and more aggressive the cleaning solution is.

Copyright by AUDI AG. Reproduction of this document for any purposes, in part or in whole, is not permitted unless authorised by AUDI AG. AUDI AG does not guarantee or accept any liability with respect to the correctness of information in this document. Copyright by AUDI AG.

If the paint is damaged, for example by impact from a stone, the paint damage must be repaired immediately.

Remove adhesive residue from light alloy rim adhesive balancing weights:

- Harsh solvents and acids attack the paint on light alloy wheels and the surface of the wheel becomes matte and milky. These agents therefore must not be used.
- To remove adhesive residue on light alloy wheels, use light alloy cleansers or benzene-based cleanser. Do not exceed the soaking time of the cleaning agent.
- After cleaning or removing adhesive residue on the tires, they must be rinsed again with water.

Wheels, Rotating

- Vehicles with front-wheel drive experience more tread wear on the front wheels due to the increased stress on them.
- In order for all 4 wheels on the vehicle to have the same service life, it is recommended to rotate the front and rear wheels.

Downloaded from www.Manualslib.com manuals search engine

- Be sure not to mix up tires, which have the direction of rotation marked on them.
- The longer the tire runs at one position, the more it wears at certain points, therefore, it is recommended to rotate the wheels at short intervals, e.g. every 5.000 km.
- Diagonal rotation is possible only with non-directional tires. This wheel rotation is especially advantageous for heel-and-toe wear. Refer to ⇒ “1.14.3 Heel and Toe Wear“, page 31 .
- If heel-and-toe wear has already progressed very far and the tread is more than 50% worn, only slight improvement can be achieved and rotation is no longer recommended. The elasticity of the tread blocks declines and the heel-and-toe wear does not progress.

1.12.21 Tires with Rim Protector

The tire industry produces tires with rim protector for light alloy wheels (rim protector). The rim protector prevents damage to the light alloy wheels caused by contact with curbs.

Using tires with rim protector on steel wheels with wheel covers may lead to the loss of the wheel cover while driving. The cover separates from its secure seating due to the flexing of the tire.

Protected by copyright. Copying for private or commercial purposes, in part or in whole, is not permitted unless authorised by AUDI AG. AUDI AG does not guarantee or accept any liability with respect to the correctness of information in this document. Copyright by AUDI AG.

> ⚠ WARNING
>
> *When installing tires on steel rims, ensure only tires without rim protector are mounted.*

The illustration shows the non-permissible combination of steel rim, wheel cover and tire with rim protector.

A - Rim protector

B - Rim flange of a steel rim

C - Wheel cover

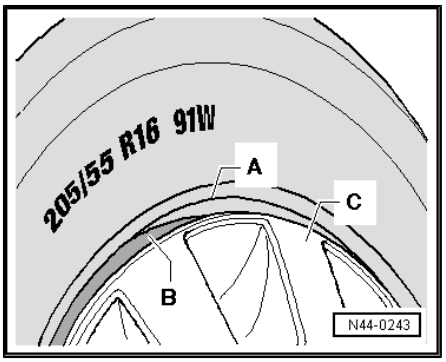

> ⚠ WARNING
>
> *This combination must not be mounted!*

1.13 Tire Wear and Service Life

⇒ “1.13.1 General Information“, page 26
⇒ “1.13.2 High Speed Tires, Wear Characteristics“, page 27
⇒ “1.13.3 Tire, Uniformly Worn“, page 27
⇒ “1.13.4 Tire Wear, One Sided“, page 27
⇒ “1.13.5 Wear on One Side, Faulty Adjustment“, page 28
⇒ “1.13.6 Tire Wear, Center“, page 28
⇒ “1.13.7 Diagonal Washouts“, page 29
⇒ “1.13.8 SA 18 - Wear; SA 11 - Adjustment Error“, page 29
⇒ “1.13.9 Changes to the Suspension“, page 30

1.13.1 General Information

Numerous demands are made on a tire. See points A through H.

Downloaded from www.Manualslib.com manuals search engine

Each of these demands is made on every tire to a certain degree.

Depending on the use of the tire and the vehicle type, certain demands may be more heavily weighted while others are accordingly less significant.

One expects greater adhesion, even on wet or flooded surfaces from H, V and Z tires for »high-powered vehicles«. Consequently, the service life for tires of this type is not as high as for S or T tires, for example.

1.13.2 High Speed Tires, Wear Characteristics

These tires are designed for the highest speeds. Good traction on wet roads is emphasized when developing these tires. Tread compounds do not have the abrasion resistance of tires for lower speeds, such as T and H tires.

Therefore the service life expectancy of high-speed tires is substantially lower under comparable operating conditions.

1.13.3 Tire, Uniformly Worn

The demands on the tires increase constantly.

The causes are the following factors:

- Higher vehicle weight.
- High speeds.
- Increased vehicle safety.

A high load on tires naturally causes high wear.

The driving style has a profound influence on the tire wear. Therefore, for complaints about wear when the treads are uniformly worn, the tires will not be replaced under warranty.

The actual service life of a tire can only be determined when the tread depth is 2 mm, see diagram. Refer to ⇒ page 15 .

1.13.4 Tire Wear, One Sided

In many causes, this is caused by driving style, but sometimes it is also caused by incorrect axle adjustment.

One-sided wear, in conjunction with scrub marks on tread ribs and finer grooves, always appears when tires roll at an extreme slip angle and consequently »scrub« on the road surface.

Protected by copyright. Copying for private or commercial purposes, in part or in whole, is not permitted unless authorised by AUDI AG. AUDI AG does not guarantee or assume any liability with respect to the correctness of information in this document. Copyright by AUDI AG.

Driving quickly around curves leads to increased wear, especially on the outside edge.

A rounded tire shoulder in conjunction with especially high wear on the outer tread bars indicates fast driving around curves. This wear pattern is influenced by the driving style.

The suspension is adjusted to certain toe and camber values to optimize handling. When tires roll under conditions other than those specified, increased and one-sided wear must be expected.

Strong one-sided wear can be caused especially by incorrect toe and camber values. This increases the danger of diagonal wear spots.

Downloaded from www.Manualslib.com manuals search engine

Toe-Out or Negative Toe-In

The distance between the fronts of the tires -A- is greater than the distance between the backs of the tires -B- (-C- = direction of travel).

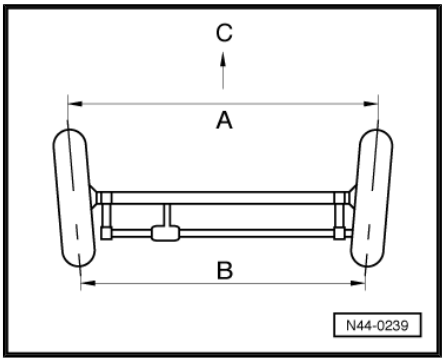

Toe-In or Positive Toe-In

The distance between the fronts of the tires -A- is less than the distance between the backs of the tires -B- (-C- = direction of travel).

To avoid one-sided tire wear, ensure that the wheel alignment remains within the tolerances specified by the vehicle manufacturer. The most common deviation of wheel alignment is caused by external influences, for example hard contact with the curb when parking.

A measurement of the axle geometry can determine whether the wheel alignment is within the specified tolerances or whether a correction of the wheel alignment is necessary.

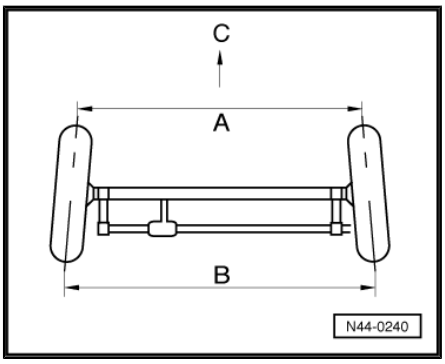

1.13.5 Wear on One Side, Faulty Adjustment

If the complaint is about one-sided tire wear, check the axle geometry. Billing to warranty is only possible in cases of one-sided tire wear that is caused by axle geometry errors that cannot be traced back to external effects on the tires and rims. The axle alignment log should be included with the tire complaint registration.

Due to tire »skew«, increased and one-sided wear. Frequently in conjunction with raised running surface to the point of ridge formation on tread edges.

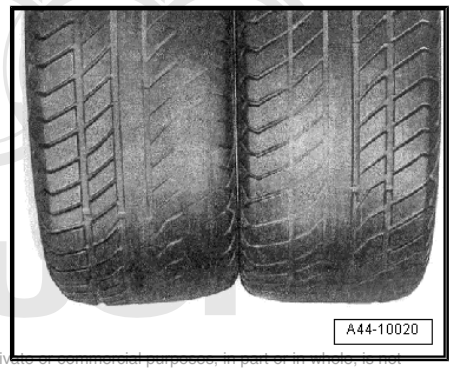

Protected by copyright. Copying for private or commercial purposes, in part or in whole, is not permitted unless authorised by AUDI AG. AUDI AG does not guarantee or accept any liability with respect to the correctness of information in this document. Copyright by AUDI AG.

1.13.6 Tire Wear, Center

This wear pattern is found on drive wheels on high-powered vehicles that often drive long stretches at high speed.

At high speeds, the centrifugal force increases the tire diameter at the center of the tread more than at the shoulders of the tire. The drive forces from the center area of the tread are transferred to the road surface. This is reflected in the wear pattern.

These effects can appear especially extreme on wide tires.

Reducing the tire pressure is not an effective remedy for this wear pattern.

Downloaded from www.Manualslib.com manuals search engine

DANGER!

For safety reasons, tire pressure must never be lowered below specified pressure under any circumstances.

A largely even wear pattern can be achieved if tires are changed in a timely manner from the tractive to the non-tractive axle.

Typical wear pattern of tires on the tractive axle of high-powered vehicles. The increased wear at the tread center is caused by stresses related to the centrifugal force of the tire and the transmission of traction forces.

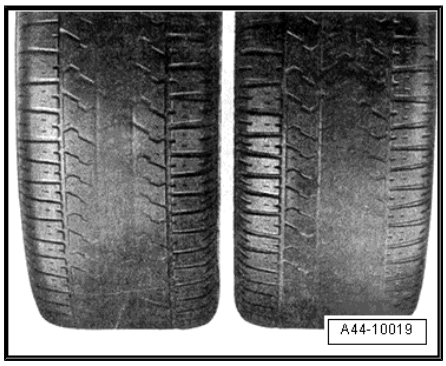

1.13.7 Diagonal Washouts

Diagonal wear spots run at an angle of approximately 45 ° with respect to the plane of circumference. They usually occur once, but may also occur several times along the tire circumference.

Wear spots appear almost exclusively on the non-tractive tires, especially the rear left tire. There are vehicle models where wear spots appear rounded, which are not a problem. The effect is increased by high toe values. Toe values at the lower tolerance limit of the specified value improve the wear pattern.

The tire component integration is often found in the area with the most pronounced diagonal wear spots.

Wheels with toe-in roll with a slip angle even when the vehicle is traveling straight ahead. This leads to diagonal tension in the contact zone between tires/road surface.

Driving with reduced tire pressure will improve the wear pattern. To prevent such wear patterns, the toe values of both rear wheels should be the same and the specified tire pressure should be maintained.

If wear spots are detected, mount the wheels on the tractive axle if the wear spots are still in the initial stage. Deeper wear spots are irreparable.

Protected by copyright. Copying for private or commercial purposes, in part or
permitted unless authorised by AUDI AG. AUDI AG does not guarantee or ac
with respect to the correctness of information in this document. Copyright b

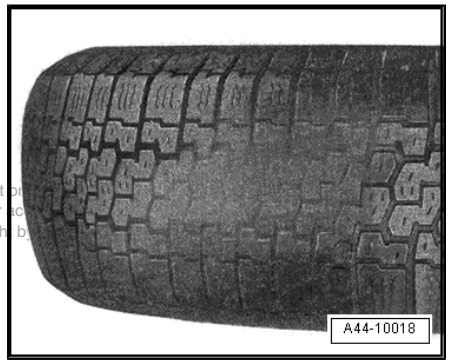

1.13.8 SA 18 - Wear; SA 11 - Adjustment Error

When a customer complains of diagonal wear spots, the toe adjustment must be checked. If it is OK, the cause for the diagonal wear spots is most likely in the tires. Billing to warranty is possible in this case.

Downloaded from www.Manualslib.com manuals search engine

The axle alignment log should be included with the tire complaint.

Tires with diagonal wear spots which developed due to faulty adjustment of the axle geometry are excluded from the warranty.

1.13.9 Changes to the Suspension

If a “lowering-kit“ and /or light alloy wheels from accessories which have not been approved by Audi are used, wheel alignments which deviate from the alignment specified in design may occur during travel.

Even if the adjustment of the axle geometry measured on a standing vehicle is correct, changes in the body height and positions of the wheels during travel can lead to changes to the paths of travel of the wheel suspension.

For this reason, uneven wear is pre-programmed.

1.14 Tires, Rolling Noises

⇒ “1.14.1 General Information“, page 30

⇒ “1.14.2 Rolling Noise, Causes“, page 30

⇒ “1.14.3 Heel and Toe Wear“, page 31

⇒ “1.14.4 Wear Spots“, page 32

Protected by copyright. Copying for private or commercial purposes, in part or in whole, is not permitted unless authorised by AUDI AG. AUDI AG does not guarantee or accept any liability with respect to the correctness of information in this document. Copyright by AUDI AG.

1.14.1 General Information

Rolling noise perceived by the human ear is caused by vibrations transmitted from the noise source to the ear via the air.

Here we are interested in noises created by certain characteristics of the tires as well as the effects of rolling (noise source).

The cause for the noise generation depends primarily on the combination of road surface and tire.

The surface structure and material of the road surface also have a strong influence on the rolling noise. For example, the noise level on a wet road is substantially higher than on a dry road.

The design of the tread has a great influence on the noise generation. Tires with cross grooves at an angle of 90° are louder than tires with grooves running diagonally.

Small tread blocks are unstable. Due to strong deformation, the air is excited by the rolling tires. Air vibrations occur, which will generate noises.

Wider tires are louder. They require more tread grooves for water displacement. Air is displaced by these tread grooves while rolling, which also cause air vibrations.

Other effects which also have an influence on noise generation:

- »Tire vibration« is the main cause of rolling noise. The noise is generated by the excitation of the air column in the grooves.
- »Air pumping« is the compression and expansion of air as the contact patch comes in contact with the road surface and the tread blocks are deformed.

1.14.2 Rolling Noise, Causes

Noise generation is created chiefly by tires and the road surface.

Influencing factors of road surface are roughness, structure and material.

Influencing factors for tires fall under different tire and rim widths. A wider tire generates more noise due to its wider contact patch

Downloaded from www.Manualslib.com manuals search engine

than a narrower tire does, because more air is displaced and a greater mass is caused to vibrate.

A wider rim also causes the tire to have a wider contact patch. The effects on noise generation are basically the same as those of a wider tire. In addition, the noise suppression characteristics of the tire can, under certain circumstances, be negatively affected by the wider rim.

The tire rolling noise is significantly noticeable in the rear of vehicles with front engines, because wind and engine noise are less audible in the back.

Note

- *Based on European Guideline ECE- R117 for new noise limits, these tire also have an "S" on the sidewall.*
- *For passenger vehicle tires with an average width up to 185 mm: as of October 1, 2009.*
- *For passenger vehicle tires with an average width from 185 mm up to 215 mm: as of October 1, 2010.*
- *For passenger vehicle tires with an average width wider than 215 mm: as of October 1, 2011.*

1.14.3 Heel and Toe Wear

Protected by copyright. Copying for private or commercial purposes, in part or in whole, is not permitted unless authorised by AUDI AG. AUDI AG does not guarantee or accept any liability with respect to the correctness of information in this document. Copyright by AUDI AG.

Heel-and-toe wear is step-like wear of individual tread blocks, due to which an increased rolling noise can develop. The heel-and-toe wear is caused by the uneven distortion of the tread blocks in the contact patch. Heel-and-toe wear appears in more extreme forms on non-tractive wheels than on tractive wheels.

New tires have a stronger tendency to heel-and-toe wear, because the high tread blocks have greater elasticity. As tread depth decreases, the rigidity of the tread blocks increases and the tendency to heel-and-toe wear decreases.

How does the heel-and-toe wear look?

The tread blocks are higher in the front than back when viewed in running direction, see illustration. Extreme heel-and-toe wear may lead to customer complaints about noise.

Increased heel-and-toe wear occurs with:

Downloaded from www.Manualslib.com manuals search engine

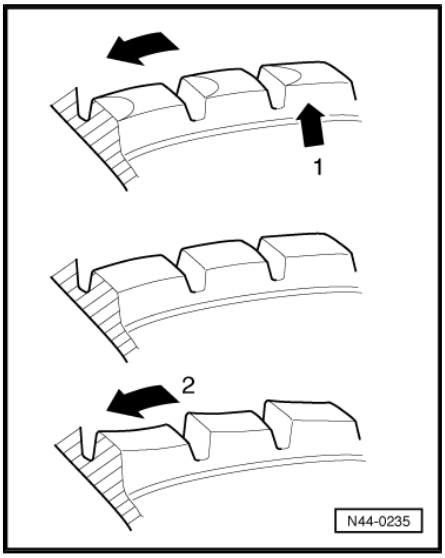

- Toe values too great
- Incorrect air pressure
- Deep, open treads
- Tires which are not mounted on the tractive axle
- Extreme cornering

1 - Tread block, heavy wear at front of tread block

2 - Running direction

Non-Directional Tires

When heel-and-toe wear occurs, the direction of travel of the tire must be reversed. If increased heel-and-toe wear and rolling noise develop, the tires should be rotated diagonally. This leads to a reduction of heel-and-toe wear. On vehicles with front wheel drive, this effect is increased by increased wear on front axle. The rolling noise is somewhat louder immediately after rotating the wheels, but the normal noise level will be reached after traveling approximately 500 to 1,000 km.

Directional Tires

In the event of increased heel-and-toe wear of the tires on the rear axle - most common with front-wheel drive - rotate the wheels from back to front. In the event of increased heel-and-toe wear on the outer edges on one axle, reverse both tires on their rims. Then the left wheel must be mounted on the right side and the right wheel on the left side.

Heel-and-toe wear is a normal wear pattern and on non-directional tires, it is reduced by diagonal tire rotation after approximately 500 to 1,000 km.

The previous repair attempt should be briefly described on the complaint report.

Modern tires are designed for maximum driver safety even in wet conditions. Heel-and-toe wear is promoted by the open tread configuration in the tire flanks and the soft tread compound that is necessary to ensure this safety.

Heel-and-toe wear is not a fault in the warranty sense but rather is a completely normal wear pattern.

1.14.4 Wear Spots

Wear spots are caused by a hard stop with locked wheels whereby the rubber compound is abraded from the contact patch.

When the tires slide across the road surface, frictional heat is generated which reduces the abrasion resistance on the tread compound.

Even the most abrasion-resistant tread compound cannot prevent wear spots which can occur during extreme braking.

Even ABS cannot completely prevent brief locking and the resulting slightly flat spots.

Protected by copyright. Copying for private or commercial purposes, in part or in whole, is not permitted unless authorised by AUDI AG. AUDI AG does not guarantee or accept any liability with respect to the correctness of information in this document. Copyright by AUDI AG.

The degree of abrasion is primarily dependent on the vehicle speed, road surface and tire load. For clarification see the following examples.

If a vehicle with locked front wheels is decelerated until it comes to a stop, the abrasion of rubber on the post card sized contact patch is approximately:

- From 57 km/h = 23.8 m braking distance, up to 2.0 mm.
- From 75 km/h = 41,8 m braking distance, up to 3,3 mm.

Downloaded from www.Manualslib.com manuals search engine

- From 92 km/h = 71,6 m braking distance, up to 4,8 mm.

Wear Spots in Tread

Tires with this type of damage cannot be used and must be replaced.

Warranty is not possible for tire damage due to braking wear spots or other driving errors (SA 13 - Untrue/imbalance; SA 20 - Driving noise).

Protected by copyright. Copying for private or commercial purposes, in part or in whole, is not permitted unless authorised by AUDI AG. AUDI AG does not guarantee or accept any liability with respect to the correctness of information in this document. Copyright by AUDI AG.

1.15 Wheels and Tires, Vibration

⇒ "1.15.1 Causes for Vibration", page 33

⇒ "1.15.2 Flat Spots in Tires from Standing", page 33

1.15.1 Causes for Vibration

There are many causes for vibration. Vibration can also be caused by tire wear, among other things.

Tire wear caused by driving does not always develop evenly over the entire tread. Due to this, a slight imbalance develops which disturbs the smoothness of the formerly accurately balanced wheel.

This slight imbalance cannot yet be felt in the steering wheel, but it is present. It increases the tire wear and consequently reduces the service life of the tire.

Recommendation

To ensure optimal safety, smoothness and even wear over the entire life of the tire, we recommend balancing the wheels/tires at least twice within the tire service life.

Flat spots in the tires can also cause vibration. Refer to ⇒ "1.15.2 Flat Spots in Tires from Standing", page 33 .

1.15.2 Flat Spots in Tires from Standing

Flat spots in tires from standing can also cause vibration.

What is a flat spot from standing?

Terms like flat portion and flattening are also used as a term for flat spots from standing.

It is important to recognize a flat spot in the tread from standing as such!

Note

It is not possible to balance a flat spot.

Downloaded from www.Manualslib.com manuals search engine

Flat spots can occur again caused by many different reasons. Flat spots from standing can be corrected without complicated special tools. Providing that the flat spot was not caused by wheel lock during hard braking. Refer to ⇒ “1.14.4 Wear Spots“, page 32 .

Note

Wear spots due to wheel lock are irreparable! Tires with such damage must be replaced.

Causes of Flat Spots from Standing

- The vehicle has been standing for a long time in one place without being moved.
- Tire pressure is too low.
- The vehicle was placed in a paint system drying cabinet after painting.
- The vehicle was parked with warm tires in a cold garage or similar for a long time. In this case, a flat spot can develop overnight.

Flat Spots, Correcting

- Flat spots cannot be removed from tires with workshop equipment.
- Flat spots cannot be balanced out.
- Check and correct the tire pressure as necessary.
- Such flat spots can be "driven out" only by driving the car until the tires are warm.
- We recommend driving the tires warm and not in cold or winter weather.

Protected by copyright. Copying for private or commercial purposes, in part or in whole, is not permitted unless authorised by AUDI AG. AUDI AG does not guarantee or accept any liability with respect to the correctness of information in this document. Copyright by AUDI AG.

DANGER!

Do not endanger yourself or other persons during this road test.

Observe valid traffic laws and speed limits during the road test!

1.16 Balancing

⇒ “1.16.1 Balancing“, page 34

⇒ “1.16.2 Road Test, Performing before Balancing“, page 35

⇒ “1.16.3 Stationary Balancing Machine“, page 35

⇒ “1.16.4 Wheels with a Sensitive Surface, Glued-On Wheel Trim“, page 37

⇒ “1.16.5 Wheel and Tire Balancing Procedure“, page 37

⇒ “1.16.6 Finish Balancer“, page 38

⇒ “1.16.7 Vibration Control Tire Balancer“, page 40

⇒ “1.16.8 Wheels and Tires, Radial Lateral Run Out“, page 40

⇒ “1.16.9 Matched Mounting“, page 40

1.16.1 Balancing

Before beginning balancing, the following requirements must be fulfilled:

Downloaded from www.Manualslib.com manuals search engine

- Tire inflation pressure must be OK.
- The tire tread must not be worn down on one side and should be at least 4 mm deep.
- The tire must not have any flat spots.

Note

It is not possible to balance a flat spot.

- The tires must not have any damage such as cuts, holes, foreign bodies, etc.
- The suspension, steering, tie rods and damper must be in proper working order.
- A road test has been performed.

1.16.2 Road Test, Performing before Balancing

If a vehicle comes to the workshop with the complaint »vibration«, a road test must be performed before balancing the wheels.

♦ That way, information about the type of vibration can be obtained.

♦ Observe at which speed range the disturbance takes place.

– Raise the vehicle on the platform immediately after the road test.

– Mark the installation position on the tire.

Note

Left front tires with »LF«; right front tires with »RF«; left rear tires with »LR«; right rear tires with »RR«.

– Remove wheels from vehicle.

Caution

If brake pads are ceramics, wheel must not fall on brake disc, otherwise it will be irreparably damaged. To remove/install wheel, install long assembly pin instead of wheel bolts in top position (12:00 position) and short assembly pin in wheel bolt mounts for support. In this way, the wheel can glide on the assembly aids when removing/installing.

Copyright. Copying for private or commercial purposes, in part or in whole, is not permitted unless authorised by AUDI AG. AUDI AG does not guarantee or accept any liability with respect to the correctness of information in this document. Copyright by AUDI AG.

– Balance the wheels.

1.16.3 Stationary Balancing Machine

Note

Please keep in mind that cleanliness is the most important when balancing as well, just as for any other repairs you perform. Only then can a proper result be obtained!

Downloaded from www.Manualslib.com manuals search engine

Caution

The balance weights must be glued on so that rub against the brake caliper or the suspension.

– Tension wheel on balancing machine.

Wheels with a sensitive surface, glued-on wheel trim, refer to ⇒ **"1.16.4 Wheels with a Sensitive Surface, Glued-On Wheel Trim", page 37** .

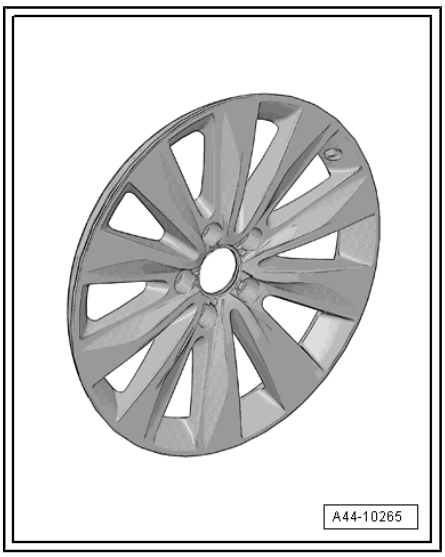

Note

- *Be careful not to scratch off the glued- on wheel trim on these rims.*
- *The surface of the wheel trim is very sensitive.*
- *The rim will have be replaced if the wheel trim is damaged.*
- *The wheel trim cannot be replaced.*

Note

Dirt and rust in the area of the contact surfaces and centering of the wheel distort the result.

– Clean contact surfaces, centering seat and wheel disc before tensioning wheel on balancing machine!

– Tension wheel with tire on balancing machine.

Caution

The balance weights must be glued on so that rub against the brake caliper or the suspension.

Note

- *To mount wheel on wheel balancer, use e.g. centering system for wheel balancing machines -VAS 5271- .*
- *This way a 100% centering of the wheel and gentle mounting is possible!*
- *It is not possible to center it 100% on balancing machine with conical tensioners.*
- *With a deviation of 0.1 mm outside the center, there is an imbalance of 10 grams on the wheel/tire.*

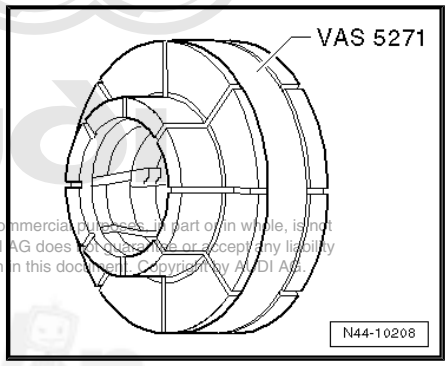

Protected by copyright. Copying for private or commercial purposes, in part or in whole, is not permitted unless authorized by AUDI AG. AUDI AG does not guarantee or accept any liability with respect to the correctness of information in this document. Copyright by AUDI AG.

Use a clamping plate such as -VAS 6243- to gently mount a wheel on the wheel balancer.

This way improved balance results are attained and the surface of the rim is protected, for example, on chrome wheel rims.

Downloaded from www.Manualslib.com manuals search engine

1.16.4 Wheels with a Sensitive Surface, Glued-On Wheel Trim

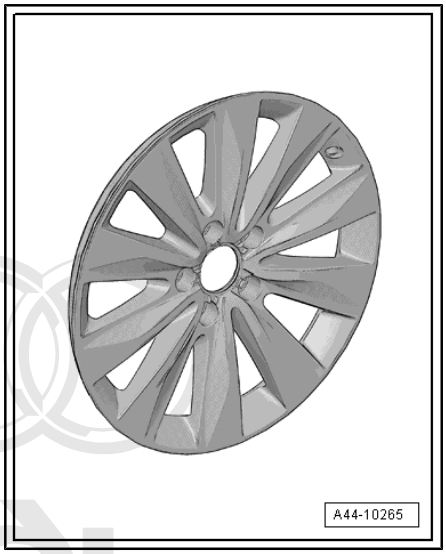

Note

- *Be careful not to scratch off the glued- on wheel trim on these rims.*
- *The surface of the wheel trim is very sensitive.*
- *The rim will have be replaced if the wheel trim is damaged.*
- *The wheel trim cannot be replaced.*

Exclusively use the tension plate -VAS 6652- and pressure bolt -VAS 6652/1- .

1.16.5 Wheel and Tire Balancing Procedure

Wheels with a sensitive surface, glued-on wheel trim, refer to ⇒ "1.16.4 Wheels with a Sensitive Surface, Glued-On Wheel Trim", page 37 .

Reproduced by copying or printing for private or commercial purposes, in part or in whole, is not permitted without the express consent of AUDI AG. AUDI AG does not guarantee or accept any liability with respect to the correctness of information in this document. Copyright by AUDI AG.

Caution

The balance weights must be glued on so that rub against the brake caliper or the suspension.

– Let the wheel and tire rotate on the wheel balancer.

– Check the run of the characteristic lines on the sidewall of the tire in the area of the rim flange.

– Check the tire wear pattern while the wheel and tire are rotating.

Note

In the event of one-sided wear, flat spots from braking or severe wear spots, smooth running cannot be achieved by balancing. In this case, the tire must be replaced.

– Check the run-out of the wheel and tire. If the wheel with tire runs untrue although there are no flat spots, a radial or lateral run-out may be the cause.

– Check wheel with tire for radial and lateral run-out, radial run-out (RR) and lateral runout (LR)!

– If the radial and lateral run-out are within the specified tolerance, balance the wheel and tire.

Downloaded from www.Manualslib.com manuals search engine

Note

- *Do not use more than 60 grams of weight per wheel.*
- *If more weight is necessary, a smoother running can achieved by matched mounting of the tire. Refer to* *⇒ "1.16.9 Matched Mounting", page 40* .
- *The display in the balancing machine should show 0 grams.*

– Bolt the wheel to the vehicle.

Caution

If brake pads are ceramics, wheel must not fall on brake disc, otherwise it will be irreparably damaged. To remove/install wheel, install long assembly pin instead of wheel bolts in top position (12:00 position) and short assembly pin in wheel bolt mounts for support. In this way, the wheel can glide on the assembly aids when removing/installing.

– First tighten the bottom wheel bolt by hand to approximately 30 Nm.

– Now tighten the remaining wheel bolts diagonally also to about 30 Nm. This process centers the wheel on the wheel hub.

– Put the vehicle on its wheels.

– Now use a torque wrench to tighten the wheel bolts diagonally to the specified tightening specification.

– Carry out a road test.

Note

- *If a vibration is still detected during the road test, the cause may be due to tolerance in the wheel centering.*
- *The component tolerances of wheels and wheel hubs can be additive in unfavorable cases. Vibration can result from this. This can be eliminated using a finish balancer.*

Protected by copyright. Copying for private or commercial purposes, in part or in whole, is not permitted unless authorized by AUDI AG. AUDI AG does not guarantee or assume any liability with respect to the correctness of information. Vehicle manufacturer reserves the right to change specifications and delivery options.

1.16.6 Finish Balancer

Caution

For the balancing, the wheels of the tractive axle are set upon the turntable sensors, i.e. front wheels for Front Wheel Drive (FWD) and all 4 wheels for All Wheel Drive (AWD).

Note

Working with a finish balancer requires instruction from the manufacturer of the balancer.

If it is determined when balancing on the vehicle the remaining imbalance is more than 20 grams, the wheel should be rotated on the wheel hub.

Downloaded from www.Manualslib.com manuals search engine

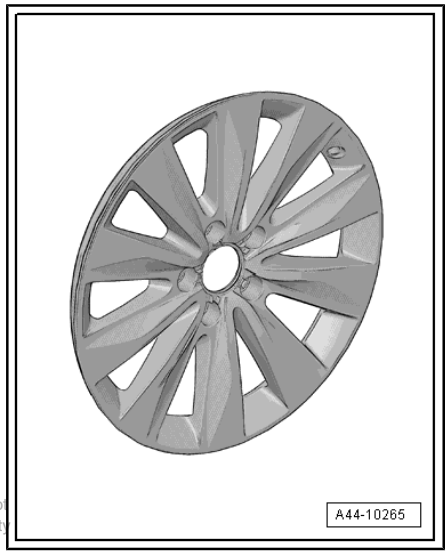

Note

- *Be careful not to scratch off the glued- on wheel trim on these rims.*
- *The surface of the wheel trim is very sensitive.*
- *The rim will have be replaced if the wheel trim is damaged.*
- *The wheel trim cannot be replaced.*

– Mark the point at which the imbalance is indicated.

Caution

The balance weights must be glued on so that rub against the brake caliper or the suspension.

Protected by copyright. Copying for private or commercial purposes, in part or in whole, is not permitted unless authorised by AUDI AG. AUDI AG does not guarantee or accept any liability with respect to the correctness of information in this document. Copyright by AUDI AG.

– Afterwards, unbolt the wheel and rotate its position on the wheel hub so that the marking points downward.

Note

Important! The wheel hub must not turn during this procedure.

– First, tighten the lowest wheel bolt by hand to approximately 30 Nm.
– Now tighten the remaining wheel bolts diagonally also to about 30 Nm. This process centers the wheel properly on the wheel hub.
– - Check again whether the imbalance is less than 20 grams using the finish balancer.

Note

The imbalance should not be smaller than 20 grams under any circumstances before changing balance weight.

– Remove the wheel bolts again if necessary.
– Rotate the wheel relative to the wheel hub once more by one or two wheel bolt holes.
– Tighten the wheels using the method described above.

Note

The imbalance should only be reduced by changing balance weight if the imbalance is less than 20 grams.

– Balance the wheels until the imbalance is below 5 grams.
– Tighten the wheel bolts to the specified tightening specification if you have not already done so.
– Always tighten the wheel bolts to the specified tightening specification using a torque wrench.

Downloaded from www.Manualslib.com manuals search engine

1.16.7 Vibration Control Tire Balancer

Wheels with a sensitive surface, glued-on wheel trim, refer to ⇒ "1.16.4 Wheels with a Sensitive Surface, Glued-On Wheel Trim", page 37 .

Expanded functions can be performed using vibration control tire balancer -VAS 6230 A- in addition to the previously known balancers.

A special characteristic of this system is testing the radial force of wheel/tire during rolling.

For this purpose, a roller presses a force of approximately 635 kg against the wheel. This simulates the tire contact force against the street surface while driving.

Tire contact forces fluctuate due to radial- and lateral run-out and differing rigidity in the tires.

The -VAS 6230 A- detects and stores the position of the maximum measured radial force in the tires. After that, the position of smallest dimension between rim flange and disc wheel center is measured.

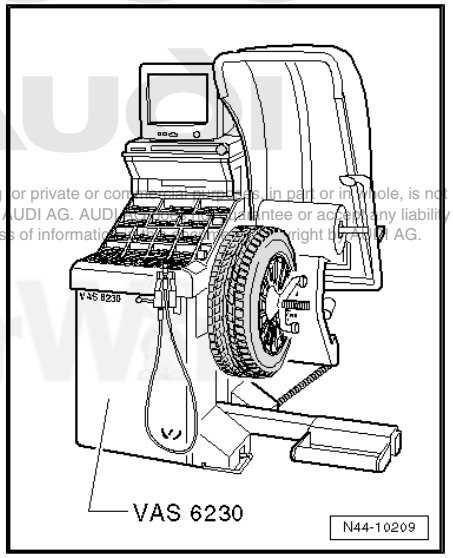

Protected by copyright. Copying or private or commercial use, in part or in whole, is not permitted unless authorised by AUDI AG. AUDI AG does not guarantee or accept any liability with respect to the correctness of information. Copyright by AUDI AG.

1.16.8 Wheels and Tires, Radial Lateral Run Out

Radial and lateral run-out occur when the wheel and tire are not running precisely true.

For technical reasons, 100% true running is not possible.

Therefore the manufacturers of these components allow a precisely specified tolerance.

Mounting the tire in a unfavorable position on the wheel can be the cause for exceeding the maximum allowed tolerance for wheel with tire.

The table shows the maximum permissible tolerance values for the wheel with mounted tire.

Tolerances for radial and lateral run-out of disc wheel with tire

Wheel with Tire	Radial Run-Out	Lateral Run-Out
All	0.8 mm	0.9 mm

1.16.9 Matched Mounting

If radial or lateral run-out from wheel or tire meet each other, the untrue running of the wheel and tire is increased.

100% true running is not possible for technical reasons, , radial and lateral run-out on wheel/tire.

Under unfavorable circumstances, the lateral or radial run-out of the combined wheel and tire can exceed the permitted tolerance.

The individual values of the disc wheel and tire may nevertheless be below the specified value.

Targeted rotating of the tire relative to the wheel can partially balance out the radial and lateral run-out.

Tire specialists call this procedure match-mounting, whereby the true running of the wheel and tire can be optimized.

Downloaded from www.Manualslib.com manuals search engine

Drive the tires until they are warm before matching them to the tires already on the vehicle. This eliminates flat spots from standing which may exist.

Matching Procedure

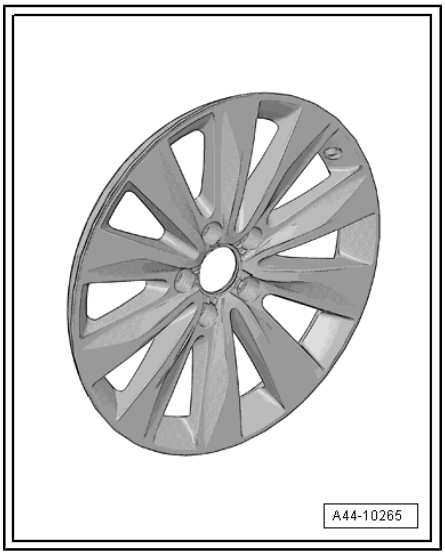

Note

- *Be careful not to scratch off the glued- on wheel trim on these rims.*
- *The surface of the wheel trim is very sensitive.*
- *The rim will have be replaced if the wheel trim is damaged.*
- *The wheel trim cannot be replaced.*

– Let the air out of the tire.
– Press the tire beads off the rim flanges.
– Coat the tire beads all around with tire mounting paste.
– Rotate the tire 180° relative to the disc wheel.
– Inflate the tire to approximately 4 bar.
– Tension wheel with tire on balancing machine.
– Check the run-out or the radial and lateral run-out, as necessary.

Note

- *If the radial and lateral run-out value is not exceeded, the wheel can be balanced to 0 grams. Specifications, refer to* *⇒ page 82* *.*
- *If the radial and lateral run-out lies outside the specified values, the tire must be turned again.*

– Let the air out of the tire and press the tire beads off the rim flanges.
– Rotate the tire 90° (one quarter turn) relative to the disc wheel.
– Inflate the tire to 4 bar and check for true running.

Note

Protected by copyright. Copying for private or commercial purposes, in part or in whole, is not permitted unless authorised by AUDI AG. AUDI AG does not guarantee or accept any liability with respect to the correctness of information in this document. Copyright by AUDI AG.

- *If the radial and lateral run-out value is not exceeded, the wheel can be balanced to 0 grams.*
- *If the radial and lateral run-out is still outside the specified values, the wheel must be turned again.*

– Press the tire beads off the rim flanges.
– Rotate the tire 180° (one half turn) relative to the disc wheel.

If the values for radial or lateral run-out are still outside the specified values, check the wheel for radial and lateral run-out.

If the measured values for radial and lateral run-out of the wheel disc are within the specified values, then the tire has excessive radial or lateral run-out. In this case, the tire must be replaced.

Downloaded from www.Manualslib.com manuals search engine

1.17 Vehicle Pulls to One Side

Perform a road test to determine if a vehicle pulls to one side and if so, when and to which side. If the vehicle pulls to one side, see procedure. Refer to
⇒ “4.1 Vehicle Pulls to One Side, Correcting“, page 77 .

If the vehicle alignment is measured, submit the measurement printout and the complaint report with the tire.

General Information

Manufacturer's tolerances can lead to taper in the tire construction. This results in a side force when the tire rolls, which acts directly on the suspension and can therefore lead to vehicle self-steering behavior. Targeted rotation of the wheels can balance out this self-steering behavior.

Taper

Taper is caused by slightly offsetting the tread and/or the belt by a few tenths of a millimeter from the geometric center of the tire. Taper cannot be recognized visually nor can it be measured with workshop equipment.

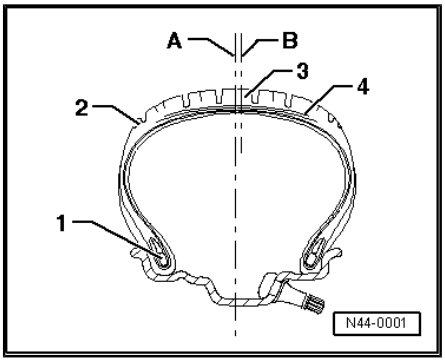

1 - Bead

2 - Shoulder

3 - Tread

4 - Steel belt

A - Geometric center of tire

B - Actual position of belt. It can be offset to inside or outside.

Protected by copyright. Copying for private or commercial purposes, in part or in whole, is not permitted unless authorised by AUDI AG. AUDI AG does not guarantee or accept any liability with respect to the correctness of information in this document. Copyright by AUDI AG.

Downloaded from www.Manualslib.com manuals search engine

Shown out of proportion to provide a better illustration.

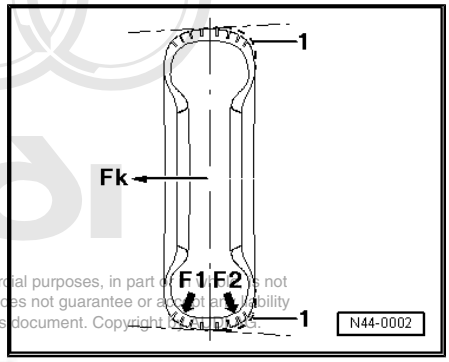

1 - Belt/tread offset

The offset produces differences in rigidity of the inner and outer shoulders of the tire, which lead to differing forces on the contact patch. Due to this, the belt and tread will not be pressed against the road surface with the same force (F1, F2). A taper forms. The resulting force (force of taper Fk) can become so large depending on speed, that the vehicle pulls to one side.

If the force (Fk) on one wheel of the axle is, for example, 50 Newton and on the other wheel also 50 Newton, and both forces are exerted in the same direction, the forces are additive. Reversing a tire on the rim can compensate for the pulling because the forces then act against each other.

Because the direction in which the force of taper is exerted is not visible at the tire, only road tests and targeted rotation of wheels and tires can establish which tires cause the pulling.

The tire consists of numerous components and materials which are vulcanized to a single part at the end of a complicated manufacturing procedure. This leads to differing construction tolerances which can make themselves noticeable through more or less strong lateral forces (lateral forces of taper). These forces can also develop in new tires.

One-Sided Pulling on Front Axle

Pulling to one side can be caused by the suspension. However, experience shows that in 90% of all complaints, the tires cause pulling to one side.

One-Sided Pulling During Normal Driving Behavior

On a straight, level road surface, the vehicle wants to pull to one side at a constant speed or with moderate acceleration. A force can be felt at the steering wheel.

One-Sided Pulling During Strong Accelerating

Pulling to one side during fast acceleration is, in part, due to the design of vehicles with front wheel drive. Various frictional conditions of left and right wheels, for example, possible irregularities in the road surface (pot holes) and consequently varying adhesion to ground have a substantial influence on the handling characteristics. This does not constitute a complaint in the sense of warranty coverage.

Downloaded from www.Manualslib.com manuals search engine

1.18 Tire Damage

⇒ “1.18.1 General Information“, page 44
⇒ “1.18.2 Tires, Examining“, page 44
⇒ “1.18.3 Radial Tire Construction“, page 45
⇒ “1.18.4 Disintegrated Tread“, page 46
⇒ “1.18.5 Cracking“, page 46
⇒ “1.18.6 Impact Damage“, page 47
⇒ “1.18.7 Cuts“, page 48
⇒ “1.18.8 Damage from Foreign Bodies“, page 48
⇒ “1.18.9 Tires, Air Loss“, page 48
⇒ “1.18.10 Mounting Damage“, page 49
⇒ “1.18.11 Bead Damage Caused by Tire Changers“, page 49
⇒ “1.18.12 Tire Pressure“, page 50
⇒ “1.18.13 Tire Damage from Low Tire Pressure“, page 50
⇒ “1.18.14 Slow Loss of Air Pressure“, page 51
⇒ “1.18.15 Tire Temperature Rising When Tires Pressure Is Too Low“, page 51
⇒ “1.18.16 Cracked Tires“, page 51

1.18.1 General Information

Note

Because tire damage can have serious consequences, the technician and the driver should regularly check the tires, as it is the best form of early problem recognition.

Pre-damaged tires cannot withstand driving situations like high vehicle speed, long driving distance, sporty driving style and similar situations.

Damage can occur from various causes:

- Driving with low tire pressure
- Mistakes during tire mounting
- Damage during run-in
- Aging
- Incorrect storage

Protected by copyright. Copying for private or commercial purposes, in part or in whole, is not permitted unless authorised by AUDI AG. AUDI AG does not guarantee or accept any liability with respect to the correctness of information in this document. Copyright by AUDI AG.

Caution

As soon as a safety risk cannot be ruled out, the tire must be replaced.

1.18.2 Tires, Examining

Pay special attention to the following criteria when examining the tire:

Downloaded from www.Manualslib.com manuals search engine

- Surface erosion or marbling on the inner side (pressure was too low or insufficient for the load).
- Detached rubber or loose cords.

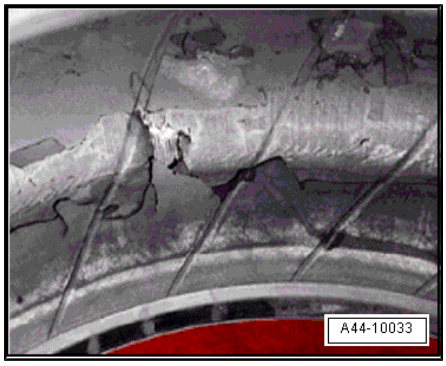

- Exposed or deformed bead bundle.

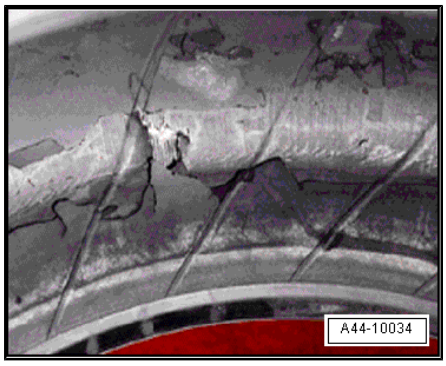

- Damage to tire bead with visible cords.

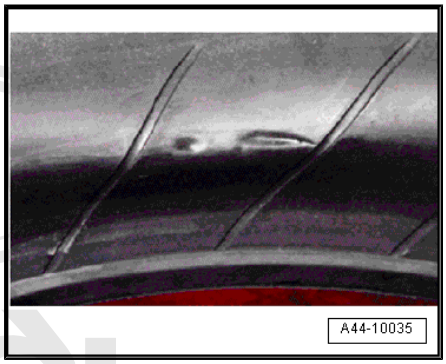

1.18.3 Radial Tire Construction

The illustration shows a cross section of a radial tire.

Protected by copyright. Copying for private or commercial purposes, in part or in whole, is not permitted unless authorised by AUDI AG. AUDI AG does not guarantee or accept any liability with respect to the correctness of information in this document. Copyright by AUDI AG.

Downloaded from www.Manualslib.com manuals search engine

1 - Tread Block

2 - Tread Groove

3 - Tread

4 - Nylon Ply

5 - Radial Tires

- ❑ Mostly consist of steel.

6 - Bead Bundle

- ❑ Consists of steel wires vulcanized into rubber Make sure that secure seating of the tire on the rim.

7 - Bead Filler

8 - Wheel Flange Protection

- ❑ Protects the rim and tire from abrasion due to, for example, contact with the curb.
- ❑ Wheels with rim protection are identified with the abbreviation MFS.

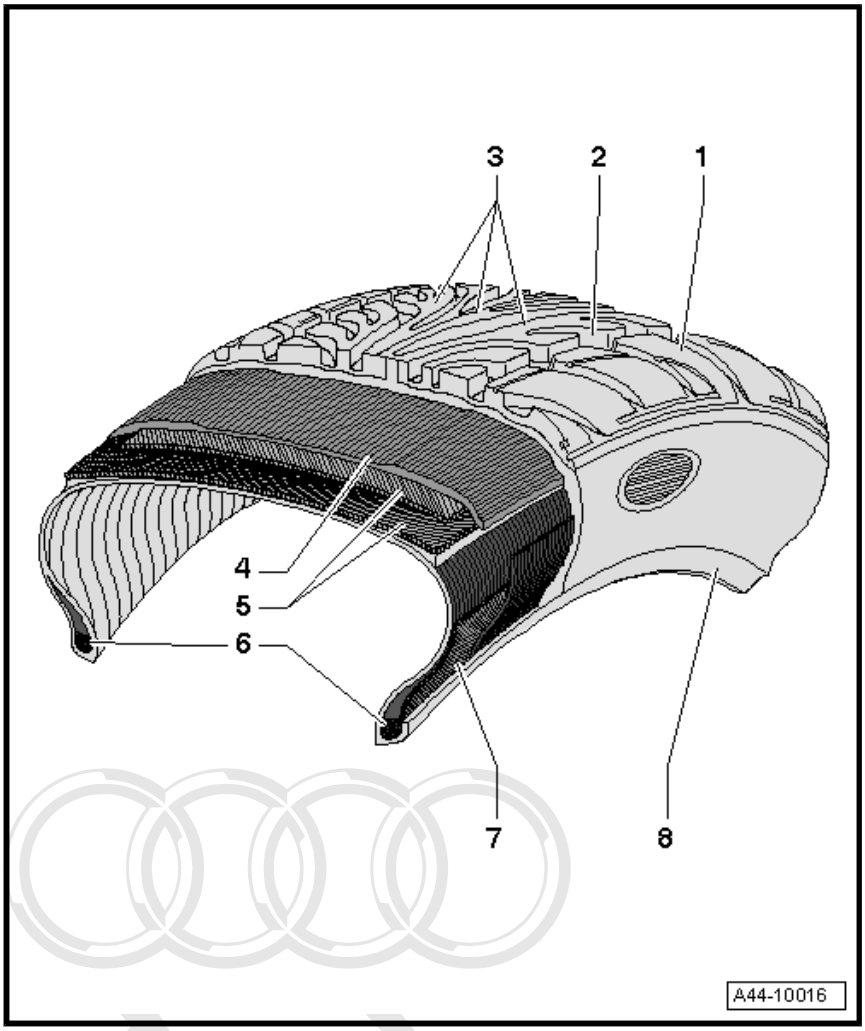

The nylon ply -4-, belt layers -5-, bead bundle -6- and bead filler -7- form the carcass. The carcass is the »load-bearing structure« of the tire.

Protected by copyright. Copying for private or commercial purposes, in part or in whole, is not permitted unless authorised by AUDI AG. AUDI AG does not guarantee or accept any liability with respect to the correctness of information in this document. Copyright by AUDI AG.

1.18.4 Disintegrated Tread

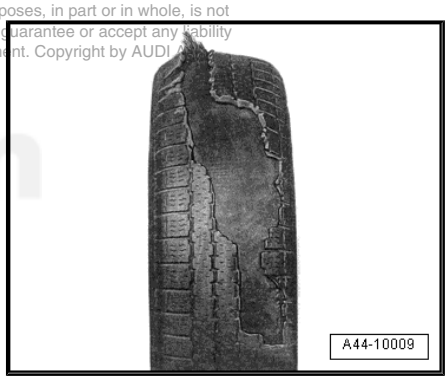

1.18.5 Cracking

Cracking is the term for shallow cracks in the sidewall of the tire.

They run starting from the bulge in the direction of the tire shoulder.

Downloaded from www.Manualslib.com manuals search engine

The cause is the increase in material at the joints of the tire components.

Cracking has no effect on:

- Safety.
- Service life.
- Driving behavior or other tire characteristics.

Cracks can be of varying visibility. Removing the tire from the rim or an examination is not necessary.

How did the cracks form?

Modern steel belted tires are constructed with single-ply sidewalls to save weight.

The sidewall components consist of long strips before they are joined together to form a tire. They must overlap at the joints. Small irregularities/ripples form in the area of the overlapping components. The overlaps are easier to see from the outside due to the single-ply construction.

1.18.6 Impact Damage

A swelling in the flank of the tire indicates that the substructure of the carcass has been damaged.

Typical causes for such damage include, for example, driving over curbs at a sharp angle.

Protected by copyright. Copying for private or commercial purposes, in part or in whole, is not permitted unless authorised by AUDI AG. AUDI AG does not guarantee or accept any liability with respect to the correctness of information in this document. Copyright by AUDI AG.

Pinching the carcass of a tire this way can damage the carcass.

The substructure of the tire is stretched so far that individual fibers in the carcass may break.

The extent of the damage depends on the speed of impact, the angle of impact, the air pressure, the axle load and the type of obstacle.

Evidence of pinching in the tire side wall.

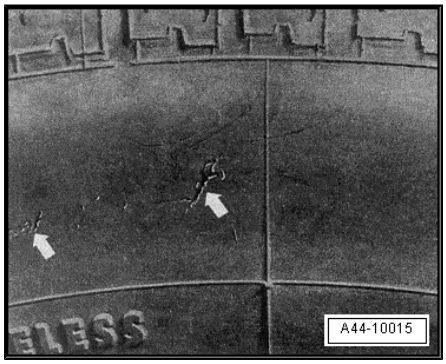

Note

- *Driving over curbs must be avoided!*
- *When it cannot be avoided, curbs should be driven over very slowly at the bluntest possible angle.*

Interior view of a tire with a punctured carcass.

Due to a severe impact, the carcass was pinched on the rim flange and is ruptured in the contact patch.

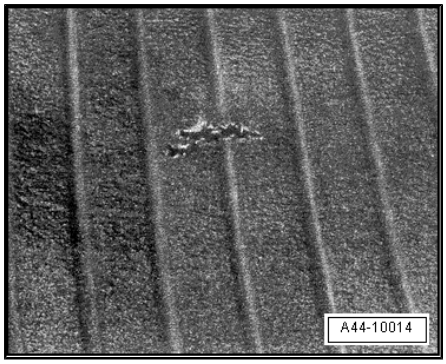

Downloaded from www.Manualslib.com manuals search engine

Double rupture caused by pinching when driving over a curb.

Often not detectable from outside.

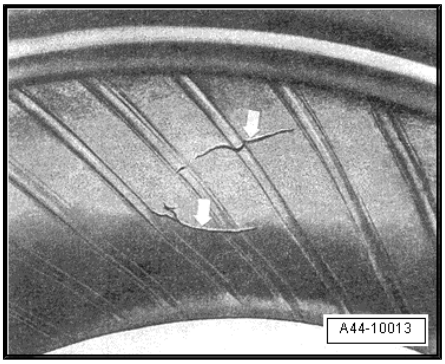

1.18.7 Cuts

Cuts caused by a sharp-edged obstacle.

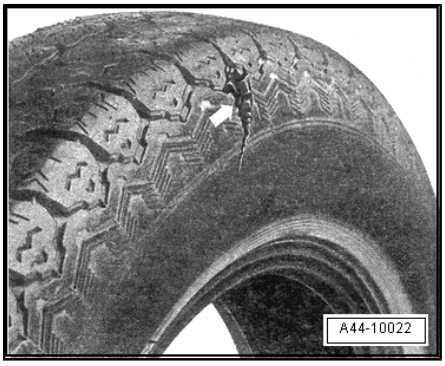

1.18.8 Damage from Foreign Bodies

Driving over hard, pointed objects like nails, screws and the like can pierce the tire.

This always leads to tire damage.

Frequently, the foreign object is so securely embedded in the tire that it will not free itself even at higher speeds. Due to this, it can act as a plug and seal the tire relatively well. The result is gradual loss of pressure which the driver does not notice immediately but which can lead to sudden and complete tire failure.

1.18.9 Tires, Air Loss

If the customer complains of loss of air from a tire, the tire must absolutely be checked for embedded foreign bodies.

Note

No repair should be attempted on steel belted tires of which the structure has been punctured by a foreign body.

Corrosion can develop on the steel wires. This will always lead to the separation of the rubber from the steel belt.

Generally, it cannot be determined when the foreign body was embedded. Therefore, the tire structure may already have been damaged due to driving with insufficient tire pressure.

Damaged belt wires will lead to separation of the rubber from the steel belt sooner or later. As a result, the tire can fail completely after a certain running time, long after the tire damage has occurred.

Reproduced by any means of any kind, copyright, or commercial purposes, in part or in whole, is not permitted under any authorization of AUDI AG. AUDI AG does not guarantee or accept any liability with respect to the correctness of information in this document. Copyright by AUDI AG.

Downloaded from www.Manualslib.com manuals search engine

Tire damage caused by foreign objects is not covered by warranty.

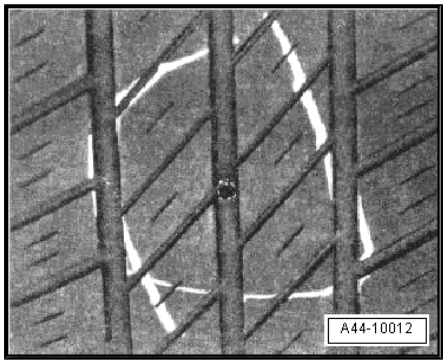

1.18.10 Mounting Damage

Bundle broken during tire inflation.

Modern radial car tires are mounted only on safety rims. These have a hump -1- running along the shoulders.

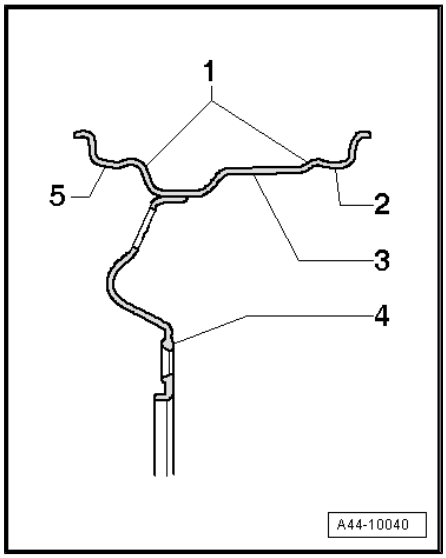

1 - Hump (H2)

2 - Inner bead seat

3 - Rim

4 - Wheel disc

5 - Outer bead seat

The hump prevents the tire from being pressed out of the bead seat during travel with insufficient tire pressure.

When the tire is inflated, the tire bead may not slip completely over the outer rim hump.

In this case, there is the danger that the bead bundle will be overstretched if the tire pressure is too high and the steel wires rupture partially or completely. Torn bundles are often not detectable from outside.

> ⚠ **DANGER!**
>
> - ***Tires with damaged bead bundles are not seated safely and securely on the rim. Such tires are a safety risk!***
> - ***In addition, there is the danger that a partially broken bundle tears during continued operation and the tire suddenly tears open. If the bead bundle breaks during inflation, the carcass will also be destroyed.***

1.18.11 Bead Damage Caused by Tire Changers

The following mistakes when fitting tires can lead to severe tire damage.

- When rolling in the upper bead on the tire changer, the opposing tire bead does not lie completely in its bed.
- The mounting head was adjusted incorrectly.
- The edge of the fitting roller rolls onto the bead.
- The guide rollers are worn or have sharp edges.

Frequently, mounting and run out marks from the guide rollers are identified in the damaged area.

Protected by copyright. Copying for private or commercial purposes, in part or in whole, is not permitted without authorization by AUDI AG. AUDI AG does not guarantee or accept any liability with respect to the correctness of information in this document. Copyright by AUDI AG.

Downloaded from www.Manualslib.com manuals search engine

Note

Both tire beads as well as the bead seats must always be coated with fitting paste.

If mounting damage is undetected, there is the danger that the tire will fail later when driving.

THEREFORE!

- Never fit a tire without fitting paste.
- Do not inflate the bead seating pressure above 3 bar.
- Do not inflate the tire filling pressure above 4 bar.
- After the tire has been fitted, reduce the air pressure to the specified value.

1.18.12 Tire Pressure

Air pressure must be checked regularly. It is recommended to check the tire pressure every 14 days. The correct tire pressure is especially important during long trips or if a load must be carried. A sporty driving style also requires correct or even slightly increased air pressure.

Protected by copyright. Copying for private or commercial purposes, in part or in whole, is not permitted unless authorised by AUDI AG. AUDI AG does not guarantee or accept any liability with respect to the correctness of information in this document. Copyright by AUDI AG.

1.18.13 Tire Damage from Low Tire Pressure

The most common causes of failure are small external damage, a defective valve or a leaky rim due to corrosion or damage.

Strong heating due to driving with substantially low pressure leads to overheating and subsequent separation of carcass from rubber.

The tire shown here was sporadically driven with tire pressure insufficient for the load. Typical indications for this are the circumferential abrasions in the area of the bead caused by the rim flange and the discoloration. Small, furrowed folds are visible along the inner sidewall.

When the tire rolls, strong shear forces develop between the steel belt layers, especially at the ends of the belts.

Downloaded from www.Manualslib.com manuals search engine

Wide furrows along the circumference in the area of the bead indicate that the tire was driven with insufficient air pressure.

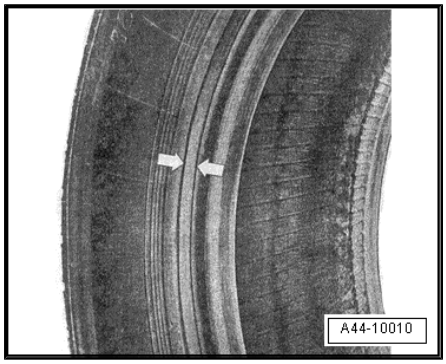

Driving a vehicle with insufficient tire pressure or ignoring or not recognizing tire damage can have serious consequences.

The tire can no longer withstand the forces developing during travel.

The function of the tire is limited by the defects mentioned above. The rubber compounds separate from one another, resulting in partial separation of tire components up to complete destruction.

Such damage usually develops over a longer period of time. If an already damaged tire is exposed to high stress, the centrifugal force at higher speeds can tear components off the tire.

1.18.14 Slow Loss of Air Pressure

The slow loss of tire pressure is an especially tricky process because even experienced drivers often do not notice it.

The insufficient air pressure and the related increase in force required to flex the tire (inner friction) cause the tire material to heat up so much that the various components and rubber compounds can separate.

The final stage is usually the complete destruction of the tire.

The cause for the slow pressure loss cannot always be determined because the tire is severely damaged and components of the tire are missing.

The following pages show tires that were destroyed by driving with low tire pressure.

Protected by copyright. Copying for private or commercial purposes, in part or in whole, is not permitted unless authorised by AUDI AG. AUDI AG does not guarantee or accept any liability with respect to the correctness of information in this document. Copyright by AUDI AG.

1.18.15 Tire Temperature Rising When Tires Pressure Is Too Low

The diagram shows the temperature behavior of a tire at 180 km/h.

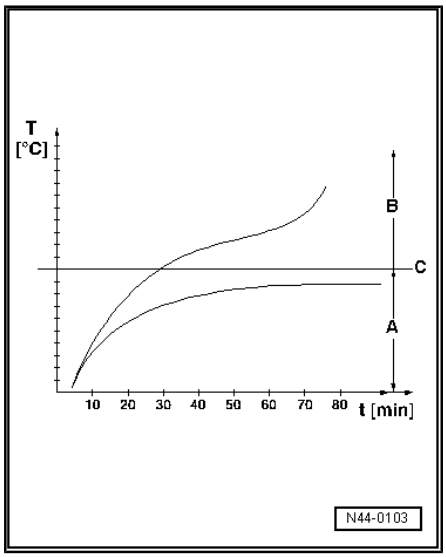

A - Normal range. When maintaining the specified tire pressure, the temperature remains stable.

B - Danger zone. When the air pressure is 0.3 bar below specification, the temperature rises to above 120 °C at higher speeds.

C - Critical temperature limit. The tire defect is triggered.

T - Temperature.

t - Driving time in minutes.

1.18.16 Cracked Tires

Applies to cracks on tires or tread blowouts and tire breaks.

it is not possible to bill for damage to external effects.

Downloaded from www.Manualslib.com manuals search engine

1.19 Wheel Repair Kit

Audi vehicles have either a spare wheel or a wheel repair kit, depending on equipment.

The wheel repair kit is located in the luggage compartment, where the spare tire would be stored if the vehicle was equipped with one. It contains a bottle of tire sealant next to the compressor.

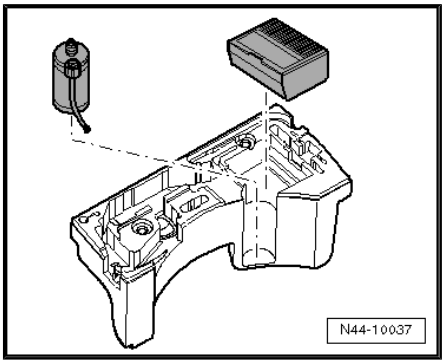

Tire Sealant

> **WARNING**
>
> *If tire sealant was used, then the wheel electronics on that particular wheel must be replaced.*

Tire sealant in the bottle has a limited storage life.

Therefore, the expiration date is indicated on the bottle -arrow-.

I this example, the expiration date is 05/2003, it must be replaced.

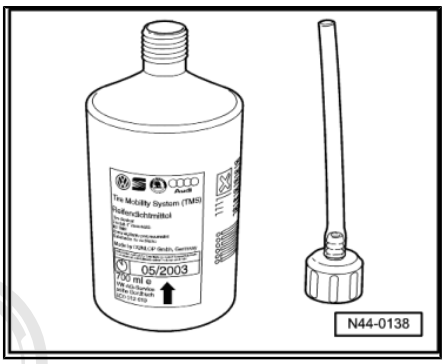

If the bottle was opened, e.g. for a punctured tire, it must also be replaced.

Tire Sealant Disposal

Remainder of tire sealant or bottles still filled, date expired, must be disposed of.

Old tire sealant or remainder of tire sealant must not be mixed with other fluids or disposed of. To do so, follow disposal instructions in Handbook Service Organization; Environmental Protection and Disposal Practices.

1.20 Tire Pressure Monitoring System

⇒ “1.20.1 Tire Pressure Monitoring System, with Pressure Sensor“, page 53

⇒ “1.20.2 Tire Pressure Monitoring System, with Wheel Speed Sensor“, page 53

Assembly overview, refer to
⇒ “2.5 Tire Pressure Monitoring System Assembly Overview“, page 73 .

Beru wheel electronics system, refer to
⇒ “5.3 Wheel Electronics, TPMS, Beru System“, page 92 .

Siemens wheel electronics system, refer to
⇒ “5.4 Wheel Electronics, TPMS, Siemens System“, page 92 .

Protected by copyright. Copying for private or commercial purposes, in part or in whole, is not permitted unless authorised by AUDI AG. AUDI AG does not guarantee or accept any liability with respect to the correctness of information in this document. Copyright by AUDI AG.

Note

The lettering on the wheel electronics shows which system is installed.

> **WARNING**
>
> *Tires with emergency running characteristics are only installed in conjunction with a tire pressure monitoring system.*

Downloaded from www.Manualslib.com manuals search engine

1.20.1 Tire Pressure Monitoring System, with Pressure Sensor

WARNING

If tire sealant was used, then the wheel electronics on that particular wheel must be replaced.

Protected by copyright. Copying for private or commercial purposes, in part or in whole, is not permitted unless authorised by AUDI AG. AUDI AG does not guarantee or accept any liability with respect to the correctness of information in this document. Copyright by AUDI AG.

The wheel electronics, that is, the system pressure sensor, forms a physical unit with the valve.

Currently there are 2 versions of the wheel electronics.

Beru TPMS, refer to
⇒ “5.3 Wheel Electronics, TPMS, Beru System“, page 92 .

Siemens TPMS, refer to
⇒ “5.4 Wheel Electronics, TPMS, Siemens System“, page 92 .

Overview, Beru System

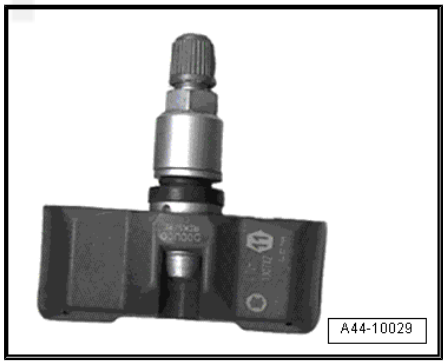

The pressure sensor transfers the recorded signals to the tire pressure monitoring system antenna.

The pressure sensor is connected firmly to the rim with a threaded connection.

If the tire pressure drops, the driver is warned via the pressure sensor in the instrument cluster.

Tire Pressure Monitoring System

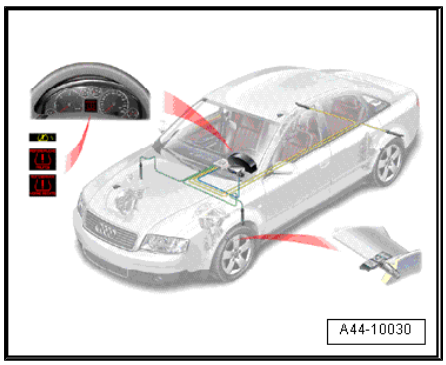

To inform the driver, this system transfers the tire pressure values via a control module to the driver information system in the instrument cluster.

Note

- *If vehicles with tire pressure monitoring sensors are transported in airplanes, the airline must be informed of the sensors.*
- *The correct allocation must be observed, otherwise the tire pressure monitoring will not function correctly.*

More detailed information on this system can be found in SSP 219 “Electronic tire pressure monitoring“.

1.20.2 Tire Pressure Monitoring System, with Wheel Speed Sensor

Note

If the vehicle has TPMS, there are no wheel electronics in the rim.

When the tire pressure decreases, the speed of the respective tire changes.

The changed tire speed is recorded by the speed sensor.

The driver is informed of the changed tire pressure in the instrument cluster.

Downloaded from www.Manualslib.com manuals search engine

1.21 Emergency Wheels

Emergency Wheels, Using

Note

Inform your customer as necessary of the notes listed in the following and also refer if necessary to the vehicle owner's manual.

The following notes listed also apply to spare wheels that are marked with a yellow sticker with the note “MAX 80 km/h“ or “MAX 50 mph“.

Note

Protected by copyright. Copying for private or commercial purposes, in part or in whole, is not permitted unless authorised by AUDI AG. AUDI AG does not guarantee or accept any liability with respect to the correctness of information in this document. Copyright by AUDI AG.

- *Emergency wheel/spare wheel is designed only for sporadic and brief use. Therefore it is to be replaced with the normal wheel again as soon as possible.*
- *After mounting the emergency wheel/spare wheel, tire inflation pressure must be checked as soon as possible. The correct tire inflation pressure can be found in the following tire inflation pressure table on the respective vehicle or the respective manual: Maintenance.*
- *Always pay attention to speed information on the wheel (“MAX 80 km/h“ or “MAX 50 mph“).*
- *Wide Open Throttle (WOT) acceleration, strong braking and rapid driving around curves should be prevented.*
- *Never drive with more than one emergency wheel/spare wheel.*
- *It is not permissible to use snow chains on the emergency wheel for technical reasons.*
- *If vehicle must be driven with snow chains, therefore the emergency wheel must be installed on the rear axle for a breakdown on the front axle. The rear wheel freed up must then be mounted in place of the faulty front wheel.*

1.22 Tires with Emergency Running Characteristics, PAX

⇒ “1.22.1 PAX Tires, Construction“, page 55

⇒ “1.22.2 PAX Tires, Designations“, page 57

⇒ “1.22.3 Support Ring on PAX Wheels“, page 57

⇒ “1.22.4 Dimensions and Designations on PAX Rims“, page 58

⇒ “1.22.5 Tire Inflation on PAX Wheels“, page 58

⇒ “1.22.6 Vehicle Alignment and Adjustment“, page 58

⇒ “1.22.7 PAX Tires, Repairing“, page 59

⇒ “1.22.8 PAX Tires, Examining“, page 59

⇒ “1.22.9 Supporting Ring, Examining“, page 60

Work on tires with emergency running characteristics (PAX) must only be performed at skilled facilities.

These have the corresponding trained personnel and necessary tools available.

Downloaded from www.Manualslib.com manuals search engine

1.22.1 PAX Tires, Construction

PAX tires involve specially developed system that exhibits the following differences in comparison to conventional tires:

Pax Tires with Supporting Ring

– -I- PAX tires with air

– -II- PAX tires without air

– The tire is anchored to a special rim that prevents it from sliding off when pressure is lost. The rubber supporting ring ensures stability in emergency operation.

♦ The inner and outer bead diameter are different sizes. This makes it possible to place the tire in a supporting ring.

♦ The tire is anchored to the rim differently.

♦ In this way, the tire height could be reduced considerably. That was possible because the area near the bead could be considerably smaller due to the special connection between the tire and rim.

♦ The tire bead is formed so that it can engage in the rim seat. Therefore, it remains firmly in the seat when pressure is lost.

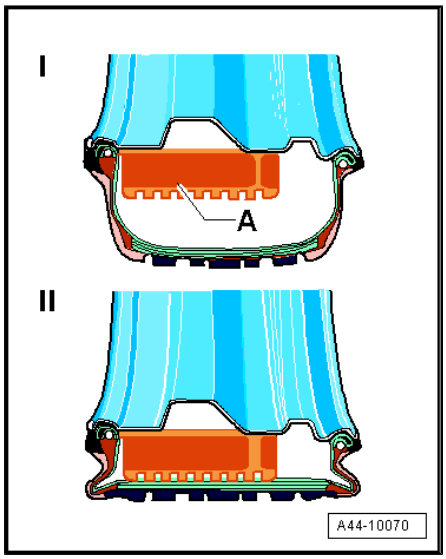

Standard Tire, Bead Area Construction

1 - Rim flange

2 - Fabric carcass

3 - Bead bundle

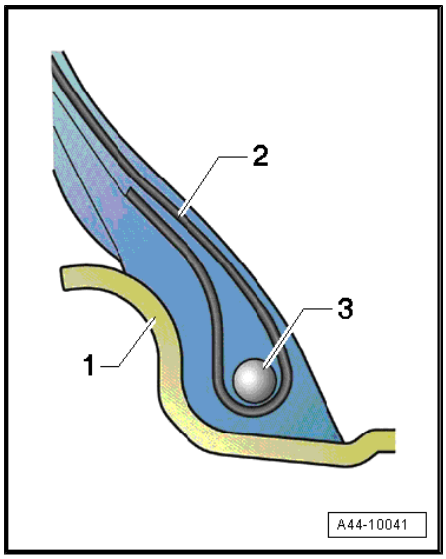

Protected by copyright. Copying for private or commercial purposes, in part or in whole, is not permitted unless authorised by AUDI AG. AUDI AG does not guarantee or accept any liability with respect to the correctness of information in this document. Copyright by AUDI AG.

Downloaded from www.Manualslib.com manuals search engine

PAX Tire, Bead Area Construction

1 - Loop

2 - Fabric carcass

3 - Bead bundle

4 - Rim flange

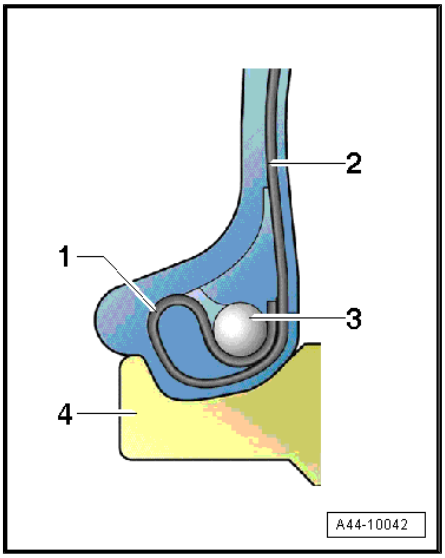

PAX Tires, Anchoring

The secure seating of the tire in the rim is ensured in all driving situations due to the type of construction.

A wedge-shaped component of the tire is pressed between the bead bundle and rim when loaded. This happens independently of the pressure in the tire.

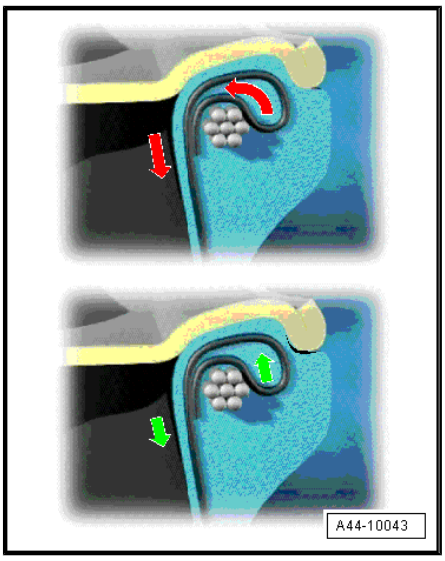

Protected by copyright. Copying for private or commercial purposes, in part or in whole, is not permitted unless authorised by AUDI AG. AUDI AG does not guarantee or accept any liability with respect to the correctness of information in this document. Copyright by AUDI AG.

PAX Tires, Dimensions

In contract to conventional tires, tires with emergency running characteristics (PAX) exhibit differences in regard to dimensions and designations.

Therefore, PAX tires can only be mounted on special rims (PAX).

1 - Width in millimeters; Tire width from flank to flank on standard rim (corresponds to width specification on standard tire).

2 - Outer diameter in millimeters: Maximum new tire diameter.

3 - Designated diameter in millimeters on standard rim seat.

4 - Smaller bead diameter in millimeters: rim seat on outer side.

5 - Larger beam diameter in millimeters: rim seat on inner side.

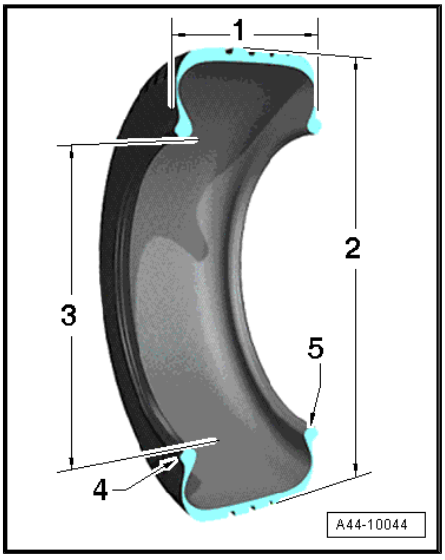

Downloaded from www.Manualslib.com manuals search engine

1.22.2 PAX Tires, Designations

In contrast to conventional tires, other designations are found on the tire flanks of PAX tires. In this way, these tires can be allocated clearly.

Designations

245 - Tire width in millimeters

690 - Outer diameter in millimeters

R - Radial construction

500 - Designated diameter on standard rim seat

A - Tire quality grading for PAX tires (A- “asymmetrical“) because both rim seats have different diameters.

99 - Indicator of maximum load permitted for this tire (99 = 1550 kg)

Y - Speed code letter (“Y“) corresponds to a permitted maximum speed of 300 km/h.

1.22.3 Support Ring on PAX Wheels

Dimensions

Overview of the most important dimensions:

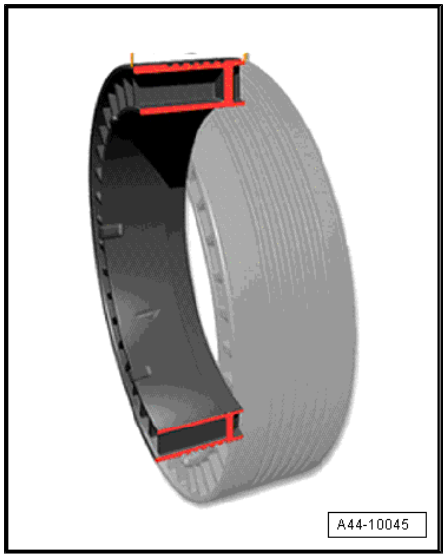

Designations

Example: 90-500(35) CLI A 1 876107

90 - Designated width in millimeters

500 - Designated diameter in millimeters

35 - Height in millimeters

CLI - Supporting ring versions: CLI - Clip supporting ring/FL - standard supporting ring

A - Build type index, asymmetrical. Indication of wheels with emergency running characteristics (PAX)

1 - Supporting ring versions

876107 - CAI, international item code

Protected by copyright. Copying for private or commercial purposes, in part or in whole, is not permitted unless authorised by AUDI AG. AUDI AG does not guarantee or accept any liability with respect to the correctness of information in this document. Copyright by AUDI AG.

Downloaded from www.Manualslib.com manuals search engine

1.22.4 Dimensions and Designations on PAX Rims

Example: 235 x 500 A - 5 - 41

235 - Designated width in millimeters

x - One-part

500 - Designated diameter of standardized rim seat in millimeters

A - Asymmetrical

5 - Number of bolt holes

41 - Offset in millimeters

1.22.5 Tire Inflation on PAX Wheels

When filling tires, pay special attention to the following points:

- After mounting the tires with inserted valve insert, fill with air. At 1 bar, check whether both beads are seated correctly.
- If one of the beads is not seated correctly, do not deflate air from tire but rather position the assembly roller on the affected beat and press on by rotating slightly. The bead then seats itself.
- Then continue filling until the tire pressure recommended for the vehicle is reached. Tires can also be filled with tire filling gas as with conventional tires.

Protected by copyright. Copying for private or commercial purposes, in part or in whole, is not permitted unless authorised by AUDI AG. AUDI AG does not guarantee or accept any liability with respect to the correctness of information in this document. Copyright by AUDI AG.

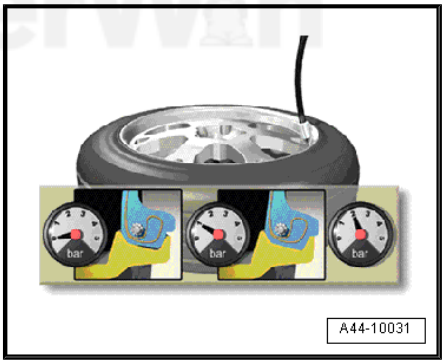

Note

Do not briefly overinflate tires to 3.5 bar as is common with conventional tires.

1.22.6 Vehicle Alignment and Adjustment

The chassis adjustment is done on vehicle with tires with emergency running characteristics (PAX) in the same way as on vehicle that are equipped with conventional tires.

Generally, the same gauge heads and mounts that are suitable for conventional tires with a rim protection strip can be used for tires with emergency running characteristics (PAX). (Supports on inner side, mount in tire tread).

Downloaded from www.Manualslib.com manuals search engine

1.22.7 PAX Tires, Repairing

General Information

It is generally not necessary to replace a tire after going flat and after driving on a flat tire.

Note

The affected tire should be removed and checked for damaged by trained professionals. Assembly work and damage diagnosis on the affected tire should only be performed by trained personnel.

Proceed as follows to examine a tire with emergency running characteristics (PAX) after going flat:

– First, the remaining gel must be removed from the tire. The flat side of the spatula is suitable for this.

– Then clean the tire and supporting ring with water and a cloth to remove the remaining gel residue.

– After separating tire and supporting ring, evaluate both of these components (PAX) according to the criteria described in the following section.

Additional information:

– When remounting, ensure the used supporting ring fits the tire and rim dimensions.

– The rim must be inspected before mounting, as with conventional wheel/tire systems.

– A damaged rim should be replaced.

Protected by copyright. Copying for private or commercial purposes, in part or in whole, is not permitted unless authorised by AUDI AG. AUDI AG does not guarantee or accept any liability with respect to the correctness of information in this document. Copyright by AUDI AG.

1.22.8 PAX Tires, Examining

Pay special attention to the following criteria when examining the tire:

♦ Surface erosion or marbling on the inner side (pressure was too low or insufficient for the load).

♦ Detached rubber or loose cords.

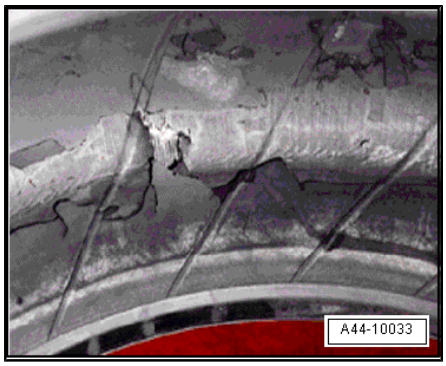

Downloaded from www.Manualslib.com manuals search engine

- Exposed or deformed bead bundle.

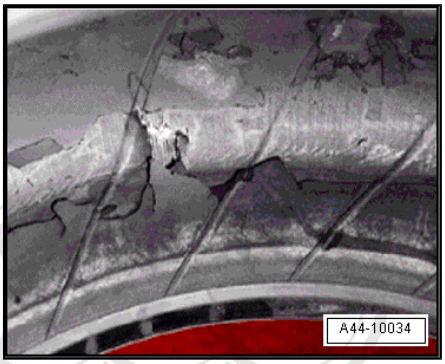

- Damage to tire bead with visible cords.

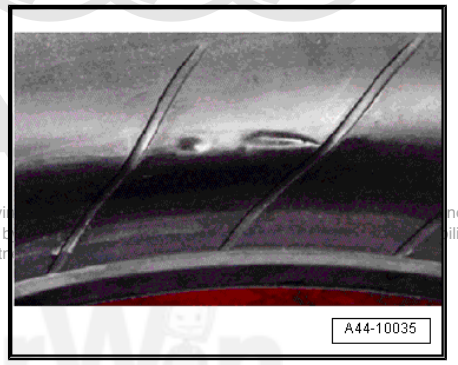

Protected by copyright. Copyi not
permitted unless authorised b ility
with respect to the correctn

1.22.9 Supporting Ring, Examining

As with the tire, the supporting ring is generally not replaced after driving with flat tire.

In case of damage such as:

- Blowouts or missing parts

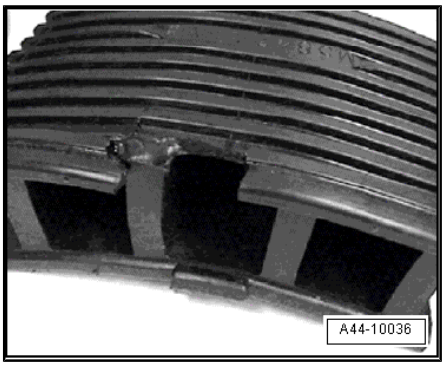

- Cracks in partitions

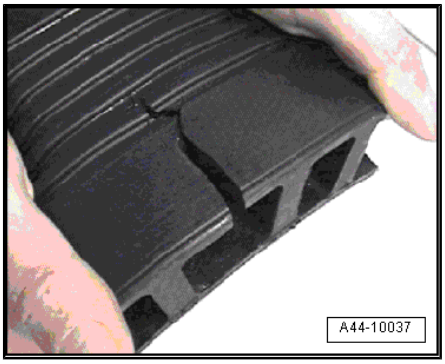

Downloaded from www.Manualslib.com manuals search engine

- Damage and holes

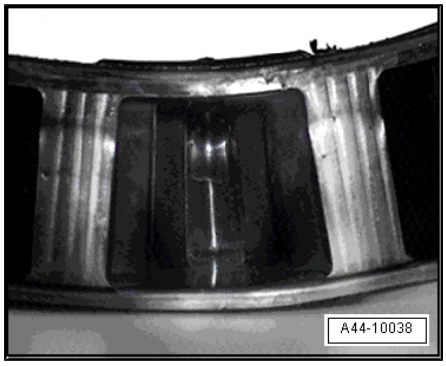

- Bubbles and discoloration due to overheating

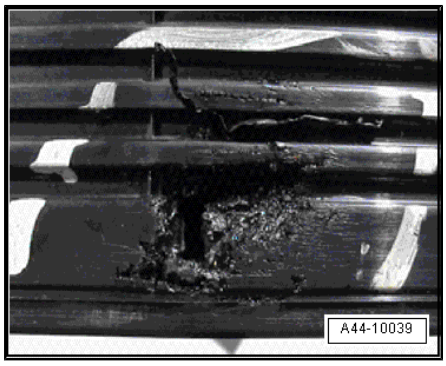

the supporting ring should be replaced.

Repairs on Tires

Note

- *Repairs on tires with emergency running characteristics (PAX) must not be performed with adhesive tape.*
- *Tire repair sprays must not be used on tires with emergency running characteristics (PAX) because these products are not compatible with the gel in the tires.*

1.23 Tires with Emergency Running Characteristics, SST (Self-Supporting Tire)

⇒ "1.23.1 SST Tires, Construction", page 62

⇒ "1.23.2 SST Tires, Repairing", page 63

⇒ "1.23.3 Installing/Conditions for Using Run-Flat Tires", page 64

Run-flat tires, removing and installing, refer to
⇒ "5.8 Tires, with Run-Flat Tires", page 98 .

Protected by copyright. Copying for private or commercial purposes, in part or in whole, is not permitted unless authorised by AUDI AG. AUDI AG does not guarantee or accept any liability with respect to the correctness of information in this document. Copyright by AUDI AG.

Note

- *Only vehicles with a tire pressure monitoring system are equipped with SST tires. This warns the driver when tire pressure falls below a certain value.*
- *Tire damage and the pressure loss resulting from it is not always recognizable.*
- *Driving can continue at a maximum of 80 km/h up to a distance of 50 km with complete loss of pressure.*

Observe the special mounting information for SST tires.

Mixed installation of SST tires and standard tires is not permitted, and not on the same axle. A standard tire can only be installed in exception cases for a short time or a limited driving distance. However, the SST-specific flat running characteristics no longer apply. The driver must be explicitly informed of this.

In an emergency, the responsibility lies with the driver to decide after checking whether the affected tire can be driven farther. Refer to the Owner's Manual.

Downloaded from www.Manualslib.com manuals search engine

Retrofitting only with tires approved for this (EH2 - extended hump rim contour).

1.23.1 SST Tires, Construction

Run-Flat Tires, removing and installing, refer to
⇒ "5.8 Tires, with Run-Flat Tires", page 98

Note

- *A tire pressure monitoring display is necessary when using run-flat tires.*
- *Tire damage and the pressure loss resulting from it is not always recognizable.*

SST tires are identified with a special code (RSC = Runflat System Component) on the side wall.

Note

The identification on the side wall of run-flat tires can differ depending on the manufacturer.

Self Supporting Tire stands for a tire system with emergency running characteristics in the event of a loss of pressure. In the event of a flat tire, the driver can continue driving to a limited extent to the next workshop. Refer to the Owner's Manual.

Advantage

Protected by copyright. Copying for private or commercial purposes, in part or in whole, is not permitted unless authorised by AUDI AG. AUDI AG does not guarantee or assume any liability with respect to the correctness of information

SST tires make it possible to drive up to 50 km at a maximum of 80 km/h even with a complete loss of pressure.

Driving style, speed, road surface, weather conditions, tire condition and tire load influence the distance.

With SST tires, it is not necessary to immediately change a tire when it suffers from a complete loss of pressure (e.g. no tire changing in an area with low visibility or in dangerous conditions).

Braking, steering and driving performance remain for the most part after the tire looses pressure.

A spare wheel is no longer necessary when using SST tires. From a customer's point of view, that means: saving space and weight.

Technology in Detail

Standard Tires without Emergency Running Characteristics

Downloaded from www.Manualslib.com manuals search engine

– -I- Standard tires with air
– -II- Standard tires without air
– If the standard tire loses air, the rim presses the side wall together. The rubber in a flat tire is heated strongly and quickly looses its properties.

SST Tires with Reinforced Side Wall

The self-supporting, reinforced side walls form the basis of SST technology.

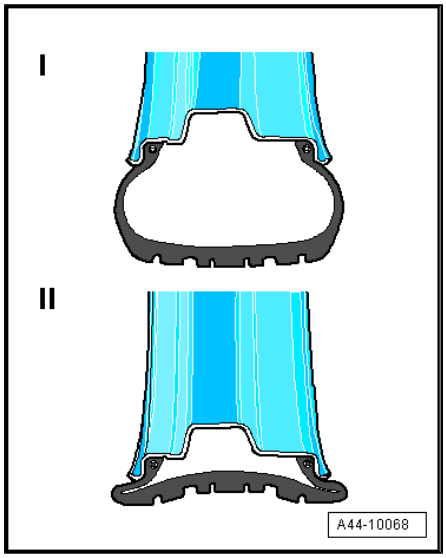

– -I- SST tires with air
– -II- SST tires without air
– Especially thick side walls -A- support the empty tires on a standard rim and the vehicle remains maneuverable. A special rubber mixture reinforces the tires and supports the vehicle in an emergency.

The reinforced side walls, unlike a standard tire, prevent the tire flanks from pinching between the road and rim when flat.

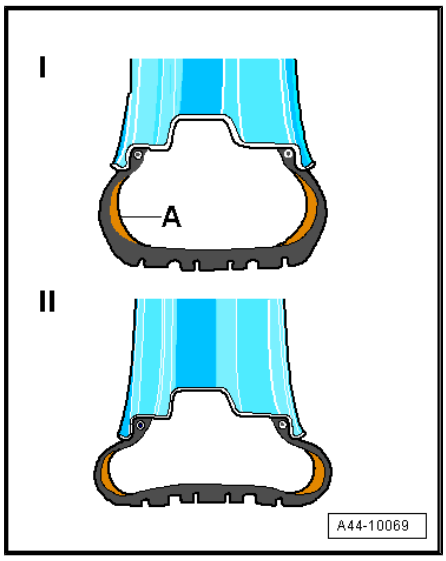

Difference in Version H2 and EJ2 Extended Hump Rim

- The increased hump on the EH2 Extended Hump Rim prevents the SST tire from springing off when pressure is lost.
- EH2 builds up toward the center of the wheel.

> **WARNING**
>
> *The clearance to the brake is reduced.*

Protected by copyright. Copying for private or commercial purposes, in part or in whole, is not permitted unless authorized by AUDI AG. AUDI AG does not guarantee or accept any liability with respect to the correctness of information in this document. Copyright by AUDI AG.

1.23.2 SST Tires, Repairing

> **WARNING**
>
> - *Run-flat tires must be replaced after they have gone flat.*
> - *Pay close attention to the installation instructions.*

– The wheel must be inspected before mounting, as with conventional wheel/tire systems.
– The wheels should be checked for damage after a flat tire (true running, axial run-out, other damage) because the wheel could be damaged in an emergency by driving through a pothole.
– A damaged wheel should be replaced.

Downloaded from www.Manualslib.com manuals search engine

Note

- *Flat tire sprays may be used on tires with emergency running characteristics (SST).*
- *Tires must be replaced after running flat.*
- *Observe manufacturer's mounting instructions.*

1.23.3 Installing/Conditions for Using Run-Flat Tires

Protected by copyright. Copying for private or commercial purposes, in part or in whole, is not permitted unless authorised by AUDI AG. AUDI AG does not guarantee or accept any liability with respect to the correctness of information in this document. Copyright by AUDI AG.

Because pressure loss in a run-flat tire is not always visible, these tires should only be used on vehicles equipped with a tire pressure monitoring system. This system warns the driver when the tire pressure falls below a certain value.

The following are permitted:

- Direct measuring systems
- Indirect measuring systems

Only mount run-flat tires on disc wheels with an extended double hump (extended hump - EH2) .

Pay close attention to the installation instructions.

Do not install both run-flat tires and standard tires, even if the two tires on each axle will be the same.

A standard tire can only be installed in exception cases for a short time or a limited driving distance. The specific characteristics designed for driving with a flat tire will not be available. The driver must be informed of this.

Downloaded from www.Manualslib.com manuals search engine

2 Description and Operation

⇒ “2.1 Disc Wheel Design Overview, Wheel Rims“, page 65

⇒ “2.2 Light Alloy Wheels Component Overview“, page 67

⇒ “2.3 Tires with Emergency Running Characteristics (PAX) Component Overview“, page 69

⇒ “2.4 Tire Side Wall Lettering Overview“, page 70

⇒ “2.5 Tire Pressure Monitoring System Assembly Overview“, page 73

2.1 Disc Wheel Design Overview, Wheel Rims

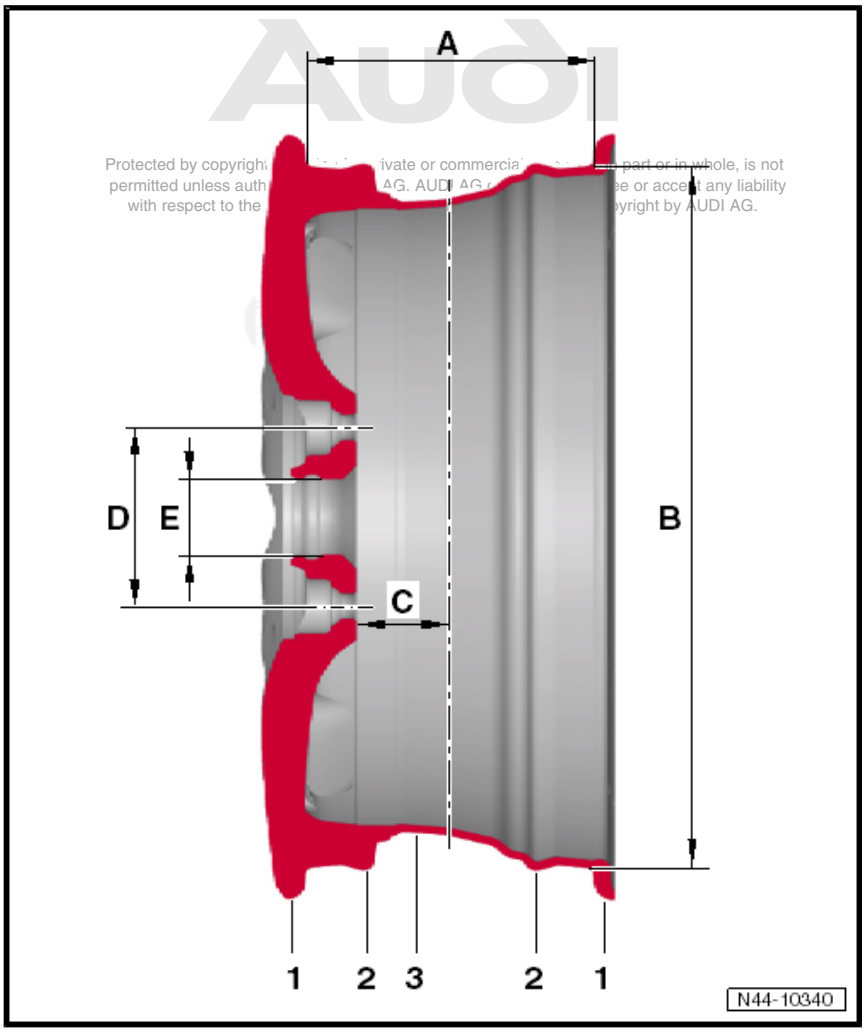

Protected by copyright. Private or commercial use, in part or in whole, is not permitted unless authorized by AUDI AG. AUDI AG does not guarantee or accept any liability with respect to the correctness of information. Copyright by AUDI AG.

1 - Rim Flange

- ❑ Stop for the side tire bead.

2 - Hump (H2) on both Bead Seats

- ❑ prevents the tire from slipping off the bead seat when driving around tight curves.
- ❑ An extended hump (EH2) is required when using run-flat tires.

3 - Bed

- ❑ Makes it easier to mount the tire.

A - Rim Width

- ❑ Distance between the tire contact surfaces on both rim flanges.
- ❑ Dimensions in inches.

B - Rim Diameter

- ❑ Distance between the rim contact surfaces on the opposite tire shoulders.
- ❑ Dimensions in inches.

♦ 1 inch = 2.54 cm (25.4 mm)

♦ 1 cm = 0.394 inch

C - Offset

- ❑ Refer to ⇒ “2.1.1 Offset“, page 66 .
- ❑ Distance between the vertical wheel center and the inner wheel contact surface.
- ❑ Dimensions in mm.

D - Pitch Circle Diameter

- ❑ Refer to ⇒ “2.1.3 Disc Wheels Rims, Pitch Circle Diameter“, page 67 .
- ❑ Circle diameter where the wheel bolt holes are located.
- ❑ Dimensions in mm.

E - Center Hole, Inner Diameter

- ❑ Refer to ⇒ “2.1.2 Center Hole, Inner Diameter“, page 66 .

Downloaded from www.Manualslib.com manuals search engine

- ❑ Enables centering.
- ❑ Dimensions in mm.

Disc Wheel Specifications, Wheel Rims

Several indications can be found on the disc wheels. The indications required for the clear identification of the disc wheel, can be seen in the following example:

Protected by copyright. Copying for private or commercial purposes, in part or in whole, is not permitted unless authorised by AUDI AG. AUDI AG does not guarantee or accept any liability with respect to the correctness of information in this document. Copyright by AUDI AG.

Replacement parts number: (Example)	8K0 601 025 N 8Z8
Disc wheel size	7J x 17 H2 ET 46
Size of disc wheel:	7- Rim width in inches J - rim flange shape 17 - rim diameter in inches
Indication for hump on bead seat	H2 Extended Hump [1]
Indication for hump on bead seat	EH 2 [2]
Offset in mm:	46
Color code	8Z8
1 inch	2.54 cm (25.4 mm)
1 cm	0.394 inch

[1] Raised round hump on both bead seats. Prevents the tire from sliding into the rim well while driving

[2] Wheels with EH2 are only necessary if tires with emergency mode properties are mounted!

2.1.1 Offset

The press-in depth is the distance between the center of the rim and inner contact surface of the wheel rim to the wheel hub.

If the rim has a press-in depth of “0“, then the inside contact surface of the wheel rim to the wheel hub is exactly in the center of the wheel rim.

A positive press-in depth “+35“ on the same wheel rim width means the wheel rim is goes further in toward the center of the vehicle.

A negative press-in depth “-35“ on the same wheel rim width means the wheel rim is goes further out, away from the center of the vehicle.

2.1.2 Center Hole, Inner Diameter

Model	Vehicle type	Diameter in mm
A1	8X	57
A2	8Z	57
A3	8L, 8P	57
A4	All except 8K	57
A4	8K	66,5
A5	8T and 8F	66,5
A6	All except 4G	57
A6	4G	66,5
A7	4G	66,5
A8	All except 4H	57
A8	4H	66,5

Downloaded from www.Manualslib.com manuals search engine

TT	8N and 8J	57
R8	42	57
Q5	8R	66,5
Q7	4L	71,58
All other Audi models		57

2.1.3 Disc Wheels Rims, Pitch Circle Diameter

Model	Model	Hole circle in mm
Audi A1	8X	5 x 100
Audi Q7	4L	5 x 130
All other Audi models from 1991		5 x 112

The older models through 1994:

Model	Model	Hole circle in mm
Audi 80 1979 - 1984	81	4 x 100
Audi 80 from 1985	81 / 85	4 x 108
Audi 80 from 1987	89 / 89Q	4 x 108
Audi 80 from 1992	8C (B4)	4 x 108
Audi 90 from 1985	81 / 85 quattro	4 x 108
Audi 90 from 1988	89 / 89Q	4 x 108
Audi 100 1981 - 1984	44 / 44Q	4 x 108
Audi 100 1985 - 1991	44 / 44Q	4 x 108 and 5 x 112
Audi 100 1991 - 1994	4A (C4)	5 x 112
Audi 200 from 1984	44 / 44Q	5 x 112
Audi V8 1989	D11	5 x 112

Protected by copyright. Copying for private or commercial purposes, in part or in whole, is not permitted unless authorised by AUDI AG. AUDI AG does not guarantee or accept any liability with respect to the correctness of information in this document. Copyright by AUDI AG.

2.2 Light Alloy Wheels Component Overview

Note

- *Be careful not to scratch off the glued- on wheel trim on these rims.*
- *The surface of the wheel trim is very sensitive.*
- *The rim will have be replaced if the wheel trim is damaged.*
- *The wheel trim cannot be replaced.*

Changing/mounting wheel, assembly information, refer to ⇒ “5.1 Wheel, Changing and Mounting“, page 83 .

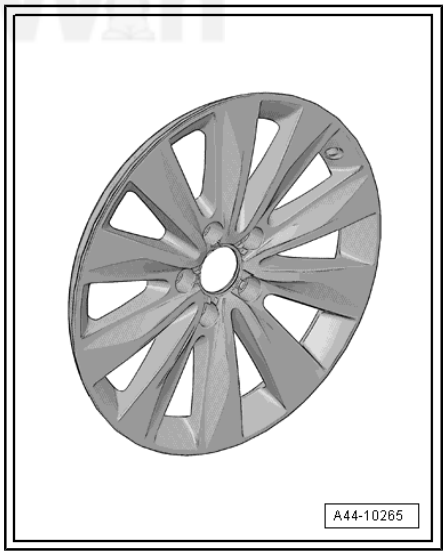

Downloaded from www.Manualslib.com manuals search engine

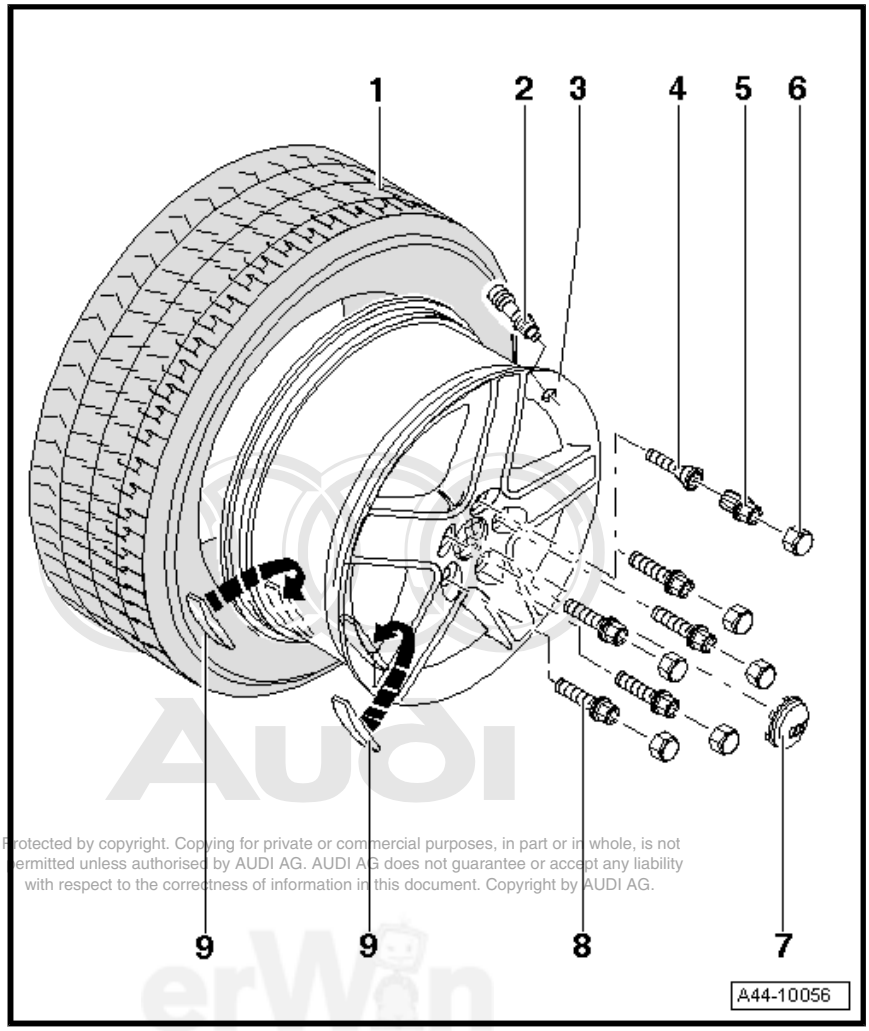

Protected by copyright. Copying for private or commercial purposes, in part or in whole, is not permitted unless authorised by AUDI AG. AUDI AG does not guarantee or accept any liability with respect to the correctness of information in this document. Copyright by AUDI AG.

1 - Tires

2 - Valve

- ❑ Always replace.
- ❑ Only install valve according to the Electronic Parts Catalog (ETKA).

3 - Wheel

- ❑ Note assembly instructions. Refer to ⇒ "5.1 Wheel, Changing and Mounting", page 83 .

4 - Wheel Bolt

- ❑ Note assembly instructions. Refer to ⇒ "5.1 Wheel, Changing and Mounting", page 83 .
- ❑ Wheel bolt tightening specifications, refer to ⇒ "3.2 Wheel Bolt Tightening Specifications", page 75
- ❑ Anti-theft wheel bolts, refer to ⇒ page 11 .

5 - Wheel Bolt Adapter

- ❑ Place on wheel bolt designed for it. Refer to ⇒ page 11 .

6 - Wheel Bolt Cover Cap

7 - Cap

8 - Wheel Bolt

Note

- ❑ Note assembly instructions. Refer to ⇒ "5.1 Wheel, Changing and Mounting", page 83 .
- ❑ Wheel bolt tightening specifications, refer to ⇒ "3.2 Wheel Bolt Tightening Specifications", page 75 .

9 - Adhesive Balancing Weights

- ❑ Maximum 60 grams per rim flange permitted.
- ❑ Clean wheel where it will be adhered so it is free of dirt and grease.
- ❑ Remove protective film.
- ❑ Attach balance weights to intended surfaces.

Downloaded from www.Manualslib.com manuals search engine

2.3 Tires with Emergency Running Characteristics (PAX) Component Overview

Note

- *Be careful not to scratch off the glued- on wheel trim on these rims.*
- *The surface of the wheel trim is very sensitive.*
- *The rim will have be replaced if the wheel trim is damaged.*
- *The wheel trim cannot be replaced.*

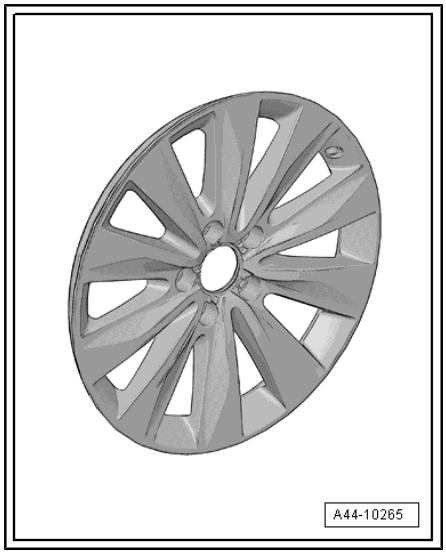

Protected by copyright. Copying for private or commercial purposes, in part or in whole, is not permitted unless authorised by AUDI AG. AUDI AG does not guarantee or accept any liability with respect to the correctness of information in this document. Copyright by AUDI AG.

1 - PAX Tires

2 - Support Ring

3 - Wheel for PAX Tires

- ❑ Note assembly instructions. Refer to ⇒ “5.1 Wheel, Changing and Mounting“, page 83 .

4 - Wheel Electronics

- ❑ Batteries must be completely replaced.
- ❑ Remaining battery life, temperature and pressure can be read via diagnosis with Vehicle Diagnostic, Testing and Information System - VAS 5051- .

5 - Metal Valve Body

- ❑ Only install valve according to the Electronic Parts Catalog (ETKA).
- ❑ delivered complete

6 - Wheel Bolt

Note

- ❑ Note assembly instructions. Refer to ⇒ “5.1 Wheel, Changing and Mounting“, page 83
- ❑ Tightening specifications for wheel bolts, re-

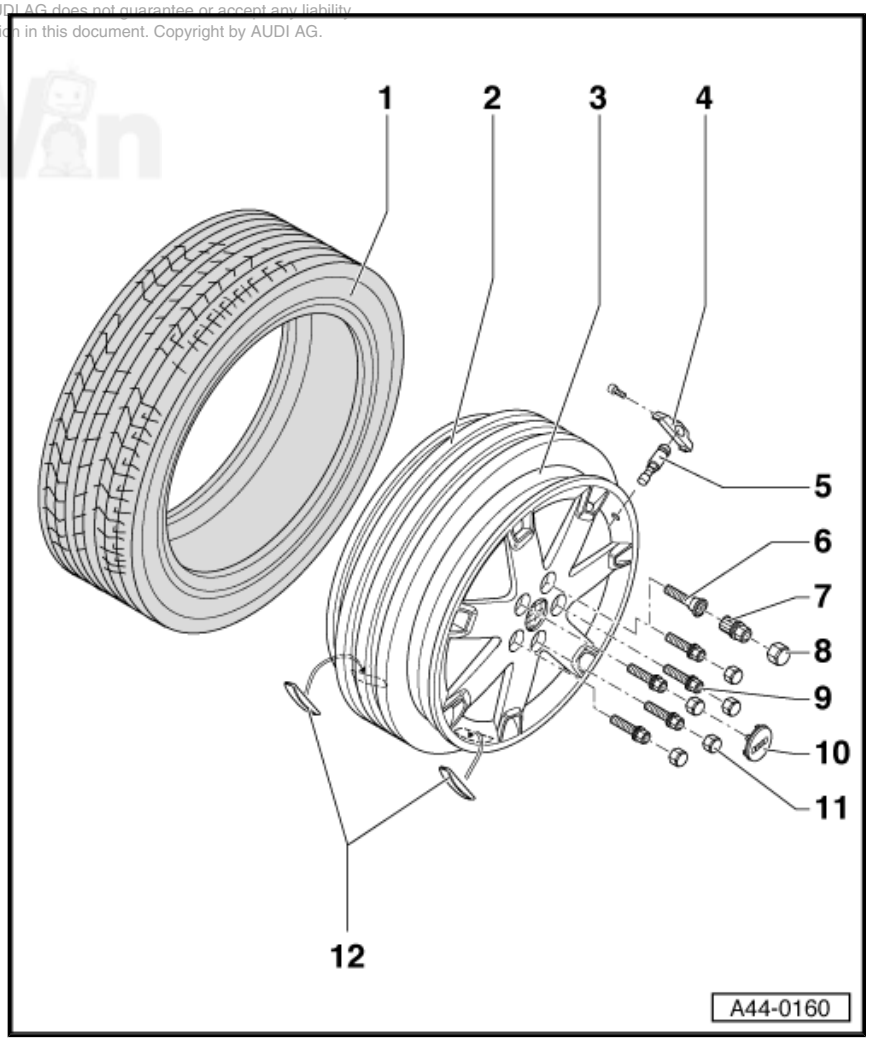

Downloaded from www.Manualslib.com manuals search engine

fer to
⇒ “3.2 Wheel Bolt Tightening Specifications“, page 75 .

- ❑ Anti-theft wheel bolts. Refer to ⇒ page 11 .

7 - Wheel Bolt Adapter

- ❑ Place on wheel bolt designed for it. Refer to ⇒ page 11 .

8 - Cap

- ❑ Place on wheel bolt.

9 - Wheel Bolt, Two-Part

- ❑ Note assembly instructions. Refer to ⇒ “5.1 Wheel, Changing and Mounting“, page 83 .
- ❑ Tightening specifications for wheel bolts, refer to
⇒ “3.2 Wheel Bolt Tightening Specifications“, page 75 .

10 - Cap

11 - Wheel Bolt Cover Cap

12 - Adhesive Balancing Weights

- ❑ Maximum 60 grams per rim permitted.
- ❑ Clean wheel where it will be adhered so it is free of dirt and grease.
- ❑ Remove protective film.
- ❑ Attach balance weights to intended surfaces.

2.4 Tire Side Wall Lettering Overview

Example: Dunlop SP Sport 9000

Protected by copyright. Copying for private or commercial purposes, in part or in whole, is not permitted unless authorised by AUDI AG. AUDI AG does not guarantee or accept any liability with respect to the correctness of information in this document. Copyright by AUDI AG.

Downloaded from www.Manualslib.com manuals search engine

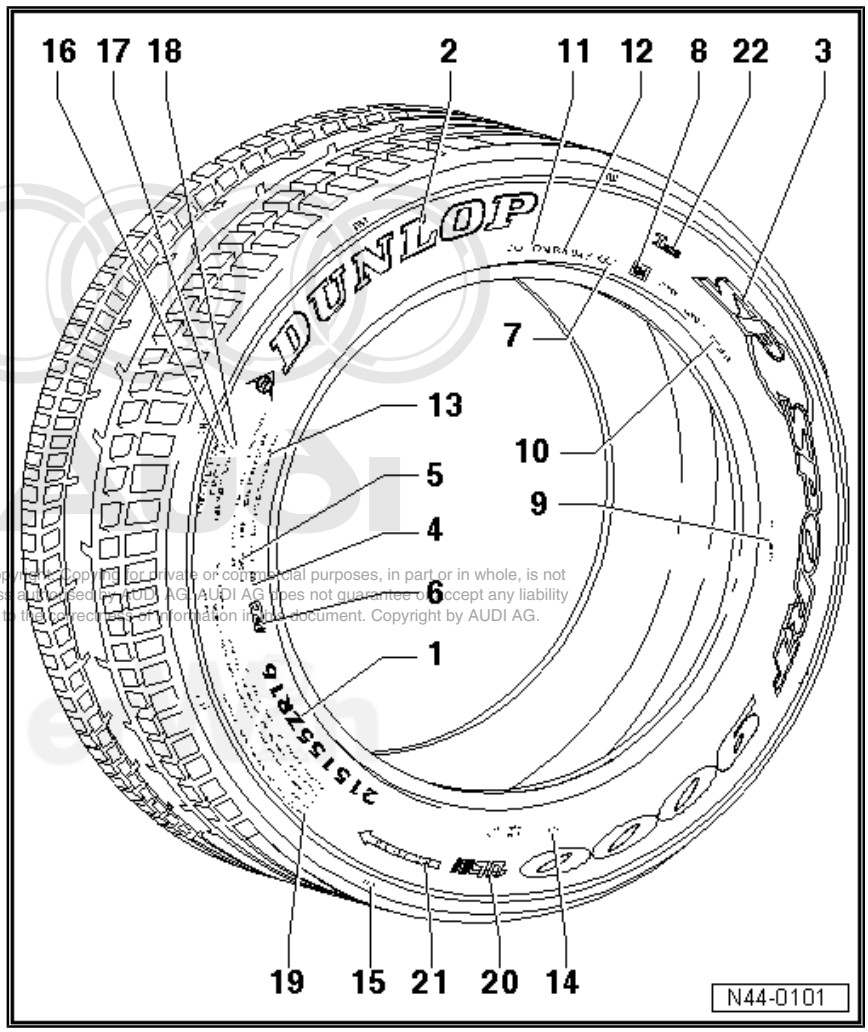

1 - Size Designation (215/55 ZR16)

- Writing on PAX tires ⇒ "1.12.7 Tires with Emergency Running Characteristics (PAX) Side Wall Lettering", page 18

2 - Manufacturer (Trade Name)

3 - Tread Designation

4 - Identifier for Tubeless Tires

5 - Radial Construction (Radially-Oriented Fibers in Carcass)

6 - Information on Version with »Flange Protection«

7 - Manufacture Date

- Tire aging, refer to ⇒ "1.12.18 Tires, Aging", page 24 .

Protected by copyright. Copying for private or commercial purposes, in part or in whole, is not permitted unless authorised by AUDI AG. AUDI AG does not guarantee or accept any liability with respect to the correctness of information in this document. Copyright by AUDI AG.

Note

8 - E number = Approval Number

- The tires fulfill all European guidelines.
- European guideline according to ECE-R30, EEC92/93 or ECE - R 117

Note

9 - Country of Manufacture - Manufactured in Germany

10 - Manufacturer Internal Profile Code

11 - Department of Transportation

- The tires fulfill the guidelines from the American transportation authorities.

12 - Example: Dunlop SP Sport 9000

DOT - code identification number for manufacturer's factory, tire size and tire version.

13 - Maximum Permissible Load (Load Index)

- Table, refer to ⇒ "1.12.12 Load Index (LI)", page 21 .

Note

- Reinforced, extra load tire, refer to ⇒ "1.12.13 Tires, Reinforced, Extra Load", page 22 .

14 - Number of Ply Layers in the Center of the Tread and in the Sidewalls and Information about the Material

15 - Position of TWI Tread Wear Indicator

- Refer to ⇒ page 18 .

16 - Relative Service Life Expectancy - Abrasion Resistance

- Based on a US-specific standard test.

Downloaded from www.Manualslib.com manuals search engine

17 - Evaluation of Wet Braking Ability A, B or C

- ❑ According to US-specific test.

18 - Evaluation of Temperature Stability A, B or C

- ❑ According to US-specific test.

19 - Safety Notes for Use or Fitting of Tires

20 - Indication of "Ultralight Construction"

- ❑ Tires are up to 30% lighter.

21 - Specified Direction of Travel of Tire

22 - Inmetro Designation

- ❑ Only necessary for Brazilian market.

Tire Dimension Explanation

Tires	Speed	1	2	3	4	5	6	7
Summer Tires	up to 240 km/h	195	65	R	15	91	V	-
Winter Tires	up to 160 km/h	195	65	R	15	91	Q	M + S
Winter Tires	up to 190 km/h	195	65	R	15	91	T	M + S
High Speed Tires	over 240 km/h	225	50	ZR	16	91	-	-

Protected by copyright. Copying for private or commercial purposes, in part or in whole, is not permitted unless authorised by AUDI AG. AUDI AG does not guarantee or accept any liability with respect to the correctness of information in this document. Copyright by AUDI AG.

1 - Tire width

2 - Aspect ratio in %

3 - Tire construction code “R“ (means radial)

4 - Rim diameter designation

5 - Load index (LI)

6 - Speed code

7 - Winter tire/designation for all-season tire

Note

There may also be an additional identification by Audi, such as “R01“ and / or “AO“ on the sidewall. This is released by Audi and is for special Audi models with special tires.

Note

- *Based on European Guideline ECE- R117 for new noise limits, these tire also have an “S“ on the sidewall.*
- *for passenger vehicle tires with an average width up to 185 mm: as of October 1, 2009*
- *for passenger vehicle tires with an average width from 185 mm up to 215 mm: as of October 1, 2010*
- *for passenger vehicle tires with an average width wider than 215 mm: as of October 1, 2011*

Downloaded from www.Manualslib.com manuals search engine

Tires with emergency running characteristics, SST (Self-Supporting Tire) and PAX, have a special designation on the tire side wall, depending on manufacturer.

2.5 Tire Pressure Monitoring System Assembly Overview

Beru wheel electronics system, refer to
⇒ “5.3 Wheel Electronics, TPMS, Beru System“, page 92 .

Siemens wheel electronics system, refer to
⇒ “5.4 Wheel Electronics, TPMS, Siemens System“, page 92 .

Note

The lettering on the wheel electronics shows which system is installed.

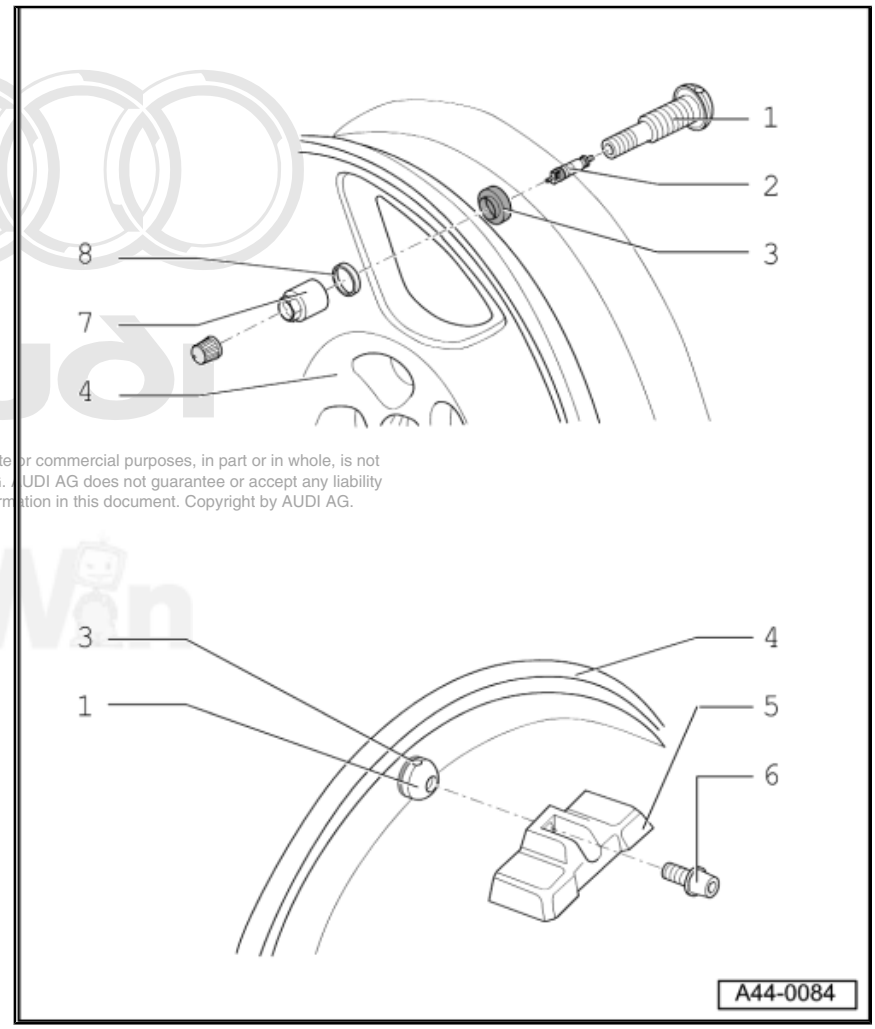

1 - Metal Valve Body

- Only install valve according to the Electronic Parts Catalog (ETKA).
- Delivered complete.
- Replace valve insert with every tire change.
- Removing and installing, refer to
⇒ “5.2 Metal Valve Body“, page 87 .

2 - Valve Core

3 - Seal

- Removing and installing, refer to
⇒ “5.2 Metal Valve Body“, page 87 .

Protected by copyright. Copying for private or commercial purposes, in part or in whole, is not permitted unless authorised by AUDI AG. AUDI AG does not guarantee or accept any liability with respect to the correctness of information in this document. Copyright by AUDI AG.

Note

4 - Rim

- Removing and installing tires, refer to
⇒ “5.7 Tires, Changing“, page 96 .
- Removing and installing run-flat tires, refer to
⇒ “5.8 Tires, with Run-Flat Tires“, page 98 .

5 - Wheel Electronics

- Batteries must be completely replaced.
- Remaining battery life, temperature and pressure can be read via diagnosis with Vehicle Diagnostic, Testing and Information System -VAS 5051B- or -VAS 5052- .
- Installing the wheel electronics, Beru System, refer to
⇒ “5.3 Wheel Electronics, TPMS, Beru System“, page 92 .
- Installing the wheel electronics, Siemens System, refer to
⇒ “5.4 Wheel Electronics, TPMS, Siemens System“, page 92 .

Downloaded from www.Manualslib.com manuals search engine

Note

WARNING

If tire sealant was used, then the wheel electronics on that particular wheel must be replaced.

WARNING

Damaged wheel electronics must be replaced.

Protected by copyright. Copying for private or commercial purposes, in part or in whole, is not permitted unless authorised by AUDI AG. AUDI AG does not guarantee or accept any liability with respect to the correctness of information in this document. Copyright by AUDI AG.

6 - Microencapsulated Bolt

Note

All models: 4 Nm

- ❑ Replace bolt.
- ❑ Can only be obtained as a replacement part with wheel electronics.

7 - Union Nut

- ❑ Removing and installing, refer to ⇒ “5.2 Metal Valve Body“, page 87 .
- ❑ Tightening specification, refer to ⇒ page 89 .

8 - Beveled Washer

Downloaded from www.Manualslib.com manuals search engine

3 Specifications

⇒ "3.1 Fastener Tightening Specifications", page 75

⇒ "3.2 Wheel Bolt Tightening Specifications", page 75

3.1 Fastener Tightening Specifications

Component	Fastener Size	Nm
Decorative Trim to Wheel Rim Bolt	-	5
Metal Valve to Wheel Rim Union Nut	-	Refer to ⇒ page 89
Wheel Electronics to Metal Valve Microencapsulated Bolt, Beru System	-	4

3.2 Wheel Bolt Tightening Specifications

DANGER!

In order to make sure the wheel bolts fit correctly, be use to use the correct wheel bolts specified for the model. The wheel bolts for each model have different diameters on the surface of the ball running surface on the wheel rim and they have different lengths.

Model	Model	Tightening Specification
RS 2	895	130 Nm
RS 4	8D	140 Nm
A1	8X	120 Nm
A2	8Z	120 Nm
A3	8P	120 Nm
S3	8P	120 Nm
A3 Cabrio	8P	120 Nm
A4	8E	120 Nm
S4	8E	120 Nm
RS 4	8E	120 Nm
A4 B8	8K	120 Nm
S4 B8	8K	120 Nm
A4 allroad	8K	120 Nm
RS 4 B8	8K	120 Nm
A5 Coupe	8T	120 Nm
S5 Coupe	8T	120 Nm
A5 Sportback	8T	120 Nm
A5 Cabrio	8F	120 Nm
S5 Cabrio	8F	120 Nm
RS -5	8T	120 Nm
A6	4B / 4F / 4G	120 Nm
A6 allroad	4B / 4F	120 Nm
S6	4B / 4F	120 Nm
RS 6	4B / 4F	120 Nm

Protected by copyright. Copying for private or commercial purposes, in part or in whole, is not permitted unless authorised by AUDI AG. AUDI AG does not guarantee or accept any liability with respect to the correctness of information in this document. Copyright by AUDI AG.

Downloaded from www.Manualslib.com manuals search engine

Model	Model	Tightening Specification
A7	4G	120 Nm
A8	4D / 4E / 4H	120 Nm
TT	8N / 8J	120 Nm
R8	42	120 Nm
Q5	8R	140 Nm
Q7	4L	160 Nm
Q7 - 12-cylinder	4L	160 Nm
Pax wheels A6	4B / 4F	120 Nm
Pax wheels A8	4D / 4E / 4H	140 Nm
A 6 (security)	4B / 4F	120 Nm
A 8 (security)	4D / 4E / 4H	140 Nm
All other Audi models		120 Nm

Protected by copyright. Copying for private or commercial purposes, in part or in whole, is not permitted unless authorised by AUDI AG. AUDI AG does not guarantee or accept any liability with respect to the correctness of information in this document. Copyright by AUDI AG.

Downloaded from www.Manualslib.com manuals search engine

4 Diagnosis and Testing

⇒ “4.1 Vehicle Pulls to One Side, Correcting“, page 77

⇒ “4.2 Wheel Rotation, Non-Directional Tires“, page 78

⇒ “4.3 Wheel Rotation, Directional Tires“, page 79

⇒ “4.4 Wheels and Tires, Radial and Lateral Run-Out, Checking with VAG 1435“, page 80

⇒ “4.5 Wheels and Tires, Radial and Lateral Run Out, Checking with Tire Dial Gauge“, page 80

⇒ “4.6 Rim Radial and Lateral Run Out, Checking“, page 81

4.1 Vehicle Pulls to One Side, Correcting

Test conditions before and during the road test:

- Check all suspension components on front and rear suspension for damage.
- Check tire pressure and correct if necessary.
- Check the tires for external damage. Holes, cuts, bulges in the side wall, flat spots from braking and/or damage to the tread.
- Ask the customer if a tire had been damaged by a nail or similar object and perhaps repaired by a tire dealer. You may have to replace such tires.
- Check tires for even wear and tread depth.
- Are all tires of the same type, manufacture and tread pattern?
- If the tires are non-directional, ensure that all DOT classifications on the tire face outwards. It may be that the vehicle's wheels and tires were already changed around at an earlier date.
- Are the tire brands factory-approved as initial equipment?
- For the road test, use a level, straight driving surface that does not slope off to one side and does not have ruts.
- Perform the road test with the customer under the conditions specified above. The customer should demonstrate the problem.

Reproduction or copying for private or commercial purposes, in part or in whole, is not permitted unless authorised by AUDI AG. AUDI AG does not guarantee or accept any liability with respect to the correctness of information in this document. Copyright by AUDI AG.

Note

There should not be any side wind when road test takes place.

If the complaint is justified, it is recommend to rotate the wheels and tires as described on the following pages.

Before beginning, observe the following notes, otherwise all effort will be for nothing!

- Identify tires and wheels before the first rotation.
- After rotating wheels or reversing the tire on its rim, observe very carefully how the vehicle behaves during the road test. Note what was replaced and how.
- The intensity or any possible change to the one-sided pulling should be assessed.
- To do this, it is absolutely essential that the road tests are always performed by the same person on the same road. It is best to drive the »test course« in both directions.

Downloaded from www.Manualslib.com manuals search engine

- Replacing a tire with a new one does not ensure that the pulling to one side is corrected, also see “taper“. Refer to ⇒ page 42 . Therefore, it is recommended to perform a targeted exchange of the wheels as described below. Refer to ⇒ “4.2 Wheel Rotation, Non-Directional Tires“, page 78 or ⇒ “4.3 Wheel Rotation, Directional Tires“, page 79 .
- If there are large differences in the tread depth of the tires on the front and rear axles, the tires with the deeper tread should always be mounted on the front axle.

4.2 Wheel Rotation, Non-Directional Tires

<table>
<tr><td colspan="4">I</td></tr>
<tr><td colspan="4">Perform a road test to determine if a vehicle pulls to one side and if so, when and to which side.</td></tr>
<tr><td colspan="4">I</td></tr>
<tr><td colspan="4">If the vehicle pulls to one side, swap the front wheels.</td></tr>
<tr><td colspan="4">I</td></tr>
<tr><td colspan="4">Road Test, Performing</td></tr>
<tr><td colspan="4">Vehicle travels straight - END</td></tr>
<tr><td colspan="2">Vehicle now pulls to opposite side.</td><td colspan="2">Vehicle still pulls to the same side.</td></tr>
<tr><td colspan="2">I</td><td colspan="2">I</td></tr>
<tr><td colspan="2">Reverse one tire on its rim on the front axle (reverse the direction of travel).</td><td colspan="2">Rotate wheels from front to back.</td></tr>
<tr><td colspan="2">I</td><td colspan="2">I</td></tr>
<tr><td colspan="2">Road Test, Performing</td><td colspan="2">Road Test, Performing</td></tr>
<tr><td colspan="2">Vehicle travels straight - END</td><td colspan="2">Vehicle travels straight - END</td></tr>
<tr><td colspan="2">Vehicle does not travel straight.</td><td colspan="2">Vehicle does not travel straight.</td></tr>
<tr><td colspan="2">I</td><td colspan="2">I</td></tr>
<tr><td colspan="2">Swap front wheels and swap back wheels.</td><td>Vehicle now pulls to opposite side.</td><td>No change</td></tr>
<tr><td colspan="2">I</td><td>I</td><td>I</td></tr>
<tr><td colspan="2">Road Test, Performing</td><td rowspan="5">Reverse one tire on its rim on the front axle (reverse the direction of travel)</td><td rowspan="7">Check axle adjustment on front and rear axle, adjust if necessary. If adjustment is OK, contact product support.</td></tr>
<tr><td colspan="2">Vehicle travels straight - END</td></tr>
<tr><td colspan="2">Vehicle does not travel straight.</td></tr>
<tr><td colspan="2">I</td></tr>
<tr><td colspan="2">Swap the front wheels</td><td>I</td></tr>
<tr><td colspan="2">I</td><td>I</td></tr>
<tr><td colspan="2">Road Test, Performing</td><td>Road Test, Performing</td><td></td></tr>
<tr><td>Vehicle travels straight - END</td><td>Vehicle does not travel straight</td><td>Vehicle travels straight END</td><td></td></tr>
<tr><td>I</td><td></td><td>Vehicle does not travel straight.</td><td></td></tr>
<tr><td></td><td>Install new tires on front axle.</td><td>Install new tires on front axle.</td><td></td></tr>
<tr><td colspan="2">I</td><td>I</td><td></td></tr>
<tr><td colspan="2">Road Test, Performing</td><td>Road Test, Performing</td><td></td></tr>
<tr><td colspan="2">Vehicle travels straight - END</td><td>Vehicle travels straight - END</td><td></td></tr>
<tr><td colspan="2">I</td><td>I</td><td></td></tr>
<tr><td colspan="4">Vehicle does not travel straight, inform Audi Product Support.</td></tr>
</table>

Protected by copyright. Copying for private or commercial purposes, in part or in whole, is not permitted unless authorised by AUDI AG. AUDI AG does not guarantee or accept any liability with respect to the correctness of information in this document. Copyright by AUDI AG.

Downloaded from www.Manualslib.com manuals search engine

4.3 Wheel Rotation, Directional Tires

Note

- *Be careful not to scratch off the glued- on wheel trim on these rims.*
- *The surface of the wheel trim is very sensitive.*
- *The rim will have be replaced if the wheel trim is damaged.*
- *The wheel trim cannot be replaced.*

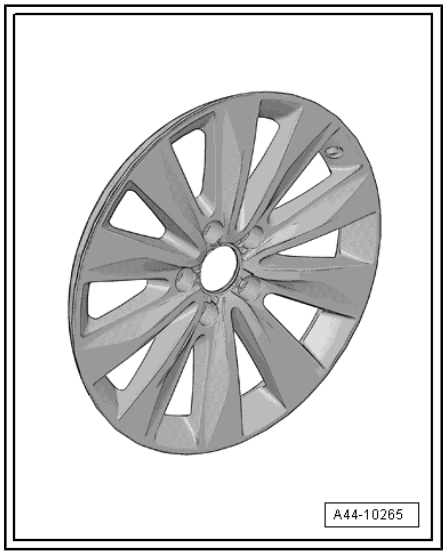

I
Perform a road test to determine if a vehicle pulls to one side and if so, when and to which side.
I
Rotate wheels with tires from front to back.
I
Road Test, Performing
Vehicle travels straight - END
I
First, replace one tire on the front axle.
I
Road Test, Performing
Vehicle travels straight - END
Vehicle does not travel straight.
I
Replace second tire on the front axle.
I
Road Test, Performing
Vehicle travels straight - END
Vehicle does not travel straight.
I
Measure vehicle at front and back.
I
Road Test, Performing
Vehicle travels straight - END
Vehicle does not travel straight, inform Product Support.

Protected by copyright. Copying for private or commercial purposes, in part or in whole, is not permitted unless authorized by AUDI AG. AUDI AG does not guarantee or accept any liability with respect to the correctness of information in this document. Copyright by AUDI AG.

Downloaded from www.Manualslib.com manuals search engine

4.4 Wheels and Tires, Radial and Lateral Run-Out, Checking with VAG 1435

Checking Lateral Run-Out

- Preload tire dial gauge approximately 2 mm.
- Position dial gauge on tire side wall as shown in illustration.
- Slowly rotate the wheel.
- Note the smallest and the largest dial readings.

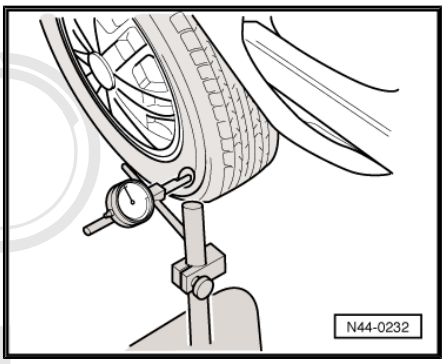

Note

If the difference is greater than 1.3 mm, the lateral run-out is too great.

In this case, lateral run-out can be reduced by matched mounting of the tire. Refer to ⇒ “1.16.9 Matched Mounting“, page 40 .

Peak values on the tire dial gauge due to small irregularities in the rubber may be disregarded.

Checking Radial Run-Out

- Preload tire dial gauge approximately 2 mm.
- Position dial gauge on tire running surface as shown in illustration.
- Slowly rotate the wheel.
- Note the smallest and the largest dial readings.

Protected by copyright. Copying for private or commercial purposes, in part or in whole, is not permitted unless authorised by AUDI AG. AUDI AG does not guarantee or accept any liability with respect to the correctness of information in this document. Copyright by AUDI AG.

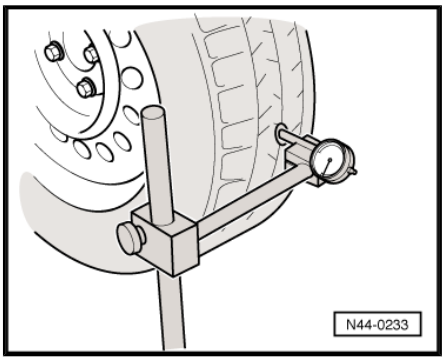

Note

If the difference is greater than 1 mm, the radial run-out is too great.

In this case, radial run-out can be reduced by matched mounting of the tire. Refer to ⇒ “1.16.9 Matched Mounting“, page 40 .

4.5 Wheels and Tires, Radial and Lateral Run Out, Checking with Tire Dial Gauge

Checking Lateral Run-Out

- Mount the tire on the wheel balancer.

Downloaded from www.Manualslib.com manuals search engine

Note

- *Be careful not to scratch off the glued- on wheel trim on these rims.*
- *The surface of the wheel trim is very sensitive.*
- *The rim will have be replaced if the wheel trim is damaged.*
- *The wheel trim cannot be replaced.*

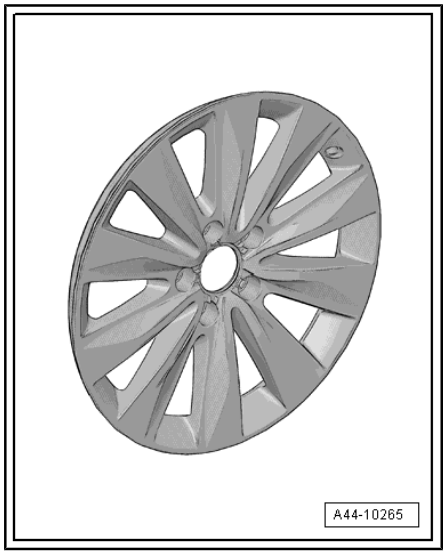

– Use the centering system for wheel balancing machines -VAS 5271- .
– Preload tire dial gauge approximately 2 mm.
– Position dial gauge on tire side wall as shown in illustration.
– Slowly rotate the wheel.

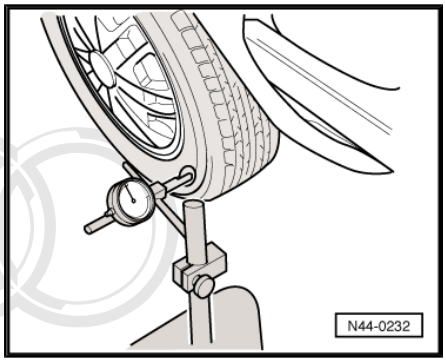

– Note the smallest and the largest dial readings.

Note

If the difference is greater than 1.3 mm, the lateral run-out is too great.

In this case, lateral run-out can be reduced by matched mounting of the tire. Refer to ⇒ "1.16.9 Matched Mounting", page 40 .

Peak values on the tire dial gauge due to small irregularities in the rubber may be disregarded.

Checking Radial Run-Out

– Preload tire dial gauge approximately 2 mm.
– Position dial gauge on tire running surface as shown in illustration.
– Slowly rotate the wheel.

Protected by copyright. Copying for private or commercial purposes, in part or in whole, is not permitted unless authorised by AUDI AG. AUDI AG does not guarantee or accept any liability with respect to the correctness of information in this document. Copyright by AUDI AG.

– Note the smallest and the largest dial readings.

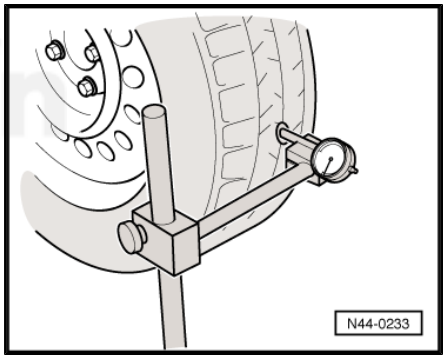

Note

If the difference is greater than 1 mm, the radial run-out is too great.

In this case, radial run-out can be reduced by matched mounting of the tire.

Note

If the measured value exceeds the specified value, no acceptable smooth running can be attained.

4.6 Rim Radial and Lateral Run Out, Checking

– Mount the rim on the wheel balancer.

Downloaded from www.Manualslib.com manuals search engine

Note

- *Be careful not to scratch off the glued- on wheel trim on these rims.*
- *The surface of the wheel trim is very sensitive.*
- *The rim will have be replaced if the wheel trim is damaged.*
- *The wheel trim cannot be replaced.*

– Use the centering system for wheel balancing machines -VAS 5271- .

– Preload tire dial gauge approximately 2 mm.

– Turn the rim slowly.

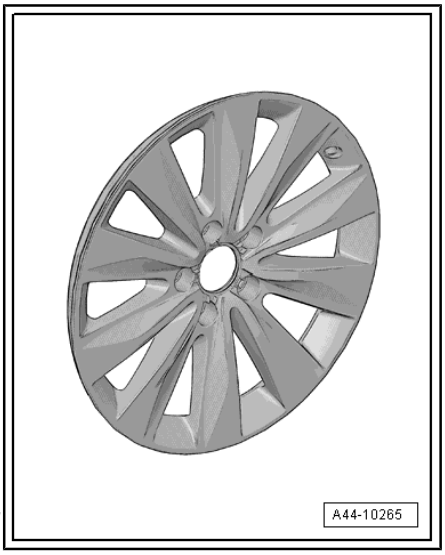

Protected by copyright. Copying for private or commercial purposes, in part or in whole, is not permitted unless authorised by AUDI AG. AUDI AG does not guarantee or accept any liability with respect to the correctness of information in this document. Copyright by AUDI AG.

– Note the smallest and the largest dial readings.

S - Lateral run-out

H - Radial run-out

– Compare determined value with specifications in the table.

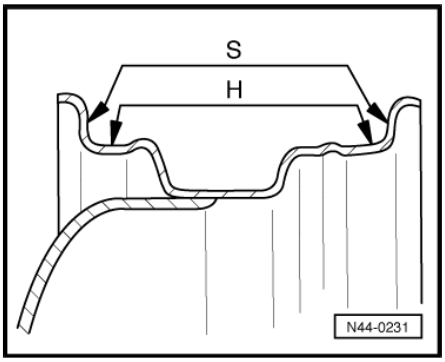

Note

Peak values on the tire dial gauge due to small irregularities may be disregarded.

Specifications for Radial and Lateral Run-Out on Wheel

Steel Wheel	Radial Run-Out	Lateral Run-Out
Steel wheel	0.5 mm	0.5 mm
Aluminum wheel	0.3 mm	0.3 mm

Note

If the measured value exceeds the specified value, no acceptable smooth running can be attained.

Downloaded from www.Manualslib.com manuals search engine

5 Removal and Installation

⇒ "5.1 Wheel, Changing and Mounting", page 83

⇒ "5.2 Metal Valve Body", page 87

⇒ "5.3 Wheel Electronics, TPMS, Beru System", page 92

⇒ "5.4 Wheel Electronics, TPMS, Siemens System", page 92

⇒ "5.5 Wheel Rims with Replaceable Decorative Trim, Attached with Bolts", page 93

⇒ "5.6 Wheel Rims with Replaceable Decorative Trim, Glued", page 93

⇒ "5.7 Tires, Changing", page 96

⇒ "5.8 Tires, with Run-Flat Tires", page 98

⇒ "5.9 Tires, Sealed with Sealant", page 102

5.1 Wheel, Changing and Mounting

Note

The wrench size of the included wheel bolt adapter can be vary from the wrench size of the respective master set.

Special tools and workshop equipment required

- Torque wrench -V.A.G 1332-
- Master Wheel Bolt Key Set -T10101-
- Master Wheel Bolt Key Set -T10101 A-
- Master Wheel Bolt Key Set -T40004-
- Master Wheel Bolt Key Set -T40073-
- Wax Spray -D 322 000 A2-
- Optimol TA Paste -G 052 109 A2-

Reproduction of this document or parts thereof for commercial purposes, in part or in whole, is not permitted unless authorised by AUDI AG. AUDI AG does not guarantee or accept any liability with respect to the correctness of information in this document. Copyright by AUDI AG.

Changing

Caution

If brake pads are ceramics, wheel must not fall on brake disc, otherwise it will be irreparably damaged. To remove/install wheel, install long assembly pin instead of wheel bolts in top position (12:00 position) and short assembly pin in wheel bolt mounts for support. In this way, the wheel can glide on the assembly aids when removing/installing.

Downloaded from www.Manualslib.com manuals search engine

Note

- *Only raise vehicle at designated mounting points.*
- *On vehicles with alloy wheels, do not pry out cover caps with a screwdriver but rather use only the special tool designed for this (puller hook in vehicle tool kit).*
- *To loosen wheel bolts, use sockets in the correct size. Sockets that did not fit must not be used any more.*
- *Do not use an impact wrench to loosen anti-theft wheel bolts (lockable wheel bolts).*
- *Do not make wheel bolts dirty.*

DANGER!

The secure seating of the wheel bolts and the wheels is only ensured if the instructions and checks below are followed.

The following checks and instructions must be performed with wheel (rim) unmounted!

DANGER!

In order to make sure the wheel bolts fit correctly, be use to use the correct wheel bolts specified for the model. The wheel bolts for each model have different diameters on the surface of the ball running surface on the wheel rim and they have different lengths.

– Check if the contact surfaces -arrows- between the brake disc/ wheel hub brake disc/brake drum and the wheel (rim) are free of corrosion and dirt.

– If necessary, remove oil, grease, grease and corrosion.

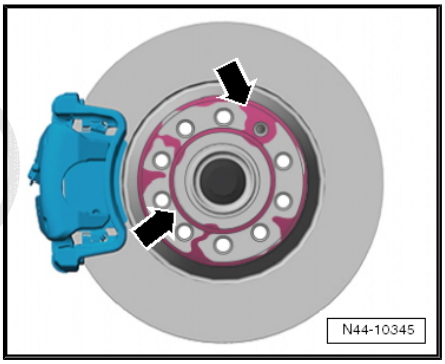

– Make sure there is no corrosion or dirt on the center of the wheel hub -arrows-.

Protected by copyright. Copying for private or commercial purposes, in part or in
permitted unless authorised by AUDI AG. AUDI AG does not guarantee or accep
with respect to the correctness of information in this document. Copyright by A

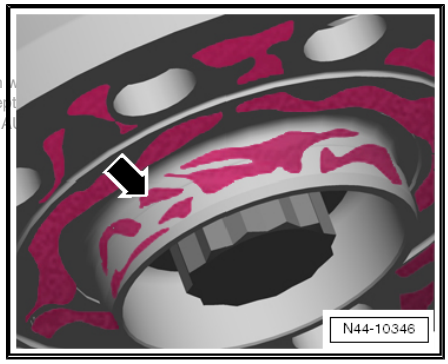

Downloaded from www.Manualslib.com manuals search engine

– Make sure the contact surfaces -arrow- on the wheel inner side (rim) as well as the central seat in the rim is free of corrosion and dirt.

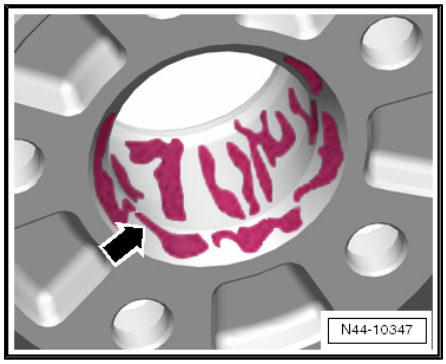

– The spherical caps in the wheel bolt holes must not have any corrosion, dirt, oil or grease on them.
– If necessary, remove oil, dirt and corrosion and reapply corrosion protection in centering seat area with Wax Spray -D 322 000 A2- .

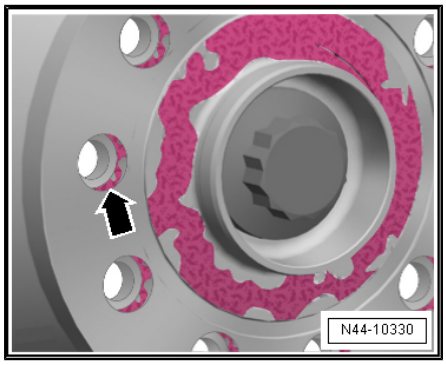

Note

- *The wax spray must not get onto brake system parts.*
- *If rust or dirt falls between brake disc and wheel hub during removal, remove it by blowing out with compressed air.*

DANGER!

Wear protective eyewear when working with compressed air.

The wheel (rim) spherical caps and wheel bolts must be free of dirt and corrosion.

– Dirty wheel (rim) spherical caps should be cleaned with a lint-free cloth.
– Check wheel bolts and wheel hub threads for cleanliness.
– Clean dirty wheel bolts in spherical cap area and threads, e.g. with a brass brush.

Protected by copyright. Copying for private or commercial purposes, in part or in whole, is not permitted unless authorised by AUDI AG. AUDI AG does not guarantee or accept any liability with respect to the correctness of information in this document. Copyright by AUDI AG.

WARNING

Heavily corroded or damaged wheel bolts must be replaced.

Downloaded from www.Manualslib.com manuals search engine

If lightly corroded wheel bolts are reused, they must be cleaned in area of spherical cap and threads and Optimol AT -G 052 109 A2- paste must be applied to slide surfaces as follows (all vehicles except RS 2 and RS 4, type 8D):

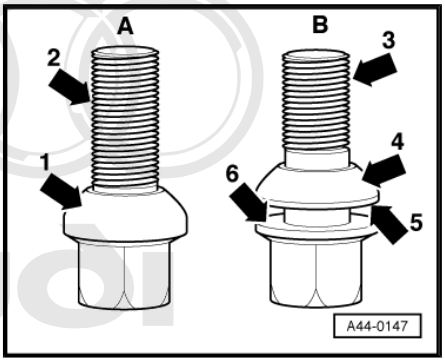

A - One-part wheel bolt. Lightly lubricate threaded area -2- and spherical cap -1-.

B - Two-part wheel bolt. Lightly lubricate threaded area -3- as well as between bolt head contact surface -6- and spherical cap ring -5-. The spherical cap to wheel (rim) contact surface -4- must not be lubricated.

Note

Protected by copyright. Copying for private or commercial purposes, in part or in whole, is not permitted unless authorised by AUDI AG. AUDI AG does not guarantee or accept any liability with respect to the correctness of information in this document. Copyright by AUDI AG.

Only use Optimol TA -G 052 109 A2- paste. The paste must not get on brake system parts.

Only for RS 2 and RS 4 type 8D

- Lightly corroded wheel bolts must not be cleaned and lubricated. These wheel bolts should be replaced.
- Install wheel bolts dry.

All Vehicles

– Check whether the wheel bolts can be easily installed by hand without tools. It must be easy to install the wheel bolts the entire length of the threads when installing the wheel.

– Make sure that threads align with the hub. The threads of the wheel bolts must not touch the holes in the brake disc.

– If the thread of the wheel bolt touches the hole, turn the brake disc relative to the wheel accordingly.

Wheel Mounting

Downloaded from www.Manualslib.com manuals search engine

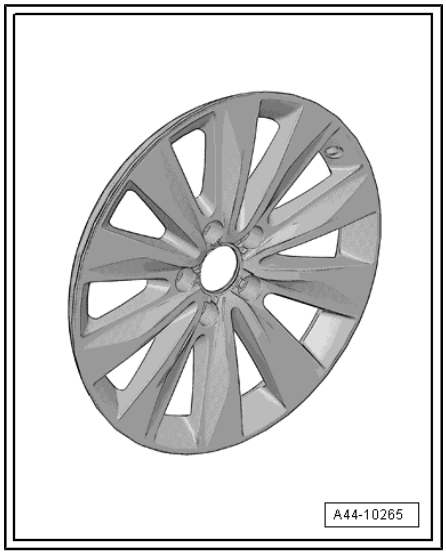

Note

- *Be careful not to scratch off the glued- on wheel trim on these rims.*
- *The surface of the wheel trim is very sensitive.*
- *The rim will have be replaced if the wheel trim is damaged.*
- *The wheel trim cannot be replaced.*

- Place wheel on wheel hub and secure it by hand with two wheel bolts on opposite sides.
- Install remaining wheel bolts by hand, they must be easy to install. Make sure that they are centered exactly.
- Take load off wheel if necessary by raising slightly and lightly tighten two wheel bolts by hand.
- When mounting a wheel, tighten all wheel bolts uniformly by hand.
- Tighten the wheel bolts diagonally using, for example, a four-way lug wrench, to about 30 Nm.

Note

- *Make sure the correct wheel bolts are installed. Allocation, refer to the Electronic Parts Catalog (ETKA).*
- *Only the same wheel bolts may be installed on all four wheel rims for every vehicle.*

WARNING

Do not use an impact wrench to install the wheel bolts.

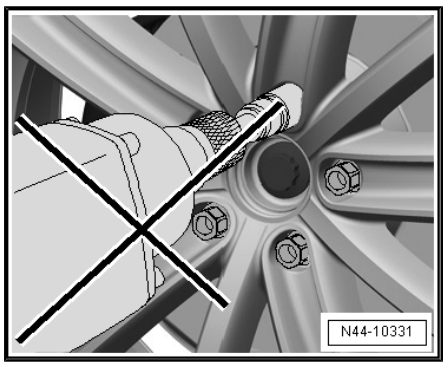

– Lift the wheel slightly to take the pressure off it.
– Lower the vehicle to the floor and tighten diagonally all wheel bolts to the specified wheel bolt tightening specification.
– Lower the vehicle onto its wheels. Refer to ⇒ Suspension, Wheels, Steering; Rep. Gr. 44 ; Description and Operation .

5.2 Metal Valve Body

Photo copy copyright. Copyright private or commercial purposes, in part or in whole, is not permitted unless authorised by AUDI AG. AUDI AG does not guarantee or accept any liability [illegible] document. Copyright by AUDI AG.

Special tools and workshop equipment required

- Torque wrench -V.A.G 1410-
- 11 m socket wrench -V.A.G 1331-

– Place metal valve with rubber seal through rim from inside.
– Attach chamfered washer and union nut from outside and tighten by hand.

Downloaded from www.Manualslib.com manuals search engine

– Tighten the union nut.

Protected by copyright. Copying for private or commercial purposes, in part or in whole, is not permitted unless authorised by AUDI AG. AUDI AG does not guarantee or accept any liability with respect to the correctness of information in this document. Copyright by AUDI AG.

Downloaded from www.Manualslib.com manuals search engine

Note

- *Be careful not to scratch off the glued- on wheel trim on these rims.*
- *The surface of the wheel trim is very sensitive.*
- *The rim will have be replaced if the wheel trim is damaged.*
- *The wheel trim cannot be replaced.*

Protected by copyright. Copying for private or commercial purposes, in part or in whole, is not permitted unless authorised by AUDI AG. AUDI AG does not guarantee or accept any liability with respect to the correctness of information in this document. Copyright by AUDI AG.

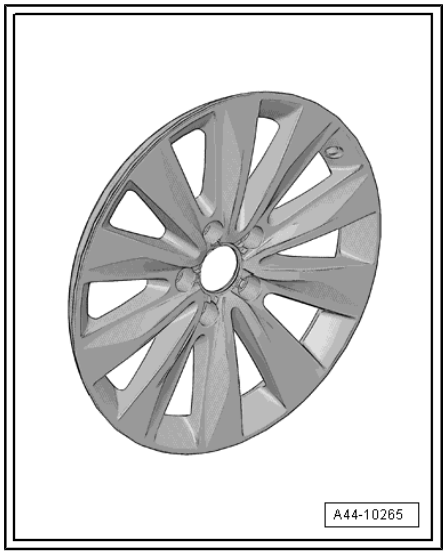

Downloaded from www.Manualslib.com manuals search engine

Union Nut Tightening Specification

Model, Type	System	Country	Nm
A1, 8X	TPMS + indirect measuring 6)	USA and rest of the world	------
A3, 8P	Direct measuring, Siemens 5)	USA	8 Nm
A3, 8P	TPMS + indirect measuring 7)	Rest of the world	------
A4, 8E	Direct measuring, Beru 5)	USA and rest of the world	4 Nm
A4, 8K	Direct measuring, Siemens 5)	USA	8 Nm
A4, 8K	TPMS + indirect measuring 6)	Rest of the world	------
A5, 8T	Direct measuring, Siemens 5)	USA	8 Nm
A5, 8T	TPMS + indirect measuring 6)	Rest of the world	------
S5, 8T	Direct measuring, Siemens 5)	USA	8 Nm
S5, 8T	TPMS + indirect measuring 6)	Rest of the world	------
A5, S5 Cabriolet 8F	Direct measuring, Siemens 5)	USA	8 Nm
A5, S5 Cabriolet 8F	TPMS + indirect measuring 6)	Rest of the world	------
A6, 4B	Direct measuring, Beru 5)	USA and rest of the world	4 Nm
A6, 4F	Direct measuring, Beru 5)	USA and rest of the world	4 Nm
RS 6, 4F	Direct measuring, Beru 5)	USA and rest of the world	6 Nm
A6, 4G	TPMS + indirect measuring 6)	USA and rest of the world	------
A7, 4G	TPMS + indirect measuring 6)	USA and rest of the world	------
A8, 4E	Direct measuring, Beru 5)	USA and rest of the world	4 Nm
A8, 4H	TPMS + indirect measuring 6)	USA and rest of the world	------
Q5, 8R	Direct measuring, Siemens 5)	USA	8 Nm
Q7, 4L	Direct measuring, Beru 5)	USA and rest of the world	4 Nm
Q7, 4L, 12-cylinder	Direct measuring, Beru 5)	USA and rest of the world	4 Nm
TT, 8J	Direct measuring, Siemens 5)	USA	8 Nm
TT, 8J	TPMS + indirect measuring 6)	Rest of the world	------
R8, 42	Direct measuring, Beru 5)	USA and rest of the world	6 Nm

Protected by copyright. Copying for private or commercial purposes, in part or in whole, is not permitted unless authorised by AUDI AG. AUDI AG does not guarantee or accept any liability with respect to the correctness of information in this document. Copyright by AUDI AG.

Downloaded from www.Manualslib.com manuals search engine

All other models: 4 Nm

5) TPMS direct measuring. The wheel electronics are installed inside the wheel on the metal valve; the tire pressure and temperature values are transmitted and evaluated periodically.

6) TPMS + indirect measuring. There are no wheel electronics installed inside the wheel. With the help of the ABS sensors, the TPMS compares the speed and rolling circumference of the individuals wheels. The loss of pressure is determined indirectly. If there is a change in the tire pressure, then the speed and the rolling circumference of wheel will also change.

7) TPMS indirect measuring. There are no wheel electronics installed inside the wheel. With the help of the ABS sensors, the TPMS compares the rolling circumference of the individual wheels. The loss of pressure is determined indirectly. If there is a change in the tire pressure, then the speed of the tire will also change.

– Secure against turning with counterhold -1- (for example, a 2 mm drill bit).

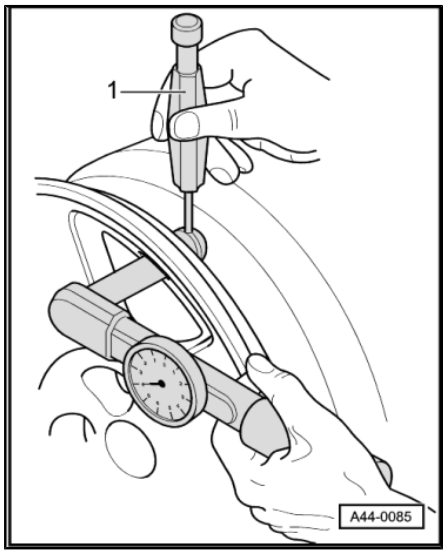

Note

- *Be careful not to scratch off the glued- on wheel trim on these rims.*
- *The surface of the wheel trim is very sensitive.*
- *The rim will have be replaced if the wheel trim is damaged.*
- *The wheel trim cannot be replaced.*

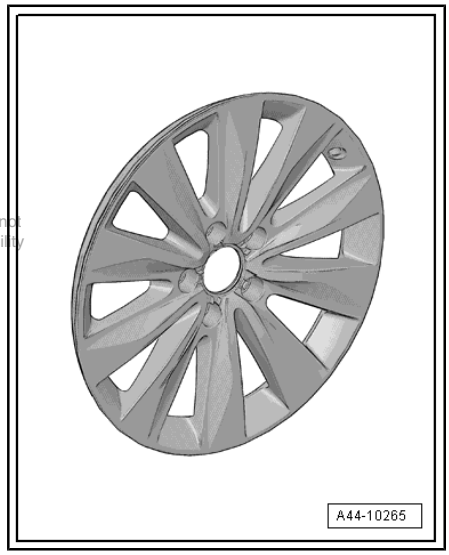

Copyright © 2010 Audi AG. All rights reserved. Reproduction or distribution of the whole, is not permitted unless authorised by AUDI AG. AUDI AG does not guarantee or accept any liability with respect to the correctness of information in this document. Copyright by AUDI AG.

Downloaded from www.Manualslib.com manuals search engine

5.3 Wheel Electronics, TPMS, Beru System

Special tools and workshop equipment required

- Torque wrench -V.A.G 1410-
- Socket -V.A.G 1410/1-

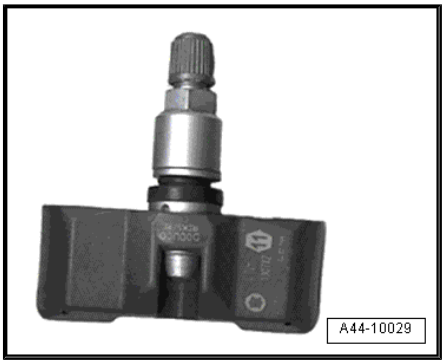

Overview

> **WARNING**
>
> *If tire sealant was used, then the wheel electronics on that particular wheel must be replaced.*

> **WARNING**
>
> *Damaged wheel electronics must be replaced.*

– Push the wheel electronics -1- into the bed.

– Install on the valve from the back with a microencapsulated screw.

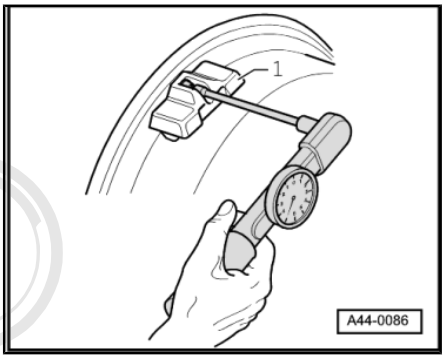

Note

Replace the microencapsulated screw.

Tightening specification for all models: 4 Nm

5.4 Wheel Electronics, TPMS, Siemens System

> **WARNING**
>
> *If tire sealant was used, then the wheel electronics on that particular wheel must be replaced.*

Protected by copyright. Copying for private or commercial purposes, in part or in whole, is not permitted unless authorised by AUDI AG. AUDI AG does not guarantee or accept any liability with respect to the correctness of information in this document. Copyright by AUDI AG.

- The Siemens wheel electronics does not have a microencapsulated screw.
- A union nut holds the wheel electronics in place inside the rim.
- The metal valve body serves as an antenna.
- The connection between the metal valve body to the wheel electronics must not get damaged.

> **WARNING**
>
> *Counterhold the metal valve from the back by hand when pressing the wheel electronics into the bed on the rim. The connection between the metal valve to the wheel electronics must not get interrupted or damaged. Damaged wheel electronics must be replaced.*

– Press the wheel electronics into the bed.

Downloaded from www.Manualslib.com manuals search engine

– Tighten the wheel electronics to the metal valve with the union nut. Refer to ⇒ “5.2 Metal Valve Body“, page 87 .

5.5 Wheel Rims with Replaceable Decorative Trim, Attached with Bolts

These disc wheels are equipped with replaceable decoration elements. Note the following when installing.

– Clean the thread in the disc wheel before screwing in the new bolts.

– Always use new bolts.

1 - Decoration element

2 - Hex socket bolts

Tightening specification for self-locking hex socket bolts: 5 Nm

Protected by copyright. Copying for private or commercial purposes, in part or in whole, is not permitted unless authorised by AUDI AG. AUDI AG does not guarantee or assume any liability with respect to the correctness of information in this document. Copyright by AUDI AG.

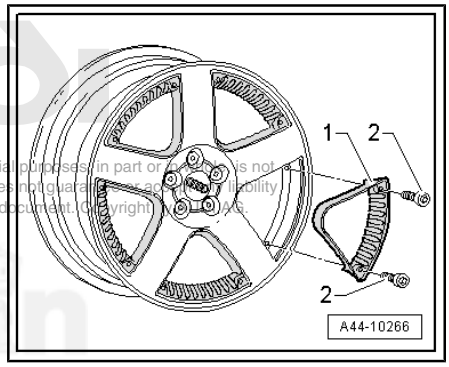

5.6 Wheel Rims with Replaceable Decorative Trim, Glued

Special tools and workshop equipment required

- Disassembly wedge -3409-
- Hot air blower -V.A.G 1416-
- Cartridge gun -V.A.G 1628-

Removing

Note

It is not possible remove the decorative trim without damaging it.

Downloaded from www.Manualslib.com manuals search engine

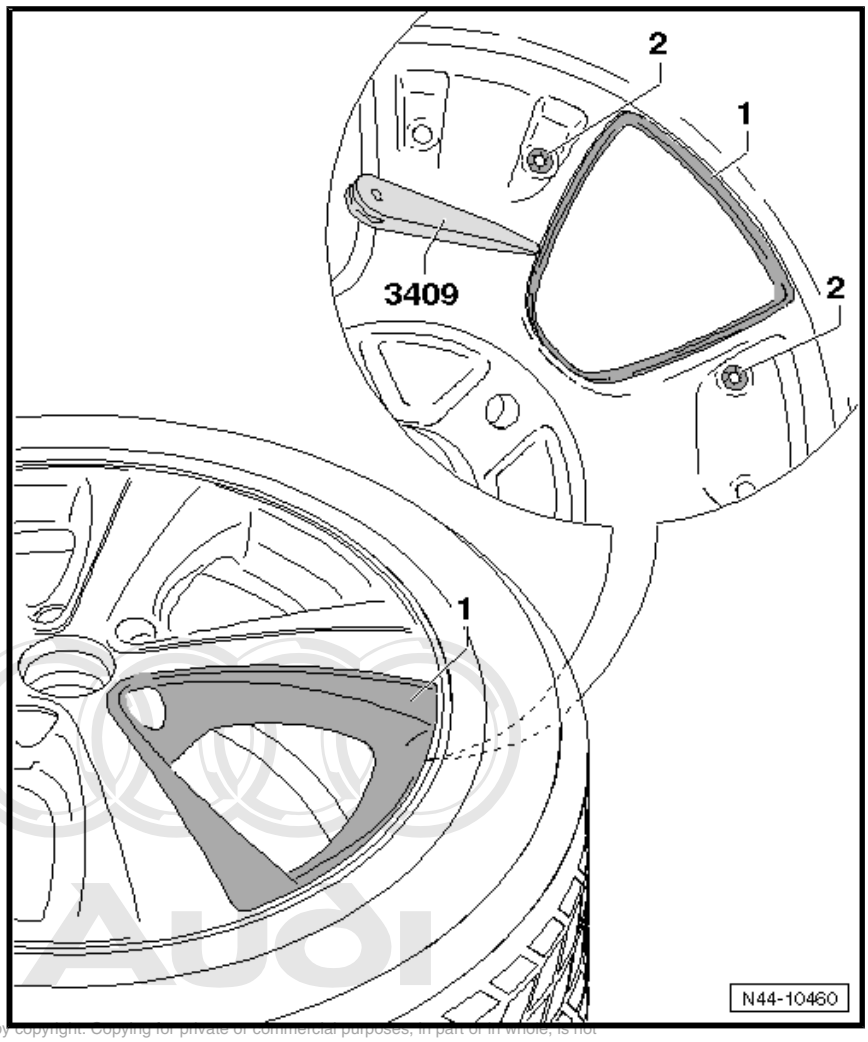

Protected by copyright. Copying for private or commercial purposes, in part or in whole, is not permitted unless authorised by AUDI AG. AUDI AG does not guarantee or accept any liability with respect to the correctness of information in this document. Copyright by AUDI AG.

– Loosen the lock washers -2- from the inside of the light alloy wheel.

– Warm the decorative trim -1- from the outside using the -V.A.G 1416- .

Caution

Do not overheat tires and light alloy wheels.

– Loosen the decorative trim -1- from the inside of the light alloy wheel using the -3409- .

– Grab under one corner from the outside and pull the decorative trim -1- off the light alloy wheel.

Note

- *The adhesive points for the PUR label are cut into the light alloy wheel.*
- *The remaining material serves as the adhesive base for the new decorative trim.*
- *The new decorative trim can be installed immediately.*

Downloaded from www.Manualslib.com manuals search engine

Installing

♦ 1K window adhesive	-DH 009 100 A2-
♦ Silicone remover	-LSE 020 100 A3-

These light alloy wheels are equipped with replaceable decoration elements. Note the following when installing.

♦ Make sure the adhesion area on the light alloy wheels and decorative trim are free of dust and grease.

♦ Clean the adhesion area with silicone remover -LSE 020 100 A3- .

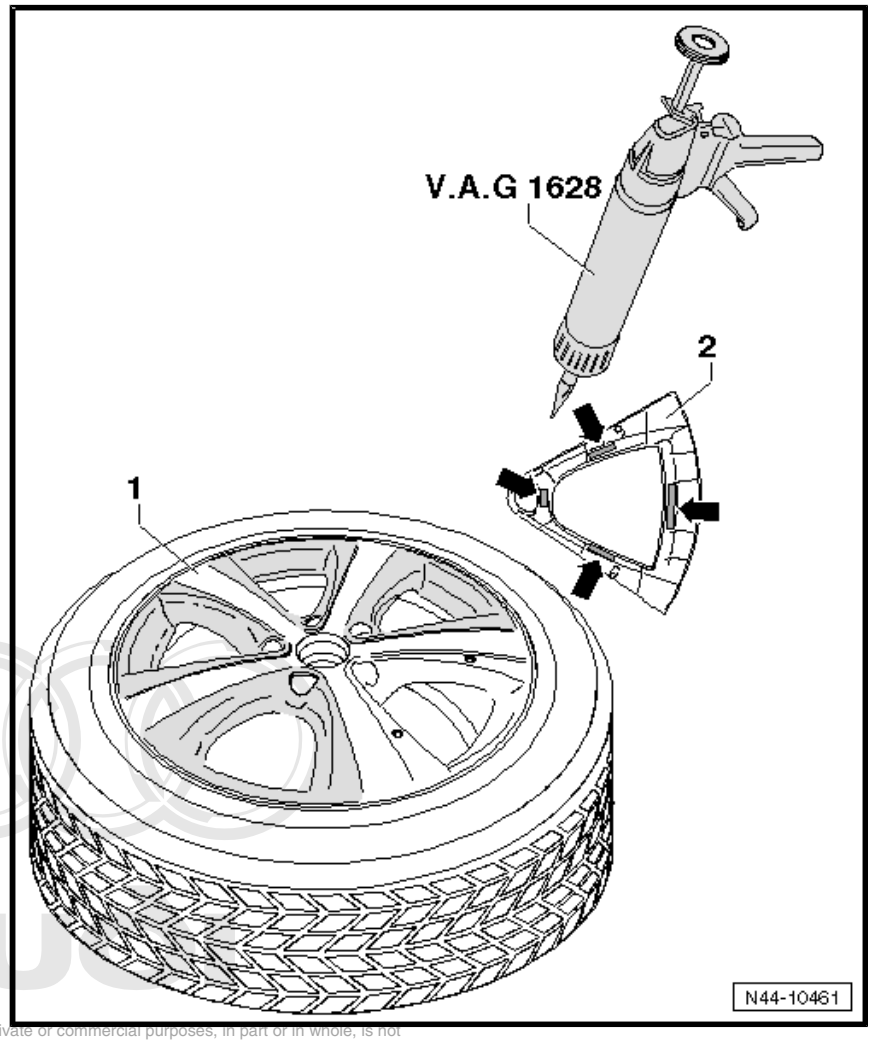

Protected by copyright. Copying for private or commercial purposes, in part or in whole, is not permitted unless authorised by AUDI AG. AUDI AG does not guarantee or accept any liability with respect to the correctness of information in this document. Copyright by AUDI AG.

– Apply 1K window adhesive -DH 009 100 A2- on the adhesive surfaces -arrows- using the -V.A.G 1628- .

• Adhesive point: length = approximately 25 mm and diameter = approximately 10 mm

Downloaded from www.Manualslib.com manuals search engine

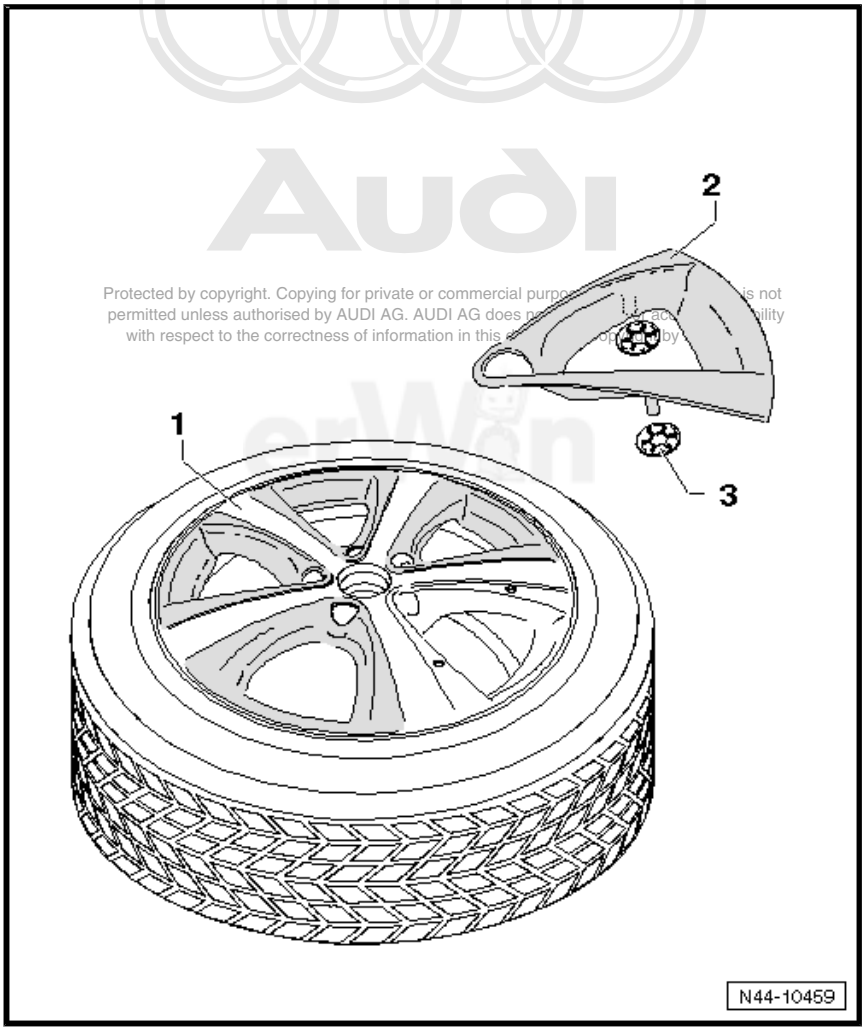

– Press the decorative trim -2- into the light alloy wheels -1- using firm pressure.

– Secure the decorative trim -2- to the inside of the light alloy wheel with lock washers -3-.

Minimum curing time: 3 hours at room temperature of minimum 15 °C.

> ⚠ **WARNING**
>
> ***The light alloy wheel must be balanced again.***

5.7 Tires, Changing

Removing and installing run-flat tires, refer to
⇒ "5.8 Tires, with Run-Flat Tires", page 98 .

Note

- *The valve insert must be replaced with every tire change.*
- *Metal valve and wheel electronics can be reused*

Downloaded from www.Manualslib.com manuals search engine

– Let air out of tire by removing the valve insert.

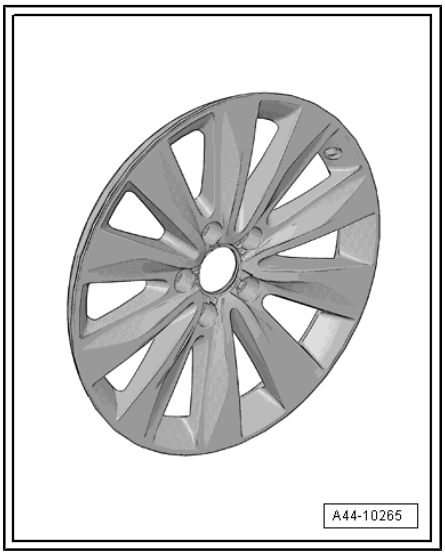

Note

- *Be careful not to scratch off the glued- on wheel trim on these rims.*
- *The surface of the wheel trim is very sensitive.*
- *The rim will have be replaced if the wheel trim is damaged.*
- *The wheel trim cannot be replaced.*

– Perform a visual inspection for loose or damaged parts. If there are loose threaded connections, replace entire valve unit.

Note

Damaged wheel electronics must be replaced.

Dismounting Tire

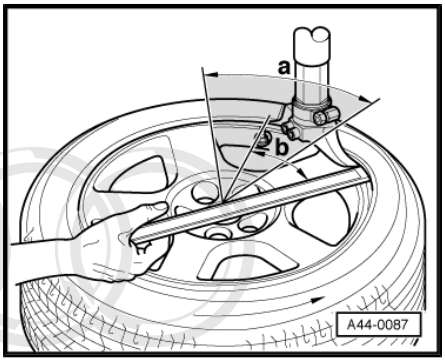

Roll or press tires off.

When using pressure paddles, first separate tires from side opposite of valve.

Note

Do not use pressure paddles in hatched area -a-.

– Position mounting head near valve so that so that tire iron can be put on approximately 30° -b- next to tire valve.

– Then remove tire in valve area first.

Mounting Tire

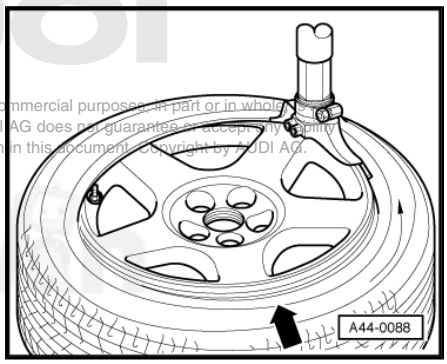

Note

Protected by copyright. Copying for private or commercial purposes, in part or in whole, is not permitted unless authorised by AUDI AG. AUDI AG does not guarantee or accept any liability with respect to the correctness of information in this document. Copyright by AUDI AG.

Do not use pressure paddles in valve area.

– Position wheel electronics approximately 180° opposite of mounting head.

– Press tire in bed approximately 90° in front of mounting head -arrow-.

– Install a new valve insert.

– Mount tire.

– Fill tires, reinstall plastic cap.

– Balance the tire. Refer to ⇒ “1.16 Balancing“, page 34 .

– Install wheel.

Downloaded from www.Manualslib.com manuals search engine

5.8 Tires, with Run-Flat Tires

Pressing Off Tires

Caution

- *Note the safety precautions. Refer to* *⇒ "1.4 Run-Flat Tire Safety Precautions", page 6* .

– Release air from tires, unscrew the valve insert to do so.

Note

- *Be careful not to scratch off the glued- on wheel trim on these rims.*
- *The surface of the wheel trim is very sensitive.*
- *The rim will have be replaced if the wheel trim is damaged.*
- *The wheel trim cannot be replaced.*

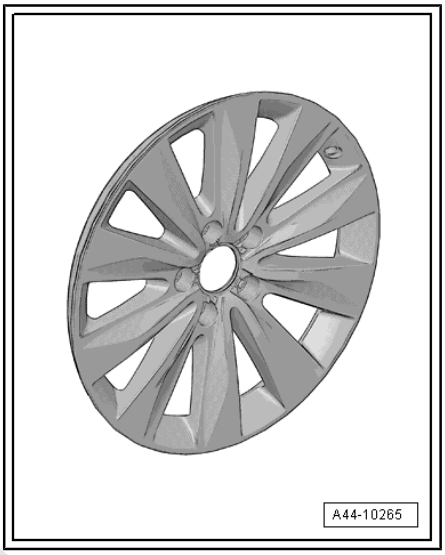

– When pressing off tire on a tire dismounting/mounting machine with press-off blade, always make sure that tire valve/ tire pressure sensor -arrow- is located opposite the press-off blade -1-.

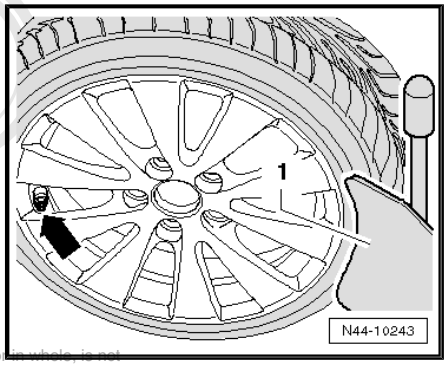

Note

Press-off blade must be applied at maximum 2 cm removed from rim flange.

– Remove balancing weights and coarse dirt from disc wheel.

Protected by copyright. Copying for private or commercial purposes, in part or in whole, is not permitted unless authorised by AUDI AG. AUDI AG does not guarantee or accept any liability with respect to the correctness of information. Copyright by AUDI AG.

– Press off both tire beads around circumference while thoroughly applying tire mounting paste between tire and rim flange -arrow-.

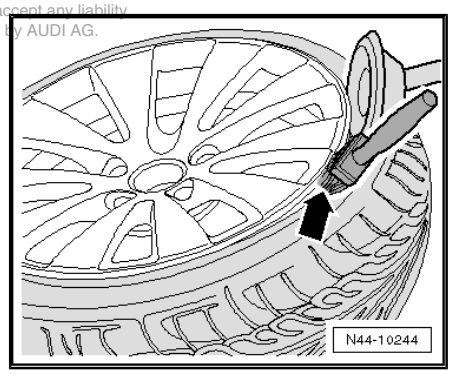

Removing

Caution

- *Note the safety precautions. Refer to* *⇒ "1.4 Run-Flat Tire Safety Precautions", page 6* .

Downloaded from www.Manualslib.com manuals search engine

– Turn wheel on tire mounting device so that tire valve/tire pressure sensor -2- stands in front of mounting head -1-.

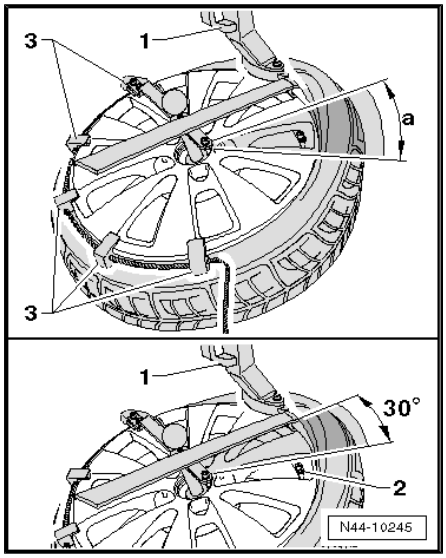

Caution

Mounting head -1- must not be located in area -a- of tire valve/ tire pressure sensor, otherwise the mounting head will damage the tire pressure sensor.

– Position mounting head -1- in vicinity of tire valve/tire pressure sensor so that tire iron can be put on approximately 30° next to tire valve/tire pressure sensor -2-.

– Install press holders -3- on disc wheel opposite the mounting head -1-.

– Now pry tire bead over mounting finger on mounting head using tire iron and remove tire iron again.

– Let the tire dismounting/mounting machine run clockwise until upper bead lies completely above the rim flange.

This slides the press holders -1- against the mounting head. This allows them to be removed again easily.

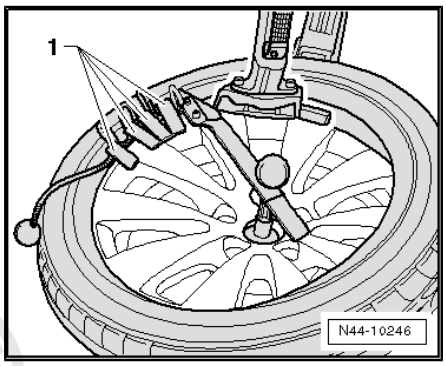

– Turn wheel on tire mounting device so that tire valve/tire pressure sensor -2- stands in front of mounting head -1-.

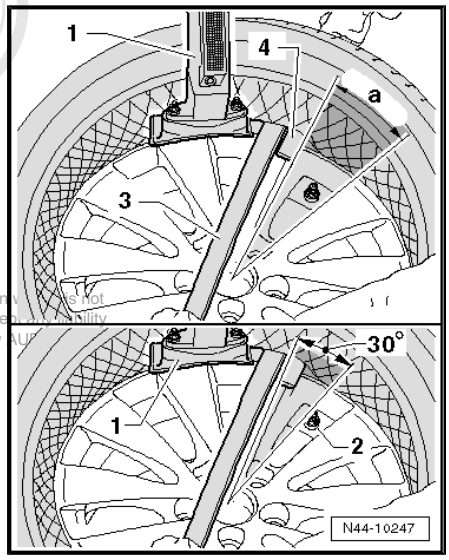

Caution

Mounting head -1- must not be located in area -a- of tire valve/ tire pressure sensor, otherwise the mounting head will damage the tire pressure sensor.

– Position mounting head -1- in vicinity of tire valve/tire pressure sensor so that tire iron can be put on approximately 30° next to tire valve/tire pressure sensor -2-.

– Now pry tire bead over mounting finger of mounting head using tire iron -3-.

– In addition, insert a plastic mounting lever -4-.

– Remove tire iron -3- again.

Copyright by AUDI AG. No part of this publication may be reproduced or transmitted in any form or by any means, electronic or mechanical, including photocopying and microfilm, without the prior written permission of AUDI AG. AUDI AG does not guarantee or accept any liability with respect to the correctness of information in this document. Copyright by AUDI AG.

Downloaded from www.Manualslib.com manuals search engine

– Using plastic mounting lever -1-, hold bead in place over the rim flange from outside and let tire mounting device run clockwise until tire has been pulled off completely from disc wheel.

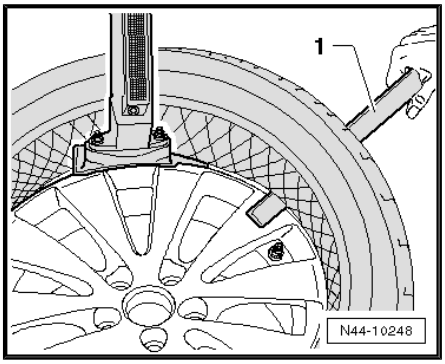

Note

- *Check tire pressure sensor for loose or damaged parts. If threaded connections are loose, union nut, valve insert, seal, sealing washer and valve cap must be replaced by new parts from repair set. Allocation, refer to the Electronic Parts Catalog (ETKA).*
- *If tire pressure sensor is damaged, then it must be replaced completely.*

Installing

Caution

- ***Installation instructions, minimum mounting temperature, refer to***
  ⇒ "1.5 Run-Flat Tire Installation Instructions", page 7 .
- ***Note the safety precautions. Refer to***
  ⇒ "1.4 Run-Flat Tire Safety Precautions", page 6 .

– Coat rim flanges, tire beads and inside of upper tire beads thoroughly with tire mounting paste.

Note

- *Be careful not to scratch off the glued- on wheel trim on these rims.*
- *The surface of the wheel trim is very sensitive.*
- *The rim will have be replaced if the wheel trim is damaged.*
- *The wheel trim cannot be replaced.*

Protected by copyright. Copying for private or commercial purposes, in part or in whole, is not permitted unless authorised by AUDI AG. AUDI AG does not guarantee or accept any liability with respect to the correctness of information in this document. Copyright by AUDI AG.

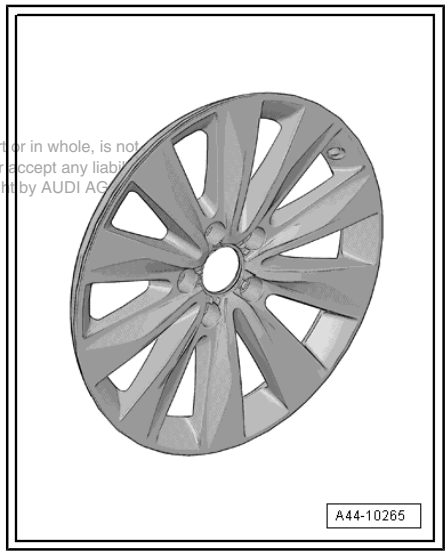

– Turn disc wheel on tire mounting device so that tire valve/tire pressure sensor -1- stands on opposite side of mounting head -2-.

– Let the tire dismounting/mounting machine run clockwise.

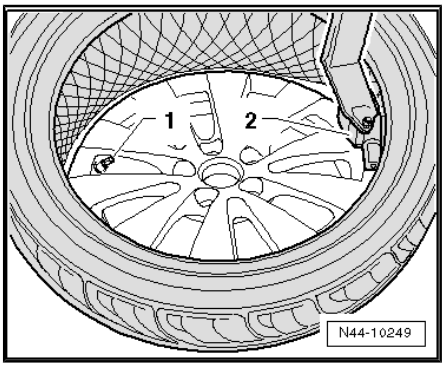

Downloaded from www.Manualslib.com manuals search engine

– Mounting of the lower bead ends before the tire valve/tire pressure sensor -arrow- to prevent damage to tire pressure sensor.

Tire bead now slips over the rim flange. Wheel may be turned only as far until mounting head is located just in front of tire valve/tire pressure sensor -arrow-.

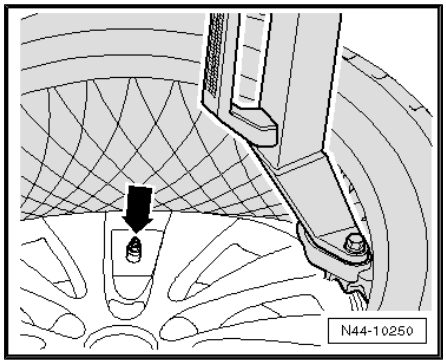

– Turn disc wheel on tire mounting device so that tire valve/tire pressure sensor -1- stands on opposite side of mounting head -2-.
– Install press holders -3- on disc wheel.
– Make sure tire bead fits correctly on mounting head and let mounting device run clockwise.

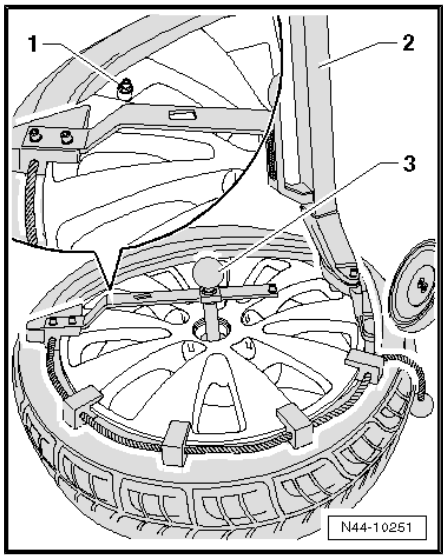

Protected by copyright. Copying for private or commercial purposes, in part or in whole, is not permitted unless authorised by AUDI AG. AUDI AG does not guarantee or accept any liability with respect to the correctness of information in this document. Copyright by AUDI AG.

Downloaded from www.Manualslib.com manuals search engine

– Mounting of the upper bead ends before the tire valve/tire pressure sensor -arrow- to prevent damage to tire pressure sensor.

Tire bead now slips over the rim flange. Wheel may be turned only as far until mounting head is located just in front of tire valve/tire pressure sensor -arrow-.

– Remove press holders from rim flange.

– Inflate tire to an inflation pressure of maximum 3.3 bar (spring pressure).

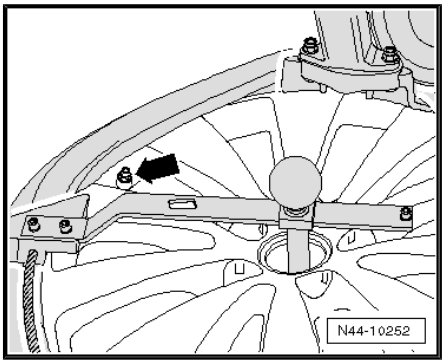

Caution

If tire beads do not make contact completely on disc wheel edge, pressure must not be increased under any circumstances.

Pre-damage to tire or disc wheel would result.

– If tire beads do not make contact completely on disc wheel edge, then release air, press off tire bead once more and coat rim flange thoroughly again with tire mounting paste.

– Inflate tire to an inflation pressure of maximum 3.3 bar (spring pressure).

– If tire beads make contact on bead seat without problems, then increase inflation pressure to 4 bar to »settle« tire.

– Install a new valve insert and fill the tire to the specified pressure.

– Then balance wheel.

– Install wheel and tighten it to tightening specification.

5.9 Tires, Sealed with Sealant

Removing

Tires which have been filled or sealed with tire sealant, must be drained before removing from wheel.

WARNING

- *Prevent tire sealant from making contact with eyes and skin.*
- *It is harmful to health, can cause eye irritation and allergies.*
- *Wear protective gloves and glasses when removing tires.*

Protected by copyright. Copying for private or commercial purposes, in part or in whole, is not permitted unless authorised by AUDI AG. AUDI AG does not guarantee or accept any liability with respect to the correctness of information in this document. Copyright by AUDI AG.

– Set wheel on an even surface.

– Remove tire valve insert.

Downloaded from www.Manualslib.com manuals search engine

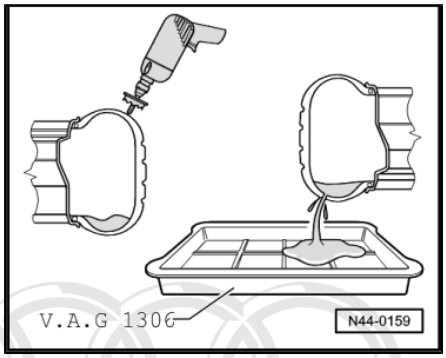

– Carefully drill hole in tire in area of shoulder using suitable drill or cutter.
– Hold wheel over drip tray and allow tire sealant to drain.
– Remove tire from rim.
– Clean wheel rim, for example using a damp cloth.

Mounting

> **WARNING**
>
> ***If tire sealant was used, then the wheel electronics on that particular wheel must be replaced.***

• Make sure wheel rim is clean.
– After using tire sealing liquid, wheel electronics must be replaced, since there is the possibility of incorrect measurements due to liquid deposits on pressure sensor.
– Insert a new tire valve.
– Remove the valve insert.
– Inflate tire to approximately 3 to 4 bar, tire bead must audibly slide over rim hump.
– Install valve insert.
– Correct inflation pressure to the specified pressure.
– Balance wheel.

Protected by copyright. Copying for private or commercial purposes, in part or in whole, is not permitted unless authorised by AUDI AG. AUDI AG does not guarantee or accept any liability with respect to the correctness of information in this document. Copyright by AUDI AG.

Edition 02.16.11

Downloaded from www.Manualslib.com manuals search engine

6 Special Tools

Special tools and workshop equipment required

- Centering system for wheel balancing machines -VAS 5271-
- Tension plate -VAS 6652-
- Pressure bolt -VAS 6652/1-
- Vehicle diagnosis, testing and information system -VAS 5051-
- Tire gauge -V.A.G 1435-
- Vibration control tire balancer -VAS 6230 A-
- Socket -V.A.G 1410/1-
- 11 m socket wrench -V.A.G 1331-
- Master Wheel Bolt Key Set -T10101-
- Master Wheel Bolt Key Set -T10101 A-

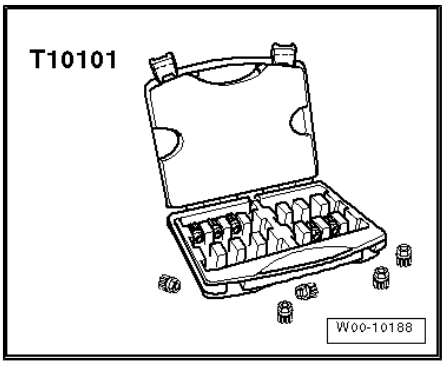

- Master Wheel Bolt Key Set -T40004-

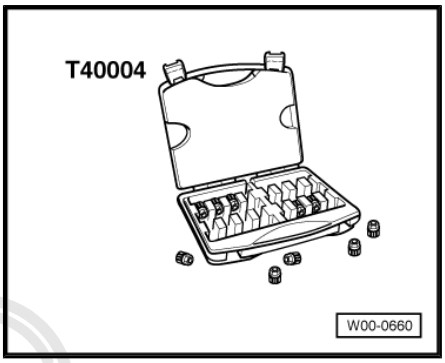

- Master Wheel Bolt Key Set -T40073-

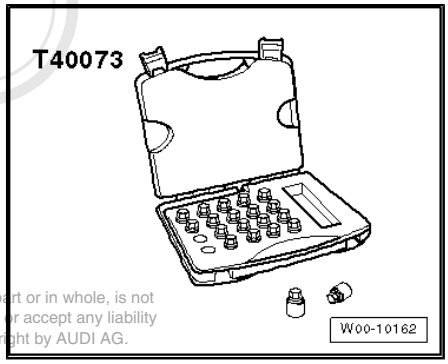

Protected by copyright. Copying for private or commercial purposes, in part or in whole, is not permitted unless authorised by AUDI AG. AUDI AG does not guarantee or accept any liability with respect to the correctness of information in this document. Copyright by AUDI AG.

Downloaded from www.Manualslib.com manuals search engine

- Torque wrench -V.A.G 1332-

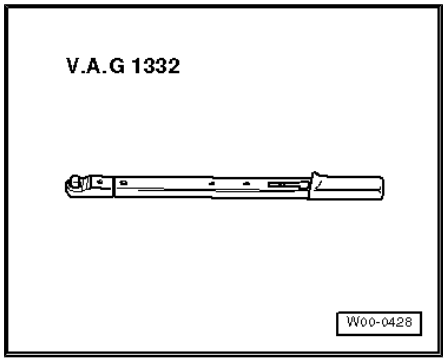

- Torque wrench -V.A.G 1410-

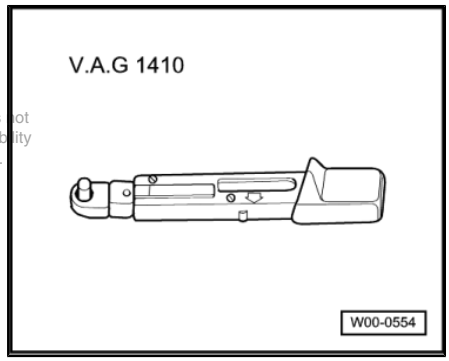

Protected by copyright. Copying for private or commercial purposes, in part or in whole, is not permitted unless authorised by AUDI AG. AUDI AG does not guarantee or accept any liability with respect to the correctness of information in this document. Copyright by AUDI AG.

- Disassembly wedge -3409-

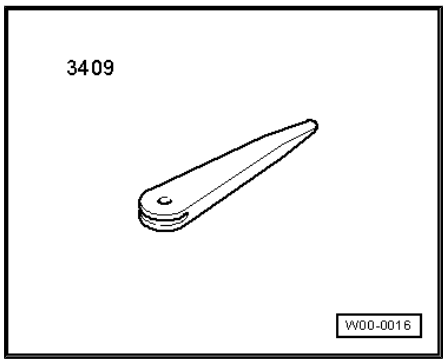

- Hot air blower -V.A.G 1416-

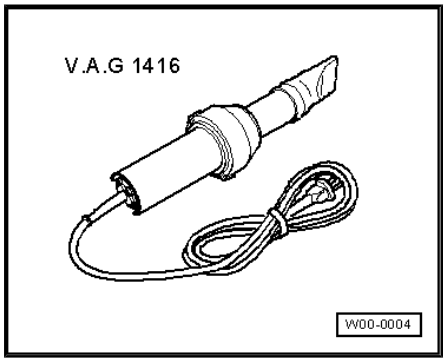

Downloaded from www.Manualslib.com manuals search engine

- Cartridge gun -V.A.G 1628-

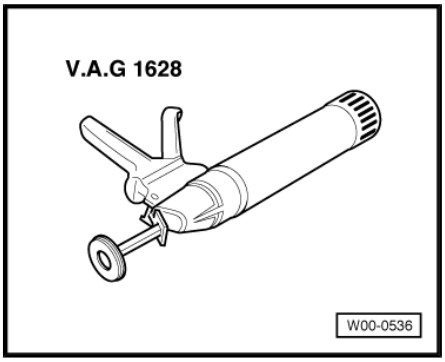

Protected by copyright. Copying for private or commercial purposes, in part or in whole, is not permitted unless authorised by AUDI AG. AUDI AG does not guarantee or accept any liability with respect to the correctness of information in this document. Copyright by AUDI AG.

Downloaded from www.Manualslib.com manuals search engine

Cautions & Warnings

Please read these WARNINGS and CAUTIONS before proceeding with maintenance and repair work. You must answer that you have read and you understand these WARNINGS and CAUTIONS before you will be allowed to view this information.

- If you lack the skills, tools and equipment, or a suitable workshop for any procedure described in this manual, we suggest you leave such repairs to an authorized Audi retailer or other qualified shop. We especially urge you to consult an authorized Audi retailer before beginning repairs on any vehicle that may still be covered wholly or in part by any of the extensive warranties issued by Audi.

- Disconnect the battery negative terminal (ground strap)whenever you work on the fuel system or the electrical system. Do not smoke or work near heaters or other fire hazards. Keep an approved fire extinguisher handy.

- Audi is constantly improving its vehicles and sometimes these changes, both in parts and specifications, are made applicable to earlier models. Therefore, part numbers listed in this manual are for reference only. Always check with your authorized Audi retailer parts department for the latest information.

- Any time the battery has been disconnected on an automatic transmission vehicle, it will be necessary to reestablish Transmission Control Module (TCM) basic settings using the VAG 1551 Scan Tool (ST).

Protected by copyright. Copying for private or commercial purposes, in part or in whole, is not permitted unless authorised by AUDI AG. AUDI AG does not guarantee or accept any liability with respect to the correctness of information in this document. Copyright by AUDI AG.

- Never work under a lifted vehicle unless it is solidly supported on stands designed for the purpose. Do not support a vehicle on cinder blocks, hollow tiles or other props that may crumble under continuous load. Never work under a vehicle that is supported solely by a jack. Never work under the vehicle while the engine is running.

- For vehicles equipped with an anti-theft radio, be sure of the correct radio activation code before disconnecting the battery or removing the radio. If the wrong code is entered when the power is restored, the radio may lock up and become inoperable, even if the correct code is used in a later attempt.

- If you are going to work under a vehicle on the ground, make sure that the ground is level. Block the wheels to keep the vehicle from rolling. Disconnect the battery negative terminal (ground strap) to prevent others from starting the vehicle while you are under it.

- Do not attempt to work on your vehicle if you do not feel well. You increase the danger of injury to yourself and others if you are tired, upset or have taken medicine or any other substances that may impair you or keep you from being fully alert.

- Never run the engine unless the work area is well ventilated. Carbon monoxide (CO) kills.

- Always observe good workshop practices. Wear goggles when you operate machine tools or work with acid. Wear goggles, gloves and other protective clothing whenever the job requires working with harmful substances.

- Tie long hair behind your head. Do not wear a necktie, a scarf, loose clothing, or a necklace when you work near machine tools or running engines. If your hair, clothing, or jewelry were to get caught in the machinery, severe injury could result.

© 2002 Audi of America, Inc.
All rights reserved. Information contained in this document is based on the latest information available at the time of printing and is subject to the copyright and other intellectual property rights of Audi of America, Inc., its affiliated companies and its licensors. All rights are reserved to make changes at any time without notice. No part of this document may be reproduced, stored in a retrieval system, or transmitted in any form or by any means, electronic, mechanical, photocopying, recording, or otherwise, nor may these materials be modified or reposted to other sites, without the prior expressed written permission of the publisher.
Version 1.0

Downloaded from www.Manualslib.com manuals search engine

Cautions & Warnings

- Do not re-use any fasteners that are worn or deformed in normal use. Some fasteners are designed to be used only once and are unreliable and may fail if used a second time. This includes, but is not limited to, nuts, bolts, washers, circlips and cotter pins. Always follow the recommendations in this manual - replace these fasteners with new parts where indicated, and any other time it is deemed necessary by inspection.

- Illuminate the work area adequately but safely. Use a portable safety light for working inside or under the vehicle. Make sure the bulb is enclosed by a wire cage. The hot filament of an accidentally broken bulb can ignite spilled fuel or oil.

- Friction materials such as brake pads and clutch discs may contain asbestos fibers. Do not create dust by grinding, sanding, or by cleaning with compressed air. Avoid breathing asbestos fibers and asbestos dust. Breathing asbestos can cause serious diseases such as asbestosis or cancer, and may result in death.

- Finger rings should be removed so that they cannot cause electrical shorts, get caught in running machinery, or be crushed by heavy parts.

- Before starting a job, make certain that you have all the necessary tools and parts on hand. Read all the instructions thoroughly, do not attempt shortcuts. Use tools that are appropriate to the work and use only replacement parts meeting Audi specifications. Makeshift tools, parts and procedures will not make good repairs.

- Catch draining fuel, oil or brake fluid in suitable containers. Do not use empty food or beverage containers that might mislead someone into drinking from them. Store flammable fluids away from fire hazards. Wipe up spills at once, but do not store the oily rags, which can ignite and burn spontaneously.

- Use pneumatic and electric tools only to loosen threaded parts and fasteners. Never use these tools to tighten fasteners, especially on light alloy parts. Always use a torque wrench to tighten fasteners to the tightening torque listed.

- Keep sparks, lighted matches, and open flame away from the top of the battery. If escaping hydrogen gas is ignited, it will ignite gas trapped in the cells and cause the battery to explode.

- Be mindful of the environment and ecology. Before you drain the crankcase, find out the proper way to dispose of the oil. Do not pour oil onto the ground, down a drain, or into a stream, pond, or lake. Consult local ordinances that govern the disposal of wastes.

- The air-conditioning (A/C) system is filled with a chemical refrigerant that is hazardous. The A/C system should be serviced only by trained automotive service technicians using approved refrigerant recovery/recycling equipment, trained in related safety precautions, and familiar with regulations governing the discharging and disposal of automotive chemical refrigerants.

- Before doing any electrical welding on vehicles equipped with anti-lock brakes (ABS), disconnect the battery negative terminal (ground strap) and the ABS control module connector.

- Do not expose any part of the A/C system to high temperatures such as open flame. Excessive heat will increase system pressure and may cause the system to burst.

Protected by copyright. Copying for private or commercial purposes, in part or in whole, is not permitted unless authorised by AUDI AG. AUDI AG does not guarantee or accept any liability with respect to the correctness of information in this document. Copyright by AUDI AG.

© 2002 Audi of America, Inc.
All rights reserved. Information contained in this document is based on the latest information available at the time of printing and is subject to the copyright and other intellectual property rights of Audi of America, Inc., its affiliated companies and its licensors. All rights are reserved to make changes at any time without notice. No part of this document may be reproduced, stored in a retrieval system, or transmitted in any form or by any means, electronic, mechanical, photocopying, recording, or otherwise, nor may these materials be modified or reposted to other sites, without the prior expressed written permission of the publisher.
Version 1.0

Downloaded from www.Manualslib.com manuals search engine

Cautions & Warnings

- When boost-charging the battery, first remove the fuses for the Engine Control Module (ECM), the Transmission Control Module (TCM), the ABS control module, and the trip computer. In cases where one or more of these components is not separately fused, disconnect the control module connector(s).

- Some of the vehicles covered by this manual are equipped with a supplemental restraint system (SRS), that automatically deploys an airbag in the event of a frontal impact. The airbag is operated by an explosive device. Handled improperly or without adequate safeguards, it can be accidentally activated and cause serious personal injury. To guard against personal injury or airbag system failure, only trained Audi Service technicians should test, disassemble or service the airbag system.

- Do not quick-charge the battery (for boost starting) for longer than one minute, and do not exceed 16.5 volts at the battery with the boosting cables attached. Wait at least one minute before boosting the battery a second time.

- Never use a test light to conduct electrical tests of the airbag system. The system must only be tested by trained Audi Service technicians using the VAG 1551 Scan Tool (ST) or an approved equivalent. The airbag unit must never be electrically tested while it is not installed in the vehicle.

- Some aerosol tire inflators are highly flammable. Be extremely cautious when repairing a tire that may have been inflated using an aerosol tire inflator. Keep sparks, open flame or other sources of ignition away from the tire repair area. Inflate and deflate the tire at least four times before breaking the bead from the rim. Completely remove the tire from the rim before attempting any repair.

- When driving or riding in an airbag-equipped vehicle, never hold test equipment in your hands or lap while the vehicle is in motion. Objects between you and the airbag can increase the risk of injury in an accident.

I have read and I understand these Cautions and Warnings.

Protected by copyright. Copying for private or commercial purposes, in part or in whole, is not permitted unless authorised by AUDI AG. AUDI AG does not guarantee or accept any liability with respect to the correctness of information in this document. Copyright by AUDI AG.

© 2002 Audi of America, Inc.
All rights reserved. Information contained in this document is based on the latest information available at the time of printing and is subject to the copyright and other intellectual property rights of Audi of America, Inc., its affiliated companies and its licensors. All rights are reserved to make changes at any time without notice. No part of this document may be reproduced, stored in a retrieval system, or transmitted in any form or by any means, electronic, mechanical, photocopying, recording, or otherwise, nor may these materials be modified or reposted to other sites, without the prior expressed written permission of the publisher.
Version 1.0

Downloaded from www.Manualslib.com manuals search engine