SECTION EM
ENGINE MECHANICAL

CONTENTS

SYMPTOM DIAGNOSIS 3

NOISE, VIBRATION AND HARSHNESS (NVH) TROUBLESHOOTING 3
NVH troubleshooting Chart 3

PRECAUTION 5

PRECAUTIONS 5
Precautions for Removing of Battery Terminal 5
Precaution for Procedure without Cowl Top Cover.....5
Precaution for Supplemental Restraint System (SRS) "AIR BAG" and "SEAT BELT PRE-TENSIONER" 5
Precautions For Engine Service 6
Parts Requiring Angle Tightening 6
Liquid Gasket 7

PREPARATION 9

PREPARATION 9
Special Service Tools 9
Commercial Service Tools 10

PERIODIC MAINTENANCE 13

DRIVE BELT 13
Exploded View 13
Checking 13
Tension Adjustment 13
Removal and Installation 13

AIR CLEANER FILTER 15
Removal and Installation 15
Inspection (Viscous Paper Type) 15

SPARK PLUG 16
Exploded View 16
Removal and Installation 16
Inspection 17

CAMSHAFT VALVE CLEARANCE 18
Inspection and Adjustment 18

COMPRESSION PRESSURE 21
Inspection 21

REMOVAL AND INSTALLATION 22

ENGINE COVER 22
Exploded View 22
Removal and Installation 22

DRIVE BELT AUTO TENSIONER AND IDLER PULLEY 23
Exploded View 23
Removal and Installation 23

AIR CLEANER AND AIR DUCT 24
Exploded View 24
Removal and Installation 24
Inspection 25

INTAKE MANIFOLD 26
Exploded View 26
Removal and Installation 26

EXHAUST MANIFOLD 29
Exploded View 29
Removal and Installation 29
Inspection 31

OIL PAN (LOWER) 32
Exploded View 32
Removal and Installation 32
Inspection 34

FUEL INJECTOR AND FUEL TUBE 35
Exploded View 35
Removal and Installation 35
Inspection 38

IGNITION COIL, SPARK PLUG AND ROCKER COVER 40
Exploded View 40

Removal and Installation 40

TIMING CHAIN 42
Exploded View 42
Removal and Installation 43
Inspection 51

CAMSHAFT 53
Exploded View 53
Removal and Installation 54
Inspection 57

OIL SEAL 62

VALVE OIL SEAL 62
VALVE OIL SEAL : Removal and Installation 62

FRONT OIL SEAL 62
FRONT OIL SEAL : Removal and Installation 63

REAR OIL SEAL 63
REAR OIL SEAL : Removal and Installation 63

CYLINDER HEAD 65
Exploded View 65
Removal and Installation 66
Disassembly and Assembly 67
Inspection 71

UNIT REMOVAL AND INSTALLATION 74

ENGINE ASSEMBLY 74
Exploded View 74
Removal and Installation 74
Inspection 78

UNIT DISASSEMBLY AND ASSEMBLY ... 79

ENGINE STAND SETTING 79
Setting 79

ENGINE UNIT 81
Disassembly 81
Assembly 81

OIL PAN (UPPER) 82
Exploded View 82
Removal and Installation 82
Inspection 85

CYLINDER BLOCK 86
Exploded View 86
Disassembly and Assembly 87
Inspection 95

HOW TO SELECT PISTON AND BEARING ..106
Description 106
Piston 106
Connecting Rod Bearing 107
Main Bearing 109

SERVICE DATA AND SPECIFICATIONS (SDS) 113

SERVICE DATA AND SPECIFICATIONS (SDS) 113
General Specification 113
Drive Belt 113
Spark Plug 113
Exhaust Manifold 114
Camshaft 114
Cylinder Head 116
Cylinder Block 118
Connecting Rod Bearing 122
Main Bearing 122

SYMPTOM DIAGNOSIS

NOISE, VIBRATION AND HARSHNESS (NVH) TROUBLESHOOTING

NVH troubleshooting Chart

INFOID:0000000009944906

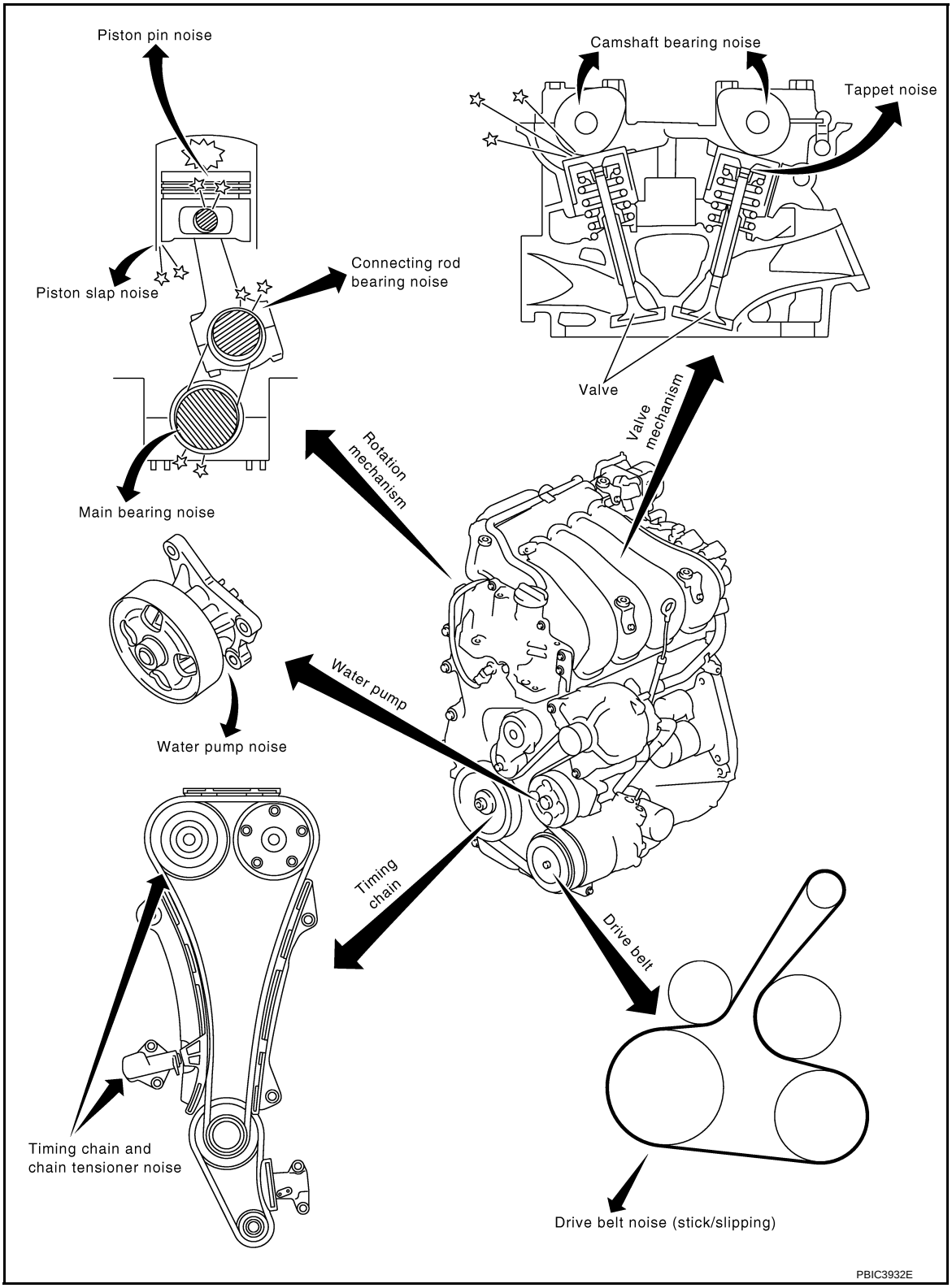

1. Locate the area where noise occurs.
2. Confirm the type of noise.
3. Specify the operating condition of engine.

4. Check specified noise source.

If necessary, repair or replace these parts.

Location of noise	Type of noise	Operating condition of engine						Source of noise	Check item	Reference page
		Before warm-up	After warm-up	When starting	When idling	When racing	While driving			
Top of engine Rocker cover Cylinder head	Ticking or clicking	C	A	—	A	B	—	Tappet noise	Valve clearance	EM-18
	Rattle	C	A	—	A	B	C	Camshaft bearing noise	Camshaft journal oil clearance Camshaft runout	EM-114
Crankshaft pulley Cylinder block (Side of engine) Oil pan	Slap or knock	—	A	—	B	B	—	Piston pin noise	Piston to piston pin oil clearance Connecting rod bushing oil clearance	EM-118
	Slap or rap	A	—	—	B	B	A	Piston slap noise	Piston to cylinder bore clearance Piston ring side clearance Piston ring end gap Connecting rod bend and torsion	EM-118
	Knock	A	B	C	B	B	B	Connecting rod bearing noise	Connecting rod bushing oil clearance Connecting rod bearing oil clearance	EM-118 EM-122
	Knock	A	B	—	A	B	C	Main bearing noise	Main bearing oil clearance Crankshaft runout	EM-122 EM-118
Front of engine Front cover	Tapping or ticking	A	A	—	B	B	B	Timing chain and chain tensioner noise	Timing chain cracks and wear Timing chain tensioner operation	EM-51 EM-42
Front of engine	Squeaking or fizzing	A	B	—	B	—	C	Drive belt (Sticking or slipping)	Drive belt deflection	EM-13
	Creaking	A	B	A	B	A	B	Drive belt (Slipping)	Idler pulley bearing operation	
	Squall Creak	A	B	—	B	A	B	Water pump noise	Water pump operation	CO-19, "Exploded View"

A: Closely related B: Related C: Sometimes related —: Not related

PRECAUTION

PRECAUTIONS

Precautions for Removing of Battery Terminal

INFOID:0000000010190653

- When removing the 12V battery terminal, turn OFF the ignition switch and wait at least 30 seconds.
  NOTE:
  ECU may be active for several tens of seconds after the ignition switch is turned OFF. If the battery terminal is removed before ECU stops, then a DTC detection error or ECU data corruption may occur.
- For vehicles with the 2-batteries, be sure to connect the main battery and the sub battery before turning ON the ignition switch.
  NOTE:
  If the ignition switch is turned ON with any one of the terminals of main battery and sub battery disconnected, then DTC may be detected.

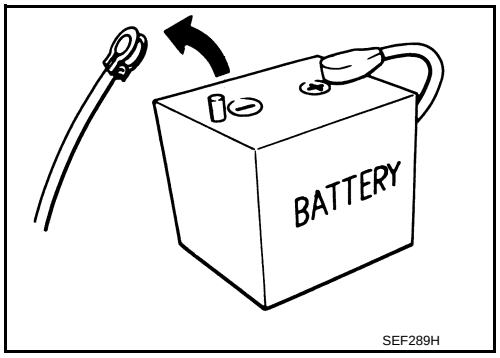

SEF289H

- After installing the 12V battery, always check "Self Diagnosis Result" of all ECUs and erase DTC.
  NOTE:
  The removal of 12V battery may cause a DTC detection error.

Precaution for Procedure without Cowl Top Cover

INFOID:0000000009944907

When performing the procedure after removing cowl top cover, cover the lower end of windshield with urethane, etc to prevent damage to windshield.

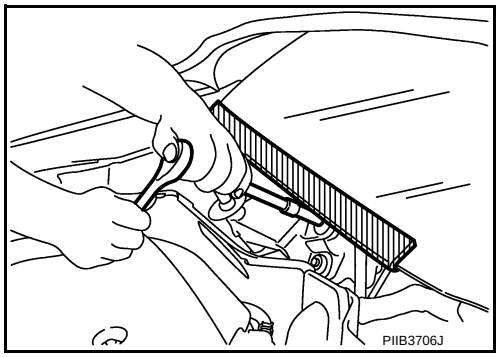
PIIB3706J

Precaution for Supplemental Restraint System (SRS) "AIR BAG" and "SEAT BELT PRE-TENSIONER"

INFOID:0000000010190654

The Supplemental Restraint System such as “AIR BAG” and “SEAT BELT PRE-TENSIONER”, used along with a front seat belt, helps to reduce the risk or severity of injury to the driver and front passenger for certain types of collision. This system includes seat belt switch inputs and dual stage front air bag modules. The SRS system uses the seat belt switches to determine the front air bag deployment, and may only deploy one front air bag, depending on the severity of a collision and whether the front occupants are belted or unbelted.
Information necessary to service the system safely is included in the “SRS AIR BAG” and “SEAT BELT” of this Service Manual.

WARNING:
Always observe the following items for preventing accidental activation.
- **To avoid rendering the SRS inoperative, which could increase the risk of personal injury or death in the event of a collision that would result in air bag inflation, all maintenance must be performed by an authorized NISSAN/INFINITI dealer.**
- **Improper maintenance, including incorrect removal and installation of the SRS, can lead to personal injury caused by unintentional activation of the system. For removal of Spiral Cable and Air Bag Module, see “SRS AIR BAG”.**
- **Never use electrical test equipment on any circuit related to the SRS unless instructed to in this Service Manual. SRS wiring harnesses can be identified by yellow and/or orange harnesses or harness connectors.**

PRECAUTIONS WHEN USING POWER TOOLS (AIR OR ELECTRIC) AND HAMMERS

WARNING:

Always observe the following items for preventing accidental activation.

- **When working near the Air Bag Diagnosis Sensor Unit or other Air Bag System sensors with the ignition ON or engine running, never use air or electric power tools or strike near the sensor(s) with a hammer. Heavy vibration could activate the sensor(s) and deploy the air bag(s), possibly causing serious injury.**
- **When using air or electric power tools or hammers, always switch the ignition OFF, disconnect the battery, and wait at least 3 minutes before performing any service.**

Precautions For Engine Service

INFOID:0000000009944910

DISCONNECTING FUEL PIPING

- Before starting work, check no fire or spark producing items are in the work area.
- Release fuel pressure before disconnecting and disassembly.
- After disconnecting pipes, plug openings to stop fuel leakage.

DRAINING ENGINE COOLANT

Drain engine coolant and engine oil when the engine is cooled.

INSPECTION, REPAIR AND REPLACEMENT

Before repairing or replacing, thoroughly inspect parts. Inspect new replacement parts in the same way, and replace if necessary.

REMOVAL AND DISASSEMBLY

- When instructed to use SST, use specified tools. Always be careful to work safely, avoid forceful or uninstructed operations.
- Exercise maximum care to avoid damage to mating or sliding surfaces.
- Dowel pins are used for several parts alignment. When replacing and reassembling parts with dowel pins, check that dowel pins are installed in the original position.
- Must cover openings of engine system with a tape or equivalent, to seal out foreign materials.
- Mark and arrange disassembly parts in an organized way for easy troubleshooting and reassembly.
- When loosening nuts and bolts, as a basic rule, start with the one furthest outside, then the one diagonally opposite, and so on. If the order of loosening is specified, do exactly as specified. Power tools may be used in the step.

ASSEMBLY AND INSTALLATION

- Use torque wrench to tighten bolts or nuts to specification.
- When tightening nuts and bolts, as a basic rule, equally tighten in several different steps starting with the ones in center, then ones on inside and outside diagonally in this order. If the order of tightening is specified, do exactly as specified.
- Replace with new gasket, packing, oil seal or O-ring.
- Thoroughly wash, clean, and air-blow each part. Carefully check engine oil or engine coolant passages for any restriction and blockage.
- Avoid damaging sliding or mating surfaces. Completely remove foreign materials such as cloth lint or dust. Before assembly, oil sliding surfaces well.
- After disassembling, or exposing any internal engine parts, change engine oil and replace oil filter with a new one.
- Release air within route when refilling after draining engine coolant.
- After repairing, start the engine and increase engine speed to check engine coolant, fuel, engine oil, and exhaust gases for leakage.

Parts Requiring Angle Tightening

INFOID:0000000009944911

- Use the angle wrench [SST: KV10112100 (BT8653-A)] for the final tightening of the following engine parts:
- Camshaft sprocket (INT) bolt
- Cylinder head bolts
- Main bearing cap bolts
- Connecting rod cap bolts

- Crankshaft pulley bolt (No the angle wrench is required as bolt flange is provided with notches for angle tightening)
- Do not use a torque value for final tightening.
- The torque value for these parts are for a preliminary step.
- Ensure thread and seat surfaces are clean and coated with engine oil.

Liquid Gasket

INFOID:0000000009944912

REMOVAL OF LIQUID GASKET SEALING

- After removing mounting nuts and bolts, separate the mating surface using the seal cutter [SST: KV10111100 (J-37228)] (A) and remove old liquid gasket sealing.
  CAUTION:
  Be careful not to damage the mating surfaces.
- Tap the seal cutter [SST: KV10111100 (J-37228)] to insert it (B), and then slide it (C) by tapping on the side as shown in the figure.
- In areas where the seal cutter [SST: KV10111100 (J-37228)] is difficult to use, lightly tap the parts using a plastic hammer to remove it.
  CAUTION:
  If for some unavoidable reason tool such as a screwdriver is used, be careful not to damage the mating surfaces.

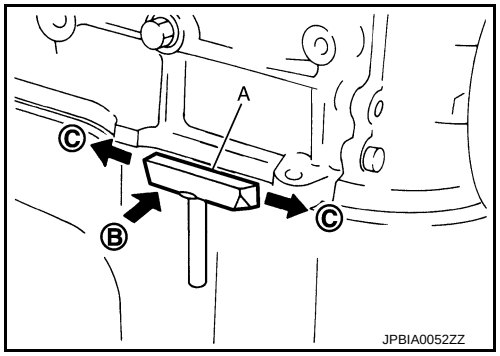

LIQUID GASKET APPLICATION PROCEDURE

1. Using a scraper (A), remove old liquid gasket adhering to the liquid gasket application surface and the mating surface.
   - Remove liquid gasket completely from the groove of the liquid gasket application surface, mounting bolts, and bolt holes.
2. Wipe the liquid gasket application surface and the mating surface with white gasoline (lighting and heating use) to remove adhering moisture, grease and foreign materials.

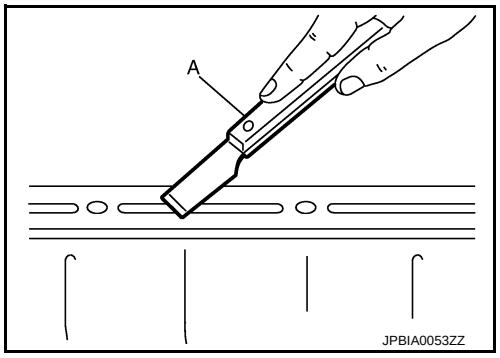

3. Attach liquid gasket tube to the tube presser (commercial service tool).
   Use Genuine RTV Silicon Sealant or equivalent. Refer to GI-22, "Recommended Chemical Products and Sealants".
4. Apply liquid gasket without gaps to the specified location according to the specified dimensions.
   - If there is a groove for liquid gasket application, apply liquid gasket to the groove.

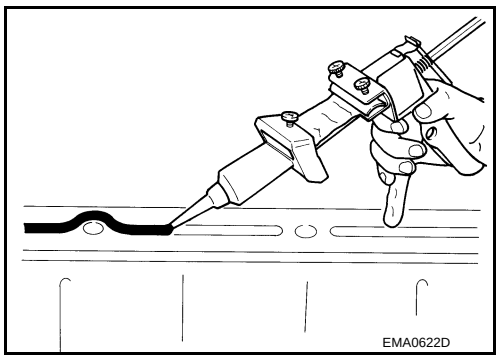

   - As for bolt holes (B), normally apply liquid gasket inside the holes. Occasionally, it should be applied outside the holes. Check to read the text of this manual.

     A : Groove

     ⇦ : Inside

   - Within five minutes of liquid gasket application, install the mating component.
   - If liquid gasket protrudes, wipe it off immediately.
   - Do not retighten mounting bolts or nuts after the installation.

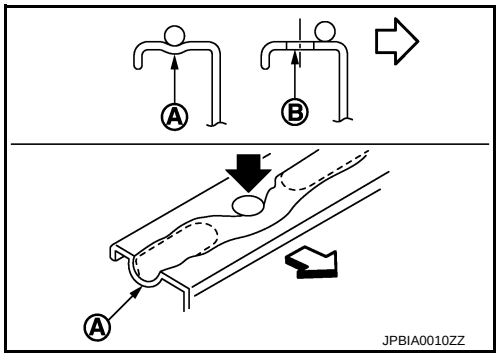

- After 30 minutes or more have passed from the installation, fill engine oil and engine coolant.

CAUTION:

If there are specific instructions in this manual, observe them.

PREPARATION

PREPARATION

Special Service Tools

INFOID:0000000009944913

The actual shapes of Kent-Moore tools may differ from those of special service tools illustrated here.

Tool number (Kent-Moore No.) Tool name		Description
KV10111100 (J-37228) Seal cutter	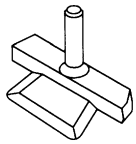 S-NT046	Removing oil pan (upper and lower) etc.
KV10116200 (J-26336-A) Valve spring compressor 1. KV10115900 (J-26336-20) Attachment 2. KV10109220 (—) Adapter	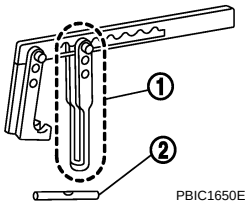 PBIC1650E	Disassembling and assembling valve mechanism Part (1) is a component of KV10116200 (J-26336-A), but Part (2) is not so.
KV10112100 (BT8653-A) Angle wrench	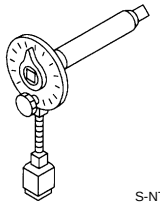 S-NT014	Tightening bolts for main bearing cap, cylinder head, etc.
KV10117100 (J-3647-A) Heated oxygen sensor wrench	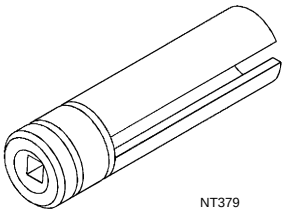 NT379	Loosening or tightening air fuel ratio sensor 1 **For 22 mm (0.87 in) width hexagon nut**
KV10107902 (J-38959) Valve oil seal puller	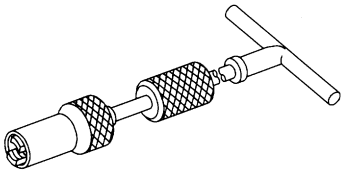 NT011	Removing valve oil seal
KV10115600 (J-38958) Valve oil seal drift	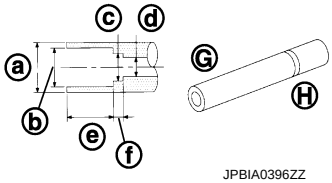 JPBIA0396ZZ	Installing valve oil seal **Use side A (G).** **a: 20 (0.79) dia.** **d: 8 (0.31) dia.** **b: 13 (0.51) dia.** **e: 10.7 (0.421)** **c: 10.3 (0.406) dia.** **f: 5 (0.20)** **H: Side B** Unit: mm (in)

Tool number (Kent-Moore No.) Tool name	Description
EM03470000 (J-8037) Piston ring compressor 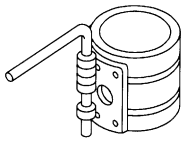 S-NT044	Installing piston assembly into cylinder bore
ST16610001 (J-23907) Pilot bushing puller 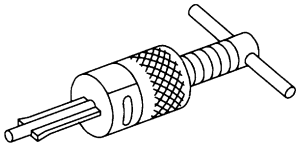 S-NT045	Removing pilot converter
KV11103000 (—) Pulley puller 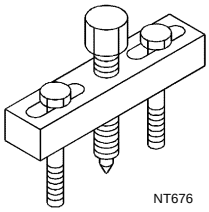 NT676	Removing crankshaft pulley
KV11105210 (J-44716) Stopper plate 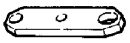 ZZA0009D	Fixing drive plate

Commercial Service Tools

INFOID:0000000009944914

(Kent-Moore No.) Tool name	Description
(J-45488) Quick connector release PBIC0198E	Removing fuel tube quick connectors in engine room
(—) Spark plug wrench 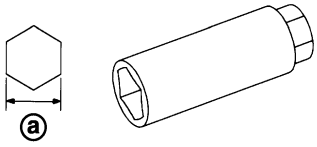 JPBIA0399ZZ	Removing and installing spark plug a: 14 mm (0.55 in)

(Kent-Moore No.) Tool name	Description
(—) Pulley holder ZZA1010D	Crankshaft pulley removing and installing
(—) Valve seat cutter set 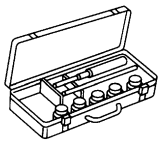 S-NT048	Finishing valve seat dimensions
(—) Piston ring expander 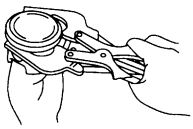 S-NT030	Removing and installing piston ring
(—) Valve guide drift 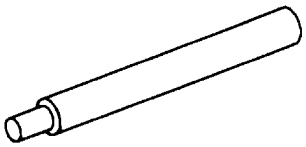 PBIC4012E	Removing and installing valve guide
(—) Valve guide reamer 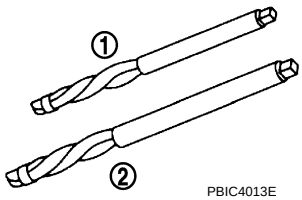 PBIC4013E	1: Reaming valve guide inner hole 2: Reaming hole for oversize valve guide
(J-43897-18) (J-43897-12) Oxygen sensor thread cleaner 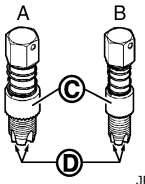 JPBIA0238ZZ	Reconditioning the exhaust system threads before installing a new air fuel ratio sensor (Use with anti-seize lubricant shown below.) **A: J-43897-18 [18 mm (0.71 in) dia.] for zirconia heated oxygen sensor** **B: J-43897-12 [12 mm (0.47 in) dia.] for titania heated oxygen sensor** C: Mating surface shave cylinder D: Flutes
(—) Anti-seize lubricant (Permatex 133AR or equivalent meeting MIL specification MIL-A-907) 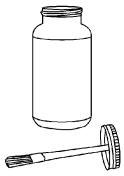 AEM489	Lubricating oxygen sensor thread cleaning tool when reconditioning exhaust system threads

(Kent-Moore No.) Tool name	Description
(—) Manual lift table caddy 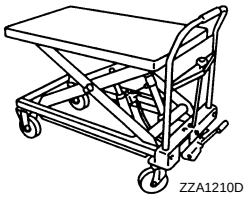 ZZA1210D	Removing and installing engine
(—) Tube presser 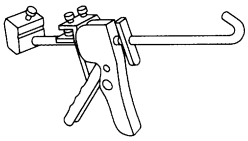 S-NT052	Pressing the tube of liquid gasket

PERIODIC MAINTENANCE

DRIVE BELT

Exploded View

INFOID:0000000009944915

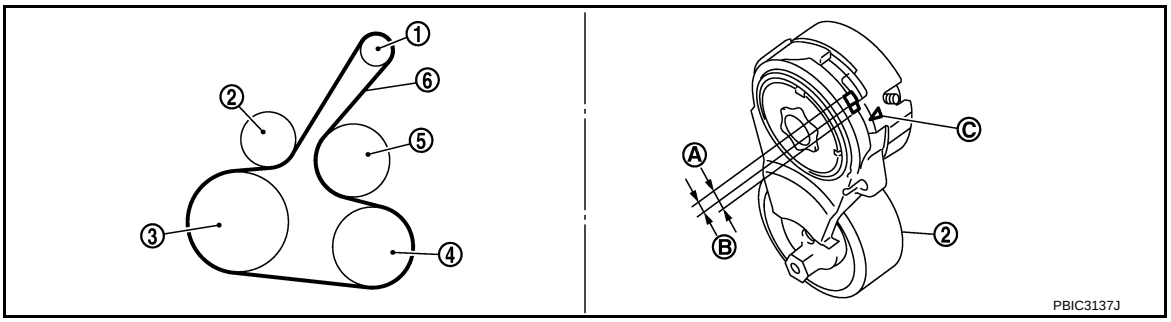

1.	Alternator	2.	Drive belt auto-tensioner	3.	Crankshaft pulley
4.	A/C compressor (models with A/C) Idler pulley (models without A/C)	5.	Water pump	6.	Drive belt
A.	Possible use range	B.	Range when new drive belt is installed	C.	Indicator

Checking

INFOID:0000000009944916

WARNING:
Perform this step when engine is stopped.

- Check that the indicator (C) (notch on fixed side) of drive belt auto-tensioner is within the possible use range (A) in the figure.
  NOTE:
  - Check the drive belt auto-tensioner indication when the engine is cold.
  - When new drive belt is installed, the indicator (notch on fixed side) should be within the range (B) in the figure.
- Visually check entire drive belt for wear, damage or cracks.
- If the indicator (notch on fixed side) is out of the possible use range or belt is damaged, replace drive belt.

Tension Adjustment

INFOID:0000000009944917

Refer to : EM-113, "Drive Belt".

Removal and Installation

INFOID:0000000009944918

REMOVAL

1. Remove front wheel and tire (RH).
2. Remove front fender protector (RH). Refer to EXT-21, "FENDER PROTECTOR : Exploded View".
3. Hold the hexagonal part (A) of drive belt auto-tensioner (1) with a wrench securely. Then move the wrench handle in the direction of arrow (loosening direction of tensioner).
   CAUTION:
   Avoid placing hand in a location where pinching may occur if the holding tool accidentally comes off.
4. Insert a rod approximately 6 mm (0.24 in) in diameter such as short-length screwdriver into the hole (B) of the retaining boss to fix drive belt auto-tensioner.
   - Keep drive belt auto-tensioner pulley arm locked after drive belt is removed.
5. Remove drive belt.

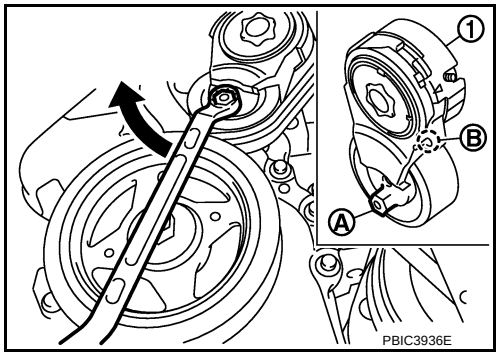

INSTALLATION

1. Install drive belt.
   CAUTION:
   - **Confirm drive belt is completely set to pulleys.**
   - **Check for engine oil, working fluid and engine coolant are not adhered to drive belt and each pulley groove.**
2. Release drive belt auto-tensioner, and apply tension to drive belt.
3. Turn crankshaft pulley clockwise several times to equalize tension between each pulley.
4. Confirm tension of drive belt at indicator (notch on fixed side) is within the possible use range. Refer to EM-13, "Exploded View".

AIR CLEANER FILTER

Removal and Installation

INFOID:0000000009944919

REMOVAL

1. Push the tabs (A) of both ends of the air cleaner cover (1) into the inside (B).
2. Pull up the air cleaner cover forward (C) and remove it.

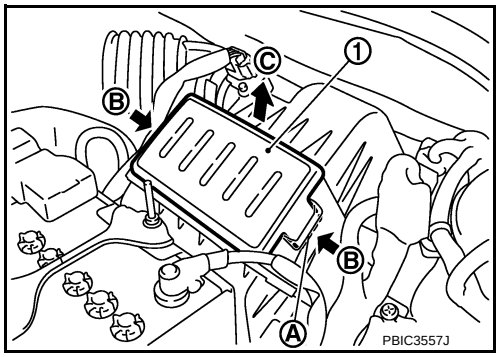

3. Remove the air cleaner filter (1) and holder (2) assembly from the air cleaner case.
4. Remove the air cleaner filter from the holder.

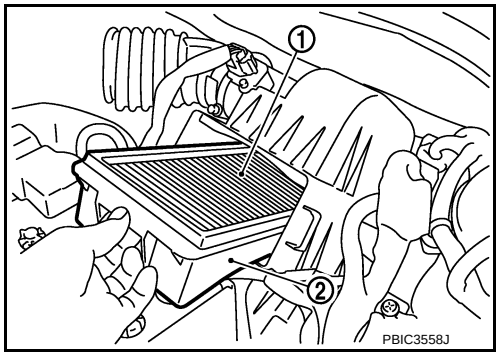

INSTALLATION

Note the following, and install in the reverse order of removal.

- Install the air cleaner cover (1) in the direction as shown in the figure.

2 : Air cleaner filter
3 : Holder

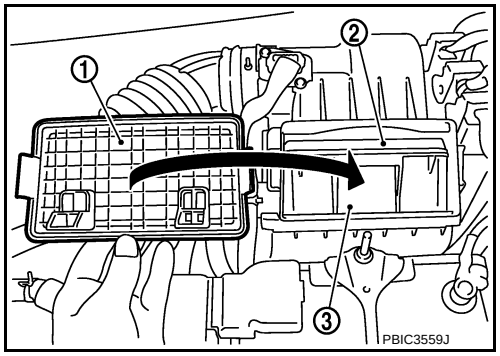

Inspection (Viscous Paper Type)

INFOID:0000000010208825

INSPECTION AFTER REMOVAL

Examine with eyes that there is no stain, clogging, or damage on air cleaner element.

- Remove dusts (such as dead leafs) on air cleaner element surface and inside cleaner case.
- If clogging or damage is observed, replace the air cleaner element.

CAUTION:

Never clean the viscous paper type air cleaner element by blowing as there is a risk of deterioration of its performance

MAINTENANCE INTERVAL

Refer to MA-6, "Introduction of Periodic Maintenance".

SPARK PLUG

Exploded View

INFOID:0000000009944920

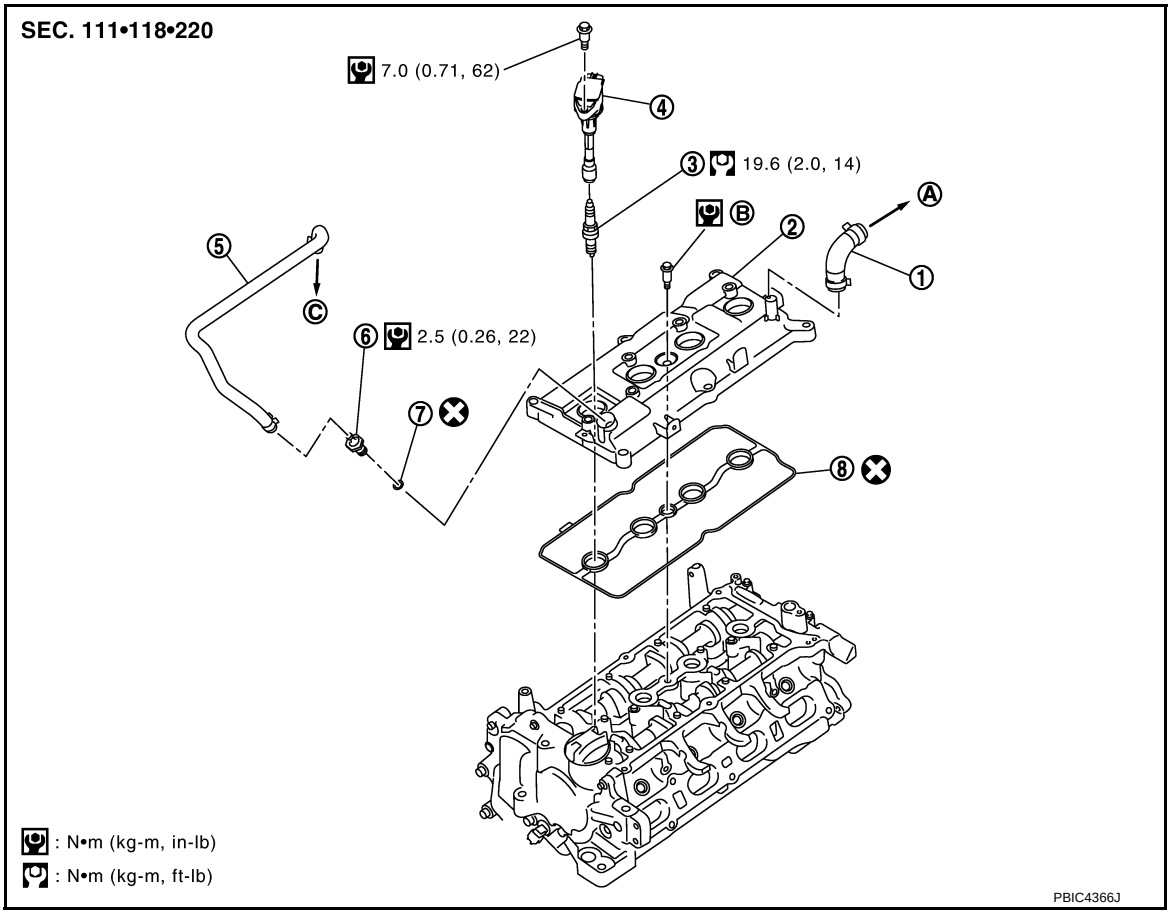

1.	PCV hose	2.	Rocker cover	3.	Spark plug
4.	Ignition coil	5.	PCV hose	6.	PCV valve
7.	O-ring	8.	Rocker cover gasket		
A.	To air duct assembly	B.	Comply with the assembly procedure when tightening. Refer to EM-40	C.	To intake manifold

: Always replace after every disassembly.

Removal and Installation

INFOID:0000000009944921

REMOVAL

1. Remove ignition coil. Refer to EM-40, "Exploded View".
2. Remove spark plug with a spark plug wrench (commercial service tool).

a : 14 mm (0.55 in)

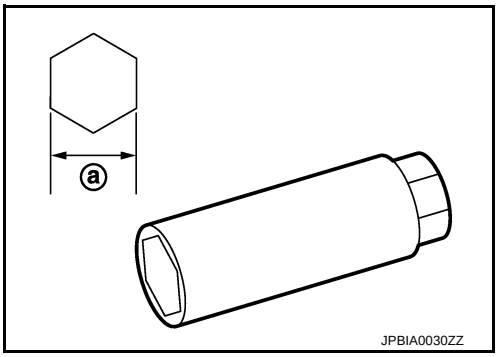

CAUTION:
Never drop or shock spark plug.

INSTALLATION

Install in the reverse order of removal.

Inspection

INFOID:0000000009944922

INSPECTION AFTER REMOVAL

Use the standard type spark plug for normal condition.

Spark plug (Standard type) : Refer to EM-113, "Spark Plug".

CAUTION:

- **Never drop or shock spark plug.**
- **Never use a wire brush for cleaning.**
- **If plug tip is covered with carbon, spark plug cleaner may be used.**

Cleaner air pressure : Less than 588 kPa (6 kg/cm^2, 85 psi)

Cleaning time : Less than 20 seconds

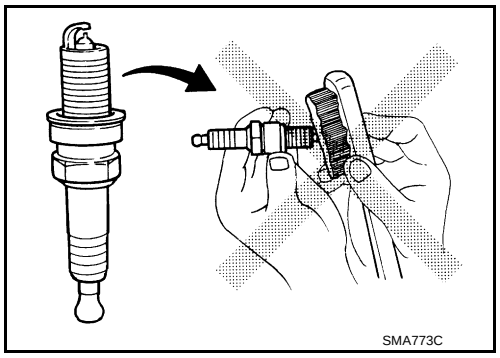

- **Spark plug gap adjustment is not required between replacement intervals.**
- **Measure spark plug gap. when it exceeds the limit, replace spark plug even if it is with in the specified replacement mileage. Refer to EM-113, "Spark Plug".**

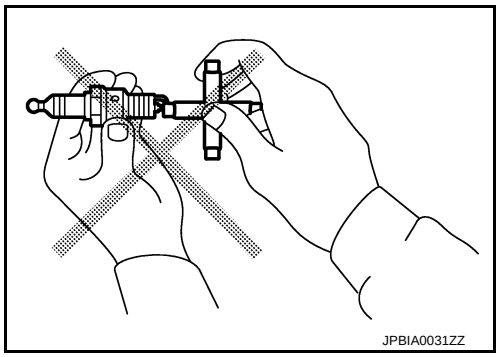

CAMSHAFT VALVE CLEARANCE

Inspection and Adjustment

INFOID:0000000009944923

INSPECTION

Perform inspection as follows after removal, installation or replacement of camshaft or valve-related parts, or if there is unusual engine conditions regarding valve clearance.

1. Remove rocker cover. Refer to EM-40, "Exploded View".
2. Measure the valve clearance with the following procedure:

a. Set No. 1 cylinder at TDC of its compression stroke.

- Rotate crankshaft pulley (1) clockwise and align TDC mark (no paint) (B) to timing indicator (A) on front cover.

  C : White paint mark (Not use for service)

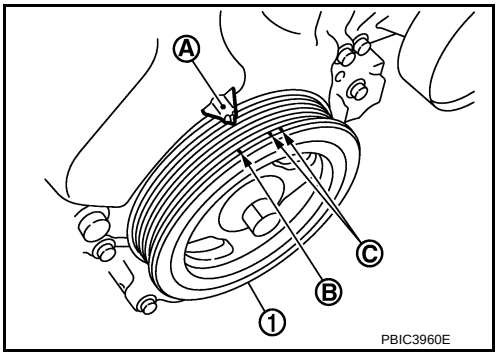

- At the same time, check that both intake and exhaust cam noses of No. 1 cylinder face inside (⬅) as shown in the figure.

  1 : Camshaft (INT)
  2 : Camshaft (EXH)
  ⇦ : Engine front

- If they do not face inside, rotate crankshaft pulley once more (360 degrees) and align as shown in the figure.

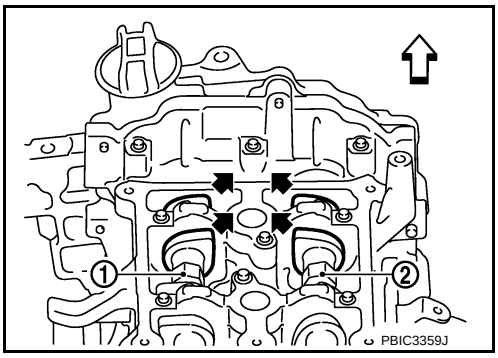

b. Use a feeler gauge, measure the clearance between valve lifter and camshaft.

Valve clearance : Refer to EM-114, "Camshaft".

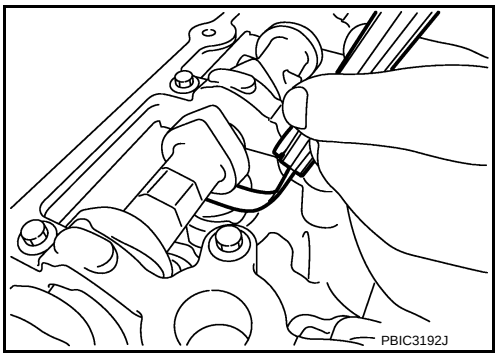

- By referring to the figure, measure the valve clearances at locations marked "×" as shown in the table below [locations indicated with black arrow (⬅) in the figure] with a feeler gauge.

  A : Exhaust side
  B : No. 1 cylinder
  C : No. 2 cylinder
  D : No. 3 cylinder
  E : No. 4 cylinder

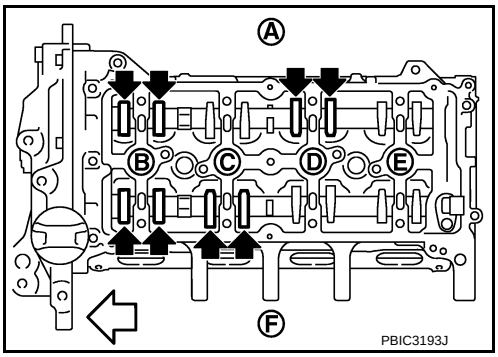

F : Intake side

⇦ : Engine front

Measuring position		No. 1 CYL.	No. 2 CYL.	No. 3 CYL.	No. 4 CYL.
No. 1 cylinder at compression TDC	EXH	×		×	
	INT	×	×		

c. Set No. 4 cylinder at TDC of its compression stroke.
- Rotate crankshaft pulley (1) one revolution (360 degrees) and align TDC mark (no paint) (B) to timing indicator (A) on front cover.

C : White paint mark (Not use for service)

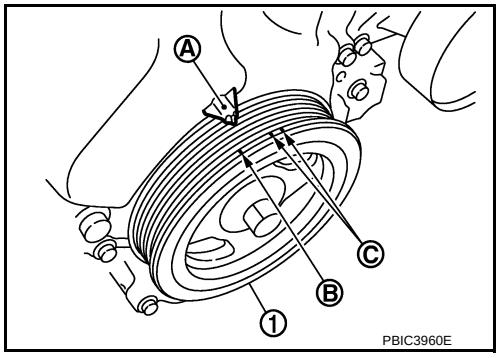

- By referring to the figure, measure the valve clearance at locations marked "×" as shown in the table below [locations indicated with black arrow (⬅) in the figure] with a feeler gauge.

A : Exhaust side
B : No. 1 cylinder
C : No. 2 cylinder
D : No. 3 cylinder
E : No. 4 cylinder
F : Intake side
⇦ : Engine front

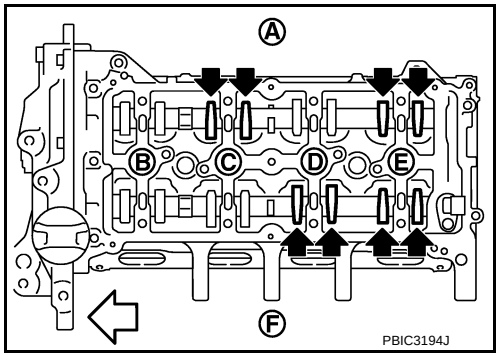

Measuring position		No. 1 CYL.	No. 2 CYL.	No. 3 CYL.	No. 4 CYL.
No. 4 cylinder at compression TDC	EXH		×		×
	INT			×	×

3. If out of standard, perform adjustment. Refer to "ADJUSTMENT".

ADJUSTMENT

- Perform adjustment depending on selected head thickness of valve lifter.

1. Remove camshaft. Refer to EM-53, "Exploded View".
2. Remove valve lifters at the locations that are out of the standard.
3. Measure the center thickness of the removed valve lifters with a micrometer (A).

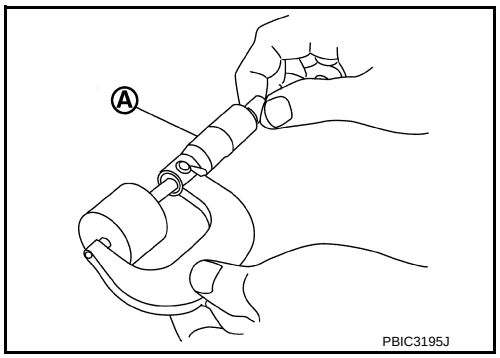

4. Use the equation below to calculate valve lifter thickness for replacement.

Valve lifter thickness calculation: $t = t_1 + (C_1 - C_2)$

t = Valve lifter thickness to be replaced

t_1 = Removed valve lifter thickness

C_1 = Measured valve clearance

C_2 = Standard valve clearance:

Intake : 0.30 mm (0.012 in)

Exhaust : 0.33 mm (0.013 in)

- Thickness of new valve lifter (B) can be identified by stamp mark (A) on the reverse side (inside the cylinder).
- Stamp mark “302” indicates 3.02 mm (0.1189 in) in thickness.

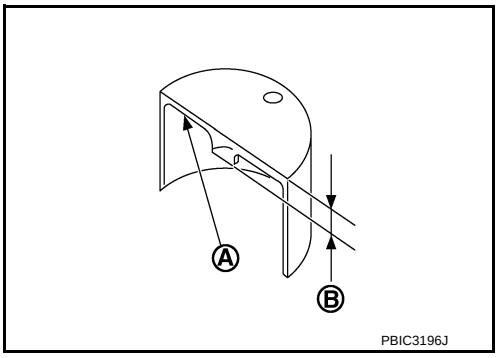

NOTE:
Available thickness of valve lifter: 26 sizes range 3.00 to 3.50 mm (0.1181 to 0.1378 in) in steps of 0.02 mm (0.0008 in) (when manufactured at factory). Refer to EM-114, "Camshaft".

5. Install the selected valve lifter.
6. Install camshaft. Refer to EM-53, "Exploded View".
7. Install timing chain and related parts. Refer to EM-42, "Exploded View".
8. Manually rotate crankshaft pulley a few rotations.
9. Check that the valve clearances is within the standard. Refer to “INSPECTION”.
10. Install remaining parts in the reverse order of removal.
11. Warm up the engine, and check for unusual noise and vibration.

COMPRESSION PRESSURE

Inspection

INFOID:0000000009944924

1. Warm up engine thoroughly. Then, stop it.
2. Release fuel pressure. Refer to EC-478, "Inspection".
3. Remove ignition coil and spark plug from each cylinder. Refer to EM-40, "Exploded View".
4. Connect engine tachometer (not required in use of CONSULT).
5. Install compression gauge (B) with an adapter (A) (commercial service tool) onto spark plug hole.

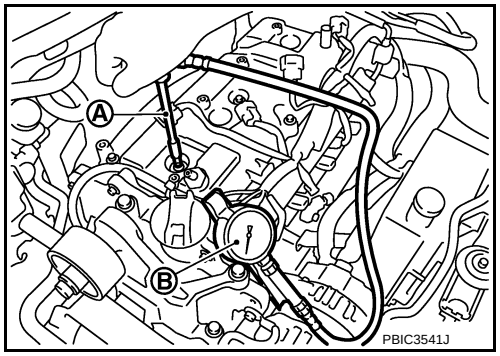

- Use the adapter whose picking up end inserted to spark plug hole is smaller than 20 mm (0.79 in) in diameter. Otherwise, it may be caught by cylinder head during removal.

  a : 20 mm (0.79 in)

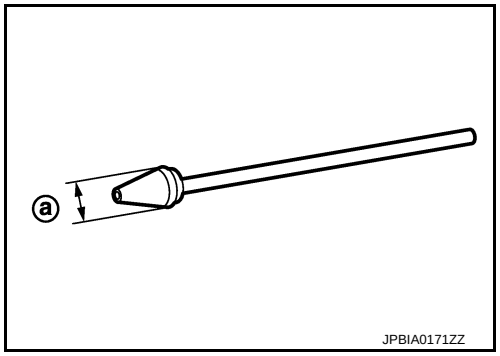

6. With accelerator pedal fully depressed, turn ignition switch to “START” for cranking. When the gauge pointer stabilizes, read the compression pressure and the engine rpm. Perform these steps to check each cylinder.

   Compression pressure : Refer to EM-113, "General Specification".

   CAUTION:
   Always use a fully charged battery to obtain the specified engine speed.
   - If the engine speed is out of the specified range, check battery liquid for proper gravity. Check the engine speed again with normal battery gravity.
   - If compression pressure is below minimum value, check valve clearances, and parts associated with combustion chamber (valve, valve seat, piston, piston ring, cylinder bore, cylinder head, and cylinder head gasket). After the checking, measure compression pressure again.
   - If some cylinder has low compression pressure, pour small amount of engine oil into the spark plug hole of the cylinder to recheck it for compression.
   - If the added engine oil improves the compression, piston rings may be worn out or damaged. Check piston rings and replace if necessary.
   - If the compression pressure remains at low level despite the addition of engine oil, valves may be malfunctioning. Check valves for damage. Replace valve or valve seat accordingly.
   - If two adjacent cylinders have respectively low compression pressure and their compression remains low even after the addition of engine oil, cylinder head gaskets are leaking. In such a case, replace cylinder head gaskets.
7. After inspection is completed, install removed parts.
8. Start the engine, and check that the engine runs smoothly.
9. Perform trouble diagnosis. If DTC appears, erase it. Refer to EC-121, "Description".

REMOVAL AND INSTALLATION

ENGINE COVER

Exploded View

INFOID:0000000009944925

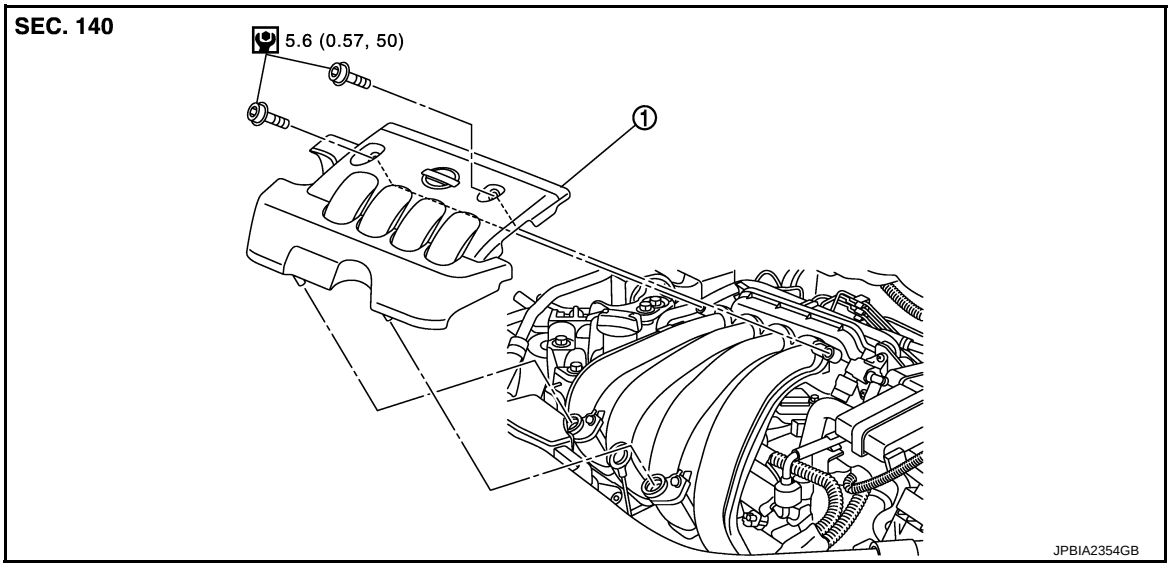

1. Engine cover

: N·m (kg-m, in-lb)

Removal and Installation

INFOID:0000000009944926

REMOVAL

Remove engine cover.

CAUTION:

Never damage or scratch engine cover when installing or removing.

INSTALLATION

Install in the reverse order of removal.

DRIVE BELT AUTO TENSIONER AND IDLER PULLEY

Exploded View

INFOID:0000000009944927

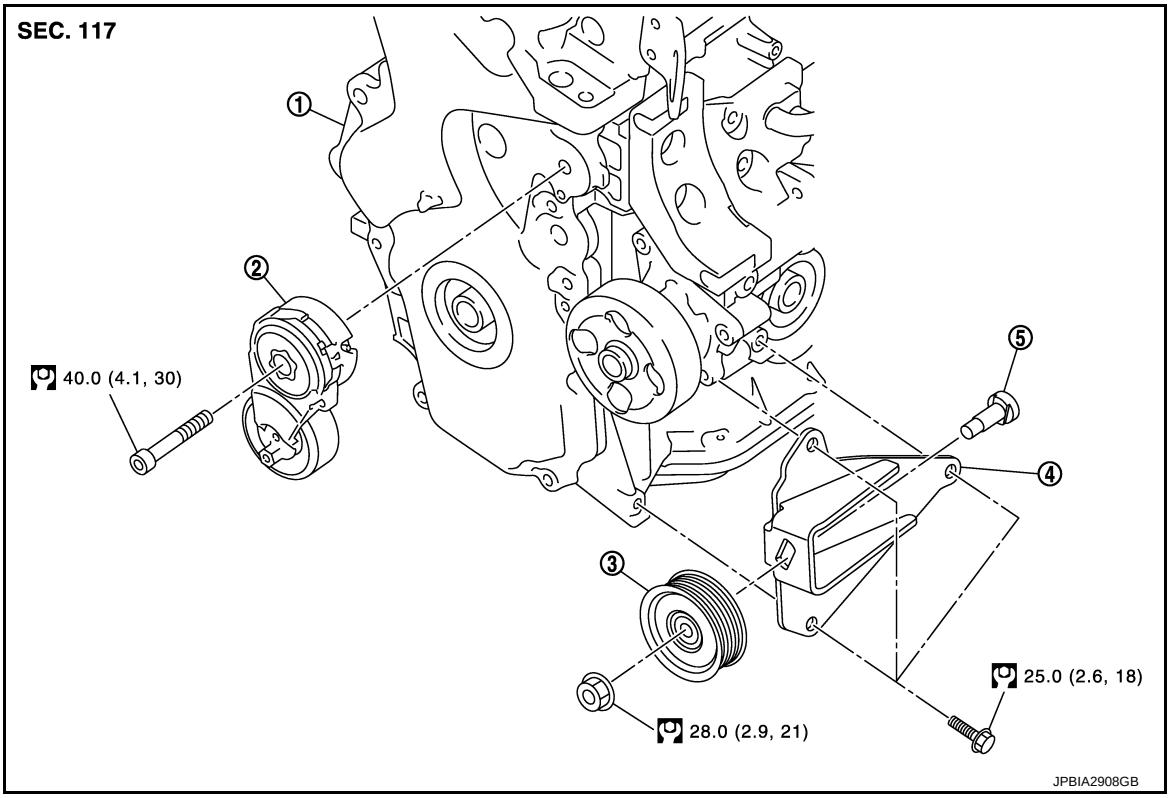

1. Front cover
2. Drive belt auto-tensioner
3. Idler pulley (models without A/C)
4. Idler pulley bracket (models without A/C)
5. Shaft (models without A/C)

: N·m (kg-m, ft-lb)

Removal and Installation

INFOID:0000000009944928

Removal

1. Remove the following parts.
   - Engine cover: Refer to EM-22, "Exploded View".
   - Cowl top cover and extension cowl top: Refer to EXT-19, "Exploded View".
   - Vacuum lines: Refer to BR-31, "Exploded View".
   - Air duct: Refer to EM-24, "Exploded View".
   - Front fender protector (RH): Refer to EXT-21, "FENDER PROTECTOR : Exploded View".
   - Ground cable (between front cover and radiator core support)
2. Remove drive belt. Refer to EM-13, "Removal and Installation".
   - Keep drive belt auto-tensioner pulley arm locked after drive belt are removed.
3. Support the bottom surface of engine using a transmission jack, and then remove the engine mounting bracket (RH) and the engine mounting insulator (RH). Refer to EM-74, "Exploded View".
   CAUTION:
   Never damage or scratch oil pan (lower) when supporting.
4. Loosen mounting bolt and remove drive belt auto-tensioner.
   - Lift the front side of the engine with a jack sustaining engine base to remove mounting bolt.

Installation

Install in the reverse order of removal.

CAUTION:

When installing drive belt auto-tensioner, be careful not to interfere with water pump pulley.

AIR CLEANER AND AIR DUCT

Exploded View

INFOID:0000000009944929

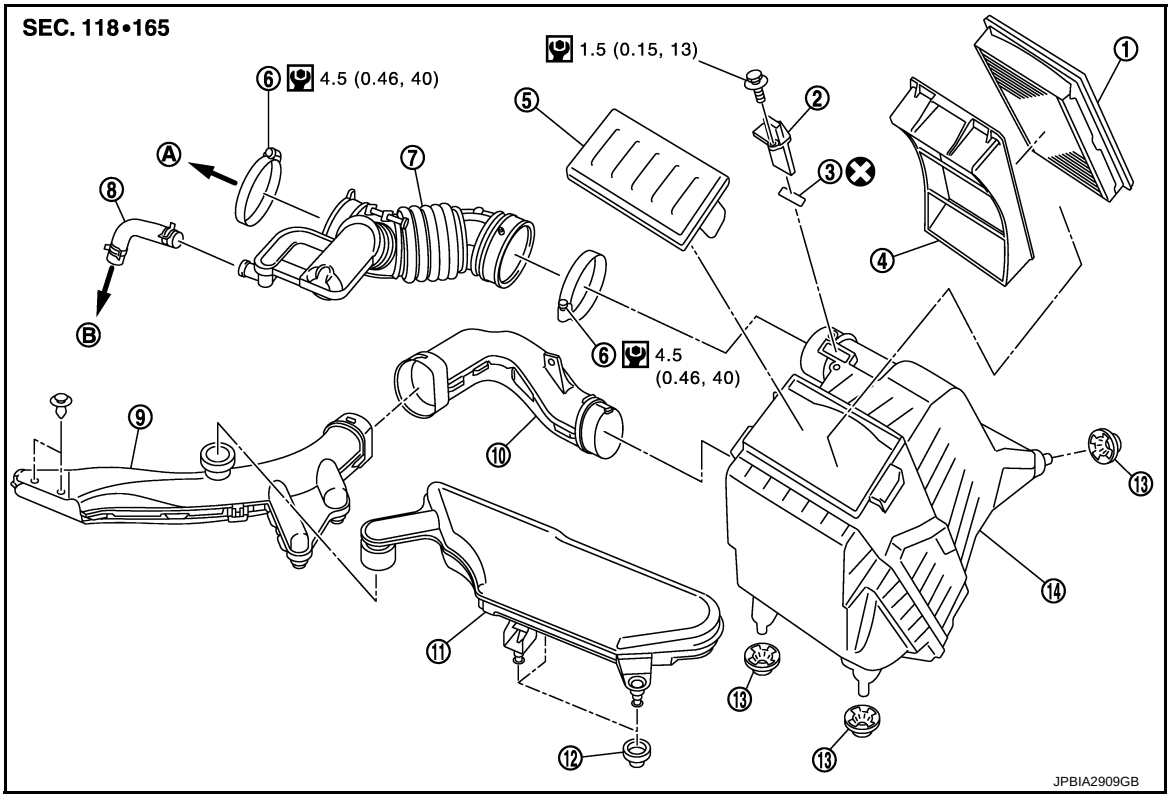

1.	Air cleaner filter	2.	Mass air flow sensor	3.	O-ring
4.	Holder	5.	Cleaner cover	6.	Clamp
7.	Air duct	8.	PCV hose	9.	Air duct (inlet)
10.	Air duct	11.	Resonator	12.	Grommet
13.	Grommet	14.	Air cleaner case		
A.	To electric throttle control actuator	B.	To rocker cover		

: Always replace after every disassembly.

: N·m (kg-m, in-lb)

Removal and Installation

INFOID:0000000009944930

REMOVAL

NOTE:

Mass air flow sensor is removable under the car-mounted condition.

1. Remove air duct (inlet) and resonator assembly.
2. Remove engine cover. Refer to EM-22, "Exploded View".
3. Remove the air cleaner filter from the air cleaner case.
4. Remove air duct [between air duct (inlet) and air cleaner case] from the air cleaner case.
5. Disconnect PCV hose.
6. Remove the air duct (between air cleaner case and electric throttle control actuator).
   - Add matching marks if necessary for easier installation.
7. Remove air cleaner case with the following procedure.

a. Remove battery. Refer to PG-82, "Exploded View".

b. Disconnect mass air flow sensor harness connector.

c. Remove the air cleaner case.

8. Remove mass air flow sensor from air cleaner case, if necessary.

CAUTION:

Handle the mass air flow sensor with following cares.

- **Never shock the mass air flow sensor.**
- **Never disassemble the mass air flow sensor.**
- **Never touch the sensor of the mass air flow sensor.**

INSTALLATION

CAUTION:

Do not reuse O-rings.

Note the following, and install in the reverse order of removal.

- Align marks. Attach each joint. Screw clamps firmly.

Inspection

INFOID:0000000009944931

INSPECTION AFTER REMOVAL

Inspect air duct and resonator assembly for crack or tear.

- If anything found, replace air duct and resonator assembly.

INTAKE MANIFOLD

Exploded View

INFOID:0000000009944932

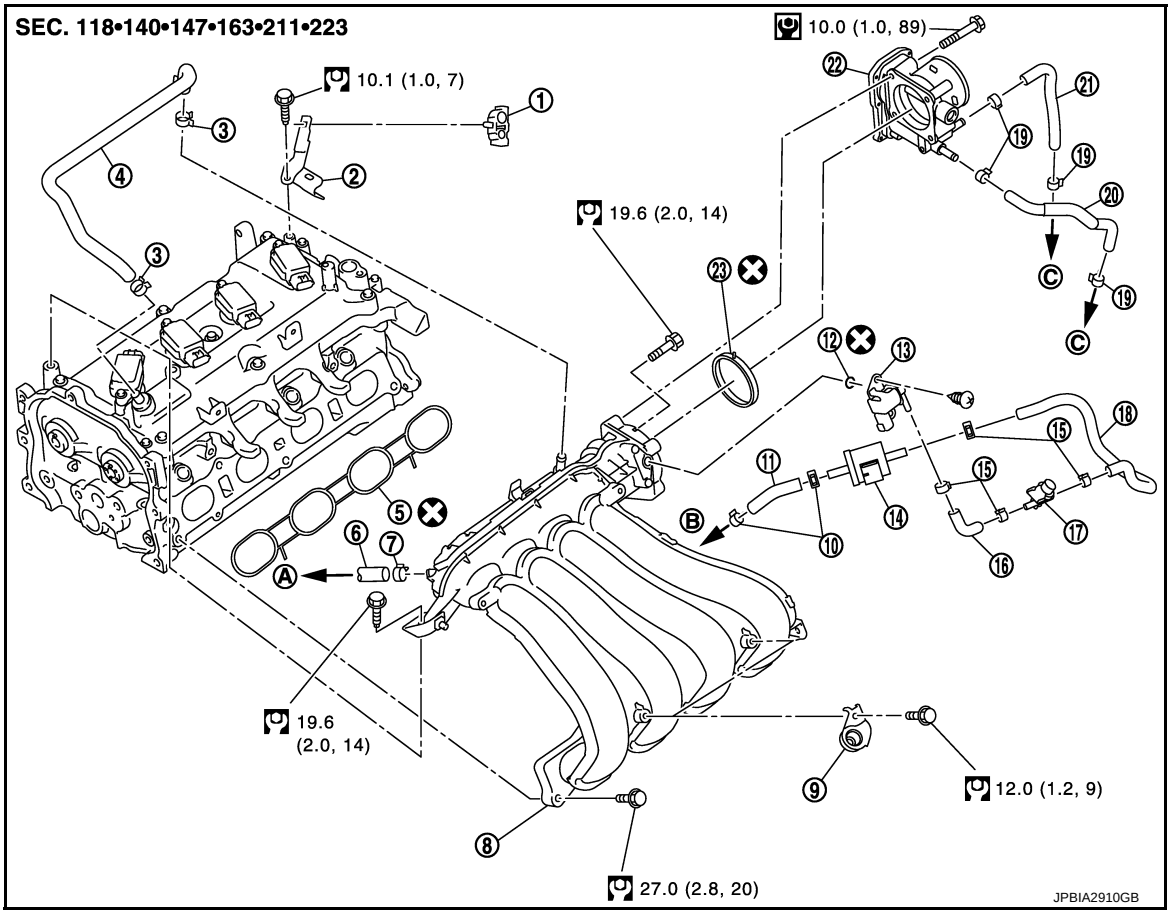

1.	Clamp	2.	Harness bracket	3.	Clamp
4.	PCV hose	5.	Gasket	6.	Vacuum hose
7.	Clamp	8.	Intake manifold	9.	Bracket
10.	Clamp	11.	EVAP hose	12.	O-ring
13.	EVAP canister purge volume control solenoid valve	14.	EVAP vacuum tank	15.	Clamp
16.	EVAP hose	17.	EVAP service port	18.	EVAP hose
19.	Clamp	20.	Water hose	21.	Water hose
22.	Electric throttle control actuator	23.	Gasket		
A.	To brake booster	B.	To centralized under-floor piping	C.	To water outlet

: Always replace after every disassembly.

: N·m (kg-m, ft-lb)

: N·m (kg-m, in-lb)

Removal and Installation

INFOID:0000000009944933

REMOVAL

1. Remove engine cover. Refer to EM-22, "Exploded View".
2. Pull out oil level gauge.
   CAUTION:
   Cover the oil level gauge guide openings to avoid entry of foreign materials.

3. Disconnect PCV hose from intake manifold and rocker cover.
4. Remove air duct (inlet), resonator and air duct assembly. Refer to EM-24, "Exploded View".
5. Disconnect vacuum hose from intake manifold.
6. Disconnect water hoses from electric throttle control actuator as follows:
   - Drain engine coolant from radiator or attach plug to prevent engine coolant leakage when engine coolant is not drained. Refer to CO-8, "Draining".
   CAUTION:
   Perform this step when the engine is cold.
7. Remove electric throttle control actuator.
   CAUTION:
   - **Handle carefully to avoid any shock to electric throttle control actuator.**
   - **Never disassemble electric throttle control actuator.**
8. Remove intake manifold (1) with the following procedure:

   ⇦ : Engine front

a. Loosen and remove intake manifold mounting bolts (A) and (B).
b. Remove harness clip from intake manifold side.
c. Disconnect EVAP hose from intake manifold.
d. Disconnect harness connector from EVAP canister purge volume control valve.

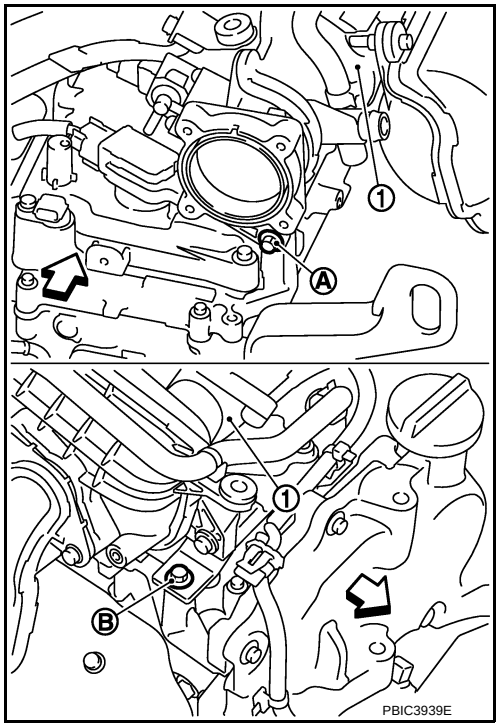

e. Loosen mounting bolts in the order of 5 to 1 as shown in the figure.

   ⇦ : Engine front

   CAUTION:
   Cover engine openings to avoid entry of foreign materials.

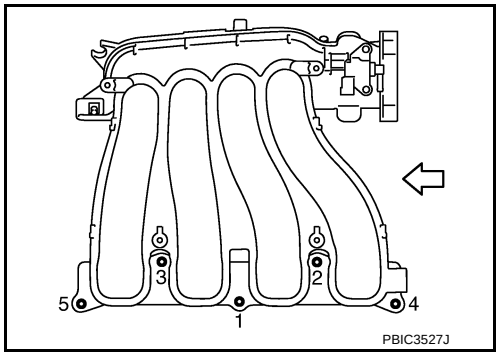

9. Remove brackets from intake manifold, if necessary.
10. Remove engine cover bracket, if necessary.
11. Remove EVAP canister purge volume control solenoid valve from intake manifold, if necessary.

INSTALLATION

Note the following, and install in the reverse order of removal.

Intake Manifold

1. Check if gasket is not dropped from the installation groove of intake manifold.
2. Install intake manifold with the following procedure:

a. Tighten in the order of 1 to 5 as shown in the figure.

⇦ : Engine front

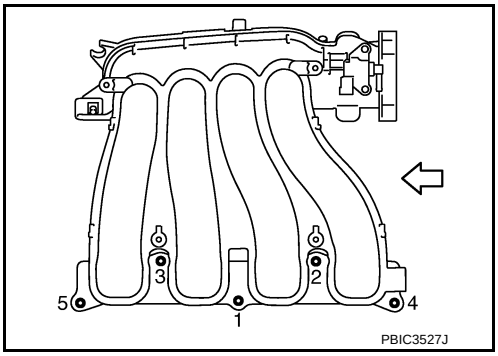

b. Tighten No. 1 bolt again.

c. Tighten intake manifold mounting bolt (A). Then tighten intake manifold mounting bolt (B).

1 : Intake manifold

⇦ : Engine front

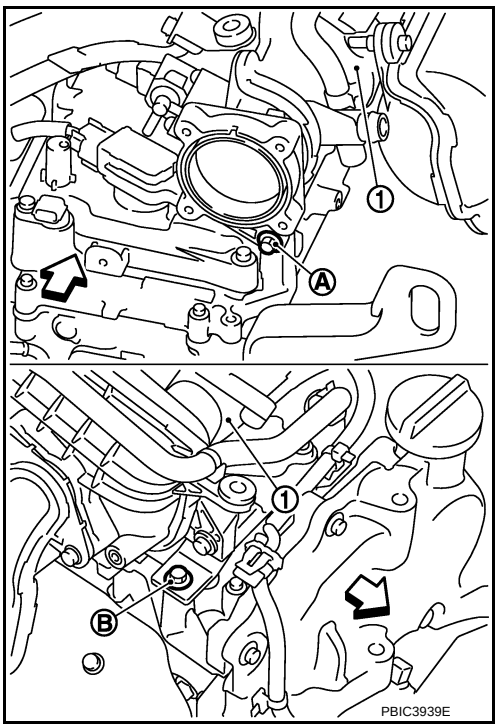

Electric Throttle Control Actuator

- Tighten bolts of electric throttle control actuator equally and diagonally in several steps.
- Perform “Throttle Valve Closed Position Learning” after repair when removing harness connector of the electric throttle control actuator. Refer to EC-19, "THROTTLE VALVE CLOSED POSITION LEARNING : Description".
- Perform “Throttle Valve Closed Position Learning” and “Idle Air Volume Learning” after repair when replacing electric throttle control actuator. Refer to EC-19, "THROTTLE VALVE CLOSED POSITION LEARNING : Description" and EC-20, "IDLE AIR VOLUME LEARNING : Description" .

EXHAUST MANIFOLD

Exploded View

INFOID:0000000009944934

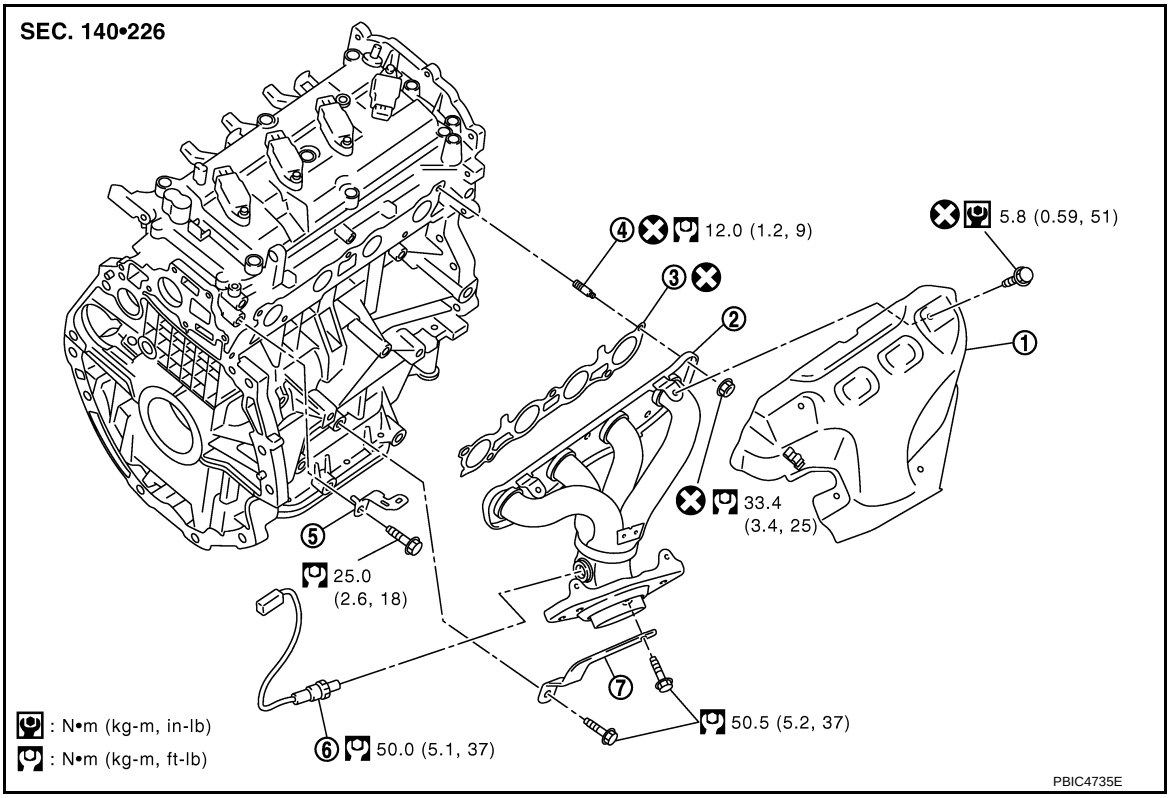

1. Exhaust manifold cover
2. Exhaust manifold
3. Gasket
4. Stud bolt
5. Harness bracket
6. Air fuel ratio sensor 1
7. Exhaust manifold stay

: Always replace after every disassembly.

Removal and Installation

INFOID:0000000009944935

REMOVAL

1. Remove exhaust front tube. Refer to EX-5, "Exploded View".
2. Remove exhaust manifold cover.
3. Remove the air fuel ratio sensor 1.
   - Using heated oxygen sensor wrench [SST: KV10117100 (J-3647-A)], remove air fuel ratio sensor 1.

   CAUTION:
   Handle air fuel ratio sensor 1 carefully and avoid impacts.
   NOTE:
   The exhaust manifold can be removed and installed without removing the air fuel ratio sensor 1 (Disassembly of harness connector is necessary).
4. Remove exhaust manifold stay.
5. Remove exhaust manifold.

- Loosen nuts in the order of 5 to 1 as shown in the figure.

⇦ : Engine front

NOTE:
- Disregard No. 6 to 8 when loosening.

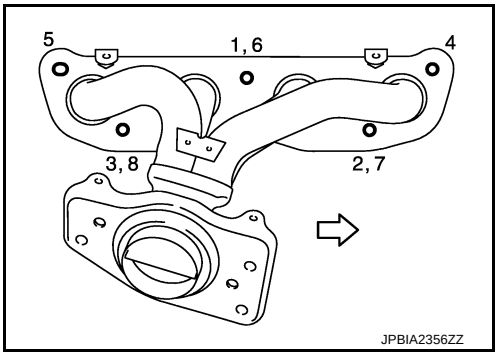

6. Remove gasket.
CAUTION:
Cover engine openings to avoid entry of foreign materials.

INSTALLATION

Exhaust manifold

1. Install gasket to cylinder head as shown in the figure.

⇦ : Engine front

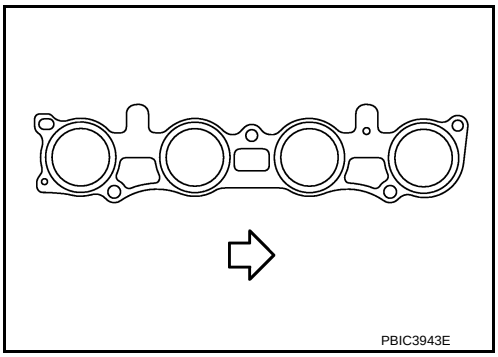

2. Install exhaust manifold with the following procedure:

a. Tighten nuts in the order of 1 to 8 as shown in the figure.

⇦ : Engine front

NOTE:
- No. 6 to 8 mean double tightening of nuts No. 1 to 3.

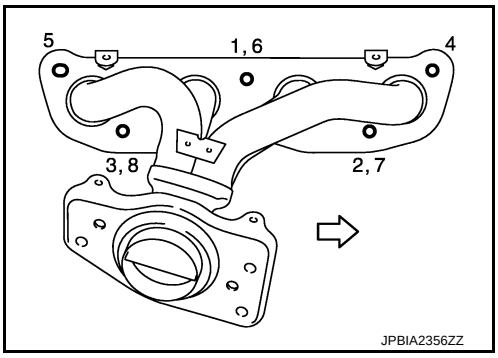

b. Install exhaust manifold stay (2) in the direction as shown in the figure.

1 : Exhaust manifold
3 : Drive shaft support bearing bracket
A : Upper mark
⇦ : Vehicle front

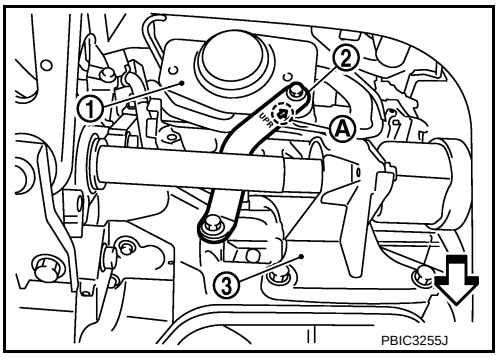

3. Install remaining parts in the reverse order of removal.

AIR FUEL RATIO SENSOR 1
CAUTION:

- **Before installing a new air fuel ratio sensor 1, clean exhaust system threads using heated oxygen sensor thread cleaner tool (commercial service tool) and apply anti-seize lubricant.**
- **Never over torque air fuel ratio sensor 1. Doing so may cause damage to air fuel ratio sensor 1, resulting in the “MI” coming on.**
- **Prevent rust preventives from adhering to the sensor body.**

Inspection

INFOID:0000000009944936

INSPECTION AFTER REMOVAL

Surface Distortion

- Using feeler gauge (A) and straightedge (B), check the surface distortion of exhaust manifold mating surface in each exhaust port and entire part.

Limit : Refer to EM-114, "Exhaust Manifold".

- If it exceeds the limit, replace exhaust manifold.

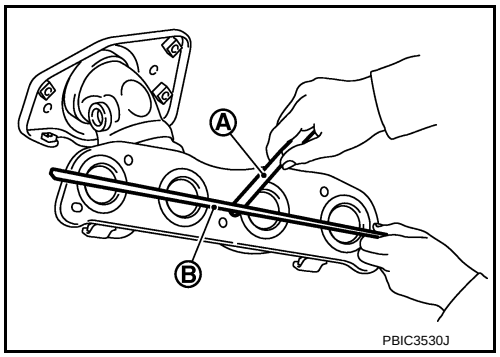

OIL PAN (LOWER)

Exploded View

INFOID:0000000009944937

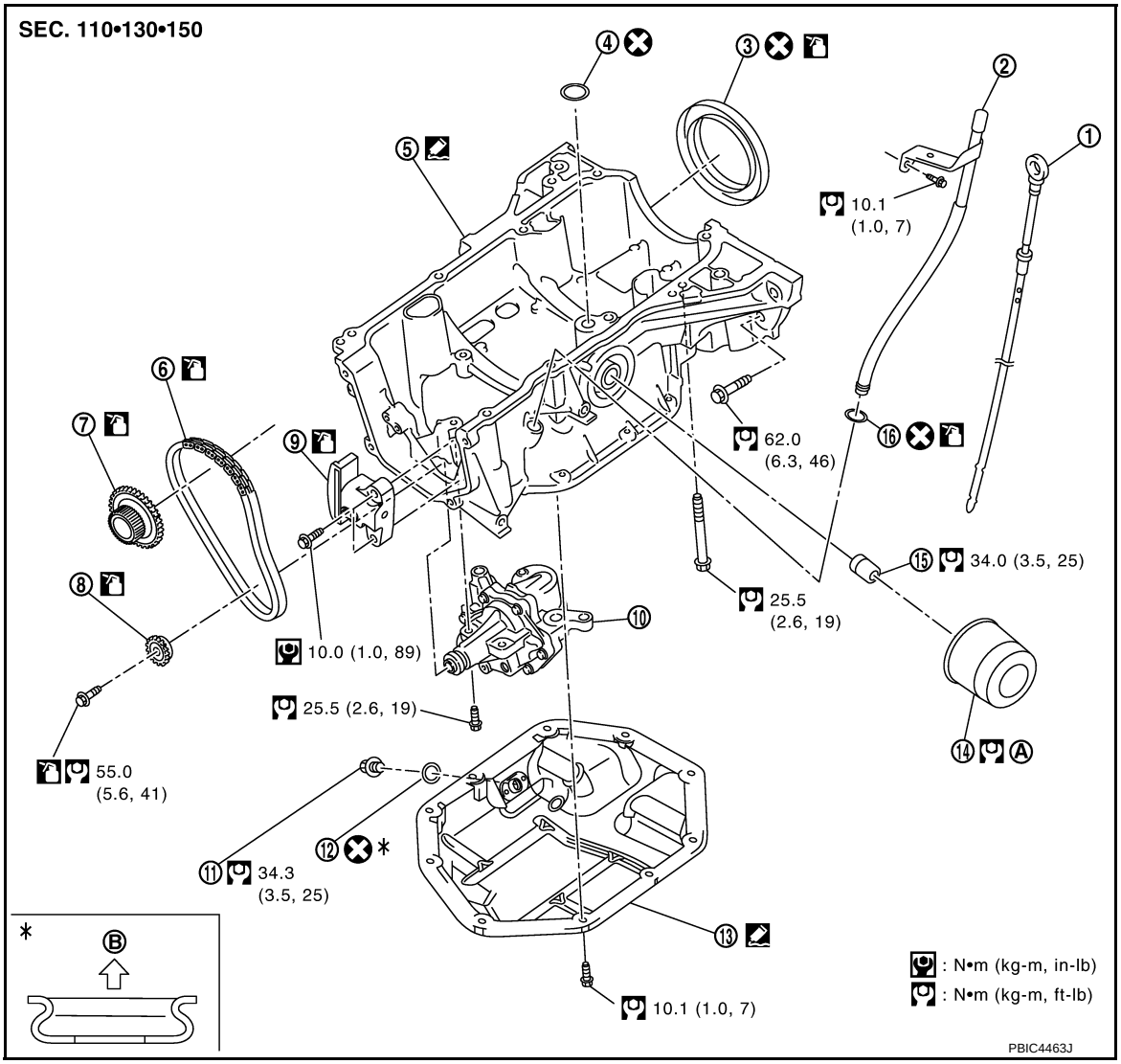

1.	Oil level gauge	2.	Oil level gauge guide	3.	Rear oil seal
4.	O-ring	5.	Oil pan (upper)	6.	Oil pump drive chain
7.	Crankshaft sprocket	8.	Oil pump sprocket	9.	Oil pump chain tensioner
10.	Oil pump	11.	Drain plug	12.	Drain plug washer
13.	Oil pan (lower)	14.	Oil filter	15.	Connector bolt
16.	O-ring				
A.	Comply with the assembly procedure when tightening. Refer to LU-11	B.	Oil pan side		

: Always replace after every disassembly.

: Should be lubricated with oil.

: Sealing point

Removal and Installation

INFOID:0000000009944938

REMOVAL

1. Drain engine oil. Refer to LU-9, "Draining".

2. Remove oil pan (lower) with the following procedure:

a. Loosen mounting bolts in the order of 10 to 1 as shown in the figure.

⇦ : Engine front

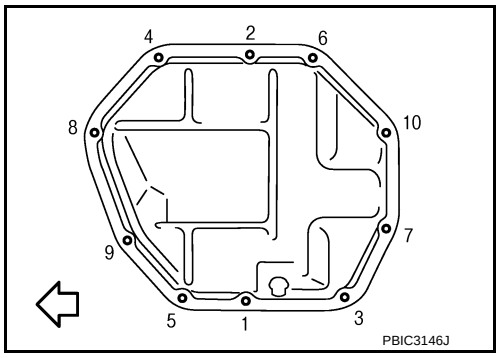

b. Insert seal cutter [SST: KV10111100 (J-37228)] (A) between oil pan (upper) and oil pan (lower).
CAUTION:
- **Be careful not to damage the mating surface.**
- **Never insert a screwdriver. This damages the mating surfaces.**

c. Slide the seal cutter [SST: KV10111100 (J-37228)] by tapping on the side of tool with a hammer.

d. Remove oil pan (lower).

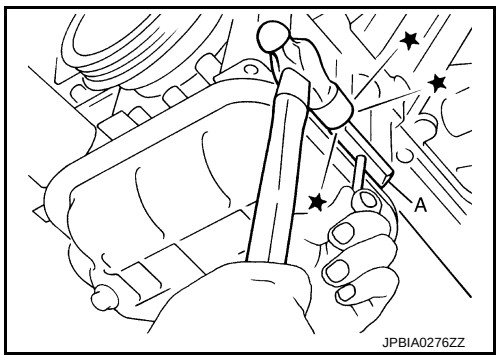

INSTALLATION

CAUTION:
Do not reuse drain plug washer.

1. Install oil pan (lower) as follows:

a. Use a scraper (A) to remove old liquid gasket from mating surfaces.
- Also remove old liquid gasket from mating surface of oil pan (upper).
- Remove old liquid gasket from the bolt holes and threads.

CAUTION:
Never scratch or damage the mating surface when cleaning off old liquid gasket.

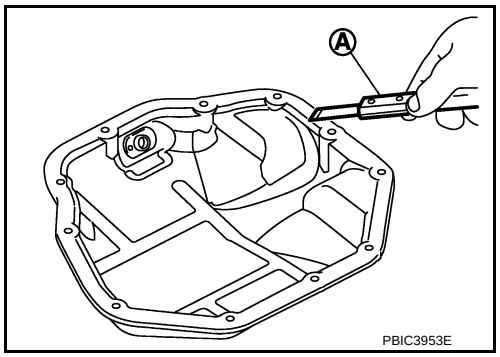

b. Apply a continuous bead of liquid gasket (A) with a tube presser (commercial service tool) as shown in the figure.

1 : Oil pan (lower)

⬅ : Engine outside

Use Genuine RTV Silicon Sealant or equivalent. Refer to GI-22, "Recommended Chemical Products and Sealants".

CAUTION:

Attaching should be done within 5 minutes after liquid gasket application.

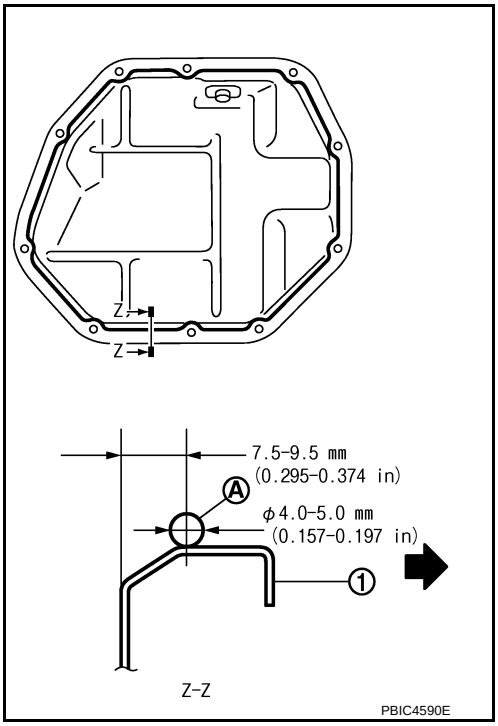

c. Tighten bolts in the order of 1 to 10 as shown in the figure.

⇦ : Engine front

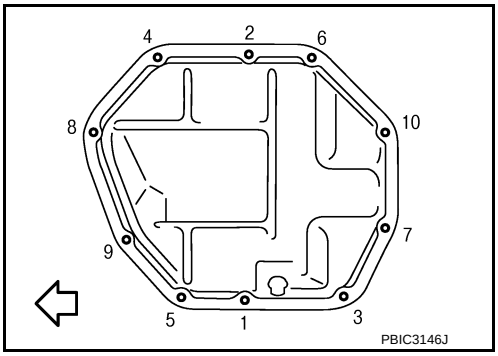

2. Install oil pan drain plug.
   - Refer to the figure of components of former page for installation direction of drain plug washer. Refer to EM-32, "Exploded View".
3. Install in the reverse order of removal after this step.

Inspection

INFOID:0000000009944939

INSPECTION AFTER REMOVAL

Clean oil strainer if any object attached.

INSPECTION AFTER INSTALLATION

1. Check the engine oil level and adjust engine oil. Refer to LU-8, "Inspection".
2. Start engine, and check there is no leakage of engine oil.
3. Stop engine and wait for 10 minutes.
4. Check the engine oil level again. Refer to LU-8, "Inspection".

FUEL INJECTOR AND FUEL TUBE

Exploded View

INFOID:0000000009944940

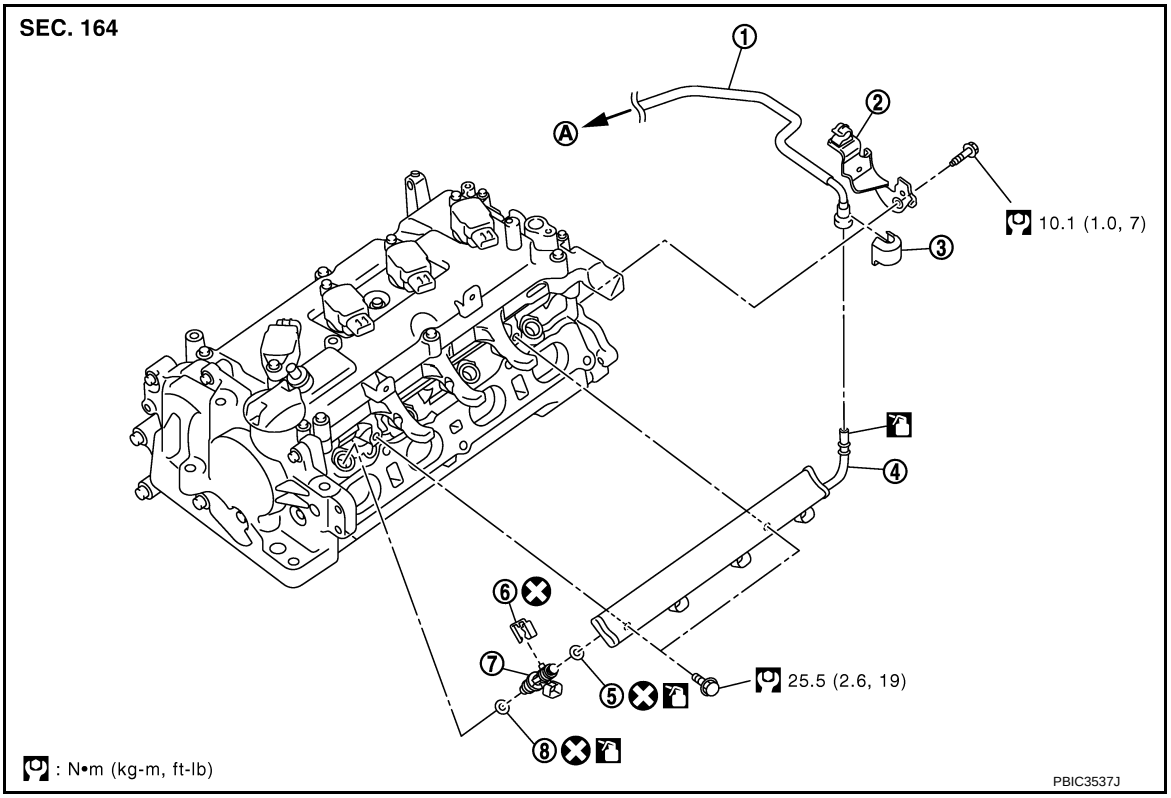

1.	Fuel feed tube	2.	Bracket	3.	Quick connector cap
4.	Fuel tube	5.	O-ring (black)	6.	Clip
7.	Injector	8.	O-ring (green)		
A.	To centralized under-floor piping				

: Always replace after every disassembly.

: Should be lubricated with oil.

CAUTION:
Never remove or disassemble parts unless instructed as shown in the figure.

Removal and Installation

INFOID:0000000009944941

WARNING:
- **Put a “CAUTION: FLAMMABLE” sign in the workshop.**
- **Be sure to work in a well ventilated area and furnish workshop with a CO_2 fire extinguisher.**
- **Never smoke while servicing fuel system. Keep open flames and sparks away from the work area.**

REMOVAL

1. Release the fuel pressure. Refer to EC-478, "Inspection".
2. Remove intake manifold. Refer to EM-26, "Exploded View".

3. Disconnect quick connector with the following procedure. Disconnect fuel feed tube (1) from fuel tube (3).
   NOTE:
   There is no fuel return path.

a. Remove quick connector cap (engine side) (2) from quick connector connection.

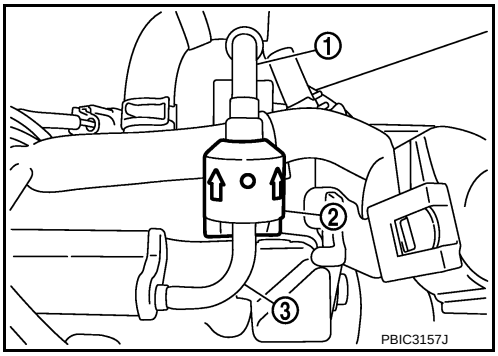

b. With the sleeve side of quick connector release facing quick connector, install quick connector release (commercial service tool) onto fuel tube.

c. Insert quick connector release (A) into quick connector (2) until sleeve (B) contacts and goes no further. Hold quick connector release on that position.

   D : Insert and retain

   CAUTION:
   Inserting quick connector release hard will not disconnect quick connector. Hold quick connector release where it contacts and goes no further.

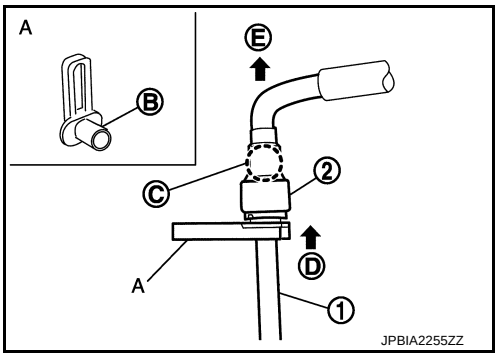

d. Draw and pull out quick connector straight from fuel tube (1).
   CAUTION:
   - **Pull quick connector (E) holding position (C) in the figure.**
   - **Never pull with lateral force applied. O-ring inside quick connector may be damaged.**
   - **Prepare container and cloth beforehand as fuel will leakage out.**
   - **Avoid fire and sparks.**
   - **Keep parts away from heat source. Especially, be careful when welding is performed around them.**
   - **Never expose parts to battery electrolyte or other acids.**
   - **Never bend or twist connection between quick connector and fuel feed tube during installation/removal.**
   - **To keep clean the connecting portion and to avoid damage and foreign materials, cover them completely with plastic bags, etc. (A) or something similar.**

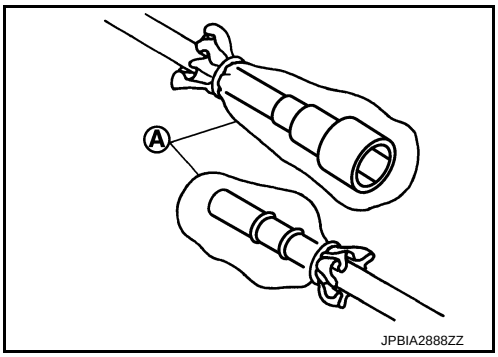

4. Disconnect harness connector from fuel injector.
5. Remove fuel tube and fuel injector assembly.
   - Loosen mounting bolts in the order of 2, 1 as shown in the figure.

   ⇦ : Engine front

CAUTION:
- **When removing, be careful to avoid any interference with fuel injector.**
- **Use a shop cloth to absorb any fuel leakage from fuel tube.**

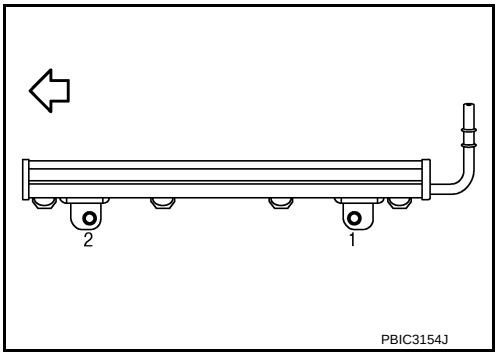

6. Remove fuel injector from fuel tube with the following procedure:
a. Open and remove clip (2).
b. Remove fuel injector (3) from fuel tube (1) by pulling straight.
CAUTION:
- **Be careful with remaining fuel that may go out from fuel tube.**
- **Be careful not to damage fuel injector nozzle during removal.**
- **Never bump or drop fuel injector.**
- **Never disassemble fuel injector.**

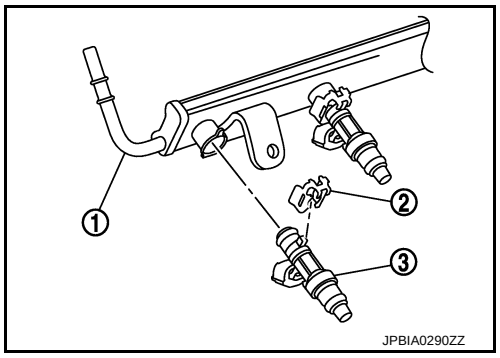

INSTALLATION
CAUTION:
Do not reuse O-rings.

1. Note the following, and install O-rings to fuel injector.
CAUTION:
- **Do not reuse O-ring.**
- **Upper and lower O-rings are different. Be careful not to confuse them.**

Fuel tube side	**: Black**
Nozzle side	**: Green**

- **Handle O-ring with bare hands. Never wear gloves.**
- **Lubricate O-ring with new engine oil.**
- **Never clean O-ring with solvent.**
- **Check that O-ring and its mating part are free of foreign material.**
- **When installing O-ring, be careful not to scratch it with tool or fingernails. Also be careful not to twist or stretch O-ring. If O-ring is stretched while installing, never insert it quickly into fuel tube.**
- **Insert O-ring straight into fuel tube. Never decenter or twist it.**

2. Install fuel injector to fuel tube with the following procedure:
a. Insert clip (2) into clip mounting groove (F) on fuel injector (4).

3 : O-ring (black)
5 : O-ring (green)

- Insert clip so that protrusion (G) of fuel injector matches cut-out (D) of clip.
CAUTION:
- **Never reuse clip. Replace it with a new one.**
- **Be careful to keep clip from interfering with O-ring. If interference occurs, replace O-ring.**

b. Insert fuel injector into fuel tube (1) with clip attached.
- Insert it while matching it to the axial center.
- Insert fuel injector so that protrusion (B) of fuel tube matches cut-out (C) of clip.
- Check that fuel tube flange (A) is securely fixed in flange fixing groove (E) on clip.

c. Check that installation is complete by checking that fuel injector does not rotate or come off.

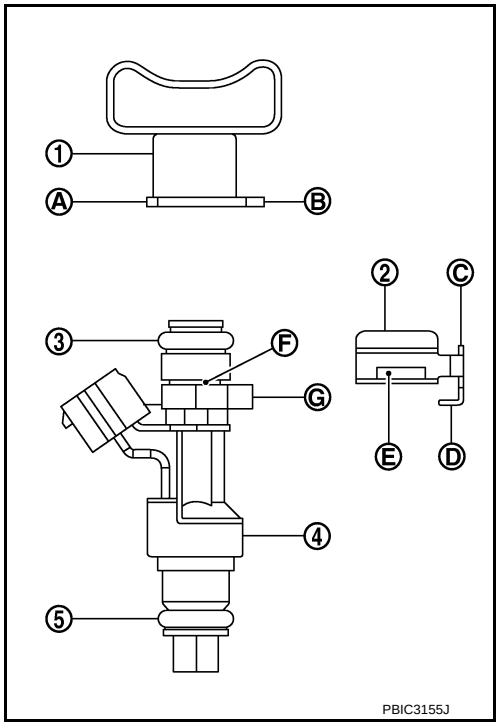

3. Set fuel tube and fuel injector assembly at its position for installation on cylinder head.
CAUTION:

For installation, be careful not to interfere with fuel injector nozzle.

4. Install fuel tube and injector assembly onto cylinder.
   - Tighten mounting bolts in the order of 1, 2 as shown in the figure.

   ⇦ : Engine front

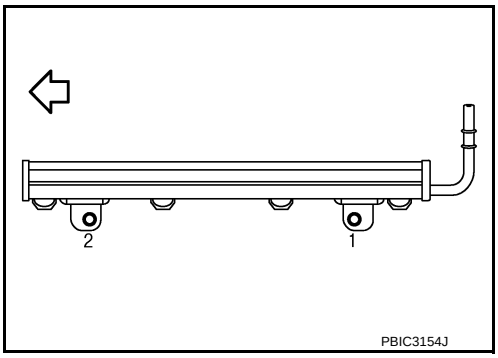

5. Connect harness connector to fuel injector.
6. Connect fuel feed tube with the following procedure.

a. Check for damage or foreign material on the fuel tube and quick connector.

b. Apply new engine oil lightly to area around the top of fuel tube.

c. Align center to insert quick connector straightly into fuel tube.
   - Insert quick connector (1) to fuel tube until the top spool (C) on fuel tube is inserted completely and the 2nd level spool (D) is positioned slightly below quick connector bottom end.

   B : Upright insertion

   E : Fitted condition

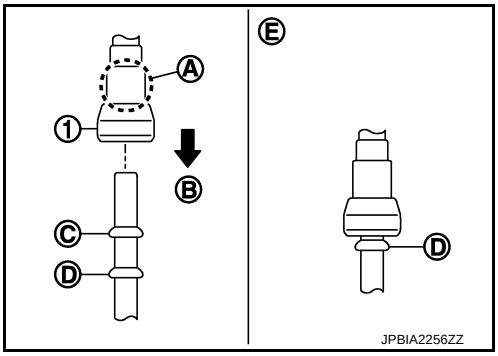

   CAUTION:
   - **Hold (A) position in the figure when inserting fuel tube into quick connector.**
   - **Carefully align center to avoid inclined insertion to prevent damage to O-ring inside quick connector.**
   - **Insert until you hear a "click" sound and actually feel the engagement.**
   - **To avoid misidentification of engagement with a similar sound, be sure to perform the next step.**

d. Pull quick connector hard by hand holding position. Check it is completely engaged (connected) so that it does not come out from fuel tube.

e. Install quick connector cap (engine side) (2) to quick connector connection.

   1. Fuel feed hose
   3. Fuel tube

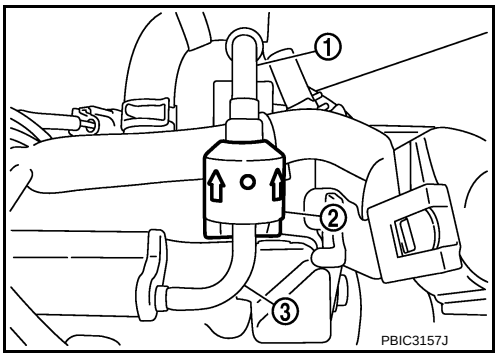

   - Install quick connector cap (engine side) with the side arrow facing quick connector side (fuel feed tube side).

   CAUTION:
   - **Check that the quick connector and fuel tube are securely engaged with the quick connector cap (engine side) mounting groove.**
   - **Quick connector may not be connected correctly if quick connector cap (engine side) cannot be installed easily. Remove the quick connector cap (engine side), and then check the connection of quick connector again.**

f. Install fuel feed hose to hose clamp.

7. Install remaining parts in the reverse order of removal.

Inspection

INFOID:0000000009944942

INSPECTION AFTER INSTALLATION

Check on Fuel Leakage

1. Turn ignition switch “ON” (with the engine stopped). With fuel pressure applied to fuel piping, check there are no fuel leakage at connection points.
   NOTE:
   Use mirrors for checking at points out of clear sight.
2. Start the engine. With engine speed increased, check again that there are no fuel leakage at connection points.
   CAUTION:
   Never touch the engine immediately after stopped, as the engine becomes extremely hot.

IGNITION COIL, SPARK PLUG AND ROCKER COVER

Exploded View

INFOID:0000000009944943

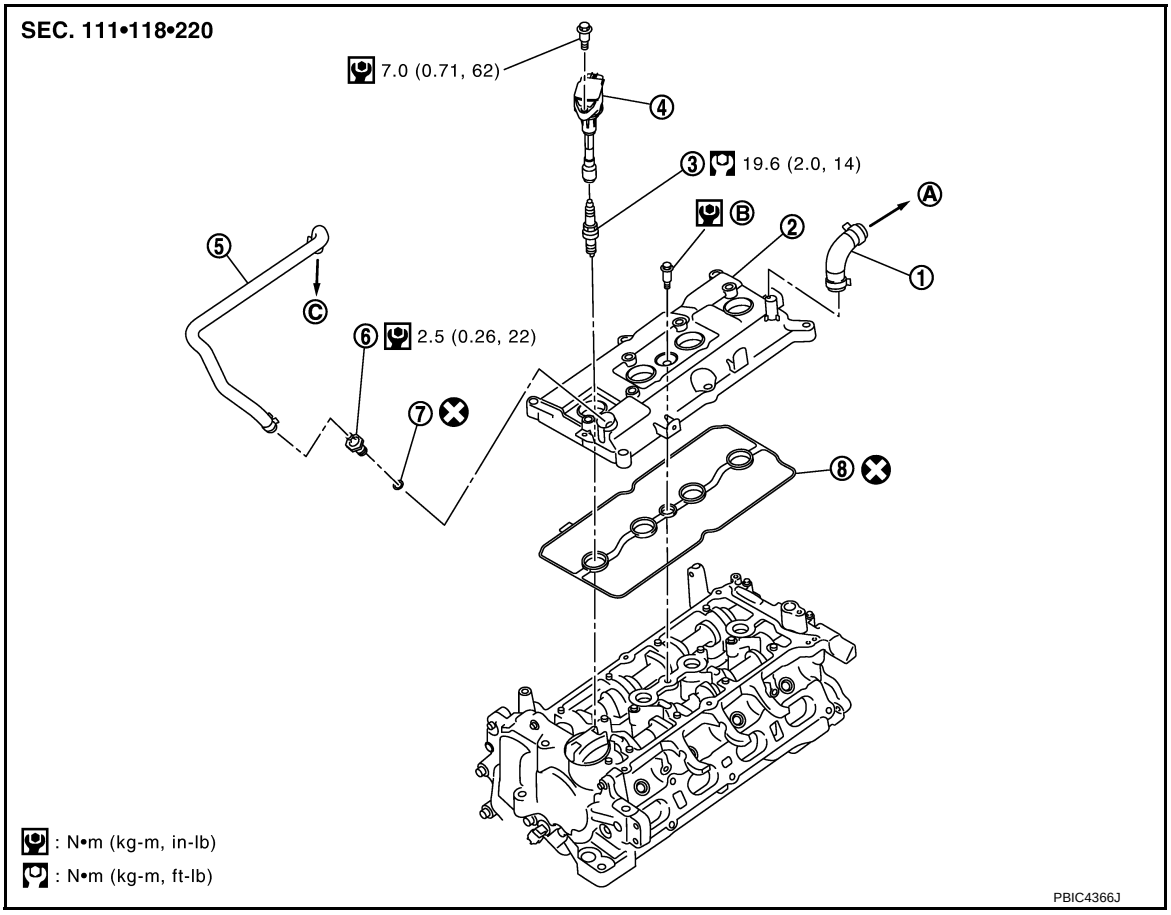

1.	PCV hose	2.	Rocker cover	3.	Spark plug
4.	Ignition coil	5.	PCV hose	6.	PCV valve
7.	O-ring	8.	Rocker cover gasket		
A.	To air duct assembly	B.	Comply with the assembly procedure when tightening. Refer to EM-40	C.	To intake manifold

: Always replace after every disassembly.

Removal and Installation

INFOID:0000000009944944

REMOVAL

1. Remove intake manifold. Refer to EM-26, "Exploded View".
2. Remove ignition coil.
   CAUTION:
   - **Never drop or shock ignition coil.**
   - **Never disassemble ignition coil.**
3. Remove rocker cover.

- Loosen bolts in the order of 7 to 1 as shown in the figure.

⇦ : Engine front

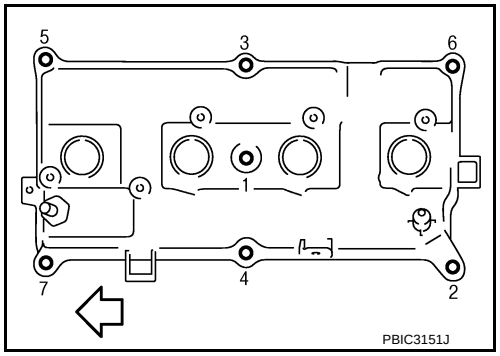

4. Remove PCV valve and PCV hose, if necessary.
5. Remove rocker cover gasket from rocker cover.
6. Use scraper to remove all traces of liquid gasket from cylinder head and front cover.
   CAUTION:
   Never scratch or damage the mating surface when cleaning off old liquid gasket.

INSTALLATION

CAUTION:
Do not reuse O-rings.

1. Install the rocker cover gasket to rocker cover.
   CAUTION:
   Check the gasket is not dropped.
2. Install rocker cover.
   - Tighten bolts in two steps separately in the order of 1 to 7 as shown in the figure.

⇦ : Engine front

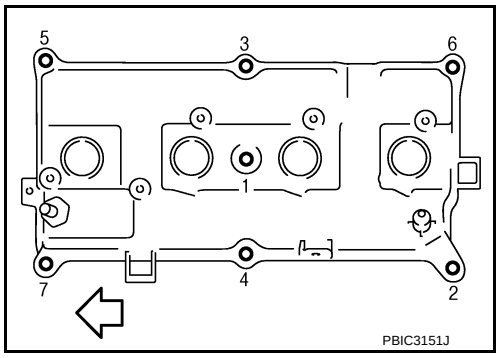

1st step : 1.96 N·m (0.20 kg-m, 17 in-lb)
2nd step : 8.33 N·m (0.85 kg-m, 74 in-lb)

3. Install in the reverse order of removal, for the rest of parts.

TIMING CHAIN

Exploded View

INFOID:0000000009944945

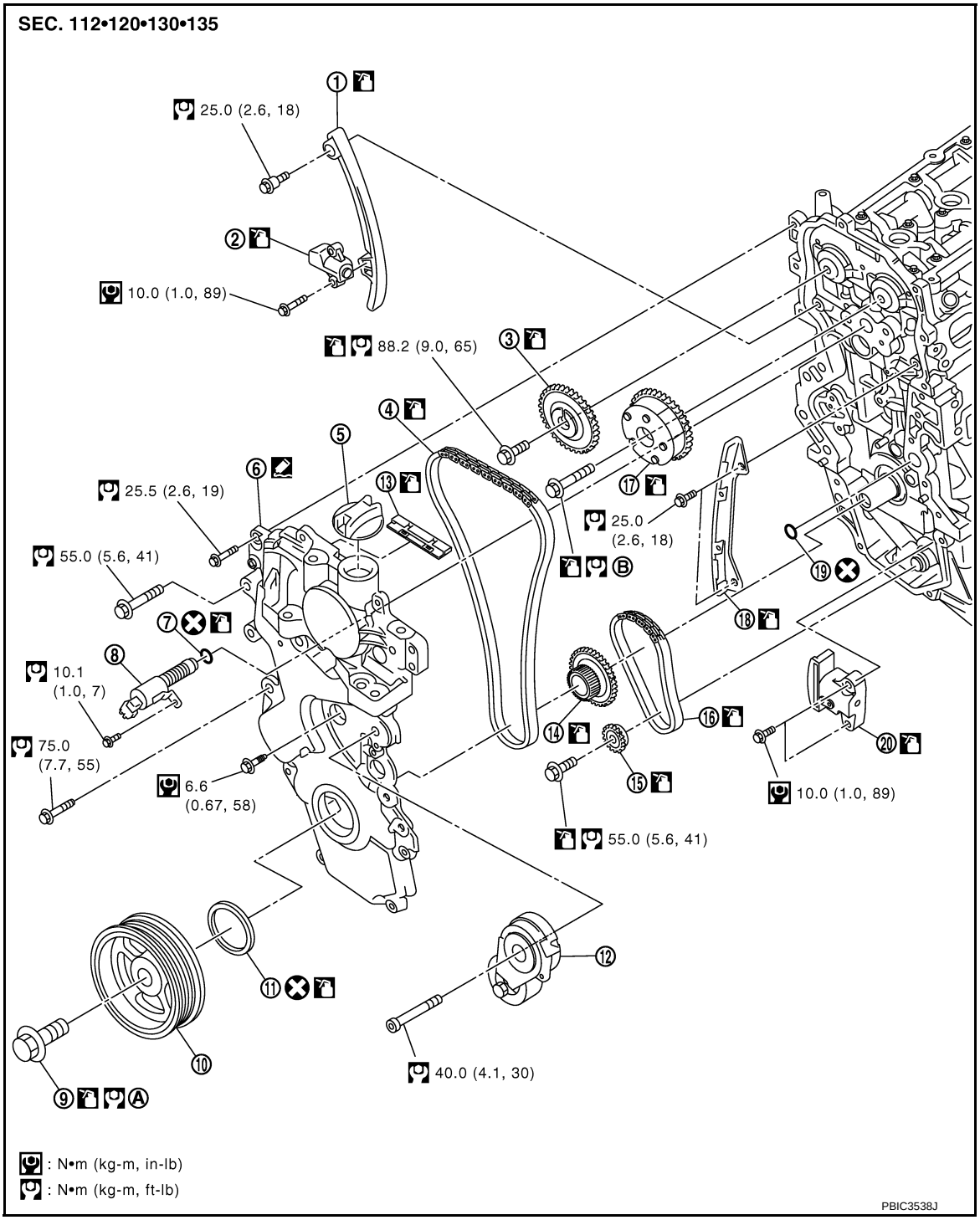

1.	Timing chain slack guide	2.	Timing chain tensioner	3.	Camshaft sprocket (EXH)
4.	Timing chain	5.	Oil filler cap	6.	Front cover
7.	O-ring	8.	Intake valve timing control solenoid valve	9.	Crankshaft pulley bolt
10.	Crankshaft pulley	11.	Front oil seal	12.	Drive belt auto-tensioner
13.	Timing chain tension guide (front cover side)	14.	Crankshaft sprocket	15.	Oil pump sprocket

16. Oil pump drive chain
17. Camshaft sprocket (INT)
18. Timing chain tension guide
19. O-ring
20. Oil pump chain tensioner

A. Comply with the assembly procedure when tightening. Refer to EM-43
B. Comply with the assembly procedure when tightening. Refer to EM-54

: Always replace after every disassembly.

: Should be lubricated with oil.

: Sealing point

Removal and Installation

INFOID:0000000009944946

REMOVAL

CAUTION:
The rotating direction in the text indicates all directions seen from the engine front.

1. Remove front fender protector (RH). Refer to EXT-21, "FENDER PROTECTOR : Exploded View".
2. Drain engine oil. Refer to LU-9, "Draining".
   CAUTION:
   Perform this step when engine is cold.
3. Remove the following parts:
   - Intake manifold: Refer to EM-26, "Exploded View".
   - Rocker cover: Refer to EM-40, "Exploded View".
   - Drive belt: Refer to EM-13, "Removal and Installation".
   - Ground cable (between front cover and radiator core support)
4. Set No. 1 cylinder at TDC on its compression stroke with the following procedure:

a. Rotate crankshaft pulley (1) clockwise and align TDC mark (no paint) (B) to timing indicator (A) on front cover.

C : White paint mark (Not use for service)

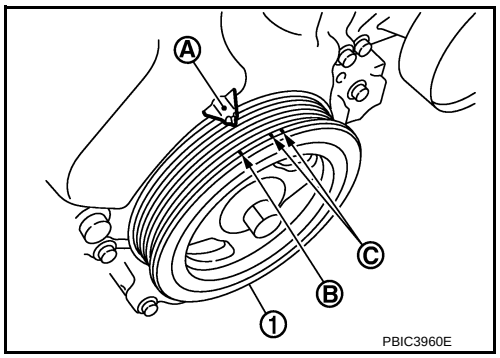

b. At the same time, check that the cam noses of the No. 1 cylinder are located (⬅) as shown in the figure.

1 : Camshaft (INT)
2 : Camshaft (EXH)
⇦ : Engine front

- If not, rotate crankshaft pulley one revolution (360 degrees) and align as shown in the figure.

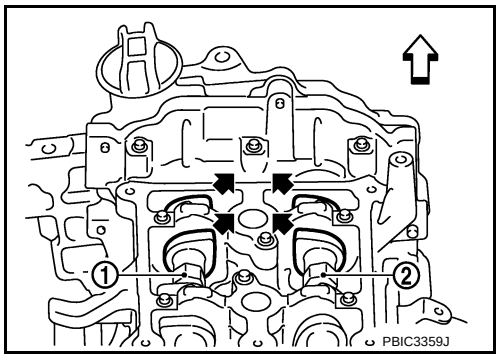

5. Remove crankshaft pulley with the following procedure:

a. Fix crankshaft pulley (1) with a pulley holder (commercial service tool) (A), loosen crankshaft pulley bolt, and locate bolt seating surface at 10 mm (0.39 in) from its original position.
CAUTION:
Never remove the crankshaft pulley bolt as they will be used as a supporting point for the pulley puller [SST: KV11103000 (—)].

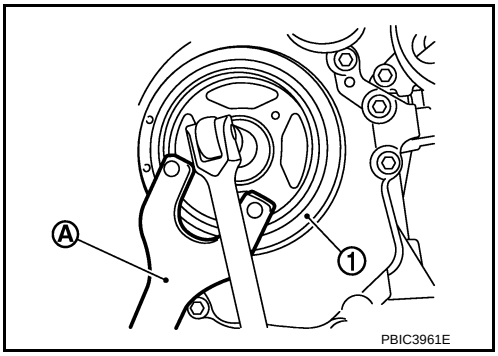

b. Attach a pulley puller [SST: KV11103000 (—)] (A) in the M6 thread hole on crankshaft pulley (1), and remove crankshaft pulley.

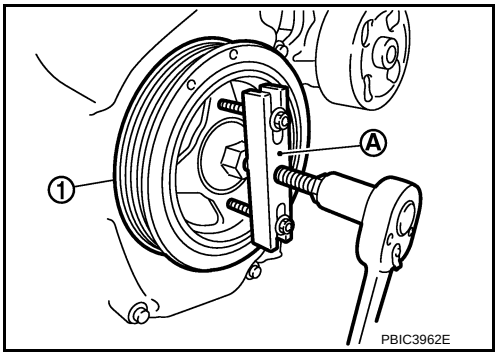

6. Remove oil pan (lower). Refer to EM-32, "Exploded View".
NOTE:
If crankshaft sprocket and oil pump drive component are not removed, this step is unnecessary.
7. Support the bottom surface of engine using a transmission jack, and then remove the engine mounting bracket (RH) and the engine mounting insulator (RH). Refer to EM-74, "Exploded View".
8. Remove intake valve timing control solenoid valve.
9. Remove drive belt auto-tensioner. Refer to EM-23, "Exploded View".
10. Remove front cover with the following procedure:

a. Loosen mounting bolts in the order of 22 to 1 as shown in the figure.

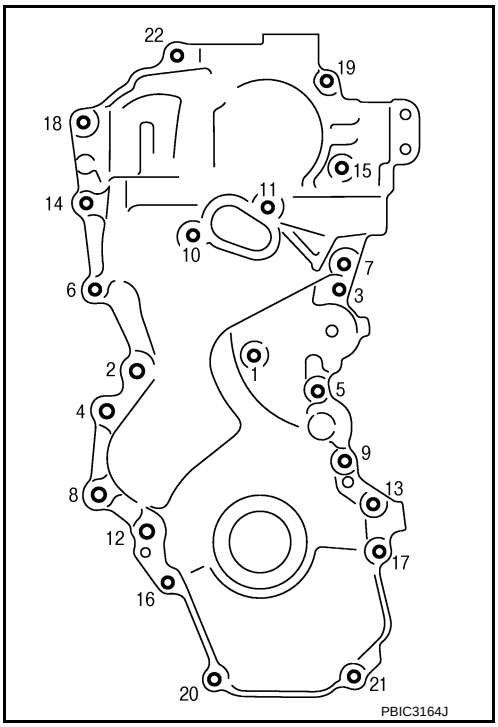

b. Cut liquid gasket by prying the position (⬅) shown in the figure, and then remove the front cover.
CAUTION:
- **Be careful not to damage the mating surface.**
- **A more adhesive liquid gasket is applied compared to previous types when shipped, so it should not be forced off the position not specified.**

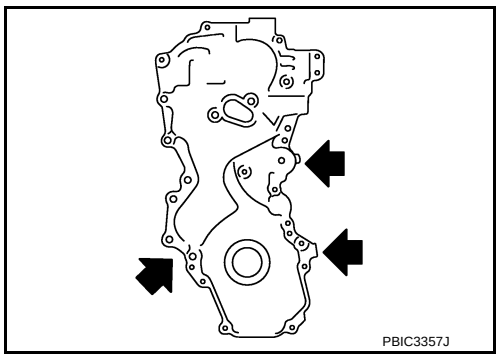

11. Remove front oil seal from front cover.
CAUTION:
Be careful not to damage front cover.
- Lift up front oil seal using a screwdriver.

12. Remove timing chain tensioner with the following procedure:

a. Push in timing chain tensioner plunger.

b. Insert a stopper pin (A) into the body hole, and then fix it with the plunger pushed in.
NOTE:
Use approximately 1.5 mm (0.059 in) diameter. hard metal pin as a stopper pin.

c. Remove timing chain tensioner (1).

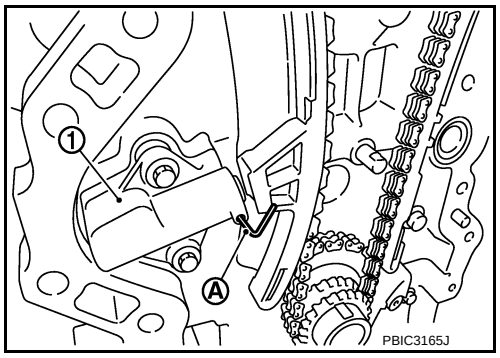

13. Remove slack guide (2), tension guide (3) and timing chain (1).
CAUTION:
Never rotate each crankshaft and camshaft individually while timing chain is removed. It causes interference between valve and piston.
NOTE:
If timing chain is difficult to remove, remove camshaft sprocket (EXH) first to remove timing chain.

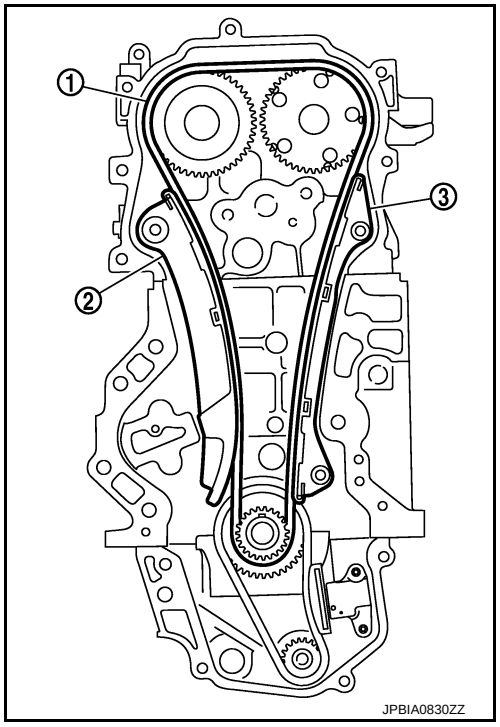

14. Remove crankshaft sprocket and oil pump drive component with the following procedure:

a. Press stopper tab (A) in the direction shown in the figure to push the oil pump chain tensioner slack guide (B) toward oil pump chain tensioner (1).
   - The oil pump chain tensioner slack guide is released by pressing the stopper tab. As the result, the oil pump chain tensioner slack guide can be moved.

b. Insert a stopper pin (D) into tensioner body hole (C) to secure the oil pump chain tensioner slack guide.
   NOTE:
   Use a hard metal pin with the diameter of approximately 1.2 mm (0.047 in) as a stopper pin.

c. Remove oil pump chain tensioner.
   - When the holes on lever and tensioner body cannot be aligned, align these holes by slightly moving the oil pump chain tensioner slack guide.

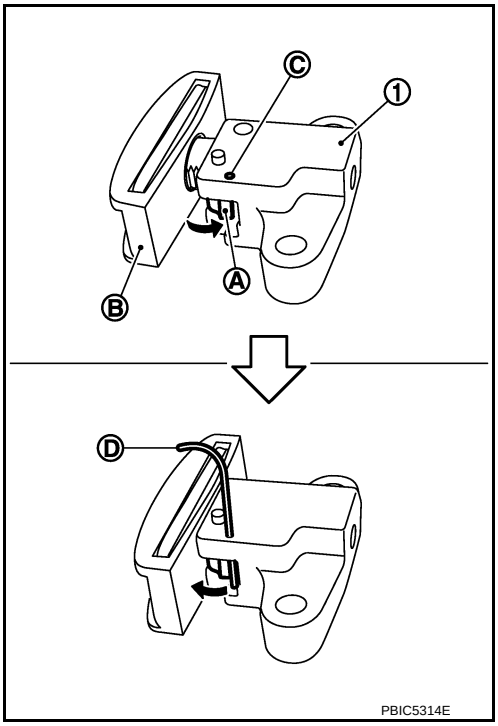

d. Hold the WAF part of oil pump shaft [WAF: 10 mm (0.39 in)] (A), and then loosen the oil pump sprocket bolt and remove it.

   1 : Oil pan (upper)
   2 : Oil pump
   ⇦ : Engine front

   CAUTION:
   - **Secure the oil pump shaft with the WAF part.**
   - **Never loosen the oil pump sprocket bolt by tightening the oil pump drive chain.**

e. Remove crankshaft sprocket, oil pump sprocket, and oil pump drive chain as a set.

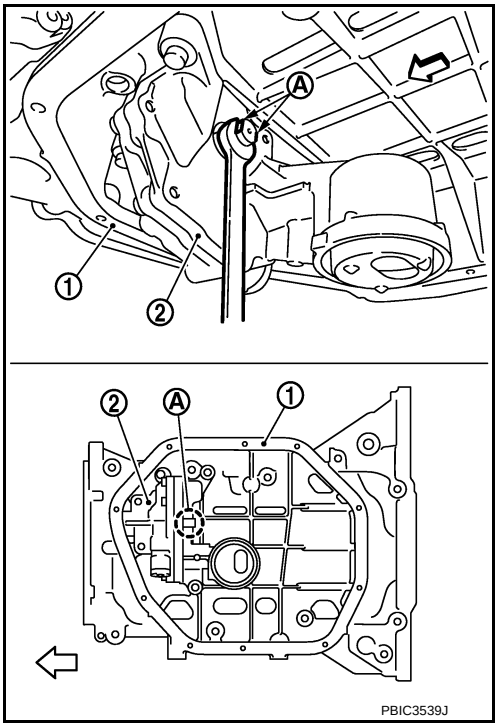

15. Remove tension guide (front cover side) from front cover, if necessary.

INSTALLATION

CAUTION:
Do not reuse O-rings.
NOTE:

The figure shows the relationship between the matching mark on each timing chain and that on the corresponding sprocket, with the components installed.

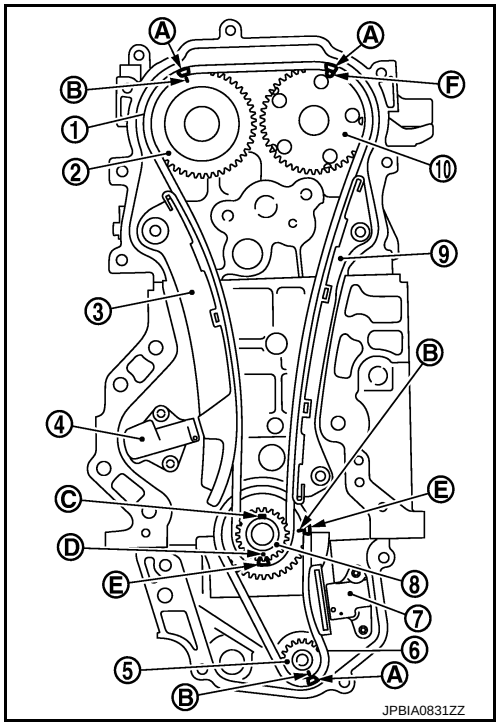

1 : Timing chain
2 : Camshaft sprocket (EXH)
3 : Slack guide
4 : Timing chain tensioner
5 : Oil pump sprocket
6 : Oil pump drive chain
7 : Oil pump chain tensioner
8 : Crankshaft sprocket
9 : Tension guide
10 : Camshaft sprocket (INT)
A : Matching mark (dark blue link)
B : Matching mark (stamping)
C : Crankshaft key position (straight up)
D : Matching mark (stamping)
E : Matching mark (orange link)
F : Matching mark (outer groove*)

*: There are two outer grooves in camshaft sprocket (INT). The wider one is a matching mark.

1. Check that crankshaft key points straight up.
2. If the tension guide (front cover side) is removed, install it to the front cover.
   CAUTION:
   Check the joint condition by sound or feeling.
3. Install crankshaft sprocket (2), oil pump sprocket (3), and oil pump drive chain (1).

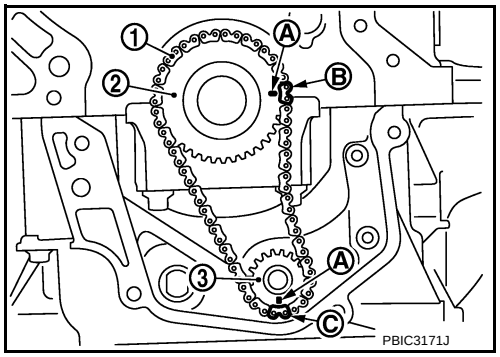

A : Matching mark (stamping)
B : Matching mark (orange link)
C : Matching mark (dark blue link)

- Install it by aligning matching marks on each sprockets and oil pump drive chain.
- If these matching marks are not aligned, rotate the oil pump shaft slightly to correct the position.

CAUTION:
Check matching mark position of each sprockets after installing the oil pump drive chain.

4. Hold the WAF part of oil pump (2) shaft [WAF: 10 mm (0.39 in)] (A), and then tighten the oil pump shaft sprocket bolt.

   1 : Oil pan (upper)

   ⇦ : Engine front

   CAUTION:
   - **Secure the oil pump shaft with the WAF part.**
   - **Never loosen the oil pump shaft sprocket bolt by tightening the oil pump drive chain.**

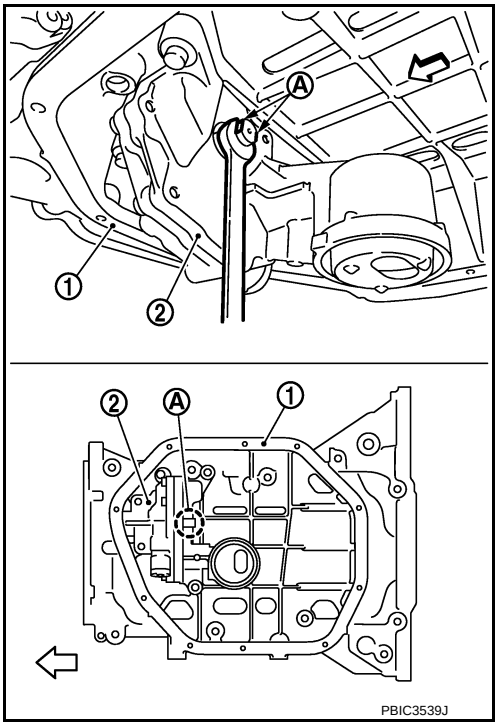

5. Install oil pump chain tensioner (1).
   - Fix the plunger at the most compressed position using a stopper pin (A), and then install it.
   - Securely pull out (⬅) the stopper pin after installing the oil pump chain tensioner.
   - Check matching mark position of oil pump drive chain and each sprockets again.

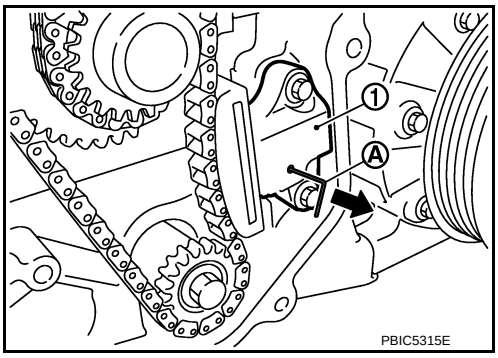

6. Align the matching marks of each sprockets with the matching marks of timing chain.

   1 : Camshaft sprocket (EXH)
   2 : Camshaft sprocket (INT)
   3 : Timing chain
   A : Matching mark (dark blue link)
   B : Matching mark (stamping)
   C : Matching mark (outer groove*)
   D : Matching mark (orange link)
   E : Matching mark (stamping)

   *: There are 2 outer grooves in camshaft sprocket (INT). The wider one is a matching mark.

   - If these matching marks are not aligned, rotate the camshaft slightly by holding the hexagonal portion to correct the position.

   CAUTION:
   Check matching mark position of each sprocket and timing chain again after installing the timing chain.

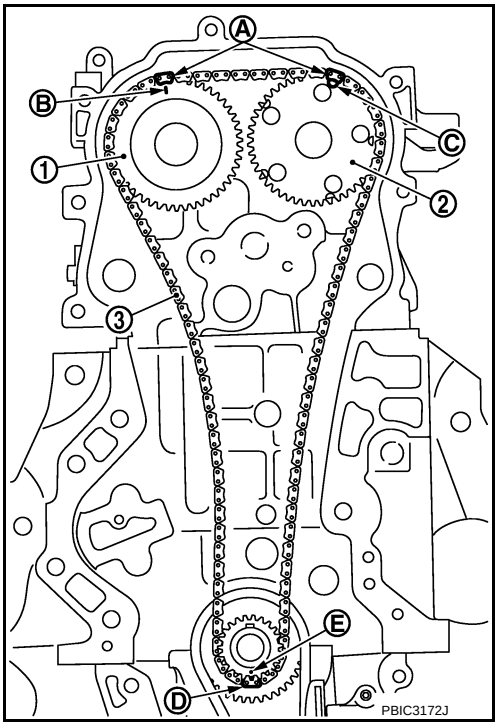

7. Install the slack guide (2) and the tension guide (3).

   1 : Timing chain

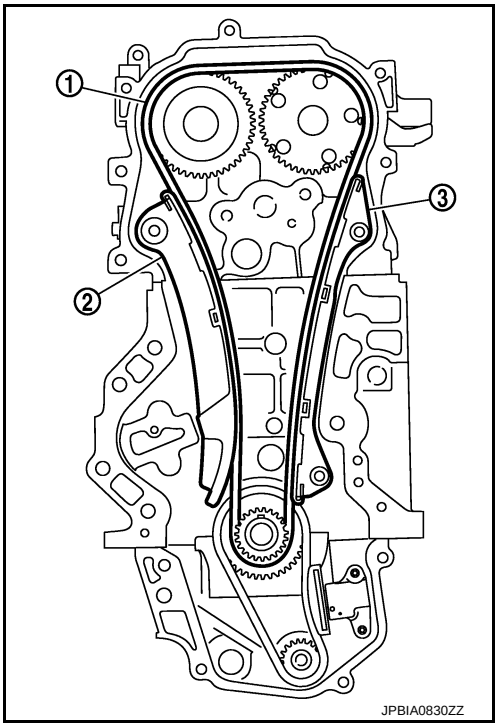

8. Install timing chain tensioner (1).
   - Fix the plunger at the most compressed position using a stopper pin (A), and then install it.
   - Securely pull out the stopper pin after installing the timing chain tensioner.

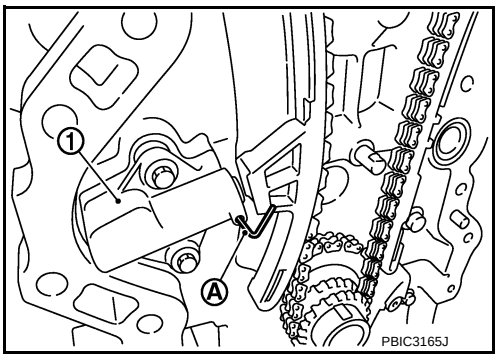

9. Check matching mark position of timing chain and each sprockets again.
10. Install front oil seal. Refer to EM-63, "FRONT OIL SEAL : Removal and Installation".
11. Install front cover with the following procedure:

a. Install new O-ring to cylinder block.
CAUTION:
Never misalign O-ring.

b. Apply a continuous bead of liquid gasket (B) with a tube presser (commercial service tool) to front cover as shown in the figure.

A : Liquid gasket application area
c : 4.0 - 5.6 mm (0.157 - 0.220 in)
d : ϕ3.4 - 4.4 mm (0.134 - 0.173 in)
⇦ : Engine outside

Use Genuine RTV Silicon Sealant or equivalent. Refer to GI-22, "Recommended Chemical Products and Sealants".

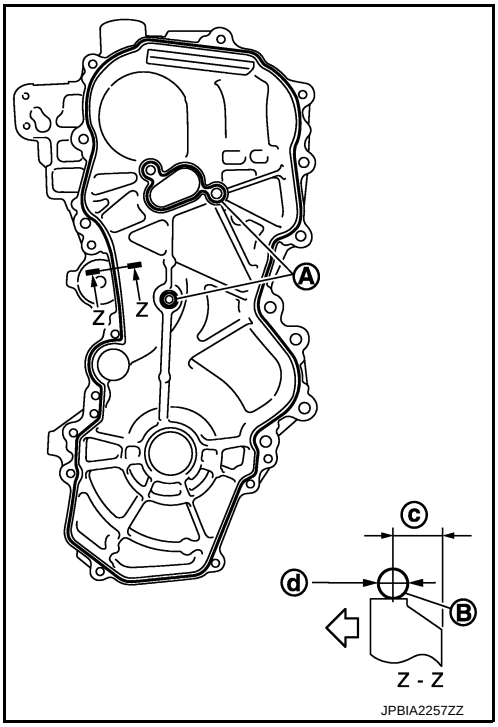

c. Check that matching marks of timing chain and each sprockets are still aligned. Then install front cover.
CAUTION:
- **Check O-ring on cylinder block is correctly installed.**
- **Be careful not to damage front oil seal by interference with front end of crankshaft.**

d. Install front cover, and tighten mounting bolts in the order of 1 to 22 as shown in the figure.
- Refer to the following for the installation position of bolts.

M6 bolt	**: No. 1**
M10 bolts	**: No. 6, 7, 10, 11, 14**
M12 bolts	**: No. 2, 4, 8, 12**
M8 bolts	**: Except the above**

CAUTION:
Attaching should be done within 5 minutes after liquid gasket application.

e. After all bolts are tightened, retighten them to specified torque in numerical order as shown in the figure.
CAUTION:
Be sure to wipe off any excessive liquid gasket leaking.

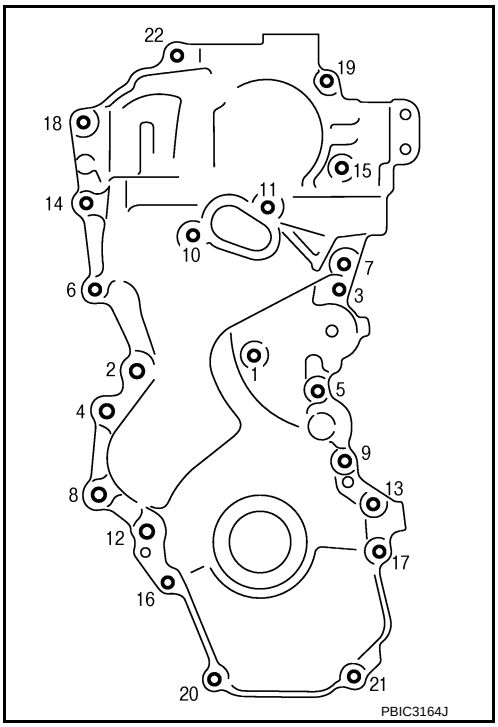

12. Install crankshaft pulley with the following procedure:

a. When inserting crankshaft pulley with a plastic hammer, tap on its center portion (not circumference).
CAUTION:
Never damage front oil seal lip section.

b. Secure crankshaft pulley (1) with a pulley holder (commercial service tool) (A).

c. Apply new engine oil to thread and seat surfaces of crankshaft pulley bolt.

d. Tighten crankshaft pulley bolt.

: 68.6 N·m (7.0 kg-m, 51 ft-lb)

e. Completely loosen.

: 0 N·m (0 kg-m, 0 ft-lb)

f. Tighten crankshaft pulley bolt.

: 29.4 N·m (3.0 kg-m, 22 ft-lb)

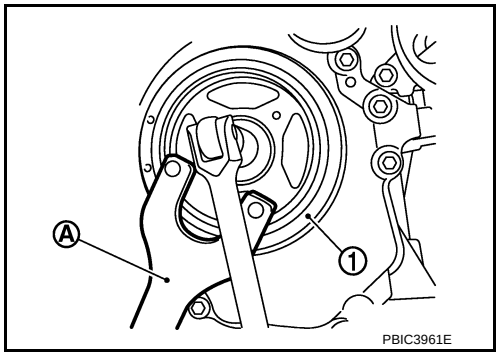

g. Put a paint mark (B) on crankshaft pulley (2), matching with any one of six easy to recognize angle marks (A) on crankshaft pulley bolt (1) flange.

h. Turn another 60 degrees clockwise (angle tightening).
- Check the tightening angle with movement of one angle mark.

i. Check that crankshaft rotates clockwise smoothly.

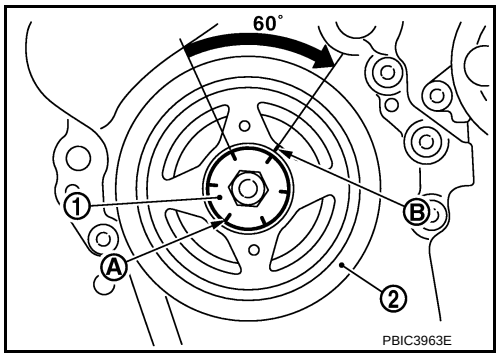

13. Install remaining parts in the reverse order of removal.

Inspection

INFOID:0000000009944947

INSPECTION AFTER REMOVAL

Timing Chain

Check for cracks (A) and any excessive wear (B) at link plates and roller links of timing chain. Replace timing chain if necessary.

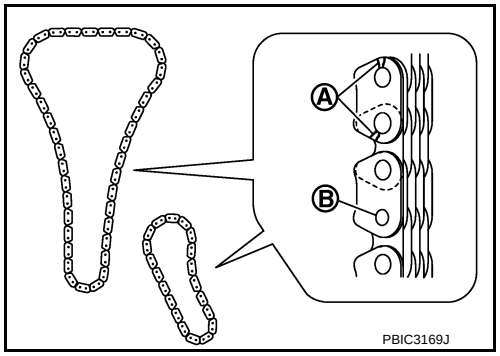

INSPECTION AFTER INSTALLATION

Inspection for Leakage

The following are procedures for checking fluids leakage, lubricates leakage, and exhaust gases leakage.
- Before starting engine, check oil/fluid levels including engine coolant and engine oil. If less than required quantity, fill to the specified level. Refer to MA-10, "Fluids and Lubricants".
- Use procedure below to check for fuel leakage.
- Turn ignition switch “ON” (with engine stopped). With fuel pressure applied to fuel piping, check for fuel leakage at connection points.
- Start engine. With engine speed increased, check again for fuel leakage at connection points.

- Run engine to check for unusual noise and vibration.
  NOTE:
  If hydraulic pressure inside chain tensioner drops after removal/installation, slack in guide may generate a pounding noise during and just after the engine start. However, this does not indicate an unusualness. Noise will stop after hydraulic pressure rises.
- Warm up engine thoroughly to check there is no leakage of fuel, or any oil/fluids including engine oil and engine coolant.
- Bleed air from lines and hoses of applicable lines, such as in cooling system.
- After cooling down engine, again check oil/fluid levels including engine oil and engine coolant. Refill to the specified level, if necessary.

Summary of the inspection items:

Items		Before starting engine	Engine running	After engine stopped
Engine coolant		Level	Leakage	Level
Engine oil		Level	Leakage	Level
Transmission / transaxle fluid	AT & CVT Models	Leakage	Level / Leakage	Leakage
	MT Models	Level / Leakage	Leakage	Level / Leakage
Other oils and fluids*		Level	Leakage	Level
Fuel		Leakage	Leakage	Leakage
Exhaust gases		—	Leakage	—

*: Power steering fluid, brake fluid, etc.

CAMSHAFT

Exploded View

INFOID:0000000009944948

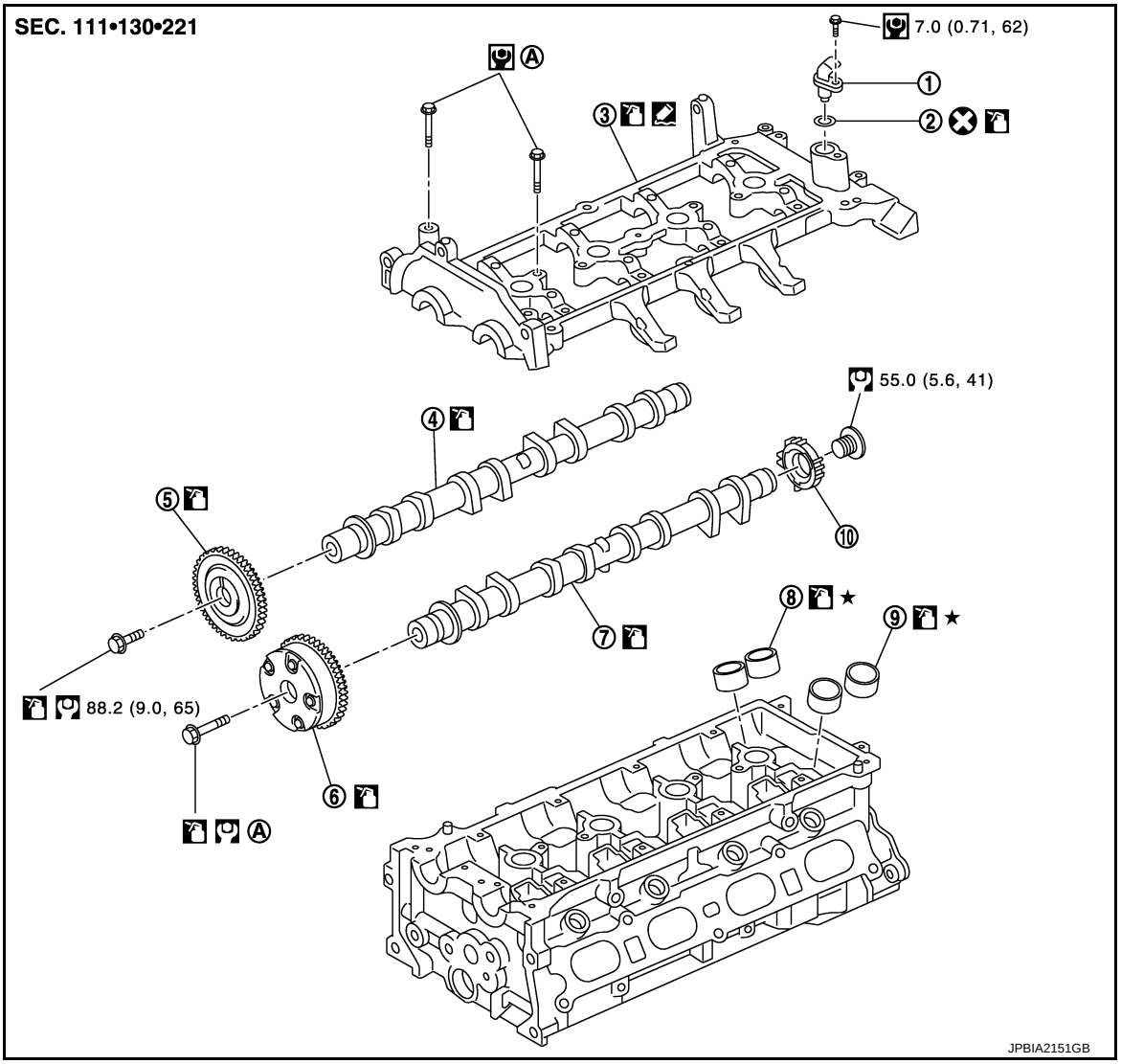

1.	Camshaft position sensor (PHASE)	2.	O-ring	3.	Camshaft bracket
4.	Camshaft (EXH)	5.	Camshaft sprocket (EXH)	6.	Camshaft sprocket (INT)
7.	Camshaft (INT)	8.	Valve lifter (EXH)	9.	Valve lifter (INT)
10.	Signal plate				

A. Comply with the assembly procedure when tightening. Refer to EM-54

: Always replace after every disassembly.

: N·m (kg-m, ft-lb)

: N·m (kg-m, in-lb)

: Should be lubricated with oil.

: Sealing point

★ : Select with proper thickness.

Removal and Installation

INFOID:0000000009944949

CAUTION:
The rotating direction in the text indicates all directions seen from the engine front.

REMOVAL

1. Remove the following parts.
   - Intake manifold: Refer to EM-26, "Exploded View".
   - Rocker cover: Refer to EM-40, "Exploded View".
   - Front cover and timing chain related parts: Refer to EM-42, "Exploded View".

   NOTE:
   Removal of oil pump drive related part is not necessary.
2. Remove camshaft position sensor (PHASE) from camshaft bracket.

   CAUTION:
   - **Handle camshaft position sensor (PHASE) carefully and avoid impacts.**
   - **Never disassemble camshaft position sensor (PHASE).**
   - **Never place sensor where it is exposed to magnetism.**
3. Put the matching mark (A) on the camshaft sprocket (INT) (2) and the camshaft bracket (1) as shown in the figure.

   ⇦ : Engine front

   NOTE:
   It prevents the knock pin of the camshaft (INT) from engaging with the incorrect pin hole when installing the camshaft sprocket (INT).

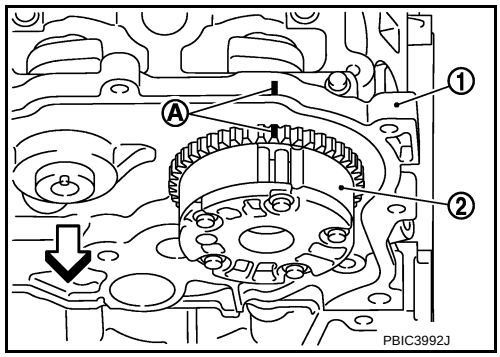

4. Remove camshaft sprockets (INT and EXH).
   - Secure hexagonal part (A) of camshaft with a wrench. Loosen camshaft sprocket mounting bolts and remove camshaft sprocket.

   1 : Camshaft sprocket (INT)
   2 : Camshaft sprocket (EXH)

   CAUTION:
   - **Never rotate crankshaft or camshaft while timing chain is removed. It causes interference between valve and piston.**
   - **Never loosen the mounting bolts with securing anything other than the camshaft hexagonal part or with tensioning the timing chain.**

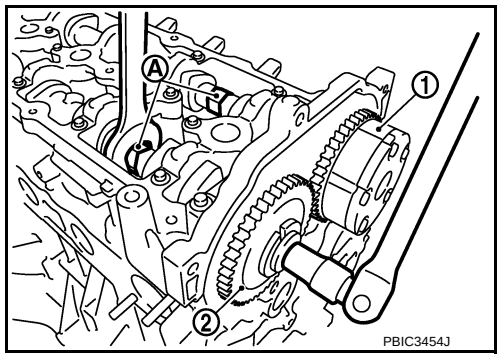

5. Remove camshaft bracket with the following procedure:

a. Loosen mounting bolts in the order of 17 to 1 as shown in the figure.

   ⇦ : Engine front

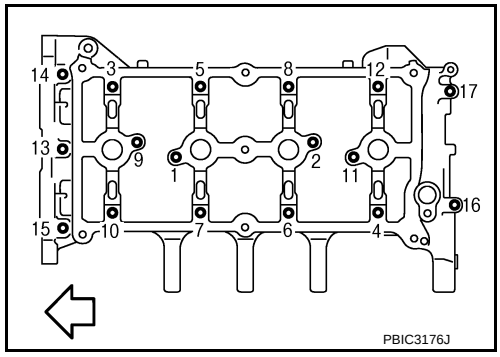

b. Cut liquid gasket by prying the position (⬅) shown in the figure, and then remove the camshaft bracket.

⇦ : Engine front

CAUTION:
- **Be careful not to damage the mating surface.**
- **A more adhesive liquid gasket is applied compared to previous types when shipped, so it should not be forced off the position not specified.**

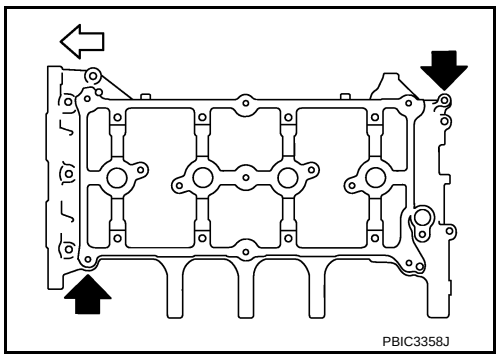

6. Remove camshafts.
7. Remove valve lifters.
   - Identify installation positions, and store them without mixing them up.
8. Remove signal plate from camshaft (INT), if necessary.

INSTALLATION

CAUTION:
Do not reuse O-rings.

1. Install valve lifters.
   - Install them in the original positions.
2. Install camshafts.
   - Clean camshaft journal to remove any foreign material.
   - Distinguish between the intake and the exhaust by looking at the different shapes of the front and rear ends of the camshaft or using the identification colors (A) and (B).

1 : Camshaft (EXH)
2 : Camshaft (INT)

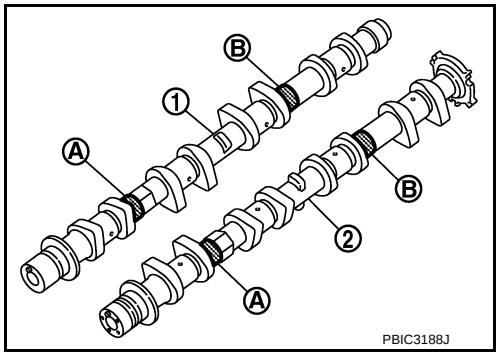

Identification color	A	B
Camshaft (EXH)	—	Yellow
Camshaft (INT)	Yellow	—

- Install camshafts so that camshaft dowel pins (A) on the front side are positioned as shown in the figure.

1 : Camshaft (EXH)
2 : Camshaft (INT)

NOTE:
Though camshaft does not stop at the positions as shown in the figure, for the placement of cam nose, it is generally accepted camshaft is placed for the same direction of the figure.

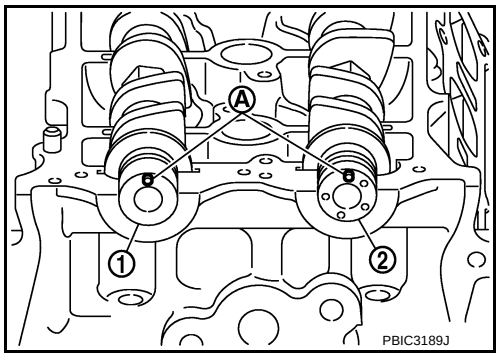

3. Install camshaft bracket with the following procedure:

a. Remove foreign material completely from camshaft bracket backside and from cylinder head installation face.

b. Apply liquid gasket (A) to camshaft bracket as shown in the figure.

B : Plug hole inner wall

⇦ : Engine front

⬅ : Engine outside

Use Genuine Liquid Gasket or equivalent.

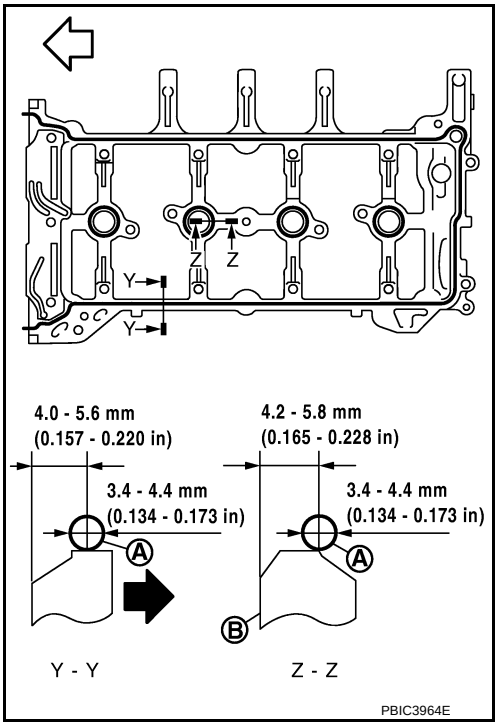

c. Tighten mounting bolts of camshaft brackets in the following steps, in the order of 1 to 17 as shown in the figure.

⇦ : Engine front

- There are two types of mounting bolts. Refer to the following for locating bolts.

M6 bolts [thread length: 57.5 mm (2.264 in)]
: 13, 14, and 15 in the figure
M6 bolts [thread length: 35.0 mm (1.378 in)]
: Except the above

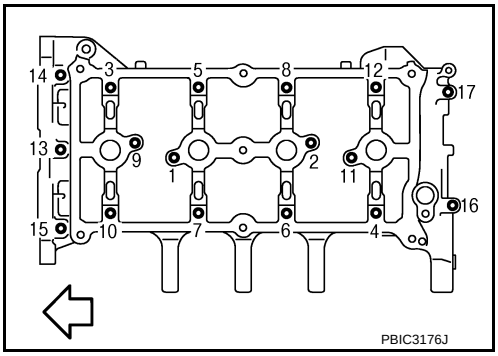

i. Tighten mounting bolts in numerical order.

: 1.96 N·m (0.20 kg-m, 17 in-lb)

ii. Tighten mounting bolts in numerical order.

: 5.88 N·m (0.60 kg-m, 52 in-lb)

iii. Tighten mounting bolts in numerical order.

: 9.5 N·m (0.97 kg-m, 84 in-lb)

CAUTION:
After tightening mounting bolts of camshaft brackets, be sure to wipe off excessive liquid gasket from the mating surface of cylinder head.

4. Install the camshaft sprocket (INT) to the camshaft (INT) with the following procedure.

a. When the camshaft sprocket (INT) (2) is removed, refer to the paint mark (A) put according to step “3”. Securely align the knock pin and the pin hole, and then install them.

1 : Camshaft bracket

⇦ : Engine front

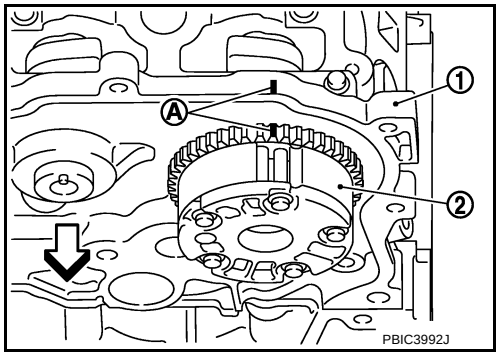

b. Tighten bolts in the following steps.
- Secure the hexagonal part of camshaft (INT) using wrench to tighten mounting bolt.

i. Tighten camshaft (INT) mounting bolt.

: 35.0 N·m (3.6 kg-m, 26 ft-lb)

ii. Turn 67 degrees clockwise (angle tightening).

CAUTION:

Check the tightening angle by using an angle wrench [SST: KV10112100 (BT8653-A)] (B) or protractor. Never judge by visual inspection without an angle wrench.

1 : Camshaft sprocket (INT)

A : Camshaft (INT) hexagonal part

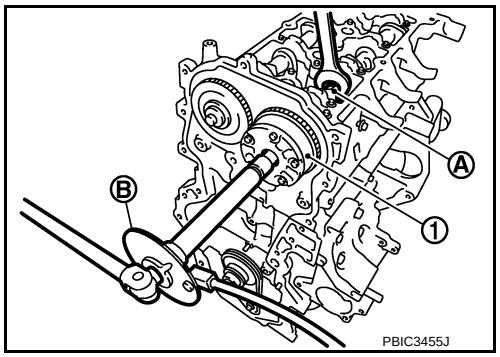

5. Install camshaft sprocket (EXH) (2).

1 : Camshaft sprocket (INT)

- Secure the hexagonal part (A) of camshaft (EXH) using wrench to tighten mounting bolt.

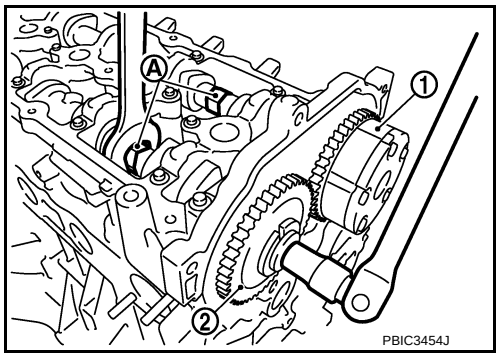

6. Install timing chain and related parts. Refer to EM-42, "Exploded View".
7. Inspect and adjust valve clearance. Refer to EM-18, "Inspection and Adjustment".
8. Install remaining parts in the reverse order of removal.

Inspection

INFOID:0000000009944950

INSPECTION AFTER REMOVAL

Camshaft Runout

1. Put V-block on a precise flat table, and support No. 2 and 5 journal of camshaft.

CAUTION:

Never support No. 1 journal (on the side of camshaft sprocket) because it has a different diameter from the other four locations.

2. Set dial indicator (A) vertically to No. 3 journal.
3. Turn camshaft to one direction with hands, and measure the camshaft runout on dial indicator. (Total indicator reading)

Standard and Limit : Refer to EM-114, "Camshaft".

4. If it exceeds the limit, replace camshaft.

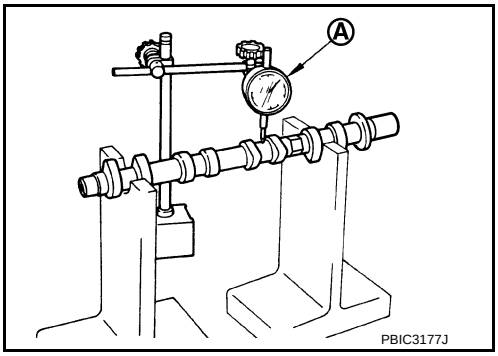

Camshaft Cam Height

1. Measure the camshaft cam height with a micrometer (A).

Standard and Limit : Refer to EM-114, "Camshaft".

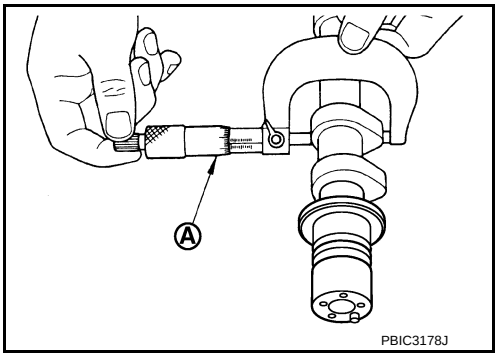

2. If it exceeds the limit, replace camshaft.

Camshaft Journal Oil Clearance

CAMSHAFT JOURNAL OUTER DIAMETER

Measure the outer diameter of camshaft journal with a micrometer (A).

Standard : Refer to EM-114, "Camshaft".

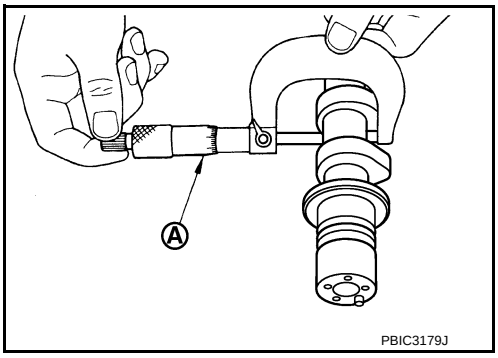

CAMSHAFT BRACKET INNER DIAMETER

- Tighten camshaft bracket bolts with specified torque. Refer to EM-54, "Removal and Installation".
- Measure the inner diameter of camshaft bracket with a bore gauge (A).

B : Measuring direction of inner diameter

Standard : Refer to EM-114, "Camshaft".

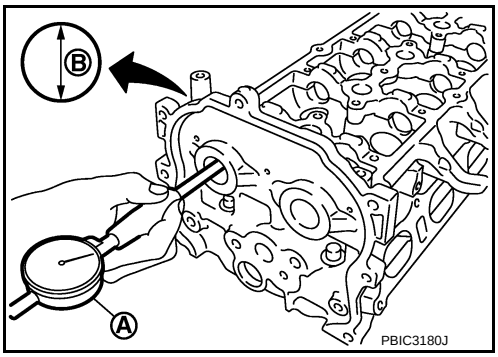

CAMSHAFT JOURNAL OIL CLEARANCE

- (Oil clearance) = (Camshaft bracket inner diameter) – (Camshaft journal diameter)

Standard and Limit : Refer to EM-114, "Camshaft".

- If it exceeds the limit, replace camshaft or cylinder head, or both.

NOTE:
Camshaft bracket cannot be replaced as a single part, because it is machined together with cylinder head. Replace whole cylinder head assembly.

Camshaft End Play

1. Install camshaft in cylinder head. Refer to EM-54, "Removal and Installation".
2. Install dial indicator in thrust direction on front end of camshaft. Read the end play of dial indicator (A) when camshaft is moved forward/backward (in direction to axis).

Standard and Limit : Refer to EM-114, "Camshaft".

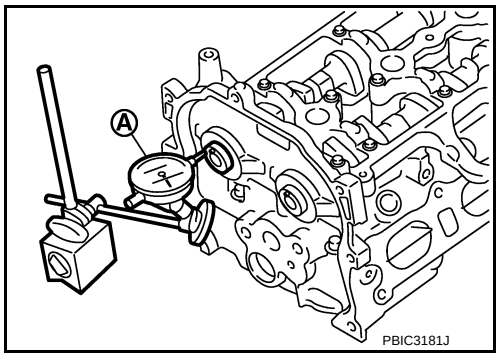

- Measure the following parts if out of the standard.
- Dimension (A) for groove of cylinder head No. 1 journal

Standard : 4.000 - 4.030 mm (0.1575 - 0.1587 in)

- Dimension (B) for camshaft flange

Standard : 3.877 - 3.925 mm (0.1526 - 0.1545 in)

- Refer to the standards above, and then replace camshaft and/or cylinder head.

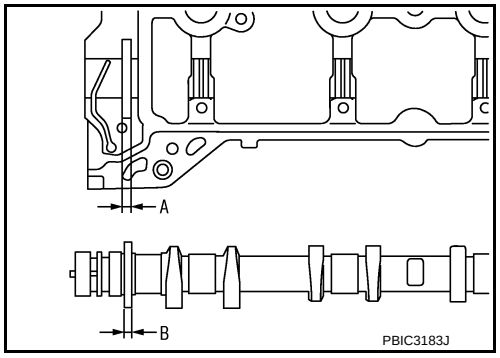

Camshaft Sprocket Runout

1. Put V-block on precise flat table, and support No. 2 and 5 journals of camshaft.
CAUTION:
Never support No. 1 journal (on the side of camshaft sprocket) because it has a different diameter from the other four locations.
2. Measure the camshaft sprocket runout with a dial indicator (A). (Total indicator reading)

Limit : Refer to EM-114, "Camshaft".

- If it exceeds the limit, replace camshaft sprocket.

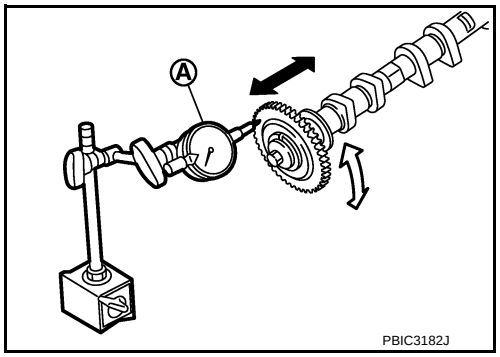

Valve Lifter

Check if surface of valve lifter has any wear or cracks.

- If anything above is found, replace valve lifter. Refer to EM-114, "Camshaft".

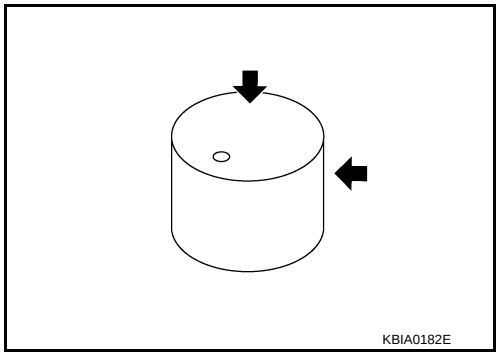

Valve Lifter Clearance

VALVE LIFTER OUTER DIAMETER

- Measure the outer diameter of valve lifter with a micrometer (A).

Standard : Refer to EM-114, "Camshaft".

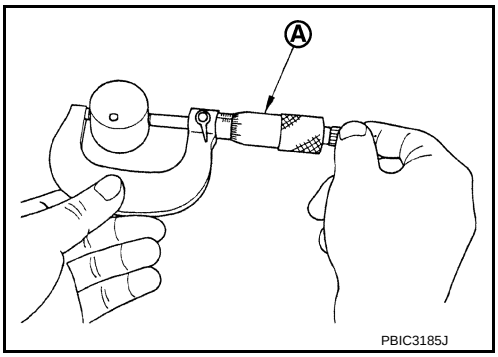

VALVE LIFTER HOLE DIAMETER

Measure the inner diameter of valve lifter hole of cylinder head with an inside micrometer (A).

Standard : Refer to EM-114, "Camshaft".

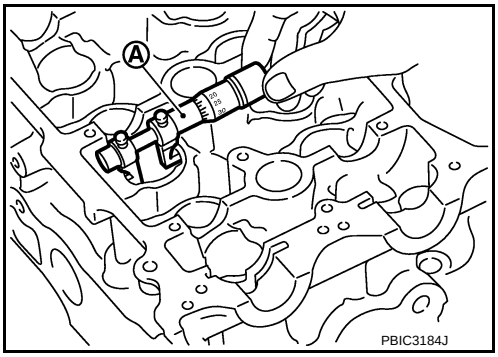

VALVE LIFTER CLEARANCE

- (Valve lifter clearance) = (Valve lifter hole diameter) – (Valve lifter outer diameter)

Standard : Refer to EM-114, "Camshaft".

- If out of the standard, referring to the each standard of valve lifter outer diameter and valve lifter hole diameter, replace either or both valve lifter and cylinder head.

INSPECTION AFTER INSTALLATION

Inspection of Camshaft Sprocket (INT) Oil Groove

CAUTION:

- **Perform this inspection only when DTC P0011 is detected in self-diagnostic results of CONSULT and it is directed according to inspection procedure of EC section. Refer to EC-135, "Diagnosis Procedure".**
- **Check when engine is cold so as to prevent burns by the splashing engine oil.**

1. Check engine oil level. Refer to LU-8, "Inspection".
2. Perform the following procedure so as to prevent the engine from being unintentionally started while checking.

a. Release the fuel pressure. Refer to EC-478, "Inspection".

b. Remove intake manifold. Refer to EM-26, "Exploded View".

c. Disconnect ignition coil and injector harness connectors.

d. Support the bottom surface of engine using a transmission jack, and then remove the engine mounting bracket (RH) and engine mounting insulator (RH). Refer to EM-74, "Exploded View".

3. Remove intake valve timing control solenoid valve. Refer to EM-42, "Exploded View".
   - Lift the front side of the engine with a jack base to remove intake valve timing control solenoid valve.
4. Clean the mounting area of intake valve timing control solenoid valve, and then insert a clean waste with no oil adhesion into the oil hole of the cylinder head.
5. Install engine mounting insulator (RH) and engine mounting bracket (RH). (After the removal of intake valve timing control solenoid valve and insertion of a waste into the oil hole.)
6. Perform cranking to check that engine oil comes out from the oil hole (mounting hole of intake valve timing control solenoid valve) of cylinder head.
   - Regarding the engine oil check, judge it by the amount of oil adhered to the wasted inserted into the oil hole.

   WARNING:
   - **Never insert fingers into the oil hole.**
   - **Be careful not to touch rotating parts (drive belt, idler pulleys and crankshaft pulley, etc.).**

CAUTION:
- **Never perform cranking without installing the engine mounting insulator (RH) and engine mounting bracket (RH).**
- **Prevent splashing by using a shop cloth so as to prevent the worker from injury from engine oil and so as to prevent engine oil contamination.**
- **Prevent splashing by using a shop cloth so as to prevent engine oil from being splashed to engine and vehicle. Especially, be careful not to apply engine oil to rubber parts of drive belt, engine mounting insulator, etc. Wipe engine oil off immediately if it is splashed.**

7. Perform the following inspection if engine oil does not come out from intake valve timing control solenoid valve oil hole of the cylinder head.
   - Remove oil filter (for intake valve timing control), and then clean it. Refer to EM-86, "Exploded View".
   - Clean oil groove between oil strainer and intake valve timing control solenoid valve. Refer to LU-2, "Engine Lubrication System" and LU-2, "Engine Lubrication System Schematic".
8. Remove components between intake valve timing control solenoid valve and camshaft sprocket (INT), and then check each oil groove for clogging.
   - Clean oil groove if necessary. Refer to LU-2, "Engine Lubrication System" and LU-2, "Engine Lubrication System Schematic".
9. After inspection, install removed parts in the reverse order.

OIL SEAL

VALVE OIL SEAL

VALVE OIL SEAL : Removal and Installation

INFOID:0000000009944951

REMOVAL

1. Remove camshafts. Refer to EM-53, "Exploded View".
2. Remove valve lifters. Refer to EM-53, "Exploded View".
3. Rotate crankshaft, and set piston whose valve oil seal is to be removed to TDC. This will prevent valve from dropping into cylinder.
   CAUTION:
   When rotating crankshaft, be careful to avoid scarring front cover with timing chain.
4. Remove valve collet.
   - Compress valve spring with the valve spring compressor [SST: KV10116200 (J-26336-A)] (A), the attachment [SST: KV10115900 (J-26336-20)] (C), and the adapter [SST: KV10109220 (—)] (B). Remove valve collet with magnet hand.
   CAUTION:
   Be careful not to damage valve lifter holes.

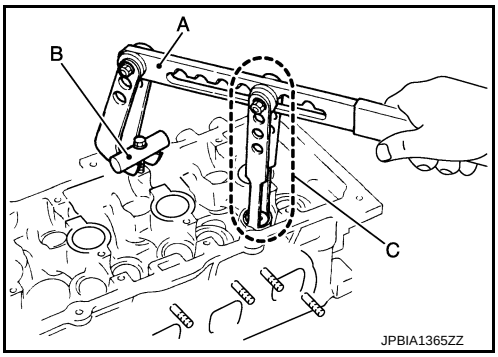

5. Remove valve spring retainer and valve spring (with valve spring seat).
   CAUTION:
   Never remove valve spring seat from valve spring.
6. Remove valve oil seal with the valve oil seal puller [SST: KV10107902 (J-38959)] (A).

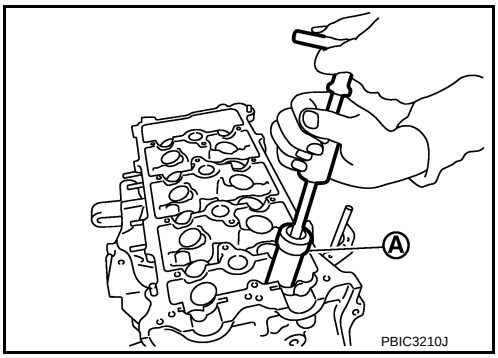

INSTALLATION

1. Apply new engine oil to valve oil seal joint surface and seal lip.
2. Press in valve oil seal to the height (H) shown in the figure with the valve oil seal drift [SST: KV10115600 (J-38958)] (A).

   Height (H) : 15.1 - 15.7 mm (0.594 - 0.618 in)

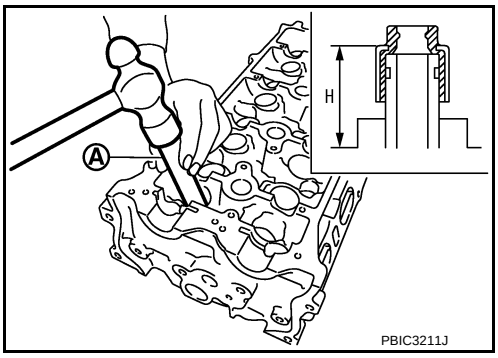

3. Install in the reverse order of removal, for the rest of parts.

FRONT OIL SEAL

FRONT OIL SEAL : Removal and Installation

INFOID:0000000009944952

REMOVAL

1. Remove the following parts.
   - Front fender protector (RH): Refer to EXT-21, "FENDER PROTECTOR : Exploded View".
   - Drive belt: Refer to EM-13, "Exploded View".
   - Crankshaft pulley: Refer to EM-42, "Exploded View".
2. Remove front oil seal with a suitable tool.
   CAUTION:
   Be careful not to damage front cover and crankshaft.

INSTALLATION

1. Apply new engine oil to new front oil seal joint surface and seal lip.
2. Install front oil seal so that each seal lip is oriented as shown in the figure.

   A : Dust seal lip
   B : Oil seal lip
   ⇦ : Engine outside
   ⬅ : Engine inside

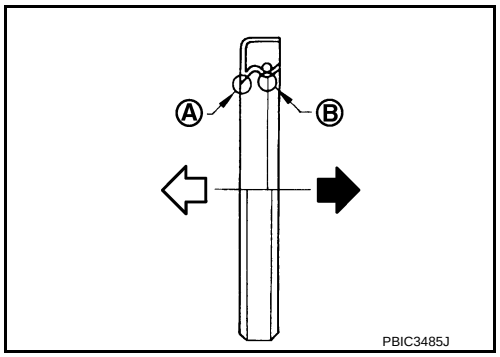

   - Press-fit front oil seal using a suitable drift with outer diameter 57 mm (2.24 in) and inner diameter 45 mm (1.77 in).

     Within 0.3 mm (0.012 in) toward engine front (crankshaft pulley side)
     Within 0.5 mm (0.020 in) toward engine rear (crankshaft sprocket side)

     CAUTION:
     - **Be careful not to damage front cover and crankshaft.**
     - **Press-fit oil seal straight to avoid causing burrs or tilting.**

3. Install in the reverse order of removal, for the rest of parts.

REAR OIL SEAL

REAR OIL SEAL : Removal and Installation

INFOID:0000000009944953

REMOVAL

1. Remove transaxle assembly. Refer to TM-235, "Exploded View" (CVT models) or TM-25, "Exploded View" (M/T models).
2. Remove clutch cover and clutch disk (M/T models). Refer to CL-18, "Exploded View".
3. Remove drive plate (CVT models) or flywheel (M/T models). Refer to EM-86, "Exploded View".
4. Remove rear oil seal with a suitable tool.
   CAUTION:
   Be careful not to damage crankshaft and cylinder block.

INSTALLATION

1. Apply the liquid gasket lightly to entire outside area of new rear oil seal.
   Use Genuine RTV Silicon Sealant or equivalent. Refer to GI-22, "Recommended Chemical Products and Sealants".

2. Install rear oil seal so that each seal lip is oriented as shown in the figure.

   A : Dust seal lip
   B : Oil seal lip
   ⇦ : Engine outside
   ⬅ : Engine inside

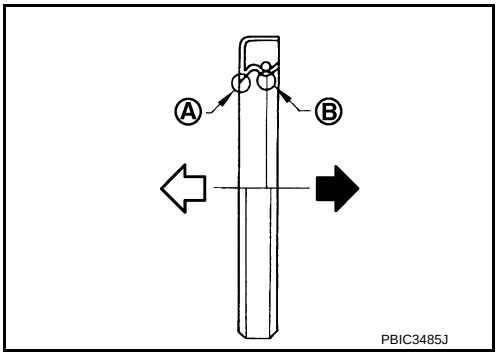

- Press-fit rear oil seal with a suitable drift (A) outer diameter 115 mm (4.53 in) and inner diameter 90 mm (3.54 in).
  CAUTION:
  - **Be careful not to damage crankshaft and cylinder block.**
  - **Press-fit oil seal straight to avoid causing burrs or tilting.**
  - **Never touch grease applied onto oil seal lip.**

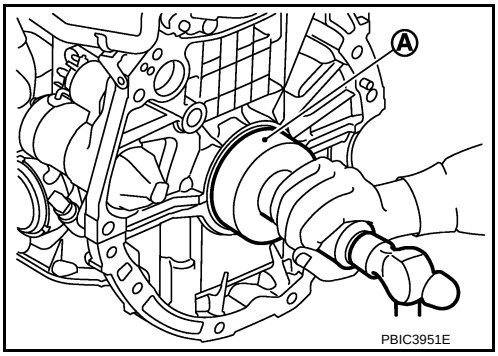

- Press in rear oil seal (1) to the position as shown in the figure.

  A : Rear end surface of cylinder block

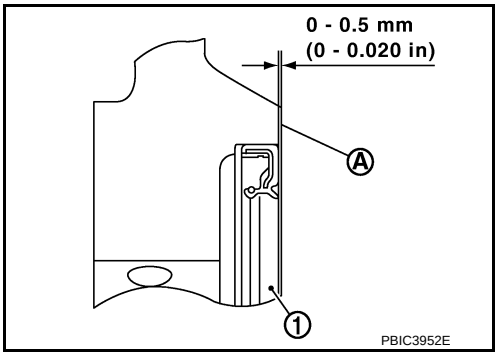

3. Install in the reverse order of removal, for the rest of parts.

CYLINDER HEAD

Exploded View

INFOID:0000000009944954

REMOVAL

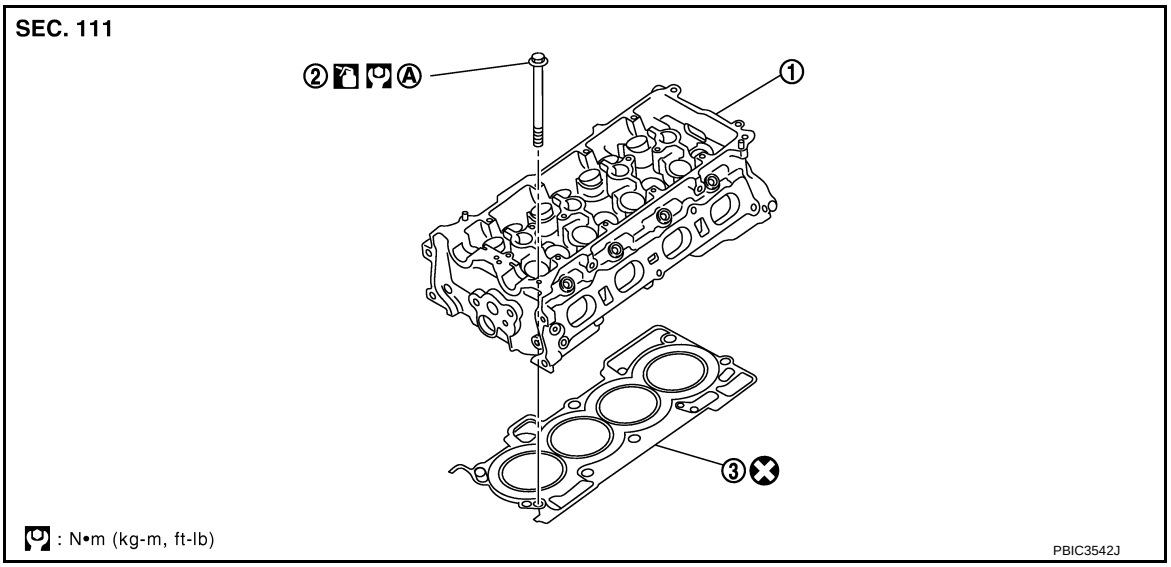

1. Cylinder head assembly
2. Cylinder head bolt
3. Cylinder head gasket

A. Comply with the assembly procedure when tightening. Refer to EM-66

: Always replace after every disassembly.

: Should be lubricated with oil.

DISASSEMBLY

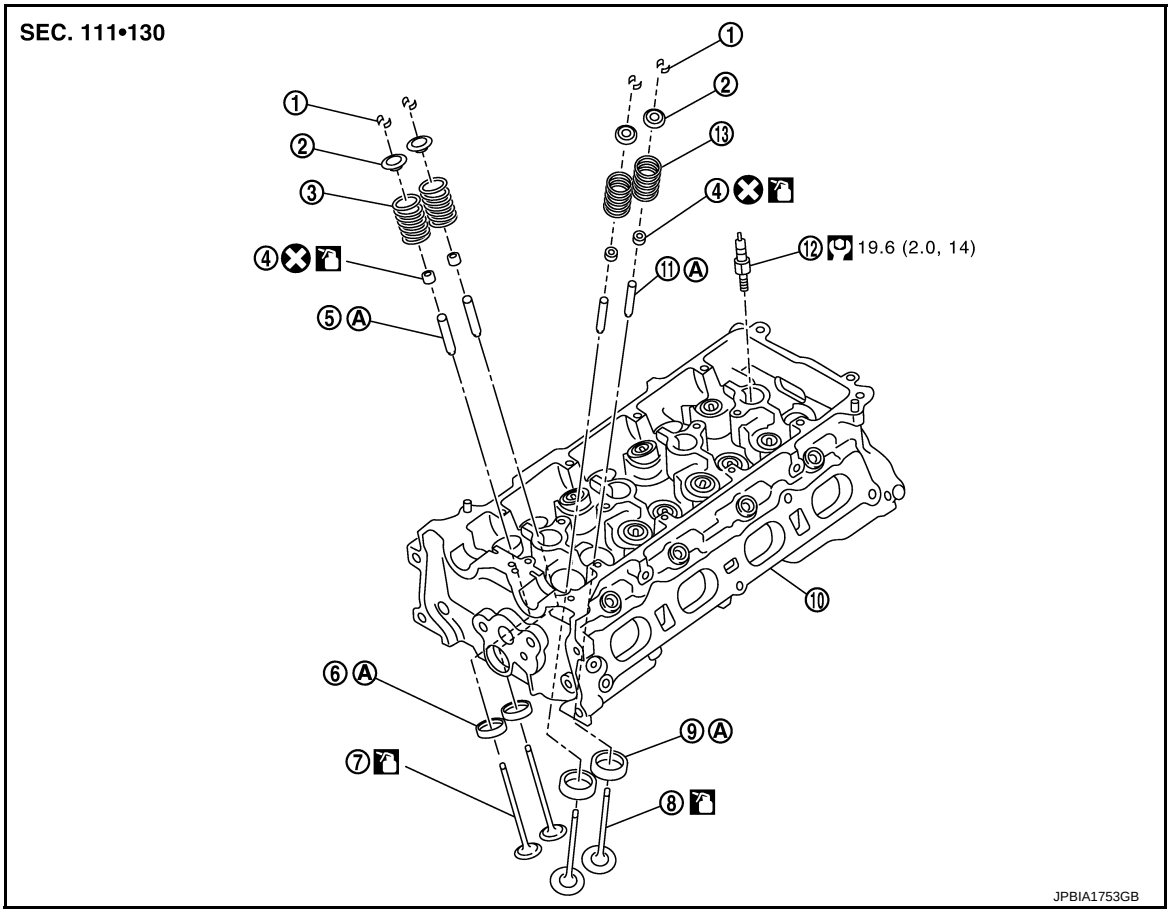

1.	Valve collet	2.	Valve spring retainer	3.	Valve spring (EXH) (with valve spring seat)
4.	Valve oil seal	5.	Valve guide (EXH)	6.	Valve seat (EXH)
7.	Valve (EXH)	8.	Valve (INT)	9.	Valve seat (INT)
10.	Cylinder head	11.	Valve guide (INT)	12.	Spark plug
13.	Valve spring (INT) (with valve spring seat)				
A.	Replacement must be following the disassembly and assembly procedure. Refer to EM-67				

: Always replace after every disassembly.

: N·m (kg-m, ft-lb)

: Should be lubricated with oil.

Removal and Installation

INFOID:0000000009944955

REMOVAL

1. Release fuel pressure. Refer to EC-478, "Inspection".
2. Drain engine coolant and engine oil. Refer to CO-8, "Draining" and LU-9, "Draining".
3. Remove the following components and related parts.
   - Exhaust manifold: Refer to EM-29, "Exploded View".
   - Intake manifold: Refer to EM-26, "Exploded View".
   - Fuel injector and fuel tube assembly: Refer to EM-35, "Exploded View".
   - Water outlet: Refer to CO-23, "Exploded View".
   - Rocker cover: Refer to EM-40, "Exploded View".
   - Front cover, timing chain: Refer to EM-42, "Exploded View".

- Camshaft: Refer to EM-53, "Exploded View".

4. Remove cylinder head.
   - Loosen cylinder head bolts in the order of 10 to 1 as shown in the figure.

     ⇦ : Engine front

   - Using TORX socket, loosen cylinder head bolts.

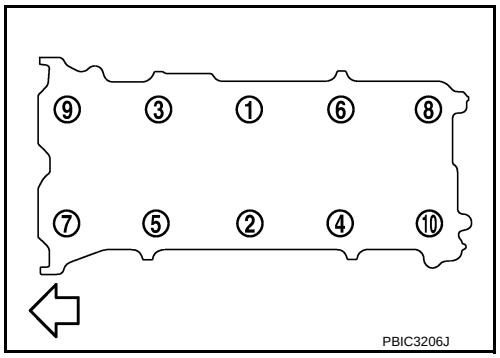

5. Remove cylinder head gasket.

INSTALLATION

1. Install cylinder head gasket.
2. Install cylinder head, and tighten cylinder head bolts in the order of 1 to 10 as shown in the figure with the following procedure.

   ⇦ : Engine front

   CAUTION:
   If cylinder head bolts are reused, check their outer diameters before installation. Refer to EM-71, "Inspection".

   a. Apply new engine oil to threads and seating surface of mounting bolts.
   b. Tighten all cylinder head bolts.

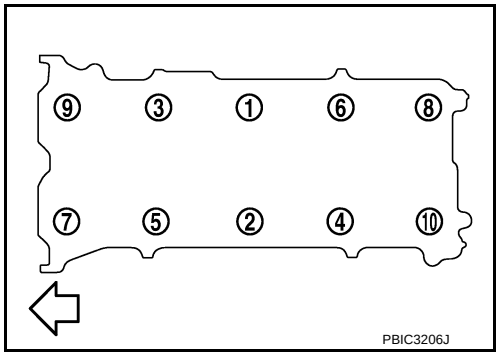

   : 40.0 N·m (4.1 kg-m, 30 ft-lb)

   c. Turn all cylinder head bolts 100 degrees clockwise (angle tightening).
   CAUTION:
   Check and confirm the tightening angle by using an angle wrench [SST: KV10112100 (BT8653-A)] (A) or protractor. Never judge by visual inspection without the tool.
   d. Completely loosen.

   : 0 N·m (0 kg-m, 0 ft-lb)

   CAUTION:
   In this step, loosen cylinder head bolts in reverse order that indicated in the figure.
   e. Tighten all cylinder head bolts.

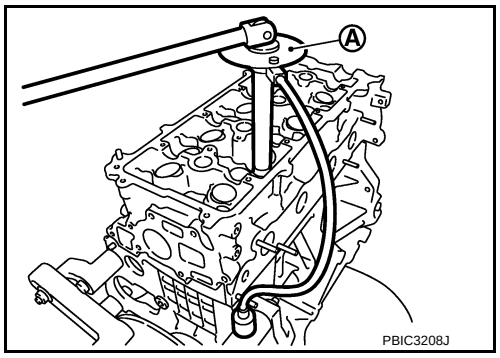

   : 40.0 N·m (4.1 kg-m, 30 ft-lb)

   f. Turn all cylinder head bolts 100 degrees clockwise (angle tightening).
   g. Turn all cylinder head bolts 100 degrees clockwise again (angle tightening).
3. Install in the reverse order of removal, for the rest of parts.

Disassembly and Assembly

INFOID:0000000009944956

DISASSEMBLY

1. Remove spark plug with spark plug wrench (commercial service tool).
2. Remove valve lifter.
   - Identify installation positions, and store them without mixing them up.

3. Remove valve collet.
   - Compress valve spring with the valve spring compressor [SST: KV10116200 (J-26336-A)] (A), the attachment [SST: KV10115900 (J-26336-20)] (C), and the adapter [SST: KV10109220 (—)] (B). Remove valve collet with a magnet hand.

   CAUTION:
   Be careful not to damage valve lifter holes.

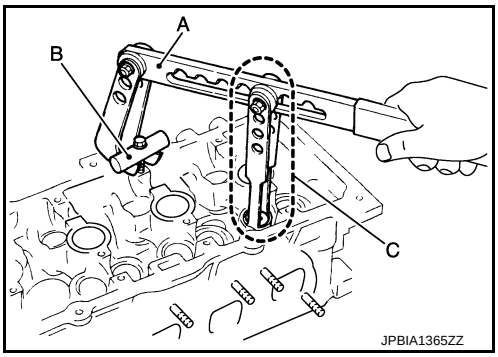

4. Remove valve spring retainer and valve spring (with valve spring seat).

   CAUTION:
   Never remove valve spring seat from valve spring.
5. Push valve stem to combustion chamber side, and remove valve.
   - Identify installation positions, and store them without mixing them up.
6. Remove valve oil seal with a valve oil seal puller [SST: KV10107902 (J-38959)] (A).

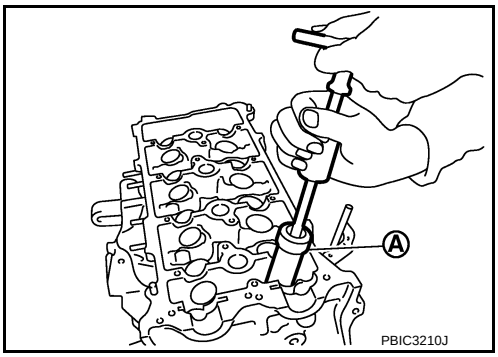

7. When valve seat must be replaced.
   - Bore out old seat until it collapses. Boring should not continue beyond the bottom face of the seat recess in cylinder head. Set the machine depth stop to ensure this. Refer to EM-116, "Cylinder Head".

   CAUTION:
   Never bore excessively to prevent cylinder head from scratching.
8. When valve guide must be replaced.

a. To remove valve guide, heat cylinder head to 110 to 130°C (230 to 266°F) by soaking in heated oil (A).

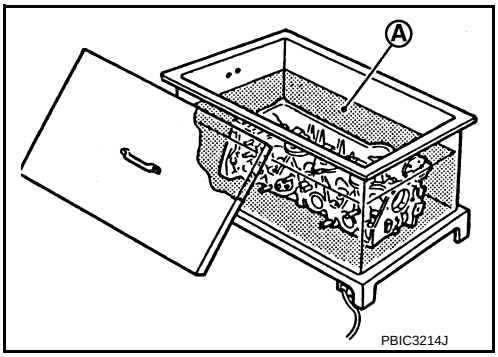

b. Drive out valve guide with a hammer and valve guide drift (commercial service tool).

   CAUTION:
   Cylinder head contains heat, wear protective equipment to avoid getting burned.

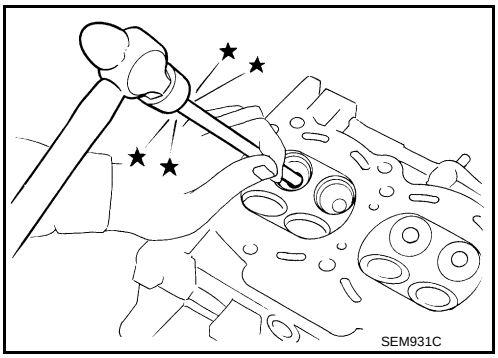

ASSEMBLY

1. When valve guide is removed, install it.
   CAUTION:
   Replace with oversize [0.2 mm (0.008 in)] valve guide.

a. Ream cylinder head valve guide hole with a valve guide reamer (commercial service tool) (A).

   For service parts: Oversize [0.2 mm (0.008 in)]
   Refer to EM-116, "Cylinder Head".

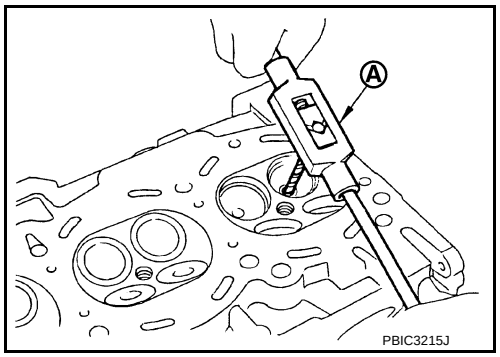

b. Heat cylinder head to 110 to 130°C (230 to 266°F) by soaking in heated oil (A).

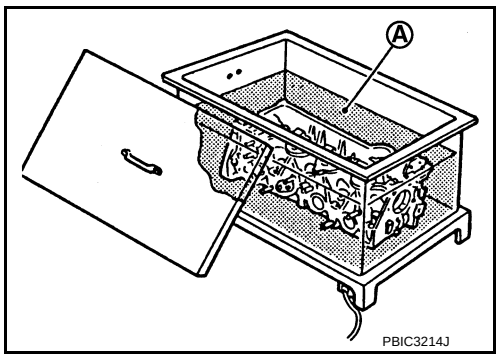

c. Press valve guide (1) from camshaft side to dimensions as shown in the figure.

   2 : Cylinder head

   Projection (H) : Refer to EM-116, "Cylinder Head".

   CAUTION:
   Cylinder head contains heat, wear protective equipment to avoid getting burned.

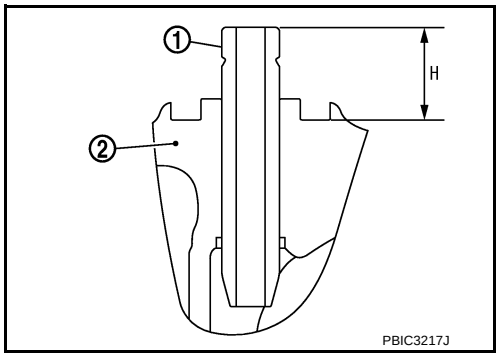

d. Apply reamer finish to valve guide with a valve guide reamer (commercial service tool) (A).

   Standard : Refer to EM-116, "Cylinder Head".

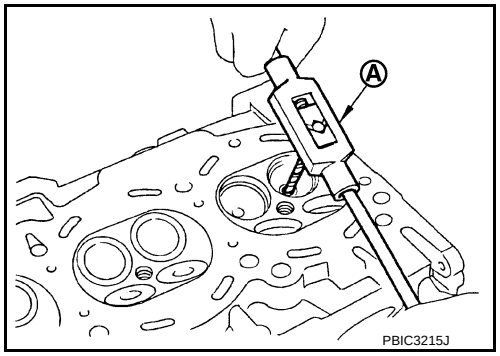

2. When valve seat is removed, install it.
   CAUTION:
   Replace with oversize [0.5 mm (0.020 in)] valve seat.

a. Ream cylinder head (1) recess diameter for service valve seat (2).

For service parts: Oversize [0.5 mm (0.020 in)]

Refer to EM-116, "Cylinder Head".

- Be sure to ream in circles concentric to the valve guide center. This will enable valve seat to fit correctly.

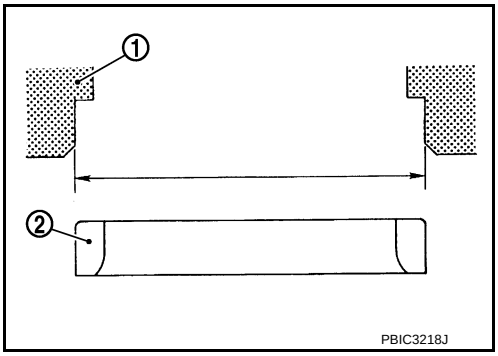

b. Heat cylinder head to 110 to 130°C (230 to 266°F) by soaking in heated oil (A).

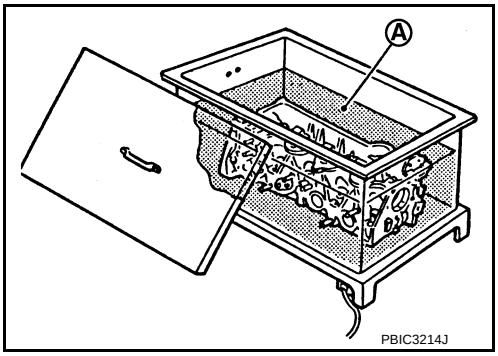

c. Provide valve seats cooled well with dry ice. Press-fit valve seat into cylinder head.

CAUTION:

- **Never touch cold valve seats directly.**
- **Cylinder head contains heat, wear protective equipment to avoid getting burned.**

d. Using valve seat cutter set (commercial service tool) or valve seat grinder, finish valve seat to the specified dimensions. For dimensions, refer to EM-116, "Cylinder Head".

CAUTION:

When using valve seat cutter, firmly grip the cutter handle with both hands. Then, press on the contacting surface all around the circumference to cut in a single drive. Improper pressure on with the cutter or cutting many different times may result in stage valve seat.

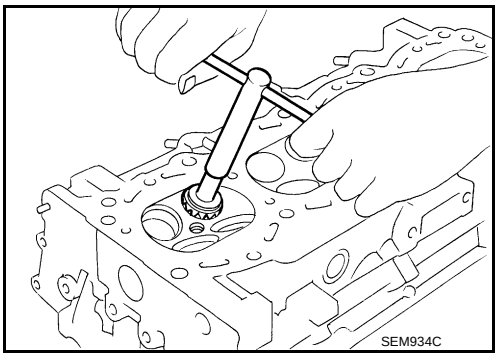

e. Using compound, grind to adjust valve fitting.

f. Check again for normal contact. Refer to EM-71, "Inspection".

3. Install valve oil seal.
   - Install with a valve oil seal drift [SST: KV10115600 (J-38958)] (A) to match dimension in the figure.

   NOTE:

   Dimension is height that measured before installing valve spring (with valve spring seat).

   Height (H) : 15.1 - 15.7 mm (0.594 - 0.618 in)

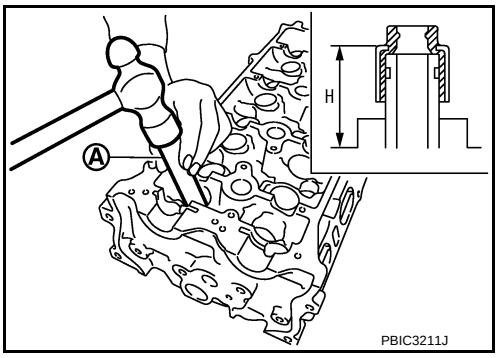

4. Install valve.
   - Install larger diameter to intake side.
5. Install valve spring (with valve spring seat).

- Install smaller pitch (valve spring seat side) to cylinder head side (B).

  1 : Valve spring seat (Do not remove from valve spring.)

- Confirm identification color (A) of valve spring.

  Intake : White
  Exhaust : Orange

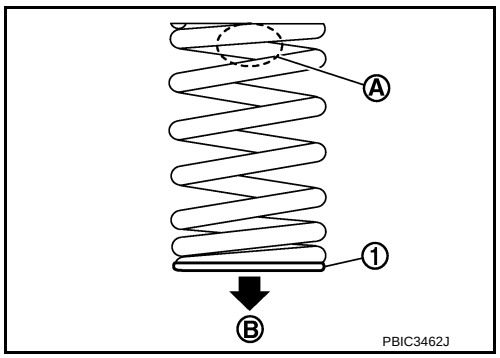

6. Install valve spring retainer.
7. Install valve collet.
   - Compress valve spring with the valve spring compressor [SST: KV10116200 (J-26336-A)] (A), the attachment [SST: KV10115900 (J-26336-20)] (C), and the adapter [SST: KV10109220 (—)] (B). Install valve collet with a magnet hand.
     CAUTION:
     When working care not to damage valve lifter holes.
   - Tap valve stem edge lightly with a plastic hammer after installation to check its installed condition.

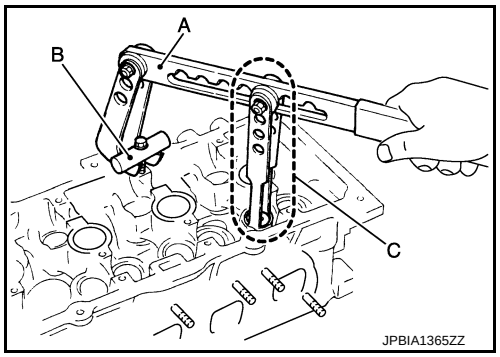

8. Install valve lifter.
   - Install it in the original position.
9. Install spark plug with spark plug wrench (commercial service tool).

Inspection

INFOID:0000000009944957

INSPECTION AFTER REMOVAL

Cylinder Head Bolts Outer Diameter

- Cylinder head bolts are tightened by plastic zone tightening method. Whenever the size difference between (d1) and (d2) exceeds the limit, replace them with a new one.

  Limit [(d1) – (d2)]: 0.15 mm (0.0059 in)

- If reduction of outer diameter appears in a position other than (d2), use it as (d2) point.

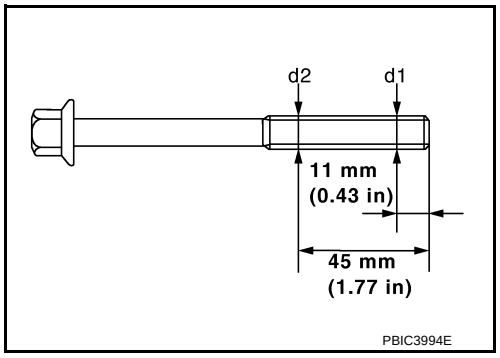

Cylinder Head Distortion

NOTE:
When performing this inspection, cylinder block distortion should be also checked. Refer to EM-95, "Inspection".

1. Wipe off engine oil and remove water scale (like deposit), gasket, sealant, carbon, etc. with a scraper.
   CAUTION:
   Never allow gasket debris to enter passages for engine oil or water.

2. At each of several locations on bottom surface of cylinder head, measure the distortion in six directions using straightedge (A) and feeler gauge (B).

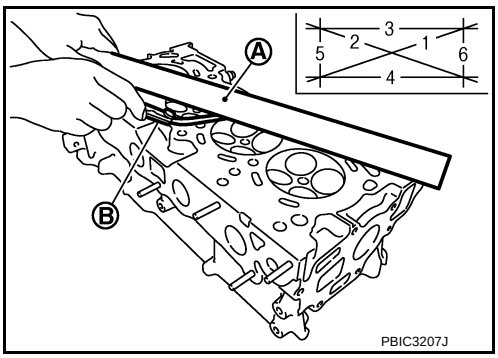

Limit: Refer to EM-116, "Cylinder Head".

- If it exceeds the limit, replace cylinder head.

INSPECTION AFTER DISASSEMBLY

VALVE DIMENSIONS

- Check the dimensions of each valve. For the dimensions, refer to EM-116, "Cylinder Head".
- If dimensions are out of the standard, replace valve and check valve seat contact. Refer to “VALVE SEAT CONTACT”.

VALVE GUIDE CLEARANCE

Valve Stem Diameter

- Measure the diameter of valve stem with micrometer (A).

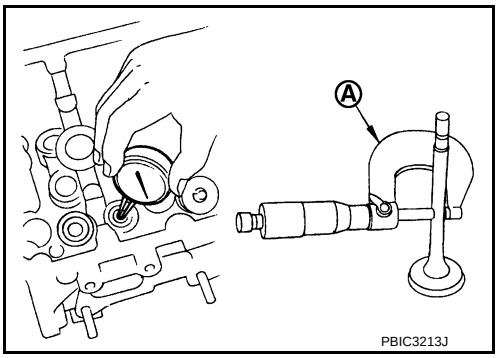

Standard: Refer to EM-116, "Cylinder Head".

Valve Guide Inner Diameter

- Measure the inner diameter of valve guide with bore gauge.

Standard: Refer to EM-116, "Cylinder Head".

Valve Guide Clearance

- (Valve guide clearance) = (Valve guide inner diameter) – (Valve stem diameter)

Standard and Limit: Refer to EM-116, "Cylinder Head".

- If the calculated value exceeds the limit, replace valve and/or valve guide. When valve guide must be replaced. Refer to EM-67, "Disassembly and Assembly".

VALVE SEAT CONTACT

- After confirming that the dimensions of valve guides and valves are within the specifications, perform this procedure.
- Apply prussian blue (or white lead) onto contacting surface of valve seat to check the condition of the valve contact on the surface.
- Check if the contact area band is continuous all around the circumference.

A : OK

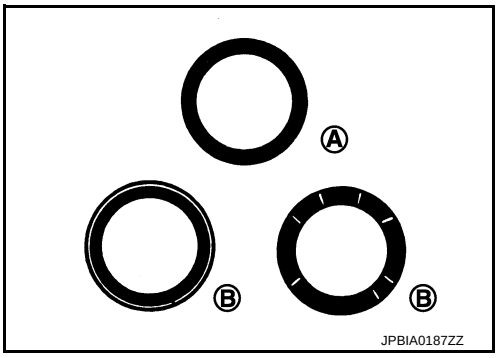

- If not, grind to adjust valve fitting and check again. If the contacting surface still has “NG” conditions (B) even after the recheck, replace valve seat. Refer to EM-67, "Disassembly and Assembly".

VALVE SPRING SQUARENESS

- Set a try square (A) along the side of valve spring and rotate spring. Measure the maximum clearance between the top of spring and try square.

  B : Contact

  Limit : Refer to EM-116, "Cylinder Head".

- If it exceeds the limit, replace valve spring.

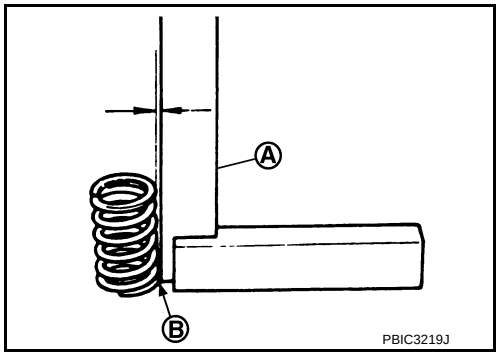

VALVE SPRING DIMENSIONS AND VALVE SPRING PRESSURE LOAD

- Check valve spring pressure with valve spring seat installed at the specified spring height.
  CAUTION:
  Never remove valve spring seat from valve spring.

  Standard : Refer to EM-116, "Cylinder Head".

- If the installation load or load with valve open is out of the standard, replace valve spring (with valve spring seat).

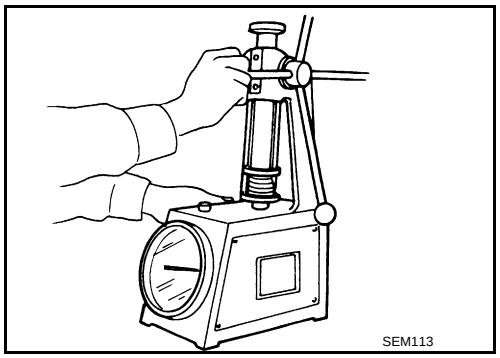

INSPECTION AFTER INSTALLATION

Inspection for Leakage

The following are procedures for checking fluids leakage, lubricates leakage, and exhaust gases leakage.

- Before starting engine, check oil/fluid levels including engine coolant and engine oil. If less than required quantity, fill to the specified level. Refer to MA-10, "Fluids and Lubricants".
- Use procedure below to check for fuel leakage.
  - Turn ignition switch “ON” (with engine stopped). With fuel pressure applied to fuel piping, check for fuel leakage at connection points.
  - Start engine. With engine speed increased, check again for fuel leakage at connection points.
- Run engine to check for unusual noise and vibration.
- Warm up engine thoroughly to check there is no leakage of fuel, exhaust gases, or any oil/fluids including engine oil and engine coolant.
- Bleed air from lines and hoses of applicable lines, such as in cooling system.
- After cooling down engine, again check oil/fluid levels including engine oil and engine coolant. Refill to the specified level, if necessary.

Summary of the inspection items:

Items		Before starting engine	Engine running	After engine stopped
Engine coolant		Level	Leakage	Level
Engine oil		Level	Leakage	Level
Transmission / transaxle fluid	AT & CVT Models	Leakage	Level / Leakage	Leakage
	MT Models	Level / Leakage	Leakage	Level / Leakage
Other oils and fluids*		Level	Leakage	Level
Fuel		Leakage	Leakage	Leakage
Exhaust gases		—	Leakage	—

*: Power steering fluid, brake fluid, etc.

UNIT REMOVAL AND INSTALLATION

ENGINE ASSEMBLY

Exploded View

INFOID:0000000009944958

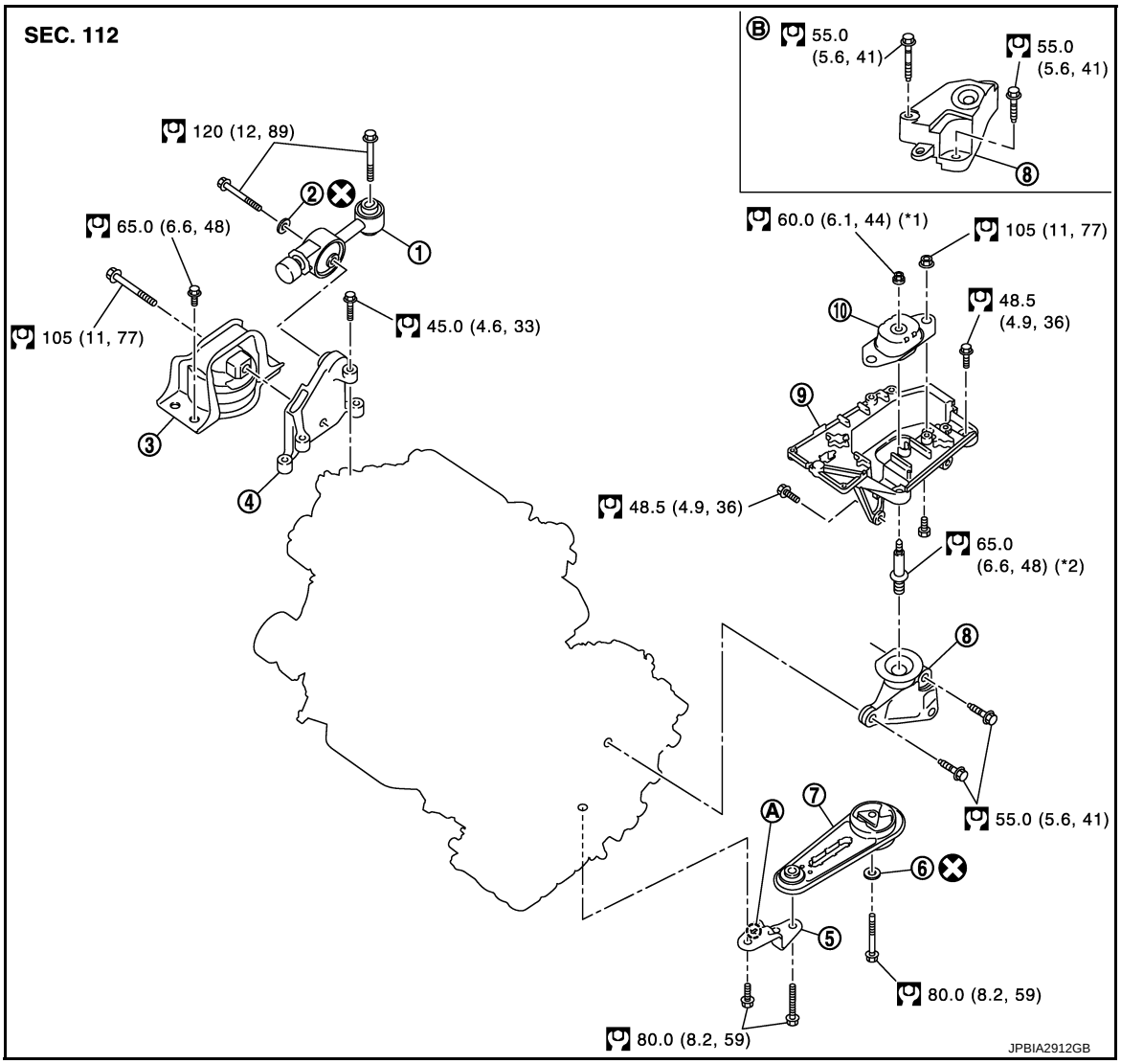

1.	Upper torque rod (RH)	2.	Washer	3.	Engine mounting insulator (RH)
4.	Engine mounting bracket (RH)	5.	Rear engine mounting bracket	6.	Washer
7.	Rear torque rod	8.	Engine mounting bracket (LH)	9.	Engine mounting bracket support (LH)
10.	Engine mounting insulator (LH)				
A.	Front mark	B.	M/T models		

⊗ : Always replace after every disassembly.

: N·m (kg-m, ft-lb)

CAUTION:

Check that the stud bolt (*2) is tight at the specified torque before tightening the mounting nut (*1) shown in the figure. [Stud bolt (*2) may be loosened after loosening the mounting nut (*1)]

Removal and Installation

INFOID:0000000009944959

WARNING:

- **Situate the vehicle on a flat and solid surface.**
- **Place chocks at front and back of rear wheels.**
- **Attach proper slingers and bolts described in PARTS CATALOG if engine slingers are not equipped.**

CAUTION:

- **Always be careful to work safely, avoid forceful or uninstructed operations.**
- **Never start working until exhaust system and coolant are cool enough.**
- **If items or work required are not covered by the engine section, refer to the applicable sections.**
- **Always use the support point specified for lifting.**
- **Use either 2-pole lift type or separate type lift as best you can. If board-on type is used for unavoidable reasons, support at the rear axle jacking point with a transmission jack or similar tool before starting work, in preparation for the backward shift of center of gravity.**
- **For supporting points for lifting and jacking point at rear axle, refer to GI-32, "Garage Jack and Safety Stand and 2-Pole Lift".**

NOTE:

When removing components such as hoses, tubes/lines, etc., cap or plug openings to prevent fluid from spilling.

REMOVAL

Outline

Remove the engine and the transaxle assembly from the vehicle downward. Separate the engine and the transaxle.

Preparation

1. Release fuel pressure. Refer to EC-478, "Inspection".
2. Drain engine coolant from radiator. Refer to CO-8, "Draining".
   CAUTION:
   - **Perform this step when the engine is cold.**
   - **Never spill engine coolant on drive belts.**
3. Remove the following parts.
   - Engine undercover
   - Front road wheels and tires
   - Front fender protector (RH and LH): Refer to EXT-21, "FENDER PROTECTOR : Exploded View".
   - Drive belt: Refer to EM-13, "Removal and Installation".
   - Engine cover: Refer to EM-22, "Exploded View".
   - Battery and battery tray: Refer to PG-82, "Exploded View".
   - Air duct (inlet), resonator, air duct, and air cleaner case assembly: Refer to EM-24, "Exploded View".
   - Radiator hose (upper and lower): Refer to CO-14, "Exploded View".
   - Exhaust front tube: Refer to EX-5, "Exploded View".
   - Radiator cooling fan assembly: Refer to CO-17, "Exploded View".
   - Alternator: Refer to CHG-30, "Exploded View".

Engine Room LH

1. Disconnect all connections of engine harness around the battery, and then temporarily secure the engine harness into the engine side.
   CAUTION:
   Protect connectors using a resin bag against foreign materials during the operation.
2. Disconnect fuel feed tube at engine side. Refer to EM-35, "Exploded View".
3. Disconnect heater hoses. Refer to CO-23, "Exploded View".
4. Disconnect control cable from transaxle. (CVT models) Refer to TM-219, "Exploded View".
5. Disconnect control linkage from transaxle. (M/T models) Refer to TM-19, "Exploded View".
6. Remove EVAP hoses. Refer to EM-26, "Exploded View".
7. Disconnect clutch tube on transaxle side from clutch damper. (M/T models) Refer to CL-15, "Exploded View".

Engine Room RH

1. Disconnect vacuum hose from intake manifold. Refer to EM-26, "Exploded View".
2. Remove A/C compressor. (with A/C models) Refer to HA-31, "Exploded View".
3. Remove ground cable at engine side.

Vehicle Underbody

1. Remove ground cable at transaxle side.
2. Remove drive shafts (RH and LH). Refer to FAX-15, "Exploded View".
3. Remove rear torque rod (1).

2 : Rear engine mounting bracket
A : Front mark
⇦ : Vehicle front

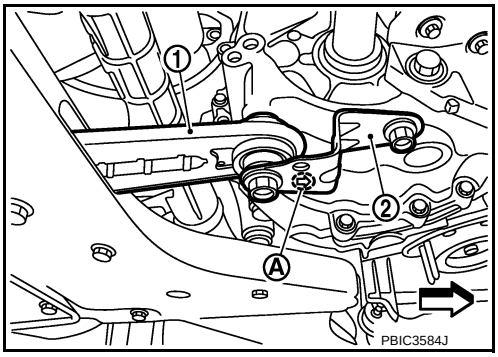

4. Preparation for the separation work of transaxle is as follows:
   - Remove transaxle joint bolts which pierce at oil pan (upper) lower rear side. Refer to EM-32, "Exploded View".

Removal

1. Use a manual lift table caddy (commercial service tool) (A) or equivalently rigid tool such as a transmission jack. Securely support bottom of the engine and the transaxle assembly.
   CAUTION:
   Put a piece of wood or an equivalent as the supporting surface, secure a completely stable condition.

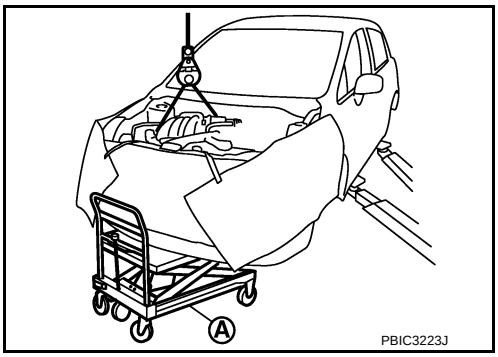

2. Remove upper torque rod (1), engine mounting bracket (RH) (2), and engine mounting insulator (RH) (3).

⇦ : Vehicle front

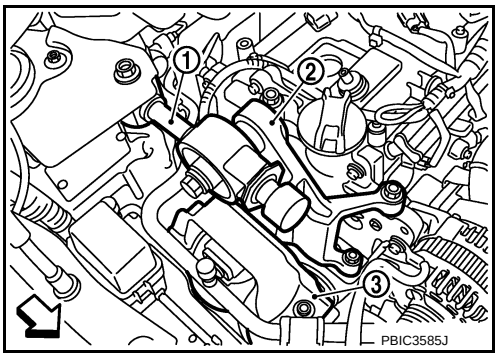

3. Remove engine mounting bracket (LH) through bolt-securing nut (B).

1 : Engine mounting insulator (LH)
2 : Engine mounting bracket support (LH)
A : Through not
⇦ : Vehicle front

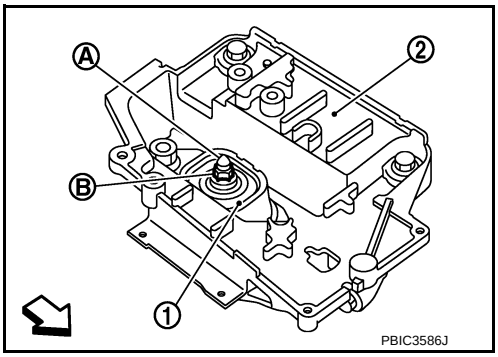

4. Carefully lower jack, or raise lift to remove the engine and the transaxle assembly. When performing work, observe the following caution.
   CAUTION:
   - **Check that no part interferes with the vehicle side.**

- **Before and during this lifting, always check if any harnesses are left connected.**
- **During the removal, always be careful to prevent the vehicle from falling off the lift due to changes in the center of gravity.**
- **If necessary, support the vehicle by setting jack or suitable tool at the rear.**

Separation

1. Install engine slinger to front cover front left side (A) and cylinder head rear right side (B).

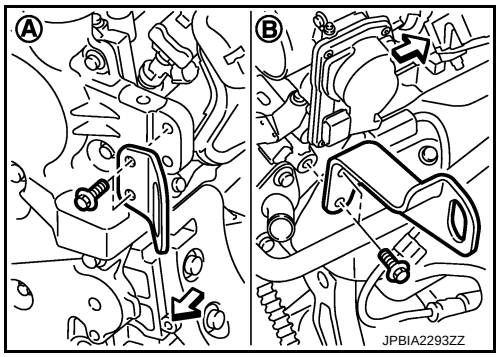

⇦ : Engine front

Slinger bolts	
Front cover front left side:	**: 32.9 N·m (3.4 kg-m, 24 ft-lb)**
Cylinder head rear right side:	**: 25.0 N·m (2.6 kg-m, 18 ft-lb)**

2. Remove starter motor. Refer to STR-25, "Exploded View".
3. Lift with a hoist and separate the engine from the transaxle assembly. Refer to TM-235, "Exploded View" (CVT models) or TM-25, "Exploded View" (M/T models).

INSTALLATION

Note the following, and install in the reverse order of removal.

CAUTION:

- **Never allow engine oil to get on engine mounting insulator. Be careful not to damage engine mounting insulator.**
- **Check that each mounting insulator is seated properly, and tighten mounting nuts and bolts.**
- **When installation directions are specified, install parts according to the direction marks on them referring to the figure of components. Refer to EM-74, "Exploded View".**

Upper Torque Rod (RH)

- Install upper torque rod (RH) (1), positioning dynamic damper (A) as shown in the figure.

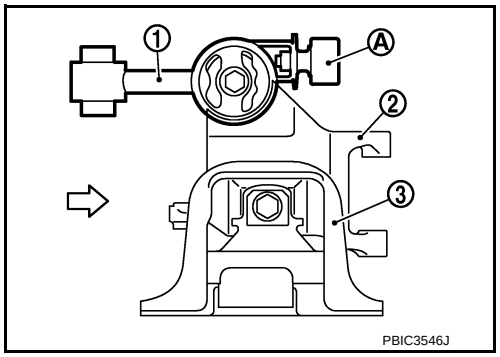

2 : Engine mounting bracket (RH)
3 : Engine mounting insulator (RH)
⇦ : Vehicle front

Engine Mounting Bracket (RH)

- Install engine mounting bracket (RH) to the engine side according to the following procedure.

1. Temporarily tighten mounting bolts in the order of 1 to 4 as shown in the figure.

⇦ : Vehicle front

2. Tighten mounting bolts to the specified torque in the order of 1 to 4 as shown in the figure.

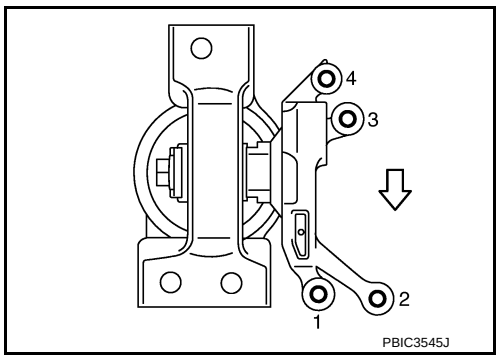

Inspection

INFOID:0000000009944960

INSPECTION AFTER INSTALLATION

Inspection for Leakage

The following are procedures for checking fluids leakage, lubricates leakage, and exhaust gases leakage.

- Before starting engine, check oil/fluid levels including engine coolant and engine oil. If less than required quantity, fill to the specified level. Refer to MA-10, "Fluids and Lubricants".
- Use procedure below to check for fuel leakage.
  - Turn ignition switch “ON” (with engine stopped). With fuel pressure applied to fuel piping, check for fuel leakage at connection points.
  - Start engine. With engine speed increased, check again for fuel leakage at connection points.
- Run engine to check for unusual noise and vibration.
- Warm up engine thoroughly to check there is no leakage of fuel, exhaust gases, or any oil/fluids including engine oil and engine coolant.
- Bleed air from lines and hoses of applicable lines, such as in cooling system.
- After cooling down engine, again check oil/fluid levels including engine oil and engine coolant. Refill to the specified level, if necessary.

Summary of the inspection items:

Items		Before starting engine	Engine running	After engine stopped
Engine coolant		Level	Leakage	Level
Engine oil		Level	Leakage	Level
Transmission / transaxle fluid	AT & CVT Models	Leakage	Level / Leakage	Leakage
	MT Models	Level / Leakage	Leakage	Level / Leakage
Other oils and fluids*		Level	Leakage	Level
Fuel		Leakage	Leakage	Leakage
Exhaust gases		—	Leakage	—

*: Power steering fluid, brake fluid, etc.

UNIT DISASSEMBLY AND ASSEMBLY

ENGINE STAND SETTING

Setting

INFOID:0000000009944961

NOTE:
Explained here is how to disassemble with engine stand supporting transaxle surface. When using different type of engine stand, note with difference in steps and etc.

1. Remove the engine and the transaxle assembly from the vehicle, and separate the transaxle from the engine. Refer to EM-74, "Exploded View".
2. Install engine to engine stand with the following procedure:

a. Remove flywheel (M/T models) or drive plate (CVT models).
- Secure flywheel (M/T models) or drive plate (CVT models) (1) with a stopper plate [SST: KV11105210 (J-44716)] (A), and remove mounting bolts.

CAUTION:
- **Never disassemble them.**
- **Any dropped drive plate shall not be used.**

NOTE:
This figure shows CVT models as an example.

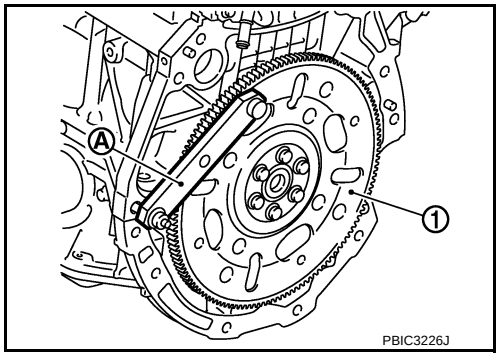

b. Remove pilot converter (1) using pilot bushing puller [SST: ST16610001 (J-23907)] (A) or suitable tool. (CVT models)

NOTE:
M/T models have no pilot bushing.

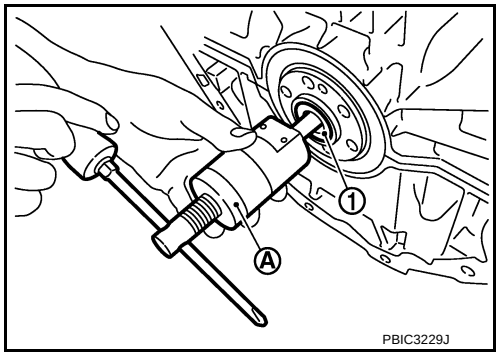

c. Lift the engine with a hoist to install it onto widely use engine stand.

CAUTION:
- **Use the engine stand that has a load capacity [approximately 135 kg (298 lb) or more] large enough for supporting the engine weight.**
- If the load capacity of stand is not adequate, remove the following parts beforehand to reduce the potential risk of overturning stand.
- Intake manifold: Refer to EM-26, "Exploded View".
- Exhaust manifold: Refer to EM-29, "Exploded View".
- Rocker cover: Refer to EM-40, "Exploded View".

NOTE:
The figure shows an example of widely used engine stand (A) that can support mating surface of transaxle with flywheel (M/T models) or drive plate (CVT models) removed.

CAUTION:
Before removing the hanging chains, check the engine stand is stable and there is no risk of overturning.

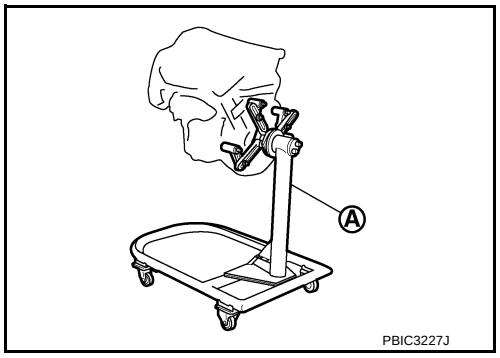

3. Drain engine oil. Refer to LU-9, "Draining".
   CAUTION:
   Be sure to clean drain plug and install with new drain plug washer.
4. Drain engine coolant by removing water drain plug (1) from inside of the engine.

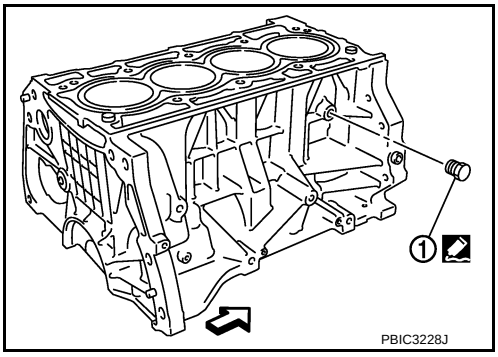

⇦ : Engine front

Tightening torque : **Refer to EM-87, "Disassembly and Assembly".**

Use Genuine RTV Silicon Sealant or equivalent. Refer to GI-22, "Recommended Chemical Products and Sealants".

ENGINE UNIT

Disassembly

INFOID:0000000009944962

1. Remove intake manifold. Refer to EM-26, "Exploded View".
2. Remove exhaust manifold. Refer to EM-29, "Exploded View".
3. Remove oil pan (lower). Refer to EM-32, "Exploded View".
4. Remove ignition coil, spark plug, and rocker cover. Refer to EM-40, "Exploded View".
5. Remove fuel injector and fuel tube. Refer to EM-35, "Exploded View".
6. Remove timing chain. Refer to EM-42, "Exploded View".
7. Remove camshaft. Refer to EM-53, "Exploded View".
8. Remove water inlet. Refer to CO-21, "Exploded View".
9. Remove water outlet. Refer to CO-23, "Exploded View".
10. Remove cylinder head. Refer to EM-65, "Exploded View".

Assembly

INFOID:0000000009944963

Assemble in the reverse order of disassembly.

OIL PAN (UPPER)

Exploded View

INFOID:0000000009944964

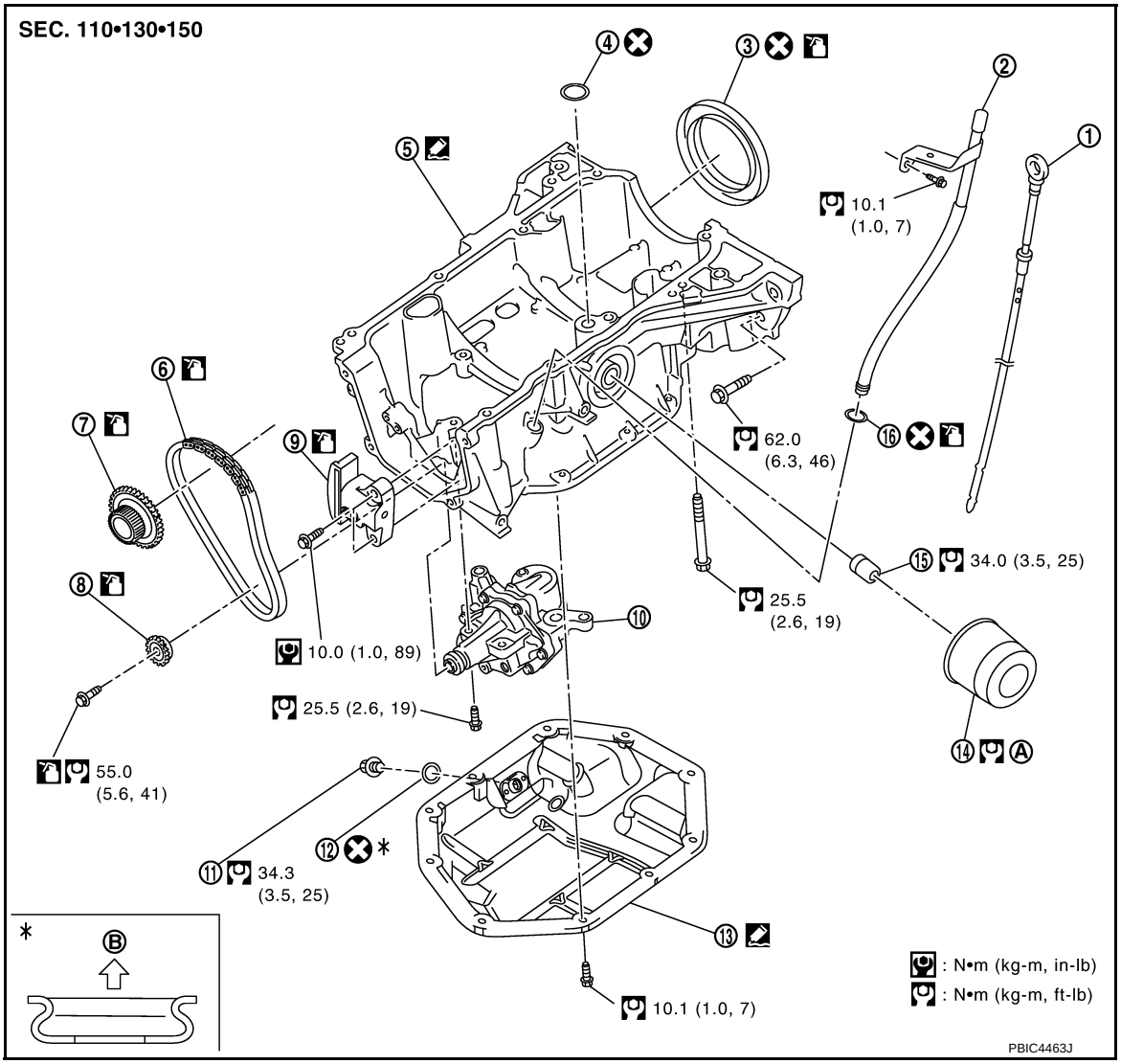

1.	Oil level gauge	2.	Oil level gauge guide	3.	Rear oil seal
4.	O-ring	5.	Oil pan (upper)	6.	Oil pump drive chain
7.	Crankshaft sprocket	8.	Oil pump sprocket	9.	Oil pump chain tensioner
10.	Oil pump	11.	Drain plug	12.	Drain plug washer
13.	Oil pan (lower)	14.	Oil filter	15.	Connector bolt
16.	O-ring				
A.	Comply with the assembly procedure when tightening. Refer to LU-11	B.	Oil pan side		

: Always replace after every disassembly.

: Should be lubricated with oil.

: Sealing point

Removal and Installation

INFOID:0000000009944965

REMOVAL

1. Remove oil pan (lower). Refer to EM-32, "Exploded View".

2. Remove oil filter. Refer to LU-11, "Removal and Installation".
3. Remove front cover, timing chain, oil pump drive chain, and other related parts. Refer to EM-42, "Exploded View".
4. Remove oil level gauge and oil level gauge guide.
5. Remove oil pump. Refer to LU-12, "Exploded View".
   NOTE:
   The oil pan (upper) can be removed and installed without removing the oil pump.
6. Remove oil pan (upper) with the following procedure:

a. Loosen bolts in the order of 10 to 1 as shown in the figure.

⇦ : Engine front

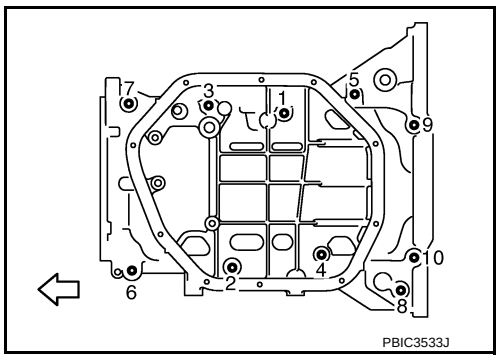

b. Insert a screwdriver shown by the arrow (⬅) in the figure and open up a crack between oil pan (upper) and cylinder block.

⇦ : Engine front

CAUTION:
A more adhesive liquid gasket is applied compared to previous types when shipped, so it should not be forced off the position not specified.

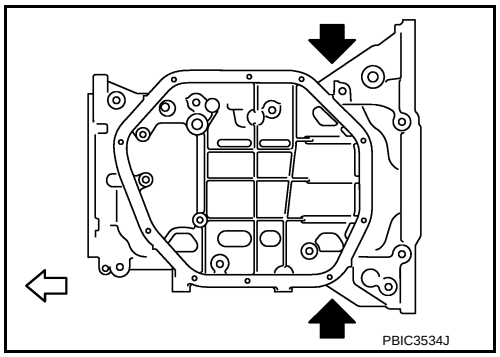

c. Insert seal cutter [SST: KV10111100 (J-37228)] between oil pan (upper) and cylinder block, and slide it by tapping on the side of the tool with a hammer.
   CAUTION:
   Be careful not to damage the mating surface.

7. Remove O-ring between cylinder block and oil pan (upper).

INSTALLATION

1. Install oil pan (upper) with the following procedure:

a. Use a scraper (A) to remove old liquid gasket from mating surfaces.
   - Remove the old liquid gasket from mating surface of cylinder block.
   - Remove old liquid gasket from the bolt holes and threads.

   CAUTION:
   Never scratch or damage the mating surfaces when cleaning off old liquid gasket.

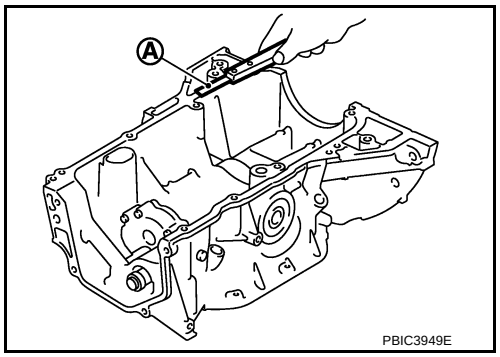

b. Apply a continuous bead of liquid gasket (C) with a tube presser (commercial service tool) as shown in the figure.

1 : Oil pan (upper)
A : 2 mm (0.08 in) protruded to outside
B : 2 mm (0.08 in) protruded to rear oil seal mounting side
⇦ : Engine front
⬅ : Engine outside

Use Genuine RTV Silicon Sealant or equivalent. Refer to GI-22, "Recommended Chemical Products and Sealants".

CAUTION:
- **Apply liquid gasket to outside of bolt hole for the positions shown by ▲ marks.**
- **Attaching should be done within 5 minutes after liquid gasket application.**

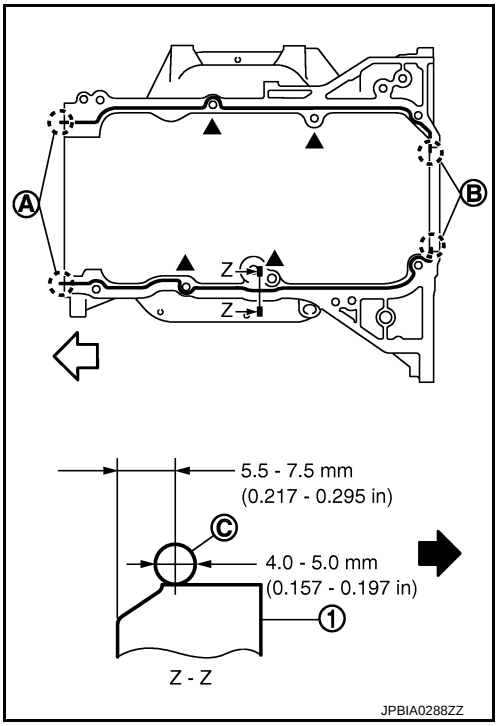

c. Install new O-ring at cylinder block side.

CAUTION:
Install avoiding misalignment of O-ring.

d. Tighten bolts in the order of 1 to 10 as shown in the figure.

⇦ : Engine front

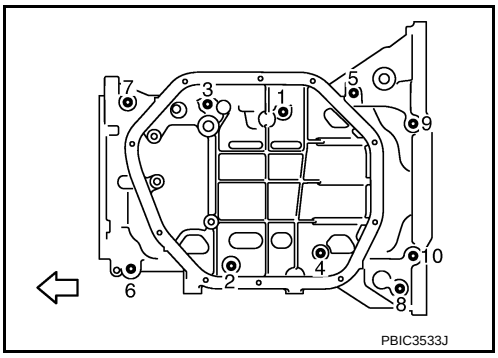

2. Install rear oil seal with the following procedure.

CAUTION:
- **The installation of rear oil seal should be completed within 5 minutes after installing oil pan (upper).**
- **Always replace rear oil seal with new one.**
- **Never touch oil seal lip.**

a. Wipe off liquid gasket protruding to the rear oil seal mounting part of oil pan (upper) and cylinder block using a scraper.

b. Apply engine oil to entire outside area of rear oil seal.

c. Press-fit the rear oil seal using a suitable drift (A) with outer diameter 115 mm (4.53 in) and inner diameter 90 mm (3.54 in).

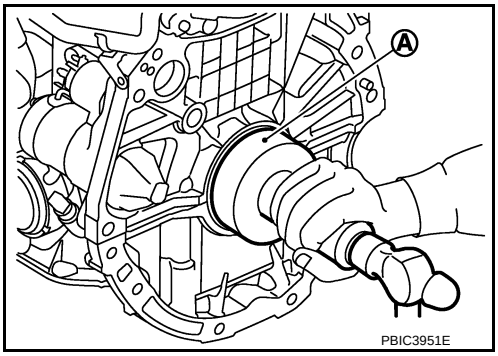

- Press-fit to the specified dimensions as shown in the figure.

  1 : Rear oil seal

  A : Cylinder block rear end surface

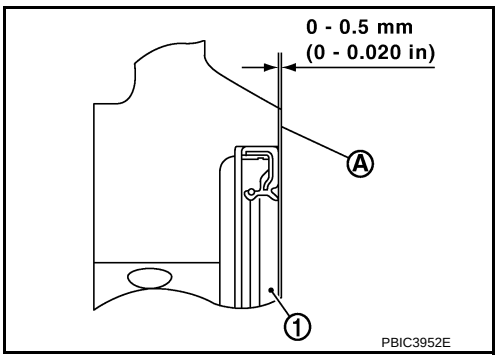

CAUTION:
- **Never touch the grease applied to the oil seal lip.**
- **Be careful not to damage the rear oil seal mounting part of oil pan (upper) and cylinder block or the crankshaft.**
- **Press-fit straight, checking that rear oil seal does not curl or tilt.**

NOTE:
The standard surface of the dimension is the rear end surface of cylinder block.

3. Install in the reverse order of removal, for the rest of parts.

Inspection

INFOID:0000000009944966

INSPECTION AFTER REMOVAL

Clean oil strainer portion (part of the oil pump) if any object attached.

CYLINDER BLOCK

Exploded View

INFOID:0000000009944967

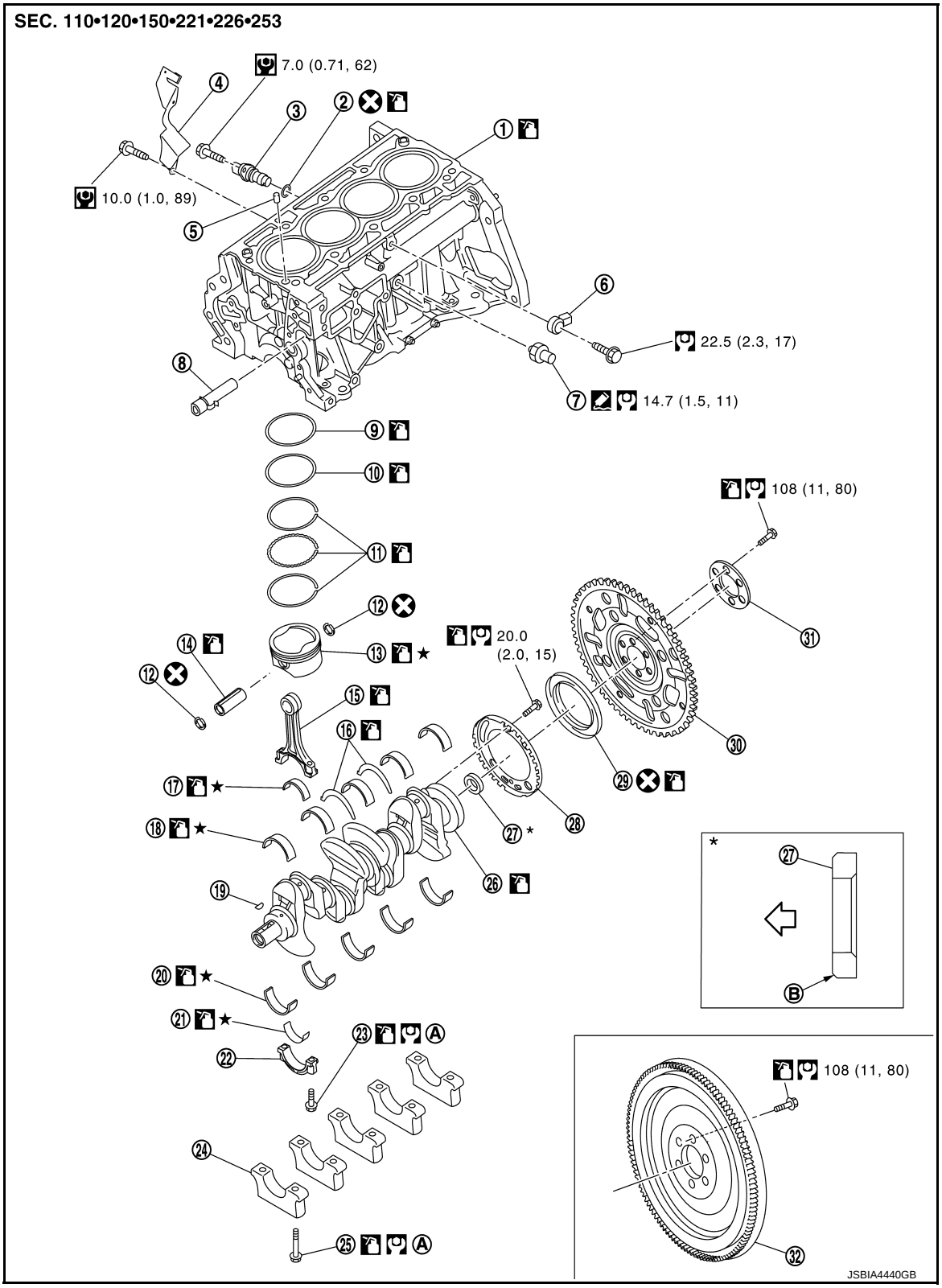

1.	Cylinder block	2.	O-ring	3.	Crankshaft position sensor (POS)
4.	Crankshaft position sensor (POS) cover	5.	Oil filter (for intake valve timing control)	6.	Knock sensor
7.	Oil pressure switch	8.	Cylinder block heater (for Canada)	9.	Top ring

10. Second ring	11. Oil ring	12. Snap ring
13. Piston	14. Piston pin	15. Connecting rod
16. Thrust bearing	17. Connecting rod bearing (upper)	18. Main bearing (upper)
19. Crankshaft key	20. Main bearing (lower)	21. Connecting rod bearing (lower)
22. Connecting rod cap	23. Connecting rod cap bolt	24. Main bearing cap
25. Main bearing cap bolt	26. Crankshaft	27. Pilot converter (CVT models)
28. Signal plate	29. Rear oil seal	30. Drive plate (CVT models)
31. Reinforcement plate (CVT models)	32. Flywheel (M/T models)	
A. Comply with the assembly procedure when tightening. Refer to EM-87	B. Chamfered	

⇦ : Crankshaft side

: Always replace after every disassembly.

: N·m (kg-m, ft-lb)

: N·m (kg-m, in-lb)

: Should be lubricated with oil.

: Sealing point

★ : Select with proper thickness.

Disassembly and Assembly

INFOID:0000000009944968

DISASSEMBLY

1. Remove oil pan (upper). Refer to EM-82, "Exploded View".
2. Remove thermostat housing. Refer to CO-21, "Exploded View".
3. Remove knock sensor.
   CAUTION:
   Carefully handle sensor avoiding shocks.
4. Remove crankshaft position sensor (POS) cover and crankshaft position sensor (POS).
   CAUTION:
   - **Avoid impacts such as a dropping.**
   - **Never disassemble.**
   - **Keep it away from metal particles.**
   - **Never place sensor in a location where it is exposed to magnetism.**
5. Remove oil filter (for intake valve timing control).
6. Remove piston and connecting rod assembly with the following procedure:
   - Before removing piston and connecting rod assembly, check the connecting rod side clearance. Refer to EM-95, "Inspection".

a. Position crankshaft pin corresponding to connecting rod to be removed onto the bottom dead center.

b. Remove connecting rod cap.

c. Using a hammer handle or similar tool, push piston and connecting rod assembly out to the cylinder head side.
   CAUTION:
   - **Be careful not to damage matching surface with connecting rod cap.**
   - **Be careful not to damage the cylinder wall and crankshaft pin, resulting from an interference of the connecting rod big end.**

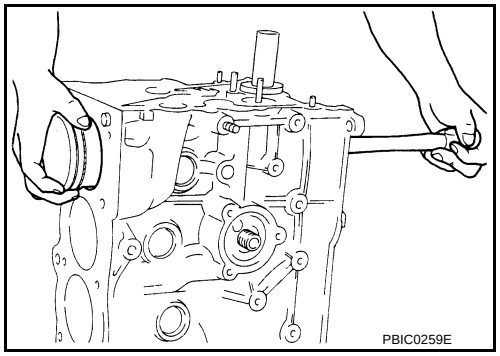

7. Remove connecting rod bearings.
   CAUTION:
   When removing them, note the installation position. Keep them in the correct.

8. Remove piston rings from piston.
   - Before removing piston rings, check the piston ring side clearance. Refer to EM-95, "Inspection".
   - Use a piston ring expander (commercial service tool) (A).

     CAUTION:
     - **When removing piston rings, be careful not to damage the piston.**
     - **Be careful not to damage piston rings by expanding them excessively.**

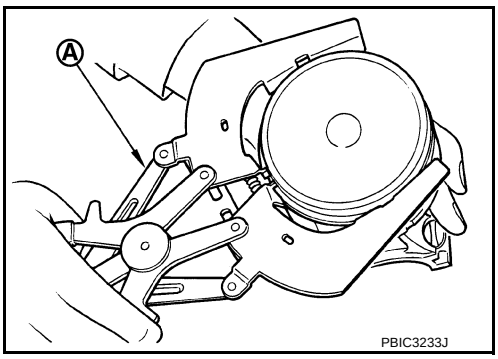

9. Remove piston from connecting rod with the following procedure:

a. Using snap ring pliers (A), remove snap rings.

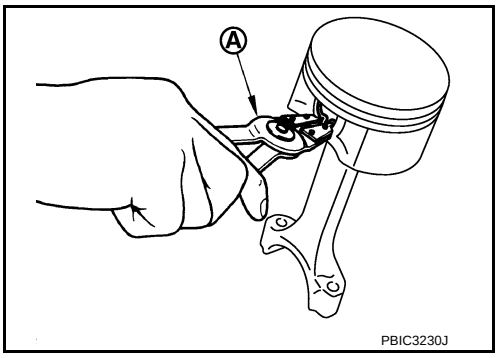

b. Heat piston to 60 to 70°C (140 to 158°F) with an industrial use drier (A) or equivalent.

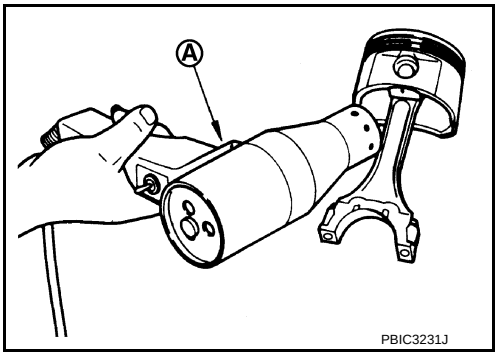

c. Push out piston pin with stick of outer diameter approximately 18 mm (0.71 in).

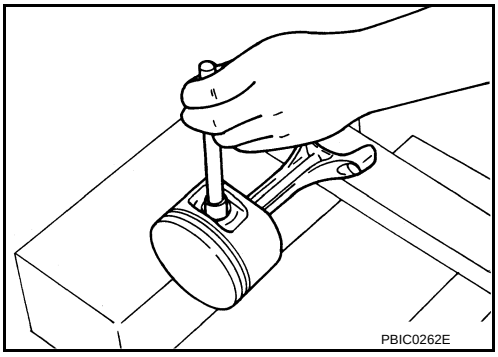

10. Remove main bearing cap bolts.
    - Measure crankshaft end play before loosening main bearing cap bolts. Refer to EM-95, "Inspection".

- Loosen and remove main bearing cap bolts in the order of 10 to 1 as shown in the figure.

  ⇦ : Engine front

- Use TORX socket.

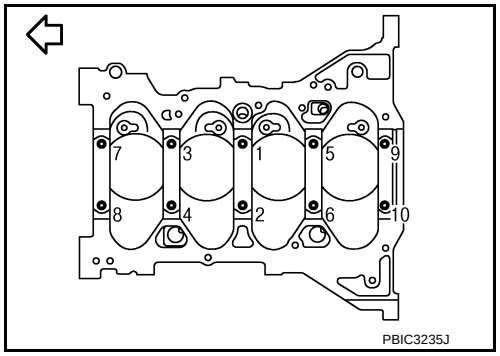

11. Remove main bearing caps.
    - Tap main bearing caps lightly with a plastic hammer for removal.
    CAUTION:
    Be careful not to damage the mounting surface.
12. Remove crankshaft.
    CAUTION:
    - **Be careful not to damage or deform signal plate (1) mounted on rear end of crankshaft (A).**
    - **When setting crankshaft on a flat floor surface, use a block of wood to avoid interference between signal plate and the floor surface.**
    - **Never remove signal plate unless it is necessary to do so.**

    NOTE:
    When removing or installing signal plate, use TORX socket.

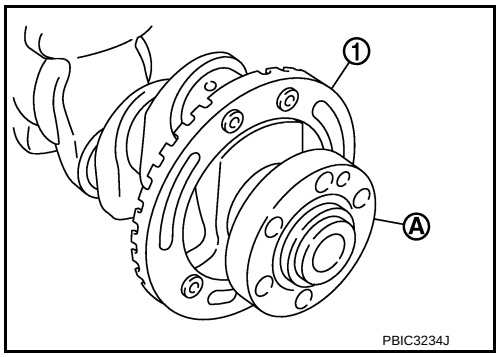

13. Pull rear oil seal out from rear end of crankshaft.
14. Remove main bearings and thrust bearings from cylinder block and main bearing caps.
    CAUTION:
    Identify installation positions, and store them without mixing them up.

ASSEMBLY

CAUTION:
Do not reuse O-rings or washers.

1. Fully air-blow engine coolant and engine oil passages in cylinder block, cylinder bore and crankcase to remove any foreign material.
   CAUTION:
   Use a goggles to protect your eye.
2. Install each plug to cylinder block as shown in the figure.

   2 : Washer

   ⇦ : Engine front

   - Apply liquid gasket to the thread of water drain plug (4).
     Use Genuine RTV Silicon Sealant or equivalent. Refer to **GI-22, "Recommended Chemical Products and Sealants"****.**
   - Apply sealant to the thread of plug (1).
     Use genuine high strength thread locking sealant or equivalent. Refer to **GI-22, "Recommended Chemical Products and Sealants"****.**
     CAUTION:
     Do not reuse washers.
     NOTE:
     Do not apply liquid gasket or high strength thread locking sealant to the plug (3).

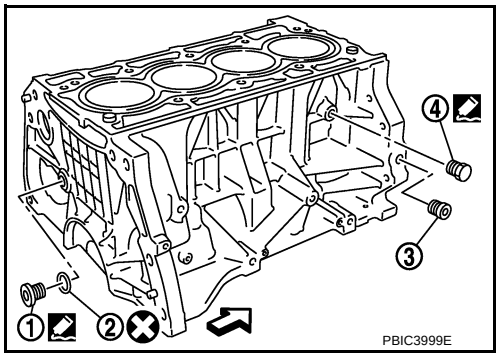

- Tighten each plug as specified below.

Part	Washer	Tightening torque
1	Yes	54.0 N·m (5.5 kg-m, 40 ft-lb)
3	No	19.6 N·m (2.0 kg-m, 14 ft-lb)
4	No	9.8 N·m (1.0 kg-m, 87 in-lb)

3. Install main bearings and thrust bearings with the following procedure:

a. Remove dust, dirt, and engine oil on the bearing mating surfaces of cylinder block and main bearing cap.

b. Install thrust bearings to the both sides of the No. 3 journal housing (B) on cylinder block.

⇦ : Engine front

- Install thrust bearings with the oil groove (A) facing crankshaft arm (outside).

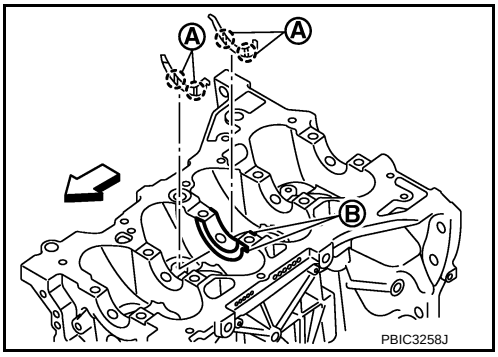

c. Install the main bearings paying attention to the direction.
- Before installing main bearings, apply new engine oil to the bearing surface (inside). Do not apply new engine oil to the back surface, but thoroughly clean it.
- When installing, align main bearing to the center position of cylinder block and main bearing cap.
- The difference (A) between main bearing (upper) (1) and main bearing (lower) (3) should be 0.85 mm (0.0335 in) or less when installing.

2 : Cylinder block
4 : Main bearing cap

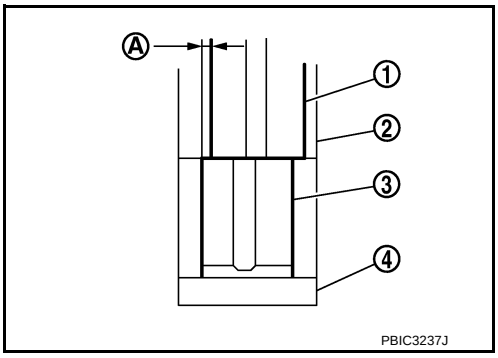

- Ensure the oil holes on cylinder block and oil holes (A) on the main bearings (1) are aligned.

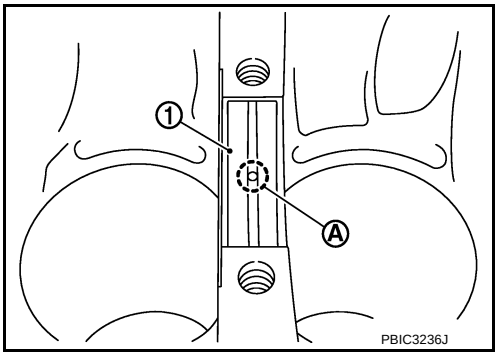

4. Install signal plate to crankshaft if removed.

a. Set the signal plate with the flange facing toward the counter weight side (engine front side) to the crankshaft rear surface.

b. Apply new engine oil to threads and seat surfaces of mounting bolts.

c. Position crankshaft (2) and signal plate (1) using a dowel pin (service part), and tighten mounting bolts in numerical order as shown in the figure using TORX socket.

A : Dowel pin hole

NOTE:
Dowel pin of crankshaft and signal plate is provided as a set for each.

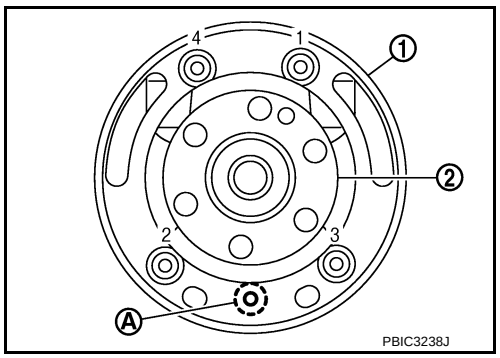

d. Tighten mounting bolts in numerical order as shown in the figure again.

e. Remove dowel pin. (service parts)
CAUTION:
Be sure to remove dowel pin.

5. Install crankshaft to cylinder block.
   - While turning crankshaft by hand, check that it turns smoothly.

6. Install main bearing caps with the following procedure:

a. Install main bearing caps referring to the journal No. stamp (A) and front mark (B) as shown in the figure.

⇦ : Engine front

NOTE:
Main bearing cap cannot be replaced as a single part, because it is machined together with cylinder block.

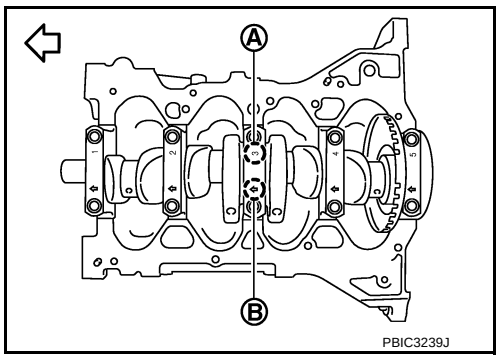

b. Tighten main bearing cap bolts in the order of 1 to 10 as shown in the figure with the following procedure:

⇦ : Engine front

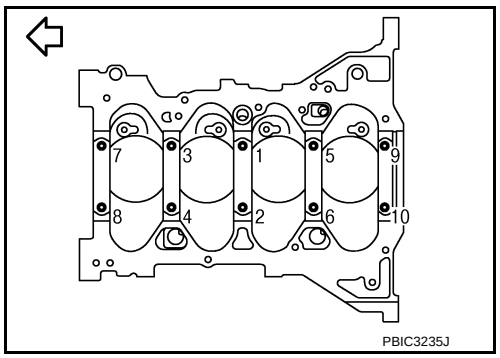

i. Apply new engine oil to threads and seat surfaces of mounting bolts.

ii. Tighten main bearing cap bolts.

: 34.3 N·m (3.5 kg-m, 25 ft-lb)

iii. Turn main bearing cap bolts 60 degrees clockwise (angle tightening) in order from No. 1 to 10 in the figure.
CAUTION:
Confirm the tightening angle by using an angle wrench [SST: KV10112100 (BT8653-A)] (A) or protractor. Never judge by visual inspection without the tool.

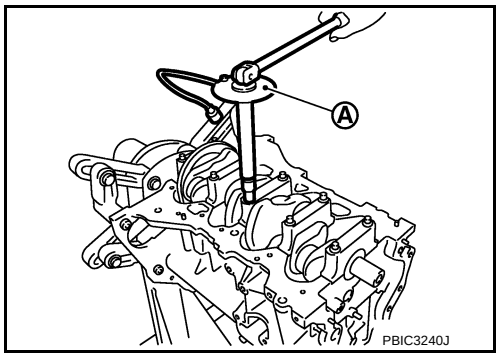

- After installing mounting bolts, check that crankshaft can be rotated smoothly by hand.
- Check crankshaft end play. Refer to EM-95, "Inspection".

7. Install piston to connecting rod with the following procedure:

a. Using snap ring pliers, install new snap ring to the groove of the piston rear side.
   - Insert it fully into groove to install.

b. Assemble piston to connecting rod.
   - Using an industrial use drier or similar tool, heat the piston until the piston pin can be pushed in by hand without excess force [approximately 60 to 70°C (140 to 158°F)]. From the front to the rear, insert piston pin into piston and connecting rod.
   - Assemble so that the front mark (A) on the piston head and the oil hole (B) and the cylinder number (C) on connecting rod are positioned as shown in the figure.

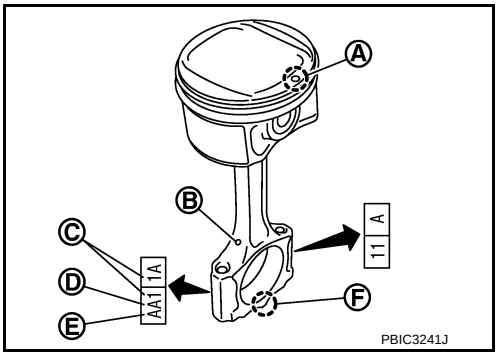

D : Big end diameter grade
E : Small end diameter grade
F : Front mark (connecting rod)

c. Install new snap ring to the groove of the piston front side.
   - Insert it fully into groove to install.
   - After installing, check that connecting rod moves smoothly.

8. Using a piston ring expander (commercial service tool), install piston rings.

CAUTION:
- **Be careful not to damage piston.**
- **Be careful not to damage piston rings by expanding them excessively.**
- Position each ring with the gap as shown in the figure referring to the piston front mark.

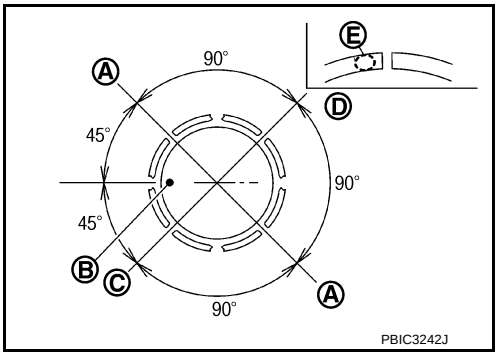

A : Oil ring upper or lower rail gap
B : Front mark
C : Second ring and oil ring spacer gap
D : Top ring gap
E : Stamped mark

CAUTION:
Never contact the rail end gap under the oil ring with the oil drain cast groove of piston.
- Install second ring with the stamped surface facing upward.

9. Install connecting rod bearing upper (2) and lower (3) to connecting rod (1) and connecting rod cap (4).

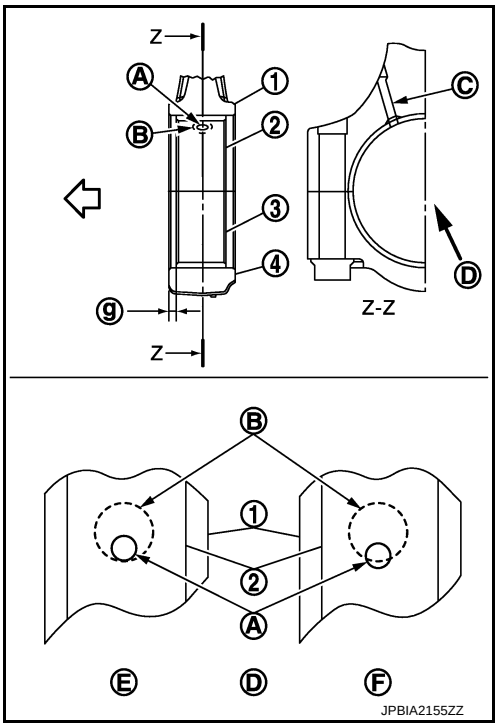

C : Oil hole (connecting rod)
D : View D
E : OK
F : NG
g : 2.55 - 2.95 mm (0.1004 - 0.1161 in)
⇦ : Engine front

- Install the connecting rod in the dimension shown in the figure.
- Check that connecting rod bearing oil hole (A) is completely in the inside of connecting rod oil hole chamfered area (B).
- When installing connecting rod bearings, apply new engine oil to the bearing surface (inside). Do not apply new engine oil to the back surface, but thoroughly clean it.

NOTE:
- There is no positioning tab.
- Install the connecting rod bearings in the center of connecting rod and connecting rod cap as shown in the figure. For service operation, the center position can be checked, visually.

10. Install piston and connecting rod assembly to crankshaft.
    - Position crankshaft pin corresponding to connecting rod to be installed onto the bottom dead center.
    - Apply new engine oil sufficiently to the cylinder bore, piston and crankshaft pin.
    - Match the cylinder position with the cylinder number (C) on connecting rod to install.

      B : Oil hole
      D : Big end diameter grade
      E : Small end diameter grade
      F : Front mark (connecting rod)

    - Install so that front mark (A) on the piston head faces the front of engine.

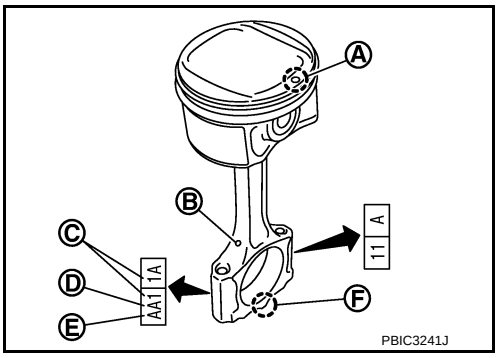

    - Using a piston ring compressor [SST: EM03470000 (J-8037)] (A) or suitable tool, install piston with the front mark on the piston head facing the front of the engine.
      CAUTION:
      Be careful not to damage the cylinder wall and crankshaft pin, resulting from an interference of the connecting rod big end.

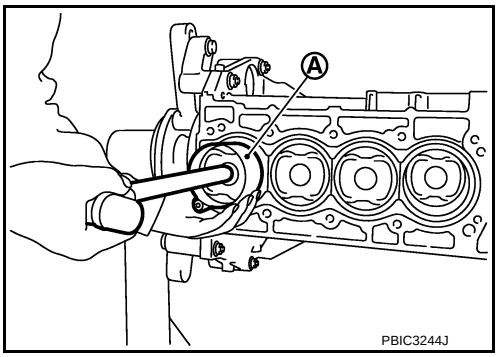

11. Install connecting rod cap.
    - Match the stamped cylinder number marks (C) on connecting rod with those on connecting rod cap to install.

      A : Front mark (piston)
      B : Oil hole
      D : Big end diameter grade
      E : Small end diameter grade
      F : Front mark (connecting rod)

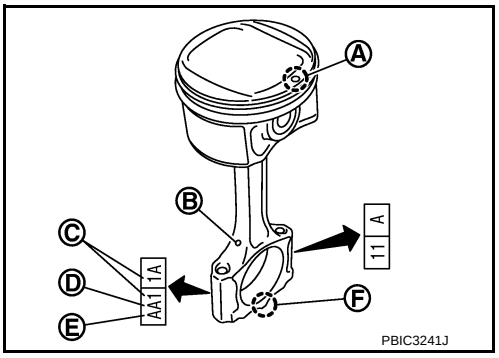

12. Tighten connecting rod cap bolt with the following procedure:
    CAUTION:
    - **Check that there is no gap in the thrust surface (A) of the joint between connecting rod (1) and connecting rod cap (2) and that these parts are in the correct position. And then, tighten the connecting rod cap bolts.**
    - **If the connecting rod cap bolts are reused, measure the outer diameter. Refer to EM-95, "Inspection".**

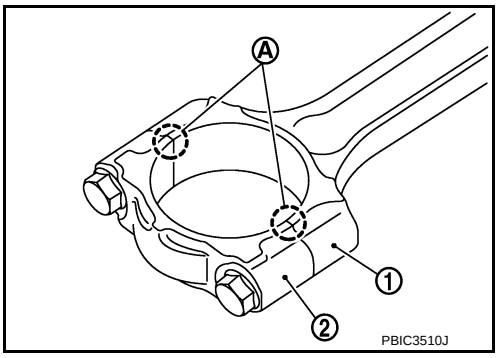

a. Apply new engine oil to the threads and seats of connecting rod cap bolts.
b. Tighten connecting rod cap bolts.

   : 27.5 N·m (2.8 kg-m, 20 ft-lb)

c. Completely loosen connecting rod cap bolts.

   : 0 N·m (0 kg-m, 0 ft-lb)

d. Tighten connecting rod cap bolts.

: 19.6 N·m (2.0 kg-m, 14 ft-lb)

e. Then turn all connecting rod cap bolts 60 degrees clockwise (angle tightening).
CAUTION:
Check and confirm the tightening angle by using an angle wrench [SST: KV10112100 (BT8653-A)] (A) or protractor. Never judge by visual inspection without the tool.

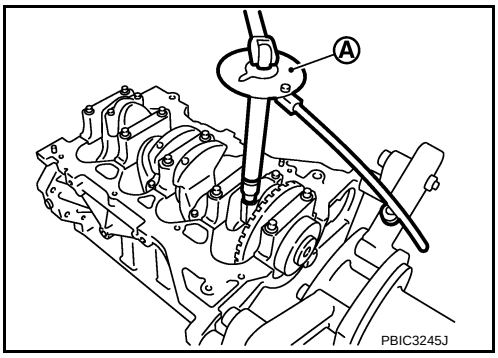

- After tightening connecting rod cap bolt, check that crankshaft rotates smoothly.
- Check the connecting rod side clearance. Refer to EM-95, "Inspection".

13. Install oil pan (upper). Refer to EM-82, "Exploded View".
NOTE:
Install the rear oil seal after installing the oil pan (upper).
14. Install rear oil seal. Refer to EM-63, "REAR OIL SEAL : Removal and Installation".
15. Install flywheel (M/T models) or drive plate (CVT models).

Drive plate (CVT models)
- Secure crankshaft with a stopper plate [SST: KV11105210 (J-44716)], (A) and tighten mounting bolts crosswise over several times.

1 : Drive plate

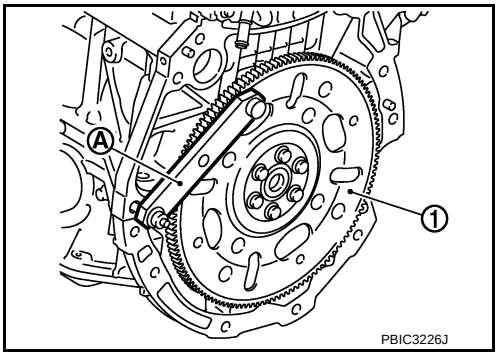

- Install pilot converter (1), drive plate (2), and reinforcement plate (3) as shown in the figure.

A : Crankshaft rear end
B : R

- Using a drift of 33 mm (1.30 in) in dia meter, press-fit pilot converter into the end of crankshaft until it stops.

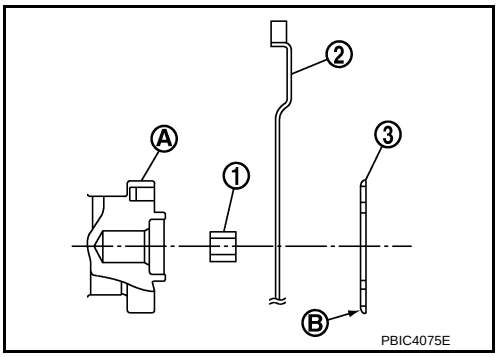

Fly wheel (M/T models)
- Secure crankshaft with a stopper plate [SST: KV11105210 (J-44716)] and tighten mounting bolts crosswise over several times.
NOTE:
M/T models have no pilot bushing and reinforcement plate.

16. Install knock sensor.

- Install knock sensor (1) with harness connector facing toward the rear of engine.

A : Cylinder block left side

⇦ : Engine front

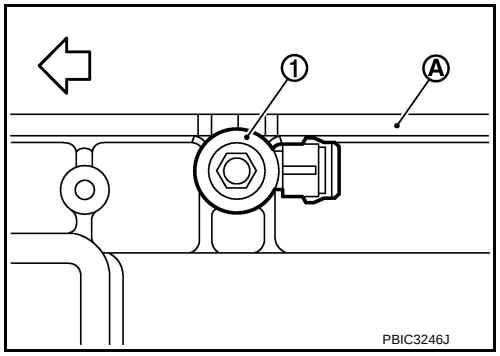

CAUTION:
- **Never tighten mounting bolts while holding the harness connector.**
- **If any impact by dropping is applied to knock sensor, replace it with a new one.**

NOTE:
- Check that there is no foreign material on the cylinder block mating surface and the back surface of knock sensor.
- Check that knock sensor does not interfere with other parts.

17. Install crankshaft position sensor (POS) and crankshaft position sensor (POS) cover.

CAUTION:
- **Do not reuse O-ring.**
- **Handle crankshaft position sensor (POS) carefully and avoid impacts.**
- **Never disassemble.**
- **Never place crankshaft position sensor (POS) in a location where it is exposed to magnetism.**

18. Install oil filter (for intake valve timing control) (1) in the direction shown in the figure.
    - Check that the oil filter (for intake valve timing control) does not protrude from the upper surface of cylinder block (2) after installation.

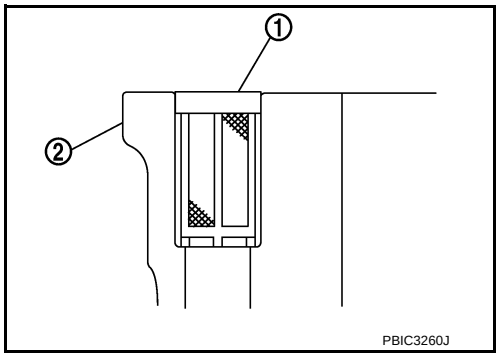

19. Assemble in the reverse order of disassembly.

Inspection

INFOID:0000000009944969

CRANKSHAFT END PLAY

- Measure the clearance between thrust bearings and crankshaft arm when crankshaft is moved fully forward or backward with a dial indicator (A).

Standard and Limit : **Refer to EM-118, "Cylinder Block".**

- If the measured value exceeds the limit, replace thrust bearings, and measure again. If it still exceeds the limit, replace crankshaft also.

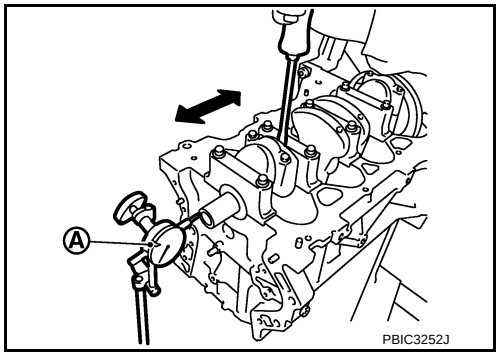

CONNECTING ROD SIDE CLEARANCE

- Measure the side clearance between connecting rod and crankshaft arm with a feeler gauge (A).

Standard and Limit : Refer to EM-118, "Cylinder Block".

- If the measured value exceeds the limit, replace connecting rod, and measure again. If it still exceeds the limit, replace crankshaft also.

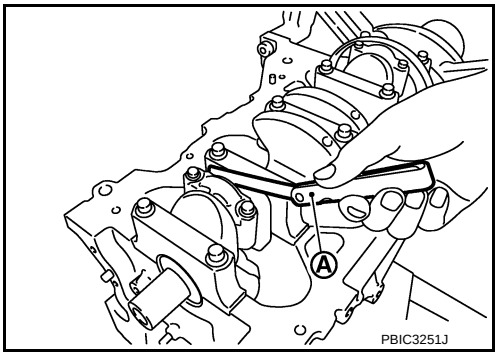

PISTON TO PISTON PIN OIL CLEARANCE

Piston Pin Hole Diameter

Measure the inner diameter of piston pin hole with an inside micrometer (A).

Standard : Refer to EM-118, "Cylinder Block".

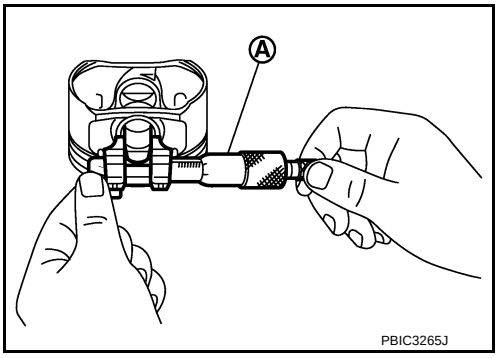

Piston Pin Outer Diameter

Measure the outer diameter of piston pin with a micrometer (A).

Standard : Refer to EM-118, "Cylinder Block".

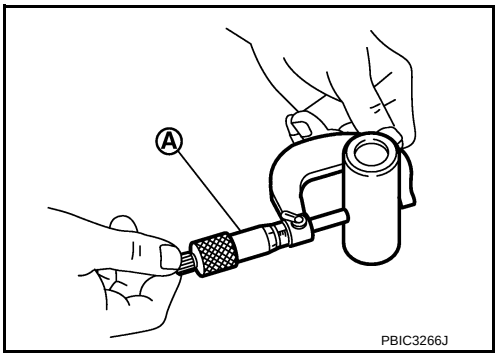

Piston to Piston Pin Oil Clearance

(Piston to piston pin oil clearance) = (Piston pin hole diameter) – (Piston pin outer diameter)

Standard : Refer to EM-118, "Cylinder Block".

- If oil clearance is out of the standard, replace piston and piston pin assembly.
- When replacing piston and piston pin assembly. Refer to EM-106, "Description".

NOTE:
- Piston is available together with piston pin as assembly.
- Piston pin (piston pin hole) grade is provided only for the parts installed at the plant. For service parts, no grades can be selected. (Only grade “0” is available.)

PISTON RING SIDE CLEARANCE

- Measure the side clearance of piston ring and piston ring groove with a feeler gauge (A).

Standard and Limit : **Refer to EM-118, "Cylinder Block".**

- If the measured value exceeds the limit, replace piston ring, and measure again. If it still exceeds the limit, replace piston also.

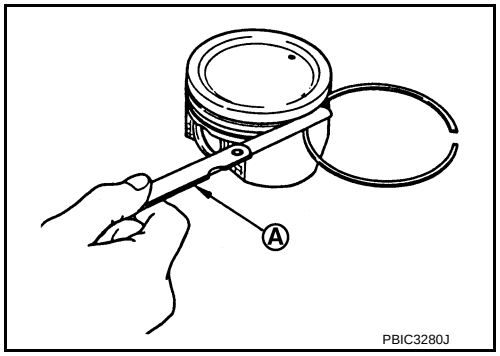

PISTON RING END GAP

- Check that cylinder bore inner diameter is within specification. Refer to “PISTON TO CYLINDER BORE CLEARANCE”.
- Lubricate with new engine oil to piston (1) and piston ring (2), and then insert (A) piston ring until middle of cylinder (B) with piston, and measure piston ring end gap with a feeler gauge (C).

Standard and Limit : **Refer to EM-118, "Cylinder Block".**

- If the measured value exceeds the limit, replace piston ring, and measure again. If it still exceeds the limit, rebore cylinder and use oversized piston and piston rings.

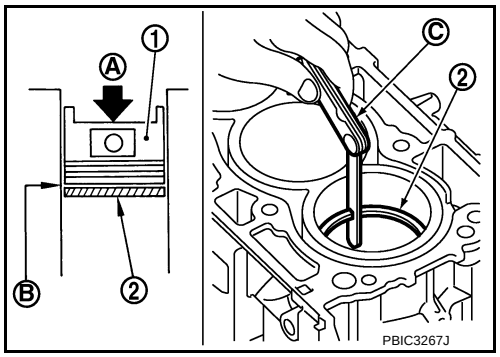

CONNECTING ROD BEND AND TORSION

- Check with a connecting rod aligner.

A : Bend
B : Torsion
C : Feeler gauge

Limit : **Refer to EM-118, "Cylinder Block".**

- If it exceeds the limit, replace connecting rod assembly.

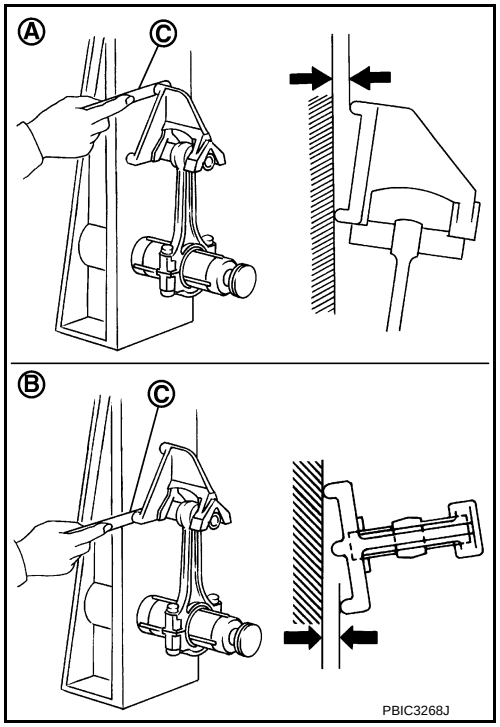

CONNECTING ROD BIG END DIAMETER

- Install connecting rod cap (1) without connecting rod bearing installed, and tightening connecting rod cap bolts to the specified torque. Refer to EM-87, "Disassembly and Assembly".

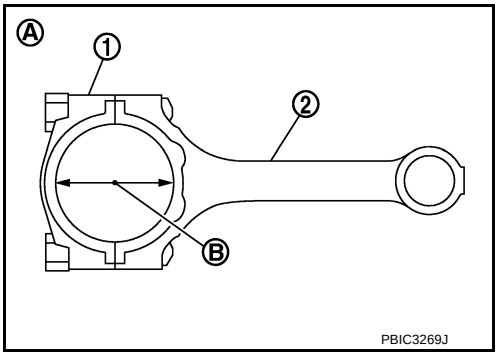

2	: Connecting rod
A	: Example
B	: Measuring direction of inner diameter

- Measure the inner diameter of connecting rod big end with an inside micrometer.

Standard : Refer to EM-118, "Cylinder Block".

- If out of the standard, replace connecting rod assembly.

CONNECTING ROD BUSHING OIL CLEARANCE

Connecting Rod Bushing Inner Diameter

Measure the inner diameter of connecting rod bushing with an inside micrometer (A).

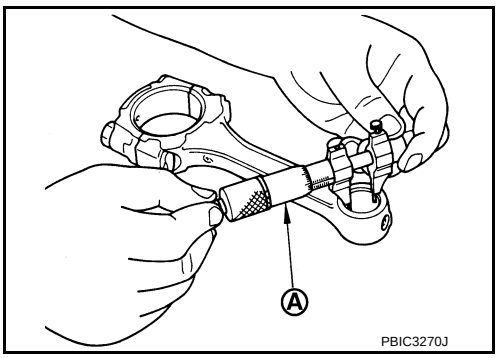

Standard : Refer to EM-118, "Cylinder Block".

Piston Pin Outer Diameter

Measure the outer diameter of piston pin with a micrometer (A).

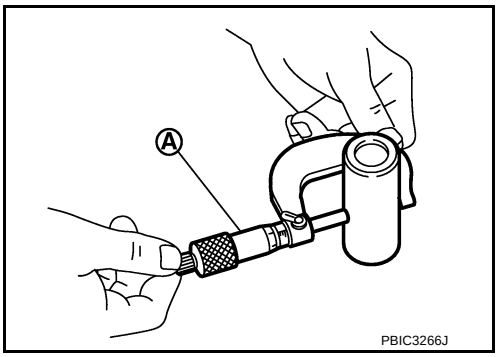

Standard : Refer to EM-118, "Cylinder Block".

Connecting Rod Bushing Oil Clearance

(Connecting rod bushing oil clearance) = (Connecting rod bushing inner diameter) – (Piston pin outer diameter)

Standard and Limit : Refer to EM-118, "Cylinder Block".

- If the measured value is out of the standard, replace connecting rod assembly and/or piston and piston pin assembly.
- If replacing piston and piston pin assembly. Refer to EM-106, "Piston".
- If replacing connecting rod assembly. Refer to EM-107, "Connecting Rod Bearing".

CYLINDER BLOCK TOP SURFACE DISTORTION

- Using a scraper, remove gasket on the cylinder block surface, and also remove engine oil, scale, carbon, or other contamination.

  CAUTION:

  Be careful not to allow gasket flakes to enter engine oil or engine coolant passages.

- Measure the distortion on the cylinder block upper face at some different points in six directions with a straight edge (A) and feeler gauge (B).

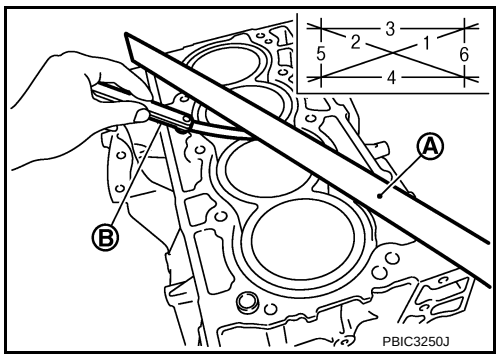

Limit : Refer to EM-118, "Cylinder Block".

- If it exceeds the limit, replace cylinder block.

MAIN BEARING HOUSING INNER DIAMETER

- Install main bearing cap without main bearings installed, and tighten main bearing cap mounting bolts to the specified torque. Refer to EM-87, "Disassembly and Assembly".
- Measure the inner diameter of main bearing housing with a bore gauge.
- Measure the position shown in the figure [5 mm (0.20 in)] backward from main bearing housing front side in the 2 directions as shown in the figure. The smaller one is the measured value.

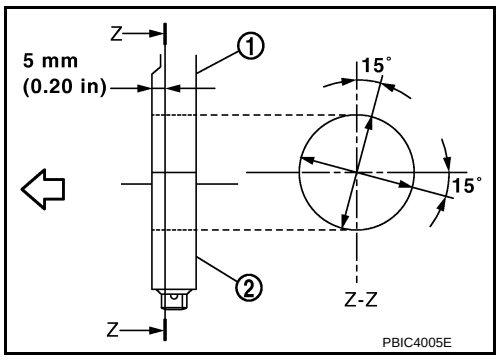

1	: Cylinder block
2	: Main bearing cap
⇦	: Engine front

Standard : Refer to EM-118, "Cylinder Block".

- If out of the standard, replace cylinder block and main bearing caps assembly.

NOTE:
Main bearing caps cannot be replaced as a single, because it is machined together with cylinder block.

PISTON TO CYLINDER BORE CLEARANCE

Cylinder Bore Inner Diameter

- Using a bore gauge, measure the cylinder bore for wear, out-of-round and taper at six different points on each cylinder. [(A) and (B) directions at (C), (D), and (E)] [(A) is in longitudinal direction of engine]

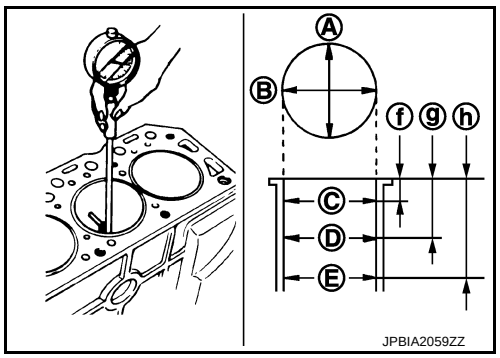

f	: 10 mm (0.39 in)
g	: 60 mm (2.36 in)
h	: 130 mm (5.12 in)

NOTE:
When determining cylinder bore grade, measure the cylinder bore (B) direction at (D) position.

Standard:

Cylinder bore inner diameter

: Refer to EM-118, "Cylinder Block".

Limit:

Out-of-round [Difference between (A) and (B)]

Taper [Difference between (C) and (D)]

: Refer to EM-118, "Cylinder Block".

- If the measured value exceeds the limit, or if there are scratches and/or seizure on the cylinder inner wall, replace cylinder block.

NOTE:
Oversize piston is not provided.

Piston Skirt Diameter

Measure the outer diameter of piston skirt with a micrometer (A).

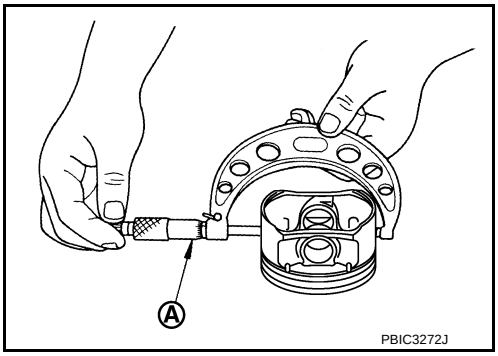

Standard : Refer to EM-118, "Cylinder Block".

Piston to Cylinder Bore Clearance

Calculate by piston skirt diameter and cylinder bore inner diameter [direction (B), position (D)].

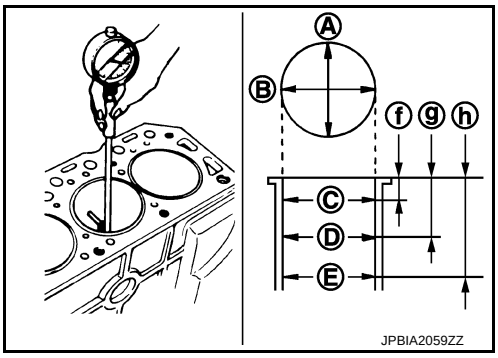

A : Direction A
C : Position C
E : Position E
f : 10 mm (0.39 in)
g : 60 mm (2.36 in)
h : 130 mm (5.12 in)

(Clearance) = (Cylinder bore inner diameter) – (Piston skirt diameter)

Standard and Limit : Refer to EM-118, "Cylinder Block".

- If it exceeds the limit, replace piston and piston pin assembly and/or cylinder block. Refer to EM-106, "Piston".

CRANKSHAFT MAIN JOURNAL DIAMETER

- Measure the outer diameter of crankshaft main journals with a micrometer (A).

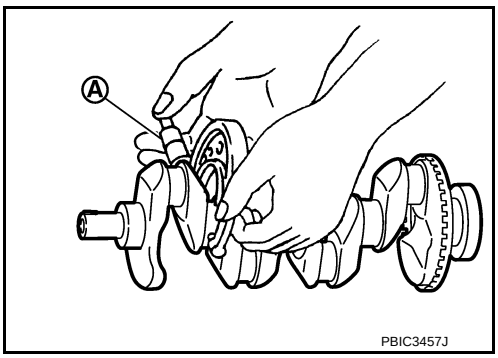

Standard : Refer to EM-118, "Cylinder Block".

- If out of the standard, measure the main bearing oil clearance. Then use undersize bearing. Refer to EM-122, "Main Bearing".

CRANKSHAFT PIN JOURNAL DIAMETER

- Measure the outer diameter of crankshaft pin journal with a micrometer.

Standard : Refer to EM-118, "Cylinder Block".

- If out of the standard, measure the connecting rod bearing oil clearance. Then use undersize bearing. Refer to EM-122, "Connecting Rod Bearing".

OUT-OF-ROUND AND TAPER OF CRANKSHAFT

- Measure the dimensions at four different points as shown in the figure on each main journal and pin journal with a micrometer.
- Out-of-round is indicated by the difference in dimensions between (X) and (Y) at (A) and (B).
- Taper is indicated by the difference in dimension between (A) and (B) at (X) and (Y).

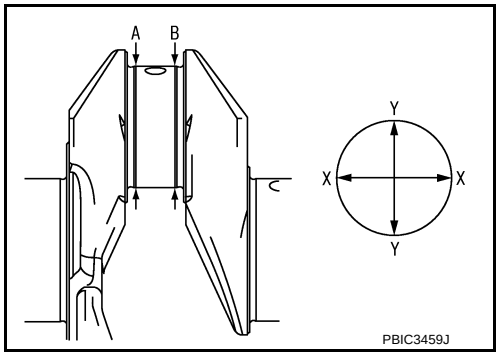

Limit:

Out-of-round [Difference between (X) and (Y)]

Taper [Difference between (A) and (B)]

: Refer to EM-118, "Cylinder Block".

- If the measured value exceeds the limit, correct or replace crankshaft.
- If corrected, measure the bearing oil clearance of the corrected main journal and/or pin journal. Then select main bearing and/or connecting rod bearing. Refer to EM-107, "Connecting Rod Bearing" and/or EM-109, "Main Bearing".

CRANKSHAFT RUNOUT

- Place a V-block on a precise flat table to support the journals on the both end of the crankshaft.
- Place a dial indicator (A) straight up on the No. 3 journal.
- While rotating crankshaft, read the movement of the pointer on the dial indicator. (Total indicator reading)

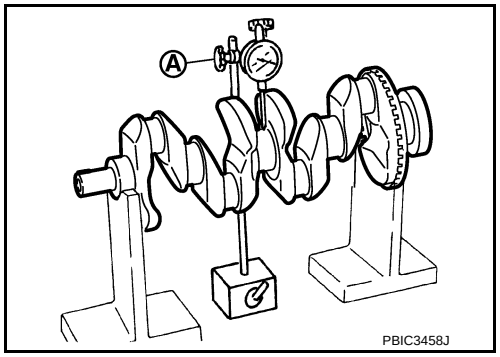

Standard and Limit : Refer to EM-118, "Cylinder Block".

- If it exceeds the limit, replace crankshaft.

CONNECTING ROD BEARING OIL CLEARANCE

Method by Calculation

- Install connecting rod bearings (2) to connecting rod (3) and connecting rod bearing cap (1), and tighten connecting rod cap bolts to the specified torque. Refer to EM-87, "Disassembly and Assembly".

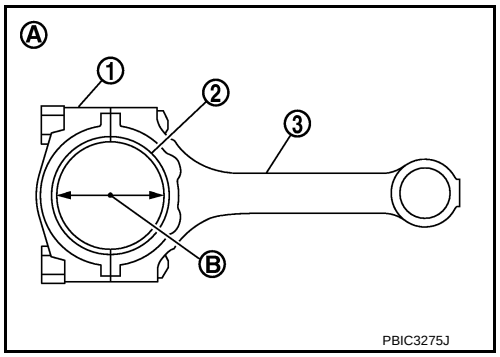

A : Example

B : Inner diameter measuring direction

- Measure the inner diameter of connecting rod bearing with an inside micrometer.
  (Bearing oil clearance) = (Connecting rod bearing inner diameter) – (Crankshaft pin journal diameter)

Standard and Limit : Refer to EM-122, "Connecting Rod Bearing".

- If clearance exceeds the limit, select proper connecting rod bearing according to connecting rod big end diameter and crankshaft pin journal diameter to obtain specified bearing oil clearance. Refer to EM-107, "Connecting Rod Bearing".

Method of Using Plastigage

- Remove engine oil and dust on crankshaft pin and the surfaces of each bearing completely.
- Cut a plastigage slightly shorter than the bearing width, and place it in crankshaft axial direction, avoiding oil holes.
- Install connecting rod bearings to connecting rod and cap, and tighten connecting rod cap bolts to the specified torque. Refer to EM-87, "Disassembly and Assembly".
  CAUTION:
  Never rotate crankshaft.

- Remove connecting rod cap and bearing, and using the scale (A) on the plastigage bag, measure the plastigage width.
  NOTE:
  The procedure when the measured value exceeds the limit is same as that described in the “Method by Calculation”.

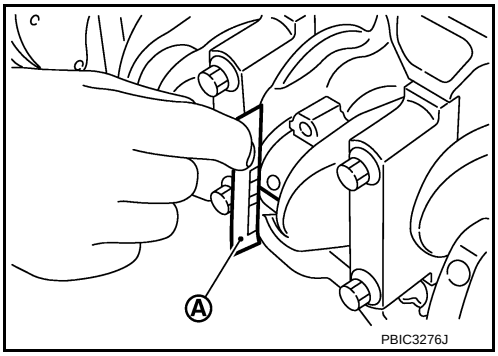

MAIN BEARING OIL CLEARANCE

Method by Calculation

- Install main bearings (3) to cylinder block (1) and main bearing cap (2), and tighten main bearing cap mounting bolts to the specified torque. Refer to EM-87, "Disassembly and Assembly".

A : Example

B : Inner diameter measuring direction

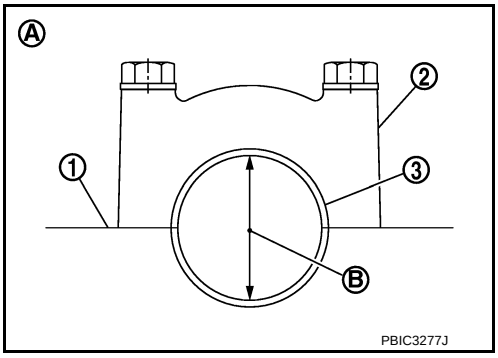

- Measure the inner diameter of main bearing with a bore gauge.

(Bearing oil clearance) = (Main bearing inner diameter) – (Crankshaft main journal diameter)

Standard and Limit : Refer to EM-122, "Main Bearing".

- If clearance exceeds the limit, select proper main bearing according to main bearing inner diameter and crankshaft main journal diameter to obtain specified bearing oil clearance. Refer to EM-109, "Main Bearing".

Method of Using Plastigage

- Remove engine oil and dust on crankshaft main journal and the surfaces of each bearing completely.
- Cut a plastigage slightly shorter than the bearing width, and place it in crankshaft axial direction, avoiding oil holes.
- Install main bearings to cylinder block and main bearing cap, and tighten main bearing cap mounting bolts to the specified torque. Refer to EM-87, "Disassembly and Assembly".
  CAUTION:
  Never rotate crankshaft.
- Remove main bearing cap and bearings, and using the scale (A) on the plastigage bag, measure the plastigage width.
  NOTE:
  The procedure when the measured value exceeds the limit is same as that described in the “Method by Calculation”.

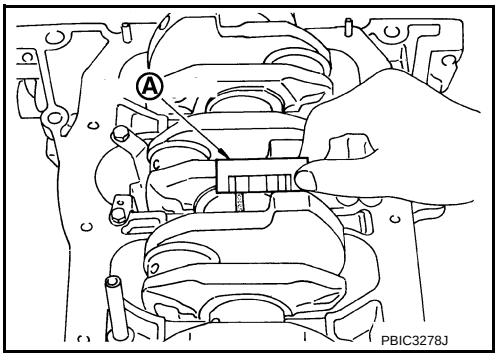

MAIN BEARING CRUSH HEIGHT

- When main bearing cap is removed after being tightened to the specified torque with main bearings (1) installed, the tip end of bearing must protrude (B). Refer to EM-87, "Disassembly and Assembly".

A : Example

Standard : There must be crush height.

- If the standard is not met, replace main bearings.

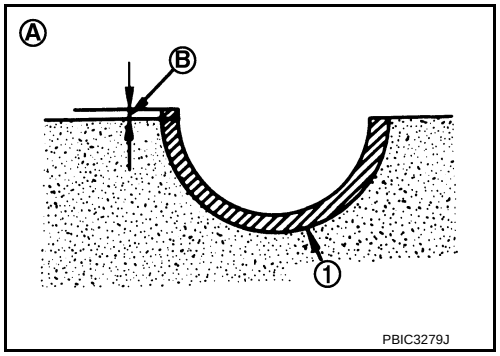

CONNECTING ROD BEARING CRUSH HEIGHT

- When connecting rod cap is removed after being tightened to the specified torque with connecting rod bearings (1) installed, the tip end of bearing must protrude (B). Refer to EM-87, "Disassembly and Assembly".

A : Example

Standard : There must be crush height.

- If the standard is not met, replace connecting rod bearings.

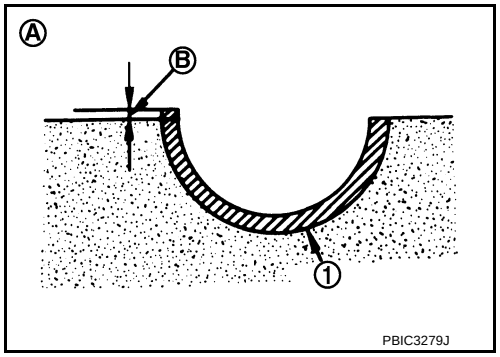

MAIN BEARING CAP BOLT OUTER DIAMETER

- Measure the outer diameters (d_1) and (d_2) at two positions as shown in the figure.

A : (d_1) measuring position

B : (d_2) measuring position

- If reduction appears in places other than (B) range, regard it as (d_2).

Limit [(d_1) – (d_2)]: 0.15 mm (0.0059 in)

- If it exceeds the limit (a large difference in dimensions), replace main bearing cap mounting bolt with a new one.

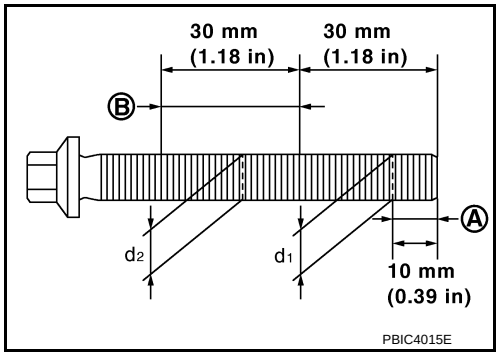

CONNECTING ROD CAP BOLT OUTER DIAMETER

- Measure the outer diameter (d) at position as shown in the figure.
- If reduction appears in a position other than (d), regard it as (d).

Limit: 7.75 mm (0.3051 in)

- When (d) exceeds the limit (when it becomes thinner), replace connecting rod cap bolt with a new one.

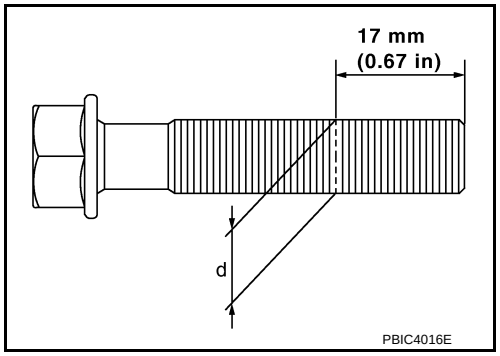

CLOGGED OR DAMAGED OIL FILTER (FOR INTAKE VALVE TIMING CONTROL)

- Check that there is no foreign material on the oil filter and check it for clogging.
- Clean it if necessary.
- Check the oil filter for damage.
- Replace it if necessary.

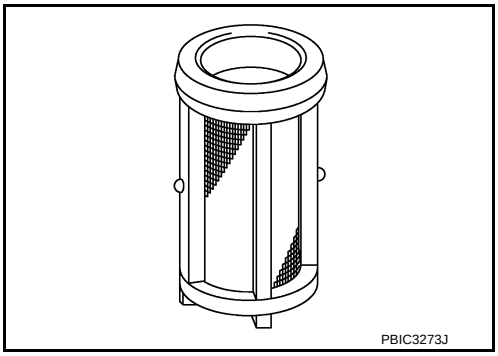

FLYWHEEL DEFLECTION (M/T MODELS)

- Measure the deflection of flywheel contact surface to torque with a dial indicator (A).
- Measure the deflection at 210 mm (8.27 in) diameter.

Limit : 0.45 mm (0.0177 in) or less.

- If measured value is out of the standard, replace flywheel.
- If a trace of burn or discoloration is found on the surface, repair it with sandpaper.

CAUTION:
When measuring, keep magnetic fields (such as dial indicator stand) away from signal plate of the rear end of crankshaft.

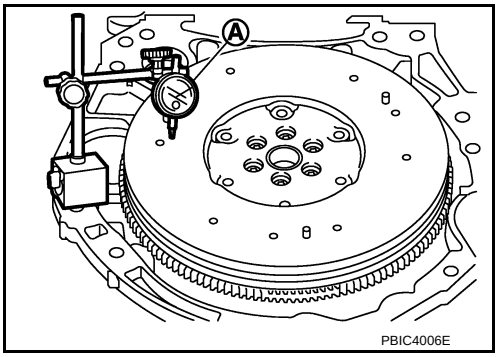

MOVEMENT AMOUNT OF FLYWHEEL (M/T MODELS)

CAUTION:
Never disassemble double mass flywheel.

Movement Amount of Thrust (Fore-and-Aft) Direction

- Measure the movement amount of thrust (fore-and-aft) direction when 100 N (10.2 kg, 22 lb) force is added at the portion of 125 mm (4.92 in) radius from the center of flywheel.

Standard : 1.8 mm (0.071 in) or less

- If measured value is out of the standard, replace flywheel.

Movement Amount in Radial (Rotation) Direction

Check the movement amount of radial (rotation) direction with the following procedure:

1. Install clutch cover mounting bolt (1) to clutch cover mounting hole, and place a torque wrench (A) on the extended line of the flywheel (2) center line.
   - Tighten bolt at a force of 9.8 N·m (1.0 kg-m, 87 in-lb) to keep it from loosening.
2. Put a matching mark on circumferences of the two flywheel masses without applying any load (Measurement standard points).
3. Apply a force of 9.8 N·m (1.0 kg-m, 87 in-lb) in each direction, and mark the movement amount on the mass on the transaxle side.
4. Measure the dimensions of movement amounts “A” and “B” on circumference of the flywheel on the transaxle side.

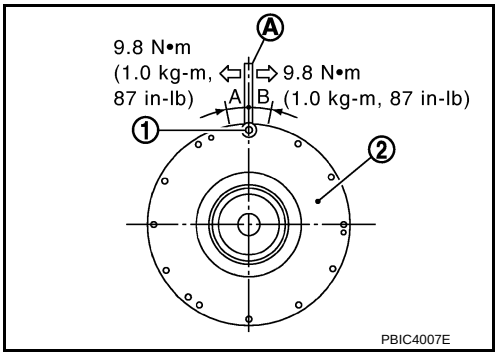

Limit : 33.2 mm (1.307 in) or less.

- If measured value is out of the standard, replace flywheel.

DRIVE PLATE (CVT MODELS)

- Check drive plate and signal plate for deformation or damage.
  CAUTION:
  - **Never disassemble drive plate.**
  - **Never place drive plate with signal plate facing down.**
  - **When handling signal plate, take care not to damage or scratch it.**
  - **Handle signal plate in a manner that prevents it from becoming magnetized.**
- If anything is found, replace drive plate.

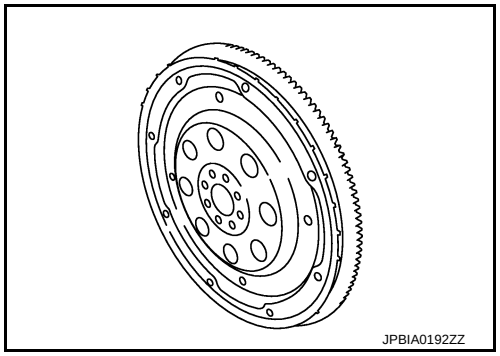

HOW TO SELECT PISTON AND BEARING

Description

INFOID:0000000009944970

Selection points	Selection parts	Selection items	Selection methods
Between cylinder block and crankshaft	Main bearing	Main bearing grade (bearing thickness)	Determined by match of cylinder block bearing housing grade (inner diameter of housing) and crankshaft journal grade (outer diameter of journal)
Between crankshaft and connecting rod	Connecting rod bearing	Connecting rod bearing grade (bearing thickness)	Combining service grades for connecting rod big end diameter and crankshaft pin outer diameter determine connecting rod bearing selection.
Between cylinder block and piston	Piston and piston pin assembly (piston is available together with piston pin as an assembly.)	Piston grade (piston outer diameter)	Piston grade = cylinder bore grade (inner diameter of bore)

- The identification grade stamped on each part is the grade for the dimension measured in new condition. This grade cannot apply to reused parts.
- For reused or repaired parts, measure the dimension accurately. Determine the grade by comparing the measurement with the values of each selection table.
- For details of the measurement method of each part, the reuse standards and the selection method of the selective fitting parts, refer to the text.

Piston

INFOID:0000000009944971

WHEN NEW CYLINDER BLOCK IS USED

- Check the cylinder bore grade on rear left side of cylinder block (L), and select piston of the same grade.

A : Correction stamp
B : Standard stamp
C : Cylinder No. 1 bore grade
D : Cylinder No. 2 bore grade
E : Cylinder No. 3 bore grade
F : Cylinder No. 4 bore grade
G : No. 1 main bearing housing grade
H : No. 2 main bearing housing grade
I : No. 3 main bearing housing grade
J : No. 4 main bearing housing grade
K : No. 5 main bearing housing grade
⇦ : Engine front

- If there is a correction stamp mark on the cylinder block, use it as a correct reference.

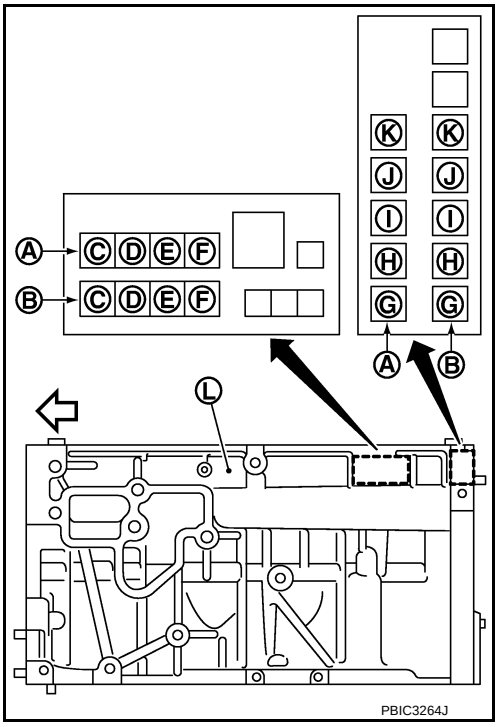

WHEN CYLINDER BLOCK IS REUSED

1. Measure the cylinder bore inner diameter. Refer to EM-118, "Cylinder Block".
2. Determine the bore grade by comparing the measurement with the values under the cylinder bore inner diameter of the “Piston Selection Table”.

3. Select piston of the same grade.

A : Piston grade number
B : Front mark
C : Identification code
D : Sub grade number

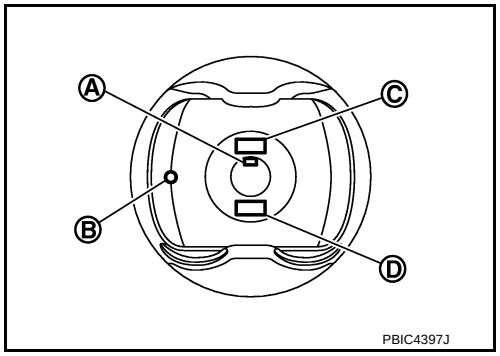

PISTON SELECTION TABLE

Unit: mm (in)

Grade number (Mark)	1	2 [or no mark (piston only)]
Cylinder bore Inner diameter	84.000 - 84.010 (3.3071 - 3.3075)	84.010 - 84.020 (3.3075 - 3.3079)
Piston skirt diameter	83.970 - 83.980 (3.3059 - 3.3063)	83.980 - 83.990 (3.3063 - 3.3067)

NOTE:
Piston is available together with piston pin as an assembly.

Connecting Rod Bearing

INFOID:0000000009944972

WHEN NEW CONNECTING ROD AND CRANKSHAFT ARE USED

1. Apply connecting rod big end diameter grade stamped on connecting rod side face to the row in the “Connecting Rod Bearing Selection Table”.

A : Oil hole
B : Management code
C : Cylinder number
D : Big end diameter grade
E : Small end diameter grade
F : Front mark

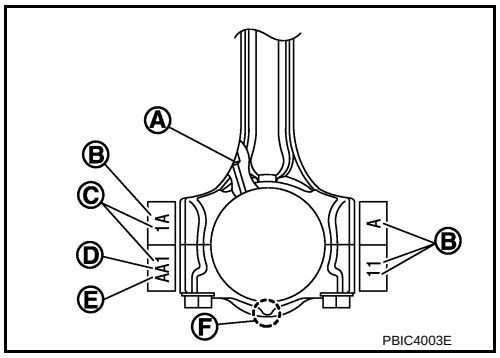

2. Apply crankshaft pin journal diameter grade stamped on crankshaft front side to the column in the “Connecting Rod Bearing Selection Table”.

A : No. 1 pin journal diameter grade
B : No. 2 pin journal diameter grade
C : No. 3 pin journal diameter grade
D : No. 4 pin journal diameter grade
E : No. 1 main journal diameter grade
F : No. 2 main journal diameter grade
G : No. 3 main journal diameter grade
H : No. 4 main journal diameter grade
I : No. 5 main journal diameter grade

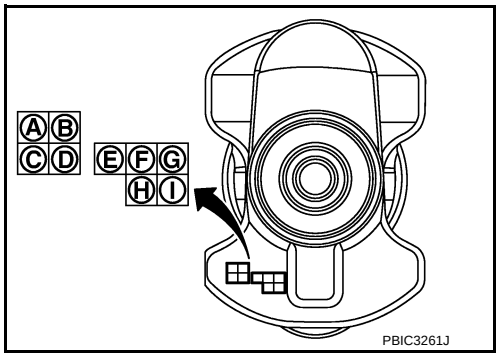

3. Read the symbol at the cross point of selected row and column in the “Connecting Rod Bearing Selection Table”.
4. Apply the symbol obtained to the “Connecting Rod Bearing Grade Table” to select connecting rod bearing.

WHEN CONNECTING ROD AND CRANKSHAFT ARE REUSED

1. Measure the dimensions of the connecting rod big end diameter and crankshaft pin journal diameter individually. Refer to EM-95, "Inspection".

2. Apply the measured dimension to the “Connecting Rod Bearing Selection Table”.
3. Read the symbol at the cross point of selected row and column in the “Connecting Rod Bearing Selection Table”.
4. Apply the symbol obtained to the “Connecting Rod Bearing Grade Table” to select connecting rod bearing.

CONNECTING ROD BEARING SELECTION TABLE

Crankshaft pin journal diameter Unit: mm (in) / Connecting rod big end diameter Unit: mm (in)		Mark	A	B	C	D	E	F	G	H	J	K	L	M	N
		Hole diameter	47.000 - 47.001 (1.8504 - 1.8504)	47.001 - 47.002 (1.8504 - 1.8505)	47.002 - 47.003 (1.8505 - 1.8505)	47.003 - 47.004 (1.8505 - 1.8505)	47.004 - 47.005 (1.8505 - 1.8506)	47.005 - 47.006 (1.8506 - 1.8506)	47.006 - 47.007 (1.8506 - 1.8507)	47.007 - 47.008 (1.8507 - 1.8507)	47.008 - 47.009 (1.8507 - 1.8507)	47.009 - 47.010 (1.8507 - 1.8508)	47.010 - 47.011 (1.8508 - 1.8508)	47.011 - 47.012 (1.8508 - 1.8509)	47.012 - 47.013 (1.8509 - 1.8509)
Mark	Axle diameter														
A	43.970 - 43.971 (1.7311 - 1.7311)		0	0	0	0	0	01	01	01	1	1	1	12	12
B	43.969 - 43.970 (1.7311 - 1.7311)		0	0	0	0	01	01	01	1	1	1	12	12	12
C	43.968 - 43.969 (1.7310 - 1.7311)		0	0	0	01	01	01	1	1	1	12	12	12	2
D	43.967 - 43.968 (1.7310 - 1.7310)		0	0	01	01	01	1	1	1	12	12	12	2	2
E	43.966 - 43.967 (1.7309 - 1.7310)		0	01	01	01	1	1	1	12	12	12	2	2	2
F	43.965 - 43.966 (1.7309 - 1.7309)		01	01	01	1	1	1	12	12	12	2	2	2	23
G	43.964 - 43.965 (1.7309 - 1.7309)		01	01	1	1	1	12	12	12	2	2	2	23	23
H	43.963 - 43.964 (1.7308 - 1.7309)		01	1	1	1	12	12	12	2	2	2	23	23	23
J	43.962 - 43.963 (1.7308 - 1.7308)		1	1	1	12	12	12	2	2	2	23	23	23	3
K	43.961 - 43.962 (1.7307 - 1.7308)		1	1	12	12	12	2	2	2	23	23	23	3	3
L	43.960 - 43.961 (1.7307 - 1.7307)		1	12	12	12	2	2	2	23	23	23	3	3	3
M	43.959 - 43.960 (1.7307 - 1.7307)		12	12	12	2	2	2	23	23	23	3	3	3	34
N	43.958 - 43.959 (1.7306 - 1.7307)		12	12	2	2	2	23	23	23	3	3	3	34	34
P	43.957 - 43.958 (1.7306 - 1.7306)		12	2	2	2	23	23	23	3	3	3	34	34	34
R	43.956 - 43.957 (1.7305 - 1.7306)		2	2	2	23	23	23	3	3	3	34	34	34	4
S	43.955 - 43.956 (1.7305 - 1.7305)		2	2	23	23	23	3	3	3	34	34	34	4	4
T	43.954 - 43.955 (1.7305 - 1.7305)		2	23	23	23	3	3	3	34	34	34	4	4	4
U	43.953 - 43.954 (1.7304 - 1.7305)		23	23	23	3	3	3	34	34	34	4	4	4	4

PBIC4077E

CONNECTING ROD BEARING GRADE TABLE

Connecting rod bearing grade table : Refer to EM-122, "Connecting Rod Bearing".

UNDERSIZE BEARINGS USAGE GUIDE

- When the specified connecting rod bearing oil clearance is not obtained with standard size connecting rod bearings, use undersize (US) bearings.
- When using undersize (US) bearing, measure the connecting rod bearing inner diameter with bearing installed, and grind the crankshaft pin so that the connecting rod bearing oil clearance satisfies the standard.

CAUTION:

In grinding crankshaft pin to use undersize bearings, keep the fillet R [1.5 - 1.7 mm (0.059 - 0.067 in)] (A).

Bearing undersize table

: Refer to EM-122, "Connecting Rod Bearing".

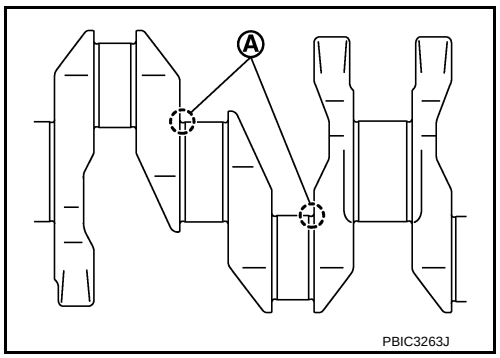

Main Bearing

INFOID:0000000009944973

WHEN NEW CYLINDER BLOCK AND CRANKSHAFT ARE USED

1. "Main Bearing Selection Table" rows correspond to main bearing housing grade on rear left side of cylinder block (L).

   A : Correction stamp
   B : Standard stamp
   C : Cylinder No. 1 bore grade
   D : Cylinder No. 2 bore grade
   E : Cylinder No. 3 bore grade
   F : Cylinder No. 4 bore grade
   G : No. 1 main bearing housing grade
   H : No. 2 main bearing housing grade
   I : No. 3 main bearing housing grade
   J : No. 4 main bearing housing grade
   K : No. 5 main bearing housing grade
   ⇦ : Engine front

   - If there is a correction stamp mark on cylinder block, use it as a correct reference.

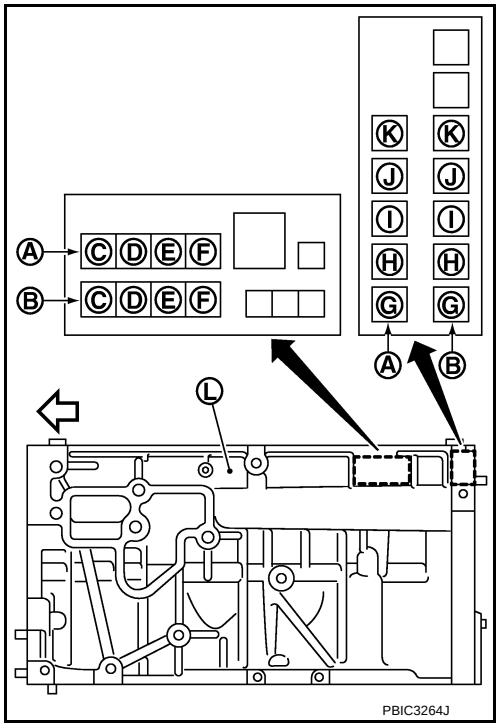

2. Apply main journal diameter grade stamped on crankshaft front side to column in the "Main Bearing Selection Table".

   A : No. 1 pin journal diameter grade
   B : No. 2 pin journal diameter grade
   C : No. 3 pin journal diameter grade
   D : No. 4 pin journal diameter grade
   E : No. 1 main journal diameter grade
   F : No. 2 main journal diameter grade
   G : No. 3 main journal diameter grade
   H : No. 4 main journal diameter grade
   I : No. 5 main journal diameter grade

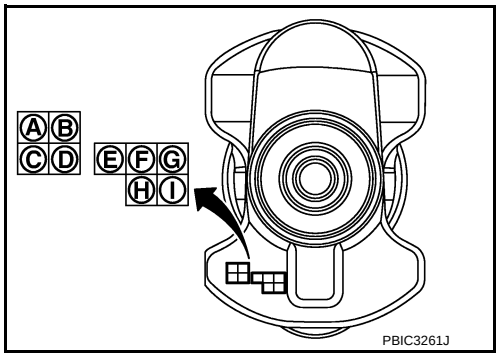

3. Read the symbol at the cross point of selected row and column in the "Main Bearing Selection Table".
   CAUTION:
   There are two main bearing selection tables. One is for No. 1, 4, and 5 journals and the other is for No. 2 and 3 journals. Make certain to use the appropriate table. This is due to differences in the specified clearances.

4. Apply the symbol obtained to the “Main Bearing Grade Table” to select main bearing.
   NOTE:
   Service part is available as a set of both upper and lower.

WHEN CYLINDER BLOCK AND CRANKSHAFT ARE REUSED

1. Measure the dimensions of the cylinder block main bearing housing inner diameter and crankshaft main journal diameter individually. Refer to EM-95, "Inspection".
2. Apply the measured dimension to the “Main Bearing Selection Table”.
3. Read the symbol at the cross point of selected row and column in the “Main Bearing Selection Table”.
   CAUTION:
   There are two main bearing selection tables. One is for No. 1, 4, and 5 journals and the other is for No. 2 and 3 journals. Make certain to use the appropriate table. This is due to differences in the specified clearances.
4. Apply the symbol obtained to the “Main Bearing Grade Table” to select main bearing.
   NOTE:
   Service part is available as a set of both upper and lower.

MAIN BEARING SELECTION TABLE (No. 1, 4, AND 5 JOURNAL)

Crankshaft main journal diameter Unit: mm (in) / Cylinder block main bearing housing inner diameter Unit: mm (in)		Mark	A	B	C	D	E	F	G	H	J	K	L	M	N	P	R	S	T	U	V	W
Mark	Axle diameter	Hole diameter	55.997 - 55.998 (2.2046 - 2.2046)	55.998 - 55.999 (2.2046 - 2.2047)	55.999 - 56.000 (2.2047 - 2.2047)	56.000 - 56.001 (2.2047 - 2.2048)	56.001 - 56.002 (2.2048 - 2.2048)	56.002 - 56.003 (2.2048 - 2.2048)	56.003 - 56.004 (2.2048 - 2.2049)	56.004 - 56.005 (2.2049 - 2.2049)	56.005 - 56.006 (2.2049 - 2.2050)	56.006 - 56.007 (2.2050 - 2.2050)	56.007 - 56.008 (2.2050 - 2.2050)	56.008 - 56.009 (2.2050 - 2.2051)	56.009 - 56.010 (2.2051 - 2.2051)	56.010 - 56.011 (2.2051 - 2.2052)	56.011 - 56.012 (2.2052 - 2.2052)	56.012 - 56.013 (2.2052 - 2.2052)	56.013 - 56.014 (2.2052 - 2.2053)	56.014 - 56.015 (2.2053 - 2.2053)	56.015 - 56.016 (2.2053 - 2.2053)	56.016 - 56.017 (2.2053 - 2.2054)
A	51.978 - 51.979 (2.0464 - 2.0464)		0	0	0	0	0	0	0	01	01	01	1	1	1	12	12	12	2	2	2	23
B	51.977 - 51.978 (2.0463 - 2.0464)		0	0	0	0	0	0	01	01	01	1	1	1	12	12	12	2	2	2	23	23
C	51.976 - 51.977 (2.0463 - 2.0463)		0	0	0	0	0	01	01	01	1	1	1	12	12	12	2	2	2	23	23	23
D	51.975 - 51.976 (2.0463 - 2.0463)		0	0	0	0	01	01	01	1	1	1	12	12	12	2	2	2	23	23	23	3
E	51.974 - 51.975 (2.0462 - 2.0463)		0	0	0	01	01	01	1	1	1	12	12	12	2	2	2	23	23	23	3	3
F	51.973 - 51.974 (2.0462 - 2.0462)		0	0	01	01	01	1	1	1	12	12	12	2	2	2	23	23	23	3	3	3
G	51.972 - 51.973 (2.0461 - 2.0462)		0	01	01	01	1	1	1	12	12	12	2	2	2	23	23	23	3	3	3	34
H	51.971 - 51.972 (2.0461 - 2.0461)		01	01	01	1	1	1	12	12	12	2	2	2	23	23	23	3	3	3	34	34
J	51.970 - 51.971 (2.0461 - 2.0461)		01	01	1	1	1	12	12	12	2	2	2	23	23	23	3	3	3	34	34	34
K	51.969 - 51.970 (2.0460 - 2.0461)		01	1	1	1	12	12	12	2	2	2	23	23	23	3	3	3	34	34	34	4
L	51.968 - 51.969 (2.0460 - 2.0460)		1	1	1	12	12	12	2	2	2	23	23	23	3	3	3	34	34	34	4	4
M	51.967 - 51.968 (2.0459 - 2.0460)		1	1	12	12	12	2	2	2	23	23	23	3	3	3	34	34	34	4	4	4
N	51.966 - 51.967 (2.0459 - 2.0459)		1	12	12	12	2	2	2	23	23	23	3	3	3	34	34	34	4	4	4	45
P	51.965 - 51.966 (2.0459 - 2.0459)		12	12	12	2	2	2	23	23	23	3	3	3	34	34	34	4	4	4	45	45
R	51.964 - 51.965 (2.0458 - 2.0459)		12	12	2	2	2	23	23	23	3	3	3	34	34	34	4	4	4	45	45	45
S	51.963 - 51.964 (2.0458 - 2.0458)		12	2	2	2	23	23	23	3	3	3	34	34	34	4	4	4	45	45	45	5
T	51.962 - 51.963 (2.0457 - 2.0458)		2	2	2	23	23	23	3	3	3	34	34	34	4	4	4	45	45	45	5	5
U	51.961 - 51.962 (2.0457 - 2.0457)		2	2	23	23	23	3	3	3	34	34	34	4	4	4	45	45	45	5	5	5
V	51.960 - 51.961 (2.0457 - 2.0457)		2	23	23	23	3	3	3	34	34	34	4	4	4	45	45	45	5	5	5	5
W	51.959 - 51.960 (2.0456 - 2.0457)		23	23	23	3	3	3	34	34	34	4	4	4	45	45	45	5	5	5	5	5

PBIC4078E

MAIN BEARING SELECTION TABLE (No. 2 AND 3 JOURNAL)

Crankshaft main journal diameter Unit: mm (in) / Cylinder block main bearing housing inner diameter Unit: mm (in)		Mark	A	B	C	D	E	F	G	H	J	K	L	M	N	P	R	S	T	U	V	W
		Hole diameter	55.997 - 55.998 (2.2046 - 2.2046)	55.998 - 55.999 (2.2046 - 2.2047)	55.999 - 56.000 (2.2047 - 2.2047)	56.000 - 56.001 (2.2047 - 2.2048)	56.001 - 56.002 (2.2048 - 2.2048)	56.002 - 56.003 (2.2048 - 2.2048)	56.003 - 56.004 (2.2048 - 2.2049)	56.004 - 56.005 (2.2049 - 2.2049)	56.005 - 56.006 (2.2049 - 2.2050)	56.006 - 56.007 (2.2050 - 2.2050)	56.007 - 56.008 (2.2050 - 2.2050)	56.008 - 56.009 (2.2050 - 2.2051)	56.009 - 56.010 (2.2051 - 2.2051)	56.010 - 56.011 (2.2051 - 2.2052)	56.011 - 56.012 (2.2052 - 2.2052)	56.012 - 56.013 (2.2052 - 2.2052)	56.013 - 56.014 (2.2052 - 2.2053)	56.014 - 56.015 (2.2053 - 2.2053)	56.015 - 56.016 (2.2053 - 2.2053)	56.016 - 56.017 (2.2053 - 2.2054)
Mark	Axle diameter																					
A	51.978 - 51.979 (2.0464 - 2.0464)		1	12	12	12	2	2	2	23	23	23	3	3	3	34	34	34	4	4	4	45
B	51.977 - 51.978 (2.0463 - 2.0464)		12	12	12	2	2	2	23	23	23	3	3	3	34	34	34	4	4	4	45	45
C	51.976 - 51.977 (2.0463 - 2.0463)		12	12	2	2	2	23	23	23	3	3	3	34	34	34	4	4	4	45	45	45
D	51.975 - 51.976 (2.0463 - 2.0463)		12	2	2	2	23	23	23	3	3	3	34	34	34	4	4	4	45	45	45	5
E	51.974 - 51.975 (2.0462 - 2.0463)		2	2	2	23	23	23	3	3	3	34	34	34	4	4	4	45	45	45	5	5
F	51.973 - 51.974 (2.0462 - 2.0462)		2	2	23	23	23	3	3	3	34	34	34	4	4	4	45	45	45	5	5	5
G	51.972 - 51.973 (2.0461 - 2.0462)		2	23	23	23	3	3	3	34	34	34	4	4	4	45	45	45	5	5	5	56
H	51.971 - 51.972 (2.0461 - 2.0461)		23	23	23	3	3	3	34	34	34	4	4	4	45	45	45	5	5	5	56	56
J	51.970 - 51.971 (2.0461 - 2.0461)		23	23	3	3	3	34	34	34	4	4	4	45	45	45	5	5	5	56	56	56
K	51.969 - 51.970 (2.0460 - 2.0461)		23	3	3	3	34	34	34	4	4	4	45	45	45	5	5	5	56	56	56	6
L	51.968 - 51.969 (2.0460 - 2.0460)		3	3	3	34	34	34	4	4	4	45	45	45	5	5	5	56	56	56	6	6
M	51.967 - 51.968 (2.0459 - 2.0460)		3	3	34	34	34	4	4	4	45	45	45	5	5	5	56	56	56	6	6	6
N	51.966 - 51.967 (2.0459 - 2.0459)		3	34	34	34	4	4	4	45	45	45	5	5	5	56	56	56	6	6	6	67
P	51.965 - 51.966 (2.0459 - 2.0459)		34	34	34	4	4	4	45	45	45	5	5	5	56	56	56	6	6	6	67	67
R	51.964 - 51.965 (2.0458 - 2.0459)		34	34	4	4	4	45	45	45	5	5	5	56	56	56	6	6	6	67	67	67
S	51.963 - 51.964 (2.0458 - 2.0458)		34	4	4	4	45	45	45	5	5	5	56	56	56	6	6	6	67	67	67	7
T	51.962 - 51.963 (2.0457 - 2.0458)		4	4	4	45	45	45	5	5	5	56	56	56	6	6	6	67	67	67	7	7
U	51.961 - 51.962 (2.0457 - 2.0457)		4	4	45	45	45	5	5	5	56	56	56	6	6	6	67	67	67	7	7	7
V	51.960 - 51.961 (2.0457 - 2.0457)		4	45	45	45	5	5	5	56	56	56	6	6	6	67	67	67	7	7	7	7
W	51.959 - 51.960 (2.0456 - 2.0457)		45	45	45	5	5	5	56	56	56	6	6	6	67	67	67	7	7	7	7	7

PBIC4079E

MAIN BEARING GRADE TABLE (ALL JOURNALS)

Main bearing grade table (All journals) : Refer to EM-122, "Main Bearing".

UNDERSIZE BEARING USAGE GUIDE

- When the specified main bearing oil clearance is not obtained with standard size main bearings, use undersize (US) bearing.
- When using undersize (US) bearing, measure the main bearing inner diameter with bearing installed, and grind main journal so that the main bearing oil clearance satisfies the standard.

CAUTION:

In grinding crankshaft main journal to use undersize bearings, keep the fillet R [1.5 - 1.7 mm (0.059 - 0.067 in)] (A).

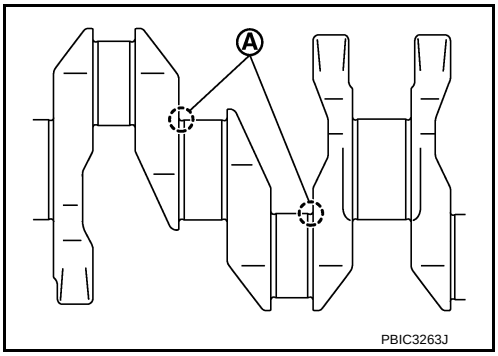

Bearing undersize table:

Refer to EM-122, "Main Bearing".

SERVICE DATA AND SPECIFICATIONS (SDS)

SERVICE DATA AND SPECIFICATIONS (SDS)

General Specification

INFOID:0000000009944974

GENERAL SPECIFICATIONS

Engine type		MR18DE
Cylinder arrangement		In-line 4
Displacement cm^3 (cu in)		1,797 (109.65)
Bore and stroke mm (in)		84.0×81.1 (3.307×3.193)
Valve arrangement		DOHC
Firing order		1-3-4-2
Number of piston rings	Compression	2
	Oil	1
Compression ratio		9.9
Compression pressure kPa (kg/cm^2, psi)/250 rpm	Standard	1,500 (15.3, 217.5)
	Minimum	1,200 (12.2, 174)
	Differential limit between cylinders	100 (1.0, 14.5)

Unit: degree

Valve timing
⇦: Intake valve
⬅: Exhaust valve

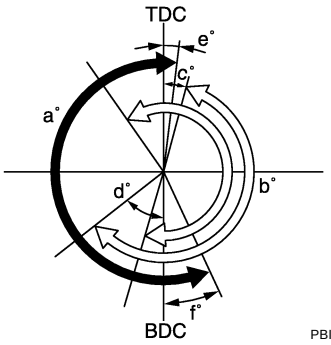

PBIC5304E

a	b	c	d	e	f
212	224	8 (–32) ATDC	52 (12) ABDC	7	25

( ): Valve timing control “ON”

Drive Belt

INFOID:0000000009944975

DRIVE BELT

Tension of drive belt	Belt tension is not necessary, as it is automatically adjusted by drive belt auto-tensioner.

Spark Plug

INFOID:0000000009944976

SPARK PLUG

Unit: mm (in)

Make		DENSO
Standard type		FXE20HR11
Gap (Nominal)	Standard	1.1 (0.043)
	Limit	1.4 (0.055)

Exhaust Manifold

INFOID:0000000009944977

EXHAUST MANIFOLD

Unit: mm (in)

Items		Limit
Surface distortion	Each exhaust port	0.3 (0.012)
	Entire part	0.7 (0.028)

Camshaft

INFOID:0000000009944978

CAMSHAFT

Unit: mm (in)

Items		Standard	Limit
Camshaft journal oil clearance	No. 1	0.045 - 0.086 (0.0018 - 0.0034)	0.15 (0.0059)
	No. 2, 3, 4, 5	0.030 - 0.071 (0.0012 - 0.0028)	
Camshaft bracket inner diameter	No. 1	28.000 - 28.021 (1.1024 - 1.1032)	—
	No. 2, 3, 4, 5	25.000 - 25.021 (0.9843 - 0.9851)	—
Camshaft journal diameter	No. 1	27.935 - 27.955 (1.0998 - 1.1006)	—
	No. 2, 3, 4, 5	24.950 - 24.970 (0.9823 - 0.9831)	—
Camshaft end play		0.075 - 0.153 (0.0030 - 0.0060)	0.24 (0.0094)
Camshaft cam height “A”	Intake	44.605 - 44.795 (1.7561 - 1.7636)	44.405 (1.7482)
	Exhaust	43.175 - 43.365 (1.6998 - 1.7073)	42.975 (1.6919)
Camshaft runout [TIR*]		Less than 0.02 (0.0008)	0.05 (0.0020)
Camshaft sprocket runout [TIR*]		—	0.15 (0.0059)

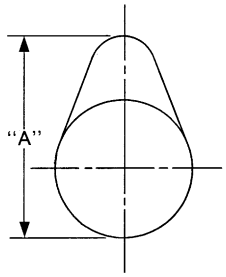

SEM671

*: Total indicator reading

VALVE LIFTER

Unit: mm (in)

Items		Standard
Valve lifter outer diameter	Intake	33.977 - 33.987 (1.3377 - 1.3381)
	Exhaust	29.977 - 29.987 (1.1802 - 1.1806)
Valve lifter hole diameter	Intake	34.000 - 34.021 (1.3386 - 1.3394)
	Exhaust	30.000 - 30.021 (1.1811 - 1.1819)
Valve lifter clearance		0.013 - 0.044 (0.0005 - 0.0017)

VALVE CLEARANCE

Unit: mm (in)

Items	Cold	Hot* (reference data)
Intake	0.26 - 0.34 (0.010 - 0.013)	0.304 - 0.416 (0.012 - 0.016)
Exhaust	0.29 - 0.37 (0.011 - 0.015)	0.308 - 0.432 (0.012 - 0.017)

*: Approximately 80°C (176°F)

AVAILABLE VALVE LIFTER

Unit: mm (in)

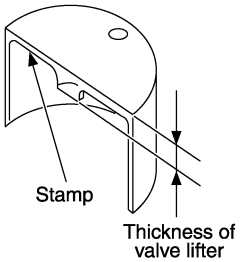

KBIA0119E

Identification mark	Thickness
300	3.00 (0.1181)
302	3.02 (0.1189)
304	3.04 (0.1197)
306	3.06 (0.1205)
308	3.08 (0.1213)
310	3.10 (0.1220)
312	3.12 (0.1228)
314	3.14 (0.1236)
316	3.16 (0.1244)
318	3.18 (0.1252)
320	3.20 (0.1260)
322	3.22 (0.1268)
324	3.24 (0.1276)
326	3.26 (0.1283)
328	3.28 (0.1291)
330	3.30 (0.1299)
332	3.32 (0.1307)
334	3.34 (0.1315)
336	3.36 (0.1323)
338	3.38 (0.1331)
340	3.40 (0.1339)
342	3.42 (0.1346)
344	3.44 (0.1354)
346	3.46 (0.1362)
348	3.48 (0.1370)
350	3.50 (0.1378)

Cylinder Head

INFOID:0000000009944979

CYLINDER HEAD

Unit: mm (in)

Items	Standard	Limit
Head surface distortion	—	0.1 (0.004)
Normal cylinder head height “H”	130.9 (5.15)	—

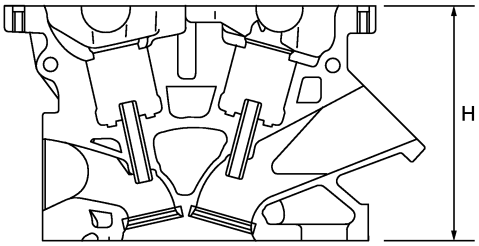

PBIC0924E

VALVE DIMENSIONS

Unit: mm (in)

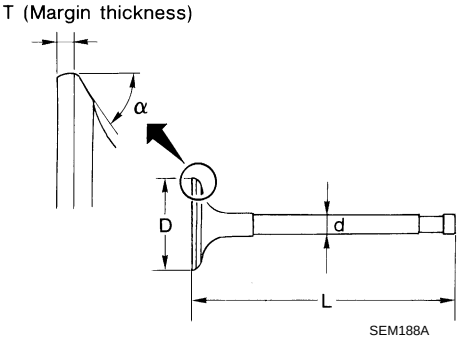

SEM188A

Valve head diameter “D”	Intake	33.8 - 34.1 (1.331 - 1.343)
	Exhaust	27.6 - 27.9 (1.087 - 1.098)
Valve length “L”	Intake	106.27 (4.18)
	Exhaust	105.26 (4.14)
Valve stem diameter “d”	Intake	5.465 - 5.480 (0.2152 - 0.2157)
	Exhaust	5.455 - 5.470 (0.2148 - 0.2154)
Valve seat angle “α”		45°15′ - 45°45′
Valve margin “T”	Intake	1.1 (0.043)
	Exhaust	1.2 (0.047)

VALVE GUIDE

Unit: mm (in)

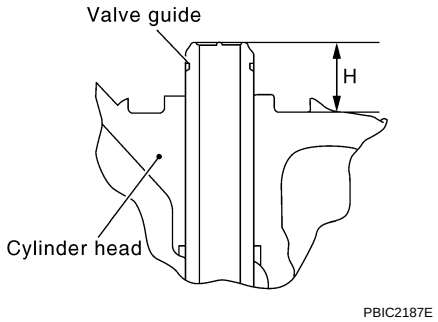

Items		Standard	Oversize (service) [0.2 (0.008)]
Valve guide	Outer diameter	9.523 - 9.534 (0.3749 - 0.3754)	9.723 - 9.734 (0.3828 - 0.3832)
	Inner diameter (Finished size)	5.500 - 5.518 (0.2165 - 0.2172)	
Cylinder head valve guide hole diameter		9.475 - 9.496 (0.3730 - 0.3739)	9.675 - 9.696 (0.3809 - 0.3817)
Interference fit of valve guide		0.027 - 0.059 (0.0011 - 0.0023)	

Items		Standard	Limit
Valve guide clearance	Intake	0.020 - 0.053 (0.0008 - 0.0021)	0.1 (0.004)
	Exhaust	0.030 - 0.063 (0.0012 - 0.0025)	
Projection length “H”		13.35 - 13.65 (0.5256 - 0.5374)	

VALVE SEAT

Unit: mm (in)

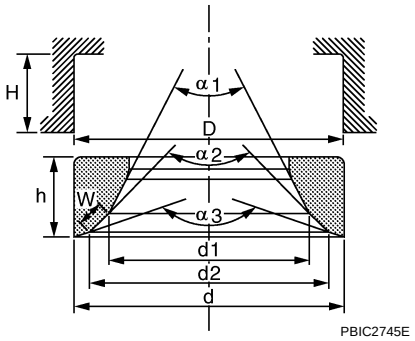

Items		Standard	Oversize (service) [0.5 (0.020)]
Cylinder head seat recess diameter “D”	Intake	34.700 - 34.727 (1.3661 - 1.3672)	35.200 - 35.227 (1.3858 - 1.3869)
	Exhaust	28.700 - 28.727 (1.1299 - 1.1310)	29.200 - 29.227 (1.1496 - 1.1507)
Valve seat outer diameter “d”	Intake	34.808 - 34.824 (1.3704 - 1.3710)	35.308 - 35.324 (1.3901 - 1.3907)
	Exhaust	28.808 - 28.824 (1.1342 - 1.1348)	29.308 - 29.324 (1.1539 - 1.1545)
Valve seat interference fit		0.081 - 0.124 (0.0032 - 0.0049)	
Diameter “d1”*1	Intake	31.8 (1.252)	
	Exhaust	25.3 (0.996)	
Diameter “d2”*2	Intake	33.1 - 33.6 (1.303 - 1.323)	
	Exhaust	26.9 - 27.4 (1.059 - 1.079)	
Angle “α1”	Intake	60°	
	Exhaust	45°	
Angle “α2”		88°45′ - 90°15′	
Angle “α3”		120°	

Contacting width “W”*3	Intake	1.0 - 1.4 (0.039 - 0.055)	
	Exhaust	1.2 - 1.6 (0.047 - 0.063)	
Height “h”	Intake	5.9 - 6.0 (0.232 - 0.236)	5.03 - 5.13 (0.1980 - 0.2020)
	Exhaust		4.95 - 5.05 (0.1949 - 0.1988)
Depth “H”	Intake	6.04 (0.2378)	
	Exhaust	6.05 (0.2382)	

*1: Diameter made by intersection point of conic angles “α1” and “α2”

*2: Diameter made by intersection point of conic angles “α2” and “α3”

*3: Machining data

VALVE SPRING

Items	Standard	
	Intake	Exhaust
Free height	44.90 - 45.10 mm (1.7677 - 1.7756 in)	45.74 - 45.94 mm (1.8008 - 1.8087 in)
Installation height	35.30 mm (1.390 in)	35.30 mm (1.390 in)
Installation load	151 - 175 N (15.4 - 17.9 kg, 34 - 39 lb)	137 - 159 N (14.0 - 16.2 kg, 31 - 36 lb)
Height during valve open	26.36 mm (1.0378 in)	27.80 mm (1.0945 in)
Load with valve open	333 - 379 N (34.0 - 38.7 kg, 75 - 85 lb)	264 - 299 N (26.9 - 30.5 kg, 59 - 67 lb)
Identification color	White	Orange

Unit: mm (in)

Items	Limit
Valve spring squareness	2.0 (0.079)

Cylinder Block

INFOID:0000000009944980

CYLINDER BLOCK

Unit: mm (in)

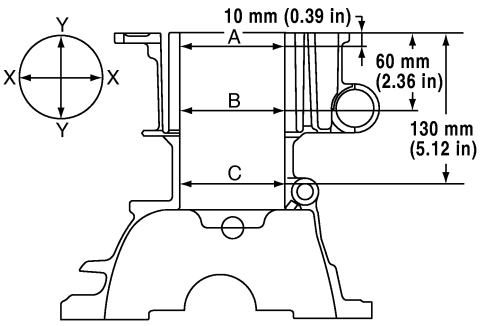

PBIC4017E

Cylinder block top surface distortion	Limit		0.1 (0.004)
Cylinder bore inner diameter	Standard	Grade No. 1	84.000 - 84.010 (3.3071 - 3.3075)
		Grade No. 2	84.010 - 84.020 (3.3075 - 3.3079)
Out-of-round	Limit		0.015 (0.0006)
Taper			0.010 (0.0004)

Main bearing housing inner diameter grade	Grade No. A	55.997 - 55.998 (2.2046 - 2.2046)
	Grade No. B	55.998 - 55.999 (2.2046 - 2.2047)
	Grade No. C	55.999 - 56.000 (2.2047 - 2.2047)
	Grade No. D	56.000 - 56.001 (2.2047 - 2.2048)
	Grade No. E	56.001 - 56.002 (2.2048 - 2.2048)
	Grade No. F	56.002 - 56.003 (2.2048 - 2.2048)
	Grade No. G	56.003 - 56.004 (2.2048 - 2.2049)
	Grade No. H	56.004 - 56.005 (2.2049 - 2.2049)
	Grade No. J	56.005 - 56.006 (2.2049 - 2.2050)
	Grade No. K	56.006 - 56.007 (2.2050 - 2.2050)
	Grade No. L	56.007 - 56.008 (2.2050 - 2.2050)
	Grade No. M	56.008 - 56.009 (2.2050 - 2.2051)
	Grade No. N	56.009 - 56.010 (2.2051 - 2.2051)
	Grade No. P	56.010 - 56.011 (2.2051 - 2.2052)
	Grade No. R	56.011 - 56.012 (2.2052 - 2.2052)
	Grade No. S	56.012 - 56.013 (2.2052 - 2.2052)
	Grade No. T	56.013 - 56.014 (2.2052 - 2.2053)
	Grade No. U	56.014 - 56.015 (2.2053 - 2.2053)
	Grade No. V	56.015 - 56.016 (2.2053 - 2.2053)
	Grade No. W	56.016 - 56.017 (2.2053 - 2.2054)

AVAILABLE PISTON

Unit: mm (in)

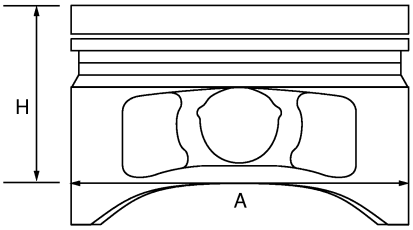

PBIC0188E

Piston skirt diameter “A”	Standard	Grade No. 1	83.970 - 83.980 (3.3059 - 3.3063)
		Grade No. 2	83.980 - 83.990 (3.3063 - 3.3067)
Measure point “H”			39.9 (1.571)
Piston pin hole diameter			19.993 - 19.999 (0.7871 - 0.7874)
Piston to cylinder bore clearance		Standard	0.020 - 0.040 (0.0008 - 0.0016)
		Limit	0.08 (0.0031)

PISTON RING

Unit: mm (in)

Items		Standard	Limit
Piston ring side clearance	Top	0.04 - 0.08 (0.0016 - 0.0031)	0.11 (0.0043)
	2nd	0.03 - 0.07 (0.0012 - 0.0028)	0.10 (0.0039)
	Oil ring	0.015 - 0.185 (0.006 - 0.0073)	—

Piston ring end gap	Top	0.20 - 0.30 (0.0079 - 0.0118)	0.51 (0.0201)
	2nd	0.50 - 0.65 (0.0197 - 0.0256)	0.83 (0.0327)
	Oil (rail ring)	0.15 - 0.45 (0.0059 - 0.0177)	0.78 (0.0307)

PISTON PIN

Unit: mm (in)

Items	Standard	Limit
Piston pin outer diameter	19.989 - 19.995 (0.7870 - 0.7872)	—
Piston to piston pin oil clearance	0.002 - 0.006 (0.0001 - 0.0002)	—

CONNECTING ROD

Unit: mm (in)

Center distance		143.44 - 143.54 (5.65 - 5.65)
Bend [per 100 (3.94)]	Limit	0.15 (0.0059)
Torsion [per 100 (3.94)]	Limit	0.30 (0.0118)
Connecting rod bushing inner diameter*	Standard	20.000 - 20.012 (0.7874 - 0.7879)
Connecting rod bushing oil clearance	Standard	0.005 - 0.023 (0.0002 - 0.0009)
	Limit	0.03 (0.0012)
Connecting rod side clearance	Standard	0.20 - 0.35 (0.0079 - 0.0138)
	Limit	0.4 (0.016)
Connecting rod big end diameter grade	Grade No. A	47.000 - 47.001 (1.8504 - 1.8504)
	Grade No. B	47.001 - 47.002 (1.8504 - 1.8505)
	Grade No. C	47.002 - 47.003 (1.8505 - 1.8505)
	Grade No. D	47.003 - 47.004 (1.8505 - 1.8505)
	Grade No. E	47.004 - 47.005 (1.8505 - 1.8506)
	Grade No. F	47.005 - 47.006 (1.8506 - 1.8506)
	Grade No. G	47.006 - 47.007 (1.8506 - 1.8507)
	Grade No. H	47.007 - 47.008 (1.8507 - 1.8507)
	Grade No. J	47.008 - 47.009 (1.8507 - 1.8507)
	Grade No. K	47.009 - 47.010 (1.8507 - 1.8508)
	Grade No. L	47.010 - 47.011 (1.8508 - 1.8508)
	Grade No. M	47.011 - 47.012 (1.8508 - 1.8509)
	Grade No. N	47.012 - 47.013 (1.8509 - 1.8509)

*: After installing in connecting rod

CRANKSHAFT

Unit: mm (in)

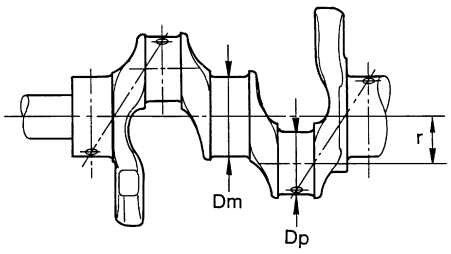

SEM645

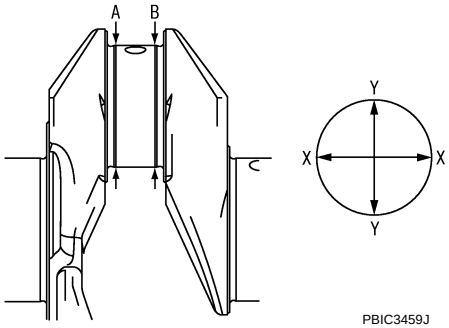

PBIC3459J

Center distance “r”	40.41 - 40.49 (1.5909 - 1.5940)

Out-of-round	Limit	0.0035 (0.0001)
Taper	Limit	
Runout [TIR*]	Standard	0.05 (0.0020)
	Limit	0.10 (0.0039)
Crankshaft end play	Standard	0.10 - 0.26 (0.0039 - 0.0102)
	Limit	0.30 (0.0118)
Crankshaft pin journal diameter “Dp” grade.	Grade No. A	43.970 - 43.971 (1.7311 - 1.7311)
	Grade No. B	43.969 - 43.970 (1.7311 - 1.7311)
	Grade No. C	43.968 - 43.969 (1.7310 - 1.7311)
	Grade No. D	43.967 - 43.968 (1.7310 - 1.7310)
	Grade No. E	43.966 - 43.967 (1.7309 - 1.7310)
	Grade No. F	43.965 - 43.966 (1.7309 - 1.7309)
	Grade No. G	43.964 - 43.965 (1.7309 - 1.7309)
	Grade No. H	43.963 - 43.964 (1.7308 - 1.7309)
	Grade No. J	43.962 - 43.963 (1.7308 - 1.7308)
	Grade No. K	43.961 - 43.962 (1.7307 - 1.7308)
	Grade No. L	43.960 - 43.961 (1.7307 - 1.7307)
	Grade No. M	43.959 - 43.960 (1.7307 - 1.7307)
	Grade No. N	43.958 - 43.959 (1.7306 - 1.7307)
	Grade No. P	43.957 - 43.958 (1.7306 - 1.7306)
	Grade No. R	43.956 - 43.957 (1.7305 - 1.7306)
	Grade No. S	43.955 - 43.956 (1.7305 - 1.7305)
	Grade No. T	43.954 - 43.955 (1.7305 - 1.7305)
	Grade No. U	43.953 - 43.954 (1.7304 - 1.7305)
Crankshaft main journal diameter “Dm” grade.	Grade No. A	51.978 - 51.979 (2.0464 - 2.0464)
	Grade No. B	51.977 - 51.978 (2.0463 - 2.0464)
	Grade No. C	51.976 - 51.977 (2.0463 - 2.0463)
	Grade No. D	51.975 - 51.976 (2.0463 - 2.0463)
	Grade No. E	51.974 - 51.975 (2.0462 - 2.0463)
	Grade No. F	51.973 - 51.974 (2.0462 - 2.0462)
	Grade No. G	51.972 - 51.973 (2.0461 - 2.0462)
	Grade No. H	51.971 - 51.972 (2.0461 - 2.0461)
	Grade No. J	51.970 - 51.971 (2.0461 - 2.0461)
	Grade No. K	51.969 - 51.970 (2.0460 - 2.0461)
	Grade No. L	51.968 - 51.969 (2.0460 - 2.0460)
	Grade No. M	51.967 - 51.968 (2.0459 - 2.0460)
	Grade No. N	51.966 - 51.967 (2.0459 - 2.0459)
	Grade No. P	51.965 - 51.966 (2.0459 - 2.0459)
	Grade No. R	51.964 - 51.965 (2.0458 - 2.0459)
	Grade No. S	51.963 - 51.964 (2.0458 - 2.0458)
	Grade No. T	51.962 - 51.963 (2.0457 - 2.0458)
	Grade No. U	51.961 - 51.962 (2.0457 - 2.0457)
	Grade No. V	51.960 - 51.961 (2.0457 - 2.0457)
	Grade No. W	51.959 - 51.960 (2.0456 - 2.0457)

*: Total indicator reading

Connecting Rod Bearing

INFOID:0000000009944981

CONNECTING ROD BEARING GRADE TABLE

Unit: mm (in)

Grade number		Thickness	Identification color	Remarks
0		1.494 - 1.497 (0.0588 - 0.0589)	Black	Grade and color are the same for upper and lower bearings.
1		1.497 - 1.500 (0.0589 - 0.0591)	Brown	
2		1.500 - 1.503 (0.0591 - 0.0592)	Green	
3		1.503 - 1.506 (0.0592 - 0.0593)	Yellow	
4		1.506 - 1.509 (0.0593 - 0.0594)	Blue	
01	UPR	1.494 - 1.497 (0.0588 - 0.0589)	Black	Grade and color are different between upper and lower bearings.
	LWR	1.497 - 1.500 (0.0589 - 0.0591)	Brown	
12	UPR	1.497 - 1.500 (0.0589 - 0.0591)	Brown	
	LWR	1.500 - 1.503 (0.0591 - 0.0592)	Green	
23	UPR	1.500 - 1.503 (0.0591 - 0.0592)	Green	
	LWR	1.503 - 1.506 (0.0592 - 0.0593)	Yellow	
34	UPR	1.503 - 1.506 (0.0592 - 0.0593)	Yellow	
	LWR	1.506 - 1.509 (0.0593 - 0.0594)	Blue	

UNDERSIZE TABLE

Unit: mm (in)

Items	Thickness	Crank pin journal diameter
US 0.25 (0.0098)	1.623 - 1.631 (0.0639 - 0.0642)	Grind so that bearing clearance is the specified value.

CONNECTING ROD BEARING OIL CLEARANCE

Unit: mm (in)

Connecting rod bearing oil clearance	Standard	0.037 - 0.047 (0.0015 - 0.0019)
	Limit	0.07 (0.0028)

Main Bearing

INFOID:0000000009944982

MAIN BEARING GRADE TABLE (ALL JOURNALS)

Unit: mm (in)

Grade number	Thickness	Identification color	Remarks
0	1.996 - 1.999 (0.0786 - 0.0787)	Black	Grade and color are the same for upper and lower bearings.
1	1.999 - 2.002 (0.0787 - 0.0788)	Brown	
2	2.002 - 2.005 (0.0788 - 0.0789)	Green	
3	2.005 - 2.008 (0.0789 - 0.0791)	Yellow	
4	2.008 - 2.011 (0.0791 - 0.0792)	Blue	
5	2.011 - 2.014 (0.0792 - 0.0793)	Pink	
6	2.014 - 2.017 (0.0793 - 0.0794)	Purple	
7	2.017 - 2.020 (0.0794 - 0.0795)	White	

01	UPR	1.996 - 1.999 (0.0786 - 0.0787)	Black	Grade and color are different between upper and lower bearings.
	LWR	1.999 - 2.002 (0.0787 - 0.0788)	Brown	
12	UPR	1.999 - 2.002 (0.0787 - 0.0788)	Brown	
	LWR	2.002 - 2.005 (0.0788 - 0.0789)	Green	
23	UPR	2.002 - 2.005 (0.0788 - 0.0789)	Green	
	LWR	2.005 - 2.008 (0.0789 - 0.0791)	Yellow	
34	UPR	2.005 - 2.008 (0.0789 - 0.0791)	Yellow	
	LWR	2.008 - 2.011 (0.0791 - 0.0792)	Blue	
45	UPR	2.008 - 2.011 (0.0791 - 0.0792)	Blue	
	LWR	2.011 - 2.014 (0.0792 - 0.0793)	Pink	
56	UPR	2.011 - 2.014 (0.0792 - 0.0793)	Pink	
	LWR	2.014 - 2.017 (0.0793 - 0.0794)	Purple	
67	UPR	2.014 - 2.017 (0.0793 - 0.0794)	Purple	
	LWR	2.017 - 2.020 (0.0794 - 0.0795)	White	

UNDERSIZE TABLE

Unit: mm (in)

Items	Thickness	Main journal diameter
US 0.25 (0.0098)	2.126 - 2.134 (0.0837 - 0.0840)	Grind so that bearing clearance is the specified value.

MAIN BEARING OIL CLEARANCE

Unit: mm (in)

Main bearing oil clearance	Standard	No. 1, 4 and 5	0.024 - 0.034 (0.0009 - 0.0013)
		No. 2 and 3	0.012 - 0.022 (0.0005 - 0.0009)
	Limit		0.065 (0.0026)