Getting to Know Your 2009 Impala

Table of Contents

DRIVER INFORMATION
- Instrument Panel 2
- Instrument Panel Cluster 3
- Driver Information Center 4

SAFETY & SECURITY
- Remote Keyless Entry 6
- Automatic Door Locks 6
- Passenger Airbag Status Indicator 6
- Head Curtain Side Airbags 7
- OnStar® 7

COMFORT
- Seat Adjustments 7
- Heated Seats 8
- Shoulder Belt Height Adjustment 8
- Tilt Steering Wheel 8
- Power Mirror Controls 9
- Climate Controls 9
- Preventing Window Fogging . . .10
- Sun Visors 10

ENTERTAINMENT
- Audio System Features 10
- Multiple-Disc CD Player 12
- XM® Radio 13
- Bluetooth® System 13
- Bose Premium Sound System 13
- Audio Steering Wheel Controls 13

CONVENIENCE
- Remote Vehicle Start 14
- Auto Turn Signal 14
- Exterior Lamps 15
- Cruise Control 15
- Windshield Wipers 16
- Accessory Power Outlets 16
- Folding Rear Seat 16
- Sunroof 17
- Courtesy Lamps 17

PERFORMANCE & MAINTENANCE
- Antilock Brake System 18
- Traction Control System 18
- StabiliTrak® – Stability Control System 18
- Tire Pressure Monitor 18
- Securing the Gas Cap 19
- FlexFuel (E85) – Yellow Gas Cap 19
- Resetting the Engine Oil Life System 19

OWNER INFORMATION
- Roadside Assistance 20
- My GMLink 20

Congratulations on your purchase of a Chevrolet Impala. Please read this information about your vehicle's features and your Owner Manual to ensure an outstanding ownership experience. Note that your vehicle may not include all the features described in this booklet. Keep this booklet with your Owner Manual for easy reference.

DRIVER INFORMATION

Instrument Panel

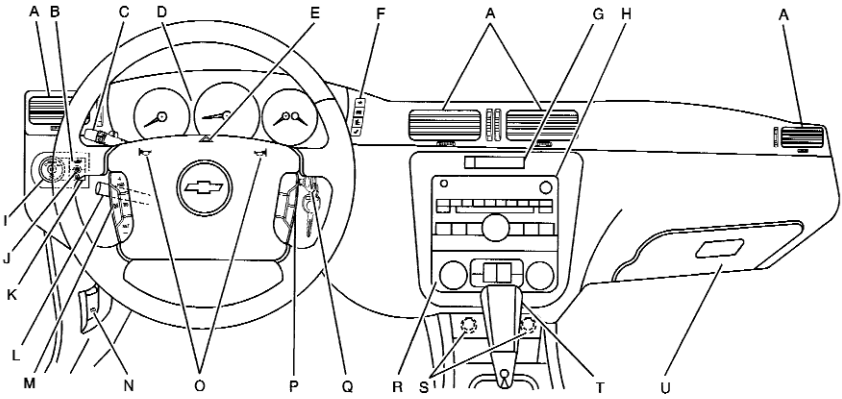

The main features of the instrument panel include:

A. Air Outlets
B. Remote Trunk Release Button
C. Turn Signal/Multifunction Lever
D. Instrument Panel Cluster
E. Hazard Warning Flashers Button
F. Driver Information Center Controls
G. Passenger Airbag Status Indicator
H. Audio System
I. Exterior Lamps Control
J. Instrument Panel Brightness Control
K. Traction Control Button
L. Tilt Steering Wheel Lever
M. Cruise Control
N. Hood Release
O. Horn
P. Audio Steering Wheel Controls (if equipped)
Q. Ignition Switch
R. Climate Controls
S. Accessory Power Outlets
T. Shift Lever
U. Glove Box

See Section 3 of your Owner Manual.

Instrument Panel Cluster

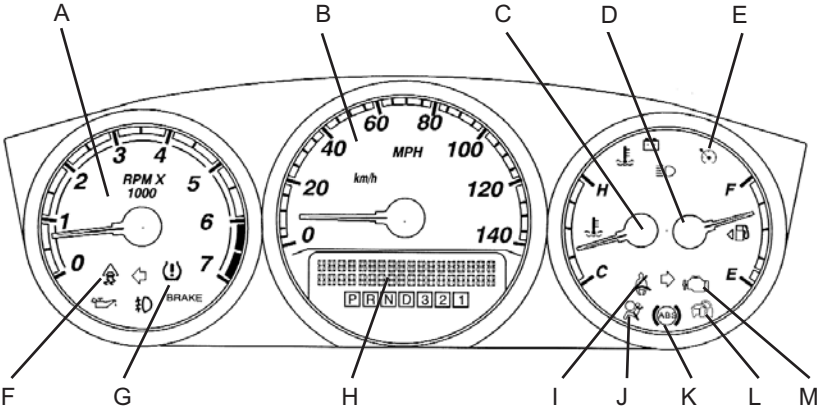

Your vehicle's instrument panel is equipped with this cluster or one similar to it. The instrument panel cluster includes these key features:

A. Tachometer
B. Speedometer
C. Engine Coolant Temperature Gauge
D. Fuel Gauge
E. Cruise Control Set Light
F. Traction Control System Warning Light
G. Tire Pressure Light
H. Driver Information Center Display/ Odometer
I. Safety Belt Reminder Light
J. Airbag Readiness Light
K. Antilock Brake System Warning Light
L. Security Light
M. Malfunction Indicator Lamp (Check Engine Light)

Note: The instrument panel cluster is designed to let you know about many important aspects of your vehicle's operation. It is important to read your Owner Manual and become familiar with the information being relayed to you by the lights, gauges and indicators, as well as what action can be taken to ensure safety and to prevent damage.

See Section 3 of your Owner Manual.

Driver Information Center

Your vehicle's Driver Information Center (DIC) provides vehicle information, vehicle warning messages and vehicle feature customization. The DIC messages will be shown on your instrument panel cluster display. The DIC display also shows the outside air temperature and compass direction (if equipped).

To operate the DIC, the ignition switch must be on. The DIC is controlled through the following four buttons located on the right side of the instrument panel cluster:

(Trip/Fuel): Use this button to display the odometer, trip odometers, fuel range, average economy, instantaneous economy, Active Fuel Management™ indicator (if equipped) and average speed.

(Vehicle Information): Use this button to display the oil life, display units, tire pressure and tire pressure system programming (if equipped), compass zone and calibration (if equipped) and Remote Keyless Entry programming.

(Customization): Use this button to customize certain vehicle features to your preference.

(Set/Reset): Use this button to set or reset trip/fuel and vehicle information as well as acknowledge DIC messages.

Vehicle Customization Settings

To customize features:

1. Press the (Customization) button until FEATURE SETTINGS is displayed.
2. Press the (Set/Reset) button to enter the Feature Settings menu.
3. Press the button to display available customization features.
4. With the desired customization feature displayed, press the button to access the feature settings.
5. Press the button to scroll through the available settings.
6. With the desired setting displayed, press the button to select it.
7. Press the button or button to exit the Feature Settings menu.

Customization features include:

- Display Language (DIC information display languages)
  - English (default)
  - French
  - Spanish

- Auto Door Unlock (Automatically unlocks the vehicle doors)
  - Off
  - Driver at Key Out
  - Driver in Park
  - All at Key Out
  - All in Park (default)
  - No Change
- Remote Door Lock (Feedback from RKE locking)
  - Off
  - Lights Only
  - Horn Only
  - Horn & Lights (default)
  - No Change
- Remote Door Unlock (Feedback from RKE unlocking)
  - Lights Off
  - Lights On (default)
  - No Change
- Exit Lighting (Amount of time the exterior lamps remain on after exiting)
  - Off
  - 30 Seconds (default)
  - 1 Minute
  - 2 Minutes
  - No Change
- Approach Lighting (Lights turn on when RKE is pressed)
  - On (default)
  - Off
  - No Change
- Chime Volume (Adjust the volume level)
  - Normal (default)
  - Loud
  - No Change
- Remote Start (Enable Remote Vehicle Start)
  - On (default)
  - Off
  - No Change
- Factory Settings (Sets all features to the factory default)
  - Restore All (default)
  - Do Not Restore

Warnings and Messages

The DIC provides a variety of vehicle messages, as well as warnings if a problem is sensed in a vehicle system.

To acknowledge a message and clear it from the display, press any of the DIC buttons. Some urgent messages cannot be cleared from the DIC display.

If you have a current OnStar subscription and your Check Engine light or any other warning message appears, press the OnStar button to speak to an OnStar Advisor. In many vehicles, OnStar Advisors can access certain diagnostic information and can tell you how serious the problem is and what you should do about it.

Note: Your vehicle's warnings and messages provide critical information that can prevent damage to your vehicle. Review your Owner Manual to become familiar with the information displayed and the action required.

Setting the Compass

To adjust for compass variance when traveling on a long-distance trip or to calibrate the compass, follow the procedures in the DIC section of your Owner Manual.

See Section 3 of your Owner Manual.

SAFETY & SECURITY

Remote Keyless Entry

The Remote Keyless Entry (RKE) transmitter includes the following functions:

(Remote Start) (if equipped): This feature can be used to start the engine from outside the vehicle. (See Remote Vehicle Start.)

(Lock): Press this button to lock all the doors. If enabled through the DIC, the parking lamps will flash once and/or the horn will chirp to indicate locking has occurred.

(Unlock): Press this button to unlock the driver's door. Press it again within five seconds and all remaining doors will unlock. If enabled through the DIC, the parking lamps will flash once to indicate unlocking has occurred.

(Trunk Release): Press and hold this button to unlatch the trunk lid. You can open the trunk with the transmitter when the vehicle is in Park.

The trunk may also be opened using the Trunk Release button located on the left side of the instrument panel.

(Vehicle Locator/Panic Alarm): Press this button to locate your vehicle. The turn signal lamps will flash and the horn will sound three times. Press and hold this button to activate the alarm. The horn will sound and the headlamps will flash for two minutes. Press the button again to cancel the panic alarm.

See Section 2 of your Owner Manual.

Automatic Door Locks

For your safety, your vehicle is programmed at the factory to lock all doors automatically when all doors are closed, the ignition is on and the shift lever is moved out of Park. This feature cannot be disabled; however, you can customize the unlock features by using the Driver Information Center.

See Section 2 of your Owner Manual.

Passenger Airbag Status Indicator

Your vehicle is equipped with a Passenger Sensing System located in the front passenger seat for the front passenger frontal airbag, and a passenger airbag status indicator located on the instrument panel center stack.

Note: It is recommended that children not be placed in the front passenger seat, even with the Passenger Sensing System. All children should be secured in a rear seat, including an infant riding in a rear-facing infant seat, a child riding in a forward-facing child seat or an older child riding in a booster seat.

See Sections 1 and 3 of your Owner Manual.

Head Curtain Side Airbags

The head curtain side airbags are located in the ceiling above the side windows.

See Section 1 of your Owner Manual.

OnStar® (if equipped)

Your vehicle may feature the OnStar Safe & Sound Plan or the uplevel OnStar Directions & Connections Plan, with one year of OnStar service from the date you purchased your new vehicle. OnStar offers a variety of capabilities, such as Remote Door Unlock, Automatic Notification of Airbag Deployment, and Hands-Free Calling. In addition, most vehicles can get driving directions using Turn-by-Turn Navigation. OnStar Advisors can send a planned route to your vehicle and, as you approach a turn, instructions play over your vehicle speakers and are displayed on the radio (as shown above).

Press the OnStar button to ask an OnStar Advisor about your service plan. All owners may upgrade to the OnStar Directions & Connections Plan.

For more information, refer to your OnStar Owner's Guide, call 1-888-4-ONSTAR (1-888-466-7827), or visit **onstar.com**.

See Section 2 of your Owner Manual.

COMFORT

Seat Adjustments

Manual Seatback Adjustment

Lift the rear-mounted lever on the outboard side of the seat cushion and move the seatback to the desired position; then release the lever.

Power Seat Adjustment (if equipped)

Use the horizontal control (A) on the outboard side of the seat to move the seat forward or rearward. On the driver's seat, also use the control to raise or lower the front or rear of the seat cushion.

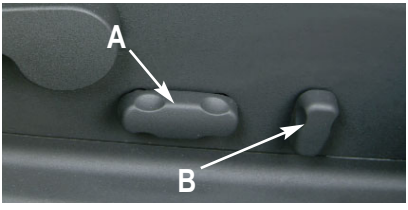

Power Seatback Adjustment (if equipped)

Use the vertical control (B) on the outboard side of the seat to recline or raise the seatback.

Lumbar Adjustment (if equipped)

Adjust lumbar support using the front-mounted lever on the outboard side of the seat cushion. Ratchet the lever up to increase support or down to decrease support.

See Section 1 of your Owner Manual.

Heated Seats (if equipped)

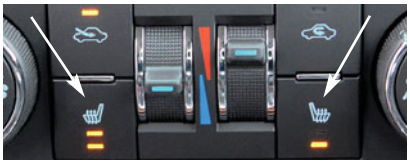

The heated front seat controls are located on the climate control panel.

High Setting

- Press the button once to turn on the heated seat. It will heat to the high setting (two indicator lights).

Low Setting

- Press the button again to turn on the seat to the low setting (one indicator light).

Off

- Press the button a third time to turn off the heated seat.

See Section 1 of your Owner Manual.

Shoulder Belt Height Adjustment

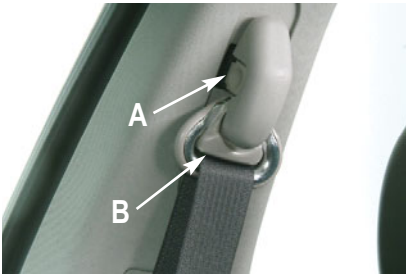

The shoulder belt can be adjusted to the height that is right for you. Push the buttons (A) on the sides of the adjuster to move it down. Push up on the belt guide (B) to move it up. Once in a comfortable position, try to move the height adjuster to make sure it is locked in place.

See Section 1 of your Owner Manual.

Tilt Steering Wheel

The steering wheel can be adjusted up or down using the lever located on the left side of the steering column.

To tilt the wheel, hold the steering wheel and pull the lever toward you. Then adjust the wheel to a comfortable position and release the lever to lock the wheel in place.

See Section 3 of your Owner Manual.

Power Mirror Controls

The power outside rearview mirrors can be adjusted using the controls located on the driver's door.

Use the bottom switch to select the driver-side or passenger-side mirror; and then use the control pad to adjust the selected mirror up, down or side to side. Move the selector switch to the center position when not adjusting either mirror.

See Section 2 of your Owner Manual.

Climate Controls

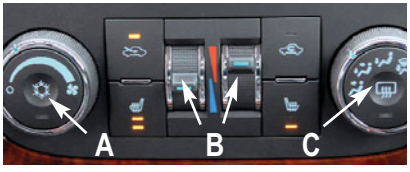

The climate controls include the following functions:

(Fan): Turn the fan control knob (A) to increase or decrease fan speed. Turn the fan knob to the ◯ (Off) position to turn off the system.

(Air Conditioning): Press this button to turn the air conditioning system on or off.

(Recirculation): Press this button to recirculate inside air through the vehicle and keep outside air from entering the vehicle. The recirculation mode will operate only when the vent or bi-level mode is selected.

> **Note:** A flashing light when the air conditioning or recirculation button is pressed indicates that the function is not available based on the current settings or the outside temperature.

(Outside Air): Press this button to allow outside air to enter the vehicle.

Temperature Control: Rotate the thumbwheels (B) to raise or lower the temperature setting(s) for the driver and front passenger zones.

Airflow Modes: Turn the airflow control knob (C) to change the direction of the air delivery to the vent, bi-level, floor, defog, or defrost mode. The knob can be positioned between two modes for a wide range of airflow adjustments.

(Rear Window Defogger): Press this button to activate the rear window defogger. The defogger will turn off automatically after about 10 minutes.

Maximum Cooling Performance

1. Open the windows to let the hot inside air escape; then close them.
2. Select the lowest temperature setting for both zones.
3. Select the (Vent) mode.
4. Press the (Air Conditioning) button.
5. Select the highest fan speed.

> **Note:** When the lowest temperature setting and the air conditioning are selected, the recirculation mode is automatically activated. If a higher temperature setting is selected later, the system will change to the outside air mode.

Maximum Heating Performance

1. Select the highest temperature setting for both zones.
2. Select the (Floor) mode.
3. Select a mid-level fan speed.
4. When airflow feels warm, select the highest fan speed.

See Section 3 of your Owner Manual.

Preventing Window Fogging

To keep the vehicle glass fog-free, turn the airflow control knob to the (Defog) mode or the (Defrost) mode (see Climate Controls). Recirculation will not function in these modes, allowing outside air into the vehicle to help reduce moisture. Also keep the glass clean. Cleaning the glass will help prevent moisture accumulation on the glass in humid conditions.

See Section 3 of your Owner Manual.

Sun Visors

To block glare, swing down the sun visors. Each visor can be detached from the center retainer and slid along the rod to cover different areas of the front window and rotated to cover the side window.

See Section 2 of your Owner Manual.

ENTERTAINMENT

Audio System Features

While most of the features on your radio will look familiar, some of the following may be new:

(Power/Volume): Press this knob to turn the system on or off. Turn the knob to adjust the volume.

(Tune): Turn this knob to select radio stations or, when a CD is playing, to select a track or MP3 file. Press the

Uplevel radio shown

(Tune) knob to adjust the tone control (bass/treble) or speaker control (balance/fade) setting. Turn the knob or press the SEEK, FWD or REV button to adjust the selected setting.

(Information): Press this button to display additional information related to the current FM-RDS or XM station, or MP3 song.

FAV (Favorite) (if equipped): Press this button to go through up to six pages of any combination (AM, FM, or XM, if equipped) of preset favorite radio stations. On each page, up to six stations are available by using the six push-buttons below the radio display.

BAND: Press this button to switch to FM, AM, or XM (if equipped). When playing a CD or portable audio player, press this button to play the radio instead.

CD/AUX: Press this button to play a CD instead of the radio. Press again and the system will automatically search for a portable audio player connected to the auxiliary input jack.

EQ (Equalization): Press this button to select preset equalization settings.

CAT (Category) (if equipped): Press this button to find XM stations (if equipped) within a desired category.

Auxiliary Input Jack: A portable audio player (such as an iPod® or MP3 player) can be connected to the auxiliary input jack located on the radio. Press the CD/AUX button to begin playing audio from the portable player over the vehicle speakers. To optimize speaker volume, fully increase the volume level of the portable player.

Setting Favorite Stations (if equipped)

Before setting your favorite stations, shift the vehicle into Park.

> **Note:** Engaging in extended searching for specific audio stations or songs by using buttons and knobs — or giving extended attention to entertainment tasks — can lead you to look away from the road frequently or for prolonged periods, which may cause you to miss seeing things on the road that you need to see. Avoid engaging in extended searching for specific items while driving.

You can set up to six pages of any combination (AM, FM, or XM, if equipped) of favorite radio stations, with up to six stations stored on each page.

To set the number of favorite station pages:

1. Press the MENU button to display the radio setup menu.
2. Press the pushbutton located below the FAV 1–6 label on the radio display.
3. Select the desired number of favorite station pages.
4. Press the FAV button. You may now begin storing your favorite stations for the chosen number of pages.

To store favorite stations:

1. Tune in the desired radio station.
2. Press the FAV button to display the page where the station is to be stored.
3. Press and hold one of the six push-buttons until a beep sounds to store the station.
4. Repeat the steps for each pushbutton on each page.

Setting the Time

To set the time:

1. Press the ◷ (Clock) button. Or, if equipped, press the MENU button until the clock option is displayed; and then press the pushbutton located under the clock option label. The HR, MIN, MM, DD, YYYY labels will appear on the display.
2. Press the pushbutton under any of the labels to be changed.
3. Press the pushbutton again, the right SEEK arrow or FWD button to increase the numbers. Press the left SEEK arrow or REV button to decrease the numbers. Rotating the ♫ (Tune) knob also will increase or decrease the numbers of the selected label.
4. Press the Clock or MENU button again to set the currently displayed time and date.

Speed Compensated Volume

With Speed Compensated Volume (SCV), the radio automatically adjusts the volume to compensate for road noise as vehicle speed changes. Press the MENU button to access the SCV settings.

Playing MP3 Files (if equipped)

The audio system may have MP3 file playback capability. When playing a CD-R containing MP3 audio files, an MP3 label will be displayed.

Radio Data System

When you tune to a Radio Data System (RDS) station, the station name or call letters will appear on the display instead of the frequency. Depending on the RDS station, additional text information may be available by pressing the i (Information) button.

RDS features are available for use only on FM stations that broadcast RDS information. RDS relies on receiving specific information from these stations and will work only when the information is available.

Refer to the Audio Systems section of your Owner Manual for more information about all available audio systems.

See Section 3 of your Owner Manual.

Multiple-Disc CD Player (if equipped)

With the in-dash 6-Disc CD Player, note that you cannot directly load a CD as in single-play systems.

Load a Single CD

- Press and release the LOAD button. Wait for the display prompt before loading the CD.

Load Multiple CDs

- Press and hold the LOAD button for two seconds. Follow the display prompts to load each CD. Press the LOAD button again to cancel loading more CDs.

Play a Specific CD

- Press the pushbutton under the up/down arrow label that corresponds to the loaded CD number on the display.

Eject a CD

- To eject the CD that is currently playing, press the EJECT button once.
- To eject all CDs, press and hold the EJECT button for two seconds.

If a CD is not removed after several seconds, it will be automatically pulled back into the player.

Note: CDs with any affixed labels may jam in the CD player. Label a CD using a permanent marker. If more than one CD is inserted into the slot at a time, or if scratched or damaged CDs are played, the CD player could be damaged. When using the CD player, use only CDs in good condition without labels; load one CD at a time; and keep the CD player and the loading slot free of foreign materials, liquids or debris.

See Section 3 of your Owner Manual.

XM® Radio (if equipped)

XM Radio offers more than 170 channels of digital-quality sound that goes wherever you go — coast to coast. After a free three-month trial period, activation and service subscription fees apply. Service is based in the continental United States and Canada. For more information, visit XM online at **www.XMradio.com** or call 1-800-929-2100.

See Section 3 of your Owner Manual.

Bluetooth® System (if equipped)

The in-vehicle Bluetooth system allows users with a Bluetooth-enabled cell phone to make and receive hands-free phone calls using the vehicle's audio system, microphone and controls. The Bluetooth-enabled cell phone must be paired with the in-vehicle Bluetooth system before it can be used in the vehicle.

Not all phones will support all functions. Visit **www.chevrolet.com/bluetooth** for more information.

See Section 3 of your Owner Manual.

Bose Premium Sound System (if equipped)

The Bose Premium Sound System provides enhanced sound quality. The system features eight speakers, a six-channel amplifier, and A-pillar tweeters. For additional information, refer to your Bose Owner Manual supplement.

Audio Steering Wheel Controls (if equipped)

The following audio controls are located on the steering wheel:

+ – (Volume): Press the plus or minus button to increase or decrease the volume.

(Next/Previous/End): Press the up or down arrow to go to the next or previous radio station stored as a Favorite or, when a CD is playing, to the next or previous track. Press the (End) button to end or reject an OnStar or Bluetooth call.

SRCE (Source): Press this button to switch to AM, FM, XM (if equipped), CD and AUX.

(Seek): Press this button to go to the next radio station.

(Mute/Voice Recognition): Press this button to mute the system. Press the button again to turn the sound on.

Press and hold the button for one second to interact with the OnStar or Bluetooth system.

See Section 3 of your Owner Manual.

CONVENIENCE

Remote Vehicle Start (if equipped)

This feature allows you to start the engine from outside the vehicle by using the Remote Keyless Entry (RKE) transmitter. (Remote Vehicle Start transmitter range is within approximately 200 feet of the vehicle.)

After a remote start, the engine will run for about 10 minutes before turning itself off, but can be extended 10 minutes by performing another remote start sequence at any time. After two consecutive remote starts, no additional remote starts are allowed until the vehicle has been started with the ignition key.

The vehicle's climate control system automatically heats or cools the vehicle interior, depending on equipment, or will turn on at the same setting as when the vehicle was last turned off.

Starting the Vehicle

1. Aim the RKE transmitter at the vehicle.
2. Press and release the (Lock) button on the transmitter.
3. Immediately press and hold the (Remote Vehicle Start) button for about four seconds.
4. When the vehicle starts, the parking lamps will light and remain on while the engine is running.
5. Repeat these steps for a 10-minute time extension.

When you enter the vehicle after a Remote Vehicle Start, the key must be inserted in the ignition and turned to the Run position before driving.

> **Note:** The Remote Vehicle Start feature will not operate if the key is in the ignition, the hood is open, or the Check Engine light is illuminated on the instrument panel cluster.

Canceling a Remote Start

If you wish to turn off the engine instead of driving after a Remote Vehicle Start, perform one of the following functions:

- Press and hold the button until the parking lamps turn off.
- Press and release the Hazard Warning Flashers button inside the vehicle. Press the button again to turn off the flashers.
- Turn the key in the ignition switch to On and then off.
- The engine will automatically stop when time expires.

See Section 2 of your Owner Manual.

Auto Turn Signal

The turn signal lever includes an automatic lane change signal feature.

To signal a lane change, raise or lower the lever until the arrow starts to flash; then release the lever. The turn signal will flash automatically three times.

To signal a turn, move the lever all the way up or down.

See Section 3 of your Owner Manual.

Exterior Lamps

Automatic Lamp Control

Your vehicle is equipped with an Automatic Lamp Control (ALC) system, which turns on the headlamps and other exterior lamps at night or when necessary. The exterior lamps also can be operated manually.

Light Sensor

The Automatic Lamp Control system's light sensor is located on top of the instrument panel. To ensure proper system operation, it's important to avoid placing any objects on or near the sensor.

Exterior Lamp Control Switch

The exterior lamp control switch is located on the instrument panel to the left of the steering wheel. The switch can be rotated to each of the following positions:

(Off): When operating in the AUTO position, a momentary turn of the lamp control switch to the Off position will turn off the ALC system and all the exterior lights. Turn the control switch to this position again to turn on the ALC system.

AUTO (Automatic): Automatically turns on Daytime Running Lamps (DRLs) in the daytime and headlamps, parking lamps and taillamps at night.

(Parking Lamps): Turns on parking lamps and taillamps.

(Headlamps): Turns on the headlamps, parking lamps and taillamps.

(Fog Lamps): Push in the exterior lamp control to turn the fog lamps on or off.

See Section 3 of your Owner Manual.

Cruise Control

The following cruise control buttons are located on the steering wheel:

(On/Off): Press this button to turn the cruise control system on or off.

– SET (Set): Press this button to set a speed, or to decrease the set speed if the system is active. When the cruise control speed is set, the cruise light will illuminate in the instrument cluster.

+ RES (Resume): Press this button to resume a set speed, or to increase the set speed if the system is active.

(Cancel): Press this button to cancel the cruise control but retain the set speed in memory.

See Section 3 of your Owner Manual.

Windshield Wipers

The windshield wipers control is located on the multifunction stalk on the left side of the steering column. It includes the following functions:

(Mist): Rotate the wipers band down to this position to turn the wipers on for one wipe.

(Off): Rotate the wipers band to this position to turn the wipers off.

(Delay): Rotate the wipers band up to this position to have the wipers delay between wipes. The wipers activate more often as the band is rotated upward.

(Low): Rotate the wipers band up to this position to turn the wipers on Low.

(High): Rotate the wipers band up to this position to turn the wipers on High.

(Washer): Push the paddle on top of the multifunction lever to spray washer fluid on the windshield.

See Section 3 of your Owner Manual.

Accessory Power Outlets

Your vehicle is equipped with Accessory Power Outlets (APOs) on the instrument panel and the center console (if equipped) that provide power for a number of electronic devices. On vehicles without a center console, an APO is located at the rear center of the front passenger seat.

See Section 3 of your Owner Manual.

Folding Rear Seat (if equipped)

The split rear seats flip and fold to provide more cargo space and access to the trunk. An additional storage compartment is located under the seat cushions.

To Fold Down a Rear Seat:

1. Extend the center rear safety belt and wrap it around the outboard passenger's side headrest (A).
2. Pull the seat cushion tab (B) located at the back side of each seat cushion.

3. Flip the seat cushion forward.
4. Pull on the seatback tab (C) located on the top outboard side of each seatback.
5. Fold down the seatback.

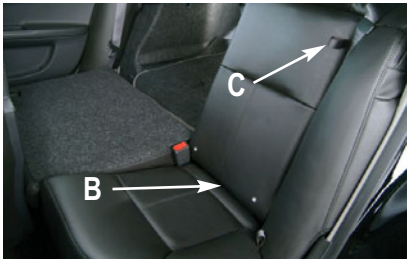

To Fold Up a Rear Seat:

1. Push up the seatback until it latches.
2. Pull on the seatback to make sure it is secure.
3. Place the center rear safety belt back in the center seat position. Check that all safety belts are properly stowed over the seatback.
4. Fold down the seat cushion until it latches.
5. Pull on the seat cushion to make sure it is secure.

See Section 1 of your Owner Manual.

Sunroof (if equipped)

The control switch for the sunroof is located on the overhead console. To operate the sunroof:

▲ **(Vent/Express-Open):** Open the sunshade by hand. Press this switch once for the vent position. Press the switch again to activate the express-open function.

Press the close switch to stop the movement of the sunroof.

▼ **(Close):** Press and hold this switch until the sunroof closes.

See Section 2 of your Owner Manual.

Courtesy Lamps

When a door is opened, the courtesy lamps automatically illuminate. These lamps also can be turned on by rotating the instrument panel brightness control clockwise all the way.

The reading lamps, located on the rearview mirror, can be turned on or off independent of the courtesy lamps by pressing the buttons on the bottom of the mirror, when the doors are closed.

See Section 3 of your Owner Manual.

PERFORMANCE & MAINTENANCE

Antilock Brake System

The Antilock Brake System (ABS) is an advanced electronic system that will help prevent a braking skid. When operating the brakes, do not pump the brake pedal. Just hold the brake pedal down firmly. You may feel a slight brake pedal pulsation or notice some noise, but this is normal.

See Section 4 of your Owner Manual.

Traction Control System

The Traction Control System activates every time you start your vehicle. When one or more of the drive wheels begin to spin from traction loss, the Traction Control System will reduce engine power, indicated by a flashing light on the instrument panel. The front brakes may be applied and the transaxle may upshift to help regain traction. If your vehicle becomes stuck and rocking the vehicle is required, the system should be turned off.

To deactivate the Traction Control System, press the traction control button on the left side of the instrument panel. When the system is turned off, the traction control light will illuminate.

See Section 4 of your Owner Manual.

StabiliTrak® – Stability Control System (if equipped)

StabiliTrak is an advanced computer-controlled vehicle stability system that assists with directional control of the vehicle in difficult driving conditions. It turns on automatically every time you start your vehicle.

When the system senses a discrepancy between your intended path and the direction the vehicle is actually traveling, it selectively applies brake pressure at any one of the wheels to help steer the vehicle in the direction in which you are steering.

See Section 4 of your Owner Manual.

Tire Pressure Monitor

The Tire Pressure Monitor alerts you when a significant reduction in pressure occurs in one or more of your vehicle's tires by illuminating the (!) (Low Tire Pressure) warning light on the instrument panel. The low tire pressure warning light **will remain on** until you correct the tire pressure. You may also have a CHECK TIRE PRESSURE message appear on the DIC (if equipped).

To view tire pressures, press the i (Vehicle Information) button until the DIC shows the tire pressure for the front tires. Press the button again to view the pressure for the rear tires.

Correcting the Tire Pressure

When the low tire pressure warning light illuminates, **you must inflate the tire** to the proper tire pressure. The Tire and Loading Information label shows the correct tire pressure for the tires when they're cold. "Cold" means your vehicle

has been sitting for at least three hours or driven no more than one mile.

You can temporarily remove the DIC message by acknowledging it with your DIC controls. However, at the next vehicle start-up, the DIC message will reappear if the tire pressure has not been corrected.

You may notice during cooler conditions that the low tire pressure warning light will appear when the vehicle is first started and then turn off as you start to drive. This could be an early indicator that your tire pressures are getting low and the tires need to be inflated to the proper pressure.

Note: The Tire Pressure Monitor can alert you about low tire pressure, but it doesn't replace normal monthly tire maintenance.

See Section 5 of your Owner Manual.

Securing the Gas Cap

If the Driver Information Center displays the TIGHTEN GAS CAP message, check that your gas cap is securely fastened. If the cap is not secure, turn it clockwise until a clicking sound is heard, indicating that it is properly installed.

See Sections 3 and 5 of your Owner Manual.

FlexFuel (E85) – Yellow Gas Cap (if equipped)

If your vehicle has a yellow gas cap, it was engineered as a FlexFuel vehicle capable of running on gasoline or E85 fuel. E85 is a blend of 85% ethanol and 15% gasoline. E85 is a high-octane, renewable fuel made primarily from corn (see **livegreengoyellow.com**).

Your FlexFuel vehicle automatically detects the current fuel mixture in the fuel tank and adjusts engine settings accordingly. You can fill up with gasoline or E85, regardless of which fuel is already in the tank.

E85 is not yet available at all gas stations. E85 holds less energy per gallon than gasoline, so drivers will experience lower miles per gallon and cruising range when running on E85.

Note: If your vehicle does not have the yellow gas cap, do not use E85.

See Section 5 of your Owner Manual.

Resetting the Engine Oil Life System

The Oil Life System calculates engine oil life based on vehicle use and displays CHANGE ENGINE OIL SOON in the Driver Information Center (DIC) when it's necessary to change your engine oil and filter. The Oil Life System should be reset to 100% only following an oil change.

Reset the Oil Life System

1. Turn the ignition to On.
2. Press the i button until the DIC displays OIL LIFE REMAINING.
3. Press and hold the ✓ button until 100% is displayed.
4. Turn the ignition to Off.

Refer to your Owner Manual for additional information.

See Section 5 of your Owner Manual.

OWNER INFORMATION

Roadside Assistance

1-800-CHEV-USA

(1-800-243-8872)

TTY Users: 1-888-889-2438

As the proud owner of a new Chevrolet vehicle, you are automatically enrolled in the Chevrolet Roadside Assistance program. This value-added service is intended to provide you with peace of mind as you drive in the city or travel the open road.

Chevrolet's Roadside Assistance toll-free number is staffed by a team of technically trained advisors, who are available 24 hours a day, 365 days a year. The advisors can provide minor repair information or make arrangements to tow your vehicle to the nearest Chevrolet dealer.

Chevrolet will provide the following services for 5 years/100,000 miles at no expense to you:

- Fuel delivery
- Lockout service (identification required)
- Tow to nearest dealership for warranty service
- Flat tire assistance
- Jump starts

In many instances, mechanical failures are covered under Chevrolet's comprehensive warranty. However, when other services are utilized, our advisors will explain any payment obligations you might incur.

For prompt and efficient assistance when calling, please provide the following information to the advisor:

- Location of the vehicle
- Telephone number and your location
- Vehicle model, year and color
- Vehicle mileage
- Vehicle Identification Number (VIN)
- Vehicle license plate number

Chevrolet reserves the right to limit services or reimbursement to an owner or driver when, in Chevrolet's judgment, the claims become excessive in frequency or type of occurrence.

Roadside Assistance and OnStar

If you have a current OnStar subscription, press the OnStar button and the vehicle will send your current GPS location to an OnStar Advisor who will speak to you, assess your problem, contact Roadside Assistance and relay your exact location so you will get the help you need.

My GMLink

The Chevrolet Owner Center at My GMLink is a complimentary service for Chevrolet owners, a one-stop resource to enhance your Chevrolet ownership experience. Exclusive member benefits include online service reminders, vehicle maintenance tips, online owner manual, special privileges and more. Sign up today at **www.mygmlink.com**.

Certain restrictions, precautions and safety procedures apply to your vehicle. Please read your Owner Manual for complete instructions. All information contained herein is based on information available at the time of printing and is subject to change without notice. Copyright 2008 by GM Corp. All rights reserved.

25783628 A

25783628 A