2008 Pontiac G6 Owner Manual

Seats and Restraint Systems 1-1
- Front Seats 1-2
- Rear Seats 1-11
- Safety Belts 1-13
- Child Restraints 1-33
- Airbag System 1-59
- Restraint System Check 1-74

Features and Controls 2-1
- Keys 2-3
- Doors and Locks 2-10
- Windows 2-15
- Theft-Deterrent Systems 2-18
- Starting and Operating Your Vehicle 2-21
- Mirrors 2-37
- OnStar® System 2-41
- Storage Areas 2-44
- Sunroof 2-45
- Retractable Hardtop 2-45

Instrument Panel 3-1
- Instrument Panel Overview 3-4
- Climate Controls 3-19
- Warning Lights, Gages, and Indicators 3-27
- Driver Information Center (DIC) 3-43
- Audio System(s) 3-52

Driving Your Vehicle 4-1
- Your Driving, the Road, and Your Vehicle 4-2
- Towing 4-25

Service and Appearance Care 5-1
- Service 5-4
- Fuel 5-6
- Checking Things Under the Hood 5-12
- Bulb Replacement 5-51
- Windshield Wiper Blade Replacement 5-59
- Tires 5-60
- Appearance Care 5-100
- Vehicle Identification 5-109
- Electrical System 5-109
- Capacities and Specifications 5-119

Maintenance Schedule 6-1
- Maintenance Schedule 6-2

Customer Assistance Information 7-1
- Customer Assistance and Information 7-2
- Reporting Safety Defects 7-14
- Vehicle Data Recording and Privacy 7-16

Index 1

Downloaded from www.Manualslib.com manuals search engine

GENERAL MOTORS, GM, the GM Emblem, PONTIAC, the PONTIAC Emblem, and the name G6 are registered trademarks of General Motors Corporation.

This manual includes the latest information at the time it was printed. We reserve the right to make changes after that time without further notice. For vehicles first sold in Canada, substitute the name “General Motors of Canada Limited” for Pontiac Division whenever it appears in this manual.

This manual describes features that may be available in this model, but your vehicle may not have all of them. For example, more than one entertainment system may be offered or your vehicle may have been ordered without a front passenger or rear seats.

Keep this manual in the vehicle for quick reference.

Canadian Owners

A French language copy of this manual can be obtained from your dealer/retailer or from:

Helm, Incorporated
P.O. Box 07130
Detroit, MI 48207

1-800-551-4123
www.helminc.com

Propriétaires Canadiens

On peut obtenir un exemplaire de ce guide en français auprès de concessionnaire ou à l’adresse suivante:

Helm Incorporated
P.O. Box 07130
Detroit, MI 48207

1-800-551-4123
www.helminc.com

Litho in U.S.A.
Part No. 15864180 A First Printing

©2007 General Motors Corporation. All Rights Reserved.

Downloaded from www.Manualslib.com manuals search engine

Using this Manual

Many people read the owner manual from beginning to end when they first receive their new vehicle to learn about the vehicle's features and controls. Pictures and words work together to explain things.

Index

A good place to quickly locate information about the vehicle is the Index in the back of the manual. It is an alphabetical list of what is in the manual and the page number where it can be found.

Safety Warnings and Symbols

There are a number of safety cautions in this book. A box with the word CAUTION is used to tell about things that could hurt you or others if you were to ignore the warning.

⚠ CAUTION:

These mean there is something that could hurt you or other people.

We tell you what the hazard is and what to do to help avoid or reduce the hazard. Please read these cautions. If you do not, you or others could be hurt.

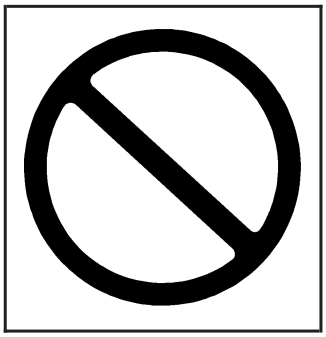

A circle with a slash through it is a safety symbol which means "Do Not," "Do Not do this" or "Do Not let this happen."

Downloaded from www.Manualslib.com manuals search engine

Vehicle Damage Warnings

You will also find notices in this manual.

Notice: **These mean there is something that could damage your vehicle.**

A notice tells about something that can damage the vehicle. Many times, this damage would not be covered by your vehicle's warranty, and it could be costly. The notice tells what to do to help avoid the damage.

When you read other manuals, you might see CAUTION and NOTICE warnings in different colors or in different words.

There are also warning labels on the vehicle which use the same words, CAUTION or NOTICE.

Vehicle Symbols

The vehicle has components and labels that use symbols instead of text. Symbols are shown along with the text describing the operation or information relating to a specific component, control, message, gage, or indicator.

Downloaded from www.Manualslib.com manuals search engine

Section 1 Seats and Restraint Systems

Front Seats 1-2
Manual Seats 1-2
Power Seat 1-3
Manual Lumbar 1-3
Heated Seats 1-4
Reclining Seatbacks 1-4
Head Restraints 1-7
Seatback Latches 1-8
Easy Entry Seat 1-9
Power Lift Seat 1-11

Rear Seats 1-11
60/40 Split Bench Seat (Sedan and Coupe) 1-11

Safety Belts 1-13
Safety Belts: They Are for Everyone 1-13
How to Wear Safety Belts Properly 1-18
Lap-Shoulder Belt 1-26
Safety Belt Use During Pregnancy 1-32
Safety Belt Extender 1-32

Child Restraints 1-33
Older Children 1-33
Infants and Young Children 1-36
Child Restraint Systems 1-39
Where to Put the Restraint 1-42
Lower Anchors and Tethers for Children (LATCH) 1-44
Securing a Child Restraint in a Rear Seat Position 1-53
Securing a Child Restraint in the Right Front Seat Position 1-56

Airbag System 1-59
Where Are the Airbags? 1-62
When Should an Airbag Inflate? 1-64
What Makes an Airbag Inflate? 1-65
How Does an Airbag Restrain? 1-66
What Will You See After an Airbag Inflates? 1-66
Passenger Sensing System 1-68
Servicing Your Airbag-Equipped Vehicle 1-72
Adding Equipment to Your Airbag-Equipped Vehicle 1-73

Restraint System Check 1-74
Checking the Restraint Systems 1-74
Replacing Restraint System Parts After a Crash 1-75

Downloaded from www.Manualslib.com manuals search engine

Front Seats

Manual Seats

⚠ CAUTION:

You can lose control of the vehicle if you try to adjust a manual driver's seat while the vehicle is moving. The sudden movement could startle and confuse you, or make you push a pedal when you do not want to. Adjust the driver's seat only when the vehicle is not moving.

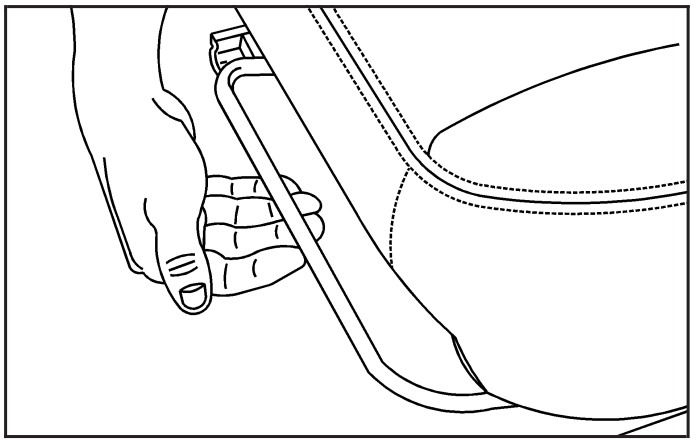

Lift the bar located under the front of the seat to unlock it. Slide the seat to where you want it and release the bar. Try to move the seat with your body to be sure the seat is locked in place.

Downloaded from www.Manualslib.com manuals search engine

Power Seat

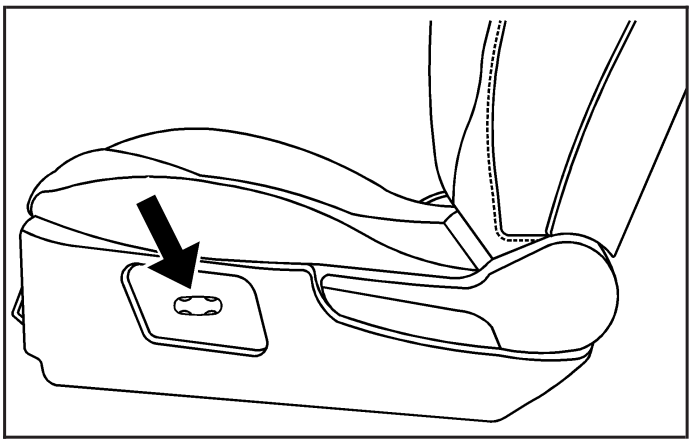

If the vehicle has a power seat, the control used to operate it is located on the outboard side of the driver's seat.

To adjust the seat:

- Move the seat forward or rearward by sliding the control forward or rearward.
- Raise or lower the front part of the seat cushion by moving the front of the control up or down.
- Raise or lower the rear part of the seat cushion by moving the rear of the control up or down.

Manual Lumbar

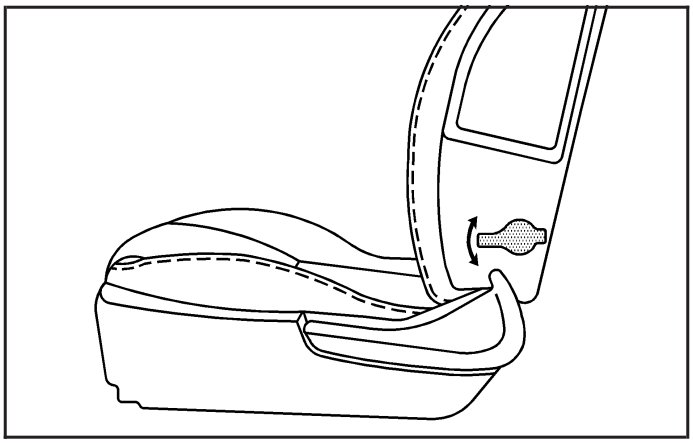

If your vehicle has this feature, the handle is located on the outboard side of the driver's seat. Move the handle up repeatedly to decrease lumbar support. Move the handle down repeatedly to increase lumbar support.

Downloaded from www.Manualslib.com manuals search engine

Heated Seats

Your vehicle may have heated front seats.

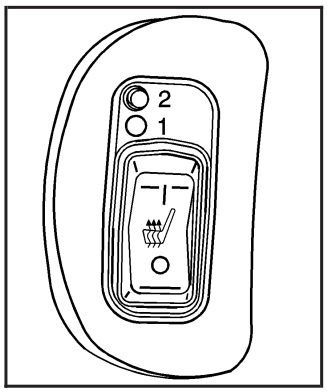

The buttons are located on the outboard side of the driver's and front passenger's seats.

Press the top of the switch to turn the feature on. The seat will heat to the high setting. The indicator light above the switch will be lit next to the number 2.

Press the top of the switch again to go to the low heat setting. The indicator light will be lit next to the number 1.

Press the bottom of the switch to turn the feature off.

The heated seat feature will turn off when the ignition is turned off.

Reclining Seatbacks

⚠ CAUTION:

You can lose control of the vehicle if you try to adjust a manual driver's seat while the vehicle is moving. The sudden movement could startle and confuse you, or make you push a pedal when you do not want to. Adjust the driver's seat only when the vehicle is not moving.

⚠ CAUTION:

If the seatback is not locked, it could move forward in a sudden stop or crash. That could cause injury to the person sitting there. Always push and pull on the seatback to be sure it is locked.

Your seats have manual reclining seatbacks. The lever used to operate them is located on the outboard side of the seats.

Downloaded from www.Manualslib.com manuals search engine

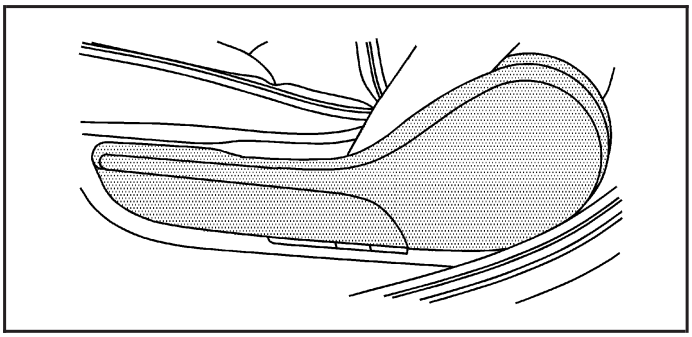

To recline the seatback, do the following:

1. Lift the recline lever.
2. Move the seatback to the desired position, then release the lever to lock the seatback in place.
3. Push and pull on the seatback to make sure it is locked.

To return the seatback to an upright position, do the following:

1. Lift the lever fully without applying pressure to the seatback and the seatback will return to the upright position. Release the lever to lock the seatback in place.

⚠ CAUTION:

If the seatback is not locked, it could move forward in a sudden stop or crash. That could cause injury to the person sitting there. Always push and pull on the seatback to be sure it is locked.

2. Push and pull on the seatback to make sure it is locked.

Downloaded from www.Manualslib.com manuals search engine

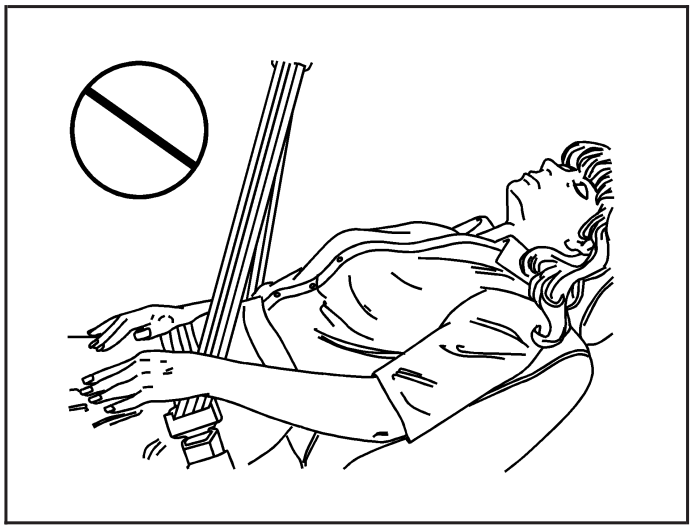

⚠ CAUTION:

Sitting in a reclined position when your vehicle is in motion can be dangerous. Even if you buckle up, your safety belts cannot do their job when you are reclined like this.

The shoulder belt cannot do its job because it will not be against your body. Instead, it will be in front of you. In a crash, you could go into it, receiving neck or other injuries.

The lap belt cannot do its job either. In a crash, the belt could go up over your abdomen. The belt forces would be there, not at your pelvic bones. This could cause serious internal injuries.

For proper protection when the vehicle is in motion, have the seatback upright. Then sit well back in the seat and wear your safety belt properly.

Do not have a seatback reclined if your vehicle is moving.

Downloaded from www.Manualslib.com manuals search engine

Head Restraints

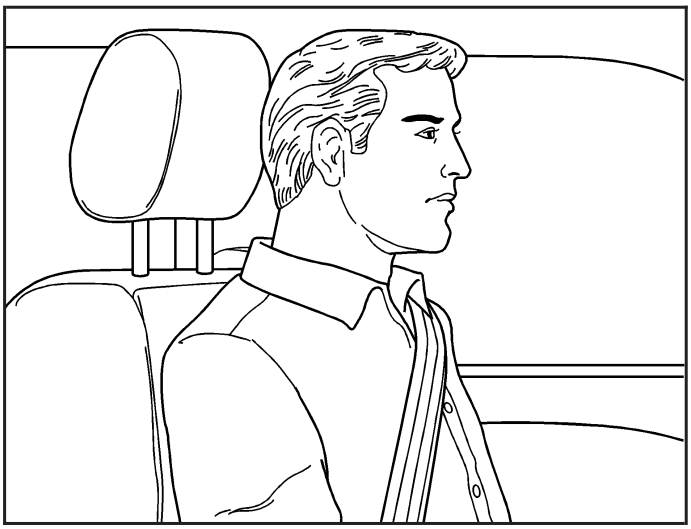

Adjust the head restraint so that the top of the restraint is at the same height as the top of the occupant's head. This position reduces the chance of a neck injury in a crash.

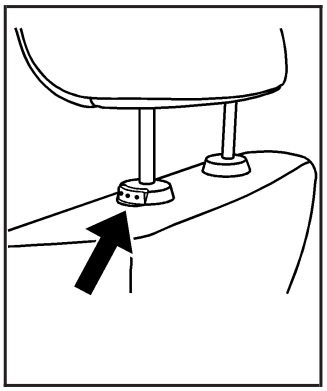

Pull the restraint up to raise it. To lower the head restraint, press the button, located on the top of the seatback, and push the restraint down.

On sedans and coupes the rear seat head rests are also adjustable.

On vehicles with a retractable hardtop the rear seat head rests are not adjustable.

Downloaded from www.Manualslib.com manuals search engine

Seatback Latches

⚠ CAUTION:

You can lose control of the vehicle if you try to adjust a manual driver's seat while the vehicle is moving. The sudden movement could startle and confuse you, or make you push a pedal when you do not want to. Adjust the driver's seat only when the vehicle is not moving.

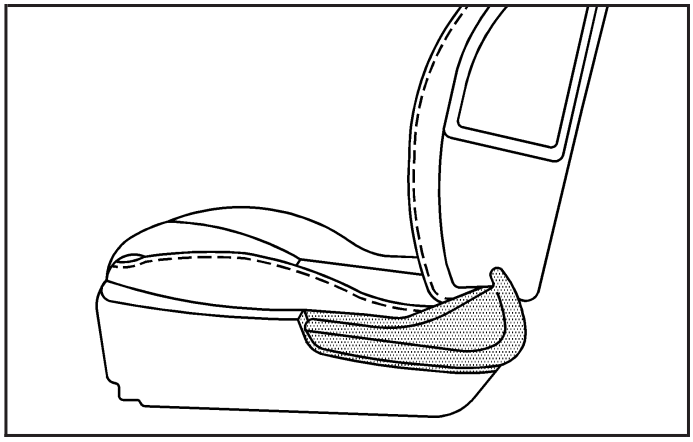

If your vehicle is a coupe or retractable hardtop model, it has a seatback latch as part of the manual recline lever. This feature provides easy access to the rear seats. To operate the seatback latch, pull up on the manual recline lever. The seatback will automatically spring forward. To operate the latch from the rear seat, pull back on the top of the manual recline lever.

⚠ CAUTION:

If the seatback is not locked, it could move forward in a sudden stop or crash. That could cause injury to the person sitting there. Always push and pull on the seatback to be sure it is locked.

Lift the seatback up to return it to the upright position. Push and pull on the seatback to make sure it is locked.

Downloaded from www.Manualslib.com manuals search engine

Easy Entry Seat

⚠ CAUTION:

If the easy entry right front seat is not locked, it can move. In a sudden stop or crash, the person sitting there could be injured. After you have used it, be sure to push rearward on an easy entry seat to be sure it is locked.

⚠ CAUTION:

If the seatback is not locked, it could move forward in a sudden stop or crash. That could cause injury to the person sitting there. Always push and pull on the seatback to be sure it is locked.

If your vehicle is a two-door model, the front passenger seat can be moved to make it easier to get in and out of the rear seat.

To use the easy entry seat, do the following:

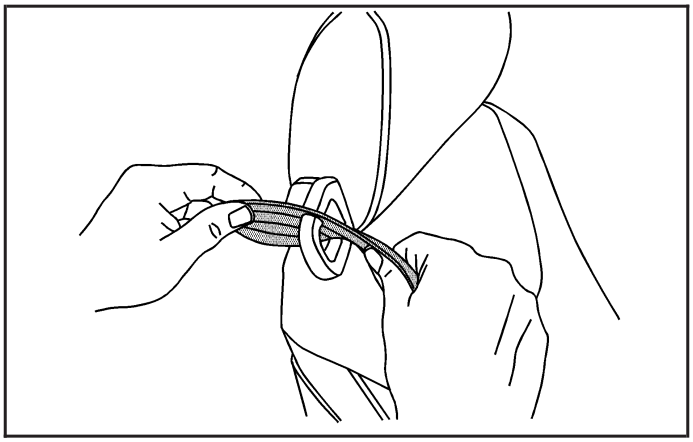

1. Remove the safety belt from the headrest-mounted guide.

Downloaded from www.Manualslib.com manuals search engine

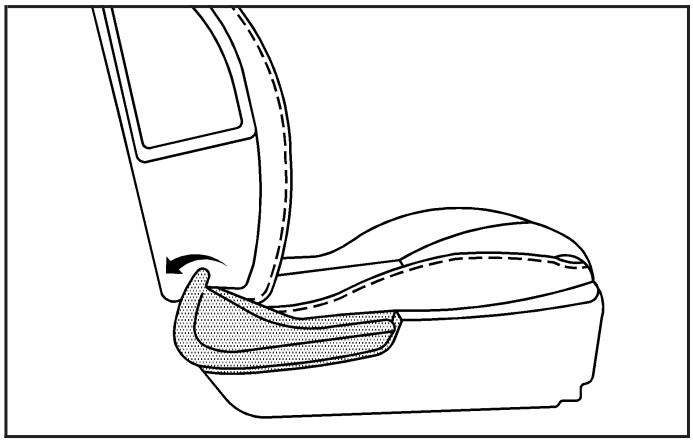

2. Pull back on the top of the recliner lever. The seatback will move forward.

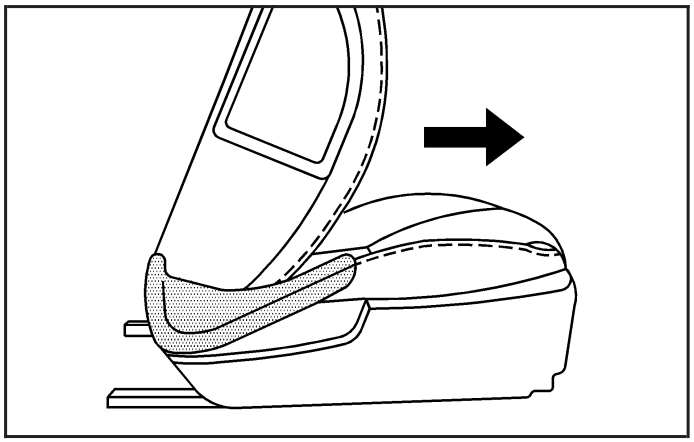

3. Slide the seat forward.
4. Move the seat rearward until it locks into place after the passenger enters the rear seat area.
5. Move the seatback to its original position and return the front seat safety belt to the safety belt guide. Make sure both the seat and seatback are locked.

Downloaded from www.Manualslib.com manuals search engine

Power Lift Seat

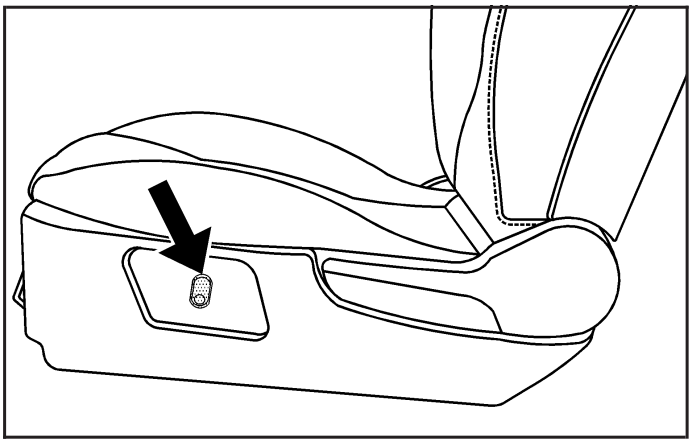

To adjust a power lift seat, press the top or bottom of the power lift seat switch to raise or lower the seat.

Rear Seats

60/40 Split Bench Seat (Sedan and Coupe)

Folding the Seatback

To fold down the rear seatback, do the following:

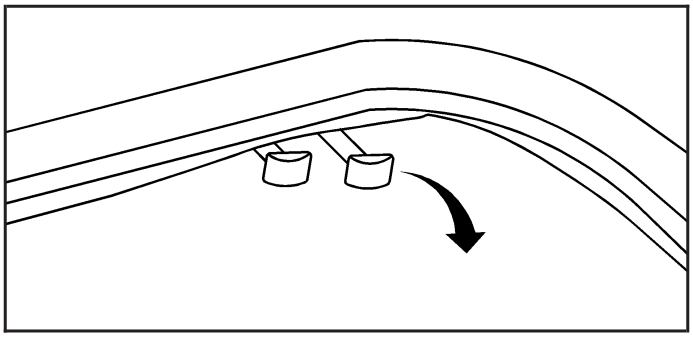

1. The handles that are used to lower the rear seatbacks are located on the upper edge of the trunk opening. Open the trunk. Pull the driver's side handle to open the larger side of the seatback. Pull the passenger's side handle to open the smaller side of the seatback.

Downloaded from www.Manualslib.com manuals search engine

Notice: **Folding a rear seat with the safety belts still fastened may cause damage to the seat or the safety belts. Always unbuckle the safety belts and return them to their normal stowed position before folding a rear seat.**

2. Fold the seatback down from inside the vehicle.

⚠ CAUTION:

If the seatback is not locked, it could move forward in a sudden stop or crash. That could cause injury to the person sitting there. Always push and pull on the seatback to be sure it is locked.

⚠ CAUTION:

A safety belt that is improperly routed, not properly attached, or twisted will not provide the protection needed in a crash. The person wearing the belt could be seriously injured. After raising the rear seatback, always check to be sure that the safety belts are properly routed and attached, and are not twisted.

To return the seatback to the upright position, push up the seatback until you hear a click. Then pull on the seatback to make sure it is secure.

Downloaded from www.Manualslib.com manuals search engine

Safety Belts

Safety Belts: They Are for Everyone

This part of the manual tells you how to use safety belts properly. It also tells you some things you should not do with safety belts.

⚠ CAUTION:

Do not let anyone ride where he or she cannot wear a safety belt properly. If you are in a crash and you are not wearing a safety belt, your injuries can be much worse. You can hit things inside the vehicle harder or be ejected from it and be seriously injured or killed. In the same crash, you might not be, if you are buckled up. Always fasten your safety belt, and check that your passenger(s) are restrained properly too.

⚠ CAUTION:

It is extremely dangerous to ride in a cargo area, inside or outside of a vehicle. In a collision, people riding in these areas are more likely to be seriously injured or killed. Do not allow people to ride in any area of your vehicle that is not equipped with seats and safety belts. Be sure everyone in your vehicle is in a seat and using a safety belt properly.

Your vehicle has indicators as a reminder to buckle your safety belts. See *Safety Belt Reminders on page 3-30*.

In most states and in all Canadian provinces, the law requires wearing safety belts. Here is why:

You never know if you will be in a crash. If you do have a crash, you do not know if it will be a serious one.

A few crashes are mild, and some crashes can be so serious that even buckled up, a person would not survive. But most crashes are in between. In many of them, people who buckle up can survive and sometimes walk away. Without belts they could have been badly hurt or killed.

After more than 40 years of safety belts in vehicles, the facts are clear. In most crashes buckling up does matter... a lot!

Downloaded from www.Manualslib.com manuals search engine

Why Safety Belts Work

When you ride in or on anything, you go as fast as it goes.

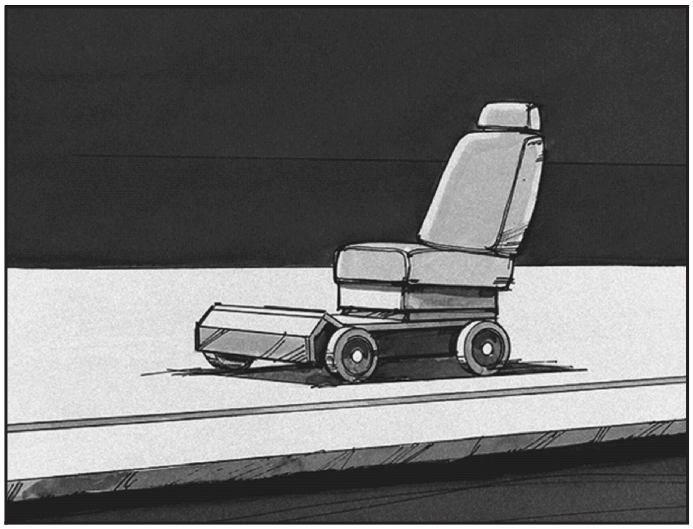

Take the simplest vehicle. Suppose it is just a seat on wheels.

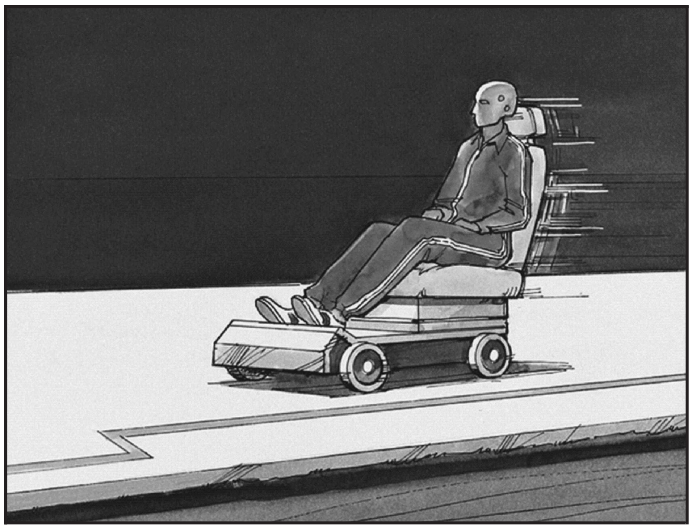

Put someone on it.

Downloaded from www.Manualslib.com manuals search engine

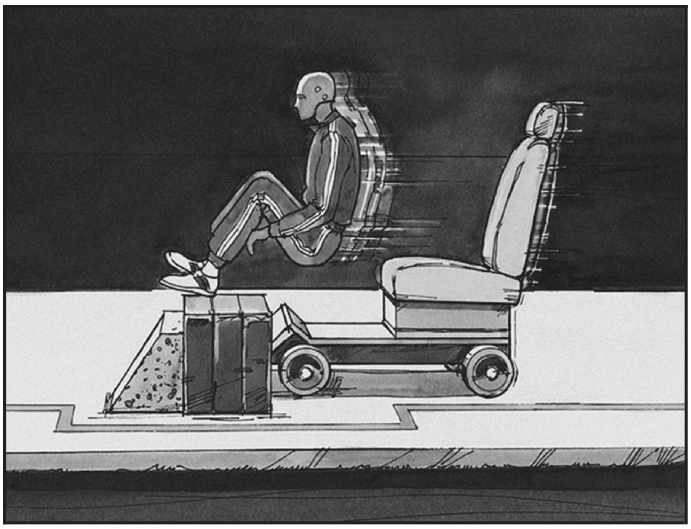

Get it up to speed. Then stop the vehicle. The rider does not stop.

The person keeps going until stopped by something. In a real vehicle, it could be the windshield...

Downloaded from www.Manualslib.com manuals search engine

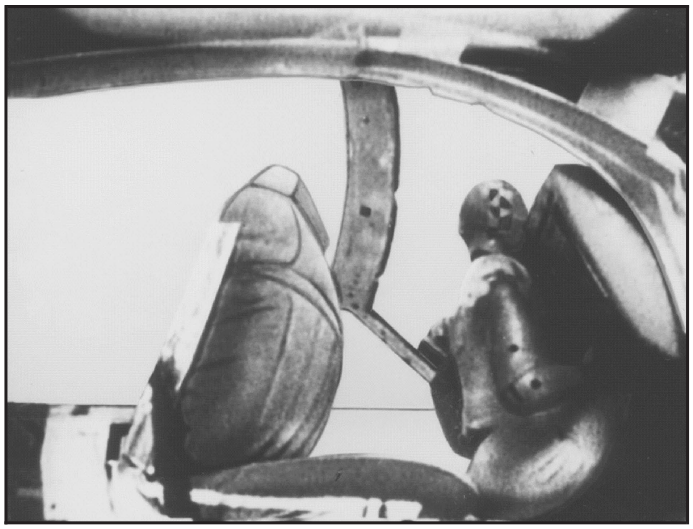

or the instrument panel...

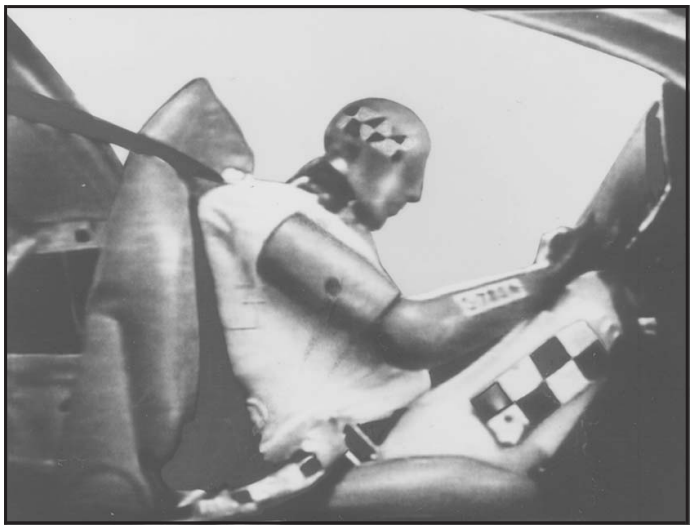

or the safety belts!

With safety belts, you slow down as the vehicle does. You get more time to stop. You stop over more distance, and your strongest bones take the forces. That is why safety belts make such good sense.

Downloaded from www.Manualslib.com manuals search engine

Questions and Answers About Safety Belts

Q: Will I be trapped in the vehicle after a crash if I am wearing a safety belt?

A: You *could* be — whether you are wearing a safety belt or not. But your chance of being conscious during and after an accident, so you *can* unbuckle and get out, is *much* greater if you are belted. And you can unbuckle a safety belt, even if you are upside down.

Q: If my vehicle has airbags, why should I have to wear safety belts?

A: Airbags are supplemental systems only; so they work *with* safety belts — not instead of them. Whether or not an airbag is provided, all occupants still have to buckle up to get the most protection. That is true not only in frontal collisions, but especially in side and other collisions.

Q: If I am a good driver, and I never drive far from home, why should I wear safety belts?

A: You may be an excellent driver, but if you are in a crash — even one that is not your fault — you and your passenger(s) can be hurt. Being a good driver does not protect you from things beyond your control, such as bad drivers.

Most accidents occur within 25 miles (40 km) of home. And the greatest number of serious injuries and deaths occur at speeds of less than 40 mph (65 km/h).

Safety belts are for everyone.

Downloaded from www.Manualslib.com manuals search engine

How to Wear Safety Belts Properly

This section is only for people of adult size.

Be aware that there are special things to know about safety belts and children. And there are different rules for smaller children and babies. If a child will be riding in your vehicle, see *Older Children on page 1-33* or *Infants and Young Children on page 1-36*. Follow those rules for everyone's protection.

It is very important for all occupants to buckle up. Statistics show that unbelted people are hurt more often in crashes than those who are wearing safety belts.

Occupants who are not buckled up can be thrown out of the vehicle in a crash. And they can strike others in the vehicle who are wearing safety belts.

First, before you or your passenger(s) wear a safety belt, there is important information you should know.

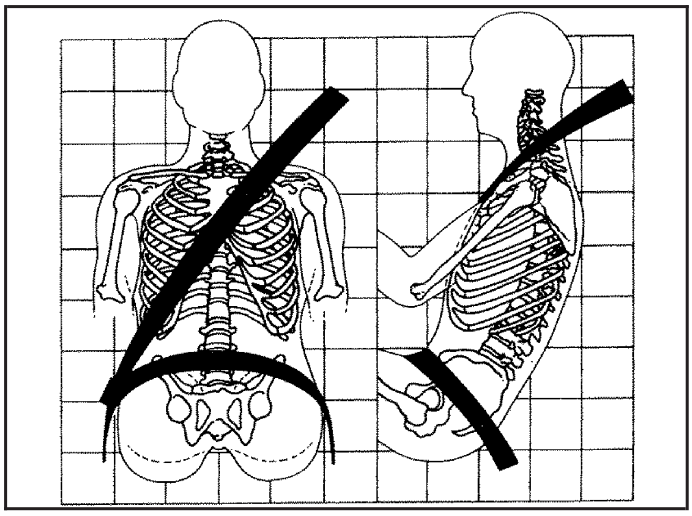

Sit up straight and always keep your feet on the floor in front of you. The lap part of the belt should be worn low and snug on the hips, just touching the thighs. In a crash, this applies force to the strong pelvic bones and you would be less likely to slide under the lap belt. If you slid under it, the belt would apply force on your abdomen. This could cause serious or even fatal injuries. The shoulder belt should go over the shoulder and across the chest. These parts of the body are best able to take belt restraining forces.

The shoulder belt locks if there is a sudden stop or crash.

Downloaded from www.Manualslib.com manuals search engine

Q: What is wrong with this?

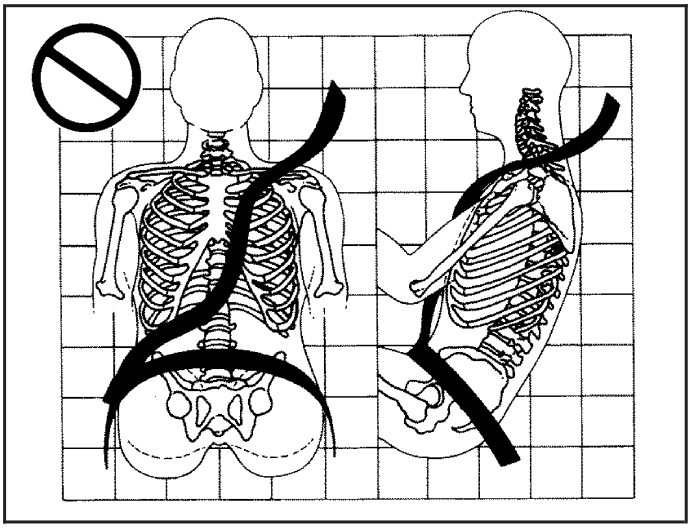

A: The shoulder belt is too loose. It will not give as much protection this way.

⚠ CAUTION:

You can be seriously hurt if your shoulder belt is too loose. In a crash, you would move forward too much, which could increase injury. The shoulder belt should fit snugly against your body.

Downloaded from www.Manualslib.com manuals search engine

Q: What is wrong with this?

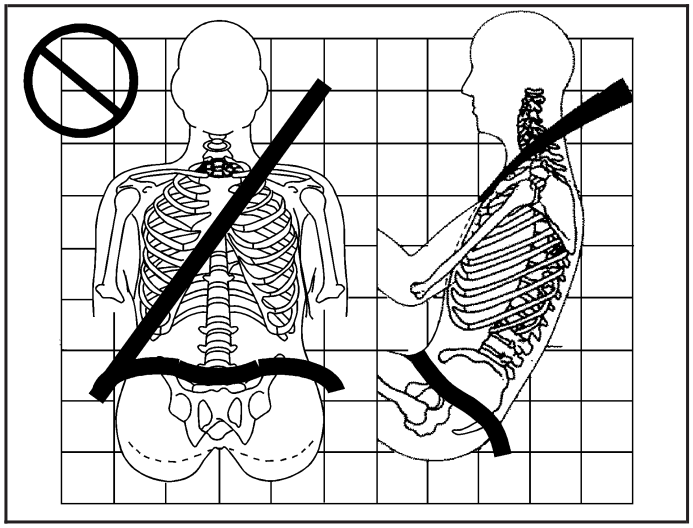

A: The lap belt is too loose. It will not give nearly as much protection this way.

⚠ CAUTION:

You can be seriously hurt if your lap belt is too loose. In a crash, you could slide under the lap belt and apply force on your abdomen. This could cause serious or even fatal injuries. The lap belt should be worn low and snug on the hips, just touching the thighs.

Downloaded from www.Manualslib.com manuals search engine

Q: What is wrong with this?

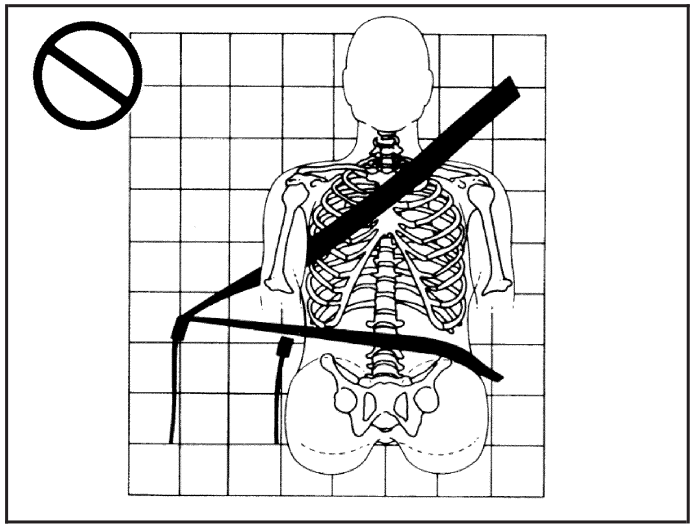

A: The belt is buckled in the wrong place.

⚠ CAUTION:

You can be seriously injured if your belt is buckled in the wrong place like this. In a crash, the belt would go up over your abdomen. The belt forces would be there, not on the pelvic bones. This could cause serious internal injuries. Always buckle your belt into the buckle nearest you.

Downloaded from www.Manualslib.com manuals search engine

Q: What is wrong with this?

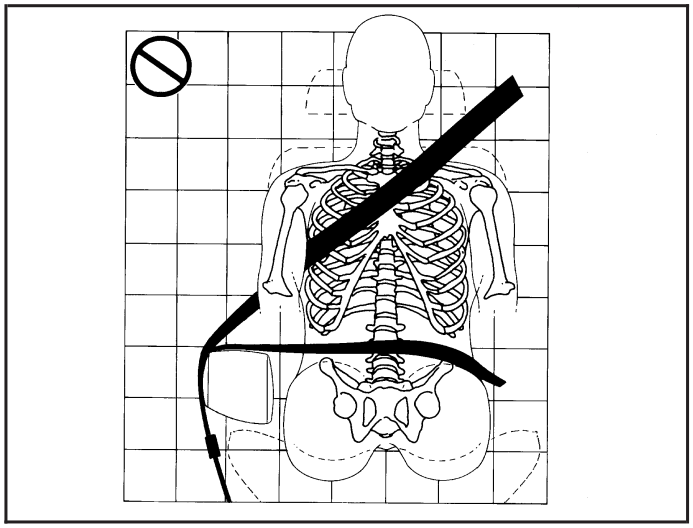

A: The belt is over an armrest.

⚠ CAUTION:

You can be seriously injured if your belt goes over an armrest like this. The belt would be much too high. In a crash, you can slide under the belt. The belt force would then be applied on the abdomen, not on the pelvic bones, and that could cause serious or fatal injuries. Be sure the belt goes under the armrests.

Downloaded from www.Manualslib.com manuals search engine

Q: What is wrong with this?

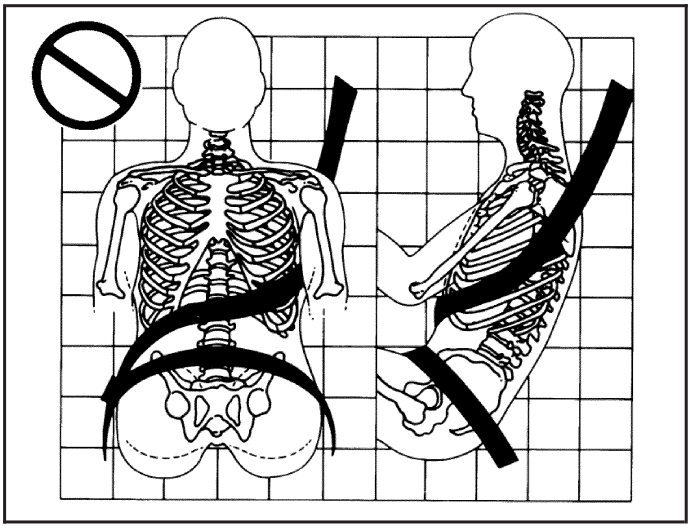

A: The shoulder belt is worn under the arm. It should be worn over the shoulder at all times.

⚠ CAUTION:

You can be seriously injured if you wear the shoulder belt under your arm. In a crash, your body would move too far forward, which would increase the chance of head and neck injury. Also, the belt would apply too much force to the ribs, which are not as strong as shoulder bones. You could also severely injure internal organs like your liver or spleen. The shoulder belt should go over the shoulder and across the chest.

Downloaded from www.Manualslib.com manuals search engine

Q: **What is wrong with this?**

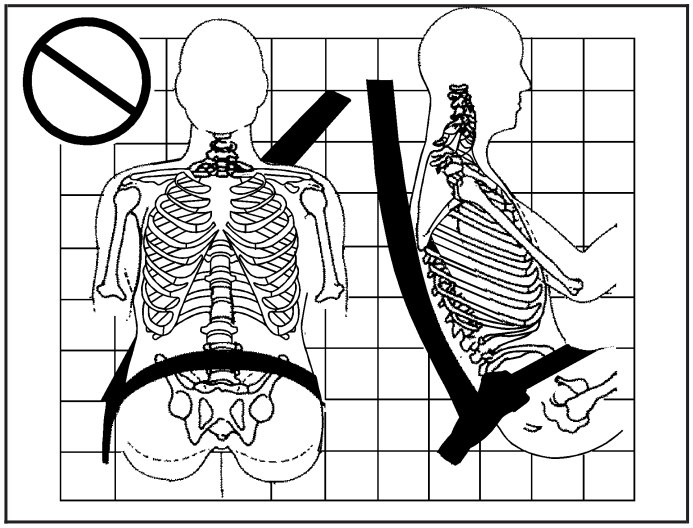

A: The belt is behind the body.

⚠ CAUTION:

You can be seriously injured by not wearing the lap-shoulder belt properly. In a crash, you would not be restrained by the shoulder belt. Your body could move too far forward increasing the chance of head and neck injury. You might also slide under the lap belt. The belt force would then be applied right on the abdomen. That could cause serious or fatal injuries. The shoulder belt should go over the shoulder and across the chest.

Downloaded from www.Manualslib.com manuals search engine

Q: What is wrong with this?

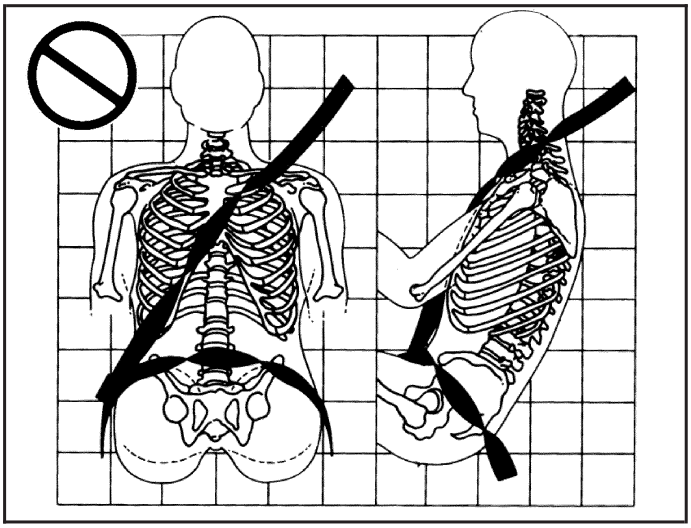

A: The belt is twisted across the body.

⚠ CAUTION:

You can be seriously injured by a twisted belt. In a crash, you would not have the full width of the belt to spread impact forces. If a belt is twisted, make it straight so it can work properly, or ask your dealer/retailer to fix it.

Downloaded from www.Manualslib.com manuals search engine

Lap-Shoulder Belt

All seating positions in your vehicle have a lap-shoulder belt.

Here is how to wear a lap-shoulder belt properly.

1. Adjust the seat, if the seat is adjustable, so you can sit up straight. To see how, see “Seats” in the Index.

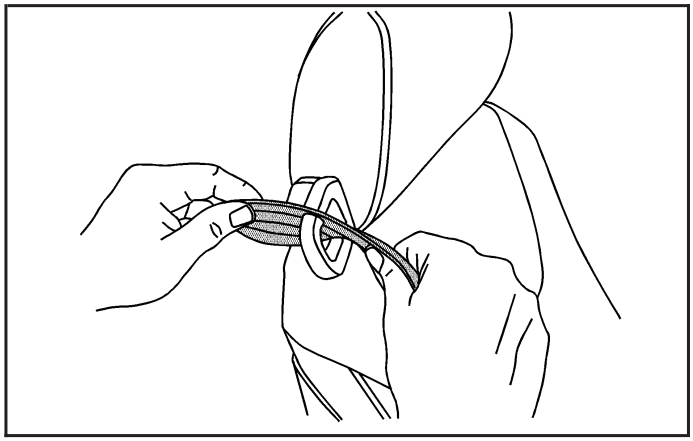

2. If your seat has a safety belt guide, and the safety belt is not routed through the guide, slide the edge of the belt webbing through the opening on the guide. Be sure the belt is not twisted.

3. Pick up the latch plate and pull the belt across you. Do not let it get twisted.

   The lap-shoulder belt may lock if you pull the belt across you very quickly. If this happens, let the belt go back slightly to unlock it. Then pull the belt across you more slowly.

   If you ever pull the shoulder portion of a passenger belt out all the way, you may engage the child restraint locking feature. If this happens, just let the belt go back all the way and start again.

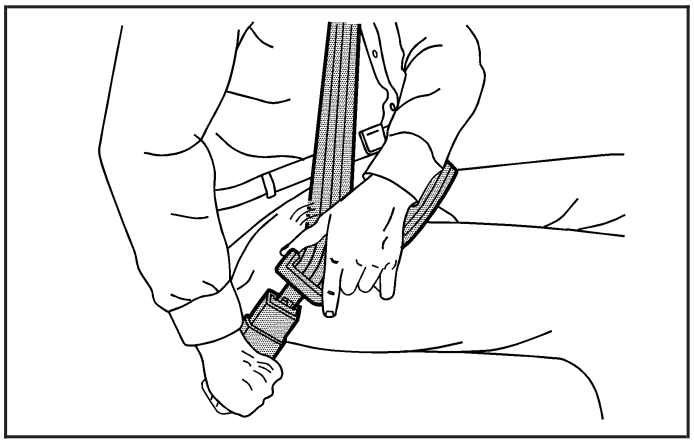

4. Push the latch plate into the buckle until it clicks.

Downloaded from www.Manualslib.com manuals search engine

Pull up on the latch plate to make sure it is secure. If the belt is not long enough, see *Safety Belt Extender on page 1-32*.

Make sure the release button on the buckle is positioned so you would be able to unbuckle the safety belt quickly if necessary.

5. If equipped with a shoulder belt height adjuster, move it to the height that is right for you. Improper shoulder belt height adjustment could reduce the effectiveness of the safety belt in a crash. See “Shoulder Belt Height Adjustment” later in this section.

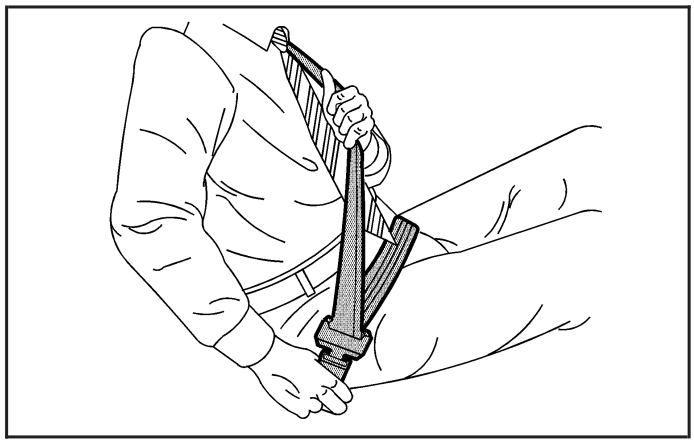

6. To make the lap part tight, pull up on the shoulder belt.

   It may be necessary to pull stitching on the safety belt through the latch plate to fully tighten the lap belt on smaller occupants.

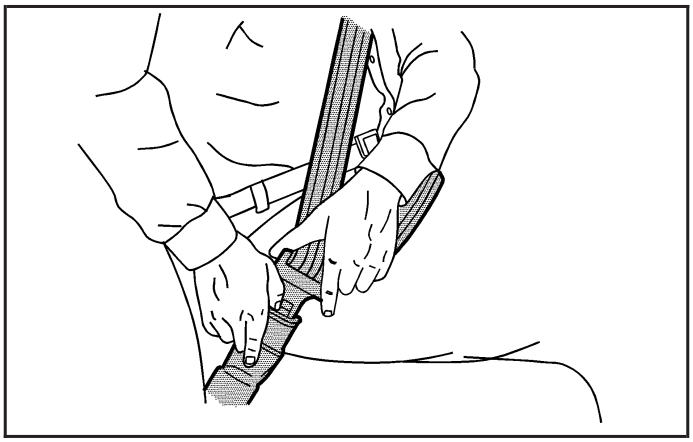

To unlatch the belt, push the button on the buckle. The belt should go back out of the way.

When the safety belt is not in use, slide the latch plate up the safety belt webbing. The latch plate should rest on the stitching on the safety belt, near the guide loop on the side wall.

Downloaded from www.Manualslib.com manuals search engine

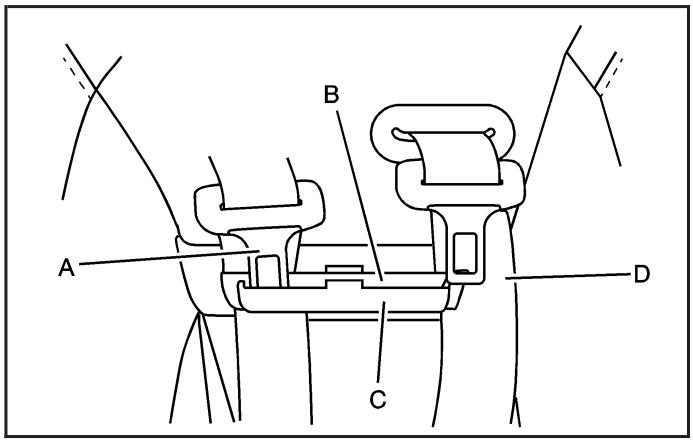

If your vehicle has a retractable hardtop, secure the safety belt latch plate when the safety belt is not in use in the rear seat. To do this, slide the safety belt webbing (D) behind the belt webbing retaining clip (B) and slide the latch (A) into the latch retaining clip (C).

Before you close a door, be sure the belt is out of the way. If you slam the door on it, you can damage both the belt and your vehicle.

Shoulder Belt Height Adjuster (Sedan Only)

Your vehicle has shoulder belt height adjusters for the driver and right front passenger position.

Adjust the height so that the shoulder portion of the belt is centered on your shoulder. The belt should be away from your face and neck, but not falling off your shoulder. Improper shoulder belt height adjustment could reduce the effectiveness of the safety belt in a crash.

To move it down, push down the release button (A) and move the height adjuster to the desired position. You can move the height adjuster up by pushing the release button up.

After you move the height adjuster to where you want it, try to move it down without pushing the release button to make sure it has locked into position.

Downloaded from www.Manualslib.com manuals search engine

Safety Belt Pretensioners

Your vehicle has safety belt pretensioners for front outboard occupants. Although you cannot see them, they are part of the safety belt assembly. They can help tighten the safety belts during the early stages of a moderate to severe frontal and near frontal crash if the threshold conditions for pretensioner activation are met. And, if your vehicle has side impact airbags, safety belt pretensioners can help tighten the safety belts in a side crash.

Pretensioners work only once. If they activate in a crash, you will need to get new ones, and probably other new parts for your safety belt system. See *Replacing Restraint System Parts After a Crash on page 1-75*.

Rear Safety Belt Comfort Guides (Sedan and Coupe Only)

Rear shoulder belt comfort guides may provide added safety belt comfort for older children who have outgrown booster seats and for some adults. When installed on a shoulder belt, the comfort guide positions the belt away from the neck and head.

There is one guide for each outside passenger position in the rear seat. Here is how to install a comfort guide to the safety belt:

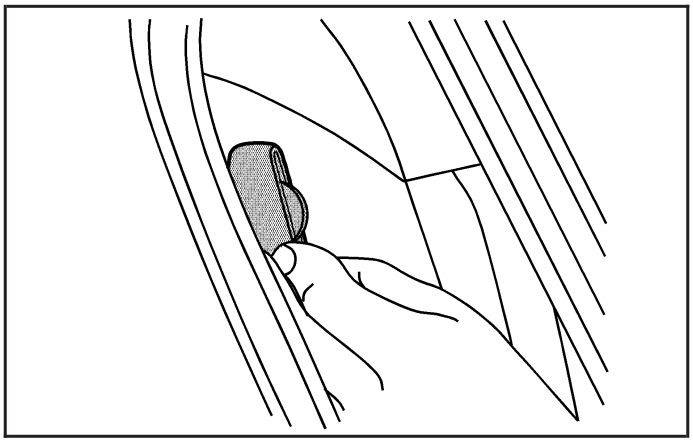

1. Pull the elastic cord out from between the edge of the seatback and the interior body to remove the guide from its storage clip.

Downloaded from www.Manualslib.com manuals search engine

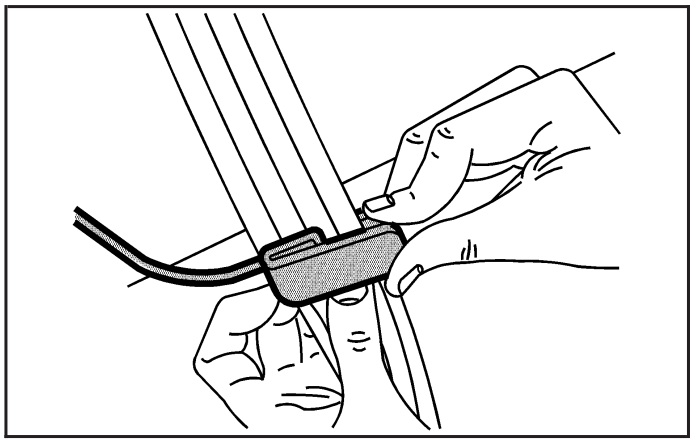

2. Place the guide over the belt, and insert the two edges of the belt into the slots of the guide.

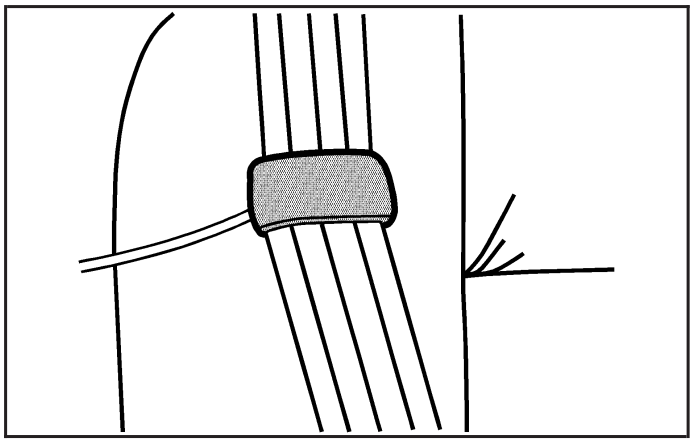

3. Be sure that the belt is not twisted and it lies flat. The elastic cord must be under the belt and the guide on top.

Downloaded from www.Manualslib.com manuals search engine

⚠ CAUTION:

A safety belt that is not properly worn may not provide the protection needed in a crash. The person wearing the belt could be seriously injured. The shoulder belt should go over the shoulder and across the chest. These parts of the body are best able to take belt restraining forces.

4. Buckle, position, and release the safety belt as described previously in this section. Make sure that the shoulder belt crosses the shoulder.

To remove and store the comfort guide, squeeze the belt edges together so that you can take them out of the guide. Pull the guide upward to expose its storage clip, and then slide the guide onto the clip. Turn the guide and clip inward and slide them between the seatback and the interior body, leaving only the loop of the elastic cord exposed.

Downloaded from www.Manualslib.com manuals search engine

Safety Belt Use During Pregnancy

Safety belts work for everyone, including pregnant women. Like all occupants, they are more likely to be seriously injured if they do not wear safety belts.

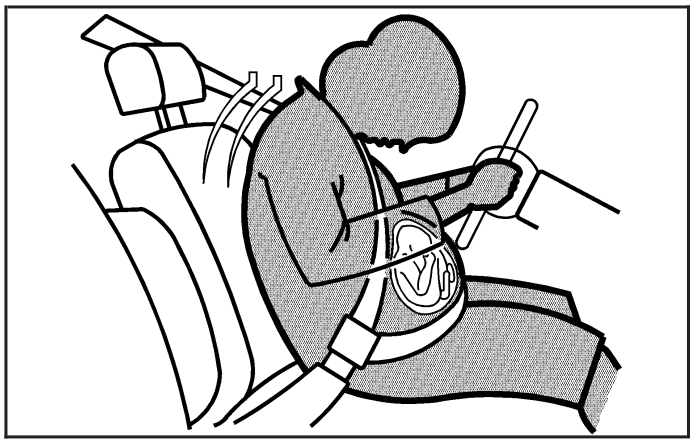

A pregnant woman should wear a lap-shoulder belt, and the lap portion should be worn as low as possible, below the rounding, throughout the pregnancy.

The best way to protect the fetus is to protect the mother. When a safety belt is worn properly, it is more likely that the fetus will not be hurt in a crash. For pregnant women, as for anyone, the key to making safety belts effective is wearing them properly.

Safety Belt Extender

If the vehicle's safety belt will fasten around you, you should use it.

But if a safety belt is not long enough, your dealer/retailer will order you an extender. When you go in to order it, take the heaviest coat you will wear, so the extender will be long enough for you. To help avoid personal injury, do not let someone else use it, and use it only for the seat it is made to fit. The extender has been designed for adults. Never use it for securing child seats. To wear it, attach it to the regular safety belt. For more information, see the instruction sheet that comes with the extender.

Downloaded from www.Manualslib.com manuals search engine

Child Restraints

Older Children

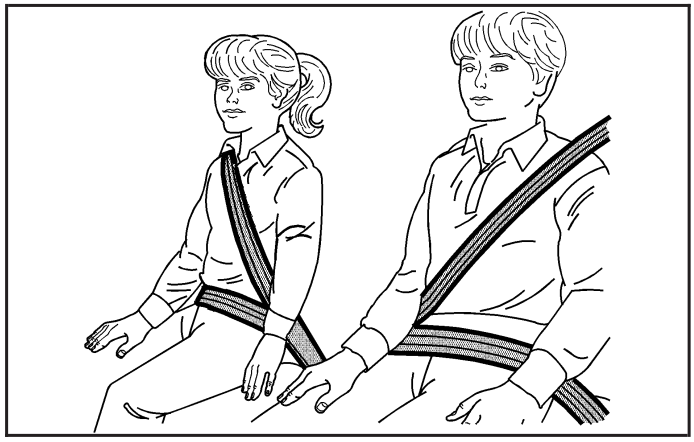

Older children who have outgrown booster seats should wear the vehicle's safety belts.

The manufacturer's instructions that come with the booster seat, state the weight and height limitations for that booster. Use a booster seat with a lap-shoulder belt until the child passes the below fit test:

- Sit all the way back on the seat. Do the knees bend at the seat edge? If yes, continue. If no, return to the booster seat.
- Buckle the lap-shoulder belt. Does the shoulder belt rest on the shoulder? If yes, continue. If no, try using the rear safety belt comfort guide. See "Rear Safety Belt Comfort Guides" under *Lap-Shoulder Belt on page 1-26* for more information. If the shoulder belt still does not rest on the shoulder, then return to the booster seat.
- Does the lap belt fit low and snug on the hips, touching the thighs? If yes, continue. If no, return to the booster seat.
- Can proper safety belt fit be maintained for the length of the trip? If yes, continue. If no, return to the booster seat.

Downloaded from www.Manualslib.com manuals search engine

Q: What is the proper way to wear safety belts?

A: An older child should wear a lap-shoulder belt and get the additional restraint a shoulder belt can provide. The shoulder belt should not cross the face or neck. The lap belt should fit snugly below the hips, just touching the top of the thighs. This applies belt force to the child's pelvic bones in a crash. It should never be worn over the abdomen, which could cause severe or even fatal internal injuries in a crash.

Also see "Rear Safety Belt Comfort Guides" under *Lap-Shoulder Belt on page 1-26*.

According to accident statistics, children and infants are safer when properly restrained in the rear seating positions than in the front seating positions.

In a crash, children who are not buckled up can strike other people who are buckled up, or can be thrown out of the vehicle. Older children need to use safety belts properly.

⚠ CAUTION:

Never do this.

Here two children are wearing the same belt. The belt cannot properly spread the impact forces. In a crash, the two children can be crushed together and seriously injured. A belt must be used by only one person at a time.

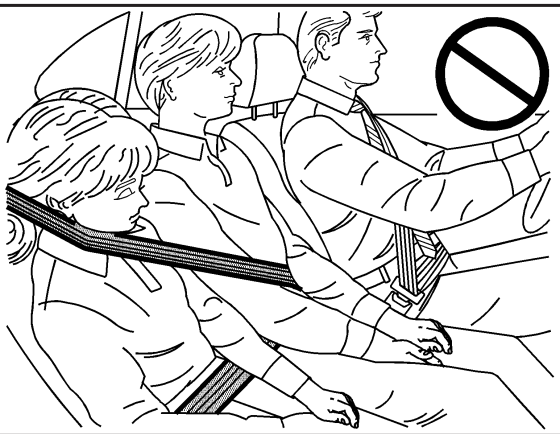

Downloaded from www.Manualslib.com manuals search engine

⚠ CAUTION:

Never do this.

Here a child is sitting in a seat that has a lap-shoulder belt, but the shoulder part is behind the child. In a crash, the child would not be restrained by the shoulder belt. The child might slide under the lap belt. The belt force would then be applied right on the abdomen. That could cause serious or fatal injuries. The child could also move too far forward increasing the chance of head and neck injury. The shoulder belt should go over the shoulder and across the chest.

Downloaded from www.Manualslib.com manuals search engine

Infants and Young Children

Everyone in a vehicle needs protection! This includes infants and all other children. Neither the distance traveled nor the age and size of the traveler changes the need, for everyone, to use safety restraints. In fact, the law in every state in the United States and in every Canadian province says children up to some age must be restrained while in a vehicle.

⚠ CAUTION:

Children can be seriously injured or strangled if a shoulder belt is wrapped around their neck and the safety belt continues to tighten. Never leave children unattended in a vehicle and never allow children to play with the safety belts.

Every time infants and young children ride in vehicles, they should have the protection provided by appropriate restraints. Children who are not restrained properly can strike other people, or can be thrown out of the vehicle. In addition, young children should not use the vehicle's adult safety belts alone; they need to use a child restraint.

⚠ CAUTION:

People should never hold an infant in their arms while riding in a vehicle. An infant does not weigh much — until a crash. During a crash an infant will become so heavy it is not possible to hold it. For example, in a crash at only 25 mph (40 km/h), a 12 lb (5.5 kg) infant will suddenly become a 240 lb (110 kg) force on a person's arms. An infant should be secured in an appropriate restraint.

Downloaded from www.Manualslib.com manuals search engine

⚠ CAUTION:

Children who are up against, or very close to, any airbag when it inflates can be seriously injured or killed. Airbags plus lap-shoulder belts offer protection for adults and older

CAUTION: (Continued)

CAUTION: (Continued)

children, but not for young children and infants. Neither the vehicle's safety belt system nor its airbag system is designed for them. Young children and infants need the protection that a child restraint system can provide.

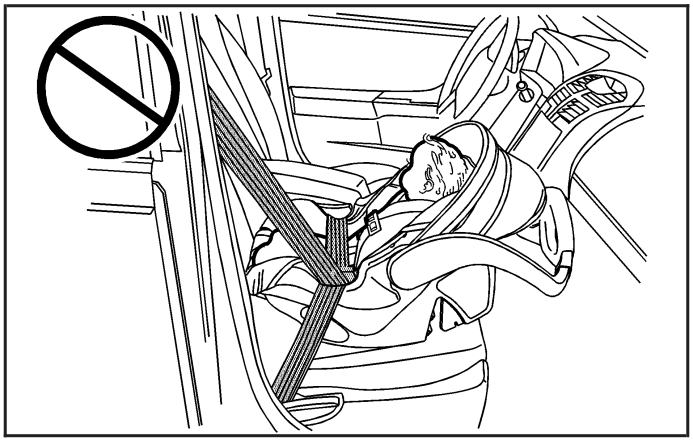

Downloaded from www.Manualslib.com manuals search engine

Q: What are the different types of add-on child restraints?

A: Add-on child restraints, which are purchased by the vehicle's owner, are available in four basic types. Selection of a particular restraint should take into consideration not only the child's weight, height, and age but also whether or not the restraint will be compatible with the motor vehicle in which it will be used.

For most basic types of child restraints, there are many different models available. When purchasing a child restraint, be sure it is designed to be used in a motor vehicle. If it is, the restraint will have a label saying that it meets federal motor vehicle safety standards.

The restraint manufacturer's instructions that come with the restraint state the weight and height limitations for a particular child restraint. In addition, there are many kinds of restraints available for children with special needs.

⚠ CAUTION:

Newborn infants need complete support, including support for the head and neck. This is necessary because a newborn infant's neck is weak and its head weighs so much compared with the rest of its body. In a crash, an infant in a rear-facing seat settles into the restraint, so the crash forces can be distributed across the strongest part of an infant's body, the back and shoulders. Infants should always be secured in appropriate infant restraints.

Downloaded from www.Manualslib.com manuals search engine

⚠ CAUTION:

The body structure of a young child is quite unlike that of an adult or older child, for whom the safety belts are designed. A young child's hip bones are still so small that the vehicle's regular safety belt may not remain low on the hip bones, as it should. Instead, it may settle up around the child's abdomen. In a crash, the belt would apply force on a body area that is unprotected by any bony structure. This alone could cause serious or fatal injuries. Young children should always be secured in appropriate child restraints.

Child Restraint Systems

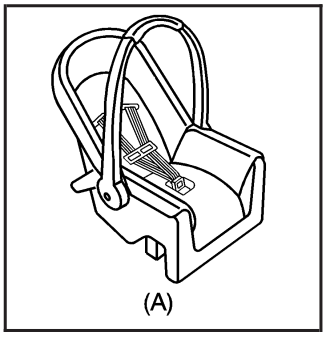

A rear-facing infant seat (A) provides restraint with the seating surface against the back of the infant.

The harness system holds the infant in place and, in a crash, acts to keep the infant positioned in the restraint.

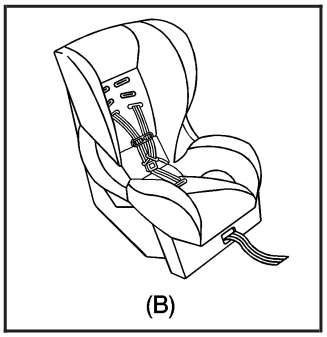

A forward-facing child seat (B) provides restraint for the child's body with the harness.

Downloaded from www.Manualslib.com manuals search engine

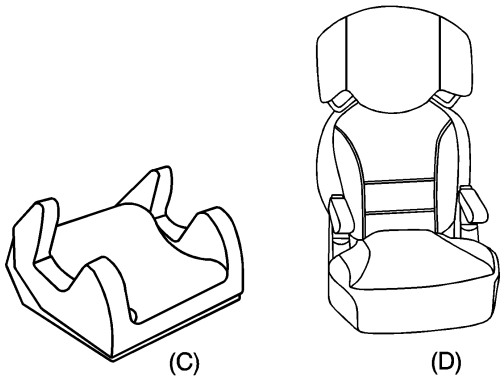

A booster seat (C-D) is a child restraint designed to improve the fit of the vehicle's safety belt system. A booster seat can also help a child to see out the window.

Securing an Add-On Child Restraint in the Vehicle

⚠ CAUTION:

A child can be seriously injured or killed in a crash if the child restraint is not properly secured in the vehicle. Make sure the child restraint is properly installed in the vehicle using the vehicle's safety belt or LATCH system, following the instructions that came with that restraint, and also the instructions in this manual.

To help reduce the chance of injury, the child restraint must be secured in the vehicle. Child restraint systems must be secured in vehicle seats by lap belts or the lap belt portion of a lap-shoulder belt, or by the LATCH system. See *Lower Anchors and Tethers for Children (LATCH) on page 1-44* for more information. A child can be endangered in a crash if the child restraint is not properly secured in the vehicle.

Downloaded from www.Manualslib.com manuals search engine

When securing an add-on child restraint, refer to the instructions that come with the restraint which may be on the restraint itself or in a booklet, or both, and to this manual. The child restraint instructions are important, so if they are not available, obtain a replacement copy from the manufacturer.

Keep in mind that an unsecured child restraint can move around in a collision or sudden stop and injure people in the vehicle. Be sure to properly secure any child restraint in your vehicle — even when no child is in it.

Securing the Child Within the Child Restraint

⚠ CAUTION:

A child can be seriously injured or killed in a crash if the child is not properly secured in the child restraint. Because there are different systems, it is important to refer to the instructions that come with the restraint. Make sure the child is properly secured, following the instructions that came with that restraint.

Downloaded from www.Manualslib.com manuals search engine

Where to Put the Restraint

Accident statistics show that children are safer if they are restrained in the rear rather than the front seat.

We recommend that children and child restraints be secured in a rear seat, including: an infant or a child riding in a rear-facing child restraint; a child riding in a forward-facing child seat; an older child riding in a booster seat; and children, who are large enough, using safety belts.

A label on your sun visor says, “Never put a rear-facing child seat in the front.” This is because the risk to the rear-facing child is so great, if the airbag deploys.

⚠ CAUTION:

A child in a rear-facing child restraint can be seriously injured or killed if the right front passenger’s airbag inflates. This is because the back of the rear-facing child restraint would be very close to the inflating airbag.

CAUTION: (Continued)

CAUTION: (Continued)

Even though the passenger sensing system is designed to turn off the right front passenger’s frontal airbag if the system detects a rear-facing child restraint, no system is fail-safe, and no one can guarantee that an airbag will not deploy under some unusual circumstance, even though it is turned off. We recommend that rear-facing child restraints be secured in a rear seat, even if the airbag is off.

If you secure a forward-facing child restraint in the right front seat, always move the front passenger seat as far back as it will go. It is better to secure the child restraint in a rear seat.

See *Passenger Sensing System on page 1-68* for additional information.

When securing a child restraint in a rear seating position, study the instructions that came with your child restraint to make sure it is compatible with this vehicle.

Wherever you install a child restraint, be sure to secure the child restraint properly.

Downloaded from www.Manualslib.com manuals search engine

Keep in mind that an unsecured child restraint can move around in a collision or sudden stop and injure people in the vehicle. Be sure to properly secure any child restraint in your vehicle — even when no child is in it.

If you need to secure more than one child restraint in the rear seat, review the following illustrations. Depending on where you place the child restraint, you may not be able to access certain safety belt assemblies or LATCH anchors for additional passengers or child restraints.

Configurations for Use of Child Restraints (Sedan Only)

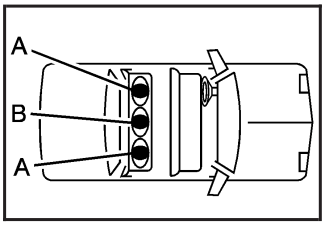

A. Child restraint using LATCH
B. Child restraint or occupant using safety belt

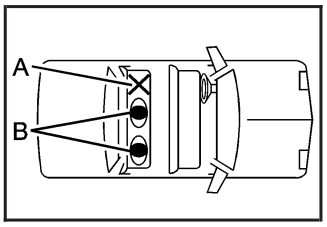

A. Occupant prohibited
B. Child restraint using LATCH

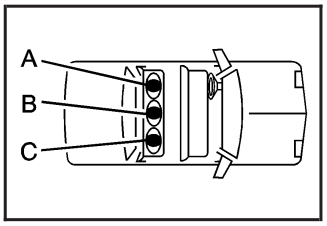

A. Child restraint using LATCH
B. Child restraint or occupant using safety belt
C. Child restraint using safety belt or LATCH or occupant using safety belt

Downloaded from www.Manualslib.com manuals search engine

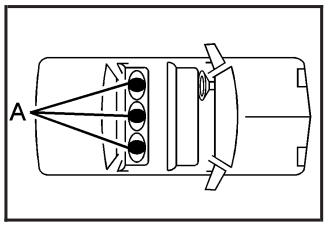

A. Child restraint or occupant using safety belt

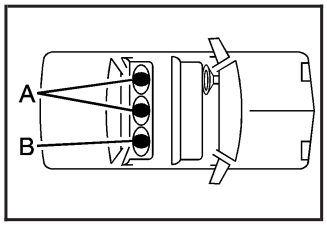

A. Child restraint or occupant using safety belt
B. Child restraint using LATCH

Lower Anchors and Tethers for Children (LATCH)

The LATCH system holds a child restraint during driving or in a crash. This system is designed to make installation of a child restraint easier. The LATCH system uses anchors in the vehicle and attachments on the child restraint that are made for use with the LATCH system.

Make sure that a LATCH-compatible child restraint is properly installed using the anchors, or use the vehicle's safety belts to secure the restraint, following the instructions that came with that restraint, and also the instructions in this manual. When installing a child restraint with a top tether, you must also use either the lower anchors or the safety belts to properly secure the child restraint. A child restraint must never be installed using only the top tether and anchor.

In order to use the LATCH system in your vehicle, you need a child restraint that has LATCH attachments. The child restraint manufacturer will provide you with instructions on how to use the child restraint and its attachments. The following explains how to attach a child restraint with these attachments in your vehicle.

Not all vehicle seating positions or child restraints have lower anchors and attachments or top tether anchors and attachments.

Downloaded from www.Manualslib.com manuals search engine

Lower Anchors

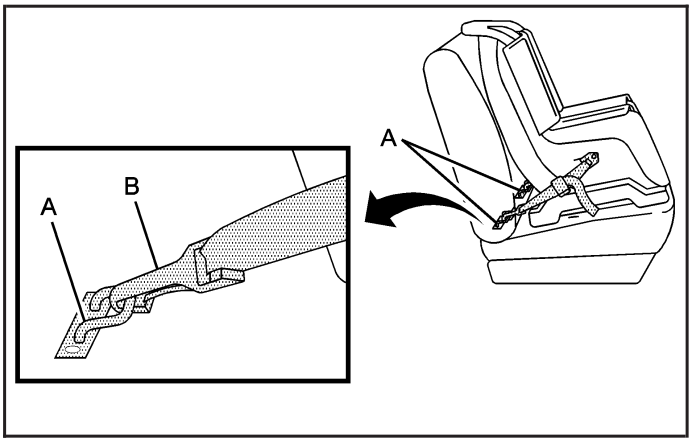

Lower anchors (A) are metal bars built into the vehicle. There are two lower anchors for each LATCH seating position that will accommodate a child restraint with lower attachments (B).

Top Tether Anchor

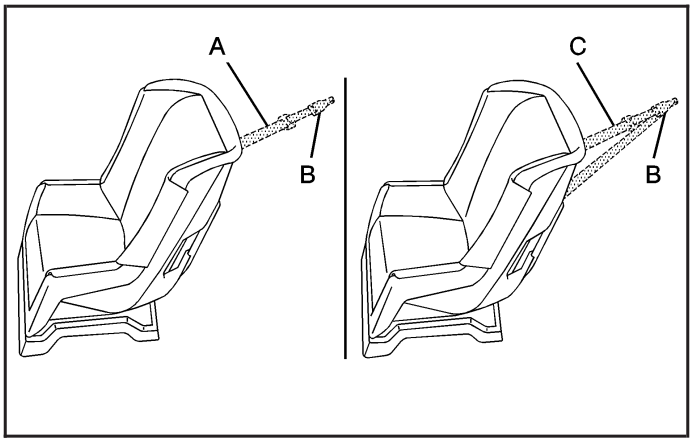

A top tether (A, C) anchors the top of the child restraint to the vehicle. A top tether anchor is built into the vehicle. The top tether attachment (B) on the child restraint connects to the top tether anchor in the vehicle in order to reduce the forward movement and rotation of the child restraint during driving or in a crash.

Your child restraint may have a single tether (A) or a dual tether (C). Either will have a single attachment (B) to secure the top tether to the anchor.

Downloaded from www.Manualslib.com manuals search engine

Some child restraints that have a top tether are designed for use with or without the top tether being attached. Others require the top tether always to be attached. In Canada, the law requires that forward-facing child restraints have a top tether, and that the tether be attached. Be sure to read and follow the instructions for your child restraint.

If the child restraint does not have a top tether, one can be obtained, in kit form, for many child restraints. Ask the child restraint manufacturer whether or not a kit is available.

Lower Anchor and Top Tether Anchor Locations

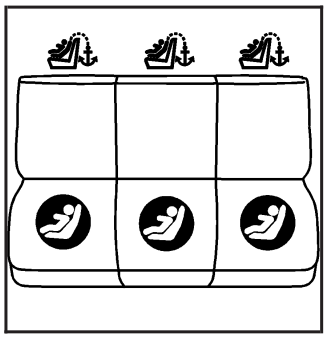

Rear Seat — Sedan

(Top Tether Anchor): Seating positions with top tether anchors.

(Lower Anchor): Seating positions with two lower anchors.

Rear Seat — Coupe

(Top Tether Anchor): Seating positions with top tether anchors.

(Lower Anchor): Seating positions with two lower anchors.

Rear Seat — Retractable Hardtop

(Lower Anchor): Seating positions with two lower anchors.

Downloaded from www.Manualslib.com manuals search engine

To assist you in locating the lower anchors, each seating position with lower anchors has two labels, near the crease between the seatback and the seat cushion.

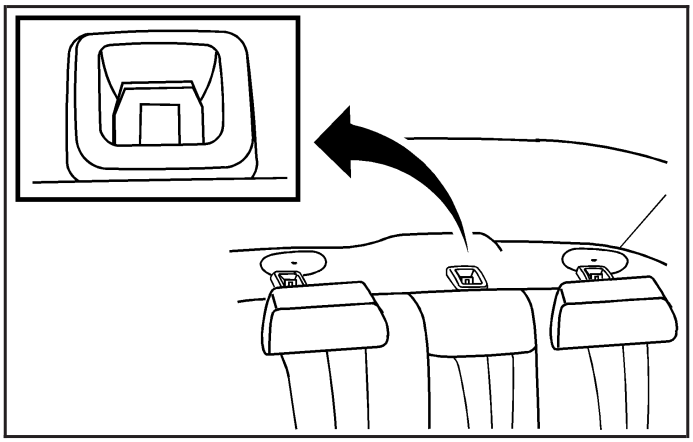

Sedan

The top tether anchors are located on the rear seatback filler panel. Be sure to use an anchor located on the same side of the vehicle as the seating position where the child restraint will be placed.

Downloaded from www.Manualslib.com manuals search engine

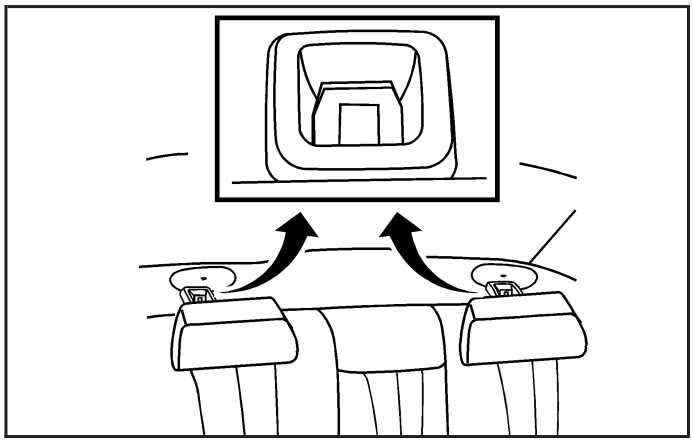

Coupe

Retractable hardtop models do not have top tether anchors in any seating position.

Do not secure a child restraint in a position without a top tether anchor if a national or local law requires that the top tether be attached, or if the instructions that come with the child restraint say that the top tether must be attached.

Accident statistics show that children are safer if they are restrained in the rear rather than the front seat. See *Where to Put the Restraint on page 1-42* for additional information.

Securing a Child Restraint Designed for the LATCH System

⚠ CAUTION:

If a LATCH-type child restraint is not attached to anchors, the restraint will not be able to protect the child correctly. In a crash, the child could be seriously injured or killed. Make sure that a LATCH-type child restraint is properly installed using the anchors, or use the vehicle's safety belts to secure the restraint, following the instructions that came with that restraint, and also the instructions in this manual.

Downloaded from www.Manualslib.com manuals search engine

⚠ CAUTION:

Each top tether anchor and lower anchor in the vehicle is designed to hold only one child restraint. Attaching more than one child restraint to a single anchor could cause the anchor or attachment to come loose or even break during a crash. A child or others could be injured if this happens. To help prevent injury to people and damage to your vehicle, attach only one child restraint per anchor.

⚠ CAUTION:

Children can be seriously injured or strangled if a shoulder belt is wrapped around their neck and the safety belt continues to tighten. Secure any unused safety belts behind the child restraint so children cannot reach them.

CAUTION: (Continued)

CAUTION: (Continued)

Pull the shoulder belt all the way out of the retractor to set the lock, if your vehicle has one, after the child restraint has been installed. Be sure to follow the instructions of the child restraint manufacturer.

Notice: **Contact between the child restraint LATCH attachment parts and the vehicle's safety belt assembly may cause damage to these parts. Make sure when securing unused safety belts behind the child restraint that there is no contact between the child restraint LATCH attachment parts and the vehicle's safety belt assembly.**

Folding an empty rear seat with the safety belts secured may cause damage to the safety belt or the seat. When removing the child restraint, always remember to return the safety belts to their normal, stowed position before folding the rear seat.

Downloaded from www.Manualslib.com manuals search engine

Sedan Models

If you need to secure more than one child restraint in the rear seat, see *Where to Put the Restraint on page 1-42*. Depending on where you place the child restraint, you may not be able to access certain safety belt assemblies or LATCH anchors for additional passengers or child restraints.

You cannot secure three child restraints using the LATCH anchors in the rear seat at the same time, but you can install two of them. If you want to do this, install one LATCH child restraint in the passenger-side position, and install the other one either in the driver's-side position or in the center position. Refer to the following illustration to learn which anchors to use.

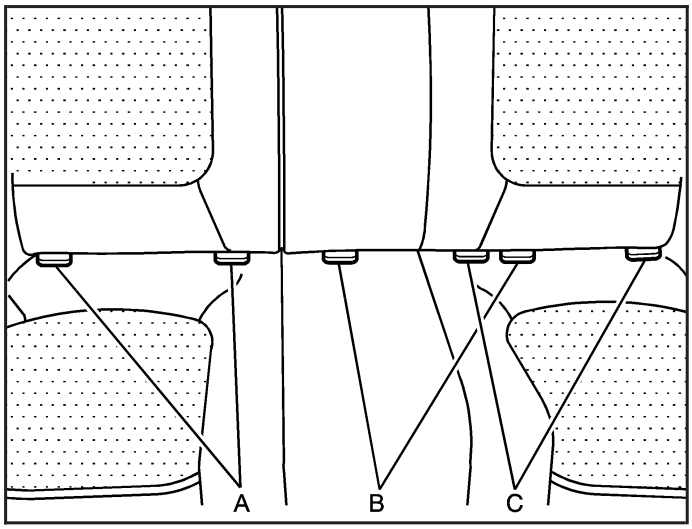

Sedan

A. Passenger's Side Rear Seat Lower Anchors

B. Center Rear Seat Lower Anchors

C. Driver's Side Rear Seat Lower Anchors

Make sure to attach the child restraint at the proper anchor location.

Downloaded from www.Manualslib.com manuals search engine

This system is designed to make installation of child restraints easier. When using lower anchors, do not use the vehicle's safety belts. Instead, use the vehicle's anchors and child restraint attachments to secure the restraints. Some restraints also use another vehicle anchor to secure a top tether.

Sedan, Coupe and Retractable Hardtop Models

1. Attach and tighten the lower attachments to the lower anchors. If the child restraint does not have lower attachments or the desired seating position does not have lower anchors, secure the child restraint with the top tether and the safety belts. Refer to your child restraint manufacturer instructions and the instructions in this manual.
   - 1.1. Find the lower anchors for the desired seating position.
   - 1.2. Put the child restraint on the seat.
   - 1.3. Attach and tighten the lower attachments on the child restraint to the lower anchors.
2. If the child restraint manufacturer recommends that the top tether be attached, attach and tighten the top tether to the top tether anchor, if equipped. Refer to the child restraint instructions and the following steps:
   - 2.1. Find the top tether anchor.
   - 2.2. If the position you are using has an adjustable headrest or head restraint, raise it. See *Head Restraints on page 1-7*.
   - 2.3. Route, attach, and tighten the top tether according to your child restraint instructions and the following instructions:

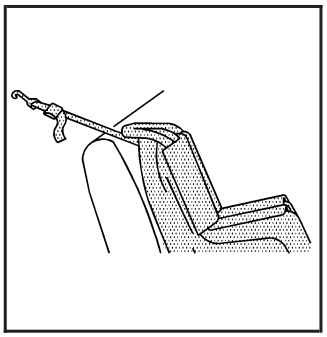

If the position you are using does not have a headrest or head restraint and you are using a single tether, route the tether over the seatback.

Downloaded from www.Manualslib.com manuals search engine

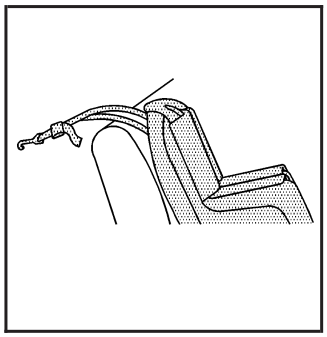

If the position you are using does not have a headrest or head restraint and you are using a dual tether, route the tether over the seatback.

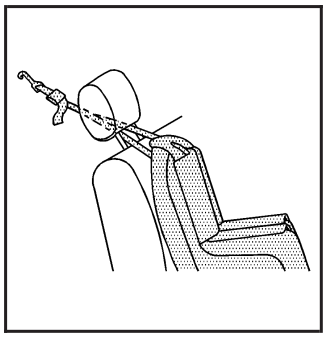

If the position you are using has a headrest or head restraint and you are using a dual tether, route the tether under the headrest or head restraint and in between the headrest or head restraint posts.

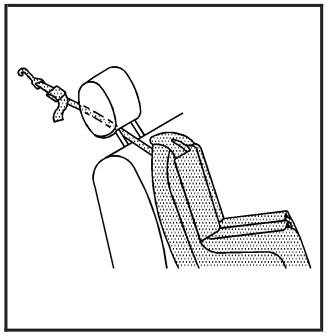

If the position you are using has a headrest or head restraint and you are using a single tether, route the tether under the headrest or head restraint and in between the headrest or head restraint posts.

If the headrest or head restraint is adjustable, pull up on the headrest or head restraint to access the top tether anchors. If the headrest or head restraint is fixed, there should be a gap to route the strap under the headrest or head restraint. Do not route the top strap around the headrest or head restraint.

3. Push and pull the child restraint in different directions to be sure it is secure.

Downloaded from www.Manualslib.com manuals search engine

Securing a Child Restraint in a Rear Seat Position

When securing a child restraint in a rear seating position, study the instructions that came with your child restraint to make sure it is compatible with this vehicle.

If your child restraint has the LATCH system, see *Lower Anchors and Tethers for Children (LATCH) on page 1-44* for how to install your child restraint using LATCH. If you secure a child restraint using a safety belt and it uses a top tether, see *Lower Anchors and Tethers for Children (LATCH) on page 1-44* for top tether anchor locations.

Do not secure a child restraint in a position without a top tether anchor if a national or local law requires that the top tether be anchored, or if the instructions that come with the child restraint say that the top strap must be anchored.

In Canada, the law requires that forward-facing child restraints have a top tether, and that the tether be attached.

If your child restraint does not have the LATCH system, you will be using the safety belt to secure the child restraint in this position. Be sure to follow the instructions that came with the child restraint. Secure the child in the child restraint when and as the instructions say.

If you need to install more than one child restraint in the rear seat, be sure to read *Where to Put the Restraint on page 1-42*.

1. Put the child restraint on the seat.
2. Pick up the latch plate, and run the lap and shoulder portions of the vehicle's safety belt through or around the restraint. The child restraint instructions will show you how.

Downloaded from www.Manualslib.com manuals search engine

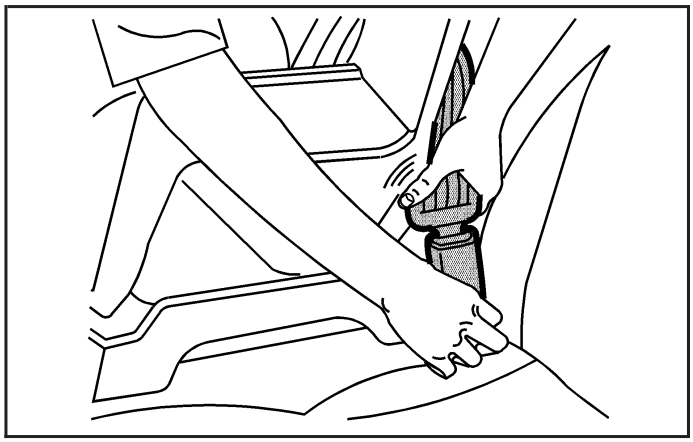

3. Push the latch plate into the buckle until it clicks.

   Make sure the release button is positioned so you would be able to unbuckle the safety belt quickly if necessary.

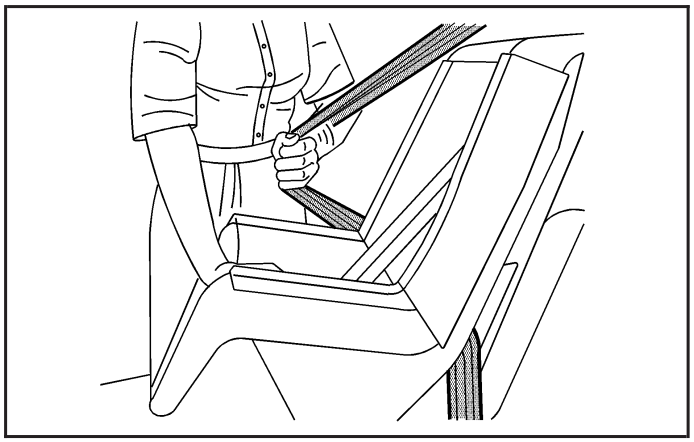

4. Pull the rest of the shoulder belt all the way out of the retractor to set the lock.

Downloaded from www.Manualslib.com manuals search engine

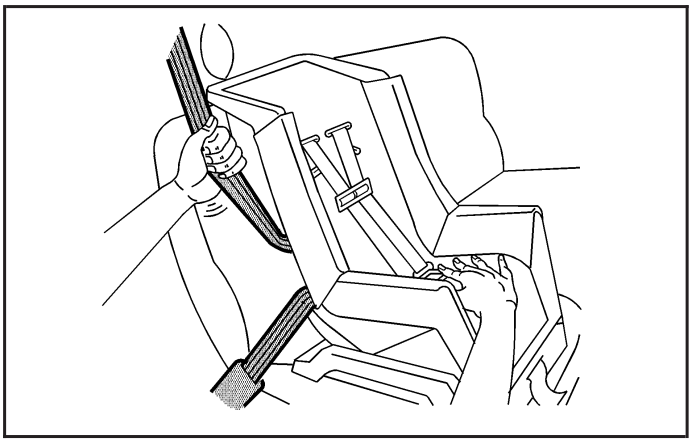

5. To tighten the belt, push down on the child restraint, pull the shoulder portion of the belt to tighten the lap portion of the belt, and feed the shoulder belt back into the retractor. If you are using a forward-facing child restraint, you may find it helpful to use your knee to push down on the child restraint as you tighten the belt.
6. If your child restraint has a top tether, follow the child restraint manufacturer's instructions regarding the use of the top tether. See *Lower Anchors and Tethers for Children (LATCH) on page 1-44* for more information.
7. Push and pull the child restraint in different directions to be sure it is secure.

To remove the child restraint, unbuckle the vehicle's safety belt and let it go back all the way. If the top tether is attached to a top tether anchor, disconnect it.

If your seat has a safety belt guide, return the safety belt into the guide on the seatback by sliding the webbing through the opening on the guide.

Downloaded from www.Manualslib.com manuals search engine

Securing a Child Restraint in the Right Front Seat Position

Your vehicle has airbags. A rear seat is a safer place to secure a forward-facing child restraint. See *Where to Put the Restraint on page 1-42*.

In addition, your vehicle has a passenger sensing system which is designed to turn off the right front passenger's frontal airbag under certain conditions. See *Passenger Sensing System on page 1-68* and *Passenger Airbag Status Indicator on page 3-31* for more information on this, including important safety information.

A label on your sun visor says, "Never put a rear-facing child seat in the front." This is because the risk to the rear-facing child is so great, if the airbag deploys.

⚠ CAUTION:

A child in a rear-facing child restraint can be seriously injured or killed if the right front passenger's airbag inflates. This is because the back of the rear-facing child restraint would be very close to the inflating airbag.

CAUTION: (Continued)

CAUTION: (Continued)

Even though the passenger sensing system is designed to turn off the right front passenger's frontal airbag if the system detects a rear-facing child restraint, no system is fail-safe, and no one can guarantee that an airbag will not deploy under some unusual circumstance, even though it is turned off. We recommend that rear-facing child restraints be secured in a rear seat, even if the airbag is off.

If you secure a forward-facing child restraint in the right front seat, always move the front passenger seat as far back as it will go. It is better to secure the child restraint in a rear seat.

See *Passenger Sensing System on page 1-68* for additional information.

If your child restraint has the LATCH system, see *Lower Anchors and Tethers for Children (LATCH) on page 1-44* for how to install your child restraint using LATCH. If you secure a child restraint using a safety belt and it uses a top tether, see *Lower Anchors and Tethers for Children (LATCH) on page 1-44* for top tether anchor locations.

Downloaded from www.Manualslib.com manuals search engine

Do not secure a child seat in a position without a top tether anchor if a national or local law requires that the top tether be anchored, or if the instructions that come with the child restraint say that the top strap must be anchored.

In Canada, the law requires that forward-facing child restraints have a top tether, and that the tether be attached.

You will be using the lap-shoulder belt to secure the child restraint in this position. Follow the instructions that came with the child restraint.

1. Move the seat as far back as it will go before securing the forward-facing child restraint.

   When the passenger sensing system has turned off the right front passenger's frontal airbag, the off indicator on the passenger airbag status indicator should light and stay lit when you start the vehicle. See *Passenger Airbag Status Indicator on page 3-31*.

2. Put the child restraint on the seat.

3. If your seat has a safety belt guide, remove the safety belt from the guide on the head restraint by sliding the webbing through the opening on the guide. Do not secure the child restraint with the safety belt routed through the guide.

4. Pick up the latch plate, and run the lap and shoulder portions of the vehicle's safety belt through or around the restraint. The child restraint instructions will show you how.

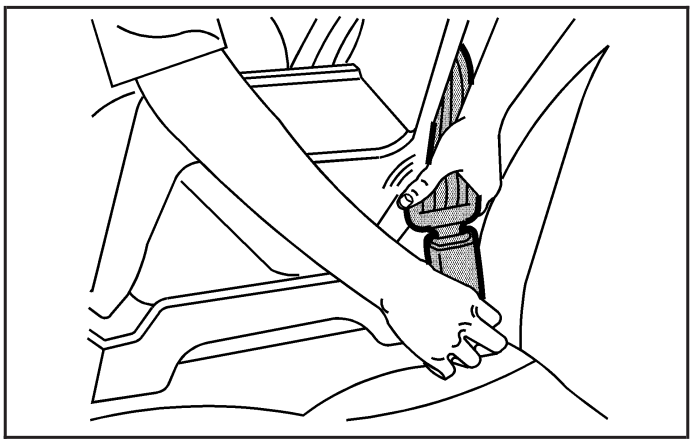

5. Push the latch plate into the buckle until it clicks.

   Make sure the release button is positioned so you would be able to unbuckle the safety belt quickly if necessary.

Downloaded from www.Manualslib.com manuals search engine

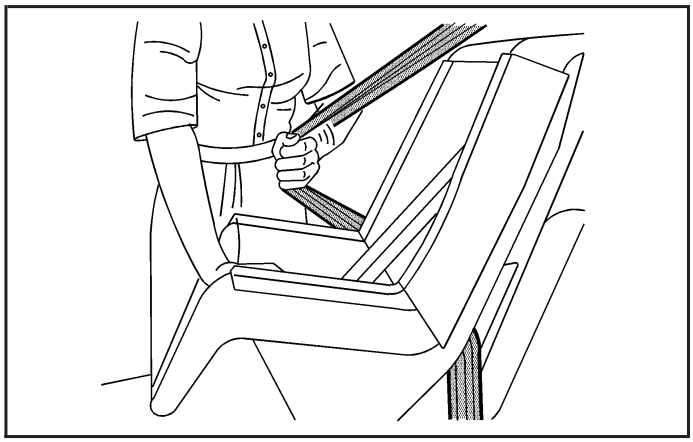

6. Pull the rest of the shoulder belt all the way out of the retractor to set the lock.

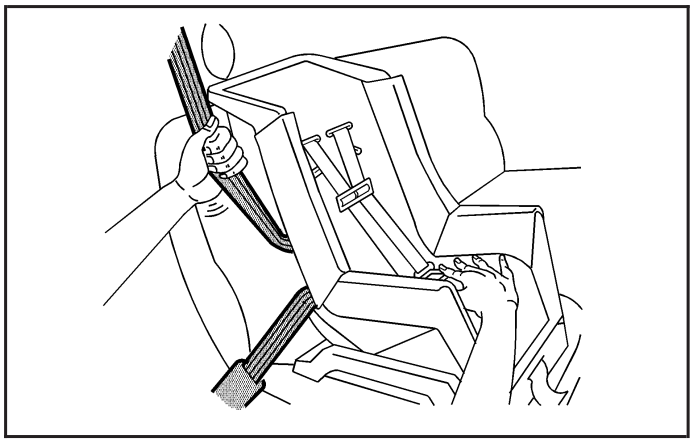

7. To tighten the belt, push down on the child restraint, pull the shoulder portion of the belt to tighten the lap portion of the belt and feed the shoulder belt back into the retractor. If you are using a forward-facing child restraint, you may find it helpful to use your knee to push down on the child restraint as you tighten the belt.
8. Push and pull the child restraint in different directions to be sure it is secure.

Downloaded from www.Manualslib.com manuals search engine

If the airbag is off, the off indicator in the passenger airbag status indicator will come on and stay on when the vehicle is started.

If a child restraint has been installed and the on indicator is lit, turn the vehicle off. Remove the child restraint from the vehicle and reinstall the child restraint.

If, after reinstalling the child restraint and restarting the vehicle, the on indicator is still lit, check to make sure that the vehicle's seatback is not pressing the child restraint into the seat cushion. If this happens, slightly recline the vehicle's seatback and adjust the seat cushion if possible. Also make sure the child restraint is not trapped under the vehicle head restraint. If this happens, adjust the head restraint.

Remove any additional material from the seat such as blankets, cushions, seat covers, seat heaters or seat massagers before reinstalling or securing the child restraint.

If the on indicator is still lit, secure the child in the child restraint in a rear seat position in the vehicle and check with your dealer/retailer.

To remove the child restraint, unbuckle the vehicle's safety belt and let it go back all the way.

If your seat has a safety belt guide, insert the safety belt into the guide on the head restraint by sliding the webbing through the opening on the guide.

Airbag System

Your vehicle has the following airbags:

- A frontal airbag for the driver.
- A frontal airbag for the right front passenger.
- A seat-mounted side impact airbag for the driver.
- A seat-mounted side impact airbag for the right front passenger.

Your vehicle may also have the following airbags:

- A roof-rail airbag for the driver and the passenger seated directly behind the driver.
- A roof-rail airbag for the right front passenger and the passenger seated directly behind the right front passenger.

All of the airbags in your vehicle will have the word AIRBAG embossed in the trim or on an attached label near the deployment opening.

For frontal airbags, the word AIRBAG will appear on the middle part of the steering wheel for the driver and on the instrument panel for the right front passenger.

With seat-mounted side impact airbags, the word AIRBAG will appear on the side of the seatback closest to the door.

Downloaded from www.Manualslib.com manuals search engine

With roof-rail airbags, the word AIRBAG will appear along the headliner or trim.

Airbags are designed to supplement the protection provided by safety belts. Even though today's airbags are also designed to help reduce the risk of injury from the force of an inflating bag, all airbags must inflate very quickly to do their job.

Here are the most important things to know about the airbag system:

⚠ CAUTION:

You can be severely injured or killed in a crash if you are not wearing your safety belt — even if you have airbags. Wearing your safety belt during a crash helps reduce your chance of hitting things inside the vehicle or being ejected from it. Airbags are "supplemental restraints" to the safety belts. All airbags are designed to work with safety belts, but do not replace them.

⚠ CAUTION:

Frontal airbags are designed to deploy in moderate to severe frontal and near frontal crashes. They are not designed to inflate in rollover, rear crashes, or in many side crashes.

Seat-mounted side impact airbags and roof-rail airbags are designed to inflate in moderate to severe crashes where something hits the side of your vehicle. They are not designed to inflate in frontal, in rollover, or in rear crashes.

Everyone in your vehicle should wear a safety belt properly — whether or not there is an airbag for that person.

Downloaded from www.Manualslib.com manuals search engine

⚠ CAUTION:

Airbags inflate with great force, faster than the blink of an eye. Anyone who is up against, or very close to, any airbag when it inflates can be seriously injured or killed. Do not sit unnecessarily close to the airbag, as you would be if you were sitting on the edge of your seat or leaning forward. Safety belts help keep you in position before and during a crash. Always wear your safety belt, even with airbags. The driver should sit as far back as possible while still maintaining control of the vehicle.

Occupants should not lean on or sleep against the door or side windows in seating positions with seat-mounted side impact airbags and/or roof-rail airbags.

⚠ CAUTION:

Airbags plus lap-shoulder belts offer the best protection for adults, but not for young children and infants. Neither the vehicle's safety belt system nor its airbag system is designed for them. Young children and infants need the protection that a child restraint system can provide. Always secure children properly in your vehicle. To read how, see *Older Children on page 1-33* or *Infants and Young Children on page 1-36*.

There is an airbag readiness light on the instrument panel, which shows the airbag symbol.

The system checks the airbag electrical system for malfunctions. The light tells you if there is an electrical problem. See *Airbag Readiness Light on page 3-30* for more information.

Downloaded from www.Manualslib.com manuals search engine

Where Are the Airbags?

The driver's frontal airbag is in the middle of the steering wheel.

The right front passenger's frontal airbag is in the instrument panel on the passenger's side.

Downloaded from www.Manualslib.com manuals search engine

Driver Side shown, Passenger Side similar

The seat-mounted side impact airbags for the driver and right front passenger are in the side of the seatbacks closest to the door.

Driver Side shown, Passenger Side similar

If your vehicle has roof-rail airbags for the driver, right front passenger, and second row outboard passengers, they are in the ceiling above the side windows.

Downloaded from www.Manualslib.com manuals search engine

⚠ CAUTION:

If something is between an occupant and an airbag, the airbag might not inflate properly or it might force the object into that person causing severe injury or even death. The path of an inflating airbag must be kept clear. Do not put anything between an occupant and an airbag, and do not attach or put anything on the steering wheel hub or on or near any other airbag covering.

Do not use seat accessories that block the inflation path of a seat-mounted side impact airbag.

If your vehicle has roof-rail airbags, never secure anything to the roof of your vehicle by routing the rope or tie down through any door or window opening. If you do, the path of an inflating roof-rail airbag will be blocked.

When Should an Airbag Inflate?

Frontal airbags are designed to inflate in moderate to severe frontal or near-frontal crashes to help reduce the potential for severe injuries mainly to the driver's or right front passenger's head and chest. However, they are only designed to inflate if the impact exceeds a predetermined deployment threshold. Deployment thresholds are used to predict how severe a crash is likely to be in time for the airbags to inflate and help restrain the occupants.

Whether your frontal airbags will or should deploy is not based on how fast your vehicle is traveling. It depends largely on what you hit, the direction of the impact, and how quickly your vehicle slows down.

Frontal airbags may inflate at different crash speeds. For example:

- If the vehicle hits a stationary object, the airbags could inflate at a different crash speed than if the vehicle hits a moving object.
- If the vehicle hits an object that deforms, the airbags could inflate at a different crash speed than if the vehicle hits an object that does not deform.

Downloaded from www.Manualslib.com manuals search engine

- If the vehicle hits a narrow object (like a pole), the airbags could inflate at a different crash speed than if the vehicle hits a wide object (like a wall).
- If the vehicle goes into an object at an angle, the airbags could inflate at a different crash speed than if the vehicle goes straight into the object.

Thresholds can also vary with specific vehicle design.

Frontal airbags are not intended to inflate during vehicle rollovers, rear impacts, or in many side impacts.

In addition, your vehicle has dual-stage frontal airbags. Dual-stage airbags adjust the restraint according to crash severity. Your vehicle has electronic frontal sensors, which help the sensing system distinguish between a moderate frontal impact and a more severe frontal impact. For moderate frontal impacts, dual-stage airbags inflate at a level less than full deployment. For more severe frontal impacts, full deployment occurs.

Your vehicle has seat-mounted side impact airbags. Your vehicle may or may not have roof-rail airbags. See *Airbag System on page 1-59*. Seat-mounted side impact and roof-rail airbags are intended to inflate in moderate to severe side crashes. Seat-mounted side impact and roof-rail airbags will inflate if the crash severity is above the system's designed threshold level. The threshold level can vary with specific vehicle design.

Seat-mounted side impact and roof-rail airbags are not intended to inflate in frontal impacts, near-frontal impacts, rollovers, or rear impacts. A seat-mounted side impact airbag is intended to deploy on the side of the vehicle that is struck. A roof-rail airbag is intended to deploy on the side of the vehicle that is struck.

In any particular crash, no one can say whether an airbag should have inflated simply because of the damage to a vehicle or because of what the repair costs were. For frontal airbags, inflation is determined by what the vehicle hits, the angle of the impact, and how quickly the vehicle slows down. For seat-mounted side impact and roof-rail airbags, deployment is determined by the location and severity of the side impact.

What Makes an Airbag Inflate?

In a deployment event, the sensing system sends an electrical signal triggering a release of gas from the inflator. Gas from the inflator fills the airbag causing the bag to break out of the cover and deploy. The inflator, the airbag, and related hardware are all part of the airbag module.

Frontal airbag modules are located inside the steering wheel and instrument panel. For vehicles with seat-mounted side impact airbags, there are airbag modules in the side of the front seatbacks closest to the door. For vehicles with roof-rail airbags, there are airbag modules in the ceiling of the vehicle, near the side windows that have occupant seating positions.

Downloaded from www.Manualslib.com manuals search engine

How Does an Airbag Restrain?

In moderate to severe frontal or near frontal collisions, even belted occupants can contact the steering wheel or the instrument panel. In moderate to severe side collisions, even belted occupants can contact the inside of the vehicle.

Airbags supplement the protection provided by safety belts. Frontal airbags distribute the force of the impact more evenly over the occupant's upper body, stopping the occupant more gradually. Seat-mounted side impact and roof-rail airbags distribute the force of the impact more evenly over the occupant's upper body.

But airbags would not help in many types of collisions, primarily because the occupant's motion is not toward those airbags. See *When Should an Airbag Inflate? on page 1-64* for more information.

Airbags should never be regarded as anything more than a supplement to safety belts.

What Will You See After an Airbag Inflates?

After the frontal airbags and seat-mounted side impact airbags inflate, they quickly deflate, so quickly that some people may not even realize an airbag inflated. Roof-rail airbags may still be at least partially inflated for some time after they deploy. Some components of the airbag module may be hot for several minutes. For location of the airbag modules, see *What Makes an Airbag Inflate? on page 1-65*.

The parts of the airbag that come into contact with you may be warm, but not too hot to touch. There may be some smoke and dust coming from the vents in the deflated airbags. Airbag inflation does not prevent the driver from seeing out of the windshield or being able to steer the vehicle, nor does it prevent people from leaving the vehicle.

Downloaded from www.Manualslib.com manuals search engine

⚠ CAUTION:

When an airbag inflates, there may be dust in the air. This dust could cause breathing problems for people with a history of asthma or other breathing trouble. To avoid this, everyone in the vehicle should get out as soon as it is safe to do so. If you have breathing problems but cannot get out of the vehicle after an airbag inflates, then get fresh air by opening a window or a door. If you experience breathing problems following an airbag deployment, you should seek medical attention.

Your vehicle has a feature that may automatically unlock the doors, turn the interior lamps on, and turn the hazard warning flashers on when the airbags inflate. You can lock the doors, turn the interior lamps off, and turn the hazard warning flashers off by using the controls for those features.

In many crashes severe enough to inflate the airbag, windshields are broken by vehicle deformation. Additional windshield breakage may also occur from the right front passenger airbag.

- Airbags are designed to inflate only once. After an airbag inflates, you will need some new parts for the airbag system. If you do not get them, the airbag system will not be there to help protect you in another crash. A new system will include airbag modules and possibly other parts. The service manual for your vehicle covers the need to replace other parts.
- Your vehicle has a crash sensing and diagnostic module which records information after a crash. See *Vehicle Data Recording and Privacy on page 7-16* and *Event Data Recorders on page 7-16*.
- Let only qualified technicians work on the airbag systems. Improper service can mean that an airbag system will not work properly. See your dealer/retailer for service.

Downloaded from www.Manualslib.com manuals search engine

Passenger Sensing System

Your vehicle has a passenger sensing system for the right front passenger's position. The passenger airbag status indicator will be visible on the instrument panel when you start your vehicle.

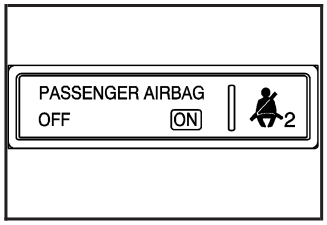

United States

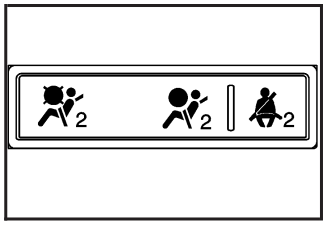

Canada

The words ON and OFF, or the symbol for on and off, will be visible during the system check. If you are using remote start to start your vehicle from a distance, if equipped, you may not see the system check. When the system check is complete, either the word ON or the word OFF, or the symbol for on or the symbol for off, will be visible. See *Passenger Airbag Status Indicator on page 3-31*.

The passenger sensing system will turn off the right front passenger's frontal airbag under certain conditions. The driver's airbags are not part of the passenger sensing system.

The passenger sensing system works with sensors that are part of the right front passenger's seat. The sensors are designed to detect the presence of a properly-seated occupant and determine if the right front passenger's frontal airbag should be enabled (may inflate) or not.

Accident statistics show that children are safer if they are restrained in the rear rather than the front seat.

We recommend that children be secured in a rear seat, including: an infant or a child riding in a rear-facing child restraint; a child riding in a forward-facing child seat; an older child riding in a booster seat; and children, who are large enough, using safety belts.

A label on your sun visor says, "Never put a rear-facing child seat in the front." This is because the risk to the rear-facing child is so great, if the airbag deploys.

Downloaded from www.Manualslib.com manuals search engine

⚠ CAUTION:

A child in a rear-facing child restraint can be seriously injured or killed if the right front passenger's airbag inflates. This is because the back of the rear-facing child restraint would be very close to the inflating airbag.

Even though the passenger sensing system is designed to turn off the right front passenger's frontal airbag if the system detects a rear-facing child restraint, no system is fail-safe, and no one can guarantee that an airbag will not deploy under some unusual circumstance, even though it is turned off. We recommend that rear-facing child restraints be secured in a rear seat, even if the airbag is off.

If you secure a forward-facing child restraint in the right front seat, always move the front passenger seat as far back as it will go. It is better to secure the child restraint in a rear seat.

The passenger sensing system is designed to turn off the right front passenger's frontal airbag if:

- The right front passenger seat is unoccupied.
- The system determines that an infant is present in a rear-facing infant seat.
- The system determines that a small child is present in a child restraint.
- The system determines that a small child is present in a booster seat.
- A right front passenger takes his/her weight off of the seat for a period of time.
- The right front passenger seat is occupied by a smaller person, such as a child who has outgrown child restraints.
- Or, if there is a critical problem with the airbag system or the passenger sensing system.

When the passenger sensing system has turned off the right front passenger's frontal airbag, the off indicator will light and stay lit to remind you that the airbag is off. See *Passenger Airbag Status Indicator on page 3-31*.

If a child restraint has been installed and the on indicator is lit, turn the vehicle off. Remove the child restraint from the vehicle and reinstall the child restraint following the child restraint manufacturer's directions and refer to *Securing a Child Restraint in the Right Front Seat Position on page 1-56*.

Downloaded from www.Manualslib.com manuals search engine

If, after reinstalling the child restraint and restarting the vehicle, the on indicator is still lit, check to make sure that the vehicle's seatback is not pressing the child restraint into the seat cushion. If this happens, slightly recline the vehicle's seatback and adjust the seat cushion if possible. Also make sure the child restraint is not trapped under the vehicle head restraint. If this happens, adjust the head restraint. See *Head Restraints on page 1-7*.

Remove any additional material from the seat such as blankets, cushions, seat covers, seat heaters, or seat massagers before reinstalling or securing the child restraint.

If the on indicator is still lit, secure the child in the child restraint in a rear seat position in the vehicle, and check with your dealer/retailer.

The passenger sensing system is designed to enable (may inflate) the right front passenger's frontal airbag anytime the system senses that a person of adult size is sitting properly in the right front passenger's seat. When the passenger sensing system has allowed the airbag to be enabled, the on indicator will light and stay lit to remind you that the airbag is active.

For some children who have outgrown child restraints and for very small adults, the passenger sensing system may or may not turn off the right front passenger's frontal airbag, depending upon the person's seating posture and body build. Everyone in your vehicle who has outgrown child restraints should wear a safety belt properly — whether or not there is an airbag for that person.

If a person of adult-size is sitting in the right front passenger's seat, but the off indicator is lit, it could be because that person is not sitting properly in the seat. If this happens, turn the vehicle off, remove any additional material from the seat, such as blankets, cushions, seat covers, seat heaters or seat massagers and ask the person to place the seatback in the fully upright position, then sit upright in the seat, centered on the seat cushion, with the person's legs comfortably extended. Restart the vehicle and have the person remain in this position for two to three minutes. This will allow the system to detect that person and then enable the right front passenger's frontal airbag.

Downloaded from www.Manualslib.com manuals search engine

Safety belts help keep the passenger in position on the seat during vehicle maneuvers and braking, which helps the passenger sensing system maintain the passenger airbag status. See “Safety Belts” and “Child Restraints” in the Index for additional information about the importance of proper restraint use.

⚠ CAUTION:

If the airbag readiness light in the instrument panel cluster ever comes on and stays on, it means that something may be wrong with the airbag system. If this ever happens, have the vehicle serviced promptly, because an adult-size person sitting in the right front passenger’s seat may not have the protection of the airbag(s). See *Airbag Readiness Light on page 3-30* for more on this, including important safety information.

A thick layer of additional material, such as a blanket or cushion, or aftermarket equipment such as seat covers, seat heaters, and seat massagers can affect how well the passenger sensing system operates.

Downloaded from www.Manualslib.com manuals search engine

We recommend that you not use seat covers or other aftermarket equipment other than any that GM has approved for your specific vehicle. See *Adding Equipment to Your Airbag-Equipped Vehicle on page 1-73* for more information about modifications that can affect how the system operates.

⚠ CAUTION:

Stowing of articles under the passenger's seat or between the passenger's seat cushion and seatback may interfere with the proper operation of the passenger sensing system.

Servicing Your Airbag-Equipped Vehicle

Airbags affect how your vehicle should be serviced. There are parts of the airbag system in several places around your vehicle. Your dealer/retailer and the service manual have information about servicing your vehicle and the airbag system. To purchase a service manual, see *Service Publications Ordering Information on page 7-15*.

⚠ CAUTION:

For up to 10 seconds after the ignition is turned off and the battery is disconnected, an airbag can still inflate during improper service. You can be injured if you are close to an airbag when it inflates. Avoid yellow connectors. They are probably part of the airbag system. Be sure to follow proper service procedures, and make sure the person performing work for you is qualified to do so.

Downloaded from www.Manualslib.com manuals search engine

Adding Equipment to Your Airbag-Equipped Vehicle

Q: Is there anything I might add to or change about the vehicle that could keep the airbags from working properly?

A: Yes. If you add things that change your vehicle's frame, bumper system, height, front end or side sheet metal, they may keep the airbag system from working properly. Changing or moving any parts of the front seats, safety belts, the airbag sensing and diagnostic module, steering wheel, instrument panel, roof-rail airbag modules, ceiling headliner or pillar garnish trim, front sensors, or airbag wiring can affect the operation of the airbag system.

In addition, your vehicle has a passenger sensing system for the right front passenger's position, which includes sensors that are part of the passenger's seat. The passenger sensing system may not operate properly if the original seat trim is replaced with non-GM covers, upholstery or trim, or with GM covers, upholstery or trim designed for a different vehicle. Any object, such as an aftermarket seat heater or a comfort enhancing pad or device, installed under or on top of the seat fabric, could also interfere with the operation of the passenger sensing system. This could either prevent proper deployment of the passenger airbag(s) or prevent the passenger sensing system from properly turning off the passenger airbag(s). See *Passenger Sensing System on page 1-68*.

If you have any questions about this, you should contact Customer Assistance before you modify your vehicle. The phone numbers and addresses for Customer Assistance are in Step Two of the Customer Satisfaction Procedure in this manual. See *Customer Satisfaction Procedure on page 7-2*.

Q: Because I have a disability, I have to get my vehicle modified. How can I find out whether this will affect my airbag system?

A: If you have questions, call Customer Assistance. The phone numbers and addresses for Customer Assistance are in Step Two of the Customer Satisfaction Procedure in this manual. See *Customer Satisfaction Procedure on page 7-2*.

In addition, your dealer/retailer and the service manual have information about the location of the airbag sensors, sensing and diagnostic module and airbag wiring.

Downloaded from www.Manualslib.com manuals search engine

Restraint System Check

Checking the Restraint Systems

Safety Belts

Now and then, make sure the safety belt reminder light and all your belts, buckles, latch plates, retractors and anchorages are working properly.

Look for any other loose or damaged safety belt system parts. If you see anything that might keep a safety belt system from doing its job, have it repaired. Torn or frayed safety belts may not protect you in a crash. They can rip apart under impact forces. If a belt is torn or frayed, get a new one right away.

Make sure the safety belt reminder light is working. See *Safety Belt Reminders on page 3-30* for more information.

Keep safety belts clean and dry. See *Care of Safety Belts on page 5-103*.

Airbags

The airbag system does not need regularly scheduled maintenance or replacement. Make sure the airbag readiness light is working. See *Airbag Readiness Light on page 3-30* for more information.

Notice: **If an airbag covering is damaged, opened, or broken, the airbag may not work properly. Do not open or break the airbag coverings. If there are any opened or broken airbag covers, have the airbag covering and/or airbag module replaced. For the location of the airbag modules, see *What Makes an Airbag Inflate? on page 1-65*. See your dealer/retailer for service.**

Downloaded from www.Manualslib.com manuals search engine

Replacing Restraint System Parts After a Crash

⚠ CAUTION:

A crash can damage the restraint systems in your vehicle. A damaged restraint system may not properly protect the person using it, resulting in serious injury or even death in a crash. To help make sure your restraint systems are working properly after a crash, have them inspected and any necessary replacements made as soon as possible.

If you have had a crash, do you need new belts or LATCH system (if equipped) parts?

After a very minor crash, nothing may be necessary. But the belt assemblies that were used during any crash may have been stressed or damaged. See your dealer/retailer to have your safety belt assemblies inspected or replaced.

If your vehicle has the LATCH system and it was being used during a crash, you may need new LATCH system parts.

New parts and repairs may be necessary even if the belt or LATCH system (if equipped), was not being used at the time of the crash.

If an airbag inflates, you will need to replace airbag system parts. See the part on the airbag system earlier in this section.

Have your safety belt pretensioners checked if your vehicle has been in a crash, if your airbag readiness light stays on after you start your vehicle, or while you are driving. See *Airbag Readiness Light on page 3-30*.

Downloaded from www.Manualslib.com manuals search engine

✍ NOTES

Downloaded from www.Manualslib.com manuals search engine

Section 2 Features and Controls

Keys 2-3
Remote Keyless Entry (RKE) System 2-4
Remote Keyless Entry (RKE) System Operation 2-4
Remote Vehicle Start 2-7

Doors and Locks 2-10
Door Locks 2-10
Power Door Locks 2-10
Door Ajar Reminder 2-11
Delayed Locking 2-11
Automatic Door Lock 2-11
Programmable Automatic Door Unlock 2-12
Rear Door Security Locks 2-12
Lockout Protection 2-13
Trunk 2-13

Windows 2-15
Power Windows 2-16
Sun Visors 2-18

Theft-Deterrent Systems 2-18
Content Theft-Deterrent 2-18
PASS-Key® III+ 2-19
PASS-Key® III+ Operation 2-20

Starting and Operating Your Vehicle 2-21
New Vehicle Break-In 2-21
Ignition Positions 2-22
Retained Accessory Power (RAP) 2-23
Starting the Engine 2-23
Adjustable Throttle and Brake Pedal 2-25
Engine Coolant Heater 2-25
Automatic Transmission Operation 2-27
Parking Brake 2-31
Shifting Into PARK (P) (Automatic Transmission) 2-32
Shifting Out of PARK (P) 2-34
Parking Over Things That Burn 2-35
Engine Exhaust 2-35
Running the Engine While Parked 2-36

Mirrors 2-37
Manual Rearview Mirror 2-37
Manual Rearview Mirror with OnStar® 2-37
Automatic Dimming Rearview Mirror with OnStar® and Compass 2-37
Automatic Dimming Rearview Mirror with Compass 2-39
Outside Power Mirrors 2-40
Outside Convex Mirror 2-41

Downloaded from www.Manualslib.com manuals search engine

Section 2 Features and Controls

OnStar® System 2-41
Storage Areas 2-44
Glove Box 2-44
Cupholder(s) 2-44
Center Console Storage 2-44
Convenience Net 2-44
Sunroof 2-45
Retractable Hardtop 2-45
Lowering the Retractable Hardtop 2-46
Raising the Retractable Hardtop 2-49

Downloaded from www.Manualslib.com manuals search engine

Keys

⚠ CAUTION:

Leaving children in a vehicle with the ignition key is dangerous for many reasons, children or others could be badly injured or even killed. They could operate the power windows or other controls or even make the vehicle move. The windows will function with the keys in the ignition and they could be seriously injured or killed if caught in the path of a closing window. Do not leave the keys in a vehicle with children.

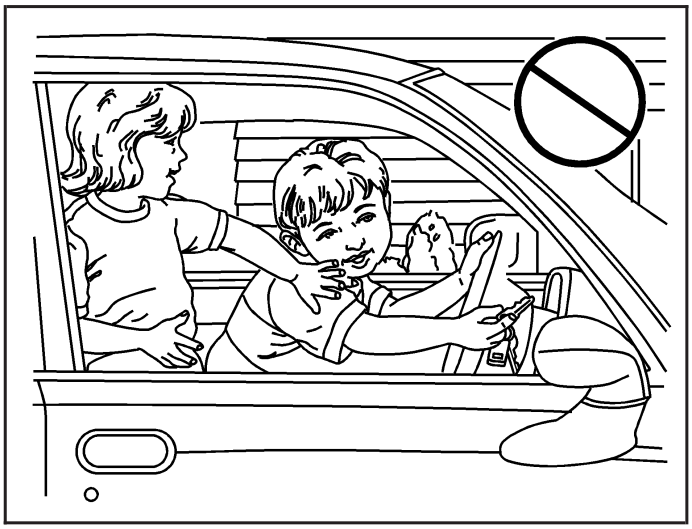

The key can be used for the ignition and all locks.

The key has a bar-coded key tag that the dealer/retailer or qualified locksmith can use to make new keys. Store this information in a safe place, not in your vehicle.

Notice: **If you ever lock your keys in your vehicle, you may have to damage the vehicle to get in. Be sure you have spare keys.**

If you are locked out of your vehicle, contact Roadside Assistance. See *Roadside Assistance Program on page 7-6*.

Downloaded from www.Manualslib.com manuals search engine

Remote Keyless Entry (RKE) System

If the vehicle has the Remote Keyless Entry (RKE) system, it operates on a radio frequency subject to Federal Communications Commission (FCC) Rules and with Industry Canada.

This device complies with Part 15 of the FCC Rules. Operation is subject to the following two conditions:

1. This device may not cause interference.
2. This device must accept any interference received, including interference that may cause undesired operation of the device.

This device complies with RSS-210 of Industry Canada. Operation is subject to the following two conditions:

1. This device may not cause interference.
2. This device must accept any interference received, including interference that may cause undesired operation of the device.

Changes or modifications to this system by other than an authorized service facility could void authorization to use this equipment.

At times you may notice a decrease in range. This is normal for any RKE system. If the transmitter does not work or if you have to stand closer to your vehicle for the transmitter to work, try this:

- Check the distance. You may be too far from your vehicle. You may need to stand closer during rainy or snowy weather.
- Check the location. Other vehicles or objects may be blocking the signal. Take a few steps to the left or right, hold the transmitter higher, and try again.
- Check to determine if battery replacement is necessary. See “Battery Replacement” later in this section.
- If you are still having trouble, see your dealer/retailer or a qualified technician for service.

Remote Keyless Entry (RKE) System Operation

The vehicle’s doors may be locked and unlocked, and the trunk can be opened from approximately 3 feet (1 m) up to 197 feet (60 m) away with the Remote Keyless Entry (RKE) transmitter. If your vehicle has the remote vehicle start feature, you can also start the vehicle’s engine with the RKE transmitter.

Downloaded from www.Manualslib.com manuals search engine

There are other conditions which can affect the performance of the transmitter. See *Remote Keyless Entry (RKE) System on page 2-4*.

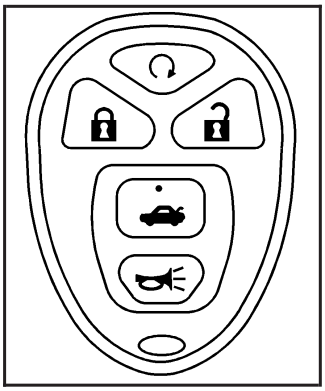

With Remote Start Shown, Without Remote Start Similar

(Remote Vehicle Start): If your vehicle has this feature, press to start the engine from outside the vehicle using the RKE transmitter. See *Remote Vehicle Start on page 2-7* for additional information.

(Lock): Press to lock all the doors. The interior lamps will turn off after all of the doors are closed. If enabled through the Driver Information Center (DIC), the remote lock feedback can be programmed to have the horn chirp and/or the turn signals flash when the RKE transmitter is used to lock the vehicle's doors. See "LOCK HORN" and "LIGHT FLASH" under *DIC Vehicle Personalization on page 3-50* for more information.

Pressing may also arm the content theft-deterrent system. See *Content Theft-Deterrent on page 2-18*.

(Unlock): Press to unlock the driver's door. If is pressed again within five seconds, all remaining doors will unlock. The interior lamps will turn on and stay on for 20 seconds or until the ignition is turned on. If enabled through the DIC, the remote unlock feedback can be programmed to have the horn chirp and/or the turn signals flash when the RKE transmitter is used to unlock the vehicle's doors. See "UNLOCK HORN" and "LIGHT FLASH" under *DIC Vehicle Personalization on page 3-50* for more information.

If enabled through the DIC, and it is dark enough outside, the vehicle's high-beam headlamps, parking lamps, and back-up lamps will turn on each time on the transmitter is pressed. These exterior lamps will stay on for 20 seconds, or until a door is opened. See "EXT (Exterior) LIGHTS" under *DIC Vehicle Personalization on page 3-50* for additional information.

Downloaded from www.Manualslib.com manuals search engine

Pressing on the RKE transmitter will disarm the content theft-deterrent system. See *Content Theft-Deterrent on page 2-18*.

(Remote Trunk Release): Press and hold for approximately one second to open the trunk. The trunk will open using the transmitter when the vehicle speed is less than 2 mph (3 km/h), when the ignition is off, or when the vehicle shift lever is in PARK (P), if your vehicle has an automatic transmission.

(Vehicle Locator/Panic Alarm): Press to locate your vehicle. The horn will sound three times and the headlamps and turn signals will flash three times.

Press and hold for approximately three seconds to sound the panic alarm. The horn will sound and the headlamps and turn signals will flash for 30 seconds. Press again to cancel the panic alarm.

Matching Transmitter(s) to Your Vehicle

Each RKE transmitter is coded to prevent another transmitter from unlocking your vehicle. If a transmitter is lost or stolen, a replacement can be purchased through your dealer/retailer. All transmitters need to be re-coded to match the new transmitter. The lost transmitter will no longer work after the new transmitters are re-coded. Each vehicle can have up to four transmitters matched to it.

Battery Replacement

Replace the battery if the KEY FOB BATT LOW message displays in the DIC. See “KEY FOB BATT LOW” under *DIC Warnings and Messages on page 3-46* for additional information.

Notice: **When replacing the battery, use care not to touch any of the circuitry. Static from your body transferred to these surfaces may damage the transmitter.**

Downloaded from www.Manualslib.com manuals search engine

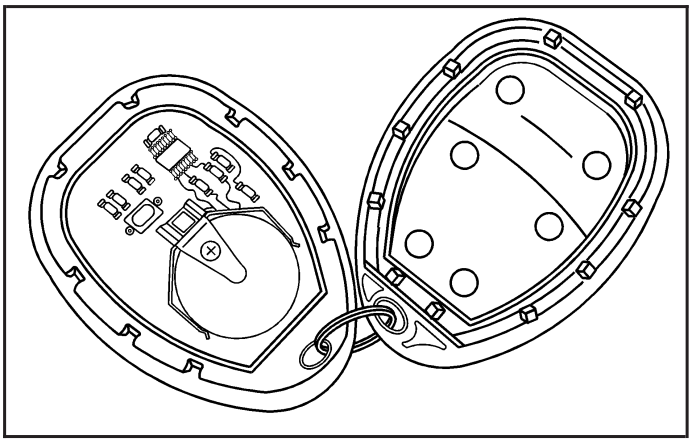

To replace the battery in the RKE transmitter:

1. Separate the halves of the transmitter with a flat, thin object inserted into the notch on the side.
2. Remove the old battery. Do not use a metal object.
3. Insert the new battery, positive side facing up. Replace with a CR2032 or equivalent battery.
4. Put the transmitter back together tightly.

Remote Vehicle Start

Your vehicle may have a remote starting feature. This feature allows you to start the engine from outside the vehicle. It may also start the vehicle's heating or air conditioning systems and rear window defogger. When the remote start system is active and the vehicle has an automatic climate control system, it will automatically regulate the inside temperature. Normal operation of the system will return after the ignition key is turned to ON/RUN.

Laws in some communities may restrict the use of remote starters. For example, some laws may require a person using remote start to have the vehicle in view when doing so. Check local regulations for any requirements on remote starting of vehicles.

Do not use the remote start feature if your vehicle is low on fuel. Your vehicle may run out of fuel.

The remote start feature provides two separate starts per ignition cycle, each with 10 minutes of engine running time.

The remote start feature needs to be reset after your vehicle's engine is started two times using the transmitter's remote start button. To reset the remote start feature, insert the vehicle's key into the ignition switch and turn it to ON/RUN. See *Ignition Positions on page 2-22* for information regarding the ignition positions on your vehicle.

Downloaded from www.Manualslib.com manuals search engine

You can start your vehicle's engine from approximately 197 feet (60 m) away. However, the range may be less while the vehicle is running, and as a result you may need to be closer to your vehicle to turn it off than you were to turn it on.

There are other conditions which can affect the performance of the transmitter, see *Remote Keyless Entry (RKE) System on page 2-4* for additional information.

(Remote Start): This button will be on the RKE transmitter if you have remote start.

To start the vehicle using the remote start feature:

1. Aim the transmitter at the vehicle.
2. Press and release the transmitter's lock button, then immediately press and hold the transmitter's remote start button until the vehicle's turn signal lamps flash.

   When the vehicle starts, the parking lamps will turn on and remain on while the engine is running.
3. If it is the first remote start since the vehicle has been driven, repeat these steps, while the engine is still running, to extend the engine running time by 10 minutes. Remote start can be extended one time.

After entering the vehicle during a remote start, insert and turn the key to ON/RUN to drive the vehicle.

The engine will shut off automatically after 10 minutes, unless a time extension has been done or the vehicle's key is inserted into the ignition switch and turned to ON/RUN.

To manually shut off a remote start:

- Aim the RKE transmitter at the vehicle and press and release the remote start button.
- Turn on the hazard warning flashers.
- Turn the ignition switch ON/RUN and then LOCK/OFF.

  The parking lamps will turn off to indicate the engine is off.

Your vehicle's engine can be started two times, per ignition cycle, using the transmitter's remote start feature.

If the remote start procedure is used again before the first 10 minute time frame has ended, the first 10 minutes will immediately expire and the second 10 minute time frame will start.

The remote vehicle start feature will not operate if any of the follow occur:

- The remote start system is disabled through the DIC.
- The vehicle's key is in the ignition.
- The vehicle's hood is open.

Downloaded from www.Manualslib.com manuals search engine

- The hazard warning flashers are on.
- The check engine light is on. See *Malfunction Indicator Lamp on page 3-38*.
- The engine coolant temperature is too high.
- The oil pressure is low.
- Two remote vehicle starts have already been used for that ignition cycle.

Vehicles that have the remote vehicle start feature are shipped from the factory with the remote start system enabled. The system may be enabled or disabled through the DIC. See “REMOTE START” under *DIC Vehicle Personalization on page 3-50* for additional information.

Remote Start Ready (Automatic Transmission Only)

If your vehicle does not have the remote vehicle start feature, it may have the remote start ready feature. This feature allows your dealer/retailer to add the manufacturer’s remote vehicle start feature.

If the RKE transmitter has a plus (+) symbol on the back cover, your vehicle has the remote start ready feature. You can lock or unlock your vehicle from approximately 197 feet (60 m) away.

See your dealer/retailer if you would like to add the manufacturer’s remote vehicle start feature to your vehicle.

Downloaded from www.Manualslib.com manuals search engine

Doors and Locks

Door Locks

⚠ CAUTION:

Unlocked doors can be dangerous.

- **Passengers, especially children, can easily open the doors and fall out of a moving vehicle. When a door is locked, the handle will not open it. You increase the chance of being thrown out of the vehicle in a crash if the doors are not locked. So, wear safety belts properly and lock the doors whenever you drive.**
- **Young children who get into unlocked vehicles may be unable to get out. A child can be overcome by extreme heat and can suffer permanent injuries or even death from heat stroke. Always lock your vehicle whenever you leave it.**
- **Outsiders can easily enter through an unlocked door when you slow down or stop your vehicle. Locking your doors can help prevent this from happening.**

There are several ways to lock and unlock your vehicle.

From the outside, use your key or, if your vehicle has one, the Remote Keyless Entry (RKE) transmitter. Turn the key counterclockwise to unlock the door. Turn the key clockwise to lock the door.

From the inside, use the manual lock knobs or the power lock switches.

Power Door Locks

The power door lock switches are located on the driver's and front passenger's door.

Press the outboard side of the switch to unlock all doors. Press the inboard side of the switch to lock all doors.

The rear doors do not have power door lock switches. Rear seat passengers must use the manual lock knob on their doors.

Downloaded from www.Manualslib.com manuals search engine

Door Ajar Reminder

If one of the doors is not fully closed while the ignition is on and the shift lever is moved out of PARK (P) or NEUTRAL (N) the following will occur:

- A chime will sound.
- The DOOR AJAR message will display through the Driver Information Center (DIC) until the door is closed. See *DIC Warnings and Messages on page 3-46*.

Delayed Locking

This feature lets the driver to delay the locking of the vehicle. It will not operate with the key in the ignition. See *Lockout Protection on page 2-13*.

Press the driver's power door lock switch or the Remote Keyless Entry (RKE) transmitter lock button once. With the key removed from the ignition and the driver's door open, the following will occur:

- Three chimes will sound to signal the delay.
- All doors will lock and the turn signals will flash once five seconds after the last door has been closed.
- The horn will chirp if the horn chirp feature is enabled. See *DIC Operation and Displays on page 3-43*.

If a door is opened before the five seconds has ended, the doors will not lock until five seconds after all doors are closed.

If the power door lock switch or the transmitter lock button is pressed twice when leaving the vehicle, the doors will lock immediately.

If the power door unlock switch or the transmitter unlock button is pressed, the doors will unlock immediately and do not lock automatically after the doors are closed.

This feature is turned on at the factory but may be turned off through the Driver Information Center (DIC). See *DIC Vehicle Personalization on page 3-50*.

Automatic Door Lock

Your vehicle is programmed at the factory to lock all doors automatically when the following are met:

- All doors are closed.
- The ignition is on.
- The shift lever is moved out of PARK (P) for vehicles with an automatic transmission.

This feature cannot be disabled.

If someone needs to exit the vehicle once the doors are locked, have that person use the manual lock knob or power door unlock switch.

Downloaded from www.Manualslib.com manuals search engine

Programmable Automatic Door Unlock

Your vehicle was programmed at the factory to unlock when the shift lever is moved to PARK (P).

You can change the settings of the programmable automatic door unlock feature through the Driver Information Center (DIC). See *DIC Vehicle Personalization on page 3-50*.

Rear Door Security Locks

Your vehicle has rear door security locks, that prevent passengers from opening the rear doors from the inside.

The rear door security locks are located on the inside edge of each rear door. You must open the rear doors to access them.

To assist you in finding the lock, your vehicle will have one of the following:

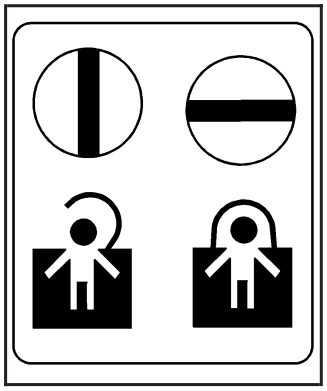

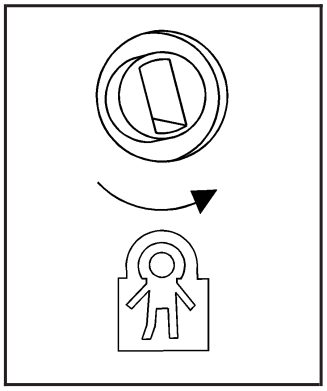

To use these locks, do the following:

1. Insert the key into the security lock slot and turn it so the slot is in the horizontal position.
2. Close the door.
3. Do the same for the other rear door.

When you want to open a rear door when the security lock is on, do the following:

1. Unlock the door using the remote keyless entry transmitter, if the vehicle has one, the power door lock switch, or by lifting the rear door manual lock.
2. Open the door from the outside.

Downloaded from www.Manualslib.com manuals search engine

To cancel the rear door security lock, do the following:

1. Unlock the door and open it from the outside.
2. Insert the key into the security lock slot and turn it so the slot is in the vertical position.
3. Do the same for the other rear door.

Lockout Protection

This feature prevents the driver's door from being locked using the power door locks, if the key is left in the ignition and a door is open.

Press the power door lock switch to lock all the doors and then unlock the driver's door.

Press and hold the power door lock switch for more than three seconds to override this feature.

If the key is removed from the ignition, or if the manual door lock or the Remote Keyless Entry (RKE) transmitter is used, the key could still be locked inside the vehicle. Always remember to take the key with you.

Trunk

To open the trunk from the outside, press and hold the trunk release button on the Remote Keyless Entry (RKE) transmitter. You can also use the key in the trunk lock, except on retractable hardtop models.

Use the pull cup to aid in closing the trunk.

⚠ CAUTION:

It can be dangerous to drive with the trunk lid open because carbon monoxide (CO) gas can come into your vehicle. You cannot see or smell CO. It can cause unconsciousness and even death. If you must drive with the trunk lid open or if electrical wiring or other cable connections must pass through the seal between the body and the trunk lid:

- **Make sure all other windows are shut.**
- **Turn the fan on your heating or cooling system to its highest speed and select the control setting that will force outside air into your vehicle. See Climate Control System.**
- **If you have air outlets on or under the instrument panel, open them all the way.**

See *Engine Exhaust on page 2-35*.

Downloaded from www.Manualslib.com manuals search engine

Remote Trunk Release

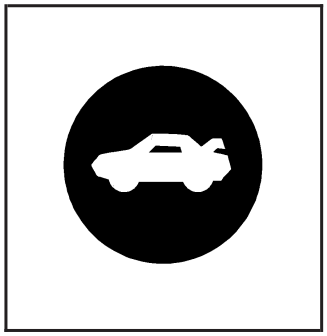

Press this button located on the driver's door near the map pocket to open the trunk.

You can open the trunk when the gear selector is in PARK (P).

Emergency Trunk Release Handle

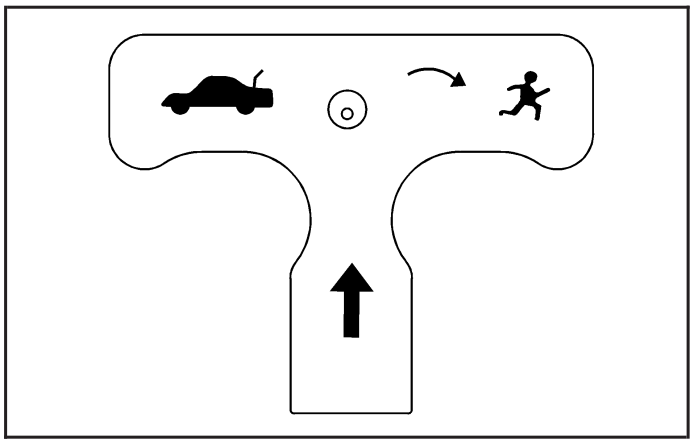

Notice: **Do not use the emergency trunk release handle as a tie-down or anchor point when securing items in the trunk as it could damage the handle. The emergency trunk release handle is only intended to aid a person trapped in a latched trunk, enabling them to open the trunk from the inside.**

There is a glow-in-the-dark emergency trunk release handle located inside the trunk on the trunk latch. This handle will glow following exposure to light. Pull the release handle up to open the trunk from the inside.

Downloaded from www.Manualslib.com manuals search engine

Windows

⚠ CAUTION:

Leaving children, helpless adults, or pets in a vehicle with the windows closed is dangerous. They can be overcome by the extreme heat and suffer permanent injuries or even death from heat stroke. Never leave a child, a helpless adult, or a pet alone in a vehicle, especially with the windows closed in warm or hot weather.

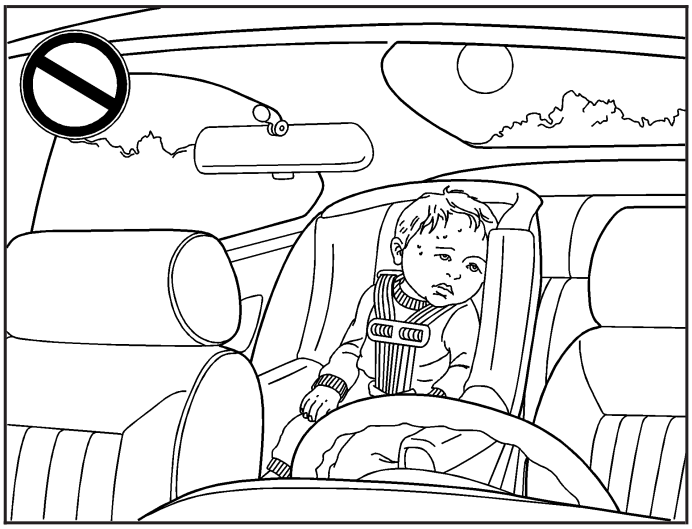

Downloaded from www.Manualslib.com manuals search engine

Power Windows

⚠ CAUTION:

Leaving children, helpless adults, or pets in a vehicle with the windows closed is dangerous. They can be overcome from extreme heat in warm or hot weather and suffer permanent injuries or even death from heat stroke.

Leaving children in a vehicle with the ignition key is dangerous for many reasons, children or others could be badly injured or even killed. They could operate the power windows or other controls or even make the vehicle move. The windows will function with the keys in the ignition and they could be seriously injured or killed if caught in the path of a closing window. Do not leave keys in a vehicle with children.

When there are children in the rear seat use the window lockout button to prevent unintentional operation of the windows.

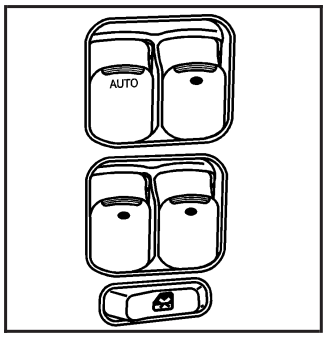

Sedan Switches

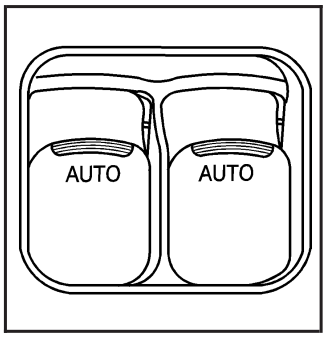

Coupe Switches

The power window switches for all the windows are located on the driver's door armrest. Each passenger door also has a power window switch for its own window. Press the front of the switch to the first position to lower the window to the desired level. Pull the switch up to raise the window.

Window Indexing (Coupe and Retractable Hardtop)

This feature automatically lowers the window a small amount when the door is opened. Then, when the door is closed, the window will automatically raise fully.

Downloaded from www.Manualslib.com manuals search engine

If the vehicle loses power or the window freezes, this feature may not work. From outside the vehicle, close the door and push the window inward so that the glass goes under the molding.

Power Window Initialize (Coupe and Retractable Hardtop)

After a power reconnect, such as battery replacement, the indexing feature will not function until the system is initialized. This procedure needs to be done for each individual window. Once power is restored, do the following:

1. Close the door.
2. Raise the window by pulling the power window switch up.
3. Hold the window switch up for two seconds after the window is closed. Release the switch. Then hold the switch up again for two seconds.
4. Lower the window all the way down. Hold the switch down for two seconds.
5. Repeat the procedure for each window, including the rear quarter windows on retractable hardtop models, until all windows are initialized.

Express-Down Window

The express-down feature lowers the window all the way without continuously pressing the switch. The switch(es) is labeled AUTO.

On sedan and retractable hardtop models, the driver's window has the express-down feature. On coupe models, both the driver's and front passenger's window have the express-down feature. The front passenger's express-down is activated by the driver's side switch only. Press the front of the switch all the way down and release it to express open the window.

To stop the window while it is lowering, pull the front of the switch up briefly.

Window Lockout (Sedan Only)

(Window Lockout): This button prevents the rear passengers from using their window switches.

The window lockout button is located near the driver's power window switches. The driver can still operate all the windows and the front passenger can operate their own window with the lockout on. Press the right side of the switch to turn the lockout feature on. Press the left side to turn it off. The red part of the switch is visible when you have returned to normal window operation.

Downloaded from www.Manualslib.com manuals search engine

Sun Visors

Swing down the visors to block glare. The visors can be removed from the center mount and swung to the side. The visors also have extenders that can be pulled out for additional blockage.

Your vehicle may have lighted vanity mirrors on the driver's and passenger's visors. When you lift the cover, the light will turn on.

Theft-Deterrent Systems

Vehicle theft is big business, especially in some cities. Although your vehicle has a number of theft-deterrent features, we know that nothing we put on it can make it impossible to steal.

Content Theft-Deterrent

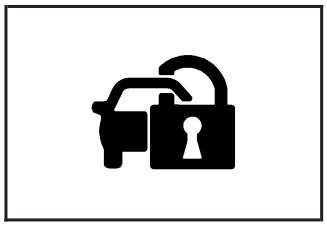

Your vehicle may have a content theft-deterrent alarm system.

Arming the System

With the ignition off, you can arm the system by pressing the Remote Keyless Entry (RKE) transmitter lock button.

The system will arm 30 seconds after all the doors are closed, or 60 seconds with any door open.

If you press the lock button on the transmitter a second time while all the doors are closed, the system will arm immediately. The system will still arm in 60 seconds if a door is open. When the open door is closed, the system will arm.

The security light, located on the instrument panel cluster, comes on to indicate that arming has been initiated. Once the system is armed, the security light will flash once every three seconds.

If the security light is flashing twice per second, this means that a door is open.

If the system is armed and the key is used to unlock the vehicle, the alarm will be activated.

If you do not want to arm the content theft system, lock the vehicle with the manual lock knob on the doors or with the inside power door lock switches.

The alarm will sound and the exterior lights will flash if any door is opened while armed.

Downloaded from www.Manualslib.com manuals search engine

Disarming the System

To disarm the system, do one of the following:

- Press the RKE transmitter unlock button.
- Turn the ignition to ON/RUN.

If you want to lock the vehicle without arming the content theft system, lock the vehicle with the manual lock knob on the doors or with the inside power door lock switches.

Once the system is disarmed, the security light will stop flashing.

How the System Alarm is Activated

To activate the system if it is armed:

- Open the driver's door or trunk. A ten second pre-alarm chirp will sound followed by a thirty second full alarm of horn and lights.
- Open any other door. A full alarm of horn and lights will immediately sound for thirty seconds.
- Open the hood. If the vehicle has the remote start feature, it will activate the full alarm.

When an alarm event has finished, the system will re-arm itself automatically.

How to Turn Off the System Alarm

To turn off the system alarm:

- Press the lock button on the RKE transmitter. The system will then re-arm itself.
- Press the unlock button on the RKE transmitter. This will also disarm the system.
- Insert the key in the ignition and turn it on. This will also disarm the system.

How to Detect a Tamper Condition

If you hear three chirps when the unlock or lock button is pressed on the RKE transmitter, it means that the content theft security system alarm was previously triggered.

PASS-Key® III+

The PASS-Key® III+ system operates on a radio frequency subject to Federal Communications Commission (FCC) Rules and with Industry Canada.

This device complies with Part 15 of the FCC Rules. Operation is subject to the following two conditions:

1. This device may not cause harmful interference.
2. This device must accept any interference received, including interference that may cause undesired operation.

Downloaded from www.Manualslib.com manuals search engine

This device complies with RSS-210 of Industry Canada. Operation is subject to the following two conditions:

1. This device may not cause interference.
2. This device must accept any interference received, including interference that may cause undesired operation of the device.

Changes or modifications to this system by other than an authorized service facility could void authorization to use this equipment.

PASS-Key® III+ uses a radio frequency transponder in the key that matches a decoder in your vehicle.

PASS-Key® III+ Operation

Your vehicle has the PASS-Key® III+ (Personalized Automotive Security System) theft-deterrent system. PASS-Key® III+ is a passive theft-deterrent system.

The system is automatically armed when the key is removed from the ignition.

You do not have to manually arm or disarm the system.

The security light will come on if there is a problem with arming or disarming the theft-deterrent system.

When the PASS-Key® III+ system senses that someone is using the wrong key, it prevents the vehicle from starting. Anyone using a trial-and-error method to start the vehicle will be discouraged because of the high number of electrical key codes.

When trying to start the vehicle if the engine does not start and the security light comes on, the key may have a damaged transponder. Turn the ignition off and try again.

If the engine still does not start, and the key appears to be undamaged, try another ignition key. Also, check the fuse. See *Fuses on page 5-110*. If the engine still does not start with the other key, your vehicle needs service. If your vehicle does start, the first key may be faulty. See your dealer/retailer who can service the PASS-Key® III+ and have a new key made. In an emergency, contact Roadside Assistance.

It is possible for the PASS-Key® III+ decoder to “learn” the transponder value of a new or replacement key. Up to 10 additional keys may be programmed for the vehicle. The following procedure is for programming additional keys only. If all the currently programmed keys are lost or do not operate, you must see your dealer/retailer or a locksmith who can service PASS-Key® III+ to have keys made and programmed to the system.

See your dealer/retailer or a locksmith who can service PASS-Key® III+ to get a new key blank that is cut exactly as the ignition key that operates the system.

Downloaded from www.Manualslib.com manuals search engine

To program the new key:

1. Verify that the new key has ⊕ stamped on it.
2. Insert the already programmed key in the ignition and start the engine. If the engine will not start, see your dealer/retailer for service.
3. After the engine has started, turn the key to LOCK/OFF, and remove the key.
4. Insert the key to be programmed and turn it to the ON/RUN position within five seconds of removing the original key.

   The security light will turn off once the key has been programmed.
5. Repeat Steps 1 through 4 if additional keys are to be programmed.

If you are ever driving and the security light comes on and stays on, you may be able to restart your engine if you turn it off. Your PASS-Key® III+ system, however, is not working properly and must be serviced by your dealer/retailer. Your vehicle is not protected by the PASS-Key® III+ system at this time.

If you lose or damage your PASS-Key® III+ key, see your dealer/retailer or a locksmith who can service PASS-Key® III+ to have a new key made.

Do not leave the key or device that disarms or deactivates the theft deterrent system in the vehicle.

Starting and Operating Your Vehicle

New Vehicle Break-In

Notice: **Your vehicle does not need an elaborate break-in. But it will perform better in the long run if you follow these guidelines:**

- **Do not drive at any one constant speed, fast or slow, for the first 500 miles (805 km). Do not make full-throttle starts. Do not exceed 5,000 engine rpm. Avoid downshifting to brake or slow the vehicle.**
- **Avoid making hard stops for the first 200 miles (322 km) or so. During this time the new brake linings are not yet broken in. Hard stops with new linings can mean premature wear and earlier replacement. Follow this breaking-in guideline every time you get new brake linings.**
- **Do not tow a trailer during break-in. See *Towing a Trailer on page 4-28* for the trailer towing capabilities of your vehicle and more information.**

Following break-in, engine speed and load can be gradually increased.

Downloaded from www.Manualslib.com manuals search engine

Ignition Positions

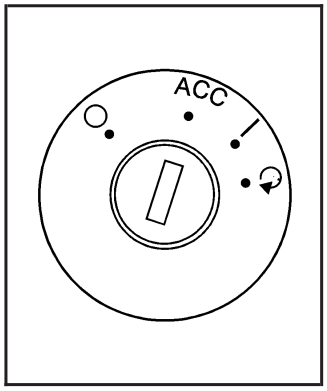

With the key in the ignition switch, you can turn it to four different positions.

Notice: **Using a tool to force the key from the ignition switch could cause damage or break the key. Use the correct key and turn the key only with your hand. Make sure the key is in all the way. If none of this works, then your vehicle needs service.**

◯ **(LOCK/OFF):** This is the only position from which you can remove the key. The shift lever must be in PARK (P) with the ignition in LOCK/OFF to remove the key.

ACC (ACC/ACCESSORY): This position unlocks the transmission. It also lets you use things like the radio and windshield wipers while the engine is not running. To use ACC/ACCESSORY, turn the key clockwise to the first position. Use this position if your vehicle must be pushed or towed. See *Recreational Vehicle Towing on page 4-26*.

Never try to push-start your vehicle.

| **(ON/RUN):** This position is where the key returns to after you start the engine and release the key. The ignition switch will stay in this position while the engine is running. But even while the engine is not running, you can use ON/RUN to operate your electrical accessories and to display some instrument panel warning lights. Use the ON/RUN position for push-starting a vehicle with a manual transmission.

The battery could be drained if you leave the key in the ACC/ACCESSORY or ON/RUN position with the engine off. You may not be able to start your vehicle if the battery is allowed to drain for an extended period of time.

(START): This position starts the engine. When the engine starts, release the key. The ignition switch will return to the ON/RUN position for normal driving.

Downloaded from www.Manualslib.com manuals search engine

Key In the Ignition

Never leave your vehicle with the keys inside, as it is an easy target for joy riders or thieves. If you leave the key in the ignition and park your vehicle, a chime will sound, when you open the driver's door. Always remember to remove your key from the ignition and take it with you. This will lock your ignition and transmission. Also, always remember to lock the doors.

The battery could be drained if you leave the key in the ignition while your vehicle is parked. You may not be able to start your vehicle after it has been parked for an extended period of time.

Retained Accessory Power (RAP)

These vehicle accessories can be used for up to 10 minutes after the engine is turned off:

- Audio System
- Power Windows
- Heated Seats (if equipped)
- Sunroof (if equipped)

These features continue to work up to 10 minutes after the ignition is turned to LOCK/OFF.

The power windows, heated seats, and sunroof will work until any door is opened.

The radio continues to work until the driver's door is opened.

All these features operate when the key is in the ON/RUN or ACC/ACCESSORY.

Starting the Engine

Move your shift lever to PARK (P) or NEUTRAL (N). Your engine will not start in any other position – this is a safety feature. To restart when you are already moving, use NEUTRAL (N) only.

Notice: **Do not try to shift to PARK (P) if your vehicle is moving. If you do, you could damage the transmission. Shift to PARK (P) only when your vehicle is stopped.**

Downloaded from www.Manualslib.com manuals search engine

Starting Procedure

1. With your foot off the accelerator pedal, turn the ignition key to START. When the engine starts, let go of the key. The idle speed will go down as your engine gets warm. Do not race the engine immediately after starting it. Operate the engine and transmission gently to allow the oil to warm up and lubricate all moving parts.

   Your vehicle has a Computer-Controlled Cranking System. This feature assists in starting the engine and protects components. If the ignition key is turned to the START position, and then released when the engine begins cranking, the engine will continue cranking for a few seconds or until the vehicle starts. If the engine does not start and the key is held in START for many seconds, cranking will be stopped after 15 seconds to prevent cranking motor damage. To prevent gear damage, this system also prevents cranking if the engine is already running. Engine cranking can be stopped by turning the ignition switch to the ACC/ACCESSORY or LOCK/OFF position.

Notice: **Cranking the engine for long periods of time, by returning the key to the START position immediately after cranking has ended, can overheat and damage the cranking motor, and drain the battery. Wait at least 15 seconds between each try, to let the cranking motor cool down.**

2. If the engine does not start after 5-10 seconds, especially in very cold weather (below 0°F or –18°C), it could be flooded with too much gasoline. Try pushing the accelerator pedal all the way to the floor and holding it there as you hold the key in START for up to a maximum of 15 seconds. Wait at least 15 seconds between each try, to allow the cranking motor to cool down. When the engine starts, let go of the key and accelerator. If the vehicle starts briefly but then stops again, do the same thing. This clears the extra gasoline from the engine. Do not race the engine immediately after starting it. Operate the engine and transmission gently until the oil warms up and lubricates all moving parts.

Notice: **The engine is designed to work with the electronics in your vehicle. If you add electrical parts or accessories, you could change the way the engine operates. Before adding electrical equipment, check with your dealer/retailer. If you do not, your engine might not perform properly. Any resulting damage would not be covered by your vehicle's warranty.**

Downloaded from www.Manualslib.com manuals search engine

Adjustable Throttle and Brake Pedal

If your vehicle has this feature, you can change the position of the throttle and brake pedals. This feature is designed for shorter drivers, since the pedals cannot move farther away from the standard position, but can move rearward for better pedal reach.

The ignition must be off or the vehicle in PARK (P) for this feature to work. The feature will not work if your foot is pushing on the throttle or brake pedal. Remove your foot from the pedals and press the switch again.

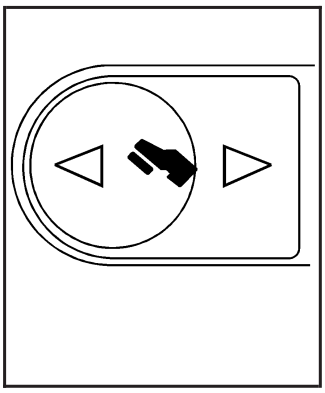

The switch used to adjust the pedals is located on the left side of the instrument panel.

The adjustable pedal feature is meant to be used with the adjustable seat and adjustable steering wheel controls to reach a safe and comfortable position.

Adjust the throttle and brake pedals to reach a comfortable and safe operating position by pushing the right and left arrow to move the pedals either closer or further from your body.

Engine Coolant Heater

The engine coolant heater, if available, can help in cold weather conditions at or below 0°F (–18°C) for easier starting and better fuel economy during engine warm-up. Plug in the coolant heater at least four hours before starting your vehicle. An internal thermostat in the plug-end of the cord may exist which will prevent engine coolant heater operation at temperatures above 0°F (–18°C).

Downloaded from www.Manualslib.com manuals search engine

To Use the Engine Coolant Heater

1. Turn off the engine.
2. Open the hood and unwrap the electrical cord. On the 2.4L L4 ECOTEC® engine, the engine coolant heater cord is located near the air cleaner box on the passenger's side of the engine compartment. On the 3.5L, 3.6L and 3.9L V6 engines, the engine coolant heater cord is located on the driver's side around the battery box. See *Engine Compartment Overview on page 5-14* for more information on location.
3. Plug the cord into a normal, grounded 110-volt AC outlet.

⚠ CAUTION:

Plugging the cord into an ungrounded outlet could cause an electrical shock. Also, the wrong kind of extension cord could overheat and cause a fire. You could be seriously injured. Plug the cord into a properly grounded three-prong 110-volt AC outlet. If the cord will not reach, use a heavy-duty three-prong extension cord rated for at least 15 amps.

4. Before starting the engine, be sure to unplug and store the cord as it was before to keep it away from moving engine parts. If you do not, it could be damaged.

How long should you keep the coolant heater plugged in? The answer depends on the outside temperature, the kind of oil you have, and some other things. Instead of trying to list everything here, we ask that you contact your dealer/retailer in the area where you will be parking your vehicle. The dealer/retailer can give you the best advice for that particular area.

Downloaded from www.Manualslib.com manuals search engine

Automatic Transmission Operation

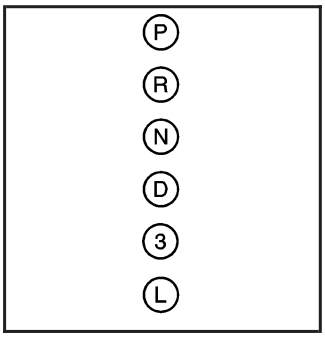

SE Model

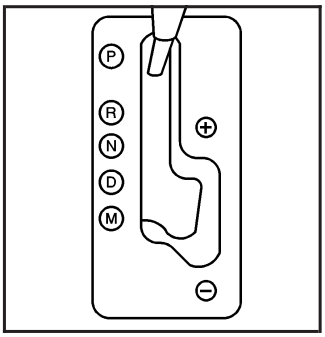

GT and GXP Models

Your automatic transmission has a shift lever located on the console between the seats.

PARK (P): This position locks your front wheels. It is the best position to use when you start the engine because your vehicle cannot move easily.

⚠ CAUTION:

It is dangerous to get out of your vehicle if the shift lever is not fully in PARK (P) with the parking brake firmly set. Your vehicle can roll.

CAUTION: (Continued)

CAUTION: (Continued)

Do not leave your vehicle when the engine is running unless you have to. If you have left the engine running, the vehicle can move suddenly. You or others could be injured. To be sure your vehicle will not move, even when you are on fairly level ground, always set your parking brake and move the shift lever to PARK (P). See *Shifting Into PARK (P) (Automatic Transmission) on page 2-32*. If you are pulling a trailer, see *Towing a Trailer on page 4-28*.

Make sure the shift lever is fully in PARK (P) before starting the engine. Your vehicle has an automatic transmission shift lock control system. You have to apply your regular brake first and then press the shift lever button before you can shift from PARK (P) while the ignition key is in ON/RUN. If you cannot shift out of PARK (P), ease pressure on the shift lever and push the shift lever all the way into PARK (P) as you maintain brake application. Press the shift lever button and then move the shift lever into another gear. See *Shifting Out of PARK (P) on page 2-34* later in this section.

Downloaded from www.Manualslib.com manuals search engine

REVERSE (R): Use this gear to back up.

Notice: **Shifting to REVERSE (R) while your vehicle is moving forward could damage the transmission. The repairs would not be covered by your warranty. Shift to REVERSE (R) only after your vehicle is stopped.**

To rock your vehicle back and forth to get out of snow, ice, or sand without damaging your transmission, see *If Your Vehicle is Stuck in Sand, Mud, Ice, or Snow on page 4-19*.

NEUTRAL (N): In this position, your engine does not connect with the wheels. To restart when you are already moving, use NEUTRAL (N) only. Also, use NEUTRAL (N) when your vehicle is being towed.

⚠ CAUTION:

Shifting into a drive gear while the engine is running at high speed is dangerous. Unless your foot is firmly on the brake pedal, your vehicle could move very rapidly. You could lose control and hit people or objects. Do not shift into a drive gear while your engine is running at high speed.

Notice: **Shifting out of PARK (P) or NEUTRAL (N) with the engine running at high speed may damage the transmission. The repairs would not be covered by your warranty. Be sure the engine is not running at high speed when shifting your vehicle.**

DRIVE (D): This position is for normal driving. It provides the best fuel economy for your vehicle. If you need more power for passing, and you are:

- Going less than 35 mph (55 km/h), push your accelerator pedal about halfway down.
- Going about 35 mph (55 km/h) or more, push the accelerator all the way down.

  You will shift down to the next gear and have more power.

Downshifting the transmission in slippery road conditions could result in skidding, see “Skidding” under *Loss of Control on page 4-10*.

Notice: **If your vehicle seems to accelerate slowly or not shift gears when you go faster, and you continue to drive your vehicle that way, you could damage the transmission. Have your vehicle serviced right away. You can drive in LOW (L) when you are driving less than 35 mph (56 km/h) and DRIVE (D) for higher speeds until then.**

Downloaded from www.Manualslib.com manuals search engine

THIRD (3): This position, available on the SE model, is also used for normal driving. However, it reduces vehicle speed more than DRIVE (D) without using your brakes. Here are some times you might choose THIRD (3) instead of DRIVE (D):

- When driving on hilly, winding roads.
- When towing a trailer, so there is less shifting between gears.
- When going down a steep hill.

LOW (L): This position, available on the SE model, reduces vehicle speed more than THIRD (3) without using your brakes. You can use LOW (L) on hills. It can help control your speed as you go down steep mountain roads, but then you would also want to use your brakes off and on.

You can use LOW (L) on very steep hills, or in deep snow or mud. If the shift lever is put in LOW (L), the transmission will not shift into first gear until the vehicle is going slowly enough.

Notice: **Driving in LOW (L) for more than 25 miles (40 km) or at speeds over 55 mph (90 km/h) may damage the transmission. Also, shifting into LOW (L) at speeds above 65 mph (105 km/h) can cause damage. Drive in THIRD (3) or DRIVE (D) instead of LOW (L).**

Notice: **Spinning the tires or holding the vehicle in one place on a hill using only the accelerator pedal may damage the transmission. The repair will not be covered by your warranty. If you are stuck, do not spin the tires. When stopping on a hill, use the brakes to hold the vehicle in place.**

MANUAL MODE (M): This position, available on the GT/GXP models, allows you to change gears similar to a manual transmission. If your vehicle has this feature, see Manual Shift Mode (MSM) following.

Manual Shift Mode (MSM) (Automatic Transmission)

To use this feature, do the following:

1. Move the shift lever from DRIVE (D) rearward and then to the right into the MANUAL MODE (M).

   While driving in manual shift mode, the transmission will remain in the driver gear selected.

2. Press the shift level forward to upshift or rearward to downshift.

The odometer display on the instrument panel cluster will change from the vehicle's mileage to the letter M, for manual shift mode, and a number indicating the requested gear range when moving the shift lever forward or rearward. See *Speedometer and Odometer on page 3-29* for more information.

Downloaded from www.Manualslib.com manuals search engine

While using the MSM feature the vehicle will have firmer shifting and sportier performance. You can use this for sport driving or when climbing hills to stay in gear longer or to downshift for more power or engine braking.

The transmission will only allow you to shift into gears appropriate for the vehicle speed and engine revolutions per minute (RPM):

- The transmission will not automatically shift to the next higher gear if the engine RPM is too high.
- The transmission will not allow shifting to the next lower gear if the engine RPM is too high.

If the vehicle does not respond to a gear change, or detects a problem with the transmission, the range of gears may be reduced and the Malfunction Indicator Lamp will come on. See *Malfunction Indicator Lamp on page 3-38* for more information.

SECOND (2)/THIRD (3) Gear Start Feature

Notice: **If you attempt a third gear start while trailering or towing a heavy load, you will notice reduced engine power. This could overheat and damage your transmission. Do not attempt a third gear start while trailering or towing your vehicle.**

If your vehicle has the 6-speed transmission, when accelerating your vehicle from a stop in snowy and icy conditions, you may want to shift into SECOND (2), or THIRD (3) gear. A higher gear, and light application of the gas pedal, may allow you to gain more traction on slippery surfaces.

With the MSM, the vehicle can accelerate from a stop in SECOND (2) or THIRD (3).

1. Move the shift lever from DRIVE (D) into the MANUAL MODE (M) position.
2. With the vehicle stopped, move the lever forward towards the plus (+) to select SECOND (2) or THIRD (3)gear. The vehicle will start from a stop position in SECOND (2) or THIRD (3) gear.
3. Once the vehicle is moving select the desired drive gear.

Downloaded from www.Manualslib.com manuals search engine

Parking Brake

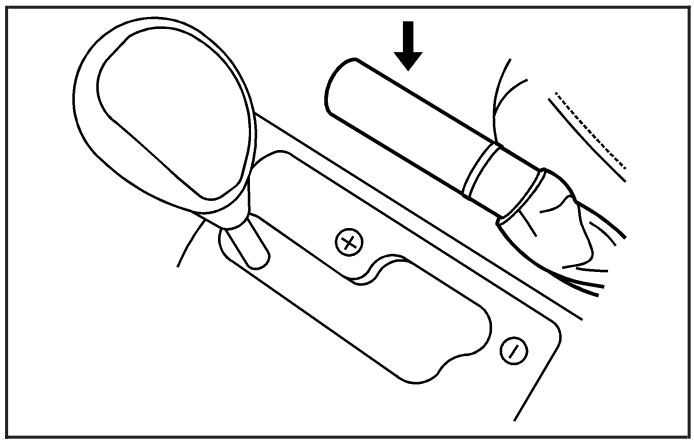

GT and GTP Shown, SE Similar

To set the parking brake, pull up on the parking brake handle. If the ignition is on, the brake system warning light will come on. See *Brake System Warning Light on page 3-34*.

To release the parking brake:

1. Hold the brake pedal down.
2. Pull the parking brake handle up until you can press the release button.
3. Hold the release button in as you move the brake handle all the way down.

Notice: **Driving with the parking brake on can overheat the brake system and cause premature wear or damage to brake system parts. Make sure that the parking brake is fully released and the brake warning light is off before driving.**

If you are towing a trailer and you are parking on a hill, see *Towing a Trailer on page 4-28*.

Downloaded from www.Manualslib.com manuals search engine

Shifting Into PARK (P) (Automatic Transmission)

⚠ CAUTION:

It can be dangerous to get out of your vehicle if the shift lever is not fully in PARK (P) with the parking brake firmly set. Your vehicle can roll. If you have left the engine running, the vehicle can move suddenly. You or others could be injured. To be sure your vehicle will not move, even when you are on fairly level ground, use the steps that follow. If you are pulling a trailer, see *Towing a Trailer on page 4-28*.

Use this procedure to shift into PARK (P):

1. Hold the brake pedal down with your right foot and set the parking brake.

   See *Parking Brake on page 2-31* for more information.

2. Move the shift lever into PARK (P) by holding in the button on the shift lever and pushing the lever all the way toward the front of the vehicle.
3. Turn the ignition key to LOCK/OFF.
4. For vehicles with base ignitions, remove the key and take it with you. If you can leave your vehicle with the ignition key in your hand, your vehicle is in PARK (P). Vehicles with the passive ignitions, turn the passive key to the LOCK/OFF position. Take the keyless access transmitter with you.

Downloaded from www.Manualslib.com manuals search engine

Leaving Your Vehicle With the Engine Running (Automatic Transmission)

⚠ CAUTION:

It can be dangerous to leave your vehicle with the engine running. Your vehicle could move suddenly if the shift lever is not fully in PARK (P) with the parking brake firmly set. And, if you leave the vehicle with the engine running, it could overheat and even catch fire. You or others could be injured. Do not leave your vehicle with the engine running.

If you have to leave your automatic transmission vehicle with the engine running, be sure your vehicle is in PARK (P) and your parking brake is firmly set before you leave it. After you have moved the shift lever into PARK (P), hold the regular brake pedal down. Then, see if you can move the shift lever away from PARK (P) without first pushing the button.

If you can, it means that the shift lever was not fully locked into PARK (P).

Torque Lock (Automatic Transmission)

If you are parking on a hill and you do not shift your automatic transmission into PARK (P) properly, the weight of the vehicle may put too much force on the parking pawl in the transmission. You may find it difficult to pull the shift lever out of PARK (P). This is called torque lock. To prevent torque lock, set the parking brake and then shift into PARK (P) properly before you leave the driver's seat. To find out how, see "Shifting Into Park (P)" previously in the section.

When you are ready to drive, move the shift lever out of PARK (P) before you release the parking brake.

If torque lock does occur, you may need to have another vehicle push yours a little uphill to take some of the pressure from the parking pawl in the transmission, so you can pull the shift lever out of PARK (P).

Downloaded from www.Manualslib.com manuals search engine

Shifting Out of PARK (P)

This vehicle is equipped with an electronic shift lock release system. The shift lock release is designed to:

- Prevent ignition key removal unless the shift lever is in PARK (P) with the shift lever button fully released, and
- Prevent movement of the shift lever out of PARK (P), unless the ignition is in ON/RUN or ACC/ACCESSORY and the regular brake pedal is applied.

The shift lock release is always functional except in the case of an uncharged or low voltage (less than 9 volt) battery.

If your vehicle has an uncharged battery or a battery with low voltage, try charging or jump starting the battery. See *Jump Starting on page 5-46* for more information.

To shift out of PARK (P) use the following:

1. Apply the brake pedal.
2. Then press the shift lever button.
3. Move the shift lever to the desired position.

If you still are unable to shift out of PARK (P):

1. Fully release the shift lever button.
2. While holding down the brake pedal, press the shift lever button again.
3. Move the shift lever to the desired position.

If you still cannot move the shift lever from PARK (P), consult your dealer/retailer or a professional towing service.

Downloaded from www.Manualslib.com manuals search engine

Parking Over Things That Burn

⚠ CAUTION:

Things that can burn could touch hot exhaust parts under your vehicle and ignite. Do not park over papers, leaves, dry grass, or other things that can burn.

Engine Exhaust

⚠ CAUTION:

Engine exhaust can kill. It contains the gas carbon monoxide (CO), which you cannot see or smell. It can cause unconsciousness and death.

You might have exhaust coming in if:

- **The exhaust system sounds strange or different.**
- **Your vehicle gets rusty underneath.**
- **Your vehicle was damaged in a collision.**
- **Your vehicle was damaged when driving over high points on the road or over road debris.**
- **Repairs were not done correctly.**
- **Your vehicle or the exhaust system has been modified improperly.**

If you ever suspect exhaust is coming into your vehicle:

- **Drive it only with all the windows down to blow out any CO; and**
- **Have your vehicle fixed immediately.**

Downloaded from www.Manualslib.com manuals search engine

Running the Engine While Parked

It is better not to park with the engine running. But if you ever have to, here are some things to know.

⚠ CAUTION:

Idling the engine with the climate control system off could allow dangerous exhaust into your vehicle. See the earlier caution under *Engine Exhaust on page 2-35*.

Also, idling in a closed-in place can let deadly carbon monoxide (CO) into your vehicle even if the climate control fan is at the highest setting. One place this can happen is a garage. Exhaust — with CO — can come in easily. NEVER park in a garage with the engine running.

Another closed-in place can be a blizzard. See *Winter Driving on page 4-15*.

⚠ CAUTION:

It can be dangerous to get out of your vehicle if the shift lever is not fully in PARK (P) with the parking brake firmly set. Your vehicle can roll. Do not leave your vehicle when the engine is running unless you have to. If you have left the engine running, the vehicle can move suddenly. You or others could be injured. To be sure your vehicle will not move, even when you are on fairly level ground, always set the parking brake and move the shift lever to PARK (P).

Follow the proper steps to be sure your vehicle will not move. See *Shifting Into PARK (P) (Automatic Transmission) on page 2-32*.

If you are parking on a hill and if you are pulling a trailer, also see *Towing a Trailer on page 4-28*.

Downloaded from www.Manualslib.com manuals search engine

Mirrors

Manual Rearview Mirror

When you are sitting in a comfortable driving position, adjust the mirror so you can see clearly behind your vehicle. Grip the mirror in the center to move it up or down and side to side. The day/night adjustment allows you to adjust the mirror to avoid glare from the lamps behind you. Move the lever to the right for nighttime use and to the left for daytime use.

Manual Rearview Mirror with OnStar®

Your vehicle may have a rearview mirror with the OnStar® system.

Control buttons for the OnStar system are at the bottom of the mirror. See your dealer/retailer for more information on the OnStar system and how to subscribe to OnStar. Also, see *OnStar® System on page 2-41* for more information about the services OnStar provides.

Mirror Operation

The manual mirror operation works the same as the manual mirror described previously, with the exception that the mirror has OnStar.

Automatic Dimming Rearview Mirror with OnStar® and Compass

Your vehicle may have an automatic dimming rearview mirror with a compass and OnStar® controls. For more information about OnStar, see *OnStar® System on page 2-41*.

The automatic dimming feature turns on each time the vehicle is started. To turn automatic dimming off or on, press the left button below the mirror. A green indicator light will be on when automatic dimming is on.

There are also three OnStar buttons located at the bottom of the mirror. See your dealer/retailer for more information on the system and how to subscribe to OnStar. See *OnStar® System on page 2-41* for more information about the service OnStar provides.

Compass Operation

Press the on/off button once to turn the compass on or off.

When the ignition and the compass feature are on, the compass will show two character boxes for a few seconds. After a few seconds, the mirror will display the current compass direction.

Downloaded from www.Manualslib.com manuals search engine

Compass Calibration

If after a few seconds the display does not show a compass direction, (N for North for example), there may be a strong magnetic field interfering with the compass. Such interference may be caused by a magnetic antenna mount, note pad holder, or similar object. If the letter C appears in the compass window, the compass may need to be reset or calibrated.

The mirror can be calibrated by driving the vehicle in circles at 5 mph (8 km/h) or less until the display reads a direction.

Compass Variance

Compass variance is the difference between earth's magnetic north and true geographic north. If the mirror is not adjusted for compass variance, the compass could give false readings.

The mirror is set in zone eight upon leaving the factory. It will be necessary to adjust the compass to compensate for compass variance if the vehicle is driven outside zone eight. Under certain circumstances, such as a long distance, cross-country trip, it will be necessary to adjust the compass variance.

To adjust for compass variance, do the following:

1. Find your current location and variance zone number on the zone map that follows.

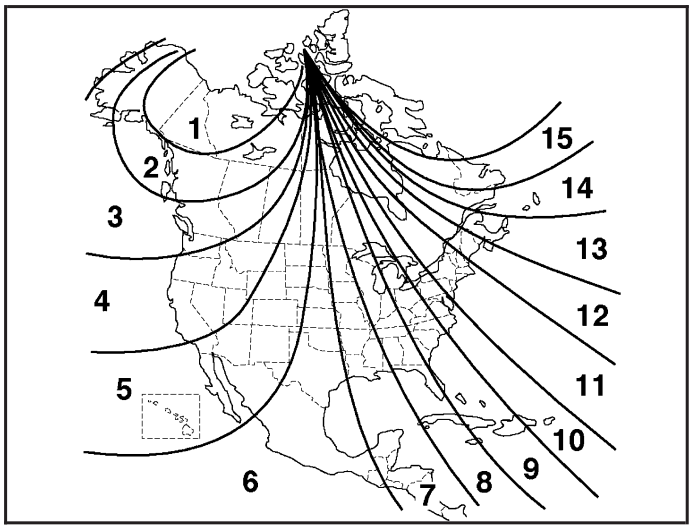

2. Press and hold the on/off button until a zone number appears on the display.
3. Once the zone number appears on the display, press the on/off button quickly until you reach the correct zone number. If C appears in the compass window, the compass may need calibration. See "Compass Calibration" listed previously.

Downloaded from www.Manualslib.com manuals search engine

Automatic Dimming Rearview Mirror with Compass

Your vehicle may have an automatic dimming rearview mirror with a compass. This feature enables the mirror to sense nighttime glare from vehicle headlamps from behind and automatically dim to reduce the glare to a safe level.

The automatic dimming feature turns on each time the vehicle is started. Press the OFF button once and the green indicator light located to the left of the button will go out indicating the feature is off. To turn the feature back on, press and release the AUTO button and the green indicator light will come on.

Compass Operation

Press the on/off button once to turn the compass on or off.

When the ignition and the compass feature are on, the compass will show two character boxes for a few seconds. After a few seconds, the mirror will display the current compass direction.

Compass Calibration

If after a few seconds the display does not show a compass direction, (N for North for example), there may be a strong magnetic field interfering with the compass. Such interference may be caused by a magnetic antenna mount, note pad holder, or similar object. If the letter C appears in the compass window, the compass may need to be reset or calibrated.

The mirror can be calibrated by driving the vehicle in circles at 5 mph (8 km/h) or less until the display reads a direction.

Compass Variance

Compass variance is the difference between earth's magnetic north and true geographic north. If the mirror is not adjusted for compass variance, the compass could give false readings.

The mirror is set in zone eight upon leaving the factory. It will be necessary to adjust the compass to compensate for compass variance if the vehicle is driven outside zone eight. Under certain circumstances, such as a long distance, cross-country trip, it will be necessary to adjust the compass variance.

Downloaded from www.Manualslib.com manuals search engine

To adjust for compass variance, do the following:

1. Find your current location and variance zone number on the zone map that follows.

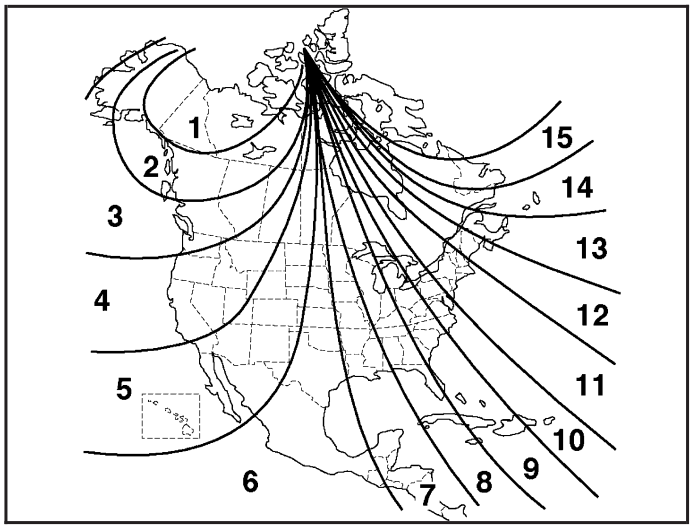

2. Press and hold the on/off button until a zone number appears on the display.
3. Once the zone number appears on the display, press the on/off button quickly until you reach the correct zone number. If C appears in the compass window, the compass may need calibration. See “Compass Calibration” listed previously.

Outside Power Mirrors

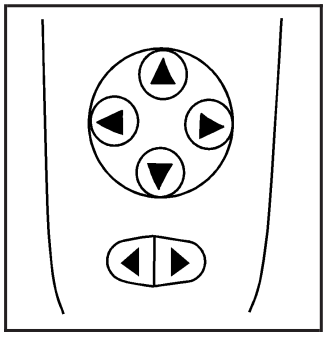

The controls for the outside power mirrors, are located on the driver’s door.

Move the selector switch located next to the control pad to the left or right to choose either the driver side or passenger side mirror. To adjust a mirror, use the arrows located on the control pad to move the mirror in the desired direction. Adjust each outside mirror so that a little of the vehicle and the area behind it can be seen while sitting in a comfortable driving position. Keep the selector switch in the center position when not adjusting either outside mirror.

Both mirrors can manually be folded by pulling them toward the vehicle. This feature may be useful when going through a car wash or a confined space. Push the mirrors away from the vehicle, to the normal position, before driving.

Downloaded from www.Manualslib.com manuals search engine

Outside Convex Mirror

⚠ CAUTION:

A convex mirror can make things (like other vehicles) look farther away than they really are. If you cut too sharply into the right lane, you could hit a vehicle on your right. Check your inside mirror or glance over your shoulder before changing lanes.

The passenger side mirror is convex. A convex mirror's surface is curved so more can be seen from the driver seat. It also makes things, like other vehicles, look farther away than they really are.

OnStar® System

OnStar uses several innovative technologies and live advisors to provide you with a wide range of safety, security, information, and convenience services. If your airbags deploy, the system is designed to make an automatic call to OnStar Emergency advisors who can request emergency services be sent to your location. If you lock your keys in the vehicle, call OnStar at 1-888-4-ONSTAR and they can send a signal to unlock your doors. If you need roadside assistance, press the OnStar button and they can contact Roadside Service for you.

Downloaded from www.Manualslib.com manuals search engine

OnStar service is provided to you subject to the OnStar Terms and Conditions. You may cancel your OnStar service at any time by contacting OnStar. A complete OnStar Owner's Guide and the OnStar Terms and Conditions are included in the vehicle's OnStar Subscriber glove box literature. For more information, visit onstar.com or onstar.ca, contact OnStar at 1-888-4-ONSTAR (1-888-466-7827) or TTY 1-877-248-2080, or press the OnStar button to speak with an OnStar advisor 24 hours a day, 7 days a week.

Not all OnStar features are available on all vehicles. To check if your vehicle is equipped to provide the services described below, or for a full description of OnStar services and system limitations, see the OnStar Owner's Guide in your glove box or visit onstar.com.

OnStar Services

For new vehicles with OnStar, the Safe & Sound Plan, or the Directions & Connections Plan is included for one year from the date of purchase. You can extend this plan beyond the first year, or upgrade to the Directions & Connections Plan. For more information, press the OnStar button to speak with an advisor. Some OnStar services (such as Remote Door Unlock or Stolen Vehicle Location Assistance) may not be available until you register with OnStar.

Available Services with Safe & Sound Plan

- Automatic Notification of Airbag Deployment
- Advanced Automatic Crash Notification (AACN) (If equipped)
- Link to Emergency Services
- Roadside Assistance
- Stolen Vehicle Location Assistance
- AccidentAssist
- Remote Door Unlock/Vehicle Alert
- OnStar Vehicle Diagnostics
- GM Goodwrench® On Demand Diagnostics
- OnStar Hands-Free Calling with 30 complimentary minutes
- OnStar Virtual Advisor (U.S. Only)

Available Services included with Directions & Connections Plan

- All Safe and Sound Plan Services
- Driving Directions - Advisor delivered or OnStar Turn-by-Turn Navigation (If equipped)
- RideAssist
- Information and Convenience Services

Downloaded from www.Manualslib.com manuals search engine

OnStar Hands-Free Calling

OnStar Hands-Free Calling allows eligible OnStar subscribers to make and receive calls using voice commands. Hands-Free Calling is fully integrated into the vehicle, and can be used with OnStar Pre-Paid Minute Packages. Hands-Free Calling may also be linked to a Verizon Wireless service plan in the U.S. or a Bell Mobility service plan in Canada, depending on eligibility. To find out more, refer to the OnStar Owner's Guide in the vehicle's glove box, visit www.onstar.com or www.onstar.ca, or speak with an OnStar advisor by pressing the OnStar button or calling 1-888-4-ONSTAR (1-888-466-7827).

OnStar Virtual Advisor

OnStar Virtual Advisor is a feature of OnStar Hands-Free Calling that uses your minutes to access location-based weather, local traffic reports, and stock quotes. By pressing the phone button and giving a few simple voice commands, you can browse through the various topics. See the OnStar Owner's Guide for more information (only available in the continental U.S.).

How OnStar Service Works

Your vehicle's OnStar system has the capability of recording and transmitting vehicle information. This information is automatically sent to an OnStar Call Center at the time of an OnStar button press, Emergency button press or if your airbags or AACN system deploys. The vehicle information usually includes your GPS location and, in the event of a crash, additional information regarding the accident that your vehicle has been involved in (e.g. the direction from which your vehicle was hit). When you use the Virtual Advisor feature of OnStar Hands-Free Calling, your vehicle also sends OnStar your GPS location so that we can provide you with location-based services.

OnStar service cannot work unless your vehicle is in a place where OnStar has an agreement with a wireless service provider for service in that area. OnStar service also cannot work unless you are in a place where the wireless service provider OnStar has hired for that area has coverage, network capacity and reception when the service is needed, and technology that is compatible with the OnStar service. Not all services are available everywhere, particularly in remote or enclosed areas, or at all times.

Downloaded from www.Manualslib.com manuals search engine

Location information about your vehicle is only available if the GPS satellite signals are unobstructed and available.

Your vehicle must have a working electrical system (including adequate battery power) for the OnStar equipment to operate. There are other problems OnStar cannot control that may prevent OnStar from providing OnStar service to you at any particular time or place. Some examples are damage to important parts of your vehicle in an accident, hills, tall buildings, tunnels, weather or wireless phone network congestion.

Your Responsibility

Increase the radio volume if you cannot hear the OnStar advisor. If the light next to the OnStar buttons is red, this means that your system is not functioning properly and should be checked by a dealer/retailer. If the light appears clear (no light is appearing), your OnStar subscription has expired. You can always press the OnStar button to confirm that your OnStar equipment is active.

Storage Areas

Glove Box

To open the glove box, lift up on the lever.

Cupholder(s)

There are two cupholders in the front center console of the vehicle and two in the rear of the center console. Pull down the door on the rear of the center console to use the rear seat cupholders.

Center Console Storage

The center console has a separate storage area. To open the compartment, which is also the armrest, pull up the latch release handle on the front of the lid.

In the floor console is a power accessory outlet. See *Accessory Power Outlet(s) on page 3-18* for more information.

Convenience Net

Your vehicle may have a convenience net in the rear of the vehicle. Store small loads as far forward as possible. The net should not be used to store heavy loads.

Downloaded from www.Manualslib.com manuals search engine

Sunroof

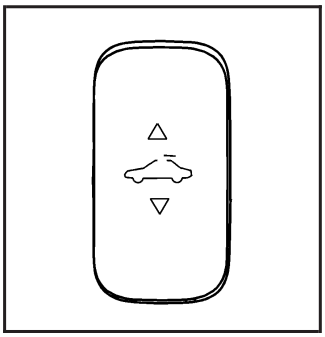

If your vehicle has a sunroof, the switch is located on the headliner between the map lamps.

The sunroof will only operate while the ignition is in ON/RUN, ACC/ACCESSORY, or if Retained Accessory Power (RAP) is active. See *Retained Accessory Power (RAP) on page 2-23*.

Press the back of the switch and release it to open the sunroof to the vent position. From the vent position, press and release the back of the switch to express-open the sunroof. To stop the sunroof from express opening, press the switch again. If the sunshade is closed, it will open automatically when the sunroof opens past the vented position.

A deflector will automatically raise when the sunroof is opened. The deflector will retract when the sunroof is closed.

To close the sunroof, press the front of the switch and hold it until the sunroof is closed. The sunroof will stop if the switch is released. Close the sunshade by hand.

The sunroof glass panel cannot be opened or closed if the vehicle has an electrical failure.

Notice: **If you force the sunshade forward of the sliding glass panel, damage will occur and the sunroof may not open or close properly. Always close the glass panel before closing the sunshade.**

Retractable Hardtop

The following procedures explain the proper operation of the retractable hardtop. The retractable hardtop will not operate if the trunk cargo cover is not in place.

If the retractable hardtop is lowered or raised multiple times, the engine should be running while doing so to prevent drain on the vehicle's battery.

Downloaded from www.Manualslib.com manuals search engine

Lowering the Retractable Hardtop

Notice: **Leaving the retractable hardtop down and exposing the interior of your vehicle to outdoor conditions may cause damage. Always close the retractable hardtop if leaving your vehicle outdoors.**

Notice: **Lowering the top if it is damp, wet, or dirty can cause stains, mildew, and damage to the inside of your vehicle. Dry off the top before lowering it.**

Notice: **If you lower the retractable hardtop in cold weather (32°F/0°C or lower), you may damage top components. Do not lower the retractable hardtop in cold weather.**

1. Park on a level surface, and shift the automatic transmission into PARK (P). The vehicle must be in PARK (P), and the engine must be running, or the ignition turned to the ON/RUN position, to operate the retractable hardtop.

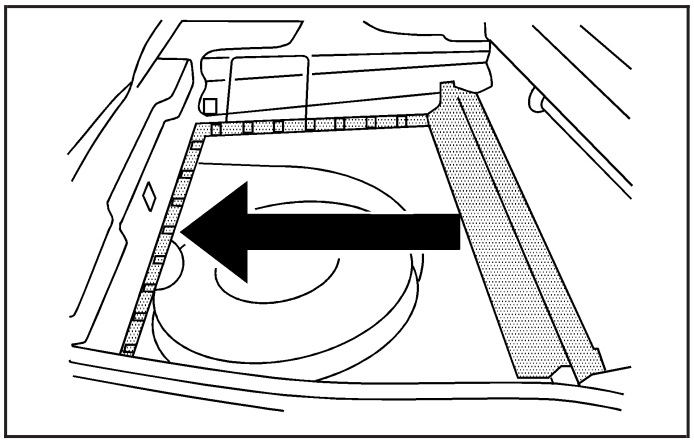

2. The trunk cargo cover must be fully closed, and the trunk must be closed before lowering the hardtop.
3. Make sure that nothing or no one is on or around the hardtop. Make sure there is nothing on top or in front of the cargo cover.

Downloaded from www.Manualslib.com manuals search engine

⚠ CAUTION:

When the retractable hardtop is opened or closed, people can be injured by the parts that move: the hardtop and its mechanism, the trunk lid, and the side windows. Keep people away from these parts when you are lowering or raising the top.

⚠ CAUTION:

If the retractable hardtop is not completely opened or closed, the system will cause the retractable hardtop to slowly descend after 3 minutes. You or others could be injured. The retractable hardtop will descend immediately if the ignition is turned to LOCK/OFF during the opening or closing of the retractable hardtop. Always completely open or close the retractable hardtop and do not shut off the ignition during the opening or closing of the retractable hardtop.

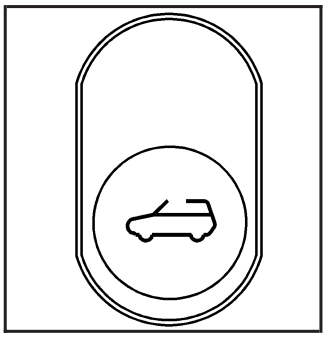

4. The hardtop switch is located on the headliner between the front reading lamps.

Press and hold the switch rearward to lower the hardtop. The switch must be pressed until the cycle is complete.

Downloaded from www.Manualslib.com manuals search engine

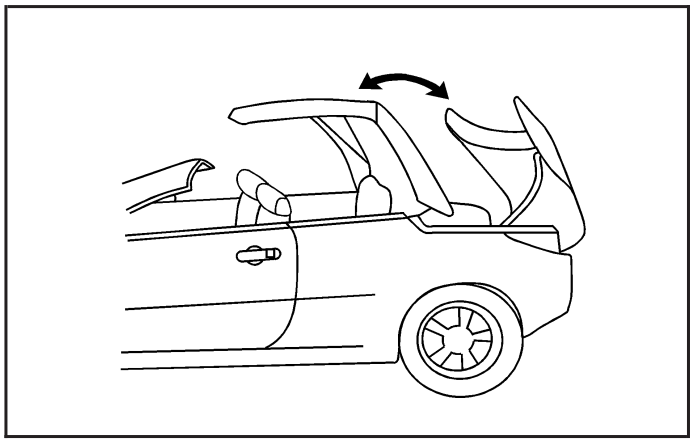

As the switch is being pressed the windows and trunk lid will open. The hardtop will automatically lower into the trunk, and the trunk lid will close and latch. If the engine is on, a chime will sound when the hardtop has lowered completely. The Driver Information Center (DIC) will display TOP MOVE COMPLT to signal the procedure is complete. See *DIC Warnings and Messages on page 3-46* for more information.

After the hardtop has lowered completely, release the switch. If you continue to press the switch for about two seconds after the hardtop has completely lowered, the windows will automatically close.

If pressure is released from the switch before the hardtop cycle is complete, the cycle will stop and the Driver Information Center (DIC) will display the TOP NOT SECURE message. Always press and hold the switch until a chime sounds, if the engine is on, and the Driver Information Center (DIC) displays the TOP MOVE COMPLT to signal the procedure is complete. See *DIC Warnings and Messages on page 3-46* for more information.

The hardtop will not operate if the vehicle has an electrical failure. If an electrical failure occurs, see your dealer/retailer for service.

If your vehicle has an electrical failure while operating the hardtop, and must be towed to a dealer/retailer for service, your vehicle should be towed by flatbed with the vehicle facing backwards. Consult your dealer/retailer or professional towing service if you need to have your disabled vehicle towed. See *Roadside Assistance Program on page 7-6*.

Downloaded from www.Manualslib.com manuals search engine

Raising the Retractable Hardtop

1. Park on a level surface, and shift the automatic transmission into PARK (P). The vehicle must be in PARK (P), and the engine must be running, or the ignition turned to the ON position, to operate the retractable hardtop.

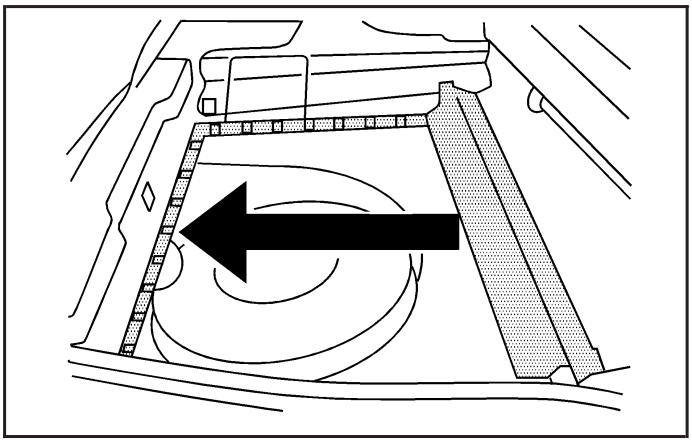

2. The trunk cargo cover must be fully closed, and the trunk must be closed before raising the hardtop.
3. Make sure nothing or no one is on or around the hardtop. Make sure there is no cargo on top of or in front of the trunk cargo cover.

⚠ CAUTION:

When the retractable hardtop is opened or closed, people can be injured by the parts that move: the hardtop and its mechanism, the trunk lid, and the side windows. Keep people away from these parts when you are lowering or raising the top.

Downloaded from www.Manualslib.com manuals search engine

⚠ CAUTION:

If the retractable hardtop is not completely opened or closed, the system will cause the retractable hardtop to slowly descend after 3 minutes. You or others could be injured. The retractable hardtop will descend immediately if the ignition is turned to LOCK/OFF during the opening or closing of the retractable hardtop. Always completely open or close the retractable hardtop and do not shut off the ignition during the opening or closing of the retractable hardtop.

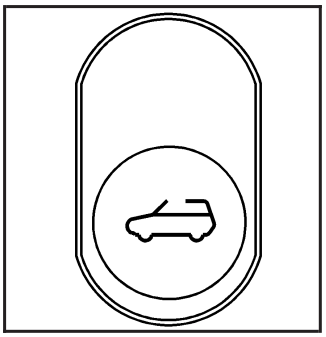

4. The hardtop switch is located on the headliner between the front reading lamps. Press and hold the switch forward to raise the hardtop. The switch must be pressed until the cycle is complete.

Downloaded from www.Manualslib.com manuals search engine

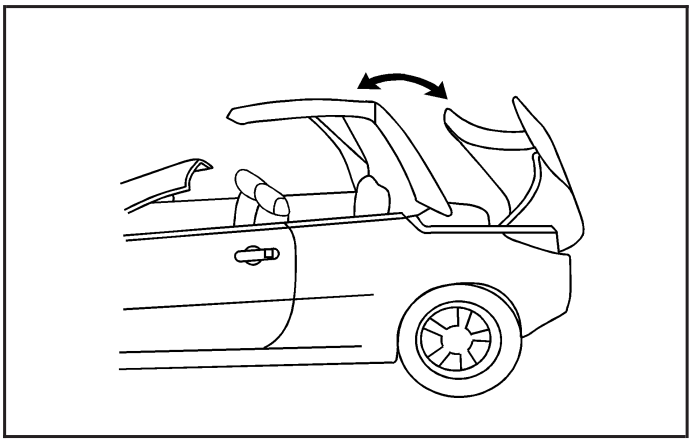

As the switch is being pressed the hardtop will raise from the trunk and move into place. The hardtop and trunk lid will close and latch. If the engine is on, a chime will sound when the hardtop has raised completely. The Driver Information Center (DIC) will display the TOP MOVE COMPLT message to signal the procedure is complete. See *DIC Warnings and Messages on page 3-46* for more information.

After the hardtop has raised completely, release the switch. If you continue to press the switch for about two seconds after the hardtop has raised completely, the windows will automatically close.

If pressure is released from the switch before the hardtop cycle is complete, the cycle will stop and the Driver Information Center (DIC) will display the TOP NOT SECURE message. Always press and hold the switch until a chime sounds, if the engine is on, and the Driver Information Center (DIC) displays the TOP MOVE COMPLT to signal the procedure is complete. See *DIC Warnings and Messages on page 3-46* for more information.

The hardtop will not operate if the vehicle has an electrical failure. If an electrical failure occurs, see your dealer/retailer for service.

If your vehicle has an electrical failure while operating the hardtop, and must be towed to a dealer/retailer for service, your vehicle should be towed by flatbed with the vehicle facing backwards. Consult your dealer/retailer or professional towing service if you need to have your disabled vehicle towed. See *Roadside Assistance Program on page 7-6*.

Downloaded from www.Manualslib.com manuals search engine

✍ NOTES

Downloaded from www.Manualslib.com manuals search engine

Section 3 Instrument Panel

Instrument Panel Overview 3-4
Hazard Warning Flashers 3-6
Other Warning Devices 3-6
Horn 3-6
Tilt Wheel 3-6
Turn Signal/Multifunction Lever 3-7
Turn and Lane-Change Signals 3-8
Headlamp High/Low-Beam Changer 3-8
Flash-to-Pass 3-8
Windshield Wipers 3-9
Windshield Washer 3-10
Cruise Control 3-10
Headlamps 3-13
Headlamps on Reminder 3-14
Headlamps Off in PARK (P) 3-14
Delayed Headlamps 3-14
Daytime Running Lamps (DRL) 3-14
Automatic Headlamp System 3-15
Fog Lamps 3-16
Instrument Panel Brightness 3-16
Courtesy Lamps 3-16
Dome Lamp 3-17
Entry/Exit Lighting 3-17
Parade Dimming 3-17
Overhead Console Reading Lamps 3-17
Trunk Lamp 3-17
Battery Run-Down Protection 3-18
Accessory Power Outlet(s) 3-18

Climate Controls 3-19
Climate Control System 3-19
Automatic Climate Control System 3-23
Outlet Adjustment 3-26

Warning Lights, Gages, and Indicators 3-27
Instrument Panel Cluster 3-28
Speedometer and Odometer 3-29
Trip Odometer 3-29
Tachometer 3-29
Safety Belt Reminders 3-30
Airbag Readiness Light 3-30
Passenger Airbag Status Indicator 3-31
Charging System Light 3-33
Brake System Warning Light 3-34
Antilock Brake System Warning Light 3-35
Traction Control System (TCS)
Warning Light 3-35
Traction Control System (TCS) Active Light 3-36
StabiliTrak® Not Ready Light 3-36

Downloaded from www.Manualslib.com manuals search engine

Section 3 Instrument Panel

StabiliTrak® Indicator Light 3-36
Engine Coolant Temperature Gage 3-37
Tire Pressure Light 3-37
Malfunction Indicator Lamp 3-38
Oil Pressure Light 3-41
Security Light 3-41
Cruise Control Light 3-42
Highbeam On Light 3-42
Fuel Gage 3-42
Low Fuel Warning Light 3-42

Driver Information Center (DIC) 3-43
DIC Operation and Displays 3-43
DIC Warnings and Messages 3-46
DIC Vehicle Personalization 3-50

Audio System(s) 3-52
Setting the Clock 3-53
Radio(s) 3-54
XM Radio Messages 3-66
Theft-Deterrent Feature 3-67
Audio Steering Wheel Controls 3-67
Radio Reception 3-68
Fixed Mast Antenna 3-68
Backglass Antenna 3-69
XM™ Satellite Radio Antenna System 3-69

Downloaded from www.Manualslib.com manuals search engine

✍ NOTES

Downloaded from www.Manualslib.com manuals search engine

Instrument Panel Overview

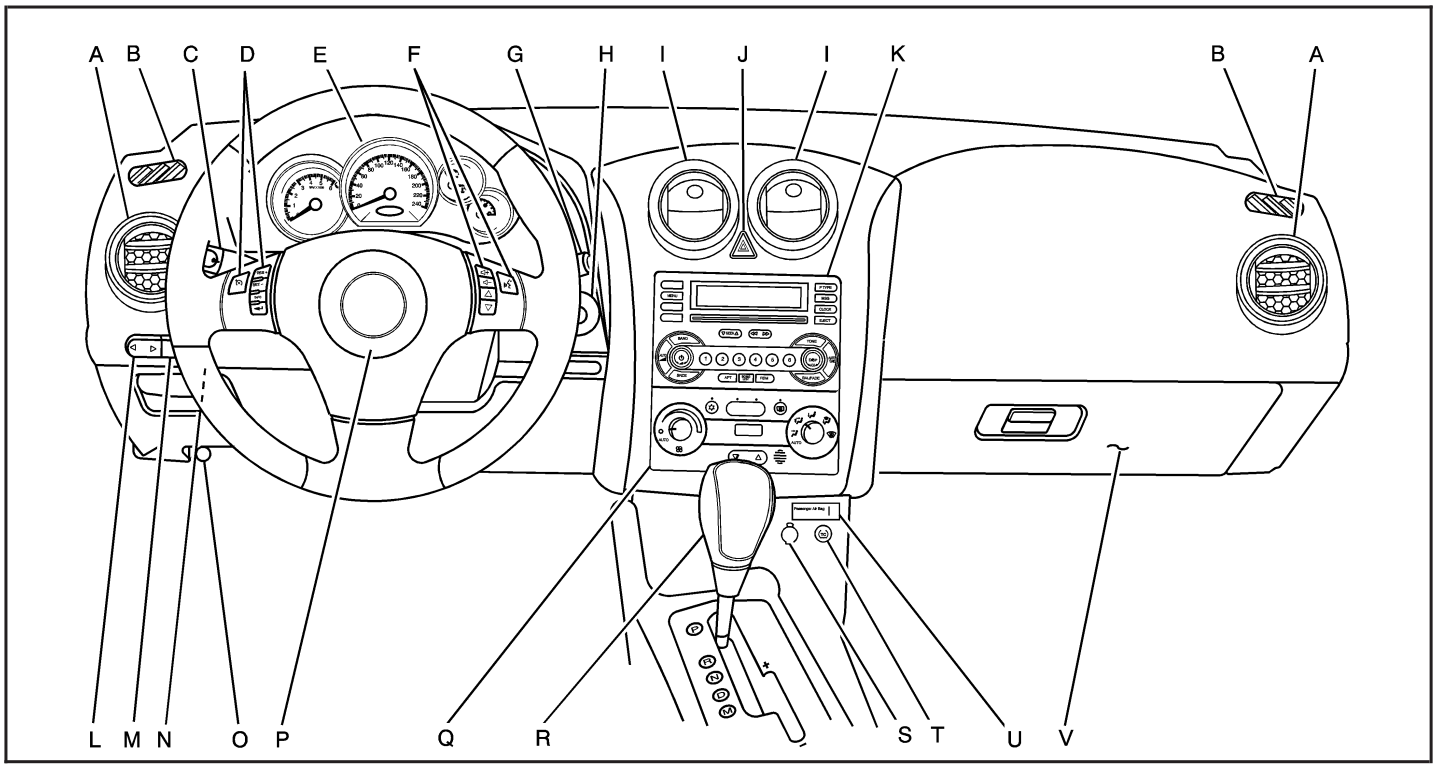

Downloaded from www.Manualslib.com manuals search engine

The main components of the instrument panel are the following:

A. Side Air Outlets. See *Outlet Adjustment on page 3-26*.

B. Side Window Outlets. See *Outlet Adjustment on page 3-26*.

C. Turn Signal/Multifunction Lever. See *Turn Signal/Multifunction Lever on page 3-7*.

D. Cruise Controls (If Equipped). See *Cruise Control on page 3-10*. Driver Information Control (DIC) Buttons. See *Driver Information Center (DIC) on page 3-43*.

E. Instrument Panel Cluster. See *Instrument Panel Cluster on page 3-28*.

F. Audio Steering Wheel Controls (If Equipped). See *Audio Steering Wheel Controls on page 3-67*.

G. Windshield Wiper and Washer Lever. See *Windshield Wipers on page 3-9* and *Windshield Washer on page 3-10*.

H. Ignition Switch. See *Ignition Positions on page 2-22*.

I. Center Air Outlets. See *Outlet Adjustment on page 3-26*.

J. Hazard Warning Flashers Button. See *Hazard Warning Flashers on page 3-6*.

K. Audio System. See *Audio System(s) on page 3-52*.

L. Adjustable Pedal Buttons (If Equipped). See *Adjustable Throttle and Brake Pedal on page 2-25*.

M. Instrument Panel Brightness Control. See *Instrument Panel Brightness on page 3-16*.

N. Fog Lamps (If Equipped). See *Fog Lamps on page 3-16*.

O. Hood Release Handle. See *Hood Release on page 5-12*.

P. Horn. See *Horn on page 3-6*.

Q. Climate Control System. See *Automatic Climate Control System on page 3-23* or *Climate Control System on page 3-19*.

R. Shift Lever. See *Automatic Transmission Operation on page 2-27*.

S. Accessory Power Outlet. See *Accessory Power Outlet(s) on page 3-18*.

T. Traction Control System Button (If Equipped). See *Traction Control System (TCS) on page 4-5*. StabiliTrak® (If Equipped). See *StabiliTrak® System on page 4-6*.

U. Passenger Airbag Status Indicator. See *Passenger Airbag Status Indicator on page 3-31*.

V. Glove Box. See *Glove Box on page 2-44*.

Downloaded from www.Manualslib.com manuals search engine

Hazard Warning Flashers

The hazard warning flashers let you warn the police and others that you have a problem. The front and rear turn signal lamps will flash on and off.

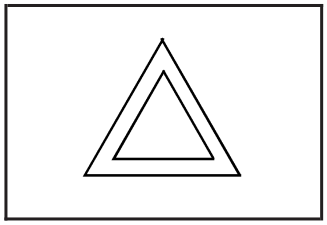

The hazard warning flasher button is located towards the center of the instrument panel.

Press the button to make the front and rear turn signal lamps flash on and off. Press the button again to turn the flashers off.

While the hazard warning flashers are on, the turn signals do not work.

The hazard warning flashers work no matter what position the key is in, and even if the key is not in the ignition switch.

Other Warning Devices

If you carry reflective triangles, you can set them up at the side of the road about 300 feet (100 m) behind your vehicle.

Horn

Press near or on the horn symbols on the steering wheel pad to sound the horn.

Tilt Wheel

A tilt and telescope wheel allows you to adjust the steering wheel before you drive. Raise the steering wheel to the highest level to give your legs more room when you enter and exit the vehicle.

The lever that allows you to tilt and telescope the steering wheel is located on the left side of the steering column.

Downloaded from www.Manualslib.com manuals search engine

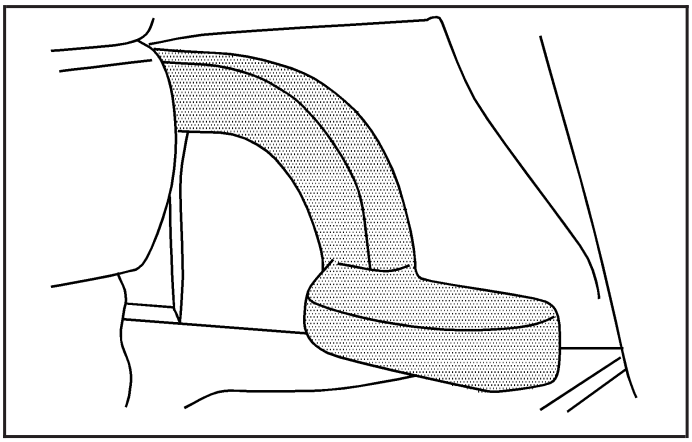

To tilt and telescope the wheel, pull down the lever. Then move the wheel up or down or back and forth to a comfortable driving position. Pull up the lever to lock the wheel in place.

Turn Signal/Multifunction Lever

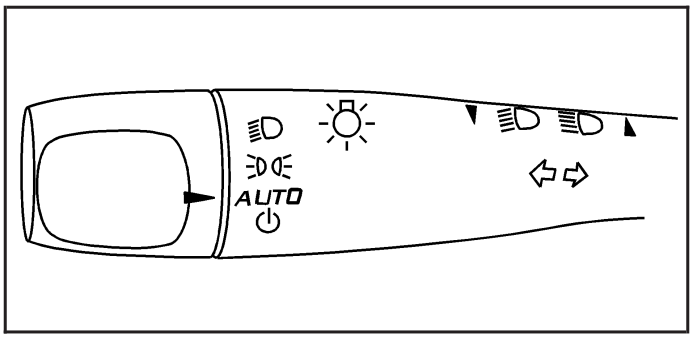

The lever on the left side of the steering column includes the following:

- **Turn and Lane-Change Signals.** See *Turn and Lane-Change Signals on page 3-8*.
- **Headlamp High/Low-Beam Changer.** See *Headlamp High/Low-Beam Changer on page 3-8*.
- Flash-to-Pass. See *Flash-to-Pass on page 3-8*.
- **Exterior Lamp Control.** See *Headlamps on page 3-13*.

Downloaded from www.Manualslib.com manuals search engine

Turn and Lane-Change Signals

The turn signal has two upward (for right) and two downward (for left) positions. These positions let you signal a turn or a lane change.

To signal a turn, move the lever all the way up or down. When the turn is finished, the lever returns automatically to the normal position.

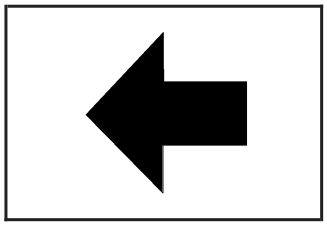

An arrow on the instrument panel cluster flashes in the direction of the turn or lane change.

To signal a lane change, raise or lower the lever until the arrow starts to flash. Hold it there until you complete your lane change. The lever returns by itself when it is released.

If the arrows flash rapidly or do not go on at all as you signal a turn or lane change, a signal bulb could be burned out and other drivers will not see your turn signal.

Replace burned out bulbs to help avoid an accident. Also, check the appropriate fuses. See *Fuses on page 5-110*.

Headlamp High/Low-Beam Changer

To change the headlamps from low beam to high beam, push the turn signal/multifunction lever away from you.

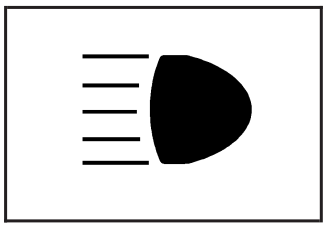

This light comes on in the instrument panel cluster if the high beam lamps are turned on while the ignition is in ON/RUN.

To change the headlamps from high beam to low beam, pull the turn signal lever toward you.

Flash-to-Pass

This feature lets you use your high-beam headlamps to signal a driver in front of you that you want to pass.

To use it, pull the turn signal/multifunction lever toward you until the high-beam headlamps come on, then release the lever to turn them off.

Downloaded from www.Manualslib.com manuals search engine

Windshield Wipers

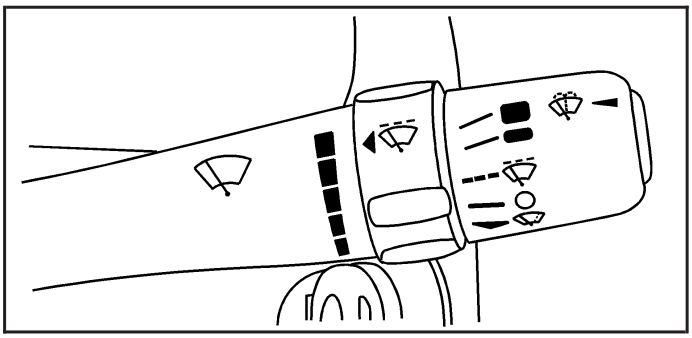

Use this lever, located on the right side of the steering wheel, to operate the windshield wipers.

(Off): Move the lever to this position to turn off the windshield wipers.

(Intermittent; Speed Sensitive Wipers): Move the lever to this position for intermittent or speed sensitive operation. The amount of delay time varies between wiping cycles due to the delay setting selected or the speed of the vehicle.

(Delay): While the lever is in the intermittent position, turn the intermittent adjust band with this symbol on it up or down to select a shorter or longer delay between wiping cycles. To the left of the adjust band are bars, increasing in size from bottom to top, that indicate the frequency of the wipes. Smaller bars mean the wipers movement is less frequent. Larger bars mean the movement is more frequent.

(Low Speed): Move the lever up to the first setting past intermittent, for steady wiping at low speed.

(High Speed): Move the lever up to the second setting past intermittent, for wiping at a high speed.

(Mist): Move the lever all the way down to this position for a single wiping cycle. Hold it there until the windshield wipers start; then let go. The windshield wipers stop after one wiping cycle. If additional wiping cycles are needed, hold the lever down longer.

Damaged wiper blades can prevent you from seeing well enough to drive safely. Clear ice and snow from the wiper blades before using them to prevent damage.

If the wiper blades are frozen to the windshield, carefully loosen or thaw them. If your blades do become damaged, get new blades.

Heavy snow or ice can overload the wiper motor. A circuit breaker stops the motor until it cools. Clear away snow or ice to prevent an overload. If the motor gets stuck, turn the wipers off, clear away the snow or ice, and then turn the wipers back on.

Downloaded from www.Manualslib.com manuals search engine

As an added safety feature, if the wipers are on for more than 15 seconds, the vehicle's headlamps turn on automatically. They turn off 15 seconds after the wipers are turned off.

Windshield Washer

To wash the windshield, press the button at the end of the lever until the washers begin.

⚠ CAUTION:

In freezing weather, do not use your washer until the windshield is warmed. Otherwise the washer fluid can form ice on the windshield, blocking your vision.

When the button is released, the washers stop, but the wipers continue to wipe about three times or resume the previous speed.

Cruise Control

If your vehicle has cruise control, a speed of about 25 mph (40 km/h) or more can be maintained without keeping your foot on the accelerator. This can really help on long trips. Cruise control does not work at speeds below 25 mph (40 km/h).

⚠ CAUTION:

Cruise control can be dangerous where you cannot drive safely at a steady speed. So, do not use your cruise control on winding roads or in heavy traffic.

Cruise control can be dangerous on slippery roads. On such roads, fast changes in tire traction can cause excessive wheel slip, and you could lose control. Do not use cruise control on slippery roads.

Downloaded from www.Manualslib.com manuals search engine

Setting Cruise Control

⚠ CAUTION:

If you leave your cruise control on when you are not using cruise, you might hit a button and go into cruise when you do not want to. You could be startled and even lose control. Keep the cruise control switch off until you want to use cruise control.

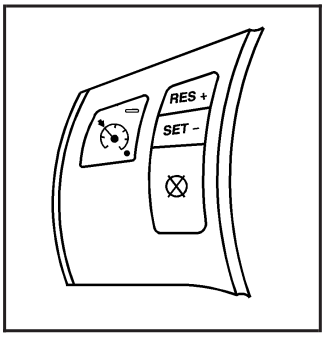

The cruise control buttons are located on the steering wheel.

(On/Off): Press this button to turn the cruise control system on and off.

RES+ (Resume): Press this button to resume a set speed and to accelerate the speed.

SET– (Set): Press this button to set a speed and to decrease the speed.

(Cancel): Press this button to cancel cruise control.

To set a speed do the following:

1. Press the on/off symbol to turn cruise control on. The indicator light on the button comes on.
2. Get to the speed you want.
3. Press the SET– symbol and release it. The cruise symbol displays in the instrument panel cluster to show the system is engaged.
4. Take your foot off the accelerator pedal.

When the brakes are applied, the cruise control shuts off.

If the vehicle is in cruise control and the Traction Control System (TCS) or Enhanced Traction System (ETS) begins to limit wheel spin, the cruise control automatically disengages. See *Traction Control System (TCS) on page 4-5*. When road conditions allow, the cruise control can be used again.

Downloaded from www.Manualslib.com manuals search engine

Resuming a Set Speed

Suppose the cruise control is set at a desired speed and the brakes are applied. This disengages the cruise control. The cruise symbol in the instrument panel cluster also goes out, indicating cruise is no longer engaged. To return to the previously set speed, you do not need to go through the set process again. Once at a speed of about 25 mph (40 km/h) or more, press the RES+ symbol briefly.

This takes the vehicle back up and maintains the previously chosen speed.

Increasing Speed While Using Cruise Control

There are two ways to go to a higher speed.

- If the cruise control system is already engaged, press the RES+ symbol. Hold it there until the speed desired is reached and then release the button.
- To increase the vehicle speed in very small amounts, press the RES+ symbol briefly and then release it. Each time this is done, the vehicle goes about 1 mph (1.6 km/h) faster.

Reducing Speed While Using Cruise Control

If the cruise control system is already engaged,

- Push and hold the SET– symbol until the lower speed desired is reached, then release it.
- To slow down in very small amounts, push the SET– symbol briefly. Each time this is done, the vehicle goes about 1 mph (1.6 km/h) slower.

Passing Another Vehicle While Using Cruise Control

Use the accelerator pedal to increase the vehicle speed. When you take your foot off the pedal, the vehicle will slow down to the cruise control speed set earlier.

Using Cruise Control on Hills

How well the cruise control works on hills depends upon the vehicle speed, load, and the steepness of the hills. When going up steep hills, you might have to step on the accelerator pedal to maintain your vehicle's speed. When going downhill, you might have to brake or shift to a lower gear to keep your vehicle's speed down. Applying the brakes does turn off the cruise control. Many drivers find this to be too much trouble and do not use cruise control on steep hills.

Downloaded from www.Manualslib.com manuals search engine

Ending Cruise Control

There are three ways to disengage the cruise control:

- Step lightly on the brake pedal.
- Press the on/off button.
- Press the cancel button.

The cruise symbol in the instrument panel cluster turns off when the system is disengaged.

Erasing Speed Memory

The cruise control set speed memory is erased when the cruise control or the ignition is turned off.

Headlamps

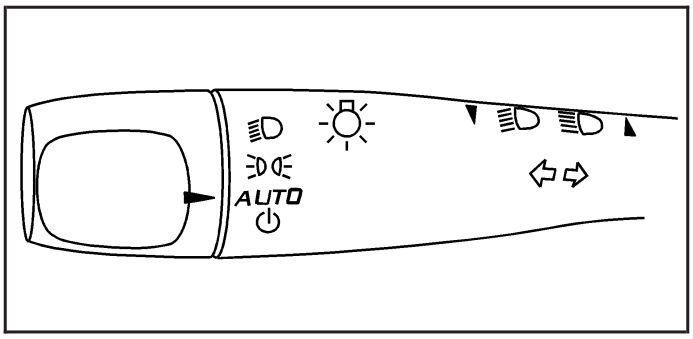

The band on the lever on the outboard side of the steering column operates the exterior lamps.

The exterior lamp control has the following four positions:

(Headlamps): Turn the band to this position to turn on the headlamps, parking lamps, and taillamps.

(Parking Lamps): Turn the band to this position to turn on the parking lamps and taillamps only.

AUTO (Automatic Headlamp System): Turn the band to this position to automatically turn on the Daytime Running Lamps during daytime, and the headlamps, parking lamps, and taillamps at night.

Downloaded from www.Manualslib.com manuals search engine

⏻ **(Off/On):** Turn the band to this position to turn on the Automatic Headlamp System. In Canada, this position only works when a vehicle is in the PARK (P) position.

To turn on the Automatic Headlamp System, turn the switch to off/on. To turn them off, turn the switch to off/on again. This is a momentary control switch that springs back when released. The Automatic Headlamp System always turns on at the beginning of an ignition cycle.

Headlamps on Reminder

A reminder tone sounds when the headlamps or parking lamps are manually turned on, if the driver's door is open and the ignition is in the LOCK/OFF or ACC/ ACCESSORY position. To turn the tone off, turn the knob all the way counterclockwise. In the automatic mode, the headlamps turn off once the ignition key is in the LOCK/OFF position.

Headlamps Off in PARK (P)

This feature works when the ignition is in the ON/RUN position and it is dark outside. To turn the headlamps off when it is dark outside but keep other exterior lights on, turn the exterior lamp control to the parking lamp position. In this position, the parking lamps, sidemarker lamps, taillamps, license plate lamps and instrument panel lights are on, but the headlamps are off.

To turn on the headlamps along with the other lamps when it is dark outside, turn the exterior lamp control to the AUTO or headlamp position.

This feature will not work for Canadian vehicles.

Delayed Headlamps

The delayed headlamps feature keeps the headlamps on for 20 seconds after the key is turned to LOCK/OFF, then the headlamps automatically turn off.

To override the 20 second delayed headlamp feature while it is active turn the turn signal/multifunction lever up one position and then back to AUTO.

Daytime Running Lamps (DRL)

Daytime Running Lamps (DRL) can make it easier for others to see the front of your vehicle during the day. DRL are helpful in many different driving conditions, but they can be especially helpful in the short periods after dawn and before sunset. Fully functional DRL are required on all vehicles first sold in Canada. The vehicle has a light sensor on top of the instrument panel that controls the DRL. Make sure it is not covered, or the head lamps will be on when they are not needed.

Downloaded from www.Manualslib.com manuals search engine

The DRL system makes the low-beam headlamps come on at a reduced brightness when the following conditions are met:

- The ignition is on.
- The exterior lamps control is in AUTO.
- The exterior lamps control is in the parking lamps only position (This applies only to vehicles that are first sold in Canada).
- The light sensor detects daytime light.
- The parking brake is released or the vehicle is not in PARK.

When the DRL system is on, the taillamps, sidemarker lamps, parking lamps, and instrument panel lights are not on unless you turn the exterior lamps control to the parking lamp position.

As with any vehicle, you should turn on the regular headlamp system when they are needed.

Automatic Headlamp System

When it is dark enough outside, the automatic headlamp system turns on the headlamps at the normal brightness along with other lamps such as the taillamps, sidemarker, parking lamps, and the instrument panel lights. The radio lights will also be dim.

Your vehicle has a light sensor on top of the instrument panel that controls the automatic headlamp system. Make sure it is not covered or the automatic headlamp system will be on when it is not needed.

There is a delay in the transition between the daytime and nighttime operation of the DRL and the automatic headlamp systems so that driving under bridges or bright overhead street lights does not affect the system. The DRL and automatic headlamp systems will only be affected when the light sensor sees a change in lighting lasting longer than this delay.

If you start your vehicle in a dark garage, the automatic headlamp system comes on immediately. Once you leave the garage, it takes about one minute for the automatic headlamp system to change to DRL if it is light outside. During that delay, the instrument panel cluster may not be as bright as usual. Make sure the instrument panel brightness control is in the full bright position. See “Instrument Panel Brightness Control” under *Instrument Panel Brightness on page 3-16*.

To idle your vehicle with the automatic headlamp system off, turn the ignition on and set the exterior light switch to the off/on position. For Canadian vehicles, the transmission must stay in PARK (P) for this function.

As with any vehicle, you should turn on the regular headlamps when they are needed.

Downloaded from www.Manualslib.com manuals search engine

Fog Lamps

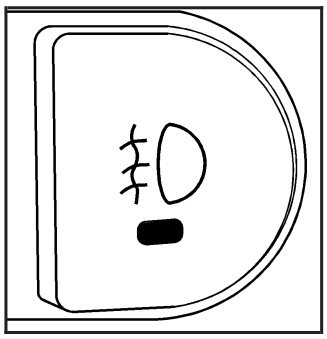

If your vehicle has fog lamps, the fog lamp button is located on the instrument panel, to the left of the steering wheel.

The ignition must be on for the fog lamps to work.

Push the button to turn the fog lamps on. An indicator light in the button will glow when the fog lamps are on. Push the button again to turn the fog lamps off.

The parking lamps automatically turn on and off when the fog lamps are turned on and off.

The fog lamps turn off while the high-beam headlamps are turned on.

Some localities have laws that require the headlamps to be on along with the fog lamps.

Instrument Panel Brightness

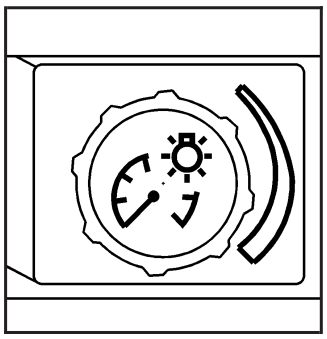

The control for this feature is located on the instrument panel to the left of the steering wheel.

Turn the knob clockwise or counterclockwise to brighten or dim the lights.

Courtesy Lamps

If your vehicle has a retractable hardtop, it has courtesy lamps in the rear passenger area of the vehicle. These lamps make it easier to see while entering and exiting the vehicle. These lamps come on when any door is opened and only turn off when all the doors are closed.

Downloaded from www.Manualslib.com manuals search engine

Dome Lamp

If the vehicle has a dome lamp with a switch, the following are the settings.

(Off): Move the lever to this position to turn the lamp off, even when a door is open.

(Door): Move the lever to this position so that the lamp comes on when a door is opened.

(On): Move the lever to this position to turn the dome lamp on.

Entry/Exit Lighting

The lamps inside the vehicle come on when any door is opened. These lamps fade out about 20 seconds after all of the doors have been closed or when the ignition is turned to ON/RUN. They also come on when the unlock symbol button or the horn symbol is pressed on the Remote Keyless Entry (RKE) system transmitter.

The lamps inside the vehicle stay on for about 20 seconds after the key is removed from the ignition to provide light as you exit.

Parade Dimming

The instrument panel has an added feature called parade mode. It automatically prohibits the dimming of the instrument panel displays during the daylight while the headlamps are on so that you will still be able to see the displays.

Overhead Console Reading Lamps

The vehicle may have reading lamps on the overhead console. These lamps come on when the doors are opened if the lamp switch is not in the OFF position. Press the side of each lamp to turn them on and off, while the doors are closed.

Trunk Lamp

The trunk lamp comes on when the trunk is opened and turns off when the trunk is closed.

Downloaded from www.Manualslib.com manuals search engine

Battery Run-Down Protection

Your vehicle has a battery run-down feature designed to protect the vehicle's battery.

When any interior lamp (trunk, reading lamps, or dome lamp) is left on when the ignition is turned off, the battery run-down protection system automatically shuts the lamp off after 20 minutes. This prevents draining of the battery.

To reactivate the interior lamps, do one of the following:

- Open any door.
- Press any Remote Keyless Entry (RKE) transmitter button.
- Press the power door lock switch.
- Press the remote trunk release.
- Turn the lamp that was left on to off and then to on again.

Accessory Power Outlet(s)

Accessory power outlets can be used to connect auxiliary electrical equipment, such as a cellular telephone or CB radio.

There are two accessory power outlets, located on the center console below the climate controls. If the vehicle has a Traction Control System (TCS), one accessory power outlet is in the center storage console and the other is on the center console below the climate controls.

To use an outlet, remove the protective cap. When not in use, always cover the outlet with the protective cap. The accessory power outlet is operational at all times.

Notice: **If electrical devices are left plugged into a power outlet, the battery may drain causing your vehicle not to start or damage to the battery. This would not be covered by the warranty. Always unplug all electrical devices when turning off your vehicle.**

Certain electrical accessories are not compatible with the accessory power outlet and could result in blown vehicle or adapter fuses. If you experience a problem, see your dealer/retailer for additional information on the accessory power outlet.

Notice: **Adding any electrical equipment to your vehicle may damage it or keep other components from working as they should. The repairs would not be covered by your warranty. Do not use equipment exceeding maximum amperage rating of 20 amperes. Check with your dealer/retailer before adding electrical equipment.**

Downloaded from www.Manualslib.com manuals search engine

When adding electrical equipment, be sure to follow the proper installation instructions included with the equipment.

Notice: **Improper use of the power outlet can cause damage not covered by your warranty. Do not hang any type of accessory or accessory bracket from the plug because the power outlets are designed for accessory power plugs only.**

Climate Controls

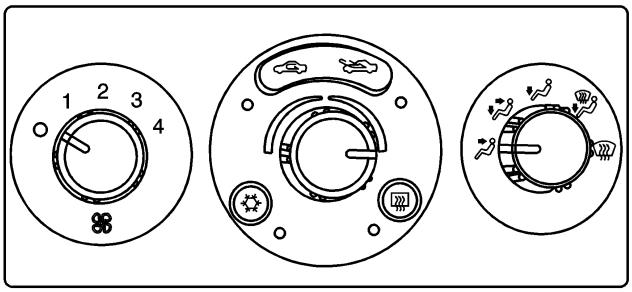

Climate Control System

The heating, cooling, and ventilation for your vehicle can be controlled with this system. If your vehicle has the remote start feature, the climate control system functions as part of the remote start feature. See *Remote Keyless Entry (RKE) System Operation on page 2-4*.

Operation

(Fan): Turn the left knob clockwise or counterclockwise to increase or decrease the fan speed. The fan must be on to run the air conditioning compressor.

To change the air delivery settings, turn the right knob to select one of the following:

(Vent): Turn the knob to this mode to direct air to the instrument panel outlets.

(Bi-Level): Turn the knob to this mode to direct half of the air to the instrument panel outlets, and the remaining air to the floor outlets. Some air may be directed toward the side windows.

Downloaded from www.Manualslib.com manuals search engine

(Floor): Turn the knob to this mode to direct most of the air to the floor outlets with some air directed to the side window outlets and windshield.

(Outside Air): Press the right side of this button to turn the outside air mode on. When this mode is selected, air from outside the vehicle circulates throughout your vehicle. An indicator light comes on to show that it is activated. The outside air mode can be used with all modes, but it cannot be used with the recirculation mode. Press this button again to cancel the recirculation mode.

(Recirculation): Press the left side of the button to turn the recirculation mode on. The air inside the vehicle is recirculated through the climate control system and throughout the vehicle, not from outside. This mode is helpful when you are trying to limit odors from entering the vehicle and for maximum air conditioning performance in hot weather. An indicator light above the button comes on to show that it is activated. The indicator light will blink three times if you try to use recirculation in a mode that it can not be used in. Use this mode only when it is needed for comfort, since window fogging occurs if the air conditioning compressor is not engaged.

Press this button to cancel the outside air mode. When you switch to the defog or defrost modes the system automatically moves from recirculation to outside air. When the vehicle or fan is turned off and back on, the system automatically defaults to outside air. Only use recirculation mode when it is needed for comfort, since window fogging can occur.

Temperature Control: Turn the center knob clockwise or counterclockwise to increase or decrease the temperature inside the vehicle.

When it is cold outside 0°F (–18°C) or lower, use the engine coolant heater, if the vehicle has one, to quickly provide warmer air. An engine coolant heater warms coolant that the engine uses to warm the inside of the vehicle. For more information, see *Engine Coolant Heater on page 2-25*.

(Air Conditioning): Press this button to turn the air conditioning system on or off. An indicator light comes on to indicate that the air conditioning is activated.

The air conditioning system removes moisture from the air, so sometimes a small amount of water drips underneath the vehicle while it is idling or after the engine is turned off. This is normal.

Downloaded from www.Manualslib.com manuals search engine

Maximum Air Conditioning

On hot days, open the windows to let hot inside air escape; then close them. This helps to reduce the time it takes for the vehicle to cool down. It also helps the system to operate more efficiently.

For quick cool down on hot days, do the following:

1. Select the vent mode.
2. Select the highest fan speed.
3. Select air conditioning.
4. Select the recirculation mode.
5. Select the coolest temperature.

Using these settings together for long periods of time can cause the air inside of the vehicle to become too dry. To prevent this from happening, after the air in the vehicle has cooled, turn the recirculation mode off.

If your vehicle has the remote start feature, it will turn on using the last settings selected on the climate control before the vehicle was turned off.

The fan and air delivery knobs can be used during remote start. The buttons will not work until the ignition is turned on by the key.

The climate control system changes back to manual operation when the vehicle key is turned to ON/RUN.

Defogging and Defrosting

Fog on the inside of windows is a result of high humidity (moisture) condensing on the cool window glass. This can be minimized if the climate control system is used properly. There are two modes to choose from to clear fog or frost from your windshield. Use the defog mode to clear the windows of fog or moisture and warm the passengers. Use the defrost mode to remove fog or frost from the windshield more quickly.

Turn the right knob to select the defog or defrost mode.

(Defog): Turn the knob to this setting to direct the air between the windshield and the floor outlets with a small amount directed to the side windows. This mode automatically turns off recirculation. The air conditioning compressor runs unless the outside temperature is at or below freezing. The air conditioning compressor operates although the indicator light is not on. The air conditioning indicator light turns off when defog is selected. If the air conditioning button is pressed while in defog mode, the indicator light turns on. If the button is pressed again, the light turns off. The recirculation mode cannot be selected while in the defog mode. Do not drive the vehicle until all the windows are clear.

Downloaded from www.Manualslib.com manuals search engine

(Defrost): Turn the knob to this setting to direct most of the air to the windshield with some air directed to the floor vents. In this mode, the system automatically forces outside air into the vehicle. The air conditioning compressor runs unless the outside temperature is at or below freezing. The air conditioning compressor operates although the indicator light is not on. The air conditioning indicator light turns off when defrost is selected. If the air conditioning button is pressed while in defrost mode, the indicator light turns on. If the button is pressed again, the light turns off. Recirculation cannot be selected while in the defrost mode.

To help clear the windshield quickly, do the following:

1. Select the defrost mode.
2. Select the highest temperature.
3. Select the highest fan speed.

Rear Window Defogger

The rear window defogger uses a warming grid to remove fog or frost from the rear window.

REAR: Press this button to turn the rear window defogger on or off. An indicator light comes on to indicate that the rear window defogger is on. Be sure to clear as much snow as possible from the rear window.

If driving below 50 mph (80 km/h), the rear window defogger turns off about 15 minutes after the button is pressed. If turned on again, the defogger only runs for about seven and one-half minutes before turning off. The defogger can also be turned off by pressing the button again or by turning off the engine.

If your vehicle's speed is maintained above 50 mph (80 km/h), the rear window defogger remains on once the button is pressed.

If your vehicle has the remote start feature, the rear defogger automatically turns on if it is cold outside. When the vehicle transitions out of the remote start mode, the rear defogger turns off. See *Remote Keyless Entry (RKE) System Operation on page 2-4*.

Notice: **Do not use anything sharp on the inside of the rear window. If you do, you could cut or damage the warming grid, and the repairs would not be covered by your warranty. Do not attach a temporary vehicle license, tape, a decal or anything similar to the defogger grid.**

Downloaded from www.Manualslib.com manuals search engine

Automatic Climate Control System

If your vehicle has this system, the heating, cooling, and ventilation can be automatically controlled in your vehicle.

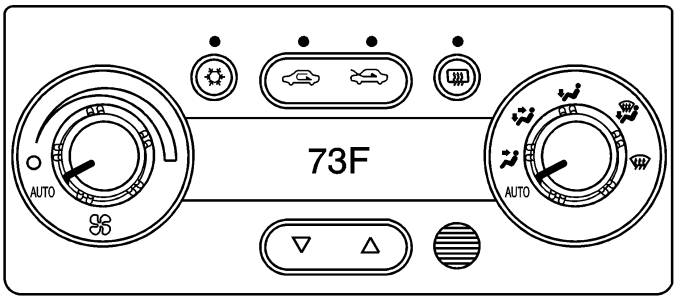

Automatic Operation

AUTO (Automatic): Select AUTO on both the fan speed control and the air delivery mode control knobs to activate the automatic system. Automatic operation controls the inside temperature and air delivery.

Use the steps below to place the climate control system in automatic mode:

1. Turn the fan knob and the mode knob to AUTO.

   The display shows the current set temperature. When auto is selected, the air conditioning operation and air inlet is automatically controlled. The air conditioning compressor runs when the outside temperature is over about 40°F (4°C). The air inlet is normally set to outside air. If it is hot outside, the air inlet can automatically switch to recirculate inside air to help quickly cool down your vehicle.

2. Set the temperature.

   To find your comfort setting, start with an initial temperature setting and allow about 20 minutes for the system to regulate. Press the up or down arrow temperature buttons to adjust the temperature setting as necessary. If you choose the temperature setting of 60°F (15°C) the system remains at the maximum cooling setting. If you choose the temperature setting of 90°F (32°C) the system remains at the maximum heat setting. Choosing either maximum setting will not cause the vehicle to heat or cool faster.

   Be careful not to cover the sensor located on the top of the instrument panel near the windshield. This sensor regulates air temperature based on sun load, and also turns on your headlamps.

   Also be careful not to cover the sensor grille on the lower right side of the climate control faceplate. This senses the inside vehicle temperature needed for proper regulation.

Downloaded from www.Manualslib.com manuals search engine

To avoid blowing cold air at start-up in cold weather, the system delays turning on the fan until warm air is available. The length of delay depends on the engine coolant temperature. Turning the fan knob overrides this delay and change the fan to a selected speed.

If your vehicle has the remote start feature, the climate control display initially shows “AS” in place of the temperature to indicate the remote start has been activated. The remote start system turns on using the last temperature selected before the vehicle was last turned off.

For best performance, turn the fan and mode knobs to the AUTO position. The fan speed and air delivery modes will change to achieve the best comfort.

If the outside air temperature is below 45°F and the air delivery mode knob is set to AUTO, the automatic climate control system starts in the defrost mode to clear the window.

The automatic climate control changes back to manual operation by turning the vehicle on with the key.

Manual Operation

The air delivery mode or fan speed can be manually adjusted.

(Off): Select this position on the fan knob to turn off the entire climate control system. Outside air still enters the vehicle, and is directed to the floor. This direction can be changed by changing the mode position. The temperature can also be adjusted using either the up or down arrow temperature buttons.

(Fan): Turn the knob with the fan symbol to manually adjust the fan speed.

(Vent): Turn the knob to this position to direct air to the instrument panel outlets.

(Bi-Level): Turn the knob to this position to direct half of the air to the instrument panel outlets, and the remaining air to the floor outlets.

(Floor): Turn the knob to this position to direct most of the air to the floor outlets with some air directed to the side window outlets and windshield.

The right knob can also be used to select defog or defrost modes. See Defogging and Defrosting later in this section.

(Outside Air): Press the right side of this button to turn the outside air mode on. Air from outside the vehicle circulates throughout your vehicle. An indicator light comes on to show that it is activated. The outside air mode can be used with all modes, but it cannot be used with the recirculation mode. Press this button to cancel the recirculation mode.

Downloaded from www.Manualslib.com manuals search engine

(Recirculation): Press the left side of the button to turn the recirculation mode on. The air inside the vehicle is recirculated through the climate control system and throughout the vehicle, not from outside. This mode is helpful when you are trying to limit odors from entering your vehicle and for maximum air conditioning performance in hot weather. An indicator light above the button comes on to show that it is activated. If recirculation is selected while in defrost, defog, or floor, the light on the button flashes three times and goes out to let you know this is not allowed. Use this mode only when it is needed for comfort, since window fogging occurs if the air conditioning compressor is not engaged.

Press this button to cancel the auto recirculation feature. Each time the vehicle is started, the system reverts to the auto recirculation function.

When the weather is cool or damp, operating the system in recirculation for extended periods of time can cause fogging of the vehicle's windows. To clear the fog, select either defog or defrost. Make sure the air conditioning is on.

Temperature Control: Press the up and down arrows to increase or decrease the temperature inside the vehicle.

(Air Conditioning): Press this button to turn the air conditioning compressor on and off. A light above the button comes on while the air conditioning is on.

When air conditioning is selected or in AUTO mode, the system runs the air conditioning automatically to cool and dehumidify the air entering the vehicle.

On hot days, open the windows long enough to let hot inside air escape. This reduces the time it takes for the vehicle to cool down. Then keep the windows closed for the air conditioner to work its best.

On cool, but sunny days while using manual operation of the automatic system, use bi-level to deliver warm air to the floor and cooler air to the instrument panel outlets. To warm or cool the air, press the temperature buttons to the desired setting.

In AUTO mode the system cools and dehumidifies the air inside the vehicle. Also, the system maximizes its performance by using recirculation as necessary.

Heating: On cold days when using manual operation of the automatic system, choose floor mode to deliver air to the floor outlets. To warm or cool the air delivered, push the temperature buttons to the desired setting.

To use the automatic mode, turn the knob to AUTO and adjust the temperature by pressing the temperature buttons.

Downloaded from www.Manualslib.com manuals search engine

Defogging and Defrosting

Use either the defog or front defrost to clear fog or frost from the windshield.

(Defog): Turn the mode knob to this position to clear the windows of fog or moisture. This setting delivers air to the floor and windshield outlets.

(Defrost): Turn the mode knob to this position to defrost the windshield. The system automatically controls the fan speed if AUTO mode is selected. If the outside temperature is 40°F (4°C) or warmer, the air conditioning compressor automatically runs to help dehumidify the air and dry the windshield. The air conditioning indicator light blinks three times if you try to turn off the compressor while in this mode.

Rear Window Defogger

The rear window defogger uses a warming grid to remove fog from the rear window.

(Rear): Press this button to turn the rear window defogger on or off. An indicator light above the button comes on to indicate that the rear window defogger is activated.

If driving below 50 mph (80 km/h), the rear window defogger turns off about 15 minutes after the button is pressed. If turned on again, the defogger will only run for about seven and one-half minutes before turning off.

If your vehicle's speed is maintained above 50 mph (80 km/h), the rear window defogger remains on once the button is pressed.

If your vehicle has the remote start feature, the rear defogger automatically turns on if it is cold outside, but the indicator light does not come on. When the vehicle transitions out of remote start mode the rear defogger turns off.

Notice: **Do not use a razor blade or sharp object to clear the inside rear window. Do not adhere anything to the defogger grid lines in the rear glass. These actions may damage the rear defogger. Repairs would not be covered by your warranty.**

Outlet Adjustment

Rotate the instrument panel outlets and move the louvers on the outlets to change the direction and amount of airflow in your vehicle.

Downloaded from www.Manualslib.com manuals search engine

Operation Tips

- Clear away any ice, snow or leaves from the air inlets at the base of the windshield that can block the flow of air into your vehicle.
- Use of non-GM approved hood deflectors can adversely affect the performance of the system.
- Keep the path under the front seats clear of objects to help circulate the air inside of your vehicle more effectively.
- When an objectionable odor outside the vehicle is encountered, use the recirculation mode, with the temperature knob at a comfortable setting to prevent the odor from entering the vehicle through the ventilation system. This can be helpful when driving through a long tunnel with poor ventilation. However, extended usage of this mode in cold or cool weather can cause window fogging.

Warning Lights, Gages, and Indicators

This section describes the warning lights and gages on your vehicle.

Warning lights and gages can signal that something is wrong before it becomes serious enough to cause an expensive repair or replacement. Paying attention to the warning lights and gages could also save you or others from injury.

Warning lights come on when there may be or is a problem with one of your vehicle's functions. As the details show on the next few pages, some warning lights come on briefly when you start the engine just to let you know they are working. If you are familiar with this section, you should not be alarmed when this happens.

Gages can indicate when there may be or is a problem with one of your vehicle's functions. Often gages and warning lights work together to let you know when there is a problem with your vehicle.

When one of the warning lights comes on and stays on as you are driving, or when one of the gages shows there may be a problem, check the section that tells you what to do about it. Please follow this manual's advice. Waiting to do repairs can be costly and even dangerous. So get to know your vehicle's warning lights and gages. They can be a big help.

Downloaded from www.Manualslib.com manuals search engine

Instrument Panel Cluster

The instrument panel cluster is designed to let you know at a glance how your vehicle is running. You will know how fast you are going, how much fuel you have, and many other things you will need to drive safely and economically.

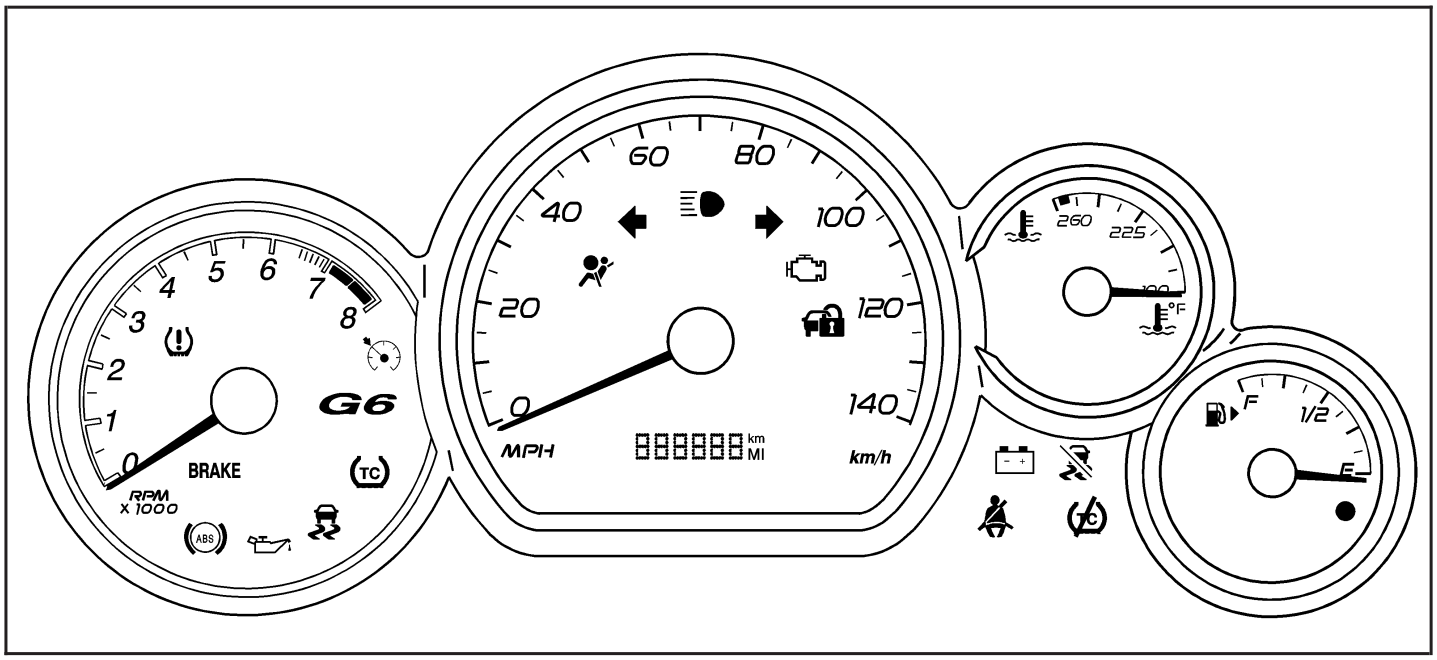

United States 2.4L and 3.6L Engines shown, Canada, 3.5L and 3.9L Engines similar

Downloaded from www.Manualslib.com manuals search engine

Speedometer and Odometer

The speedometer lets you see your speed in both miles per hour (mph) and kilometers per hour (km/h).

The odometer shows how far your vehicle has been driven, in either miles (used in the United States) or kilometers (used in Canada).

When in manual shift mode, the odometer will change from the vehicle's mileage to the letter M, for manual mode, and a number indicating the requested gear range when moving the shift lever forward or rearward. For more information see *Automatic Transmission Operation on page 2-27*.

Your vehicle has a tamper resistant odometer.

Repair or replacement of your instrument panel cluster should only be performed by your dealer/retailer.

Trip Odometer

The trip odometer can display how far you have driven since you last reset it.

For more information see *DIC Operation and Displays on page 3-43*.

Tachometer

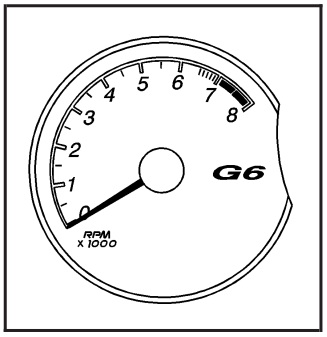

2.4L and 3.6L Engine shown, 3.5L and 3.9L Engine similar

The tachometer shows your engine speed in revolutions per minute (rpm).

Notice: **If you operate the engine with the tachometer in the shaded warning area, your vehicle could be damaged, and the damages would not be covered by your warranty. Do not operate the engine with the tachometer in the shaded warning area.**

Downloaded from www.Manualslib.com manuals search engine

Safety Belt Reminders

Safety Belt Reminder Light

When the engine is started, a chime will come on for several seconds to remind people to fasten their safety belts, unless the driver's safety belt is already buckled.

The safety belt light will also come on and stay on for several seconds, then it will flash for several more.

This chime and light is repeated if the driver remains unbuckled and the vehicle is in motion. If the driver's belt is already buckled, neither the chime nor the light will come on.

Passenger Safety Belt Reminder Light

Several seconds after the engine is started, a chime will sound for several seconds to remind the front passenger to buckle their safety belt. This would only occur if the passenger airbag is enabled. See *Passenger Sensing System on page 1-68* for more information.

The passenger safety belt light, located on the instrument panel, will come on and stay on for several seconds and then flash for several more.

This chime and light are repeated if the passenger remains unbuckled and the vehicle is in motion.

If the passenger's safety belt is buckled, neither the chime nor the light will come on.

Airbag Readiness Light

There is an airbag readiness light on the instrument panel cluster, which shows the airbag symbol. The system checks the airbag's electrical system for malfunctions. The light tells you if there is an electrical problem. The system check includes the airbag sensor, the pretensioners, the airbag modules, the wiring and the crash sensing and diagnostic module. For more information on the airbag system, see *Airbag System on page 1-59*.

Downloaded from www.Manualslib.com manuals search engine

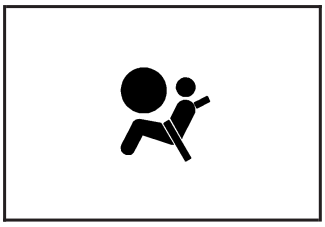

This light will come on when you start your vehicle, and it will flash for a few seconds. The light should go out and the system is ready.

If the airbag readiness light stays on after you start the vehicle or comes on when you are driving, your airbag system may not work properly. Have your vehicle serviced right away.

⚠ CAUTION:

If the airbag readiness light stays on after you start your vehicle, it means the airbag system may not be working properly. The airbags in your vehicle may not inflate in a crash, or they could even inflate without a crash. To help avoid injury to yourself or others, have your vehicle serviced right away if the airbag readiness light stays on after you start your vehicle.

The airbag readiness light should flash for a few seconds when you start the engine. If the light does not come on then, have it fixed immediately. If there is a problem with the airbag system, an airbag Driver Information Center (DIC) message may also come on. See *DIC Warnings and Messages on page 3-46* for more information.

Passenger Airbag Status Indicator

Your vehicle has the passenger sensing system. Your instrument panel has a passenger airbag status indicator.

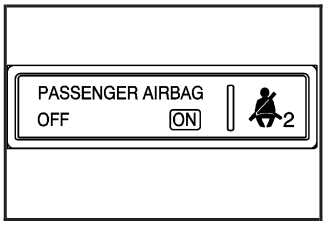

United States

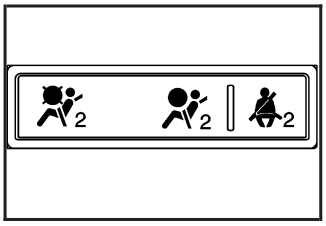

Canada

When you start the vehicle, the passenger airbag status indicator will light ON and OFF, or the symbol for on and off, for several seconds as a system check. If you use remote start to start your vehicle from a distance, if equipped, you may not see the system check.

Downloaded from www.Manualslib.com manuals search engine

Then, after several more seconds, the status indicator will light either ON or OFF, or either the on or off symbol to let you know the status of the right front passenger's frontal airbag.

If the word ON or the on symbol is lit on the passenger airbag status indicator, it means that the right front passenger's frontal airbag is enabled (may inflate).

⚠ CAUTION:

If the on indicator comes on when you have a rear-facing child restraint installed in the right front passenger's seat, it means that the passenger sensing system has not turned off the passenger's frontal airbag. A child in a rear-facing child restraint can be seriously injured or killed if the right front passenger's airbag inflates. This is because the back of the rear-facing child restraint would be very close to the inflating airbag. Do not use a rear-facing child restraint in the right front passenger's seat if the airbag is turned on.

⚠ CAUTION:

Even though the passenger sensing system is designed to turn off the right front passenger's frontal airbag if the system detects a rear-facing child restraint, no system is fail-safe, and no one can guarantee that an airbag will not deploy under some unusual circumstance, even though it is turned off. We recommend that rear-facing child restraints be secured in the rear seat, even if the airbag is off.

If the word OFF or the off symbol is lit on the airbag status indicator, it means that the passenger sensing system has turned off the right front passenger's frontal airbag. See *Passenger Sensing System on page 1-68* for more on this, including important safety information.

Downloaded from www.Manualslib.com manuals search engine

If, after several seconds, both status indicator lights remain on, or if there are no lights at all, there may be a problem with the lights or the passenger sensing system. See your dealer/retailer for service.

⚠ CAUTION:

If the airbag readiness light in the instrument panel cluster ever comes on and stays on, it means that something may be wrong with the airbag system. If this ever happens, have the vehicle serviced promptly, because an adult-size person sitting in the right front passenger's seat may not have the protection of the airbag(s). See *Airbag Readiness Light on page 3-30* for more on this, including important safety information.

Charging System Light

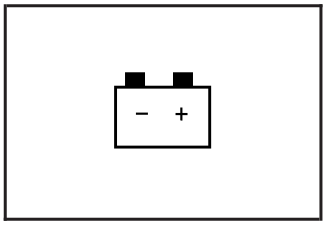

This light will come on briefly when you turn on the ignition, but the engine is not running, as a check to show you it is working.

It should go out once the engine is running. If it stays on, or comes on while you are driving, you may have a problem with the charging system. A charging system Driver Information Center (DIC) message may also appear. See *DIC Warnings and Messages on page 3-46* for more information. This light could indicate that you have problems with a generator drive belt, or another electrical problem. Have it checked right away. If you must drive a short distance with the light on, be certain to turn off all your accessories, such as the radio and air conditioner.

Downloaded from www.Manualslib.com manuals search engine

Brake System Warning Light

Your vehicle's hydraulic brake system is divided into two parts. If one part is not working, the other part can still work and stop you. For good braking, though, you need both parts working well.

If the warning light comes on, there is a brake problem. Have your brake system inspected right away.

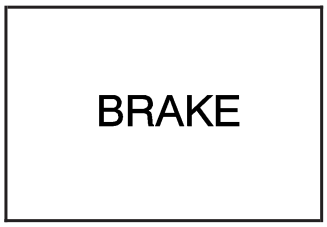

United States

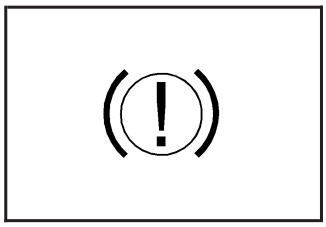

Canada

This light should come on briefly when you start the engine. If it does not come on then, have it fixed so it will be ready to warn you if there is a problem.

When the ignition is on, the brake system warning light will also come on when you set your parking brake. The light will stay on if your parking brake does not release fully. If it stays on after your parking brake is fully released, it means you have a brake problem.

If the light comes on while you are driving, pull off the road and stop carefully. You may notice that the pedal is harder to push, or the pedal may go closer to the floor. It may take longer to stop. If the light is still on, have the vehicle towed for service. See *Towing Your Vehicle on page 4-25*.

⚠ CAUTION:

Your brake system may not be working properly if the brake system warning light is on. Driving with the brake system warning light on can lead to an accident. If the light is still on after you have pulled off the road and stopped carefully, have the vehicle towed for service.

Downloaded from www.Manualslib.com manuals search engine

Antilock Brake System Warning Light

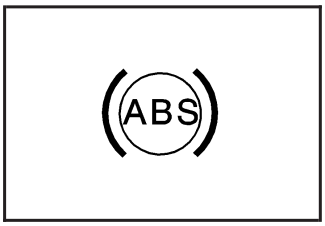

For vehicles with the Antilock Brake System (ABS), this light will come on briefly when you start the engine.

That is normal. If the light does not come on then, have it fixed so it will be ready to warn you if there is a problem.

If the ABS light stays on, turn the ignition off, if the light comes on when you are driving, stop as soon as it is safely possible and turn the ignition off. Then start the engine again to reset the system. If the ABS light still stays on, or comes on again while you are driving, your vehicle needs service. If the regular brake system warning light is not on, you still have brakes, but you do not have antilock brakes. If the regular brake system warning light is also on, you do not have antilock brakes and there is a problem with your regular brakes. See *Brake System Warning Light on page 3-34.*

For vehicles with a Driver Information Center (DIC), see *DIC Warnings and Messages on page 3-46* for all brake related DIC messages.

Traction Control System (TCS) Warning Light

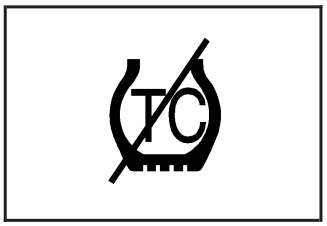

If the traction control warning light comes on and stays on, there may be a problem with the traction control system.

See *Traction Control System (TCS) on page 4-5* for more information.

Downloaded from www.Manualslib.com manuals search engine

Traction Control System (TCS) Active Light

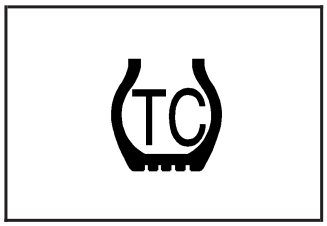

This light will appear when the traction control system is limiting wheel spin. You may feel or hear the system working, but this is normal.

Slippery road conditions may exist if this light appears, so adjust your driving accordingly. The light will stay on for a few seconds after the traction control system stops limiting wheel spin. See *Traction Control System (TCS) on page 4-5* for more information.

StabiliTrak® Not Ready Light

If your vehicle has the StabiliTrak® system, this light will come on if there is a problem detected with the StabiliTrak® system.

This light will also come on when the StabiliTrak® system has been turned off.

For more information, see *StabiliTrak® System on page 4-6*.

StabiliTrak® Indicator Light

If your vehicle has the StabiliTrak® system, this light will come on when the StabiliTrak® system is activated.

For more information, see *StabiliTrak® System on page 4-6*.

Downloaded from www.Manualslib.com manuals search engine

Engine Coolant Temperature Gage

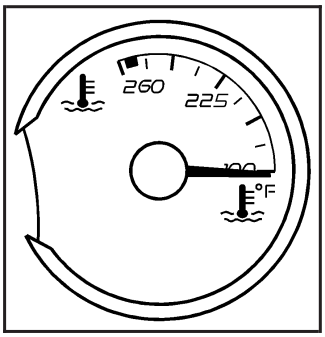

United States

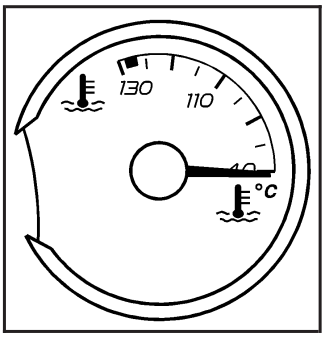

Canada

This gage shows the engine coolant temperature. If the gage pointer moves into the red area, the light comes on and you hear a chime, the engine is too hot! It means that your engine coolant has overheated. See *Engine Overheating on page 5-33*.

Tire Pressure Light

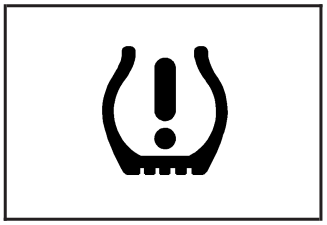

Your vehicle has a tire pressure light.

This light comes on briefly when the engine is started and provides information about tire pressures and the Tire Pressure Monitoring System.

When the Light is Solid

This indicates that one or more of your tires are significantly underinflated.

A tire pressure message in the Driver Information Center (DIC), may accompany the light. See *DIC Warnings and Messages on page 3-46* for more information. Stop and check your tires as soon as it is safe to do so. If underinflated, inflate to the proper pressure. See *Tires on page 5-60* for more information.

Downloaded from www.Manualslib.com manuals search engine

When the Light Flashes First and Then is Solid

This indicates that there may be a problem with the Tire Pressure Monitor System. The light will flash for about a minute and then stay on solid for the remainder of the ignition cycle. This sequence will repeat with every ignition cycle. See *Tire Pressure Monitor System on page 5-70* for more information.

Malfunction Indicator Lamp

Check Engine Light

A computer system called OBD II (On-Board Diagnostics-Second Generation) monitors operation of the fuel, ignition, and emission control systems. It makes sure that emissions are at acceptable levels for the life of the vehicle, helping to produce a cleaner environment.

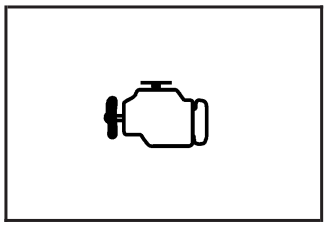

The check engine light comes on to indicate that there is an OBD II problem and service is required.

Malfunctions often are indicated by the system before any problem is apparent. This can prevent more serious damage to your vehicle. This system is also designed to assist your service technician in correctly diagnosing any malfunction.

Notice: **If you keep driving your vehicle with this light on, after a while, the emission controls might not work as well, your vehicle's fuel economy might not be as good, and the engine might not run as smoothly. This could lead to costly repairs that might not be covered by your warranty.**

Notice: **Modifications made to the engine, transmission, exhaust, intake, or fuel system of your vehicle or the replacement of the original tires with other than those of the same Tire Performance Criteria (TPC) can affect your vehicle's emission controls and can cause this light to come on. Modifications to these systems could lead to costly repairs not covered by your warranty. This could also result in a failure to pass a required Emission Inspection/Maintenance test. See *Accessories and Modifications on page 5-4*.**

Downloaded from www.Manualslib.com manuals search engine

This light comes on, as a check to show it is working, when the ignition is turned ON/RUN but the engine is not running. If the light does not come on, have it repaired. This light also comes on during a malfunction in one of two ways:

- **Light Flashing** — A misfire condition has been detected. A misfire increases vehicle emissions and could damage the emission control system on your vehicle. Diagnosis and service might be required.
- **Light On Steady** — An emission control system malfunction has been detected on your vehicle. Diagnosis and service might be required.

If the Light is Flashing

The following can prevent more serious damage to your vehicle:

- Reduce vehicle speed.
- Avoid hard accelerations.
- Avoid steep uphill grades.
- If you are towing a trailer, reduce the amount of cargo being hauled as soon as it is possible.

If the light stops flashing and remains on steady, see “If the Light Is On Steady” following.

If the light continues to flash, when it is safe to do so, stop the vehicle. Find a safe place to park the vehicle. Turn the ignition off, wait at least 10 seconds, and restart the engine. If the light remains on steady, see “If the Light Is On Steady” following. If the light is still flashing, follow the previous steps and see your dealer/retailer for service as soon as possible.

If the Light Is On Steady

You might be able to correct the emission system malfunction by considering the following:

Did you recently put fuel into your vehicle?

If so, reinstall the fuel cap, making sure to fully install the cap. See *Filling the Tank on page 5-9*. The diagnostic system can determine if the fuel cap has been left off or improperly installed. A loose or missing fuel cap allows fuel to evaporate into the atmosphere. A few driving trips with the cap properly installed should turn the light off.

Did you just drive through a deep puddle of water?

If so, your vehicle’s electrical system might be wet. The condition is usually corrected when the electrical system dries out. A few driving trips should turn the light off.

Downloaded from www.Manualslib.com manuals search engine

Have you recently changed brands of fuel?

If so, be sure to fuel your vehicle with quality fuel. See *Gasoline Octane on page 5-6*. Poor fuel quality causes the engine not to run as efficiently as designed. You might notice this as stalling after start-up, stalling when you put the vehicle into gear, misfiring, hesitation on acceleration, or stumbling on acceleration — these conditions might go away once the engine is warmed up. This will be detected by the system and cause the light to turn on.

If you experience one or more of these conditions, change the fuel brand you use. It will require at least one full tank of the proper fuel to turn the light off.

If none of the above steps have made the light turn off, your dealer/retailer can check the vehicle. Your dealer/retailer has the proper test equipment and diagnostic tools to fix any mechanical or electrical problems that might have developed.

Emissions Inspection and Maintenance Programs

Some state/provincial and local governments have or might begin programs to inspect the emission control equipment on your vehicle. Failure to pass this inspection could prevent you from getting a vehicle registration.

Here are some things you need to know to help your vehicle pass an inspection:

Your vehicle will not pass this inspection if the check engine light is on or not working properly.

Your vehicle will not pass this inspection if the OBD (on-board diagnostic) system determines that critical emission control systems have not been completely diagnosed by the system. The vehicle would be considered not ready for inspection. This can happen if you have recently replaced the battery or if the battery has run down. The diagnostic system is designed to evaluate critical emission control systems during normal driving. This can take several days of routine driving. If you have done this and your vehicle still does not pass the inspection for lack of OBD system readiness, your dealer/retailer can prepare the vehicle for inspection.

Downloaded from www.Manualslib.com manuals search engine

Oil Pressure Light

⚠ CAUTION:

Do not keep driving if the oil pressure is low. If you do, your engine can become so hot that it catches fire. You or others could be burned. Check your oil as soon as possible and have your vehicle serviced.

Notice: **Lack of proper engine oil maintenance may damage the engine. The repairs would not be covered by your warranty. Always follow the maintenance schedule in this manual for changing engine oil.**

This light will come on briefly when you start your engine. If it does not, have your vehicle serviced.

When the light comes on and stays on, it means that oil is not flowing through your engine properly. You could be low on oil and you might have some other system problem.

Security Light

For information regarding this light and the vehicle's security system, see *Content Theft-Deterrent on page 2-18*.

Downloaded from www.Manualslib.com manuals search engine

Cruise Control Light

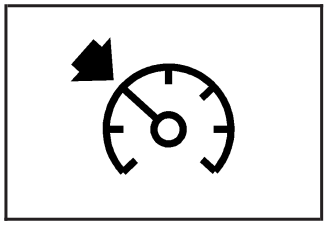

This light comes on whenever you set the cruise control.

The light goes out when the cruise control is turned off. See *Cruise Control on page 3-10* for more information.

Highbeam On Light

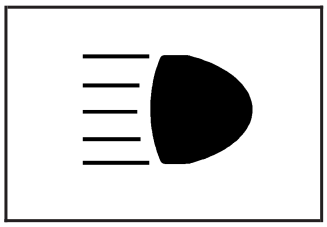

This light comes on when the high-beam headlamps are in use.

See *Headlamp High/Low-Beam Changer on page 3-8* for more information.

Fuel Gage

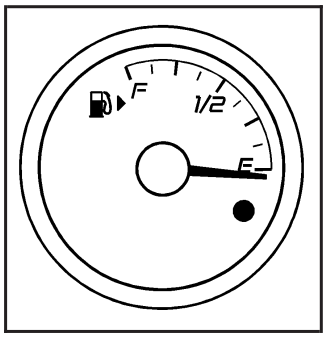

United States

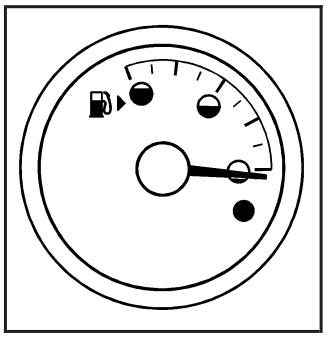

Canada

The fuel gage tells you about how much fuel you have left, when the ignition is on. See *Low Fuel Warning Light on page 3-42* for more information.

Low Fuel Warning Light

This light, on the fuel gage, comes on when the fuel tank is low on fuel. To turn if off, add fuel to the fuel tank.

Downloaded from www.Manualslib.com manuals search engine

Driver Information Center (DIC)

The Driver Information Center (DIC) provides the following:

- A way to personalize your vehicle
- Trip information
- Warning messages

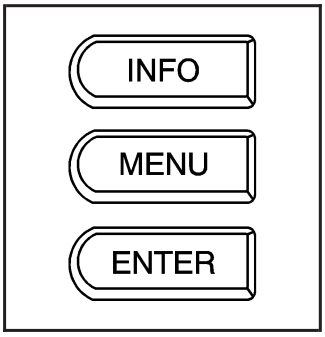

United States

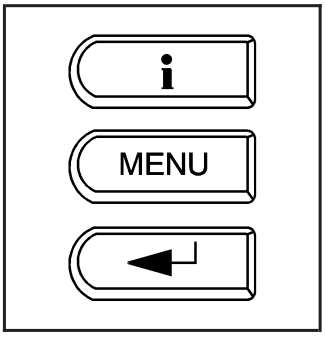

Canada

The buttons used to activate the DIC are located on the left side of the vehicle's audio system.

INFO/i (Information): Press this button to scroll through the vehicle information mode displays.

MENU: Press this button to enter and scroll through the menu mode.

ENTER/◄┘ (Enter): Press this button to select a menu option or to acknowledge a warning message.

The DIC messages will be read through your audio system display.

DIC Operation and Displays

The DIC comes on when the ignition is on. If your vehicle has the uplevel audio system, the time and outside temperature is shown on the first line of the display and the DIC information is shown on the second line of the display.

The DIC has different modes which can be accessed by pressing the DIC buttons. The button functions are detailed in the following section.

Information Modes

INFO/i (Information): Press this button to scroll through the vehicle information mode displays in the following order:

- TRIP A
- TRIP B
- FUEL RANGE (Fuel Range Until Empty)
- MPG (L/100 KM) AVG (Average Fuel Economy)

Downloaded from www.Manualslib.com manuals search engine

- MPG (L/100 KM) INST (Instantaneous Fuel Economy)
- AV SPEED (Average Vehicle Speed)
- OIL LIFE (Engine Oil Life System)
- Tire Pressure

TRIP A or TRIP B: Press the information button until TRIP A or TRIP B display. These modes show the current distance traveled since the last reset for each trip odometer in either miles (mi) or kilometers (km). Both odometers can be used at the same time.

To reset the trip odometer to zero, press and hold the enter button for a few seconds while the desired trip odometer is displayed.

FUEL RANGE: Press the information button until FUEL RANGE displays. This mode shows the remaining distance you can drive without refueling in either miles (mi) or kilometers (km). It is based on fuel economy and the fuel remaining in the tank.

When the fuel level is low, FUEL RANGE LOW displays.

The fuel economy data used to determine fuel range is an average of recent driving conditions. As your driving conditions change, this data is gradually updated. The FUEL RANGE mode cannot be reset.

MPG (L/100 KM) AVG (Average): Press the information button until MPG (L/100 KM) AVG displays. This mode shows how many miles per gallon (mpg) or liters per 100 kilometers (L/100 km) your vehicle is getting based on current and past driving conditions.

To reset the average fuel economy, press and hold the enter button while MPG (L/100 KM) AVG is displayed. Average fuel economy is then be calculated starting from that point. If the average fuel economy is not reset, it is continually updated each time you drive.

MPG (L/100 KM) INST (Instantaneous): Press the information button until MPG (L/100 KM) INST displays. This mode shows the current fuel economy at a particular moment and changes frequently as driving conditions change. This mode shows the instantaneous fuel economy in miles per gallon (mpg) or liters per 100 kilometers (L/100 km). Unlike average fuel economy, this screen cannot be reset.

AV (Average) SPEED: Press the information button until AV SPEED displays. This mode shows the vehicle's average speed in miles per hour (mph) or kilometers per hour (km/h).

To reset the average vehicle speed, press and hold the enter button while AV SPEED is displayed.

Downloaded from www.Manualslib.com manuals search engine

OIL LIFE: Press the information button until OIL LIFE displays. The engine oil life system shows an estimate of the oil's remaining useful life. It shows 100% when the system is reset after an oil change. It alerts you to change the oil on a schedule consistent with your driving conditions.

In addition to the engine oil life system monitoring the oil life, additional maintenance is recommended in the Maintenance Schedule in this manual. See *Scheduled Maintenance on page 6-4* and *Engine Oil on page 5-21*.

Always reset the engine oil life system after an oil change. See "How to Reset the Engine Oil Life System" under *Engine Oil Life System on page 5-24*.

Tire Pressure: The pressure for each tire can be viewed in the DIC. The tire pressure is shown in either pounds per square inch (psi) or kilopascals (kPa). Press the information button until LF ## PSI (kPa) ## RF displays for the front tires. Press the information button again until LR ## PSI (kPa) ## RR displays for the rear tires.

If a low tire pressure condition is detected by the system while driving, a message advising you to check the tire pressure appears in the display. See *Inflation - Tire Pressure on page 5-68* and *DIC Warnings and Messages on page 3-46* for more information.

Personalization

MENU: Press this button while the ignition is on to scroll through each of the personalization options in the following order. To avoid excessive drain on the battery, it is recommended that the headlamps are turned off. If the vehicle is moving faster than 2 mph (3 km/h), the personalization menu options are not available, except for the UNITS option. All of the personalization options may not be available on your vehicle. Only the options available display on the DIC.

- Oil Life Reset
- Units Selection (English/Metric)
- Tire Learn?, on vehicles without the Remote Keyless Entry (RKE) system
- Remote Start Capability
- Horn Chirp During Remote Keyless Entry Locking
- Horn Chirp During Remote Keyless Entry Unlocking
- Exterior Light Flash During Remote Keyless Entry Locking or Unlocking
- Delayed Locking
- Automatic Vehicle Unlocking: Specific Doors
- Automatic Vehicle Unlocking: When Key is Off or When Shift To Park

Downloaded from www.Manualslib.com manuals search engine

- Exterior Perimeter Lighting During Remote Keyless Entry Unlock
- Select Language: (English, French, Spanish or German)

When the desired option is reached, press the enter button to toggle between the modes of that option. To make a selection, press the MENU button again.

If no selection is made within 10 seconds, the display reverts back to the previous information displayed.

The MENU mode is exited when the information button is pressed, a 10 second time period has elapsed, the ignition is turned off, or the end of the MENU list is reached.

See *DIC Vehicle Personalization on page 3-50* for more information on the personalization options.

Enter

ENTER/◄┘(Enter): Press this button to reset certain functions and to turn off or acknowledge messages on the DIC display. This button also toggles through the options available in each personalization menu.

DIC Warnings and Messages

These messages appear if there is a problem detected in one of your vehicle's systems.

A message clears when the vehicle's condition is no longer present. To acknowledge a message and clear it from the display, press and hold any of the DIC buttons. If the condition is still present, the warning message comes back on the next time the vehicle is turned off and back on. With most messages, a warning chime sounds when the message displays. Your vehicle may have other warning messages.

AUTO (Automatic) LIGHTS OFF

This message displays if the automatic headlamp system is disabled with the headlamp switch.

AUTO (Automatic) LIGHTS ON

This message displays if the automatic headlamp system is enabled with the headlamp switch.

BRAKE FLUID

This message displays, while the ignition is on, when the brake fluid level is low. The brake system warning light on the instrument panel cluster also comes on. See *Brake System Warning Light on page 3-34* for more information. Have the brake system serviced by your dealer/retailer as soon as possible.

Downloaded from www.Manualslib.com manuals search engine

CHANGE OIL SOON

This message displays when the life of the engine oil has expired and it should be changed.

When this message is acknowledged and cleared from the display, the engine oil life system must still be reset separately. See *Engine Oil Life System on page 5-24*, *Engine Oil on page 5-21*, and *Scheduled Maintenance on page 6-4* for more information.

CHECK CARGO TOP

If your vehicle has a retractable hardtop, this message displays if the cargo divider is not in place when operating the retractable hardtop. Open the trunk and make sure the cargo divider is secure and no objects are on the divider. See *Trunk on page 2-13*, *Lowering the Retractable Hardtop on page 2-46*, and *Raising the Retractable Hardtop on page 2-49* for more information.

CHECK GAS CAP

This message displays if the fuel cap has not been fully tightened. Recheck the fuel cap to make sure that it is on properly. A few driving trips with the cap properly installed should turn the message off.

CHECK TIRE PRESS (Pressure)

This message displays when the pressure in one or more of the vehicle's tires needs to be checked. If a tire pressure message appears on the DIC, stop as soon as you can. Have the tire pressures checked and set to those shown on the Tire Loading Information label. See *Tires on page 5-60*, *Loading Your Vehicle on page 4-20*, and *Inflation - Tire Pressure on page 5-68*. The DIC also shows the tire pressure values. See *DIC Operation and Displays on page 3-43*. If the tire pressure is low, the low tire pressure warning light comes on. See *Tire Pressure Light on page 3-37*.

DOOR AJAR

This message displays if one or more of the vehicle's doors are not closed properly. Make sure that the door(s) are closed completely.

ENGINE DISABLED

This message displays if the starting of the engine is disabled. Have your vehicle serviced by your dealer/retailer immediately.

ENG (Engine) PWR (Power) REDUCED

This message displays to inform you that the vehicle has reduced engine power to avoid damaging the engine. Reduced engine power can affect the vehicle's ability to accelerate. If this message is on, but there is no reduction in performance, proceed to your destination. The performance may be reduced the next time the vehicle is driven. The vehicle may be driven at a reduced speed while this message is on, but

Downloaded from www.Manualslib.com manuals search engine

acceleration and speed may be reduced. Anytime this message stays on, the vehicle should be taken to your dealer/retailer for service as soon as possible.

ICE POSSIBLE

This message displays when the outside air temperature is cold enough to create icy road conditions. Adjust your driving accordingly.

KEY FOB BATT (Battery) LOW

This message displays if the Remote Keyless Entry (RKE) transmitter battery is low. Replace the battery in the transmitter. See “Battery Replacement” under *Remote Keyless Entry (RKE) System Operation on page 2-4*.

LEARN COMPLETE

On vehicles without the Remote Keyless Entry (RKE) system, this message displays when the Tire Pressure Monitor System (TPMS) has completed the tire learning process. See *Tire Pressure Monitor System on page 5-70* for more information.

LOW FUEL

This message displays along with a low fuel warning light on the instrument panel cluster when your vehicle is low on fuel. Refill the fuel tank as soon as possible. See *Low Fuel Warning Light on page 3-42*, *Fuel on page 5-6*, and *Filling the Tank on page 5-9*.

LOW WASHER FLUID

This message displays when the vehicle’s windshield washer fluid is low. Fill the windshield washer fluid reservoir to the proper level as soon as possible. See *Windshield Washer Fluid on page 5-41*.

PARKING BRAKE

This message displays if the parking brake is left engaged and you try to drive away. See *Parking Brake on page 2-31* for more information.

POWER STEERING

This message displays if a problem has been detected with the electric power steering, if your vehicle has this feature. Have your vehicle serviced immediately by your dealer/retailer.

SERVICE AIR BAG

This message displays when there is a problem with the airbag system. Have your vehicle serviced by your dealer/retailer immediately.

SVC (Service) TIRE MONITOR

This message displays if a part on the Tire Pressure Monitor System (TPMS) is not working properly. The tire pressure light also flashes and then remains on during the same ignition cycle. See *Tire Pressure Light on page 3-37*. Several conditions may cause this message

Downloaded from www.Manualslib.com manuals search engine

to appear. See *Tire Pressure Monitor Operation on page 5-72* for more information. If the warning comes on and stays on, there may be a problem with the TPMS. See your dealer/retailer.

TIRE LEARN ON

On vehicles without the Remote Keyless Entry (RKE) system, this message displays when the Tire Pressure Monitor System (TPMS) is re-learning the tire positions on your vehicle. The tire positions must be re-learned after rotating the tires or after replacing a tire or sensor. See *Tire Inspection and Rotation on page 5-77*, *Tire Pressure Monitor System on page 5-70*, and *Inflation - Tire Pressure on page 5-68* for more information.

TOP INOP (Inoperative) – TRUNK

If your vehicle has a retractable hardtop, this message displays if the trunk lid is not completely closed when operating the retractable hardtop. Make sure that the trunk lid is closed when operating the retractable hardtop. See *Trunk on page 2-13*, *Lowering the Retractable Hardtop on page 2-46*, and *Raising the Retractable Hardtop on page 2-49* for more information.

TOP MOVE COMPLT (Complete)

If your vehicle has a retractable hardtop, this message displays when the retractable hardtop has lowered or raised completely. See *Lowering the Retractable Hardtop on page 2-46* and *Raising the Retractable Hardtop on page 2-49* for more information.

TOP NOT ALLOWED

If your vehicle has a retractable hardtop, this message displays if the retractable hardtop button is pressed while the vehicle is not in PARK (P). Make sure that the vehicle is in PARK (P) when operating the retractable hardtop. See *Lowering the Retractable Hardtop on page 2-46* and *Raising the Retractable Hardtop on page 2-49* for more information.

TOP NOT SECURE

If your vehicle has a retractable hardtop, this message displays when the retractable hardtop button is released before the top open or close operation is complete. Press and hold the retractable hardtop button to fully open or close the top. See *Lowering the Retractable Hardtop on page 2-46* and *Raising the Retractable Hardtop on page 2-49* for more information.

Downloaded from www.Manualslib.com manuals search engine

TOP OVER TEMP (Temperature)

If your vehicle has a retractable hardtop, this message displays when the retractable hardtop button is pressed and the hardtop pump motor temperature is too hot. Wait for the hardtop pump motor to cool down before using the retractable hardtop. See *Lowering the Retractable Hardtop on page 2-46* and *Raising the Retractable Hardtop on page 2-49* for more information.

TOP TOO COLD

If your vehicle has a retractable hardtop, this message displays when the retractable hardtop button is pressed and the hardtop pump motor temperature is too cold. Wait for the hardtop pump motor to warm up before using the retractable hardtop. See *Lowering the Retractable Hardtop on page 2-46* and *Raising the Retractable Hardtop on page 2-49* for more information.

TRUNK AJAR

This message displays when the trunk is not closed completely. Make sure that the trunk is closed completely. See *Trunk on page 2-13* for more information.

DIC Vehicle Personalization

The following personalization options may appear on your vehicle's audio display by pressing the MENU button.

The default settings for the features were set when your vehicle left the factory, but may have been changed from their default state since that time.

OIL LIFE RESET: When this option is displayed, you can reset the engine oil life system. To reset the system, see *Engine Oil Life System on page 5-24*.

UNITS: When UNITS appears on the display, press the enter button to move between METRIC (default in Canada) or ENGLISH (default in United States). When you have made your choice, press the MENU button to record your selection.

If you choose English, all information will be displayed in English units.

If you choose metric, all information will be displayed in metric units.

The unit measurement will also change the trip odometer, temperature, and average fuel economy displays.

TIRE LEARN?: This option is available on vehicles without the Remote Keyless Entry (RKE) system. After rotating the tires or after replacing a tire or sensor, the Tire Pressure Monitor System (TPMS) must re-learn the tire positions. To re-learn the tire positions, see *Tire Pressure Monitor System on page 5-70*. See *Tire Inspection and Rotation on page 5-77* and *DIC Warnings and Messages on page 3-46* for more information.

Downloaded from www.Manualslib.com manuals search engine

REMOTE START: If your vehicle has this feature, the remote start option can be enabled or disabled. When REMOTE START appears on the display, press the enter button to move between OFF and ON (default). When you have made your choice, press the MENU button to record your selection.

LOCK HORN: If your vehicle has Remote Keyless Entry (RKE), this option which allows the vehicle's horn to chirp every time the lock button on the RKE transmitter is pressed, can be enabled or disabled. When LOCK HORN appears on the display, press the enter button to move between ON and OFF (default). When you have made your choice, press the MENU button to record your selection.

UNLOCK HORN: If your vehicle has Remote Keyless Entry (RKE), this option which allows the vehicle's horn to chirp every time the unlock button on the RKE transmitter is pressed, can be enabled or disabled. When UNLOCK HORN appears on the display, press the enter button to move between ON and OFF (default). When you have made your choice, press the MENU button to record your selection.

LIGHT FLASH: If your vehicle has Remote Keyless Entry (RKE), this option which allows the vehicle's exterior perimeter lighting to flash every time the lock, unlock, or trunk release buttons on the RKE transmitter are pressed, can be enabled or disabled. When LIGHT FLASH appears on the display, press the enter button to move between OFF and ON (default). When you have made your choice, press the MENU button to record your selection.

DELAY LOCK: The delayed locking option, which delays the actual locking of the vehicle, can be enabled or disabled. When DELAY LOCK appears on the display, press the enter button to move between OFF and ON (default). When you have made your choice, press the MENU button to record your selection.

AUTO UNLK (Unlock): The automatic door unlocking option, which allows the vehicle to automatically unlock certain doors can be enabled or disabled. When AUTO UNLK appears on the display, press the enter button to move between ALL (default), DRIVER, or NONE. When you have made your choice, press the MENU button to record your selection. See *Programmable Automatic Door Unlock on page 2-12* for more information.

UNLK (Unlock): This screen displays only if DRIVER or ALL is selected for the AUTO UNLK option. This option determines when the automatic door unlocking will occur, when either the key is turned to OFF or the vehicle is shifted into PARK (P). When UNLK appears on the display, press the enter button to move between KEY OFF and SHIFT TO P (Park) (default). When you have made your choice, press the MENU button to record your selection. See *Programmable Automatic Door Unlock on page 2-12* for more information.

Downloaded from www.Manualslib.com manuals search engine

EXT (Exterior) LIGHTS: If your vehicle has Remote Keyless Entry (RKE), this option, which allows the vehicle's exterior perimeter lighting to turn on each time the unlock button on the RKE transmitter is pressed, can be enabled or disabled. When EXT LIGHTS appears on the display, press the enter button to move between ON (default) and OFF. When you have made your choice, press the MENU button to record your selection.

LANGUAGE: To select your choice of language, press the enter button to move between the optional languages.

The languages are ENGLISH (default), FRENCH, SPANISH, and GERMAN.

Choosing a language will display all of the information on the DIC in the desired language.

When you have made your choice, press the MENU button for at least one second to record your selection.

Audio System(s)

Determine which radio your vehicle has and then read the pages following to familiarize yourself with its features.

⚠ CAUTION:

This system provides you with far greater access to audio stations and song listings. Giving extended attention to entertainment tasks while driving can cause a crash and you or others can be injured or killed. Always keep your eyes on the road and your mind on the drive — avoid engaging in extended searching while driving.

Keeping your mind on the drive is important for safe driving. See *Defensive Driving on page 4-2*. Here are some ways in which you can help avoid distraction while driving.

While your vehicle is parked:

- Familiarize yourself with all of its controls.
- Familiarize yourself with its operation.

Downloaded from www.Manualslib.com manuals search engine

- Set up your audio system by presetting your favorite radio stations, setting the tone, and adjusting the speakers. Then, when driving conditions permit, you can tune to your favorite radio stations using the presets and steering wheel controls if the vehicle has them.

Notice: **Before adding any sound equipment to your vehicle, such as an audio system, CD player, CB radio, mobile telephone, or two-way radio, make sure that it can be added by checking with your dealer/retailer. Also, check federal rules covering mobile radio and telephone units. If sound equipment can be added, it is very important to do it properly. Added sound equipment may interfere with the operation of your vehicle's engine, radio, or other systems, and even damage them. Your vehicle's systems may interfere with the operation of sound equipment that has been added.**

Your vehicle has a feature called Retained Accessory Power (RAP). With RAP, the audio system can be played even after the ignition is turned off. See *Retained Accessory Power (RAP) on page 2-23* for more information.

Setting the Clock

To set the hour, press the CLOCK button. The clock symbol displays and the hour flashes. Turn the ADJ (adjust) knob to increase or to decrease the hours. To set the minutes, press the CLOCK button again. The minutes flash. Turn the ADJ knob to increase or to decrease the minutes. The time can be set with the ignition on or off.

To synchronize the time with an FM station broadcasting Radio Data System (RDS) information, press and hold the clock button to enter the clock set mode, then press and hold the clock button for three seconds until UPDATED displays. If the time is not available from the station, NO UPDATE displays.

RDS time is broadcast once a minute. After tuning to an RDS broadcast station, it can take a few minutes for the time to update.

Downloaded from www.Manualslib.com manuals search engine

Radio(s)

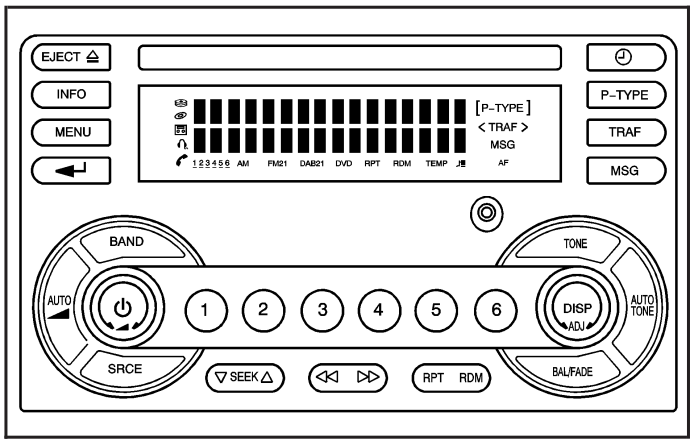

Radio with a Single CD Player

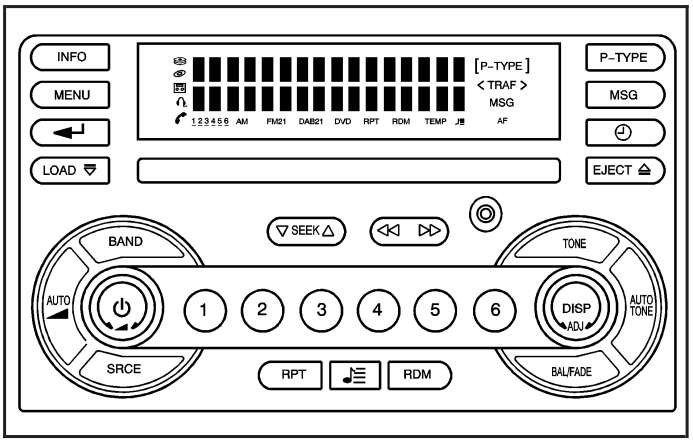

Radio with a Six-Disc CD Player

Your vehicle has one of these radios as its audio system.

If your vehicle has the Monsoon audio system, it has eight speakers and an eight channel amplifier. The radio displays MONSOON when the radio or the ignition is turned on. See your dealer/retailer for details.

Downloaded from www.Manualslib.com manuals search engine

Radio Data System (RDS)

The audio system has a Radio Data System (RDS). RDS features are available for use only on FM stations that broadcast RDS information.

With RDS, the radio can do the following:

- Seek to stations broadcasting the selected type of programming
- Receive announcements concerning local and national emergencies
- Display messages from radio stations
- Seek to stations with traffic announcements

This system relies upon receiving specific information from these stations and only works when the information is available. In rare cases, a radio station can broadcast incorrect information that causes the radio features to work improperly. If this happens, contact the radio station.

While the radio is tuned to an RDS station, the station name or call letters appear on the display instead of the frequency. RDS stations can also provide the time of day, a program type (PTY) for current programming, and the name of the program being broadcast.

Playing the Radio

⏻ **(Power):** Press to turn the system on and off.

(Volume): Turn clockwise or counterclockwise to increase or to decrease the volume.

DISP (Display): Press to switch the display between the time and the temperature or the radio station frequency and the temperature. While the ignition is off, press to display the time.

For RDS, press to change what appears on the display while using RDS. The display options are station name, RDS station frequency, PTY, and the name of the program (if available).

For XM™ (if equipped), press while in XM mode to retrieve four different categories of information related to the current song or channel: Artist, Song Title, Category or PTY, Channel Number/Channel Name.

To change the default on the display, press the DISP knob until you see the desired display, then hold the knob for two seconds. The radio produces a beep and the selected display is now the default.

Downloaded from www.Manualslib.com manuals search engine

AUTO ◢ (Automatic Volume): With automatic volume, the audio system adjusts automatically to make up for road and wind noise as you drive.

Set the volume at the desired level. Press this button to select LOW, MEDIUM, or HIGH. AUTO VOL LOW, AUTO VOL MEDIUM, or AUTO VOL HIGH displays. Each higher setting allows for more volume compensation at faster vehicle speeds. As you drive, automatic volume increases the volume, as necessary, to overcome noise at any speed. The volume level should always sound the same to you as you drive. AUTO VOL NONE displays if the radio cannot determine the vehicle speed or if the engine is not running. To turn automatic volume off, press this button until AUTO VOL OFF displays.

Finding a Station

BAND: Press to switch between FM1, FM2, AM, or XM1 or XM2 (if equipped). The display shows the selection.

ADJ (Adjust): Turn to select radio stations.

▽ SEEK △: Press the arrows to go to the next or to the previous station and stay there.

To scan stations, press and hold either arrow for two seconds until a beep sounds. The radio goes to a station, plays for a few seconds, then goes to the next station. Press either arrow again to stop scanning.

To scan preset stations, press and hold either arrow for more than four seconds until two beeps sound. The radio goes to the first preset station stored on the pushbuttons, plays for a few seconds, then goes to the next preset station. Press either arrow again to stop scanning presets.

The radio only seeks and scans stations with a strong signal that are in the selected band.

Setting Preset Stations

Up to 30 stations (six FM1, six FM2, and six AM, six XM1 and six XM2 (if equipped)), can be programmed on the six numbered pushbuttons, by performing the following steps:

1. Turn the radio on.
2. Press BAND to select FM1, FM2, AM, or XM1 or XM2 (if equipped).
3. Tune in the desired station.
4. Press AUTO TONE to select the equalization.
5. Press and hold one of the six numbered pushbuttons until a beep sounds. When that numbered pushbutton is pressed, the station that was set, returns and the equalization that was selected is stored for that pushbutton.
6. Repeat the steps for each pushbutton.

Downloaded from www.Manualslib.com manuals search engine

Setting the Tone (Bass/Midrange/Treble)

TONE (Bass/Midrange/Treble): Press and release the tone until BASS, MID (midrange), or TREB (treble) displays. Turn the ADJ (adjust) knob to increase or to decrease the tone. The display shows the bass, midrange, or treble level. If a station is weak or has static, decrease the treble.

To adjust bass, midrange, or treble to the middle position, select BASS, MID, or TREB. Then press and hold the tone button for more than two seconds. One beep sounds and the tone control adjusts to the middle position.

To adjust all tone controls to the middle position, press and hold the tone button while no tone control is displayed. ALL CENTERED displays and a beep sounds. The bass, midrange, and treble adjusts to the middle position.

AUTO TONE (Automatic Equalization): Press to select customized equalization settings designed for country, jazz, talk, pop, rock, and classical.

The equalization setting last chosen appears on the display when you first press this button. Each time you press this button, another equalization setting displays and automatic tone or automatic equalization switches to that preset equalization setting.

To return to the manual mode, press the AUTO TONE button until CUSTOM displays. The bass, midrange, and treble can manually be adjusted using the tone button.

Adjusting the Speakers (Balance/Fade)

BAL/FADE (Balance/Fade): To adjust the balance between the right and the left speakers, push and release the balance and fade button until BAL displays. Turn the ADJ (adjust) knob to move the sound toward the right or the left speakers.

To adjust the fade between the front and the rear speakers, push and release the balance and fade button until FADE displays. Turn the ADJ knob to move the sound toward the front or the rear speakers.

To adjust balance or fade to the middle position, select BAL or FADE. Then press and hold the balance and fade button for more than two seconds. One beep sounds and the speaker control adjusts to the middle position.

To adjust both speaker controls to the middle position, push and hold the balance and fade button while no speaker control is displayed. ALL CENTERED displays and One beep sounds.

Downloaded from www.Manualslib.com manuals search engine

Finding a Program Type (PTY) Station (RDS and XM™)

To select and find a desired PTY perform the following:

1. Press the P-TYPE button to activate program type select mode. PTY for FM or PTYPE for XM and a program type displays.
2. Turn the ADJ knob to select a PTY.
3. Once the desired PTY is displayed, press the up SEEK arrow to select the PTY and to take you to the PTY's first station.
4. To go to another station within that PTY press the up SEEK arrow again. If the radio cannot find the desired PTY, NONE FOUND displays and the radio returns to the last station you were listening to.

   After 15 seconds of inactivity or if the P-TYPE button is pressed again, the radio exits program type select mode.

BAND (AF – Alternate Frequency): Alternate frequency lets the radio switch to a stronger station with the same program type. To turn alternate frequency on, press and hold BAND for two seconds. FM ALT FREQ ON and AF displays. The radio can switch to stations with a stronger frequency.

To turn alternate frequency off, press and hold BAND again for two seconds. FM ALT FREQ OFF displays and AF disappears from the display. The radio does not switch to other stations.

This function does not apply for XM Satellite Radio Service.

RDS Messages

ALERT!: Alert warns of local or national emergencies. When an alert announcement comes on the current radio station, ALERT! displays. You will hear the announcement, even if the volume is low or a CD is playing. If a CD is playing, play stops during the announcement. Alert announcements cannot be turned off.

ALERT! is not affected by tests of the emergency broadcast system. This feature is not supported by all RDS stations.

MSG (Message): If the current station has a message, MSG displays. Press this button to see the message. The message can display the artist, song title, call in phone numbers, etc.

If the entire message is not displayed, parts of the message appears every three seconds. To scroll through the message, press and release the MSG button. A new group of words display after every press of this button. Once the complete message has displayed, MSG disappears from the display until another new message is received. The last message

Downloaded from www.Manualslib.com manuals search engine

can be displayed by pressing the MSG button. The last message can be viewed until a new message or the radio is turned to a different station.

When a message is not available from a station, NO MESSAGE displays.

MSG or TRAF (Traffic): If TRAFFIC displays, the tuned station broadcasts traffic announcements.

If the current tuned station does not broadcast traffic announcements, press and hold this button for two seconds and the radio seeks to a station that does. When a station that broadcasts traffic announcements is found, the radio stops seeking and TRAF in brackets displays. When a traffic announcement broadcasts on the tuned radio station, you will hear it. If no station is found that broadcasts traffic announcements, NO TRAFFIC INFO displays.

If TRAF is on the display, press and hold the MSG or TRAF button for two seconds to turn off the traffic announcements.

The radio plays the traffic announcement even if the volume is low. The radio interrupts the play of a CD if the last tuned station broadcasts traffic announcements.

This function does not apply to XM™ Satellite Radio Service.

Radio Messages

CALIBRATE: The audio system has been calibrated for your vehicle from the factory. If CALIBRATE displays, it means that the radio has not been configured properly for your vehicle and it must be returned to your dealer/retailer for service.

LOCKED: This message displays when the THEFTLOCK® system has locked up. Take your vehicle to your dealer/retailer for service.

If any error occurs repeatedly or if an error cannot be corrected, contact your dealer/retailer.

XM™ Satellite Radio Service

XM™ is a satellite radio service that is based in the 48 contiguous United States and 10 Canadian provinces. XM Satellite Radio has a wide variety of programming and commercial-free music, coast-to-coast, and in digital-quality sound. During your trial or when you subscribe, you will get unlimited access to XM Radio Online for when you are not in your vehicle. A service fee is required to receive the XM service. For more information, contact XM at www.xmradio.com or call 1-800-929-2100 in the U.S. and www.xmradio.ca or call 1-877-438-9677 in Canada.

Downloaded from www.Manualslib.com manuals search engine

Radio Messages for XM™ Only

See *XM Radio Messages on page 3-66* later in this section for further detail.

Playing a CD

Insert a CD partway into the slot, label side up. The player pulls it in and the CD should begin playing.

Press the eject button or the DISP (display) knob to insert a CD while the ignition is off.

If the ignition or radio is turned off while a CD is in the player, it stays in the player. When the ignition or radio is turned on, the CD starts playing, where it stopped, if it was the last selected audio source.

As each new track starts to play, the track number displays.

The CD player can play the smaller 3 inch (8 cm) single CDs with an adapter ring. Full-size CDs and the smaller CDs are loaded in the same manner.

Care of Your CDs

If playing a CD-R, the sound quality can be reduced due to CD-R quality, the method of recording, the quality of the music that has been recorded, and the way the CD-R has been handled. Handle them carefully. Store CD-R(s) in their original cases or other protective cases and away from direct sunlight and dust. The CD player scans the bottom surface of the disc.

If the surface of a CD is damaged, such as cracked, broken, or scratched, the CD does not play properly or not at all. Do not touch the bottom side of a CD while handling it; this could damage the surface. Pick up CDs by grasping the outer edges or the edge of the hole and the outer edge.

If the surface of a CD is soiled, take a soft, lint free cloth or dampen a clean, soft cloth in a mild, neutral detergent solution mixed with water, and clean it. Make sure the wiping process starts from the center to the edge.

Care of Your CD Player

Do not add any label to a CD, it could get caught in the CD player. If a CD is recorded on a personal computer and a description label is needed, try labeling the top of the recorded CD with a marking pen.

The use of CD lens cleaners for CDs is not advised, due to the risk of contaminating the lens of the CD optics with lubricants internal to the CD player mechanism.

Notice: **If a label is added to a CD, or more than one CD is inserted into the slot at a time, or an attempt is made to play scratched or damaged CDs, the CD player could be damaged. While using the CD player, use only CDs in good condition without any label, load one CD at a time, and keep the CD player and the loading slot free of foreign materials, liquids, and debris.**

Downloaded from www.Manualslib.com manuals search engine

If an error displays, see “CD Messages” later in this section.

For vehicles that have a Radio with a Six-Disc CD player, see the following:

LOAD ⊽: Press to load CDs into the CD player. This CD player holds up to six CDs.

To insert one CD, do the following:

1. Turn the ignition on.
2. Press and release the LOAD ⊽ button.
3. Wait for INSERT CD to flash on the display.
4. Load a CD. Insert the CD partway into the slot, label side up. The player pulls the CD in.

To insert multiple CDs, do the following:

1. Turn the ignition on.
2. Press and hold the LOAD ⊽ button for two seconds.

   A beep sounds and MULTI LOAD CD displays, then INSERT CD and the number displays.
3. Once INSERT CD and the number displays, load a CD. Insert the CD partway into the slot, label side up. The player pulls the CD in.

   Once the CD is loaded, INSERT CD and the number displays again. Once INSERT CD and the number displays again, you can load another CD. The CD player takes up to six CDs. Do not try to load more than six.

To load more than one CD but less than six, complete Steps 1 through 3. When finished loading CDs, the radio begins to play the last CD loaded.

If more than one CD has been loaded, a number for each CD is displayed and the currently selected slot number is underlined.

EJECT ⏏: To eject a single CD press this button. The radio displays EJECTING CD # and the single CD symbol flashes until the CD is ready to be removed. When the CD is ready to be removed it ejects part way from the radio and the display changes to a flashing REMOVE CD # with the single CD symbol flashing until the CD is removed. If the CD is not removed within 25 seconds the radio pulls it back in.

To eject multiple CDs, press and hold this button until a beep sounds and EJECTING ALL CDS displays with the single CD symbol flashing. The CD symbol flashes until a CD is ready to be removed. When the CD is ready to be removed it ejects part way from the radio and the display changes to a flashing REMOVE CD # with the single CD symbol flashing until the CD is removed. If the CD is not removed within 25 seconds

Downloaded from www.Manualslib.com manuals search engine

the radio pulls it back in. After the CD is removed the radio repeats the previous actions until all of the CDs have been removed or a CD is pulled back in.

Playing a Specific Loaded CD

For every CD loaded, a number appears on the display. To play a specific CD, press the numbered pushbutton that corresponds to the CD to be played. A small bar appears under the CD number that is playing, and the track number displays.

If an error displays, see “CD Messages” later in this section.

◁◁ **(Fast Reverse):** Press and hold to reverse quickly within a track. Sound is heard at a reduced volume. Release to play the passage. Depending on the radio, T# (track number), the elapsed time, and REV displays.

▷▷ **(Fast Forward):** Press and hold to advance quickly within a track. Sound is heard at a reduced volume. Release to play the passage. Depending on the radio, T#, the elapsed time, and FWD displays.

RPT (Repeat): With repeat, one track or an entire CD can be repeated.

To use repeat, do the following:

- To replay a track, press and release the RPT button. REPEAT ON and RPT displays. Press again to turn off repeat play. REPEAT OFF displays and RPT disappears from the display.
- To replay a CD on the Radio with Six-Disc CD, press and hold the RPT button for more than two seconds. REPEAT ON and RPT displays. Press again to turn off repeat play. REPEAT OFF displays and RPT disappears from the display.

RDM (Random): With the random setting, the tracks can be listened to in random, rather than sequential, order, on one CD or on all of the CDs.

To use random, do one of the following:

- To play the tracks on the CD in random order, press the RDM button. Depending on the radio, RANDOM, T# (tracks), and RDM displays. Press again to turn off random play. RANDOM OFF displays and RDM disappears from the display.
- To play the tracks on all of the CDs that are loaded in the Radio with a Six-Disc CD player, in random order, press and hold the RDM button for more than two seconds. A beep sounds, RANDOM ALL CDS, and RDM displays. Press again to turn off random play. RANDOM OFF displays and RDM disappears from the display.

Downloaded from www.Manualslib.com manuals search engine

▽ **SEEK △:** Press the down arrow to go to the start of the current track, if more than eight seconds have played. Press the up arrow to go to the beginning of the next track. If either arrow is held or pressed more than once, the player continues moving through the CD.

To scan the current CD, press and hold either arrow for more than two seconds. The CD goes to the next track, plays the first 10 seconds, then goes to the next track. Press either arrow again to stop scanning.

To scan all of the CDs loaded in the Radio with a Six-Disc CD player, press and hold either arrow for more than four seconds. The CD goes to the next CD, plays the first 10 seconds of the first track, then goes to the next CD. Press either arrow again to stop scanning.

DISP (Display) (Radio with Single CD): Press to see how long the current track has been playing. T, the track number, and the elapsed time of the track displays. To change the default on the display, time or elapsed time, press until you see the desired display, then hold the knob for two seconds. The radio produces one beep and the selected display is now the default. Pressing this button also displays text on commercially recorded CDs (if available).

DISP (Display) (Radio with Six-Disc CD Player): Press to switch between time, temperature, and the elapsed time of the track. To change the default on the display (CD#/Track#/Time, CD#/Track#/Temperature, or Track#/Elapsed Time/Temperature), press until the desired display appears, then hold the knob for two seconds. The radio produces one beep and the selected display is now the default.

AUTO TONE (Automatic Equalization): Press to select the desired equalization setting while playing a CD. The equalization is automatically recalled when a CD is played. For more information, see “AUTO TONE” listed previously in this section.

BAND: Press to listen to the radio while a CD is playing. The inactive CD(s) remains inside the radio for future listening.

SRCE (Source): Press to play a CD while listening to the radio. Press again and the system searches for an auxiliary input device such as a portable audio player.

Using Song List / ♩☰ Mode

The six-disc CD changer has a feature called song list. This feature is capable of saving 20 track selections.

To save tracks into the song list feature, perform the following steps:

1. Turn the radio on and load it with at least one CD. See “LOAD ▽ ” listed previously in this section for more information.

Downloaded from www.Manualslib.com manuals search engine

2. Check to see that the CD changer is not in song list mode. S-LIST should not display. If S-LIST is displayed, press the ♩☰ button to turn it off.
3. Select the desired CD by pressing the numbered pushbutton and then use the up SEEK arrow to locate the track to be saved. The track begins to play.
4. Press and hold the song list button for two or more seconds to save the track into memory. When song list is pressed, one beep sounds. After two seconds of pressing song list continuously, two beeps sound to confirm that the track has been saved and TRACK number ADDED displays.
5. Repeat Steps 3 and 4 for saving other selections.

SONG LIST FULL displays if more than 20 selections are saved.

To play the song list, press the song list button. One beep sounds and SONG LIST displays. The recorded tracks begins to play in the order that they were saved.

Seek through the song list by using the SEEK arrows. Seeking past the last saved track returns the song list to the first saved track.

To delete tracks from the song list, perform the following steps:

1. Turn the CD player on.
2. Press the ♩☰ button to turn song list on. SONG LIST displays.
3. Press the SEEK arrows to select the desired track to be deleted.
4. Press and hold the song list button for two seconds. When song list is pressed, one beep sounds. After two seconds of continuously pressing the song list button, two beeps sound to confirm that the track has been deleted and TRACK number DELETED displays.

After a track has been deleted, the remaining tracks are moved up the list. When another track is added to the song list, the track is added to the end of the list.

To delete the entire song list, perform the following steps:

1. Turn the CD player on.
2. Press the ♩☰ button to turn song list on. S-LIST displays.
3. Press and hold this button for more than four seconds. A beep sounds, followed by two beeps after two seconds, and a final beep sounds after four seconds. SONG LIST EMPTY displays indicating that the song list has been deleted.

Downloaded from www.Manualslib.com manuals search engine

If a CD is ejected, and the song list contains saved tracks from that CD, those tracks are automatically deleted from the song list. Any additional tracks saved to the song list are added to the bottom of the list.

To end song list mode, press the song list button. One beep sounds and S-LIST disappears from the display.

CD Messages

CHECK CD: If this message displays and/or the CD comes out, it could be for one of the following reasons:

- It is very hot. When the temperature returns to normal, the CD should play.
- You are driving on a very rough road. When the road becomes smoother, the CD should play.
- The CD is dirty, scratched, wet, or upside down.
- The air is very humid. If so, wait about an hour and try again.
- There could have been a problem while burning the CD.
- The label could be caught in the CD player.

If the CD is not playing correctly, for any other reason, try a known good CD.

If any error occurs repeatedly or if an error cannot be corrected, contact your dealer/retailer. If the radio displays an error message, write it down and provide it to your dealer/retailer when reporting the problem.

Using the Auxiliary Input Jack

The radio system has an auxiliary input jack located near the TONE button on the radio faceplate. This is not an audio output; do not plug the headphone set into the front auxiliary input jack. An external audio device such as an iPod, laptop computer, MP3 player, CD changer, etc. can be connected to the auxiliary input jack for use as another source for audio listening.

Drivers are encouraged to set up any auxiliary device while the vehicle is in PARK (P). See *Defensive Driving on page 4-2* for more information on driver distraction.

To use a portable audio player, connect a 3.5 mm (1/8 inch) cable to the radio's front auxiliary input jack. When a device is connected, press the radio SRCE button to begin playing audio from the device over the vehicle speakers.

⏻ **(Power/Volume):** Turn clockwise or counterclockwise to increase or decrease the volume of the portable player. Additional volume adjustments might need to be made from the portable device.

BAND: Press to listen to the radio while a portable audio device is playing. The portable audio device continues playing, so you might want to stop it or turn it off.

Downloaded from www.Manualslib.com manuals search engine

SRCE (Source): Press to play a CD while a portable audio device is playing. Press again and the system begins playing audio from the connected portable audio player. If a portable audio player is not connected, No Aux Input Device Found may display.

XM Radio Messages

XL (Explicit Language Channels): These channels, or any others, can be blocked at a customer's request, by calling 1-800-852-XMXM (9696).

Updating: The encryption code in the receiver is being updated, and no action is required. This process should take no longer than 30 seconds.

No Signal: The system is functioning correctly, but the vehicle is in a location that is blocking the XM™ signal. When the vehicle is moved into an open area, the signal should return.

Loading XM: The audio system is acquiring and processing audio and text data. No action is needed. This message should disappear shortly.

CH Off Air: This channel is not currently in service. Tune to another channel.

CH Unavail: This previously assigned channel is no longer assigned. Tune to another station. If this station was one of the presets, choose another station for that preset button.

No Info: No artist, song title, category, or text information is available at this time on this channel. The system is working properly.

No Info: No text or informational messages are available at this time on this channel. The system is working properly.

Not Found: There are no channels available for the selected category. The system is working properly.

XM Locked: The XM™ receiver in your vehicle may have previously been in another vehicle. For security purposes, XM™ receivers cannot be swapped between vehicles. If this message is received after having your vehicle serviced, check with your dealer/retailer.

Radio ID: If tuned to channel 0, this message alternates with the XM™ Radio eight digit radio ID label. This label is needed to activate the service.

Unknown: If this message is received when tuned to channel 0, there may be a receiver fault. Consult with your dealer/retailer.

Chk XMRcvr: If this message does not clear within a short period of time, the receiver may have a fault. Consult with your dealer/retailer.

Downloaded from www.Manualslib.com manuals search engine

Theft-Deterrent Feature

THEFTLOCK® is designed to discourage theft of your vehicle's radio. The feature works automatically by learning a portion of the Vehicle Identification Number (VIN). If the radio is moved to a different vehicle, it does not operate and LOC, LOCK, or LOCKED could display.

With THEFTLOCK® activated, the radio does not operate if stolen.

Audio Steering Wheel Controls

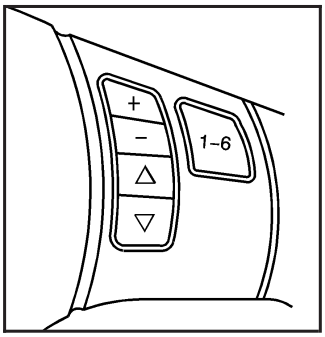

If your vehicle has this feature, some audio controls can be adjusted at the steering wheel. They include the following:

▽ △ **(Next/Previous):** Press the down or up arrow to go to the next or to the previous radio station and stay there. The radio seeks stations only with a strong signal that are in the selected band.

To scan stations, press and hold either arrow for two seconds until SCAN displays and a beep sounds. The radio goes to a station, plays for a few seconds, then goes to the next station. Press either arrow again to stop scanning.

When a CD is playing, press the down or up arrow to go to the next or to the previous track.

To scan the current CD, press and hold either arrow for more than two seconds. The CD does go to the next track, play the first 10 seconds, then go on to the next track. Press either arrow again to stop scanning.

To scan all of the CDs loaded, press and hold either arrow for more than four seconds. The CD does goes to the next CD, plays the first 10 seconds of each track, then goes to the next CD. Press either arrow again to stop scanning.

+ ◁ – ◁ **(Volume):** Press the plus or minus volume button to increase or to decrease the radio volume.

1–6 (Preset Pushbuttons): Press this button to play stations that are programmed on the radio preset pushbuttons. The radio only seeks preset stations with a strong signal that are in the selected band.

Downloaded from www.Manualslib.com manuals search engine

Radio Reception

Frequency interference and static during normal radio reception can occur if items such as cellphone chargers, vehicle convenience accessories, and external electronic devices are plugged into the accessory power outlet. If there is interference or static, unplug the item from the accessory power outlet.

AM

The range for most AM stations is greater than for FM, especially at night. The longer range can cause station frequencies to interfere with each other. For better radio reception, most AM radio stations boost the power levels during the day, and then reduce these levels during the night. Static can also occur when things like storms and power lines interfere with radio reception. When this happens, try reducing the treble on your radio.

FM Stereo

FM stereo gives the best sound, but FM signals reach only about 10 to 40 miles (16 to 65 km). Tall buildings or hills can interfere with FM signals, causing the sound to fade in and out.

XM™ Satellite Radio Service

XM™ Satellite Radio Service gives digital radio reception from coast-to-coast in the 48 contiguous United States, and in Canada. Just as with FM, tall buildings or hills can interfere with satellite radio signals, causing the sound to fade in and out. In addition, traveling or standing under heavy foliage, bridges, garages, or tunnels may cause loss of the XM™ signal for a period of time. The radio may display NO SIGNAL to indicate interference.

Fixed Mast Antenna

The fixed mast antenna can withstand most car washes without being damaged. If the mast should ever become slightly bent, straighten it out by hand. If the mast is badly bent, replace it.

Check occasionally to make sure the mast is still tightened to the antenna base located on the roof of the vehicle. If tightening is required, tighten by hand.

Downloaded from www.Manualslib.com manuals search engine

Backglass Antenna

The AM-FM antenna is integrated with the rear window defogger, located in the rear window. Make sure that the inside surface of the rear window is not scratched and that the grid lines on the glass are not damaged. If the inside surface is damaged, it could interfere with radio reception.

Notice: **Using a razor blade or sharp object to clear the inside rear window may damage the rear window antenna and/or the rear window defogger. Repairs would not be covered by your warranty. Do not clear the inside rear window with sharp objects.**

Notice: **Do not apply aftermarket glass tinting with metallic film. The metallic film in some tinting materials will interfere with or distort the incoming radio reception. Any damage caused to your backglass antenna due to metallic tinting materials will not be covered by your warranty.**

Because this antenna is built into the rear window, there is a reduced risk of damage caused by car washes and vandals.

If adding a cellular telephone to your vehicle, and the antenna needs to be attached to the glass, make sure that the grid lines for the AM-FM antenna are not damaged. There is enough space between the grid lines to attach a cellular telephone antenna without interfering with radio reception.

XM™ Satellite Radio Antenna System

The XM™ Satellite Radio antenna is located on the roof or on the deck lid of your vehicle. Keep this antenna clear of snow and ice build up for clear radio reception.

If your vehicle has a sunroof, the performance of the XM system may be affected if the sunroof is open.

Loading items onto the roof of your vehicle can interfere with the performance of the XM™ system. Make sure the XM™ Satellite Radio antenna is not obstructed.

Downloaded from www.Manualslib.com manuals search engine

✍ NOTES

Downloaded from www.Manualslib.com manuals search engine

Section 4 Driving Your Vehicle

Your Driving, the Road, and Your Vehicle 4-2
Defensive Driving 4-2
Drunk Driving 4-2
Control of a Vehicle 4-3
Braking 4-3
Antilock Brake System (ABS) 4-4
Braking in Emergencies 4-5
Traction Control System (TCS) 4-5
StabiliTrak® System 4-6
Steering 4-7
Off-Road Recovery 4-10
Passing 4-10
Loss of Control 4-10
Driving at Night 4-12
Driving in Rain and on Wet Roads 4-12
Before Leaving on a Long Trip 4-13
Highway Hypnosis 4-14
Hill and Mountain Roads 4-14
Winter Driving 4-15
If Your Vehicle is Stuck in Sand, Mud, Ice, or Snow 4-19
Rocking Your Vehicle to Get It Out 4-20
Loading Your Vehicle 4-20
Towing 4-25
Towing Your Vehicle 4-25
Recreational Vehicle Towing 4-26
Towing a Trailer 4-28

Downloaded from www.Manualslib.com manuals search engine

Your Driving, the Road, and Your Vehicle

Defensive Driving

Defensive driving means “always expect the unexpected.” The first step in driving defensively is to wear your safety belt — See *Safety Belts: They Are for Everyone on page 1-13*.

⚠ CAUTION:

Assume that other road users (pedestrians, bicyclists, and other drivers) are going to be careless and make mistakes. Anticipate what they might do and be ready. In addition:

- **Allow enough following distance between you and the driver in front of you.**
- **Focus on the task of driving.**

Driver distraction can cause collisions resulting in injury or possible death. These simple defensive driving techniques could save your life.

Drunk Driving

⚠ CAUTION:

Drinking and then driving is very dangerous. Your reflexes, perceptions, attentiveness, and judgment can be affected by even a small amount of alcohol. You can have a serious — or even fatal — collision if you drive after drinking. Do not drink and drive or ride with a driver who has been drinking. Ride home in a cab; or if you are with a group, designate a driver who will not drink.

Death and injury associated with drinking and driving is a global tragedy.

Alcohol affects four things that anyone needs to drive a vehicle: judgment, muscular coordination, vision, and attentiveness.

Police records show that almost 40 percent of all motor vehicle-related deaths involve alcohol. In most cases, these deaths are the result of someone who was drinking and driving. In recent years, more than 17,000 annual motor vehicle-related deaths have been associated with the use of alcohol, with about 250,000 people injured.

Downloaded from www.Manualslib.com manuals search engine

For persons under 21, it is against the law in every U.S. state to drink alcohol. There are good medical, psychological, and developmental reasons for these laws.

The obvious way to eliminate the leading highway safety problem is for people never to drink alcohol and then drive.

Medical research shows that alcohol in a person's system can make crash injuries worse, especially injuries to the brain, spinal cord, or heart. This means that when anyone who has been drinking — driver or passenger — is in a crash, that person's chance of being killed or permanently disabled is higher than if the person had not been drinking.

Control of a Vehicle

The following three systems help to control your vehicle while driving — brakes, steering, and accelerator. At times, as when driving on snow or ice, it is easy to ask more of those control systems than the tires and road can provide. Meaning, you can lose control of your vehicle. See *Traction Control System (TCS) on page 4-5* and *StabiliTrak® System on page 4-6*.

Adding non-dealer/non-retailer accessories can affect your vehicle's performance. See *Accessories and Modifications on page 5-4*.

Braking

See *Brake System Warning Light on page 3-34*.

Braking action involves perception time and reaction time. First, you have to decide to push on the brake pedal. That is perception time. Then you have to bring up your foot and do it. That is reaction time.

Average reaction time is about three-fourths of a second. But that is only an average. It might be less with one driver and as long as two or three seconds or more with another. Age, physical condition, alertness, coordination, and eyesight all play a part. So do alcohol, drugs, and frustration. But even in three-fourths of a second, a vehicle moving at 60 mph (100 km/h) travels 66 feet (20 m). That could be a lot of distance in an emergency, so keeping enough space between your vehicle and others is important.

And, of course, actual stopping distances vary greatly with the surface of the road, whether it is pavement or gravel; the condition of the road, whether it is wet, dry, or icy; tire tread; the condition of the brakes; the weight of the vehicle; and the amount of brake force applied.

Avoid needless heavy braking. Some people drive in spurts — heavy acceleration followed by heavy braking — rather than keeping pace with traffic. This is a mistake. The brakes might not have time to cool between hard stops. The brakes will wear out much

Downloaded from www.Manualslib.com manuals search engine

faster if you do a lot of heavy braking. If you keep pace with the traffic and allow realistic following distances, you will eliminate a lot of unnecessary braking. That means better braking and longer brake life.

If your vehicle's engine ever stops while you are driving, brake normally but do not pump the brakes. If you do, the pedal could get harder to push down. If the engine stops, you will still have some power brake assist. But you will use it when you brake. Once the power assist is used up, it can take longer to stop and the brake pedal will be harder to push.

Adding non-dealer/non-retailer accessories can affect your vehicle's performance. See *Accessories and Modifications on page 5-4*.

Antilock Brake System (ABS)

Your vehicle has the Antilock Brake System (ABS), an advanced electronic braking system that will help prevent a braking skid.

When you start the engine and begin to drive away, ABS will check itself. You might hear a momentary motor or clicking noise while this test is going on, and you might even notice that the brake pedal moves a little. This is normal.

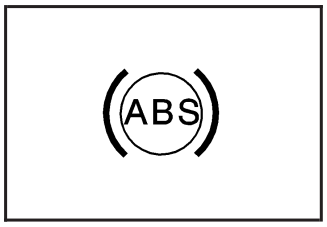

If there is a problem with ABS, this warning light will stay on. See *Antilock Brake System Warning Light on page 3-35*.

Let us say the road is wet and you are driving safely. Suddenly, an animal jumps out in front of you. You slam on the brakes and continue braking. Here is what happens with ABS:

A computer senses that wheels are slowing down. If one of the wheels is about to stop rolling, the computer will separately work the brakes at each wheel.

ABS can change the brake pressure faster than any driver could. The computer is programmed to make the most of available tire and road conditions. This can help you steer around the obstacle while braking hard.

As you brake, the computer keeps receiving updates on wheel speed and controls braking pressure accordingly.

Remember: ABS does not change the time you need to get your foot up to the brake pedal or always decrease stopping distance. If you get too close to the vehicle in front of you, you will not have time to apply the brakes

Downloaded from www.Manualslib.com manuals search engine

if that vehicle suddenly slows or stops. Always leave enough room up ahead to stop, even though you have ABS.

Using ABS

Do not pump the brakes. Just hold the brake pedal down firmly and let antilock work for you. You might hear the antilock pump or motor operate, and feel the brake pedal pulsate, but this is normal.

Braking in Emergencies

With ABS, you can steer and brake at the same time. In many emergencies, steering can help you more than even the very best braking.

Traction Control System (TCS)

Your vehicle may have a Traction Control System (TCS) that limits wheel spin. This is especially useful in slippery road conditions. The system operates only if it senses that one or both of the front wheels are spinning or beginning to lose traction. When this happens, the system reduces engine power and may also upshift the transmission to limit wheel spin. Also, the traction control system activates the appropriate corner brakes to gain even quicker control to limit wheel spin.

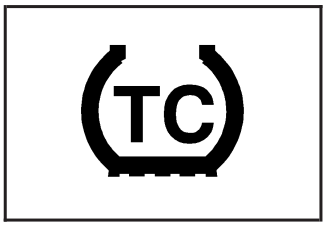

This light, located on the instrument panel, will come on when your Traction Control System is limiting wheel spin.

You may feel or hear the system working, but this is normal.

If your vehicle is in cruise control when the traction control system begins to limit wheel spin, the cruise control will automatically disengage. When road conditions allow you to safely use it again, you may re-engage the cruise control. See *Cruise Control on page 3-10*.

The Traction Control System operates in all transmission shift lever positions except park or neutral. But the system can upshift the transmission only as high as the shift lever position you've chosen, so you should use the lower gears only when necessary. See *Automatic Transmission Operation on page 2-27*.

Downloaded from www.Manualslib.com manuals search engine

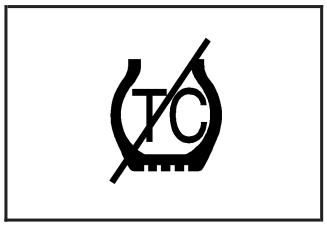

This light is located on the instrument panel cluster.

When the system is on, this light will come on to let you know if there's a problem, or if the system has been turned off.

When this warning light is on, the system will not limit wheel spin. Adjust your driving accordingly.

To limit wheel spin, especially in slippery road conditions, you should always leave the Traction Control System on. But you can turn the system off if you prefer.

To turn the system on or off, press the traction control button (TC) located under the climate controls. In order to effectively "rock" the vehicle, you will need to turn off TCS.

If you press the TC button once, the traction control system will turn off and the traction control system warning light will come on. The StabiliTrak® system will stay on. Press the TC button again to turn the system back on. The traction control system warning light will go off. If you press and hold the TC button, the StabiliTrak® system and the traction control system will turn off. Press the TC button again to turn StabiliTrak® and the traction control system back on. For more information, see *StabiliTrak® System on page 4-6*.

When you turn the system off, the Traction Control System warning light will come on and stay on. If the Traction Control System is limiting wheel spin when you press the button to turn the system off, the warning light will come on and the system will stop limiting wheel spin. The system will not provide traction assistance until the system is turned back on.

Adding non-dealer/non-retailer accessories can affect your vehicle's performance. See *Accessories and Modifications on page 5-4* for more information.

StabiliTrak® System

Your vehicle may be equipped with a vehicle stability enhancement system called StabiliTrak®. It is an advanced computer controlled system that assists you with directional control of the vehicle in difficult driving conditions.

StabiliTrak® activates when the computer senses a discrepancy between your intended path and the direction the vehicle is actually traveling. StabiliTrak® selectively applies braking pressure at any one of the vehicle's brakes to help steer the vehicle in the direction which you are steering.

Downloaded from www.Manualslib.com manuals search engine

This symbol will appear when the StabiliTrak® system is activated.

When you first start your vehicle and begin to drive away, the system performs several diagnostic checks to ensure there are no problems. You may hear or feel the system working. This is normal and does not mean there is a problem with your vehicle.

This light is located on the instrument panel cluster.

When the system is on, this light will come on to let you know if there's a problem, or if the system has been turned off.

StabiliTrak® comes on automatically whenever you start your vehicle. To help assist you with directional control of the vehicle, you should always leave the system on. You can turn the traction control system and StabiliTrak® off if you ever need to by pressing and holding the TC (traction control) on/off button. Press the TC button again to turn StabiliTrak® and the traction control system back on. See *Traction Control System (TCS) on page 4-5* for more information.

If your vehicle is in cruise control when the StabiliTrak® activates, the cruise control will automatically disengage. When road conditions allow you to safely use it again, you may reengage the cruise control. See *Cruise Control on page 3-10* for more information.

Steering

Electric Power Steering

If your vehicle has the electric power steering system and the engine stalls while you are driving, the power steering assist system will continue to operate until you are able to stop your vehicle. If you lose power steering assist because the electric power steering system is not functioning, you can steer, but it will take more effort.

If you turn the steering wheel in either direction several times until it stops, or hold the steering wheel in the stopped position for an extended amount of time, you may notice a reduced amount of power steering assist. The normal amount of power steering assist should return shortly after a few normal steering movements.

Downloaded from www.Manualslib.com manuals search engine

The electric power steering system does not require regular maintenance. If you suspect steering system problems, contact your dealer/retailer for service repairs. See *DIC Warnings and Messages on page 3-46*.

Hydraulic Power Steering

If your vehicle has the hydraulic power steering system and you lose power steering assist because the engine stops or the power steering system is not functioning, you can steer, but it will take much more effort.

Steering Tips

It is important to take curves at a reasonable speed.

A lot of the “driver lost control” accidents mentioned on the news happen on curves. Here is why:

Experienced driver or beginner, each of us is subject to the same laws of physics when driving on curves. The traction of the tires against the road surface makes it possible for the vehicle to change its path when you turn the front wheels. If there is no traction, inertia will keep the vehicle going in the same direction. If you have ever tried to steer a vehicle on wet ice, you will understand this.

The traction you can get in a curve depends on the condition of the tires and the road surface, the angle at which the curve is banked, and your speed. While you are in a curve, speed is the one factor you can control.

Suppose you are steering through a sharp curve. Then you suddenly apply the brakes. Both control systems — steering and braking — have to do their work where the tires meet the road. Unless you have antilock brakes, adding the hard braking can demand too much of those places. You can lose control.

The same thing can happen if you are steering through a sharp curve and you suddenly accelerate. Those two control systems — steering and acceleration — can overwhelm those places where the tires meet the road and make you lose control. See *Traction Control System (TCS) on page 4-5* and *StabiliTrak® System on page 4-6*.

What should you do if this ever happens? Ease up on the brake or accelerator pedal, steer the vehicle the way you want it to go, and slow down.

Speed limit signs near curves warn that you should adjust your speed. Of course, the posted speeds are based on good weather and road conditions. Under less favorable conditions you will want to go slower.

If you need to reduce your speed as you approach a curve, do it before you enter the curve, while the front wheels are straight ahead.

Try to adjust your speed so you can drive through the curve. Maintain a reasonable, steady speed. Wait to accelerate until you are out of the curve, and then accelerate gently into the straightaway.

Downloaded from www.Manualslib.com manuals search engine

Adding non-dealer/non-retailer accessories can affect your vehicle's performance. See *Accessories and Modifications on page 5-4*.

Steering in Emergencies

There are times when steering can be more effective than braking. For example, you come over a hill and find a truck stopped in your lane, or a car suddenly pulls out from nowhere, or a child darts out from between parked cars and stops right in front of you. You can avoid these problems by braking — if you can stop in time. But sometimes you cannot; there is not room. That is the time for evasive action — steering around the problem.

Your vehicle can perform very well in emergencies like these. First apply the brakes — but, unless you have antilock brakes, not enough to lock the wheels. See *Braking on page 4-3*. It is better to remove as much speed as you can from a possible collision. Then steer around the problem, to the left or right depending on the space available.

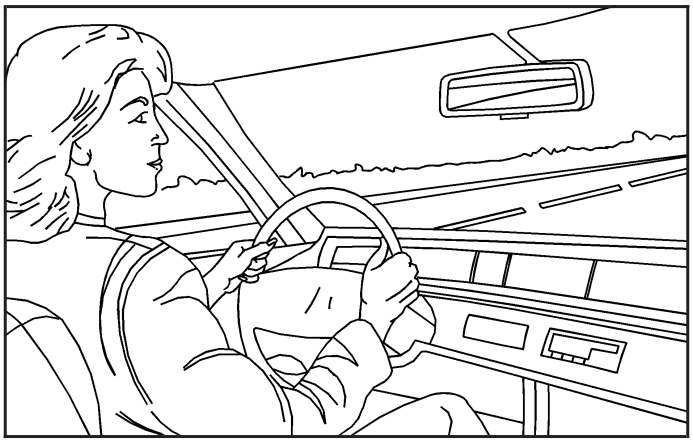

An emergency like this requires close attention and a quick decision. If you are holding the steering wheel at the recommended 9 and 3 o'clock positions, you can turn it a full 180 degrees very quickly without removing either hand. But you have to act fast, steer quickly, and just as quickly straighten the wheel once you have avoided the object.

The fact that such emergency situations are always possible is a good reason to practice defensive driving at all times and wear safety belts properly.

Downloaded from www.Manualslib.com manuals search engine

Off-Road Recovery

You may find that your vehicle's right wheels have dropped off the edge of a road onto the shoulder while you are driving.

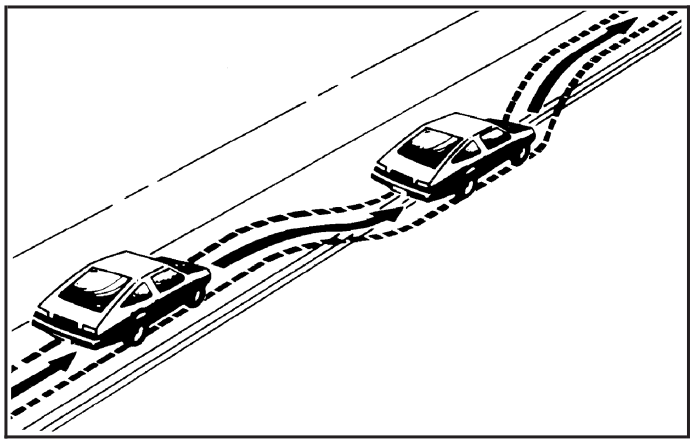

If the level of the shoulder is only slightly below the pavement, recovery should be fairly easy. Ease off the accelerator and then, if there is nothing in the way, steer so that your vehicle straddles the edge of the pavement. You can turn the steering wheel up to one-quarter turn until the right front tire contacts the pavement edge. Then turn the steering wheel to go straight down the roadway.

Passing

Passing another vehicle on a two-lane road can be dangerous. To reduce the risk of danger while passing, we suggest the following tips:

- Look down the road, to the sides, and to crossroads for situations that might affect a successful pass. If in doubt, wait.
- Watch for traffic signs, pavement markings, and lines that could indicate a turn or an intersection. Never cross a solid or double-solid line on your side of the lane.
- Do not get too close to the vehicle you want to pass. Doing so can reduce your visibility.
- Wait your turn to pass a slow vehicle.
- When you are being passed, ease to the right.

Loss of Control

Let us review what driving experts say about what happens when the three control systems — brakes, steering, and acceleration — do not have enough friction where the tires meet the road to do what the driver has asked.

In any emergency, do not give up. Keep trying to steer and constantly seek an escape route or area of less danger.

Downloaded from www.Manualslib.com manuals search engine

Skidding

In a skid, a driver can lose control of the vehicle. Defensive drivers avoid most skids by taking reasonable care suited to existing conditions, and by not overdriving those conditions. But skids are always possible.

The three types of skids correspond to your vehicle's three control systems. In the braking skid, the wheels are not rolling. In the steering or cornering skid, too much speed or steering in a curve causes tires to slip and lose cornering force. And in the acceleration skid, too much throttle causes the driving wheels to spin.

A cornering skid is best handled by easing your foot off the accelerator pedal.

If your vehicle does not have a traction system, or if the traction system is off, an acceleration skid is also best handled by easing your foot off the accelerator pedal. See *Traction Control System (TCS) on page 4-5* and *StabiliTrak® System on page 4-6*.

If your vehicle starts to slide, ease your foot off the accelerator pedal and quickly steer the way you want the vehicle to go. If you start steering quickly enough, your vehicle may straighten out. Always be ready for a second skid if it occurs.

Of course, traction is reduced when water, snow, ice, gravel, or other material is on the road. For safety, you will want to slow down and adjust your driving to these conditions. It is important to slow down on slippery surfaces because stopping distance will be longer and vehicle control more limited.

While driving on a surface with reduced traction, try your best to avoid sudden steering, acceleration, or braking, including reducing vehicle speed by shifting to a lower gear. Any sudden changes could cause the tires to slide. You may not realize the surface is slippery until your vehicle is skidding. Learn to recognize warning clues — such as enough water, ice, or packed snow on the road to make a mirrored surface — and slow down when you have any doubt.

If you have the Antilock Brake System (ABS), remember: It helps avoid only the braking skid. If you do not have ABS, then in a braking skid, where the wheels are no longer rolling, release enough pressure on the brakes to get the wheels rolling again. This restores steering control. Push the brake pedal down steadily when you have to stop suddenly. As long as the wheels are rolling, you will have steering control.

Downloaded from www.Manualslib.com manuals search engine

Driving at Night

Night driving is more dangerous than day driving because some drivers are likely to be impaired — by alcohol or drugs, with night vision problems, or by fatigue.

Night driving tips include:

- Drive defensively.
- Do not drink and drive.
- Reduce headlamp glare by adjusting the inside rearview mirror.
- Slow down and keep more space between you and other vehicles because your headlamps can only light up so much road ahead.
- Watch for animals.
- When tired, pull off the road.
- Do not wear sunglasses.
- Avoid staring directly into approaching headlamps.
- Keep the windshield and all glass on your vehicle clean — inside and out.
- Keep your eyes moving, especially during turns or curves.

No one can see as well at night as in the daytime. But, as we get older, these differences increase. A 50-year-old driver might need at least twice as much light to see the same thing at night as a 20-year-old.

Driving in Rain and on Wet Roads

Rain and wet roads can reduce vehicle traction and affect your ability to stop and accelerate. Always drive slower in these types of driving conditions and avoid driving through large puddles and deep-standing or flowing water.

⚠ CAUTION:

Wet brakes can cause crashes. They might not work as well in a quick stop and could cause pulling to one side. You could lose control of the vehicle.

After driving through a large puddle of water or a car/vehicle wash, lightly apply the brake pedal until the brakes work normally.

CAUTION: (Continued)

Downloaded from www.Manualslib.com manuals search engine

CAUTION: (Continued)

Flowing or rushing water creates strong forces. Driving through flowing water could cause your vehicle to be carried away. If this happens, you and other vehicle occupants could drown. Do not ignore police warnings and be very cautious about trying to drive through flowing water.

Hydroplaning

Hydroplaning is dangerous. Water can build up under your vehicle's tires so they actually ride on the water. This can happen if the road is wet enough and you are going fast enough. When your vehicle is hydroplaning, it has little or no contact with the road.

There is no hard and fast rule about hydroplaning. The best advice is to slow down when the road is wet.

Other Rainy Weather Tips

Besides slowing down, other wet weather driving tips include:

- Allow extra following distance.
- Pass with caution.
- Keep windshield wiping equipment in good shape.
- Keep the windshield washer fluid reservoir filled.
- Have good tires with proper tread depth. See *Tires on page 5-60*.

Before Leaving on a Long Trip

To prepare your vehicle for a long trip, consider having it serviced by your dealer/retailer before departing.

Things to check on your own include:

- *Windshield Washer Fluid:* Reservoir full? Windows clean — inside and outside?
- *Wiper Blades:* In good shape?
- *Fuel, Engine Oil, Other Fluids:* All levels checked?
- *Lamps:* Do they all work and are lenses clean?
- *Tires:* Are treads good? Are tires inflated to recommended pressure?
- *Weather and Maps:* Safe to travel? Have up-to-date maps?

Downloaded from www.Manualslib.com manuals search engine

Highway Hypnosis

Always be alert and pay attention to your surroundings while driving. If you become tired or sleepy, find a safe place to park your vehicle and rest.

Other driving tips include:

- Keep the vehicle well ventilated.
- Keep interior temperature cool.
- Keep your eyes moving — scan the road ahead and to the sides.
- Check the rearview mirror and vehicle instruments often.

Hill and Mountain Roads

Driving on steep hills or through mountains is different than driving on flat or rolling terrain. Tips for driving in these conditions include:

- Keep your vehicle serviced and in good shape.
- Check all fluid levels and brakes, tires, cooling system, and transmission.
- Going down steep or long hills, shift to a lower gear.

⚠ CAUTION:

If you do not shift down, the brakes could get so hot that they would not work well. You would then have poor braking or even none going down a hill. You could crash. Shift down to let the engine assist the brakes on a steep downhill slope.

Downloaded from www.Manualslib.com manuals search engine

⚠ CAUTION:

Coasting downhill in NEUTRAL (N) or with the ignition off is dangerous. The brakes will have to do all the work of slowing down and they could get so hot that they would not work well. You would then have poor braking or even none going down a hill. You could crash. Always have the engine running and your vehicle in gear when you go downhill.

- Stay in your own lane. Do not swing wide or cut across the center of the road. Drive at speeds that let you stay in your own lane.
- Top of hills: Be alert — something could be in your lane (stalled car, accident).
- Pay attention to special road signs (falling rocks area, winding roads, long grades, passing or no-passing zones) and take appropriate action.

Winter Driving

Here are some tips for winter driving:

- Have your vehicle in good shape for winter.
- You might want to put winter emergency supplies in your trunk.

Include an ice scraper, a small brush or broom, a supply of windshield washer fluid, a rag, some winter outer clothing, a small shovel, a flashlight, a red cloth, and a couple of reflective warning triangles. And, if you will be driving under severe conditions, include a small bag of sand, a piece of old carpet, or a couple of burlap bags to help provide traction. Be sure you properly secure these items in your vehicle.

Also see *Tires on page 5-60*.

Downloaded from www.Manualslib.com manuals search engine

Driving on Snow or Ice

Most of the time, those places where the tires meet the road probably have good traction.

However, if there is snow or ice between the tires and the road, you can have a very slippery situation. You have a lot less traction, or grip, and need to be very careful.

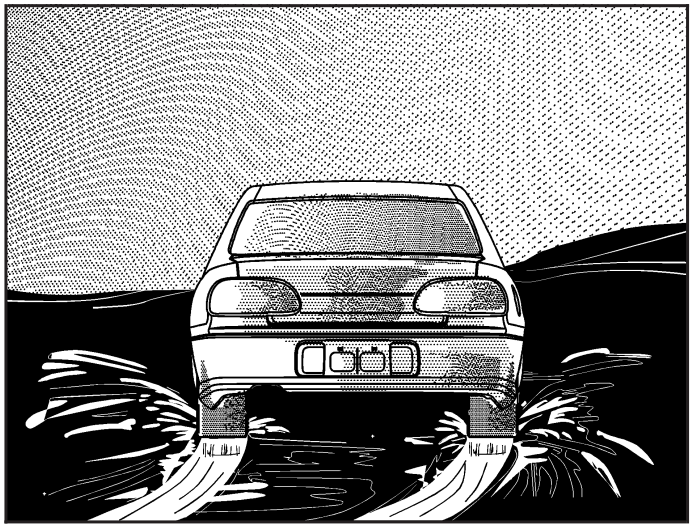

What is the worst time for this? Wet ice. Very cold snow or ice can be slick and hard to drive on. But wet ice can be even more trouble because it can offer the least traction of all. You can get wet ice when it is about freezing, 32°F (0°C), and freezing rain begins to fall. Try to avoid driving on wet ice until salt and sand crews can get there.

Whatever the condition — smooth ice, packed, blowing, or loose snow — drive with caution.

If your vehicle has a traction system, it will improve your ability to accelerate when driving on a slippery road. Even if your vehicle has a traction system, slow down and adjust your driving to the road conditions. Under certain conditions, you might want to turn the traction system off, such as when driving through deep snow and loose gravel, to help maintain vehicle motion at lower speeds. See *Traction Control System (TCS) on page 4-5* and *StabiliTrak® System on page 4-6*.

If your vehicle does not have a traction system, accelerate gently. Try not to break the fragile traction. If you accelerate too fast, the drive wheels will spin and polish the surface under the tires even more.

Downloaded from www.Manualslib.com manuals search engine

The Antilock Brake System (ABS) improves your vehicle's stability when you make a hard stop on a slippery road. Even though you have ABS, begin stopping sooner than you would on dry pavement. See *Antilock Brake System (ABS) on page 4-4*.

- Allow greater following distance on any slippery road.
- Watch for slippery spots. The road might be fine until you hit a spot that is covered with ice. On an otherwise clear road, ice patches can appear in shaded areas where the sun cannot reach, such as around clumps of trees, behind buildings, or under bridges. Sometimes the surface of a curve or an overpass can remain icy when the surrounding roads are clear. If you see a patch of ice ahead of you, brake before you are on it. Try not to brake while you are actually on the ice, and avoid sudden steering maneuvers.

If You Are Caught in a Blizzard

If you are stopped by heavy snow, you could be in a serious situation. You should probably stay with your vehicle unless you know for sure that you are near help and you can hike through the snow. Here are some things to do to summon help and keep yourself and your passengers safe:

- Turn on the hazard warning flashers.
- Tie a red cloth to your vehicle to alert police that you have been stopped by the snow.
- Put on extra clothing or wrap a blanket around you. If you do not have blankets or extra clothing, make body insulators from newspapers, burlap bags, rags, floor mats — anything you can wrap around yourself or tuck under your clothing to keep warm.

Downloaded from www.Manualslib.com manuals search engine

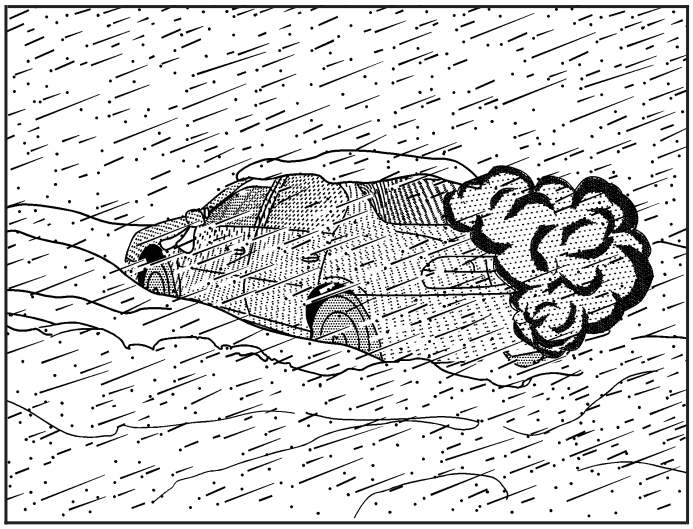

You can run the engine to keep warm, but be careful.

⚠ CAUTION:

Snow can trap exhaust gases under your vehicle. This can cause deadly CO (carbon monoxide) gas to get inside. CO could overcome you and kill you. You cannot see it or smell it, so you might not know it is in your vehicle. Clear away snow from around the base of your vehicle, especially any that is blocking the exhaust pipe. And check around again from time to time to be sure snow does not collect there.

Open a window just a little on the side of the vehicle that is away from the wind. This will help keep CO out.

Run your engine only as long as you must. This saves fuel. When you run the engine, make it go a little faster than just idle. That is, push the accelerator slightly. This uses less fuel for the heat that you get and it keeps the battery charged. You will need a well-charged battery to restart the vehicle, and possibly for signaling later on with the headlamps. Let the heater run for a while.

Downloaded from www.Manualslib.com manuals search engine

Then, shut the engine off and close the window almost all the way to preserve the heat. Start the engine again and repeat this only when you feel really uncomfortable from the cold. But do it as little as possible. Preserve the fuel as long as you can. To help keep warm, you can get out of the vehicle and do some fairly vigorous exercises every half hour or so until help comes.

If Your Vehicle is Stuck in Sand, Mud, Ice, or Snow

Slowly and cautiously spin the wheels to free your vehicle when stuck in sand, mud, ice, or snow. See *Rocking Your Vehicle to Get It Out on page 4-20*.

If your vehicle has a traction system, it can often help to free a stuck vehicle. Refer to your vehicle's traction system in the Index. If the stuck condition is too severe for the traction system to free the vehicle, turn the traction system off and use the rocking method.

⚠ CAUTION:

If you let your vehicle's tires spin at high speed, they can explode, and you or others could be injured. The vehicle can overheat, causing an engine compartment fire or other damage. Spin the wheels as little as possible and avoid going above 35 mph (55 km/h) as shown on the speedometer.

For information about using tire chains on your vehicle, see *Tire Chains on page 5-85*.

Downloaded from www.Manualslib.com manuals search engine

Rocking Your Vehicle to Get It Out

First, turn the steering wheel left and right to clear the area around the front wheels. Turn off any traction or stability system. See *Traction Control System (TCS) on page 4-5* and *StabiliTrak® System on page 4-6*. Then shift back and forth between REVERSE (R) and a forward gear, spinning the wheels as little as possible. To prevent transmission wear, wait until the wheels stop spinning before shifting gears. Release the accelerator pedal while you shift, and press lightly on the accelerator pedal when the transmission is in gear. By slowly spinning the wheels in the forward and reverse directions, you will cause a rocking motion that could free your vehicle. If that does not get your vehicle out after a few tries, it might need to be towed out. If your vehicle does need to be towed out, see *Towing Your Vehicle on page 4-25*.

Loading Your Vehicle

It is very important to know how much weight your vehicle can carry. This weight is called the vehicle capacity weight and includes the weight of all occupants, cargo and all nonfactory-installed options. Two labels on your vehicle show how much weight it may properly carry, the Tire and Loading Information label and the Certification label.

⚠ CAUTION:

Do not load your vehicle any heavier than the Gross Vehicle Weight Rating (GVWR), or either the maximum front or rear Gross Axle Weight Rating (GAWR). If you do, parts on your vehicle can break, and it can change the way your vehicle handles. These could cause you to lose control and crash. Also, overloading can shorten the life of your vehicle.

Downloaded from www.Manualslib.com manuals search engine

Tire and Loading Information Label

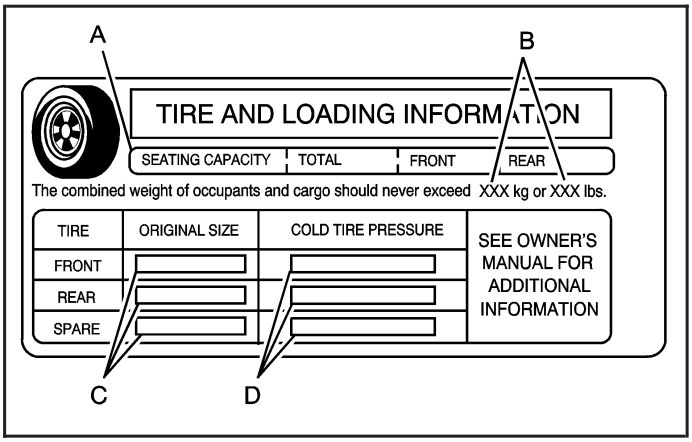

Label Example

A vehicle specific Tire and Loading Information label is attached to the vehicle's center pillar (B-pillar). With the driver's door open, you will find the label attached below the door lock post (striker). The Tire and Loading Information label shows the number of occupant seating positions (A), and the maximum vehicle capacity weight (B) in kilograms and pounds.

The Tire and Loading Information label also shows the tire size of the original equipment tires (C) and the recommended cold tire inflation pressures (D). For more information on tires and inflation see *Tires on page 5-60* and *Inflation - Tire Pressure on page 5-68*.

There is also important loading information on the Certification label. It tells you the Gross Vehicle Weight Rating (GVWR) and the Gross Axle Weight Rating (GAWR) for the front and rear axle; see "Certification Label" later in this section.

Steps for Determining Correct Load Limit

1. Locate the statement "The combined weight of occupants and cargo should never exceed XXX kg or XXX pounds" on your vehicle placard.
2. Determine the combined weight of the driver and passengers that will be riding in your vehicle.
3. Subtract the combined weight of the driver and passengers from XXX kilograms or XXX pounds.
4. The resulting figure equals the available amount of cargo and luggage load capacity. For example, if the "XXX" amount equals 1400 lbs and there will be five 150 lb passengers in your vehicle, the amount of available cargo and luggage load capacity is 650 lbs (1400 – 750 (5 x 150) = 650 lbs).

Downloaded from www.Manualslib.com manuals search engine

5. Determine the combined weight of luggage and cargo being loaded on the vehicle. That weight may not safely exceed the available cargo and luggage load capacity calculated in Step 4.
6. If your vehicle will be towing a trailer, the load from your trailer will be transferred to your vehicle. Consult this manual to determine how this reduces the available cargo and luggage load capacity of your vehicle.

   If your vehicle can tow a trailer, see *Towing a Trailer on page 4-28* for important information on towing a trailer, towing safety rules, and trailering tips.

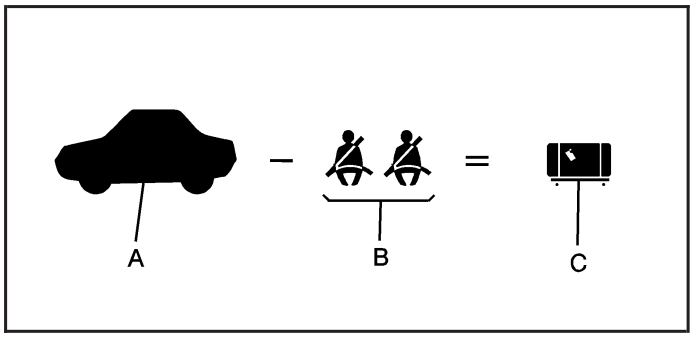

Example 1

Item	Description	Total
A	Vehicle Capacity Weight for Example 1 =	1,000 lbs (453 kg)
B	Subtract Occupant Weight 150 lbs (68 kg) × 2 =	300 lbs (136 kg)
C	Available Occupant and Cargo Weight =	700 lbs (317 kg)

Downloaded from www.Manualslib.com manuals search engine

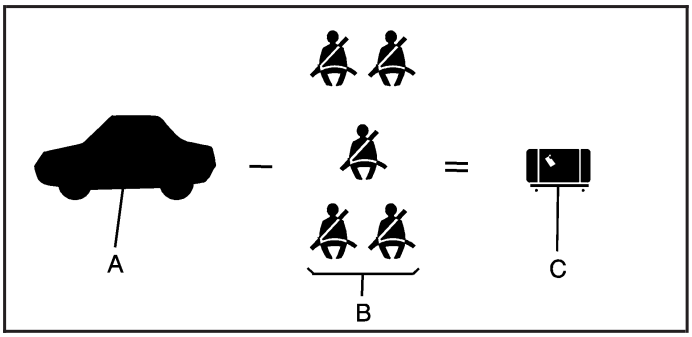

Example 2

Item	Description	Total
A	Vehicle Capacity Weight for Example 2 =	1,000 lbs (453 kg)
B	Subtract Occupant Weight 150 lbs (68 kg) × 5 =	750 lbs (340 kg)
C	Available Cargo Weight =	250 lbs (113 kg)

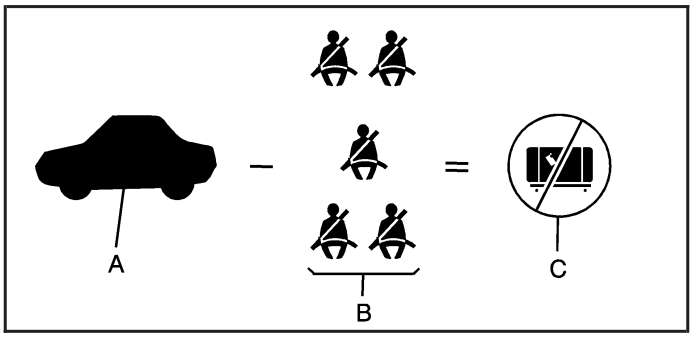

Example 3

Item	Description	Total
A	Vehicle Capacity Weight for Example 3 =	1,000 lbs (453 kg)
B	Subtract Occupant Weight 200 lbs (91 kg) × 5 =	1,000 lbs (453 kg)
C	Available Cargo Weight =	0 lbs (0 kg)

Downloaded from www.Manualslib.com manuals search engine

Refer to your vehicle's Tire and Loading Information label for specific information about your vehicle's capacity weight and seating positions. The combined weight of the driver, passengers, and cargo should never exceed your vehicle's capacity weight.

Certification Label

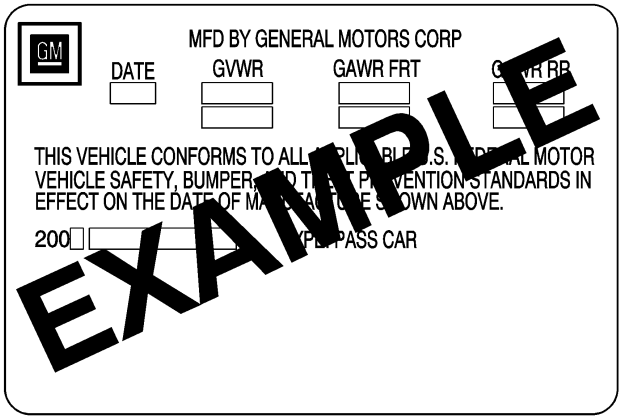

A vehicle specific Certification label, found on the rear edge of the driver's door, tells you the gross weight capacity of your vehicle, called the Gross Vehicle Weight Rating (GVWR). The GVWR includes the weight of the vehicle, all occupants, fuel and cargo. Never exceed the GVWR for your vehicle, or the Gross Axle Weight Rating (GAWR) for either the front or rear axle.

And, if you do have a heavy load, you should spread it out.

⚠ CAUTION:

Do not load your vehicle any heavier than the Gross Vehicle Weight Rating (GVWR), or either the maximum front or rear Gross Axle Weight Rating (GAWR). If you do, parts on your vehicle can break, and it can change the way your vehicle handles. These could cause you to lose control and crash. Also, overloading can shorten the life of your vehicle.

Downloaded from www.Manualslib.com manuals search engine

If you put things inside your vehicle — like suitcases, tools, packages, or anything else — they will go as fast as the vehicle goes. If you have to stop or turn quickly, or if there is a crash, they will keep going.

⚠ CAUTION:

Things you put inside your vehicle can strike and injure people in a sudden stop or turn, or in a crash.

- **Put things in the trunk or rear area of your vehicle. In a trunk, put them as far forward as you can. Try to spread the weight evenly. If you have fold-down rear seats, you will find four anchors on the back wall of your trunk. You can use these anchors to tie down lighter loads. They are not strong enough for heavy things, however, so put them as far forward as you can in the trunk or rear area.**

CAUTION: (Continued)

CAUTION: (Continued)

- **Never stack heavier things, like suitcases, inside the vehicle so that some of them are above the tops of the seats.**
- **Do not leave an unsecured child restraint in your vehicle.**
- **When you carry something inside the vehicle, secure it whenever you can.**
- **Do not leave a seat folded down unless you need to.**

Towing

Towing Your Vehicle

Consult your dealer/retailer or a professional towing service if you need to have your disabled vehicle towed. See *Roadside Assistance Program on page 7-6*.

If you want to tow your vehicle behind another vehicle for recreational purposes (such as behind a motorhome), see “Recreational Vehicle Towing” following.

Downloaded from www.Manualslib.com manuals search engine

Recreational Vehicle Towing

Recreational vehicle towing means towing your vehicle behind another vehicle – such as behind a motorhome. The two most common types of recreational vehicle towing are known as “dinghy towing” (towing your vehicle with all four wheels on the ground) and “dolly towing” (towing your vehicle with two wheels on the ground and two wheels up on a device known as a “dolly”).

With the proper preparation and equipment, many vehicles can be towed in these ways. See “Dinghy Towing” and “Dolly Towing,” following.

Here are some important things to consider before you do recreational vehicle towing:

- What’s the towing capacity of the towing vehicle? Be sure you read the tow vehicle manufacturer’s recommendations.
- How far will you tow? Some vehicles have restrictions on how far and how long they can tow.
- Do you have the proper towing equipment? See your dealer/retailer or trailering professional for additional advice and equipment recommendations.
- Is your vehicle ready to be towed? Just as you would prepare your vehicle for a long trip, you’ll want to make sure your vehicle is prepared to be towed. See *Before Leaving on a Long Trip on page 4-13*.

Dinghy Towing

If you have the 3.9L V6 engine with the four-speed automatic transmission, your vehicle cannot be dinghy towed.

If your vehicle does not have the 3.9L V6 engine with a four-speed automatic transmission, it can be dinghy towed.

When dinghy towing your vehicle, the vehicle should be run at the beginning of each day and at each RV fuel stop for about five minutes. This will ensure proper lubrication of transmission components.

Downloaded from www.Manualslib.com manuals search engine

For vehicles that can be dinghy towed with all four wheels on the ground:

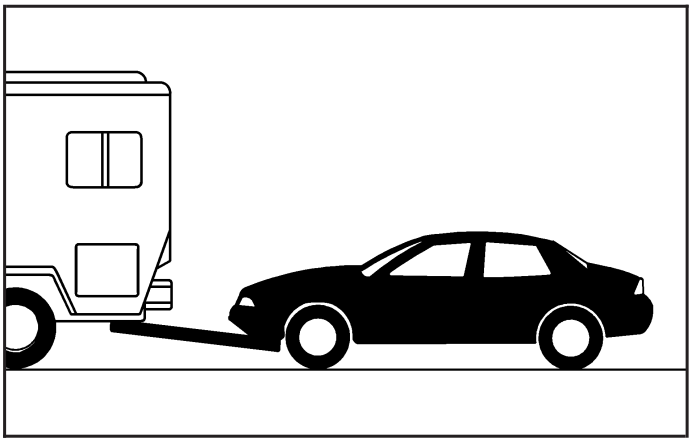

1. Position the vehicle to tow and then secure it.
2. Turn the ignition to LOCK/OFF.
3. Set the parking brake.
4. To prevent your battery from draining while the vehicle is being towed, remove the following fuse from the instrument panel fuse block: (IGN SENSOR). See *Instrument Panel Fuse Block on page 5-110* for more information.
5. Turn the ignition to ACC/ACCESSORY.
6. Shift your transmission to NEUTRAL (N).
7. Release the parking brake.

Notice: **If you exceed 65 mph (105 km/h) while towing your vehicle, it could be damaged. Never exceed 65 mph (105 km/h) while towing your vehicle.**

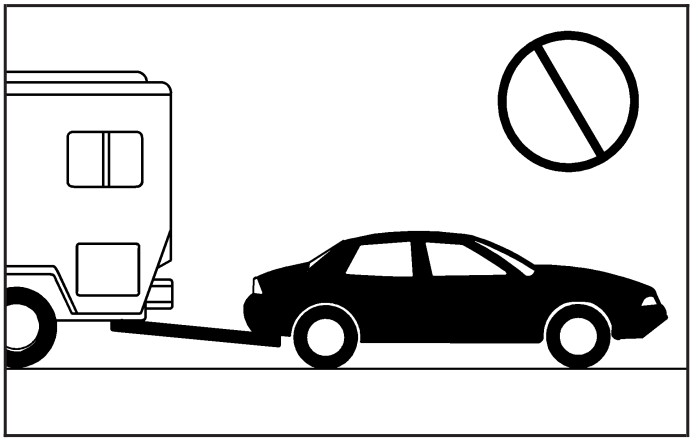

Notice: **Towing your vehicle from the rear could damage it. Also, repairs would not be covered by the warranty. Never have your vehicle towed from the rear.**

Downloaded from www.Manualslib.com manuals search engine

Dolly Towing

To tow your vehicle with two wheels on the ground and a dolly:

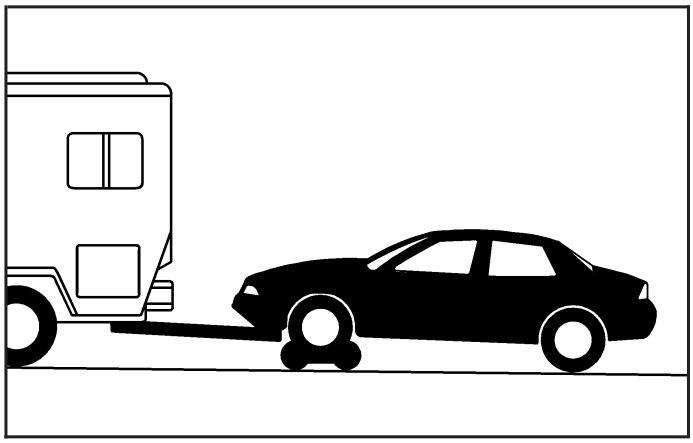

1. Put the front wheels on a dolly.
2. Shift the transmission to PARK (P).
3. Set the parking brake and then remove the key.
4. Clamp the steering wheel in a straight-ahead position with a clamping device designed for towing.
5. Release the parking brake.

Towing a Trailer

⚠ CAUTION:

If you do not use the correct equipment and drive properly, you can lose control when you pull a trailer. For example, if the trailer is too heavy, the brakes may not work well — or even at all. You and your passengers could be seriously injured. You may also damage your vehicle; the resulting repairs would not be covered by your warranty. Pull a trailer only if you have followed all the steps in this section. Ask your dealer/retailer for advice and information about towing a trailer with your vehicle.

Your vehicle can tow a trailer if it is equipped with the proper trailer towing equipment. To identify the trailering capacity of your vehicle, you should read the information in “Weight of the Trailer” that appears later in this section. Trailering is different than just driving your vehicle by itself. Trailering means changes in handling, acceleration, braking, durability and fuel economy. Successful, safe trailering takes correct equipment, and it has to be used properly.

Downloaded from www.Manualslib.com manuals search engine

That is the reason for this part. In it are many time-tested, important trailering tips and safety rules. Many of these are important for your safety and that of your passengers. So please read this section carefully before you pull a trailer.

Load-pulling components such as the engine, transmission, wheel assemblies and tires are forced to work harder against the drag of the added weight. The engine is required to operate at relatively higher speeds and under greater loads, generating extra heat. What is more, the trailer adds considerably to wind resistance, increasing the pulling requirements.

If You Do Decide To Pull A Trailer

If you do, here are some important points:

- There are many different laws, including speed limit restrictions, having to do with trailering. Make sure your rig will be legal, not only where you live but also where you will be driving. A good source for this information can be state or provincial police.
- Consider using a sway control. You can ask a hitch dealer/retailer about sway controls.
- Do not tow a trailer at all during the first 1,000 miles (1 600 km) your new vehicle is driven. Your engine, axle or other parts could be damaged.
- Then, during the first 500 miles (800 km) that you tow a trailer, do not drive over 50 mph (80 km/h) and do not make starts at full throttle. This helps your engine and other parts of your vehicle wear in at the heavier loads.
- Obey speed limit restrictions when towing a trailer. Do not drive faster than the maximum posted speed for trailers, or no more than 55 mph (90 km/h), to save wear on your vehicle's parts.

Three important considerations have to do with weight:

- the weight of the trailer
- the weight of the trailer tongue
- and the total weight on your vehicle's tires.

Weight of the Trailer

How heavy can a trailer safely be?

It should never weigh more than 1,000 lbs (453 kg). But even that can be too heavy.

It depends on how you plan to use your rig. For example, speed, altitude, road grades, outside temperature and how much your vehicle is used to pull a trailer are all important. It can also depend on any special equipment that you have on your vehicle, and the amount of tongue weight the vehicle can carry. See "Weight of the Trailer Tongue" later in this section for more information.

Downloaded from www.Manualslib.com manuals search engine

Maximum trailer weight is calculated assuming only the driver is in the tow vehicle and it has all the required trailering equipment. The weight of additional optional equipment, passengers and cargo in the tow vehicle must be subtracted from the maximum trailer weight.

When towing a trailer on long uphill grades and the outside temperature is above 85°F (29°C), reduce your vehicle speed to 45 mph (72 km/h) to avoid overheating the engine cooling system.

Ask your dealer/retailer for additional trailering information or advice, or write us at our Customer Assistance Offices. See *Customer Assistance Offices on page 7-5* for more information.

Weight of the Trailer Tongue

The tongue load (A) of any trailer is an important weight to measure because it affects the total or gross weight of your vehicle. The Gross Vehicle Weight (GVW) includes the curb weight of the vehicle, any cargo you may carry in it, and the people who will be riding in the vehicle. If you have a lot of options, equipment, passengers or cargo in your vehicle, it will reduce the tongue weight your vehicle can carry, which will also reduce the trailer weight your vehicle can tow. And if you tow a trailer, you must include the tongue load in the GVW because your vehicle will be carrying that weight, too. See *Loading Your Vehicle on page 4-20* for more information about your vehicle's maximum load capacity.

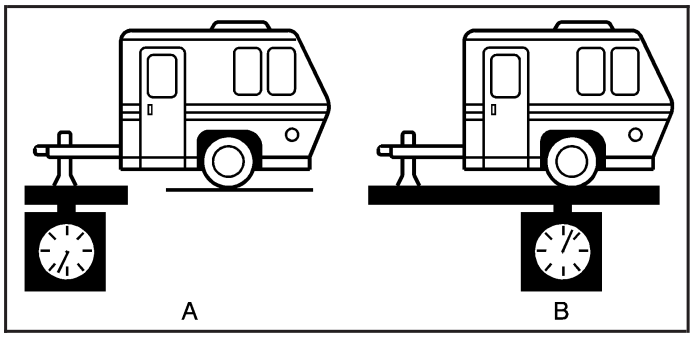

If you are using a weight-carrying hitch, the trailer tongue (A) should weigh 10 to 15 percent of the total loaded trailer weight (B).

After you have loaded your trailer, weigh the trailer and then the tongue, separately, to see if the weights are proper. If they are not, you may be able to get them right simply by moving some items around in the trailer.

Total Weight on Your Vehicle's Tires

Be sure your vehicle's tires are inflated to the upper limit for cold tires. You will find these numbers on the Tire-Loading Information label at the rear edge of the driver's door or see *Loading Your Vehicle on page 4-20*. Then be sure you do not go over the GVW limit for your vehicle, including the weight of the trailer tongue.

Downloaded from www.Manualslib.com manuals search engine

Hitches

It is important to have the correct hitch equipment. Crosswinds, large trucks going by and rough roads are a few reasons why you'll need the right hitch. Here are some rules to follow:

- The rear bumper on your vehicle is not intended for hitches. Do not attach rental hitches or other bumper-type hitches to it. Use only a frame-mounted hitch that does not attach to the bumper.
- Will you have to make any holes in the body of your vehicle when you install a trailer hitch? If you do, then be sure to seal the holes later when you remove the hitch. If you do not seal them, dirt, water and deadly carbon monoxide (CO) from your exhaust can get into your vehicle. See *Engine Exhaust on page 2-35*.

Safety Chains

You should always attach chains between your vehicle and your trailer. Cross the safety chains under the tongue of the trailer so that the tongue will not drop to the road if it becomes separated from the hitch. Instructions about safety chains may be provided by the hitch manufacturer or by the trailer manufacturer. Follow the manufacturer's recommendation for attaching safety chains and do not attach them to the bumper.

Always leave just enough slack so you can turn with your rig. And, never allow safety chains to drag on the ground.

Trailer Brakes

Does your trailer have its own brakes?

Be sure to read and follow the instructions for the trailer brakes so you will be able to install, adjust and maintain them properly. And because you may have anti-lock brakes, do not try to tap into your vehicle's brake system. If you do, both systems will not work well, or at all.

Driving with a Trailer

Towing a trailer requires a certain amount of experience. Before setting out for the open road, you will want to get to know your rig. Acquaint yourself with the feel of handling and braking with the added weight of the trailer. And always keep in mind that the vehicle you are driving is now a good deal longer and not nearly as responsive as your vehicle is by itself.

Before you start, check all trailer hitch parts and attachments, safety chains, electrical connector, lamps, tires and mirror adjustment. If the trailer has electric brakes, start your vehicle and trailer moving and then apply the trailer brake controller by hand to be sure the brakes are working. This lets you check your electrical connection at the same time.

Downloaded from www.Manualslib.com manuals search engine

During your trip, check occasionally to be sure that the load is secure, and that the lamps and any trailer brakes are still working.

Following Distance

Stay at least twice as far behind the vehicle ahead as you would when driving your vehicle without a trailer. This can help you avoid situations that require heavy braking and sudden turns.

Passing

You will need more passing distance up ahead when you are towing a trailer. And, because you're a good deal longer, you'll need to go much farther beyond the passed vehicle before you can return to your lane.

Backing Up

Hold the bottom of the steering wheel with one hand. Then, to move the trailer to the left, just move that hand to the left. To move the trailer to the right, move your hand to the right. Always back up slowly and, if possible, have someone guide you.

Making Turns

Notice: **Making very sharp turns while trailering could cause the trailer to come in contact with the vehicle. Your vehicle could be damaged. Avoid making very sharp turns while trailering.**

When you are turning with a trailer, make wider turns than normal. Do this so your trailer will not strike soft shoulders, curbs, road signs, trees or other objects. Avoid jerky or sudden maneuvers. Signal well in advance.

Turn Signals When Towing a Trailer

When you tow a trailer, your vehicle may need a different turn signal flasher and/or extra wiring. Check with your dealer/retailer. The arrows on your instrument panel will flash whenever you signal a turn or lane change. Properly hooked up, the trailer lamps will also flash, telling other drivers you are about to turn, change lanes or stop.

When towing a trailer, the arrows on your instrument panel will flash for turns even if the bulbs on the trailer are burned out. Thus, you may think drivers behind you are seeing your signal when they are not. It is important to check occasionally to be sure the trailer bulbs are still working.

Downloaded from www.Manualslib.com manuals search engine

Driving On Grades

When towing a trailer on long uphill grades and the outside temperature is above 85°F (29°C), reduce your vehicle speed to 45 mph (72 km/h) to avoid overheating the engine cooling system.

Reduce speed and shift to a lower gear *before* you start down a long or steep downgrade. If you do not shift down, you might have to use your brakes so much that they would get hot and no longer work well.

Parking on Hills

⚠ CAUTION:

You really should not park your vehicle, with a trailer attached, on a hill. If something goes wrong, your rig could start to move. People can be injured, and both your vehicle and the trailer can be damaged.

But if you ever have to park your rig on a hill, here is how to do it:

1. Apply your regular brakes, but do not shift into PARK (P) for an automatic transmission or into gear for a manual transmission. When parking uphill, turn your wheels away from the curb. When parking downhill, turn your wheels into the curb.
2. Have someone place chocks under the trailer wheels.
3. When the chocks are in place, release the regular brakes until the chocks absorb the load.
4. Reapply the regular brakes. Then apply your parking brake and shift into PARK (P).
5. Release the regular brakes.

Downloaded from www.Manualslib.com manuals search engine

When You Are Ready to Leave After Parking on a Hill

1. Apply your regular brakes and hold the pedal down while you:
   - start your engine,
   - shift into a gear, and
   - release the parking brake.
2. Let up on the brake pedal.
3. Drive slowly until the trailer is clear of the chocks.
4. Stop and have someone pick up and store the chocks.

Maintenance When Trailer Towing

Your vehicle will need service more often when you are pulling a trailer. See the Maintenance Schedule for more on this. Things that are especially important in trailer operation are automatic transmission fluid (do not overfill), engine oil, drive belt, cooling system and brake system. Each of these is covered in this manual, and the Index will help you find them quickly. If you are trailering, it is a good idea to review this information before you start your trip.

Check periodically to see that all hitch nuts and bolts are tight.

Engine Cooling When Trailer Towing

Your cooling system may temporarily overheat during severe operating conditions. See *Engine Overheating on page 5-33*.

Downloaded from www.Manualslib.com manuals search engine

Section 5 Service and Appearance Care

Service 5-4
Accessories and Modifications 5-4
California Proposition 65 Warning 5-5
California Perchlorate Materials Requirements 5-5
Doing Your Own Service Work 5-5
Adding Equipment to the Outside of Your Vehicle 5-6

Fuel 5-6
Gasoline Octane 5-6
Gasoline Specifications 5-7
California Fuel 5-7
Additives 5-8
Fuels in Foreign Countries 5-8
Filling the Tank 5-9
Filling a Portable Fuel Container 5-11

Checking Things Under the Hood 5-12
Hood Release 5-12
Engine Compartment Overview 5-14
Engine Oil 5-21
Engine Oil Life System 5-24
Engine Air Cleaner/Filter 5-26
Automatic Transmission Fluid (3.9L Engine) 5-27
Automatic Transmission Fluid (2.4L L4, 3.5L and 3.6L V6 Engines) 5-30
Engine Coolant 5-30
Pressure Cap 5-33
Engine Overheating 5-33
Overheated Engine Protection Operating Mode 5-35
Cooling System 5-36
Power Steering Fluid 5-40
Windshield Washer Fluid 5-41
Brakes 5-42
Battery 5-45
Jump Starting 5-46

Bulb Replacement 5-51
Halogen Bulbs 5-52
Headlamps, Front Turn Signal, Sidemarker, and Parking Lamps 5-52
Center High-Mounted Stoplamp (CHMSL) (Sedan) 5-54
Center High-Mounted Stoplamp (CHMSL) (Retractable Hardtop and Coupe) 5-54
Taillamps, Turn Signal, Sidemarker, Stoplamps and Back-up Lamps (Sedan) 5-55
Taillamps, Turn Signal, Sidemarker, Stoplamps and Back-up Lamps (Coupe) 5-56

Downloaded from www.Manualslib.com manuals search engine

Section 5 Service and Appearance Care

Taillamps, Turn Signal, Sidemarker, Stoplamps and Back-up Lamps (Retractable Hardtop) 5-57
License Plate Lamp 5-58
Replacement Bulbs 5-58

Windshield Wiper Blade Replacement 5-59

Tires 5-60
Winter Tires 5-61
Tire Sidewall Labeling 5-62
Tire Terminology and Definitions 5-65
Inflation - Tire Pressure 5-68
High-Speed Operation 5-70
Tire Pressure Monitor System 5-70
Tire Pressure Monitor Operation 5-72
Tire Inspection and Rotation 5-77
When It Is Time for New Tires 5-78
Buying New Tires 5-79
Different Size Tires and Wheels 5-81
Uniform Tire Quality Grading 5-82
Wheel Alignment and Tire Balance 5-83
Wheel Replacement 5-83
Tire Chains 5-85
If a Tire Goes Flat 5-86
Changing a Flat Tire 5-86
Removing the Spare Tire and Tools 5-88
Removing the Flat Tire and Installing the Spare Tire 5-90
Storing a Flat or Spare Tire and Tools 5-96
Compact Spare Tire 5-99

Appearance Care 5-100
Interior Cleaning 5-100
Fabric/Carpet 5-101
Leather 5-102
Instrument Panel, Vinyl, and Other Plastic Surfaces 5-103
Care of Safety Belts 5-103
Weatherstrips 5-103
Washing Your Vehicle 5-104
Cleaning Exterior Lamps/Lenses 5-104
Finish Care 5-104
Windshield and Wiper Blades 5-105
Aluminum Wheels 5-106
Tires 5-106
Sheet Metal Damage 5-106
Finish Damage 5-107
Underbody Maintenance 5-107
Chemical Paint Spotting 5-107
Vehicle Care/Appearance Materials 5-108

Downloaded from www.Manualslib.com manuals search engine

Section 5 Service and Appearance Care

Vehicle Identification 5-109
Vehicle Identification Number (VIN) 5-109
Service Parts Identification Label 5-109
Electrical System 5-109
Add-On Electrical Equipment 5-109
Windshield Wiper Fuses 5-110
Power Windows and Other Power Options 5-110
Fuses 5-110
Instrument Panel Fuse Block 5-110
Engine Compartment Fuse Block 5-112
Rear Compartment Fuse Block 5-116
Capacities and Specifications 5-119

Downloaded from www.Manualslib.com manuals search engine

Service

For service and parts needs, visit your dealer/retailer. You will receive genuine GM parts and GM-trained and supported service people.

Genuine GM parts have one of these marks:

Accessories and Modifications

When non-dealer/non-retailer accessories are added to your vehicle they can affect your vehicle's performance and safety, including such things as, airbags, braking, stability, ride and handling, emissions systems, aerodynamics, durability, and electronic systems like antilock brakes, traction control and stability control. Some of these accessories could even cause malfunction or damage not covered by warranty.

GM Accessories are designed to complement and function with other systems on your vehicle. Your GM dealer/retailer can accessorize your vehicle using genuine GM Accessories. When you go to your GM dealer/retailer and ask for GM Accessories, you will know that GM-trained and supported service technicians will perform the work using genuine GM Accessories.

Also, see *Adding Equipment to Your Airbag-Equipped Vehicle on page 1-73*.

Downloaded from www.Manualslib.com manuals search engine

California Proposition 65 Warning

Most motor vehicles, including this one, contain and/or emit chemicals known to the State of California to cause cancer and birth defects or other reproductive harm. Engine exhaust, many parts and systems (including some inside the vehicle), many fluids, and some component wear by-products contain and/or emit these chemicals.

California Perchlorate Materials Requirements

Certain types of automotive applications, such as airbag initiators, seat belt pretensioners, and lithium batteries contained in remote keyless entry transmitters, may contain perchlorate materials. Special handling may be necessary. For additional information, see www.dtsc.ca.gov/hazardouswaste/perchlorate.

Doing Your Own Service Work

⚠ CAUTION:

You can be injured and your vehicle could be damaged if you try to do service work on a vehicle without knowing enough about it.

- **Be sure you have sufficient knowledge, experience, the proper replacement parts, and tools before you attempt any vehicle maintenance task.**
- **Be sure to use the proper nuts, bolts, and other fasteners. English and metric fasteners can be easily confused. If you use the wrong fasteners, parts can later break or fall off. You could be hurt.**

If you want to do some of your own service work, you should use the proper service manual. It tells you much more about how to service your vehicle than this manual can. To order the proper service manual, see *Service Publications Ordering Information on page 7-15*.

Downloaded from www.Manualslib.com manuals search engine

Your vehicle has an airbag system. Before attempting to do your own service work, see *Servicing Your Airbag-Equipped Vehicle on page 1-72*.

You should keep a record with all parts receipts and list the mileage and the date of any service work you perform. See *Maintenance Record on page 6-17*.

Adding Equipment to the Outside of Your Vehicle

Things you might add to the outside of your vehicle can affect the airflow around it. This can cause wind noise and can affect fuel economy and windshield washer performance. Check with your dealer/retailer before adding equipment to the outside of your vehicle.

Fuel

Use of the recommended fuel is an important part of the proper maintenance of your vehicle. To help keep the engine clean and maintain optimum vehicle performance, we recommend the use of gasoline advertised as TOP TIER Detergent Gasoline.

The 8th digit of the Vehicle Identification Number (VIN) shows the code letter or number that identifies your vehicle's engine. The VIN is at the top left of the instrument panel. See *Vehicle Identification Number (VIN) on page 5-109*.

Gasoline Octane

If your vehicle has the 3.5L V6 engine (VIN Code N) or the 3.9L V6 engine (VIN Code 1), use regular unleaded gasoline with a posted octane rating of 87 or higher. If the octane rating is less than 87, you might notice an audible knocking noise when you drive, commonly referred to as spark knock. If this occurs, use a gasoline rated at 87 octane or higher as soon as possible. If you are using gasoline rated at 87 octane or higher and you hear heavy knocking, the engine needs service.

Downloaded from www.Manualslib.com manuals search engine

If your vehicle has the 3.6L V6 engine (VIN Code 7), use regular unleaded gasoline with a posted octane rating of 87 or higher. For best performance or trailer towing, you could choose to use middle grade 89 octane unleaded gasoline. If the octane rating is less than 87, you might notice an audible knocking noise when you drive, commonly referred to as spark knock. If this occurs, use a gasoline rated at 87 octane or higher as soon as possible. If you are using gasoline rated at 87 octane or higher and you hear heavy knocking, the engine needs service.

If your vehicle has the 2.4L L4 engine (VIN Code B), use premium unleaded gasoline with a posted octane rating of 91 or higher. You can also use regular unleaded gasoline rated at 87 octane or higher, but your vehicle's acceleration could be slightly reduced, and you might notice a slight audible knocking noise, commonly referred to as spark knock. If the octane is less than 87, you might notice a heavy knocking noise when you drive. If this occurs, use a gasoline rated at 87 octane or higher as soon as possible. Otherwise, you could damage the engine. If you are using gasoline rated at 87 octane or higher and you hear heavy knocking, the engine needs service.

Gasoline Specifications

At a minimum, gasoline should meet ASTM specification D 4814 in the United States or CAN/CGSB-3.5 or 3.511 in Canada. Some gasolines contain an octane-enhancing additive called methylcyclopentadienyl manganese tricarbonyl (MMT). We recommend against the use of gasolines containing MMT. See *Additives on page 5-8* for additional information.

California Fuel

If your vehicle is certified to meet California Emissions Standards, it is designed to operate on fuels that meet California specifications. See the underhood emission control label. If this fuel is not available in states adopting California emissions standards, your vehicle will operate satisfactorily on fuels meeting federal specifications, but emission control system performance might be affected. The malfunction indicator lamp could turn on and your vehicle might fail a smog-check test. See *Malfunction Indicator Lamp on page 3-38*. If this occurs, return to your authorized dealer/retailer for diagnosis. If it is determined that the condition is caused by the type of fuel used, repairs might not be covered by your warranty.

Downloaded from www.Manualslib.com manuals search engine

Additives

To provide cleaner air, all gasolines in the United States are now required to contain additives that help prevent engine and fuel system deposits from forming, allowing the emission control system to work properly. In most cases, you should not have to add anything to the fuel. However, some gasolines contain only the minimum amount of additive required to meet U.S. Environmental Protection Agency regulations. To help keep fuel injectors and intake valves clean, or if your vehicle experiences problems due to dirty injectors or valves, look for gasoline that is advertised as TOP TIER Detergent Gasoline. Also, your dealer/retailer has additives that will help correct and prevent most deposit-related problems.

Gasolines containing oxygenates, such as ethers and ethanol, and reformulated gasolines might be available in your area. We recommend that you use these gasolines, if they comply with the specifications described earlier. However, E85 (85% ethanol) and other fuels containing more than 10% ethanol must not be used in vehicles that were not designed for those fuels.

Notice: **Your vehicle was not designed for fuel that contains methanol. Do not use fuel containing methanol. It can corrode metal parts in the fuel system and also damage plastic and rubber parts. That damage would not be covered under your warranty.**

Some gasolines that are not reformulated for low emissions can contain an octane-enhancing additive called methylcyclopentadienyl manganese tricarbonyl (MMT); ask the attendant where you buy gasoline whether the fuel contains MMT. We recommend against the use of such gasolines. Fuels containing MMT can reduce the life of spark plugs and the performance of the emission control system could be affected. The malfunction indicator lamp might turn on. If this occurs, return to your dealer/retailer for service.

Fuels in Foreign Countries

If you plan on driving in another country outside the United States or Canada, the proper fuel might be hard to find. Never use leaded gasoline or any other fuel not recommended in the previous text on fuel. Costly repairs caused by use of improper fuel would not be covered by your warranty.

To check the fuel availability, ask an auto club, or contact a major oil company that does business in the country where you will be driving.

Downloaded from www.Manualslib.com manuals search engine

Filling the Tank

⚠ CAUTION:

Fuel vapor burns violently and a fuel fire can cause bad injuries. To help avoid injuries to you and others, read and follow all the instructions on the pump island. Turn off your engine when you are refueling. Do not smoke if you are near fuel or refueling your vehicle. Do not use cellular phones. Keep sparks, flames, and smoking materials away from fuel. Do not leave the fuel pump unattended when refueling your vehicle. This is against the law in some places. Do not re-enter the vehicle while pumping fuel. Keep children away from the fuel pump; never let children pump fuel.

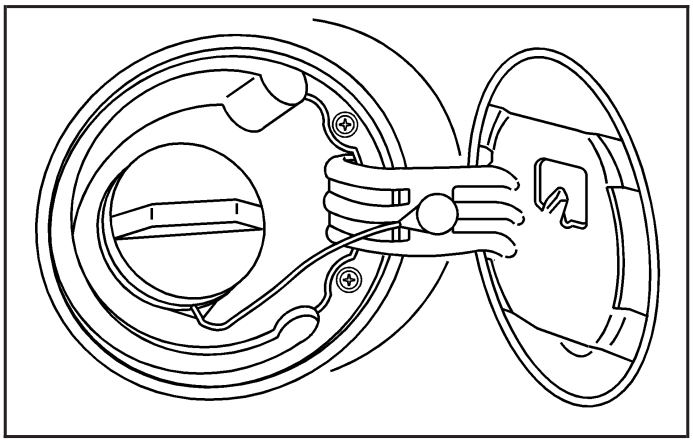

The tethered fuel cap is located behind a hinged fuel door on the passenger's side of the vehicle.

Downloaded from www.Manualslib.com manuals search engine

To remove the fuel cap, turn it slowly counterclockwise. The fuel cap has a spring in it; if the cap is released too soon, it will spring back to the right.

While refueling, hang the tethered fuel cap from the hook on the fuel door.

⚠ CAUTION:

Fuel can spray out on you if you open the fuel cap too quickly. If you spill fuel and then something ignites it, you could be badly burned. This spray can happen if your tank is nearly full, and is more likely in hot weather. Open the fuel cap slowly and wait for any hiss noise to stop. Then unscrew the cap all the way.

Be careful not to spill fuel. Do not top off or overfill the tank, and wait a few seconds after you have finished pumping before removing the nozzle. Clean fuel from painted surfaces as soon as possible. See *Washing Your Vehicle on page 5-104*.

When replacing the fuel cap, turn it clockwise until it clicks. Make sure the cap is fully installed. The diagnostic system can determine if the fuel cap has been left off or improperly installed. This would let fuel evaporate into the atmosphere. See *Malfunction Indicator Lamp on page 3-38*.

The CHECK GAS CAP message will be displayed on the Driver Information Center (DIC) if the fuel cap is not properly installed. See *DIC Warnings and Messages on page 3-46* for more information.

Downloaded from www.Manualslib.com manuals search engine

⚠ CAUTION:

If a fire starts while you are refueling, do not remove the nozzle. Shut off the flow of fuel by shutting off the pump or by notifying the station attendant. Leave the area immediately.

Notice: **If you need a new fuel cap, be sure to get the right type. Your dealer/retailer can get one for you. If you get the wrong type, it may not fit properly. This may cause your malfunction indicator lamp to light and may damage your fuel tank and emissions system. See *Malfunction Indicator Lamp on page 3-38*.**

Filling a Portable Fuel Container

⚠ CAUTION:

Never fill a portable fuel container while it is in your vehicle. Static electricity discharge from the container can ignite the fuel vapor. You can be badly burned and your vehicle damaged if this occurs. To help avoid injury to you and others:

- **Dispense fuel only into approved containers.**
- **Do not fill a container while it is inside a vehicle, in a vehicle's trunk, pickup bed, or on any surface other than the ground.**
- **Bring the fill nozzle in contact with the inside of the fill opening before operating the nozzle. Contact should be maintained until the filling is complete.**
- **Do not smoke while pumping fuel.**
- **Do not use a cellular phone while pumping fuel.**

Downloaded from www.Manualslib.com manuals search engine

Checking Things Under the Hood

⚠ CAUTION:

An electric fan under the hood can start up and injure you even when the engine is not running. Keep hands, clothing, and tools away from any underhood electric fan.

⚠ CAUTION:

Things that burn can get on hot engine parts and start a fire. These include liquids like fuel, oil, coolant, brake fluid, windshield washer and other fluids, and plastic or rubber. You or others could be burned. Be careful not to drop or spill things that will burn onto a hot engine.

Hood Release

To open the hood, do the following:

1. Pull the handle with this symbol on it. It is located under the instrument panel on the driver's side of the vehicle.

Downloaded from www.Manualslib.com manuals search engine

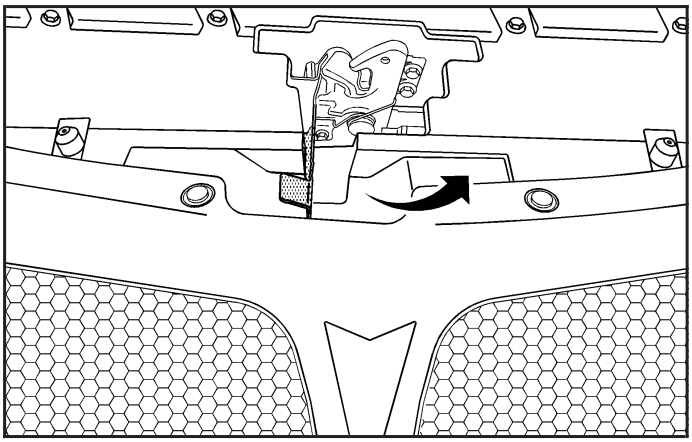

2. Then go to the front of the vehicle and push the secondary hood release lever to the right.

3. Lift the hood, release the hood prop rod from its retainer, and put the hood prop into the slot in the hood marked with an arrow.

Before closing the hood, be sure all the filler caps are on properly. Then lift the hood to relieve pressure on the hood prop. Remove the hood prop from the slot in the hood and return the prop to its retainer. Then let the hood down and close it firmly.

Downloaded from www.Manualslib.com manuals search engine

Engine Compartment Overview

When you open the hood on the 2.4L L4 engine, this is what you see:

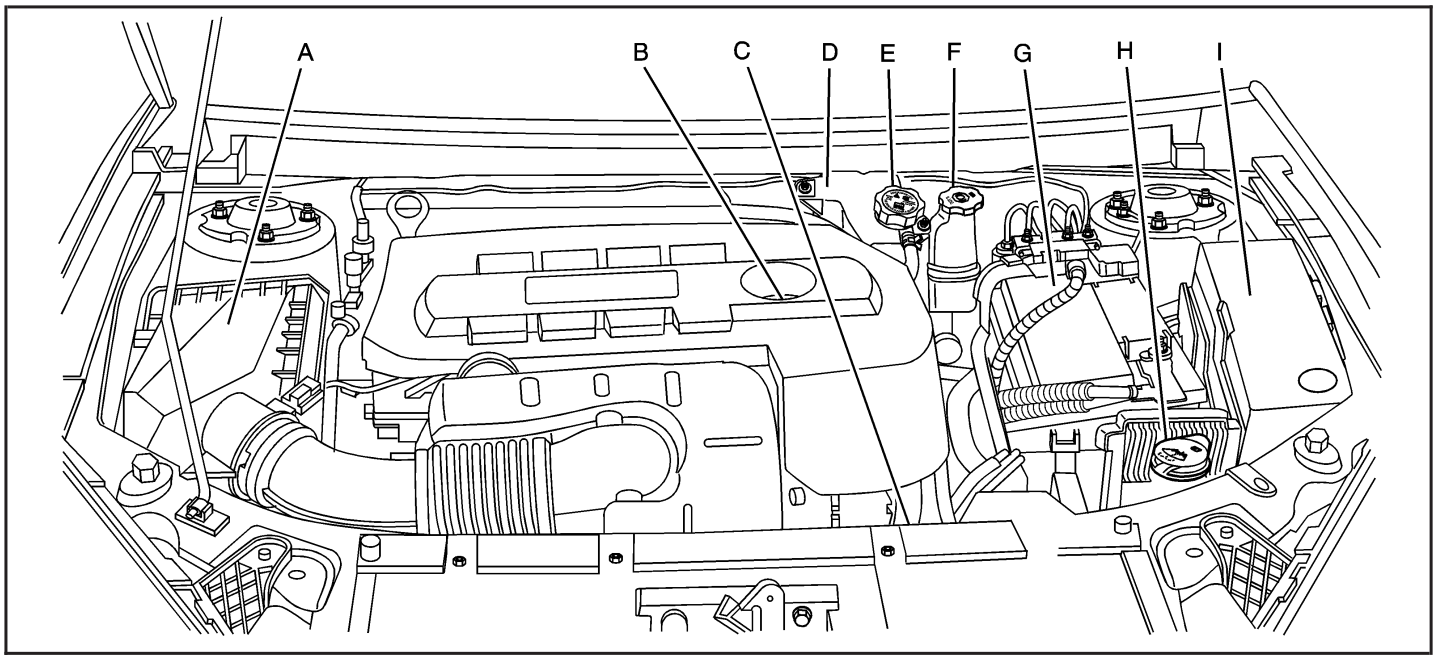

Downloaded from www.Manualslib.com manuals search engine

A. Engine Air Cleaner/Filter. See *Engine Air Cleaner/Filter on page 5-26*.

B. Engine Oil Fill Cap. See “When to Add Engine Oil” under *Engine Oil on page 5-21*.

C. Engine Oil Dipstick (Out of View). See “Checking Engine Oil” under *Engine Oil on page 5-21*.

D. Engine Coolant Surge Tank. See *Engine Coolant on page 5-30*.

E. Pressure Cap. See *Pressure Cap on page 5-33*.

F. Brake Master Cylinder Reservoir. See “Brake Fluid” under *Brakes on page 5-42*.

G. Battery. See *Battery on page 5-45*.

H. Windshield Washer Fluid Reservoir. See “Adding Washer Fluid” under *Windshield Washer Fluid on page 5-41*.

I. Engine Compartment Fuse Block. See *Engine Compartment Fuse Block on page 5-112*.

Downloaded from www.Manualslib.com manuals search engine

When you open the hood on the 3.5L V6 engine, this is what you see:

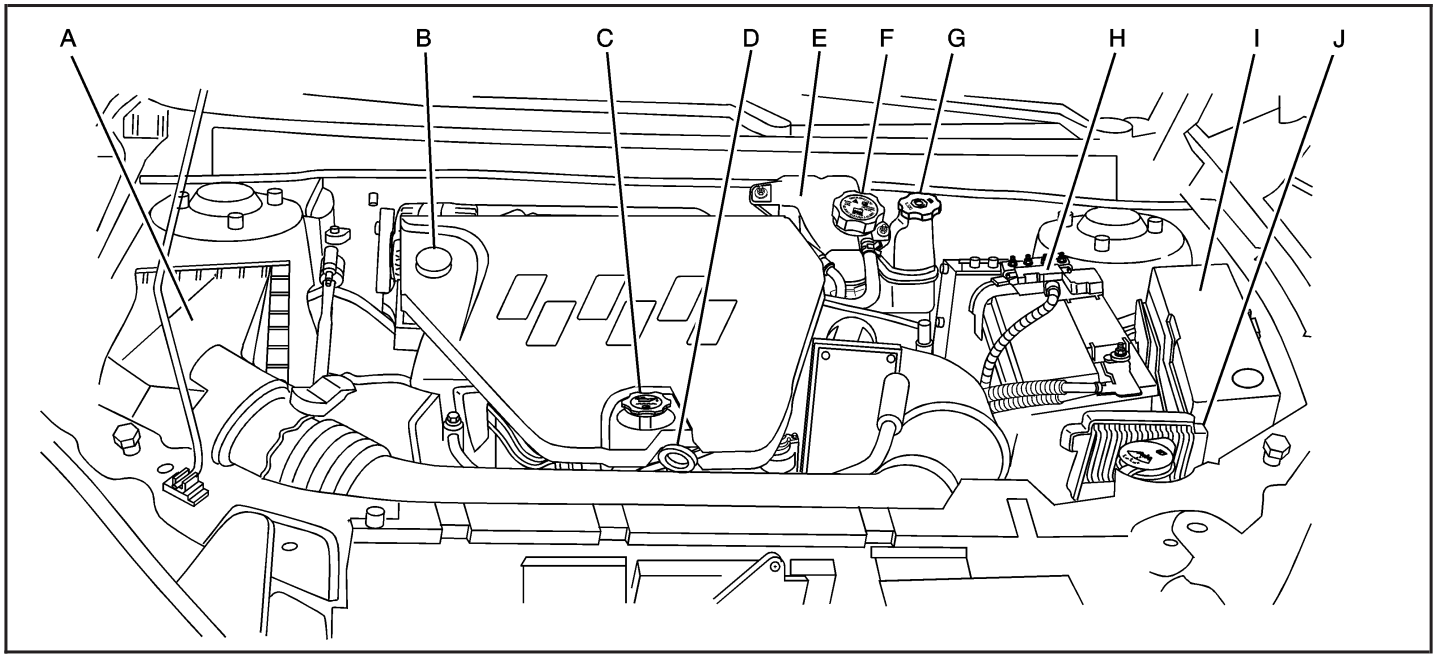

Downloaded from www.Manualslib.com manuals search engine

A. Engine Air Cleaner/Filter. See *Engine Air Cleaner/Filter on page 5-26*.

B. Power Steering Fluid Reservoir. See *Power Steering Fluid on page 5-40*.

C. Engine Oil Fill Cap. See “When to Add Engine Oil” under *Engine Oil on page 5-21*.

D. Engine Oil Dipstick. See “Checking Engine Oil” under *Engine Oil on page 5-21*.

E. Engine Coolant Surge Tank. See *Engine Coolant on page 5-30*.

F. Pressure Cap. See *Pressure Cap on page 5-33*.

G. Brake Master Cylinder Reservoir. See “Brake Fluid” under *Brakes on page 5-42*.

H. Battery. See *Battery on page 5-45*.

I. Engine Compartment Fuse Block. See *Engine Compartment Fuse Block on page 5-112*.

J. Windshield Washer Fluid Reservoir. See “Adding Washer Fluid” under *Windshield Washer Fluid on page 5-41*.

Downloaded from www.Manualslib.com manuals search engine

When you open the hood on the 3.6L V6 engine, this is what you see:

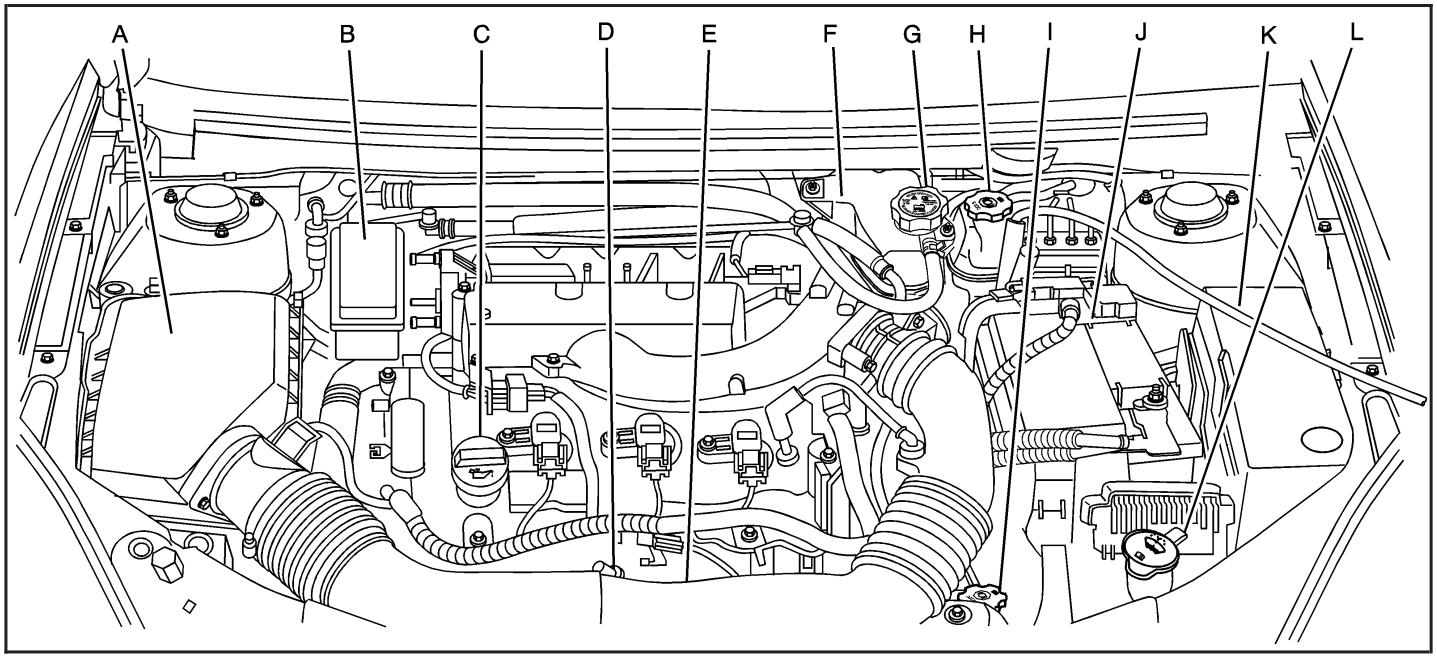

Downloaded from www.Manualslib.com manuals search engine

A. Engine Air Cleaner/Filter. See *Engine Air Cleaner/Filter on page 5-26*.

B. Power Steering Fluid Reservoir. See *Power Steering Fluid on page 5-40*.

C. Engine Oil Fill Cap. See “When to Add Engine Oil” under *Engine Oil on page 5-21*.

D. Engine Oil Dipstick. See “Checking Engine Oil” under *Engine Oil on page 5-21*.

E. Electric Engine Cooling Fans (Out of View). See *Cooling System on page 5-36*.

F. Engine Coolant Surge Tank. See *Engine Coolant on page 5-30*.

G. Pressure Cap. See *Pressure Cap on page 5-33*.

H. Brake Master Cylinder Reservoir. See “Brake Fluid” under *Brakes on page 5-42*.

I. Automatic Transmission Fluid Dipstick. See “Checking the Fluid Level” under *Automatic Transmission Fluid (3.9L Engine) on page 5-27* or *Automatic Transmission Fluid (2.4L L4, 3.5L and 3.6L V6 Engines) on page 5-30*.

J. Battery. See *Battery on page 5-45*.

K. Underhood Fuse Block. See *Engine Compartment Fuse Block on page 5-112*.

L. Windshield Washer Fluid Reservoir. See “Adding Washer Fluid” under *Windshield Washer Fluid on page 5-41*.

Downloaded from www.Manualslib.com manuals search engine

When you open the hood on the 3.9L V6 engine, this is what you see:

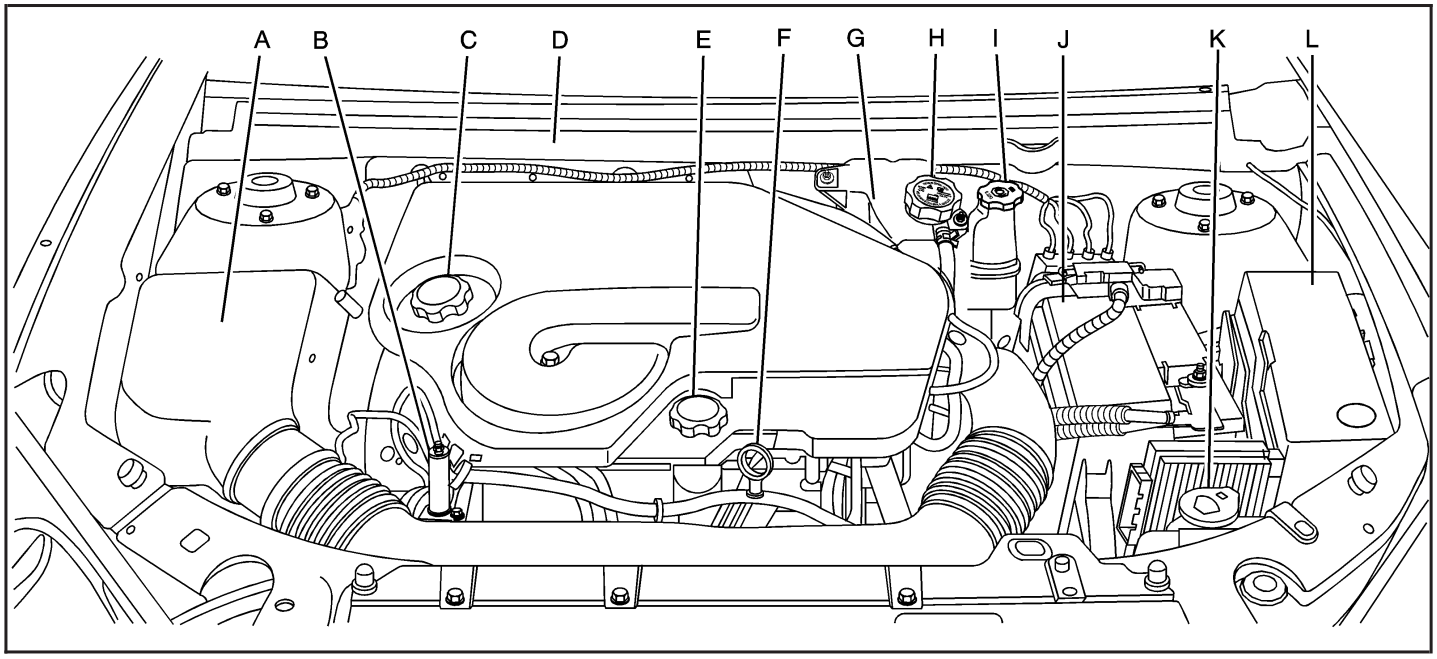

Downloaded from www.Manualslib.com manuals search engine

A. Engine Air Cleaner/Filter. See *Engine Air Cleaner/Filter on page 5-26*.

B. Engine Coolant Bleed Valve.

C. Power Steering Fluid. See *Power Steering Fluid on page 5-40*.

D. Automatic Transmission Fluid Dipstick (Out of View). See “Checking the Fluid Level” under *Automatic Transmission Fluid (3.9L Engine) on page 5-27* or *Automatic Transmission Fluid (2.4L L4, 3.5L and 3.6L V6 Engines) on page 5-30*.

E. Engine Oil Fill Cap. See “When to Add Engine Oil” under *Engine Oil on page 5-21*.

F. Engine Oil Dipstick. See “Checking Engine Oil” under *Engine Oil on page 5-21*.

G. Engine Coolant Surge Tank. See *Engine Coolant on page 5-30*.

H. Pressure Cap. See *Pressure Cap on page 5-33*.

I. Brake Master Cylinder Reservoir. See “Brake Fluid” under *Brakes on page 5-42*.

J. Battery. See *Battery on page 5-45*.

K. Windshield Washer Fluid Reservoir. See “Adding Washer Fluid” under *Windshield Washer Fluid on page 5-41*.

L. Engine Compartment Fuse Block. See *Engine Compartment Fuse Block on page 5-112*.

Engine Oil

Checking Engine Oil

It is a good idea to check the engine oil every time you get fuel. In order to get an accurate reading, the oil must be warm and the vehicle must be on level ground.

The engine oil dipstick handle is a yellow loop. See *Engine Compartment Overview on page 5-14* for the location of the engine oil dipstick.

1. Turn off the engine and give the oil several minutes to drain back into the oil pan. If you do not do this, the oil dipstick might not show the actual level.
2. Pull the dipstick and clean it with a paper towel or cloth, then push it back in all the way. Remove it again, keeping the tip down and check the level.

Downloaded from www.Manualslib.com manuals search engine

When to Add Engine Oil

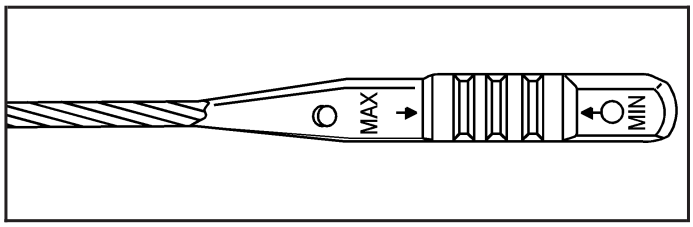

L4 Engine

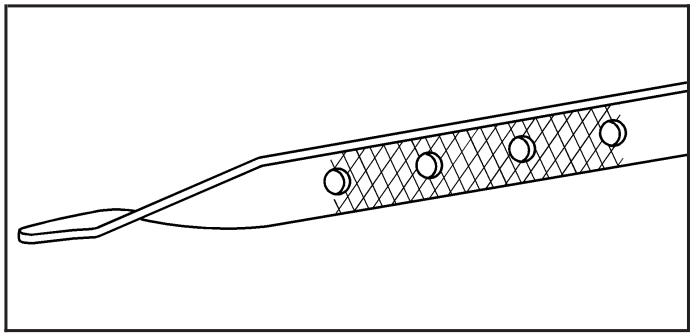

V6 Engine

If the oil is below the MIN mark for the L4 engine or below the cross-hatched area at the tip of the dipstick for the V6 engine, add at least one quart/liter of the recommended oil. This section explains what kind of oil to use. For engine oil crankcase capacity, see *Capacities and Specifications on page 5-119*.

Notice: **Do not add too much oil. If the engine has so much oil that the oil level gets above the upper mark that shows the proper operating range, the engine could be damaged.**

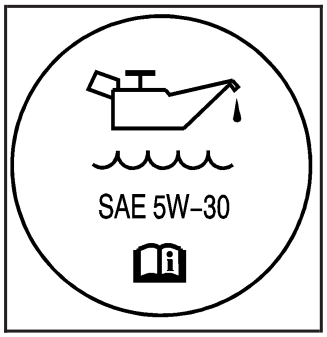

See *Engine Compartment Overview on page 5-14* for the location of the engine oil fill cap.

Be sure to add enough oil to put the level somewhere in the proper operating range. Push the dipstick all the way back in when you are through.

Downloaded from www.Manualslib.com manuals search engine

What Kind of Engine Oil to Use

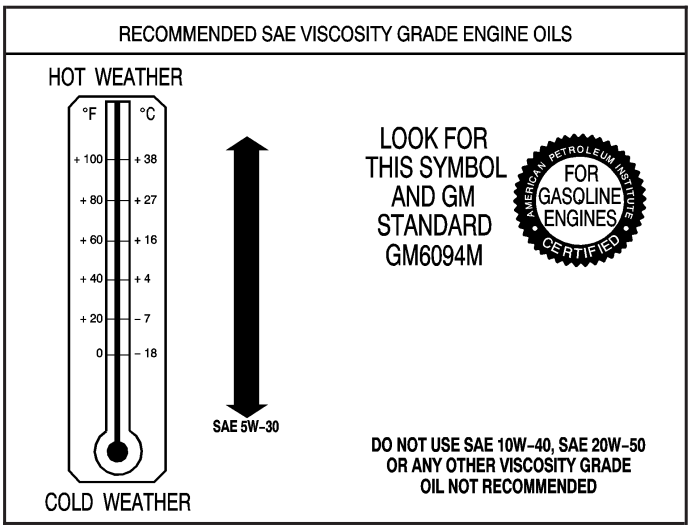

Look for three things:

- GM6094M

  Your vehicle's engine requires oil meeting GM Standard GM6094M. Look for and use only an oil that meets GM Standard GM6094M.

- SAE 5W-30

  As shown in the viscosity chart, SAE 5W-30 is best for your vehicle.

  These numbers on an oil container show its viscosity, or thickness. Do not use other viscosity oils such as SAE 20W-50.

- Oils meeting these requirements should have the starburst symbol on the container. This symbol indicates that the oil has been certified by the American Petroleum Institute (API).

Look for this information on the oil container, and use only those oils that are identified as meeting GM Standard GM6094M and have the starburst symbol on the front of the oil container.

Notice: **Use only engine oil identified as meeting GM Standard GM6094M and showing the American Petroleum Institute Certified For Gasoline Engines starburst symbol. Failure to use the recommended oil can result in engine damage not covered by your warranty.**

Downloaded from www.Manualslib.com manuals search engine

If you are in an area of extreme cold, where the temperature falls below –20°F (–29°C), it is recommended that you use either an SAE 5W-30 synthetic oil or an SAE 0W-30 oil. Both provide easier cold starting and better protection for the engine at extremely low temperatures.

Engine Oil Additives

Do not add anything to the oil. The recommended oils with the starburst symbol that meet GM Standard GM6094M are all you need for good performance and engine protection.

Engine Oil Life System

When to Change Engine Oil

Your vehicle has a computer system that lets you know when to change the engine oil and filter. This is based on engine revolutions and engine temperature, and not on mileage. Based on driving conditions, the mileage at which an oil change will be indicated can vary considerably. For the oil life system to work properly, you must reset the system every time the oil is changed.

When the system has calculated that oil life has been diminished, it will indicate that an oil change is necessary. A CHANGE OIL SOON message will come on. See *DIC Warnings and Messages on page 3-46*. Change the oil as soon as possible within the next 600 miles (1 000 km). It is possible that, if you are driving under the best conditions, the oil life system might not indicate that an oil change is necessary for over a year. However, the engine oil and filter must be changed at least once a year and at this time the system must be reset. Your dealer/retailer has trained service people who will perform this work using genuine parts and reset the system. It is also important to check the oil regularly and keep it at the proper level.

If the system is ever reset accidentally, you must change the oil at 3,000 miles (5 000 km) since your last oil change. Remember to reset the oil life system whenever the oil is changed.

Downloaded from www.Manualslib.com manuals search engine

How to Reset the Engine Oil Life System

The Engine Oil Life System calculates when to change the engine oil and filter based on vehicle use. Whenever the oil is changed, reset the system so it can calculate when the next oil change is required. If a situation occurs where you change the oil prior to a CHANGE OIL SOON message being turned on, reset the system.

After changing the engine oil and filter, the system must be reset. To reset the oil life system:

1. With the CHANGE OIL SOON message displayed, press any of the three DIC buttons to clear the CHANGE OIL SOON message. See *DIC Warnings and Messages on page 3-46*.
2. Display OIL LIFE RESET on the DIC.
3. Press and hold the ENTER button for at least one second. An ACKNOWLEDGED display message will appear for three seconds or until the next button is pressed. This will tell you the system has been reset. See *DIC Vehicle Personalization on page 3-50*.
4. Turn the ignition to LOCK/OFF.

If the CHANGE OIL SOON message comes back on when you start your vehicle, the engine oil life system has not reset. Repeat the procedure.

What to Do with Used Oil

Used engine oil contains certain elements that can be unhealthy for your skin and could even cause cancer. Do not let used oil stay on your skin for very long. Clean your skin and nails with soap and water, or a good hand cleaner. Wash or properly dispose of clothing or rags containing used engine oil. See the manufacturer's warnings about the use and disposal of oil products.

Used oil can be a threat to the environment. If you change your own oil, be sure to drain all the oil from the filter before disposal. Never dispose of oil by putting it in the trash, pouring it on the ground, into sewers, or into streams or bodies of water. Instead, recycle it by taking it to a place that collects used oil. If you have a problem properly disposing of used oil, ask your dealer/retailer, a service station, or a local recycling center for help.

Downloaded from www.Manualslib.com manuals search engine

Engine Air Cleaner/Filter

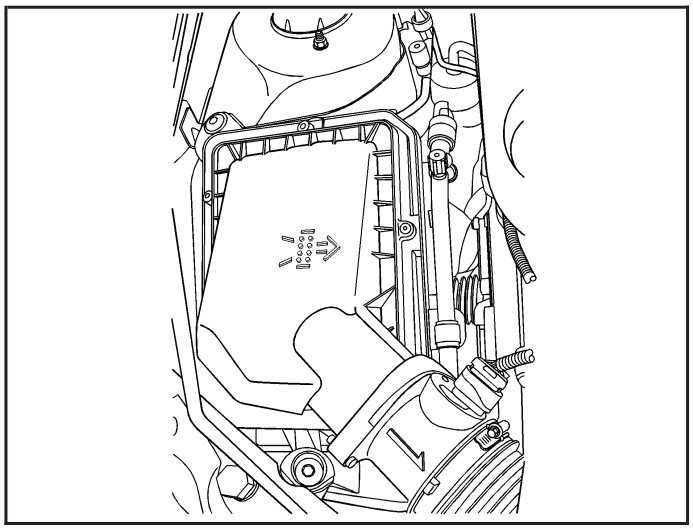

See *Engine Compartment Overview on page 5-14* for the location of the engine air cleaner/filter.

When to Inspect the Engine Air Cleaner/Filter

Inspect the air cleaner/filter at the Maintenance II intervals and replace it at the first oil change after each 50,000 mile (80 000 km) interval. See *Scheduled Maintenance on page 6-4* for more information. If you are driving in dusty/dirty conditions, inspect the filter at each engine oil change.

How to Inspect the Engine Air Cleaner/Filter

To inspect the air cleaner/filter, remove the filter from the vehicle and lightly shake the filter to release loose dust and dirt. If the filter remains caked with dirt, a new filter is required.

Downloaded from www.Manualslib.com manuals search engine

To inspect or replace the engine air cleaner/filter, do the following:

1. Remove the screws that hold the cover on.
2. Disconnect the electrical connector.
3. Lift off the cover.
4. Inspect or replace the engine air cleaner/filter.
5. Reverse Steps 1 through 3 to reinstall the cover and reconnect the electrical connector.

⚠ CAUTION:

Operating the engine with the air cleaner/filter off can cause you or others to be burned. The air cleaner not only cleans the air; it helps to stop flames if the engine backfires. If it is not there and the engine backfires, you could be burned. Do not drive with it off, and be careful working on the engine with the air cleaner/filter off.

Notice: **If the air cleaner/filter is off, a backfire can cause a damaging engine fire. And, dirt can easily get into your engine, which will damage it. Always have the air cleaner/filter in place when you are driving.**

Automatic Transmission Fluid (3.9L Engine)

When to Check and Change Automatic Transmission Fluid

A good time to check the automatic transmission fluid level is when the engine oil is changed.

Change the fluid and filter at the intervals listed in Additional Required Services, and be sure to use the transmission fluid listed in *Recommended Fluids and Lubricants on page 6-13*.

Downloaded from www.Manualslib.com manuals search engine

How to Check Automatic Transmission Fluid

Because this operation can be a little difficult, you may choose to have this done at the dealer/retailer service department.

If you do it yourself, be sure to follow all the instructions here, or you could get a false reading on the dipstick.

Notice: **Too much or too little fluid can damage your transmission. Too much can mean that some of the fluid could come out and fall on hot engine parts or exhaust system parts, starting a fire. Too little fluid could cause the transmission to overheat. Be sure to get an accurate reading if you check your transmission fluid.**

Wait at least 30 minutes before checking the transmission fluid level if you have been driving:

- When outside temperatures are above 90°F (32°C).
- At high speed for quite a while.
- In heavy traffic — especially in hot weather.
- While pulling a trailer.

To get the right reading, the fluid should be at normal operating temperature, which is 180°F to 200°F (82°C to 93°C).

Get the vehicle warmed up by driving about 15 miles (24 km) when outside temperatures are above 50°F (10°C). If it is colder than 50°F (10°C), you may have to drive longer.

Checking the Fluid Level

Prepare the vehicle as follows:

1. Park the vehicle on a level place. Keep the engine running.
2. With the parking brake applied, place the shift lever in PARK (P).
3. With your foot on the brake pedal, move the shift lever through each gear, pausing for about three seconds in each one. Then, position the shift lever in PARK (P).
4. Let the engine run at idle for three to five minutes.

Downloaded from www.Manualslib.com manuals search engine

Then, without shutting off the engine, follow these steps:

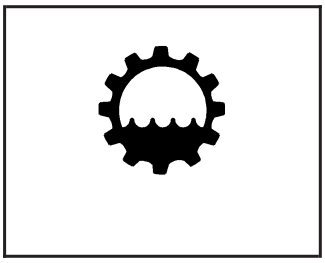

The transmission fluid dipstick handle has this symbol on it, and is located near the rear of the engine compartment. See *Engine Compartment Overview on page 5-14* for more information on location.

1. Remove the dipstick and wipe it with a clean rag or paper towel.
2. Reinstall it back in all the way, wait three seconds and then pull it back out again.

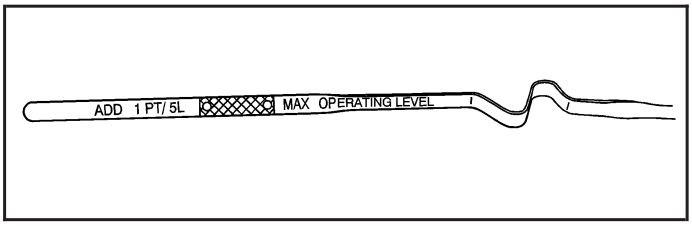

3. Check both sides of the dipstick, and read the lower level. The fluid level must be within the crosshatched area.
4. If the fluid level is in the acceptable range, reinstall the dipstick back in all the way.

How to Add Automatic Transmission Fluid

Refer to the Maintenance Schedule to determine what kind of transmission fluid to use. See *Recommended Fluids and Lubricants on page 6-13*.

If the fluid level is low, add only enough of the proper fluid to bring the level into the crosshatched area on the dipstick.

1. Remove the dipstick.
2. Using a long-neck funnel, add enough fluid at the dipstick hole to bring it to the proper level.

   It does not take much fluid, generally less than a half pint (0.24 L). Do not overfill.

Notice: **Use of the incorrect automatic transmission fluid may damage your vehicle, and the damages may not be covered by your warranty. Always use the automatic transmission fluid listed in *Recommended Fluids and Lubricants on page 6-13*.**

3. After adding fluid, recheck the fluid level as described under “How to Check Automatic Transmission Fluid,” earlier in this section.
4. When the correct fluid level is obtained, reinstall the dipstick back in all the way.

Downloaded from www.Manualslib.com manuals search engine

Automatic Transmission Fluid (2.4L L4, 3.5L and 3.6L V6 Engines)

It is not necessary to check the transmission fluid level. A transmission fluid leak is the only reason for fluid loss. If a leak occurs, take your vehicle to the dealer/retailer and have it repaired as soon as possible.

Change the fluid and filter at the intervals listed in *Additional Required Services on page 6-6*, and be sure to use the transmission fluid listed in *Recommended Fluids and Lubricants on page 6-13*.

Notice: **Use of the incorrect automatic transmission fluid may damage your vehicle, and the damages may not be covered by your warranty. Always use the automatic transmission fluid listed in *Recommended Fluids and Lubricants on page 6-13*.**

For the 3.5L and 3.6L engines, the transmission fluid will not reach the end of the dipstick unless the transmission is at operating temperature. If you need to check the transmission fluid level, please take your vehicle to your dealer/retailer.

Engine Coolant

The cooling system in your vehicle is filled with DEX-COOL® engine coolant. This coolant is designed to remain in your vehicle for five years or 150,000 miles (240 000 km), whichever occurs first, if you add only DEX-COOL® extended life coolant.

The following explains the cooling system and how to add coolant when it is low. If there is a problem with engine overheating, see *Engine Overheating on page 5-33*.

A 50/50 mixture of clean, drinkable water and DEX-COOL® coolant will:

- Give freezing protection down to –34°F (–37°C).
- Give boiling protection up to 265°F (129°C).
- Protect against rust and corrosion.
- Help keep the proper engine temperature.
- Let the warning lights and gages work as they should.

Notice: **Using coolant other than DEX-COOL® may cause premature engine, heater core, or radiator corrosion. In addition, the engine coolant may require changing sooner, at the first maintenance service after each 30,000 miles (50 000 km) or 24 months, whichever occurs first. Any repairs would not be covered by your warranty. Always use DEX-COOL® (silicate-free) coolant in your vehicle.**

Downloaded from www.Manualslib.com manuals search engine

What to Use

Use a mixture of one-half clean, drinkable water and one-half DEX-COOL® coolant which will not damage aluminum parts. If you use this coolant mixture, you do not need to add anything else.

⚠ CAUTION:

Adding only plain water to your cooling system can be dangerous. Plain water, or some other liquid such as alcohol, can boil before the proper coolant mixture will. Your vehicle's coolant warning system is set for the proper coolant mixture. With plain water or the wrong mixture, your engine could get too hot but you would not get the overheat warning. Your engine could catch fire and you or others could be burned. Use a 50/50 mixture of clean, drinkable water and DEX-COOL® coolant.

Notice: **If you use an improper coolant mixture, your engine could overheat and be badly damaged. The repair cost would not be covered by your warranty. Too much water in the mixture can freeze and crack the engine, radiator, heater core, and other parts.**

If you have to add coolant more than four times a year, have your dealer/retailer check the cooling system.

Notice: **If you use extra inhibitors and/or additives in your vehicle's cooling system, you could damage your vehicle. Use only the proper mixture of the engine coolant listed in this manual for the cooling system. See *Recommended Fluids and Lubricants on page 6-13* for more information.**

Downloaded from www.Manualslib.com manuals search engine

Checking Coolant

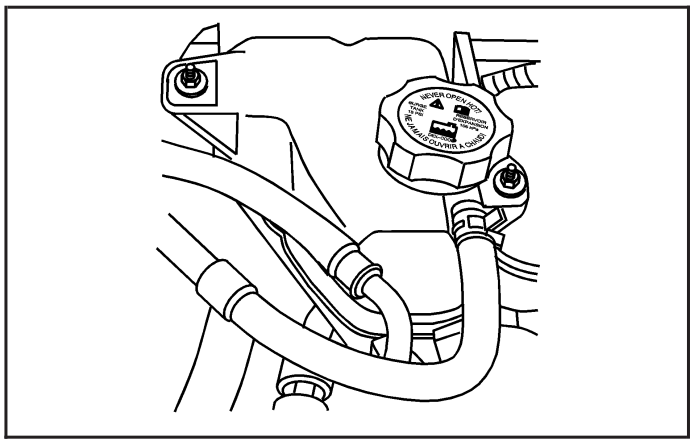

The engine coolant surge tank is located in the rear of the engine compartment. See *Engine Compartment Overview on page 5-14* for more information on location.

⚠ CAUTION:

Turning the surge tank pressure cap when the engine and radiator are hot can allow steam and scalding liquids to blow out and burn you badly. Never turn the surge tank pressure cap — even a little — when the engine and radiator are hot.

The vehicle must be on a level surface. When the engine is cold, the coolant level should be at the FULL COLD mark or slightly higher.

Downloaded from www.Manualslib.com manuals search engine

Adding Coolant

If you need more coolant, add the proper DEX-COOL® coolant mixture at the surge tank, but only when the engine is cool. If the surge tank is empty, a special fill procedure is necessary. See *Engine Overheating on page 5-33* and *Cooling System on page 5-36*.

⚠ CAUTION:

You can be burned if you spill coolant on hot engine parts. Coolant contains ethylene glycol, and it will burn if the engine parts are hot enough. Do not spill coolant on a hot engine.

When replacing the pressure cap, make sure it is hand-tight and fully seated.

Pressure Cap

Notice: **If the pressure cap is not tightly installed, coolant loss and possible engine damage may occur. Be sure the cap is properly and tightly secured.**

See *Engine Compartment Overview on page 5-14* for more information on location.

Engine Overheating

There is an engine coolant temperature gage on your vehicle's instrument panel. See *Engine Coolant Temperature Gage on page 3-37*.

Downloaded from www.Manualslib.com manuals search engine

If Steam Is Coming From Your Engine

⚠ CAUTION:

Steam from an overheated engine can burn you badly, even if you just open the hood. Stay away from the engine if you see or hear steam coming from it. Turn it off and get everyone away from the vehicle until it cools down. Wait until there is no sign of steam or coolant before you open the hood.

If you keep driving when the vehicles engine is overheated, the liquids in it can catch fire. You or others could be badly burned. Stop your engine if it overheats, and get out of the vehicle until the engine is cool.

See *Overheated Engine Protection Operating Mode on page 5-35* for information on driving to a safe place in an emergency.

Notice: **If your engine catches fire because you keep driving with no coolant, your vehicle can be badly damaged. The costly repairs would not be covered by your warranty. See *Overheated Engine Protection Operating Mode on page 5-35* for information on driving to a safe place in an emergency.**

If No Steam Is Coming From Your Engine

If you get an engine overheat warning, but see or hear no steam, the problem may not be too serious. Sometimes the engine can get a little too hot when you:

- Climb a long hill on a hot day.
- Stop after high-speed driving.
- Idle for long periods in traffic.
- Tow a trailer.

Downloaded from www.Manualslib.com manuals search engine

If you get the overheat warning with no sign of steam, try this for a minute or so:

1. In heavy traffic, let the engine idle in NEUTRAL (N) while stopped. If it is safe to do so, pull off the road, shift to PARK (P) or NEUTRAL (N) and let the engine idle.
2. Turn on your heater to full hot at the highest fan speed and open the windows as necessary.

If you no longer have the overheat warning, you can drive. Just to be safe, drive slower for about 10 minutes. If the warning does not come back on, you can drive normally.

If the warning continues, pull over, stop, and park your vehicle right away.

If there is still no sign of steam, idle the engine for three minutes while you are parked. If you still have the warning, turn off the engine and get everyone out of the vehicle until it cools down.

You might decide not to lift the hood but to get service help right away.

Overheated Engine Protection Operating Mode

This emergency operating mode lets your vehicle be driven to a safe place in an emergency situation. If an overheated engine condition exists, an overheat protection mode which alternates firing groups of cylinders helps prevent engine damage. In this mode, there is a significant loss in power and engine performance. The temperature gage indicates an overheat condition exists. Driving extended distances and/or towing a trailer in the overheat protection mode should be avoided.

Notice: **After driving in the overheated engine protection operating mode, to avoid engine damage, allow the engine to cool before attempting any repair. The engine oil will be severely degraded. Repair the cause of coolant loss, change the oil and reset the oil life system. See *Engine Oil on page 5-21*.**

Downloaded from www.Manualslib.com manuals search engine

Cooling System

When you decide it is safe to lift the hood, this is what you see:

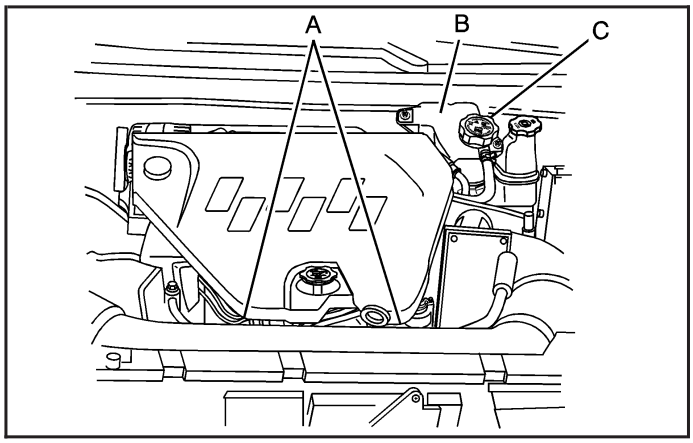

3.5L V6 Engine shown, 2.4L L4, 3.6L V6 and 3.9L V6 Engines similar

A. Engine Cooling Fans
B. Engine Coolant Surge Tank
C. Pressure Cap

⚠ CAUTION:

An electric engine cooling fan under the hood can start up even when the engine is not running and can injure you. Keep hands, clothing, and tools away from any underhood electric fan.

If the coolant inside the coolant surge tank is boiling, do not do anything else until it cools down. The vehicle should be parked on a level surface.

The coolant level should be at or above the FULL COLD mark on the coolant surge tank. If it is not, you may have a leak at the pressure cap or in the radiator hoses, heater hoses, radiator, water pump, or somewhere else in the cooling system.

Downloaded from www.Manualslib.com manuals search engine

⚠ CAUTION:

Heater and radiator hoses, and other engine parts, can be very hot. Do not touch them. If you do, you can be burned.

Do not run the engine if there is a leak. If you run the engine, it could lose all coolant. That could cause an engine fire, and you could be burned. Get any leak fixed before you drive the vehicle.

If there seems to be no leak, with the engine on, check to see if the electric engine cooling fans are running. If the engine is overheating, both fans should be running. If they are not, your vehicle needs service.

Notice: **Engine damage from running the engine without coolant is not covered by the warranty.**

Notice: **Using coolant other than DEX-COOL® may cause premature engine, heater core, or radiator corrosion. In addition, the engine coolant could require changing sooner, at 30,000 miles (50 000 km) or 24 months, whichever occurs first. Any repairs would not be covered by the warranty. Always use DEX-COOL® (silicate-free) coolant in the vehicle.**

How to Add Coolant to the Coolant Surge Tank

Notice: **This vehicle has a specific coolant fill procedure. Failure to follow this procedure could cause your engine to overheat and be severely damaged.**

If you have not found a problem yet, check to see if coolant is visible in the surge tank. If coolant is visible but the coolant level is not at or above the FULL COLD mark, add a 50/50 mixture of clean, drinkable water and DEX-COOL® coolant at the coolant surge tank, but be sure the cooling system, including the coolant surge tank pressure cap, is cool before you do it. See *Engine Coolant on page 5-30* for more information.

Downloaded from www.Manualslib.com manuals search engine

If no coolant is visible in the surge tank, add coolant as follows:

⚠ CAUTION:

Steam and scalding liquids from a hot cooling system can blow out and burn you badly. They are under pressure, and if you turn the coolant surge tank pressure cap — even a little — they can come out at high speed. Never turn the cap when the cooling system, including the coolant surge tank pressure cap, is hot. Wait for the cooling system and coolant surge tank pressure cap to cool if you ever have to turn the pressure cap.

⚠ CAUTION:

Adding only plain water to the cooling system can be dangerous. Plain water, or some other liquid such as alcohol, can boil before the proper coolant mixture will. The vehicle's coolant warning system is set for the proper coolant mixture. With plain water or the wrong mixture, the engine could get too hot but you would not get the overheat warning. The engine could catch fire and you or others could be burned. Use a 50/50 mixture of clean, drinkable water and DEX-COOL® coolant.

Notice: **In cold weather, water can freeze and crack the engine, radiator, heater core and other parts. Use the recommended coolant and the proper coolant mixture.**

Downloaded from www.Manualslib.com manuals search engine

⚠ CAUTION:

You can be burned if you spill coolant on hot engine parts. Coolant contains ethylene glycol and it will burn if the engine parts are hot enough. Do not spill coolant on a hot engine.

1. Remove the coolant surge tank pressure cap when the cooling system, including the coolant surge tank pressure cap and upper radiator hose, is no longer hot. Turn the pressure cap slowly counterclockwise about two or two and one-half turns.

   If you hear a hiss, wait for that to stop. This will allow any pressure still left to be vented out the discharge hose.

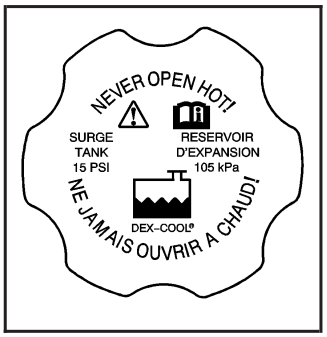

2. Then keep turning the pressure cap slowly, and remove it.

3. Fill the coolant surge tank with the proper mixture, to the FULL COLD mark. Wait about five minutes, then check to see if the level is below the mark. If the level is below the FULL COLD mark, add additional coolant to bring the level up to the mark. Repeat this procedure until the level remains constant at the FULL COLD mark for at least five minutes.

Downloaded from www.Manualslib.com manuals search engine

4. With the coolant surge tank pressure cap off, start the engine and let it run until you can feel the upper radiator hose getting hot. Watch out for the engine cooling fans.

   By this time, the coolant level inside the coolant surge tank might be lower. If the level is lower than the FULL COLD mark, add more of the proper mixture to the coolant surge tank until the level reaches the FULL COLD mark.

5. Then replace the pressure cap. Be sure the pressure cap is hand-tight and fully seated.

Power Steering Fluid

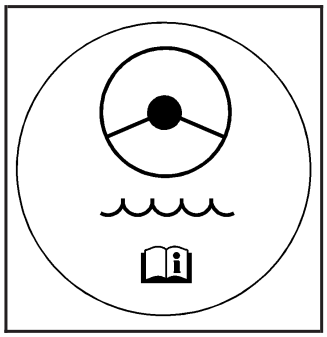

See *Engine Compartment Overview on page 5-14* for reservoir location.

When to Check Power Steering Fluid

Power steering fluid is used in all vehicles with V6 engines. Vehicles with the 4-cylinder engine have electric power steering and do not use power steering fluid.

It is not necessary to regularly check power steering fluid unless a leak is suspected in the system, or an unusual noise is heard. A fluid loss in this system could indicate a problem. Have the system inspected and repaired.

How to Check Power Steering Fluid

To check the power steering fluid, do the following:

1. Turn the key off and let the engine compartment cool down.
2. Wipe the cap and the top of the reservoir clean.
3. Unscrew the cap and wipe the dipstick with a clean rag.
4. Replace the cap and completely tighten it.
5. Remove the cap again and look at the fluid level on the dipstick

The fluid level should be within the crosshatched area on the dipstick.

If the fluid is at or below the ADD mark on the dipstick, add just enough fluid to bring the level within the crosshatched area.

Downloaded from www.Manualslib.com manuals search engine

What to Use

To determine what kind of fluid to use, see *Recommended Fluids and Lubricants on page 6-13*. Always use the proper fluid. Failure to use the proper fluid can cause leaks and damage hoses and seals.

Windshield Washer Fluid

What to Use

When you need windshield washer fluid, be sure to read the manufacturer's instructions before use. If you are operating your vehicle in an area where the temperature may fall below freezing, use a fluid that has sufficient protection against freezing.

Adding Washer Fluid

When the windshield washer fluid reservoir is low, a LOW WASHER FLUID message displays on the Driver Information Center (DIC). See *DIC Warnings and Messages on page 3-46* for more information.

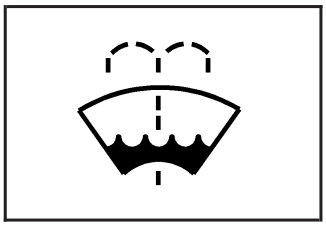

Open the cap with the washer symbol on it. Add washer fluid until the reservoir is full.

See *Engine Compartment Overview on page 5-14* for reservoir location.

Notice:

- **When using concentrated washer fluid, follow the manufacturer's instructions for adding water.**
- **Do not mix water with ready-to-use washer fluid. Water can cause the solution to freeze and damage your washer fluid tank and other parts of the washer system. Also, water does not clean as well as washer fluid.**
- **Fill the washer fluid tank only three-quarters full when it is very cold. This allows for fluid expansion if freezing occurs, which could damage the tank if it is completely full.**
- **Do not use engine coolant (antifreeze) in your windshield washer. It can damage the vehicle's windshield washer system and paint.**

Downloaded from www.Manualslib.com manuals search engine

Brakes

Brake Fluid

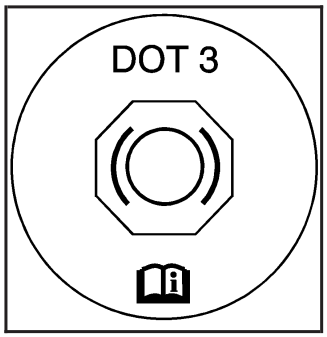

The brake master cylinder reservoir is filled with DOT-3 brake fluid. See *Engine Compartment Overview on page 5-14* for the location of the reservoir.

There are only two reasons why the brake fluid level in the reservoir might go down. The first is that the brake fluid goes down to an acceptable level during normal brake lining wear. When new linings are put in, the fluid level goes back up. The other reason is that fluid is leaking out of the brake hydraulic system. If it is, you should have the brake hydraulic system fixed, since a leak means that sooner or later the brakes will not work well.

It is not a good idea to top off the brake fluid. Adding brake fluid will not correct a leak. If fluid is added when the linings are worn, there will be too much fluid when new brake linings are installed. Add or remove brake fluid, as necessary, only when work is done on the brake hydraulic system.

⚠ CAUTION:

If your vehicle has too much brake fluid, it can spill on the engine. The fluid will burn if the engine is hot enough. You or others could be burned, and your vehicle could be damaged. Add brake fluid only when work is done on the brake hydraulic system.

When the brake fluid falls to a low level, the BRAKE FLUID message in the Driver Information Center (DIC) displays. See *DIC Warnings and Messages on page 3-46*.

Downloaded from www.Manualslib.com manuals search engine

What to Add

When you do need brake fluid, use only DOT-3 brake fluid. Use new brake fluid from a sealed container only. See *Recommended Fluids and Lubricants on page 6-13*.

Always clean the brake fluid reservoir cap and the area around the cap before removing it. This helps keep dirt from entering the reservoir.

⚠ CAUTION:

With the wrong kind of fluid in the brake hydraulic system, the brakes might not work well. This could cause a crash. Always use the proper brake fluid.

Notice:

- **Using the wrong fluid can badly damage brake hydraulic system parts. For example, just a few drops of mineral-based oil, such as engine oil, in the brake hydraulic system can damage brake hydraulic system parts so badly that they will have to be replaced. Do not let someone put in the wrong kind of fluid.**
- **If you spill brake fluid on your vehicle's painted surfaces, the paint finish can be damaged. Be careful not to spill brake fluid on your vehicle. If you do, wash it off immediately. See *Washing Your Vehicle on page 5-104*.**

Downloaded from www.Manualslib.com manuals search engine

Brake Wear

Your vehicle has disc brakes. Disc brake pads have built-in wear indicators that make a high-pitched warning sound when the brake pads are worn and new pads are needed. The sound can come and go or be heard all the time your vehicle is moving, except when you are pushing on the brake pedal firmly.

⚠ CAUTION:

The brake wear warning sound means that soon the brakes will not work well. That could lead to an accident. When you hear the brake wear warning sound, have your vehicle serviced.

Notice: **Continuing to drive with worn-out brake pads could result in costly brake repair.**

Some driving conditions or climates can cause a brake squeal when the brakes are first applied or lightly applied. This does not mean something is wrong with the brakes.

Properly torqued wheel nuts are necessary to help prevent brake pulsation. When tires are rotated, inspect brake pads for wear and evenly tighten wheel nuts in the proper sequence to torque specifications in *Capacities and Specifications on page 5-119*.

Brake linings should always be replaced as complete axle sets.

Brake Pedal Travel

See your dealer/retailer if the brake pedal does not return to normal height, or if there is a rapid increase in pedal travel. This could be a sign that brake service might be required.

Brake Adjustment

Every time you apply the brakes, with or without the vehicle moving, the brakes adjust for wear.

Downloaded from www.Manualslib.com manuals search engine

Replacing Brake System Parts

The braking system on a vehicle is complex. Its many parts have to be of top quality and work well together if the vehicle is to have really good braking. Your vehicle was designed and tested with top-quality brake parts. When you replace parts of the braking system — for example, when the brake linings wear down and you need new ones put in — be sure you get new approved replacement parts. If you do not, the brakes might not work properly. For example, if someone puts in brake linings that are wrong for your vehicle, the balance between the front and rear brakes can change — for the worse. The braking performance you have come to expect can change in many other ways if someone puts in the wrong replacement brake parts.

Battery

Your vehicle has a maintenance free battery. When it is time for a new battery, see your dealer/retailer for one that has the replacement number shown on the original battery's label. See *Engine Compartment Overview on page 5-14* for battery location.

Warning: Battery posts, terminals, and related accessories contain lead and lead compounds, chemicals known to the State of California to cause cancer and reproductive harm. Wash hands after handling.

Downloaded from www.Manualslib.com manuals search engine

Vehicle Storage

⚠ CAUTION:

Batteries have acid that can burn you and gas that can explode. You can be badly hurt if you are not careful. See *Jump Starting on page 5-46* for tips on working around a battery without getting hurt.

Infrequent Usage: If you drive your vehicle infrequently, remove the black, negative (–) cable from the battery. This will help keep the battery from running down.

See “Power Window Initialization” in *Power Windows on page 2-16*.

Extended Storage: For extended storage of your vehicle, remove the black, negative (–) cable from the battery or use a battery trickle charger. This will help maintain the charge of the battery over an extended period of time.

Jump Starting

If your vehicle’s battery has run down, you may want to use another vehicle and some jumper cables to start your vehicle. Be sure to use the following steps to do it safely.

⚠ CAUTION:

Batteries can hurt you. They can be dangerous because:

- **They contain acid that can burn you.**
- **They contain gas that can explode or ignite.**
- **They contain enough electricity to burn you.**

If you do not follow these steps exactly, some or all of these things can hurt you.

Downloaded from www.Manualslib.com manuals search engine

Notice: **Ignoring these steps could result in costly damage to your vehicle that would not be covered by your warranty.**

Trying to start your vehicle by pushing or pulling it will not work, and it could damage your vehicle.

1. Check the other vehicle. It must have a 12-volt battery with a negative ground system.

Notice: **If the other vehicle's system is not a 12-volt system with a negative ground, both vehicles can be damaged. Only use vehicles with 12-volt systems with negative grounds to jump start your vehicle.**

2. Get the vehicles close enough so the jumper cables can reach, but be sure the vehicles are not touching each other. If they are, it could cause a ground connection you do not want. You would not be able to start your vehicle, and the bad grounding could damage the electrical systems.

   To avoid the possibility of the vehicles rolling, set the parking brake firmly on both vehicles involved in the jump start procedure. Put an automatic transmission in PARK (P) or a manual transmission in NEUTRAL before setting the parking brake.

Notice: **If you leave your radio or other accessories on during the jump starting procedure, they could be damaged. The repairs would not be covered by your warranty. Always turn off your radio and other accessories when jump starting your vehicle.**

3. Turn off the ignition on both vehicles. Unplug unnecessary accessories plugged into the cigarette lighter or the accessory power outlet. Turn off the radio and all lamps that are not needed. This will avoid sparks and help save both batteries. And it could save the radio!

Downloaded from www.Manualslib.com manuals search engine

4. Open the hoods and locate the batteries. Find the positive (+) and negative (–) terminal locations on each vehicle. See *Engine Compartment Overview on page 5-14* for more information on location.

⚠ CAUTION:

An electric fan can start up even when the engine is not running and can injure you. Keep hands, clothing and tools away from any underhood electric fan.

⚠ CAUTION:

Using a match near a battery can cause battery gas to explode. People have been hurt doing this, and some have been blinded. Use a flashlight if you need more light.

Be sure the battery has enough water. You do not need to add water to the battery installed in your new vehicle. But if a battery has filler caps, be sure the right amount of fluid is there. If it is low, add water to take care of that first. If you do not, explosive gas could be present.

Battery fluid contains acid that can burn you. Do not get it on you. If you accidentally get it in your eyes or on your skin, flush the place with water and get medical help immediately.

Downloaded from www.Manualslib.com manuals search engine

5. Check that the jumper cables do not have loose or missing insulation. If they do, you could get a shock. The vehicles could be damaged too.

   Before you connect the cables, here are some things you should know. Positive (+) will go to positive (+) or to a remote positive (+) terminal if the vehicle has one. Negative (–) will go to a heavy, unpainted metal engine part or to a remote negative (–) terminal if the vehicle has one.

   Do not connect positive (+) to negative (–) or you will get a short that would damage the battery and maybe other parts too. And do not connect the negative (–) cable to the negative (–) terminal on the dead battery because this can cause sparks.

⚠ CAUTION:

Fans or other moving engine parts can injure you badly. Keep your hands away from moving parts once the engine is running.

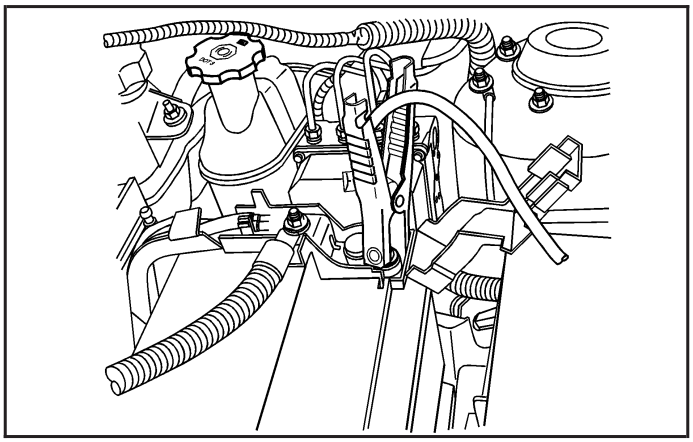

6. Connect the red positive (+) cable to the positive (+) terminal of the dead battery.

Downloaded from www.Manualslib.com manuals search engine

7. Do not let the other end touch metal. Connect it to the positive (+) terminal of the good battery. Use a remote positive (+) terminal if the vehicle has one.
8. Now connect the black negative (–) cable to the negative (–) terminal of the good battery. Use a remote negative (–) terminal if the vehicle has one.

   Do not let the other end touch anything until the next step. The other end of the negative (–) cable does not go to the dead battery. It goes to a heavy, unpainted metal engine part or to a remote negative (–) terminal on the vehicle with the dead battery.
9. Connect the other end of the negative (–) cable at least 18 inches (45 cm) away from the dead battery, but not near engine parts that move. The electrical connection is just as good there, and the chance of sparks getting back to the battery is much less.

   If the security light flashes, wait until the light stops flashing.
10. Now start the vehicle with the good battery and run the engine for a while.
11. Try to start the vehicle that had the dead battery. If it will not start after a few tries, it probably needs service.

Notice: **If the jumper cables are connected or removed in the wrong order, electrical shorting may occur and damage the vehicle. The repairs would not be covered by your warranty. Always connect and remove the jumper cables in the correct order, making sure that the cables do not touch each other or other metal.**

Downloaded from www.Manualslib.com manuals search engine

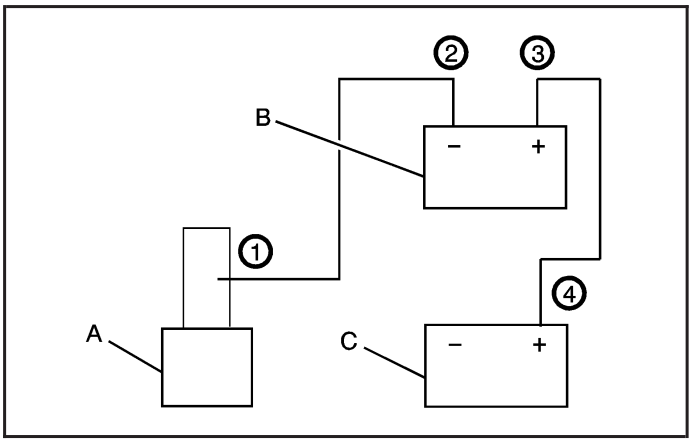

Jumper Cable Removal

A. Heavy, Unpainted Metal Engine Part
B. Good Battery
C. Dead Battery

To disconnect the jumper cables from both vehicles, do the following:

1. Disconnect the black negative (–) cable from the vehicle that had the dead battery.
2. Disconnect the black negative (–) cable from the vehicle with the good battery.
3. Disconnect the red positive (+) cable from the vehicle with the good battery.
4. Disconnect the red positive (+) cable from the other vehicle.

Bulb Replacement

For the proper type of replacement bulbs, see *Replacement Bulbs on page 5-58*.

For any bulb changing procedure not listed in this section, contact your dealer/retailer.

Downloaded from www.Manualslib.com manuals search engine

Halogen Bulbs

⚠ CAUTION:

Halogen bulbs have pressurized gas inside and can burst if you drop or scratch the bulb. You or others could be injured. Be sure to read and follow the instructions on the bulb package.

Headlamps, Front Turn Signal, Sidemarker, and Parking Lamps

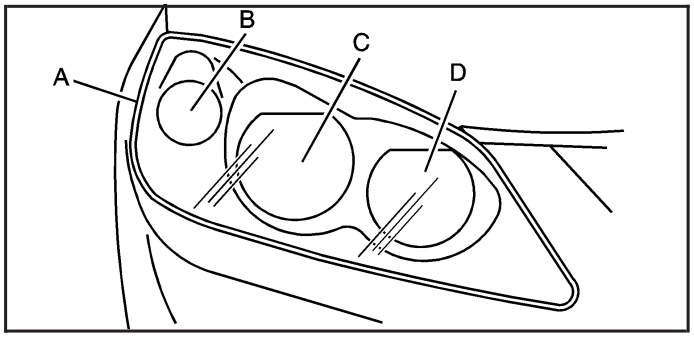

A. Front Sidemarker
B. Front Turn Signal/Parking Lamp
C. Low-Beam Headlamp
D. High-Beam Headlamp

Downloaded from www.Manualslib.com manuals search engine

To replace one of these bulbs:

1. Remove the two screws that secure the headlamp assembly.

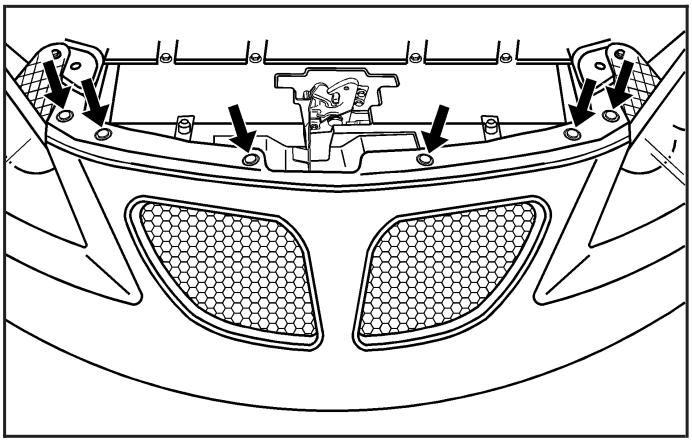

2. Loosen the front fascia by removing the plastic push pins along the top of the tie bar by prying under the fasteners with a tool.
3. Pull back the front fascia then pull the headlamp assembly forward, out of the vehicle. You need to pry the headlamp assembly away from the fender. This frees the ball stud from its retainer in the fender bracket.

   You might want someone to assist you with the removal of the headlamp assembly to avoid possible damage to the vehicle.
4. Remove the bulb access cover by turning it counterclockwise.
5. Turn the bulb socket counterclockwise and pull out the bulb assembly.
6. Disconnect the bulb socket from the wiring harness for headlamps.

   For the front turn signal/parking or sidemarker bulbs, unclip the bulb from the socket.
7. Install a new bulb.
8. Reverse Steps 1 through 4 to reinstall the bulb assembly and headlamp assembly.

Downloaded from www.Manualslib.com manuals search engine

Center High-Mounted Stoplamp (CHMSL) (Sedan)

To replace a center high-mounted stoplamp (CHMSL) bulb:

1. Open the trunk lid. See *Trunk on page 2-13* for more information.
2. Locate the center high-mounted stoplamp (CHMSL) on the inside of the trunk lid.
3. Unclip the wiring harness by using a tool to disengage the connector.

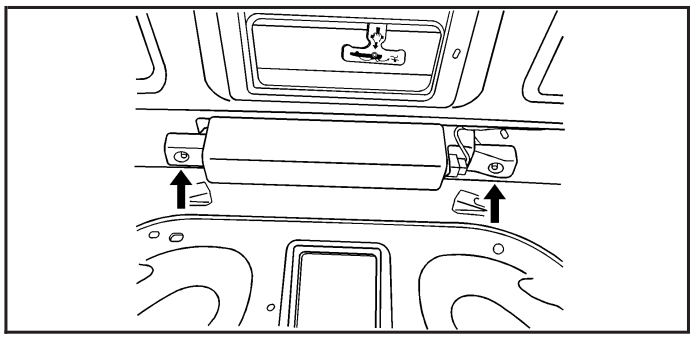

4. Remove the cover by pressing the tabs at either end with a tool.
5. Remove the bulb by turning it counterclockwise.
6. Install a new bulb.
7. Reverse Steps 3 through 5 to reinstall the bulb assembly.

Center High-Mounted Stoplamp (CHMSL) (Retractable Hardtop and Coupe)

If your vehicle has this component and it needs replacement, it is recommended that it be replaced as a unit by your dealer/retailer.

Downloaded from www.Manualslib.com manuals search engine

Taillamps, Turn Signal, Sidemarker, Stoplamps and Back-up Lamps (Sedan)

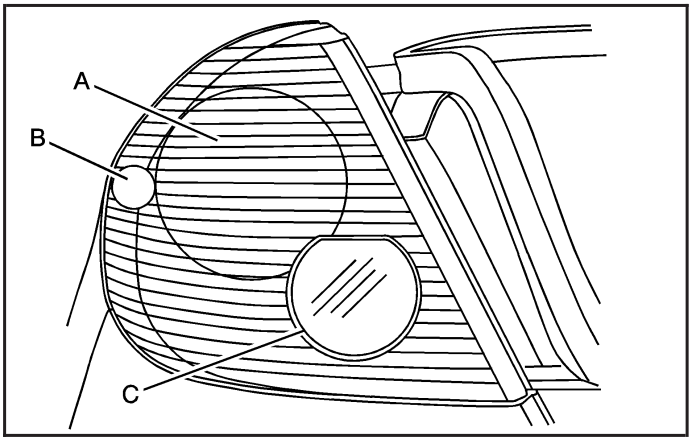

A. Stoplamp/Taillamp/Turn Signal
B. Sidemarker Lamp
C. Back-up Lamp

To replace one of these bulbs:

1. Open the trunk. See *Trunk on page 2-13* for more information.
2. Remove the convenience net, if the vehicle has one.
3. Remove the wing nuts holding the trunk trim.

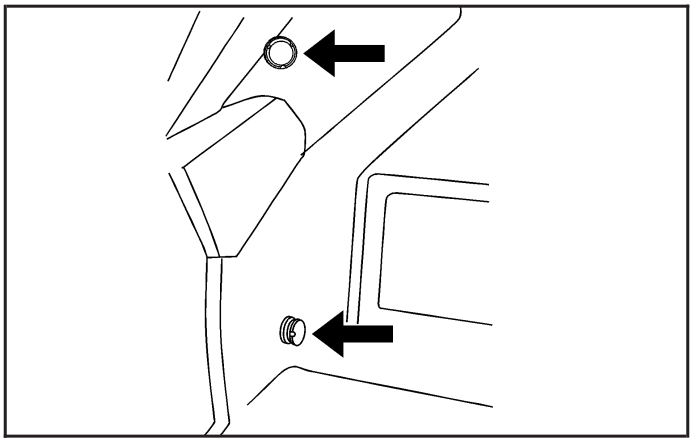

4. Remove the two nuts, which hold the taillamp assembly, from inside the vehicle.
5. Remove the taillamp assembly.
6. Turn the bulb socket counterclockwise to remove.
7. Pull the bulb from the socket.
8. Install a new bulb.
9. Reverse Steps 2 through 7 to reinstall the taillamp assembly.

Downloaded from www.Manualslib.com manuals search engine

Taillamps, Turn Signal, Sidemarker, Stoplamps and Back-up Lamps (Coupe)

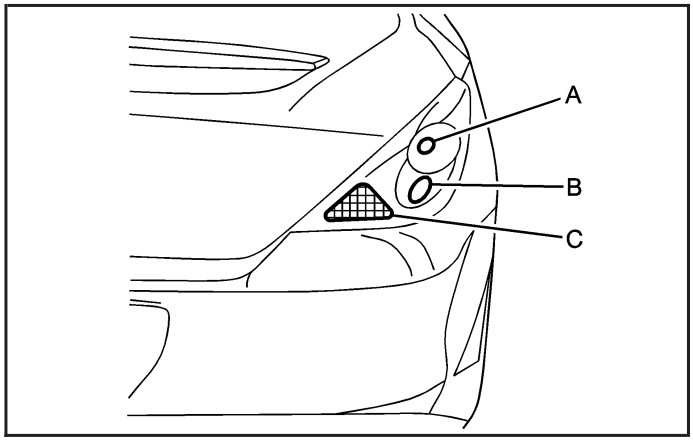

A. Sidemarker Lamp
B. Stoplamp/Taillamp/Turn Signal Lamp
C. Back-up Lamp

To replace one of these bulbs:

1. Open the trunk. See *Trunk on page 2-13* for more information.
2. Remove the convenience net, if the vehicle has one.

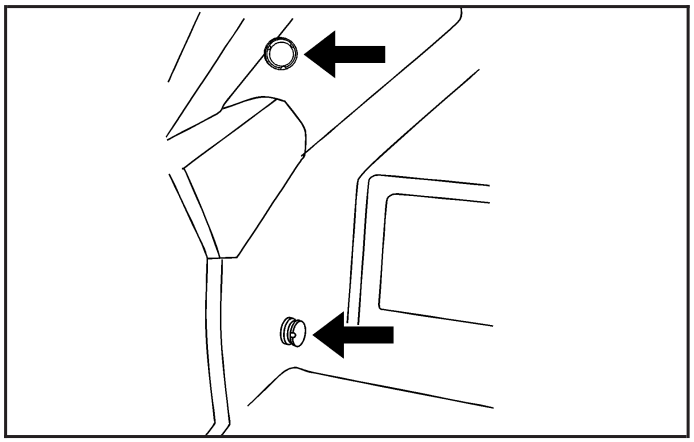

3. Remove the two wing nuts from the trunk trim to expose the hex nuts.
4. Remove the three hex nuts retaining the taillamp assembly.
5. Pull the assembly off to the side to release it from the rear of the vehicle.
6. Turn the bulb socket counterclockwise to remove.
7. Pull the bulb from the bulb socket.
8. Install a new bulb.
9. Reverse Steps 3 through 5 to reinstall the taillamp assembly.

Downloaded from www.Manualslib.com manuals search engine

Taillamps, Turn Signal, Sidemarker, Stoplamps and Back-up Lamps (Retractable Hardtop)

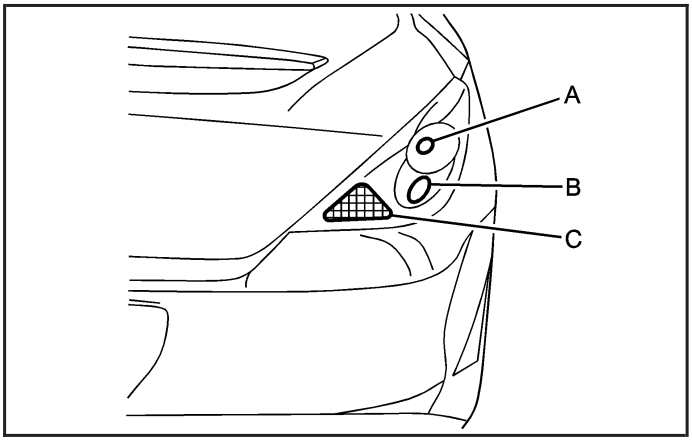

A. Sidemarker Lamp
B. Stoplamp/Taillamp/Turn Signal Lamp
C. Back-up Lamp

To replace one of these bulbs:

1. Open the trunk. See *Trunk on page 2-13* for more information.
2. Locate the three rubber covers in the trunk trim, near the taillamp assembly and remove them.
3. Remove the two nuts and one bolt retaining the taillamp assembly.
4. Pull off the assembly to the side to release it from the vehicle.
5. Turn the bulb socket counterclockwise to remove.
6. Pull the bulb from the bulb socket.
7. Install a new bulb.
8. Reverse Steps 1 through 5 to reinstall the taillamp assembly.

Downloaded from www.Manualslib.com manuals search engine

License Plate Lamp

To replace the license plate lamp bulb:

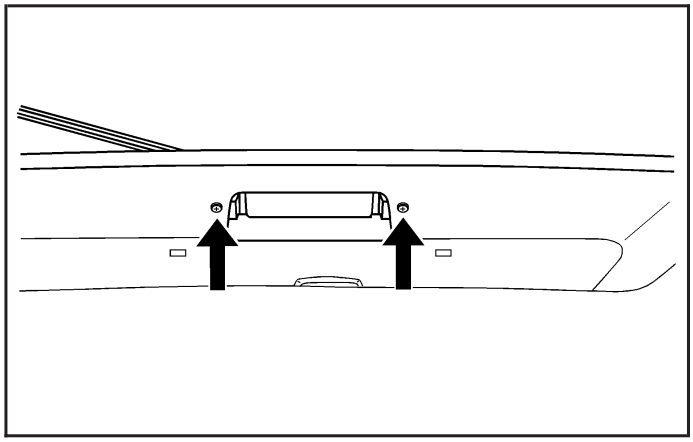

1. Remove the two screws holding the license plate lamp assembly to the fascia.
2. Turn and pull the license plate lamp forward through the fascia opening.
3. Turn the bulb socket counterclockwise and pull the bulb straight out of the socket.
4. Install the new bulb.
5. Reverse Steps 1 through 3 to reinstall the lamp assembly.

Replacement Bulbs

Exterior Lamp	Bulb Number
Coupe and Retractable Hardtop	921
Sedan	3057K
Center High-Mounted Stoplamp (CHMSL)	912***
Front Parking and Turn Signal Lamp	3157KX
Front/Rear Sidemarker Lamp	194
License Plate Lamp	168
Headlamps	
High-Beam Lamp	H9
Low-Beam Lamp	H11
Stoplamp, Taillamp and Turn Signal Lamp	3057K*
Sidemarker, Stoplamp, Taillamp and Turn Signal Lamp	3157K**
*Coupe and Sedan only **Retractable Hardtop only ***Sedan Only	

For replacement bulbs not listed here, contact your dealer/retailer.

Downloaded from www.Manualslib.com manuals search engine

Windshield Wiper Blade Replacement

Windshield wiper blades should be inspected for wear or cracking. See *Scheduled Maintenance on page 6-4* for more information on wiper blade inspection.

To remove the wiper blade:

1. Pull the windshield wiper arm connector away from the windshield.

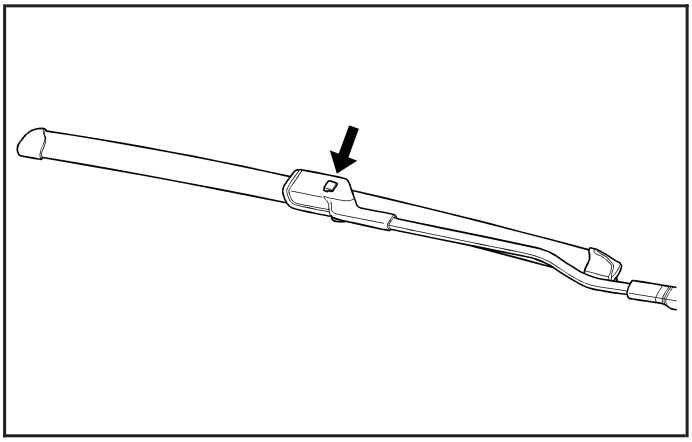

2. Push the release button.
3. Slide the blade forward.
4. Rotate the blade toward you and continue to slide forward.
5. Install the new blade onto the arm connector and make sure the grooved areas are fully set in the locked position.

For the proper type and size, see *Maintenance Replacement Parts on page 6-14*.

Downloaded from www.Manualslib.com manuals search engine

Tires

Your new vehicle comes with high-quality tires made by a leading tire manufacturer. If you ever have questions about your tire warranty and where to obtain service, see your vehicle Warranty booklet for details.

⚠ CAUTION:

- **Poorly maintained and improperly used tires are dangerous.**
- **Overloading your tires can cause overheating as a result of too much flexing. You could have an air-out and a serious accident. See *Loading Your Vehicle on page 4-20*.**

CAUTION: (Continued)

CAUTION: (Continued)

- **Underinflated tires pose the same danger as overloaded tires. The resulting accident could cause serious injury. Check all tires frequently to maintain the recommended pressure. Tire pressure should be checked when your tires are cold. See *Inflation - Tire Pressure on page 5-68*.**
- **Overinflated tires are more likely to be cut, punctured, or broken by a sudden impact — such as when you hit a pothole. Keep tires at the recommended pressure.**
- **Worn, old tires can cause accidents. If your tread is badly worn, or if your tires have been damaged, replace them.**

See *High-Speed Operation on page 5-70* for inflation pressure adjustment for high speed driving.

Downloaded from www.Manualslib.com manuals search engine

Low-Profile Performance Tire

If your vehicle has P225/50R18 or P225/50R17 size tires, they are classified as low-profile performance tires. These tires are designed for very responsive driving on wet or dry pavement. You may also notice more road noise with low-profile performance tires and that they tend to wear faster.

Notice: **If your vehicle has low-profile tires, they are more susceptible to damage from road hazards or curb impact than standard profile tires. Tire and/or wheel assembly damage can occur when coming into contact with road hazards like, potholes, or sharp edged objects, or when sliding into a curb. Your vehicle warranty does not cover this type of damage. Keep tires set to the correct inflation pressure and, when possible avoid contact with curbs, potholes, and other road hazards.**

Winter Tires

If your vehicle has P225/50R18 size tires, they are classified as low-profile performance tires. These tires are designed for very responsive driving on wet or dry pavement.

If you expect to drive on snow or ice covered roads often, you may want to get winter tires for your vehicle. The low-profile performance tires may not offer the traction you would like or the same level of performance as winter tires on snow or ice covered roads.

Winter tires, in general, are designed for increased traction on snow and ice covered roads. With winter tires, there may be decreased dry road traction, increased road noise and shorter tire tread life. After switching to winter tires, be alert for changes in vehicle handling and braking.

See your retailer for details regarding winter tire availability and proper tire selection. Also, see *Buying New Tires on page 5-79*.

If you choose to use winter tires:

- Use tires of the same brand and tread type on all four wheel positions.
- Use only radial ply tires of the same size, load range, and speed rating as your original equipment tires.

Winter tires with the same speed rating as your original equipment tires may not be available for H, V, W and ZR speed rated tires. If you choose winter tires with a lower speed rating, never exceed the tire's maximum speed capability.

Downloaded from www.Manualslib.com manuals search engine

Tire Sidewall Labeling

Useful information about a tire is molded into its sidewall. The examples below show a typical passenger vehicle tire and a compact spare tire sidewall.

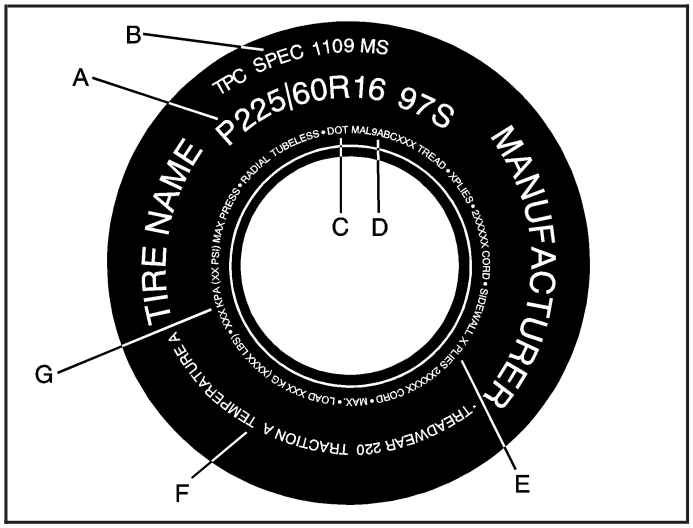

Passenger (P-Metric) Tire Example

(A) Tire Size: The tire size is a combination of letters and numbers used to define a particular tire's width, height, aspect ratio, construction type, and service description. See the "Tire Size" illustration later in this section for more detail.

(B) TPC Spec (Tire Performance Criteria Specification): Original equipment tires designed to GM's specific tire performance criteria have a TPC specification code molded onto the sidewall. GM's TPC specifications meet or exceed all federal safety guidelines.

(C) DOT (Department of Transportation): The Department of Transportation (DOT) code indicates that the tire is in compliance with the U.S. Department of Transportation Motor Vehicle Safety Standards.

Downloaded from www.Manualslib.com manuals search engine

(D) Tire Identification Number (TIN): The letters and numbers following DOT (Department of Transportation) code is the Tire Identification Number (TIN). The TIN shows the manufacturer and plant code, tire size, and date the tire was manufactured. The TIN is molded onto both sides of the tire, although only one side may have the date of manufacture.

(E) Tire Ply Material: The type of cord and number of plies in the sidewall and under the tread.

(F) Uniform Tire Quality Grading (UTQG): Tire manufacturers are required to grade tires based on three performance factors: treadwear, traction, and temperature resistance. For more information see *Uniform Tire Quality Grading on page 5-82*.

(G) Maximum Cold Inflation Load Limit: Maximum load that can be carried and the maximum pressure needed to support that load.

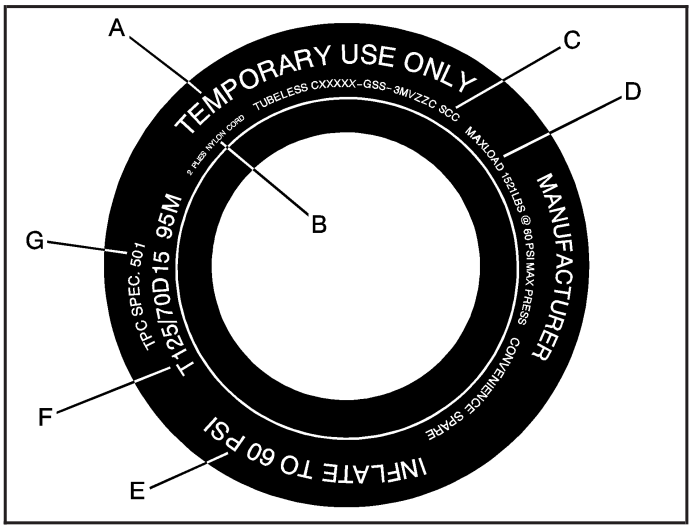

Compact Spare Tire Example

(A) Temporary Use Only: The compact spare tire or temporary use tire has a tread life of approximately 3,000 miles (5 000 km) and should not be driven at speeds over 65 mph (105 km/h). The compact spare tire is for emergency use when a regular road tire has lost air and gone flat. If your vehicle has a compact spare tire, see *Compact Spare Tire on page 5-99* and *If a Tire Goes Flat on page 5-86*.

Downloaded from www.Manualslib.com manuals search engine

(B) Tire Ply Material: The type of cord and number of plies in the sidewall and under the tread.

(C) Tire Identification Number (TIN): The letters and numbers following the DOT (Department of Transportation) code is the Tire Identification Number (TIN). The TIN shows the manufacturer and plant code, tire size, and date the tire was manufactured. The TIN is molded onto both sides of the tire, although only one side may have the date of manufacture.

(D) Maximum Cold Inflation Load Limit: Maximum load that can be carried and the maximum pressure needed to support that load.

(E) Tire Inflation: The temporary use tire or compact spare tire should be inflated to 60 psi (420 kPa). For more information on tire pressure and inflation see *Inflation - Tire Pressure on page 5-68*.

(F) Tire Size : A combination of letters and numbers define a tire's width, height, aspect ratio, construction type, and service description. The letter T as the first character in the tire size means the tire is for temporary use only.

(G) TPC Spec (Tire Performance Criteria Specification): Original equipment tires designed to GM's specific tire performance criteria have a TPC specification code molded onto the sidewall. GM's TPC specifications meet or exceed all federal safety guidelines.

Tire Size

The following illustration shows an example of a typical passenger vehicle tire size.

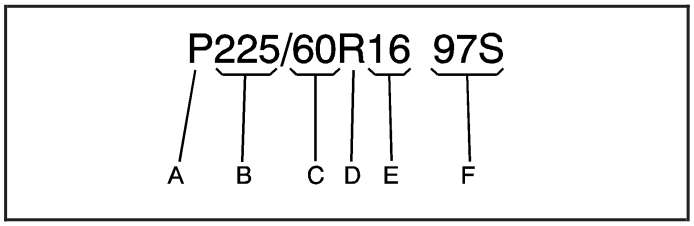

(A) Passenger (P-Metric) Tire: The United States version of a metric tire sizing system. The letter P as the first character in the tire size means a passenger vehicle tire engineered to standards set by the U.S. Tire and Rim Association.

(B) Tire Width: The three-digit number indicates the tire section width in millimeters from sidewall to sidewall.

Downloaded from www.Manualslib.com manuals search engine

(C) Aspect Ratio: A two-digit number that indicates the tire height-to-width measurements. For example, if the tire size aspect ratio is 60, as shown in item C of the illustration, it would mean that the tire's sidewall is 60 percent as high as it is wide.

(D) Construction Code: A letter code is used to indicate the type of ply construction in the tire. The letter R means radial ply construction; the letter D means diagonal or bias ply construction; and the letter B means belted-bias ply construction.

(E) Rim Diameter: Diameter of the wheel in inches.

(F) Service Description: These characters represent the load range and speed rating of the tire. The load index represents the load carry capacity a tire is certified to carry. The load index can range from 1 to 279. The speed rating is the maximum speed a tire is certified to carry a load. Speed ratings range from A to Z.

Tire Terminology and Definitions

Air Pressure: The amount of air inside the tire pressing outward on each square inch of the tire. Air pressure is expressed in pounds per square inch (psi) or kilopascal (kPa).

Accessory Weight: This means the combined weight of optional accessories. Some examples of optional accessories are, automatic transmission, power steering, power brakes, power windows, power seats, and air conditioning.

Aspect Ratio: The relationship of a tire's height to its width.

Belt: A rubber coated layer of cords that is located between the plies and the tread. Cords may be made from steel or other reinforcing materials.

Bead: The tire bead contains steel wires wrapped by steel cords that hold the tire onto the rim.

Downloaded from www.Manualslib.com manuals search engine

Bias Ply Tire: A pneumatic tire in which the plies are laid at alternate angles less than 90 degrees to the centerline of the tread.

Cold Tire Pressure: The amount of air pressure in a tire, measured in pounds per square inch (psi) or kilopascals (kPa) before a tire has built up heat from driving. See *Inflation - Tire Pressure on page 5-68*.

Curb Weight: The weight of a motor vehicle with standard and optional equipment including the maximum capacity of fuel, oil, and coolant, but without passengers and cargo.

DOT Markings: A code molded into the sidewall of a tire signifying that the tire is in compliance with the U.S. Department of Transportation (DOT) motor vehicle safety standards. The DOT code includes the Tire Identification Number (TIN), an alphanumeric designator which can also identify the tire manufacturer, production plant, brand, and date of production.

GVWR: Gross Vehicle Weight Rating. See *Loading Your Vehicle on page 4-20*.

GAWR FRT: Gross Axle Weight Rating for the front axle. See *Loading Your Vehicle on page 4-20*.

GAWR RR: Gross Axle Weight Rating for the rear axle. See *Loading Your Vehicle on page 4-20*.

Intended Outboard Sidewall: The side of an asymmetrical tire, that must always face outward when mounted on a vehicle.

Kilopascal (kPa): The metric unit for air pressure.

Light Truck (LT-Metric) Tire: A tire used on light duty trucks and some multipurpose passenger vehicles.

Load Index: An assigned number ranging from 1 to 279 that corresponds to the load carrying capacity of a tire.

Maximum Inflation Pressure: The maximum air pressure to which a cold tire can be inflated. The maximum air pressure is molded onto the sidewall.

Downloaded from www.Manualslib.com manuals search engine

Maximum Load Rating: The load rating for a tire at the maximum permissible inflation pressure for that tire.

Maximum Loaded Vehicle Weight: The sum of curb weight, accessory weight, vehicle capacity weight, and production options weight.

Normal Occupant Weight: The number of occupants a vehicle is designed to seat multiplied by 150 lbs (68 kg). See *Loading Your Vehicle on page 4-20*.

Occupant Distribution: Designated seating positions.

Outward Facing Sidewall: The side of an asymmetrical tire that has a particular side that faces outward when mounted on a vehicle. The side of the tire that contains a whitewall, bears white lettering, or bears manufacturer, brand, and/or model name molding that is higher or deeper than the same moldings on the other sidewall of the tire.

Passenger (P-Metric) Tire: A tire used on passenger cars and some light duty trucks and multipurpose vehicles.

Recommended Inflation Pressure: Vehicle manufacturer's recommended tire inflation pressure as shown on the tire placard. See *Inflation - Tire Pressure on page 5-68* and *Loading Your Vehicle on page 4-20*.

Radial Ply Tire: A pneumatic tire in which the ply cords that extend to the beads are laid at 90 degrees to the centerline of the tread.

Rim: A metal support for a tire and upon which the tire beads are seated.

Sidewall: The portion of a tire between the tread and the bead.

Speed Rating: An alphanumeric code assigned to a tire indicating the maximum speed at which a tire can operate.

Traction: The friction between the tire and the road surface. The amount of grip provided.

Tread: The portion of a tire that comes into contact with the road.

Downloaded from www.Manualslib.com manuals search engine

Treadwear Indicators: Narrow bands, sometimes called wear bars, that show across the tread of a tire when only 1/16 inch (1.6 mm) of tread remains. See *When It Is Time for New Tires on page 5-78*.

UTQGS (Uniform Tire Quality Grading Standards): A tire information system that provides consumers with ratings for a tire's traction, temperature, and treadwear. Ratings are determined by tire manufacturers using government testing procedures. The ratings are molded into the sidewall of the tire. See *Uniform Tire Quality Grading on page 5-82*.

Vehicle Capacity Weight: The number of designated seating positions multiplied by 150 lbs (68 kg) plus the rated cargo load. See *Loading Your Vehicle on page 4-20*.

Vehicle Maximum Load on the Tire: Load on an individual tire due to curb weight, accessory weight, occupant weight, and cargo weight.

Vehicle Placard: A label permanently attached to a vehicle showing the vehicle's capacity weight and the original equipment tire size and recommended inflation pressure. See "Tire and Loading Information Label" under *Loading Your Vehicle on page 4-20*.

Inflation - Tire Pressure

Tires need the correct amount of air pressure to operate effectively.

Notice: **Do not let anyone tell you that under-inflation or over-inflation is all right. It is not. If your tires do not have enough air (under-inflation), you can get the following:**

- **Too much flexing**
- **Too much heat**
- **Tire overloading**
- **Premature or irregular wear**
- **Poor handling**
- **Reduced fuel economy**

If your tires have too much air (over-inflation), you can get the following:

- **Unusual wear**
- **Poor handling**
- **Rough ride**
- **Needless damage from road hazards**

Downloaded from www.Manualslib.com manuals search engine

A vehicle specific Tire and Loading Information label is attached to your vehicle. This label shows your vehicle's original equipment tires and the correct inflation pressures for your tires when they are cold. The recommended cold tire inflation pressure, shown on the label, is the minimum amount of air pressure needed to support your vehicle's maximum load carrying capacity.

For additional information regarding how much weight your vehicle can carry, and an example of the Tire and Loading Information label, see *Loading Your Vehicle on page 4-20*. How you load your vehicle affects vehicle handling and ride comfort. Never load your vehicle with more weight than it was designed to carry.

When to Check

Check your tires once a month or more. Do not forget to check the compact spare tire, it should be at 60 psi (420 kPa). For additional information regarding the compact spare tire, see *Compact Spare Tire on page 5-99*.

How to Check

Use a good quality pocket-type gage to check tire pressure. You cannot tell if your tires are properly inflated simply by looking at them. Radial tires may look properly inflated even when they are under-inflated. Check the tire's inflation pressure when the tires are cold. Cold means your vehicle has been sitting for at least three hours or driven no more than 1 mile (1.6 km).

Remove the valve cap from the tire valve stem. Press the tire gage firmly onto the valve to get a pressure measurement. If the cold tire inflation pressure matches the recommended pressure on the Tire and Loading Information label, no further adjustment is necessary. If the inflation pressure is low, add air until you reach the recommended amount.

If you overfill the tire, release air by pushing on the metal stem in the center of the tire valve. Re-check the tire pressure with the tire gage.

Be sure to put the valve caps back on the valve stems. They help prevent leaks by keeping out dirt and moisture.

Downloaded from www.Manualslib.com manuals search engine

High-Speed Operation

⚠ CAUTION:

Driving at high speeds, 100 mph (160 km/h) or higher, puts an additional strain on tires. Sustained high-speed driving causes excessive heat build up and can cause sudden tire failure. You could have a crash and you or others could be killed. Some high-speed rated tires require inflation pressure adjustment for high speed operation. When speed limits and road conditions are such that a vehicle can be driven at high speeds, make sure the tires are rated for high speed operation, in excellent condition, and set to the correct cold tire inflation pressure for the vehicle load.

Set the cold tire inflation pressure to 35 psi (241 kPa) for the front and rear tires, when operating your vehicle at high-speed conditions. When you end high-speed driving return the tires to the cold inflation pressure shown on the Tire and Loading Information label. See *Loading Your Vehicle on page 4-20* and *Inflation - Tire Pressure on page 5-68*.

Tire Pressure Monitor System

The Tire Pressure Monitor System (TPMS) uses radio and sensor technology to check tire pressure levels. The TPMS sensors monitor the air pressure in your vehicle's tires and transmit tire pressure readings to a receiver located in the vehicle.

Each tire, including the spare (if provided), should be checked monthly when cold and inflated to the inflation pressure recommended by the vehicle manufacturer on the vehicle placard or tire inflation pressure label. (If your vehicle has tires of a different size than the size indicated on the vehicle placard or tire inflation pressure label, you should determine the proper tire inflation pressure for those tires.)

As an added safety feature, your vehicle has been equipped with a tire pressure monitoring system (TPMS) that illuminates a low tire pressure telltale when one or more of your tires is significantly under-inflated.

Accordingly, when the low tire pressure telltale illuminates, you should stop and check your tires as soon as possible, and inflate them to the proper pressure. Driving on a significantly under-inflated tire causes the tire to overheat and can lead to tire failure. Under-inflation also reduces fuel efficiency and tire tread life, and may affect the vehicle's handling and stopping ability.

Downloaded from www.Manualslib.com manuals search engine

Please note that the TPMS is not a substitute for proper tire maintenance, and it is the driver's responsibility to maintain correct tire pressure, even if under-inflation has not reached the level to trigger illumination of the TPMS low tire pressure telltale.

Your vehicle has also been equipped with a TPMS malfunction indicator to indicate when the system is not operating properly. The TPMS malfunction indicator is combined with the low tire pressure telltale. When the system detects a malfunction, the telltale will flash for approximately one minute and then remain continuously illuminated. This sequence will continue upon subsequent vehicle start-ups as long as the malfunction exists.

When the malfunction indicator is illuminated, the system may not be able to detect or signal low tire pressure as intended. TPMS malfunctions may occur for a variety of reasons, including the installation of replacement or alternate tires or wheels on the vehicle that prevent the TPMS from functioning properly. Always check the TPMS malfunction telltale after replacing one or more tires or wheels on your vehicle to ensure that the replacement or alternate tires and wheels allow the TPMS to continue to function properly.

See *Tire Pressure Monitor Operation on page 5-72*, for additional information.

Federal Communications Commission (FCC) and Industry and Science Canada

The Tire Pressure Monitor System (TPMS) operates on a radio frequency and complies with Part 15 of the FCC Rules. Operation is subject to the following two conditions:

1. This device may not cause harmful interference.
2. This device must accept any interference received, including interference that may cause undesired operation.

The Tire Pressure Monitor System (TPMS) operates on a radio frequency and complies with RSS-210 of Industry and Science Canada. Operation is subject to the following two conditions:

1. This device may not cause interference.
2. This device must accept any interference received, including interference that may cause undesired operation of the device.

Changes or modifications to this system by other than an authorized service facility could void authorization to use this equipment.

Downloaded from www.Manualslib.com manuals search engine

Tire Pressure Monitor Operation

The Tire Pressure Monitor System (TPMS) is designed to warn the driver when a low tire pressure condition exists. TPMS sensors are mounted onto each tire and wheel assembly, excluding the spare tire and wheel assembly. The TPMS sensors monitor the air pressure in the vehicle's tires and transmits the tire pressure readings to a receiver located in the vehicle.

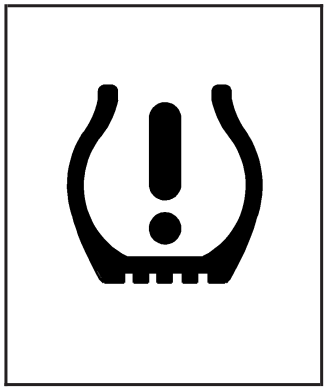

When a low tire pressure condition is detected, the TPMS turns on the low tire pressure warning light located on the instrument panel cluster.

At the same time a message to check the pressure in a specific tire appears on the Driver Information Center (DIC) display. The low tire pressure warning light and the DIC warning message come on at each ignition cycle until the tires are inflated to the correct inflation pressure. Using the DIC, tire pressure levels can be viewed by the driver. For additional information and details about the DIC operation and displays see *DIC Operation and Displays on page 3-43* and *DIC Warnings and Messages on page 3-46*.

The low tire pressure warning light may come on in cool weather when the vehicle is first started, and then turn off as you start to drive. This could be an early indicator that the air pressure in the tire(s) are getting low and need to be inflated to the proper pressure.

A Tire and Loading Information label shows the size of your vehicle's original equipment tires and the correct inflation pressure for your vehicle's tires when they are cold. See *Loading Your Vehicle on page 4-20*, for an example of the Tire and Loading Information label and its location on your vehicle. Also see *Inflation - Tire Pressure on page 5-68*.

Downloaded from www.Manualslib.com manuals search engine

Your vehicle's TPMS system can warn you about a low tire pressure condition but it does not replace normal tire maintenance. See *Tire Inspection and Rotation on page 5-77* and *Tires on page 5-60*.

Notice: **Liquid tire sealants could damage the Tire Pressure Monitor System (TPMS) sensors. Sensor damage caused by using a tire sealant is not covered by your warranty. Do not use liquid tire sealants.**

TPMS Malfunction Light and Message

The TPMS will not function properly if one or more of the TPMS sensors are missing or inoperable. When the system detects a malfunction, the low tire warning light flashes for about one minute and then stays on for the remainder of the ignition cycle. A DIC warning message is also displayed. The low tire warning light and DIC warning message come on at each ignition cycle until the problem is corrected. Some of the conditions that can cause the malfunction light and DIC message to come on are:

- One of the road tires has been replaced with the spare tire. The spare tire does not have a TPMS sensor. The TPMS malfunction light and DIC message should go off once you re-install the road tire containing the TPMS sensor.
- The TPMS sensor matching process was started but not completed or not completed successfully after rotating the vehicle's tires. The DIC message and TPMS malfunction light should go off once the TPMS sensor matching process is performed successfully. See "TPMS Sensor Matching Process" later in this section.
- One or more TPMS sensors are missing or damaged. The DIC message and the TPMS malfunction light should go off when the TPMS sensors are installed and the sensor matching process is performed successfully. See your dealer/retailer for service.
- Replacement tires or wheels do not match your vehicle's original equipment tires or wheels. Tires and wheels other than those recommended for your vehicle could prevent the TPMS from functioning properly. See *Buying New Tires on page 5-79*.
- Operating electronic devices or being near facilities using radio wave frequencies similar to the TPMS could cause the TPMS sensors to malfunction.

If the TPMS is not functioning it cannot detect or signal a low tire condition. See your dealer/retailer for service if the TPMS malfunction light and DIC message comes on and stays on.

Downloaded from www.Manualslib.com manuals search engine

TPMS Sensor Matching Process

Each TPMS sensor has a unique identification code. Any time you replace one or more of the TPMS sensors or rotate the vehicle's tires, the identification codes need to be matched to the new tire/wheel location. The sensors are matched, to the tire/wheel locations, in the following order: driver side front tire, passenger side front tire, passenger side rear tire, and driver side rear tire using a TPMS diagnostic tool. See your dealer/retailer for service.

The TPMS sensors can also be matched to each tire/wheel position by increasing or decreasing the tire's air pressure. When increasing the tire's pressure, do not exceed the maximum inflation pressure indicated on the tire's sidewall. To decrease the tire's air-pressure use the pointed end of the valve cap, a pencil-style air pressure gage, or a key.

You have two minutes to match each tire and wheel position. If it takes longer than two minutes to match any tire and wheel position, the matching process stops and you need to start over.

TPMS Matching Process for Vehicles with Remote Keyless Entry (RKE)

1. Set the parking brake.
2. Turn the ignition switch to ON/RUN with the engine off.
3. Press and hold the Remote Keyless Entry (RKE) transmitter's LOCK and UNLOCK buttons, at the same time, for about five seconds to start the TPMS learn mode. The horn sounds twice indicating the TPMS receiver is ready and in learn mode.
4. Start with the driver side front tire. The driver side front turn signal also comes on to indicate that corner's sensor is ready to be learned.
5. Remove the valve cap from the tire's valve stem. Activate the TPMS sensor by increasing or decreasing the tire's air pressure for about eight seconds. The horn chirp, can take up to 30 seconds to sound. It chirps one time and then all the turn signals flash one time to confirm the sensor identification code has been matched to the tire/wheel position.

Downloaded from www.Manualslib.com manuals search engine

6. The passenger side front turn signal comes on to indicate that corner sensor is ready to be learned. Proceed to the passenger side front tire and repeat the procedure in Step 5.
7. The passenger side rear turn signal comes on to indicate that corner sensor is ready to be learned. Proceed to the passenger side rear tire and repeat the procedure in Step 5.
8. The driver side rear turn signal comes on to indicate that corner sensor is ready to be learned. Proceed to the driver side rear tire, and repeat the procedure in Step 5.
9. After hearing the single horn chirp for the driver side rear tire, two additional horn chirps sound to indicate the tire learning process is done. Turn the ignition switch to LOCK/OFF.

   If no tires are learned after entering the TPMS learn mode, or if communication with the receiver stops, or if the time limit has expired, turn the ignition switch to LOCK/OFF and start over beginning with Step 2.
10. Set all four tires to the recommended air pressure level as indicated on the Tire and Loading Information label.
11. Put the valve caps back on the valve stems.

TPMS Matching Process for Vehicles without Remote Keyless Entry (RKE)

1. Set the parking brake.
2. Turn the ignition switch to ON/RUN with the engine off.
3. Using the Driver Information Center (DIC), press the INFO and Set/Reset buttons at the same time for about one second. Then press and release the INFO button until the TIRE LEARN? message displays.
4. Press and hold the Set/Reset DIC button for approximately three seconds to start the TPMS learn mode. The horn sounds twice to indicate the TPMS receiver is ready and the TIRE LEARN ON message displays. The driver side front turn signal also comes on to indicate that corner sensor is ready to be learned.
5. Start with the driver side front tire.

Downloaded from www.Manualslib.com manuals search engine

6. Remove the valve cap from the tire's valve stem. Activate the TPMS sensor by increasing or decreasing the tire's air pressure for about eight seconds. The horn chirp, can take up to 30 seconds to sound. It chirps one time and then all the turn signals flash one time to confirm the sensor identification code has been matched to the tire/wheel position.
7. The passenger side front turn signal comes on to indicate that corner sensor is ready to be learned. Proceed to the passenger side front tire and repeat the procedure in Step 6.
8. The passenger side rear turn signal comes on to indicate that corner sensor is ready to be learned. Proceed to the passenger side rear tire and repeat the procedure in Step 6.
9. The driver side rear turn signal comes on to indicate that corner sensor is ready to be learned. Proceed to the driver side rear tire, and repeat the procedure in Step 6.
10. After hearing the single horn chirp for the driver side rear tire, two additional horn chirps sound to indicate the tire learning process is done. The LEARN COMPLETE message displays if all four tire positions are learned. Turn the ignition switch to LOCK/OFF.

    If no tires are learned after entering the TPMS learn mode, or if communication with the receiver stops, or if the time limit has expired, the TIRE LEARN? message displays on the DIC. Turn the ignition switch to LOCK/OFF and start over beginning with Step 2.
11. Set all four tires to the recommended air pressure level as indicated on the Tire and Loading Information label.
12. Put the valve caps back on the valve stems.

Downloaded from www.Manualslib.com manuals search engine

Tire Inspection and Rotation

We recommend that you regularly inspect your vehicle's tires, including the spare tire, for signs of wear or damage. See *When It Is Time for New Tires on page 5-78* for more information.

Tires should be rotated every 5,000 to 8,000 miles (8 000 to 13 000 km). See *Scheduled Maintenance on page 6-4*.

The purpose of a regular tire rotation is to achieve a uniform wear for all tires on the vehicle. This will ensure that your vehicle continues to perform most like it did when the tires were new.

Any time you notice unusual wear, rotate the tires as soon as possible and check wheel alignment. Also check for damaged tires or wheels. See *When It Is Time for New Tires on page 5-78* and *Wheel Replacement on page 5-83*.

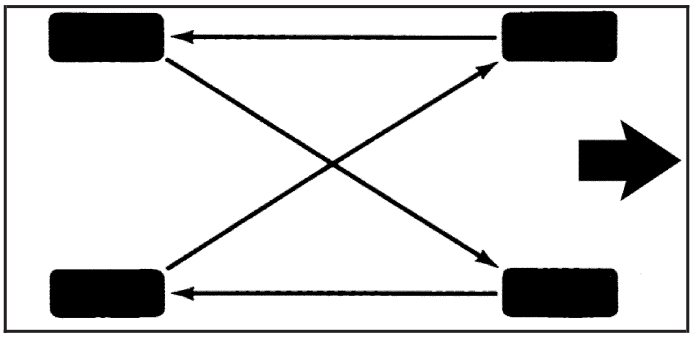

When rotating your vehicle's tires, always use the correct rotation pattern shown here.

Do not include the compact spare tire in the tire rotation.

After the tires have been rotated, adjust the front and rear inflation pressures as shown on the Tire and Loading Information label. See *Inflation - Tire Pressure on page 5-68* and *Loading Your Vehicle on page 4-20*.

Downloaded from www.Manualslib.com manuals search engine

Reset the Tire Pressure Monitor System. See *Tire Pressure Monitor Operation on page 5-72*.

Make certain that all wheel nuts are properly tightened. See “Wheel Nut Torque” under *Capacities and Specifications on page 5-119*.

⚠ CAUTION:

Rust or dirt on a wheel, or on the parts to which it is fastened, can make wheel nuts become loose after time. The wheel could come off and cause an accident. When you change a wheel, remove any rust or dirt from places where the wheel attaches to the vehicle. In an emergency, you can use a cloth or a paper towel to do this; but be sure to use a scraper or wire brush later, if needed, to get all the rust or dirt off. See *Changing a Flat Tire on page 5-86*.

When It Is Time for New Tires

Various factors, such as maintenance, temperatures, driving speeds, vehicle loading, and road conditions influence when you need new tires.

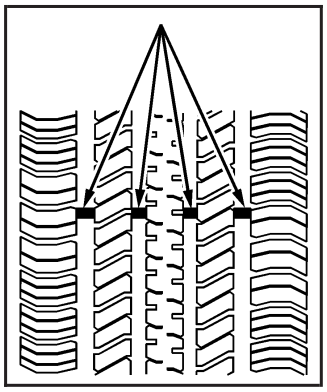

One way to tell when it is time for new tires is to check the treadwear indicators, which will appear when your tires have only 1/16 inch (1.6 mm) or less of tread remaining.

Downloaded from www.Manualslib.com manuals search engine

You need new tires if any of the following statements are true:

- You can see the indicators at three or more places around the tire.
- You can see cord or fabric showing through the tire's rubber.
- The tread or sidewall is cracked, cut, or snagged deep enough to show cord or fabric.
- The tire has a bump, bulge, or split.
- The tire has a puncture, cut, or other damage that cannot be repaired well because of the size or location of the damage.

The rubber in tires degrades over time, even if they are not being used. This is also true for the spare tire, if your vehicle has one. Multiple conditions affect how fast this aging takes place, including temperatures, loading conditions, and inflation pressure maintenance. With proper care and maintenance tires will typically wear out before they degrade due to age. If you are unsure about the need to replace your tires as they get older, consult the tire manufacturer for more information.

Buying New Tires

GM has developed and matched specific tires for your vehicle. The original equipment tires installed on your vehicle, when it was new, were designed to meet General Motors Tire Performance Criteria Specification (TPC Spec) system rating. If you need replacement tires, GM strongly recommends that you get tires with the same TPC Spec rating. This way, your vehicle will continue to have tires that are designed to give the same performance and vehicle safety, during normal use, as the original tires.

GM's exclusive TPC Spec system considers over a dozen critical specifications that impact the overall performance of your vehicle, including brake system performance, ride and handling, traction control, and tire pressure monitoring performance. GM's TPC Spec number is molded onto the tire's sidewall near the tire size. If the tires have an all-season tread design, the TPC Spec number will be followed by an MS for mud and snow. See *Tire Sidewall Labeling on page 5-62* for additional information.

Downloaded from www.Manualslib.com manuals search engine

GM recommends replacing tires in sets of four. This is because uniform tread depth on all tires will help keep your vehicle performing most like it did when the tires were new. Replacing less than a full set of tires can affect the braking and handling performance of your vehicle. See *Tire Inspection and Rotation on page 5-77* for information on proper tire rotation.

⚠ CAUTION:

Mixing tires could cause you to lose control while driving. If you mix tires of different sizes, brands, or types (radial and bias-belted tires), the vehicle may not handle properly, and you could have a crash. Using tires of different sizes, brands, or types may also cause damage to your vehicle. Be sure to use the correct size, brand, and type of tires on all wheels. It is all right to drive with your compact spare temporarily, as it was developed for use on your vehicle. See *Compact Spare Tire on page 5-99*.

⚠ CAUTION:

If you use bias-ply tires on your vehicle, the wheel rim flanges could develop cracks after many miles of driving. A tire and/or wheel could fail suddenly, causing a crash. Use only radial-ply tires with the wheels on your vehicle.

If you must replace your vehicle's tires with those that do not have a TPC Spec number, make sure they are the same size, load range, speed rating, and construction type (radial and bias-belted tires) as your vehicle's original tires.

Vehicles that have a tire pressure monitoring system could give an inaccurate low-pressure warning if non-TPC Spec rated tires are installed on your vehicle. Non-TPC Spec rated tires may give a low-pressure warning that is higher or lower than the proper warning level you would get with TPC Spec rated tires. See *Tire Pressure Monitor System on page 5-70*.

Downloaded from www.Manualslib.com manuals search engine

Your vehicle's original equipment tires are listed on the Tire and Loading Information Label. See *Loading Your Vehicle on page 4-20*, for more information about the Tire and Loading Information Label and its location on your vehicle.

Different Size Tires and Wheels

If you add wheels or tires that are a different size than your original equipment wheels and tires, this may affect the way your vehicle performs, including its braking, ride and handling characteristics, stability, and resistance to rollover. Additionally, if your vehicle has electronic systems such as, anti-lock brakes, traction control, and electronic stability control, the performance of these systems can be affected.

⚠ CAUTION:

If you add different sized wheels, your vehicle may not provide an acceptable level of performance and safety if tires not recommended for those wheels are selected. You may increase the chance that you will crash and suffer serious injury. Only use GM specific wheel and tire systems developed for your vehicle, and have them properly installed by a GM certified technician.

See *Buying New Tires on page 5-79* and *Accessories and Modifications on page 5-4* for additional information.

Downloaded from www.Manualslib.com manuals search engine

Uniform Tire Quality Grading

Quality grades can be found where applicable on the tire sidewall between tread shoulder and maximum section width. For example:

Treadwear 200 Traction AA Temperature A

The following information relates to the system developed by the United States National Highway Traffic Safety Administration (NHTSA), which grades tires by treadwear, traction, and temperature performance. This applies only to vehicles sold in the United States. The grades are molded on the sidewalls of most passenger car tires. The Uniform Tire Quality Grading (UTQG) system does not apply to deep tread, winter-type snow tires, space-saver, or temporary use spare tires, tires with nominal rim diameters of 10 to 12 inches (25 to 30 cm), or to some limited-production tires.

While the tires available on General Motors passenger cars and light trucks may vary with respect to these grades, they must also conform to federal safety requirements and additional General Motors Tire Performance Criteria (TPC) standards.

Treadwear

The treadwear grade is a comparative rating based on the wear rate of the tire when tested under controlled conditions on a specified government test course. For example, a tire graded 150 would wear one and a half (1.5) times as well on the government course as a tire graded 100. The relative performance of tires depends upon the actual conditions of their use, however, and may depart significantly from the norm due to variations in driving habits, service practices, and differences in road characteristics and climate.

Traction – AA, A, B, C

The traction grades, from highest to lowest, are AA, A, B, and C. Those grades represent the tire's ability to stop on wet pavement as measured under controlled conditions on specified government test surfaces of asphalt and concrete. A tire marked C may have poor traction performance.

Warning: **The traction grade assigned to this tire is based on straight-ahead braking traction tests, and does not include acceleration, cornering, hydroplaning, or peak traction characteristics.**

Downloaded from www.Manualslib.com manuals search engine

Temperature – A, B, C

The temperature grades are A (the highest), B, and C, representing the tire's resistance to the generation of heat and its ability to dissipate heat when tested under controlled conditions on a specified indoor laboratory test wheel. Sustained high temperature can cause the material of the tire to degenerate and reduce tire life, and excessive temperature can lead to sudden tire failure. The grade C corresponds to a level of performance which all passenger car tires must meet under the Federal Motor Vehicle Safety Standard No. 109. Grades B and A represent higher levels of performance on the laboratory test wheel than the minimum required by law.

Warning: **The temperature grade for this tire is established for a tire that is properly inflated and not overloaded. Excessive speed, underinflation, or excessive loading, either separately or in combination, can cause heat buildup and possible tire failure.**

Wheel Alignment and Tire Balance

The tires and wheels on your vehicle were aligned and balanced carefully at the factory to give you the longest tire life and best overall performance. Adjustments to wheel alignment and tire balancing will not be necessary on a regular basis. However, if you notice unusual tire wear or your vehicle pulling to one side or the other, the alignment might need to be checked. If you notice your vehicle vibrating when driving on a smooth road, the tires and wheels might need to be rebalanced. See your dealer/retailer for proper diagnosis.

Wheel Replacement

Replace any wheel that is bent, cracked, or badly rusted or corroded. If wheel nuts keep coming loose, the wheel, wheel bolts, and wheel nuts should be replaced. If the wheel leaks air, replace it (except some aluminum wheels, which can sometimes be repaired). See your dealer/retailer if any of these conditions exist.

Your dealer/retailer will know the kind of wheel you need.

Each new wheel should have the same load-carrying capacity, diameter, width, offset, and be mounted the same way as the one it replaces.

Downloaded from www.Manualslib.com manuals search engine

If you need to replace any of your wheels, wheel bolts, wheel nuts, or Tire Pressure Monitor System (TPMS) sensors, replace them only with new GM original equipment parts. This way, you will be sure to have the right wheel, wheel bolts, wheel nuts, and TPMS sensors for your vehicle.

⚠ CAUTION:

Using the wrong replacement wheels, wheel bolts, or wheel nuts on your vehicle can be dangerous. It could affect the braking and handling of your vehicle, make your tires lose air and make you lose control. You could have a collision in which you or others could be injured. Always use the correct wheel, wheel bolts, and wheel nuts for replacement.

Notice: **The wrong wheel can also cause problems with bearing life, brake cooling, speedometer or odometer calibration, headlamp aim, bumper height, vehicle ground clearance, and tire or tire chain clearance to the body and chassis.**

See *Changing a Flat Tire on page 5-86* for more information.

Used Replacement Wheels

⚠ CAUTION:

Putting a used wheel on your vehicle is dangerous. You cannot know how it has been used or how far it has been driven. It could fail suddenly and cause a crash. If you have to replace a wheel, use a new GM original equipment wheel.

Downloaded from www.Manualslib.com manuals search engine

Tire Chains

⚠ CAUTION:

Do not use tire chains, there is not enough clearance.

Tire chains used on a vehicle without the proper amount of clearance can cause damage to the brakes, suspension or other vehicle parts. The area damaged by the tire chains could cause you to lose control of your vehicle and you or others may be injured in a crash.

CAUTION: (Continued)

CAUTION: (Continued)

Use another type of traction device only if its manufacturer recommends it for use on your vehicle and tire size combination and road conditions. Follow that manufacturer's instructions. To help avoid damage to your vehicle, drive slowly, re-adjust or remove the device if is contacting your vehicle, and do not spin your wheels.

If you do find traction devices that will fit, install them on the front tires.

Downloaded from www.Manualslib.com manuals search engine

If a Tire Goes Flat

It is unusual for a tire to blowout while you are driving, especially if you maintain your vehicle's tires properly. If air goes out of a tire, it is much more likely to leak out slowly. But if you should ever have a blowout, here are a few tips about what to expect and what to do:

If a front tire fails, the flat tire creates a drag that pulls the vehicle toward that side. Take your foot off the accelerator pedal and grip the steering wheel firmly. Steer to maintain lane position, and then gently brake to a stop well out of the traffic lane.

A rear blowout, particularly on a curve, acts much like a skid and may require the same correction you would use in a skid. In any rear blowout remove your foot from the accelerator pedal. Get the vehicle under control by steering the way you want the vehicle to go. It may be very bumpy and noisy, but you can still steer. Gently brake to a stop, well off the road if possible.

⚠ CAUTION:

Lifting a vehicle and getting under it to do maintenance or repairs is dangerous without the appropriate safety equipment and training. The jack provided with your vehicle is designed only for changing a flat tire. If it is used for anything else, you or others could be badly injured or killed if the vehicle slips off the jack. Use the jack provided with your vehicle only for changing a flat tire.

If a tire goes flat, the next part shows how to use the jacking equipment to change a flat tire safely.

Changing a Flat Tire

If a tire goes flat, avoid further tire and wheel damage by driving slowly to a level place. Turn on your vehicle's hazard warning flashers. See *Hazard Warning Flashers on page 3-6* for more information.

Downloaded from www.Manualslib.com manuals search engine

⚠ CAUTION:

Changing a tire can be dangerous. The vehicle can slip off the jack and roll over or fall on you or other people. You and they could be badly injured or even killed. Find a level place to change your tire. To help prevent the vehicle from moving:

1. **Set the parking brake firmly.**
2. **Put the shift lever in PARK (P).**
3. **Turn off the engine and do not restart while the vehicle is raised.**
4. **Do not allow passengers to remain in the vehicle.**

To be even more certain the vehicle will not move, you should put blocks at the front and rear of the tire farthest away from the one being changed. That would be the tire, on the other side, at the opposite end of the vehicle.

When your vehicle has a flat tire, use the following example as a guide to assist you in the placement of wheel blocks.

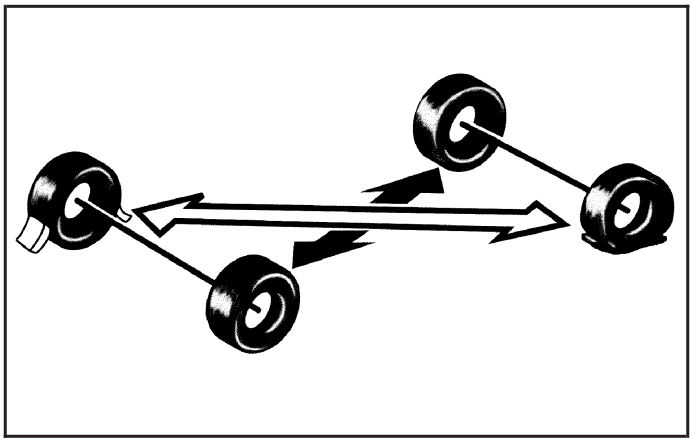

The following information tells you how to use the jack and change a tire.

Downloaded from www.Manualslib.com manuals search engine

Removing the Spare Tire and Tools

The equipment you will need is located in the trunk.

1. If you have a retractable hardtop model, make sure the hardtop is in the up position.
2. Open the trunk. See *Trunk on page 2-13* for more information.
3. If you have a sedan or coupe model, remove the spare tire cover.

   If you have a retractable hardtop model, unlatch the trunk cargo cover so that it is in the open position. Then remove the cover from the spare tire.

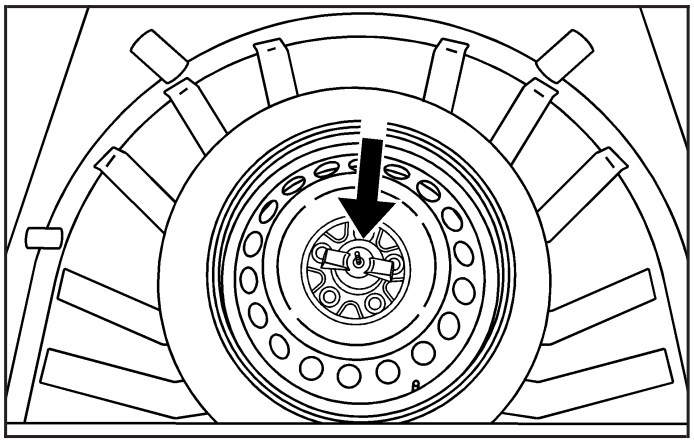

4. Turn the wing nut counterclockwise and remove it. Then remove the compact spare tire. See *Compact Spare Tire on page 5-99* for more information.
5. Remove the wing nut holding the jack in place.
6. Remove the extension bolt that is clipped to the jack. You will need this later to store the flat tire.
7. Remove the jack and wheel wrench from the trunk.

Downloaded from www.Manualslib.com manuals search engine

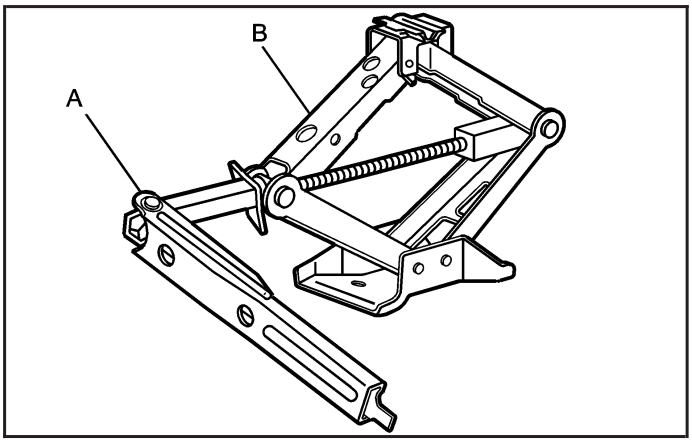

The tools you will be using include the wheel wrench (A) and jack (B).

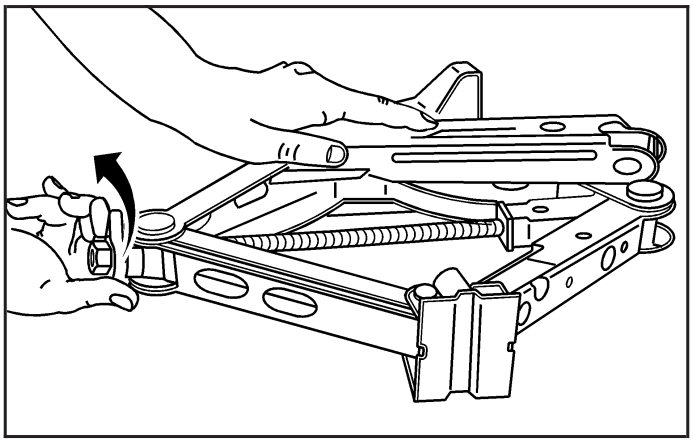

1. Turn the plastic wing nut counterclockwise to loosen the wheel wrench.
2. Unhook the wheel wrench from the jack.

Downloaded from www.Manualslib.com manuals search engine

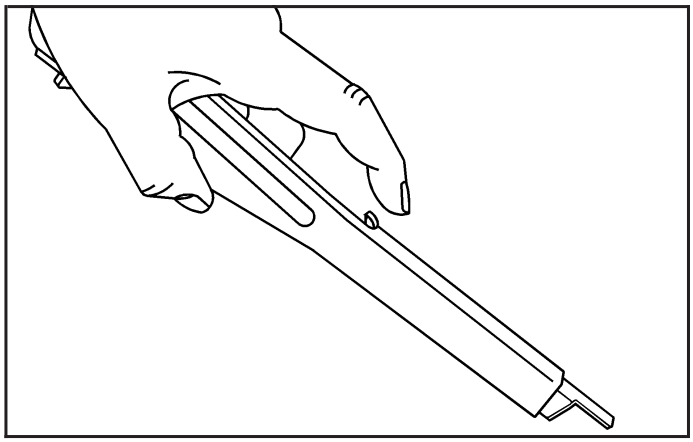

3. Extend the handle on the wheel wrench by pressing the button with your index finger and pulling on the end of the wrench. You must do this before using the wheel wrench.

Removing the Flat Tire and Installing the Spare Tire

1. It is recommended a safety check is done before proceeding. See *Changing a Flat Tire on page 5-86* for more information.
2. If your vehicle has a wheel cover or hubcap that has plastic wheel nut caps, then loosen the plastic nut caps. You may need to use the wheel wrench to loosen them. Do not pry off wheel covers or center caps that have plastic wheel nut caps.
3. Remove the wheel cover or center cap from the wheel to locate the wheel nuts.

   If your vehicle has a wheel cover or hubcap without plastic wheel nut caps, gently pry on the edge of the plastic wheel trim to remove it from the wheel to find the wheel nuts.

   Store the wheel cover in the trunk until the flat is repaired or replaced.

Downloaded from www.Manualslib.com manuals search engine

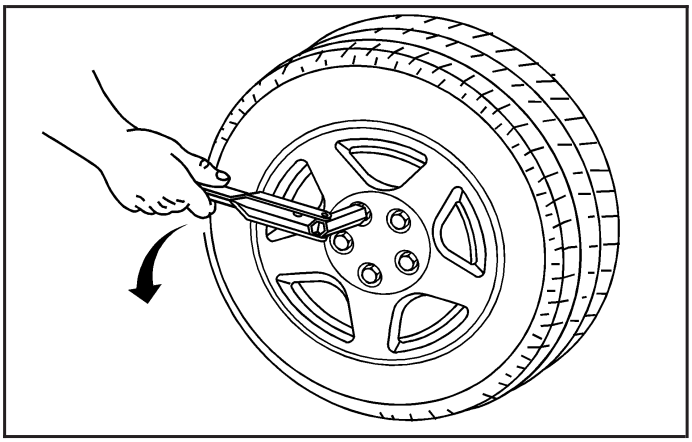

4. Use the wheel wrench to loosen all the wheel nuts. Do not remove them yet.

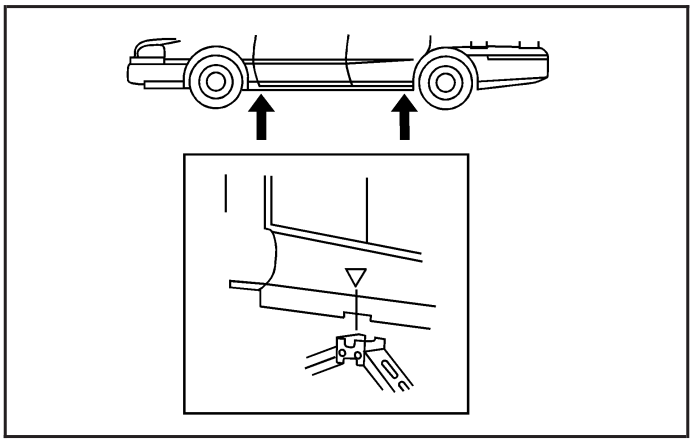

5. Position the lift head at the jack location nearest the flat tire. Make sure all of the jack lift head is touching the jacking flange under the body. Do not place the jack under a body panel. The lower body panel has an arrow to aid in locating the jacking location.

Downloaded from www.Manualslib.com manuals search engine

6. Put the compact spare tire near the flat tire being changed.

⚠ CAUTION:

Getting under a vehicle when it is jacked up is dangerous. If the vehicle slips off the jack, you could be badly injured or killed. Never get under a vehicle when it is supported only by a jack.

⚠ CAUTION:

Raising your vehicle with the jack improperly positioned can damage the vehicle and even make the vehicle fall. To help avoid personal injury and vehicle damage, be sure to fit the jack lift head into the proper location before raising the vehicle.

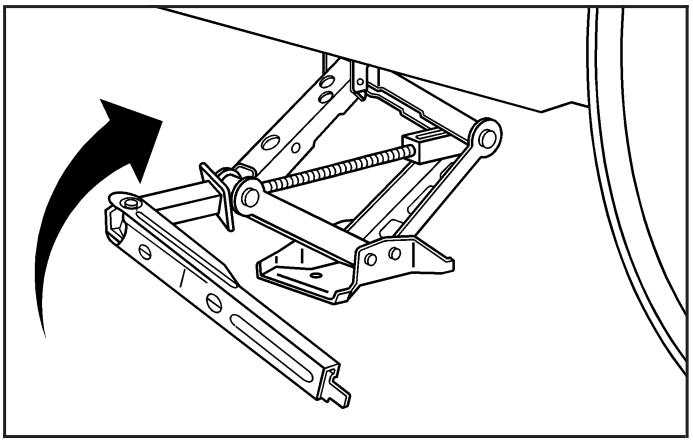

7. Raise the vehicle by turning the wheel wrench clockwise. Raise the vehicle far enough off the ground so there is enough room for the compact spare tire to fit underneath the wheel well.

Downloaded from www.Manualslib.com manuals search engine

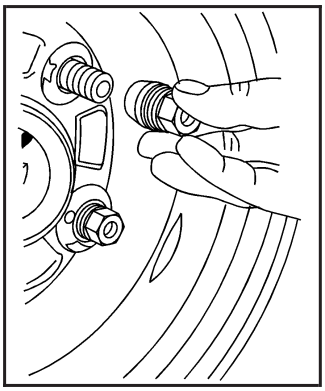

8. Remove all of the wheel nuts.

9. Remove the flat tire.

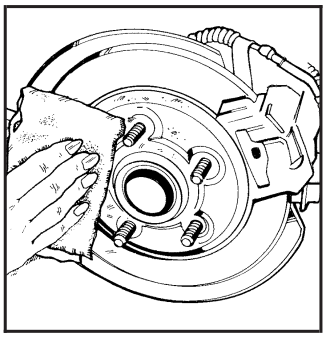

10. Remove any rust or dirt from the wheel bolts, mounting surfaces, and spare wheel.

⚠ CAUTION:

Rust or dirt on a wheel, or on the parts to which it is fastened, can make wheel nuts become loose after time. The wheel could come off and cause an accident. When you change a wheel, remove any rust or dirt from places where the wheel attaches to the vehicle. In an emergency, you can use a cloth or a paper towel to do this; but be sure to use a scraper or wire brush later, if needed, to get all the rust or dirt off. See *Changing a Flat Tire on page 5-86*.

Downloaded from www.Manualslib.com manuals search engine

11. Install the compact spare tire.
12. Put the wheel nuts back on with the rounded end of the nuts toward the wheel. Tighten each nut by hand until the wheel is held against the hub.

⚠ CAUTION:

Never use oil or grease on studs or nuts. Because the nuts might come loose. The vehicle's wheel could fall off, causing a crash.

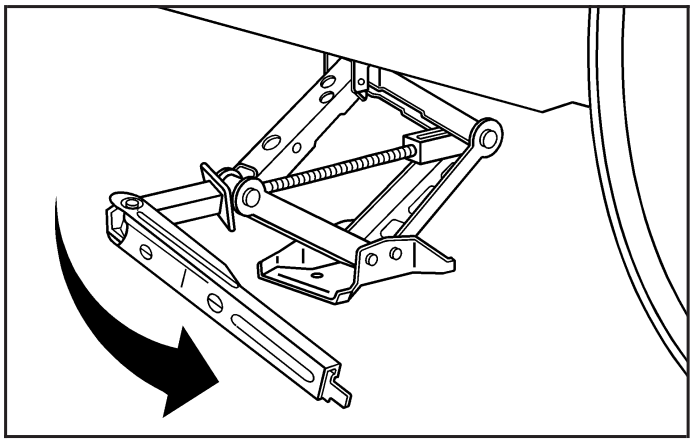

13. Lower the vehicle by turning the wheel wrench counterclockwise. Lower the jack completely.

Downloaded from www.Manualslib.com manuals search engine

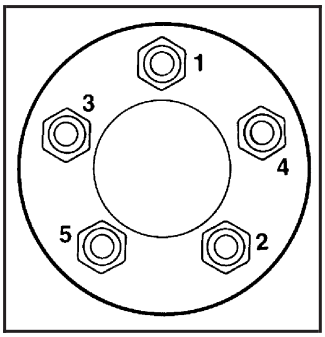

14. Tighten the wheel nuts firmly in a crisscross sequence, as shown, with the wheel wrench.

⚠ CAUTION:

Incorrect or improperly tightened wheel nuts can cause the wheel to come loose and even come off. This could lead to a crash. If you have to replace them, be sure to get new original equipment wheel nuts. Stop somewhere as soon as you can and have the nuts tightened with a torque wrench to the proper torque specification. See *Capacities and Specifications on page 5-119* for wheel nut torque specification.

Notice: **Improperly tightened wheel nuts can lead to brake pulsation and rotor damage. To avoid expensive brake repairs, evenly tighten the wheel nuts in the proper sequence and to the proper torque specification. See *Capacities and Specifications on page 5-119* for the wheel nut torque specification.**

Do not try to put a wheel cover on your compact spare tire. It will not fit.

Notice: **Wheel covers will not fit on your vehicle's compact spare. If you try to put a wheel cover on the compact spare, the cover or the spare could be damaged.**

Downloaded from www.Manualslib.com manuals search engine

Storing a Flat or Spare Tire and Tools

All Models (Except GXP and Retractable Hardtop)

⚠ CAUTION:

Storing a jack, a tire, or other equipment in the passenger compartment of the vehicle could cause injury. In a sudden stop or collision, loose equipment could strike someone. Store all these in the proper place.

To store the flat tire and jack in the compact spare tire compartment:

1. Open the trunk. See *Trunk on page 2-13* for more information.
2. Remove the bolt extension (in the yellow sleeve) from the jack and remove the center cap from the wheel.

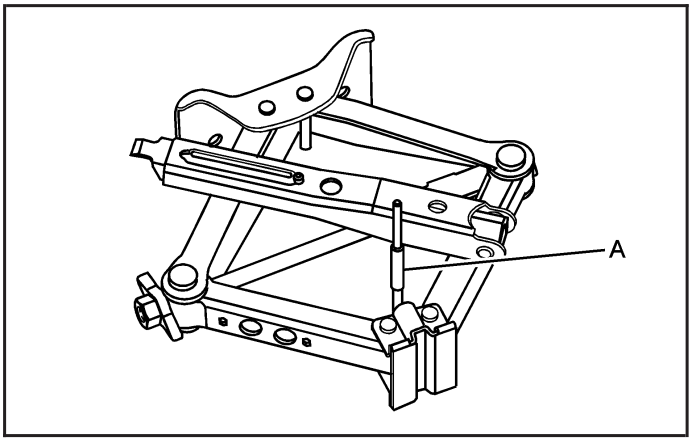

3. Place the jack over the bolt (A) on the floor, making sure it contacts the bolt as shown, and thread the jack retainer nut until it contacts the jack.

Downloaded from www.Manualslib.com manuals search engine

4. With the valve stem up, place the tire on the compartment floor with the rear of the tire beneath the trim panel. The tire may not lay completely flat.
5. Line up a the wheel center hole or a wheel nut hole with the bolt.
6. With the cap in place to prevent the wheel from being scratched, screw the bolt extension onto the bolt through the wheel hole aligned with the bolt.
7. Remove the yellow cap from the bolt extension.
8. Secure the tire and wheel with the larger wing nut.

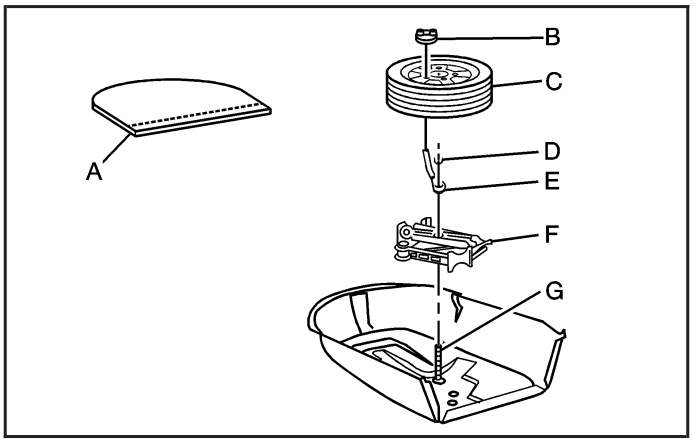

A. Cover
B. Wing Nut
C. Flat Tire (valve stem up) or Compact Spare Tire
D. Extension
E. Nut
F. Jack
G. Bolt

The compact spare is for temporary use only. Replace the compact spare tire with a full-size tire as soon as you can. See *Compact Spare Tire on page 5-99*.

Downloaded from www.Manualslib.com manuals search engine

GXP and Retractable Hardtop Models

To store the flat tire and jack in the compact spare tire compartment:

1. Make sure the retractable hardtop is in the up position.
2. Open the trunk. See *Trunk on page 2-13* for more information.
3. If you have a retractable hardtop model, unlatch the trunk cargo cover so that it is in the open position.
4. Remove the bolt extension (in the yellow sleeve) from the jack and remove the center cap from the wheel.

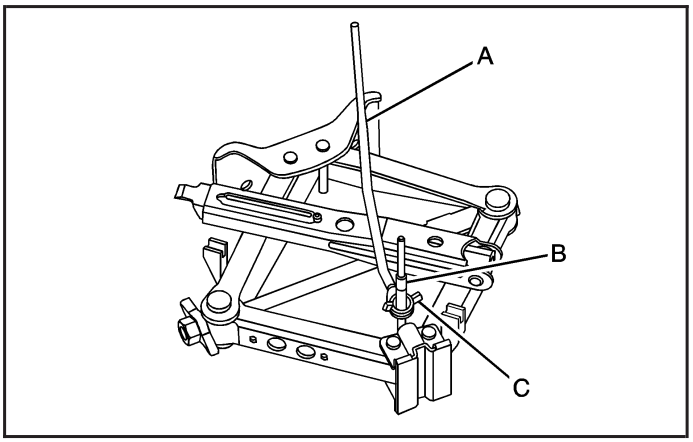

5. Place the jack over the bolt (B) on the floor, making sure it contacts the bolt as shown.
6. Place the extension bolt (A) onto the bolt (B).
7. Thread the jack retainer nut (C) until it is at or near the end of the threads.
8. While placing the flat tire in the wheel tub, reach under the wheel and lift the extension bolt so that the threaded end of the bolt passes through the center hole of the wheel.
9. Remove the yellow cap.
10. Secure the tire and wheel with the larger wing nut.
11. Replace the cover.

Downloaded from www.Manualslib.com manuals search engine

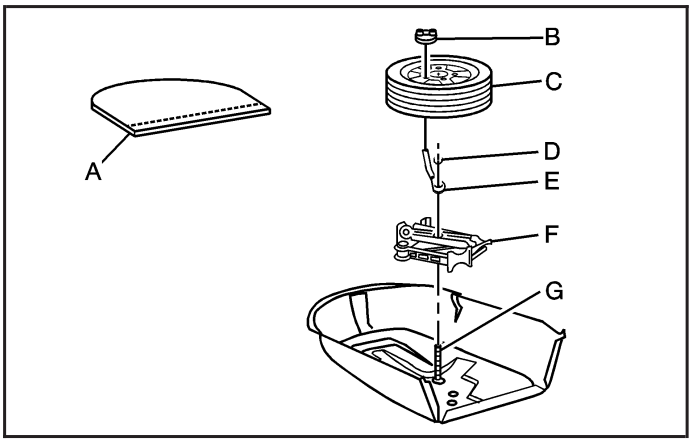

A. Retainer
B. Cover
C. Flat Tire (Valve Stem Up) or Compact Spare Tire
D. Nut
E. Bolt Extension
F. Jack and Wheel Wrench
G. Bolt

The compact spare tire is for temporary use only. Replace the compact spare tire with a full-size tire as soon as you can. See *Compact Spare Tire on page 5-99*.

Compact Spare Tire

Although the compact spare tire was fully inflated when the vehicle was new, it can lose air after a time. Check the inflation pressure regularly. It should be 60 psi (420 kPa).

After installing the compact spare on the vehicle, stop as soon as possible and make sure the spare tire is correctly inflated. The compact spare is made to perform well at speeds up to 65 mph (105 km/h) for distances up to 3,000 miles (5 000 km), so you can finish your trip and have the full-size tire repaired or replaced at your convenience. Of course, it is best to replace the spare with a full-size tire as soon as possible. The spare tire will last longer and be in good shape in case it is needed again.

Notice: **When the compact spare is installed, do not take your vehicle through an automatic car wash with guide rails. The compact spare can get caught on the rails. That can damage the tire and wheel, and maybe other parts of your vehicle.**

Do not use the compact spare on other vehicles.

Downloaded from www.Manualslib.com manuals search engine

And do not mix the compact spare tire or wheel with other wheels or tires. They will not fit. Keep the spare tire and its wheel together.

Notice: **Tire chains will not fit your compact spare. Using them can damage your vehicle and can damage the chains too. Do not use tire chains on your compact spare.**

Appearance Care

Interior Cleaning

Your vehicle's interior will continue to look its best if it is cleaned often. Although not always visible, dust and dirt can accumulate on your upholstery. Dirt can damage carpet, fabric, leather, and plastic surfaces. Regular vacuuming is recommended to remove particles from your upholstery. It is important to keep your upholstery from becoming and remaining heavily soiled. Soils should be removed as quickly as possible. Your vehicle's interior may experience extremes of heat that could cause stains to set rapidly.

Lighter colored interiors may require more frequent cleaning. Use care because newspapers and garments that transfer color to your home furnishings may also transfer color to your vehicle's interior.

When cleaning your vehicle's interior, only use cleaners specifically designed for the surfaces being cleaned. Permanent damage may result from using cleaners on surfaces for which they were not intended. Use glass cleaner only on glass. Remove any accidental over-spray from other surfaces immediately. To prevent over-spray, apply cleaner directly to the cleaning cloth.

Notice: **If you use abrasive cleaners when cleaning glass surfaces on your vehicle, you could scratch the glass and/or cause damage to the rear window defogger. When cleaning the glass on your vehicle, use only a soft cloth and glass cleaner.**

Many cleaners contain solvents that may become concentrated in your vehicle's breathing space. Before using cleaners, read and adhere to all safety instructions on the label. While cleaning your vehicle's interior, maintain adequate ventilation by opening your vehicle's doors and windows.

Downloaded from www.Manualslib.com manuals search engine

Dust may be removed from small buttons and knobs using a small brush with soft bristles.

Your dealer/retailer has a product for cleaning your vehicle's glass. Should it become necessary, you can also obtain a product from your dealer/retailer to remove odors from your vehicle's upholstery.

Do not clean your vehicle using the following cleaners or techniques:

- Never use a knife or any other sharp object to remove a soil from any interior surface.
- Never use a stiff brush. It can cause damage to your vehicle's interior surfaces.
- Never apply heavy pressure or rub aggressively with a cleaning cloth. Use of heavy pressure can damage your interior and does not improve the effectiveness of soil removal.
- Use only mild, neutral-pH soaps. Avoid laundry detergents or dishwashing soaps with degreasers. Using too much soap will leave a residue that leaves streaks and attracts dirt. For liquid cleaners, about 20 drops per gallon (3.78 L) of water is a good guide.
- Do not heavily saturate your upholstery while cleaning.
- Damage to your vehicle's interior may result from the use of many organic solvents such as naptha, alcohol, etc.

Fabric/Carpet

Use a vacuum cleaner with a soft brush attachment frequently to remove dust and loose dirt. A canister vacuum with a beater bar in the nozzle may only be used on floor carpet and carpeted floor mats. For soils, always try to remove them first with plain water or club soda. Before cleaning, gently remove as much of the soil as possible using one of the following techniques:

- For liquids: gently blot the remaining soil with a paper towel. Allow the soil to absorb into the paper towel until no more can be removed.
- For solid dry soils: remove as much as possible and then vacuum.

Downloaded from www.Manualslib.com manuals search engine

To clean, use the following instructions:

1. Saturate a lint-free, clean white cloth with water or club soda.
2. Wring the cloth to remove excess moisture.
3. Start on the outside edge of the soil and gently rub toward the center. Continue cleaning, using a clean area of the cloth each time it becomes soiled.
4. Continue to gently rub the soiled area until the cleaning cloth remains clean.
5. If the soil is not completely removed, use a mild soap solution and repeat the cleaning process that was used with plain water.

If any of the soil remains, a commercial fabric cleaner or spot lifter may be necessary. When a commercial upholstery cleaner or spot lifter is to be used, test a small hidden area for colorfastness first. If the locally cleaned area gives any impression that a ring formation may result, clean the entire surface.

After the cleaning process has been completed, a paper towel can be used to blot excess moisture from the fabric or carpet.

Leather

A soft cloth dampened with water can be used to remove dust. If a more thorough cleaning is necessary, a soft cloth dampened with a mild soap solution can be used. Allow the leather to dry naturally. Do not use heat to dry. Never use steam to clean leather. Never use spot lifters or spot removers on leather. Many commercial leather cleaners and coatings that are sold to preserve and protect leather may permanently change the appearance and feel of your leather and are not recommended. Do not use silicone or wax-based products, or those containing organic solvents to clean your vehicle's interior because they can alter the appearance by increasing the gloss in a non-uniform manner. Never use shoe polish on leather.

Downloaded from www.Manualslib.com manuals search engine

Instrument Panel, Vinyl, and Other Plastic Surfaces

A soft cloth dampened with water may be used to remove dust. If a more thorough cleaning is necessary, a clean soft cloth dampened with a mild soap solution can be used to gently remove dust and dirt. Never use spot lifters or removers on plastic surfaces. Many commercial cleaners and coatings that are sold to preserve and protect soft plastic surfaces may permanently change the appearance and feel of your interior and are not recommended. Do not use silicone or wax-based products, or those containing organic solvents to clean your vehicle's interior because they can alter the appearance by increasing the gloss in a non-uniform manner.

Some commercial products may increase gloss on your instrument panel. The increase in gloss may cause annoying reflections in the windshield and even make it difficult to see through the windshield under certain conditions.

Care of Safety Belts

Keep belts clean and dry.

⚠ CAUTION:

Do not bleach or dye safety belts. If you do, it may severely weaken them. In a crash, they might not be able to provide adequate protection. Clean safety belts only with mild soap and lukewarm water.

Weatherstrips

Silicone grease on weatherstrips will make them last longer, seal better, and not stick or squeak. Apply silicone grease with a clean cloth. During very cold, damp weather frequent application may be required. See *Recommended Fluids and Lubricants on page 6-13*.

Downloaded from www.Manualslib.com manuals search engine

Washing Your Vehicle

The best way to preserve your vehicle's finish is to keep it clean by washing it often.

Notice: **Certain cleaners contain chemicals that can damage the emblems or nameplates on your vehicle. Check the cleaning product label. If it states that it should not be used on plastic parts, do not use it on your vehicle or damage may occur and it would not be covered by the warranty.**

Do not wash the vehicle in direct sunlight. Use a car washing soap. Do not use cleaning agents that are petroleum based or that contain acid or abrasives, as they can damage the paint, metal or plastic on your vehicle. Approved cleaning products can be obtained from your dealer/retailer. See *Vehicle Care/Appearance Materials on page 5-108*. Follow all manufacturers' directions regarding correct product usage, necessary safety precautions and appropriate disposal of any vehicle care product.

Rinse the vehicle well, before washing and after to remove all cleaning agents completely. If they are allowed to dry on the surface, they could stain.

Dry the finish with a soft, clean chamois or an all-cotton towel to avoid surface scratches and water spotting

High pressure car washes may cause water to enter the vehicle. Avoid using high pressure washes closer than 12 inches (30 cm) to the surface of the vehicle. Use of power washers exceeding 1,200 psi (8 274 kPa) can result in damage or removal of paint and decals.

Cleaning Exterior Lamps/Lenses

Use only lukewarm or cold water, a soft cloth and a car washing soap to clean exterior lamps and lenses. Follow instructions under *Washing Your Vehicle on page 5-104*.

Finish Care

Occasional waxing or mild polishing of your vehicle by hand may be necessary to remove residue from the paint finish. You can get approved cleaning products from your dealer/retailer. See *Vehicle Care/Appearance Materials on page 5-108*.

If your vehicle has a basecoat/clearcoat paint finish, the clearcoat gives more depth and gloss to the colored basecoat. Always use waxes and polishes that are non-abrasive and made for a basecoat/clearcoat paint finish.

Downloaded from www.Manualslib.com manuals search engine

Notice: **Machine compounding or aggressive polishing on a basecoat/clearcoat paint finish may damage it. Use only non-abrasive waxes and polishes that are made for a basecoat/clearcoat paint finish on your vehicle.**

Foreign materials such as calcium chloride and other salts, ice melting agents, road oil and tar, tree sap, bird droppings, chemicals from industrial chimneys, etc., can damage your vehicle's finish if they remain on painted surfaces. Wash the vehicle as soon as possible. If necessary, use non-abrasive cleaners that are marked safe for painted surfaces to remove foreign matter.

Exterior painted surfaces are subject to aging, weather and chemical fallout that can take their toll over a period of years. You can help to keep the paint finish looking new by keeping your vehicle garaged or covered whenever possible.

Protecting Exterior Bright Metal Parts

Bright metal parts should be cleaned regularly to keep their luster. Washing with water is all that is usually needed. However, you may use chrome polish on chrome or stainless steel trim, if necessary.

Use special care with aluminum trim. To avoid damaging protective trim, never use auto or chrome polish, steam or caustic soap to clean aluminum. A coating of wax, rubbed to high polish, is recommended for all bright metal parts.

Windshield and Wiper Blades

Clean the outside of the windshield with glass cleaner.

Clean the rubber blades using a lint free cloth or paper towel soaked with windshield washer fluid or a mild detergent. Wash the windshield thoroughly when cleaning the blades. Bugs, road grime, sap, and a buildup of vehicle wash/wax treatments may cause wiper streaking. Replace the wiper blades if they are worn or damaged.

Wipers can be damaged by:

- Extreme dusty conditions
- Sand and salt
- Heat and sun
- Snow and ice, without proper removal

Downloaded from www.Manualslib.com manuals search engine

Aluminum Wheels

Notice: **If you use strong soaps, chemicals, abrasive polishes, cleaners, brushes, or cleaners that contain acid on aluminum or chrome-plated wheels, you could damage the surface of the wheel(s). The repairs would not be covered by your warranty. Use only approved cleaners on aluminum or chrome-plated wheels.**

Keep the wheels clean using a soft clean cloth with mild soap and water. Rinse with clean water. After rinsing thoroughly, dry with a soft clean towel. A wax may then be applied.

Notice: **Using chrome polish on aluminum wheels could damage the wheels. The repairs would not be covered by your warranty. Use chrome polish on chrome wheels only.**

The surface of these wheels is similar to the painted surface of the vehicle. Do not use strong soaps, chemicals, abrasive polishes, abrasive cleaners, cleaners with acid, or abrasive cleaning brushes on them because the surface could be damaged. Do not use chrome polish on aluminum wheels.

Notice: **If you drive your vehicle through an automatic car wash that has silicone carbide tire cleaning brushes, you could damage the aluminum or chrome-plated wheels. The repairs would not be covered by your warranty. Never drive a vehicle equipped with aluminum or chrome-plated wheels through an automatic car wash that uses silicone carbide tire cleaning brushes.**

Tires

To clean the tires, use a stiff brush with tire cleaner.

Notice: **Using petroleum-based tire dressing products on your vehicle may damage the paint finish and/or tires. When applying a tire dressing, always wipe off any overspray from all painted surfaces on your vehicle.**

Sheet Metal Damage

If the vehicle is damaged and requires sheet metal repair or replacement, make sure the body repair shop applies anti-corrosion material to parts repaired or replaced to restore corrosion protection.

Original manufacturer replacement parts will provide the corrosion protection while maintaining the warranty.

Downloaded from www.Manualslib.com manuals search engine

Finish Damage

Any stone chips, fractures or deep scratches in the finish should be repaired right away. Bare metal will corrode quickly and may develop into major repair expense.

Minor chips and scratches can be repaired with touch-up materials available from your dealer/retailer. Larger areas of finish damage can be corrected in your dealer's/retailer's body and paint shop.

Underbody Maintenance

Chemicals used for ice and snow removal and dust control can collect on the underbody. If these are not removed, corrosion and rust can develop on the underbody parts such as fuel lines, frame, floor pan, and exhaust system even though they have corrosion protection.

At least every spring, flush these materials from the underbody with plain water. Clean any areas where mud and debris can collect. Dirt packed in close areas of the frame should be loosened before being flushed. Your dealer/retailer or an underbody car washing system can do this for you.

Chemical Paint Spotting

Some weather and atmospheric conditions can create a chemical fallout. Airborne pollutants can fall upon and attack painted surfaces on the vehicle. This damage can take two forms: blotchy, ring-shaped discolorations, and small, irregular dark spots etched into the paint surface.

Although no defect in the paint job causes this, we will repair, at no charge to the owner, the surfaces of new vehicles damaged by this fallout condition within 12 months or 12,000 miles (20 000 km) of purchase, whichever occurs first.

Downloaded from www.Manualslib.com manuals search engine

Vehicle Care/Appearance Materials

Description	Usage
Polishing Cloth	Interior and exterior polishing cloth.
Tar and Road Oil Remover	Removes tar, road oil, and asphalt.
Chrome Cleaner and Polish	Use on chrome or stainless steel.
White Sidewall Tire Cleaner	Removes soil and black marks from whitewalls and raised white lettering.
Vinyl Cleaner	Cleans vinyl.
Glass Cleaner	Removes dirt, grime, smoke and fingerprints.
Chrome Wheel Cleaner	Removes dirt and grime from chrome wheels.
Finish Enhancer	Removes dust, fingerprints, and surface contaminants. Spray on and wipe off.

Description	Usage
Swirl Remover Polish	Removes swirl marks, fine scratches, and other light surface contamination.
Cleaner Wax	Removes light scratches and protects finish.
Foaming Tire Shine Low Gloss	Cleans, shines, and protects tires. No wiping necessary.
Wash Wax Concentrate	Medium foaming shampoo. Cleans and lightly waxes. Biodegradable and phosphate free.
Spot Lifter	Quickly removes spots and stains from carpets, vinyl, and cloth upholstery.
Odor Eliminator	Odorless spray odor eliminator used on fabrics, vinyl, leather and carpet.

Downloaded from www.Manualslib.com manuals search engine

Vehicle Identification

Vehicle Identification Number (VIN)

This is the legal identifier for your vehicle. It appears on a plate in the front corner of the instrument panel, on the driver side. You can see it if you look through the windshield from outside your vehicle. The VIN also appears on the Vehicle Certification and Service Parts labels and the certificates of title and registration.

Engine Identification

The eighth character in the VIN is the engine code. This code helps you identify your vehicle's engine, specifications, and replacement parts. See *Capacities and Specifications on page 5-119* for your vehicle's engine code.

Service Parts Identification Label

This label is on the inside of the glove box. It is very helpful if you ever need to order parts. The label has the following information:

- Vehicle Identification Number (VIN)
- Model designation
- Paint information
- Production options and special equipment

Do not remove this label from the vehicle.

Electrical System

Add-On Electrical Equipment

Notice: **Do not add anything electrical to your vehicle unless you check with your dealer/retailer first. Some electrical equipment can damage your vehicle and the damage would not be covered by your warranty. Some add-on electrical equipment can keep other components from working as they should.**

Add-on equipment can drain your vehicle's battery, even if your vehicle is not operating.

Your vehicle has an airbag system. Before attempting to add anything electrical to your vehicle, see *Servicing Your Airbag-Equipped Vehicle on page 1-72*.

Downloaded from www.Manualslib.com manuals search engine

Windshield Wiper Fuses

The windshield wiper motor is protected by a circuit breaker and a fuse. If the motor overheats due to heavy snow, etc., the wiper will stop until the motor cools. If the overload is caused by some electrical problem, have it fixed.

Power Windows and Other Power Options

Fuses in the fuse block protect the power windows. When the current load is too heavy, the fuse opens protecting the circuit until the problem is fixed.

Fuses

The wiring circuits in your vehicle are protected from short circuits by a combination of fuses, circuit breakers and fusible links. This greatly reduces the chance of damage caused by electrical problems.

Look at the silver-colored band inside the fuse. If the band is broken or melted, replace the fuse. Be sure to replace a bad fuse with a new one of the identical size and rating.

There are three fuse blocks in your vehicle: one in the center of the instrument panel, one in the engine compartment and one in the trunk.

There is a fuse puller located on the instrument panel fuse block. It can be used to easily remove fuses from the fuse block.

Instrument Panel Fuse Block

The instrument panel fuse block is located on the passenger side of the vehicle, on the lower portion of the instrument panel console near the floor.

Remove the console cover to access the fuse block, then remove the fuse block cover to access the fuses.

Your vehicle may not be equipped with all the fuses and features listed.

Downloaded from www.Manualslib.com manuals search engine

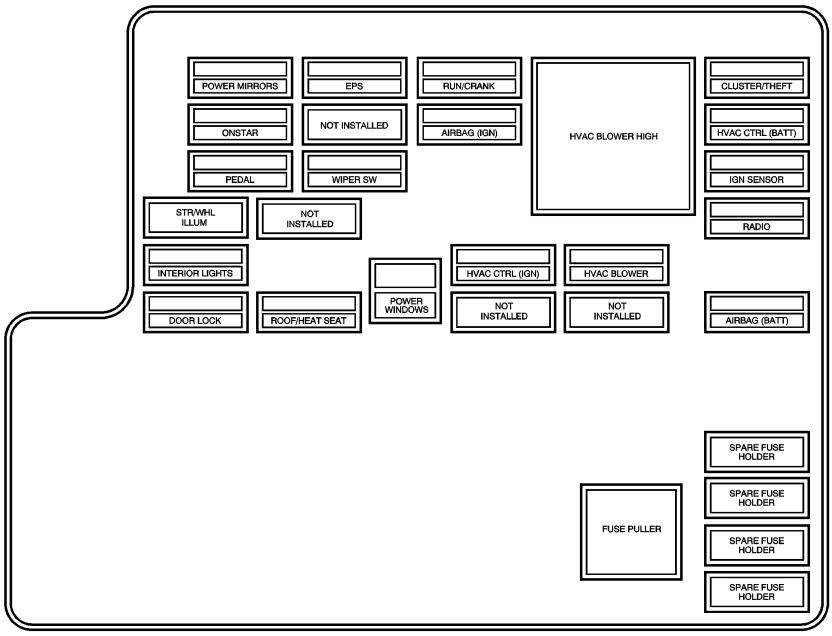

Fuses	Usage
POWER MIRRORS	Power Mirrors
EPS	Electric Power Steering
RUN/CRANK	Cruise Control Switch, Passenger Airbag Status Indicator, DSC Switch

Fuses	Usage
HVAC BLOWER HIGH	Heating Ventilation Air Conditioning Blower - High Speed Relay
CLUSTER/ THEFT	Instrument Panel Cluster, Theft Deterrent System
ONSTAR	OnStar®

Downloaded from www.Manualslib.com manuals search engine

Fuses	Usage
NOT INSTALLED	Not Used
AIRBAG (IGN)	Airbag (Ignition)
HVAC CTRL (BATT)	Heating Ventilation Air Conditioning Control Diagnostic Link Connector (Battery)
PEDAL	Adjustable Pedals
WIPER SW	Windshield Wiper/Washer Switch
IGN SENSOR	Ignition Switch
STR/WHL ILLUM	Steering Wheel Controls Backlighting
NOT INSTALLED	Not Used
RADIO	Audio System
INTERIOR LIGHTS	Interior Lamps
REAR WIPER	Not Used
POWER WINDOWS	Power Windows (Sedan)
HVAC CTRL (IGN)	Heating Ventilation Air Conditioning Control (Ignition)
HVAC BLOWER	Heating Ventilation Air Conditioning Blower Switch
DOOR LOCK	Door Locks
ROOF/HEAT SEAT	Sunroof, Heated Seat, Power Windows (Coupe, Retractable Hardtop), Automatic Dimming Rearview Mirror, Compass

Fuses	Usage
NOT INSTALLED	Not Used
NOT INSTALLED	Not Used
AIRBAG (BATT)	Airbag (Battery)
SPARE FUSE HOLDER	Spare Fuse Holder
SPARE FUSE HOLDER	Spare Fuse Holder
SPARE FUSE HOLDER	Spare Fuse Holder
SPARE FUSE HOLDER	Spare Fuse Holder
FUSE PULLER	Fuse Puller

Engine Compartment Fuse Block

Your vehicle may not be equipped with all the fuses and features listed.

The engine compartment fuse block is located on the driver side of the engine compartment, near the battery.

Notice: **Spilling liquid on any electrical components on your vehicle may damage it. Always keep the covers on any electrical component.**

Downloaded from www.Manualslib.com manuals search engine

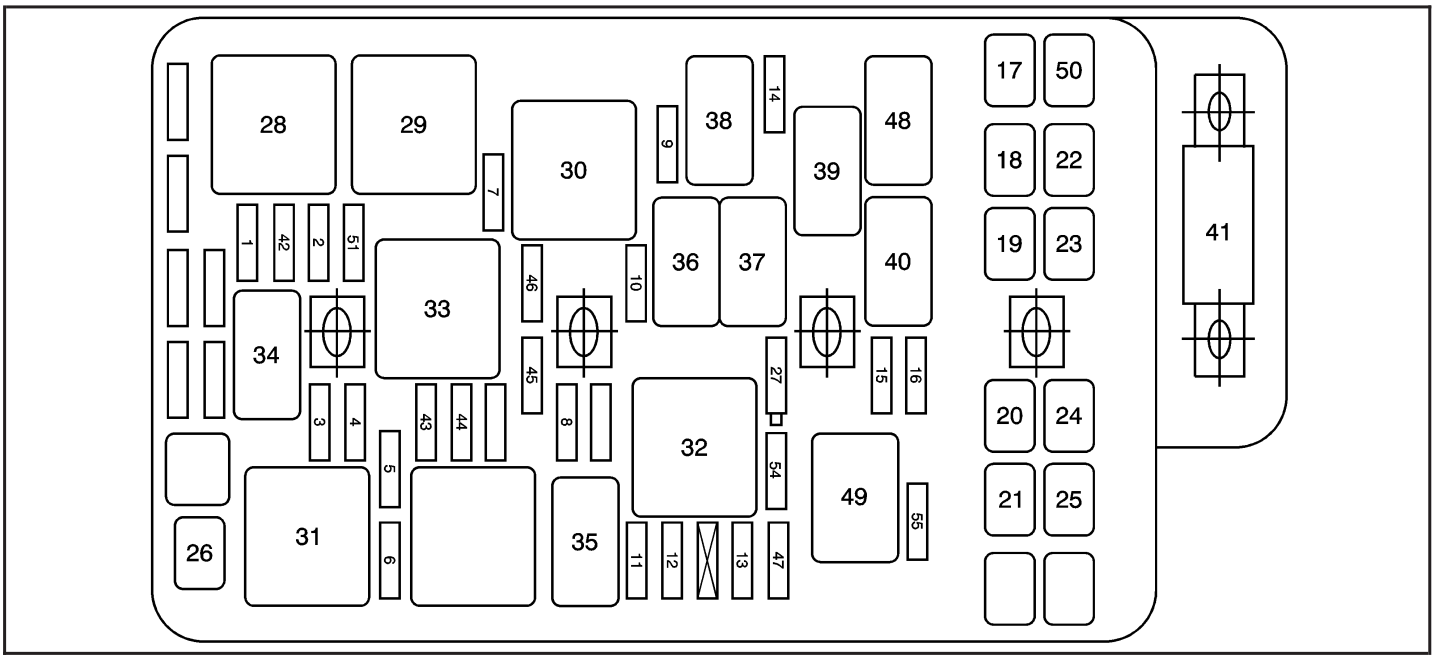

Fuses	Usage
1	Air Conditioner Clutch
2	Electronic Throttle Control

Fuses	Usage
3	Engine Control Module (IGN 1) (LZ4,LZ9)
4	Transmission Control Module Ignition 1

Downloaded from www.Manualslib.com manuals search engine

Fuses	Usage
5	Mass Airflow Sensor (LY7)
6	Emission
7	Left Headlamp Low Beam
8	Horn
9	Right Headlamp Low Beam
10	Front Fog Lamps
11	Left Headlamp High Beam
12	Right Headlamp High Beam
13	Engine Control Module (Battery) (LE5, LY7)
14	Windshield Wiper
15	Antilock Brake System (IGN 1)
16	Engine Control Module (IGN 1) (LE5, LY7)
17	Cooling Fan 1
18	Cooling Fan 2

Fuses	Usage
19	Run Relay, Heating, Ventilation, Air Conditioning Blower
20	Body Control Module 1
21	Body Control Module Run/Crank
22	Rear Electrical Center 1
23	Rear Electrical Center 2
24	Antilock Brake System
25	Body Control Module 2
26	Starter
41	Electric Power Steering
42	Transmission Control Module Battery
43	Ignition Module (LE5, LZ4, LZ9), Odd Cylinder Injectors/Ignition Coils (LY7)
44	Injectors (LE5, LZ4, LZ9), Even Cylinder Injectors/Ignition Coils (LY7)

Downloaded from www.Manualslib.com manuals search engine

Fuses	Usage
45	Rear Oxygen Sensors
46	Daytime Running Lamps
47	Center High-Mounted Stoplamp
50	Front Power Windows Coupe/Retractable Hardtop
51	Engine Control Module (Battery) (LZ4, LZ9)
54	Regulated Voltage Control
55	Antilock Brake System (Battery)

Relays	Usage
28	Cooling Fan 1
29	Cooling Fan Series/Parallel
30	Cooling Fan 2
31	Starter
32	Run/Crank, Ignition

Relays	Usage
33	Powertrain
34	Air Conditioning Clutch
35	High Beam
36	Front Fog Lamps
37	Horn
38	Low Beam
39	Windshield Wiper 1
40	Windshield Wiper 2
48	Daytime Running Lamps
49	Center High-Mounted Stoplamp

Diodes	Usage
27	Wiper

Downloaded from www.Manualslib.com manuals search engine

Rear Compartment Fuse Block

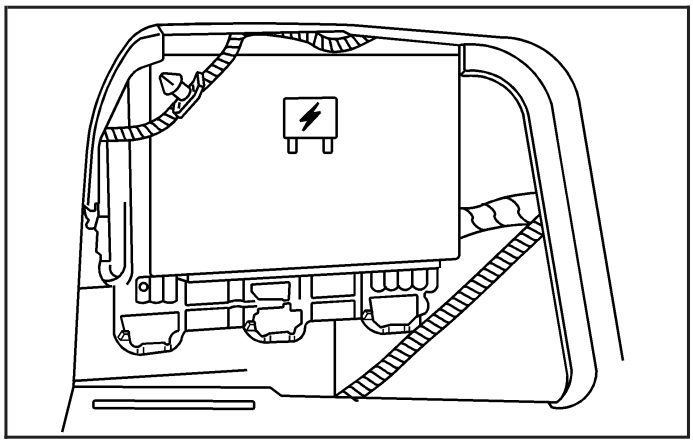

The rear compartment fuse block is located in the trunk of the vehicle. Access the fuse block through the trunk panel on the driver side of the rear cargo area.

Downloaded from www.Manualslib.com manuals search engine

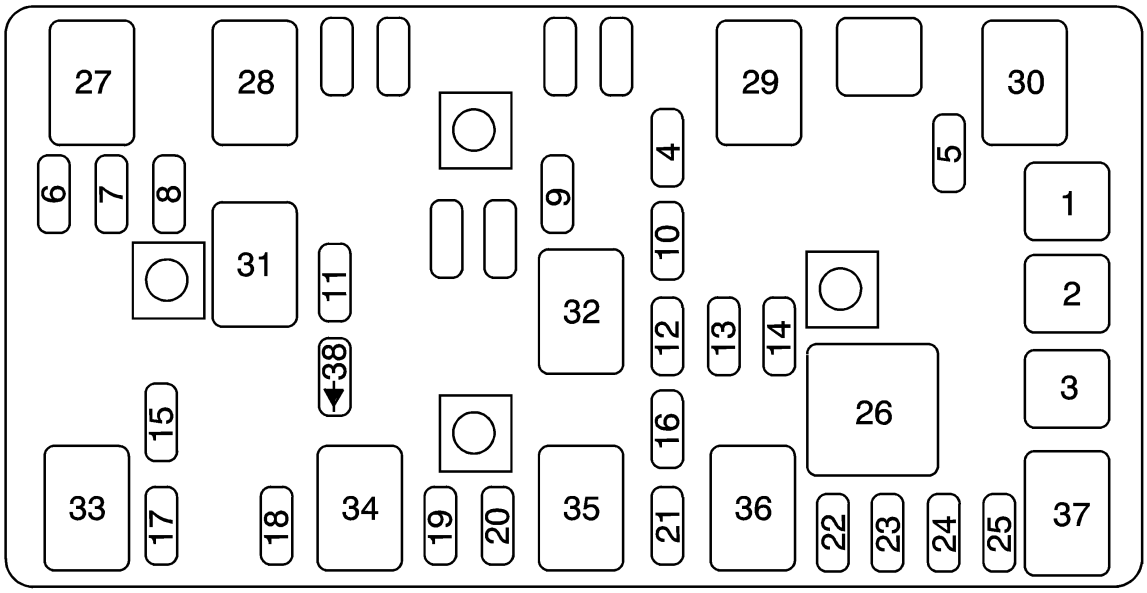

Fuses	Usage
1	Rear Quarter Windows (Retractable Hardtop Only)
2	Driver Seat Controls
3	Retractable Hardtop
4	Not Used

Fuses	Usage
5	Emission 2, Canister Vent Solenoid
6	Park Lamps, Instrument Panel Dimming
7	Not Used
8	Not Used

Downloaded from www.Manualslib.com manuals search engine

Fuses	Usage
9	Not Used
10	Sunroof Controls
11	Not Used
12	Retractable Hardtop Controller
13	Audio Amplifier
14	Heated Seat Controls
15	Not Used
16	Remote Keyless Entry System, XM Satellite Radio
17	Back-up Lamps
18	Not Used
19	Not Used
20	Cigarette Lighter, Auxiliary Power Outlet
21	Not Used
22	Trunk Release
23	Rear Defog
24	Not Used
25	Fuel Pump

Relays	Usage
26	Rear Window Defogger
27	Park Lamps
28	Not Used
29	Not Used
30	Not Used
31	Not Used
32	Not Used
33	Back-up Lamps
34	Not Used
35	Not Used
36	Trunk Release
37	Fuel Pump
38 (Diode)	Cargo Lamp

Downloaded from www.Manualslib.com manuals search engine

Capacities and Specifications

The following approximate capacities are given in English and metric conversions. See *Recommended Fluids and Lubricants on page 6-13* for more information.

Application	Capacities	
	English	Metric
Air Conditioning Refrigerant R134a	For the air conditioning system refrigerant charge amount, see the refrigerant caution label located under the hood. See your dealer/retailer for more information.	
Automatic Transmission		
Automatic 4-Speed 4T65 Transmission	7.4 qt	7.0 L
Automatic 4-Speed 4T45 Transmission	7.0 qt	6.6 L
Automatic 6-Speed 6T70 Transmission	9.5 qt	9.0 L
Cooling System		
2.4L Engine	7.5 qt	7.1 L
3.5L, 3.6L, 3.9L V6 Engines	9.7 qt	9.2 L

Downloaded from www.Manualslib.com manuals search engine

Application	Capacities	
	English	Metric
Engine Oil with Filter		
2.4L Engine	5.0 qt	4.7 L
3.5L and 3.9L Engines	4.0 qt	3.8 L
3.6L Engine	5.5 qt	5.2 L
Fuel Tank	16.3 gal	61.7 L
Wheel Nut Torque	100 lb ft	140 N•m
All capacities are approximate. When adding, be sure to fill to the appropriate level, as recommended in this manual.		

Engine Specifications

Engine	VIN Code	Transmission	Spark Plug Gap
2.4L L4 Engine	B	Automatic	0.040 inches (1.01 mm)
3.5L V6 Engine	N	Automatic	0.040 inches (1.01 mm)
3.6L V6 Engine	7	Automatic	0.040 inches (1.01 mm)
3.9L V6 Engine	1	Automatic	0.040 inches (1.01 mm)

Downloaded from www.Manualslib.com manuals search engine

Section 6 Maintenance Schedule

Maintenance Schedule 6-2
Introduction 6-2
Maintenance Requirements 6-2
Your Vehicle and the Environment 6-2
Using the Maintenance Schedule 6-3
Scheduled Maintenance 6-4
Additional Required Services 6-6
Maintenance Footnotes 6-7
Owner Checks and Services 6-9
At Each Fuel Fill 6-9
At Least Once a Month 6-10
At Least Once a Year 6-10
Recommended Fluids and Lubricants 6-13
Maintenance Replacement Parts 6-14
Engine Drive Belt Routing 6-15
Maintenance Record 6-17

Downloaded from www.Manualslib.com manuals search engine

Maintenance Schedule

Introduction

Important: Keep engine oil at the proper level and change as recommended.

Have you purchased the GM Protection Plan? The Plan supplements your new vehicle warranties. See your Warranty and Owner Assistance booklet or your dealer/retailer for details.

Maintenance Requirements

Notice: **Maintenance intervals, checks, inspections, replacement parts, and recommended fluids and lubricants as prescribed in this manual are necessary to keep your vehicle in good working condition. Any damage caused by failure to follow scheduled maintenance might not be covered by warranty.**

Your Vehicle and the Environment

Proper vehicle maintenance not only helps to keep your vehicle in good working condition, but also helps the environment. All recommended maintenance is important. Improper vehicle maintenance can even affect the quality of the air we breathe. Improper fluid levels or the wrong tire inflation can increase the level of emissions from your vehicle. To help protect our environment, and to keep your vehicle in good condition, be sure to maintain your vehicle properly.

Downloaded from www.Manualslib.com manuals search engine

Using the Maintenance Schedule

We want to help you keep your vehicle in good working condition. But we do not know exactly how you will drive it. You might drive very short distances only a few times a week. Or you might drive long distances all the time in very hot, dusty weather. You might use your vehicle in making deliveries. Or you might drive it to work, to do errands, or in many other ways.

Because of all the different ways people use their vehicles, maintenance needs vary. You might need more frequent checks and replacements. So please read the following and note how you drive. If you have any questions on how to keep your vehicle in good condition, see your dealer/retailer.

This schedule is for vehicles that:

- carry passengers and cargo within recommended limits. You will find these limits on the Tire and Loading Information label. See *Loading Your Vehicle on page 4-20*.
- are driven on reasonable road surfaces within legal driving limits.
- use the recommended fuel. See *Gasoline Octane on page 5-6*.

The services in *Scheduled Maintenance on page 6-4* should be performed when indicated. See *Additional Required Services on page 6-6* and *Maintenance Footnotes on page 6-7* for further information.

⚠ CAUTION:

Performing maintenance work on a vehicle can be dangerous. In trying to do some jobs, you can be seriously injured. Do your own maintenance work only if you have the required know-how and the proper tools and equipment for the job. If you have any doubt, see your dealer/retailer to have a qualified technician do the work. See *Doing Your Own Service Work on page 5-5*.

Some maintenance services can be complex. So, unless you are technically qualified and have the necessary equipment, you should have your dealer/retailer do these jobs.

When you go to your dealer/retailer for your service needs, you will know that trained and supported service technicians will perform the work using genuine parts.

Downloaded from www.Manualslib.com manuals search engine

If you want to purchase service information, see *Service Publications Ordering Information on page 7-15*.

Owner Checks and Services on page 6-9 tells you what should be checked, when to check it, and what you can easily do to help keep your vehicle in good condition.

The proper replacement parts, fluids, and lubricants to use are listed in *Recommended Fluids and Lubricants on page 6-13* and *Maintenance Replacement Parts on page 6-14*. When your vehicle is serviced, make sure these are used. All parts should be replaced and all necessary repairs done before you or anyone else drives the vehicle. We recommend the use of genuine parts from your dealer/retailer.

Scheduled Maintenance

When the CHANGE OIL SOON message in the Driver Information Center (DIC) comes on, it means that service is required for your vehicle. Have your vehicle serviced as soon as possible within the next 600 miles (1 000 km). It is possible that, if you are driving under the best conditions, the engine oil life system may not indicate that vehicle service is necessary for over a year. However, the engine oil and filter must be changed at least once a year and at this time the system must be reset. Your dealer/retailer has trained service technicians who will perform this work using genuine parts and reset the system.

If the engine oil life system is ever reset accidentally, you must service your vehicle within 3,000 miles (5 000 km) since your last service. Remember to reset the oil life system whenever the oil is changed. See *Engine Oil Life System on page 5-24* for information on the Engine Oil Life System and resetting the system.

When the CHANGE OIL SOON message appears, certain services, checks, and inspections are required. Required services are described in the following for “Maintenance I” and “Maintenance II.” Generally, it is recommended that your first service be Maintenance I, your second service be Maintenance II, and that you alternate Maintenance I and Maintenance II thereafter. However, in some cases, Maintenance II may be required more often.

Maintenance I — Use Maintenance I if the message comes on within 10 months since the vehicle was purchased or Maintenance II was performed.

Maintenance II — Use Maintenance II if the previous service performed was Maintenance I. Always use Maintenance II whenever the message comes on 10 months or more since the last service or if the message has not come on at all for one year.

Downloaded from www.Manualslib.com manuals search engine

Scheduled Maintenance

Service	Maintenance I	Maintenance II
Change engine oil and filter. See *Engine Oil on page 5-21*. Reset oil life system. See *Engine Oil Life System on page 5-24*. *An Emission Control Service.*	•	•
Visually check for any leaks or damage. *See footnote (j).*	•	•
Inspect engine air cleaner filter. If necessary, replace filter. See *Engine Air Cleaner/Filter on page 5-26*. *See footnote (k).*		•
Rotate tires and check inflation pressures and wear. See *Tire Inspection and Rotation on page 5-77* and “Tire Wear Inspection” in *At Least Once a Month on page 6-10*.	•	•
Inspect brake system. *See footnote (a).*	•	•
Check engine coolant and windshield washer fluid levels and add fluid as needed.	•	•
Perform any needed additional services. See “Additional Required Services” in this section.	•	•
Inspect suspension and steering components. *See footnote (b).*		•
Inspect engine cooling system. *See footnote (c).*		•
Inspect wiper blades. *See footnote (d).*		•
Inspect restraint system components. *See footnote (e).*		•
Lubricate body components. *See footnote (f).*		•
3.6L and 3.9L Engines Only: Check automatic transmission fluid level and add fluid as needed.		•
Inspect throttle system. *See footnote (g).*		•

Downloaded from www.Manualslib.com manuals search engine

Additional Required Services

The following services should be performed at the first maintenance service (I or II) after the indicated miles (kilometers) shown for each item.

Additional Required Services

Service and Miles (Kilometers)	25,000 (40 000)	50,000 (80 000)	75,000 (120 000)	100,000 (160 000)	125,000 (200 000)	150,000 (240 000)
Inspect fuel system for damage or leaks.	•	•	•	•	•	•
Inspect exhaust system for loose or damaged components.	•	•	•	•	•	•
Replace engine air cleaner filter. See *Engine Air Cleaner/Filter on page 5-26*.		•		•		•
2.4L (Code B) L4 and 3.5L (Code N) V6 Engines Only: Change automatic transmission fluid and filter (severe service only). *See footnote (h).*		•		•		•
3.9L (Code 1) V6 Engine Only: Change automatic transmission fluid and filter (severe service). *See footnote (h).*		•		•		•
3.9L (Code 1) V6 Engine Only: Change automatic transmission fluid and filter (normal service).				•		
3.6L (Code 7) V6 Engine Only: Change automatic transmission fluid (severe service). *See footnote (l).*		•		•		•

Downloaded from www.Manualslib.com manuals search engine

Additional Required Services (cont'd)

Service and Miles (Kilometers)	25,000 (40 000)	50,000 (80 000)	75,000 (120 000)	100,000 (160 000)	125,000 (200 000)	150,000 (240 000)
3.6L (Code 7) V6 Engine Only: Change automatic transmission fluid (normal service).				•		
Replace spark plugs. Inspect spark plug wires. *An Emission Control Service.*				•		
Engine cooling system service (or every five years, whichever occurs first). *An Emission Control Service. See footnote (i).*						•
Inspect engine accessory drive belt. *An Emission Control Service. See footnote (m).*						•

Maintenance Footnotes

(a) *Visually inspect brake lines and hoses for proper hook-up, binding, leaks, cracks, chafing, etc. Inspect disc brake pads for wear and rotors for surface condition. Inspect other brake parts, including calipers, parking brake, etc.*

(b) *Visually inspect front and rear suspension and steering system for damaged, loose, or missing parts or signs of wear. Inspect electric power steering cables for proper hook-up, binding, cracks, chafing, etc. Inspect hydraulic power steering lines and hoses for proper hook-up, binding, leaks, cracks, chafing, etc.*

Downloaded from www.Manualslib.com manuals search engine

(c) *Visually inspect hoses and have them replaced if they are cracked, swollen, or deteriorated. Inspect all pipes, fittings and clamps; replace with genuine parts as needed. To help ensure proper operation, a pressure test of the cooling system and pressure cap and cleaning the outside of the radiator and air conditioning condenser is recommended at least once a year.*

(d) *Inspect wiper blades for wear, cracking, or contamination. Clean the windshield and wiper blades, if contaminated. Replace wiper blades that are worn or damaged. See Windshield Wiper Blade Replacement on page 5-59 and Windshield and Wiper Blades on page 5-105 for more information.*

(e) *Make sure the safety belt reminder light and safety belt assemblies are working properly. Look for any other loose or damaged safety belt system parts. If you see anything that might keep a safety belt system from doing its job, have it repaired. Have any torn or frayed safety belts replaced. Also see Checking the Restraint Systems on page 1-74.*

(f) *Lubricate all key lock cylinders, door hinges and latches, hood hinges and latches, and trunk lid hinges and latches. More frequent lubrication may be required when exposed to a corrosive environment. Applying silicone grease on weatherstrips with a clean cloth will make them last longer, seal better, and not stick or squeak.*

(g) *Check system for interference or binding and for damaged or missing parts. Replace parts as needed. Replace any components that have high effort or excessive wear. Do not lubricate accelerator or cruise control cables.*

(h) *Change automatic transmission fluid and filter if the vehicle is mainly driven under one or more of these conditions:*

- *In heavy city traffic where the outside temperature regularly reaches 90°F (32°C) or higher.*
- *In hilly or mountainous terrain.*
- *When doing frequent trailer towing.*
- *Uses such as found in taxi, police, or delivery service.*

If you do not use your vehicle under any of these conditions, the fluid and filter do not require changing.

(i) *Drain, flush, and refill cooling system. This service can be complex; you should have your dealer/retailer perform this service. See Engine Coolant on page 5-30 for what to use. Inspect hoses. Clean radiator, condenser, pressure cap, and filler neck. Pressure test the cooling system and pressure cap.*

(j) *A fluid loss in any vehicle system could indicate a problem. Have the system inspected and repaired and the fluid level checked. Add fluid if needed.*

Downloaded from www.Manualslib.com manuals search engine

(k) *If you drive regularly under dusty conditions, inspect the filter at each engine oil change.*

(l) *Change automatic transmission fluid if the vehicle is mainly driven under one or more of these conditions:*

- *In heavy city traffic where the outside temperature regularly reaches 90°F (32°C) or higher.*
- *In hilly or mountainous terrain.*
- *When doing frequent trailer towing.*
- *Uses such as found in taxi, police, or delivery service.*

If you do not use your vehicle under any of these conditions, the fluid does not require changing.

(m) *Visually inspect belt for fraying, excessive cracks, or obvious damage. Replace belt if necessary.*

Owner Checks and Services

These owner checks and services should be performed at the intervals specified to help ensure the safety, dependability, and emission control performance of your vehicle. Your dealer/retailer can assist you with these checks and services.

Be sure any necessary repairs are completed at once. Whenever any fluids or lubricants are added to your vehicle, make sure they are the proper ones, as shown in *Recommended Fluids and Lubricants on page 6-13*.

At Each Fuel Fill

It is important to perform these underhood checks at each fuel fill.

Engine Oil Level Check

Notice: **It is important to check the engine oil regularly and keep it at the proper level. Failure to keep the engine oil at the proper level can cause damage to the engine not covered by your warranty.**

Check the engine oil level and add the proper oil if necessary. See *Engine Oil on page 5-21*.

Engine Coolant Level Check

Check the engine coolant level and add DEX-COOL® coolant mixture if necessary. See *Engine Coolant on page 5-30*.

Windshield Washer Fluid Level Check

Check the windshield washer fluid level in the windshield washer fluid reservoir and add the proper fluid if necessary.

Downloaded from www.Manualslib.com manuals search engine

At Least Once a Month

Tire Inflation Check

Inspect your vehicle's tires and make sure they are inflated to the correct pressures. Do not forget to check the spare tire. See *Inflation - Tire Pressure on page 5-68*. Check to make sure the spare tire is stored securely. See *Changing a Flat Tire on page 5-86*.

Tire Wear Inspection

Tire rotation may be required for high mileage highway drivers prior to the Engine Oil Life System service notification. Check the tires for wear and, if necessary, rotate the tires. See *Tire Inspection and Rotation on page 5-77*.

At Least Once a Year

Starter Switch Check

⚠ CAUTION:

When you are doing this inspection, the vehicle could move suddenly. If the vehicle moves, you or others could be injured.

1. Before you start, be sure you have enough room around the vehicle.
2. Firmly apply both the parking brake and the regular brake. See *Parking Brake on page 2-31*.

   Do not use the accelerator pedal, and be ready to turn off the engine immediately if it starts.
3. Try to start the engine in each gear. The vehicle should start only in PARK (P) or NEUTRAL (N). If the vehicle starts in any other position, contact your dealer/retailer for service.

Downloaded from www.Manualslib.com manuals search engine

Automatic Transmission Shift Lock Control System Check

⚠ CAUTION:

When you are doing this inspection, the vehicle could move suddenly. If the vehicle moves, you or others could be injured.

1. Before you start, be sure you have enough room around the vehicle. It should be parked on a level surface.
2. Firmly apply the parking brake. See *Parking Brake on page 2-31*.

   Be ready to apply the regular brake immediately if the vehicle begins to move.
3. With the engine off, turn the ignition to ON/RUN, but do not start the engine. Without applying the regular brake, try to move the shift lever out of PARK (P) with normal effort. If the shift lever moves out of PARK (P), contact your dealer/retailer for service.

Ignition Transmission Lock Check

While parked, and with the parking brake set, try to turn the ignition to LOCK/OFF in each shift lever position.

- The ignition should turn to LOCK/OFF only when the shift lever is in PARK (P).
- The ignition key should come out only in LOCK/OFF.

Contact your dealer/retailer if service is required.

Downloaded from www.Manualslib.com manuals search engine

Parking Brake and Automatic Transmission Park (P) Mechanism Check

⚠ CAUTION:

When you are doing this check, your vehicle could begin to move. You or others could be injured and property could be damaged. Make sure there is room in front of your vehicle in case it begins to roll. Be ready to apply the regular brake at once should the vehicle begin to move.

Park on a fairly steep hill, with the vehicle facing downhill. Keeping your foot on the regular brake, set the parking brake.

- To check the parking brake's holding ability: With the engine running and the transmission in NEUTRAL (N), slowly remove foot pressure from the regular brake pedal. Do this until the vehicle is held by the parking brake only.
- To check the PARK (P) mechanism's holding ability: With the engine running, shift to PARK (P). Then release the parking brake followed by the regular brake.

Contact your dealer/retailer if service is required.

Underbody Flushing Service

At least every spring, use plain water to flush any corrosive materials from the underbody. Take care to clean thoroughly any areas where mud and other debris can collect.

Downloaded from www.Manualslib.com manuals search engine

Recommended Fluids and Lubricants

Fluids and lubricants identified below by name, part number, or specification can be obtained from your dealer/retailer.

Usage	Fluid/Lubricant
Engine Oil	Engine oil which meets GM Standard GM6094M and displays the American Petroleum Institute Certified for Gasoline Engines starburst symbol. To determine the proper viscosity for your vehicle's engine, see *Engine Oil on page 5-21*.
Engine Coolant	50/50 mixture of clean, drinkable water and use only DEX-COOL® Coolant. See *Engine Coolant on page 5-30*.
Hydraulic Brake System	Delco® Supreme 11 Brake Fluid or equivalent DOT-3 brake fluid.
Windshield Washer	Optikleen® Washer Solvent.
Hydraulic Power Steering System (if equipped)	GM Power Steering Fluid (GM Part No. U.S. 89021184, in Canada 89021186).

Usage	Fluid/Lubricant
Automatic Transmission	DEXRON®-VI Automatic Transmission Fluid.
Key Lock Cylinders	Multi-Purpose Lubricant, Superlube (GM Part No. U.S. 12346241, in Canada 10953474).
Hood Latch Assembly, Secondary Latch, Pivots, Spring Anchor, and Release Pawl	Lubriplate Lubricant Aerosol (GM Part No. U.S. 12346293, in Canada 992723) or lubricant meeting requirements of NLGI #2, Category LB or GC-LB.
Hood and Door Hinges	Multi-Purpose Lubricant, Superlube (GM Part No. U.S. 12346241, in Canada 109435474).
Weatherstrip Conditioning	Weatherstrip Lubricant (GM Part No. U.S. 3634770, in Canada 10953518) or Dielectric Silicone Grease (GM Part No. U.S. 12345579, in Canada 992887).

Downloaded from www.Manualslib.com manuals search engine

Maintenance Replacement Parts

Replacement parts identified below by name, part number, or specification can be obtained from your dealer/retailer.

Part	GM Part Numbers	ACDelco® Part Numbers
Engine Air Cleaner/Filter		
2.4L, 3.5L and 3.9L Engines	10366901	A2930C
3.6L Engine	22676970	A1627C
Engine Oil Filter		
2.4L Engine	12605566	PF457G
3.5L Engine	89017342	PF61
3.6L Engine	89017524	PF48
3.9L Engine	89017342	PF61
Spark Plugs		
2.4L Engine	12598004	41-103
3.5L Engine	12591131	41-100
3.6L Engine	12597464	41-990
3.9L Engine	12591131	41-100
Windshield Wiper Blades		
Driver's Side — 24.0 inches (60.0 cm)	25800624	—
Passenger's Side — 21.2 inches (53.0 cm)	25800623	—

Downloaded from www.Manualslib.com manuals search engine

Engine Drive Belt Routing

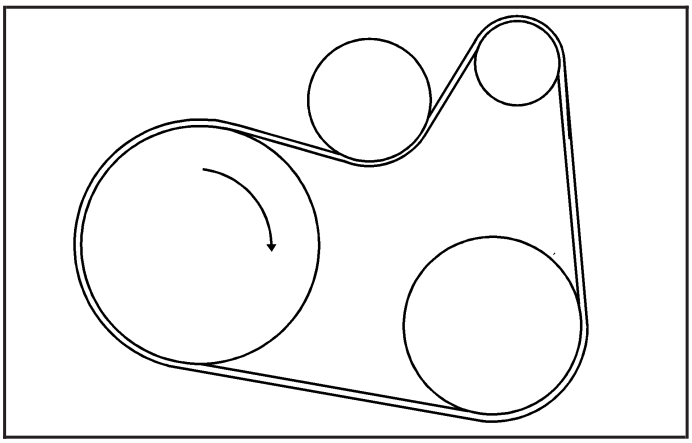

2.4L L4 Engine

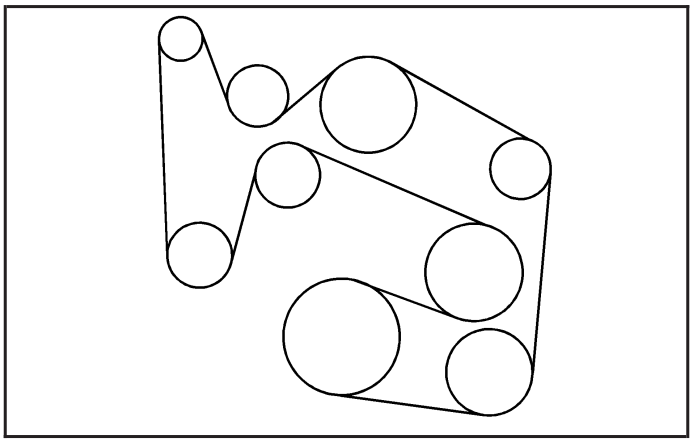

3.5L V6 Engine and 3.9L V6 Engine

Downloaded from www.Manualslib.com manuals search engine

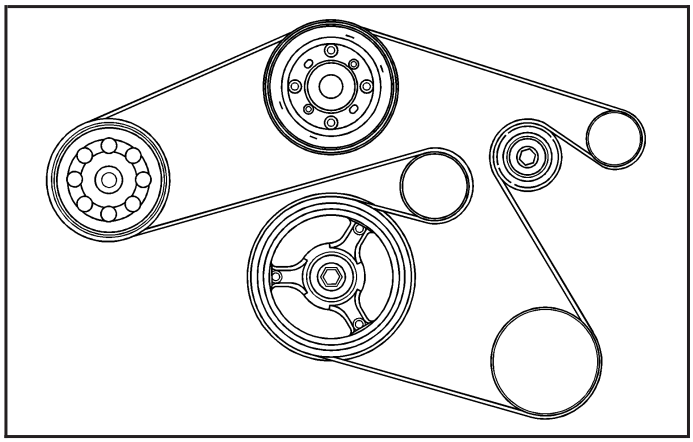

3.6L V6 Engine

Downloaded from www.Manualslib.com manuals search engine

Maintenance Record

After the scheduled services are performed, record the date, odometer reading, who performed the service, and the type of services performed in the boxes provided. See *Maintenance Requirements on page 6-2*. Any additional information from *Owner Checks and Services on page 6-9* can be added on the following record pages. You should retain all maintenance receipts.

Maintenance Record

Date	Odometer Reading	Serviced By	Maintenance I or Maintenance II	Services Performed

Downloaded from www.Manualslib.com manuals search engine

Maintenance Record (cont'd)

Date	Odometer Reading	Serviced By	Maintenance I or Maintenance II	Services Performed

Downloaded from www.Manualslib.com manuals search engine

Maintenance Record (cont'd)

Date	Odometer Reading	Serviced By	Maintenance I or Maintenance II	Services Performed

Downloaded from www.Manualslib.com manuals search engine

Maintenance Record (cont'd)

Date	Odometer Reading	Serviced By	Maintenance I or Maintenance II	Services Performed

Downloaded from www.Manualslib.com manuals search engine

Section 7 Customer Assistance Information

Customer Assistance and Information 7-2
Customer Satisfaction Procedure 7-2
Online Owner Center 7-4
Customer Assistance for Text Telephone (TTY) Users 7-5
Customer Assistance Offices 7-5
GM Mobility Reimbursement Program 7-6
Roadside Assistance Program 7-6
Scheduling Service Appointments 7-9
Courtesy Transportation 7-9
Collision Damage Repair 7-11

Reporting Safety Defects 7-14
Reporting Safety Defects to the United States Government 7-14
Reporting Safety Defects to the Canadian Government 7-14
Reporting Safety Defects to General Motors 7-15
Service Publications Ordering Information 7-15

Vehicle Data Recording and Privacy 7-16
Event Data Recorders 7-16
OnStar® 7-17
Navigation System 7-17
Radio Frequency Identification (RFID) 7-17

Downloaded from www.Manualslib.com manuals search engine

Customer Assistance and Information

Customer Satisfaction Procedure

Your satisfaction and goodwill are important to your dealer and to Pontiac. Normally, any concerns with the sales transaction or the operation of your vehicle will be resolved by your dealer's sales or service departments. Sometimes, however, despite the best intentions of all concerned, misunderstandings can occur. If your concern has not been resolved to your satisfaction, the following steps should be taken:

STEP ONE: Discuss your concern with a member of dealership management. Normally, concerns can be quickly resolved at that level. If the matter has already been reviewed with the sales, service, or parts manager, contact the owner of the dealership or the general manager.

STEP TWO: If after contacting a member of dealership management, it appears your concern cannot be resolved by the dealership without further help, in the U.S., contact the Pontiac Customer Assistance Center by calling 1-800-762-2737. In Canada, contact General Motors of Canada Customer Communication Centre in Oshawa by calling 1-800-263-3777 (English) or 1-800-263-7854 (French).

We encourage you to call the toll-free number in order to give your inquiry prompt attention. Please have the following information available to give the Customer Assistance Representative:

- Vehicle Identification Number (VIN). This is available from the vehicle registration or title, or the plate at the top left of the instrument panel and visible through the windshield.
- Dealership name and location.
- Vehicle delivery date and present mileage.

When contacting Pontiac, please remember that your concern will likely be resolved at a dealer's facility. That is why we suggest you follow Step One first if you have a concern.

STEP THREE — U.S. Owners: Both General Motors and your dealer are committed to making sure you are completely satisfied with your new vehicle. However, if you continue to remain unsatisfied after following the procedure outlined in Steps One and Two, you should file with the BBB Auto Line Program to enforce your rights.

The BBB Auto Line Program is an out of court program administered by the Council of Better Business Bureaus to settle automotive disputes regarding vehicle repairs or the interpretation of the New Vehicle Limited Warranty.

Downloaded from www.Manualslib.com manuals search engine

Although you may be required to resort to this informal dispute resolution program prior to filing a court action, use of the program is free of charge and your case will generally be heard within 40 days. If you do not agree with the decision given in your case, you may reject it and proceed with any other venue for relief available to you.

You can contact the BBB Auto Line Program using the toll-free telephone number or write them at the following address:

BBB Auto Line Program
Council of Better Business Bureaus, Inc.
4200 Wilson Boulevard
Suite 800
Arlington, VA 22203-1838

Telephone: 1-800-955-5100

This program is available in all 50 states and the District of Columbia. Eligibility is limited by vehicle age, mileage and other factors. General Motors reserves the right to change eligibility limitations and/or discontinue its participation in this program.

STEP THREE — Canadian Owners: In the event that you do not feel your concerns have been addressed after following the procedure outlined in Steps One and Two, General Motors of Canada Limited wants you to be aware of its participation in a no-charge Mediation/Arbitration Program. General Motors of Canada Limited has committed to binding arbitration of owner disputes involving factory-related vehicle service claims.

The program provides for the review of the facts involved by an impartial third party arbiter, and may include an informal hearing before the arbiter. The program is designed so that the entire dispute settlement process, from the time you file your complaint to the final decision, should be completed in approximately 70 days. We believe our impartial program offers advantages over courts in most jurisdictions because it is informal, quick, and free of charge.

For further information concerning eligibility in the Canadian Motor Vehicle Arbitration Plan (CAMVAP), call toll-free 1-800-207-0685. Alternatively, you can call the General Motors Customer Communication Centre, 1-800-263-3777 (English), 1-800-263-7854 (French), or write to:

Mediation/Arbitration Program
c/o Customer Communication Centre
General Motors of Canada Limited
Mail Code: CA1-163-005
1908 Colonel Sam Drive
Oshawa, Ontario L1H 8P7

Your inquiry should be accompanied by your Vehicle Identification Number (VIN).

Downloaded from www.Manualslib.com manuals search engine

Online Owner Center

(United States only)

The Owner Center is a resource for your GM ownership needs. Specific vehicle information can be found in one place.

The Online Owner Center allows you to:

- Get e-mail service reminders.
- Access information about your specific vehicle, including tips and videos and an electronic version of this owner manual.
- Keep track of your vehicle's service history and maintenance schedule.
- Find GM dealers/retailers for service nationwide.
- Receive special promotions and privileges only available to members.

Refer to www.MyGMLink.com on the web for updated information and to register your vehicle.

My GM Canada (Canada only)

My GM Canada is a password-protected section of gmcanada.com where you can save information on GM vehicles, get personalized offers, and use handy tools and forms with greater ease.

Here are a few of the valuable tools and services you will have access to:

- My Showroom: Find and save information on vehicles and current offers in your area.
- My Dealers/Retailers: Save details such as address and phone number for each of your preferred GM Dealers or Retailers.
- My Driveway: Receive service reminders and helpful advice on owning and maintaining your vehicle.
- My Preferences: Manage your profile, subscribe to E-News and use tools and forms with greater ease.

To sign up to My GM Canada, visit the My GM Canada section within www.gmcanada.com.

Downloaded from www.Manualslib.com manuals search engine

Customer Assistance for Text Telephone (TTY) Users

To assist customers who are deaf, hard of hearing, or speech-impaired and who use Text Telephones (TTYs), Pontiac has TTY equipment available at its Customer Assistance Center. Any TTY user in the U.S. can communicate with Pontiac by dialing: 1-800-833-PONT (7668). (TTY users in Canada can dial 1-800-263-3830.)

Customer Assistance Offices

Pontiac encourages customers to call the toll-free number for assistance. However, if a customer wishes to write or e-mail Pontiac, the letter should be addressed to:

United States — Customer Assistance

Pontiac Customer Assistance Center
P.O. Box 33172
Detroit, MI 48232-5172

www.Pontiac.com
1-800-762-2737 or
1-800-833-7668 (For Text Telephone devices (TTYs))
Roadside Assistance: 1-800-ROADSIDE (762-3743)
Fax Number: 313-381-0022

From Puerto Rico:
1-800-496-9992 (English)
1-800-496-9993 (Spanish)
Fax Number: 313-381-0022

From U.S. Virgin Islands:
1-800-496-9994
Fax Number: 313-381-0022

Canada — Customer Assistance

General Motors of Canada Limited
Customer Communication Centre, CA1-163-005
1908 Colonel Sam Drive
Oshawa, Ontario L1H 8P7

www.gmcanada.com
1-800-263-3777 (English)
1-800-263-7854 (French)
1-800-263-3830 (For Text Telephone devices (TTYs))
Roadside Assistance: 1-800-268-6800

Overseas — Customer Assistance

Please contact the local General Motors Business Unit.

Downloaded from www.Manualslib.com manuals search engine

Mexico, Central America and Caribbean Islands/Countries (Except Puerto Rico and U.S. Virgin Islands) — Customer Assistance

General Motors de Mexico, S. de R.L. de C.V.
Customer Assistance Center
Paseo de la Reforma #2740
Col. Lomas de Bezares
C.P. 11910, Mexico, D.F.
01-800-508-0000
Long Distance: 011-52-53 29 0 800

GM Mobility Reimbursement Program

GM MOBILITY SM

This program, available to qualified applicants, can reimburse you up to $1,000 of the cost of eligible aftermarket adaptive equipment required for your vehicle, such as hand controls or a wheelchair/scooter lift.

The offer is available for a very limited period of time from the date of vehicle purchase/lease. For more details, or to determine your vehicle's eligibility, visit gmmobility.com or call the GM Mobility Assistance Center at 1-800-323-9935. Text telephone (TTY) users, call 1-800-833-9935.

General Motors of Canada also has a Mobility Program. Call 1-800-GM-DRIVE (463-7483) for details. TTY users call 1-800-263-3830.

Roadside Assistance Program

For vehicles purchased in the U.S., call **1-800-ROADSIDE (762-3743); (Text telephone (TTY): 1-888-889-2438)**.

For vehicles purchased in Canada, call **1-800-268-6800**.

Service is available 24 hours a day, 365 days a year.

As the owner of a new Pontiac vehicle, you are automatically enrolled in the Pontiac Roadside Assistance program.

Downloaded from www.Manualslib.com manuals search engine

Who is Covered?

Roadside Assistance coverage is for the vehicle operator, regardless of ownership. In Canada, a person driving this vehicle without the consent of the owner is not eligible for coverage.

Services Provided

The following services are provided in the U.S. and Canada up to 5 years/100,000 miles (160 000 km), whichever occurs first, and, in Canada only, up to a maximum coverage of $100.

- **Fuel Delivery:** Delivery of enough fuel for the vehicle to get to the nearest service station (approximately $5 in Canada). In Canada, service to provide diesel may be restricted. For safety reasons, propane and other alternative fuels will not be provided through this service.
- **Lock-out Service:** Lock-out service is covered at no charge if you are unable to gain entry into your vehicle. A remote unlock may be available if you have an active OnStar® subscription. To ensure security, the driver must present personal identification before lock-out service is provided. In Canada, the vehicle registration is also required.
- **Emergency Tow From a Public Roadway or Highway:** Tow to the nearest dealership for warranty service or in the event of a vehicle-disabling crash. Winch-out assistance is provided when the vehicle is mired in sand, mud, or snow.
- **Flat Tire Change:** Installation of a spare tire in good condition, when equipped and properly inflated, is covered at no charge. The customer is responsible for the repair or replacement of the tire if not covered by a warrantable failure.
- **Jump Start:** A battery jump start is covered at no charge if the vehicle does not start.
- **Trip Routing Service (Canada only):** Upon request, Roadside Assistance will send you detailed, computer personalized maps, highlighting your choice of either the most direct route or the most scenic route to your destination, anywhere in North America, along with helpful travel information pertaining to your trip.

  Please allow three weeks before your planned departure date. Trip routing requests will be limited to six per calendar year.

Downloaded from www.Manualslib.com manuals search engine

- **Trip Interruption Benefits and Assistance (Canada only):** In the event of a warranty related vehicle disablement, while en route and over 250 kilometres from the original point of departure, you may qualify for trip interruption expense assistance. This assistance covers reasonable reimbursement of up to a maximum of $500 (Canadian) for (A) meals (maximum of $50/day), (B) lodging (maximum of $100/night) and (C) alternate ground transportation (maximum of $40/day). This benefit is to assist you with some of the unplanned expense you may incur while waiting for your vehicle to be repaired.

  Pre-authorization, original detailed receipts and a copy of the repair order are required.

  Once authorization has been given, your advisor will help you make any necessary arrangements and explain how to claim for trip interruption expense assistance.

- **Alternative Service (Canada only):** There may be times, when Roadside Assistance cannot provide timely assistance. Your advisor may authorize you to secure local emergency road service, and you will be reimbursed up to $100 upon submission of the original receipt to Roadside Assistance.

In many instances, mechanical failures may be covered. However, any cost for parts and labor for non-warranty repairs are the responsibility of the driver.

Pontiac and General Motors of Canada Limited reserve the right to limit services or reimbursement to an owner or driver when, in their sole discretion, the claims become excessive in frequency or type of occurrence.

Calling For Assistance

For prompt and efficient assistance when calling, please provide the following to the Roadside Assistance Representative:

- Your name, home address, and home telephone number
- Telephone number of your location
- Location of the vehicle
- Model, year, color, and license plate number of the vehicle
- Odometer reading, Vehicle Identification Number (VIN), and delivery date of the vehicle
- Description of the problem

Downloaded from www.Manualslib.com manuals search engine

Towing and Road Service Exclusions

Specifically excluded from Roadside Assistance coverage are towing or services for vehicles operated on a non-public roadway or highway, fines, impound towing caused by a violation of local, Municipal, State, Provincial, or Federal law, and mounting, dismounting or changing of snow tires, chains, or other traction devices.

Roadside Assistance is not part of or included in the coverage provided by the New Vehicle Limited Warranty. Pontiac and General Motors of Canada Limited reserve the right to make any changes or discontinue the Roadside Assistance program at any time without notification.

Scheduling Service Appointments

When your vehicle requires warranty service, contact your dealer/retailer and request an appointment. By scheduling a service appointment and advising your service consultant of your transportation needs, your dealer/retailer can help minimize your inconvenience.

If your vehicle cannot be scheduled into the service department immediately, keep driving it until it can be scheduled for service, unless, of course, the problem is safety-related. If it is, please call your dealership/retailer, let them know this, and ask for instructions.

If the dealer/retailer requests that you simply drop the vehicle off for service, you are urged to do so as early in the work day as possible to allow for the same day repair.

Courtesy Transportation

To enhance your ownership experience, we and our participating dealers are proud to offer Courtesy Transportation, a customer support program for vehicles with the Bumper to Bumper (Base Warranty Coverage period in Canada) and extended powertrain warranty in both the U.S. and Canada.

Several courtesy transportation options are available to assist in reducing your inconvenience when warranty repairs are required.

Courtesy Transportation is not a part of the New Vehicle Limited Warranty. A separate booklet entitled “Warranty and Owner Assistance Information” furnished with each new vehicle provides detailed warranty coverage information.

Downloaded from www.Manualslib.com manuals search engine

Transportation Options

Warranty service can generally be completed while you wait. However, if you are unable to wait, GM helps to minimize your inconvenience by providing several transportation options. Depending on the circumstances, your dealer can offer you one of the following:

Shuttle Service

Shuttle service is the preferred means of offering Courtesy Transportation. Dealers may provide you with shuttle service to get you to your destination with minimal interruption of your daily schedule. This includes one-way or round trip shuttle service within reasonable time and distance parameters of the dealer's area.

Public Transportation or Fuel Reimbursement

If your vehicle requires overnight warranty repairs, and public transportation is used instead of the dealer's shuttle service, the expense must be supported by original receipts and can only be up to the maximum amount allowed by GM for shuttle service.

In addition, for U.S. customers, should you arrange transportation through a friend or relative, limited reimbursement for reasonable fuel expenses may be available. Claim amounts should reflect actual costs and be supported by original receipts. See your dealer for information regarding the allowance amounts for reimbursement of fuel or other transportation costs.

Courtesy Rental Vehicle

Your dealer may arrange to provide you with a courtesy rental vehicle or reimburse you for a rental vehicle that you obtain if your vehicle is kept for an overnight warranty repair. Rental reimbursement will be limited and must be supported by original receipts. This requires that you sign and complete a rental agreement and meet state/provincial, local, and rental vehicle provider requirements. Requirements vary and may include minimum age requirements, insurance coverage, credit card, etc. You are responsible for fuel usage charges and may also be responsible for taxes, levies, usage fees, excessive mileage, or rental usage beyond the completion of the repair.

It may not be possible to provide a like-vehicle as a courtesy rental.

Downloaded from www.Manualslib.com manuals search engine

Additional Program Information

All program options, such as shuttle service, may not be available at every dealer. Please contact your dealer for specific information about availability. All Courtesy Transportation arrangements will be administered by appropriate dealer personnel.

General Motors reserves the right to unilaterally modify, change or discontinue Courtesy Transportation at any time and to resolve all questions of claim eligibility pursuant to the terms and conditions described herein at its sole discretion.

Collision Damage Repair

If your vehicle is involved in a collision and it is damaged, have the damage repaired by a qualified technician using the proper equipment and quality replacement parts. Poorly performed collision repairs diminish your vehicle's resale value, and safety performance can be compromised in subsequent collisions.

Collision Parts

Genuine GM Collision parts are new parts made with the same materials and construction methods as the parts with which your vehicle was originally built. Genuine GM Collision parts are your best choice to ensure that your vehicle's designed appearance, durability, and safety are preserved. The use of Genuine GM parts can help maintain your GM New Vehicle Warranty.

Recycled original equipment parts may also be used for repair. These parts are typically removed from vehicles that were total losses in prior crashes. In most cases, the parts being recycled are from undamaged sections of the vehicle. A recycled original equipment GM part, may be an acceptable choice to maintain your vehicle's originally designed appearance and safety performance, however, the history of these parts is not known. Such parts are not covered by your GM New Vehicle Limited Warranty, and any related failures are not covered by that warranty.

Aftermarket collision parts are also available. These are made by companies other than GM and may not have been tested for your vehicle. As a result, these parts may fit poorly, exhibit premature durability/corrosion problems, and may not perform properly in subsequent collisions. Aftermarket parts are not covered by your GM New Vehicle Limited Warranty, and any vehicle failure related to such parts are not covered by that warranty.

Downloaded from www.Manualslib.com manuals search engine

Repair Facility

GM also recommends that you choose a collision repair facility that meets your needs before you ever need collision repairs. Your dealer/retailer may have a collision repair center with GM-trained technicians and state of the art equipment, or be able to recommend a collision repair center that has GM-trained technicians and comparable equipment.

Insuring Your Vehicle

Protect your investment in your GM vehicle with comprehensive and collision insurance coverage. There are significant differences in the quality of coverage afforded by various insurance policy terms. Many insurance policies provide reduced protection to your GM vehicle by limiting compensation for damage repairs by using aftermarket collision parts. Some insurance companies will not specify aftermarket collision parts. When purchasing insurance, we recommend that you assure your vehicle will be repaired with GM original equipment collision parts. If such insurance coverage is not available from your current insurance carrier, consider switching to another insurance carrier.

If your vehicle is leased, the leasing company may require you to have insurance that assures repairs with Genuine GM Original Equipment Manufacturer (OEM) parts or Genuine Manufacturer replacement parts. Read your lease carefully, as you may be charged at the end of your lease for poor quality repairs.

If a Crash Occurs

Here is what to do if you are involved in a crash.

- Try to relax and then check to make sure you are all right. If you are uninjured, make sure that no one else in your vehicle, or the other vehicle, is injured.
- If there has been an injury, call emergency services for help. Do not leave the scene of a crash until all matters have been taken care of. Move your vehicle only if its position puts you in danger or you are instructed to move it by a police officer.
- Give only the necessary and requested information to police and other parties involved in the crash. Do not discuss your personal condition, mental frame of mind, or anything unrelated to the crash. This will help guard against post-crash legal action.

Downloaded from www.Manualslib.com manuals search engine

- If you need roadside assistance, call GM Roadside Assistance. See *Roadside Assistance Program on page 7-6* for more information.
- If your vehicle cannot be driven, know where the towing service will be taking it. Get a card from the tow truck operator or write down the driver's name, the service's name, and the phone number.
- Remove any valuables from your vehicle before it is towed away. Make sure this includes your insurance information and registration if you keep these items in your vehicle.
- Gather the important information you will need from the other driver. Things like name, address, phone number, driver's license number, vehicle license plate, vehicle make, model and model year, Vehicle Identification Number (VIN), insurance company and policy number, and a general description of the damage to the other vehicle.
- If possible, call your insurance company from the scene of the crash. They will walk you through the information they will need. If they ask for a police report, phone or go to the police department headquarters the next day and you can get a copy of the report for a nominal fee. In some states/provinces with "no fault" insurance laws, a report may not be necessary. This is especially true if there are no injuries and both vehicles are driveable.
- Choose a reputable collision repair facility for your vehicle. Whether you select a dealer/retailer or a private collision repair facility to fix the damage, make sure you are comfortable with them. Remember, you will have to feel comfortable with their work for a long time.
- Once you have an estimate, read it carefully and make sure you understand what work will be performed on your vehicle. If you have a question, ask for an explanation. Reputable shops welcome this opportunity.

Managing the Vehicle Damage Repair Process

In the event that your vehicle requires damage repairs, GM recommends that you take an active role in its repair. If you have a pre-determined repair facility of choice, take your vehicle there, or have it towed there. Specify to the facility that any required replacement collision parts be original equipment parts, either new Genuine GM parts or recycled original GM parts. Remember, recycled parts will not be covered by your GM vehicle warranty.

Insurance pays the bill for the repair, but you must live with the repair. Depending on your policy limits, your insurance company may initially value the repair using aftermarket parts. Discuss this with your repair professional, and insist on Genuine GM parts.

Downloaded from www.Manualslib.com manuals search engine

Remember if your vehicle is leased you may be obligated to have the vehicle repaired with Genuine GM parts, even if your insurance coverage does not pay the full cost.

If another party's insurance company is paying for the repairs, you are not obligated to accept a repair valuation based on that insurance company's collision policy repair limits, as you have no contractual limits with that company. In such cases, you can have control of the repair and parts choices as long as cost stays within reasonable limits.

Reporting Safety Defects

Reporting Safety Defects to the United States Government

If you believe that your vehicle has a defect which could cause a crash or could cause injury or death, you should immediately inform the National Highway Traffic Safety Administration (NHTSA) in addition to notifying General Motors.

If NHTSA receives similar complaints, it may open an investigation, and if it finds that a safety defect exists in a group of vehicles, it may order a recall and remedy campaign. However, NHTSA cannot become involved in individual problems between you, your dealer/retailer, or General Motors.

To contact NHTSA, you may call the Vehicle Safety Hotline toll-free at 1-888-327-4236 (TTY: 1-800-424-9153); go to http://www.safercar.gov; or write to:

Administrator, NHTSA
400 Seventh Street, SW.
Washington D.C., 20590

You can also obtain other information about motor vehicle safety from http://www.safercar.gov.

Reporting Safety Defects to the Canadian Government

If you live in Canada, and you believe that your vehicle has a safety defect, notify Transport Canada immediately, in addition to notifying General Motors of Canada Limited. Call them at 1-800-333-0510 or write to:

Transport Canada
Road Safety Branch
2780 Sheffield Road
Ottawa, Ontario K1B 3V9

Downloaded from www.Manualslib.com manuals search engine

Reporting Safety Defects to General Motors

In addition to notifying NHTSA (or Transport Canada) in a situation like this, please notify General Motors.

Call 1-800-762-2737, or write:

Pontiac Customer Assistance Center
P.O. Box 33172
Detroit, MI 48232-5172

In Canada, call 1-800-263-3777 (English) or 1-800-263-7854 (French), or write:

General Motors of Canada Limited
Customer Communication Centre, CA1-163-005
1908 Colonel Sam Drive
Oshawa, Ontario L1H 8P7

Service Publications Ordering Information

Service Manuals

Service Manuals have the diagnosis and repair information on engines, transmission, axle suspension, brakes, electrical, steering, body, etc.

Service Bulletins

Service Bulletins' give additional technical service information needed to knowledgeably service General Motors cars and trucks. Each bulletin contains instructions to assist in the diagnosis and service of your vehicle.

Owner Information

Owner publications are written specifically for owners and intended to provide basic operational information about the vehicle. The owner manual includes the Maintenance Schedule for all models.

In-Portfolio: Includes a Portfolio, Owner Manual, and Warranty Booklet.

RETAIL SELL PRICE: $35.00 (U.S.) plus processing fee

Without Portfolio: Owner Manual only.

RETAIL SELL PRICE: $25.00 (U.S.) plus processing fee

Current and Past Model Order Forms

Technical Service Bulletins and Manuals are available for current and past model GM vehicles. To request an order form, specify year and model name of the vehicle.

Downloaded from www.Manualslib.com manuals search engine

ORDER TOLL FREE: 1-800-551-4123
Monday-Friday 8:00 AM - 6:00 PM
Eastern Time

For Credit Card Orders Only
(VISA-MasterCard-Discover), visit Helm, Inc. on the World Wide Web at: www.helminc.com

Or you can write to:

Helm, Incorporated
P.O. Box 07130
Detroit, MI 48207

Prices are subject to change without notice and without incurring obligation. Allow ample time for delivery.

Note to Canadian Customers: All listed prices are quoted in U.S. funds. Canadian residents are to make checks payable in U.S. funds.

Vehicle Data Recording and Privacy

Your GM vehicle has a number of sophisticated computers that record information about the vehicle's performance and how it is driven. For example, your vehicle uses computer modules to monitor and control engine and transmission performance, to monitor the conditions for airbag deployment and deploy airbags in a crash and, if so equipped, to provide antilock braking to help the driver control the vehicle. These modules may store data to help your dealer/retailer technician service your vehicle. Some modules may also store data about how you operate the vehicle, such as rate of fuel consumption or average speed. These modules may also retain the owner's personal preferences, such as radio pre-sets, seat positions, and temperature settings.

Event Data Recorders

This vehicle has an Event Data Recorder (EDR). The main purpose of an EDR is to record, in certain crash or near crash-like situations, such as an airbag deployment or hitting a road obstacle, data that will assist in understanding how a vehicle's systems performed. The EDR is designed to record data related to vehicle dynamics and safety systems for a short period of time, typically 30 seconds or less. The EDR in this vehicle is designed to record such data as:

- How various systems in your vehicle were operating
- Whether or not the driver and passenger safety belts were buckled/fastened
- How far, if at all, the driver was pressing the accelerator and/or brake pedal
- How fast the vehicle was traveling

Downloaded from www.Manualslib.com manuals search engine

This data can help provide a better understanding of the circumstances in which crashes and injuries occur.

Important: EDR data is recorded by your vehicle only if a non-trivial crash situation occurs; no data is recorded by the EDR under normal driving conditions and no personal data (e.g., name, gender, age, and crash location) is recorded. However, other parties, such as law enforcement, could combine the EDR data with the type of personally identifying data routinely acquired during a crash investigation.

To read data recorded by an EDR, special equipment is required, and access to the vehicle or the EDR is needed. In addition to the vehicle manufacturer, other parties, such as law enforcement, that have the special equipment, can read the information if they have access to the vehicle or the EDR.

GM will not access this data or share it with others except: with the consent of the vehicle owner or, if the vehicle is leased, with the consent of the lessee; in response to an official request of police or similar government office; as part of GM's defense of litigation through the discovery process; or, as required by law. Data that GM collects or receives may also be used for GM research needs or may be made available to others for research purposes, where a need is shown and the data is not tied to a specific vehicle or vehicle owner.

OnStar®

If your vehicle has OnStar and you subscribe to the OnStar services, please refer to the OnStar Terms and Conditions for information on data collection and use. See also *OnStar® System on page 2-41* in this manual for more information.

Navigation System

If your vehicle has a navigation system, use of the system may result in the storage of destinations, addresses, telephone numbers, and other trip information. Refer to the navigation system operating manual for information on stored data and for deletion instructions.

Radio Frequency Identification (RFID)

RFID technology is used in some vehicles for functions such as tire pressure monitoring and ignition system security, as well as in connection with conveniences such as key fobs for remote door locking/unlocking and starting, and in-vehicle transmitters for garage door openers. RFID technology in GM vehicles does not use or record personal information or link with any other GM system containing personal information.

Downloaded from www.Manualslib.com manuals search engine

NOTES

Downloaded from www.Manualslib.com manuals search engine

A

Accessories and Modifications 5-4
Adding Equipment to Your Airbag-Equipped
  Vehicle 1-73
Additives, Fuel 5-8
Add-On Electrical Equipment 5-109
Adjustable Throttle and Brake Pedal 2-25
Air Cleaner/Filter, Engine 5-26
Air Conditioning 3-19, 3-23
Airbag
  Passenger Status Indicator 3-31
  Readiness Light 3-30
Airbag System 1-59
  What Will You See After an Airbag Inflates? 1-66
  When Should an Airbag Inflate? 1-64
  Where Are the Airbags? 1-62
Airbag Systems
  Adding Equipment to Your Airbag-Equipped
    Vehicle 1-73
  How Does an Airbag Restrain? 1-66
  Passenger Sensing System 1-68
  Servicing Your Airbag-Equipped Vehicle 1-72
  What Makes an Airbag Inflate? 1-65
Antenna, Backglass 3-69
Antenna, Fixed Mast 3-68
Antenna, XM™ Satellite Radio Antenna
  System 3-69
Antilock Brake System (ABS) 4-4
Antilock Brake, System Warning Light 3-35
Appearance Care
  Aluminum Wheels 5-106
  Care of Safety Belts 5-103
  Chemical Paint Spotting 5-107
  Cleaning Exterior Lamps/Lenses 5-104
  Fabric/Carpet 5-101
  Finish Care 5-104
  Finish Damage 5-107
  Instrument Panel, Vinyl, and Other Plastic
    Surfaces 5-103
  Interior Cleaning 5-100
  Leather 5-102
  Sheet Metal Damage 5-106
  Tires 5-106
  Underbody Maintenance 5-107
  Vehicle Care/Appearance Materials 5-108
  Washing Your Vehicle 5-104
  Weatherstrips 5-103
  Windshield and Wiper Blades 5-105
Appointments, Scheduling Service 7-9
Audio System 3-52
  Audio Steering Wheel Controls 3-67
  Backglass Antenna 3-69
  Fixed Mast Antenna 3-68
  Radio Reception 3-68
  Setting the Clock 3-53
  Theft-Deterrent Feature 3-67
  XM™ Satellite Radio Antenna System 3-69

Downloaded from www.Manualslib.com manuals search engine

Audio System(s) 3-54
Automatic Climate Control System 3-23
Automatic Door Lock 2-11
Automatic Headlamp System 3-15
Automatic Transmission
  Fluid 5-27, 5-30
  Operation 2-27

B

Backglass Antenna 3-69
Battery 5-45
  Run-Down Protection 3-18
Bench Seat, Split (60/40) 1-11
Brake
  Emergencies 4-5
Brakes 5-42
  System Warning Light 3-34
Braking 4-3
Braking in Emergencies 4-5
Break-In, New Vehicle 2-21
Bulb Replacement 5-51
  Center High-Mounted Stoplamp (CHMSL) 5-54
  Halogen Bulbs 5-52
  Headlamps, Front Turn Signal, Sidemarker,
    and Parking Lamps 5-52
Bulb Replacement (cont.)
  License Plate Lamps 5-58
  Replacement Bulbs 5-58
  Taillamps, Turn Signal, Sidemarker, Stoplamps,
    and Back-Up Lamps 5-55, 5-56, 5-57
Buying New Tires 5-79

C

Calibration 2-37, 2-39
California Fuel 5-7
California Perchlorate Materials Requirements 5-5
California Proposition 65 Warning 5-5
Canadian Owners ii
Capacities and Specifications 5-119
Carbon Monoxide 2-13, 2-35, 4-15, 4-28
Care of
  Safety Belts 5-103
Center Console Storage Area 2-44
Center High-Mounted Stoplamp (CHMSL) 5-54
Chains, Tire 5-85
Charging System Light 3-33
Check
  Engine Light 3-38
Checking Things Under the Hood 5-12
Chemical Paint Spotting 5-107

Downloaded from www.Manualslib.com manuals search engine

Child Restraints
Child Restraint Systems 1-39
Infants and Young Children 1-36
Lower Anchors and Tethers for Children 1-44
Older Children 1-33
Securing a Child Restraint in a Rear Seat Position 1-53
Securing a Child Restraint in the Right Front Seat Position 1-56
Where to Put the Restraint 1-42
Cleaning
Aluminum Wheels 5-106
Exterior Lamps/Lenses 5-104
Fabric/Carpet 5-101
Finish Care 5-104
Instrument Panel, Vinyl, and Other Plastic Surfaces 5-103
Interior 5-100
Leather 5-102
Tires 5-106
Underbody Maintenance 5-107
Washing Your Vehicle 5-104
Weatherstrips 5-103
Windshield and Wiper Blades 5-105
Climate Control System 3-19
Automatic 3-23
Outlet Adjustment 3-26
Clock, Setting 3-53
Collision Damage Repair 7-11
Compact Spare Tire 5-99
Compass 2-37, 2-39
Content Theft-Deterrent 2-18
Control of a Vehicle 4-3
Convenience Net 2-44
Coolant
Engine Temperature Gage 3-37
Heater, Engine 2-25
Cooling System 5-36
Courtesy Lamps 3-16
Cruise Control 3-10
Cruise Control Light 3-42
Cupholder(s) 2-44
Customer Assistance Information
Courtesy Transportation 7-9
Customer Assistance for Text Telephone (TTY) Users 7-5
Customer Assistance Offices 7-5
Customer Satisfaction Procedure 7-2
GM Mobility Reimbursement Program 7-6
Reporting Safety Defects to General Motors 7-15
Reporting Safety Defects to the Canadian Government 7-14
Reporting Safety Defects to the United States Government 7-14
Roadside Assistance Program 7-6
Service Publications Ordering Information 7-15

Downloaded from www.Manualslib.com manuals search engine

D

Daytime Running Lamps 3-14
Defensive Driving 4-2
Delayed Headlamps 3-14
Delayed Locking 2-11
Doing Your Own Service Work 5-5
Dome Lamp 3-17
Door
  Automatic Door Lock 2-11
  Delayed Locking 2-11
  Door Ajar Reminder 2-11
  Locks 2-10
  Power Door Locks 2-10
  Programmable Automatic Door Unlock 2-12
  Rear Door Security Locks 2-12
Driver Information Center (DIC) 3-43
  DIC Operation and Displays 3-43
  DIC Vehicle Personalization 3-50
  DIC Warnings and Messages 3-46
Driving
  At Night 4-12
  Before a Long Trip 4-13
  Defensive 4-2
  Drunken 4-2
  Highway Hypnosis 4-14
  Hill and Mountain Roads 4-14
  In Rain and on Wet Roads 4-12
  Rocking Your Vehicle to Get it Out 4-20
  Winter 4-15

E

Easy Entry Seat 1-9
EDR 7-16
Electrical System
  Add-On Equipment 5-109
  Engine Compartment Fuse Block 5-112
  Fuses 5-110
  Instrument Panel Fuse Block 5-110
  Power Windows and Other Power Options 5-110
  Rear Compartment Fuse Block 5-116
  Windshield Wiper Fuses 5-110
Engine
  Air Cleaner/Filter 5-26
  Check and Service Engine Soon Light 3-38
  Coolant 5-30
  Coolant Heater 2-25
  Coolant Temperature Gage 3-37
  Drive Belt Routing 6-15
  Engine Compartment Overview 5-14
  Exhaust 2-35
  Oil 5-21
  Oil Life System 5-24
  Overheated Protection Operating Mode 5-35
  Overheating 5-33
  Running While Parked 2-36
  Starting 2-23
Entry/Exit Lighting 3-17
Event Data Recorders 7-16
Extender, Safety Belt 1-32

Downloaded from www.Manualslib.com manuals search engine

F

Filter
  Engine Air Cleaner 5-26
Finish Damage 5-107
Fixed Mast Antenna 3-68
Flashers, Hazard Warning 3-6
Flash-to-Pass 3-8
Flat Tire 5-86
Flat Tire, Changing 5-86
Flat Tire, Storing 5-96
Fluid 5-27, 5-30
  Power Steering 5-40
  Windshield Washer 5-41
Fog Lamp
  Fog 3-16
Fuel 5-6
  Additives 5-8
  California Fuel 5-7
  Filling a Portable Fuel Container 5-11
  Filling the Tank 5-9
  Fuels in Foreign Countries 5-8
  Gage 3-42
  Gasoline Octane 5-6
  Gasoline Specifications 5-7
  Low Warning Light 3-42
Fuses 5-110
  Engine Compartment Fuse Block 5-112
  Instrument Panel Fuse Block 5-110
  Rear Compartment Fuse Block 5-116
  Windshield Wiper 5-110

G

Gage
  Engine Coolant Temperature 3-37
  Fuel 3-42
  Speedometer 3-29
  Tachometer 3-29
Gasoline
  Octane 5-6
  Specifications 5-7
Glove Box 2-44
GM Mobility Reimbursement Program 7-6

H

Hazard Warning Flashers 3-6
Head Restraints 1-7
Headlamps 3-13
  Bulb Replacement 5-51
  Daytime Running Lamps 3-14

Downloaded from www.Manualslib.com manuals search engine

Headlamps (cont.)
Delayed 3-14
Flash-to-Pass 3-8
Halogen Bulbs 5-52
Headlamps, Front Turn Signal, Sidemarker, and Parking Lamps 5-52
High/Low Beam Changer 3-8
On Reminder 3-14
Headlamps Off in Park (P) 3-14
Heated Seats 1-4
Heater 3-19, 3-23
Highbeam On Light 3-42
High-Speed Operation, Tires 5-70
Highway Hypnosis 4-14
Hill and Mountain Roads 4-14
Hood
Checking Things Under 5-12
Release 5-12
Horn 3-6
How to Wear Safety Belts Properly 1-18

I

Ignition Positions 2-22
Infants and Young Children, Restraints 1-36
Inflation - Tire Pressure 5-68
Instrument Panel
Overview 3-4
Instrument Panel (I/P)
Brightness 3-16
Cluster 3-28

J

Jump Starting 5-46

K

Keyless Entry System 2-4
Keys 2-3

L

Labeling, Tire Sidewall 5-62
Lamps
Courtesy 3-16
Dome 3-17
Overhead Console Reading 3-17
Trunk 3-17
Lap-Shoulder Belt 1-26

Downloaded from www.Manualslib.com manuals search engine

LATCH System
Child Restraints 1-44
Latches, Seatback 1-8
License Plate Lamps 5-58
Lift Seat, Power 1-11
Light
Airbag Readiness 3-30
Antilock Brake System Warning 3-35
Brake System Warning 3-34
Charging System 3-33
Cruise Control 3-42
Highbeam On 3-42
Low Fuel Warning 3-42
Malfunction Indicator 3-38
Oil Pressure 3-41
Passenger Airbag Status Indicator 3-31
Safety Belt Reminders 3-30
Security 3-41
StabiliTrak® Indicator 3-36
StabiliTrak® Not Ready 3-36
TCS Warning Light 3-35
Tire Pressure 3-37
Traction Control System Active 3-36
Traction Control System (TCS) Warning 3-35
Lighting
Entry/Exit 3-17
Parade Dimming 3-17
Lights 3-13
Flash-to-Pass 3-8
High/Low Beam Changer 3-8
On Reminder 3-14
Loading Your Vehicle 4-20
Lockout Protection 2-13
Locks
Automatic Door Lock 2-11
Delayed Locking 2-11
Door 2-10
Lockout Protection 2-13
Power Door 2-10
Programmable Automatic Door Unlock 2-12
Rear Door Security Locks 2-12
Loss of Control 4-10
Low Fuel Warning Light 3-42
Lowering the Retractable Hardtop 2-46
Lumbar
Manual Controls 1-3

Downloaded from www.Manualslib.com manuals search engine

M

Maintenance Schedule
Additional Required Services 6-6
At Each Fuel Fill 6-9
At Least Once a Month 6-10
At Least Once a Year 6-10
Introduction 6-2
Maintenance Footnotes 6-7
Maintenance Record 6-17
Maintenance Replacement Parts 6-14
Maintenance Requirements 6-2
Owner Checks and Services 6-9
Recommended Fluids and Lubricants 6-13
Scheduled Maintenance 6-4
Using 6-3
Your Vehicle and the Environment 6-2
Malfunction Indicator Light 3-38
Manual Lumbar Controls 1-3
Manual Seats 1-2
Manual, Using iii
Message
DIC Warnings and Messages 3-46
Mirrors
Automatic Dimming Rearview with Compass 2-39
Automatic Dimming Rearview with OnStar®
and Compass 2-37
Mirrors (cont.)
Manual Rearview Mirror 2-37
Manual Rearview Mirror with OnStar® 2-37
Outside Convex Mirror 2-41
Outside Power Mirrors 2-40
MyGMLink.com 7-4

N

Navigation System, Privacy 7-17
New Vehicle Break-In 2-21

O

Odometer 3-29
Odometer, Trip 3-29
Off-Road Recovery 4-10
Oil
Engine 5-21
Pressure Light 3-41
Oil, Engine Oil Life System 5-24
Older Children, Restraints 1-33
Online Owner Center 7-4
OnStar, Privacy 7-17
OnStar® System, see OnStar® Manual 2-41
Other Warning Devices 3-6

Downloaded from www.Manualslib.com manuals search engine

Outlet Adjustment 3-26
Outlets
  Accessory Power 3-18
Outside
  Convex Mirror 2-41
  Power Mirrors 2-40
Overhead Console Reading Lamps 3-17
Overheated Engine Protection
  Operating Mode 5-35
Owner Checks and Services 6-9
Owners, Canadian ii

P

Paint, Damage 5-107
Parade Dimming 3-17
Park Brake 2-31
Park (P)
  Shifting Into 2-32
  Shifting Out of 2-34
Park (P) Headlamps Off in Park (P) 3-14
Parking
  Over Things That Burn 2-35
Passenger Airbag Status Indicator 3-31
Passenger Sensing System 1-68
Passing 4-10
PASS-Key® III+ 2-19
PASS-Key® III+ Operation 2-20
Perchlorate Materials Requirements, California 5-5
Power
  Door Locks 2-10
  Electrical System 5-110
  Lift Seat 1-11
  Retained Accessory (RAP) 2-23
  Seat 1-3
  Steering Fluid 5-40
  Windows 2-16
Pressure Cap 5-33
Privacy 7-16
  Event Data Recorders 7-16
  Navigation System 7-17
  OnStar 7-17
  Radio Frequency Identification 7-17
Programmable Automatic Door Unlock 2-12

R

Radio Frequency Identification (RFID), Privacy 7-17
Radios 3-52
Radio(s) 3-54
Radios
  Reception 3-68
  Setting the Clock 3-53
  Theft-Deterrent 3-67
Raising the Retractable Hardtop 2-49
Rear Door Security Locks 2-12

Downloaded from www.Manualslib.com manuals search engine

Rearview Mirror, Automatic Dimming with
Compass 2-39
Rearview Mirror, Automatic Dimming with
OnStar® and Compass 2-37
Rearview Mirror with OnStar® 2-37
Rearview Mirrors 2-37
Reclining Seatbacks 1-4
Recommended Fluids and Lubricants 6-13
Recreational Vehicle Towing 4-26
Remote Keyless Entry (RKE) System 2-4
Remote Keyless Entry (RKE) System,
Operation 2-4
Remote Vehicle Start 2-7
Removing the Flat Tire and Installing the
Spare Tire 5-90
Removing the Spare Tire and Tools 5-88
Replacement Bulbs 5-58
Replacement Parts, Maintenance 6-14
Reporting Safety Defects
Canadian Government 7-14
General Motors 7-15
United States Government 7-14
Restraint System Check
Checking the Restraint Systems 1-74
Replacing Restraint System Parts After
a Crash 1-75
Retained Accessory Power (RAP) 2-23
Retractable Hardtop 2-45
Lowering 2-46
Raising 2-49
Roadside
Assistance Program 7-6
Rocking Your Vehicle to Get it Out 4-20
Routing, Engine Drive Belt 6-15
Running the Engine While Parked 2-36

S

Safety Belt
Reminder Light 3-30
Safety Belts
Care of 5-103
How to Wear Safety Belts Properly 1-18
Lap-Shoulder Belt 1-26
Safety Belt Extender 1-32
Safety Belt Use During Pregnancy 1-32
Safety Belts Are for Everyone 1-13
Safety Warnings and Symbols iii
Scheduled Maintenance 6-4
Seatback Latches 1-8

Downloaded from www.Manualslib.com manuals search engine

Seats
60/40 Split Bench Seat 1-11
Easy Entry Seat 1-9
Head Restraints 1-7
Heated Seats 1-4
Manual Lumbar 1-3
Power Lift Seat 1-11
Power Seat 1-3
Reclining Seatbacks 1-4
Seatback Latches 1-8
Securing a Child Restraint
Rear Seat Position 1-53
Right Front Seat Position 1-56
Security Light 3-41
Service 5-4
Accessories and Modifications 5-4
Adding Equipment to the Outside of Your Vehicle 5-6
California Pershlorate Materials Requirements 5-5
California Proposition 65 Warning 5-5
Doing Your Own Work 5-5
Engine Soon Light 3-38
Publications Ordering Information 7-15
Service, Scheduling Appointments 7-9
Servicing Your Airbag-Equipped Vehicle 1-72
Sheet Metal Damage 5-106
Shifting Into Park (P) 2-32
Shifting Out of Park (P) 2-34
Signals, Turn and Lane-Change 3-8
Spare Tire
Compact 5-99
Installing 5-90
Removing 5-88
Storing 5-96
Specifications, Capacities 5-119
Speedometer 3-29
Split Bench Seat (60/40) 1-11
StabiliTrak® System 4-6
StabiliTrak® Indicator Light 3-36
StabiliTrak® Not Ready Light 3-36
Start Vehicle, Remote 2-7
Starting the Engine 2-23
Steering 4-7
Steering Wheel Controls, Audio 3-67
Steering Wheel, Tilt Wheel 3-6
Storage Areas
Center Console Storage Area 2-44
Convenience Net 2-44
Cupholder(s) 2-44
Glove Box 2-44
Stuck in Sand, Mud, Ice, or Snow 4-19
Sun Visors 2-18
Sunroof 2-45

Downloaded from www.Manualslib.com manuals search engine

T

Tachometer 3-29
Taillamps
  Turn Signal, Sidemarker, Stoplamps, and
    Back-Up Lamps 5-55, 5-56, 5-57
TCS Active Light 3-36
TCS Warning Light 3-35
Theft-Deterrent, Radio 3-67
Theft-Deterrent Systems 2-18
  Content Theft-Deterrent 2-18
  PASS-Key® III+ 2-19
  PASS-Key® III+ Operation 2-20
Tilt Wheel 3-6
Time, Setting 3-53
Tire
  Pressure Light 3-37
Tires 5-60
  Aluminum Wheels, Cleaning 5-106
  Buying New Tires 5-79
  Chains 5-85
  Changing a Flat Tire 5-86
  Cleaning 5-106
  Compact Spare Tire 5-99
  Different Size 5-81
  High-Speed Operation 5-70
  If a Tire Goes Flat 5-86
Tires (cont.)
  Inflation - Tire Pressure 5-68
  Inspection and Rotation 5-77
  Installing the Spare Tire 5-90
  Pressure Monitor Operation 5-72
  Pressure Monitor System 5-70
  Removing the Flat Tire 5-90
  Removing the Spare Tire and Tools 5-88
  Storing a Flat or Spare Tire and Tools 5-96
  Tire Sidewall Labeling 5-62
  Tire Terminology and Definitions 5-65
  Uniform Tire Quality Grading 5-82
  Wheel Alignment and Tire Balance 5-83
  Wheel Replacement 5-83
  When It Is Time for New Tires 5-78
  Winter Tires 5-61
Towing
  Recreational Vehicle 4-26
  Towing a Trailer 4-28
  Your Vehicle 4-25
Traction
  Control System Active Light 3-36
  Control System (TCS) 4-5
  Control System Warning Light 3-35
  StabiliTrak® System 4-6
Transmission
  Fluid, Automatic 5-27, 5-30

Downloaded from www.Manualslib.com manuals search engine

Transmission Operation, Automatic 2-27
Trip Odometer 3-29
Trunk 2-13
Trunk Lamps 3-17
Turn and Lane-Change Signals 3-8
Turn Signal/Multifunction Lever 3-7

U

Uniform Tire Quality Grading 5-82
Using this Manual iii

V

Vehicle
  Control 4-3
  Damage Warnings iv
  Loading 4-20
  Symbols iv
Vehicle Data Recording and Privacy 7-16
Vehicle Identification
  Number (VIN) 5-109
  Service Parts Identification Label 5-109
Vehicle Personalization
  DIC 3-50
Vehicle, Remote Start 2-7
Ventilation Adjustment 3-26
Visors 2-18

W

Warning Lights, Gages and Indicators 3-27
Warnings
  DIC Warnings and Messages 3-46
  Hazard Warning Flashers 3-6
  Other Warning Devices 3-6
  Safety and Symbols iii
  Vehicle Damage iv
Wheels
  Alignment and Tire Balance 5-83
  Different Size 5-81
  Replacement 5-83
Where to Put the Restraint 1-42
Windows 2-15
  Power 2-16

Downloaded from www.Manualslib.com manuals search engine

Windshield
Washer 3-10
Washer Fluid 5-41
Wiper Blade Replacement 5-59
Wiper Blades, Cleaning 5-105
Wiper Fuses 5-110
Wipers 3-9
Winter Driving 4-15
Winter Tires 5-61

X

XM Radio Messages 3-66
XM™ Satellite Radio Antenna System 3-69

Y

Your Vehicle and the Environment 6-2

Downloaded from www.Manualslib.com manuals search engine