LS 600h L

Hybrid
2008 Model
Revised (Includes 2010 Model Updates)

Emergency Response Guide

© 2009 Toyota Motor Corporation
All rights reserved. This document may not be
altered without the written permission of Toyota Motor Corporation.

10 LS 600h L ERG REV A (09/24/09)

Downloaded from www.Manualslib.com manuals search engine

Foreword

This LS600h L gasoline-electric hybrid Emergency Response Guide has been revised to include the changes of the 2010 model year LS600h L. These changes include minor updates to the vehicle exterior and interior. The important changes affecting the emergency responder are the reshaped high voltage battery pack and the addition of pyrotechnic front seat active headrests. The LS 600h L hybrid introduced in May 2007 continues to share the basic vehicle systems and features of the conventional, non-hybrid, Lexus LS 460 L.

High voltage electricity powers the electric motor, generator, A/C compressor, and power control unit (inverter/converter). Other automotive electrical devices such as the horn, radio, and gauges are powered from a separate 12 Volt auxiliary battery. Numerous safeguards have been designed into the LS 600h L to help ensure the high voltage, approximately 288 Volt, Nickel Metal Hydride (NiMH) Hybrid Vehicle (HV) battery pack is kept safe and secure in an accident.

The LS 600h L utilizes the following electrical systems:

- Maximum 650 Volts AC
- Nominal 288 Volts DC
- Maximum 46 Volts AC / DC
- Nominal 12 Volts DC

LS 600h L Features:

- A mechanical all-wheel drive hybrid powertrain.
- A boost converter in the power control unit that boosts to 650 Volts the available voltage to the electric motor.
- A high voltage Hybrid Vehicle (HV) battery pack rated at 288 Volts.
- A high voltage motor driven Air Conditioning (A/C) compressor rated at 288 Volts.
- An Electric Power Steering (EPS) assist motor rated at 46 Volts.
- Active stabilizer suspension system motors rated at 46 Volts.
- A body electrical system rated at 12 Volts, negative chassis ground.
- Supplemental Restraint System (SRS) - dual stage frontal airbags, front knee airbags, front seat and optional rear seat side airbags, side curtain airbags, front and rear seat belt pretensioners, and when equipped with an optional rear seat Ottoman, a passenger side rear seat cushion airbag.
- Active headrests for the front seats (2010 model only)

High voltage electrical safety is an important factor in the emergency handling of the LS 600h L Lexus Hybrid Drive. It is important to recognize and understand the disabling procedures and warnings throughout the guide.

Additional topics in the guide include:

- Lexus LS 600h L identification.
- Major Lexus Hybrid Drive component locations and descriptions.
- Extrication, fire, recovery, and additional emergency response information.
- Roadside assistance information.

2008-2009 Model Year LS 600h L	2010 Model Year LS 600h L

This guide is intended to assist emergency responders in the safe handling of a Lexus LS 600h L hybrid vehicle during an incident.

NOTE:
Emergency Response Guides for Lexus hybrid vehicles may be viewed at http://techinfo.lexus.com.

Downloaded from www.Manualslib.com manuals search engine

Table of Contents

Table of Contents	Page
About the LS 600h L	1
LS 600h L Identification	2
Lexus Hybrid Drive Component Locations & Descriptions	6
Smart Access System & Push Button Start	9
Lexus Hybrid Drive Operation	11
Hybrid Vehicle (HV) Battery Pack	12
46 Volt System	13
Low Voltage Battery	14
High Voltage Safety	15
SRS Airbags & Seat Belt Pretensioners	16
Emergency Response	18
Extrication	18
Fire	25
Overhaul	26
Recovering/Recycling of NiMH HV Battery Pack	26
Spills	27
First Aid	27
Submersion	28
Roadside Assistance	29

Downloaded from www.Manualslib.com manuals search engine

About the LS 600h L

The LS 600h L sedan joins the RX 400h, RX450h, HS250h and GS 450h as a hybrid model for Lexus. Lexus Hybrid Drive means that the vehicle contains a gasoline engine and an electric motor for power. The two hybrid power sources are stored on board the vehicle:

1. Gasoline stored in the fuel tank for the gasoline engine.
2. Electricity stored in a high voltage Hybrid Vehicle (HV) battery pack for the electric motor.

The result of combining these two power sources is improved fuel economy and reduced emissions. The gasoline engine also powers an electric generator to recharge the battery pack; unlike a pure all electric vehicle, the LS 600h L never needs to be recharged from an external electric power source.

Depending on the driving conditions one or both sources are used to power the vehicle. The following illustration demonstrates how the LS 600h L operates in various driving modes.

❶ During light acceleration at low speeds, the vehicle is powered by the electric motor. The gasoline engine is shut off.

❷ During normal driving, the vehicle is powered mainly by the gasoline engine. The gasoline engine also powers the generator to recharge the battery pack.

❸ During full acceleration, such as climbing a hill, both the gasoline engine and the electric motor power the vehicle.

❹ During deceleration, such as when braking, the vehicle regenerates kinetic energy from the wheels to produce electricity that recharges the battery pack.

❺ While the vehicle is stopped, the gasoline engine and electric motor are off, however the vehicle remains on and operational.

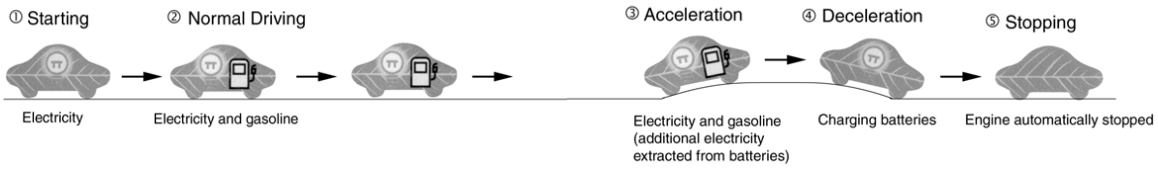

Downloaded from www.Manualslib.com manuals search engine

LS 600h L Identification

In appearance, the 2010 model year LS 600h L is nearly identical to the conventional, non-hybrid Lexus LS 460 L. The LS 600h L is a 4-door sedan and the suffix "L" indicates a long wheelbase. Exterior, interior, and engine compartment illustrations are provided to assist in identification.

The alphanumeric 17 character Vehicle Identification Number (VIN) is provided in the front windshield cowl, driver side door pillar, and engine compartment.

Example VINs:
JTHDU46F840020208 (2008/2009 Models)
JTHDU1EF840020208 (4-seat models 2010 Model)
JTHDU5EF840020208 (5-seat models 2010 Model)

An LS 600h L is identified by the first 6 alphanumeric characters **JTHDU4, JTHDU1, or JTHDU5**.

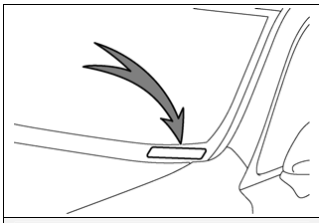

Driver Side Windshield

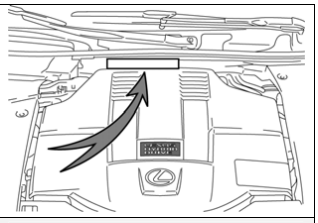

Engine Compartment Cowl

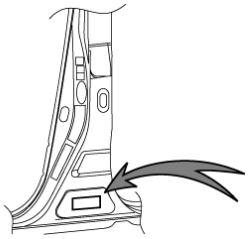

Base of Driver Side Door Pillar

Downloaded from www.Manualslib.com manuals search engine

LS 600h L Identification (Continued)

Exterior

❶ LEXUS LS 600h L logos on the rear trunk.

❷ HYBRID logos on the rear door moldings.

❸ Gasoline fuel filler door located on the driver side rear quarter panel.

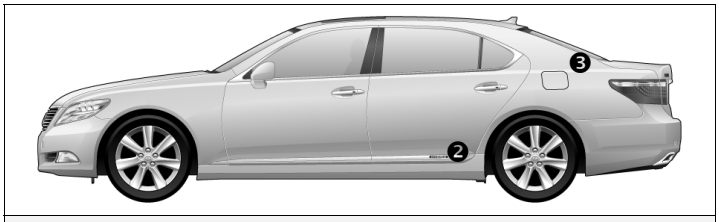

2008/09 Models Exterior Driver Side View

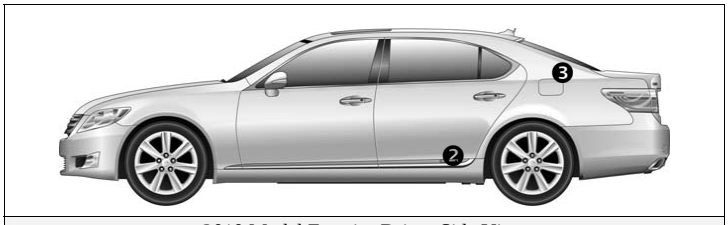

2010 Model Exterior Driver Side View

2008/09 Models Exterior Front View

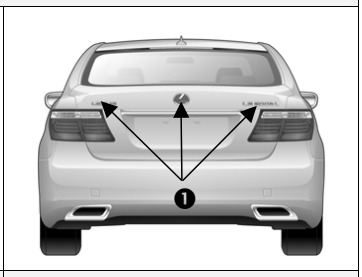

2008/09 Models Exterior Rear View

2010 Model Exterior Front View

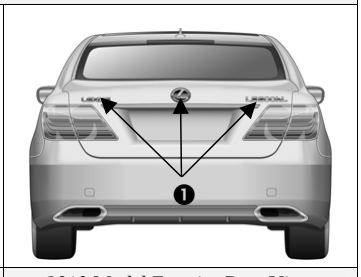

2010 Model Exterior Rear View

2008/09 Models Exterior Rear and Driver Side View

2010 Model Exterior Rear and Driver Side View

Downloaded from www.Manualslib.com manuals search engine

LS 600h L Identification (Continued)

Interior

❹ The instrument cluster (speedometer, fuel gauge, warning lights) located in the dash behind the steering wheel, is different than the one on the conventional, non-hybrid LS 460 L.

❺ The hybrid system indicator (power meter) is located next to the tachometer on 2008/09 models and next to the speedometer on the 2010 model.

NOTE:
If the vehicle is shut off, the instrument cluster gauges will be “blacked out”, not illuminated.

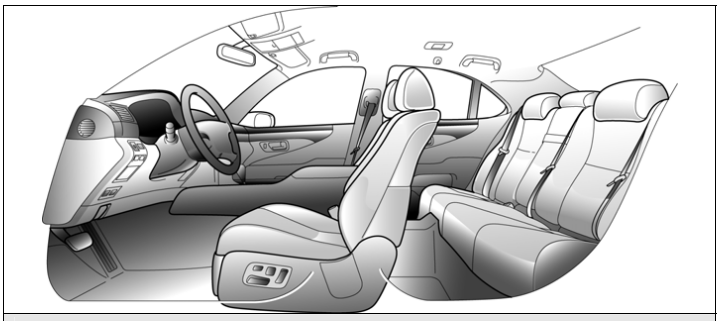

Interior View

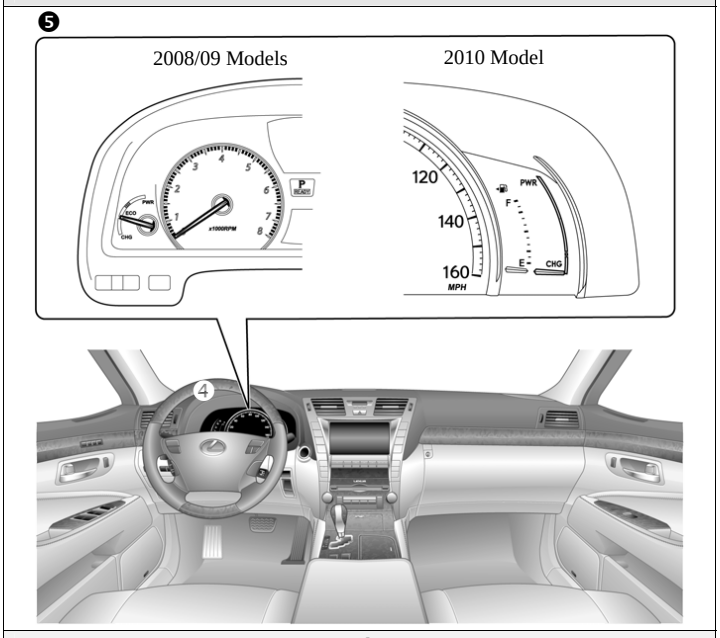

Instrument Cluster View

Downloaded from www.Manualslib.com manuals search engine

LS 600h L Identification (Continued)

Engine Compartment

❻ 5.0-liter aluminum alloy gasoline engine.

❼ Logo on the plastic engine cover.

Logo on Cover

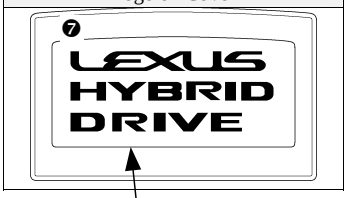

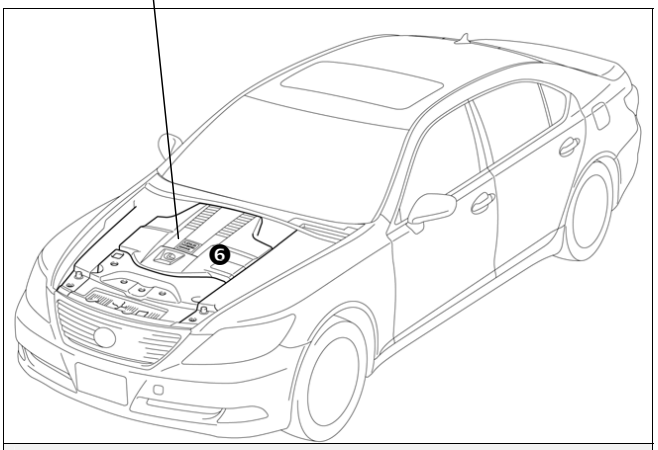

Engine Compartment View

Downloaded from www.Manualslib.com manuals search engine

Lexus Hybrid Drive Component Locations & Descriptions

Component	Location	Description
12 Volt ❶ Auxiliary Battery	Trunk Driver Side	A lead-acid battery that supplies power to the low voltage devices.
Hybrid ❷ Vehicle (HV) Battery Pack	Trunk Area, Mounted behind Rear Seat	288 Volt Nickel Metal Hydride (NiMH) battery pack consisting of 20 low voltage (14.4 Volt) modules connected in series.
Power ❸ Cables	Undercarriage and Engine Compartment	Orange colored power cables carry high voltage Direct Current (DC) between the HV battery pack, power control unit, and A/C compressor. These cables also carry 3-phase Alternating Current (AC) between the power control unit, electric motor, and generator.
Inverter/ Converter ❹	Engine Compartment	Boosts and inverts the high voltage electricity from the HV battery pack to 3-phase AC electricity that drives the electric motor. The power control unit also converts AC electricity from the electric generator and electric motor (regenerative braking) to DC that recharges the HV battery pack.
Gasoline ❺ Engine	Engine Compartment	Provides two functions: 1) Powers vehicle. 2) Powers generator to recharge the HV battery pack. The engine is started and stopped under control of the vehicle computer.
Electric ❻ Generator	Transmission	3-phase high voltage AC generator that is contained in the transmission and recharges the HV battery pack.
Electric ❼ Motor	Transmission	3-phase high voltage AC permanent magnet electric motor contained in the transmission and drives the four wheels through the transfer case and propeller shafts.

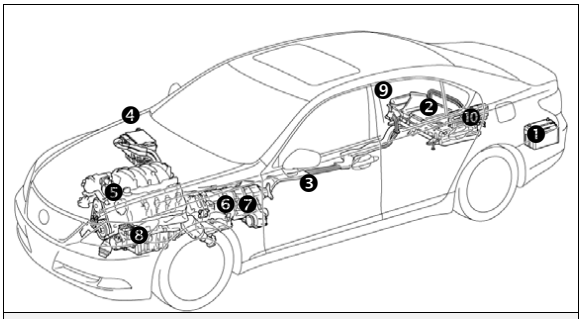

2008/09 Lexus Hybrid Drive Components

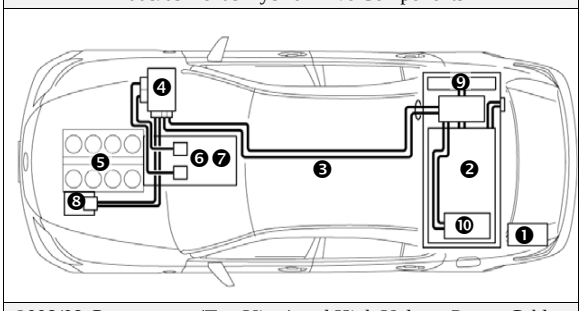

2008/09 Components (Top View) and High Voltage Power Cables

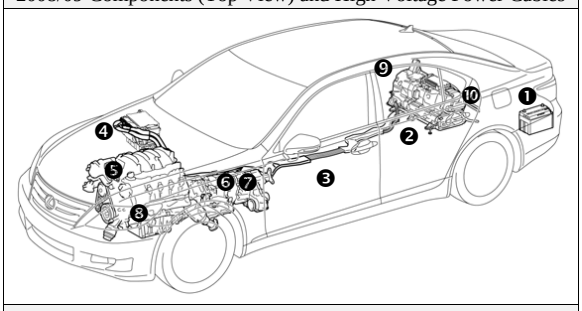

2010 Lexus Hybrid Drive Components

Downloaded from www.Manualslib.com manuals search engine

Lexus Hybrid Drive Component Locations & Descriptions (Continued)

Component	Location	Description
A/C Compressor (with Inverter) ❽	Engine Compartment	3-phase high voltage AC electrically driven motor compressor.
DC-DC Converter❾ for 12 Volt Auxiliary Battery	Inside HV Battery Pack in Trunk	Converts 288 Volts from the HV battery pack to 12 Volts for low voltage vehicle power.
DC-DC Converter ❿ for EPS and Active Stabilizer Suspension System	On HV Battery Pack	Converts 288 Volts from the HV battery pack to 46 Volts for EPS and active stabilizer suspension system power. Dull yellow colored sheathing identifies 46 Volt wires that are routed under the vehicle body to power the EPS and the active stabilizer suspension system.
Fuel Tank and Fuel Lines ⓫	Undercarriage, Driver Side and Center	The fuel tank provides gasoline via fuel lines to the engine. The source fuel lines are routed under the vehicle along the center tunnel and the return line is routed along the driver side under the floor pan.

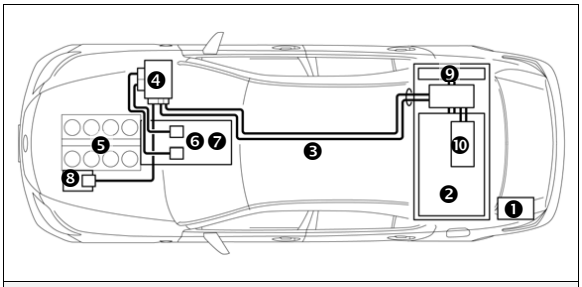

2010 Components (Top View) and High Voltage Power Cables

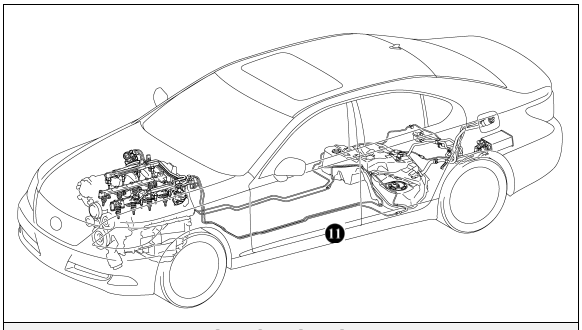

Fuel Tank and Fuel Lines

Downloaded from www.Manualslib.com manuals search engine

Lexus Hybrid Drive Component Locations & Descriptions (Continued)

Key Specifications:

Gasoline Engine:	390 hp (290 kW), 5.0-liter Aluminum Alloy Engine
Electric Motor:	221 hp (165 kW), Permanent Magnet Motor
Transmission:	Automatic Only (electrically controlled continuously variable transmission)
HV Battery:	288 Volt Sealed NiMH-Battery
Curb Weight:	5,049 lbs / 2,290 kg (2008/09) 5,360 lbs / 2,420 kg (2010)
Fuel Tank:	22.1 gals / 84 liters
Fuel Economy Ratings:	20/22 (City/Hwy) miles/gal 11.3/8.0 (City/Hwy) liters/100 km
Frame Material:	Steel Unibody
Body Material:	Steel Panels except for Aluminum Hood

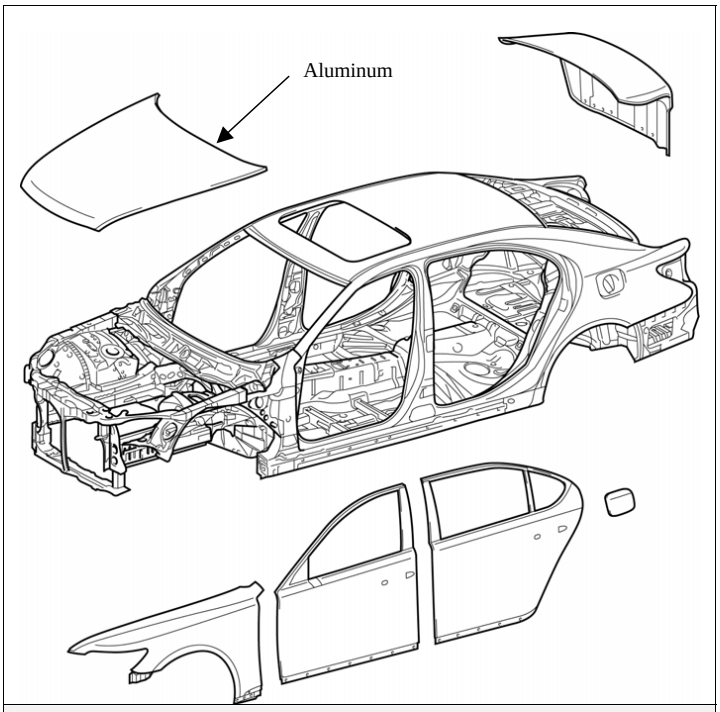

Steel Unibody

Downloaded from www.Manualslib.com manuals search engine

Smart Access System & Push Button Start

The LS 600h L smart access system consists of a smart key transceiver that communicates bi-directionally enabling the vehicle to recognize the smart key in close proximity to the vehicle. Once recognized, the smart key will allow the user to lock and unlock the doors without pushing smart key buttons, and start the vehicle without inserting it into an ignition switch.

Smart key features:

- Passive (remote) function to lock/unlock the doors and start the vehicle.
- Wireless transmitter buttons to lock/unlock the doors and unlock the trunk.
- Hidden metal cut key to lock/unlock the doors and trunk from the exterior.

The LS 600h L is equipped with two types of smart keys:

- Smart key (fob)
- Card smart key

The card smart key is designed to be stored in a wallet and has all the same functions as the smart key (fob), except push buttons.

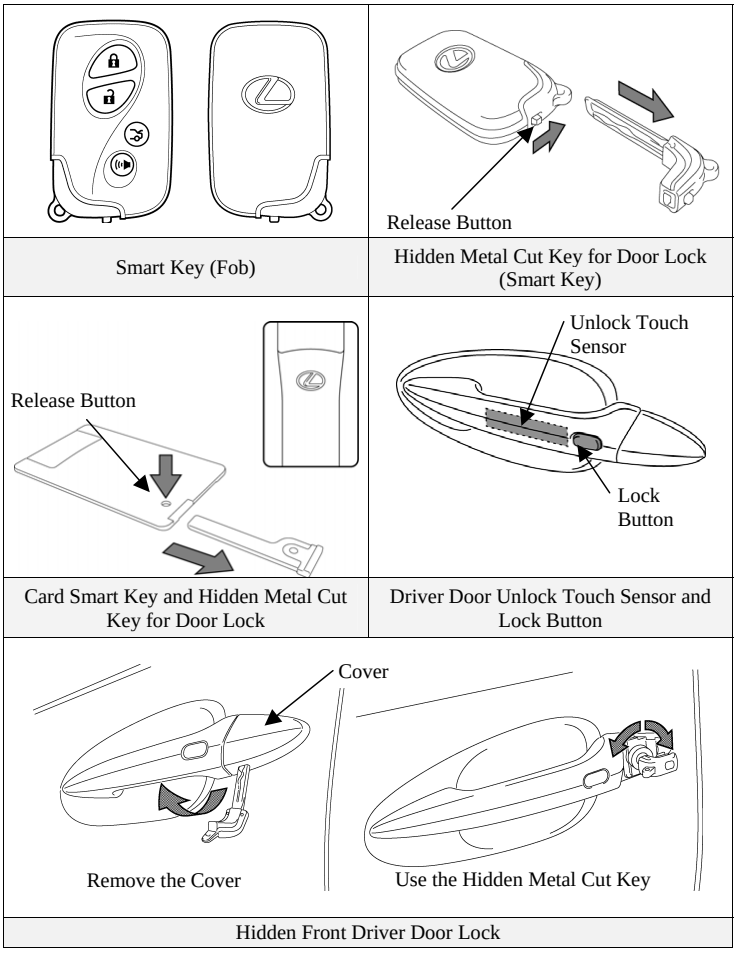

Smart Key (Fob) | Hidden Metal Cut Key for Door Lock (Smart Key)

Card Smart Key and Hidden Metal Cut Key for Door Lock | Driver Door Unlock Touch Sensor and Lock Button

Hidden Front Driver Door Lock

<u>Door (Lock/Unlock)</u>

Three methods are available to lock/unlock the doors.

1. Pushing wireless smart key lock/unlock buttons.

2. Touching the sensor on the backside of any exterior door handle, with the smart key in close proximity to the vehicle, unlocks the doors. Pushing the lock button on any exterior door handle locks the doors.

3. Removing the driver door handle cover, inserting the hidden metal cut key in the driver door lock and turning the key clockwise once unlocks the driver door, twice unlocks all doors. To lock all doors turn the key counter-clockwise once. Only the driver door contains an exterior door lock for the metal cut key.

Downloaded from www.Manualslib.com manuals search engine

Smart Access System & Push Button Start (Continued)

Vehicle Starting/Stopping

The smart key has replaced the conventional metal cut key, and the power button with an integral status indicator light has replaced the ignition switch. The smart key only needs to be in proximity to the vehicle to allow the system to function.

- With the brake pedal released, the first push of the power button operates the accessory mode, the second push operates the ignition-on mode, and the third push turns the ignition off again.

Ignition Mode Sequence (brake pedal released):

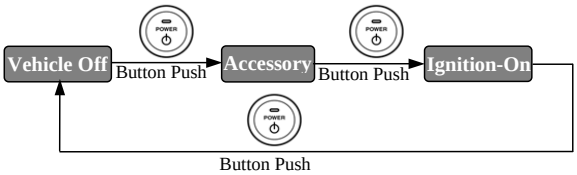

- Starting the vehicle takes priority over all other ignition modes and is accomplished by depressing the brake pedal and pushing the power button once. To verify the vehicle has started, the power button status indicator light is off and the **READY** light is illuminated in the instrument cluster.

- If the internal smart key battery is dead, use the following method to start the vehicle.
  1. Touch the Lexus emblem side of the smart key to the power button (a buzzer will sound).
  2. Within 10 seconds after the buzzer sounds, push the power button with the brake pedal depressed (the **READY** light will illuminate).

- Once the vehicle has started and is on and operational (**READY**-ON), the vehicle is shut off by bringing the vehicle to a complete stop, placing the gearshift lever in **P**ark, and then depressing the power button once.

Ignition Mode	Power Button Indicator Light
Off	Off
Accessory	Amber
Ignition-On	Amber
Brake Pedal Depressed	Green
Vehicle Started (READY-ON)	Off
Malfunction	Blinking Amber

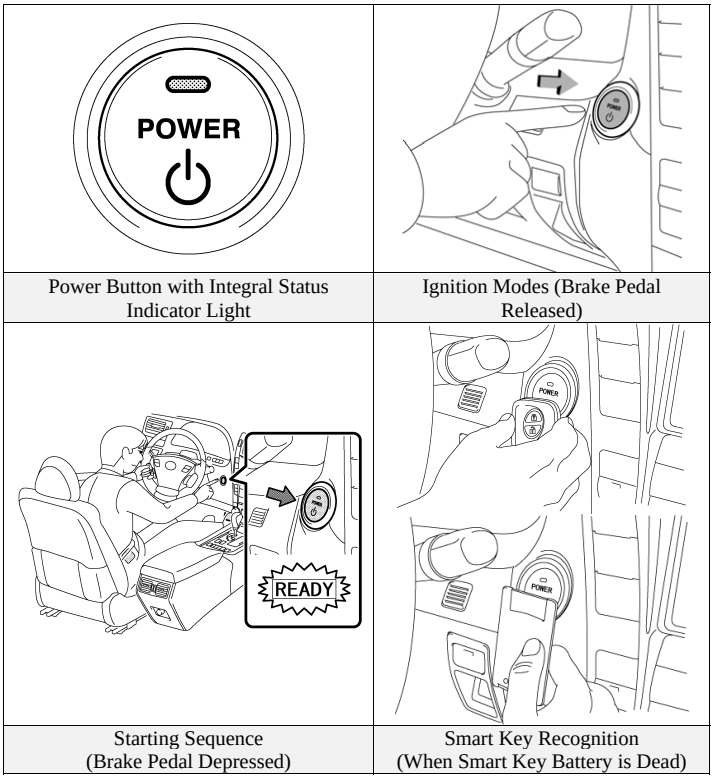

Power Button with Integral Status Indicator Light | Ignition Modes (Brake Pedal Released)

Starting Sequence (Brake Pedal Depressed) | Smart Key Recognition (When Smart Key Battery is Dead)

Downloaded from www.Manualslib.com manuals search engine

Lexus Hybrid Drive Operation

Once the **READY** indicator is illuminated in the instrument cluster, the vehicle may be driven. However, the gasoline engine does not idle like a typical automobile and will start and stop automatically. It is important to recognize and understand the **READY** indicator provided in the instrument cluster. When lit, it informs the driver that the vehicle is on and operational even though the gasoline engine may be off and the engine compartment is silent.

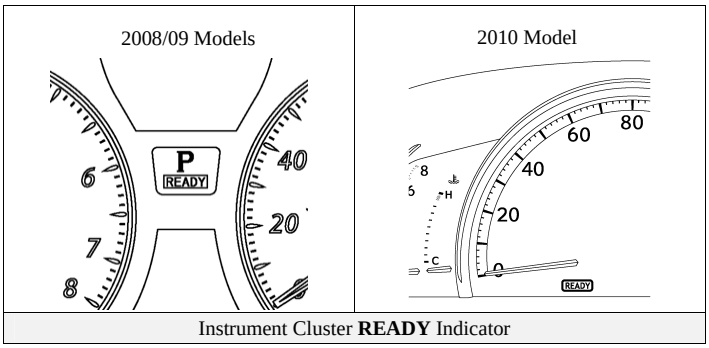

Instrument Cluster **READY** Indicator

Vehicle Operation

- With the LS 600h L, the gasoline engine may stop and start at any time while the **READY** indicator is on.

- Never assume that the vehicle is shut off just because the engine is off. Always look for the **READY** indicator status. The vehicle is shut off when the **READY** indicator is off.

- The vehicle may be powered by:
    1. The electric motor only.
    2. The gasoline engine only.
    3. A combination of both the electric motor and the gasoline engine.

- The vehicle computer determines the mode in which the vehicle operates in order to improve fuel economy and reduce emissions. Two features on the LS600h L are EV (Electric Vehicle) mode and ECO (Economy) mode:

    1. EV Mode: When activated, and certain conditions have been met, the vehicle operates with the electric motor powered by the HV battery.
    2. ECO Mode: When activated, this mode helps enhance fuel economy on trips that involve frequent braking and acceleration (2010 model only).

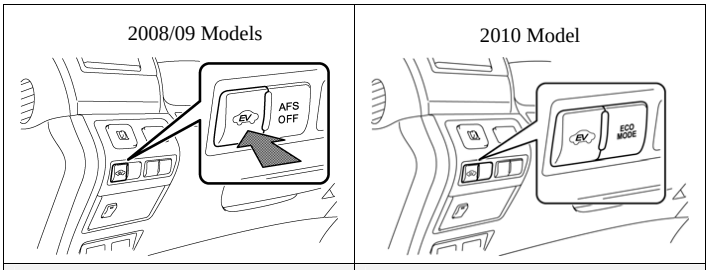

EV Mode Switch | EV Mode and ECO Mode Switch

Downloaded from www.Manualslib.com manuals search engine

Hybrid Vehicle (HV) Battery Pack

The LS 600h L features a high voltage Hybrid Vehicle (HV) battery pack that contains sealed Nickel Metal Hydride (NiMH) battery modules.

HV Battery Pack

- The HV battery pack is enclosed in a metal case and is securely mounted in the trunk area behind the rear seat. The metal case is isolated from high voltage and concealed by fabric covers.
- The HV battery pack consists of 20 low voltage (14.4 Volt) NiMH battery modules connected in series to produce approximately 288 Volts. Each NiMH battery module is non-spillable and sealed in a metal case.
- The electrolyte used in the NiMH battery module is an alkaline mixture of potassium and sodium hydroxide. The electrolyte is absorbed into the battery cell plates and will not normally leak, even in a collision.
- The shape of the 2010 LS 600h L battery pack has been changed.

HV Battery Pack	
Battery pack voltage	288 V
Number of NiMH battery modules in the pack	20
NiMH battery module voltage	14.4 V
NiMH battery module dimensions	1 x 21 x 3.3 in (18 x 542 x 86 mm)
NiMH module weight	4.8lbs (2.2kg)
NiMH battery pack dimensions (2008/09 Models)	20 x 33x 10 in (515 x 842 x 257 mm)
NiMH battery pack dimensions (2010 Model)	17 x 33x 17.3 in (432 x 842 x 439 mm)
NiMH battery pack weight (2008/09 Models)	148 lbs (67 kg)
NiMH battery pack weight (2010 Model)	174 lbs (79 kg)

Components Powered by the HV Battery Pack

- Electric Motor
- Power Control Unit
- A/C Compressor
- DC-DC Converter for 12 Volt Auxiliary Battery
- DC-DC Converter for EPS and Active Stabilizer Suspension System
- Power Cables
- Electric Generator

HV Battery Pack Recycling

- The HV battery pack is recyclable. Contact the nearest Lexus dealer or:

United States: (800) 255-3987, Canada: (800) 265-3987

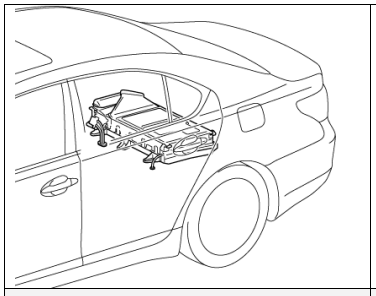

2008/09 Models HV Battery Pack

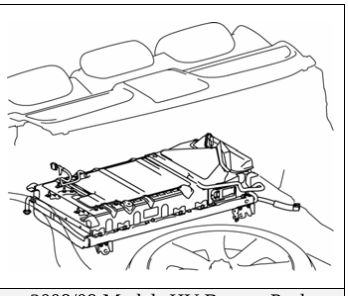

2008/09 Models HV Battery Pack (Viewed from the Trunk)

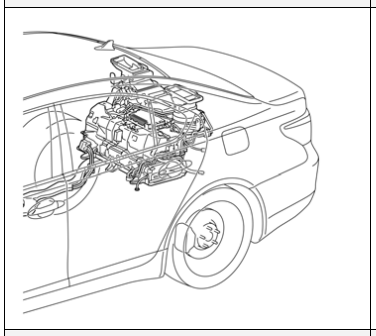

2010 Model HV Battery Pack

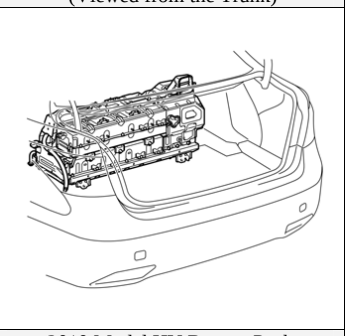

2010 Model HV Battery Pack (Viewed from the Trunk)

Downloaded from www.Manualslib.com manuals search engine

46 Volt System

The LS 600h L is equipped with a 46 Volt electrical system that powers the Electric Power Steering (EPS) assist motor in the engine compartment and the optional Active Stabilizer Suspension System motors for the front and rear stabilizer bars.

- 46 Volt electrical system wires are bundled in dull yellow sheathing for identification.
- The 46 Volt electrical system does not contain a storage battery. It is powered by converting high voltage battery power. The wires are routed underneath the vehicle from the HV battery pack DC-DC converter.
- If the HV battery pack malfunctions, backup power is provided to the EPS motor by boosting the 12 Volt electrical system.

NOTE:
46 Volts has a higher arc potential than 12 Volts.

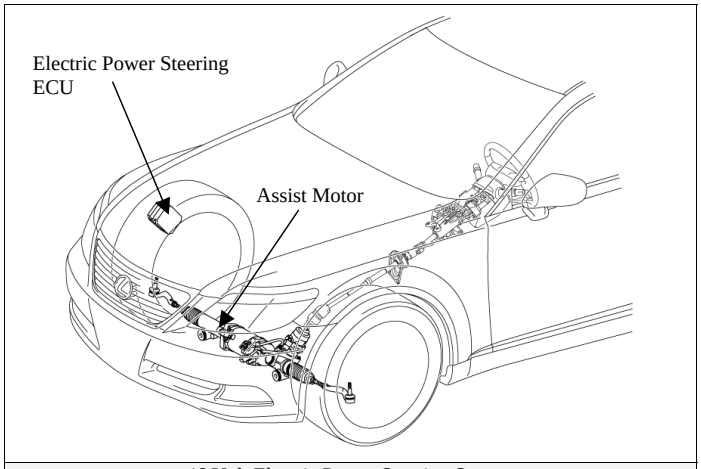

46 Volt Electric Power Steering System

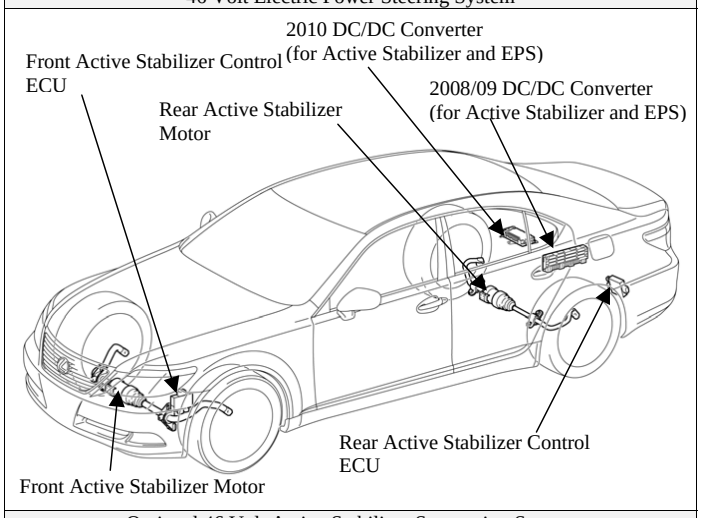

Optional 46 Volt Active Stabilizer Suspension System

Downloaded from www.Manualslib.com manuals search engine

Low Voltage Battery

Auxiliary Battery

- The LS 600h L contains a sealed lead-acid 12 Volt battery. The 12 Volt auxiliary battery powers the vehicle's electrical system similar to a conventional vehicle. As with conventional vehicles, the negative terminal of the auxiliary battery is grounded to the metal chassis of the vehicle.

- The auxiliary battery is located in the trunk. It is concealed by a fabric cover on the driver side in the rear quarter panel well.

  NOTE:
  An underhood label shows the location of the HV battery (traction battery) and 12 Volt auxiliary battery.

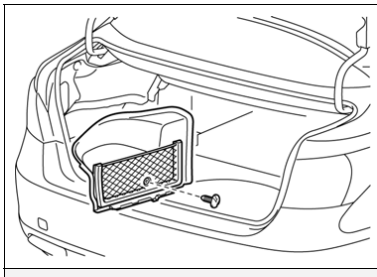

12 Volt Auxiliary Battery Fabric Cover

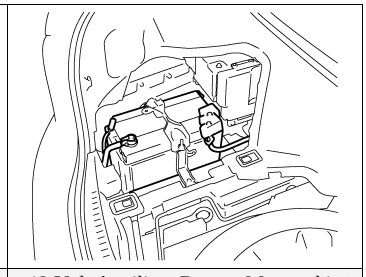

12 Volt Auxiliary Battery Mounted in Trunk (Driver Side)

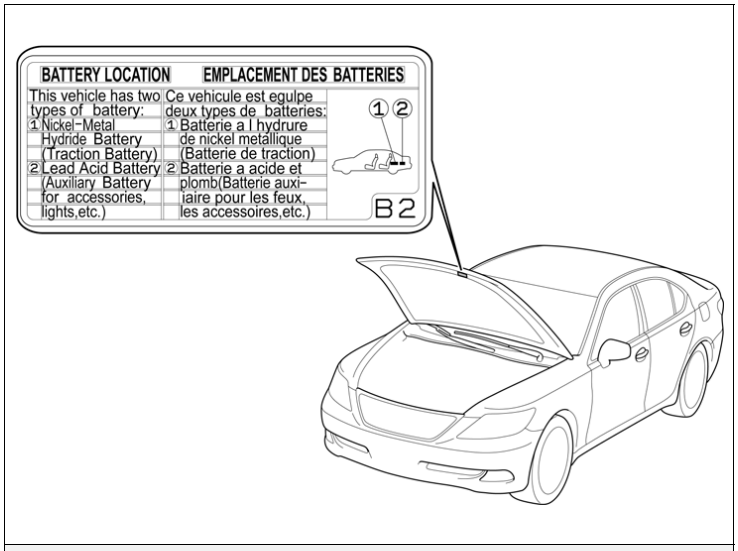

Battery Location Label

Downloaded from www.Manualslib.com manuals search engine

High Voltage Safety

The HV battery pack powers the high voltage electrical system with DC electricity. Positive and negative orange colored high voltage power cables are routed from the battery pack, under the vehicle floor pan, along the propeller shaft and transmission tunnel to the power control unit. The power control unit contains a circuit that boosts the HV battery voltage from 288 to 650 Volts DC. The power control unit creates 3-phase AC to power the motor and generator located in the transmission. Power cables are routed from the power control unit to each high voltage motor (electrical motor, electric generator, and A/C compressor). The following systems are intended to help keep occupants in the vehicle and emergency responders safe from high voltage electricity:

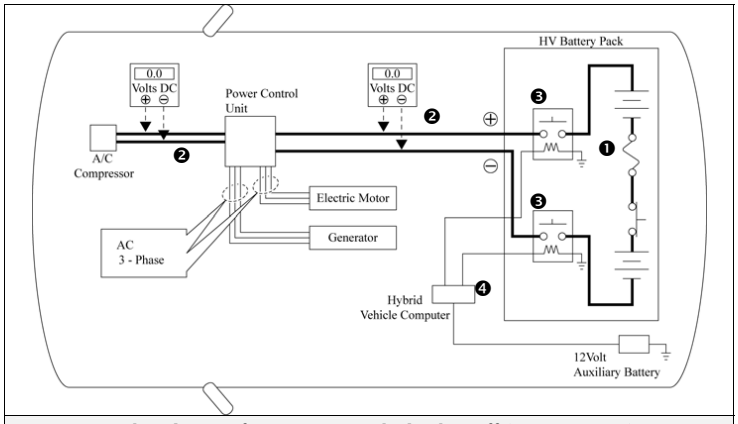

High Voltage Safety System – Vehicle Shut Off (**READY**-OFF)

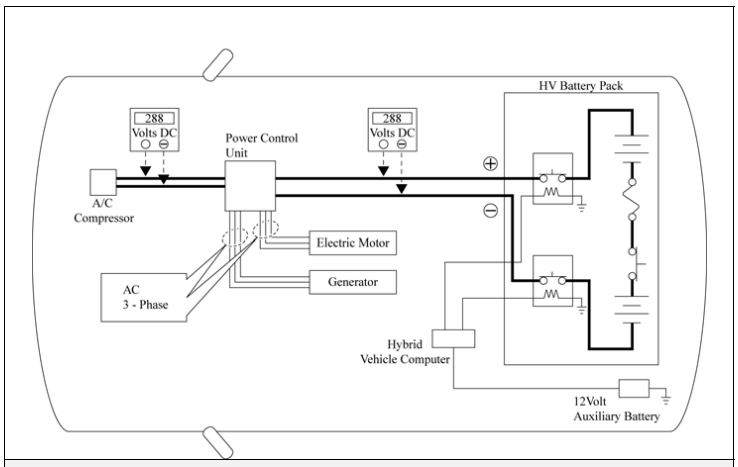

High Voltage Safety System – Vehicle On and Operational (**READY**-ON)

High Voltage Safety System

- A high voltage fuse ❶ provides short circuit protection in the HV battery pack.

- Positive and negative high voltage power cables ❷ connected to the HV battery pack are controlled by 12 Volt normally open relays ❸. When the vehicle is shut off, the relays stop electrical flow from leaving the HV battery pack.

> ⚠**WARNING:**
> *The high voltage system may remain powered for up to 10 minutes after the vehicle is shut off or disabled. To prevent serious injury or death from severe burns or electric shock, avoid touching, cutting, or breaching any orange high voltage power cable or high voltage component.*

- Both positive and negative power cables ❷ are insulated from the metal body. High voltage electricity flows through these cables and not through the metal vehicle body. The metal vehicle body is safe to touch because it is insulated from the high voltage components.

- A ground fault monitor ❹ continuously monitors for high voltage leakage to the metal chassis while the vehicle is running. If a malfunction is detected, the hybrid vehicle computer ❹ will illuminate the master warning light ⚠ in the instrument cluster and indicate "CHECK HYBRID SYSTEM" on the multi-information display.

Downloaded from www.Manualslib.com manuals search engine

SRS Airbags & Seat Belt Pretensioners

Standard Equipment

- Electronic frontal impact sensors (2) are mounted in the engine compartment ❶ as illustrated.
- Front seat belt pretensioners are mounted near the base of the B-pillars ❷.
- Rear seat belt pretensioners are mounted near the C-pillar on the rear seatbacks. ❸
- A frontal dual stage driver airbag ❹ is mounted in the steering wheel hub.
- A frontal twin-chamber shaped dual stage passenger airbag ❺ is integrated into the dashboard and deploys through the top of the dashboard.
- The SRS computer ❻, which contains an impact sensor, is mounted on the floor pan underneath the center armrest console.
- Front electronic side impact sensors (2) are mounted near the base of the B-pillars ❼.
- Rear electronic side impact sensors (2) are mounted near the base of the C-pillars ❽.
- Front seat side airbags ❾ are mounted in the seatbacks.
- Side curtain airbags ❿ are mounted along the outer edge inside the roof rails.
- Front knee airbags ⓫ are mounted on the driver side and passenger side lower portion of the dash.
- Pyrotechnic front seat active headrests ⓮(2010 model only see description on page 23).

Optional Equipment

- Rear seat side airbags ⓬ mounted in the rear seats are optional equipment.
- The optional passenger side rear ottoman power seat contains an airbag ⓭ mounted in the bottom seat cushion.
- The optional pre- collision safety system contains a radar sensory system, occupant seat sensor, and an electric motor-pyrotechnic pretensioner system. During a pre-collision event, an electric motor in the pretensioners retracts the slack in the front seatbelt. When conditions stabilize the electric motor will reverse itself. When the airbags deploy, the pyrotechnic pretensioners function normally.

⚠ **WARNING:**
The SRS may remain powered for up to 90 seconds after the vehicle is shut off or disabled. To prevent serious injury or death from unintentional SRS deployment, avoid breaching the SRS components.

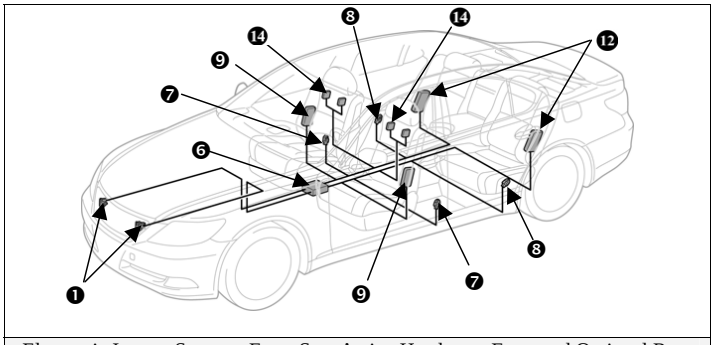

Electronic Impact Sensors, Front Seat Active Headrests, Front and Optional Rear Seat Side Airbags

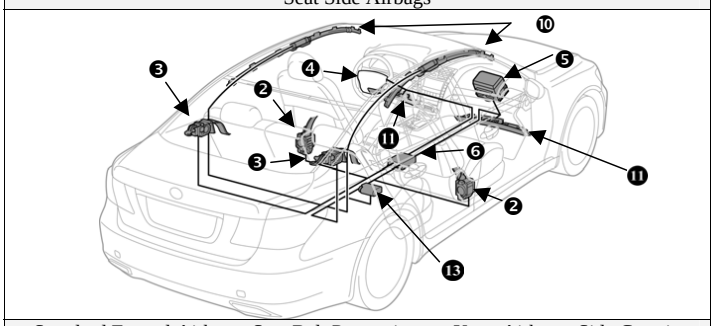

Standard Frontal Airbags, Seat Belt Pretensioners, Knee Airbags, Side Curtain Airbags, and Optional Seat Cushion Airbag

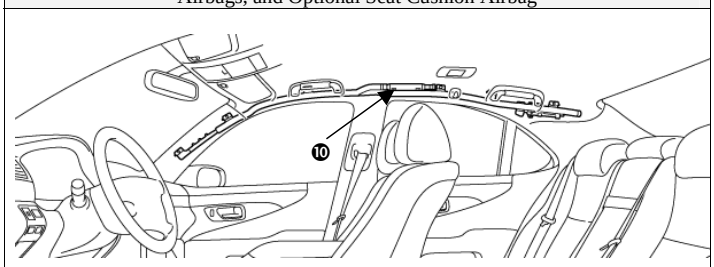

Side Curtain Airbag Inflator in Roof Rail

Downloaded from www.Manualslib.com manuals search engine

SRS Airbags & Seat Belt Pretensioners (Continued)

NOTE:
The front seatback mounted side airbags and the side curtain airbags may deploy independently of each other.

The knee airbags are designed to deploy simultaneously with the frontal airbags and seat belt pretensioners.

The LS 600h L is equipped with a standard front passenger occupant classification system that may prohibit the deployment of the front passenger frontal airbag, knee airbag, seatback mounted side airbag, front seat active headrest and seat belt pretensioners. If the passenger occupant classification system prohibits deployment during an SRS event, the passenger SRS will not re-arm nor deploy.

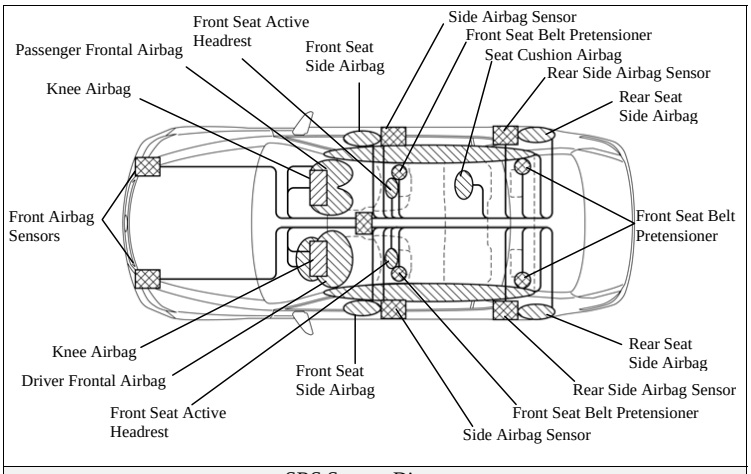

SRS System Diagram

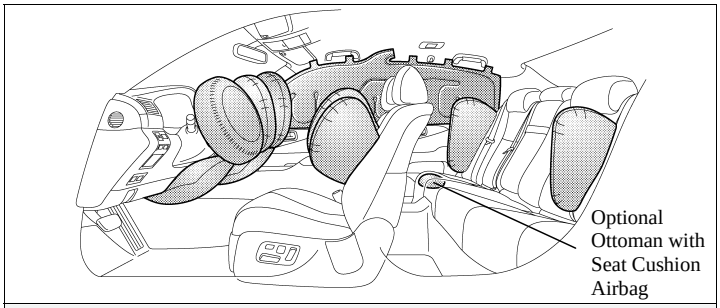

Frontal, Knee, Front Seatback Mounted Side, Side Curtain, Optional Rear Seat Side and Seat Cushion Airbags.

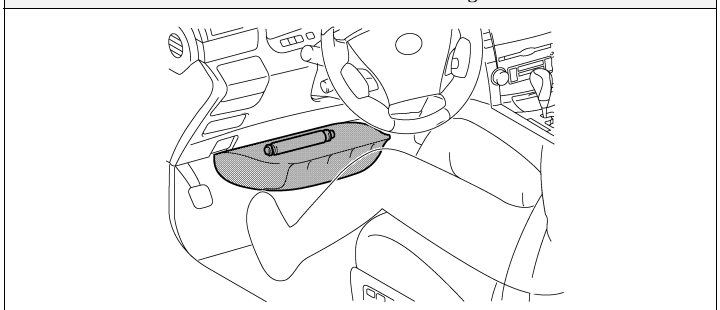

Driver Knee Airbag and Inflator

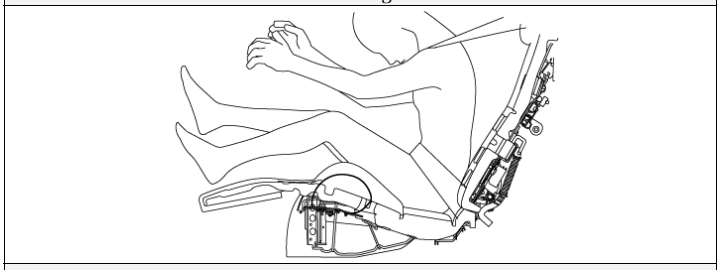

Passenger Side Rear Seat Cushion Airbag (Standard with Optional Ottoman Seat)

Downloaded from www.Manualslib.com manuals search engine

Emergency Response

On arrival, emergency responders should follow their standard operating procedures for vehicle incidents. Emergencies involving the LS 600h L may be handled like other automobiles except as noted in these guidelines for Extrication, Fire, Overhaul, Recovery, Spills, First Aid, and Submersion.

> ⚠ **WARNING:**
> - ***Never*** *assume the LS 600h L is shut off simply because it is silent.*
> - *Always observe the instrument cluster for the* ***READY*** *indicator status to verify whether the vehicle is on or shut off. The vehicle is shut off when the* ***READY*** *indicator is off.*
> - *Failure to shut off the vehicle before emergency response procedures are performed may result in serious injury or death from the unintentional deployment of the SRS or severe burns and electric shock from the high voltage electrical system.*

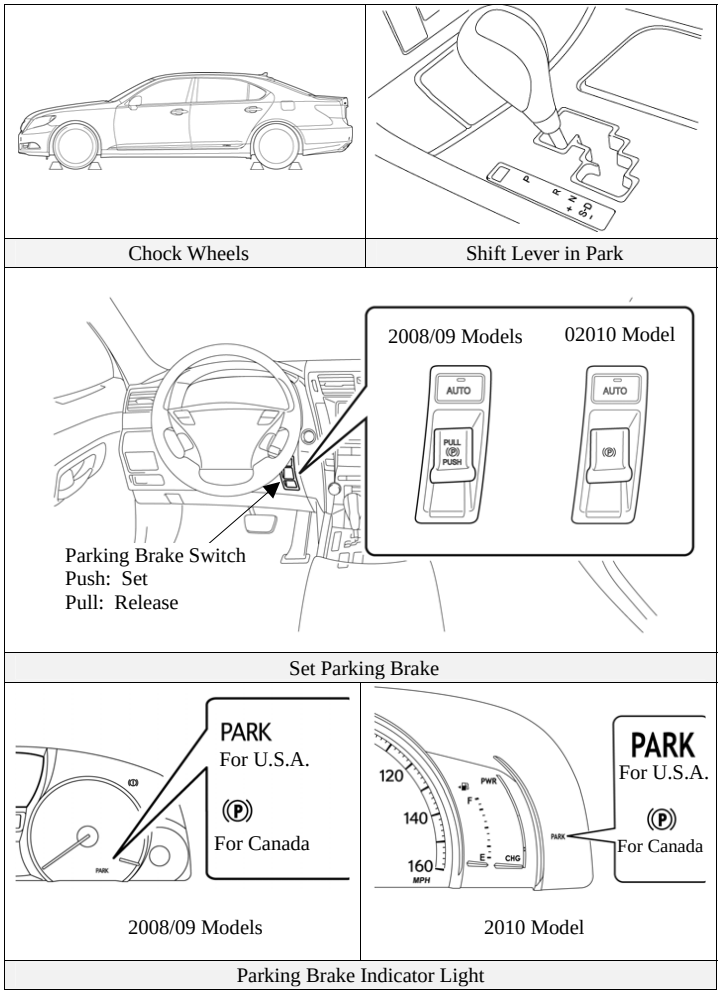

Chock Wheels | Shift Lever in Park

Set Parking Brake

Parking Brake Indicator Light

Extrication

- Immobilize Vehicle

  Chock wheels and set the parking brake.
  Move the shift lever to the **P**ark position.

  NOTE:
  The LS 600h L utilizes a push/pull parking brake switch that electro-mechanically sets/releases the rear parking brakes.
  - To set/release, push/pull the parking brake switch located on the dash to the right side of the steering column (refer to illustration).
  - If the AUTO button is set and illuminated, the parking brake will automatically set when the vehicle is shifted to the **P**ark position.
  - To verify that the parking brake is set, confirm that the **PARK** light illuminates on the instrument cluster (refer to illustration). The **PARK** light will turn off after approximately 15 seconds.

- Disable Vehicle

  Performing either of the following two procedures will shut the vehicle off and disable the HV battery pack, SRS, and gasoline fuel pump.

Downloaded from www.Manualslib.com manuals search engine

Emergency Response (Continued)

Extrication (Continued)

Procedure #1

1. Confirm the status of the **READY** indicator in the instrument cluster.
2. If the **READY** indicator is illuminated, the vehicle is on and operational. Shut off the vehicle by pushing the power button once.
3. The vehicle is already shut off if the instrument cluster lights and the **READY** indicator are not illuminated. Do **not** push the power button because the vehicle may start.
4. If the smart key is easily accessible, keep it at least 16 feet (5 meters) away from the vehicle.
5. If the smart key cannot be found, disconnect the 12 Volt auxiliary battery in the trunk to prevent accidental restarting of the vehicle.

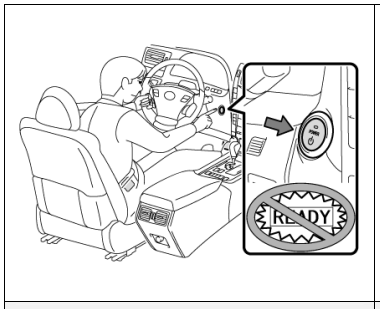

Shut Off Vehicle (**READY**-Off)

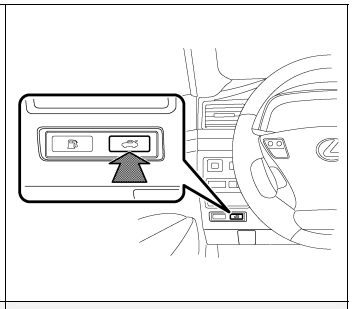

Electric Trunk Opener Switch

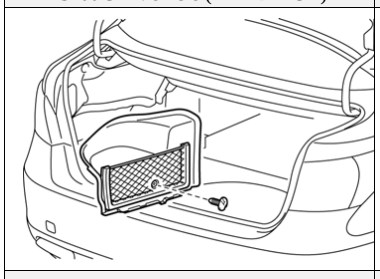

Remove 12 Volt Auxiliary Battery Fabric Cover

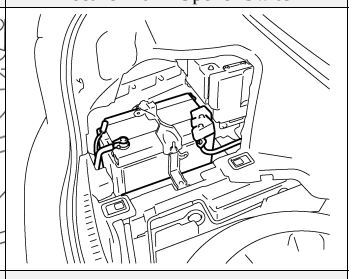

12 Volt Auxiliary Battery in Trunk (Driver Side)

Downloaded from www.Manualslib.com manuals search engine

Emergency Response (Continued)

Extrication (Continued)

Procedure #2 (Alternate if power button is inaccessible)

1. Remove the engine compartment and fuse box covers.
2. Remove the IG2 relay in the engine compartment fuse box (refer to illustration). If the correct relay cannot be recognized, pull both relays in the fuse box.
3. Disconnect the 12 Volt auxiliary battery in the trunk.

NOTE:
Before disconnecting the 12 Volt auxiliary battery, if necessary, set the parking brake, reposition the power seats, tilt/telescoping steering wheel, lower the windows, unlock the doors, open the trunk and the fuel door as required. A manual fuel door release is located in the trunk (see the illustration in the Roadside Assistance section on page 30). Once the 12 Volt auxiliary battery is disconnected, power controls will not operate.

⚠ **WARNING:**

- *The high voltage system may remain powered for up to 10 minutes after the vehicle is shut off or disabled. To prevent serious injury or death from severe burns or electric shock, avoid touching, cutting, or breaching any orange high voltage power cable or high voltage component.*
- *The SRS may remain powered for up to 90 seconds after the vehicle is shut off or disabled. To prevent serious injury or death from unintentional SRS deployment, avoid breaching the SRS components.*
- *If none of the disabling procedures can be performed, proceed with caution as there is no assurance that the high voltage electrical system, SRS, or fuel pump are disabled.*

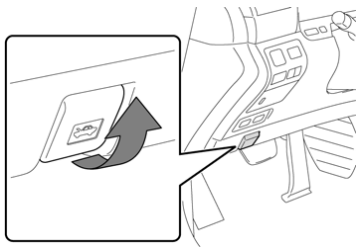

Remote Hood Release

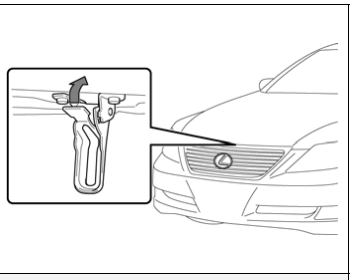

Hood Latch Release

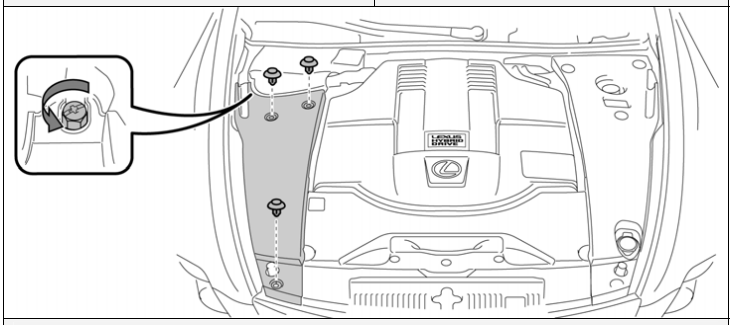

Remove Engine Compartment Cover

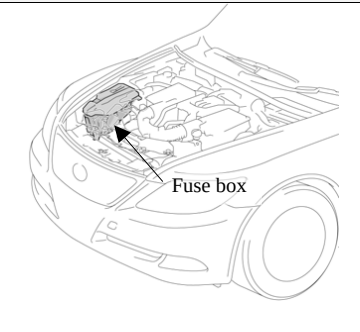

Remove Fuse Box Cover

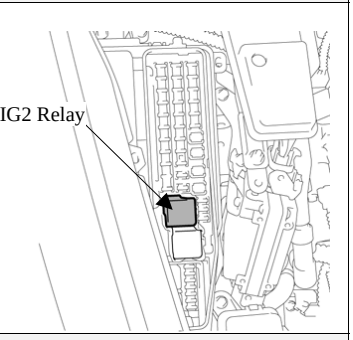

IG2 Relay Location in Engine Compartment Fuse Box

Downloaded from www.Manualslib.com manuals search engine

Emergency Response (Continued)

Extrication (Continued)

- Stabilize Vehicle
  Crib at (4) points directly under the front and rear pillars.
  Do not place cribbing under the high voltage power cables, exhaust system, or fuel system.

  NOTE:
  The LS 600h L is equipped with a tire pressure warning system that by design prevents pulling the metal valve stem with integral transmitter from the wheel. Snapping the stem with pliers or removing the valve cap and Schrader valve will release the air in the tire.

  The LS 600h L is equipped with an air suspension system. In the event of a collision, fire or malfunction, air leakage may occur, allowing the body to drop.

- Access Patients
  Glass Removal
  The LS 600h L is equipped with laminated side windows having similar properties as laminated windshield glass. If side glass removal is required, use the same techniques as the front windshield glass.

  Types of glazing found on the LS 600h L
  – Laminated front windshield
  – Laminated side windows
  – Tempered rear window

  SRS Awareness
  Responders need to be cautious when working in close proximity to undeployed airbags and seat belt pretensioners. Front dual stage airbags automatically ignite both stages within a fraction of a second.

  Door Removal/Displacement
  Doors can be removed by conventional rescue tools such as hand, electric, and hydraulic tools. In certain situations, it may be easier to pry back the vehicle body to expose and unbolt the hinges.

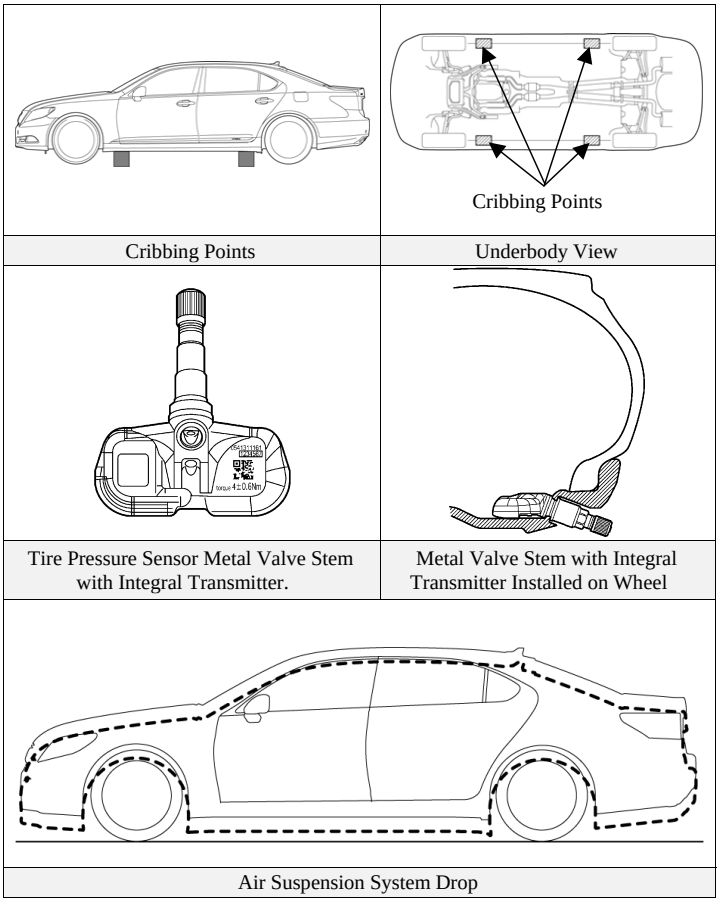

Cribbing Points | Underbody View

Tire Pressure Sensor Metal Valve Stem with Integral Transmitter. | Metal Valve Stem with Integral Transmitter Installed on Wheel

Air Suspension System Drop

Downloaded from www.Manualslib.com manuals search engine

Emergency Response (Continued)

Extrication (Continued)

Roof Removal

The LS 600h L is equipped with side curtain airbags. When undeployed, total roof removal is not recommended. Patient access through the roof can be performed by cutting the roof center section inboard of the roof rails as illustrated. This would avoid breaching the side curtain airbags, inflators, and wiring harness.

NOTE:
The side curtain airbags may be identified as illustrated on this page (additional component details on page 16).

Dash Displacement

The LS 600h L is equipped with side curtain airbags. When undeployed, total roof removal is not recommended to avoid breaching the side curtain airbags, inflators, and wiring harness. As an alternative, dash displacement may be performed by using a Modified Dash Roll.

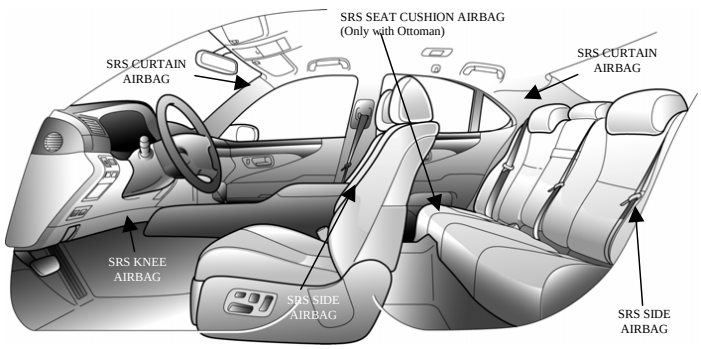

Side, Side Curtain, Knee, and Cushion Airbag Identifiers.

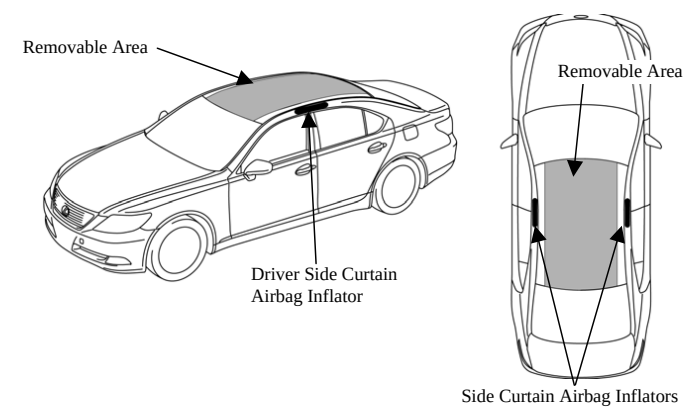

Roof Removal Area

Downloaded from www.Manualslib.com manuals search engine

Emergency Response (Continued)

Extrication (Continued)

Rescue Lift Air Bags

Responders should not place cribbing or rescue lift air bags under the high voltage power cables, exhaust system, or fuel system.

Repositioning Steering Wheel and Front Seats

Power tilt/telescopic steering wheel and seat controls are shown in the illustrations.

Front Headrest Removal

The LS 600h L is equipped with front seat power adjustable headrests using the power seat controls. The headrest cannot be removed.

Reposition the seat and headrest prior to disconnecting the 12 Volt auxiliary battery.

Active Headrest (2010 model only)

The 2010 LS 600h L is equipped with front seat active headrests for the driver and passenger. The active headrest consists of a pyrotechnic inflator contained in the seat back, rod, and link mechanism.

When the collision sensor in the SRS computer detects a rear collision of sufficient force, the inflator is ignited, pushing up the piston. The rod inside the headrest stay is pushed up by the piston and the headrest lock is released via the link mechanism. The spring retracts pushing the front surface of the headrest 2 inches (42 mm) outward and 2 inches (39 mm) upward to provide head support in the event of a rear collision.

NOTE:
The active headrest does not contain an identifier such as embossed lettering, label, or tag. Reposition the seat and headrest prior to disconnecting the 12 Volt auxiliary battery.

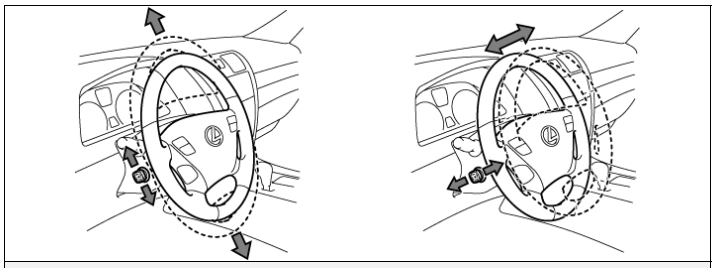

Power Tilt and Telescoping Controls

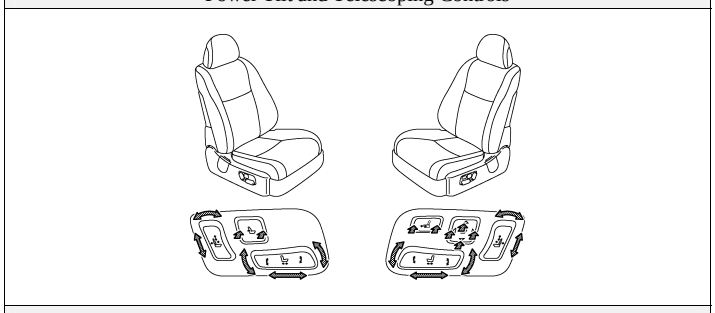

Front Power Seat Controls

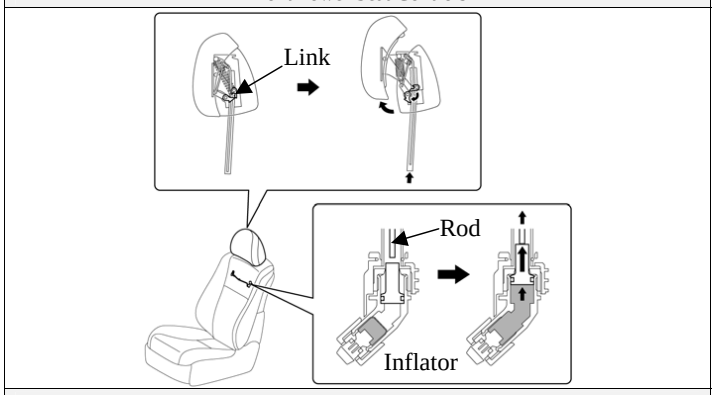

Front Seat Active Headrest (2010 model only)

Downloaded from www.Manualslib.com manuals search engine

Emergency Response (Continued)

Extrication (Continued)

Repositioning Rear Seats

Power adjustable rear seats are standard in the LS 600h L. The rear seat control panel shown in the illustration should be used if it is necessary to adjust the rear seat position.

Before adjusting the position of a rear seat, select either the left or right hand seat using the selection switch.

NOTE:
In the event that a rear door is opened, the optional rear seat ottoman may automatically fold closed. To prevent the rear seat from retracting, disconnect the 12 Volt auxiliary battery before opening the rear doors.

The LS 600h L has an electrochromic auto dimming rear view mirror. The mirror contains a minimal amount of transparent gel sealed between two glass plates that will not normally leak.

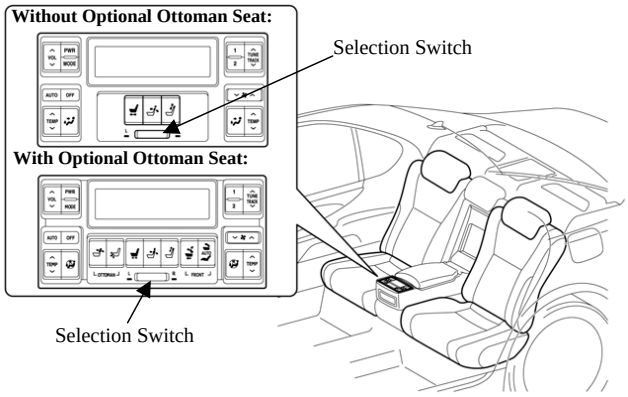

Rear Power Seat Control Panel (5 Passenger)

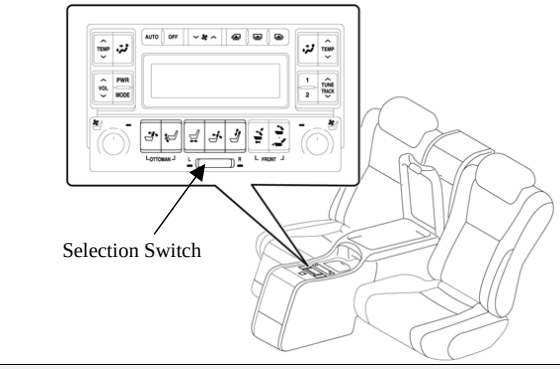

Rear Power Seat Control Panel (4 Passenger with Optional Ottoman Seat)

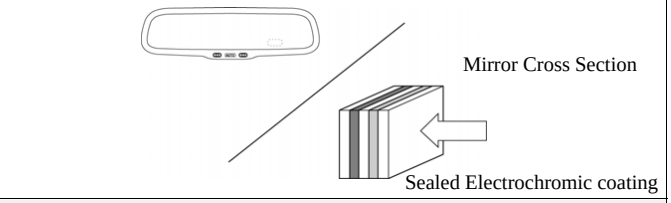

Electrochromic Auto Dimming Mirror

Downloaded from www.Manualslib.com manuals search engine

Emergency Response (Continued)

Fire

Approach and extinguish a fire using proper vehicle fire fighting practices as recommended by NFPA, IFSTA, or the National Fire Academy (USA).

- Extinguishing Agent
  Water has been proven to be a suitable extinguishing agent.

- Initial Fire Attack
  Perform a fast, aggressive fire attack.
  Divert the runoff from entering watershed areas.
  Attack teams may not be able to identify an LS 600h L until the fire has been knocked down and overhaul operations have commenced.

  NOTE:
  The LS 600h L is equipped with an air suspension system. In the event of fire, air leakage may occur, allowing the body to drop.

- Fire in the HV Battery Pack
  Should a fire occur in the NiMH HV battery pack, attack crews should utilize a water stream or fog pattern to extinguish any fire within the trunk *except* for the HV battery pack.

> ⚠ **WARNING:**
> - *The NiMH battery electrolyte is a caustic alkaline (pH 13.5) that is damaging to human tissues. To avoid injury by coming in contact with the electrolyte, wear proper personal protective equipment.*
> - *The battery modules are contained within a metal case and accessibility is limited.*
> - *To avoid serious injury or death from severe burns or electric shock,* ***never*** *breach or remove the high voltage battery pack cover under any circumstance including fire.*

When allowed to burn themselves out, the LS 600h L NiMH battery modules burn rapidly and can quickly be reduced to ashes except for the metal.

Offensive Fire Attack

Normally flooding a NiMH HV battery pack with copious amounts of water at a safe distance will effectively control the HV battery pack fire by cooling the adjacent NiMH battery modules to a point below their ignition temperature. The remaining modules on fire, if not extinguished by the water, will burn themselves out.

However, flooding the LS 600h L HV battery pack is *not* recommended due to the battery case design and location preventing the responder from properly applying water through the available vent openings safely. Therefore, it is recommended that the incident commander allow the LS 600h L HV battery pack to burn itself out.

Defensive Fire Attack

If the decision has been made to fight the fire using a defensive attack, the fire attack crew should pull back a safe distance and allow the NiMH battery modules to burn themselves out. During this defensive operation, fire crews may utilize a water stream or fog pattern to protect exposures or to control the path of smoke.

Downloaded from www.Manualslib.com manuals search engine

Emergency Response (Continued)

Overhaul

During overhaul, immobilize and disable the vehicle if not already done. Refer to illustrations on page 18, 19 and 20. The HV battery cover should ***never*** be breached or removed under any circumstances including fire. Doing so may result in severe electrical burns, shock, or electrocution.

- Immobilize Vehicle

  Chock wheels and set the parking brake.
  Move the shift lever to the **P**ark position.

  NOTE:
  The LS 600h L utilizes a push/pull parking brake switch that electro-mechanically sets/releases the rear parking brakes.
  - To set/release, push/pull the parking brake switch located on the dash to the right side of the steering column (refer to illustration on page 18).
  - If the AUTO button is set and illuminated, the parking brake will automatically set when the vehicle is shifted to the **P**ark position.
  - To verify that the parking brake is set, confirm that the **PARK** light illuminates on the instrument cluster (refer to illustration on page 18). The **PARK** light will turn off after approximately 15 seconds.

- Disable Vehicle

  Performing either of the following two procedures will shut the vehicle off and disable the HV battery pack, SRS, and gasoline fuel pump.

  Procedure #1
  1. Confirm the status of the **READY** indicator in the instrument cluster.
  2. If the **READY** indicator is illuminated, the vehicle is on and operational. Shut off the vehicle by pushing the power button once.
  3. The vehicle is already shut off if the instrument cluster lights and the **READY** indicator are not illuminated. Do **not** push the power button because the vehicle may start.
  4. If the smart key is easily accessible, keep it at least 16 feet (5 meters) away from the vehicle.
  5. If the smart key cannot be found, disconnect the 12 Volt auxiliary battery in the trunk to prevent accidental restarting of the vehicle.

  Procedure #2 (Alternate if power button is inaccessible)
  1. Remove the engine compartment cover and fuse box cover.
  2. Remove the IG2 relay in the engine compartment fuse box as illustrated on page 20. If the correct relay cannot be recognized, pull both relays in the fuse box.
  3. Disconnect the 12 Volt auxiliary battery in the trunk.

- Stabilize Vehicle

  If not already done, properly crib the vehicle to prevent the vehicle body from dropping.

Recovering/Recycling of NiMH HV Battery Pack

Clean up of the HV battery pack can be accomplished by the vehicle recovery crew without further concern of runoff or spillage. For information regarding recycling of the HV battery pack, contact the nearest Lexus dealer, or:

United States: (800) 255-3987, Canada: (800) 265-3987

Downloaded from www.Manualslib.com manuals search engine

Emergency Response (Continued)

Spills

The LS 600h L contains the same common automotive fluids used in other non-hybrid Lexus vehicles, with the exception of NiMH electrolyte used in the HV battery pack. The NiMH battery electrolyte is a caustic alkaline (pH 13.5) that is damaging to human tissues. The electrolyte, however, is absorbed in the cell plates and will not normally spill or leak out even if a battery module is cracked. A catastrophic crash that would breach both the metal battery pack case and a metal battery module would be a rare occurrence.

Similar to the use of baking soda to neutralize a lead-acid battery electrolyte spill, a dilute boric acid solution or vinegar can be used to neutralize a NiMH battery electrolyte spill.

NOTE:
Electrolyte leakage from the HV battery pack is unlikely due to its construction and the amount of available electrolyte contained within the NiMH modules. Any spillage would not warrant a declaration as a hazardous material incident. Responders should follow the recommendations as outlined in this emergency response guide.

In an emergency, Material Safety Data Sheets (MSDS) are available by contacting:

United States: CHEMTREC at (800) 424-9300
Canada: CANUTEC at *666 or (613) 996-6666 (collect)

- Handle NiMH electrolyte spills using the following Personal Protective Equipment (PPE):
  Splash shield or safety goggles. Fold down helmet shields are not acceptable for acid or electrolyte spills.
  Rubber, latex or nitrile gloves.
  Apron suitable for alkaline.
  Rubber boots.

- Neutralize NiMH Electrolyte
  Use a boric acid solution or vinegar.
  Boric acid solution - 800 grams boric acid to 20 liters water or 5.5 ounces boric acid to 1 gallon of water.

First Aid

Emergency responders may not be familiar with a NiMH electrolyte exposure when rendering aid to a patient. Exposure to the electrolyte is unlikely except in a catastrophic crash or through improper handling. Utilize the following guidelines in the event of exposure.

⚠ **WARNING:**
The NiMH battery electrolyte is a caustic alkaline (pH 13.5) that is damaging to human tissues. To avoid injury by coming in contact with the electrolyte, wear proper personal protective equipment.

- Wear Personal Protective Equipment (PPE)
  Splash shield or safety goggles. Fold down helmet shields are not acceptable for acid or electrolyte spills.
  Rubber, latex or nitrile gloves.
  Apron suitable for alkaline.
  Rubber boots.

- Absorption
  Perform gross decontamination by removing affected clothing and properly disposing of the garments.
  Rinse the affected areas with water for 20 minutes.
  Transport patients to the nearest emergency medical care facility.

- Inhalation in Non-Fire Situations
  No toxic gases are emitted under normal conditions.

- Inhalation in Fire Situations
  Toxic gases are given off as by-products of combustion. All responders in the Hot Zone should wear the proper PPE for fire fighting including SCBA.
  Move a patient from the hazardous environment to a safe area and administer oxygen.
  Transport patients to the nearest emergency medical care facility.

- Ingestion
  Do not induce vomiting.
  Allow a patient to drink large quantities of water to dilute electrolyte (never give water to an unconscious person).

Downloaded from www.Manualslib.com manuals search engine

Emergency Response (Continued)

First Aid (Continued)

If vomiting occurs spontaneously, keep the patient's head lowered and forward to reduce the risk of asphyxiation.
Transport patients to the nearest emergency medical care facility.

Submersion

A submerged hybrid vehicle does not have high voltage potential on the metal vehicle body, and is safe to touch.

Access Patients

Responders can access the patient and perform normal extrication procedures. High voltage orange color coded power cables and high voltage components should never be touched, cut, or breached.

Vehicle Recovery

If a hybrid vehicle is fully or partially submerged in water, emergency responders may not be able to determine if the vehicle has been automatically disabled. The LS 600h L may be handled by following these recommendations:

1. Remove the vehicle from the water.
2. Drain the water from the vehicle if possible.
3. Follow the immobilizing and disabling procedures on page 18, 19 and 20.

Downloaded from www.Manualslib.com manuals search engine

Roadside Assistance

Lexus LS 600h L roadside assistance may be handled like conventional Lexus vehicles except as noted in the following pages.

Shift Lever

Similar to most Lexus vehicles, the LS 600h L uses a gated shift lever as shown in the illustration. However, the LS 600h L shift lever includes an **S** position for 8 levels of engine braking.

Towing

The LS 600h L is a mechanical all-wheel drive vehicle and it must be towed with all four wheels off the ground. Failure to do so may cause serious damage to vehicle components.

- The vehicle may be shifted out of **P**ark into **N**eutral by turning the ignition-on, depressing the brake, then moving the gated shift lever to **N**.
- If the shift lever cannot be moved out of **P**ark, a shift lock release button is provided under the cover near the shift lever as shown in the illustration.
- If a tow truck is not available, in an emergency the vehicle may be temporarily towed using a cable or chain secured to the emergency towing eyelet. This should only be attempted on hard, paved roads for short distances at low speeds. The eyelet is located with the tools in the trunk, refer to the illustration on page 30.

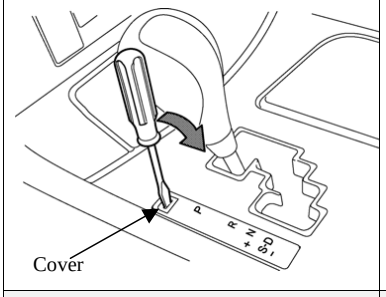

Remove Cover

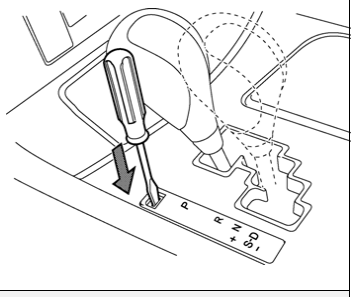

Push in Shift Lock Release

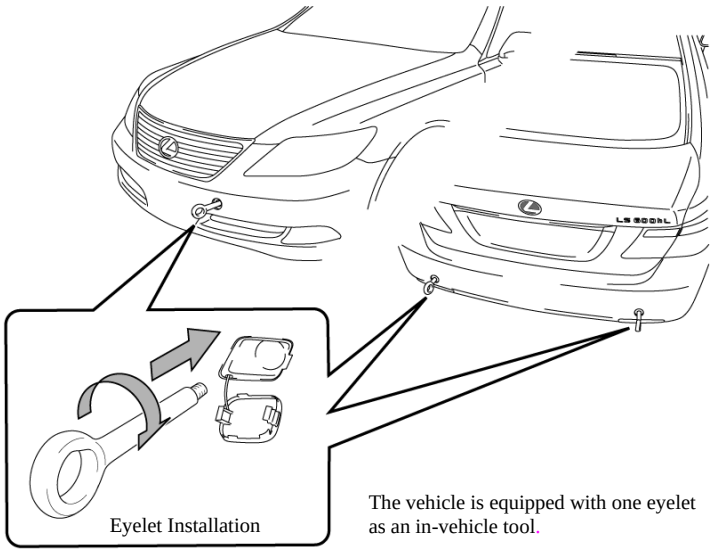

Towing Eyelet Mounting Locations

Downloaded from www.Manualslib.com manuals search engine

Roadside Assistance (Continued)

Electric Trunk Opener

The LS 600h L is equipped with an electric trunk opener. In the event of 12 Volt power loss, the trunk can be opened with the metal cut key hidden in the smart key.

Electric Fuel Door Opener

The LS 600h L is equipped with an electric fuel door opener. In the event of 12 Volt power loss, the fuel door can only be opened using the manual release located inside the trunk.

> ⚠ **WARNING:**
> The LS 600h L has a fuel vapor containment system that results in the tank pressure being higher than that of a conventional vehicle. If the fuel filler cap is removed after using the manual fuel door release, the vehicle will not automatically reduce the fuel tank pressure. Opening the fuel cap in this state will allow pressurized fuel vapors to escape, and fuel may also be discharged from the filler inlet. For these reasons, be extremely careful and open the fuel cap slowly.

Spare Tire

The jack, tools, and spare tire are provided in the trunk as illustrated.

Electric Parking Brake

The LS 600h L is equipped with an electric parking brake set/release switch. In the event of a 12 Volt power loss, the parking brake cannot be electrically operated. The parking brake can be manually released using the on-board tools.

- Remove the spare tire from inside the trunk.
- Remove the plug as illustrated.
- Insert the vehicle tool in the hole. While pressing firmly on the tool, turn it counter-clockwise until the parking brake is released.

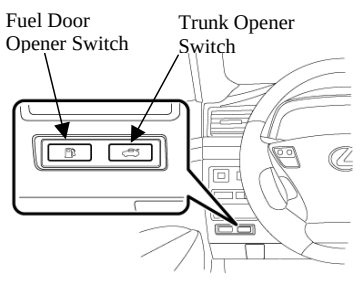

Electric Fuel Door and Trunk Opener Switches

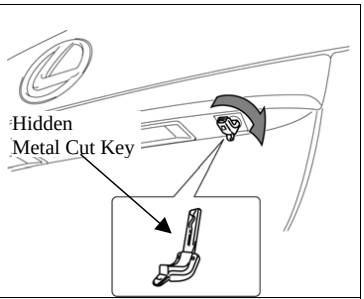

Manual Trunk Opening with the Metal Cut Key

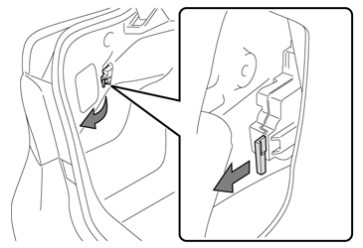

Manual Fuel Door Release

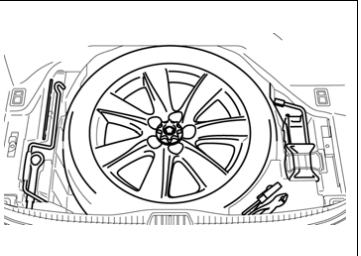

Tools and Spare Tire in the Trunk

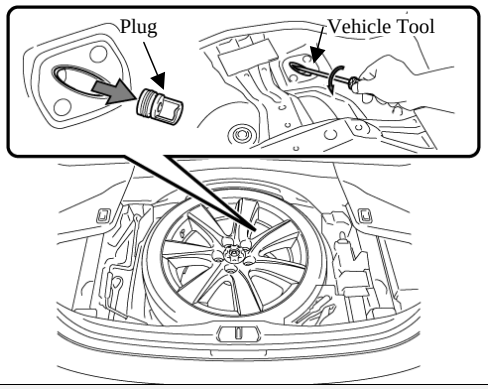

Manual Parking Brake Release

Downloaded from www.Manualslib.com manuals search engine

Roadside Assistance (Continued)

Jump Starting

The 12 Volt auxiliary battery may be jump started if the vehicle does not start and the instrument cluster gauges are dim or off after depressing the brake pedal and pushing the power button.

The 12 Volt auxiliary battery is located in the trunk. The trunk opener will not operate if the auxiliary battery is discharged. Instead use the metal cut key hidden in the smart key to open the trunk.

- Open the trunk, and remove the 12 Volt auxiliary battery cover on the driver side.
- Connect the positive jumper cable to the positive battery post.
- Connect the negative jumper cable to the negative battery post.
- Place the smart key in proximity to the interior of the vehicle, depress the brake pedal, and push the power button.

  NOTE:
  If the vehicle does not recognize the smart key after connecting the booster battery to the vehicle, open and close the driver door when the vehicle is shut off.

  If the smart key internal battery is dead, touch the Lexus emblem side of the smart key to the power button during the start sequence. See the instructions and illustrations on page 10 for more details.
- The high voltage HV battery pack cannot be jump started.

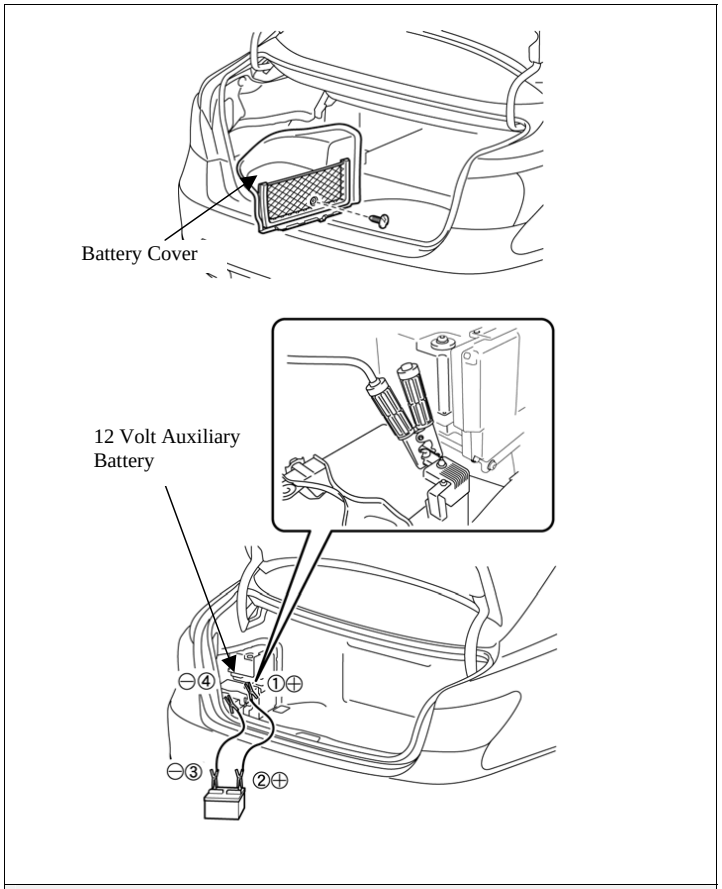

Jumper Cable Connections

Immobilizer & Anti-Theft Alarm

The LS 600h L is equipped with an immobilizer system and an anti-theft alarm as standard equipment.

- The vehicle can be started only with a registered smart key.
- To disarm the anti-theft alarm, unlock the door by using the smart key button, hidden metal cut key, or door handle touch sensor. Turning the ignition-on or starting the vehicle will also disarm the anti-theft alarm.

Downloaded from www.Manualslib.com manuals search engine