Table of Contents

E60 Driveline

Subject **Page**

E60 Driveline
Objectives of the Module 2

Automatic Transmissions
Purpose of the System 3
System Components 4
Principle of Operation 6
Workshop Hints 10

Manual Transmissions
Manual Gearboxes 10

Sequential Manual Gearbox (SMG)
Purpose of the System 11
System Components 12
Workshop Hints 15

Propeller Shaft, Final Drive, Output Shafts
Purpose of the System 17
System Components 17

cardiagn.com

Initial Print Date: 08/03 Revision Date: 09/03

E60 Driveline

Model: E60 - 525i, 530i, 545i

Production: Start of Production MY 2004

Objectives:

After completion of this module you will be able to:

- Describe the changes to the Automatic Transmissions for use in the E60.
- Identify the two types of Manual Transmissions used in the E60.
- Explain the changes to SMG Transmission / operation for use in the E60.
- Identify the correct Driveline components for the different engine / gearbox combinations.

cardiagn.com

E60 Driveline - Automatic Transmissions GA6HP19Z / GA6HP26Z

Purpose of the System

BMW has developed an automatic six speed gearbox together with ZF (Zahnradfabrik Friedrichshafen), designated the GA6HP19Z / GA6HP26Z for the E60. It represents a further development of transmission technology in BMW automatic gearboxes. These gearboxes make an important contribution to the features of the E60.

The mechanical power transmission of the gearbox has been optimized with regard to gearshift comfort, quality and reduced fuel consumption. The engine torque is transferred to the gearbox by a torque converter with a controlled lockup clutch. The six forward gears and the reverse gear are produced by a Lepelletier planetary gear train. The gears are shifted by multi-disc clutches.

The GA6HP19Z and GA6HP26Z transmissions are based on the same design, they feature different torque converters and clutches. On the E60, the drive stages and the parking lock are controlled directly by the selector lever in the center console. This section addresses the changes necessary for the E60. For additional detailed information on the GA6HP operation and workshop hints (repair procedures), refer to the ST042 E65 Part 2 training hand out.

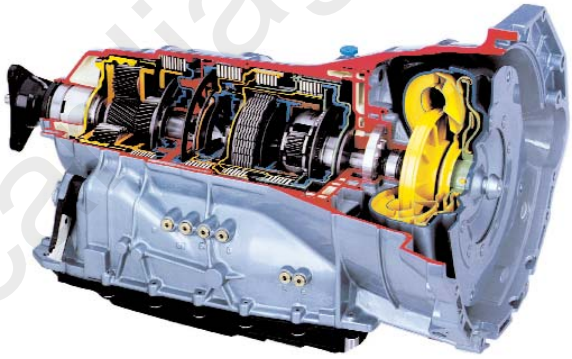

KT-7036

The E60 automatic gearboxes have the following advantages:

- Designed as a 6-speed gearbox with an overdrive ratio in 5th and 6th gear, reducing fuel consumption.
- The 6-speed gearbox allows for more gear spread, improving vehicle acceleration.
- The number of interfaces has been reduced by using the Mechatronics Module for the electronic transmission.
- Lifetime oil fill.

cadiag.com

Technical Data

Index	Explanation
Type	Passenger vehicle automatic gearbox with 6 forward gears and one reverse gear in standard arrangement with adaptive Electrohydraulic control
525i, 530i - GA6HP19Z: Max. torque at 4000 rpm Max. power output at 5500 rpm	 350 Nm 180 kW
545i - GA6HP26Z: Max. torque at 4200 rpm Max. power output at 5800 rpm	 600 Nm 320 kW
Torque converter Max. permissible continuous speed	With slip-controlled torque converter lockup clutch in the gears 1 to 6 7000 rpm
Gear ratio, 1st gear Gear ratio, 2nd gear Gear ratio, 3rd gear Gear ratio, 4th gear Gear ratio, 5th gear Gear ratio, 6th gear Gear ratio, reverse gear	4.171 2.34 1.521 1.143 0.867 0.691 3.403
Weight	GA6HP19Z: 72 to 76.7 kg including oil GA6HP26Z: 84 to 89 kg including oil

cardiagn.com

System Components

Parking Lock Operation

On the E60, the parking lock is operated via the selector lever in the center console. A cable assembly provides the connection to the gearbox (as on the E46 and E39).

The drive range switch and the hydraulic selector are operated together by the selector lever in connection with the cable assembly.

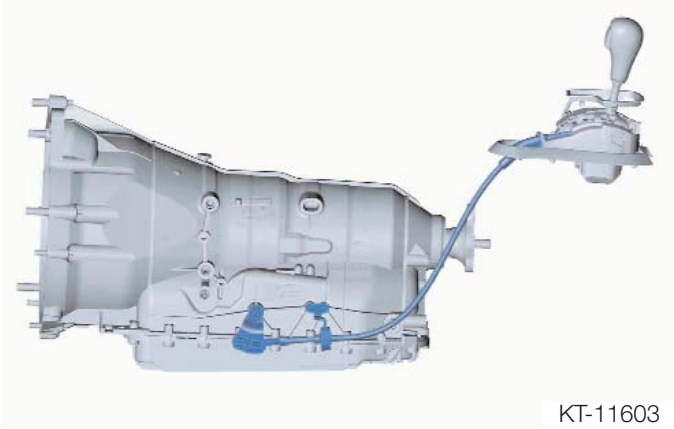

KT-11603

Mechatronics Module

The mechatronic module is a combination of the hydraulic valve body and electronic control module which are installed in the oil sump. This offers the advantages of improved shift quality, increased driving comfort and increased reliability due to the reduced number of electrical connections and interfaces.

The hydraulic valve body contains valves, springs, dampers and electric solenoid valves. *The electronic control module manages the complete electronic control of the transmission and is an integral part of the valve body (replaceable as a complete unit).* The electronic control module is completely sealed and oil tight.

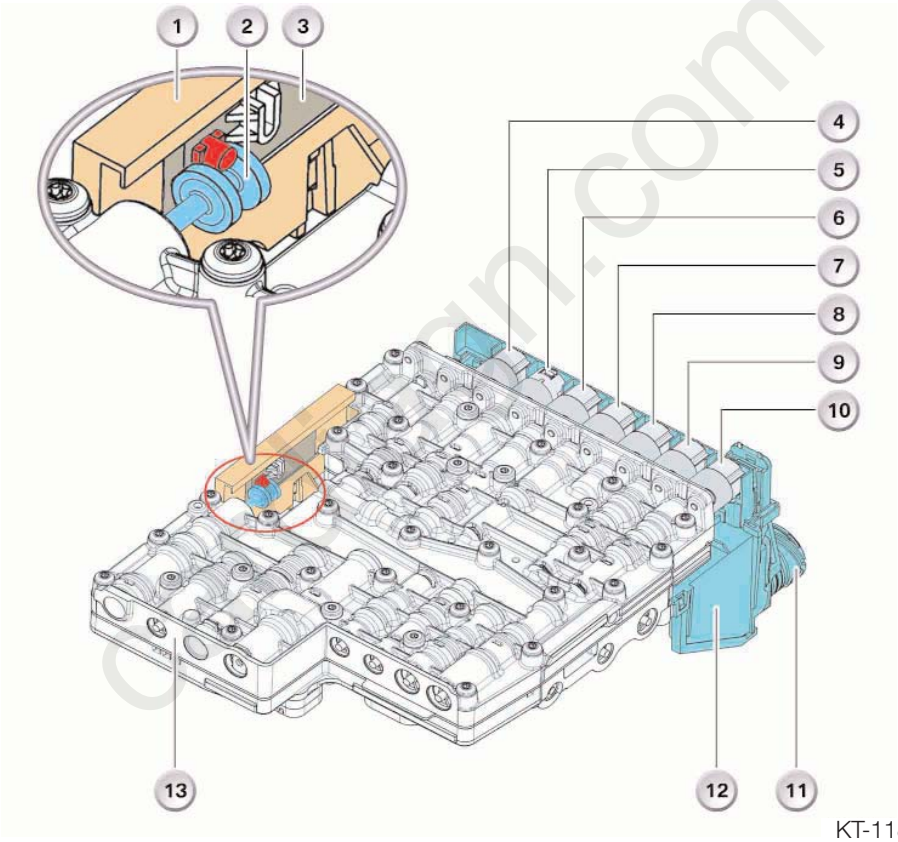

KT-11865

1. Drive range switch with 4 Hall sensors
2. Hydraulic selector (shaft)
3. Slide
4. EDS 6
5. Solenoid valve 1
6. EDS 4
7. EDS 5
8. EDS 3
9. EDS 2
10. EDS 1
11. Gearbox electrical connector (to harness)
12. Electronic transmission control unit (EGS)
13. Valve body

Principle of Operation

Transmission Control

The GA6HP19Z / GA6HP26Z gearbox is controlled by the mechatronics module that is made up of a combination of the valve body and electronic transmission control unit (EGS). The drive range switch (for drive ranges P, R, N and D) is located in the mechatronics module. It is operated by the selector lever in connection with a bowden cable assembly.

The electrical signals of the drive range switch are evaluated in the mechatronics module and used for the purpose of controlling the solenoid valves and pressure regulator. The hydraulic selector (shaft in the valvebody) is shifted (P, R, N, D) and the parking lock is operated by the bowden cable assembly.

The sequential gearshift takes place electrically by a switch on the selector lever mechanism (see automatic and Steptronic mode).

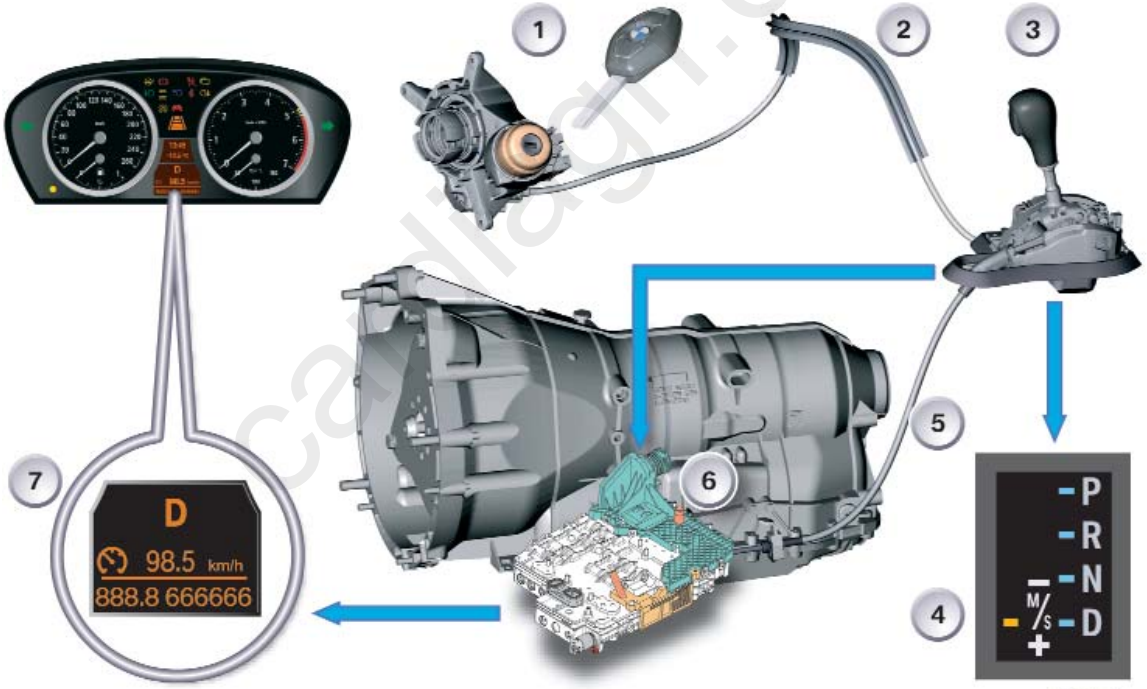

KT-11807

1. Ignition lock
2. Bowden cable assembly for interlock
3. Selector lever
4. Lighting of gate pattern on selector lever
5. Bowden cable assembly (drive range switch/parking lock)
6. Mechatronics module
7. Display in instrument cluster

The electronic transmission control unit is an integral part of the mechatronics module (installed in the oil sump of the gearbox). The electronic inputs are evaluated in the control unit and electronic output signals control the actuators. The control unit is integrated in the E60 PT-CAN system.

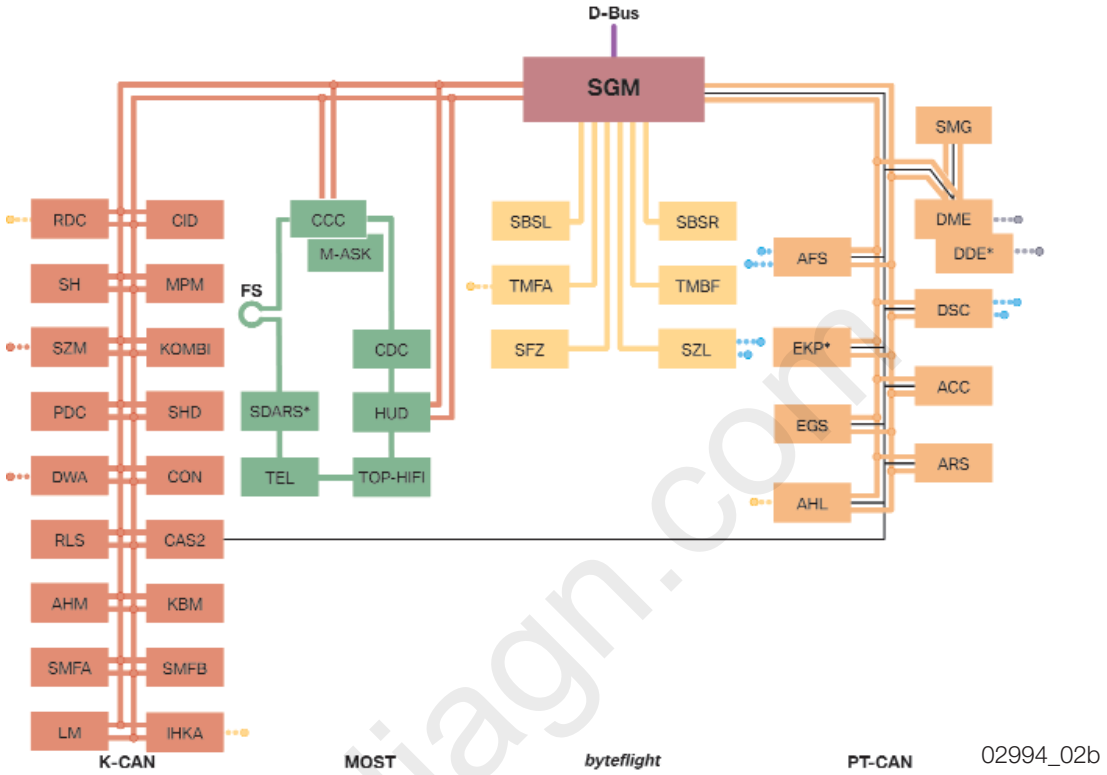

The data that the EGS requires for shifting gears, such as injection timing, engine speed, throttle valve angle, engine temperature and engine intervention, are transmitted on the PT-CAN bus. The solenoid valves and the pressure actuator are activated directly by the Mechatronics Module. Messages that are sent via the PT-CAN bus to the EGS control unit and from the EGS control unit are:

Signals	*Transmitter*	*Receiver*
Ignition terminal status	CAS	EGS
Transmission data	EGS	CAS
Engine data	ECM	EGS
Wheel speeds	DSC	EGS
Display, transmission data	EGS	Instrument cluster
Check control message	EGS	Instrument cluster

Hall sensors detect the turbine and output speed of the gearbox. The signal from the drive range switch is also routed via 4 Hall sensors to the mechatronics module. Two temperature sensors are used for acquiring the transmission fluid temperature.

cardiagn.com

Automatic and Steptronic Mode

The shift gate pattern is located in the selector lever panel. The engaged drive range is highlighted on the shift gate pattern. The background highlighting is activated by the sliding contact on the selector lever.

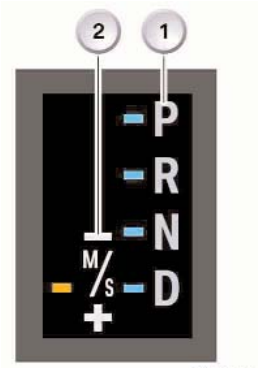

KT-11711

1. Automatic shift gate
2. Steptronic shift gate

Selecting Lever Positions in Automatic Mode

The gears are shifted automatically as part of the EGS program in the automatic shift gate (1) selector lever position D. The display in the instrument cluster shows D. The signal for the display in the instrument cluster is provided by the Mechatronics Module.

Selecting Lever Positions in Steptronic Mode

The S-program is selected by shifting the selector lever out of position D into the manual shift gate (2). The display in the instrument cluster changes to D S. Steptronic mode is activated by tapping the selector lever forward or backward and the transmission is shifted one gear up or down.

The display in the instrument cluster changes to M1 - M6. In Steptronic mode, the respective gear is maintained up to just before reaching the governed engine cutoff speed. An upshift then takes place automatically. Automatic downshifts are performed at kick-down and speed-dependent to 3rd and 2nd gear.

If a chosen gearshift is not permitted because of the engine and vehicle speed, the display in the instrument cluster initially changes to the chosen gear and then to the actual gear. The chosen gear is not shifted before reaching the permissible engine speed or vehicle speed. This function prevents engine overrevving.

The required gear is stored by tapping the selector lever several times and subsequently holding the position. The transmission shifts in succession up to the gear indicated in the instrument cluster. The selector lever must be held in position until the required gear is reached.

Plausibility Check - Since the selector lever can be moved into the manual shift gate only from position D, detection of the "manual shift gate" signal is permitted only together with the "position D" signal. Detection of the + or - signals for upshift or downshift is permitted in the manual shift gate only. If a fault occurs, a corresponding fault code is entered in the fault code memory and the S-program as well as Steptronic mode are deactivated.

carmiagn.com

Selector Lever Display in the Instrument Cluster

KT-10888

The engaged drive range is displayed in the instrument cluster (same as on the E46/E39) and is controlled by the Mechatronics Module.

Shift Lock

The shift lock prevents moving the selector lever from the drive ranges “P and N” when the service brake (pedal) is not operated. This function is accomplished by an electromagnetic lock on the selector lever.

Interlock

A cable assembly is fitted between the selector lever and ignition lock (in the steering column). It ensures the ignition key can be removed only when the selector lever is in position “P” (same as on the E38).

Notes:

cardiagn.com

Workshop Hints

Checking Oil Level

- The vehicle must be parked on a flat and level surface
- Check the oil level corresponding to the Repair Instructions
- Observe the oil temperature - the permissible operating temperature is between -30 ºC and +130 ºC oil sump temperature

Diagnosis of this gearbox can be carried out with DISplus/GT1. Gearbox operation can be checked by means of the fault code memory, test programs or control unit functions.

The processor of the transmission control unit features a 448 KB internal flash memory and a 256 KB external flash memory (on the main PCB). Approx. 480 KB of this are taken up by the basic transmission program. The remainder of the memory location contains the vehicle specific application data (performed during Programming).

Pressure Adaptation

Pressure adaptation takes place automatically while driving. After conducting repairs on the gearbox or replacing the gearbox, it is necessary to reset the pressure adaptation with the DISplus/GT1. A test drive should then be performed for the purpose of driving through all gears.

cardiagn.com

Manual Transmissions GS6-37BZ / GS6-53BZ

Manual Gearboxes

The following 6-speed manual gearboxes are used in the E60:

- GS6-37BZ for the 525i, 530i
- GS6-53BZ for the 545i

For additional detailed information on the 6-speed manual gearbox (including Workshop Hints), refer to the ST045 E85 Complete Vehicle Technical Training Handout.

E60 Driveline - Sequential Manual Gearbox SMG

Purpose of the System

The optional Sequential Manual Gearbox (SMG) is an automated manual gearbox with which clutching and shifting is assumed by an electro-hydraulic system. The SMG is operated via two shift paddles on the steering wheel and the selector lever in the center console. It offers the following functions:

- Sequential shifting mode and automated Drive mode
- Ability to choose between two different driving programs: Standard, Sport
- Operating safety through protection against mis-shifting
- Automatic upshifts in the Drive mode
- Automatic downshifts at minimum engine rpm
- Kick-down function in the Drive mode
- Acceleration assistant

There are two sequential manual gearboxes (SMG) that are used for the E60:

- H-SMG (GS6S37BZ) for the M54B25, M54B30 engine
- G-SMG (GS6S53BZ) for the N62B44 engine

The 6-speed manual gearboxes GS6-37BZ, GS6-S53BZ are the foundations for the SMGs in the E60. The G-SMG differs from the H-SMG. It uses a more powerful clutch actuator, different shaped hydraulic tank and the GS6-S53BZ gearbox.

In combination with this option, the customer also obtains the Driving Dynamics Control function (FDC). This function provides a “Sport” effect on driving by influencing the Engine Management, transmission (SMG) and steering control systems. This function is activated with the “SPORT” button.

The SMG gearboxes are already known from the E46 and E85 model series. For additional detailed information on the SMG gearbox, refer to the ST045 E85 Complete Vehicle Technical Training Handout. Only the new features of the system are described in the following module.

cardiagn.com

System Components

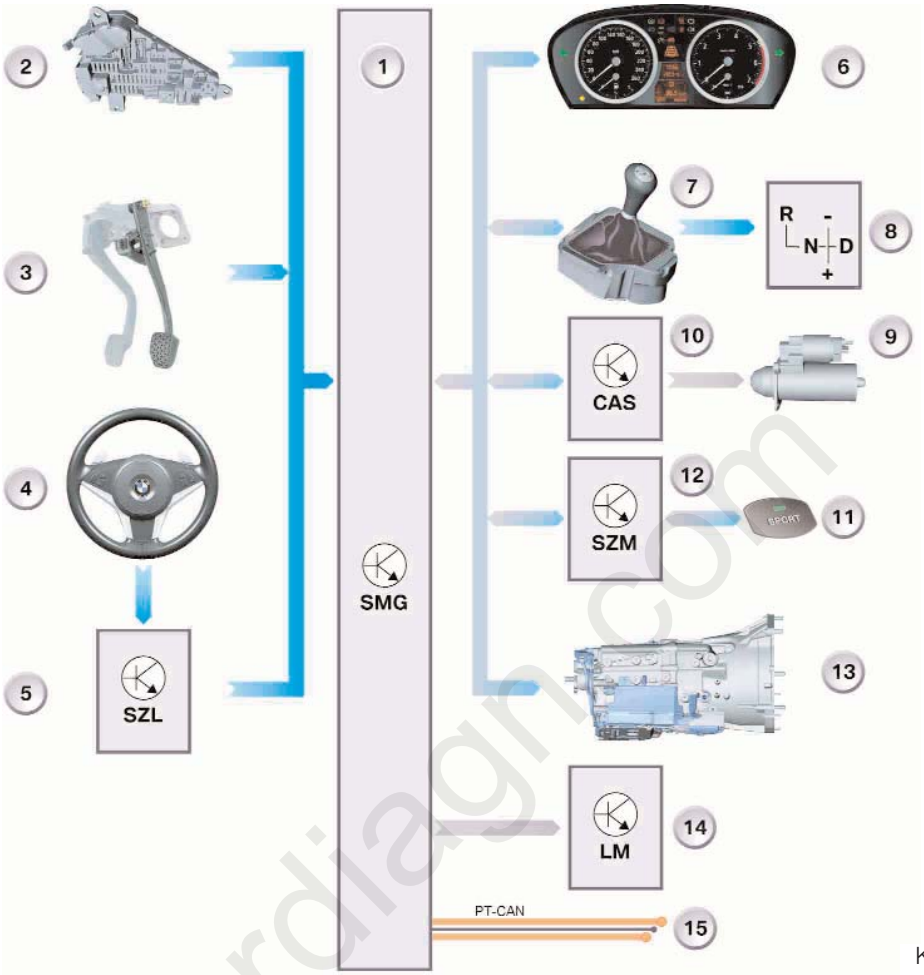

1. SMG control unit
2. Current distributor
3. Brake-light switch
4. SMG steering wheel with shift paddles
5. Steering column switch cluster (SZL)
6. Instrument cluster
7. Gearshift lever
8. Illuminated shift lever position indicator
9. Starter motor
10. Car access system (CAS)
11. FDC button
12. Centre console switch center (SZM)
13. Gearbox with hydraulic unit, shift-travel sensor, Selector angle sensor, Gearbox input speed sensor, Clutch travel sensor
14. Light module (LM)
15. Powertrain (PT) CAN

SMG Control Module

The SMG Control Module is a single-board unit with a modular connector system (SKE with 5 sockets) and is located next to the ECM in the E box.

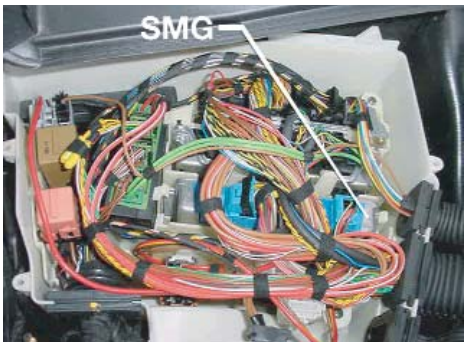

cardiagn.com

Gearshift Lever

The gearshift lever accommodates a Micro-Quadlock system with a 12-pin electrical connector which includes the illuminated gearshift lever position indicator next to the gearshift lever on the center console.

KT-11846

The lever is connected to the gearbox by electric leads only. The gearshift lever works the same as the previously used version (E46, E85).

A downshift is performed when the lever is pressed forward. An upshift is performed when the lever is pulled backward.

The signal for the reverse light is routed from the SMG Control Module via the PT-CAN > SGM > K-CAN to the light module.

Driving Dynamics Control (FDC)

The Driving Dynamics Control function (FDC) is standard with the SMG gearbox. In all other transmission systems, it is available with the sport package. By pressing the “SPORT” button (1 above), the FDC function changes overall vehicle characteristics to a sportier drive. The following systems are influenced:

Control Module	FDC Effect
ECM (DME)	Response characteristic of the accelerator pedal module to the electronic throttle is more progressive.
EGS	Higher gearshift speeds and a more sport oriented characteristic.
SMG	The shift procedure and shift time are shortened. Higher gearshift speeds and a more sport oriented characteristic in the automatic mode.
FGR	Cruise control accelerates faster.
Servotronic	More sport oriented steering characteristic.
AFS	Standard characteristic

cardiagn.com

The FDC button is located in the center console next to the gearshift or selector lever and is identified by the lettering "SPORT". "SPORT" appears in the LC display in the instrument cluster when the FDC function is active.

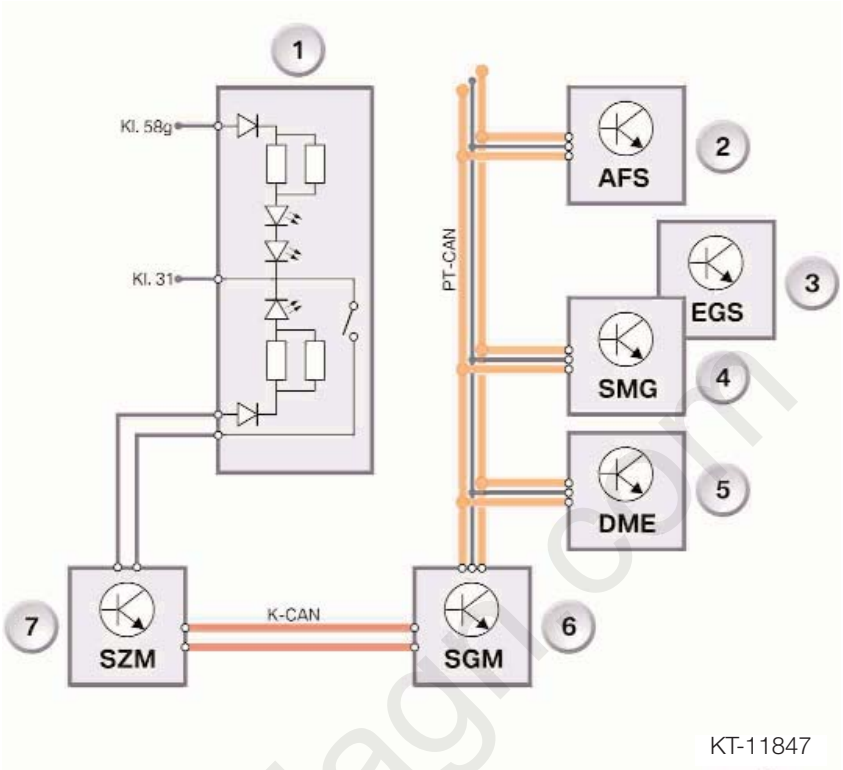

1. FDC (SPORT) button
2. Active steering (AFS)
3. Electronic transmission control
4. Sequential manual gearbox
5. Digital Motor Electronics
6. Safety and gateway module
7. Center console switch center

cardiagn.com

The signals from the FDC (SPORT) button are read by the SZM. The SZM sends the signals via the K-CAN > SGM > PT-CAN to the Control Modules ECM, EGS/SMG, Servotronic and AFS.

If there are no faults stored in these control modules, the SZM provides a ground and the “SPORT” button illuminates. When illuminated, the button indicates that the sport mode is activated.

When the ignition switch is cycled “OFF”, this function resets back to the non-sport function. “SPORT” must be reselected by the driver the next time the ignition is cycled back on.

SMG Steering Wheel with Shift Paddles

The SMG steering wheel with shift paddles can also perform a gear change.

- To upshift, pull one of the shift paddles
- To downshift, push one of the shift paddles

You accelerate from higher gears, e.g. during passing, by manually downshifting.

KT-11844

Displays/Indicators in Instrument Cluster

1. Program indicator
2. Gear indicator
3. Failsafe indicator

KT-11860

In automatic mode, the program indicator (1) shows drive stage "D" engaged for automatic mode. The gear indicator (2) shows the shifted gear.

The program indicator (1) is faded out when the manual program is selected. The gear indicator (2) shows the shifted gear.

The word "SPORT" (3) appears in the display when the FDC function is active.

A transmission fault is indicated by a corresponding CC message (refer to Instrument Cluster, CC messages).

cardiagn.com

Workshop Hints

Working on Hydraulic System

Prior to any work on the hydraulic system, the system pressure must be reduced with the Service Function "Before working on hydraulic system" using the DISplus/GT1. The hydraulic pump relay must be removed to prevent the hydraulic pump from starting.

The Service Function "After working on hydraulic system" must be performed with the DISplus/GT1. The hydraulic system is vented. The service function "Teach gearbox" must be performed.

The hydraulic pump must not run dry! The relay must not be reconnected for the entire duration of the repair work. After work is completed on the hydraulic system, the hydraulic-fluid level must be checked and topped up if necessary. The hydraulic pump relay can be reconnected. The hydraulic fluid level must be checked again.

Teaching Gearbox

The Service Function "teaching gearbox" must be implemented with the DISplus/GT1 when the following components are replaced or repaired:

- SMG Control Module
- Gearbox
- Clutch
- Gearbox sensors

The SMG Control Module learns the clutching characteristic during the drive-off operations. There may therefore be impaired comfort during the initial gearshift operations.

Diagnosis

Diagnosis of the SMG corresponds to diagnosis of the E85 and includes the following:

- Read identification
- Read fault memory
- Delete fault memory
- Diagnosis check
- Sensor signals at gearbox
- Signals from vehicle
- Bus signals
- Programming

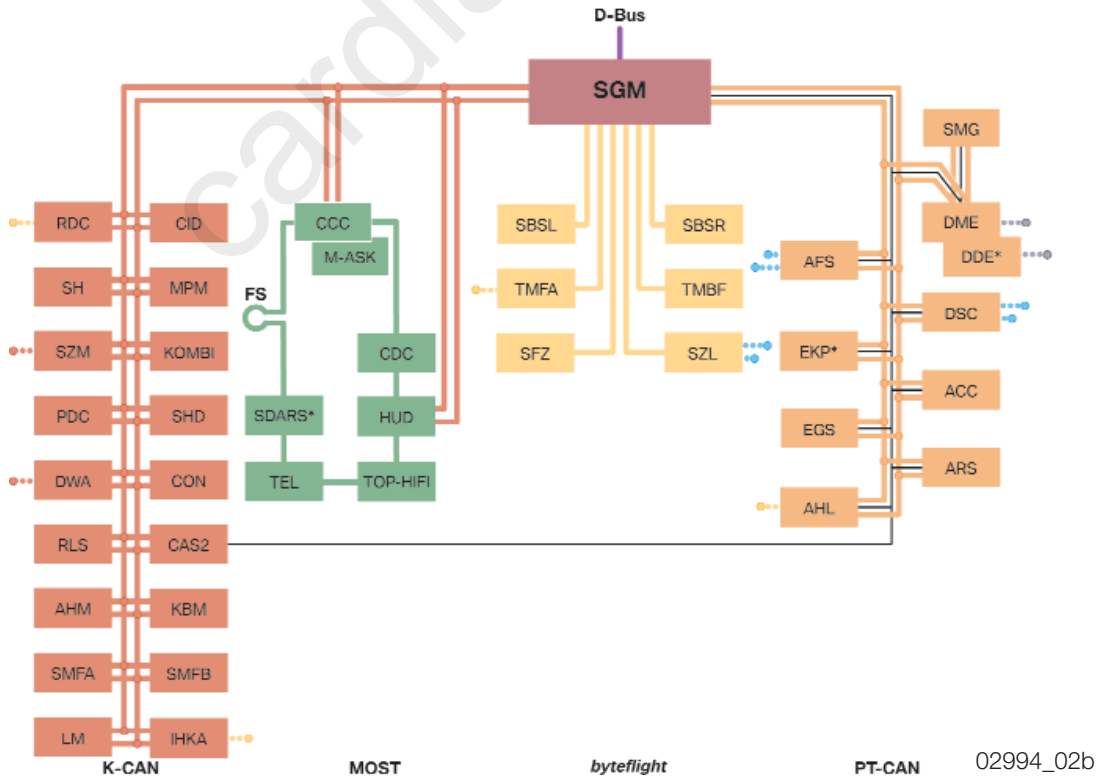

02994_02b

E60 Driveline - Propeller (drive) shaft, Final Drive, Output Shafts

Purpose of the System

In addition to the variations of the manual, SMG and automatic transmissions available in the E60, there are two variations of the final drive (rear axle differential). The final drive size depends on the engine/gearbox combination:

Engine	Manual	Automatic	SMG	Final Drive
M54B25, M54B30	GS6-37BZ	GA6HP19Z	H-SMG	188K
N62B44	GS6-53BZ	GA6HP26Z	G-SMG	215K

Various drive trains are used depending on the engine/gearbox combination installed in the E60. Either steel, aluminum or hybrid propeller (drive) shafts are fitted. The propeller shafts are equipped with deformation elements.

If displaced in the event of an accident, the engine/gearbox unit or the rear axle cause the propeller shaft to compress. This feature enhances the passive safety of the vehicle occupants. The propeller shaft takes up a defined force and transmits it to the engine/gearbox unit or the final drive.

1. Propeller shaft with center bearing
2. Final Drive
3. Output shafts

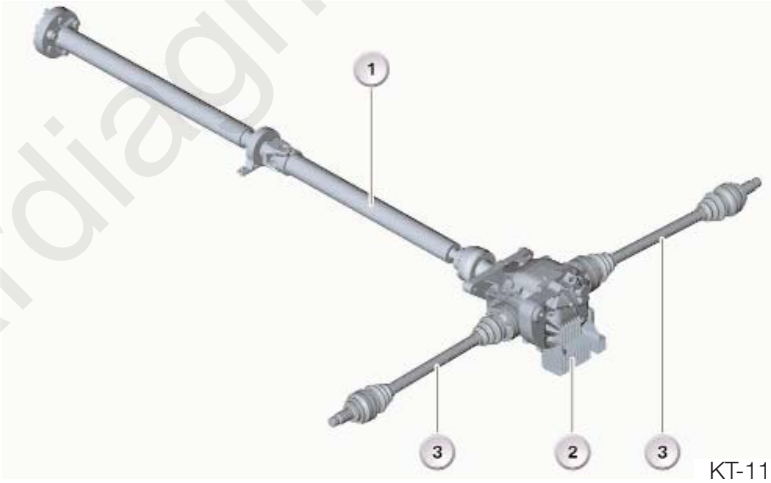

KT-11713

System Components

Propeller Shaft

Steel, aluminum or hybrid propeller shafts are used corresponding to the type of engine/gearbox combination installed. In the case of the hybrid propeller shafts, the front half of the shaft is made of steel and the rear half of the shaft is aluminum.

Engine	Transmission	Propeller Shaft	Weight (kg)
M54B25, M54B30	GS6-37BZ	Aluminum	8.5
M54B25, M54B30	GA6HP19Z	Hybrid	8.9
N62B44	GS6-53BZ	Steel	12.6
N62B44	GA6HP26Z	Steel	12.3

cardiagn.com

1. Flexible coupling
2. Front propeller shaft section
3. Center bearing
4. Universal joint
5. Rear propeller shaft section
6. Constant velocity joint

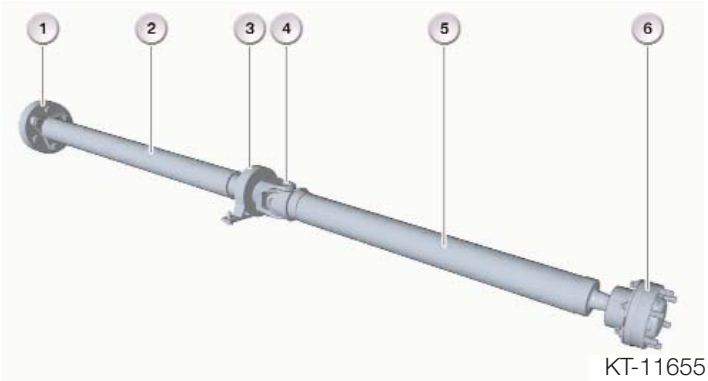

KT-11655

There are three different sizes (hole diameter of 96 and 105 mm) of the flexible coupling (1) used on the E60. The flexible coupling features a separate rubber bushing with a softer degree of rigidity. At very high torque, this rubber bushing is bridged by an internal stop.

The rigidity of the flexible coupling changes from soft to hard (as load is increased), thus protecting the soft rubber bush from overload or irreparable damage. The function is similar to that of a progressive spring.

The center bearing assembly is comprised of an aluminum bracket with integrated rubber fold-type seal.

The propeller shaft is equipped with a crash element that is located at the center bearing on the front section of the propeller shaft. In the event of an accident, the engine/gearbox unit or the rear axle is displaced, the bearing journal (3) is pressed into the propeller shaft (see item 1) specifically reducing the impact energy.

1. Deformation travel (approx. 100 mm)
2. Aluminum tube
3. Bearing journal (steel)

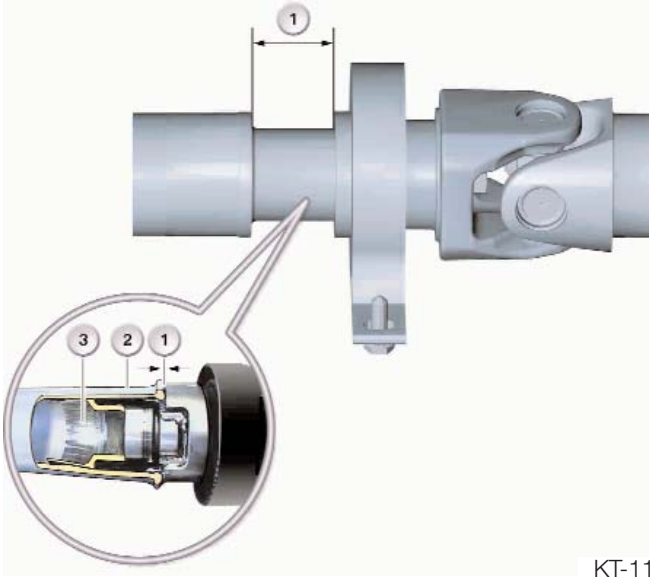

KT-11657

The bearing journal (3) serving as a mount for the crash element is made of steel.

The bearing journal is secured to the aluminum tube (2) by friction welding.

The two parts are spun into each other until the heat generated by the friction seizes them together.

cardiagn.com

The steel and hybrid propeller shafts are also pushed together (same as aluminum shafts) in the event of a crash.

1. Slip tube (shown after deformation in detail view)

KT-11655

The end of the front half of the steel and hybrid shafts is designed as a slip tube (1).

The slip tube (1) collapses if the engine/gearbox unit or the rear axle are displaced in the event of an accident.

Note: The crash element/slip tube of the propeller shafts may be deformed after an accident. If so, the propeller shaft must be replaced. After an accident, the propeller shafts must always be checked to establish whether the crash element/slip tube is pushed together (collapsed).

Final Drive (Rear Axle Differential)

Two different final drive sizes are used depending on the type of engine/gearbox combination is installed. The 6 cylinder models use the 188K and the 8 cylinder models use the 215K.

In the 188K, the gear ratio varies between 2.35 and 4.10 depending on the engine/gearbox combination.

In the 215K, the gear ratio varies between 2.47 and 3.46 depending on the engine/gearbox combination.

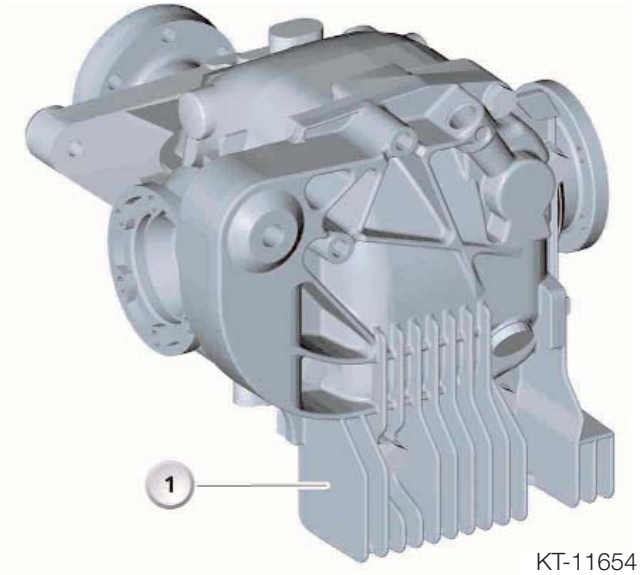

KT-11654

The aluminum cover features cooling fins (1) to provide adequate cooling for the final drive. The cooling fins increase the surface area and therefore increase heat dissipation. This achieves a 7 ºC reduction in the oil temperature in the final drive. *The final drive has a lifetime oil fill.*

cardiagn.com

Output Shafts

Various output shafts are used on the E60, for example:

- With the M54B30 engine, the constant velocity joints are the same size both at the wheel and final drive ends.

- Manual transmission M54 vehicles are equipped with torsionally rigid output shafts to improve the load change characteristics. The torsionally rigid output shafts have a larger wall thickness and outside diameter than the standard rigid output shafts. This feature avoids drumming noises caused by torsional vibration.

- M54 vehicles with automatic transmission are equipped with "standard" rigid output shafts.

1. Constant velocity joint, wheel end
2. Constant velocity joint, final drive end

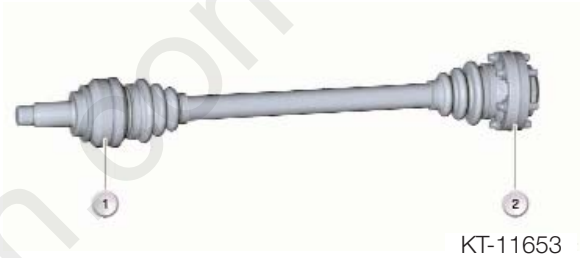

KT-11653

cardiagn.com

Notes: