AUDIO AND VISUAL SYSTEM

PARTS LOCATION

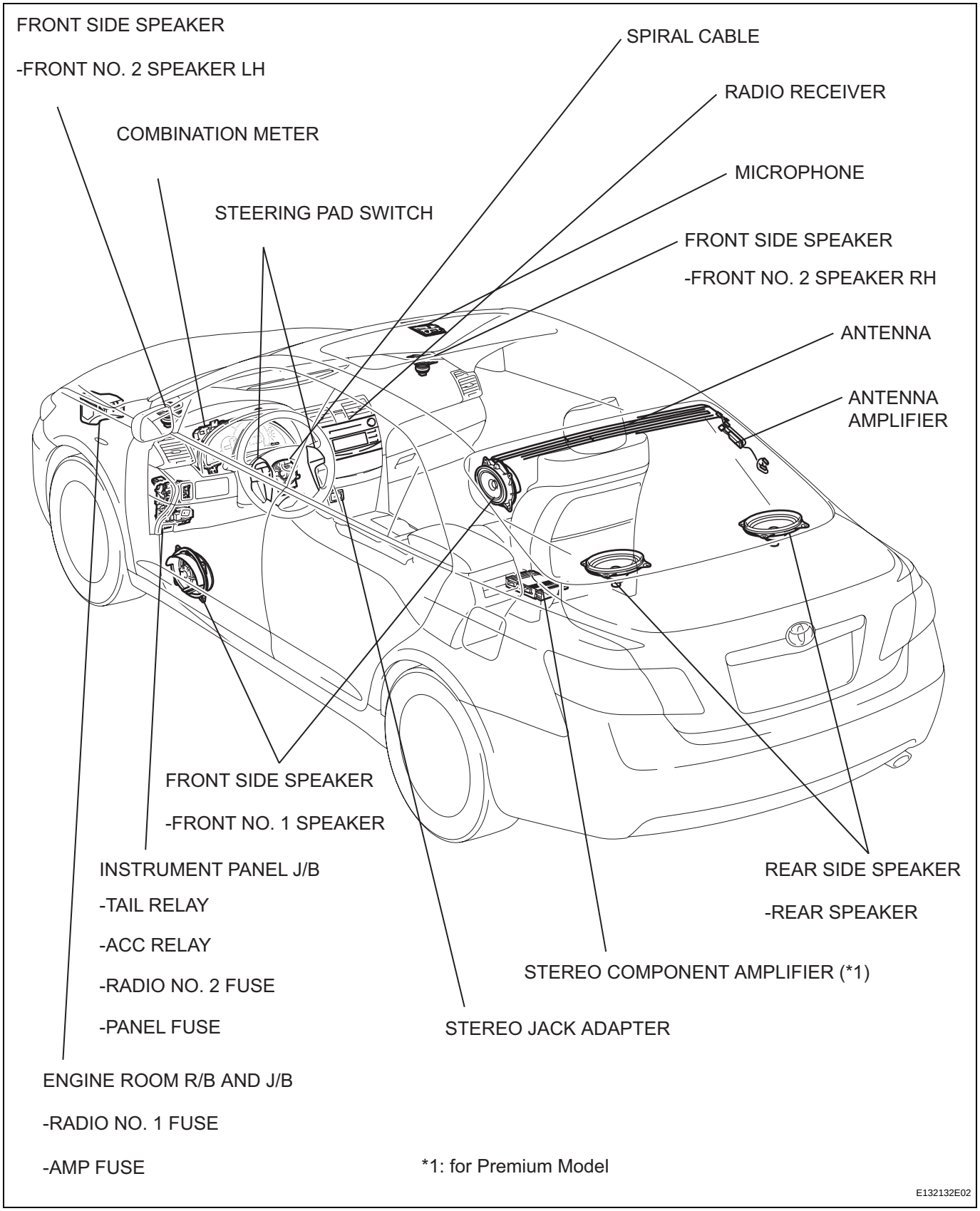

AV

SYSTEM DIAGRAM

Standard Model:

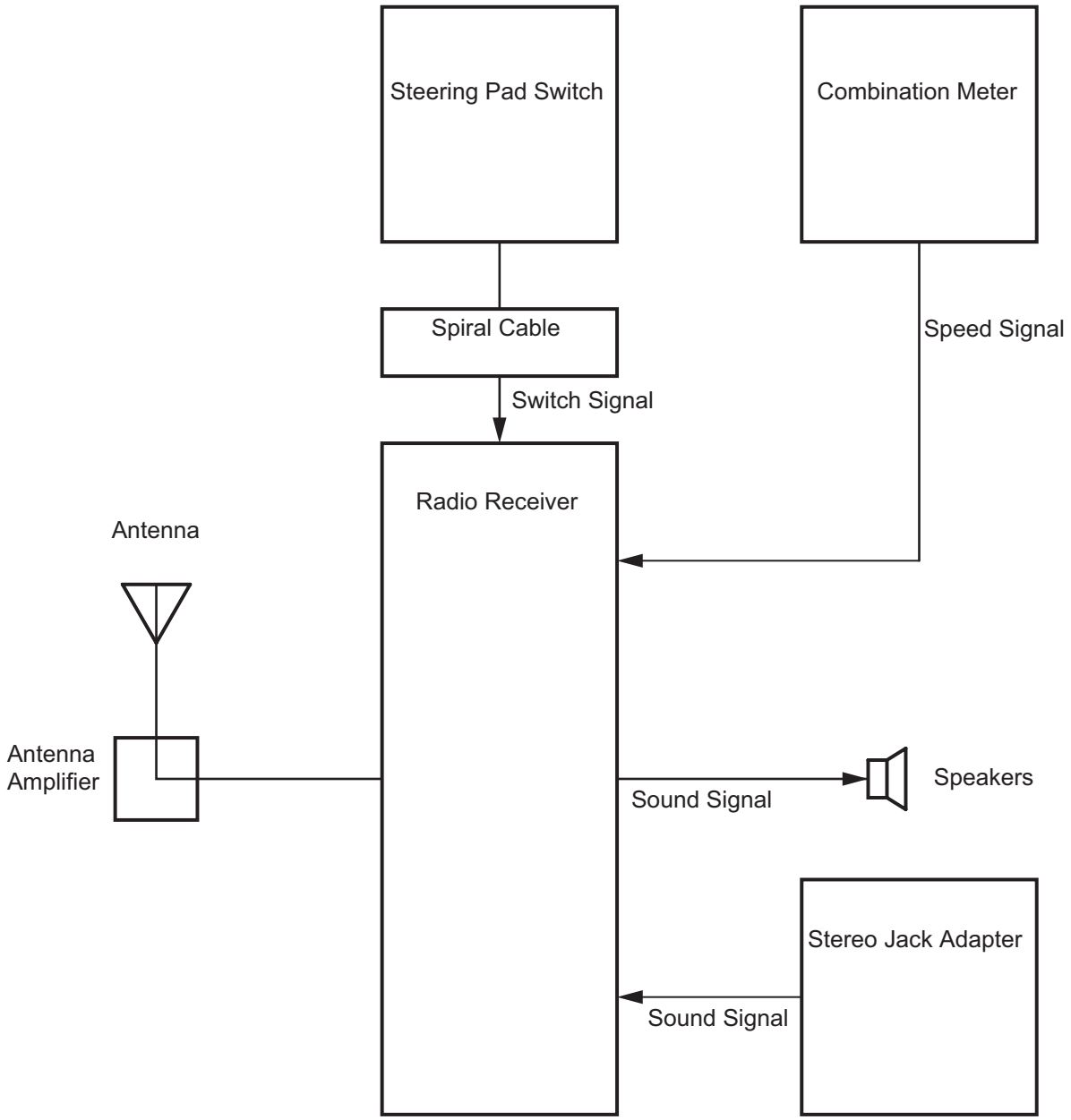

P

E129797E03

Premium Model:

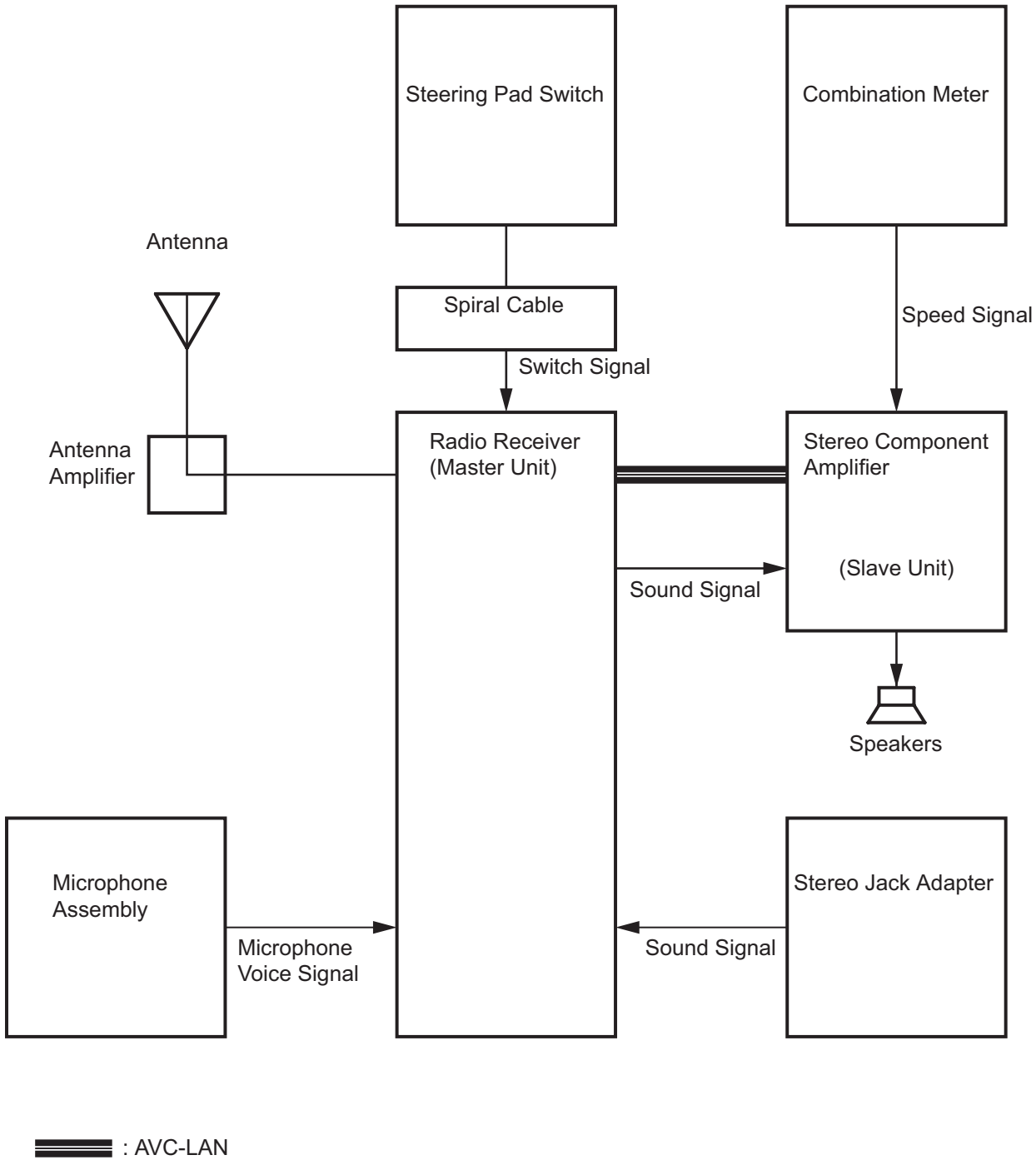

P

E129796E02

SYSTEM DESCRIPTION

1. DISC PLAYER OUTLINE

(a) A CD player uses a laser pickup to read digital signals recorded on CDs. By converting the digital signals to analog, music and other content can be played.

CAUTION:

Do not look directly at the laser pickup because the CD player uses an invisible laser beam. Be sure to operate the player only as instructed.

NOTICE:

- **Do not disassemble any part of the CD player.**
- **Do not apply oil to the CD player.**
- **Do not insert anything but a CD into the CD player.**

(b) Usable discs

(1) The CD player can only play audio CDs, CD-Rs (CD-Recordable), and CD-RWs (CD-ReWritable) that have any of the following marks:

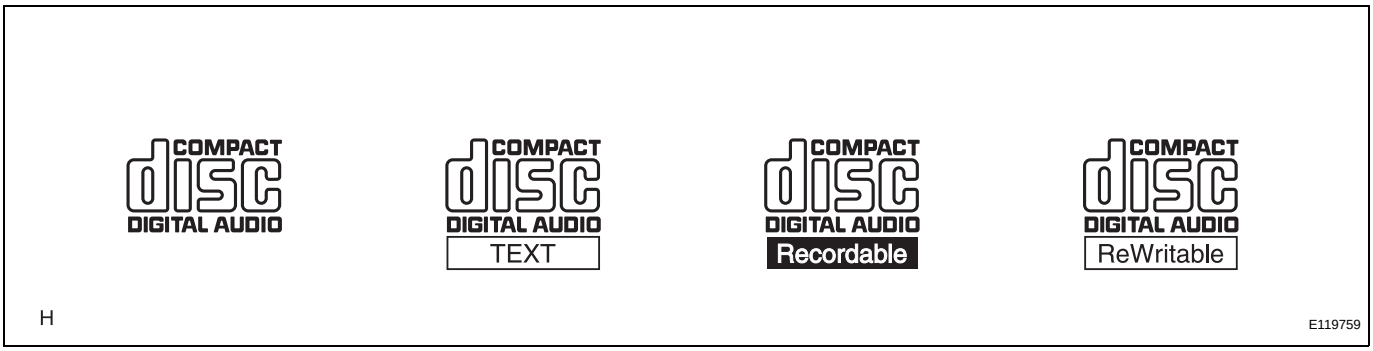

(c) Precautions for use of discs

NOTICE:

- **Copy-protected CDs cannot be played.**
- **CD-Rs and CD-RWs may not be played depending on the recording conditions or characteristics of the discs, or due to damage, dirt, or deterioration caused by leaving the discs in the cabin for a long time.**
- **Unfinalized CD-Rs and CD-RWs cannot be played.**
- **Keep the discs away from dirt. Be careful not to damage the discs or leave your fingerprints on them.**
- **Hold discs by the outer edge and center hole with the label side up.**
- **Leaving the disc exposed halfway out of the slot for a long time after pressing the disc eject button may cause deformation of the disc, making the disc unusable.**
- **If discs have adhesive tape, stickers, CDR labels, or any traces of such labels attached, the discs may not be ejected or player malfunctions may result.**

- **Keep the discs away from direct sunlight. (Exposure to direct sunlight may cause deformation of the disc, making the disc unusable.)**
- **Do not use odd-shaped CDs because these may cause player malfunctions.**
- **Do not use discs whose recording portion is transparent or translucent because they may not be inserted, ejected, or played normally.**

HINT:

- When it is cold or it is raining, if the windows mist up, mist and also dew may form in the player. In such a case, the CD may skip or the CD may stop in the middle of play. Ventilate or dehumidify the cabin for a while before using the player.
- The CD may skip if the player experiences strong vibrations when the vehicle is driven on rough road or similar uneven surface(s).

(d) Cleaning

NOTICE:

Do not use a lens cleaner because it may cause a malfunction in the pickup portion of the player.

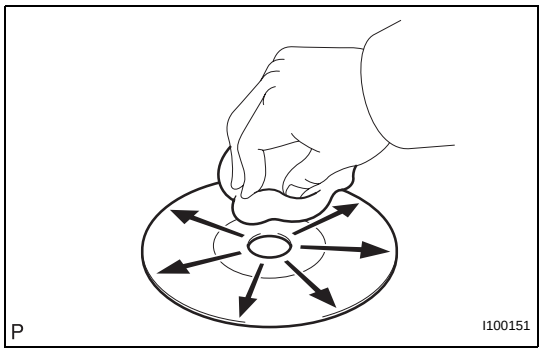

(1) If dirt is on the disc surface, wipe it clean with a soft dry cloth such as an eyeglass cleaner for plastic lenses from the inside to the outside in a radial direction.

NOTICE:

- **Pressing on the disc by hand or rubbing the disc with a hard cloth may scratch the disc surface.**
- **Use of solvent such as a record spray, antistatic agent, alcohol, benzine, and thinner, or a chemical cloth may cause damage to the disc, making the disc unusable.**

2. MP3/WMA OUTLINE

(a) Playable MP3 file standards

Compatible standard	MP3 (MPEG1 LAYER3, MPEG2 LSF LAYER 3)
Compatible sampling frequency	• MPEG1 LAYER3: 32, 44.1, 48 (kHz) • MPEG2 LSF LAYER3: 16, 22.05, 24 (kHz)
Compatible bit rate	• MPEG1 LAYER3: 64, 80, 96, 112, 128, 160, 192, 224, 256, 320 (kbps) • MPEG2 LSF LAYER3: 64, 80, 96, 112, 128, 144, 160 (kbps) • Compatible with VBR
Compatible channel mode	Stereo, joint stereo, dual channel, monaural

(b) Playable WMA file standards

Compatible standard	WMA Ver. 7, 8, and 9
Compatible sampling frequency	32, 44.1, 48 (kHz)
Compatible bit rate	• Ver. 7, 8: CBR48, 64, 80, 96, 128, 160, 192 (kbps) • Ver. 9: CBR48, 64, 80, 96, 128, 160, 192, 256, 320 (kbps) • Compatible with playback of channel 2 only

(c) ID3 tag and WMA tag

(1) Additional textual information called ID3 tag can be input to MP3 files. Information such as song titles and artist names can be stored.
HINT:
This player is compatible with the ID3 tags of ID3 Ver. 1.0 and 1.1, and ID3 Ver. 2.2 and 2.3. (Number of characters complies with ID3 Ver. 1.0 and 1.1.)

(2) Additional textual information called WMA tag can be input to WMA files. Information such as song titles and artist names can be stored.

(d) Usable media

(1) Only CD-ROMs, CD-Rs (CD-Recordable), and CD-RWs (CD-ReWritable) can be used to play MP3/WMA files.
NOTICE:
- **CD-Rs and CD-RWs are more easily affected by a hot and humid environment than discs used for normal audio CDs. For this reason, some CD-Rs and CD-RWs may not be played.**
- **If there are fingerprints or scratches on the disc, the disc may not be played or the CD may skip.**
- **Some CD-Rs and CD-RWs deteriorate if they are left in the cabin for a long time.**
- **Keep CD-Rs and CD-RWs in a storage case that is impenetrable to light.**

(e) Usable media format

(1) Usable media format

Disc format	CD-ROM Mode 1, CD-ROM XA Mode 2 Form1
File format	ISO9660 Level 1 and Level 2 (Joliet, Romeo)

HINT:
- As for MP3/WMA files written in any format other than those above, the contents of the files may not be played normally or the file names or folder names may not be displayed correctly.
- This player is compatible with multi-session discs and can play CD-Rs and CD-RWs on which MP3/WMA files are added. However, only the first session can be played.
- Discs whose first session includes both music data and MP3 or WMA format data cannot be played.

(2) Standard and restrictions

Maximum directory levels	8 levels
Maximum number of characters for a folder name/file name	32 characters
Maximum number of folders	192 (Including empty folders, route folders, and folders that do not contain MP3/WMA files)
Maximum number of files in a disc	255 (Including non-MP3/WMA files)

(f) File names

(1) Only files with an extension of ".mp3" or ".wma" can be recognized and played as MP3 or WMA files.

(2) Save MP3 or WMA files with an extension of ".mp3" or ".wma".

NOTICE:

If saving non-MP3 or non-WMA files with an extension of ".mp3" or ".wma", those files are wrongly recognized as MP3 or WMA files and played. A loud noise may occur and damage to the speaker may result.

3. AVC-LAN DESCRIPTION

(a) What is AVC-LAN?

Example:

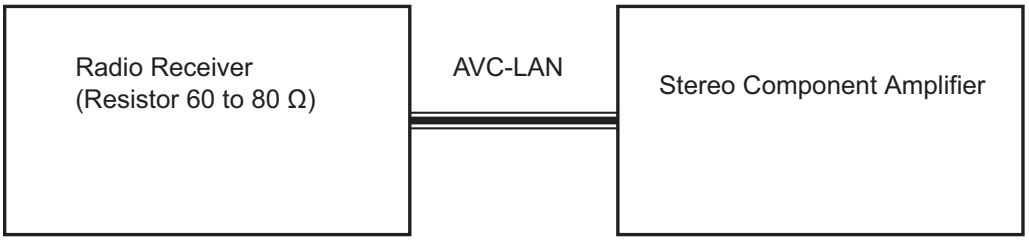

T

I100319E09

AVC-LAN, an abbreviation for "Audio Visual Communication Local Area Network", is a united standard developed by the manufacturers in affiliation with Toyota Motor Corporation. This standard pertains to audio and visual signals as well as switch and communication signals.

(b) Purpose:

Recently, car audio systems have rapidly developed and the functions have vastly changed. The conventional car audio system is being integrated with multi-media interfaces similar to those in navigation systems. At the same time, customers are demanding higher quality from their audio systems. This is merely an overview of the standardization background. The specific purposes are as follows:

(1) To solve sound problems, etc. caused by using components of different manufacturers through signal standardization.

(2) To allow each manufacturer to concentrate on developing products they do best. From this, reasonably priced products can be produced.

HINT:

- If a short to +B or short to ground is detected in the AVC-LAN circuit, communication is interrupted and the audio system will stop functioning.

- If the audio system has a navigation system installed, the multi-display unit acts as the master unit. If the navigation system is not installed, the audio head unit acts as the master unit instead. If the radio and navigation assembly is installed, it is the master unit.
- The radio receiver contains a resistor that is necessary to enable communication on the different AVC-LAN circuits.
- The car audio system with an AVC-LAN circuit has a diagnostic function.
- Each component has a specified number (3-digit) called a physical address. Each function has a number (2-digit) called a logical address.

4. COMMUNICATION SYSTEM OUTLINE

(a) Components of the audio system communicate with each other via the AVC-LAN.

(b) The master component of the AVC-LAN is a radio receiver with a 60 to 80 Ω resistor. This is essential for communication.

(c) If a short circuit or open circuit occurs in the AVC-LAN circuit, communication is interrupted and the audio system will stop functioning.

5. DIAGNOSTIC FUNCTION OUTLINE

(a) The audio system has a diagnostic function (the result is indicated on the master unit).

(b) A 3-digit hexadecimal component code (physical address) is allocated to each component on the AVC-LAN. Using this code, the component in the diagnostic function can be displayed.

6. "BLUETOOTH" OUTLINE

(a) "Bluetooth" is a trademark owned by Bluetooth SIG. Inc.

H

E100921

(b) "Bluetooth" is a new wireless connection technology that uses the 2.4 GHz frequency band. This makes it possible to connect a cellular phone ("Bluetooth" compatible phone *1) to the radio receiver (the "Bluetooth" system is built in), and use the handsfree function of the cellular phone, even if it is in a pocket or bag. As a result, it is not necessary to use a connector attached directly to the cellular phone.

*1: Some versions of "Bluetooth" compatible cellular phones may not function.

Example:

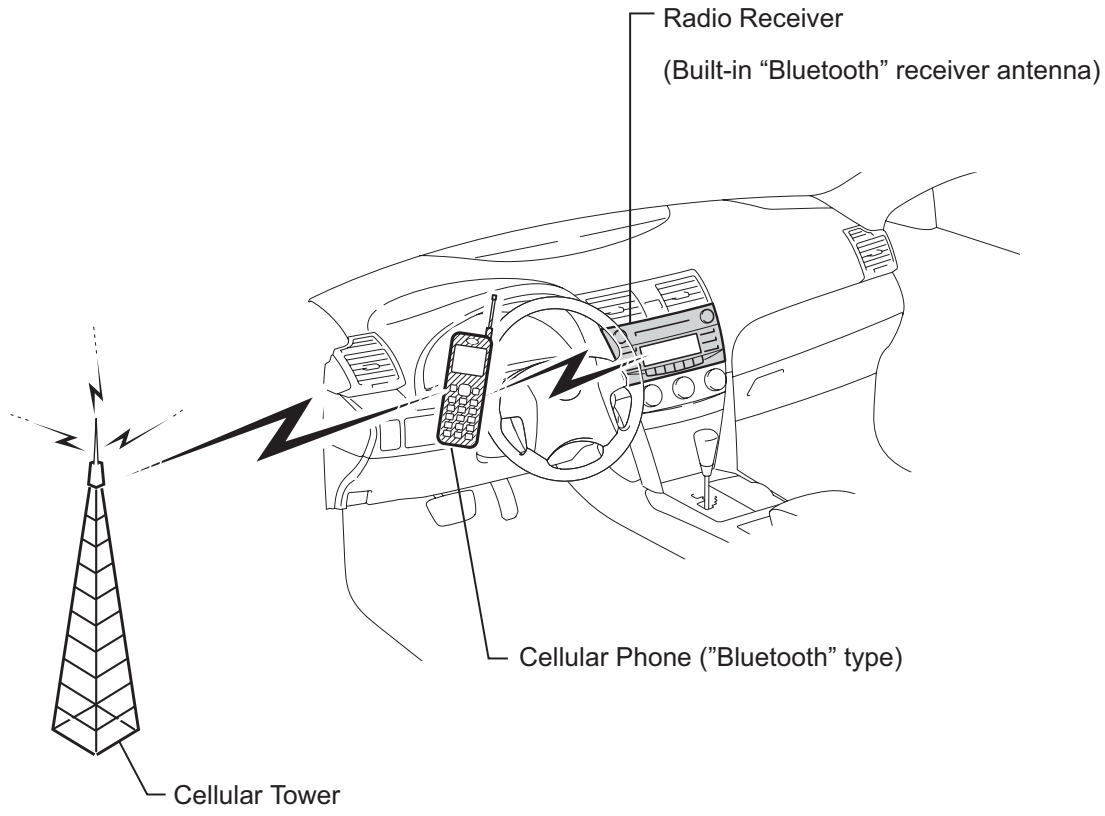

P E129829E02

HINT:
The communication performance of "Bluetooth" may vary depending on obstructions or radio wave conditions between communication devices, electromagnetic radiation, communication device sensitivity, or antenna capacity.

HOW TO PROCEED WITH TROUBLESHOOTING

1 VEHICLE BROUGHT TO WORKSHOP

NEXT

2 INSPECT BATTERY VOLTAGE

Standard voltage:
11 to 14 V
If the voltage is below 11 V, recharge or replace the battery before proceeding.

NEXT

3 BASIC INSPECTION

(a) Turn the ignition switch on (IG).
(b) Check whether or not the radio receiver turns on.

Result

Result	Proceed to
Radio receiver turns on	A
Radio receiver does not turn on	B

B → **Go to step 6**

A

4 CHECK FOR DTC

(a) Check for DTCs and note any codes that are output.
(b) Delete the DTCs.
(c) Recheck for DTCs by simulating the operation indicated by the DTCs.
HINT:
- If the system cannot enter the diagnostic mode, inspect the AVC-LAN and all the components that connect to the AVC-LAN for short circuits and repair or replace the problem part.
- Even if the malfunction symptom is not confirmed, check the DTCs. This is because the system stores past DTCs.
- Check and clear past DTCs. Then check for DTCs.

Result

Result	Proceed to
DTC is output again	A
DTC is not output	B

B → Go to step 6

A

5 DIAGNOSTIC TROUBLE CODE CHART

Find the output code in the diagnostic trouble code chart (See page AV-27).

NEXT

Go to step 8

6 PROBLEM SYMPTOMS TABLE

Refer to the problem symptoms table (See page AV-13).

Result

Result	Proceed to
Fault is not listed in problem symptoms table	A
Fault is listed in problem symptoms table	B

B → Go to step 8

A

7 OVERALL ANALYSIS AND TROUBLESHOOTING

(a) Terminals of ECU (See page AV-15).

NEXT

8 ADJUST, REPAIR OR REPLACE

NEXT

9 CONFIRMATION TEST

NEXT

END

IDENTIFICATION OF NOISE SOURCE

1. Radio Description

(a) Radio frequency band

(1) Radio broadcasts use the radio frequency bands shown in the table below.

Frequency	30 kHz	300 kHz	30 MHz	30 MHz	300 MHz
Designation	LF	MF	HF	VHF	
Radio Wave		AM ↔		FM ↔	
Modulation	Amplitude modulation			Frequency modulation	

LF: Low Frequency MF: Medium Frequency HF: High Frequency VHF: Very High Frequency

E108734E01

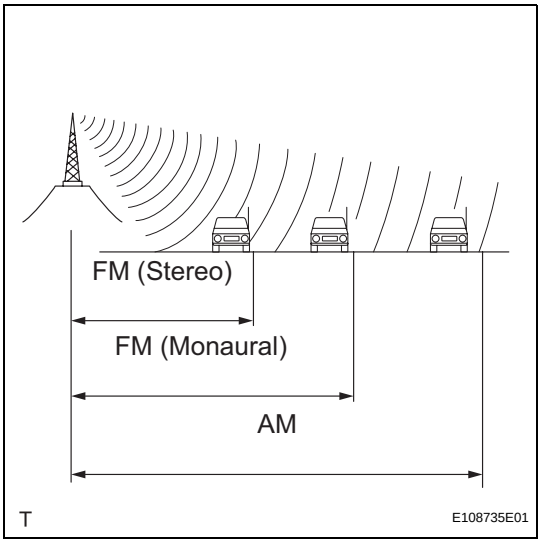

(b) Service area

(1) The service areas of AM and FM broadcasts are vastly different. Sometimes an AM broadcast can be received very clearly but an FM stereo cannot. FM stereo has the smallest service area, and is prone to pick up static and other types of interference such as noise.

(c) Radio reception problems

HINT:

In addition to static, other problems such as "phasing", "multipath", and "fade out" exist. These problems are not caused by electrical noise, but by the radio signal propagation method itself.

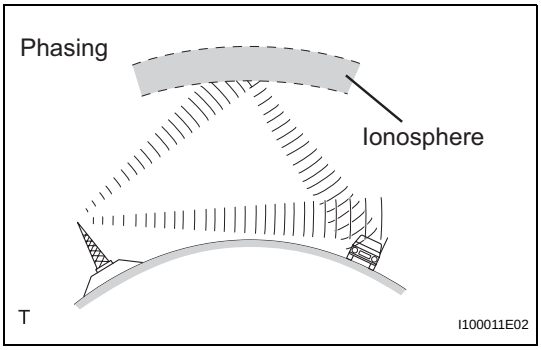

(1) Phasing

AM broadcasts are susceptible to electrical interference and another kind of interference called phasing. Occurring only at night, phasing is the interference created when a vehicle receives 2 radio wave signals from the same transmitter. One signal is reflected off the ionosphere and the other signal is received directly from the transmitter.

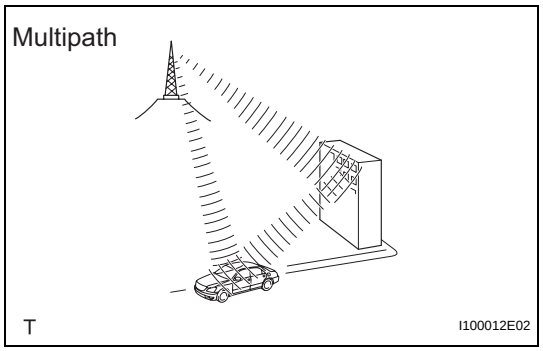

(2) Multipath
Multipath is a type of interference created when a vehicle receives 2 radio wave signals from the same transmitter. One signal is reflected off buildings or mountains and the other signal is received directly from the transmitter.

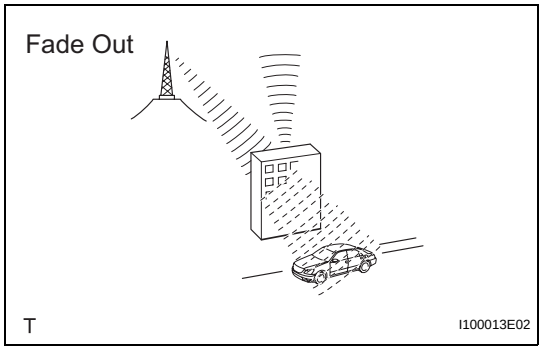

(3) Fade out
Fade out is caused by objects (buildings, mountains, and other such large obstacles) that deflect away part of a signal, resulting in a weaker signal when the object is between the transmitter and vehicle. High frequency radio waves, such as FM broadcasts, are easily deflected by obstructions. Low frequency radio waves, such as AM broadcasts, are much more difficult to deflect.

(d) Noise problem
Technicians must have a clear understanding about each customer's noise complaint. Use the following table to diagnose noise problems.

Radio Frequency	Noise Occurrence Condition	Presumable Cause
AM	Noise occurs in a specified area	Foreign noise
AM	Noise occurs when listening to an intermittent broadcast	An identical program transmitted from multiple towers can cause noise where the signals overlap
AM	Noise occurs only at night	Music beat from a distant broadcast
FM	Noise occurs while driving in a specified area	Multipath or phasing noise resulting from a change in FM frequency

HINT:
If the noise does not match the examples above, refer to the descriptions about phasing and multipath.

PROBLEM SYMPTOMS TABLE

HINT:
- Before inspecting the suspected areas listed in the table below, check the fuse and relay.
- Before inspecting the suspected areas listed in the table below, check for DTCs.
- Methods used to verify the cause of the problem are listed in order of probability in the suspected area column.

Audio Function:

Symptom	Suspected area	See page
Pressing power switch does not turn on system.	1. Proceed to "Pressing Power Switch does not Turn on System"	AV-68
	2. Radio receiver power source circuit	AV-140
	3. AVC-LAN circuit	AV-118
	4. Radio receiver	AV-145
Panel switch does not function.	1. Steering pad switch circuit	AV-91
	2. AVC-LAN circuit	AV-118
	3. Radio receiver	AV-145
No sound can be heard from speakers. (Audio is mute.) (for premium model)	1. Radio receiver power source circuit	AV-140
	2. Proceed to "No Sound can be Heard from Speakers"	AV-69
	3. Stereo component amplifier power source circuit	AV-142
	4. Proceed to "Sound Signal Circuit between Radio Receiver and Stereo Component Amplifier"	AV-111
	5. Speaker circuit	AV-103
	6. Proceed to "Mute Signal Circuit between Radio Receiver and Stereo Component Amplifier"	AV-115
	7. Stereo component amplifier	AV-150
	8. Radio receiver	AV-145
No sound can be heard from speakers. (Audio is mute.) (for standard model)	1. Radio receiver power source circuit	AV-140
	2. Proceed to "No Sound can be Heard from Speakers"	AV-69
	3. Speaker circuit	AV-103
	4. Radio receiver	AV-145
Sound quality is bad in all modes. (Volume is too low.) (for premium model)	1. Proceed to "Poor Sound Quality in All Modes (Low Volume)"	AV-80
	2. Speaker circuit.	AV-103
	3. Proceed to "Sound Signal Circuit between Radio Receiver and Stereo Component Amplifier"	AV-111
	4. Proceed to "Mute Signal Circuit between Radio Receiver and Stereo Component Amplifier"	AV-115
	5. Stereo component amplifier	AV-150
	6. Radio receiver	AV-145
Sound quality is bad in all modes. (Volume is too low.) (for standard model)	1. Proceed to "Poor Sound Quality in All Modes (Low Volume)"	AV-80
	2. Speaker circuit	AV-103
	3. Radio receiver	AV-145
ASL does not function. (for premium model)	Proceed to "Vehicle Speed Signal Circuit between Stereo Component Amplifier and Combination Meter"	AV-120
ASL does not function. (for standard model)	Proceed to "Vehicle Speed Signal Circuit between Radio Receiver and Combination Meter"	AV-87
External device sound cannot be heard or sound quality is bad. (Stereo jack is used.)	1. Radio receiver power source circuit	AV-140
	2. Proceed to "Sound Signal Circuit between Radio Receiver and Stereo Jack Adapter"	AV-113
	3. Stereo jack adapter	AV-223
	4. Radio receiver	AV-145

Symptom	Suspected area	See page
Abnormal noise occurs. (for premium model)	1. Proceed to "Noise occurs"	AV-66
	2. Stereo component amplifier	AV-150
	3. Radio receiver	AV-145
Abnormal noise occurs. (for standard model)	1. Proceed to "Noise occurs"	AV-66
	2. Radio receiver	AV-145
Radio broadcast cannot be received or poor reception.	Proceed to "Radio Broadcast cannot be Received or Poor Reception"	AV-76
CD cannot be inserted / played or CD is ejected right after insertion.	1. Radio receiver power source circuit	AV-140
	2. Proceed to "CD cannot be Inserted / Played or CD is Ejected Right After Insertion"	AV-72
CD cannot be ejected.	1. Radio receiver power source circuit	AV-140
	2. Proceed to "CD cannot be Ejected"	AV-71
Sound quality is bad only when CD is played. (Volume is too low.)	Proceed to "Sound Quality is Bad Only when CD is Played (Volume is Too Low)"	AV-70
CD sound skips.	Proceed to "CD Sound Skips"	AV-74
Radio receiver cannot be illuminated at night.	1. Illumination circuit	AV-96
	2. Radio receiver	AV-145

Steering Pad Switch Function:

Symptom	Suspected area	See page
Audio system cannot be operated with steering pad switch.	1. Steering pad switch circuit	AV-91
	2. Radio receiver	AV-145
Steering pad switch cannot be illuminated at night.	1. Illumination circuit	AV-96
	2. Radio receiver	AV-145

"Bluetooth" Function (*1):

Symptom	Suspected area	See page
Cellular phone registration failure, phone directory transfer failure.	Proceed to "Cellular Phone Registration Failure, Phone Directory Transfer Failure"	AV-81
Cellular phone cannot send / receive.	1. Proceed to "Cellular Phone cannot Send / Receive"	AV-83
	2. Steering pad switch circuit	AV-91
	3. Radio receiver	AV-145
The other caller's voice cannot be heard, is too quiet, or distorted.	1. Proceed to "The Other Caller's Voice cannot be Heard, is too Quiet, or Distorted"	AV-85
	2. Proceed to "Cellular Phone Voice Circuit between Radio Receiver and Stereo Component Amplifier"	AV-124
	3. Radio receiver	AV-145
	4. Stereo component amplifier	AV-150
The other caller cannot hear your voice, or your voice is too quiet or distorted.	1. Proceed to "The Other Caller cannot Hear Your Voice, or Your Voice is too Quiet or Distorted"	AV-86
	2. Proceed to "Microphone Circuit between Microphone and Radio Receiver"	AV-126
	3. Microphone	AV-232
	4. Radio receiver	AV-145

*1: for Premium Model

TERMINALS OF ECU

1. RADIO RECEIVER (PREMIUM MODEL)

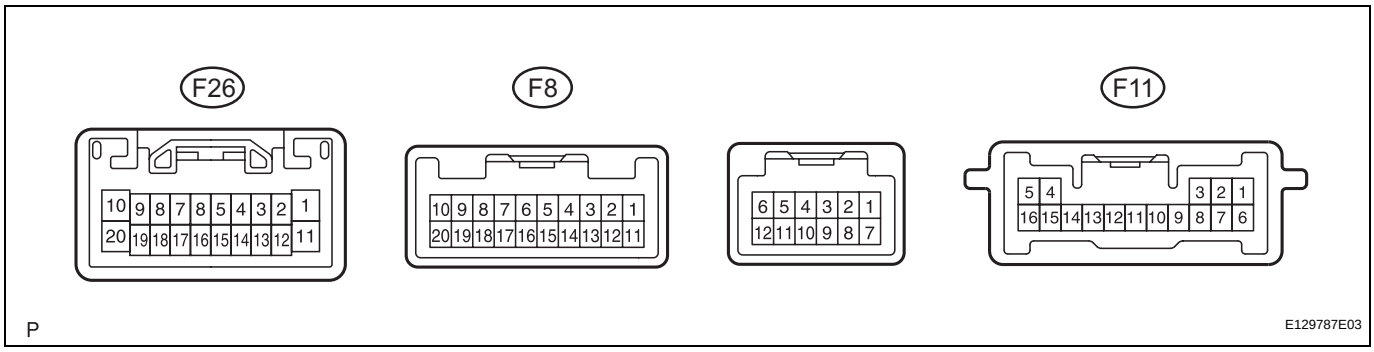

Symbols (Terminal No.)	Wiring Color	Terminal Description	Condition	Specification
B (F26-1) - GND (F26-20)	L-Y - BR	Battery	Always	10 to 14 V
ILL+ (F26-2) - GND (F26-20)	G - BR	Illumination signal	Light control switch OFF → TAIL	Below 1 V → 10 to 14 V
ATX+ (F26-5) - GND (F26-20)	R - BR	AVC-LAN communication signal	Turn ignition switch on (ACC)	2 to 3 V
MUTE (F26-7) - GND (F26-20)	O - BR	MUTE signal	Audio system is playing → Changing	Above 3.5 V → Below 1 V
R+ (F26-8) - GND (F26-20)	R - BR	Sound signal (Right)	Audio system is playing	A waveform synchronized with sounds is output
L+ (F26-9) - GND (F26-20)	B - BR	Sound signal (Left)	Audio system is playing	A waveform synchronized with sounds is output
SLD (F26-10) - Body ground	Shielded - Body ground	Shield ground	Always	Below 1 V
ACC (F26-11) - GND (F26-20)	GR - BR	Accessory (ON)	Turn ignition switch on (ACC)	10 to14 V
ILL- (F26-12) - GND (F26-20)	W-B - BR	Illumination (rheostat) signal	Light control switch OFF → TAIL	Below 1 V → Pulse generation
ANT (F26-13) - GND (F26-20)	O - BR	Power source of antenna	Radio switch ON and AM or FM	10 to 14 V
ATX- (F26-15) - GND (F26-20)	G - BR	AVC-LAN communication signal	Turn ignition switch on (ACC)	2 to 3 V
R- (F26-18) - GND (F26-20)	G - BR	Sound signal (Right)	Audio system is playing	A waveform synchronized with sounds is output
L- (F26-19) - GND (F26-20)	W - BR	Sound signal (Left)	Audio system is playing	A waveform synchronized with sounds is output
GND (F26-20) - Body ground	BR - Body ground	Ground	Always	Below 1 V
SWG (F8-6) - GND (F26-20)	P - BR	Steering pad switch ground	Always	Below 1 V
SW1 (F8-7) - GND (F26-20)	O - BR	Steering pad switch signal	Steering pad switch not operated → SEEK+ switch pushed → SEEK- switch pushed → VOL+ switch pushed → VOL- switch pushed	4 V or more → Approx. 0.5 V → Approx. 0.9 V → Approx. 2.0 V → Approx. 3.4 V
SW2 (F8-8) - GND (F26-20)	Y - BR	Steering pad switch signal	Steering pad switch not operated → MODE switch pushed → ON HOOK switch pushed → OFF HOOK switch pushed	4 V or more → Approx. 0.5 V → Approx. 0.9 V → Approx. 2.0 V
IVO+ (F8-11) - GND (F26-20)	R - BR	Voice signal	"Bluetooth" handsfree voice signal is playing	A waveform synchronized with sounds is output

Symbols (Terminal No.)	Wiring Color	Terminal Description	Condition	Specification
IVO- (F8-12) - GND (F26-20)	G - BR	Voice signal	"Bluetooth" handsfree voice signal is playing	A waveform synchronized with sounds is output
SLD (F8-13) - Body ground	Shielded - Body ground	Shield ground	Always	Below 1 V
ARI (F8-15) - GND (F26-20)	G - BR	Sound signal (Right)	External device is playing (When stereo jack is used)	A waveform synchronized with sounds is output
ASGN (F8-16) - GND (F26-20)	BR - BR	Shield ground	Always	Below 1 V
ALI (F8-17) - GND (F26-20)	R - BR	Sound signal (Left)	External device is playing (When stereo jack is used)	A waveform synchronized with sounds is output
AUXI (F8-19) - GND (F26-20)	G - BR	External device connection detection signal	External device is connected	Below 1 V
MIC- (F11-1) - GND (F26-20)	R - BR	Microphone voice signal	Bluetooth handsfree function is ON	A waveform synchronized with sounds is output
MIC+ (F11-2) - GND (F26-20)	G - BR	Microphone voice signal	Bluetooth handsfree function is ON	A waveform synchronized with sounds is output
+B (F11-5) - GND (F26-20)	L - BR	Battery	Always	10 to 14 V
MCVD (F11-7) - GND (F26-20)	LG - BR	Microphone AMP power supply	Turn ignition switch off → on (IG)	Below 1 V → 5 V
GND (F11-14) - Body ground	BR - Body ground	Ground	Always	Below 1 V
ACC (F11-16) - GND (F26-20)	GR - BR	Accessory (ON)	Turn ignition switch off → on (ACC)	Below 1 V → 10 to 14 V

2. RADIO RECEIVER (STANDARD MODEL)

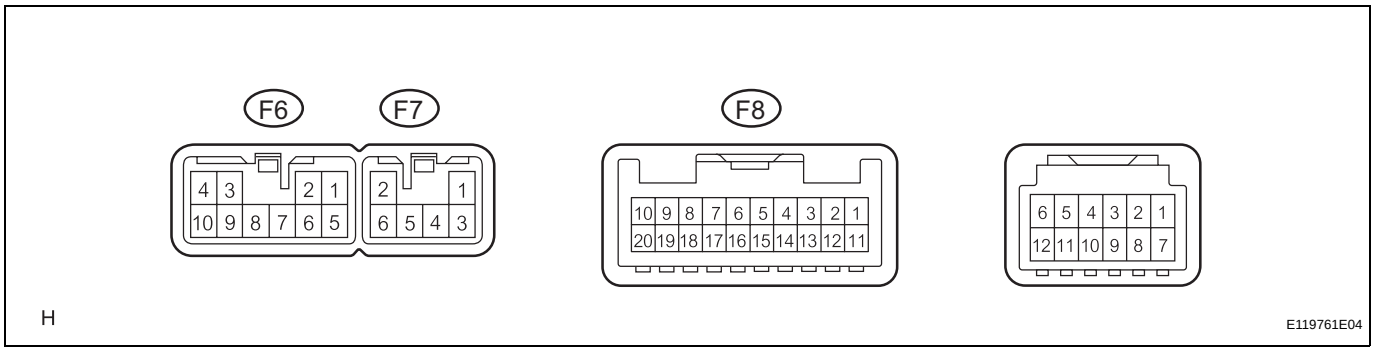

Symbols (Terminal No.)	Wiring Color	Terminal Description	Condition	Specification
FR+ (F6-1) - GND (F6-7)	LG - BR	Sound signal (Front Right)	Audio system is playing	A waveform synchronized with sounds is output
FL+ (F6-2) - GND (F6-7)	P - BR	Sound signal (Front Left)	Audio system is playing	A waveform synchronized with sounds is output
ACC (F6-3) - GND (F6-7)	GR - BR	Accessory (ON)	Turn ignition switch off→ on (ACC)	Below 1 V → 10 to 14 V
B (F6-4) - GND (F6-7)	L-Y - BR	Battery	Always	10 to 14 V
FR- (F6-5) - GND (F6-7)	L - BR	Sound signal (Front Right)	Audio system is playing	A waveform synchronized with sounds is output
FL- (F6-6) - GND (F6-7)	V - BR	Sound signal (Front Left)	Audio system is playing	A waveform synchronized with sounds is output
GND (F6-7) - Body ground	BR - Body ground	Ground	Always	Below 1 V
ANT (F6-8) - GND (F6-7)	O - BR	Power source of antenna	Radio switch ON and AM or FM	10 to 14 V
ILL+ (F6-10) - GND (F6-7)	G - BR	Illumination signal	Light control switch OFF → TAIL or HEAD	Below 1 V → 10 to 14 V
RR+ (F7-1) - GND (F6-7)	R - BR	Sound signal (Rear Right)	Audio system is playing	A waveform synchronized with sounds is output
RL+ (F7-2) - GND (F6-7)	B - BR	Sound signal (Rear Left)	Audio system is playing	A waveform synchronized with sounds is output

Symbols (Terminal No.)	Wiring Color	Terminal Description	Condition	Specification
RR- (F7-3) - GND (F6-7)	W - BR	Sound signal (Rear Right)	Audio system is playing	A waveform synchronized with sounds is output
ILL- (F7-5) - GND (F6-7)	W-B - BR	Illumination (rheostat) signal	Light control switch OFF → TAIL or HEAD	Below 1 V → Pulse generation
RL- (F7-6) - GND (F6-7)	Y - BR	Sound signal (Rear Left)	Audio system is playing	A waveform synchronized with sounds is output
SPD (F8-3) - GND (F6-7)	V - BR	Speed signal from combination meter	Turn ignition switch on (IG). Turn drive wheels slowly.	Pulse generation
SWG (F8-6) - GND (F6-7)	P - BR	Steering pad switch ground	Always	Below 1 V
SW1 (F8-7) - GND (F6-7))	O - BR	Steering pad switch signal	Steering pad switch not operated → SEEK+ switch pushed → SEEK- switch pushed → VOL+ switch pushed → VOL- switch pushed	4 V or more → Approx. 0.5 V → Approx. 0.9 V → Approx. 2.0 V → Approx. 3.4 V
SW2 (F8-8) - GND (F6-7)	Y - BR	Steering pad switch signal	Steering pad switch not operated → MODE switch pushed	4 V or more → Below 2.5 V
ARI (F8-15) - GND (F6-7)	O - BR	Sound signal (Right)	External device is playing (When stereo jack is used)	A waveform synchronized with sounds is output
ASGN (F8-16) - GND (F6-7)	BR - BR	Shield ground	Always	Below 1 V
ALI (F8-17) - GND (F6-7)	R - BR	Sound signal (Left)	External device is playing (When stereo jack is used)	A waveform synchronized with sounds is output
AUXI (F8-19) - GND (F6-7)	G - BR	External device connection detection signal	External device is connected	Below 1 V

3. STEREO COMPONENT AMPLIFIER (PREMIUM MODEL)

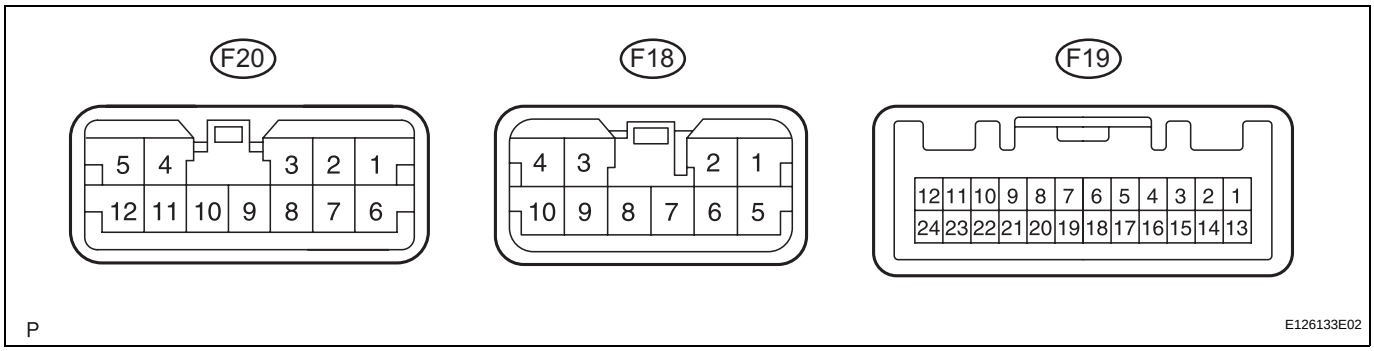

Symbols (Terminal No.)	Wiring Color	Terminal Description	Condition	Specification
MUTE (F19-1) - GND (F20-6)	O - BR	Mute signal from radio receiver	Audio system is playing → Changing	Above 3.5 V → Below 1 V
L- (F19-2) - GND (F20-6)	W - BR	Sound signal (Left)	Audio system is playing	A waveform synchronized with sounds is output
L+ (F19-3) - GND (F20-6)	B - BR	Sound signal (Left)	Audio system is playing	A waveform synchronized with sounds is output
R- (F19-4) - GND (F20-6)	G - BR	Sound signal (Right)	Audio system is playing	A waveform synchronized with sounds is output
R+ (F19-5) - GND (F20-6)	R - BR	Sound signal (Right)	Audio system is playing	A waveform synchronized with sounds is output
SLD (F19-6) - Body ground	Shielded - Body ground	Shield ground	Always	Blow 1 V
TX- (F19-7) - GND (F20-6)	G - BR	AVC-LAN communication signal	Turn ignition switch on (ACC)	2 to 3 V

Symbols (Terminal No.)	Wiring Color	Terminal Description	Condition	Specification
TX+ (F19-8) - GND (F20-6)	R - BR	AVC-LAN communication signal	Turn ignition switch on (ACC)	2 to 3 V
SPD (F19-11) - GND (F20-6)	V - BR	Speed signal from combination meter	Turn ignition switch on (IG). Turn drive wheels slowly.	Pulse generation
ACC (F19-12) - GND (F20-6)	GR - BR	Accessory (ON)	Turn ignition switch off → on (ACC)	Below 1 V → 10 to 14 V
INT- (F19-22) - GND (F20-6)	G - BR	Voice signal	Navigation or "Bluetooth " handsfree voice signal is provided	A waveform synchronized with sounds is output
INT+ (F19-23) - GND (F20-6)	R - BR	Voice signal	Navigation or "Bluetooth " handsfree voice signal is provided	A waveform synchronized with sounds is output
+B (F18-1) - GND (F20-6)	GR - BR	Battery	Always	10 to 14 V
FR+ (F18-2) - GND (F20-6)	LG - BR	Sound signal (Front Right)	Audio system is playing	A waveform synchronized with sounds is output
RL+ (F18-3) - GND (F20-6)	B - BR	Sound signal (Rear Left)	Audio system is playing	A waveform synchronized with sounds is output
RR- (F18-4) - GND (F20-6)	W - BR	Sound signal (Rear Right)	Audio system is playing	A waveform synchronized with sounds is output
+B2 (F18-5) - GND (F20-6)	GR - BR	Battery	Always	10 to 14 V
FR- (F18-6) - GND (F20-6)	L - BR	Sound signal (Front Right)	Audio system is playing	A waveform synchronized with sounds is output
FL- (F18-7) - GND (F20-6)	V - BR	Sound signal (Front Left)	Audio system is playing	A waveform synchronized with sounds is output
FL+ (F18-8) - GND (F20-6)	P - BR	Sound signal (Front Left)	Audio system is playing	A waveform synchronized with sounds is output
RL- (F18-9) - GND (F20-6)	Y - BR	Sound signal (Rear Left)	Audio system is playing	A waveform synchronized with sounds is output
RR+ (F18-10) - GND (F20-6)	R - BR	Sound signal (Rear Right)	Audio system is playing	A waveform synchronized with sounds is output
WFL- (F20-1) - GND (F20-6)	V - BR	Sound signal (Front Left)	Audio system is playing	A waveform synchronized with sounds is output
WFL+ (F20-2) - GND (F20-6)	P - BR	Sound signal (Front Left)	Audio system is playing	A waveform synchronized with sounds is output
WFR- (F20-3) - GND (F20-6)	L - BR	Sound signal (Front Right)	Audio system is playing	A waveform synchronized with sounds is output
SL+ (F20-4) - GND (F20-6)	G-W - BR	Sound signal (Rear Left)	Audio system is playing	A waveform synchronized with sounds is output
SR+ (F20-5) - GND (F20-6)	L - BR	Sound signal (Rear Right)	Audio system is playing	A waveform synchronized with sounds is output
GND (F20-6) - Body ground	BR - Body ground	Ground	Always	Below 1 V
E (F20-7) - Body ground	BR - Body ground	Ground	Always	Below 1 V
WFR+ (F20-9) - GND (F20-6)	LG - BR	Sound signal (Front Right)	Audio system is playing	A waveform synchronized with sounds is output
SL- (F20-10) - GND (F20-6)	BR - BR	Sound signal (Rear Left)	Audio system is playing	A waveform synchronized with sounds is output
SR- (F20-12) - GND (F20-6)	Y - BR	Sound signal (Rear Right)	Audio system is playing	A waveform synchronized with sounds is output

DTC CHECK / CLEAR

HINT:
If the system cannot enter the diagnostic mode, inspect the AVC-LAN and all the components that connect to the AVC-LAN for short circuits and repair or replace the problem part. (See page AV-118)

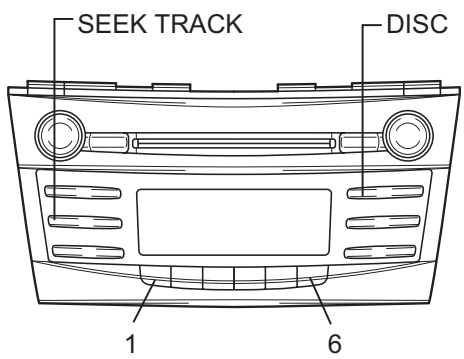

P E129786E01

1. STARTING DIAGNOSTIC MODE

(a) Turn the ignition switch on (ACC).
(b) Turn off the audio system.
(c) While pressing the preset switches "1" and "6" at the same time, press the "DISC" switch 3 times.
HINT:
A beep is emitted 3 times and the diagnostic function is activated. The system enters the all element illumination mode and the switch check mode.

2. ALL ELEMENT ILLUMINATION MODE AND SWITCH CHECK MODE

HINT:
Illumination status of all switches and operations of the panel switches can be checked.

Example:

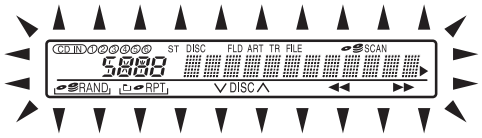

N E119764E02

(a) Check that all elements are on.
(b) When pressing each panel switch, check that a beep is emitted.
NOTICE:
Pressing the "SEEK TRACK UP" switch transfers the screen to the stereo jack adapter connection check screen. Check the operation of this switch by confirming the transfer of the screen.

When a stereo jack adapter is connected:

AUX OK

When a stereo jack adapter is not connected:

AUX – –

N E119765E02

3. STEREO JACK ADAPTER CONNECTION CHECK MODE

(a) Press the "SEEK TRACK UP" switch.
(b) Check if the stereo jack adapter is recognized.
HINT:
Vehicles that do not have a stereo jack adapter also have this function.
NOTICE:
This function is not to check connection information on an external device, but to check recognition information on a stereo jack adapter.

4. SERVICE CHECK MODE

(a) Press the "SEEK TRACK UP" switch.
HINT:
For details of the service check mode, refer to "6. CHECK DTC" and "7. DTC CLEAR/RECHECK".

5. FINISHING DIAGNOSTIC MODE

(a) Press the "DISC" switch for 2 seconds or more, or turn the ignition switch off.

6. CHECK DTC

HINT:
Illustrations may differ from the actual vehicle depending on the device settings and options. Therefore, some detailed areas may not be shown exactly the same as on the actual vehicle.

(a) Reference:
In the system check mode, the system check and the diagnostic memory check are performed, and the check results are displayed in ascending order of the component codes (physical address).

Terms	Meaning
Component code (Physical address)	Three-digit code (in hexadecimal) given to each device comprising AVC-LAN. Corresponding to its function, individual symbol is provided.
Logical address	Two-digit code (in hexadecimal) given to each function and device unit in each device comprising AVC-LAN.

(b) Service check result display

Display	Previous term	Meaning	Action to be taken
good	Good (normal)	No DTCs are detected in both "System Check Mode" and "Diagnostic Memory Mode".	-
nCon	No connection	The system recognized the component when it was registered, but the component gives no response to the "Diagnostic Mode ON Request".	Check the power source circuit and the communication circuit of the component indicated by the component code (physical address).
ECHn	Exchange	One or more DTCs for "Exchange" are detected in either "System Check Mode" or "Diagnostic Memory Mode".	Go to the detailed information mode to check the trouble area referring to the DTC list.
CHEC	Check	When no DTCs are detected for "Exchange", one or more DTCs for "Check" are detected in either "System Check Mode" or "Diagnostic Memory Mode".	Go to the detailed information mode to check the trouble area referring to the DTC list.
OLd	Old version	Old DTC application is identified and DTC is detected in either "System Check Mode" or "Diagnostic Memory Mode".	-
nrES	No response	The device gives no response to any one of "System Check Mode ON Request", "System Check Result Request", and "Diagnostic Memory Request".	Check the power source circuit and the communication circuit of the component indicated by the component code (physical address).

(c) Device name and physical address

Physical address No.	Name
190	Radio receiver
440	Stereo component amplifier
19D	"Bluetooth" handsfree module

(d) Service check mode
(1) Press the "SEEK TRACK" switch to see the check result of each component.
(2) The component code (physical address) is displayed first, and then the check result follows.
HINT:
- If all check results are "good", the system judges that no DTC exists.

- If the preset switch "1" is pressed in the service check mode, service check is performed again.
- This illustration is only an example and may differ in cases such as for each option part and output DTCs.

Service Check Mode:

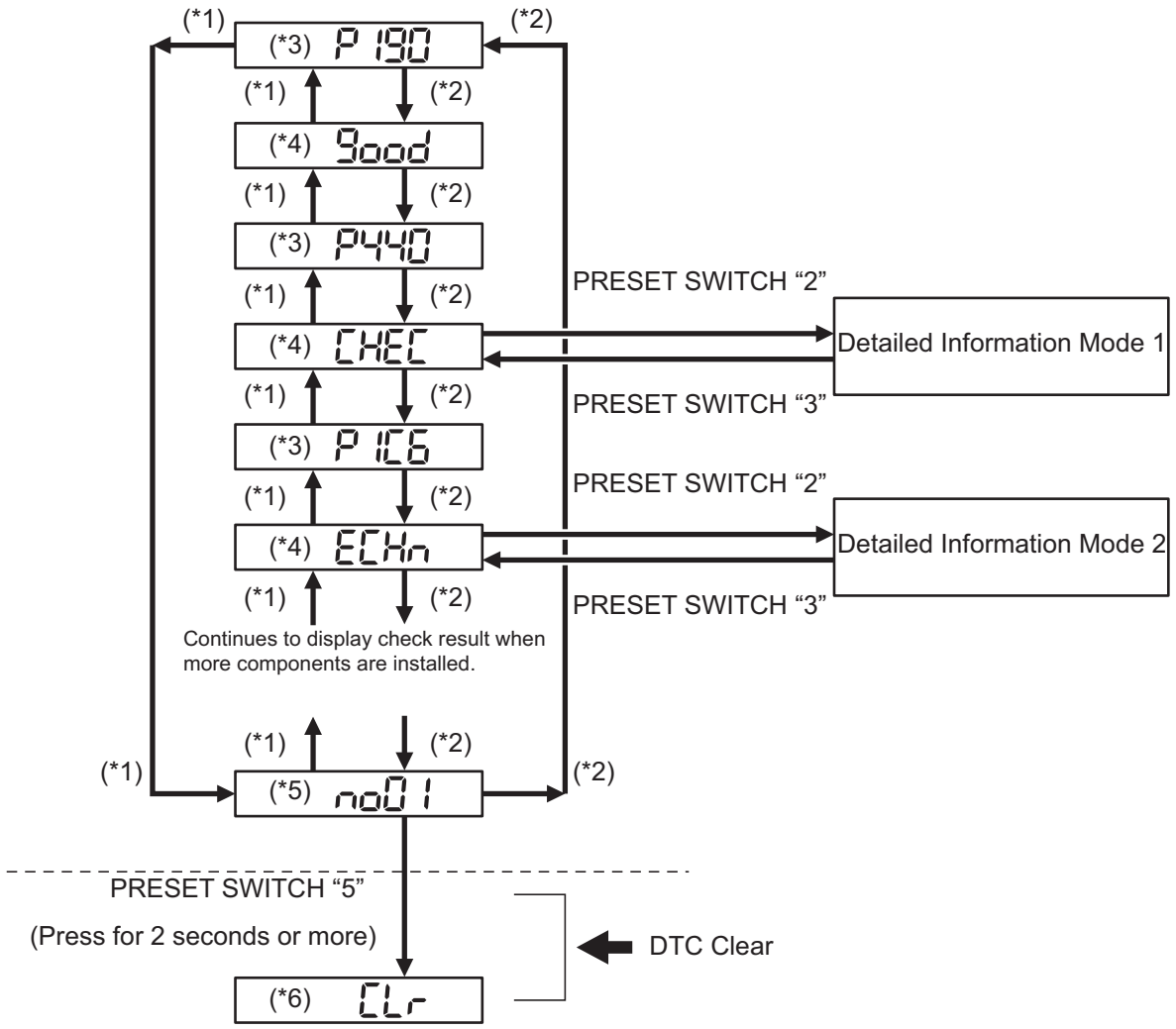

*1: SEEK TRACK DOWN

*2: SEEK TRACK UP

*3: P...Indicates physical address

190/440/1C6...Physical address

*4: Result

*5: Up-to-date connection check number

*6: Memory clear

P

E110920E07

(e) Detailed information mode 1

HINT:

- "Detailed Information Mode 1" is displayed when there is no response to "System Check Result Request" and DTC is detected only in "Diagnostic Memory Request".
- The component device code (physical address) is displayed first, and then the check result follows.
- This illustration is only an example and may differ in cases such as for each option part and output DTCs.

(1) Press the preset switch "2" to go to the "Detailed Information Mode 1".

(2) Press the "SEEK TRACK" switch to display the physical address and DTC of the component.

(3) Press the preset switch "3" to go to the "Service Check Mode".

(4) Distinguish between the displays of the responses to "System Check Result Request" and "Diagnostic Memory Request". In order to distinguish the information detected in "System Check Mode" and "Diagnostic Memory Mode" in "ECHn", "CHEC", and "OLd" in "Detailed Information Mode 1", refer to the following:

- "SyS" is displayed before the detailed codes detected as a result of "System Check Result Request" are displayed.
- "COdE" is displayed before the detailed codes detected as a result of "Diagnostic Memory Request" are displayed.

HINT:

- The response to "System Check Result Request" is the current information given from each ECU as a result of the system check.
- The response to "Diagnostic Memory Request" contains the information received from each ECU or stored in each ECU in the past.
- The response to "Diagnostic Memory Request" is the output DTCs as a result of the diagnostic memory check or the DTCs received from each ECU.
- "System Check Result Request (SyS)" is displayed first, and then the logical address and DTC appear in order.
- "Diagnostic Memory Request (COdE)" is displayed first, and then the logical address, DTC, sub-code, connection check number, and the number of occurrence appear in order.

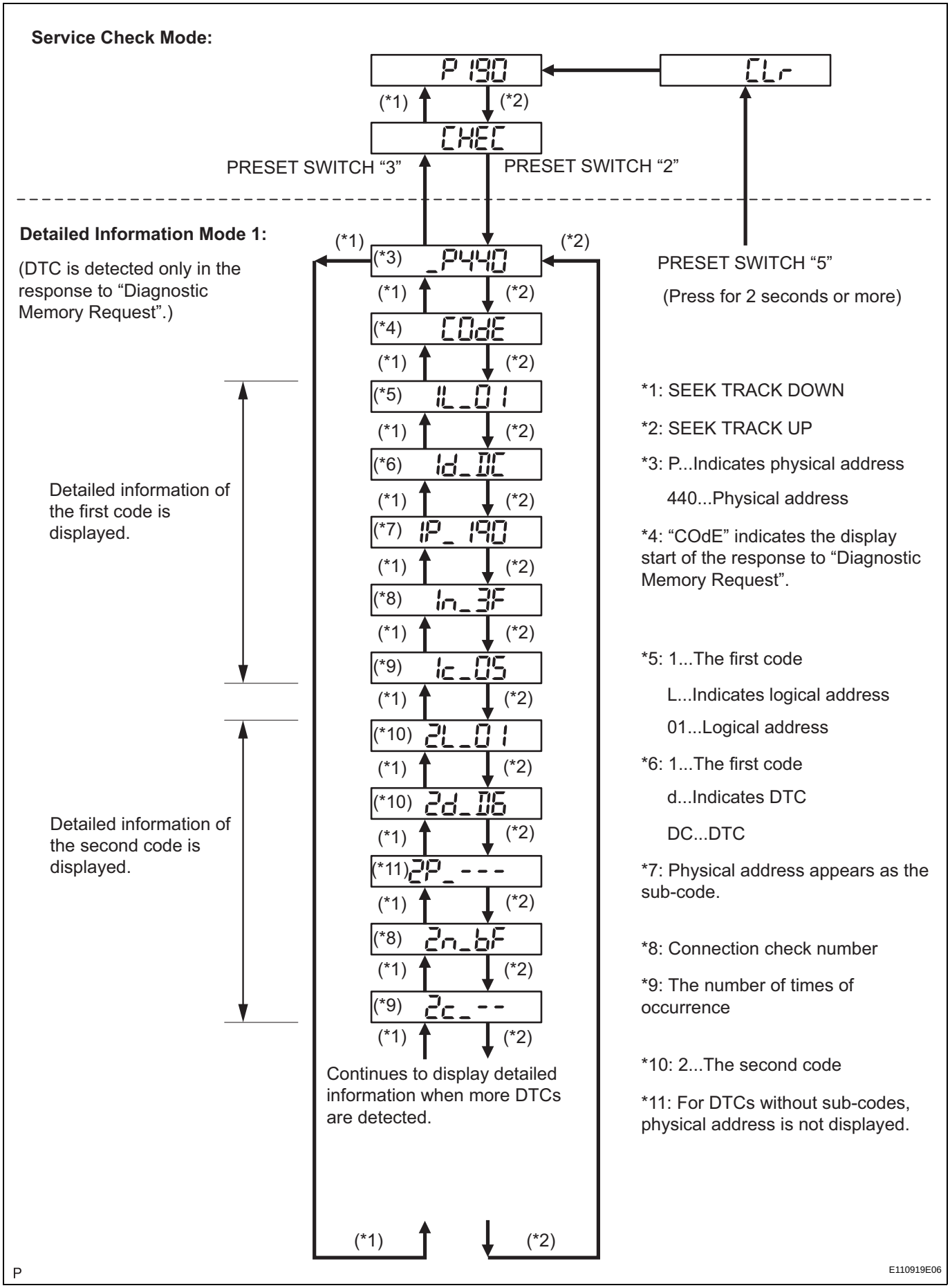
Service Check Mode:
P190
CLr
(*1)
(*2)
CHEC
PRESET SWITCH “3”
PRESET SWITCH “2”
Detailed Information Mode 1:
(DTC is detected only in the response to “Diagnostic Memory Request”.)
(*3) _P440
PRESET SWITCH “5”
(Press for 2 seconds or more)
(*4) COdE
(*5) 1L_01
(*6) 1d_DC
(*7) 1P_190
(*8) 1n_3F
(*9) 1c_05
(*10) 2L_01
(*10) 2d_D6
(*11) 2P_---
(*8) 2n_bF
(*9) 2c_--
Detailed information of the first code is displayed.
Detailed information of the second code is displayed.
Continues to display detailed information when more DTCs are detected.
*1: SEEK TRACK DOWN
*2: SEEK TRACK UP
*3: P...Indicates physical address
440...Physical address
*4: “COdE” indicates the display start of the response to “Diagnostic Memory Request”.
*5: 1...The first code
L...Indicates logical address
01...Logical address
*6: 1...The first code
d...Indicates DTC
DC...DTC
*7: Physical address appears as the sub-code.
*8: Connection check number
*9: The number of times of occurrence
*10: 2...The second code
*11: For DTCs without sub-codes, physical address is not displayed.
P
E110919E06

(f) Detailed information mode 2

HINT:

- "Detailed Information Mode 2" is displayed when DTCs are detected in the responses to both "System Check Result Request" and "Diagnostic Memory Request".
- The component device code (physical address) is displayed first, and then the check result follows.
- This illustration is only an example and may differ in cases such as for each option part and output DTCs.

(1) Press the preset switch "2" to go to the "Detailed Information Mode 2".

(2) Press the "SEEK TRACK" switch to display the physical address and DTC of the component.

(3) Press the preset switch "3" to go to the "Service Check Mode".

(4) Distinguish between the displays of the responses to "System Check Result Request" and "Diagnostic Memory Request". In order to distinguish the information detected in "System Check Mode" and "Diagnostic Memory Mode" in "ECHn", "CHEC", and "OLd" in "Detailed Information Mode 2", refer to the following:

- "SyS" is displayed before the detailed codes detected as a result of "System Check Result Request" are displayed.
- "COdE" is displayed before the detailed codes detected as a result of "Diagnostic Memory Request" are displayed.

  HINT:

  - The response to "System Check Result Request" is the current information given from each ECU as a result of the system check.
  - The response to "Diagnostic Memory Request" contains the information received from each ECU or stored in each ECU in the past.
  - The response to "Diagnostic Memory Request" is the output DTCs as a result of the diagnostic memory check or the DTCs received from each ECU.
  - "System Check Result Request (SyS)" is displayed first, and then the logical address and DTC appear in order.
  - "Diagnostic Memory Request (COdE)" is displayed first, and then the logical address, DTC, sub-code, connection check number, and the number of occurrence appear in order.

System Check Mode:

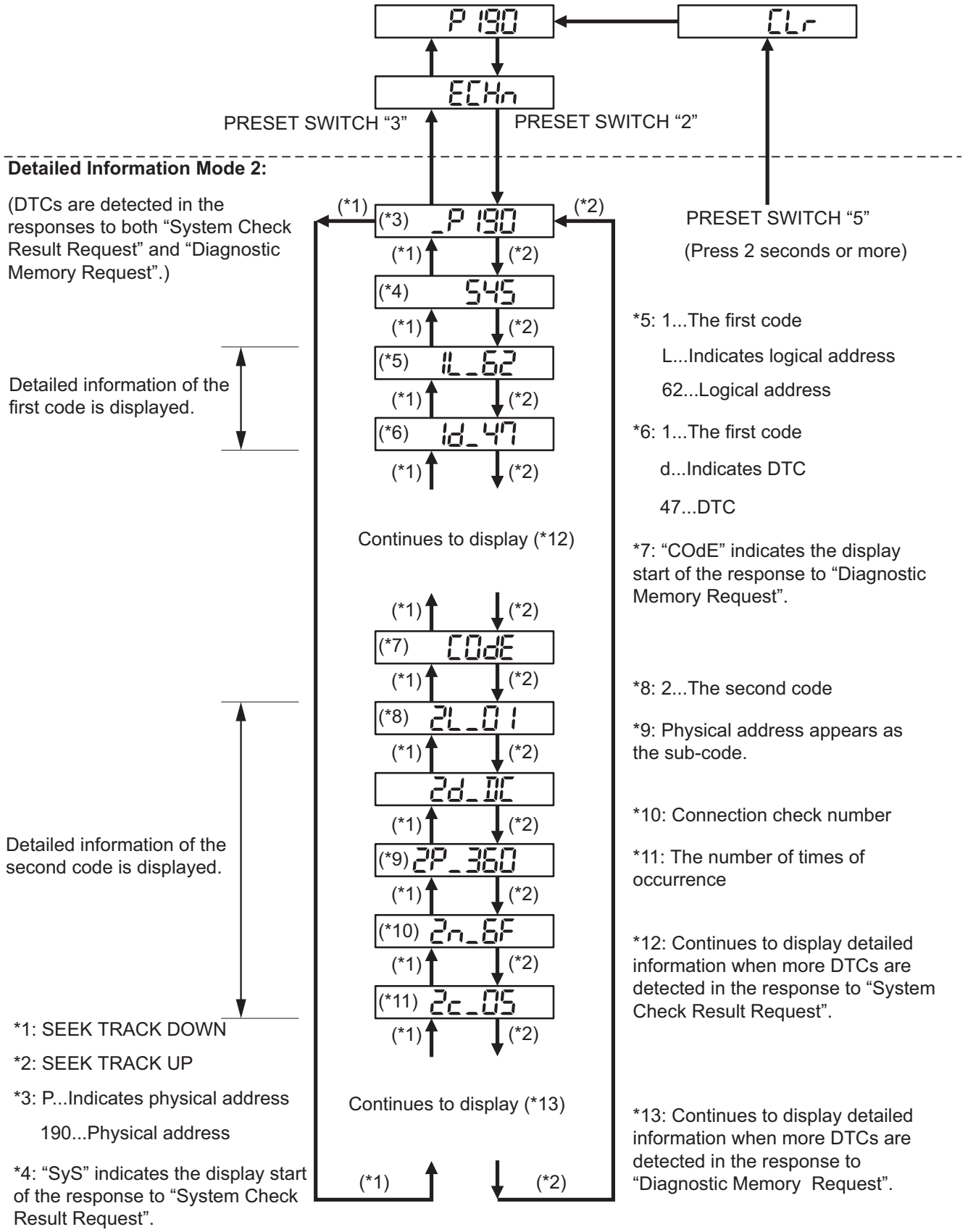

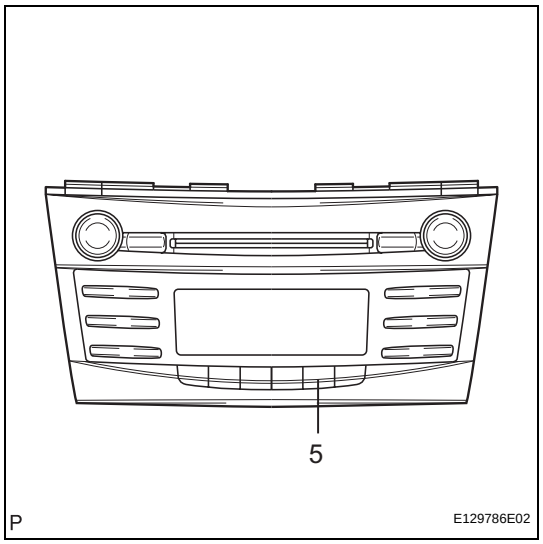

7. DTC CLEAR/RECHECK

(a) Clearing All DTC Memory (when clearing all the memory of the DTCs previously detected).

(1) When the preset switch "5" is pressed for 2 seconds or more during "Service Check Mode", the DTCs for all components are cleared. ("CLr" is displayed at this time.)

HINT:

- A beep sound is emitted once when the DTC memory is completely cleared.
- When the DTC memory for all the components is cleared, only the component codes (physical address) are displayed.
- After the DTC memory is cleared, the "Service Check Mode" is restored.

(b) Clearing Individual DTC Memory (when clearing the memory of the DTC previously detected individually).

(1) When the preset switch "5" is pressed for 2 seconds or more during "Detailed Information Mode 1" or "Detailed Information Mode 2", the DTCs for the target component are cleared.

HINT:

- A beep sound is emitted once when the DTC memory is completely cleared.
- When the DTC memory is cleared, only the component code (physical address) is displayed for the target component.
- After the DTC memory is cleared, the "Service Check Mode" is restored.
- To check DTCs, press the preset switch "1" and perform the system check again.

(c) Press the preset switch "1" to perform the service check again, and check that no DTCs are displayed for all the component codes (physical address).

DIAGNOSTIC TROUBLE CODE CHART

COMMUNICATION DIAGNOSIS:

DTC No.	Detection Item	Trouble Area	See page
01-21	ROM Error	Radio receiver	AV-31
01-22	RAM Error	Radio receiver	AV-31
01-D5	Absence of Registration Unit	1. Power source circuit of the component shown by the sub-code 2. AVC-LAN circuit between the radio receiver and the component shown by the sub-code 3. Component shown by the sub-code	AV-32
01-D6	No Master	1. Radio receiver power source circuit 2. Power source circuit of the component which has stored this code 3. AVC-LAN circuit between the radio receiver and the component which has stored this code 4. Component which has stored this code 5. Radio receiver	AV-34
01-D7	Connection Check Error	1. Radio receiver power source circuit 2. Power source circuit of the component which has stored this code 3. AVC-LAN circuit between the radio receiver and the component which has stored this code 4. Component which has stored this code 5. Radio receiver	AV-34
01-D8	No Response for Connection Check	1. Power source circuit of the component shown by the sub-code 2. AVC-LAN circuit between the radio receiver and the component shown by the sub-code 3. Component shown by the sub-code	AV-32
01-D9	Last Mode Error	1. Power source circuit of the component shown by the sub-code 2. AVC-LAN circuit between the radio receiver and the component shown by the sub-code 3. Component shown by the sub-code	AV-32
01-DA	No Response Against ON / OFF Command	1. Power source circuit of the component shown by the sub-code 2. AVC-LAN circuit between the radio receiver and the component shown by the sub-code 3. Component shown by the sub-code	AV-32

DTC No.	Detection Item	Trouble Area	See page
01-DB	Mode Status Error	1. Power source circuit of the component shown by the sub-code 2. AVC-LAN circuit between the radio receiver and the component shown by the sub-code 3. Component shown by the sub-code	AV-32
01-DC	Transmission Error	If the same sub-code is recorded in other components, check harness for power supply and communication system of all components shown by code	AV-39
01-DD	Master Reset	1. Radio receiver power source circuit 2. AVC-LAN circuit between the radio receiver and the component which has stored this code 3. Radio receiver 4. Component which has stored this code	AV-42
01-DE	Slave Reset	1. Power source circuit of the component shown by the sub-code 2. AVC-LAN circuit between the radio receiver and the component shown by the sub-code 3. Component shown by the sub-code	AV-32
01-DF	Master Error	1. Radio receiver power source circuit 2. AVC-LAN circuit between the radio receiver and the component which has stored this code 3. Radio receiver 4. Component which has stored this code	AV-47
01-E0	Registration Complete Indication Error	-	AV-51
01-E1	Voice Processing Device ON Error	1. Radio receiver power source circuit 2. AVC-LAN circuit between the radio receiver and the component which has stored this code 3. Radio receiver 4. Component which has stored this code	AV-42
01-E2	ON / OFF Indication Parameter Error	Radio receiver	AV-52
01-E3	Registration Demand Transmission	-	AV-51
01-E4	Multiple Frame Incomplete	-	AV-51

CD PLAYER

DTC No.	Detection Item	Trouble Area	See page
62-10	CD Player Mechanical Error	Radio receiver	AV-54
62-11	CD Insertion and Ejection Error	Radio receiver	AV-54
62-12	CD Reading Abnormal	Radio receiver	AV-54
62-41	Wrong Disc	1. CD 2. Radio receiver	AV-55
62-42	Disc cannot be Read	1. CD 2. Radio receiver	AV-55

DTC No.	Detection Item	Trouble Area	See page
62-43	CD-ROM Abnormal	1. CD 2. Radio receiver	AV-57
62-44	CD Abnormal	Radio receiver	AV-59
62-45	Eject Error	Radio receiver	AV-60
62-46	Scratched / Reversed Disc	1. CD 2. Radio receiver	AV-61
62-47	High Temperature	Radio receiver	AV-63
62-48	Excess Current	Radio receiver	AV-59
62-50	Tray Insertion / Ejection Error	Radio receiver	AV-59
62-51	Elevator Error	Radio receiver	AV-60
62-52	Clamp Error	Radio receiver	AV-60
62-78	DSP Error	-	AV-64
62-7D	Disc cannot be Played	1. CD 2. Radio receiver	AV-65
62-7E	No Playable Files	1. CD 2. Radio receiver	AV-65
62-7F	Copyright Protection Error	1. CD 2. Radio receiver	AV-65

IN-DASH CD CHANGER

DTC No.	Detection Item	Trouble Area	See page
63-10	CD Changer Mechanical Error	Radio receiver	AV-54
63-11	CD Insertion and Ejection Error	Radio receiver	AV-54
63-12	CD Reading Abnormal	Radio receiver	AV-54
63-41	Wrong Disc	1. CD 2. Radio receiver	AV-55
63-42	Disc cannot be Read	1. CD 2. Radio receiver	AV-55
63-43	CD-ROM Abnormal	1. CD 2. Radio receiver	AV-57
63-44	CD Abnormal	Radio receiver	AV-59
63-45	Eject Error	Radio receiver	AV-60
63-46	Scratched / Reversed Disc	1. CD 2. Radio receiver	AV-61
63-47	High Temperature	Radio receiver	AV-63
63-48	Excess Current	Radio receiver	AV-59
63-50	Tray Insertion / Ejection Error	Radio receiver	AV-59
63-51	Elevator Error	Radio receiver	AV-60
63-52	Clamp Error	Radio receiver	AV-60
63-78	DSP Error	-	AV-64
63-7D	Disc cannot be Played	1. CD 2. Radio receiver	AV-65
63-7E	No Playable Files	1. CD 2. Radio receiver	AV-65
63-7F	Copyright Protection Error	1. CD 2. Radio receiver	AV-65

TELEPHONE:

DTC No.	Detection Item	Trouble Area	See page
57-47	Bluetooth Module Initialization Failed	Radio receiver	AV-53

DTC	01-21	ROM Error

DTC	01-22	RAM Error

DESCRIPTION

DTC No.	DTC Detection Condition	Trouble Area
01-21	A malfunction exists in ROM.	Radio receiver
01-22	A malfunction exists in RAM.	

INSPECTION PROCEDURE

HINT:
After the inspection is completed, clear the DTCs.

1	**REPLACE RADIO RECEIVER**

NEXT

END

DTC	01-D5	Absence of Registration Unit

DTC	01-D8	No Response for Connection Check

DTC	01-D9	Last Mode Error

DTC	01-DA	No Response Against ON / OFF Command

DTC	01-DB	Mode Status Error

DTC	01-DE	Slave Reset

DESCRIPTION

DTC No.	DTC Detection Condition	Trouble Area
01-D5 *1, *3	A device that the sub-code shows is (was) disconnected from the system when turning the ignition switch on (ACC or IG). The communication condition with the device that the code shows cannot be obtained when the engine starts.	• Power source circuit of the component shown by the sub-code • AVC-LAN circuit between the radio receiver and the component shown by the sub-code • Component shown by the sub-code
01-D8 *2, *3	The device indicated by the sub-code is (was) disconnected from the system after the engine starts.	
01-D9 *1, *3	The device that had functioned before the engine stopped is (was) disconnected from the system when turning the ignition switch is on (ACC or IG).	
01-DA *3	No response is identified when changing mode. Sound and image do not change by switch operation.	
01-DB *1, *3	A dual alarm is detected.	
01-DE *3, *4	A slave device has been disconnected after the engine starts	

HINT:
- *1: Even if no fault is present, this trouble code may be stored depending on the battery condition or engine start voltage.
- *2: If the power connector is disconnected after the engine starts, this code is stored after 180 seconds.
- *3: If the device is reported as not existing during verification, check the power source circuit and AVC-LAN circuit for the device.
- *4: This code may be stored if the engine is started and the ignition switch is turned to the START position again. (Key type ignition switch only)

NOTICE:
- **Before starting troubleshooting, be sure to clear DTCs to erase codes stored due to the reasons described in the HINT above. Then, check for DTCs and troubleshoot according to the output DTCs.**
- **The radio receiver is the master unit.**
- **Be sure to clear and recheck DTCs after the inspection is completed to confirm that no DTCs are output.**

INSPECTION PROCEDURE

NOTICE:

Be sure to read DESCRIPTION before performing the following procedures.

1	**CHECK "RADIO RECEIVER COMMUNICATION ERROR" IN FLOW CHART**

Refer to the radio receiver communication error (See page AV-129).

NEXT

END

DTC	01-D6	No Master

DTC	01-D7	Connection Check Error

DESCRIPTION

DTC No.	DTC Detection Condition	Trouble Area
01-D6 *1	When either of the following conditions is met: • The device that stores (stored) the code has (had) been disconnected when the ignition switch is turned on (ACC or IG). • The master device has (had) been disconnected when this code is stored.	• Radio receiver power source circuit • Power source circuit of the component which has stored this code • AVC-LAN circuit between the radio receiver and the component which has stored this code • Component which has stored this code • Radio receiver
01-D7 *2	When either of the following conditions is met: • The device that stored the code has (had) been disconnected after the engine starts (started). • The master device has (had) been disconnected when this code is (was) stored.	

HINT:
- *1: Even if no fault is present, this trouble code may be stored depending on the battery condition or engine start voltage.
- *2: When 210 seconds have elapsed after disconnecting the power supply connector of the master component with the ignition switch on (ACC or IG), this code is stored.

NOTICE:
- **Before starting troubleshooting, be sure to clear DTCs to erase codes stored due to the reasons described in the HINT above. Then, check for DTCs and troubleshoot according to the output DTCs.**
- **The radio receiver is the master unit.**
- **Be sure to clear and recheck DTCs after the inspection is completed to confirm that no DTCs are output.**

INSPECTION PROCEDURE

NOTICE:
Be sure to read DESCRIPTION before performing the following procedures.

1	CHECK RADIO RECEIVER POWER SOURCE CIRCUIT

Refer to the radio receiver power source circuit (See page AV-140).
If the power source circuit is operating normally, proceed to the next step.

NEXT

AV

2	IDENTIFY THE COMPONENT WHICH HAS STORED THIS CODE

(a) Enter the diagnostic mode.

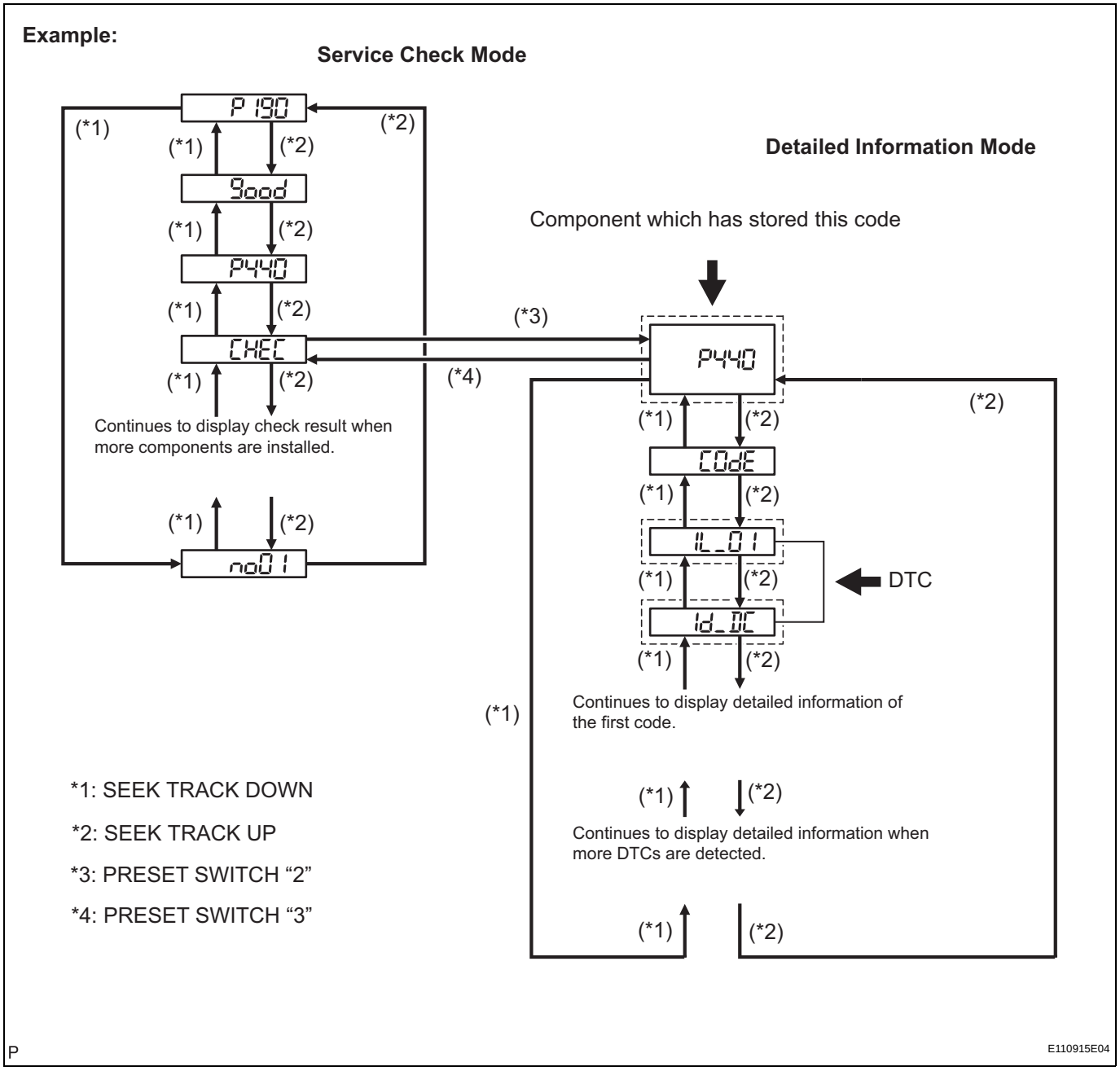

(b) Press the preset switch "3" to change to "Detailed Information Mode".

(c) Identify the component which has stored this code.

Component Table:

Component	Physical address
Stereo component amplifier	440
"Bluetooth" handsfree module	19D

HINT:

- "440 (stereo component amplifier)" is the component which has stored this code in the example shown in the illustration.
- For details of the DTC display, refer to "DTC CHECK/ CLEAR" (See page AV-19).

AV

NEXT

3 CHECK COMPONENT WHICH HAS STORED THIS CODE

(a) Select the component which has stored this code.
HINT:
The "Bluetooth" handsfree module is built into the radio receiver. If there is a problem between the "Bluetooth" handsfree module and radio receiver, replace the radio receiver.

Component Table:

Component	Proceed to
"Bluetooth" handsfree module	A
Except "Bluetooth" handsfree module	B

A → **REPLACE RADIO RECEIVER**

B

4 CHECK POWER SOURCE CIRCUIT OF COMPONENT WHICH HAS STORED THIS CODE

(a) Inspect the power source circuit of the component which has stored this code.
If the power source circuit is operating normally, proceed to the next step.

Component Table:

Component	Proceed to
Stereo component amplifier	Stereo component amplifier power source circuit (See page AV-142)

NEXT

5 INSPECT RADIO RECEIVER

Premium Model Wire Harness View:

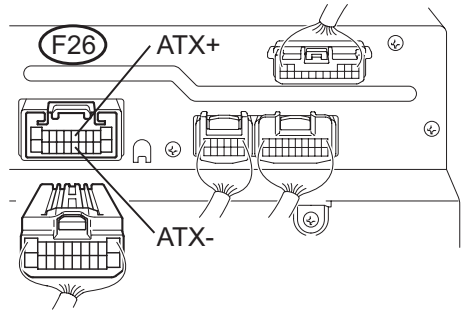

P E129798E04

(a) Disconnect the radio receiver connector.
(b) Measure the resistance according to the value(s) in the table below.

Standard resistance

Tester connection	Condition	Specified condition
ATX+ (F26-5) - ATX- (F26-15)	Always	60 to 80 Ω

NG → **REPLACE RADIO RECEIVER**

AV

OK

6	CHECK HARNESS AND CONNECTOR (RADIO RECEIVER - COMPONENT WHICH HAS STORED THIS CODE)

HINT:
For details of the connectors, refer to the "TERMINALS OF ECU" (See page AV-15).

(a) Referring to the AVC-LAN wiring diagram below, check the AVC-LAN circuit between the radio receiver and the component which has stored this code.
  (1) Disconnect all connectors between the radio receiver and the component which has stored this code.
  (2) Check for an open or short in the AVC-LAN circuit between the radio receiver and the component which has stored this code.
  OK:
  There is no open or short circuit.

AVC-LAN WIRING DIAGRAM

Premium Model:

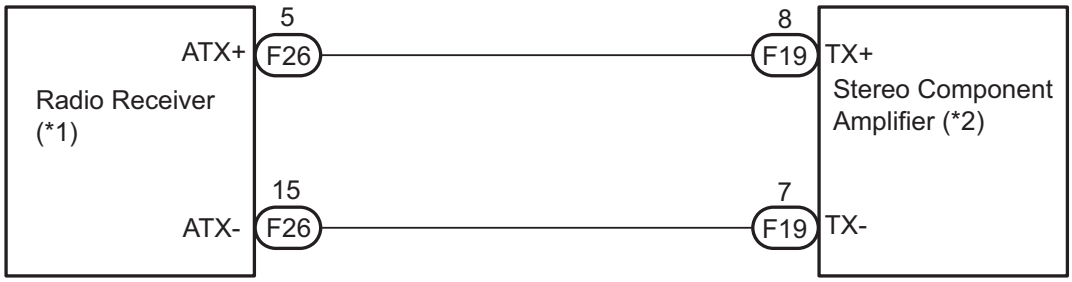

*1: Master Unit

*2: Slave Unit

P

E111831E15

NG → REPAIR OR REPLACE HARNESS OR CONNECTOR

OK

7	REPLACE COMPONENT WHICH HAS STORED THIS CODE

(a) Replace the component which has stored this code with a normal one and check if the same problem occurs again.

OK:
Same problem does not occur.

NG → **REPLACE RADIO RECEIVER**

OK

END

DTC	01-DC	Transmission Error

DESCRIPTION

DTC No.	DTC Detection Condition	Trouble Area
01-DC *1	Transmission to component shown by sub-code failed (Detecting this DTC does not always mean actual failure)	If the same sub-code is recorded in other components, check harness for power supply and communication system of all components shown by code

HINT:
*1: This code may be stored if the engine is started, idled for 60 seconds and then the ignition switch is turned to the START position again. (Key type ignition switch only)

NOTICE:

- **Before starting troubleshooting, be sure to clear DTCs to erase codes stored due to the reasons described in the HINT above. Then, check for DTCs and troubleshoot according to the output DTCs.**
- **The radio receiver is the master unit.**
- **Be sure to clear and recheck DTCs after the inspection is completed to confirm that no DTCs are output.**

INSPECTION PROCEDURE

NOTICE:

Be sure to read DESCRIPTION before performing the following procedures.

1 CHECK FOR DTC OF OTHER COMPONENTS

(a) Check if the component shown by the sub-code is displayed in the check result of the other components.
  (1) Check if "01-DC" is output for the other components.
  (2) If "01-DC" is output for any other components, check if the same physical address is displayed.
  Result

Result	Proceed to
"01-DC" is output and the same physical address is displayed	**A**
"01-DC" is not output or the same physical address is not displayed	**B**

HINT:
For the list of the components shown by sub-codes, refer to the table in step 2.

B → **Go to step 4**

A

2 IDENTIFY THE COMPONENT WHICH HAS STORED THIS CODE

(a) Enter the diagnostic mode.

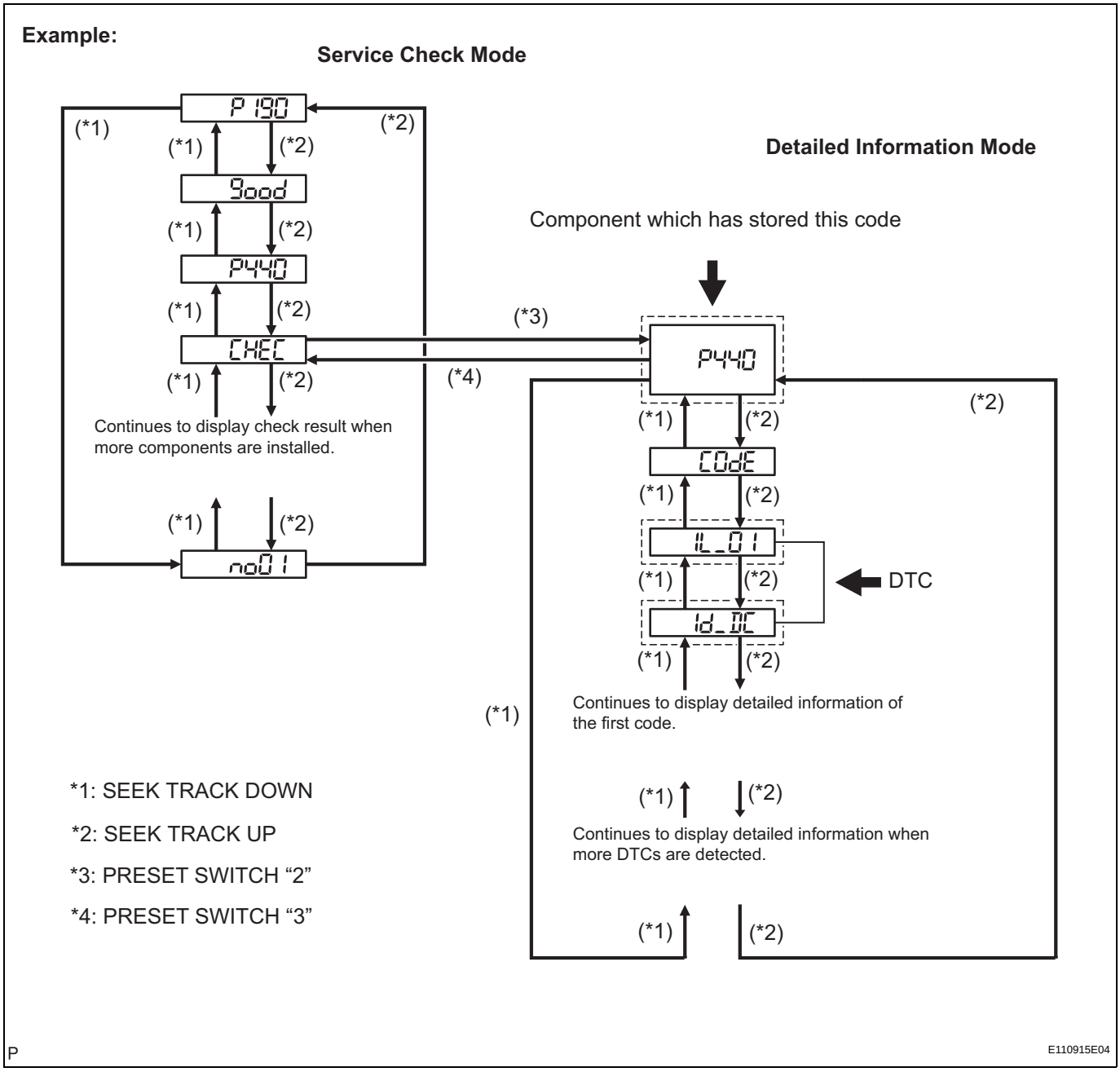

(b) Press the preset switch "3" to change to "Detailed Information Mode".

(c) Identify the component which has stored this code.

Component Table:

Component	Physical address
Stereo component amplifier	440
"Bluetooth" handsfree module	19D
Radio receiver	190

HINT:

- "440 (stereo component amplifier)" is the component which has stored this code in the example shown in the illustration.
- For details of the DTC display, refer to "DTC CHECK/ CLEAR" (See page AV-19).

NEXT

3	CHECK COMPONENT WHICH HAS STORED THIS CODE

(a) Select the component which has stored this code.

Component Table:

Component	Proceed to
Stereo component amplifier	Stereo component amplifier communication error (See page AV-133)
"Bluetooth" handsfree module	"Bluetooth" handsfree module communication error (See page AV-136)
Radio receiver	Radio receiver communication error (See page AV-129)

NEXT

END

4	CLEAR DTC

(a) Clear the DTCs (See page AV-19).
HINT:
If "01-DC" is output for only one component, this may not indicate a malfunction.

NEXT

5	RECHECK DTC

(a) Recheck for DTCs and check if the same trouble occurs again.
OK:
Malfunction disappears.

NG → **Go to step 3**

OK

END

DTC	01-DD	Master Reset

DTC	01-E1	Voice Processing Device ON Error

DESCRIPTION

DTC No.	DTC Detection Condition	Trouble Area
01-DD *1	The device that should be the master has been disconnected after engine start.	• Radio receiver power source circuit • AVC-LAN circuit between the radio receiver and the component which has stored this code • Radio receiver • Component which has stored this code
01-E1 *2	The AMP device records that the AMP output does not function even while the source device operates.	

HINT:
*1: This code may be stored if the engine is started and the ignition switch is turned to START position again. (Key type ignition switch only)
*2: Even if no fault is present, this trouble code may be stored depending on the battery condition or engine start voltage.

NOTICE:

- **Before starting troubleshooting, be sure to clear DTCs to erase codes stored due to the reasons described in the HINT above. Then, check for DTCs and troubleshoot according to the output DTCs.**
- **The radio receiver is the master unit.**
- **Be sure to clear and recheck DTCs after the inspection is completed to confirm that no DTCs are output.**

INSPECTION PROCEDURE

NOTICE:

Be sure to read DESCRIPTION before performing the following procedures.

1	CHECK RADIO RECEIVER POWER SOURCE CIRCUIT

Refer to the radio receiver power source circuit (See page AV-140).
If the power source circuit is operating normally, proceed to the next step.

NEXT

2 INSPECT RADIO RECEIVER

Premium Model Wire Harness View:

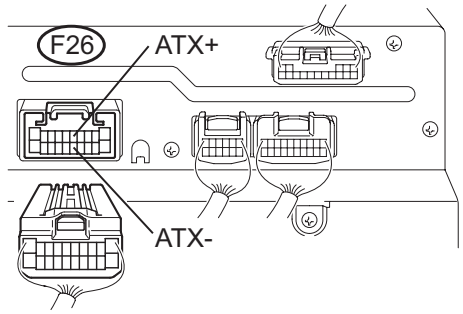

P E129798E04

(a) Disconnect the radio receiver connector.
(b) Measure the resistance according to the value(s) in the table below.

Standard resistance

Tester connection	Condition	Specified condition
ATX+ (F26-5) - ATX- (F26-15)	Always	60 to 80 Ω

NG → **REPLACE RADIO RECEIVER**

OK

3 IDENTIFY THE COMPONENT WHICH HAS STORED THIS CODE

(a) Enter the diagnostic mode.

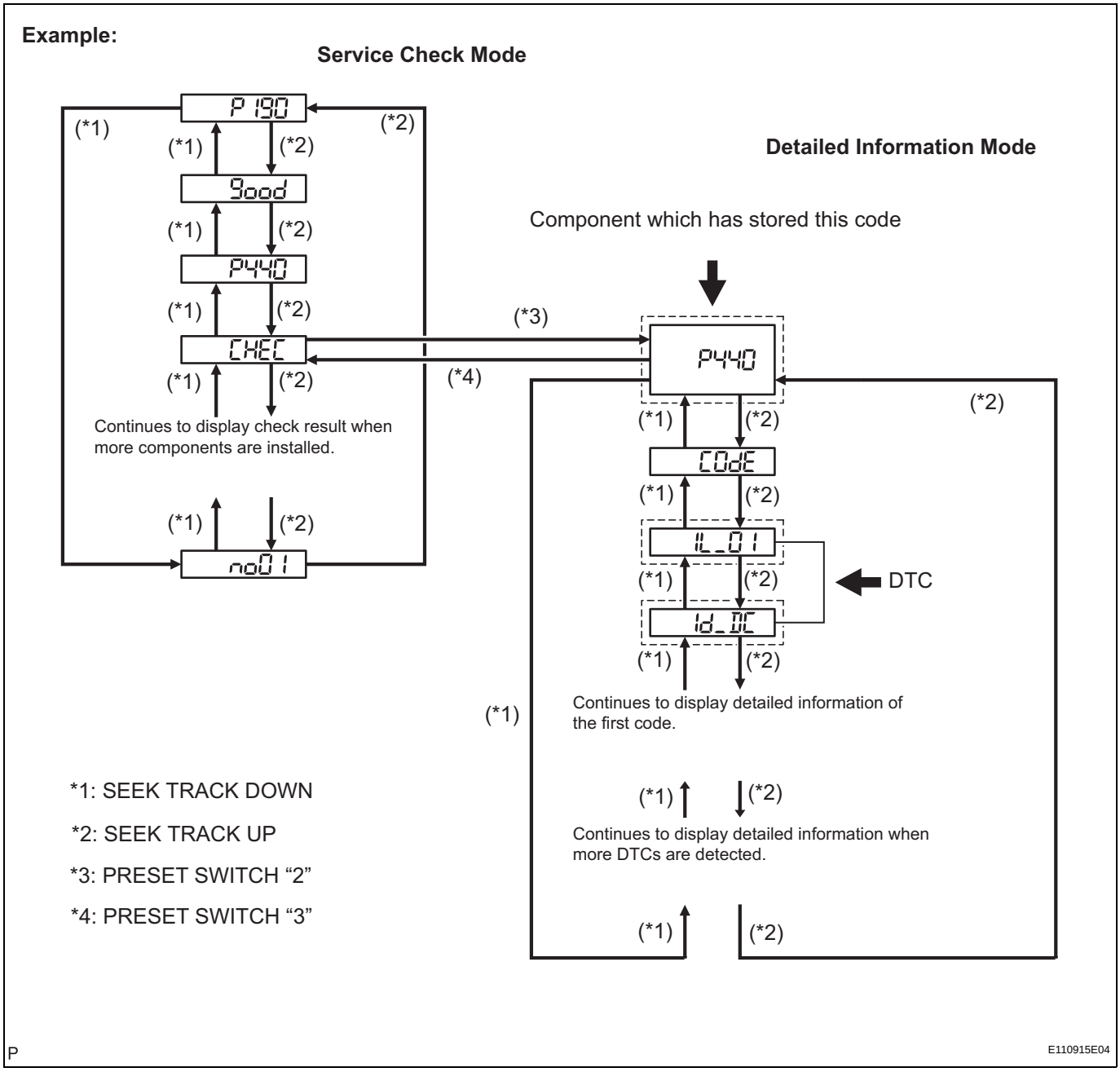

(b) Press the preset switch "3" to change to "Detailed Information Mode".

(c) Identify the component which has stored this code.

Component Table:

Component	Physical address
Stereo component amplifier	440
"Bluetooth" handsfree module	19D

HINT:

- "440 (stereo component amplifier)" is the component which has stored this code in the example shown in the illustration.
- For details of the DTC display, refer to "DTC CHECK/ CLEAR" (See page AV-19).

NEXT

4	**CHECK COMPONENT WHICH HAS STORED THIS CODE**

(a) Select the component which has stored this code.
HINT:
The "Bluetooth" handsfree module is built into the radio receiver. If there is a problem between the "Bluetooth" handsfree module and radio receiver, replace the radio receiver.

Component Table:

Component	Proceed to
"Bluetooth" handsfree module	A
Except "Bluetooth" handsfree module	B

A → **REPLACE RADIO RECEIVER**

B

5	**CHECK HARNESS AND CONNECTOR (RADIO RECEIVER - COMPONENT WHICH HAS STORED THIS CODE)**

HINT:
For details of the connectors, refer to the "TERMINALS OF ECU" (See page AV-15).

(a) Referring to the AVC-LAN wiring diagram below, check the AVC-LAN circuit between the radio receiver and the component which has stored this code.
   (1) Disconnect all connectors between the radio receiver and the component which has stored this code.
   (2) Check for an open or short in the AVC-LAN circuit between the radio receiver and the component which has stored this code.
   OK:
   There is no open or short circuit.

AVC-LAN WIRING DIAGRAM

Premium Model:

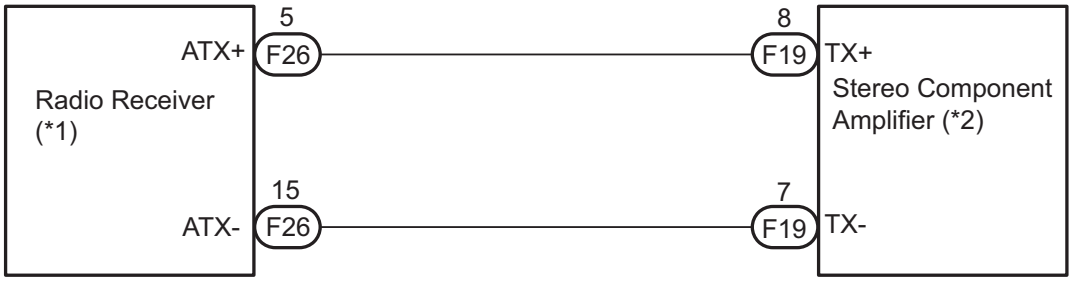

*1: Master Unit

*2: Slave Unit

P

E111831E15

NG → **REPAIR OR REPLACE HARNESS OR CONNECTOR**

OK

6	**REPLACE RADIO RECEIVER**

(a) Replace the radio receiver with a normal one and check if the same problem occurs again.
OK:
Same problem does not occur.

NG → **REPLACE COMPONENT WHICH HAS STORED THIS CODE**

OK

END

DTC	01-DF	Master Error

DESCRIPTION

DTC No.	DTC Detection Condition	Trouble Area
01-DF *1	The device with a display fails and the master is switched to the audio device. Also when a communication error between the sub-master (audio) and master occurs, this code is stored.	• Radio receiver power source circuit • AVC-LAN circuit between the radio receiver and the component which has stored this code • Radio receiver • Component which has stored this code

HINT:
*1: When 210 seconds have elapsed after disconnecting the power supply connector of the master component with the ignition switch on (ACC or IG), this code is stored.

NOTICE:

- **Before starting troubleshooting, be sure to clear DTCs to erase codes stored due to the reasons described in the HINT above. Then, check for DTCs and troubleshoot according to the output DTCs.**
- **The radio receiver is the master unit.**
- **Be sure to clear and recheck DTCs after the inspection is completed to confirm that no DTCs are output.**

INSPECTION PROCEDURE

NOTICE:

Be sure to read DESCRIPTION before performing the following procedures.

1 CHECK RADIO RECEIVER POWER SOURCE CIRCUIT

Refer to the radio receiver power source circuit (See page AV-140).
If the power source circuit is operating normally, proceed to the next step.

NEXT

2 INSPECT RADIO RECEIVER

Premium Model Wire Harness View:

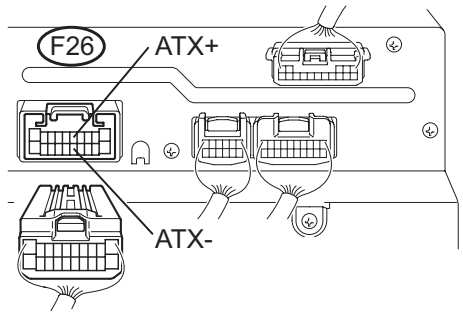

P E129798E04

(a) Disconnect the radio receiver connector.
(b) Measure the resistance according to the value(s) in the table below.

Standard resistance

Tester connection	Condition	Specified condition
ATX+ (F26-5) - ATX- (F26-15)	Always	60 to 80 Ω

NG → **REPLACE RADIO RECEIVER**

AV

OK

3	IDENTIFY THE COMPONENT WHICH HAS STORED THIS CODE

(a) Enter the diagnostic mode.

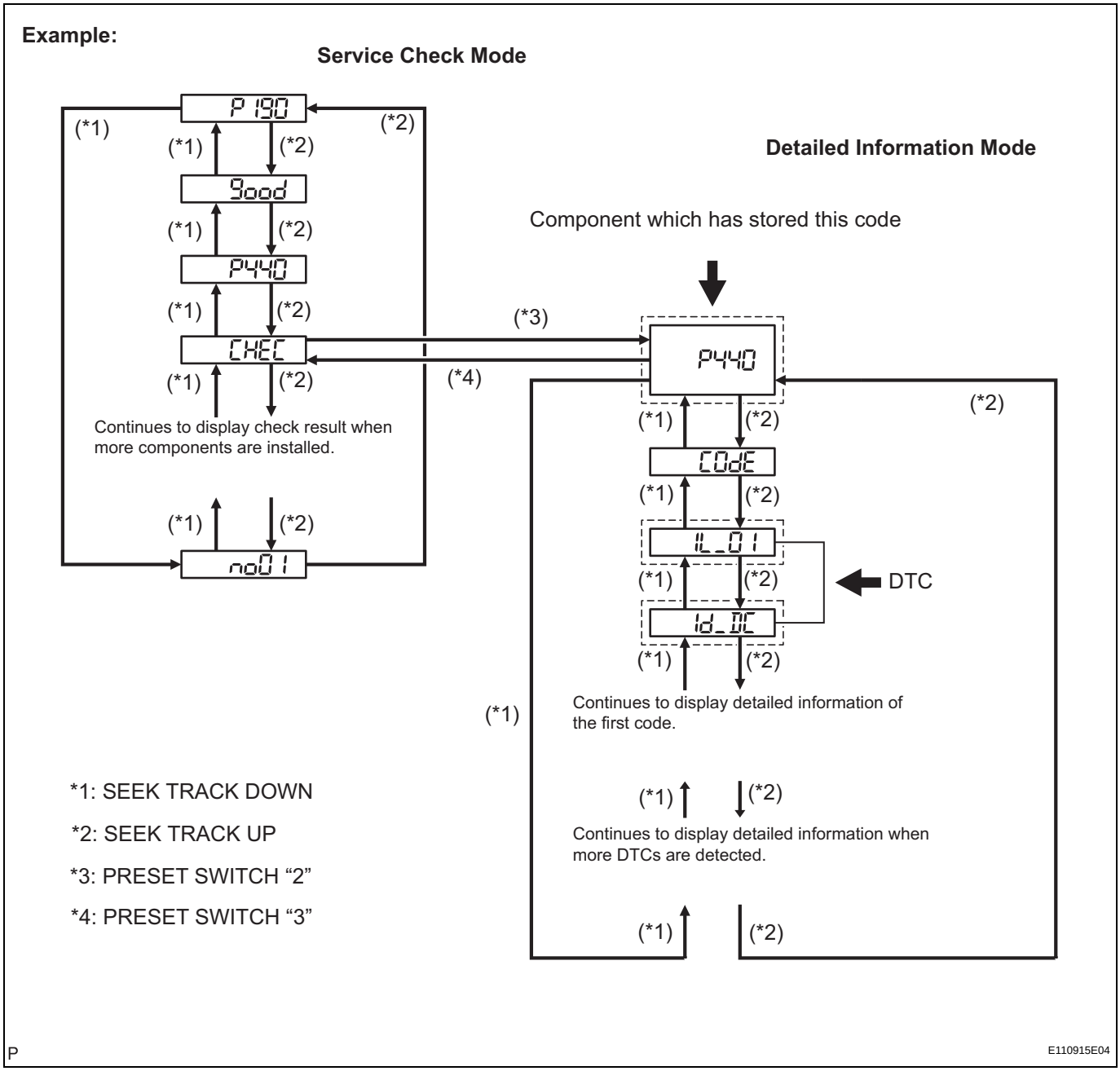

(b) Press the preset switch "3" to change to "Detailed Information Mode".

(c) Identify the component which has stored this code.

Component Table:

Component	Physical address
Stereo component amplifier	440
"Bluetooth" handsfree module	19D

HINT:
- "440 (stereo component amplifier)" is the component which has stored this code in the example shown in the illustration.
- For details of the DTC display, refer to "DTC CHECK/ CLEAR" (See page AV-19).

NEXT

4	CHECK COMPONENT WHICH HAS STORED THIS CODE

(a) Select the component which has stored this code.
HINT:
The "Bluetooth" handsfree module is built into the radio receiver. If there is a problem between the "Bluetooth" handsfree module and radio receiver, replace the radio receiver.

Component Table:

Component	Proceed to
"Bluetooth" handsfree module	A
Except "Bluetooth" handsfree module	B

A → **REPLACE RADIO RECEIVER**

B

5	CHECK HARNESS AND CONNECTOR (RADIO RECEIVER - COMPONENT WHICH HAS STORED THIS CODE)

HINT:
For details of the connectors, refer to the "TERMINALS OF ECU" (See page AV-15).

(a) Referring to the AVC-LAN wiring diagram below, check the AVC-LAN circuit between the radio receiver and the component which has stored this code.
   (1) Disconnect all connectors between the radio receiver and the component which has stored this code.
   (2) Check for an open or short in the AVC-LAN circuit between the radio receiver and the component which has stored this code.
   OK:
   There is no open or short circuit.

AVC-LAN WIRING DIAGRAM

Premium Model:

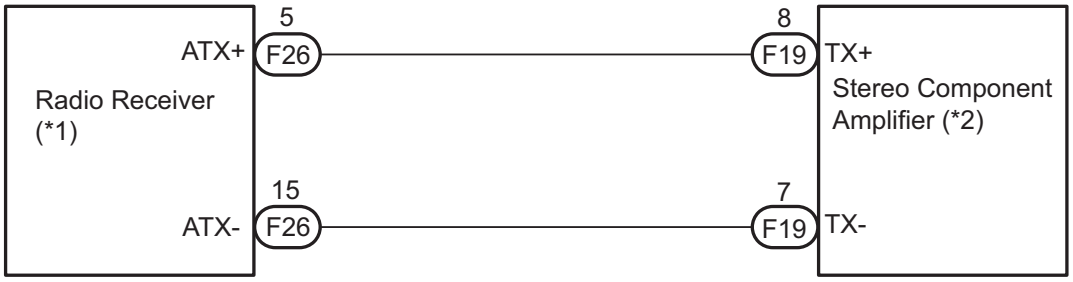

*1: Master Unit

*2: Slave Unit

P

E111831E15

NG → **REPAIR OR REPLACE HARNESS OR CONNECTOR**

OK

6	**REPLACE RADIO RECEIVER**

(a) Replace the radio receiver with a normal one and check if the same problem occurs again.
OK:
Same problem does not occur.

NG → **REPLACE COMPONENT WHICH HAS STORED THIS CODE**

OK

END

DTC	01-E0	Registration Complete Indication Error

DTC	01-E3	Registration Demand Transmission

DTC	01-E4	Multiple Frame Incomplete

DESCRIPTION

DTC No.	DTC Detection Condition	Trouble Area
01-E0	"Registration complete" signal from the master device cannot be received.	-
01-E3	The registration demand signal from the slave device is output. Or the registration demand signal is output by receiving connection confirmation signal from the sub-master device.	-
01-E4	The multiple frame transmission is incomplete.	-

HINT:
Even if no fault is present, this trouble code may be stored depending on the battery condition or engine start voltage.

INSPECTION PROCEDURE

HINT:
After the inspection is completed, clear the DTCs. These DTCs do not indicate a malfunction.

DTC	01-E2	ON / OFF Indication Parameter Error

DESCRIPTION

DTC No.	DTC Detection Condition	Trouble Area
01-E2	The command for ON/OFF control from the master device has a problem.	Radio receiver

INSPECTION PROCEDURE

HINT:
After the inspection is completed, clear the DTCs.

1	REPLACE RADIO RECEIVER

NEXT

END

DTC	57-47	Bluetooth Module Initialization Failed

DESCRIPTION

DTC No.	DTC Detection Condition	Trouble Area
57-47	• "Bluetooth" module is not installed. • Problem with "Bluetooth" module • Problem in communication line to "Bluetooth" module	Radio receiver

INSPECTION PROCEDURE

HINT:
After the inspection is completed, clear the DTCs.

1	REPLACE RADIO RECEIVER

NEXT

END

DTC	62-10	CD Player Mechanical Error

DTC	62-11	CD Insertion and Ejection Error

DTC	62-12	CD Reading Abnormal

DTC	63-10	CD Changer Mechanical Error

DTC	63-11	CD Insertion and Ejection Error

DTC	63-12	CD Reading Abnormal

DESCRIPTION

DTC No.	DTC Detection Condition	Trouble Area
62-10	A mechanical error in the CD player is detected while the CD is not being inserted or ejected.	Radio receiver
62-11	CD insertion or ejection is failed.	
62-12	CD read problem occurs.	
63-10	A mechanical error in the CD changer is detected while the CD is not being inserted or ejected.	
63-11	CD insertion or ejection is failed.	
63-12	CD read problem occurs.	

INSPECTION PROCEDURE

HINT:
After the inspection is completed, clear the DTCs.

1	REPLACE RADIO RECEIVER

NEXT

END

DTC	62-41	Wrong Disc

DTC	62-42	Disc cannot be Read

DTC	63-41	Wrong Disc

DTC	63-42	Disc cannot be Read

DESCRIPTION

DTC No.	DTC Detection Condition	Trouble Area
62-41	An unsuitable disc is inserted.	• CD • Radio receiver
62-42	The disc cannot be read.	
63-41	An unsuitable disc is inserted.	
63-42	The disc cannot be read.	

INSPECTION PROCEDURE

HINT:
After the inspection is completed, clear the DTCs.

1	CHECK DISC

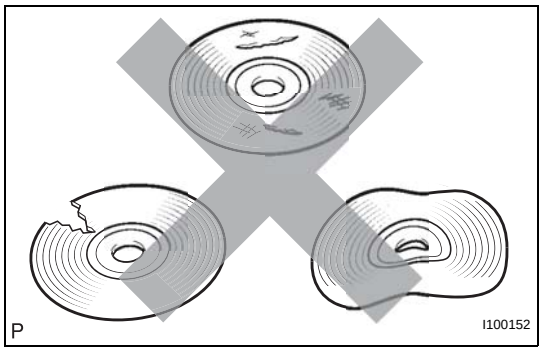

(a) Check that the disc is not deformed or cracked.
OK:
No deformation or cracks on the disc.

NG → **CHANGE DISC**

OK

2	DISC CLEANING

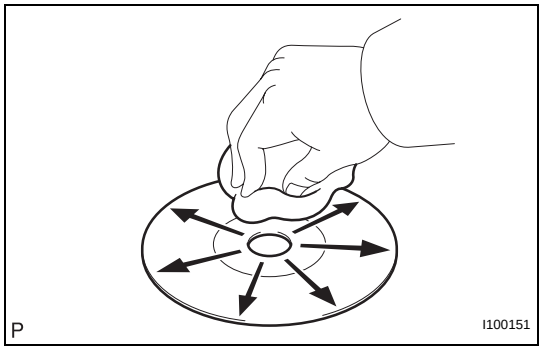

(a) Disc cleaning
(1) If dirt is on the disc surface, wipe it clean with a soft cloth from the inside to the outside in a radial direction.
NOTICE:
Do not use a conventional record cleaner or anti-static preservative.

NEXT

3	CLEAR DTC

(a) Clear the DTCs (See page AV-19).

NEXT

4	RECHECK DTC

(a) Recheck for DTCs and check if the same trouble occurs again.

OK:

Malfunction disappears.

OK → **END**

NG

5	REPLACE DISC WITH ANOTHER AND RECHECK

(a) Replace the disc with another and recheck.
  (1) Replace the disc with another normal one.
  (2) Clear the DTCs (See page AV-19).
  (3) Recheck for DTCs and check if the same trouble occurs again.
  OK:
  Malfunction disappears.

NG → **REPLACE RADIO RECEIVER**

OK

END

DTC	62-43	CD-ROM Abnormal

DTC	63-43	CD-ROM Abnormal

DESCRIPTION

DTC No.	DTC Detection Condition	Trouble Area
62-43	CD-ROM operation is abnormal	• CD • Radio receiver
63-43	CD-ROM operation is abnormal	

INSPECTION PROCEDURE

HINT:
After the inspection is completed, clear the DTCs.

1 CHECK IF A PROPER CD IS INSERTED

(a) Make sure that the CD is an audio CD or a CD with an MP3 or WMA file, and that it is not deformed, flawed, stained, burred, or otherwise defective.
OK:
Normal CD
HINT:
- Translucent or uniquely-shaped CDs cannot be played.
- CDs with adhesive paper labels should not be played.
- Commercial audio CDs can be played.
- CD-DA files on CD-ROMs, CD-Rs, and CD-RWs can be played.
- MP3 and WMA files on CD-ROMs, CD-Rs, and CD-RWs can be played.
- For details on playable CDs, refer to the Owner's Manual.

NG → **CHANGE DISC**

OK

2 REPLACE CD WITH ANOTHER AND RECHECK

(a) Replace the CD with another and recheck.
(1) Replace the CD with another normal one.
(2) Clear the DTCs (See page AV-19).
(3) Recheck for DTCs and check if the same trouble occurs again.
OK:
Malfunction disappears.

NG → **REPLACE RADIO RECEIVER**

OK

END

DTC	62-44	CD Abnormal

DTC	62-48	Excess Current

DTC	62-50	Tray Insertion / Ejection Error

DTC	63-44	CD Abnormal

DTC	63-48	Excess Current

DTC	63-50	Tray Insertion / Ejection Error

DESCRIPTION

DTC No.	DTC Detection Condition	Trouble Area
62-44	Operation error in the CD mechanism	Radio receiver
62-48	Excess current is present in the CD player	
62-50	Malfunction in insertion/ejection system	
63-44	Operation error in the CD mechanism	
63-48	Excess current is present in the CD changer	
63-50	Malfunction in insertion/ejection system	

INSPECTION PROCEDURE

HINT:
After the inspection is completed, clear the DTCs.

1 CLEAR DTC

(a) Clear the DTCs (See page AV-19).

NEXT

2 RECHECK DTC

(a) Recheck for DTCs and check if the same trouble occurs again.
HINT:
If DTCs are detected frequently, replace the radio receiver.
OK:
Malfunction disappears.

NG → **REPLACE RADIO RECEIVER**

OK

END

DTC	62-45	Eject Error

DTC	62-51	Elevator Error

DTC	62-52	Clamp Error

DTC	63-45	Eject Error

DTC	63-51	Elevator Error

DTC	63-52	Clamp Error

DESCRIPTION

DTC No.	DTC Detection Condition	Trouble Area
62-45	Disc cannot be ejected.	Radio receiver
62-51	Mechanical error occurs during elevator operation.	
62-52	Error occurs in CD player clamp.	
63-45	Magazine cannot be ejected.	
63-51	Mechanical error occurs during elevator operation.	
63-52	Error occurs in CD changer clamp.	

INSPECTION PROCEDURE

HINT:
After the inspection is completed, clear the DTCs.

1 CHECK RADIO RECEIVER

(a) Check if a disc can be changed, inserted or ejected normally.
OK:
Malfunction disappears.

NG → **REPLACE RADIO RECEIVER**

OK

END

DTC	62-46	Scratched / Reversed Disc

DTC	63-46	Scratched / Reversed Disc

DESCRIPTION

DTC No.	DTC Detection Condition	Trouble Area
62-46	Scratches or dirt is found on CD surface or CD is set upside down.	• CD • Radio receiver
63-46	Scratches or dirt is found on CD surface or CD is set upside down.	

INSPECTION PROCEDURE

HINT:
After the inspection is completed, clear the DTCs.

1	CHECK THAT CD IS INSERTED PROPERLY

(a) Check whether or not the CD is inserted upside down.
OK:
CD is properly inserted.

NG → **REINSERT DISC PROPERLY**

OK

2	CHECK DISC

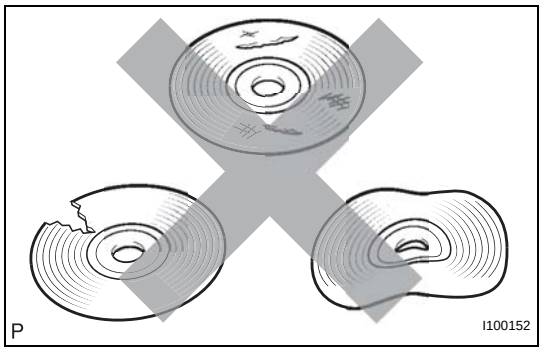

(a) Check that the disc is not deformed or cracked.
OK:
No deformation or cracks on the disc.

NG → **CHANGE DISC**

OK

3	DISC CLEANING

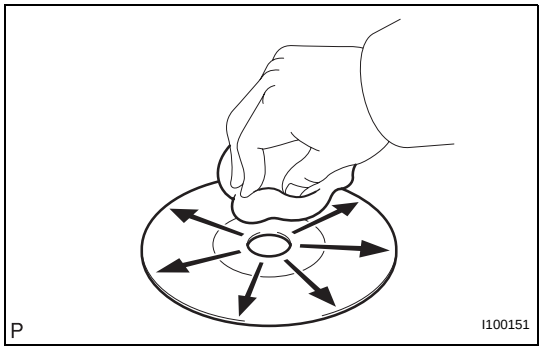

(a) Disc cleaning
  (1) If dirt is on the disc surface, wipe it clean with a soft cloth from the inside to the outside in a radial direction.
  NOTICE:
  Do not use a conventional record cleaner or anti-static preservative.

NEXT

4	CLEAR DTC

(a) Clear the DTCs (See page AV-19).

NEXT

5	RECHECK DTC

(a) Recheck for DTCs and check if the same trouble occurs again.

OK:
Malfunction disappears.

OK → END

NG

6	REINSERT DISC PROPERLY

(a) Replace the disc with another and recheck.
  (1) Replace the disc with another normal one.
  (2) Clear the DTCs (See page AV-19).
  (3) Recheck for DTCs and check if the same trouble occurs again.
  OK:
  Malfunction disappears.

NG → REPLACE RADIO RECEIVER

OK

END

DTC	62-47	High Temperature

DTC	63-47	High Temperature

DESCRIPTION

DTC No.	DTC Detection Condition	Trouble Area
62-47	Sensor detects that CD unit temperature is high. (Over 80°C)	Radio receiver
63-47	Sensor detects that CD unit temperature is high. (Over 80°C)	

INSPECTION PROCEDURE

HINT:
After the inspection is completed, clear the DTCs.

1 CHECK RADIO RECEIVER

(a) Park the vehicle in a cool place.
(b) Check that the temperature of the radio receiver becomes sufficiently low, and start the engine. Check that the malfunction disappears.
OK:
Malfunction disappears.

NG → **REPLACE RADIO RECEIVER**

OK

END

DTC	62-78	DSP Error

DTC	63-78	DSP Error

DESCRIPTION

DTC No.	DTC Detection Condition	Trouble Area
62-78	An error occurs during the decode process (MP3/WMA).	-
63-78	An error occurs during the decode process (MP3/WMA).	-

INSPECTION PROCEDURE

HINT:
After the inspection is completed, clear the DTCs.

NOTICE:

- **These codes may be output even if there is no malfunction.**
- **If these codes are output frequently, replace the radio receiver.**

1 CLEAR DTC

(a) Clear the DTCs (See page AV-19).

NEXT

2 RECHECK DTC

(a) Recheck for DTCs and check if the same trouble occurs again.
OK:
Malfunction disappears.

NG → **REPLACE RADIO RECEIVER**

OK

END

DTC	62-7D	Disc cannot be Played

DTC	62-7E	No Playable Files

DTC	62-7F	Copyright Protection Error

DTC	63-7D	Disc cannot be Played

DTC	63-7E	No Playable Files

DTC	63-7F	Copyright Protection Error

DESCRIPTION

DTC No.	DTC Detection Condition	Trouble Area
62-7D	• An incompatible MP3/WMA file is used. • Although the file has an extension of ".mp3" or ".wma", the header information cannot be read.	• CD • Radio receiver
62-7E	• A disc with no music data is used. • Playable files are not on the disc (MP3/WMA).	
62-7F	A copy-protected file, which cannot be played, is used.	
63-7D	• An incompatible MP3/WMA file is used • Although the file has an extension of ".mp3" or ".wma", the header information cannot be read.	
63-7E	• A disc with no music data is used. • Playable files are not on the disc (MP3/WMA).	
63-7F	A copy-protected file, which cannot be played, is used.	

INSPECTION PROCEDURE

HINT:
After the inspection is completed, clear the DTCs.

1 CHANGE DISC

(a) Insert a disc with a playable file and check if the disc can be played correctly.
HINT:
For details on playable files and discs, refer to the Owner's Manual.
OK:
The disc can be played correctly.

NG → **REPLACE RADIO RECEIVER**

OK

END

AV

Noise Occurs

INSPECTION PROCEDURE

1 NOISE CONDITION

(a) Check from which direction the noise comes (front left or right, or rear left or right).
(1) Check from which direction the noise comes.
OK:
The location of the noise source can be determined.

NG → **Go to step 3**

OK

2 CHECK SPEAKERS

(a) Check the installation conditions of the speaker units that are located near the noise source and that there are no cracks, scratches, deformation, or other failures.

Result

Condition	Proceed to
A speaker is installed incorrectly	A
Foreign objects are in the speaker	B
A speaker cone paper is broken	C
No malfunction is found	D

A → **REINSTALL SPEAKER**

B → **REMOVE FOREIGN OBJECT**

C → **REPLACE SPEAKER**

D

3 CHECK NOISE CONDITIONS

(a) Check the noise condition.
HINT:
The radio has a noise prevention function to reduce noise when listening to the radio. If a loud noise occurs, check whether the ground at the antenna mounting base and the noise prevention unit are installed and wired correctly.

Conditions under which noise occurs	Noise source
Noise increases when the accelerator pedal is depressed, but stops when the engine is stopped.	Generator
Noise occurs during A/C or heater operation.	Blower motor
Noise occurs when the vehicle accelerates rapidly on an unpaved road or after the ignition switch is turned on (IG or ACC).	Fuel pump

Conditions under which noise occurs	Noise source
Noise occurs when the horn switch is pressed and released or when pressed and held.	Horn
Noise occurs synchronously with the blink of the turn signal.	Flasher
Noise occurs during window washer operation.	Washer
Noise occurs while the engine is running, and continues even after the engine is stopped.	Water temperature sensor
Noise occurs during wiper operation.	Wiper
Noise occurs when the brake pedal is depressed.	Stop light switch
Others	Static electricity

HINT:

- In the chart's left column, find the situation that matches the customer's complaint. Then, in the right column, find the part that is causing the noise. Check the noise filter on or for the part.
- To save time and avoid a misdiagnosis, first make sure that the noise is not coming from outside the vehicle.
- Noise should be removed in descending order of loudness.
- Setting the radio to a frequency where no signal is received may make recognition of the noise problem easier.

OK:

The noise source cannot be determined.

NG → **REPAIR OR REPLACE NOISE SOURCE**

OK

PROCEED TO NEXT CIRCUIT INSPECTION SHOWN IN PROBLEM SYMPTOMS TABLE

Pressing Power Switch does not Turn on System

INSPECTION PROCEDURE

1	CHECK VEHICLE CONDITION

(a) Check that conditions in the cabin are not likely to cause condensation.
HINT:
This problem occurs when the cabin is humid and the temperature changes rapidly. This may produce condensation, resulting in a short circuit.
OK:
Condensation is not likely to be produced.

NG → **DRY OUT CABIN AND RECHECK CONDITION**

OK

PROCEED TO NEXT CIRCUIT INSPECTION SHOWN IN PROBLEM SYMPTOMS TABLE

No Sound can be Heard from Speakers

INSPECTION PROCEDURE

1	CHECK RADIO RECEIVER

(a) Check radio receiver setting.
  (1) Check that the volume is not set to "0".
  (2) Check that "MUTE" is off.
  OK:
  The volume is not set to "0" and "MUTE" is off.

OK → **END**

NG

PROCEED TO NEXT CIRCUIT INSPECTION SHOWN IN PROBLEM SYMPTOMS TABLE

Sound Quality is Bad Only when CD is Played (Volume is Too Low)

INSPECTION PROCEDURE

1	REPLACE CD WITH ANOTHER AND RECHECK

(a) Replace the CD with another one and recheck.
(1) Check if the problem recurs using another CD.
OK:
Malfunction disappears.

NG → **REPLACE RADIO RECEIVER**

OK

END

CD cannot be Ejected

INSPECTION PROCEDURE

1	PRESS "EJECT" AND CHECK OPERATION

(a) Press the CD EJECT switch of the radio receiver for 2 seconds or more and check that the CD is ejected.
OK:
CD is ejected.

NG → **REPLACE RADIO RECEIVER**

OK

2	REPLACE CD WITH ANOTHER AND RECHECK

(a) Insert another CD and check if it is ejected.
OK:
CD is ejected.

NG → **REPLACE RADIO RECEIVER**

OK

END

CD cannot be Inserted / Played or CD is Ejected Right After Insertion

INSPECTION PROCEDURE

1 CHECK IF A PROPER CD IS INSERTED

(a) Make sure that the CD is an audio CD or a CD with an MP3 or WMA file, and that it is not deformed, flawed, stained, burred, or otherwise defective.
OK:
Normal CD.
HINT:
- Translucent or uniquely-shaped CDs cannot be played.
- CDs with adhesive paper labels should not be played.
- Commercial audio CDs can be played.
- CD-DA files on CD-ROMs, CD-Rs, and CD-RWs can be played.
- MP3 and WMA files on CD-ROMs, CD-Rs, and CD-RWs can be played.
- For details on playable CDs, refer to the Owner's Manual.

NG → **CHANGE DISC**

OK

2 CHECK THAT CD IS INSERTED PROPERLY

(a) Check whether or not the CD is inserted upside down.
OK:
CD is properly inserted.

NG → **INSERT CD PROPERLY**

OK

3 CHECK CD

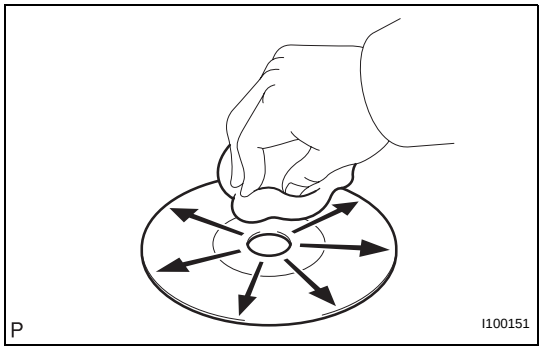

(a) Clean the disc by wiping it with a soft cloth from the inside to the outside in a radial direction.
OK:
Malfunction disappears.
NOTICE:
Do not use a conventional record cleaner or anti-static preservative.

NG → **Go to step 4**

OK

END

4	REPLACE CD WITH ANOTHER AND RECHECK

(a) Replace the CD with a normal one and check that the malfunction disappears.
OK:
Malfunction disappears.

NG → **REPLACE RADIO RECEIVER**

OK

END

CD Sound Skips

INSPECTION PROCEDURE

1 CHECK CD

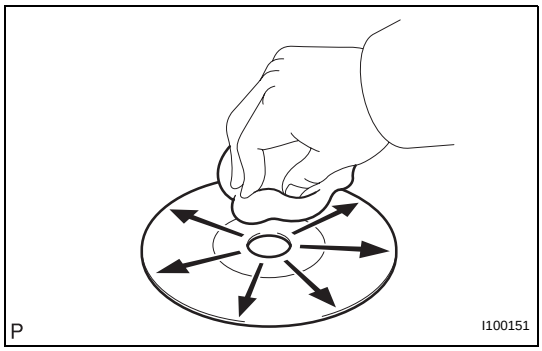

(a) Check the CD.
OK:
The CD is clean.
HINT:
If dirt is on the CD surface, wipe it clean with a soft cloth from the inside to the outside in a radial direction.
NOTICE:
Do not use a conventional record cleaner or anti-static preservative.

NG → **CLEAN CD**

OK

2 CHECK CD

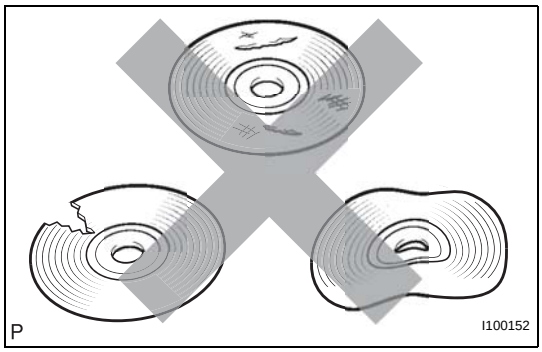

(a) Check that the CD is not deformed or cracked.
OK:
No deformation or cracks on the CD.

NG → **CHANGE DISC**

OK

3 CHECK OPERATION USING ANOTHER CD

(a) Check using another CD.
(1) Check if the problem recurs using another CD.
OK:
The problem does not occur.

OK → **END**

NG

4 CHECK RADIO RECEIVER

(a) Check the radio receiver installation condition.
(1) Check that the radio receiver is properly installed.
OK:
Radio receiver is properly installed.

NG → **REINSTALL RADIO RECEIVER PROPERLY**

OK

REPLACE RADIO RECEIVER

Radio Broadcast cannot be Received or Poor Reception

INSPECTION PROCEDURE

1 CHECK RADIO RECEIVER

(a) Check the radio's automatic station search function.
(1) Check the radio's automatic station search function by activating it.
OK:
The radio's automatic station search function works properly.

OK → **REPLACE RADIO RECEIVER**

NG

2 INSPECT RADIO RECEIVER

Wire Harness View (Premium Model):

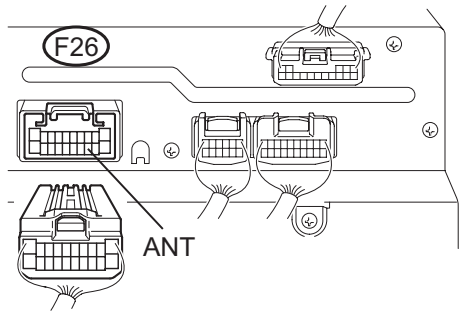

Wire Harness View (Standard Model):

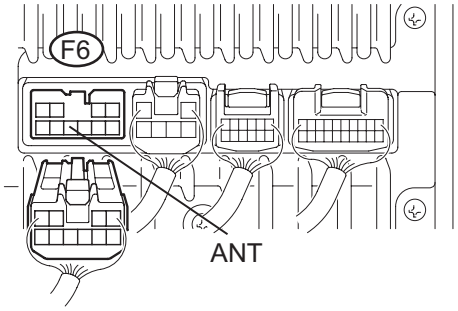

P E129799E03

(a) Disconnect the radio receiver connector.
(b) Measure the voltage according to the value(s) in the table below.
Standard voltage

Tester connection	Condition	Specified condition
ANT - Body ground	Ignition SW on (IG) Radio SW ON	10 to 14 V

NG → **REPLACE RADIO RECEIVER**

OK

3	CHECK OPTIONAL COMPONENTS

(a) Check optional components (sun-shade film, telephone antenna, etc.).
  (1) Check if any optional components, such as sunshade film or telephone antenna that may decrease reception capacity, are installed.
  OK:
  Optional components are installed.
  NOTICE:
  Do not remove any optional components installed by the customer without his or her consent.

OK → **REMOVE OPTIONAL COMPONENTS AND CHECK AGAIN (SEE NOTICE ABOVE)**

NG

4	CHECK RADIO RECEIVER

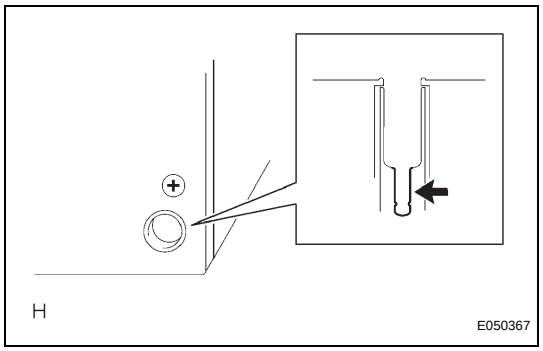

(a) Preparation for check
  (1) Remove the antenna plug from the radio receiver.
(b) Check for noise
  (1) Turn the ignition switch on (ACC) with the radio receiver connector connected.
  (2) Turn the radio on and put into AM mode.
  (3) Place a screwdriver, thin wire, or other metal object on the radio receiver's antenna jack and check that noise can be heard from the speaker.
  OK:
  Noise occurs.

NG → **REPLACE RADIO RECEIVER**

OK

5	CHECK GLASS ANTENNA

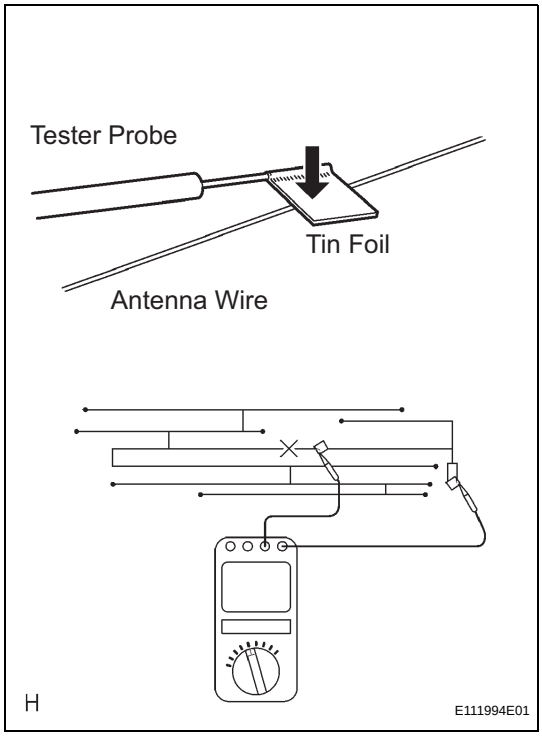

(a) Check for continuity of the antenna.
HINT:
Check for continuity at the center of each antenna wire as shown in the illustration.
NOTICE:
When cleaning the glass, wipe it in the direction of the wire with a soft dry cloth. Take care not to damage the wire. Do not use detergents or glass cleaners with abrasive ingredients. When measuring voltage, wrap a piece of tin foil around the tip of the negative probe and press the foil against the wire with your finger, as shown in the illustration.
OK:
There is continuity in the antenna.

NG → **REPAIR GLASS ANTENNA**

OK

6	CHECK ANTENNA CORD

(a) Remove the antenna plug of the radio receiver and antenna.
(b) Measure the resistance between the antenna and radio receiver to check for an open circuit in the antenna cord.
Standard resistance:
Below 1 Ω
(c) Measure the resistance between the antenna cord and body ground to check for a short circuit in the antenna cord.
Standard resistance:
10 kΩ or higher

NG → **REPLACE ANTENNA CORD**

OK

7	REPLACE AMPLIFIER ANTENNA

(a) Replace the amplifier antenna and check if radio broadcasts can be received normally.
OK:
Radio broadcasts can be received.

OK → **NORMAL OPERATION**

NG

REPLACE RADIO RECEIVER

Poor Sound Quality in All Modes (Low Volume)

INSPECTION PROCEDURE

1	CHECK AUDIO SETTINGS

(a) Set "BASS", "MID", and "TREB" to the initial values and check that sound is normal.
OK:
Malfunction disappears.

OK → **END**

NG

2	COMPARE WITH ANOTHER VEHICLE OF SAME MODEL

(a) Compare with another vehicle of the same model.
(1) Compare with another vehicle of the same model which does not have trouble to see if there is any difference in the sound quality.
OK:
No difference is found.

OK → **END**

NG

PROCEED TO NEXT CIRCUIT INSPECTION SHOWN IN PROBLEM SYMPTOMS TABLE

Cellular Phone Registration Failure, Phone Directory Transfer Failure

INSPECTION PROCEDURE

1 CHECK CURRENT CONDITIONS

(a) Proceed to the next step according to the table below.

RESULT

Conditions	Proceed to
Another "Bluetooth" compatible cellular phone is present.	A
Another "Bluetooth" compatible vehicle is present.	B
None of the above	C

B → **Go to step 3**

C → **Go to step 4**

A

2 CHECK USING ANOTHER CELLULAR PHONE

(a) Check if the system functions using another "Bluetooth" compatible cellular phone.
HINT:
- Confirm that either the same or a different version of another "Bluetooth" compatible cellular phone complies with the system.
- Depending on the version, some "Bluetooth" compatible cellular phones cannot be used.

OK:
The system functions.

NG → **REPLACE RADIO RECEIVER**

OK

USE A "BLUETOOTH" COMPATIBLE CELLULAR PHONE

3 CHECK USING ANOTHER "BLUETOOTH" COMPATIBLE VEHICLE

(a) Register the cellular phone with another vehicle and check if the system functions normally.
HINT:
Depending on the version, some "Bluetooth" compatible cellular phones cannot be used.

OK:
The system functions.

OK → **REPLACE RADIO RECEIVER**

NG

USE A "BLUETOOTH" COMPATIBLE CELLULAR PHONE

4	CHECK CELLULAR PHONE

(a) Check if the cellular phone is "Bluetooth" compatible.
HINT:
Some versions of "Bluetooth" compatible cellular phones may not function.
OK:
The phone is Bluetooth compatible.

NG → **USE A "BLUETOOTH" COMPATIBLE CELLULAR PHONE**

OK

5	CHECK CELLULAR PHONE

(a) Check if a call can be made from the cellular phone.
HINT:
When the battery is low, registration or directory transfer cannot be done.
OK:
A call can be made from the cellular phone.

NG → **REPAIR OR REPLACE CELLULAR PHONE**

OK

REPLACE RADIO RECEIVER

Cellular Phone cannot Send / Receive

INSPECTION PROCEDURE

1	CHECK "BLUETOOTH" SETTINGS

(a) Check if the "Bluetooth" settings are correct.
OK:
"Bluetooth" settings are correct.

NG → **SET SETTINGS CORRECTLY**

OK ↓

2	CHECK CELLULAR PHONE

(a) Check if the cellular phone is "Bluetooth" compatible.
HINT:
Some versions of "Bluetooth" compatible cellular phones may not function.
OK:
Phone is "Bluetooth" compatible.

NG → **END (ONLY A "BLUETOOTH" COMPATIBLE CELLULAR PHONE CAN BE USED)**

OK ↓

3	CHECK SETTINGS

(a) Check if the cellular phone functions.
HINT:
The cellular phone is unable to call under any of the following conditions.
- The cellular phone is locked.
- The directory is being transferred.
- The line is crossed.
- Transmission is regulated.
- The power is off.
- The cellular phone is not connected to "Bluetooth" ("BT" is displayed while connected).

OK:
None of the above conditions exist.

NG → **SET CORRECTLY**

OK ↓

4	CHECK CELLULAR PHONE

(a) Check if the cellular phone can make a call.

HINT:
When the battery is low, calls cannot be made or received.
OK:
Cellular phone can make a call.

NG → **REPAIR OR REPLACE CELLULAR PHONE**

OK

5	CHECK RECEPTION

(a) Set the cellular phone so that it can receive calls.
(b) Place the cellular phone close to the radio receiver.
(c) Check if the cellular phone has reception according to the radio receiver.
OK:
Cellular phone has reception.

NG → **REPLACE RADIO RECEIVER**

OK

PROCEED TO NEXT CIRCUIT INSPECTION SHOWN IN PROBLEM SYMPTOMS TABLE

The Other Caller's Voice cannot be Heard, is too Quiet, or Distorted

INSPECTION PROCEDURE

1 CHECK CELLULAR PHONE

(a) Check if the voice on the other side can be heard using a cellular phone.
OK:
Voice can be heard.

NG → **REPAIR OR REPLACE CELLULAR PHONE**

OK ↓

2 CHECK AUDIO AND VISUAL SYSTEM

(a) Check that audio sound can be heard from the driver side speaker.
OK:
Audio sound can be heard.
HINT:
If audio sound cannot be heard, proceed to "No sound can be heard from speakers. (Audio is mute.)" in the PROBLEM SYMPTOMS TABLE (See page AV-13).

NG → **PROCEED TO NEXT CIRCUIT INSPECTION SHOWN IN PROBLEM SYMPTOMS TABLE**

OK ↓

3 CHECK SETTINGS

(a) Check that the received voice level setting on the cellular phone is not too low.
OK:
The received voice level setting is not too low.

NG → **SET VOLUME TO HIGH**

OK ↓

PROCEED TO NEXT CIRCUIT INSPECTION SHOWN IN PROBLEM SYMPTOMS TABLE

The Other Caller cannot Hear Your Voice, or Your Voice is too Quiet or Distorted

INSPECTION PROCEDURE

1	CHECK CELLULAR PHONE

(a) Check if the other side can hear your voice properly.
OK:
Your voice can be heard correctly.

NG → **REPLACE CELLULAR PHONE**

OK ↓

2	CHECK SETTINGS

(a) Check if the mute is set to ON.
OK:
Mute is not set to ON.

NG → **TURN MUTE OFF**

OK ↓

PROCEED TO NEXT CIRCUIT INSPECTION SHOWN IN PROBLEM SYMPTOMS TABLE

Vehicle Speed Signal Circuit between Radio Receiver and Combination Meter

DESCRIPTION

This circuit is necessary for the ASL (Auto Sound Leveliser) built into the radio receiver.
Speed signals are received from the combination meter and used for the ASL.
The ASL function automatically adjusts the sound data in order to enable hearing the clear audio sound even when vehicle noise increases (as vehicle noise increases, the volume is turned up etc.).
HINT:

- A voltage of 12 V or 5 V is output from each ECU and then input to the combination meter. The signal is changed to a pulse signal at the transistor in the combination meter. Each ECU controls the respective system based on the pulse signal.
- If a short occurs in an ECU, all systems in the diagram below will not operate normally.

WIRING DIAGRAM

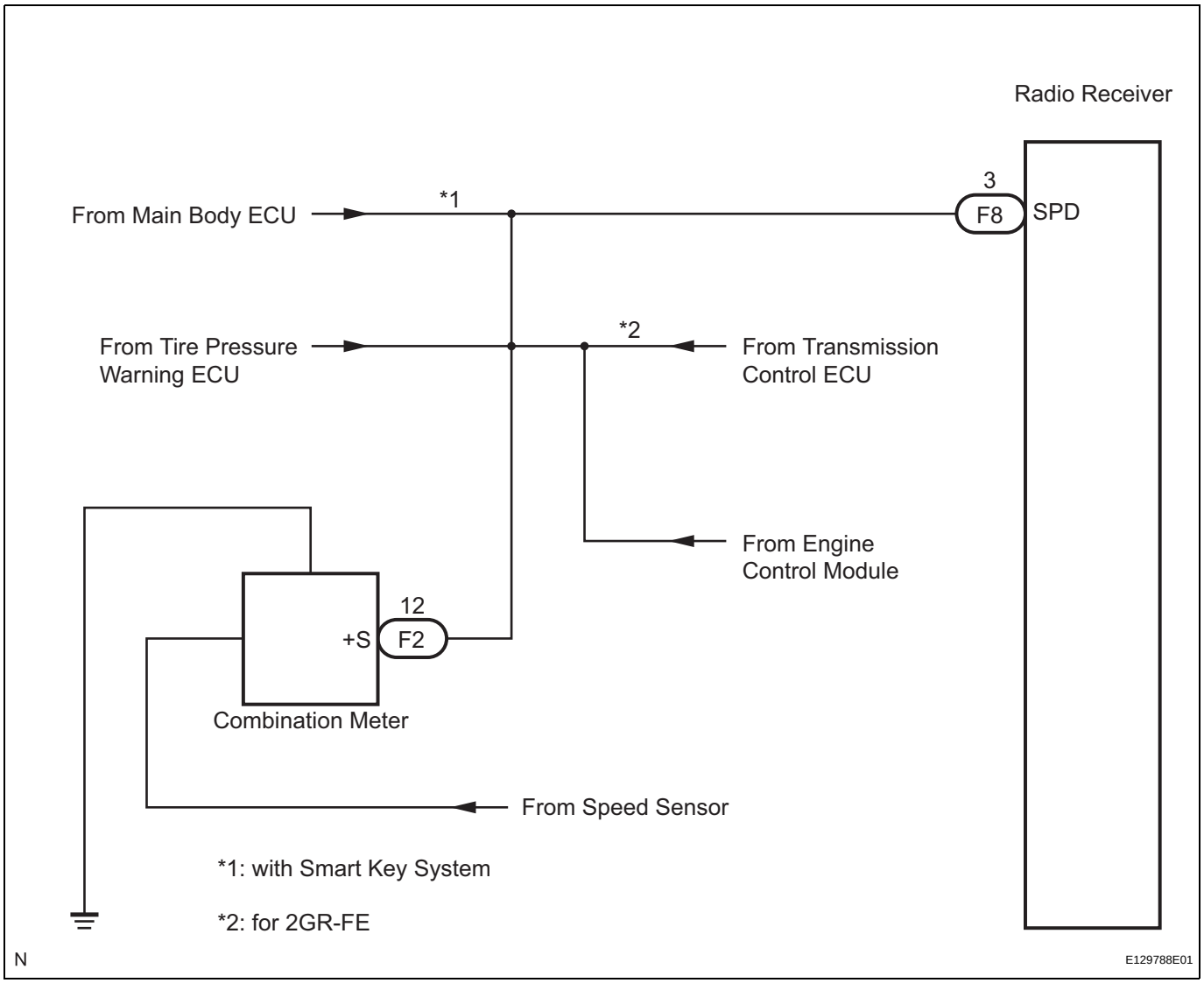

AV

INSPECTION PROCEDURE

1	CHECK OPERATION OF SPEEDOMETER

(a) Drive the vehicle and check if the function of the speedometer on the combination meter is normal.

OK:

Actual vehicle speed and the speed indicated on the speedometer are the same.

HINT:

The vehicle speed sensor is functioning normally when the indication on the speedometer is normal.

NG → **CHECK COMBINATION METER**

OK ↓

2	INSPECT RADIO RECEIVER

Wire Harness View:

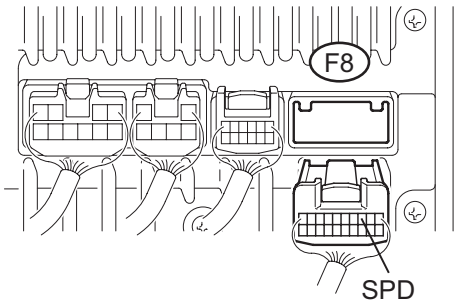

P E129800E01

(a) Disconnect the radio receiver connector F8.

(b) Measure the voltage.

(1) Jack up either one of the drive wheels.

(2) Move the shift lever to the neutral position.

(3) Turn the ignition switch on (IG).

(4) Measure the voltage between terminal SPD of the wire harness connector and body ground when the drive wheels are turned slowly.

OK:

Voltage pulses as shown in the illustration.

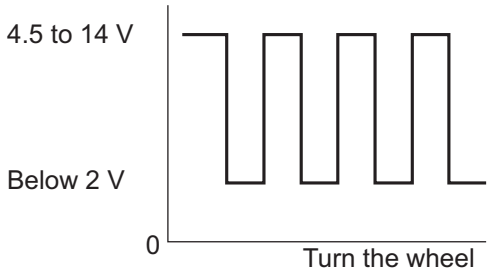

H E110855E03

OK → **REPLACE RADIO RECEIVER**

NG ↓

AV

3	CHECK HARNESS AND CONNECTOR (COMBINATION METER - RADIO RECEIVER)

Radio Receiver Wire Harness View:

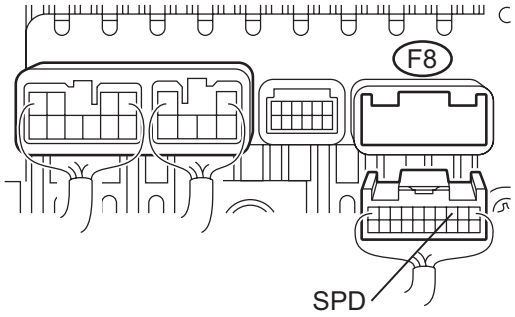

Combination Meter Wire Harness View:

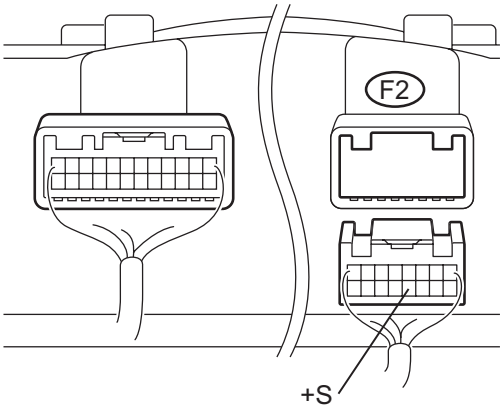

H E129801E01

(a) Disconnect the radio receiver connector F8 and combination meter connector F2.

(b) Measure the resistance according to the value(s) in the table below.

Standard resistance

Tester connection	Condition	Specified condition
SPD - +S	Ignition switch off	Below 1 Ω

NG → **REPAIR OR REPLACE HARNESS OR CONNECTOR**

OK

4	CHECK HARNESS AND CONNECTOR (RADIO RECEIVER - BODY GROUND)

Wire Harness View:

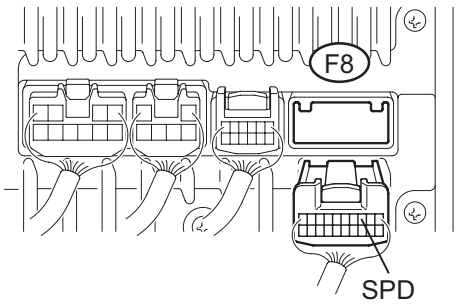

P E129800E01

(a) Measure the resistance according to the value(s) in the table below.

Standard resistance

Tester connection	Condition	Specified condition
SPD - Body ground	Ignition switch off	10 kΩ or higher

HINT:
If the resistance between terminal SPD and body ground is less than 10 kΩ, there may be a short in a wire harness, connector, or an ECU that is connected to the SPD signal wire.

NG → **REPAIR OR REPLACE HARNESS OR CONNECTOR OR EACH ECU**

OK

REPLACE COMBINATION METER

Steering Pad Switch Circuit

DESCRIPTION

This circuit sends an operation signal from the steering pad switch to the radio receiver.
If there is an open in the circuit, the audio system cannot be operated using the steering pad switch.
If there is a short in the circuit, the same condition as that when the switch is continuously depressed occurs.
Therefore, the radio receiver cannot be operated using the steering pad switch, and also the radio receiver itself cannot function.

WIRING DIAGRAM

3 Spoke Type:

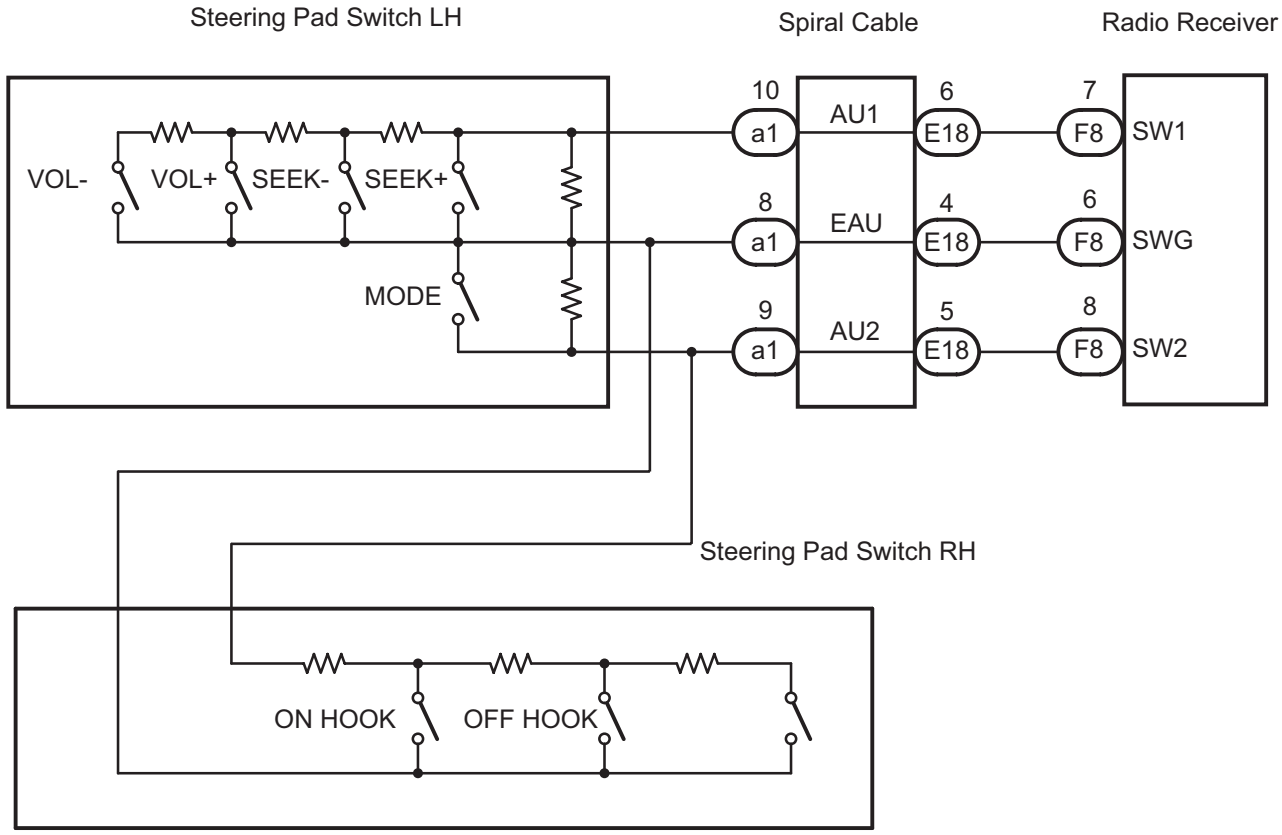

4 Spoke Type:

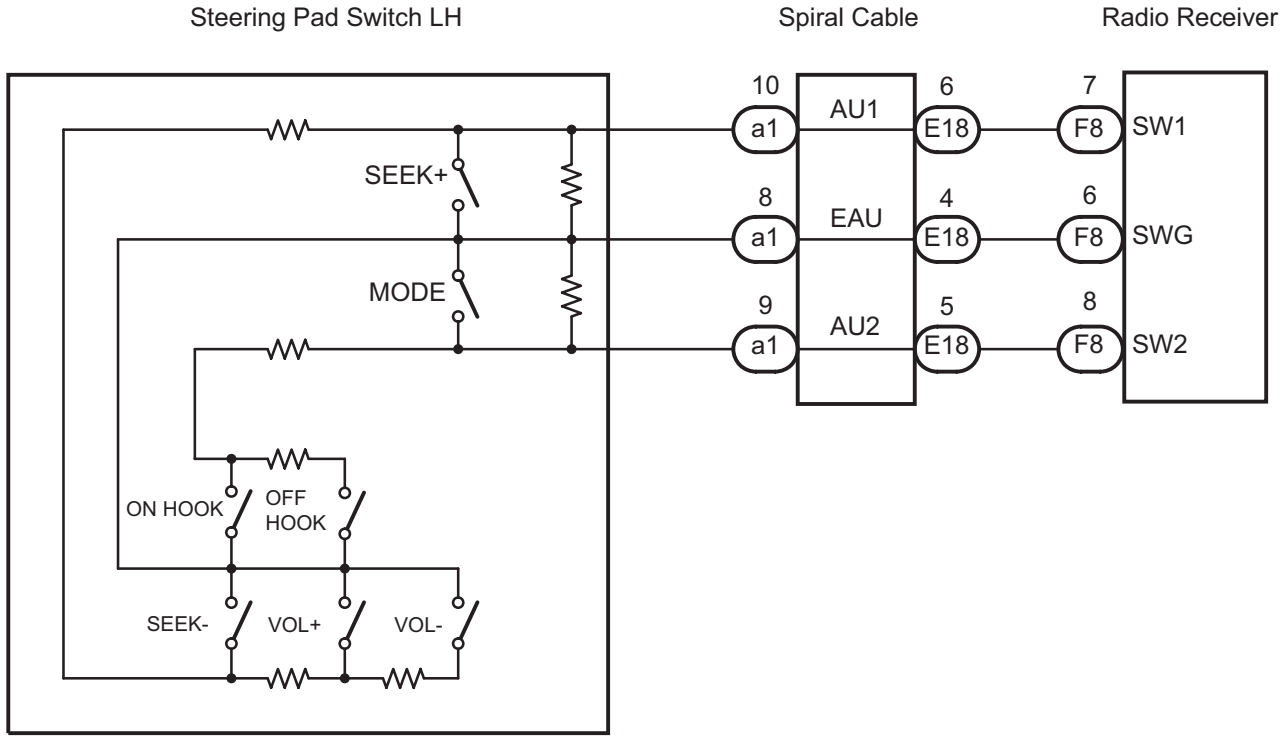

P

E129802E02

AV

INSPECTION PROCEDURE

NOTICE:

The vehicle is equipped with an SRS (Supplemental Restraint System) which includes components such as airbags. Before servicing (including removal or installation of parts), be sure to read the precautionary notice for the Supplemental Restraint System (See page RS-1).

1 INSPECT RADIO RECEIVER

Wire Harness View (Premium Model):

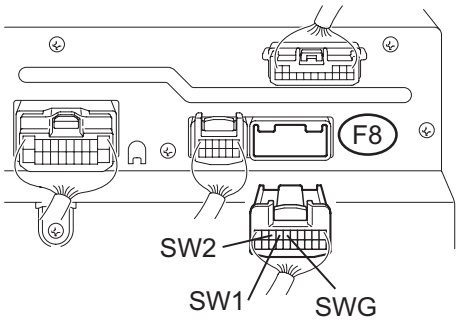

Wire Harness View (Standard Model):

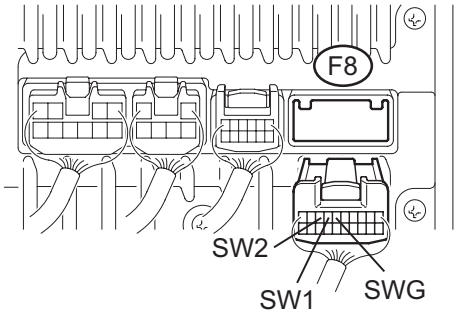

P E129803E02

(a) Disconnect the radio receiver connector F8.

(b) Measure the resistance according to the value(s) in the table below.

Standard resistance

Tester connection	Condition	Specified condition
SW1 - SWG	No switch is pushed	Approx. 100 kΩ
SW1 - SWG	SEEK+ switch: push	0 to 2.5 Ω
SW1 - SWG	SEEK- switch: push	Approx. 0.3 kΩ
SW1 - SWG	VOL+ switch: push	Approx. 1 kΩ
SW1 - SWG	VOL- switch: push	Approx. 3.1 kΩ
SW2 - SWG	No switch is pushed	Approx. 100 kΩ
SW2 - SWG	MODE switch: push	0 to 2.5 Ω
SW2 - SWG	ON HOOK switch: push (*1)	Approx. 0.3 kΩ
SW2 - SWG	OFF HOOK switch: push (*1)	Approx. 1 kΩ

*1: for Premium model

NG → **Go to step 2**

OK

PROCEED TO NEXT CIRCUIT INSPECTION SHOWN IN PROBLEM SYMPTOMS TABLE

2 INSPECT STEERING PAD SWITCH ASSEMBLY

(a) Disconnect the steering pad switch assembly connector.

(b) Measure the resistance according to the values in the table below.

3 Spoke Type:

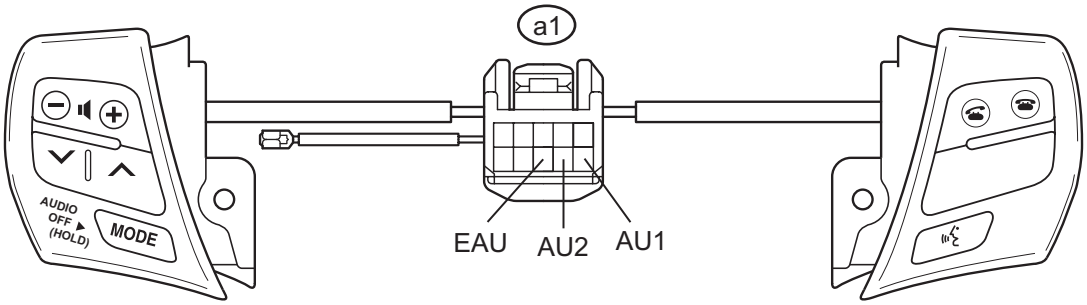

4 Spoke Type:

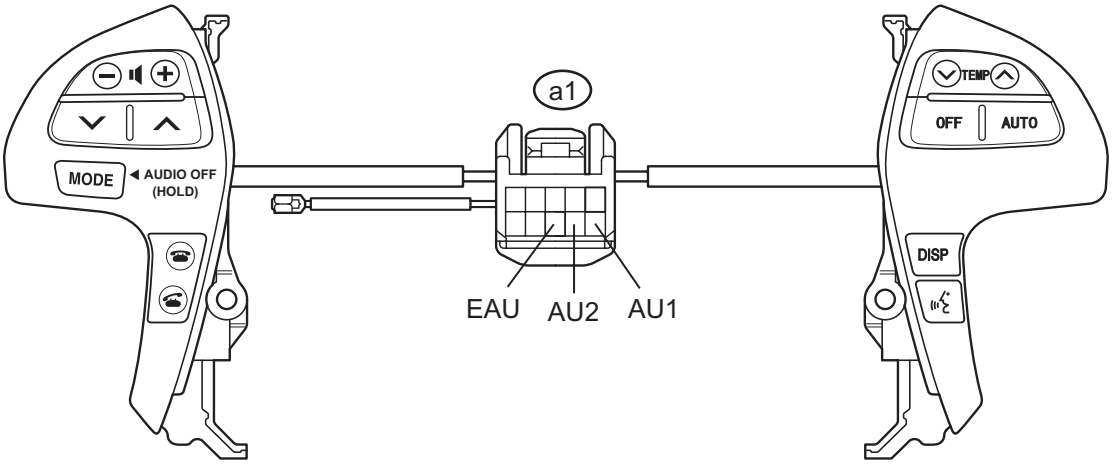

P

E129804E01

Standard resistance

Tester connection	Condition	Specified condition
AU1 - EAU	No switch is pushed	Approx. 100 kΩ
AU1 - EAU	SEEK+ switch: push	0 to 2.5 Ω
AU1 - EAU	SEEK- switch: push	Approx. 0.3 kΩ
AU1 - EAU	VOL+ switch: push	Approx. 1 kΩ
AU1 - EAU	VOL- switch: push	Approx. 3.1 kΩ
AU2 - EAU	No switch is pushed	Approx. 100 kΩ
AU2 - EAU	MODE switch: push	0 to 2.5 Ω
AU2 - EAU	ON HOOK switch: push (*1)	Approx. 0.3 kΩ
AU2 - EAU	OFF HOOK switch: push (*1)	Approx. 1 kΩ

*1: for Premium model

NG → **REPLACE STEERING PAD SWITCH ASSEMBLY**

OK

3 INSPECT SPIRAL CABLE

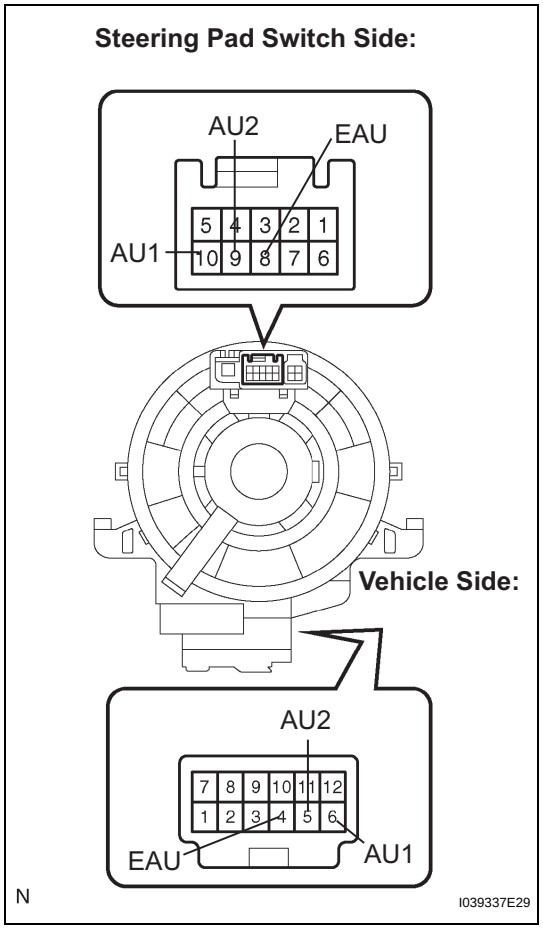

(a) Disconnect the steering pad switch and spiral cable connectors.

(b) Measure the resistance according to the value(s) in the table below.

Standard resistance

Tester connection	Spiral cable position	Specified condition
EAU - EAU	Center	Below 1 Ω
	2.5 rotations to the left	
	2.5 rotations to the right	
AU1 - AU1	Center	Below 1 Ω
	2.5 rotations to the left	
	2.5 rotations to the right	
AU2 - AU2	Center	Below 1 Ω
	2.5 rotations to the left	
	2.5 rotations to the right	

NOTICE:
The spiral cable is an important part of the SRS airbag system. Incorrect removal or installation of the spiral cable may prevent the airbag from deploying. Be sure to read the page shown in the brackets.

HINT:
- Removal (See page RS-363)
- Installation (See page RS-366)

NG → **REPLACE SPIRAL CABLE**

OK

REPAIR OR REPLACE HARNESS OR CONNECTOR (SPIRAL CABLE - RADIO RECEIVER)

Illumination Circuit

DESCRIPTION

Power is supplied to the radio receiver and steering pad switch illumination when the light control switch is in the TAIL or HEAD position.

WIRING DIAGRAM

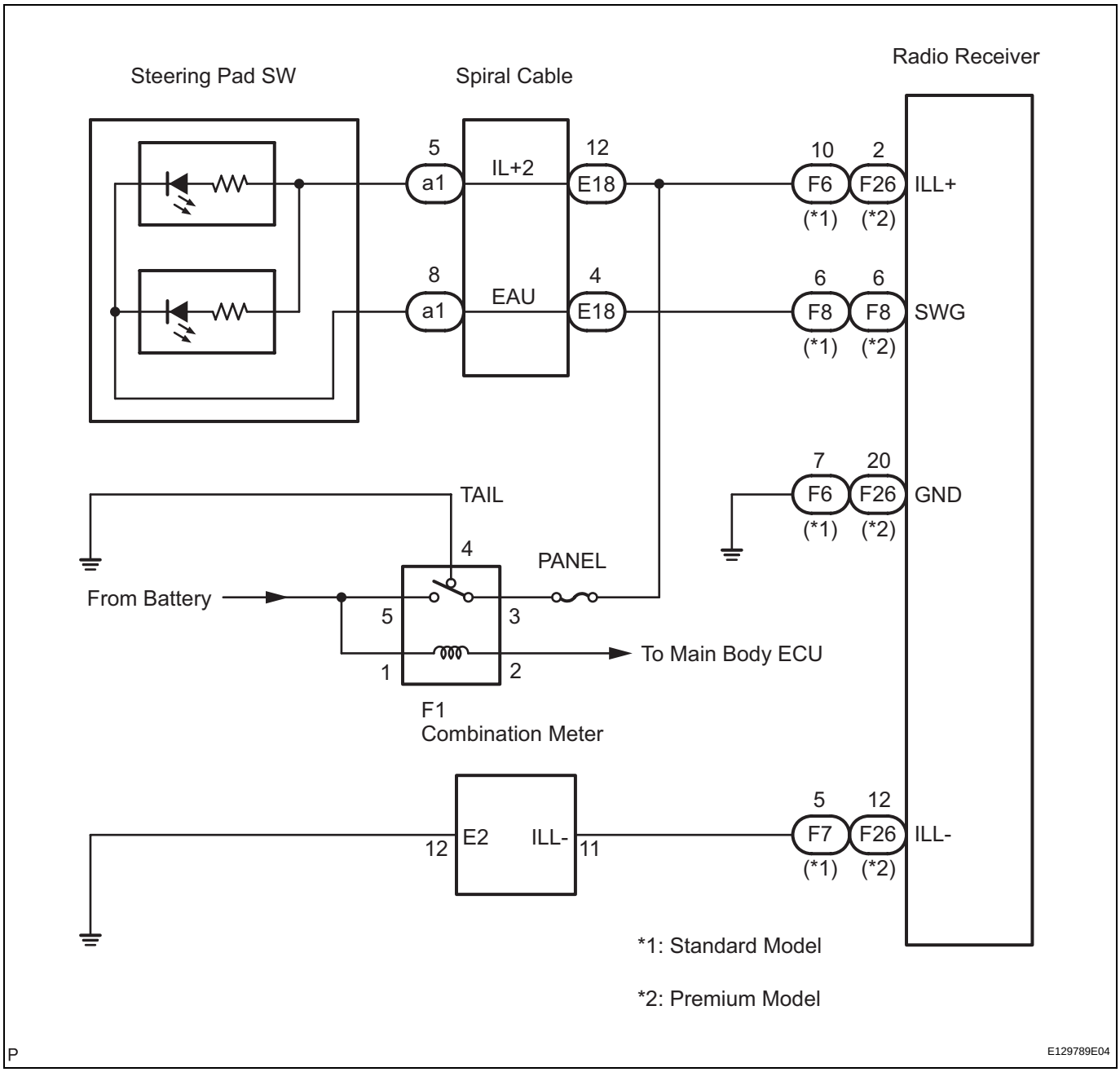

INSPECTION PROCEDURE

NOTICE:

The vehicle is equipped with an SRS (Supplemental Restraint System) which includes components such as airbags. Before servicing (including removal or installation of parts), be sure to read the precautionary notice for the supplemental restraint system (See page RS-1).

1 CHECK ILLUMINATION

(a) Check if the illumination for the radio receiver, steering pad switch, glove box or others (hazard switch, transmission control switch, etc.) comes on when the light control switch is turned to the HEAD or TAIL position.

Result

Result	Proceed to
Illumination comes on for all components except steering pad switch.	**A**
Illumination comes on for all components except radio receiver.	**B**
No illumination comes on (radio receiver, hazard switch, glove box, etc.).	**C**
Illumination comes on only for glove box and steering pad switch.	**D**

B → **Go to step 6**

C → **GO TO LIGHTING SYSTEM**

D → **GO TO COMBINATION METER SYSTEM**

A

2 CHECK HARNESS AND CONNECTOR (BATTERY - SPIRAL CABLE)

Spiral Cable Connector Front View:

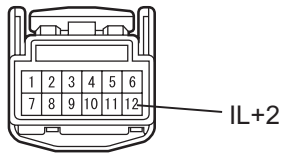

(a) Disconnect the spiral cable connector.
(b) Measure the voltage according to the value(s) in the table below.

Standard voltage

Tester connection	Condition	Specified condition
IL+2 - Body ground	**Light control SW TAIL or HEAD**	**10 to 14 V**

NG → **REPAIR OR REPLACE HARNESS OR CONNECTOR**

OK

3 INSPECT STEERING PAD SWITCH ASSEMBLY

(a) Disconnect the steering pad switch connector.
(b) Connect the positive (+) lead to terminal IL+2 and the negative (-) lead to terminal EAU of the steering pad switch assembly connector.

3 Spoke Type:

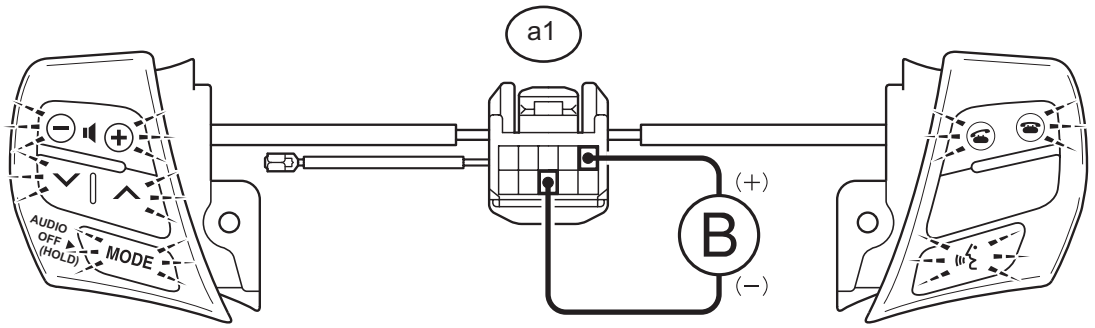

4 Spoke Type:

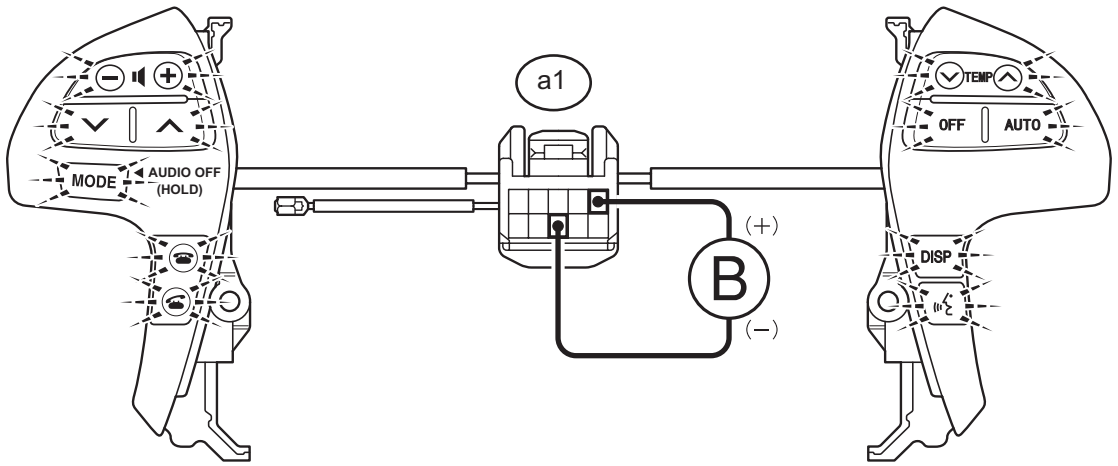

P

E129805E01

(c) Check if the illumination for the steering pad switch assembly comes on.

OK:

Illumination for the steering pad switch assembly comes on.

NG → **REPLACE STEERING PAD SWITCH ASSEMBLY**

OK

AV

4 INSPECT SPIRAL CABLE

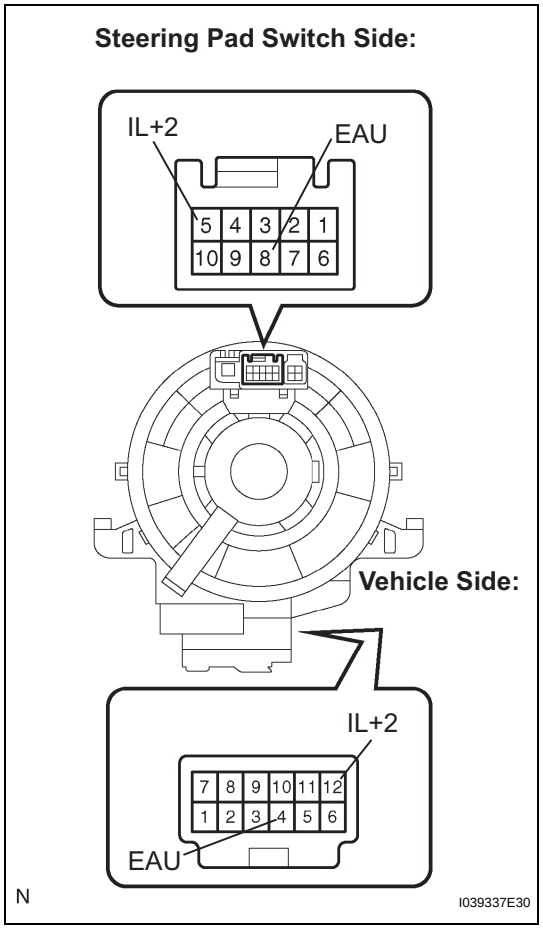

(a) Disconnect the steering pad switch and spiral cable connectors.

(b) Measure the resistance according to the value(s) in the table below.

Standard resistance

Tester connection	Spiral cable position	Specified condition
EAU - EAU	Center	Below 1 Ω
	2.5 rotations to the left	
	2.5 rotations to the right	
IL+2 - IL+2	Center	Below 1 Ω
	2.5 rotations to the left	
	2.5 rotations to the right	

NOTICE:
The spiral cable is an important part of the SRS airbag system. Incorrect removal or installation of the spiral cable may prevent the airbag from deploying. Be sure to read the page shown in the brackets.

HINT:
- Removal (See page RS-363)
- Installation (See page RS-366)

NG → **REPLACE SPIRAL CABLE**

OK

5 CHECK HARNESS AND CONNECTOR (SPIRAL CABLE - RADIO RECEIVER)

Radio Receiver Wire Harness View (Premium Model):

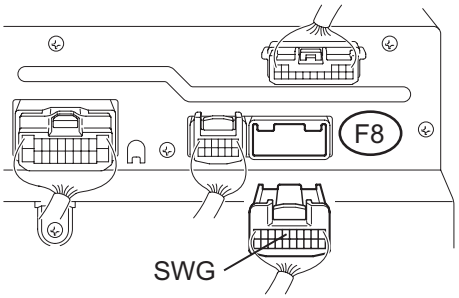

Radio Receiver Wire Harness View (Standard Model):

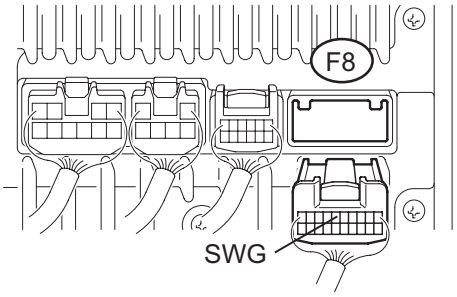

Spiral Cable Connector Front View:

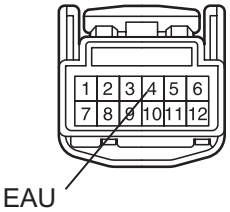

P E129806E02

(a) Disconnect the connectors from the radio receiver and spiral cable.

(b) Measure the resistance according to the value(s) in the table below.

Standard resistance

Tester connection	Condition	Specified condition
SWG - EAU	Always	Below 1 Ω
SWG - Body ground	Always	10 kΩ or higher

NG → **REPAIR OR REPLACE HARNESS OR CONNECTOR**

OK

PROCEED TO NEXT CIRCUIT INSPECTION SHOWN IN PROBLEM SYMPTOMS TABLE

6 CHECK HARNESS AND CONNECTOR (BATTERY - RADIO RECEIVER)

Wire Harness View (Premium Model):

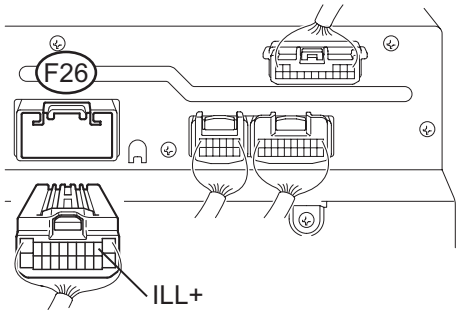

Wire Harness View (Standard Model):

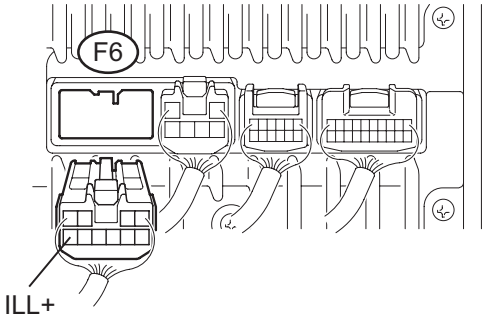

P E129807E03

OK

(a) Disconnect the radio receiver connector.
(b) Measure the voltage according to the value(s) in the table below.

Standard voltage

Tester connection	Condition	Specified condition
ILL+ - Body ground	Light control switch TAIL or HEAD	10 to 14 V

NG → **REPAIR OR REPLACE HARNESS OR CONNECTOR**

7 CHECK HARNESS AND CONNECTOR (RADIO RECEIVER - COMBINATION METER)

Radio Receiver Wire Harness View (Premium Model):

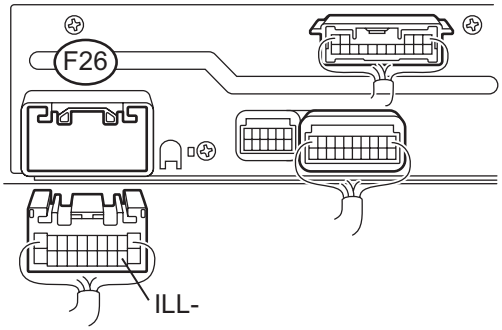

Radio Receiver Wire Harness View (Standard Model):

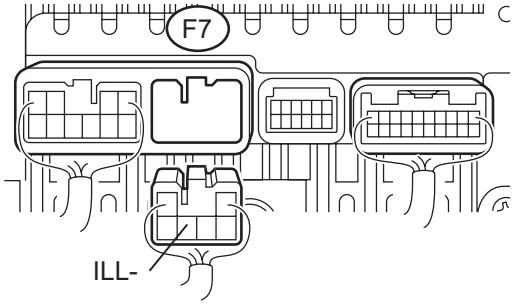

Combination Meter Wire Harness View:

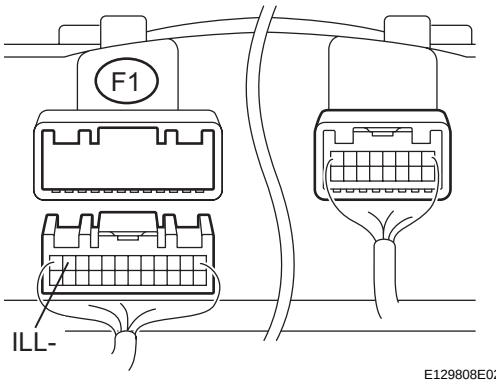

H E129808E02

(a) Disconnect the radio receiver connector and combination meter connector.

(b) Measure the resistance according to the value(s) in the table below.

Standard resistance

Tester connection	Condition	Specified condition
ILL- - ILL-	Always	Below 1 Ω
ILL- - Body ground	Always	10 kΩ or higher

NG → **REPAIR OR REPLACE HARNESS OR CONNECTOR**

OK

PROCEED TO NEXT CIRCUIT INSPECTION SHOWN IN PROBLEM SYMPTOMS TABLE

Speaker Circuit

DESCRIPTION

- When the vehicle has a built-in type amplifier, a sound signal is sent from the radio receiver to the speakers via the "Standard Model" circuit.
- When the vehicle has a separate type amplifier, a sound signal from the radio receiver is amplified by the stereo component amplifier and then transmitted to the speaker via the "Premium Model" circuit.

If there is a short in this circuit, the stereo component amplifier detects it and stops output to the speakers. Thus sound cannot be heard from the speakers even if there is no malfunction in the stereo component amplifier or speakers.

WIRING DIAGRAM

Standard Model:

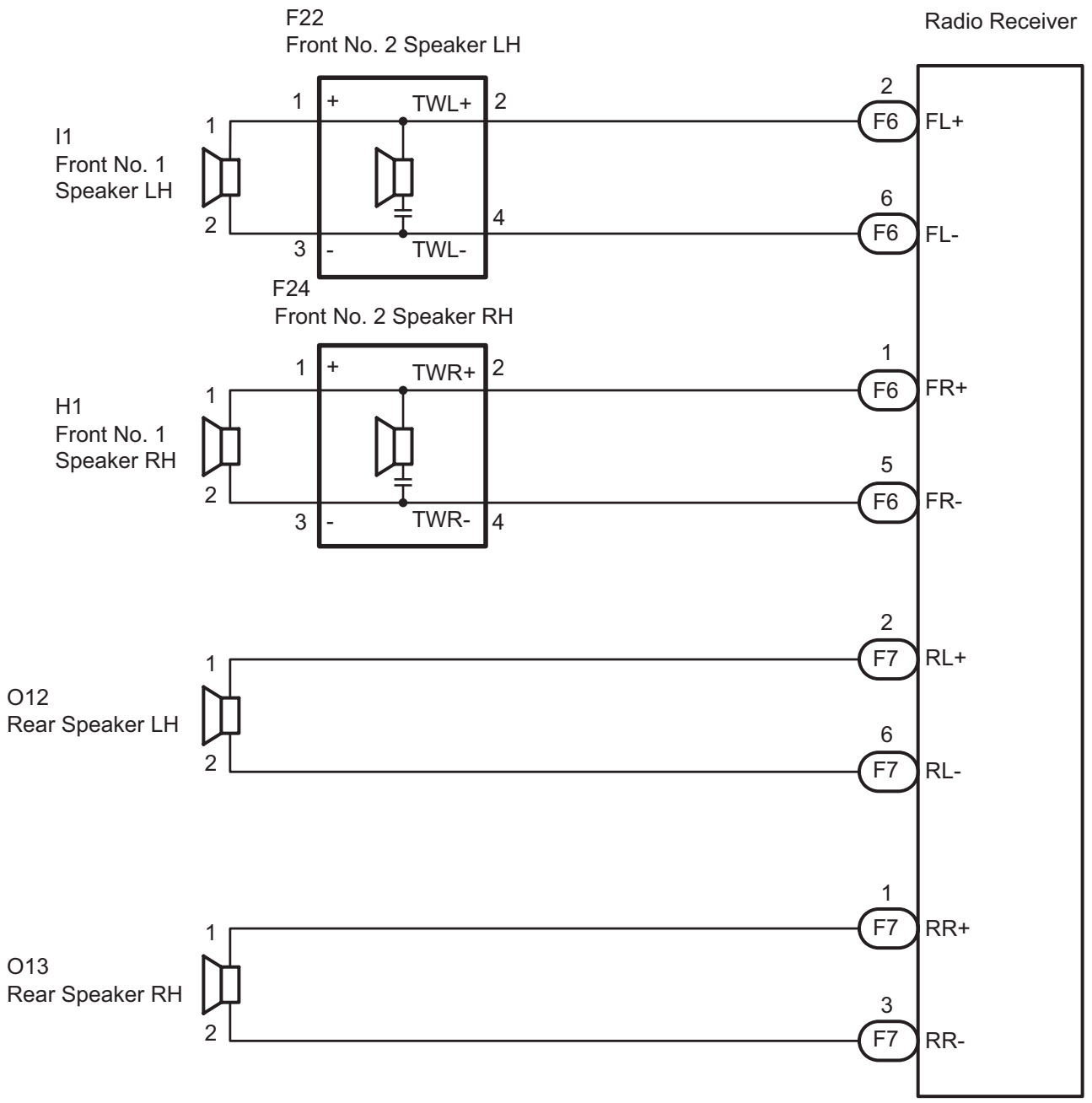

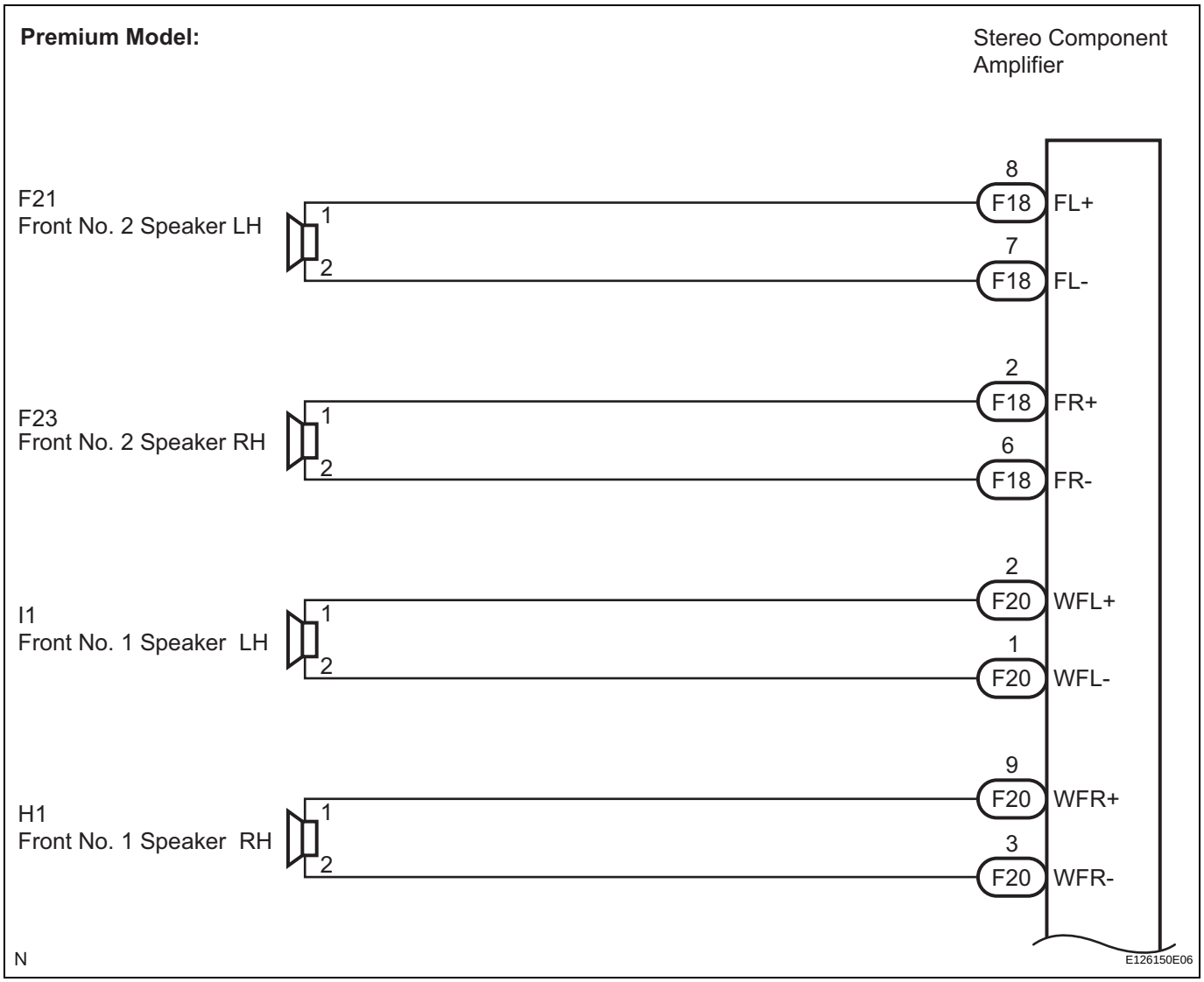
Premium Model:
Stereo Component Amplifier
F21
Front No. 2 Speaker LH
1
2
8
F18
FL+
7
F18
FL-
F23
Front No. 2 Speaker RH
1
2
2
F18
FR+
6
F18
FR-
I1
Front No. 1 Speaker LH
1
2
2
F20
WFL+
1
F20
WFL-
H1
Front No. 1 Speaker RH
1
2
9
F20
WFR+
3
F20
WFR-
N
E126150E06

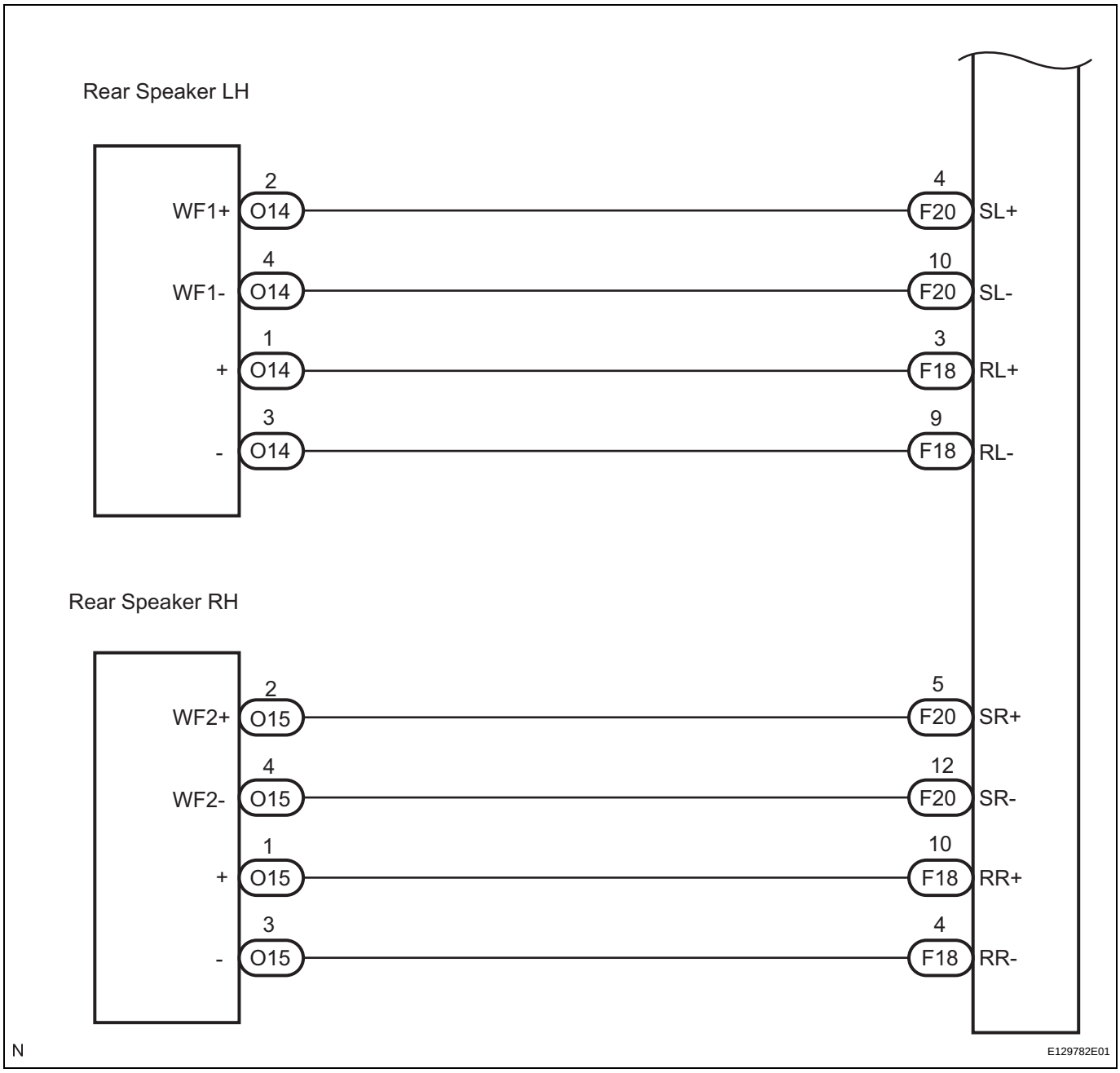
Rear Speaker LH
WF1+
2
O14
4
F20
SL+
WF1-
4
O14
10
F20
SL-
+
1
O14
3
F18
RL+
-
3
O14
9
F18
RL-
Rear Speaker RH
WF2+
2
O15
5
F20
SR+
WF2-
4
O15
12
F20
SR-
+
1
O15
10
F18
RR+
-
3
O15
4
F18
RR-
N
E129782E01

INSPECTION PROCEDURE

1	CHECK HARNESS AND CONNECTOR

Stereo Component Amplifier Wire Harness View (Premium Model):

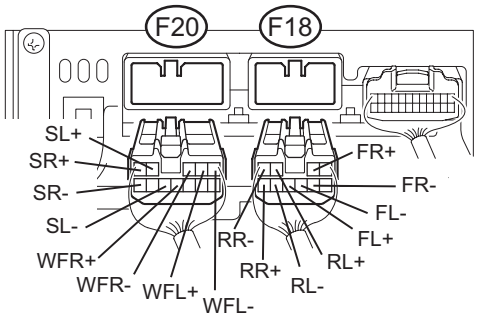

Radio Receiver Wire Harness View (Standard Model):

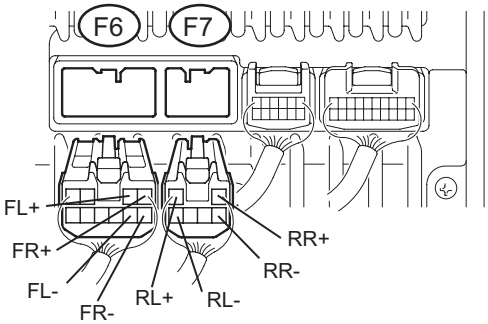

Front No. 1 Speaker Connector Front View:

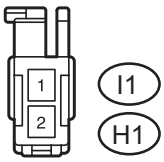

Front No. 2 Speaker Connector Front View:

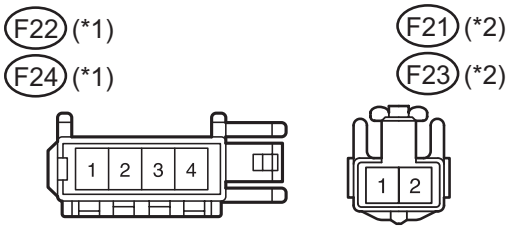

*1: Standard Model

*2: Premium Model

P

E129814E04

(a) Disconnect the connectors shown in the illustration from the stereo component amplifier or radio receiver and speakers.

(b) Premium Model:
Measure the resistance between each of the front No. 2 speakers and the stereo component amplifier to check for an open circuit in the wire harness.
Standard resistance:
Below 1 Ω

(c) Standard Model:
Measure the resistance between each of the front No. 2 speakers and the radio receiver to check for an open circuit in the wire harness.
Standard resistance:
Below 1 Ω

(d) Premium Model:
Measure the resistance between each of the front No. 1 speakers and the stereo component amplifier to check for an open circuit in the wire harness.
Standard resistance:
Below 1 Ω

(e) Standard Model:
Measure the resistance between each of the front No. 2 speakers and each of the front No. 1 speakers to check for an open circuit in the wire harness.
Standard resistance:
Below 1 Ω

(f) Premium Model:
Measure the resistance between each of the rear speakers and the stereo component amplifier to check for an open circuit in the wire harness.
Standard resistance:
Below 1 Ω

(g) Standard Model:
Measure the resistance between each of the rear speakers and the radio receiver to check for an open circuit in the wire harness.
Standard resistance:
Below 1 Ω

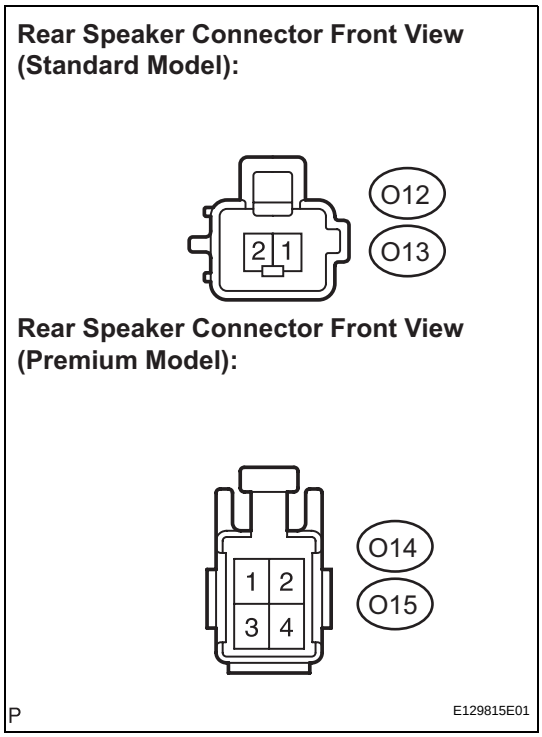

(h) Measure the resistance between each speaker and body ground to check for a short circuit in the wire harness.
Standard resistance:
10 kΩ or higher

NG → **REPAIR OR REPLACE HARNESS OR CONNECTOR**

OK

2	INSPECT FRONT NO. 1 SPEAKER

(a) Resistance check.
(1) Measure the resistance between the terminals of the speaker.
Standard resistance:
Premium Model:
1.8 to 2.6 Ω
Standard Model:
Approximately 4 Ω

NG → **REPLACE FRONT NO. 1 SPEAKER**

OK

3	INSPECT FRONT NO. 2 SPEAKER

(a) Check that the malfunction disappears when another speaker in good condition is installed.
OK:
Malfunction disappears.
HINT:
- Connect all the connectors to the front No. 2 speaker.
- When there is a possibility that either the right or left front speaker is detective, inspect by interchanging the right one with the left one.
- Perform the above inspection on both LH and RH sides.

OK → **REPLACE FRONT NO. 2 SPEAKER**

NG

4 CONFIRM MODEL

Result

Result	Proceed to
Premium Model	A
Standard Model	B

B → **Go to step 6**

A

5 INSPECT REAR SPEAKER

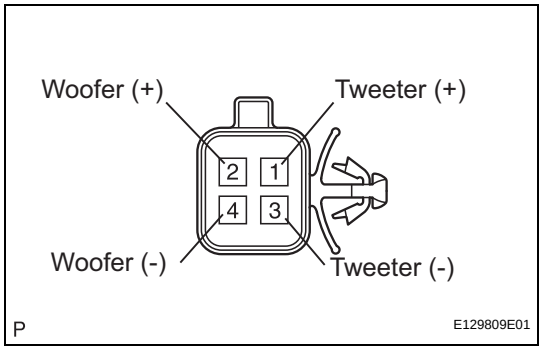

(a) Woofer speaker:
  (1) Measure the resistance according to the value(s) in the table below.
  NOTICE:
  The speaker should not be removed for checking.
  Standard resistance

Tester connection	Condition	Specified condition
2 - 4	Always	1.8 to 2.6 Ω

(b) Tweeter speaker:
  (1) Check that the malfunction disappears when another rear speaker in good condition is installed.

OK:
Malfunction appears.

HINT:
- Connect all the connectors to the rear speaker.
- When there is a possibility that either the right or left rear speaker is detective, inspect by interchanging the right one with the left one.

NG → **REPLACE REAR SPEAKER**

OK

PROCEED TO NEXT CIRCUIT INSPECTION SHOWN IN PROBLEM SYMPTOMS TABLE

AV

6 INSPECT REAR SPEAKER

(a) Resistance check.
  (1) Measure the resistance between the terminals of the speaker.
  Standard resistance:
  Approximately 4 Ω

NG → **REPLACE REAR SPEAKER**

OK

PROCEED TO NEXT CIRCUIT INSPECTION SHOWN IN PROBLEM SYMPTOMS TABLE

Sound Signal Circuit between Radio Receiver and Stereo Component Amplifier

DESCRIPTION

The radio receiver sends a sound signal to the stereo component amplifier through this circuit.
The sound signal that has been sent is amplified by the stereo component amplifier, and then is sent to the speakers.
If there is an open or short in the circuit, sound cannot be heard from the speakers even if there is no malfunction in the stereo component amplifier or speakers.

WIRING DIAGRAM

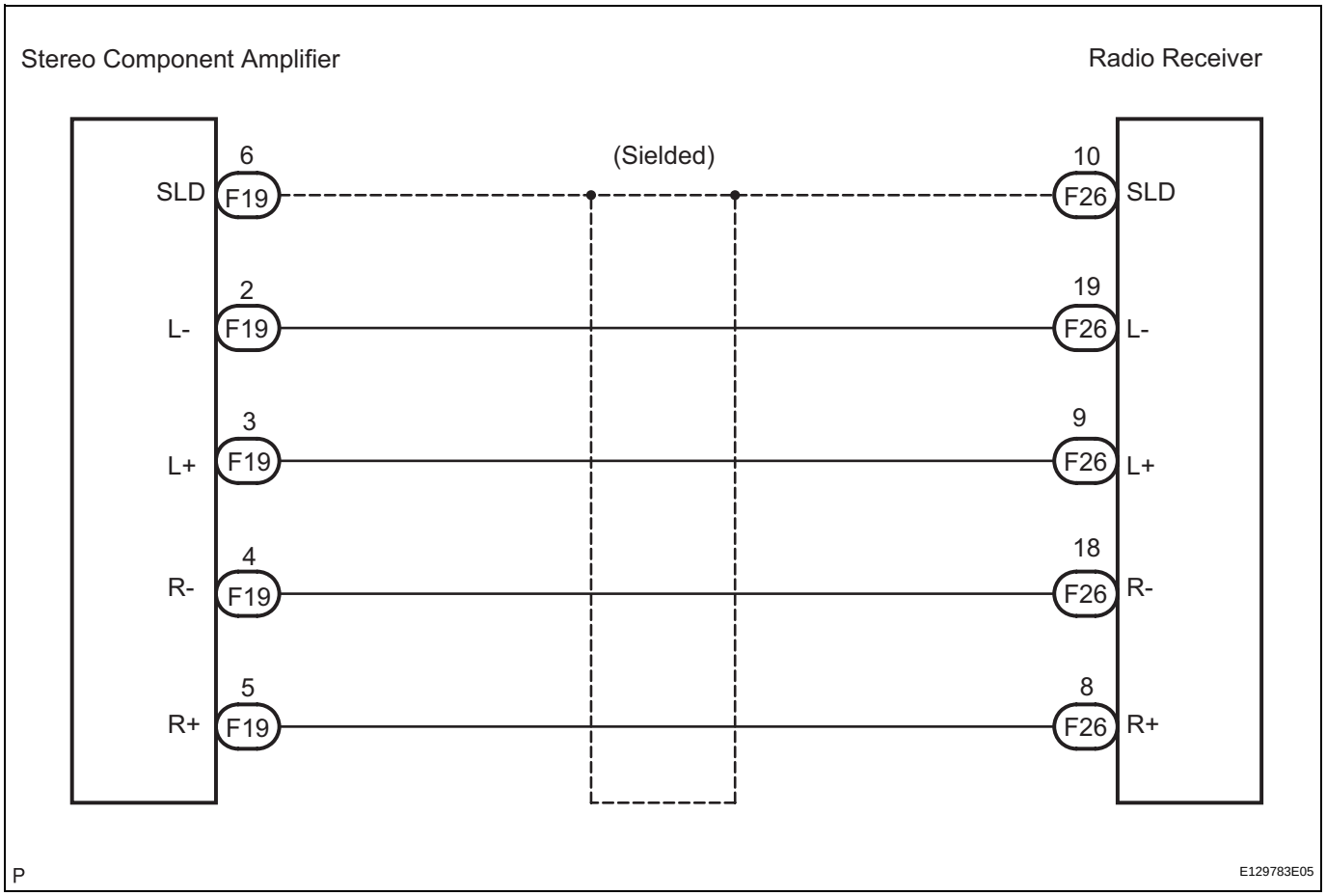

INSPECTION PROCEDURE

1	**CHECK HARNESS AND CONNECTOR (RADIO RECEIVER - STEREO COMPONENT AMPLIFIER)**

Radio Receiver Wire Harness View:

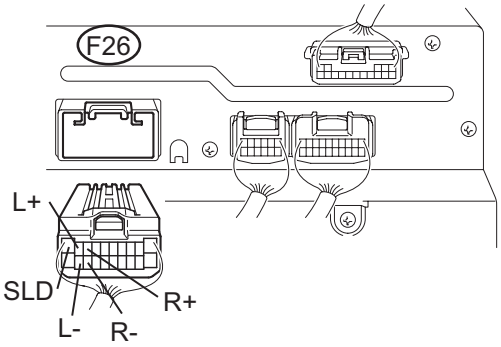

Stereo Component Amplifier Wire Harness View:

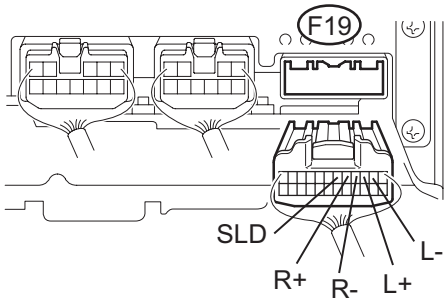

P E129816E05

(a) Disconnect the connectors from the radio receiver and stereo component amplifier.

(b) Measure the resistance according to the value(s) in the table below.

Standard resistance

Tester connection	Condition	Specified condition
L+ - L+	Always	Below 1 Ω
L- - L-	Always	Below 1 Ω
R+ - R+	Always	Below 1 Ω
R- - R-	Always	Below 1 Ω
SLD - SLD	Always	Below 1 Ω
L+ - Body ground	Always	10 kΩ or higher
L- - Body ground	Always	10 kΩ or higher
R+ - Body ground	Always	10 kΩ or higher
R- - Body ground	Always	10 kΩ or higher
SLD - Body ground	Always	10 kΩ or higher

NG → **REPAIR OR REPLACE HARNESS OR CONNECTOR**

OK

PROCEED TO NEXT CIRCUIT INSPECTION SHOWN IN PROBLEM SYMPTOMS TABLE

Sound Signal Circuit between Radio Receiver and Stereo Jack Adapter

DESCRIPTION

The stereo jack adapter sends an external device sound signal to the radio receiver through this circuit. The sound signal that has been sent is amplified by the stereo component amplifier or radio receiver, and then is sent to the speakers.
If there is an open or short in the circuit, sound cannot be heard from the speakers even if there is no malfunction in the stereo component amplifier, radio receiver, or speakers.

WIRING DIAGRAM

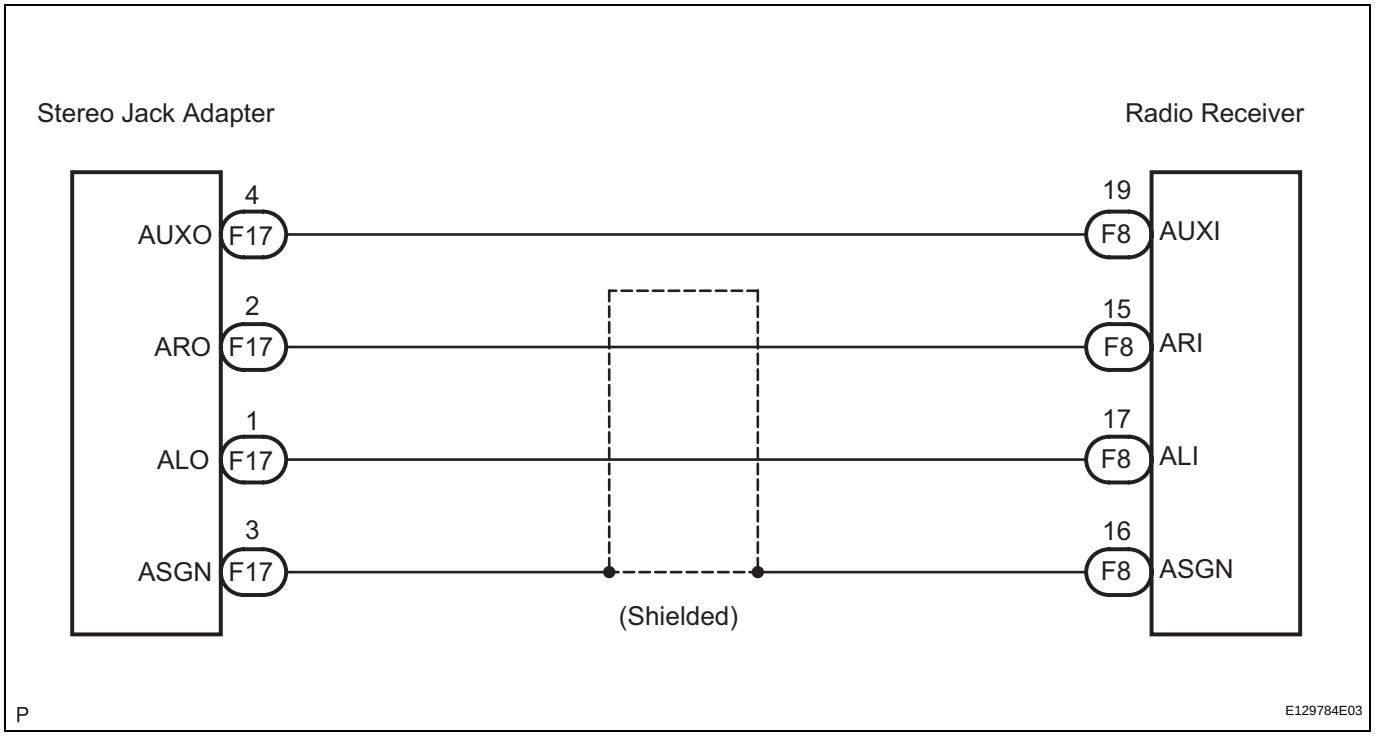

INSPECTION PROCEDURE

1	CHECK HARNESS AND CONNECTOR (RADIO RECEIVER - STEREO JACK ADAPTER)

Radio Receiver Wire Harness View (Premium Model):

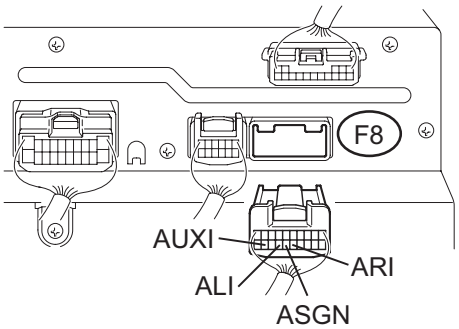

Radio Receiver Wire Harness View (Standard Model):

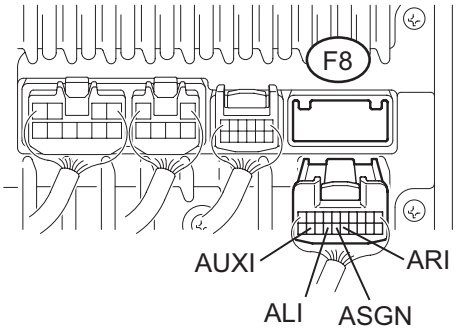

Stereo Jack Adapter Connector Front View:

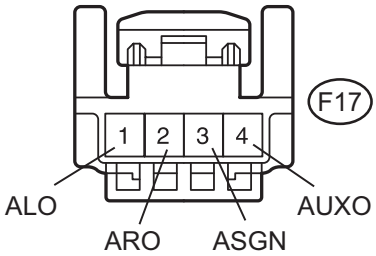

P E129810E01

(a) Disconnect the connectors from the stereo jack adapter and radio receiver.

(b) Measure the resistance according to the value(s) in the table below.

Standard resistance

Tester connection	Condition	Specified condition
AUXO - AUXI	Always	Below 1 Ω
ASGN - ASGN	Always	Below 1 Ω
ARO - ARI	Always	Below 1 Ω
ALO - ALI	Always	Below 1 Ω
AUXO - Body ground	Always	10 kΩ or higher
ASGN - Body ground	Always	10 kΩ or higher
ARO - Body ground	Always	10 kΩ or higher
ALO - Body ground	Always	10 kΩ or higher

NG → **REPAIR OR REPLACE HARNESS OR CONNECTOR**

OK

PROCEED TO NEXT CIRCUIT INSPECTION SHOWN IN PROBLEM SYMPTOMS TABLE

Mute Signal Circuit between Radio Receiver and Stereo Component Amplifier

DESCRIPTION

This circuit sends a signal to the stereo component amplifier to mute noise. Because of that, the noise produced by changing the sound source ceases.
If there is an open in the circuit, noise can be heard from the speakers when changing the sound source.
If there is a short in the circuit, even though the stereo component amplifier is normal, no sound, or only an extremely small sound, can be produced.

WIRING DIAGRAM

INSPECTION PROCEDURE

1	INSPECT STEREO COMPONENT AMPLIFIER

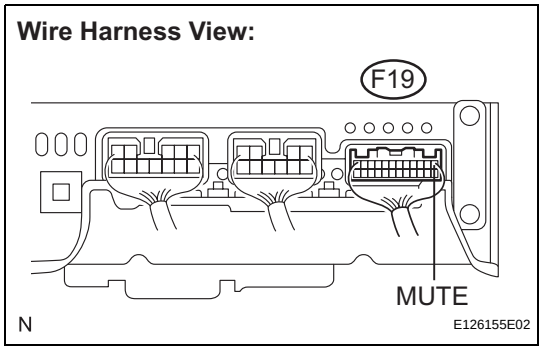

(a) Measure the voltage according to the value(s) in the table below.
Standard voltage

Tester connection	Condition	Specified condition
MUTE - Body ground	Turn ignition switch on (ACC), Audio system is playing → Changing	Above 3.5 V → Below 1 V

OK → **PROCEED TO NEXT CIRCUIT INSPECTION SHOWN IN PROBLEM SYMPTOMS TABLE**

NG

AV

2	CHECK HARNESS AND CONNECTOR (RADIO RECEIVER - STEREO COMPONENT AMPLIFIER)

Radio Receiver Wire Harness View:

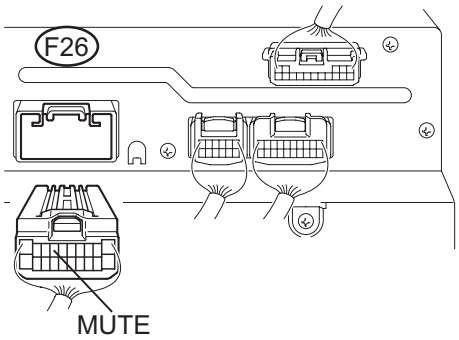

Stereo Component Amplifier Wire Harness View:

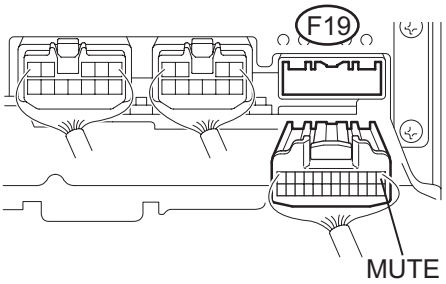

P E129816E06

(a) Disconnect the radio receiver connector F26 and stereo component amplifier connector F19.

(b) Measure the resistance according to the value(s) in the table below.

Standard resistance

Tester connection	Condition	Specified condition
MUTE - MUTE	Always	Below 1 Ω
MUTE - Body ground	Always	10 kΩ or higher

NG → **REPAIR OR REPLACE HARNESS OR CONNECTOR**

OK

3	**INSPECT STEREO COMPONENT AMPLIFIER (OUTPUT SIGNAL)**

Premium Model Wire Harness View:

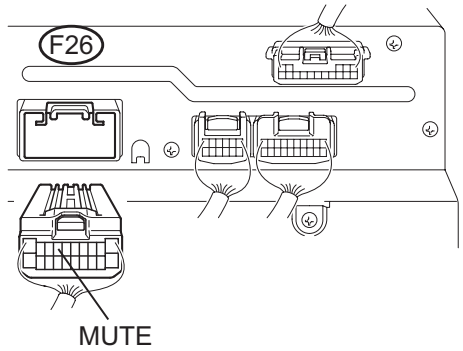

(a) Reconnect the stereo component amplifier connector F19.

(b) Measure the voltage according to the value(s) in the table below.

Standard voltage

Tester connection	Condition	Specified condition
MUTE - Body ground	Turn ignition switch on (ACC), Audio system is playing.	Above 3.5 V

NG → **REPLACE STEREO COMPONENT AMPLIFIER**

OK

REPLACE RADIO RECEIVER

AVC-LAN Circuit

DESCRIPTION

Each unit of the audio system connected to the AVC-LAN (communication bus) transfers the signal of each switch by communication.
When a short to +B or short to ground occurs in this AVC-LAN, the audio system will not function normally as the communication is discontinued.

INSPECTION PROCEDURE

1 INSPECT RADIO RECEIVER

Premium Model Wire Harness View:

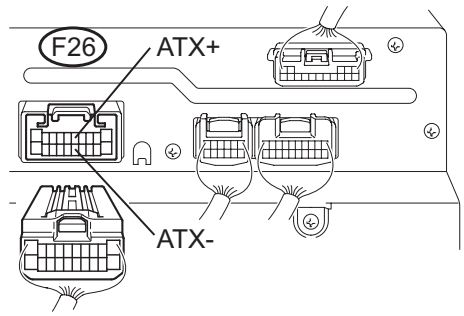

P E129798E04

(a) Disconnect the radio receiver connector.
(b) Measure the resistance according to the value(s) in the table below.
Standard resistance

Tester connection	Condition	Specified condition
ATX+ (F26-5) - ATX- (F26-15)	Always	60 to 80 Ω

NG → **REPLACE RADIO RECEIVER**

OK

2 CHECK HARNESS AND CONNECTOR

HINT:
For details of the connectors, refer to the "TERMINALS OF ECU" (See page AV-15).
(a) Referring to the AVC-LAN wiring diagram below, check all AVC-LAN circuits.
  (1) Disconnect all connectors in all AVC-LAN circuits.
  (2) Check for an open or short in all AVC-LAN circuits.
  OK:
  There is no open or short circuit.

AVC-LAN WIRING DIAGRAM

Premium Model:

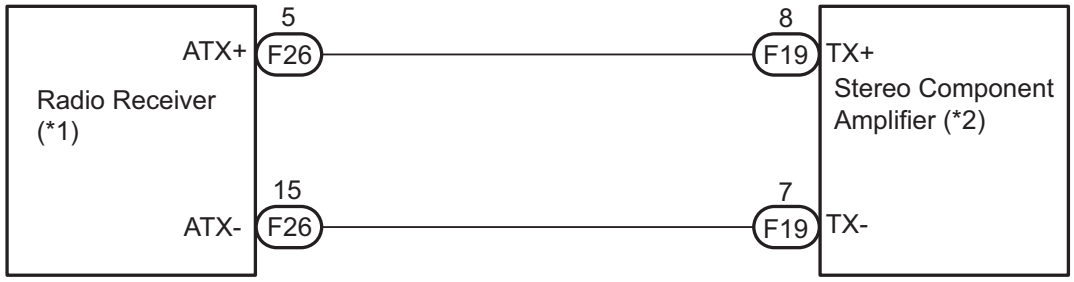

*1: Master Unit

*2: Slave Unit

P

E111831E15

NG → **REPAIR OR REPLACE HARNESS OR CONNECTOR**

OK

PROCEED TO NEXT CIRCUIT INSPECTION SHOWN IN PROBLEM SYMPTOMS TABLE

Vehicle Speed Signal Circuit between Stereo Component Amplifier and Combination Meter

DESCRIPTION

This circuit is necessary for the ASL (Auto Sound Leveliser) built into the stereo component amplifier. Speed signals are received from the combination meter and used for the ASL.
The ASL function automatically adjusts the sound data in order to enable hearing the clear audio sound even when vehicle noise increases (as vehicle noise increases, the volume is turned up etc.).
HINT:

- A voltage of 12 V or 5 V is output from each ECU and then input to the combination meter. The signal is changed to a pulse signal at the transistor in the combination meter. Each ECU controls the respective system based on the pulse signal.
- If a short occurs in an ECU, all systems in the diagram below will not operate normally.

WIRING DIAGRAM

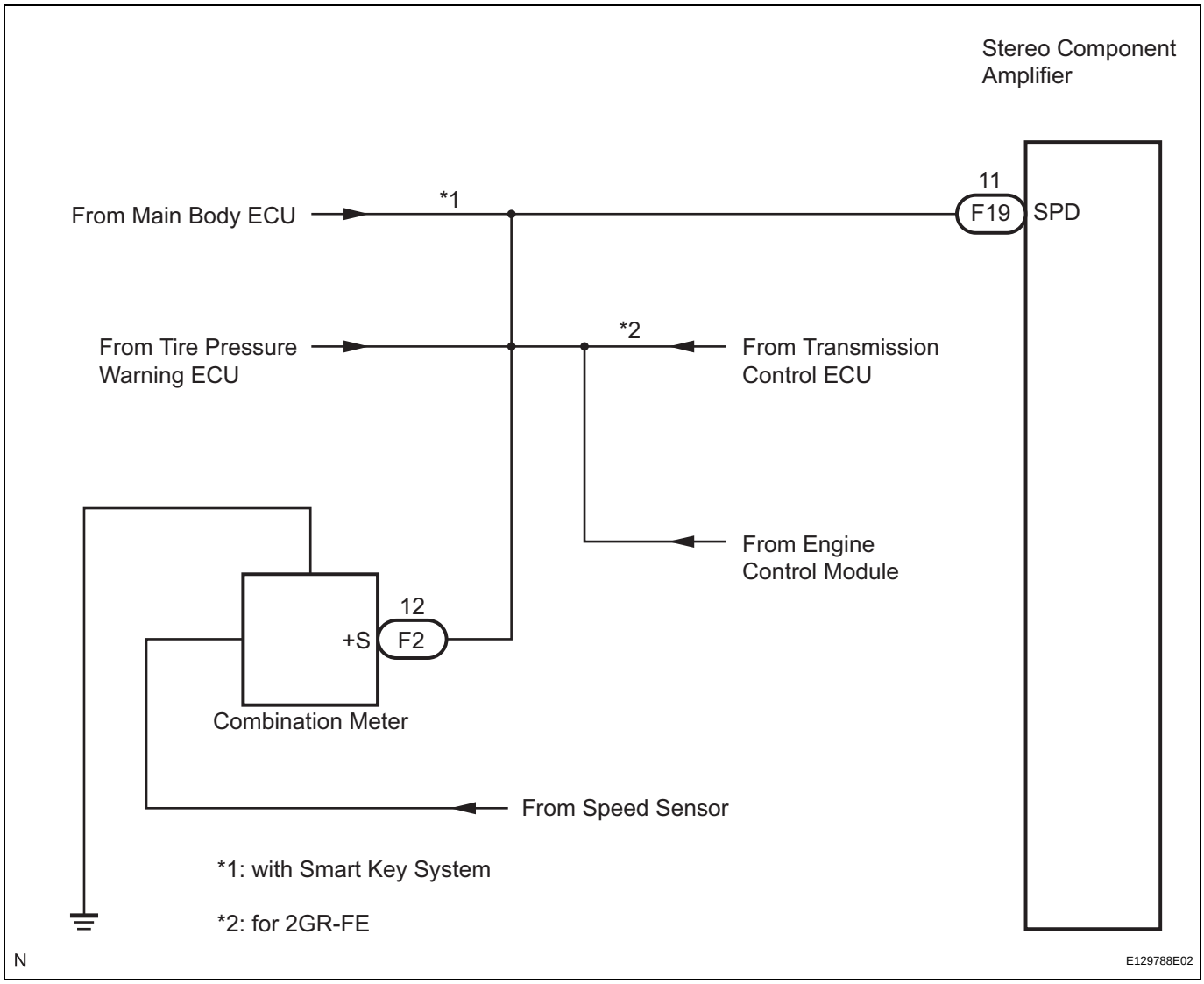

INSPECTION PROCEDURE

1	OPERATION OF SPEEDOMETER

(a) Drive the vehicle and check if the function of the speedometer on the combination meter is normal.
OK:
Actual vehicle speed and the speed indicated on the speedometer are the same.
HINT:
The vehicle speed sensor is functioning normally when the indication on the speedometer is normal.

NG → **CHECK COMBINATION METER**

OK

2	INSPECT STEREO COMPONENT AMPLIFIER

Wire Harness View:

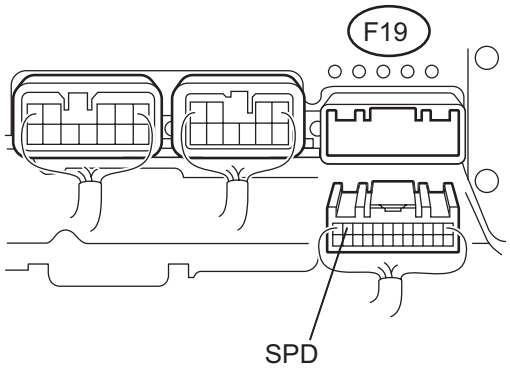

E132126E01

(a) Disconnect the stereo component amplifier connector F19.
(b) Measure the voltage.
(1) Jack up either one of the drive wheels.
(2) Move the shift lever to the neutral position.
(3) Turn the ignition switch on (IG).

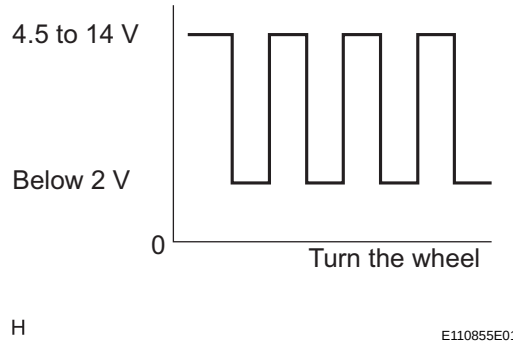

E110855E01

(4) Measure the voltage between terminal SPD of the wire harness connector and body ground when the drive wheels are turned slowly.
OK:
Voltage pulses as shown in the illustration.

NG → **Go to step 3**

OK

REPLACE STEREO COMPONENT AMPLIFIER

3	CHECK HARNESS AND CONNECTOR (COMBINATION METER - STEREO COMPONENT AMPLIFIER)

Stereo Component Amplifier Wire Harness View:

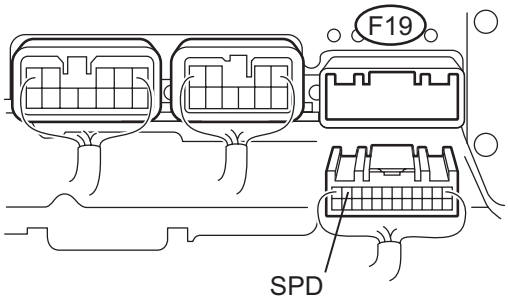

Combination Meter Wire Harness View:

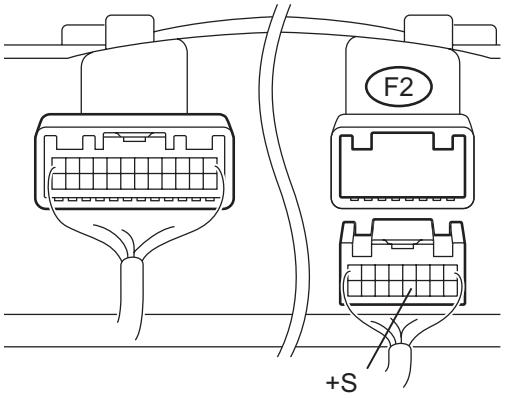

H E129817E01

(a) Disconnect the stereo component amplifier connector F19 and combination meter connector F2.
(b) Measure the resistance according to the value(s) in the table below.

Standard resistance

Tester connection	Condition	Specified condition
SPD - +S	Ignition switch off	Below 1 Ω

NG → **REPAIR OR REPLACE HARNESS OR CONNECTOR**

OK

4	**CHECK HARNESS AND CONNECTOR (STEREO COMPONENT AMPLIFIER - BODY GROUND)**

Stereo Component Amplifier Wire Harness View:

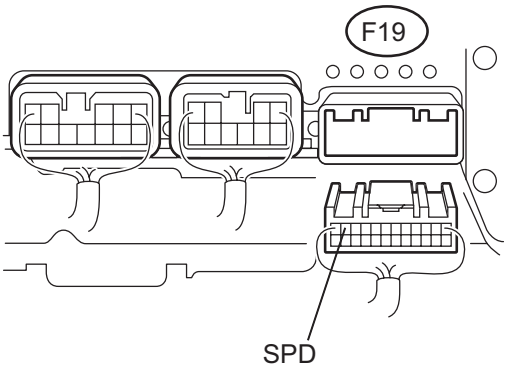

E132126E09

(a) Measure the resistance according to the value(s) in the table below.

Standard resistance

Tester connection	Condition	Specified condition
SPD - Body ground	Ignition switch off	10 kΩ or higher

HINT:
If the resistance between terminal SPD and body ground is less than 10 kΩ, there may be a short in a wire harness, connector, or an ECU that is connected to the SPD signal wire.

NG → **REPAIR OR REPLACE HARNESS OR CONNECTOR OR CHECK EACH ECU**

OK

REPLACE COMBINATION METER

Cellular Phone Voice Circuit between Radio Receiver and Stereo Component Amplifier

SYSTEM DESCRIPTION

This circuit is used when the cellular phone voice in the "Bluetooth" handsfree system is on.

WIRING DIAGRAM

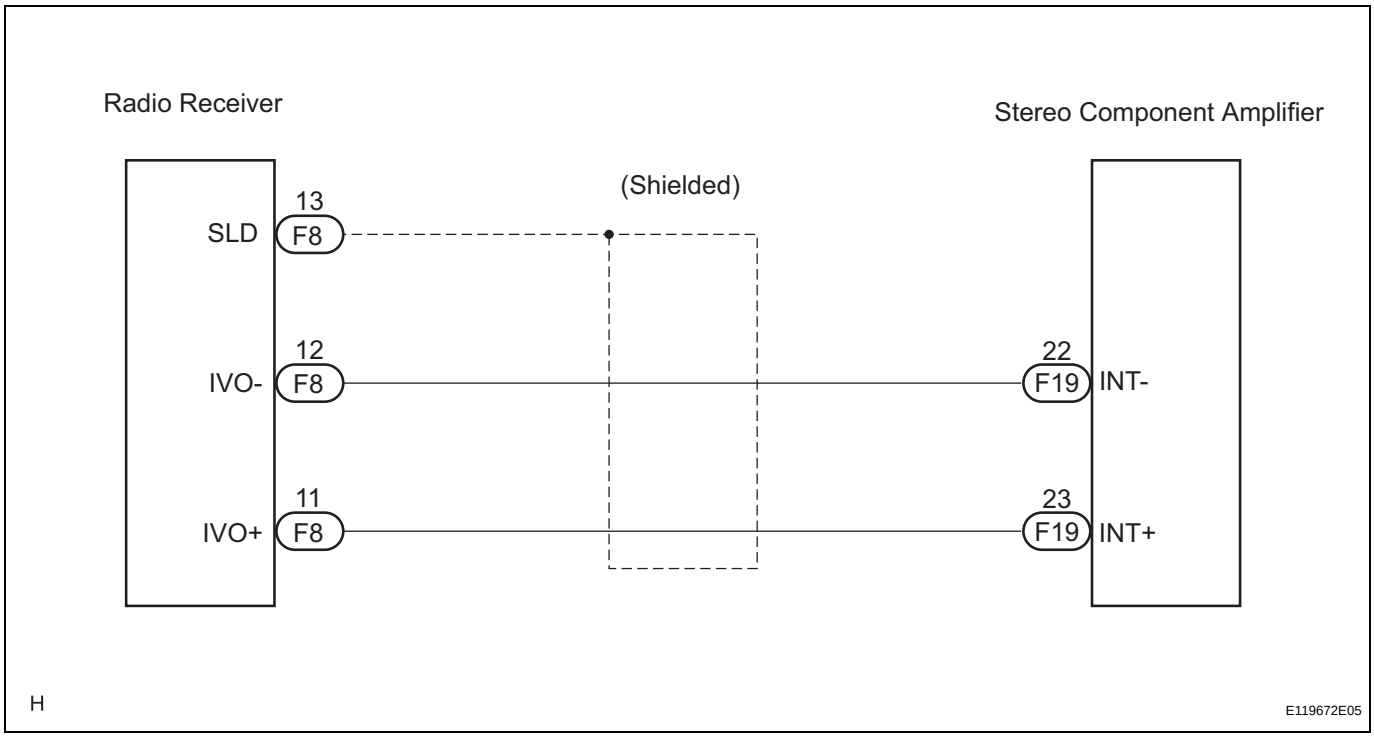

INSPECTION PROCEDURE

1	**CHECK HARNESS AND CONNECTOR (RADIO RECEIVER - STEREO COMPONENT AMPLIFIER)**

Radio Receiver Wire Harness View:

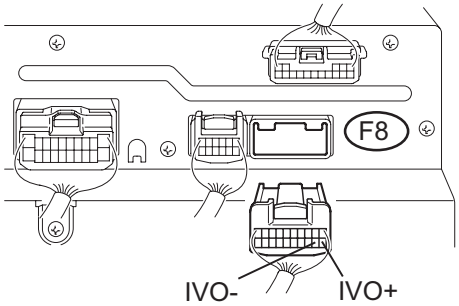

Stereo Component Amplifier Wire Harness View:

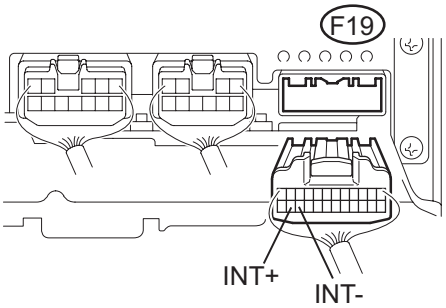

P E133935E01

(a) Disconnect the radio receiver connector F8 and stereo component amplifier connector F19.

(b) Measure the resistance according to the value(s) in the table below.

Standard resistance

Tester connection	Condition	Specified condition
IVO+ - INT+	Always	Below 1 Ω
IVO- - INT-	Always	Below 1 Ω
IVO+ - Body ground	Always	10 kΩ or higher
IVO- - Body ground	Always	10 kΩ or higher

NG → **REPAIR OR REPLACE HARNESS OR CONNECTOR**

OK

PROCEED TO NEXT CIRCUIT INSPECTION SHOWN IN PROBLEM SYMPTOMS TABLE

Microphone Circuit between Microphone and Radio Receiver

DESCRIPTION

This circuit sends a microphone signal from the microphone to the radio receiver.
It also supplies power from the radio receiver to the microphone.

WIRING DIAGRAM

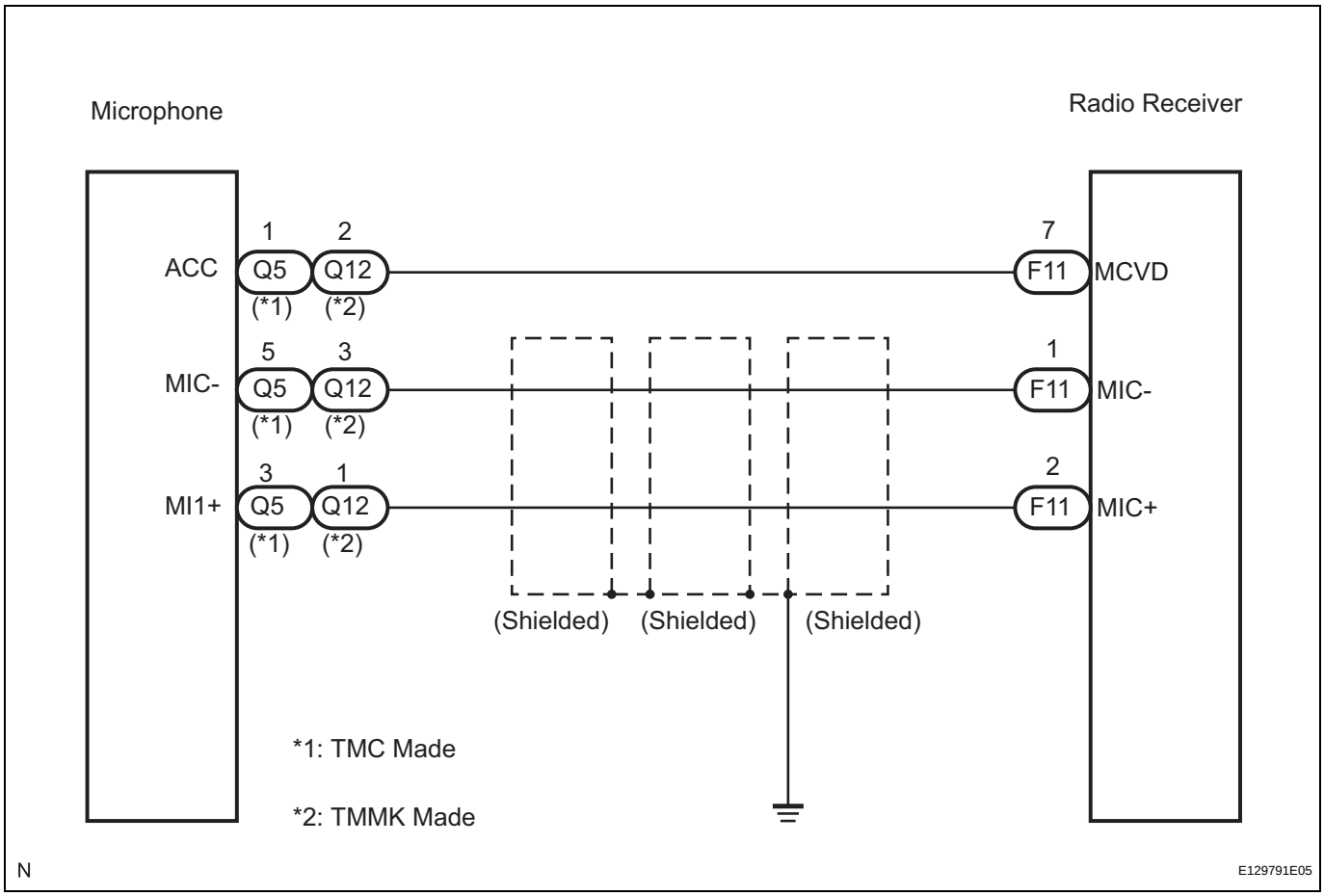

INSPECTION PROCEDURE

1	**INSPECT RADIO RECEIVER**

Wire Harness View:

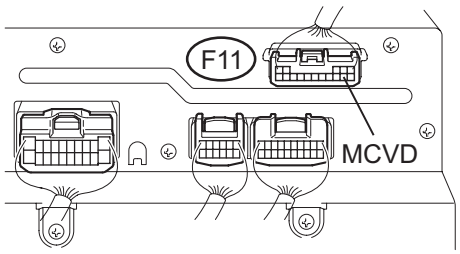

P E129811E02

(a) Measure the voltage according to the value(s) in the table below.

Standard voltage

Tester connection	Condition	Specified condition
MCVD - Body ground	Ignition SW on (ACC)	4 to 6 V

NG → **REPLACE RADIO RECEIVER**

OK

2 CHECK HARNESS AND CONNECTOR (MICROPHONE - RADIO RECEIVER)

Microphone Connector Front View (TMC Made):

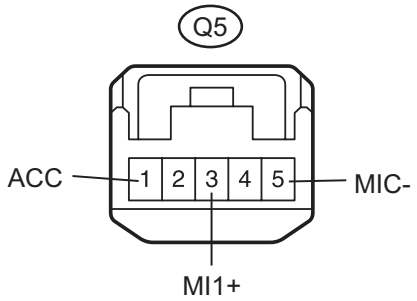

Microphone Connector Front View (TMMK Made):

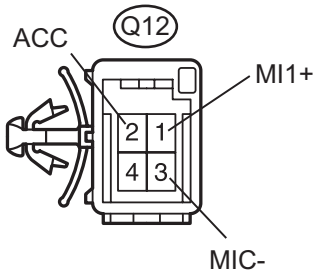

Radio Receiver Wire Harness View:

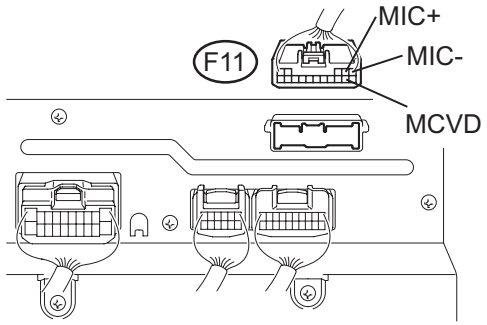

P E131895E02

(a) Disconnect the microphone connector and radio receiver connector.

(b) Measure the resistance according to the value(s) in the table below.

Standard resistance

Tester connection	Condition	Specified condition
ACC - MCVD	Always	Below 1 Ω
MI1+ - MIC+	Always	Below 1 Ω
MIC- - MIC-	Always	Below 1 Ω
ACC - Body ground	Always	10 kΩ or higher
MIC+ - Body ground	Always	10 kΩ or higher
MIC- - Body ground	Always	10 kΩ or higher

NG → **REPAIR OR REPLACE HARNESS OR CONNECTOR**

OK

PROCEED TO NEXT CIRCUIT INSPECTION SHOWN IN PROBLEM SYMPTOMS TABLE

Radio Receiver Communication Error

INSPECTION PROCEDURE

1	IDENTIFY THE COMPONENT SHOWN BY SUB-CODE

(a) Enter the diagnostic mode.

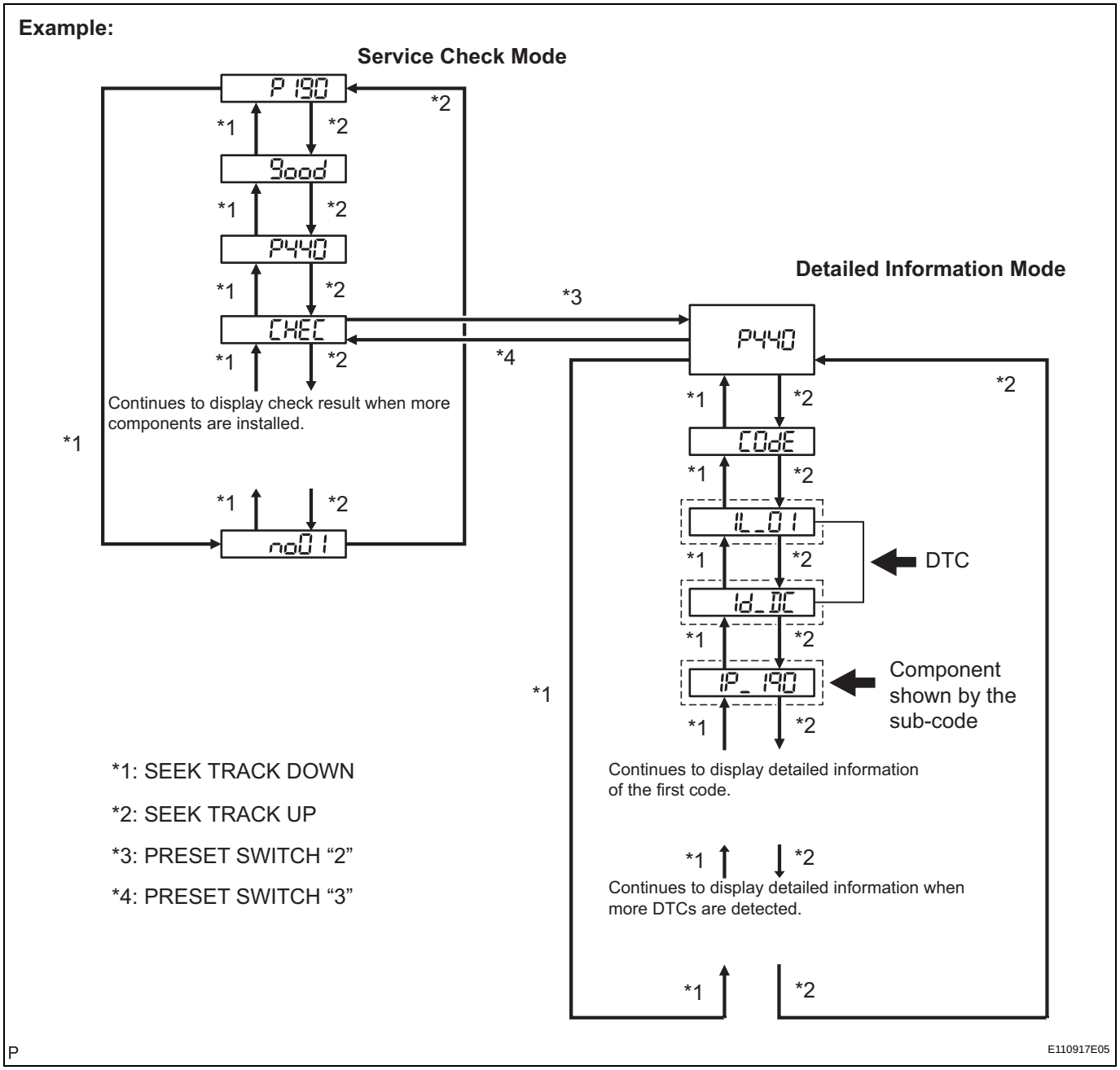

(b) Press the preset switch "3" to change to "Detailed Information Mode".

(c) Identify the component shown by the sub-code.

HINT:

- "190 (radio receiver)" is the component shown by the sub-code in the example shown in the illustration.

AV

- For details of the DTC display, refer to "DTC CHECK/ CLEAR" (See page AV-19).

NEXT

2 CHECK COMPONENT SHOWN BY SUB-CODE

(a) Select the component shown by sub-code.
HINT:
The "Bluetooth" handsfree module is built into the radio receiver. If there is a problem between the "Bluetooth" handsfree module and radio receiver, replace the radio receiver.

Component Table:

Component	Proceed to
"Bluetooth" handsfree module (19D)	A
Except "Bluetooth" handsfree module	B

A → **REPLACE RADIO RECEIVER**

B

3 CHECK POWER SOURCE CIRCUIT OF COMPONENT SHOWN BY SUB-CODE

(a) Inspect the power source circuit of the component shown by the sub-code.
If the power source circuit is operating normally, proceed to the next step.

Component Table:

Component	Proceed to
Stereo component amplifier (440)	Stereo component amplifier power source circuit (See page AV-142)

NEXT

4 INSPECT RADIO RECEIVER

Premium Model Wire Harness View:

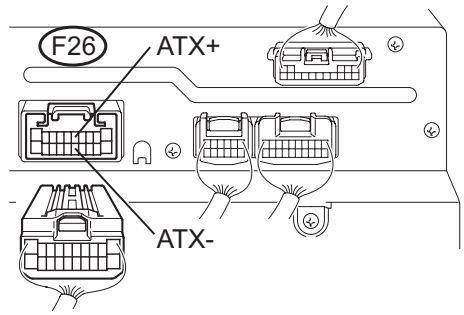

P E129798E04

(a) Disconnect the radio receiver connector.
(b) Measure the resistance according to the value(s) in the table below.

Standard resistance

Tester connection	Condition	Specified condition
ATX+ (F26-5) - ATX- (F26-15)	Always	60 to 80 Ω

NG → **REPLACE RADIO RECEIVER**

OK

5	CHECK HARNESS AND CONNECTOR (RADIO RECEIVER - COMPONENT SHOWN BY SUB-CODE)

HINT:
- Start the check from the circuit that is near the component shown by the sub-code first.
- For details of the connectors, refer to the "TERMINALS OF ECU" (See page AV-15).

(a) Referring to the AVC-LAN wiring diagram below, check the AVC-LAN circuit between the radio receiver and the component shown by the sub-code.
  (1) Disconnect all connectors between the radio receiver and the component shown by the sub-code.
  (2) Check for an open or short in the AVC-LAN circuit between the radio receiver and the component shown by the sub-code.
  OK:
  There is no open or short circuit.

AVC-LAN WIRING DIAGRAM

Premium Model:

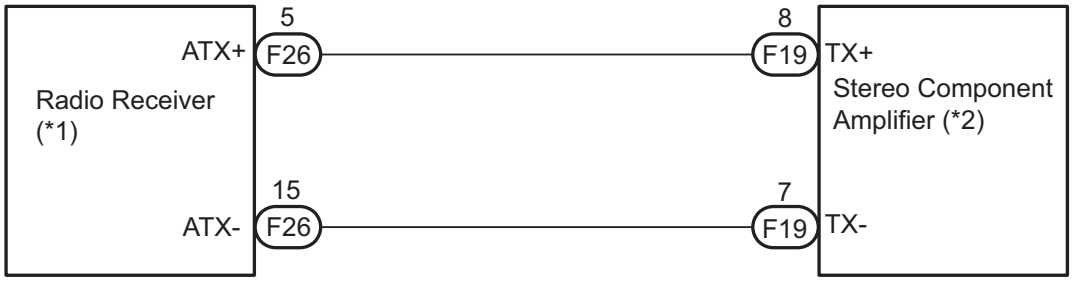

*1: Master Unit

*2: Slave Unit

P E111831E15

NG → REPAIR OR REPLACE HARNESS OR CONNECTOR

OK

6	REPLACE COMPONENT SHOWN BY SUB-CODE

(a) Replace the component shown by the sub-code with a normal one and check if the same problem occurs again.

OK:
Same problem does not occur.

NG → **REPLACE RADIO RECEIVER**

OK

END

Stereo Component Amplifier Communication Error

INSPECTION PROCEDURE

1	IDENTIFY THE COMPONENT SHOWN BY SUB-CODE

(a) Enter the diagnostic mode.

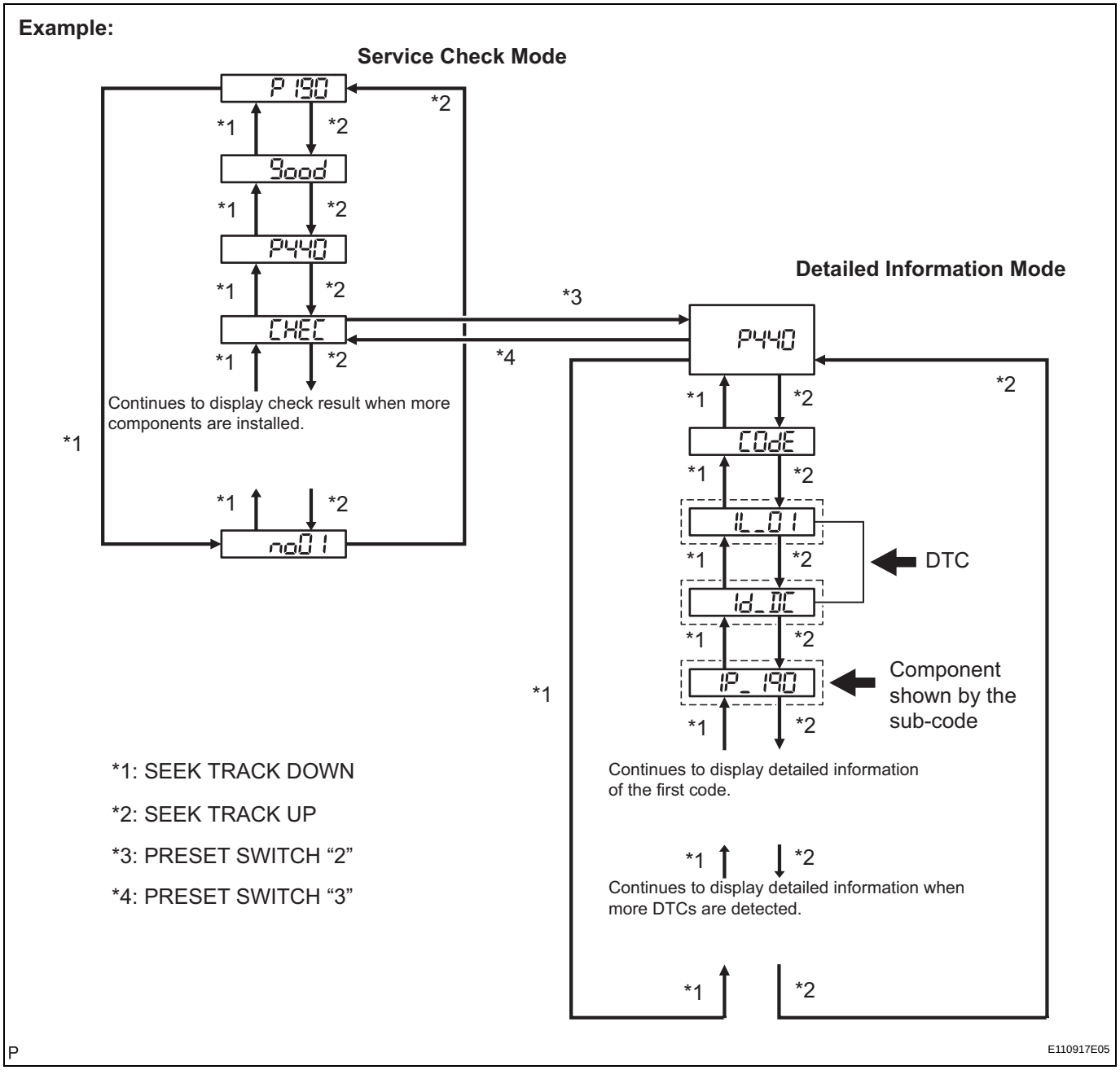

(b) Press the preset switch "3" to change to "Detailed Information Mode".

(c) Identify the component shown by the sub-code.

HINT:

- "190 (radio receiver)" is the component shown by the sub-code in the example shown in the illustration.

AV

- For details of the DTC display, refer to "DTC CHECK/ CLEAR" (See page AV-19).

NEXT

2 CHECK POWER SOURCE CIRCUIT OF COMPONENT SHOWN BY SUB-CODE

(a) Inspect the power source circuit of the component shown by the sub-code.
If the power source circuit is operating normally, proceed to the next step.
HINT:
The "Bluetooth" handsfree module is built into the radio receiver.

Component Table:

Component	Proceed to
"Bluetooth" handsfree module (19D)	Radio receiver power source circuit (See page AV-140)
Radio receiver (190)	Radio receiver power source circuit (See page AV-140)

NEXT

3 INSPECT RADIO RECEIVER

Premium Model Wire Harness View:

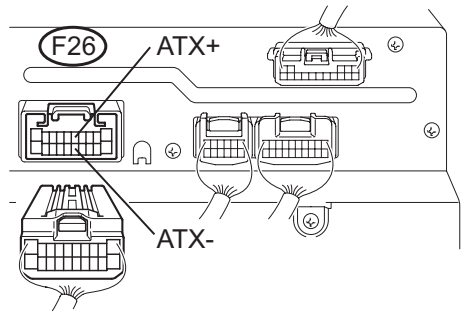

P E129798E04

(a) Disconnect the radio receiver connector.
(b) Measure the resistance according to the value(s) in the table below.
Standard resistance

Tester connection	Condition	Specified condition
ATX+ (F26-5) - ATX- (F26-15)	Always	60 to 80 Ω

NG → **REPLACE RADIO RECEIVER**

OK

4 CHECK HARNESS AND CONNECTOR (STEREO COMPONENT AMPLIFIER - COMPONENT SHOWN BY SUB-CODE)

HINT:
- Start the check from the circuit that is near the component shown by the sub-code first.
- For details of the connectors, refer to the "TERMINALS OF ECU" (See page AV-15).

(a) Referring to the AVC-LAN wiring diagram below, check the AVC-LAN circuit between the stereo component amplifier and the component shown by the sub-code.

AV

(1) Disconnect all connectors between the stereo component amplifier and the component shown by the sub-code.

(2) Check for an open or short in the AVC-LAN circuit between the stereo component amplifier and the component shown by the sub-code.

OK:

There is no open or short circuit.

AVC-LAN WIRING DIAGRAM

Premium Model:

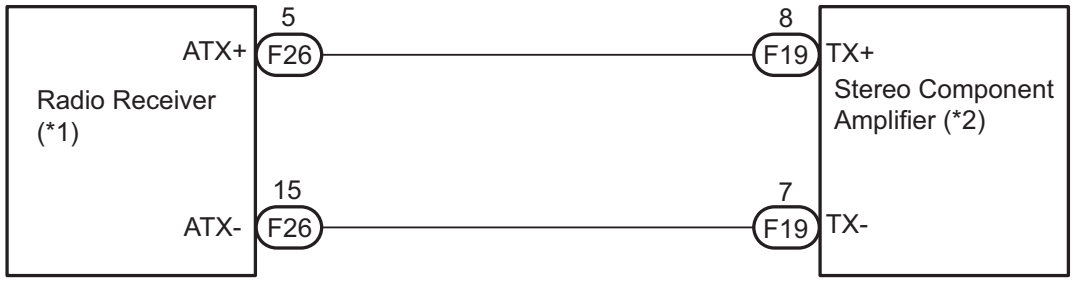

*1: Master Unit

*2: Slave Unit

P

E111831E15

NG → **REPAIR OR REPLACE HARNESS OR CONNECTOR**

OK

5	REPLACE COMPONENT SHOWN BY SUB-CODE

(a) Replace the component shown by the sub-code with a normal one and check if the same problem occurs again.

OK:

Same problem does not occur.

NG → **REPLACE STEREO COMPONENT AMPLIFIER**

OK

END

AV

Bluetooth Handsfree Module Communication Error

INSPECTION PROCEDURE

1	IDENTIFY THE COMPONENT SHOWN BY SUB-CODE

(a) Enter the diagnostic mode.

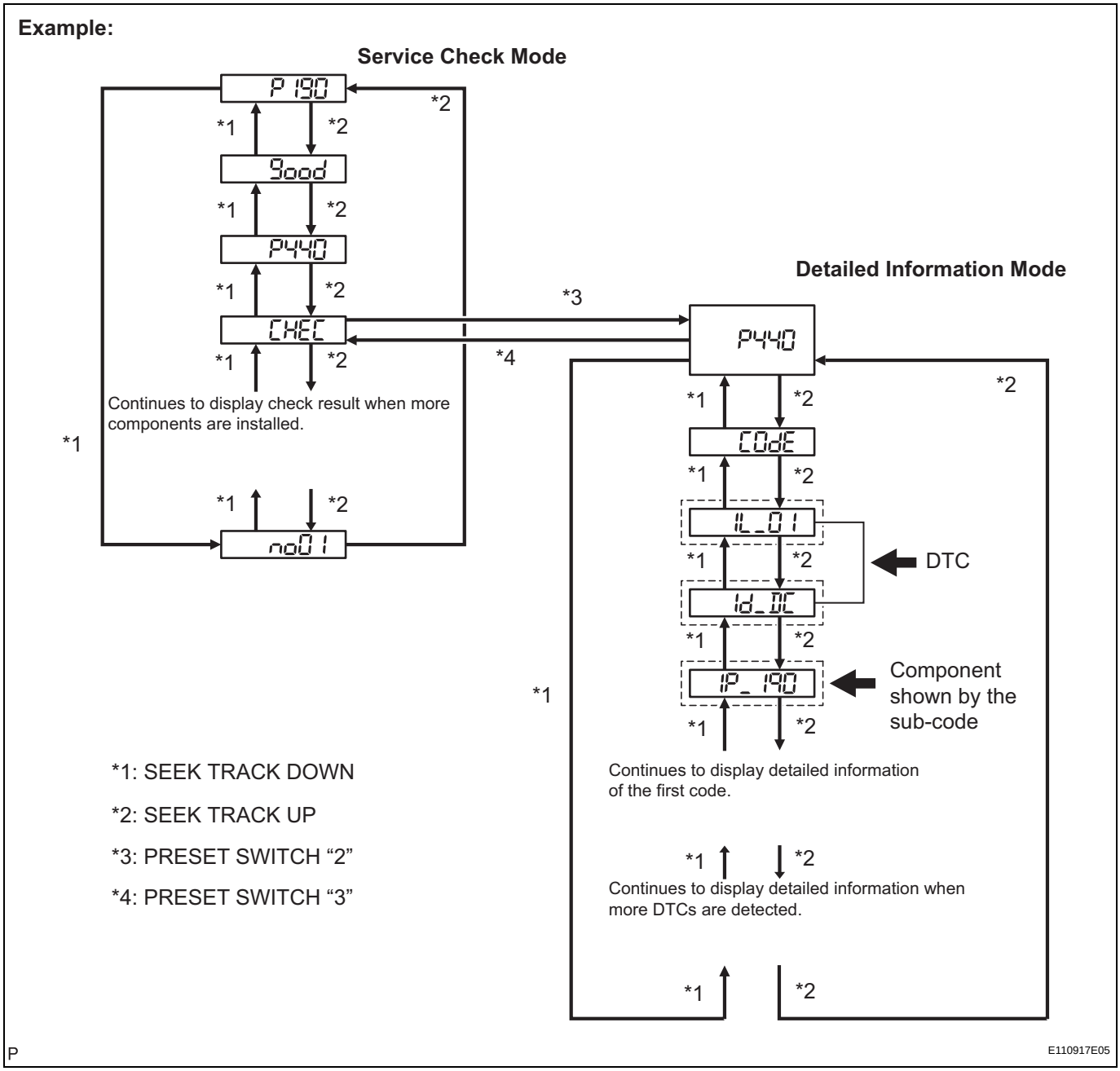

(b) Press the preset switch "3" to change to "Detailed Information Mode".

(c) Identify the component shown by the sub-code.

HINT:

- "190 (radio receiver)" is the component shown by the sub-code in the example shown in the illustration.

AV

- For details of the DTC display, refer to "DTC CHECK/ CLEAR" (See page AV-19).

NEXT

2 CHECK COMPONENT SHOWN BY SUB-CODE

(a) Select the component shown by sub-code.
HINT:
The "Bluetooth" handsfree module is built into the radio receiver. If there is a problem between the "Bluetooth" handsfree module and radio receiver, replace the radio receiver.

Component Table:

Component	Proceed to
Radio Receiver (190)	A
Except Radio Receiver	B

A → **REPLACE RADIO RECEIVER**

B

3 CHECK POWER SOURCE CIRCUIT OF COMPONENT SHOWN BY SUB-CODE

(a) Inspect the power source circuit of the component shown by the sub-code.
If the power source circuit is operating normally, proceed to the next step.

Component Table:

Component	Proceed to
Stereo component amplifier (440)	Stereo component amplifier power source circuit (See page AV-142)

NEXT

4 INSPECT RADIO RECEIVER

Premium Model Wire Harness View:

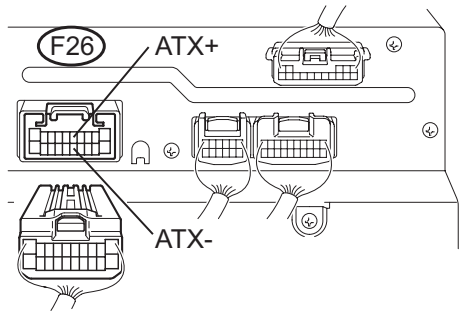

P E129798E04

(a) Disconnect the radio receiver connector.
(b) Measure the resistance according to the value(s) in the table below.
Standard resistance

Tester connection	Condition	Specified condition
ATX+ (F26-5) - ATX- (F26-15)	Always	60 to 80 Ω

NG → **REPLACE RADIO RECEIVER**

AV

OK

5	**CHECK HARNESS AND CONNECTOR ("BLUETOOTH" HANDSFREE MODULE - COMPONENT SHOWN BY SUB-CODE)**

HINT:
- Start the check from the circuit that is near the component shown by the sub-code first.
- For details of the connectors, refer to the "TERMINALS OF ECU" (See page AV-15).

(a) Referring to the AVC-LAN wiring diagram below, check the AVC-LAN circuit between the "Bluetooth" handsfree module and the component shown by the sub-code.
  (1) Disconnect all connectors between the "Bluetooth" handsfree module and the component shown by the sub-code.
  (2) Check for an open or short in the AVC-LAN circuit between the "Bluetooth" handsfree module and the component shown by the sub-code.
  OK:
  There is no open or short circuit.

AVC-LAN WIRING DIAGRAM

Premium Model:

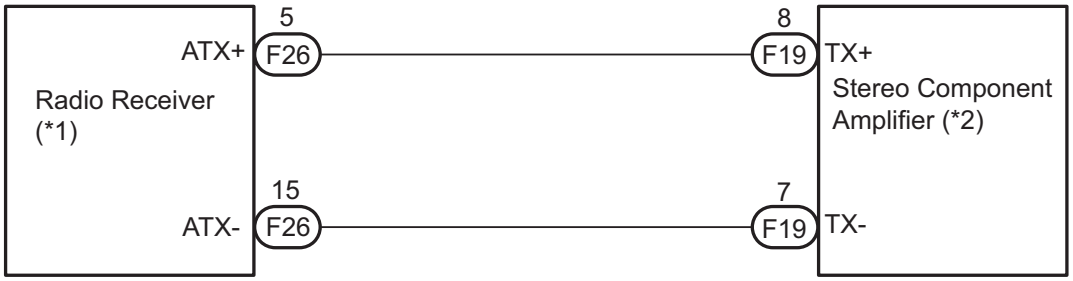

*1: Master Unit

*2: Slave Unit

P

E111831E15

AV

NG → **REPAIR OR REPLACE HARNESS OR CONNECTOR**

OK

6	**REPLACE COMPONENT SHOWN BY SUB-CODE**

(a) Replace the component shown by the sub-code with a normal one and check if the same problem occurs again.

OK:
Same problem does not occur.

NG → **REPLACE RADIO RECEIVER (BUILT-IN "BLUETOOTH" HANDSFREE MODULE)**

OK

END

Radio Receiver Power Source Circuit

DESCRIPTION

This circuit provides power to the radio receiver.

WIRING DIAGRAM

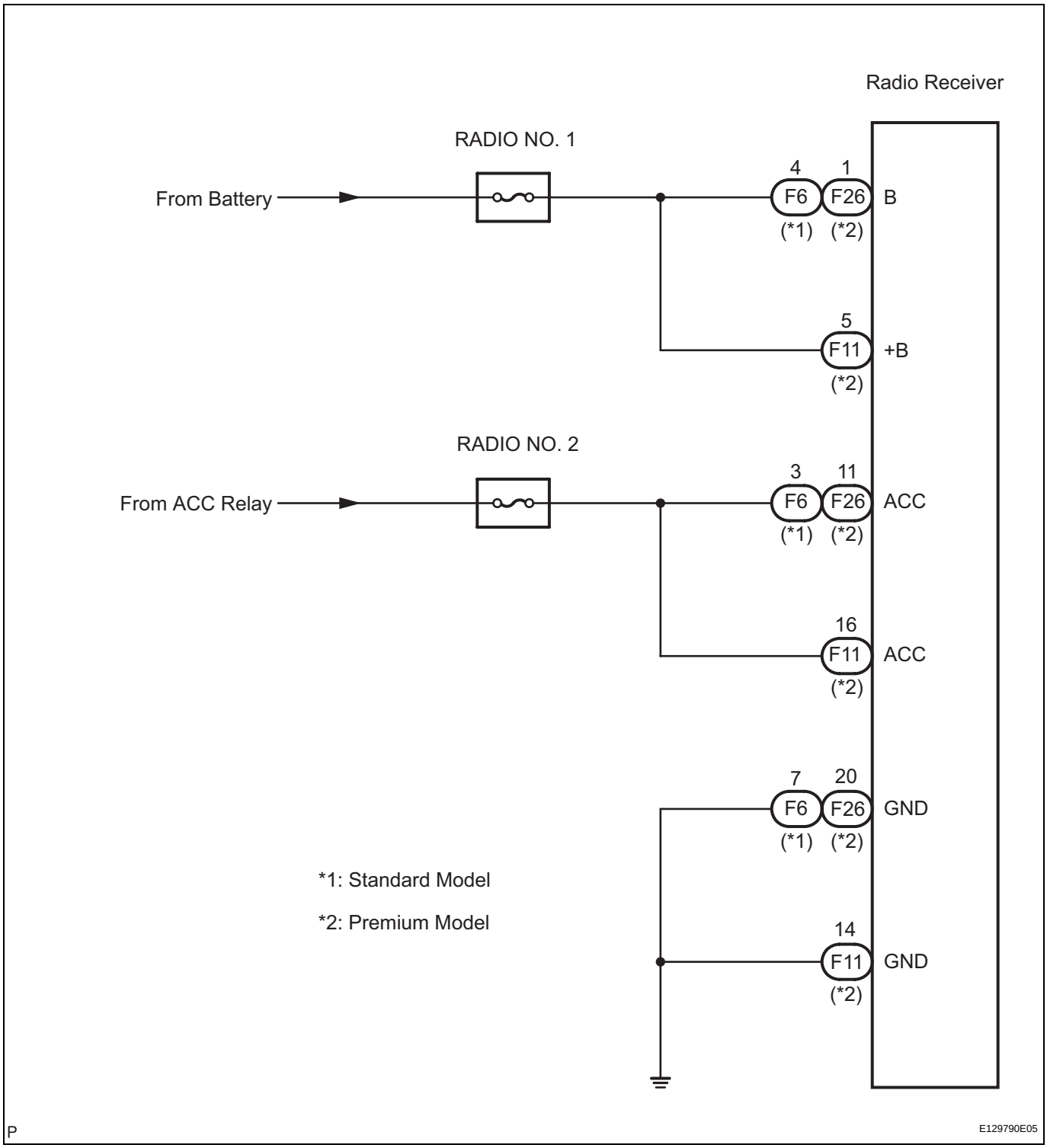

INSPECTION PROCEDURE

1	**INSPECT RADIO RECEIVER**

Wire Harness View (Premium Model):

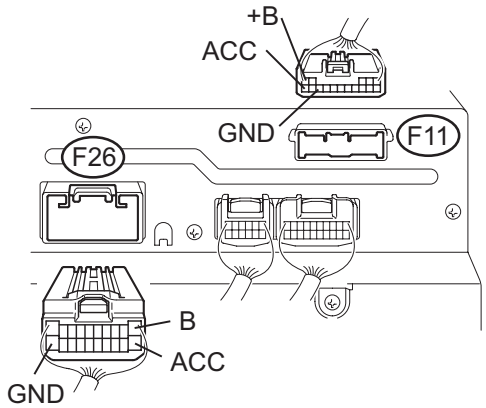

Wire Harness View (Standard Model):

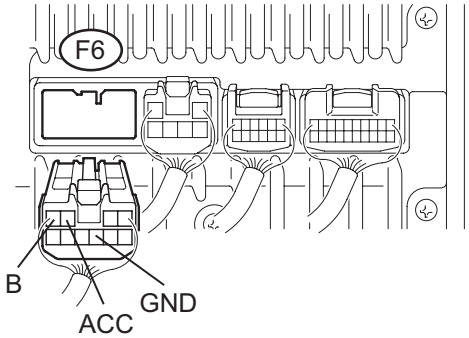

P E129813E05

(a) Disconnect the radio receiver connector.
(b) Measure the resistance according to the value in the table below.

Standard resistance

Tester connection	Condition	Specified condition
GND - Body ground	Always	Below 1 Ω

(c) Measure the voltage according to the values in the table below.

Standard voltage

Tester connection	Condition	Specified condition
+B - GND (*1)	Always	10 to 14 V
B - GND	Always	10 to 14 V
ACC - GND	Ignition SW on (ACC)	10 to 14 V

*1: Premium model

NG → **REPAIR OR REPLACE HARNESS OR CONNECTOR**

OK

PROCEED TO NEXT CIRCUIT INSPECTION SHOWN IN PROBLEM SYMPTOMS TABLE

Stereo Component Amplifier Power Source Circuit

DESCRIPTION

This circuit provides power to the stereo component amplifier.

WIRING DIAGRAM

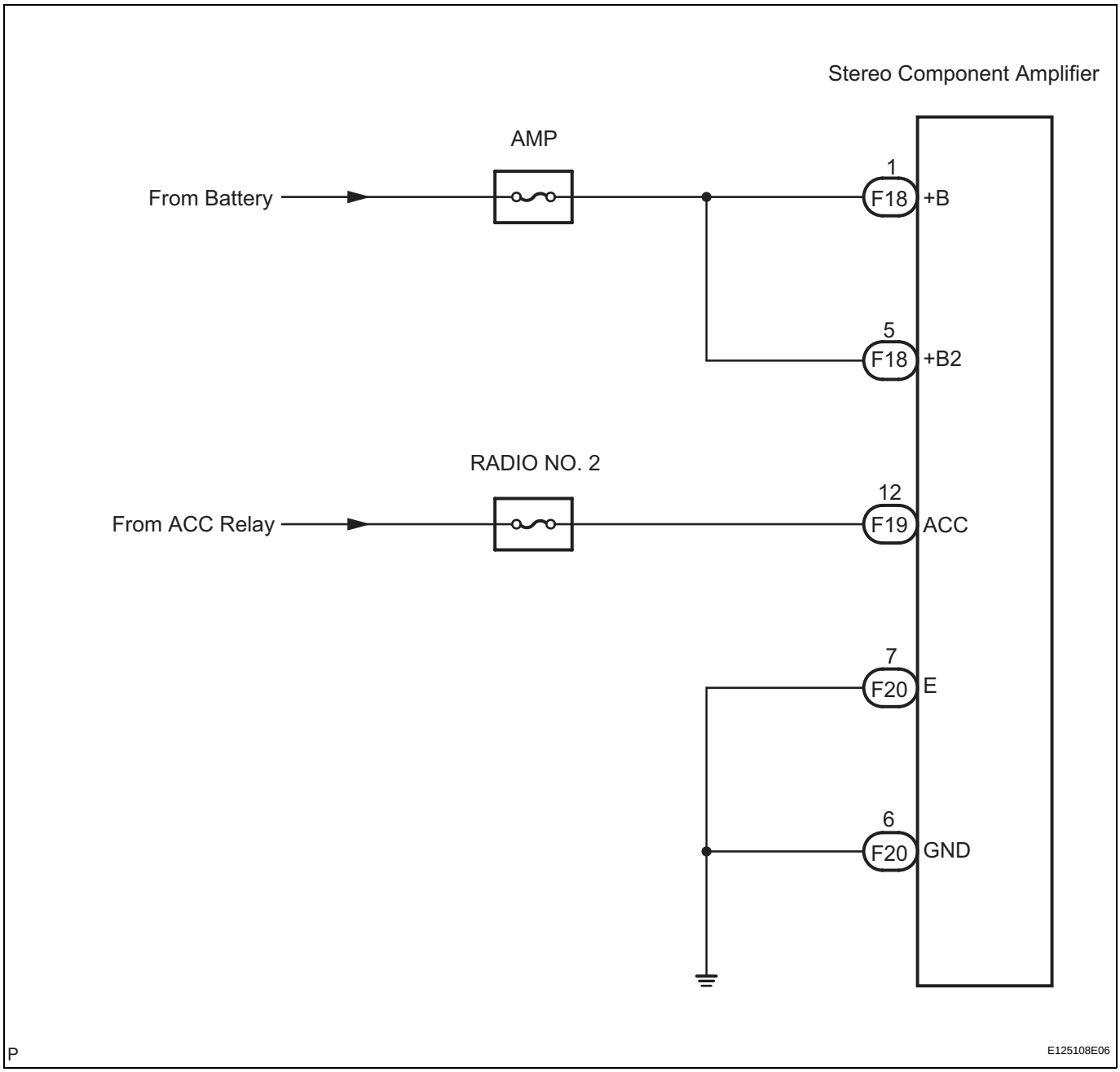

INSPECTION PROCEDURE

1	INSPECT STEREO COMPONENT AMPLIFIER

Wire Harness View:

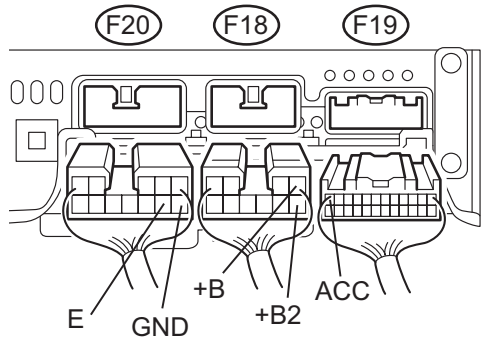

N E126146E03

(a) Disconnect the stereo component amplifier connectors.
(b) Measure the resistance according to the values in the table below.

Standard resistance

Tester connection	Condition	Specified condition
GND - Body ground	Always	Below 1 Ω
E - Body ground	Always	Below 1 Ω

(c) Measure the voltage according to the values in the table below.

Standard voltage

Tester connection	Condition	Specified condition
+B - GND	Always	10 to 14 V
+B2 - GND	Always	10 to 14 V
ACC - GND	Ignition SW on (ACC)	10 to 14 V

NG → **REPAIR OR REPLACE HARNESS OR CONNECTOR**

OK

PROCEED TO NEXT CIRCUIT INSPECTION SHOWN IN PROBLEM SYMPTOMS TABLE

RADIO RECEIVER

COMPONENTS

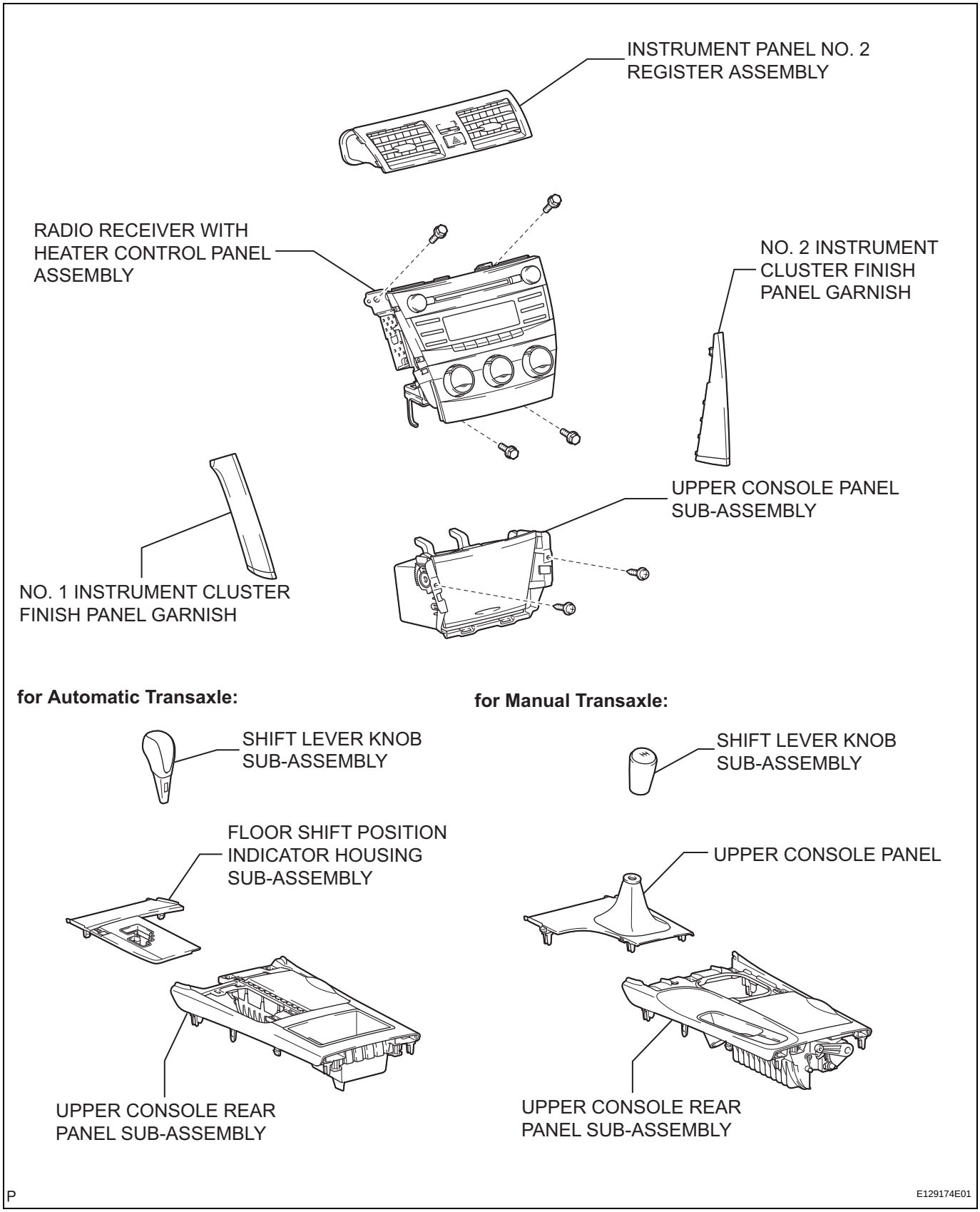

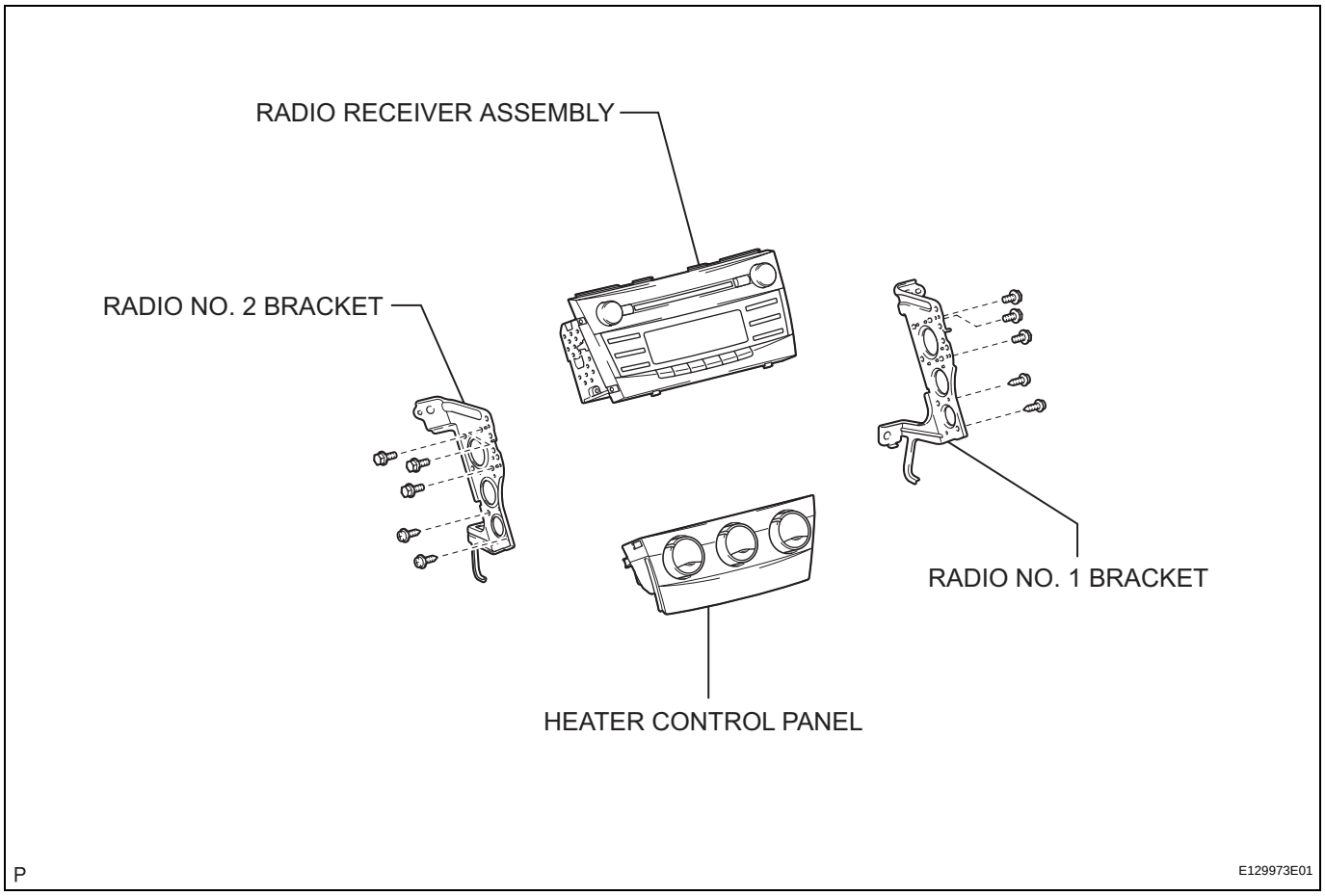
RADIO RECEIVER ASSEMBLY
RADIO NO. 2 BRACKET
RADIO NO. 1 BRACKET
HEATER CONTROL PANEL
P
E129973E01

REMOVAL

1. **REMOVE SHIFT LEVER KNOB SUB-ASSEMBLY (for Automatic Transaxle) (See page IP-24)**
2. **REMOVE SHIFT LEVER KNOB SUB-ASSEMBLY (for Manual Transaxle) (See page IP-24)**
3. **REMOVE NO. 1 INSTRUMENT CLUSTER FINISH PANEL GARNISH (See page IP-24)**
4. **REMOVE NO. 2 INSTRUMENT CLUSTER FINISH PANEL GARNISH (See page IP-25)**
5. **REMOVE FLOOR SHIFT POSITION INDICATOR HOUSING SUB-ASSEMBLY (for Automatic Transaxle) (See page IP-25)**
6. **REMOVE UPPER CONSOLE PANEL (for Manual Transaxle) (See page IP-25)**
7. **REMOVE UPPER CONSOLE REAR PANEL SUB-ASSEMBLY (for Automatic Transaxle) (See page IP-26)**
8. **REMOVE UPPER CONSOLE REAR PANEL SUB-ASSEMBLY (for Manual Transaxle) (See page IP-26)**
9. **REMOVE UPPER CONSOLE PANEL SUB-ASSEMBLY (See page IP-27)**
10. **REMOVE INSTRUMENT PANEL NO. 2 REGISTER ASSEMBLY (See page IP-27)**
11. **REMOVE RADIO RECEIVER WITH HEATER CONTROL PANEL ASSEMBLY**
    (a) Remove the 4 bolts.
    (b) Pull the radio receiver with heater control panel assembly toward the rear of the vehicle and disengage the 4 clips.
    (c) Disconnect each connector and remove the radio receiver with heater control panel assembly.

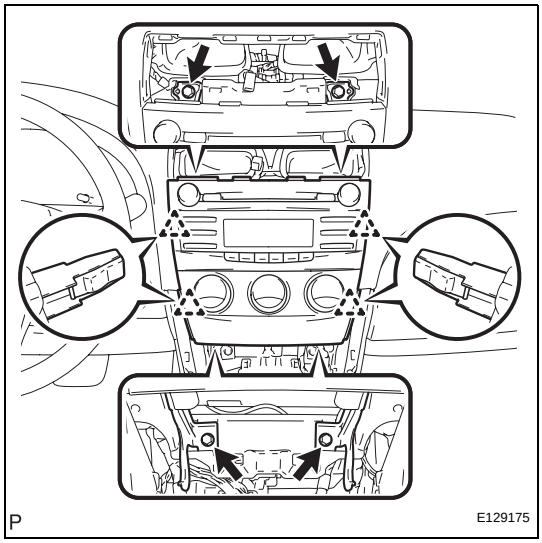

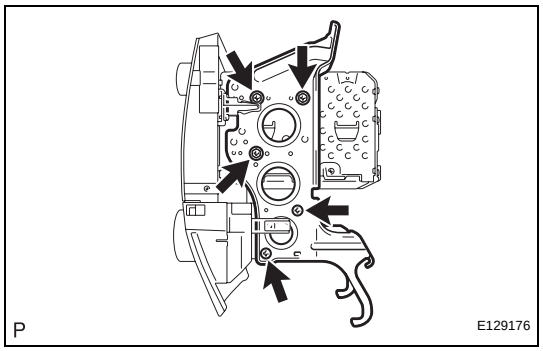

12. REMOVE RADIO NO. 1 BRACKET

(a) Remove the 5 bolts and radio No. 1 bracket.

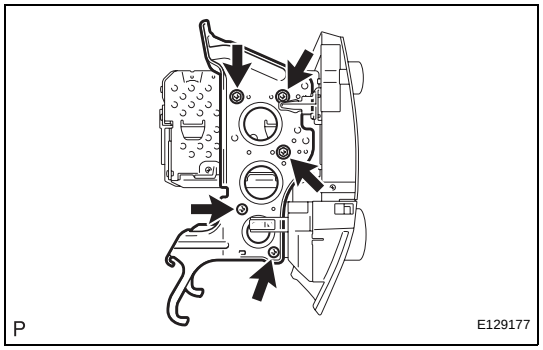

13. REMOVE RADIO NO. 2 BRACKET

(a) Remove the 5 bolts and radio No. 2 bracket.

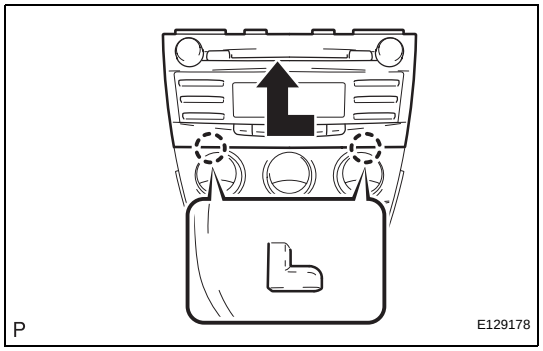

14. REMOVE RADIO RECEIVER ASSEMBLY

(a) Remove the radio receiver assembly as shown in the illustration.

INSTALLATION

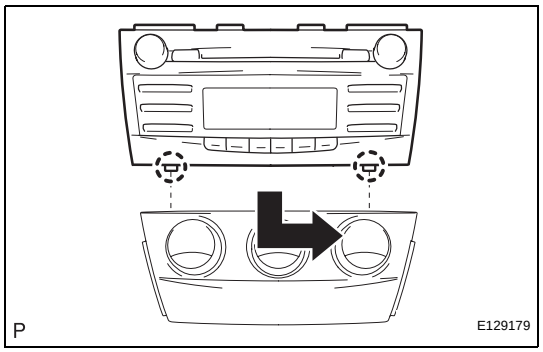

1. INSTALL RADIO RECEIVER ASSEMBLY

(a) Install the radio receiver assembly as shown in the illustration.

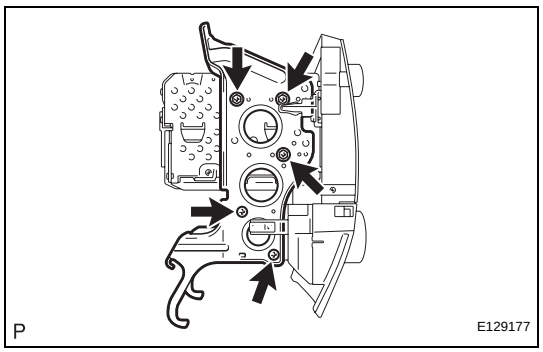

2. INSTALL RADIO NO. 2 BRACKET

(a) Install the radio No. 2 bracket with the 5 bolts.

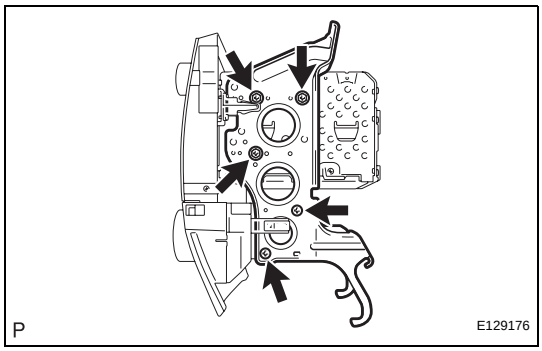

3. INSTALL RADIO NO. 1 BRACKET

(a) Install the radio No. 1 bracket with the 5 bolts.

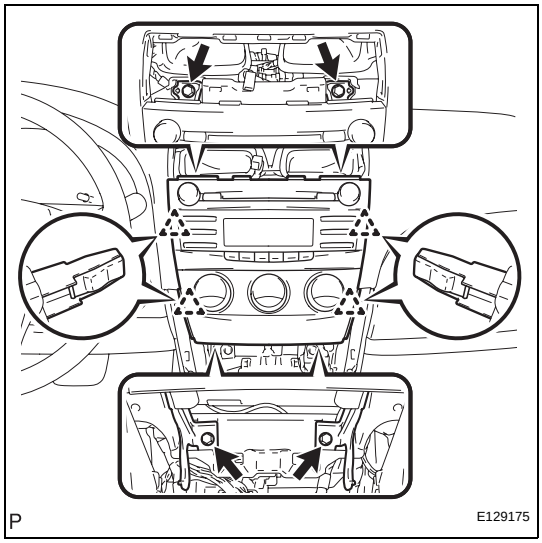

4. INSTALL RADIO RECEIVER WITH HEATER CONTROL PANEL ASSEMBLY

(a) Connect each connector.
(b) Engage the 4 clips.
(c) Install the radio receiver with heater control panel assembly with the 4 bolts.

5. INSTALL INSTRUMENT PANEL NO. 2 REGISTER ASSEMBLY (See page IP-52)

6. INSTALL UPPER CONSOLE PANEL SUB-ASSEMBLY (See page IP-52)

7. INSTALL UPPER CONSOLE REAR PANEL SUB-ASSEMBLY (for Automatic Transaxle) (See page IP-53)

8. INSTALL UPPER CONSOLE REAR PANEL SUB-ASSEMBLY (for Manual Transaxle) (See page IP-53)

9. INSTALL FLOOR SHIFT POSITION INDICATOR HOUSING SUB-ASSEMBLY (for Automatic Transaxle) (See page IP-53)

10. INSTALL UPPER CONSOLE PANEL (for Manual Transaxle) (See page IP-54)

11. INSTALL NO. 2 INSTRUMENT CLUSTER FINISH PANEL GARNISH (See page IP-54)

12. INSTALL NO. 1 INSTRUMENT CLUSTER FINISH PANEL GARNISH (See page IP-55)

13. INSTALL SHIFT LEVER KNOB SUB-ASSEMBLY (for Automatic Transaxle) (See page IP-55)

14. INSTALL SHIFT LEVER KNOB SUB-ASSEMBLY (for Manual Transaxle) (See page IP-55)

STEREO COMPONENT AMPLIFIER

COMPONENTS

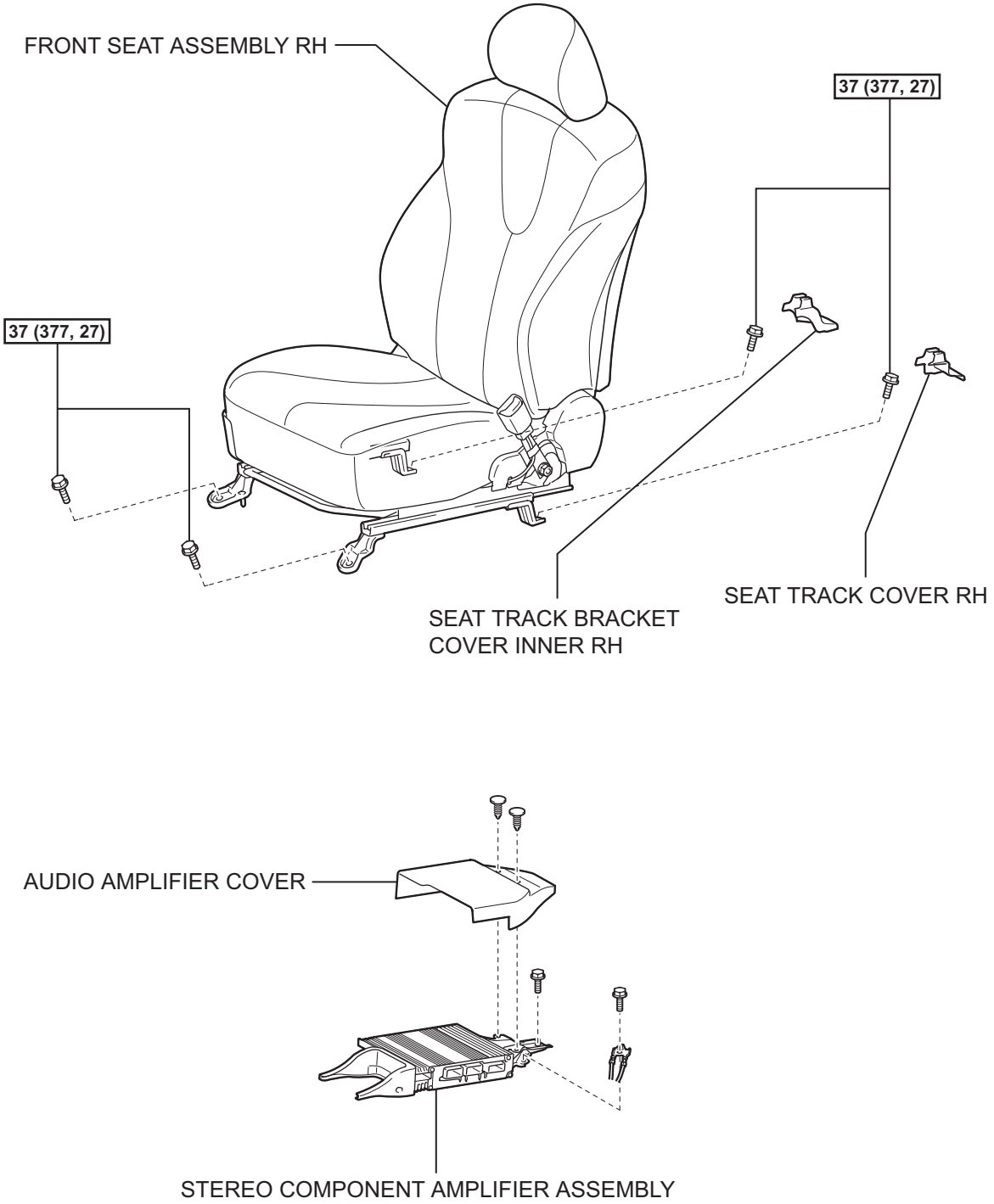

N*m (kgf*cm, ft.*lbf) : Specified torque

P

E129196E01

REMOVAL

1. **DISCONNECT CABLE FROM NEGATIVE BATTERY TERMINAL**
   CAUTION:
   Wait for 90 seconds after disconnecting the cable to prevent the airbag working.

2. **REMOVE SEAT TRACK COVER RH (for Manual Seat)**
   HINT:
   Use the same procedures for the RH side and the LH side (see page SE-16).

3. **REMOVE SEAT TRACK BRACKET COVER INNER RH (for Manual Seat)**
   HINT:
   Use the same procedures for the RH side and the LH side (see page SE-16).

4. **REMOVE FRONT SEAT ASSEMBLY RH (for Manual Seat)**
   HINT:
   Use the same procedures for the RH side and the LH side (see page SE-16).

5. **REMOVE SEAT TRACK COVER RH (for Power Seat)**
   HINT:
   Use the same procedures for the RH side and the LH side (see page SE-30).

6. **REMOVE SEAT TRACK BRACKET COVER INNER RH (for Power Seat)**
   HINT:
   Use the same procedures for the RH side and the LH side (see page SE-30).

7. **REMOVE FRONT SEAT ASSEMBLY RH (for Power Seat)**
   HINT:
   Use the same procedures for the RH side and the LH side (see page SE-30).

8. **REMOVE AUDIO AMPLIFIER COVER**
   (a) Remove the 2 clips and audio amplifier cover.

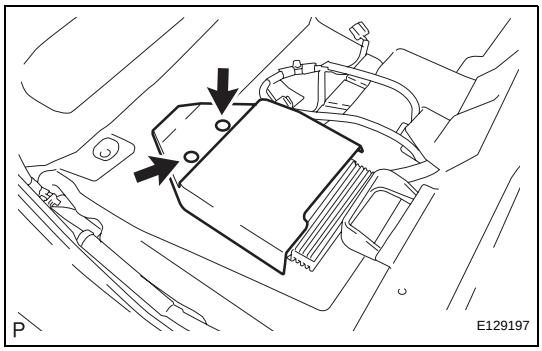

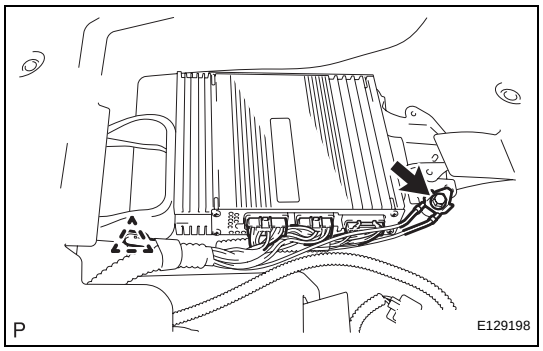

9. REMOVE STEREO COMPONENT AMPLIFIER ASSEMBLY

(a) Disconnect each connector and remove the bolt.
(b) Disengage the clip.

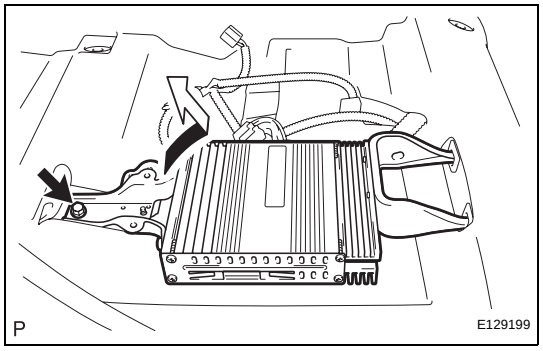

(c) Remove the bolt and stereo component amplifier assembly as shown in the illustration.

INSTALLATION

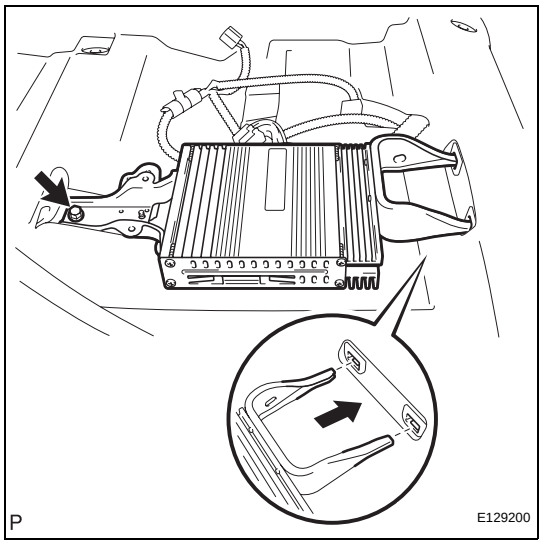

1. INSTALL STEREO COMPONENT AMPLIFIER ASSEMBLY

(a) Install the stereo component amplifier assembly as shown in the illustration.

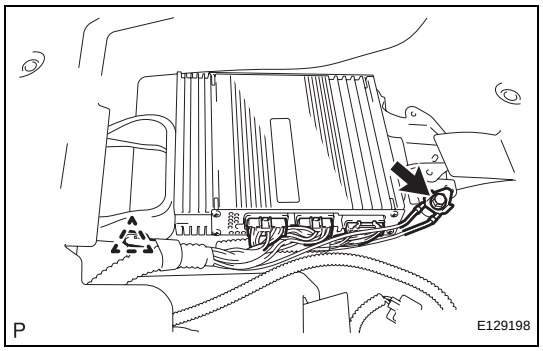

(b) Install the bolt and connect each connector.
(c) Engage the clip.
(d) Install the bolt.

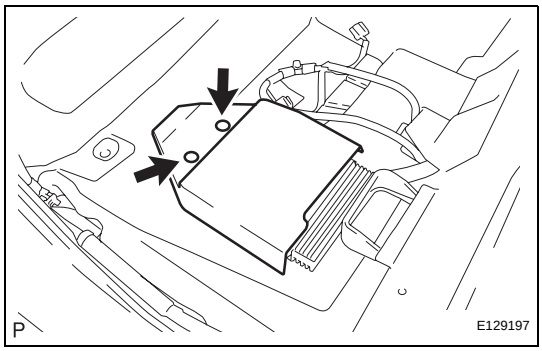

2. **INSTALL AUDIO AMPLIFIER COVER**
   (a) Install the audio amplifier cover with the 2 clips.

3. **INSTALL FRONT SEAT ASSEMBLY RH (for Manual Seat)**
   HINT:
   Use the same procedures for the RH side and the LH side (see page SE-24).

4. **INSTALL SEAT TRACK BRACKET COVER INNER RH (for Manual Seat)**
   HINT:
   Use the same procedures for the RH side and the LH side (see page SE-25).

5. **INSTALL SEAT TRACK COVER RH (for Manual Seat)**
   HINT:
   Use the same procedures for the RH side and the LH side (see page SE-25).

6. **INSTALL FRONT SEAT ASSEMBLY RH (for Power Seat)**
   HINT:
   Use the same procedures for the RH side and the LH side (see page SE-41).

7. **INSTALL SEAT TRACK BRACKET COVER INNER RH (for Power Seat)**
   HINT:
   Use the same procedures for the RH side and the LH side (see page SE-42).

8. **INSTALL SEAT TRACK COVER RH (for Power Seat)**
   HINT:
   Use the same procedures for the RH side and the LH side (see page SE-42).

9. **CONNECT CABLE TO NEGATIVE BATTERY TERMINAL**

10. **PERFORM ZERO POINT CALIBRATION AND SENSITIVITY CHECK**
    (See page RS-242)

FRONT SIDE SPEAKER

COMPONENTS

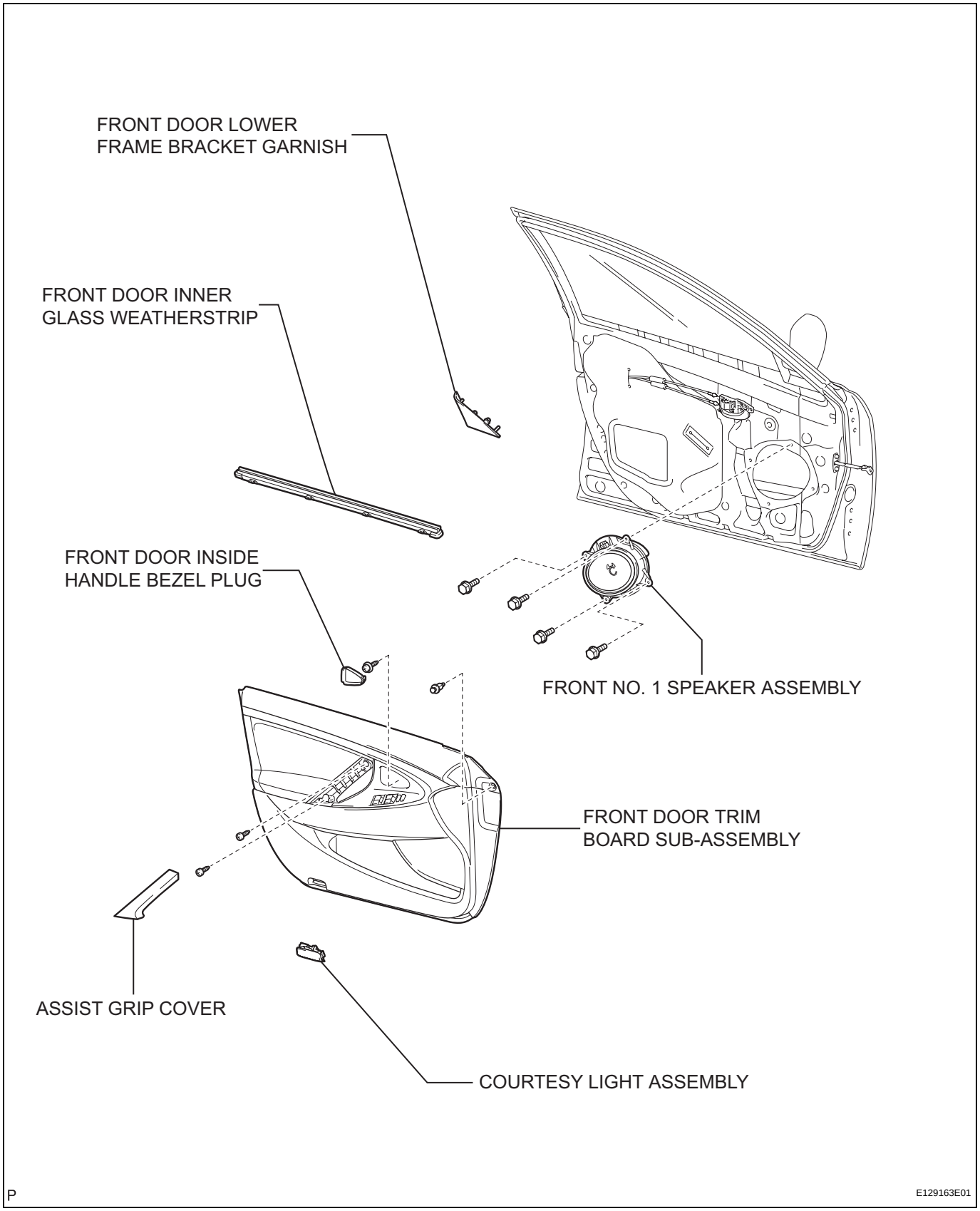

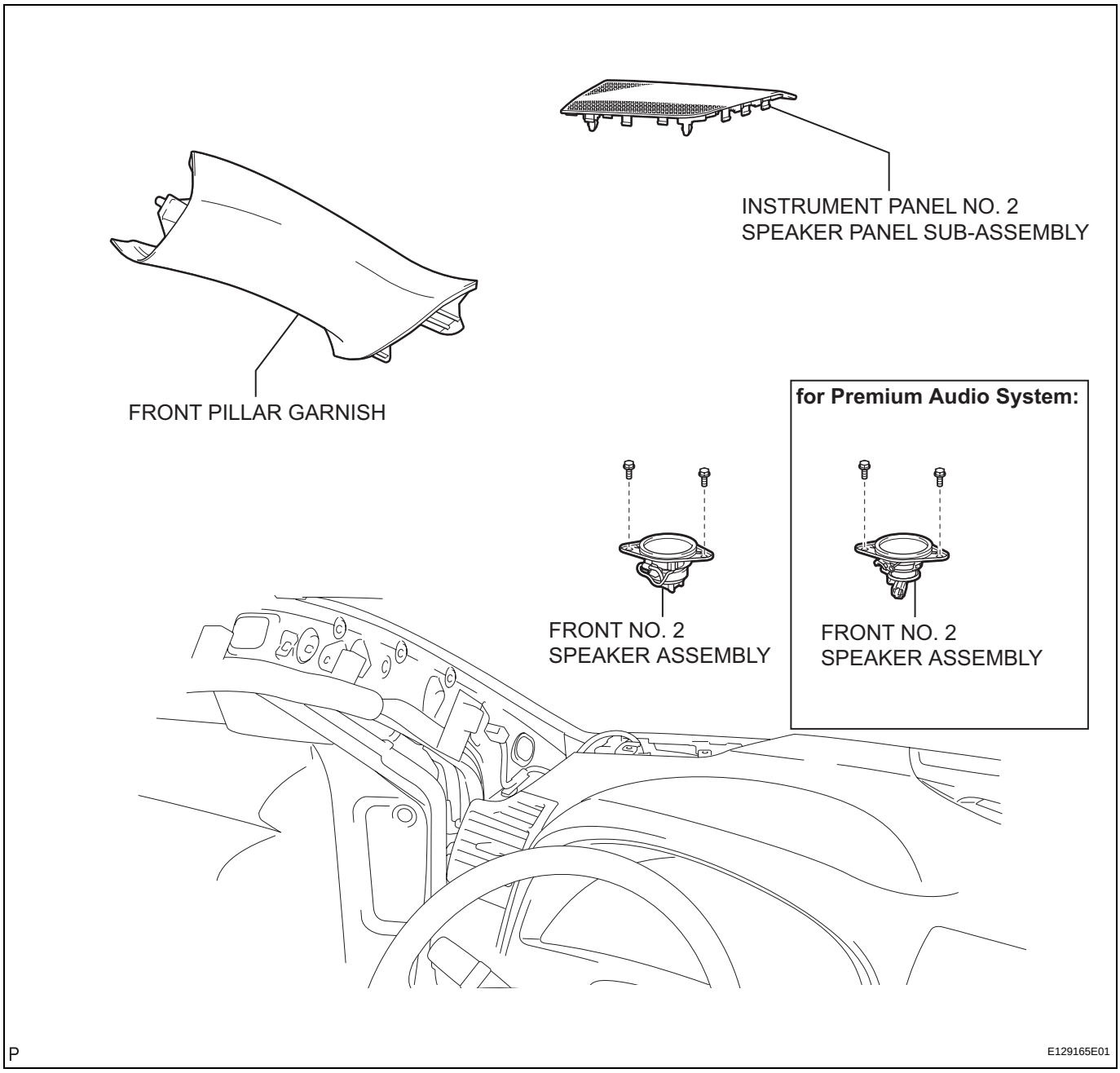
INSTRUMENT PANEL NO. 2
SPEAKER PANEL SUB-ASSEMBLY
FRONT PILLAR GARNISH
for Premium Audio System:
FRONT NO. 2
SPEAKER ASSEMBLY
FRONT NO. 2
SPEAKER ASSEMBLY
P
E129165E01

ON-VEHICLE INSPECTION

1. INSPECT FRONT NO. 1 SPEAKER

HINT:
Remove interior parts so that the front No. 1 speaker can be seen.

(a) Check the speaker installation.
OK:
The speaker is securely installed.
If the result is not as specified, reinstall the front No. 1 speaker.

(b) Visually check the speaker.
OK:
The cone paper of the speaker is not torn.
If the result is not as specified, replace the front No. 1 speaker.

(c) Speaker resistance check
(1) Disconnect the front No. 1 speaker connector.
(2) Measure the resistance between the terminals of the speaker.
Standard resistance:
Premium Model: 1.8 to 2.6 Ω
Standard Model: Approximately 4 Ω
If the result is not as specified, replace the front No. 1 speaker.

2. INSPECT FRONT NO. 2 SPEAKER

HINT:
Remove interior parts so that the front No. 2 speaker can be seen.

(a) Check the speaker installation.
OK:
The speaker is securely installed.
If the result is not as specified, reinstall the front No. 2 speaker.

(b) Visually check the speaker.
OK:
The cone paper of the speaker is not torn.
If the result is not as specified, replace the front No. 2 speaker.

REMOVAL

1. **REMOVE FRONT DOOR LOWER FRAME BRACKET GARNISH (See page ED-14)**
2. **REMOVE FRONT DOOR INSIDE HANDLE BEZEL PLUG (See page ED-14)**
3. **REMOVE ASSIST GRIP COVER (See page ED-15)**
4. **REMOVE COURTESY LIGHT ASSEMBLY (See page ED-15)**
5. **REMOVE FRONT DOOR TRIM BOARD SUB-ASSEMBLY (See page ED-15)**
6. **REMOVE FRONT DOOR INNER GLASS WEATHERSTRIP (See page ED-16)**

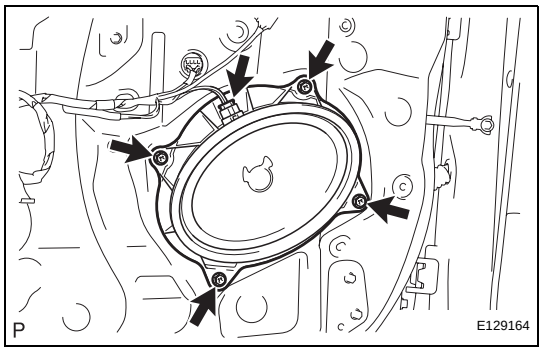

7. **REMOVE FRONT NO. 1 SPEAKER ASSEMBLY**
   (a) Disconnect the connector.
   (b) Remove the 4 bolts and front No. 1 speaker assembly.
   NOTICE:
   Do not touch the cone part of the speaker.
8. **REMOVE FRONT PILLAR GARNISH (See page IR-27)**

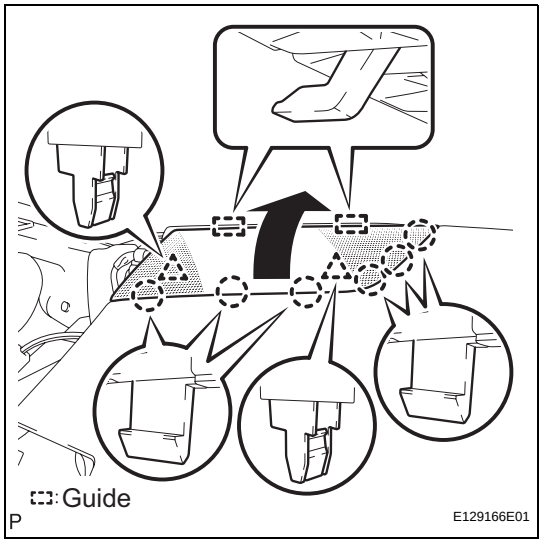

9. **REMOVE INSTRUMENT PANEL NO. 2 SPEAKER PANEL SUB-ASSEMBLY**
   (a) Engage the 6 claws and 2 clips.
   (b) Remove the instrument panel No. 2 speaker panel sub-assembly.

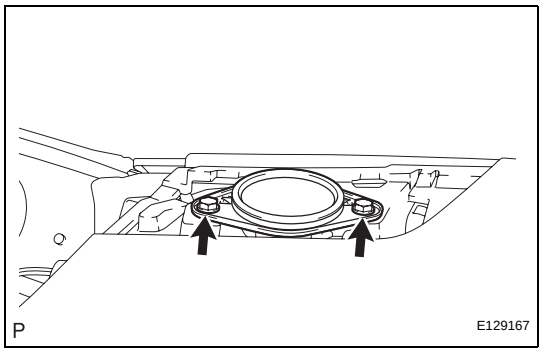

10. **REMOVE FRONT NO. 2 SPEAKER ASSEMBLY**
    (a) Remove the 2 bolts and front No. 2 speaker assembly.
    (b) Disconnect the connector.

INSTALLATION

1. INSTALL FRONT NO. 2 SPEAKER ASSEMBLY

(a) Connect the connector.

(b) Install the front No. 2 speaker assembly with the 2 bolts.

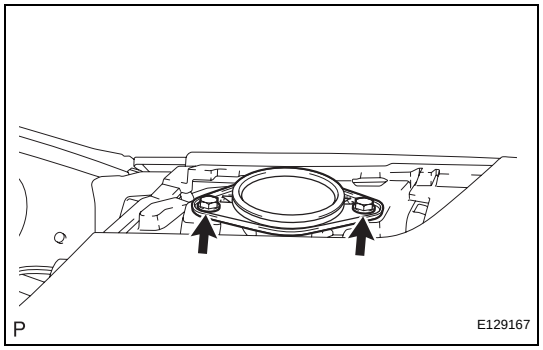

2. INSTALL INSTRUMENT PANEL NO. 2 SPEAKER PANEL SUB-ASSEMBLY

(a) Engage the 6 claws and 2 clips and install the instrument panel No. 2 speaker panel sub-assembly.

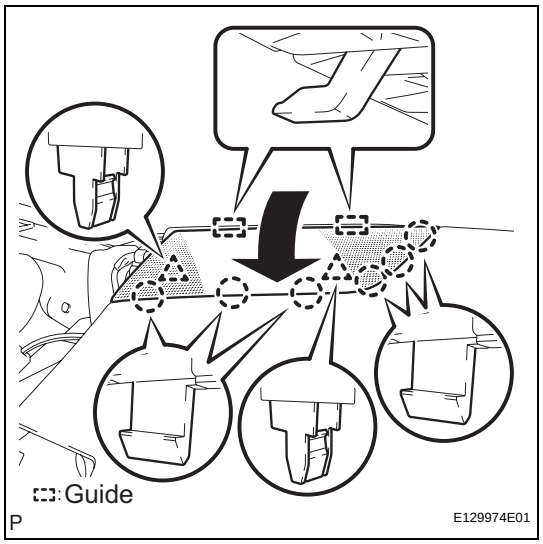

3. INSTALL FRONT PILLAR GARNISH (See page IR-51)

4. INSTALL FRONT NO. 1 SPEAKER ASSEMBLY

(a) Install the front No. 1 speaker assembly with the 4 bolts.

(b) Connect the connector.

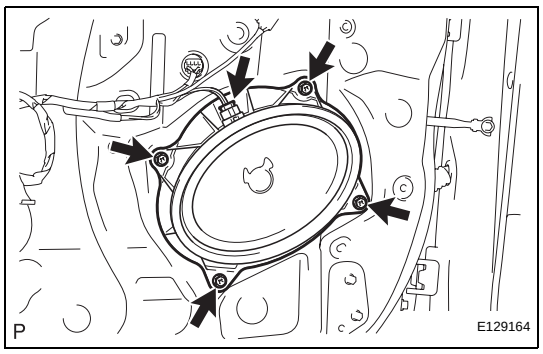

5. INSTALL FRONT DOOR INNER GLASS WEATHERSTRIP (See page ED-32)

6. INSTALL FRONT DOOR TRIM BOARD SUB-ASSEMBLY (See page ED-33)

7. INSTALL COURTESY LIGHT ASSEMBLY (See page ED-34)

8. INSTALL ASSIST GRIP COVER (See page ED-34)

9. INSTALL FRONT DOOR INSIDE HANDLE BEZEL PLUG (See page ED-34)

10. INSTALL FRONT DOOR LOWER FRAME BRACKET GARNISH (See page ED-34)

REAR SIDE SPEAKER

COMPONENTS

for Fixed Seat Type:

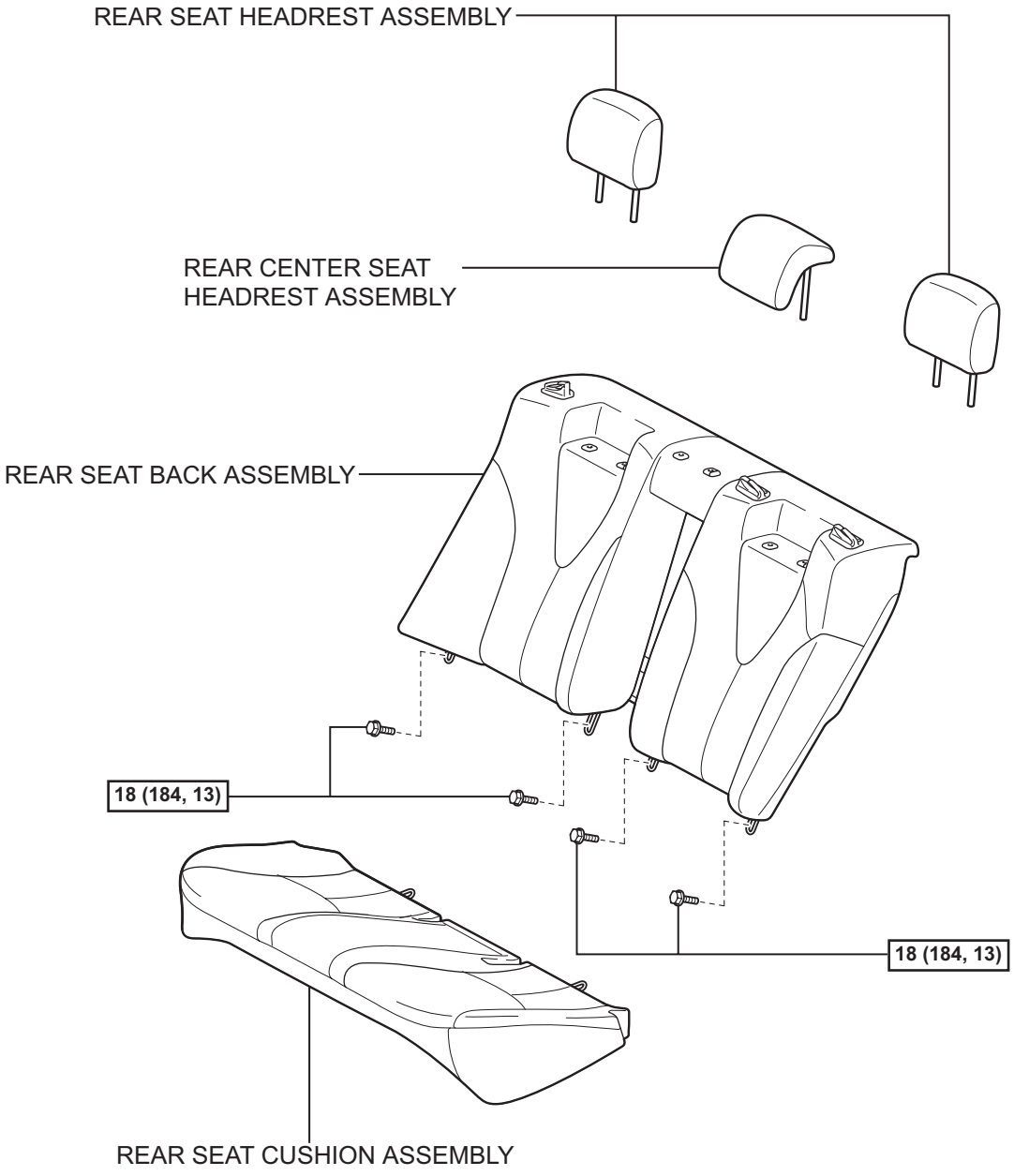

N*m (kgf*cm, ft.*lbf) : Specified torque

P

B136589E02

for Fold Down Seat Type:

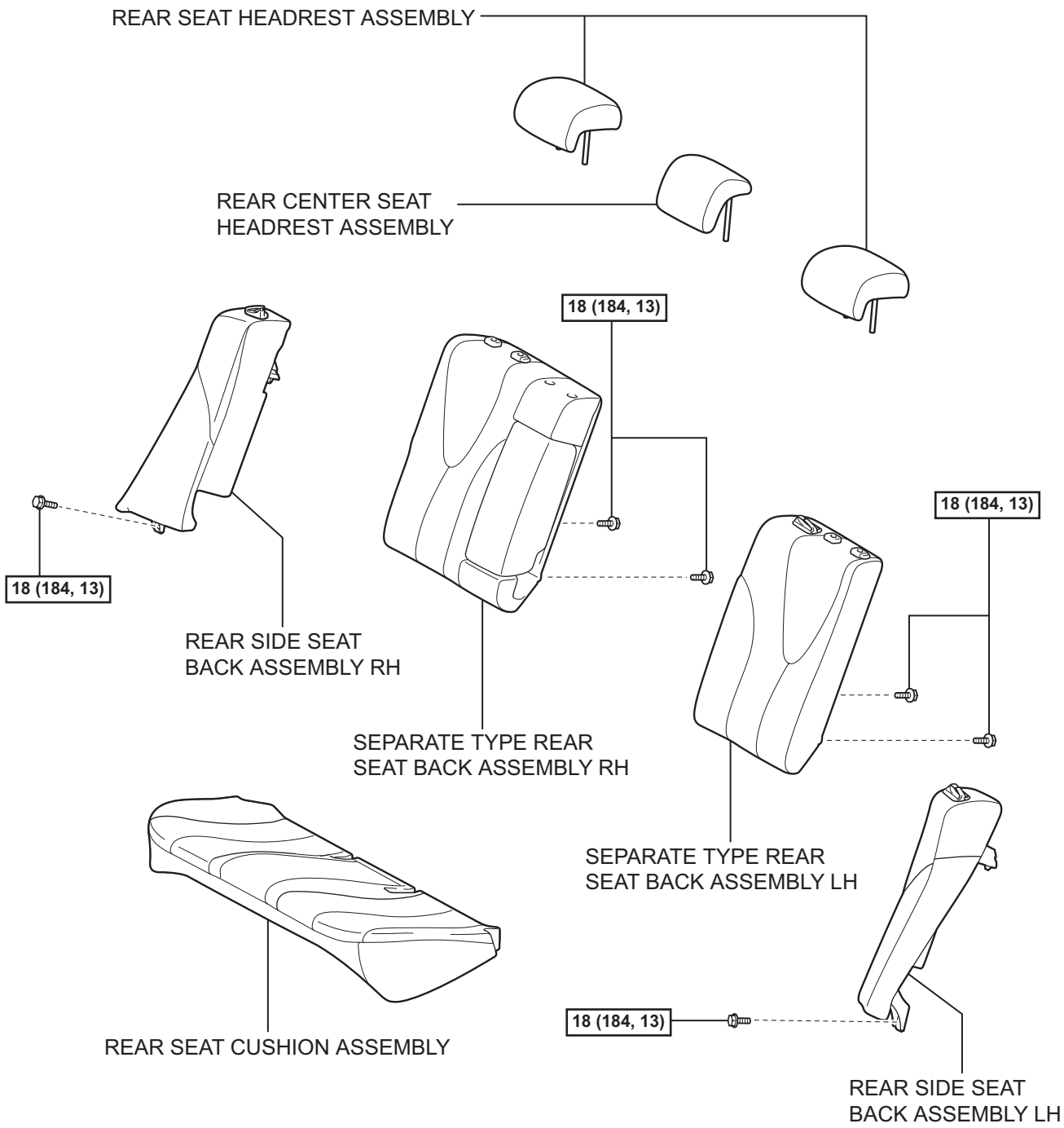

N*m (kgf*cm, ft.*lbf) : Specified torque

P

B136564E02

AV

for Reclining Seat Type:

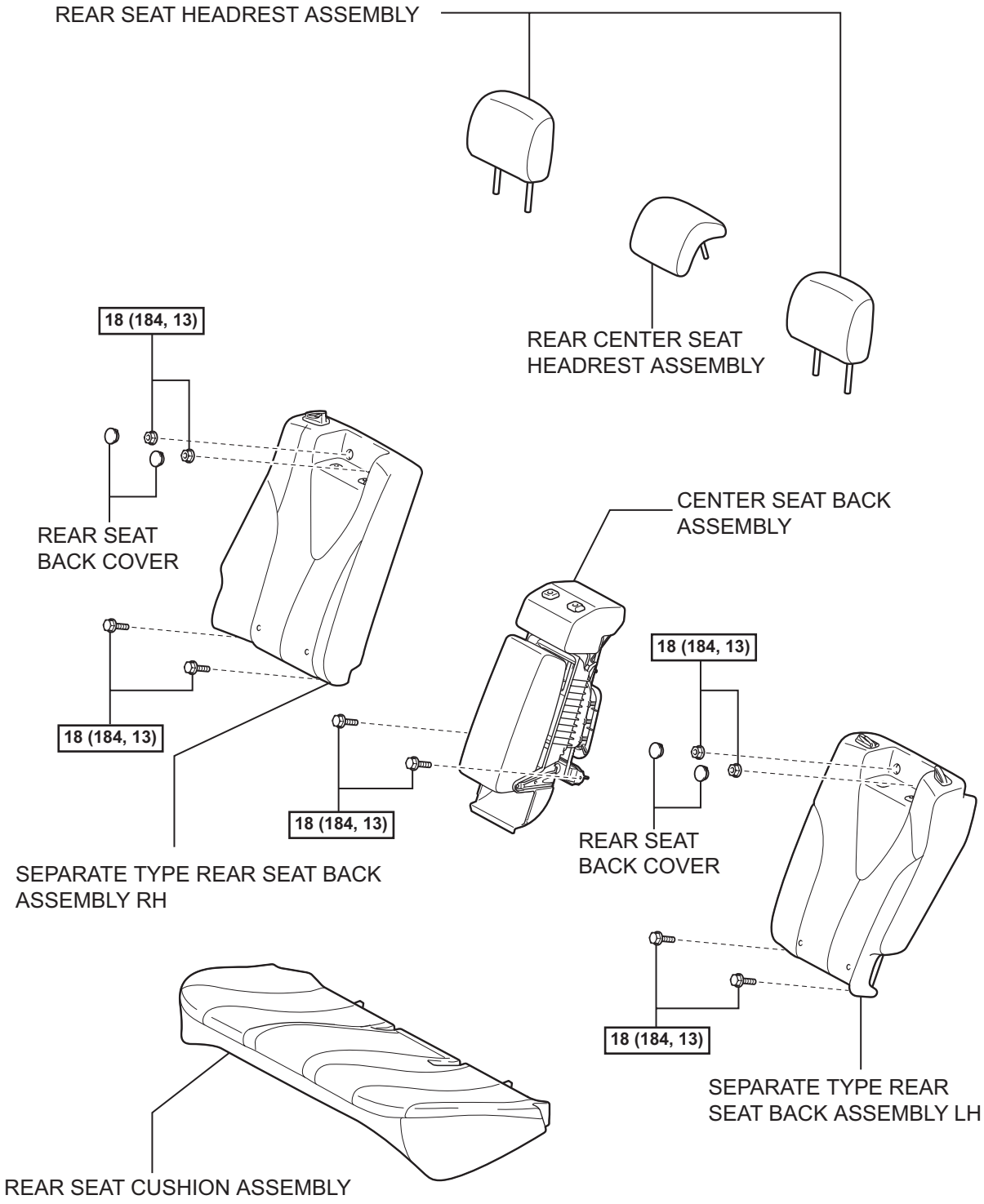

N*m (kgf*cm, ft.*lbf) : Specified torque

P

B139095E03

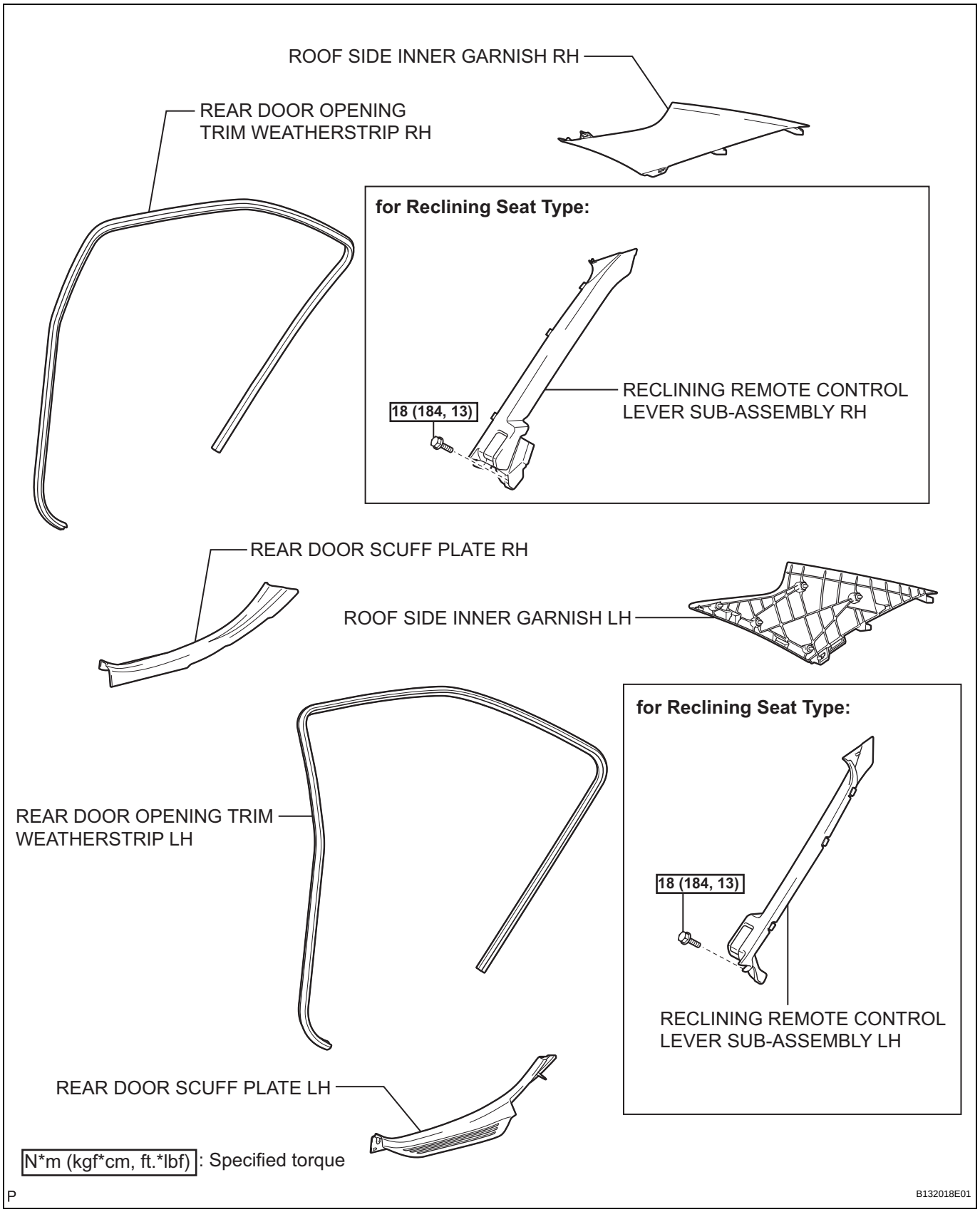
ROOF SIDE INNER GARNISH RH
REAR DOOR OPENING TRIM WEATHERSTRIP RH
for Reclining Seat Type:
18 (184, 13)
RECLINING REMOTE CONTROL LEVER SUB-ASSEMBLY RH
REAR DOOR SCUFF PLATE RH
ROOF SIDE INNER GARNISH LH
REAR DOOR OPENING TRIM WEATHERSTRIP LH
for Reclining Seat Type:
18 (184, 13)
RECLINING REMOTE CONTROL LEVER SUB-ASSEMBLY LH
REAR DOOR SCUFF PLATE LH
N*m (kgf*cm, ft.*lbf): Specified torque
P
B132018E01

AV

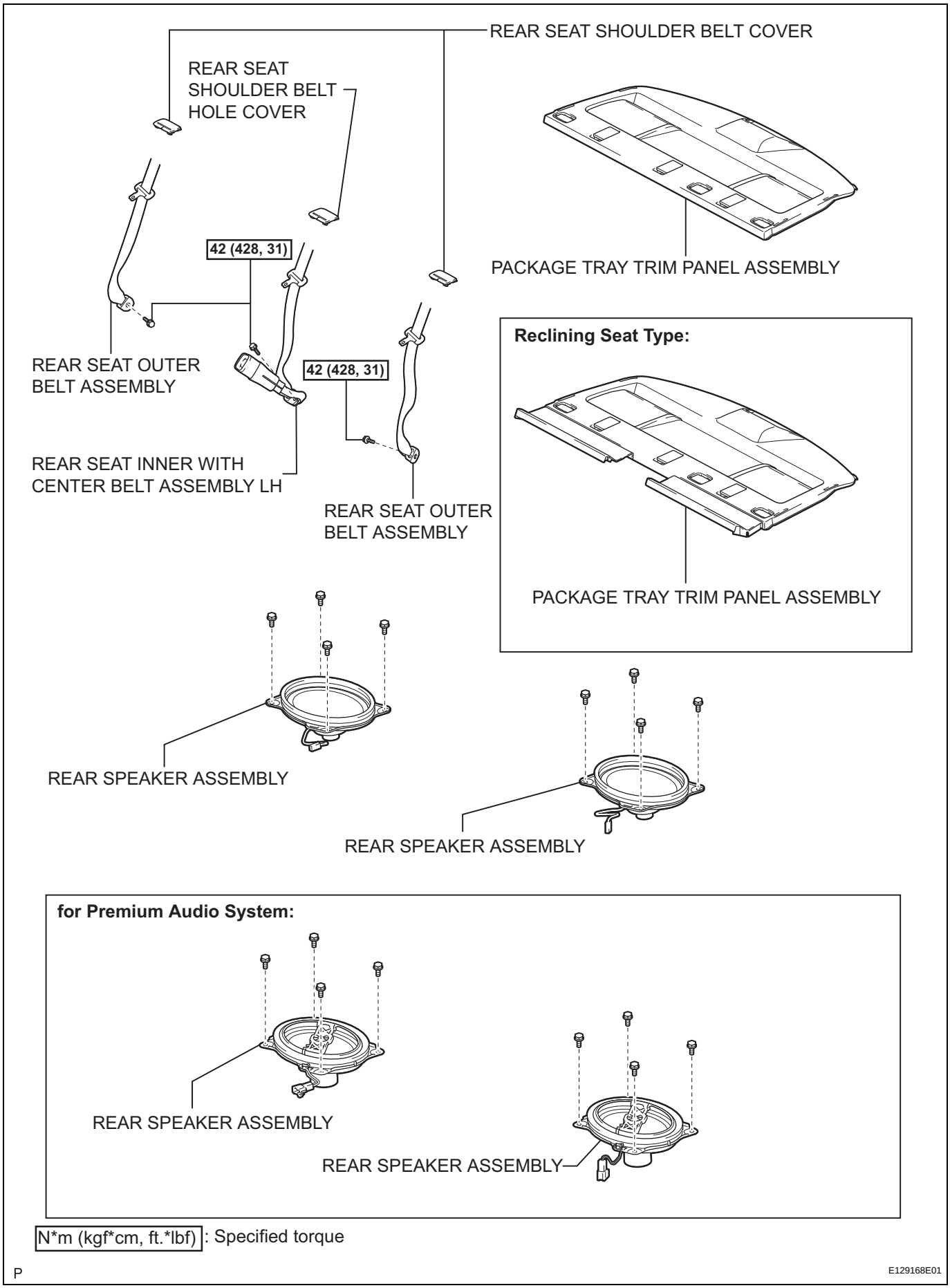
REAR SEAT SHOULDER BELT COVER
REAR SEAT SHOULDER BELT HOLE COVER
PACKAGE TRAY TRIM PANEL ASSEMBLY
42 (428, 31)
REAR SEAT OUTER BELT ASSEMBLY
42 (428, 31)
REAR SEAT INNER WITH CENTER BELT ASSEMBLY LH
REAR SEAT OUTER BELT ASSEMBLY
Reclining Seat Type:
PACKAGE TRAY TRIM PANEL ASSEMBLY
REAR SPEAKER ASSEMBLY
REAR SPEAKER ASSEMBLY
for Premium Audio System:
REAR SPEAKER ASSEMBLY
REAR SPEAKER ASSEMBLY
N*m (kgf*cm, ft.*lbf) : Specified torque
P
E129168E01

ON-VEHICLE INSPECTION

1. INSPECT REAR SPEAKER

HINT:
Remove interior parts so that the rear speaker can be seen.

(a) Check the speaker installation.
OK:
The speaker is securely installed.
If the result is not as specified, reinstall the rear speaker.

(b) Visually check the speaker.
OK:
The cone paper of the speaker is not torn.
If the result is not as specified, replace the rear speaker.

(c) Speaker resistance check

(1) Disconnect the rear speaker connector.

(2) Measure the resistance between the terminals of the speaker.
Standard resistance (Premium Model (Only Woofer Speaker))

Tester connection	Condition	Specified condition
2 - 4	Always	1.8 to 2.6 Ω

Standard resistance (Standard Model):
Approximately 4 Ω
If the result is not as specified, replace the rear speaker.

Premium Model:

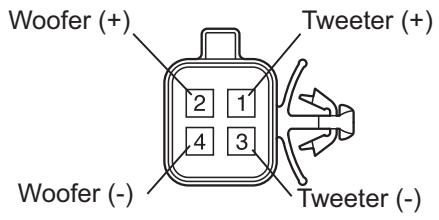

P E129809E02

REMOVAL

1. REMOVE REAR SEAT HEADREST ASSEMBLY
2. REMOVE REAR CENTER SEAT HEADREST ASSEMBLY
3. REMOVE REAR SEAT CUSHION ASSEMBLY (See page SE-62)
4. REMOVE REAR SEAT BACK ASSEMBLY (for Fixed Seat Type) (See page SE-77)
5. REMOVE SEPARATE TYPE REAR SEAT BACK ASSEMBLY RH (for Fold Down Seat Type) (See page SE-47)
6. REMOVE SEPARATE TYPE REAR SEAT BACK ASSEMBLY LH (for Fold Down Seat Type) (See page SE-47)
7. REMOVE REAR SIDE SEAT BACK ASSEMBLY LH (for Fold Down Seat Type) (See page SE-48)
8. REMOVE REAR SIDE SEAT BACK ASSEMBLY RH (for Fold Down Seat Type) (See page SE-48)
9. REMOVE REAR SEAT BACK COVER (for Reclining Seat Type) (See page SE-63)
10. REMOVE SEPARATE TYPE REAR SEAT BACK ASSEMBLY LH (for Reclining Seat Type) (See page SE-63)
11. REMOVE SEPARATE TYPE REAR SEAT BACK ASSEMBLY RH (for Reclining Seat Type) (See page SE-64)
12. REMOVE CENTER SEAT BACK ASSEMBLY (for Reclining Seat Type) (See page SE-64)
13. REMOVE REAR DOOR SCUFF PLATE LH (See page IR-24)
14. DISCONNECT REAR DOOR OPENING TRIM WEATHERSTRIP LH (for Reclining Seat Type)
15. REMOVE REAR DOOR SCUFF PLATE RH (See page IR-24)
16. DISCONNECT REAR DOOR OPENING TRIM WEATHERSTRIP RH (for Reclining Seat Type)
17. REMOVE RECLINING REMOTE CONTROL LEVER SUB-ASSEMBLY LH (for Reclining Seat Type) (See page SE-68)
18. REMOVE RECLINING REMOTE CONTROL LEVER SUB-ASSEMBLY RH (for Reclining Seat Type)
19. DISCONNECT REAR SEAT INNER WITH CENTER BELT ASSEMBLY LH (for TMC Made) (See page SB-35)

20. DISCONNECT REAR SEAT INNER WITH CENTER BELT ASSEMBLY LH (for TMMK Made) (See page SB-35)

21. REMOVE ROOF SIDE INNER GARNISH LH (See page IR-26)

22. REMOVE ROOF SIDE INNER GARNISH RH (See page IR-26)

23. DISCONNECT REAR SEAT OUTER BELT ASSEMBLY (for LH Side) (See page SB-50)

24. DISCONNECT REAR SEAT OUTER BELT ASSEMBLY (for RH Side) (See page SB-50)

25. REMOVE REAR SEAT SHOULDER BELT COVER (See page SB-50)

26. REMOVE REAR SEAT SHOULDER BELT HOLE COVER (See page SB-51)

27. REMOVE PACKAGE TRAY TRIM PANEL ASSEMBLY (See page SB-37)

28. REMOVE PACKAGE TRAY TRIM PANEL ASSEMBLY (for Reclining Seat Type) (See page SB-37)

29. REMOVE REAR SPEAKER ASSEMBLY (for LH Side)

(a) Turn up the partition pad.

(b) Disconnect the connector.

(c) Remove the 4 bolts and the rear speaker assembly.

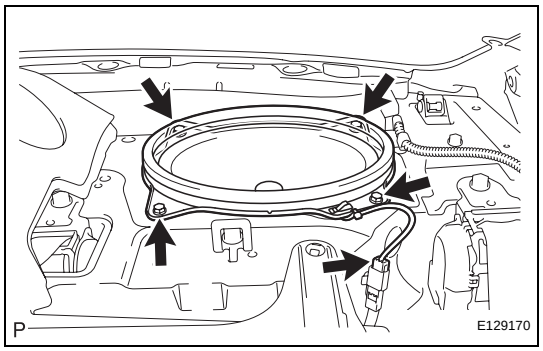

30. REMOVE REAR SPEAKER ASSEMBLY (for RH Side)

(a) Turn up the partition pad.

(b) Disconnect the connector.

(c) Remove the 4 bolts and the rear speaker assembly.

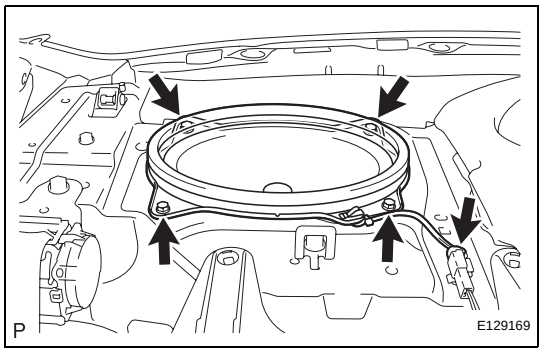

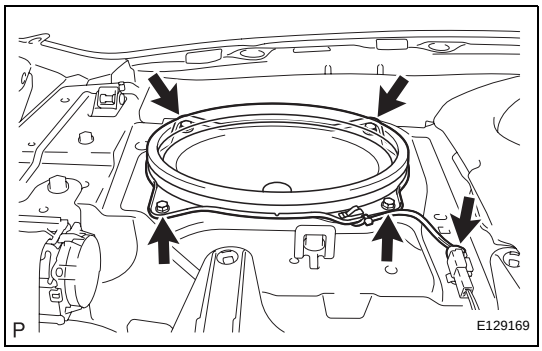

INSTALLATION

1. **INSTALL REAR SPEAKER ASSEMBLY (for RH Side)**
   (a) Install the rear speaker assembly with the 4 bolts.
   (b) Connect the connector.
   (c) Install the partition pad.

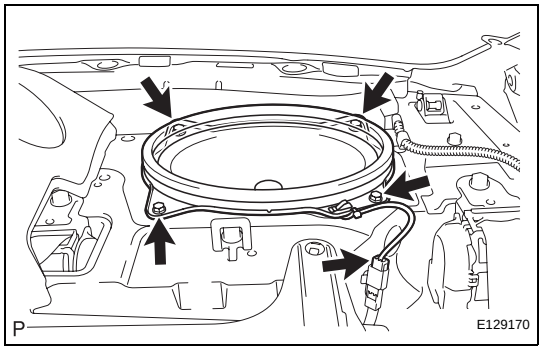

2. **INSTALL REAR SPEAKER ASSEMBLY (for LH Side)**
   (a) Install the rear speaker assembly with the 4 bolts.
   (b) Connect the connector.
   (c) Install the partition pad.
3. **INSTALL PACKAGE TRAY TRIM PANEL ASSEMBLY (See page SB-38)**
4. **INSTALL PACKAGE TRAY TRIM PANEL ASSEMBLY (for Reclining Seat Type) (See page SB-39)**
5. **INSTALL REAR SEAT SHOULDER BELT HOLE COVER (See page SB-51)**
6. **INSTALL REAR SEAT SHOULDER BELT COVER (See page SB-52)**
7. **CONNECT REAR SEAT OUTER BELT ASSEMBLY (for LH Side) (See page SB-52)**
8. **CONNECT REAR SEAT OUTER BELT ASSEMBLY (for RH Side) (See page SB-52)**
9. **INSTALL ROOF SIDE INNER GARNISH LH (See page IR-52)**
10. **INSTALL ROOF SIDE INNER GARNISH RH (See page IR-52)**
11. **CONNECT REAR SEAT INNER WITH CENTER BELT ASSEMBLY LH (for TMC Made) (See page SB-40)**
12. **CONNECT REAR SEAT INNER WITH CENTER BELT ASSEMBLY LH (for TMMK Made) (See page SB-40)**
13. **INSTALL RECLINING REMOTE CONTROL LEVER SUB-ASSEMBLY LH (for Reclining Seat Type) (See page SE-69)**
14. **INSTALL RECLINING REMOTE CONTROL LEVER SUB-ASSEMBLY RH (for Reclining Seat Type) (See page SB-53)**
15. **CONNECT REAR DOOR OPENING TRIM WEATHERSTRIP LH (for Reclining Seat Type) (See page IR-55)**
16. **INSTALL REAR DOOR SCUFF PLATE LH (See page IR-56)**

17. **CONNECT REAR DOOR OPENING TRIM WEATHERSTRIP RH (for Reclining Seat Type) (See page IR-56)**
18. **INSTALL REAR DOOR SCUFF PLATE RH (See page IR-56)**
19. **INSTALL CENTER SEAT BACK ASSEMBLY (for Reclining Seat Type) (See page SE-71)**
20. **INSTALL SEPARATE TYPE REAR SEAT BACK ASSEMBLY LH (for Reclining Seat Type) (See page SE-72)**
21. **INSTALL SEPARATE TYPE REAR SEAT BACK ASSEMBLY RH (for Reclining Seat Type) (See page SE-71)**
22. **INSTALL REAR SEAT BACK COVER (for Reclining Seat Type)**
23. **INSTALL REAR SIDE SEAT BACK ASSEMBLY LH (for Fold Down Seat Type) (See page SE-57)**
24. **INSTALL REAR SIDE SEAT BACK ASSEMBLY RH (for Fold Down Seat Type)**
25. **INSTALL SEPARATE TYPE REAR SEAT BACK ASSEMBLY LH (for Fold Down Seat Type) (See page SE-57)**
26. **INSTALL SEPARATE TYPE REAR SEAT BACK ASSEMBLY RH (for Fold Down Seat Type) (See page SE-57)**
27. **INSTALL REAR SEAT BACK ASSEMBLY (for Fixed Seat Type) (See page SE-84)**
28. **INSTALL REAR SEAT CUSHION ASSEMBLY (See page SE-58)**
29. **INSTALL REAR CENTER SEAT HEADREST ASSEMBLY**
30. **INSTALL REAR SEAT HEADREST ASSEMBLY**

REMOVAL

1. **PRECAUTION**
   (See page IP-1)
2. **ALIGN FRONT WHEELS FACING STRAIGHT AHEAD**
3. **DISCONNECT CABLE FROM NEGATIVE BATTERY TERMINAL**
   CAUTION:
   Wait for 90 seconds after disconnecting the cable to prevent airbag deployment (See page RS-1).
4. **REMOVE LOWER NO. 3 STEERING WHEEL COVER (See page RS-349)**
5. **REMOVE LOWER NO. 2 STEERING WHEEL COVER (See page RS-349)**
6. **REMOVE STEERING PAD (See page RS-350)**
7. **REMOVE STEERING WHEEL ASSEMBLY (See page SR-38)**
8. **REMOVE FRONT DOOR SCUFF PLATE LH (See page IR-24)**
9. **REMOVE COWL SIDE TRIM SUB-ASSEMBLY LH (See page IR-25)**
10. **REMOVE LOWER INSTRUMENT PANEL FINISH PANEL LH (for TMC Made) (See page IP-20)**
11. **REMOVE LOWER INSTRUMENT PANEL FINISH PANEL LH (for TMMK Made) (See page IP-21)**
12. **REMOVE STEERING COLUMN COVER (for TMC Made) (See page IP-21)**
13. **REMOVE STEERING COLUMN COVER (for TMMK Made) (See page IP-21)**
14. **REMOVE TURN SIGNAL SWITCH ASSEMBLY WITH SPIRAL CABLE SUB-ASSEMBLY (See page SR-39)**
15. **REMOVE NO. 1 INSTRUMENT PANEL SUB-ASSEMBLY (See page IP-22)**
16. **REMOVE LOWER INSTRUMENT PANEL FINISH PANEL (w/o Smart Key System) (See page IP-22)**
17. **REMOVE LOWER INSTRUMENT PANEL FINISH PANEL (w/ Smart Key System) (See page IP-22)**
18. **REMOVE INSTRUMENT CLUSTER FINISH PANEL (See page IP-22)**
19. **REMOVE COMBINATION METER ASSEMBLY (for TMC Made) (See page IP-23)**
20. **REMOVE COMBINATION METER ASSEMBLY (for TMMK Made) (See page IP-23)**
21. **REMOVE FRONT DOOR SCUFF PLATE RH (See page IR-26)**

22. **REMOVE COWL SIDE TRIM SUB-ASSEMBLY RH**
23. **REMOVE INSTRUMENT PANEL NO. 2 UNDER COVER SUB-ASSEMBLY (See page IP-23)**
24. **REMOVE LOWER INSTRUMENT PANEL SUB-ASSEMBLY (for TMC Made) (See page IP-23)**
25. **REMOVE LOWER INSTRUMENT PANEL SUB-ASSEMBLY (for TMMK Made) (See page IP-24)**
26. **REMOVE SHIFT LEVER KNOB SUB-ASSEMBLY (for Automatic Transaxle) (See page IP-24)**
27. **REMOVE SHIFT LEVER KNOB SUB-ASSEMBLY (for Manual Transaxle) (See page IP-24)**
28. **REMOVE NO. 1 INSTRUMENT CLUSTER FINISH PANEL GARNISH (See page IP-24)**
29. **REMOVE NO. 2 INSTRUMENT CLUSTER FINISH PANEL GARNISH (See page IP-25)**
30. **REMOVE FLOOR SHIFT POSITION INDICATOR HOUSING SUB-ASSEMBLY (for Automatic Transaxle) (See page IP-25)**
31. **REMOVE UPPER CONSOLE PANEL (for Manual Transaxle) (See page IP-25)**
32. **REMOVE UPPER CONSOLE REAR PANEL SUB-ASSEMBLY (for Automatic Transaxle) (See page IP-26)**
33. **REMOVE UPPER CONSOLE REAR PANEL SUB-ASSEMBLY (for Manual Transaxle) (See page IP-26)**
34. **REMOVE UPPER CONSOLE PANEL SUB-ASSEMBLY (for TMC Made) (See page IP-27)**
35. **REMOVE UPPER CONSOLE PANEL SUB-ASSEMBLY (for TMMK Made) (See page IP-27)**
36. **REMOVE INSTRUMENT PANEL NO. 2 REGISTER ASSEMBLY (See page IP-27)**
37. **REMOVE RADIO RECEIVER WITH HEATER CONTROL PANEL ASSEMBLY (w/o Navigation System) (See page AV-146)**
38. **REMOVE NAVIGATION RECEIVER WITH HEATER CONTROL PANEL ASSEMBLY (See page NS-195)**
39. **REMOVE CONSOLE BOX POCKET (See page IP-28)**
40. **REMOVE CONSOLE BOX CARPET (See page IP-28)**
41. **REMOVE CONSOLE BOX ASSEMBLY (for TMC Made) (See page IP-28)**
42. **REMOVE CONSOLE BOX ASSEMBLY (for TMMK Made) (See page IP-29)**
43. **REMOVE NO. 2 CONSOLE BOX INSERT FRONT (for TMC Made) (See page IP-29)**

44. **REMOVE NO. 2 CONSOLE BOX INSERT FRONT (for TMMK Made) (See page IP-30)**
45. **REMOVE NO. 1 CONSOLE BOX INSERT FRONT (for TMC Made) (See page IP-30)**
46. **REMOVE NO. 1 CONSOLE BOX INSERT FRONT (for TMMK Made) (See page IP-30)**
47. **REMOVE FRONT PILLAR GARNISH LH (See page IR-27)**
48. **REMOVE INSTRUMENT PANEL NO. 1 REGISTER ASSEMBLY (See page IP-31)**
49. **REMOVE INSTRUMENT PANEL NO. 1 SPEAKER PANEL SUB-ASSEMBLY (See page IP-31)**
50. **REMOVE FRONT NO. 2 SPEAKER ASSEMBLY (for LH Side) (See page AV-156)**
51. **REMOVE FRONT PILLAR GARNISH RH (See page IR-27)**
52. **REMOVE INSTRUMENT PANEL NO. 3 REGISTER ASSEMBLY (See page IP-31)**
53. **REMOVE INSTRUMENT PANEL NO. 2 SPEAKER PANEL SUB-ASSEMBLY (See page IP-32)**
54. **REMOVE FRONT NO. 2 SPEAKER ASSEMBLY (for RH Side)**
    HINT:
    Use the same procedures for the RH side and the LH side (See page AV-156).
55. **REMOVE NO. 1 DEFROSTER NOZZLE GARNISH (See page IP-32)**
56. **REMOVE INSTRUMENT PANEL SAFETY PAD ASSEMBLY (for TMC Made) (See page IP-32)**
57. **REMOVE INSTRUMENT PANEL SAFETY PAD ASSEMBLY (for TMMK Made) (See page IP-34)**
58. **REMOVE SIDE NO. 1 DEFROSTER NOZZLE DUCT (for TMC Made) (See page IP-37)**
59. **REMOVE SIDE NO. 1 DEFROSTER NOZZLE DUCT (for TMMK Made) (See page IP-37)**
60. **REMOVE SIDE NO. 2 DEFROSTER NOZZLE DUCT (for TMC Made) (See page IP-38)**
61. **REMOVE SIDE NO. 2 DEFROSTER NOZZLE DUCT (for TMMK Made) (See page IP-38)**
62. **REMOVE DEFROSTER NOZZLE ASSEMBLY (for TMC Made) (See page IP-38)**
63. **REMOVE DEFROSTER NOZZLE ASSEMBLY (for TMMK Made) (See page IP-38)**
64. **REMOVE NO. 1 HEATER TO REGISTER DUCT (for TMC Made) (See page IP-38)**

65. REMOVE NO. 1 HEATER TO REGISTER DUCT (for TMMK Made) (See page IP-39)

66. REMOVE NO. 3 HEATER TO REGISTER DUCT (for TMC Made) (See page IP-39)

67. REMOVE NO. 3 HEATER TO REGISTER DUCT (for TMMK Made) (See page IP-39)

68. REMOVE NO. 2 HEATER TO REGISTER DUCT (for TMC Made) (See page IP-39)

69. REMOVE NO. 2 HEATER TO REGISTER DUCT (for TMMK Made) (See page IP-39)

70. REMOVE NO. 2 ANTENNA CORD SUB-ASSEMBLY

(a) Disengage the 6 clamps and clip and remove the No. 2 antenna cord sub-assembly.

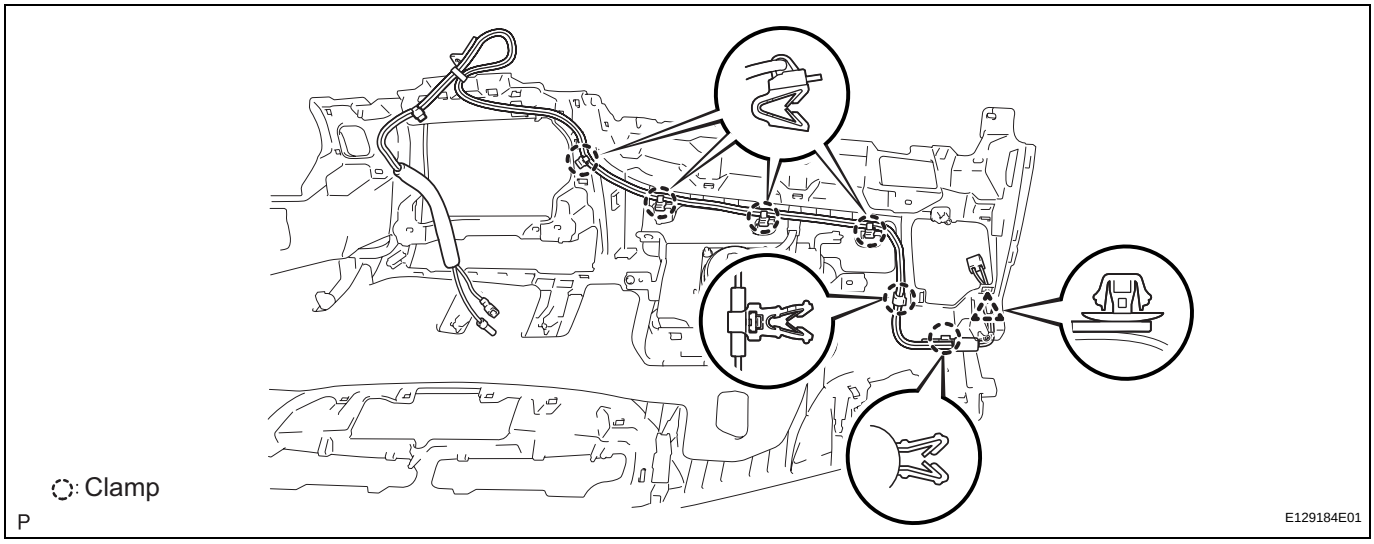

71. REMOVE FRONT SEAT HEADREST ASSEMBLY (for Manual Seat)

72. REMOVE SEAT TRACK COVER LH (for Manual Seat) (See page SE-16)

73. REMOVE INNER SEAT TRACK BRACKET COVER LH (for Manual Seat) (See page SE-16)

74. REMOVE FRONT SEAT ASSEMBLY LH (for Manual Seat) (See page SE-16)

75. REMOVE FRONT SEAT HEADREST ASSEMBLY (for Power Seat)

76. REMOVE SEAT TRACK COVER LH (for Power Seat) (See page SE-30)

77. REMOVE SEAT TRACK COVER RH (for Power Seat) (See page SE-30)

78. REMOVE FRONT SEAT ASSEMBLY LH (for Power Seat) (See page SE-30)

79. REMOVE FRONT SEAT HEADREST ASSEMBLY (for Manual Seat)

80. **REMOVE SEAT TRACK COVER RH (for Manual Seat) (See page IR-22)**
81. **REMOVE INNER SEAT TRACK BRACKET COVER RH (for Manual Seat) (See page IR-22)**
82. **REMOVE FRONT SEAT ASSEMBLY RH (for Manual Seat) (See page IR-22)**
83. **REMOVE FRONT SEAT HEADREST ASSEMBLY (for Power Seat)**
84. **REMOVE SEAT TRACK COVER RH (for Power Seat) (See page IR-22)**
85. **REMOVE SEAT TRACK COVER LH (for Power Seat) (See page IR-23)**
86. **REMOVE FRONT SEAT ASSEMBLY RH (for Power Seat) (See page IR-23)**
87. **REMOVE REAR SEAT CUSHION ASSEMBLY (See page SE-77)**
88. **REMOVE REAR SEAT HEADREST ASSEMBLY**
89. **REMOVE REAR CENTER SEAT HEADREST ASSEMBLY**
90. **REMOVE REAR SEAT BACK ASSEMBLY (for Fixed Seat Type) (See page SE-77)**
91. **REMOVE SEPARATE TYPE REAR SEAT BACK ASSEMBLY LH (for Fold Down Seat Type) (See page SE-47)**
92. **REMOVE SEPARATE TYPE REAR SEAT BACK ASSEMBLY RH (for Fold Down Seat Type) (See page SE-47)**
93. **REMOVE REAR SIDE SEAT BACK ASSEMBLY LH (for Fold Down Seat Type) (See page SE-48)**
94. **REMOVE REAR SIDE SEAT BACK ASSEMBLY RH (for Fold Down Seat Type) (See page SE-48)**
95. **REMOVE REAR SEAT BACK COVER (for Reclining Seat Type) (See page SE-63)**
96. **REMOVE SEPARATE TYPE REAR SEAT BACK ASSEMBLY LH (for Reclining Seat Type) (See page SE-63)**
97. **REMOVE SEPARATE TYPE REAR SEAT BACK ASSEMBLY RH (for Reclining Seat Type) (See page SE-64)**
98. **REMOVE CENTER SEAT BACK ASSEMBLY (for Reclining Seat Type) (See page SE-64)**
99. **REMOVE REAR DOOR SCUFF PLATE LH (See page IR-24)**
100. **REMOVE REAR DOOR OPENING TRIM WEATHERSTRIP LH**

101. REMOVE REAR DOOR SCUFF PLATE RH (See page IR-24)
102. REMOVE REAR DOOR OPENING TRIM WEATHERSTRIP RH
103. REMOVE RECLINING REMOTE CONTROL LEVER SUB-ASSEMBLY LH (for Reclining Seat Type) (See page SE-68)
104. REMOVE RECLINING REMOTE CONTROL LEVER SUB-ASSEMBLY RH (for Reclining Seat Type)
105. REMOVE REAR DOOR INSIDE HANDLE BEZEL PLUG LH (See page ED-38)
106. REMOVE DOOR ASSIST GRIP COVER LH (See page ED-38)
107. REMOVE REAR DOOR TRIM BOARD SUB-ASSEMBLY LH (See page ED-39)
108. REMOVE REAR DOOR INNER GLASS WEATHERSTRIP LH (See page ED-40)
109. REMOVE FRONT DOOR SCUFF PLATE LH (See page IR-24)
110. REMOVE COWL SIDE TRIM SUB-ASSEMBLY LH (See page IR-25)
111. REMOVE FRONT DOOR OPENING TRIM WEATHERSTRIP LH
112. REMOVE LAP BELT OUTER ANCHOR COVER (See page IR-25)
113. DISCONNECT FRONT SEAT OUTER BELT ASSEMBLY LH (See page IR-25)
114. REMOVE LOWER CENTER PILLAR GARNISH LH (See page IR-25)
115. REMOVE UPPER CENTER PILLAR GARNISH LH (See page IR-26)
116. REMOVE FRONT DOOR SCUFF PLATE RH (See page IR-26)
117. REMOVE COWL SIDE TRIM SUB-ASSEMBLY RH (See page IR-26)
118. REMOVE FRONT DOOR OPENING TRIM WEATHERSTRIP RH
119. REMOVE LAP BELT OUTER ANCHOR COVER (See page IR-26)
120. DISCONNECT FRONT SEAT OUTER BELT ASSEMBLY RH (See page IR-26)
121. REMOVE LOWER CENTER PILLAR GARNISH RH (See page IR-26)
122. REMOVE UPPER CENTER PILLAR GARNISH RH (See page IR-26)

123. REMOVE ROOF SIDE INNER GARNISH LH (See page IR-26)

124. REMOVE ROOF SIDE INNER GARNISH RH (See page IR-26)

125. REMOVE FRONT PILLAR GARNISH LH (See page IR-27)

126. REMOVE FRONT PILLAR GARNISH RH (See page IR-27)

127. REMOVE ROOF CONSOLE BOX ASSEMBLY (See page IR-28)

128. REMOVE VISOR ASSEMBLY LH (See page IR-28)

129. REMOVE VISOR ASSEMBLY RH (See page IR-29)

130. REMOVE VISOR HOLDER (See page IR-29)

131. REMOVE FRONT ASSIST GRIP SUB-ASSEMBLY (See page IR-29)

132. REMOVE REAR ASSIST GRIP SUB-ASSEMBLY (See page IR-29)

133. REMOVE NO. 1 ROOM LIGHT ASSEMBLY (w/o Sliding Roof) (See page IR-30)

134. REMOVE SPOT LIGHT ASSEMBLY (w/ Sliding Roof) (See page IR-30)

135. REMOVE SUN ROOF OPENING TRIM MOULDING (w/ Sliding Roof) (See page IR-31)

136. REMOVE SUNSHADE TRIM HOLDER (w/ Rear Sunshade) (See page IR-31)

137. REMOVE ROOF HEADLINING ASSEMBLY (w/o Sliding Roof) (See page IR-31)

138. REMOVE ROOF HEADLINING ASSEMBLY (w/ Sliding Roof) (See page IR-32)

139. REMOVE ANTENNA CORD SUB-ASSEMBLY

(a) Peel the strips of the tape used to secure the antenna cord only to the extent that allows removal of the antenna cord.
HINT:
Tape is not available as a supply part. Try to leave as much tape as possible on the roof headlining so that the tape can be reused.

(b) Remove the antenna cord from the roof headlining.

TMC Made:

without Sliding Roof:

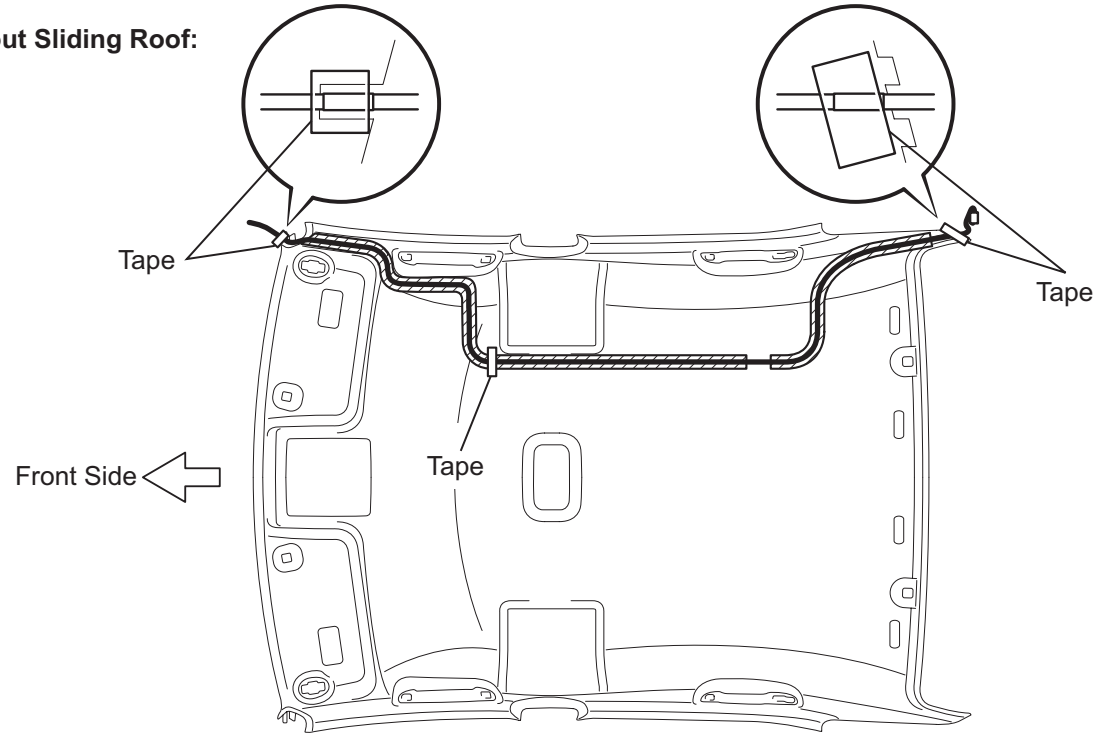

with Sliding Roof:

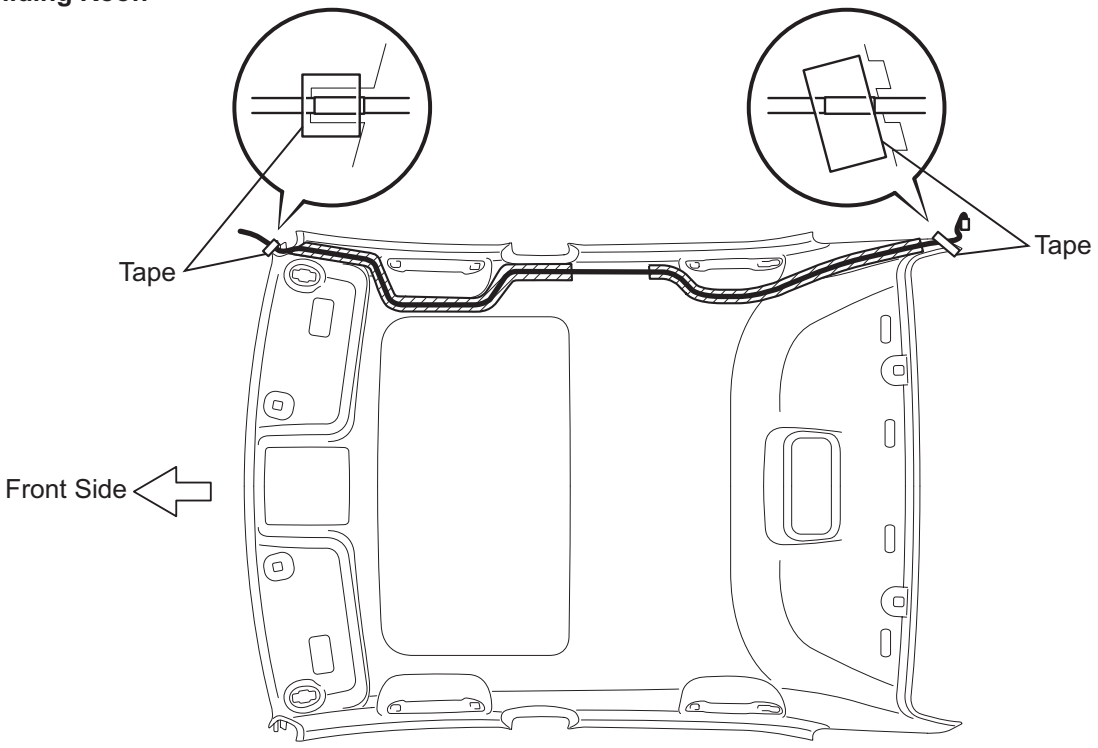

: Double-sided Tape

P

E129975E01

TMMK Made:

without Sliding Roof:

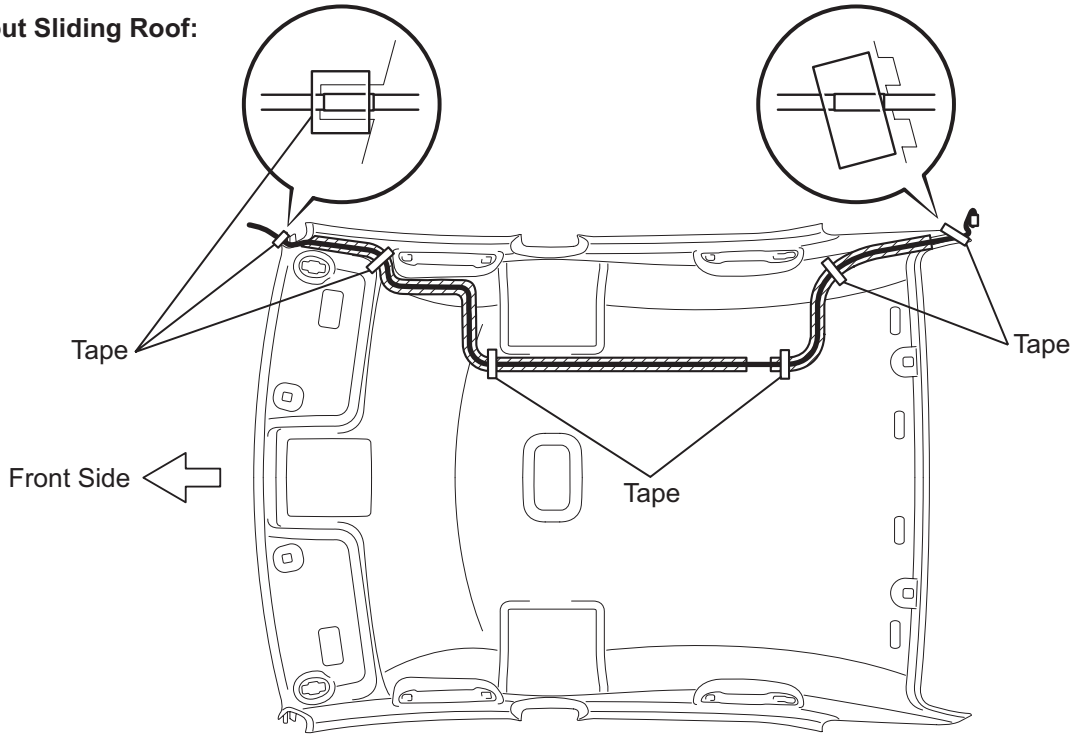

with Sliding Roof:

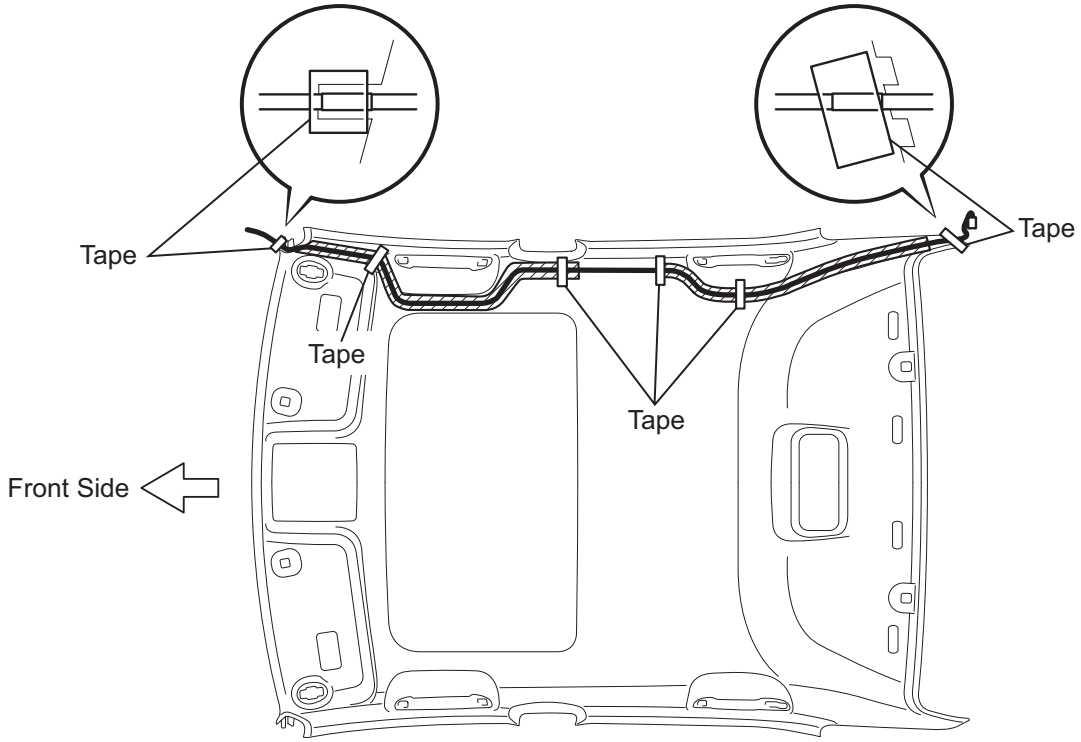

: Double-sided Tape

P

E129191E02

INSTALLATION

1. INSTALL ANTENNA CORD SUB-ASSEMBLY

HINT:

The double-sided tape and tape are not available as supply parts. If these tapes still have enough adhesion to secure the roof headlining and antenna cord, reuse the tapes. If the roof headlining has been replaced with a new one, or if the tape and/or the double-sided tape is no longer sticky, apply new tape following the procedures below.

(a) Apply new double-sided tape.

without Sliding Roof:

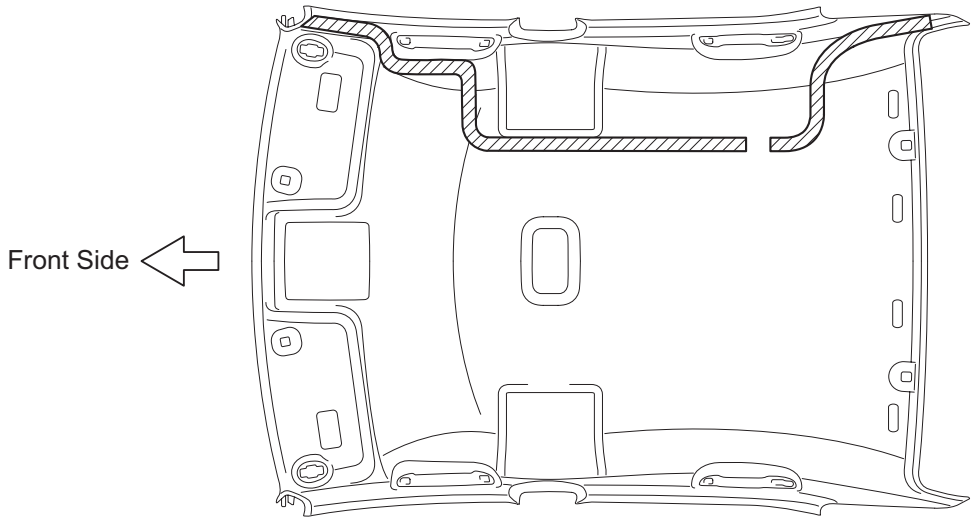

with Sliding Roof:

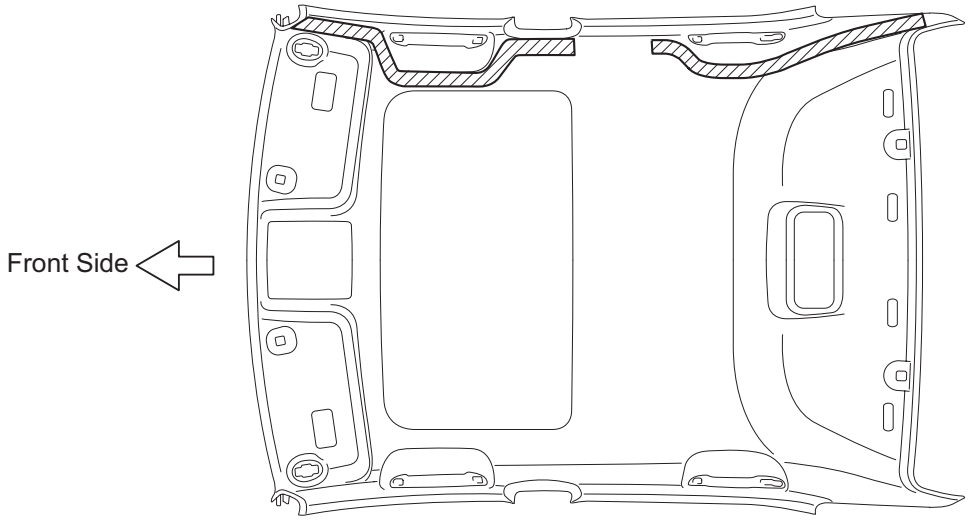

Double-sided Tape

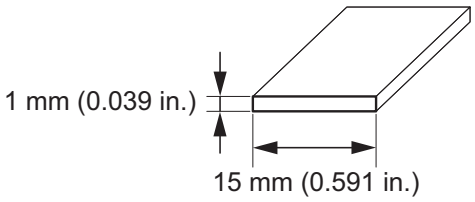

: Double-sided Tape

P

E129190E01

(1) Remove the double-sided tape from the roof headlining assembly.

(2) Peel off the appropriate amount of new double-sided tape. Be careful not to touch the adhesive surface.
(3) Apply the double-sided tape to the roof headlining while aligning the tape with the markings on the roof headlining assembly.
(4) Peel off the backing sheet from the double-sided tape.

(b) Install the antenna cord to the roof headlining assembly from the front of the vehicle.

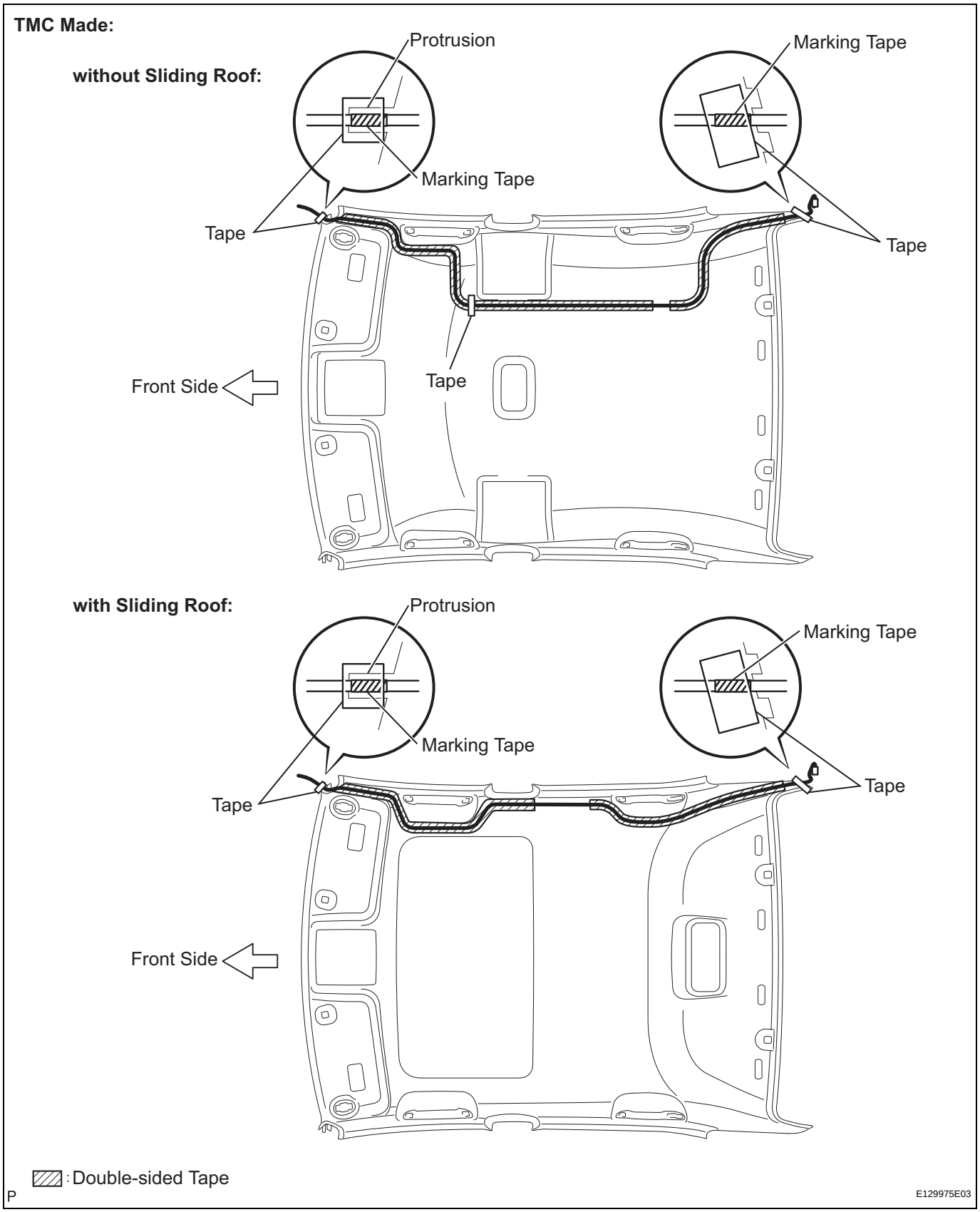

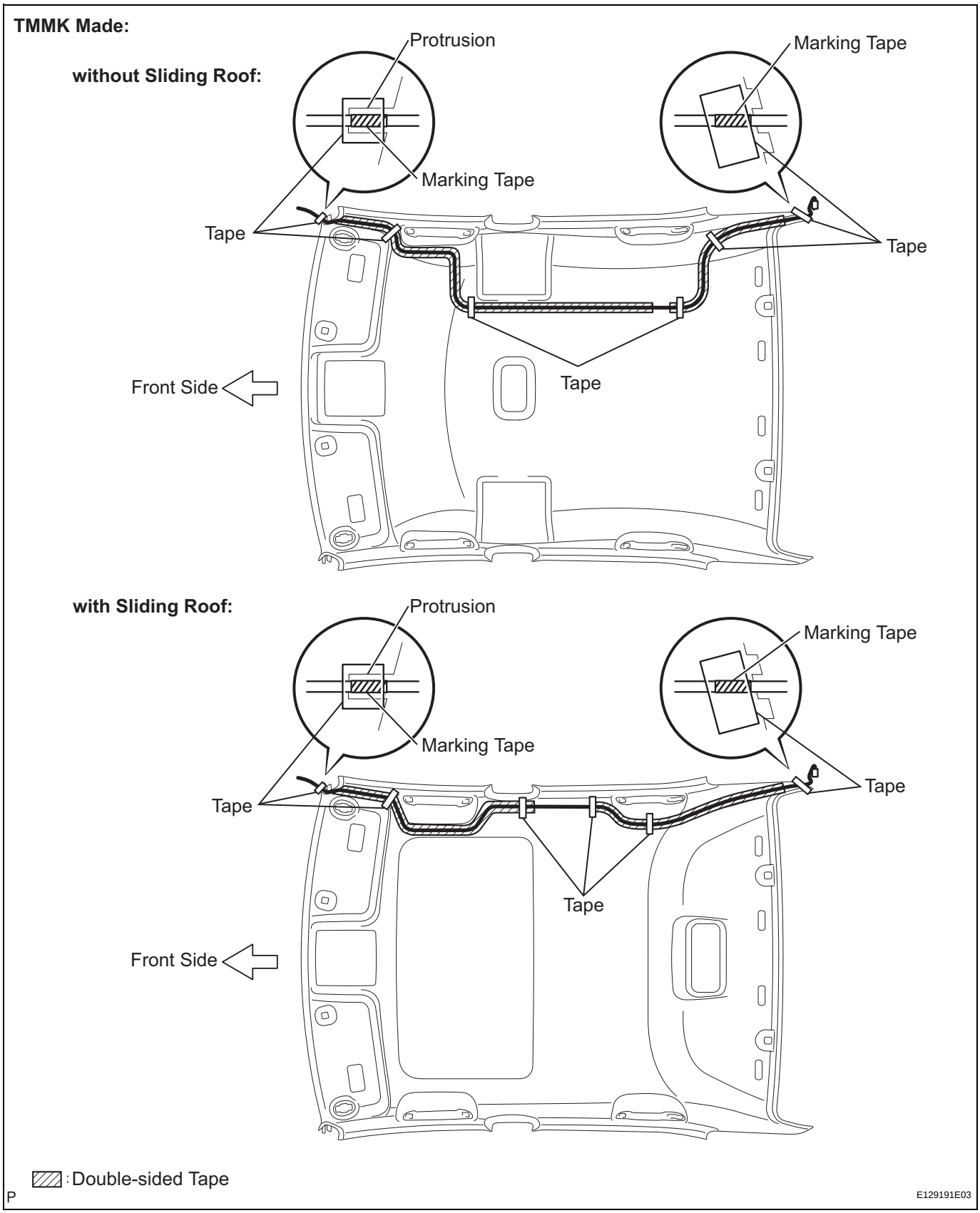

HINT:
Align the taped part of the antenna cable with the protrusion of the roof headlining, and apply tape to secure the cable to the headlining.

(c) Put the strips of the tape back to the positions shown in the illustration in order to secure the antenna cord to the roof headlining assembly.
HINT:
- If the tape is no longer sticky, use other tape, such as packing tape, that has enough adhesion to secure the antenna cord to the roof headlining assembly.
- For the right front corner of the roof headlining assembly, align the marking tape on the antenna cord with the protrusion of the roof headlining, and wrap tape around the antenna cord and roof headlining assembly once or twice to securely hold them.
- For the right rear corner of the roof headlining assembly, align the marking tape on the antenna cord with the rear edge of the roof headlining, and secure the antenna cord to the roof headlining assembly with tape.

2. **INSTALL ROOF HEADLINING ASSEMBLY (w/o Sliding Roof) (See page IR-45)**
3. **INSTALL ROOF HEADLINING ASSEMBLY (w/ Sliding Roof) (See page IR-46)**
4. **INSTALL SUNSHADE TRIM HOLDER (w/ Rear Sunshade) (See page IR-47)**
5. **INSTALL SUN ROOF OPENING TRIM MOULDING (w/ Sliding Roof) (See page IR-47)**
6. **INSTALL SPOT LIGHT ASSEMBLY (w/ Sliding Roof) (See page IR-48)**
7. **INSTALL NO. 1 ROOM LIGHT ASSEMBLY (w/o Sliding Roof) (See page IR-48)**
8. **INSTALL FRONT ASSIST GRIP SUB-ASSEMBLY (See page IR-49)**
9. **INSTALL REAR ASSIST GRIP SUB-ASSEMBLY (See page IR-49)**
10. **INSTALL VISOR HOLDER (See page IR-49)**
11. **INSTALL VISOR ASSEMBLY LH (See page IR-50)**
12. **INSTALL VISOR ASSEMBLY RH (See page IR-50)**
13. **INSTALL ROOF CONSOLE BOX ASSEMBLY (See page IR-50)**
14. **INSTALL FRONT PILLAR GARNISH LH (See page IR-51)**
15. **INSTALL FRONT PILLAR GARNISH RH (See page IR-52)**
16. **INSTALL ROOF SIDE INNER GARNISH LH (See page IR-52)**

17. **INSTALL ROOF SIDE INNER GARNISH RH (See page IR-52)**
18. **INSTALL UPPER CENTER PILLAR GARNISH LH (See page IR-53)**
19. **INSTALL LOWER CENTER PILLAR GARNISH LH (See page IR-53)**
20. **CONNECT FRONT SEAT OUTER BELT ASSEMBLY LH (See page IR-53)**
21. **INSTALL LAP BELT OUTER ANCHOR COVER (See page IR-53)**
22. **INSTALL FRONT DOOR OPENING TRIM WEATHERSTRIP LH (See page IR-54)**
23. **INSTALL COWL SIDE TRIM SUB-ASSEMBLY LH (See page IR-54)**
24. **INSTALL FRONT DOOR SCUFF PLATE LH (See page IR-54)**
25. **INSTALL UPPER CENTER PILLAR GARNISH RH (See page IR-54)**
26. **INSTALL LOWER CENTER PILLAR GARNISH RH (See page IR-54)**
27. **CONNECT FRONT SEAT OUTER BELT ASSEMBLY RH (See page IR-54)**
28. **INSTALL LAP BELT OUTER ANCHOR COVER (See page IR-54)**
29. **INSTALL FRONT DOOR OPENING TRIM WEATHERSTRIP RH (See page IR-55)**
30. **INSTALL COWL SIDE TRIM SUB-ASSEMBLY RH (See page IR-55)**
31. **INSTALL FRONT DOOR SCUFF PLATE RH (See page IR-55)**
32. **INSTALL REAR DOOR INNER GLASS WEATHERSTRIP LH (See page ED-54)**
33. **INSTALL REAR DOOR TRIM BOARD SUB-ASSEMBLY LH (See page ED-55)**
34. **INSTALL DOOR ASSIST GRIP COVER LH (See page ED-56)**
35. **INSTALL REAR DOOR INSIDE HANDLE BEZEL PLUG LH (See page ED-56)**
36. **INSTALL RECLINING REMOTE CONTROL LEVER SUB-ASSEMBLY LH (for Reclining Seat Type) (See page SE-69)**
37. **INSTALL RECLINING REMOTE CONTROL LEVER SUB-ASSEMBLY RH (for Reclining Seat Type)**
38. **INSTALL REAR DOOR OPENING TRIM WEATHERSTRIP LH (See page IR-55)**

39. **INSTALL REAR DOOR SCUFF PLATE LH (See page IR-56)**
40. **INSTALL REAR DOOR OPENING TRIM WEATHERSTRIP RH (See page IR-56)**
41. **INSTALL REAR DOOR SCUFF PLATE RH (See page IR-56)**
42. **INSTALL CENTER SEAT BACK ASSEMBLY (for Reclining Seat Type) (See page SE-71)**
43. **INSTALL SEPARATE TYPE REAR SEAT BACK ASSEMBLY LH (for Reclining Seat Type) (See page SE-72)**
44. **INSTALL SEPARATE TYPE REAR SEAT BACK ASSEMBLY RH (for Reclining Seat Type) (See page SE-71)**
45. **INSTALL REAR SEAT BACK COVER (for Reclining Seat Type)**
46. **INSTALL REAR SIDE SEAT BACK ASSEMBLY LH (for Fold Down Seat Type) (See page SE-57)**
47. **INSTALL REAR SIDE SEAT BACK ASSEMBLY RH (for Fold Down Seat Type)**
48. **INSTALL SEPARATE TYPE REAR SEAT BACK ASSEMBLY LH (for Fold Down Seat Type) (See page SE-57)**
49. **INSTALL SEPARATE TYPE REAR SEAT BACK ASSEMBLY RH (for Fold Down Seat Type) (See page SE-57)**
50. **INSTALL REAR SEAT BACK ASSEMBLY (for Fixed Seat Type) (See page SE-84)**
51. **INSTALL REAR CENTER SEAT HEADREST ASSEMBLY**
52. **INSTALL REAR SEAT HEADREST ASSEMBLY**
53. **INSTALL REAR SEAT CUSHION ASSEMBLY (See page SE-58)**
54. **INSTALL FRONT SEAT ASSEMBLY LH (for Power Seat) (See page SE-41)**
55. **INSTALL SEAT TRACK COVER RH (for Power Seat) (See page SE-42)**
56. **INSTALL SEAT TRACK COVER LH (for Power Seat) (See page SE-42)**
57. **INSTALL FRONT SEAT HEADREST ASSEMBLY (for Power Seat)**
58. **INSTALL FRONT SEAT ASSEMBLY LH (for Manual Seat) (See page SE-24)**
59. **INSTALL INNER SEAT TRACK BRACKET COVER LH (for Manual Seat) (See page SE-25)**

60. **INSTALL SEAT TRACK COVER LH (for Manual Seat) (See page SE-25)**

61. **INSTALL FRONT SEAT HEADREST ASSEMBLY (for Manual Seat)**

62. **INSTALL FRONT SEAT ASSEMBLY RH (for Power Seat) (See page IR-57)**

63. **INSTALL SEAT TRACK COVER LH (for Power Seat) (See page IR-57)**

64. **INSTALL SEAT TRACK COVER RH (for Power Seat) (See page IR-57)**

65. **INSTALL FRONT SEAT HEADREST ASSEMBLY (for Power Seat)**

66. **INSTALL FRONT SEAT ASSEMBLY RH (for Manual Seat) (See page IR-57)**

67. **INSTALL INNER SEAT TRACK BRACKET COVER RH (for Manual Seat) (See page IR-58)**

68. **INSTALL SEAT TRACK COVER RH (for Manual Seat) (See page IR-58)**

69. **INSTALL FRONT SEAT HEADREST ASSEMBLY (for Manual Seat)**

70. **INSTALL NO. 2 ANTENNA CORD SUB-ASSEMBLY**
    (a) Engage the 6 clamps and clip and install the No. 2 antenna cord sub-assembly.

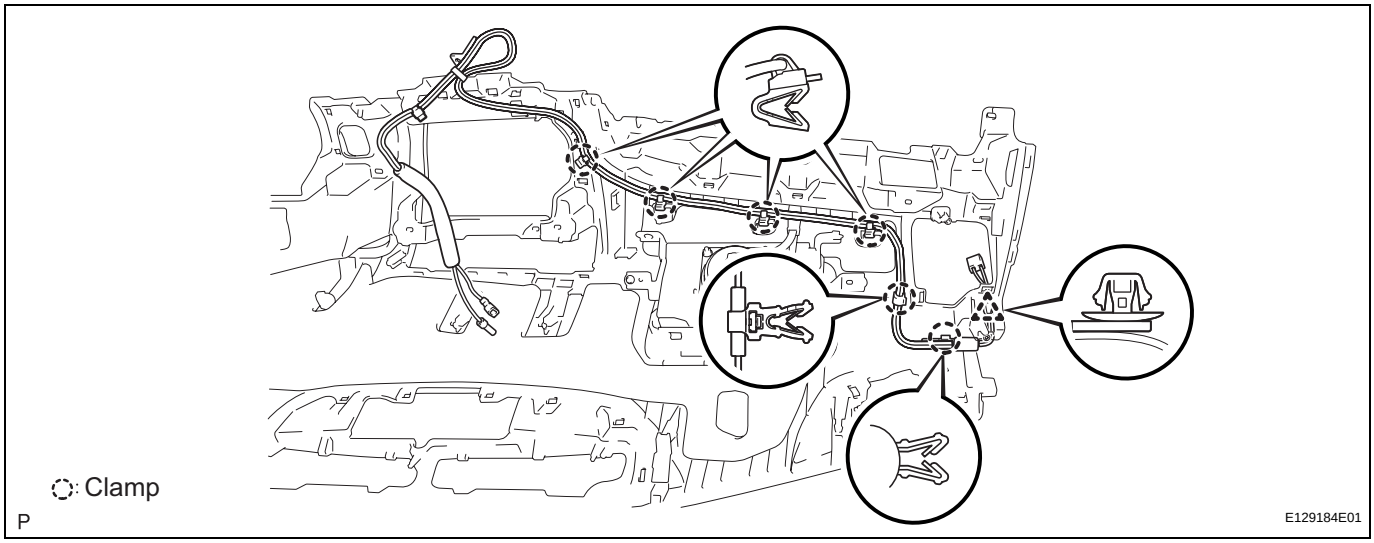

71. **INSTALL NO. 2 HEATER TO REGISTER DUCT (for TMC Made) (See page IP-41)**

72. **INSTALL NO. 2 HEATER TO REGISTER DUCT (for TMMK Made) (See page IP-41)**

73. **INSTALL NO. 3 HEATER TO REGISTER DUCT (for TMC Made) (See page IP-41)**

74. **INSTALL NO. 3 HEATER TO REGISTER DUCT (for TMMK Made) (See page IP-41)**

75. **INSTALL NO. 1 HEATER TO REGISTER DUCT (for TMC Made) (See page IP-42)**
76. **INSTALL NO. 1 HEATER TO REGISTER DUCT (for TMMK Made) (See page IP-42)**
77. **INSTALL DEFROSTER NOZZLE ASSEMBLY (for TMC Made) (See page IP-42)**
78. **INSTALL DEFROSTER NOZZLE ASSEMBLY (for TMMK Made) (See page IP-42)**
79. **INSTALL SIDE NO. 2 DEFROSTER NOZZLE DUCT (for TMC Made) (See page IP-42)**
80. **INSTALL SIDE NO. 2 DEFROSTER NOZZLE DUCT (for TMMK Made) (See page IP-43)**
81. **INSTALL SIDE NO. 1 DEFROSTER NOZZLE DUCT (for TMC Made) (See page IP-43)**
82. **INSTALL SIDE NO. 1 DEFROSTER NOZZLE DUCT (for TMMK Made) (See page IP-43)**
83. **INSTALL INSTRUMENT PANEL SAFETY PAD ASSEMBLY (for TMC Made) (See page IP-44)**
84. **INSTALL INSTRUMENT PANEL SAFETY PAD ASSEMBLY (for TMMK Made) (See page IP-45)**
85. **INSTALL NO. 1 DEFROSTER NOZZLE GARNISH (See page IP-48)**
86. **INSTALL FRONT NO. 2 SPEAKER ASSEMBLY (for LH Side) (See page AV-156)**
87. **INSTALL INSTRUMENT PANEL NO. 1 SPEAKER PANEL SUB-ASSEMBLY (See page IP-48)**
88. **INSTALL INSTRUMENT PANEL NO. 1 REGISTER ASSEMBLY (See page IP-48)**
89. **INSTALL FRONT PILLAR GARNISH LH (See page IR-51)**
90. **INSTALL FRONT NO. 2 SPEAKER ASSEMBLY (for RH Side)**
    HINT:
    Use the same procedures for the RH side and the LH side (See page AV-156).
91. **INSTALL INSTRUMENT PANEL NO. 2 SPEAKER PANEL SUB-ASSEMBLY (See page IP-49)**
92. **INSTALL INSTRUMENT PANEL NO. 3 REGISTER ASSEMBLY (See page IP-49)**
93. **INSTALL FRONT PILLAR GARNISH RH (See page IR-52)**
94. **INSTALL NO. 1 CONSOLE BOX INSERT FRONT (for TMC Made) (See page IP-49)**
95. **INSTALL NO. 1 CONSOLE BOX INSERT FRONT (for TMMK Made) (See page IP-50)**

96. **INSTALL NO. 2 CONSOLE BOX INSERT FRONT (for TMC Made) (See page IP-50)**
97. **INSTALL NO. 2 CONSOLE BOX INSERT FRONT (for TMMK Made) (See page IP-50)**
98. **INSTALL CONSOLE BOX ASSEMBLY (for TMC Made) (See page IP-51)**
99. **INSTALL CONSOLE BOX ASSEMBLY (for TMMK Made) (See page IP-51)**
100. **INSTALL CONSOLE BOX CARPET (See page IP-51)**
101. **INSTALL CONSOLE BOX POCKET (See page IP-51)**
102. **INSTALL RADIO RECEIVER WITH HEATER CONTROL PANEL ASSEMBLY (w/o Navigation System) (See page AV-147)**
103. **INSTALL NAVIGATION RECEIVER WITH HEATER CONTROL PANEL ASSEMBLY (w/ Navigation System) (See page NS-196)**
104. **INSTALL INSTRUMENT PANEL NO. 2 REGISTER ASSEMBLY (See page IP-52)**
105. **INSTALL UPPER CONSOLE PANEL SUB-ASSEMBLY (for TMC Made) (See page IP-52)**
106. **INSTALL UPPER CONSOLE PANEL SUB-ASSEMBLY (for TMMK Made) (See page IP-52)**
107. **INSTALL UPPER CONSOLE REAR PANEL SUB-ASSEMBLY (for Automatic Transaxle) (See page IP-53)**
108. **INSTALL UPPER CONSOLE REAR PANEL SUB-ASSEMBLY (for Manual Transaxle) (See page IP-53)**
109. **INSTALL FLOOR SHIFT POSITION INDICATOR HOUSING SUB-ASSEMBLY (for Automatic Transaxle) (See page IP-53)**
110. **INSTALL UPPER CONSOLE PANEL (for Manual Transaxle) (See page IP-54)**
111. **INSTALL NO. 2 INSTRUMENT CLUSTER FINISH PANEL GARNISH (See page IP-54)**
112. **INSTALL NO. 1 INSTRUMENT CLUSTER FINISH PANEL GARNISH (See page IP-55)**
113. **INSTALL SHIFT LEVER KNOB SUB-ASSEMBLY (for Automatic Transaxle) (See page IP-55)**
114. **INSTALL SHIFT LEVER KNOB SUB-ASSEMBLY (for Manual Transaxle) (See page IP-55)**
115. **INSTALL LOWER INSTRUMENT PANEL SUB-ASSEMBLY (for TMC Made) (See page IP-55)**
116. **INSTALL LOWER INSTRUMENT PANEL SUB-ASSEMBLY (for TMMK Made) (See page IP-56)**

117. INSTALL INSTRUMENT PANEL NO. 2 UNDER COVER SUB-ASSEMBLY (See page IP-56)
118. INSTALL COWL SIDE TRIM SUB-ASSEMBLY RH (See page IR-55)
119. INSTALL FRONT DOOR SCUFF PLATE RH (See page IR-55)
120. INSTALL COMBINATION METER ASSEMBLY (for TMC Made) (See page IP-56)
121. INSTALL COMBINATION METER ASSEMBLY (for TMMK Made) (See page IP-56)
122. INSTALL INSTRUMENT CLUSTER FINISH PANEL (See page IP-57)
123. INSTALL LOWER INSTRUMENT PANEL FINISH PANEL (w/o Smart Key System) (See page IP-57)
124. INSTALL LOWER INSTRUMENT PANEL FINISH PANEL (w/ Smart Key System) (See page IP-57)
125. INSTALL NO. 1 INSTRUMENT PANEL SUB-ASSEMBLY (See page IP-57)
126. INSTALL TURN SIGNAL SWITCH ASSEMBLY WITH SPIRAL CABLE SUB-ASSEMBLY
127. ADJUST SPIRAL CABLE SUB-ASSEMBLY (See page RS-367)
128. INSTALL STEERING COLUMN COVER (for TMC Made) (See page IP-58)
129. INSTALL STEERING COLUMN COVER (for TMMK Made) (See page IP-58)
130. INSTALL LOWER INSTRUMENT PANEL FINISH PANEL LH (for TMC Made) (See page IP-58)
131. INSTALL LOWER INSTRUMENT PANEL FINISH PANEL LH (for TMMK Made) (See page IP-59)
132. INSTALL COWL SIDE TRIM SUB-ASSEMBLY LH (See page IR-54)
133. INSTALL FRONT DOOR SCUFF PLATE LH (See page IR-54)
134. INSTALL STEERING WHEEL ASSEMBLY (See page SR-51)
135. INSTALL STEERING PAD (See page RS-350)
136. INSTALL LOWER NO. 3 STEERING WHEEL COVER (See page RS-351)
137. INSTALL LOWER NO. 2 STEERING WHEEL COVER (See page RS-352)
138. CONNECT CABLE TO NEGATIVE BATTERY TERMINAL
139. INSPECT FRONT SEAT ASSEMBLY

140. INSPECT FRONT SEAT ADJUSTER ASSEMBLY

141. INSPECT STEERING PAD (See page RS-352)

142. PERFORM ZERO POINT CALIBRATION AND SENSITIVITY CHECK (for Front Passenger Seat)
(See page RS-242)

143. INSPECT SRS WARNING LIGHT
(See page RS-32)

RADIO ANTENNA CORD

COMPONENTS

for TMC Made:

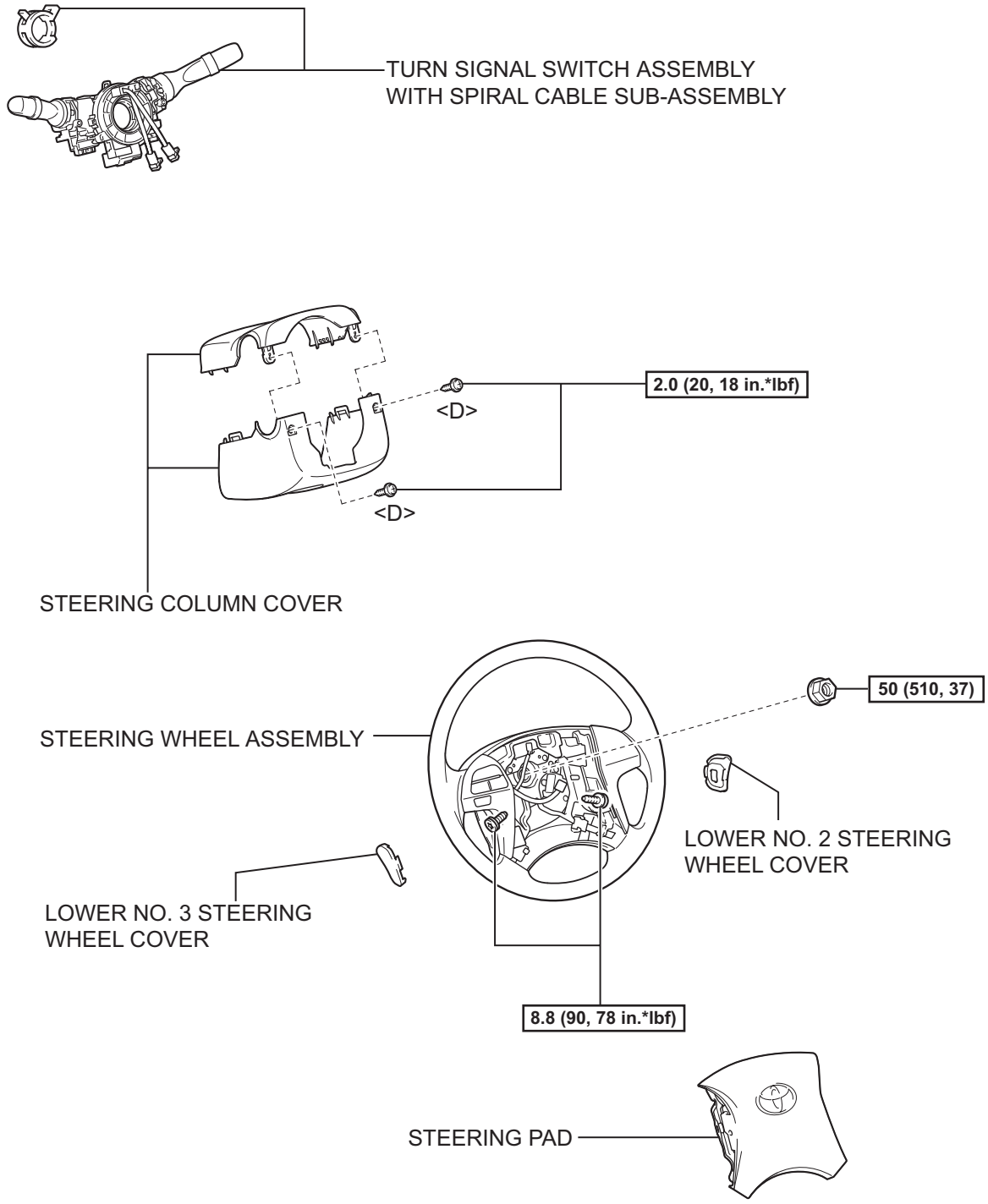

N*m (kgf*cm, ft.*lbf) : Specified torque

P

B137279E01

for TMMK Made:

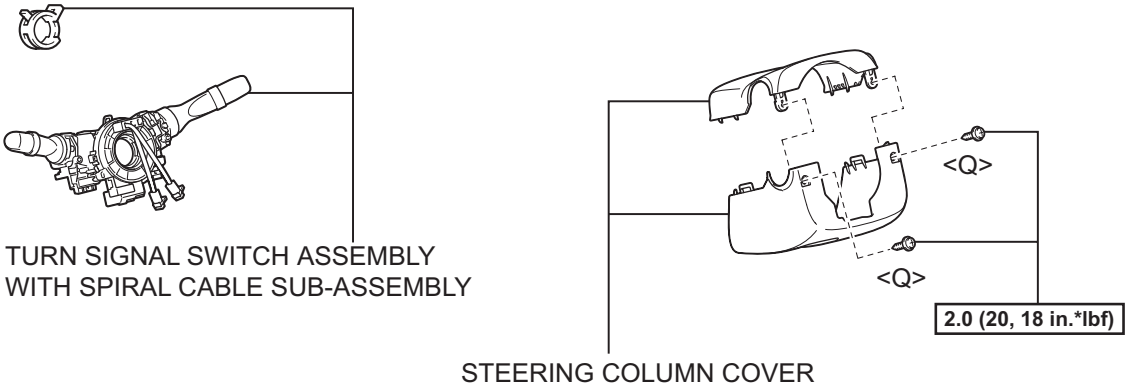

for 4 Spoke:

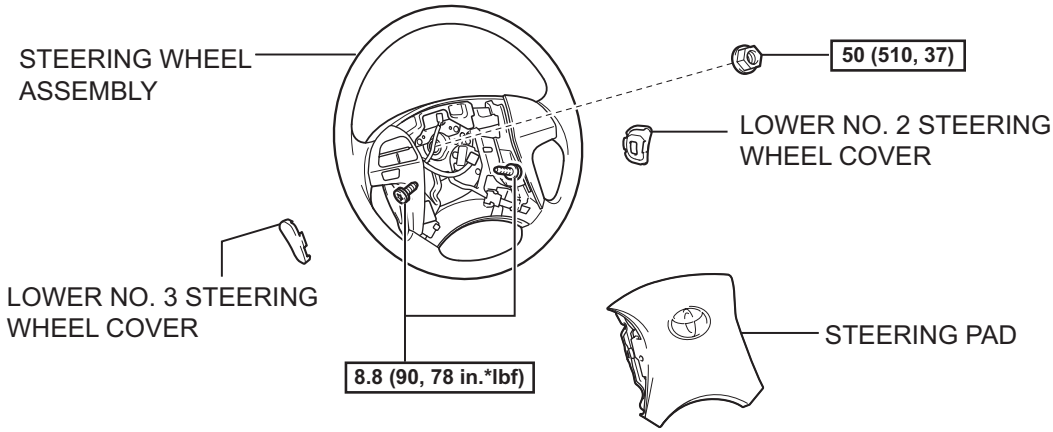

for 3 Spoke:

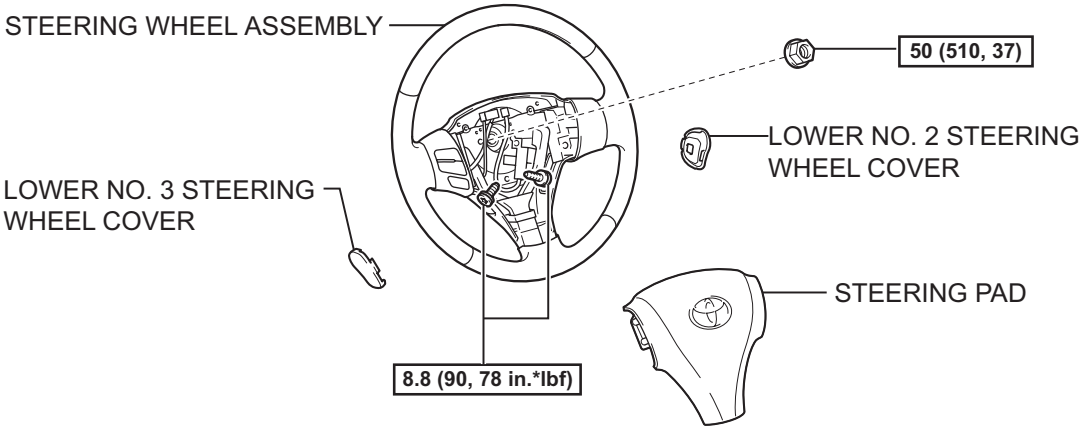

N*m (kgf*cm, ft.*lbf) : Specified torque

P

B137280E01

AV

for TMC Made:

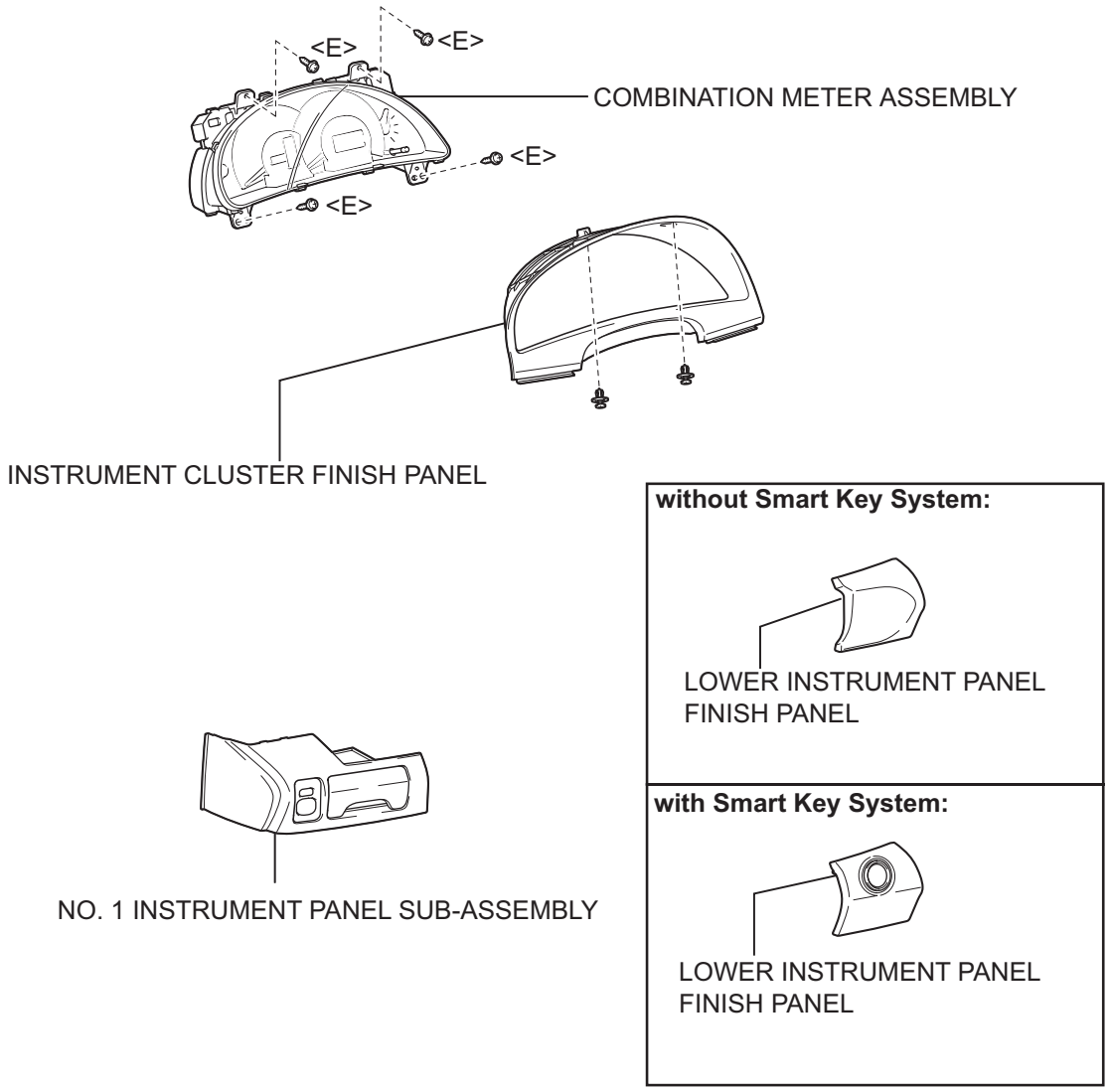

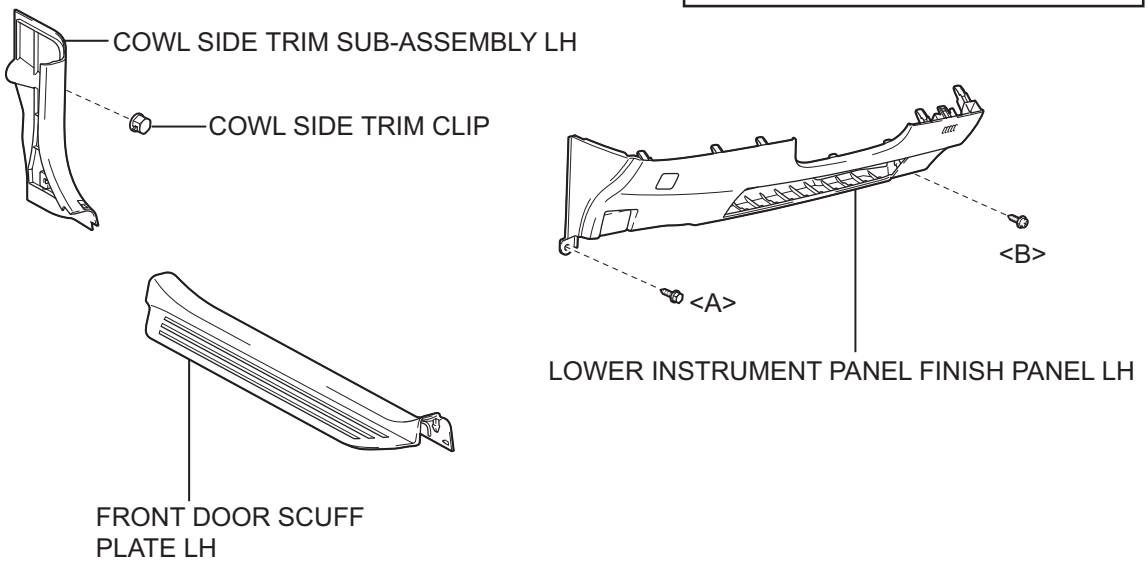

AV

P

B137281E01

for TMMK Made:

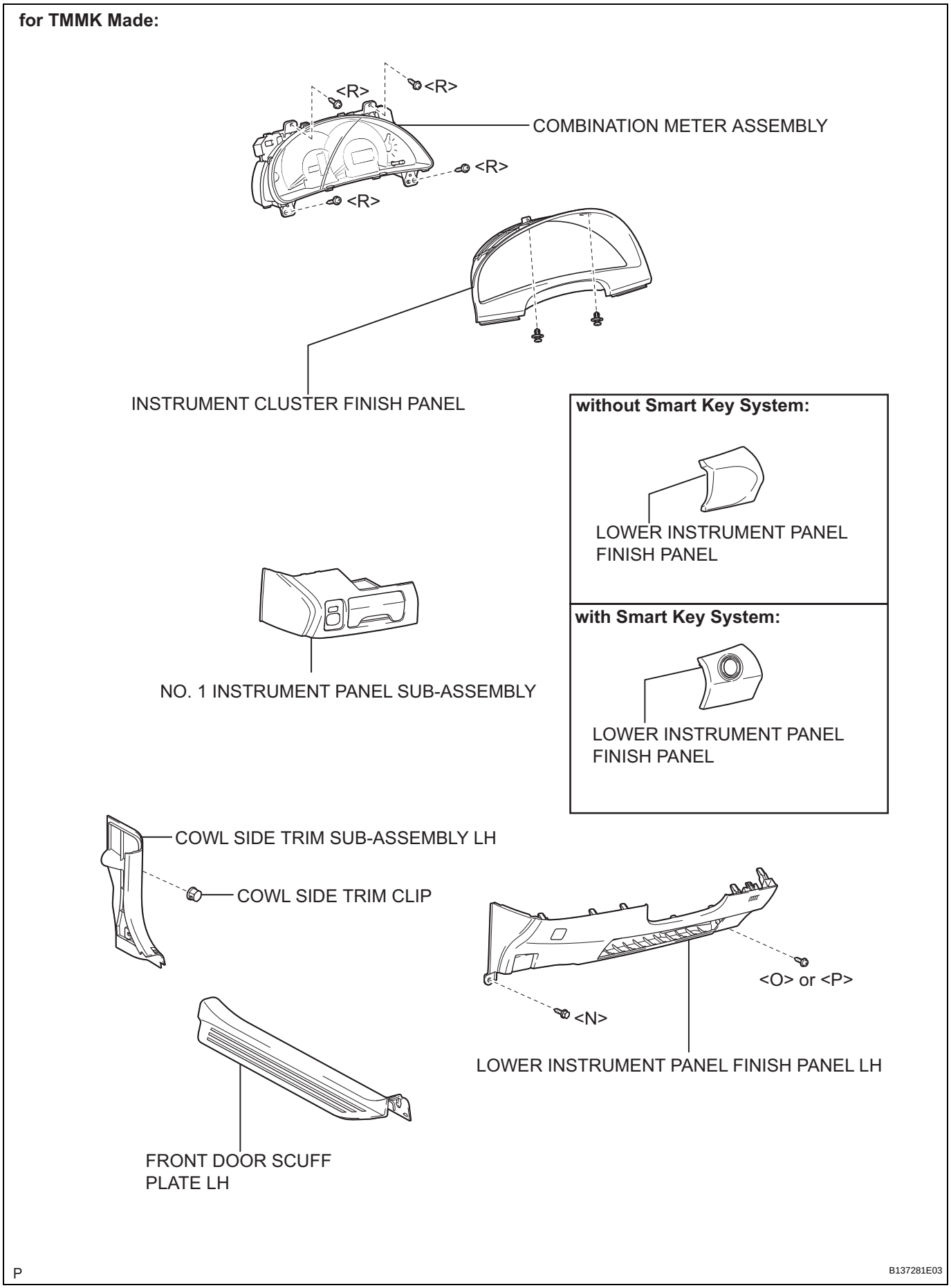

AV

for TMC Made:

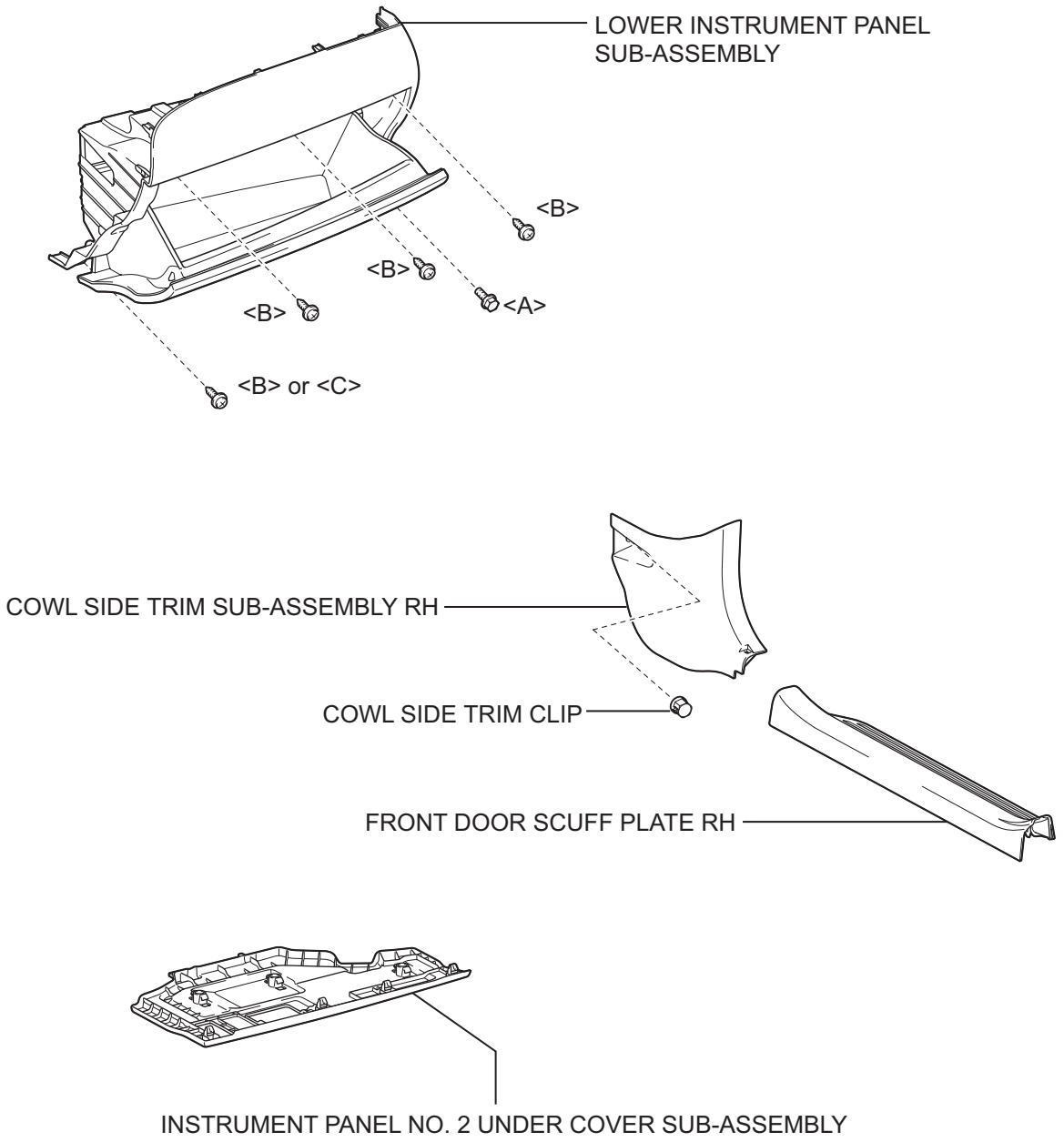

P

B137282E01

for TMMK Made:

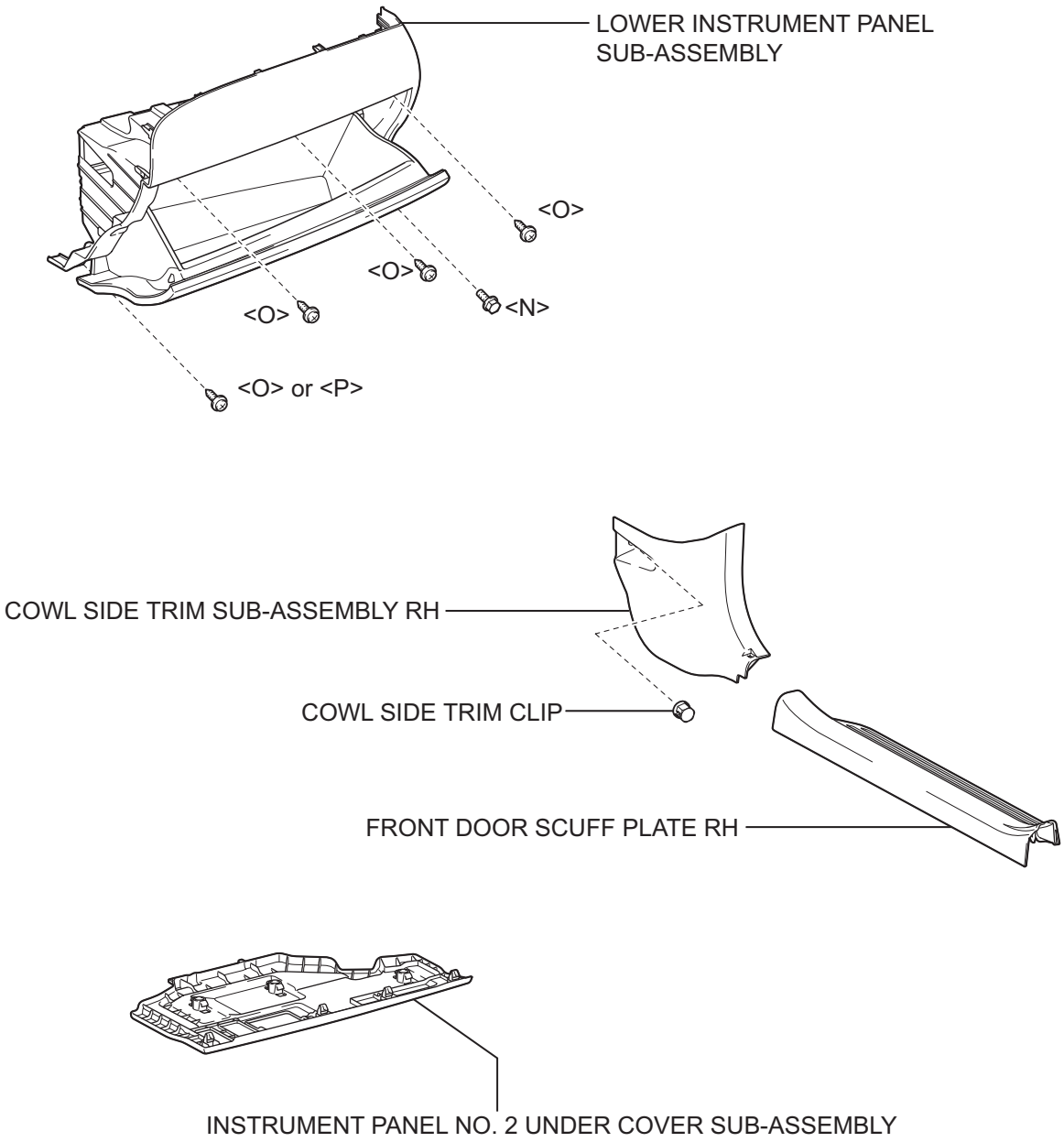

P

B137282E03

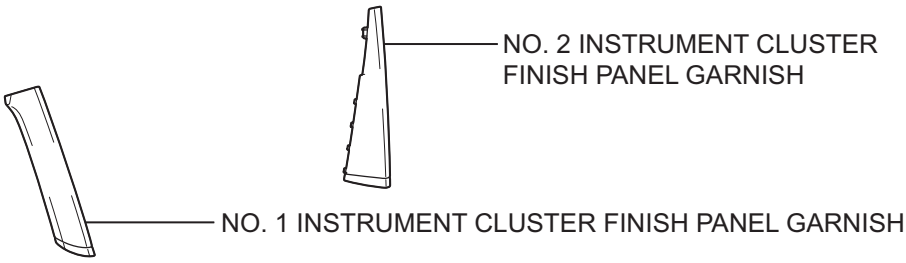

for Automatic Transaxle:

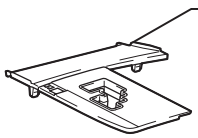

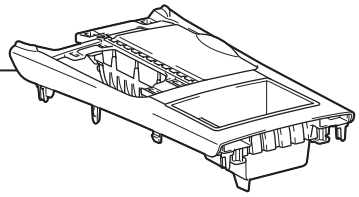

for Manual Transaxle:

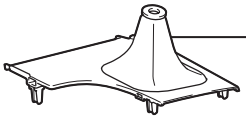

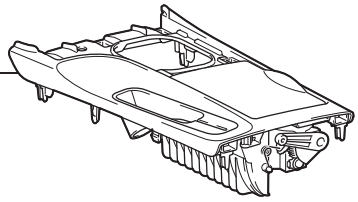

AV

P

B137283E01

for TMC Made:

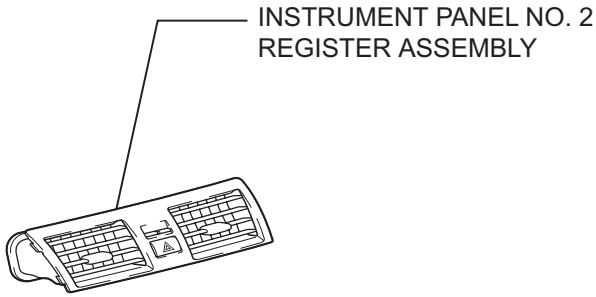

without Navigation System:

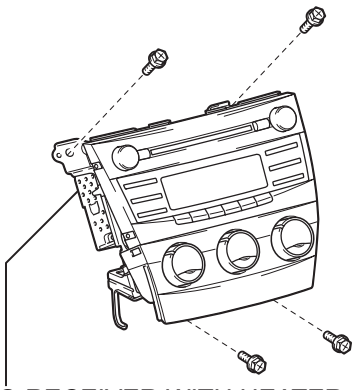

with Navigation System:

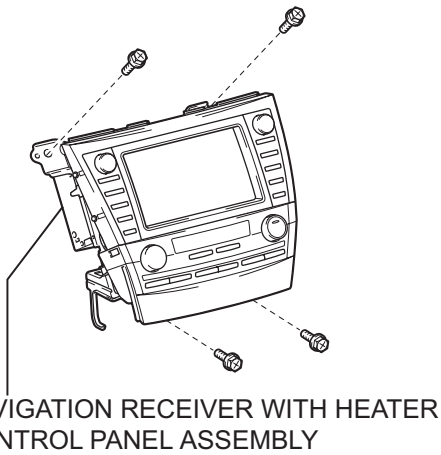

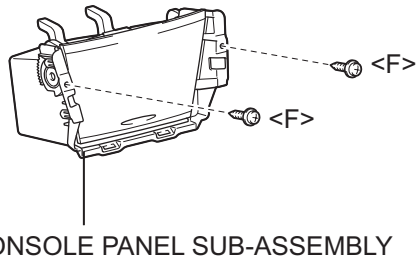

AV

P

B137284E01

for TMMK Made:

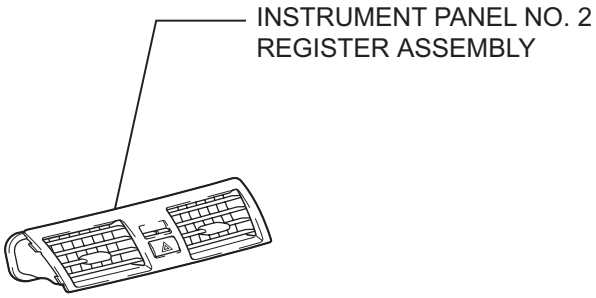

without Navigation System:

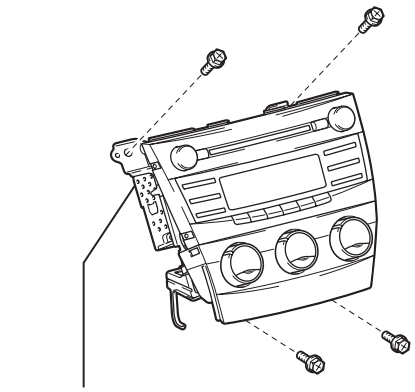

with Navigation System:

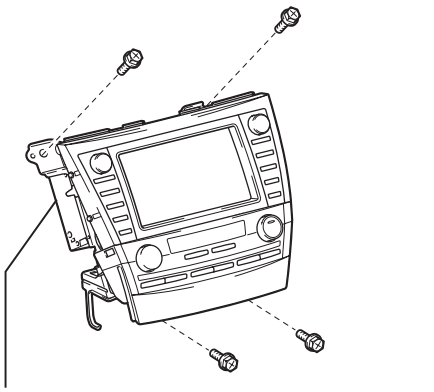

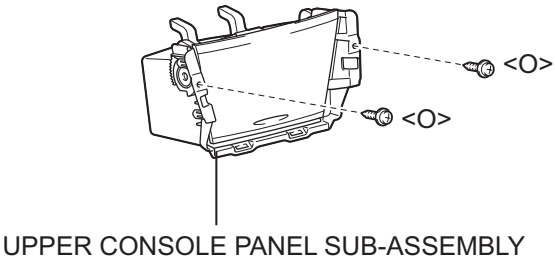

AV

P

B137284E03

for TMC Made:

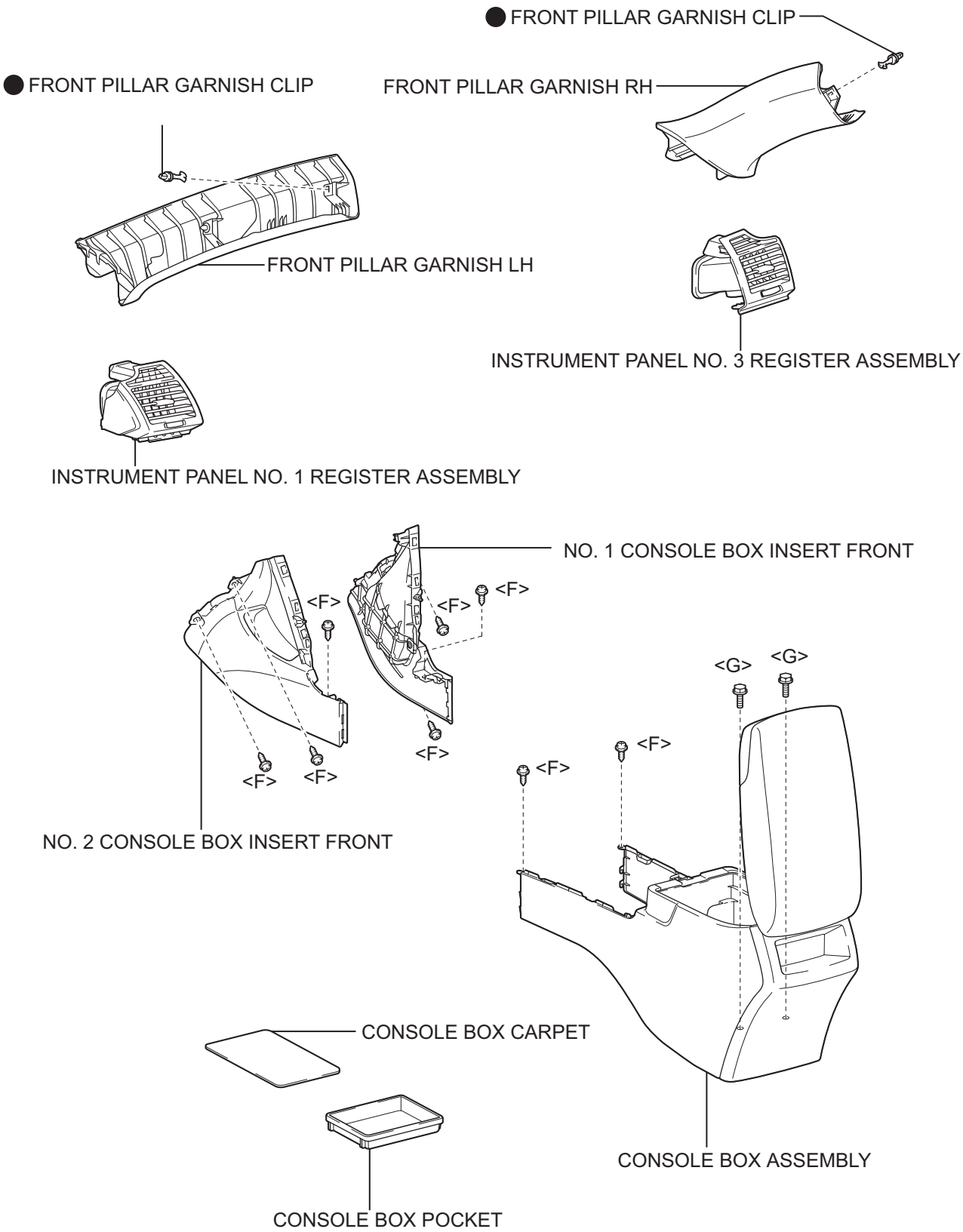

● Non-reusable part

P

B137285E01

for TMMK Made:

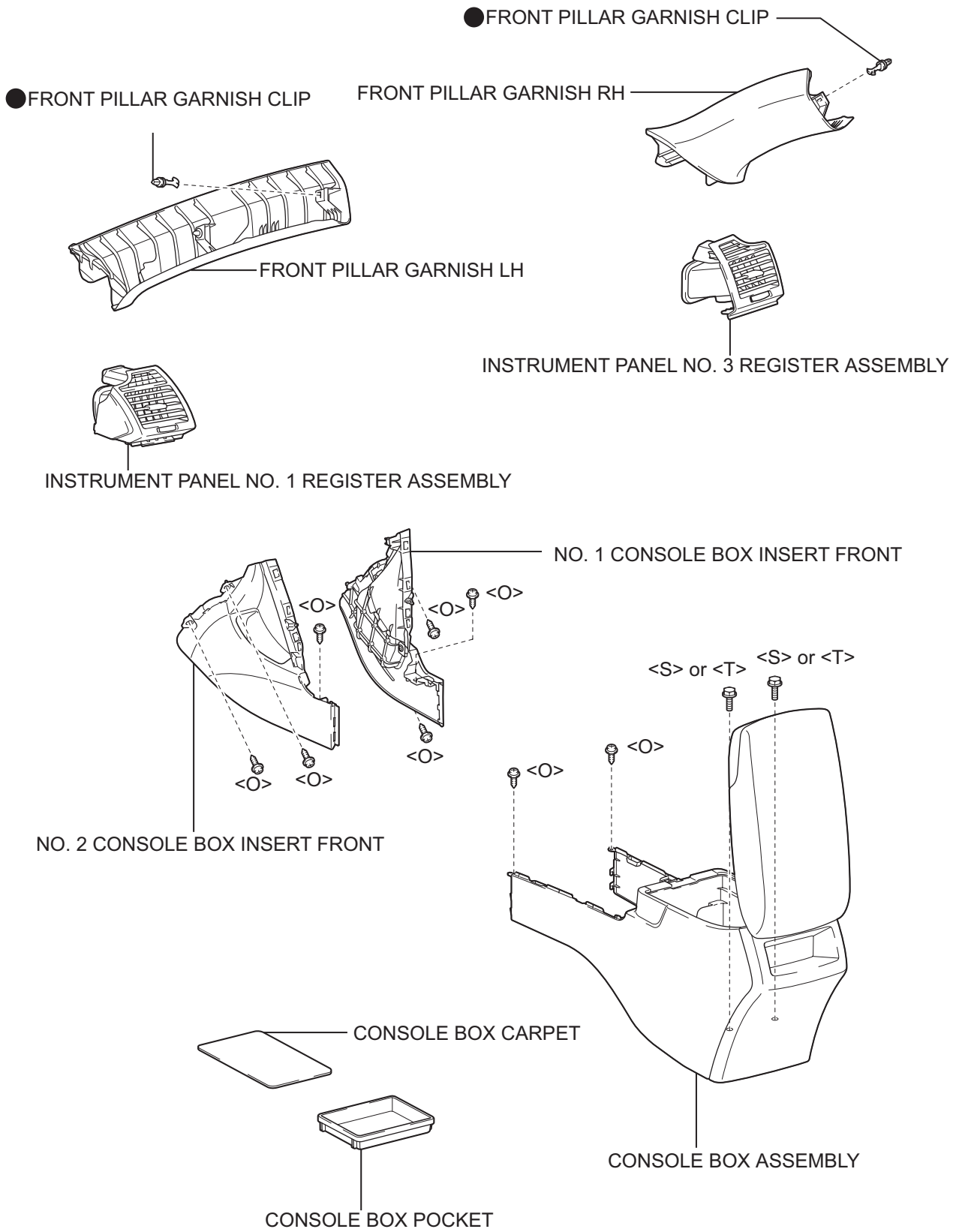

● Non-reusable part

P

B137285E03

AV

for TMC Made:

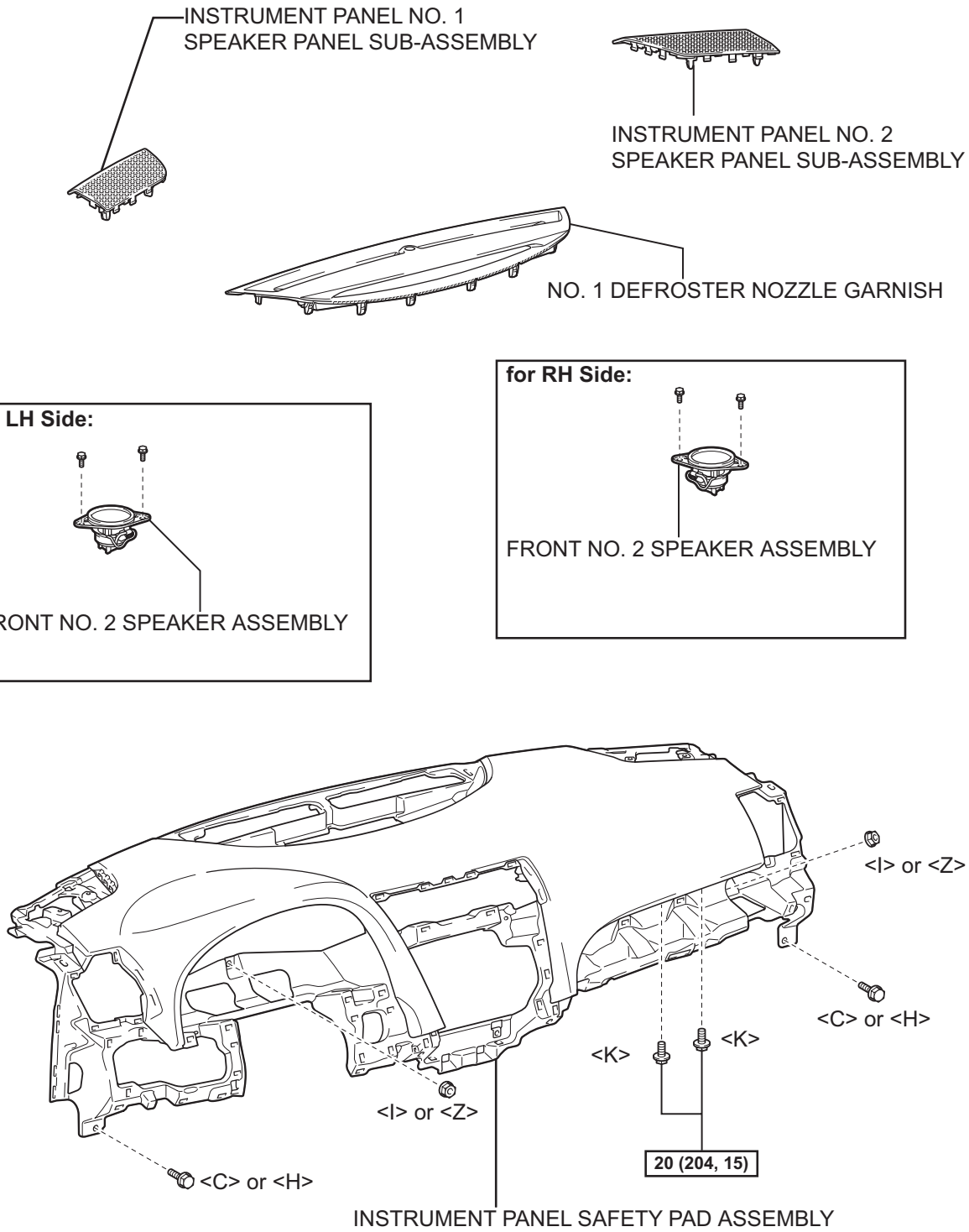

N*m (kgf*cm, ft.*lbf) : Specified torque

P

B137286E01

for TMMK Made:

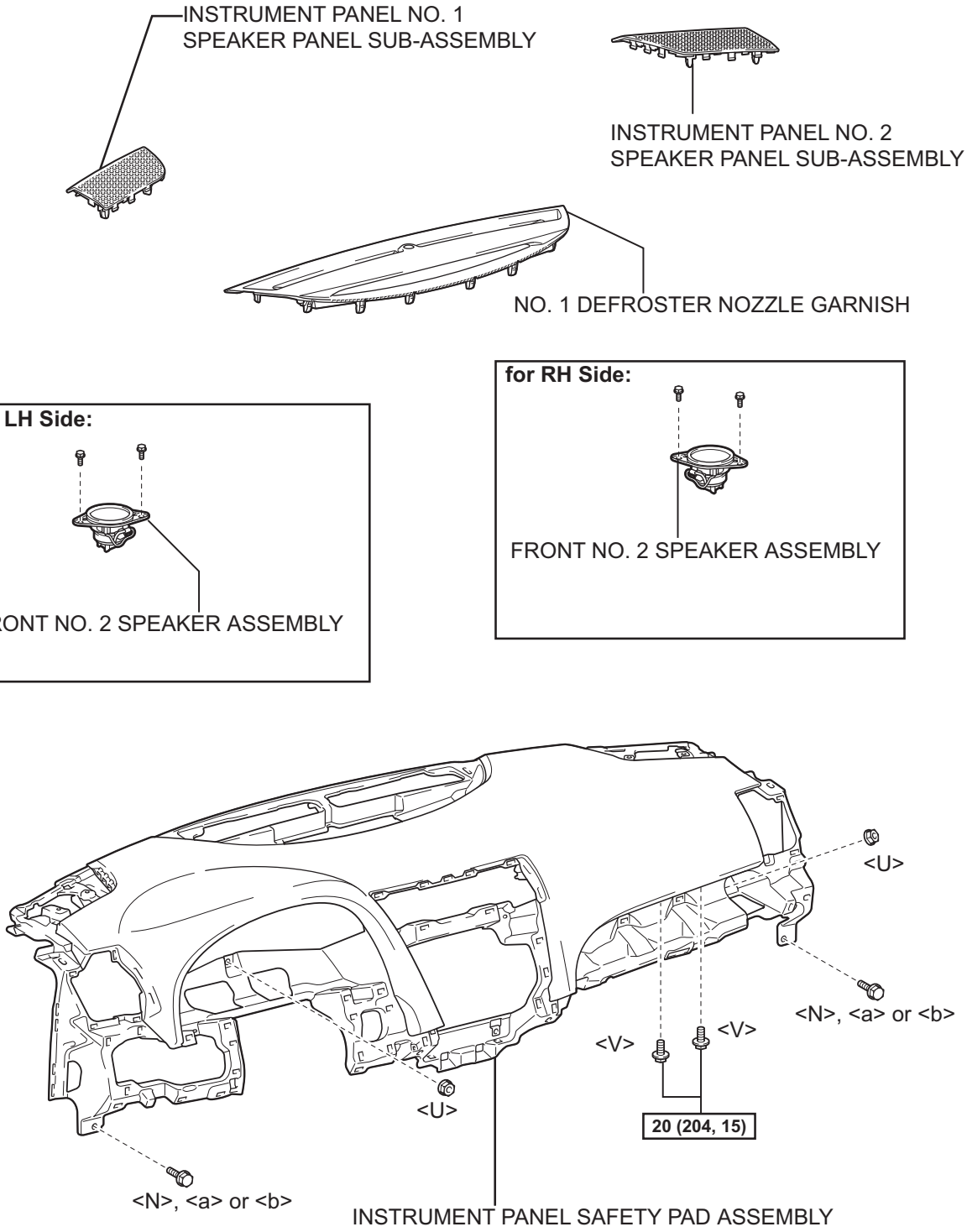

N*m (kgf*cm, ft.*lbf) : Specified torque

P

B137286E03

AV

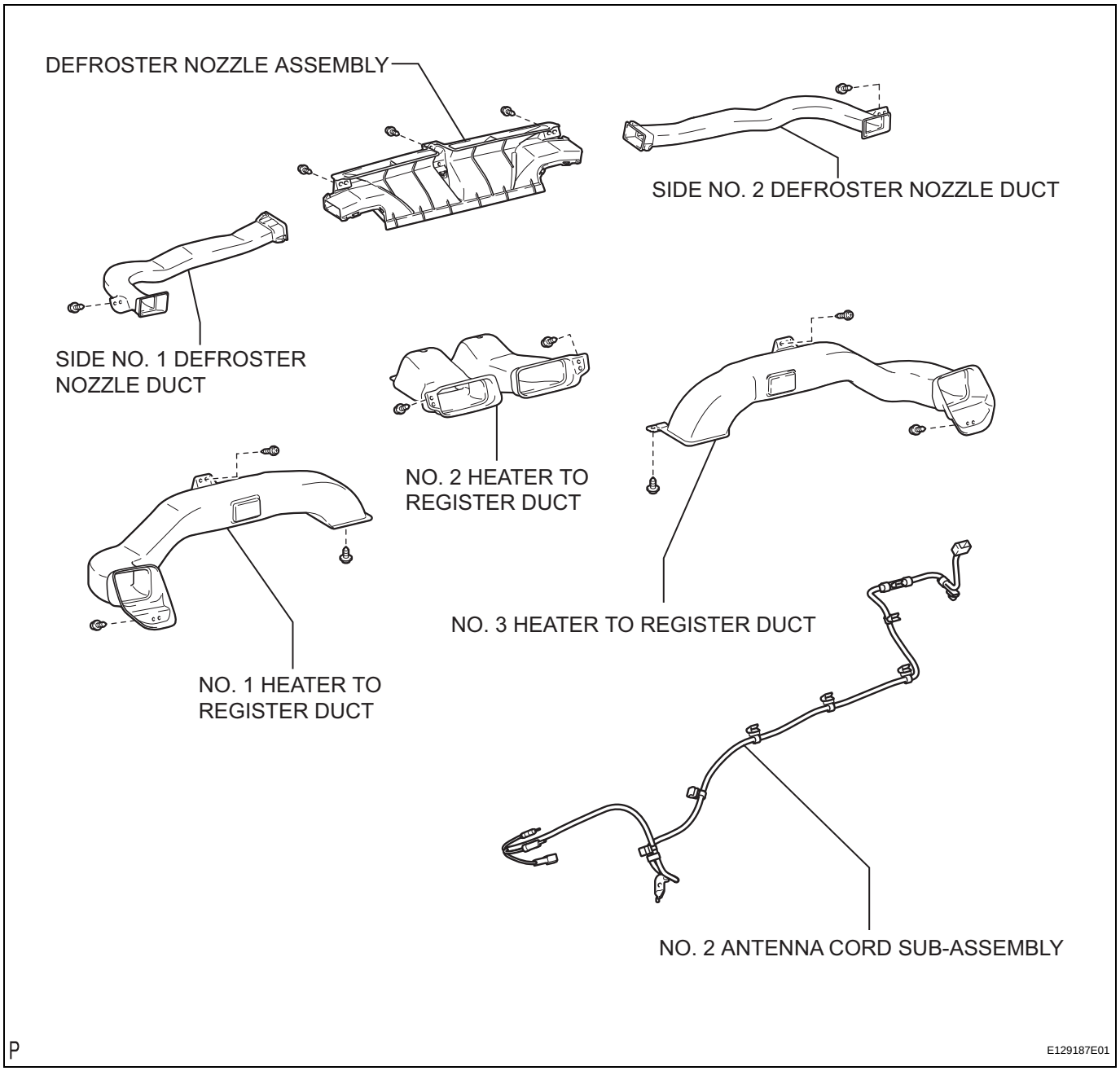
DEFROSTER NOZZLE ASSEMBLY
SIDE NO. 2 DEFROSTER NOZZLE DUCT
SIDE NO. 1 DEFROSTER NOZZLE DUCT
NO. 2 HEATER TO REGISTER DUCT
NO. 3 HEATER TO REGISTER DUCT
NO. 1 HEATER TO REGISTER DUCT
NO. 2 ANTENNA CORD SUB-ASSEMBLY
P
E129187E01

for Manual Seat:

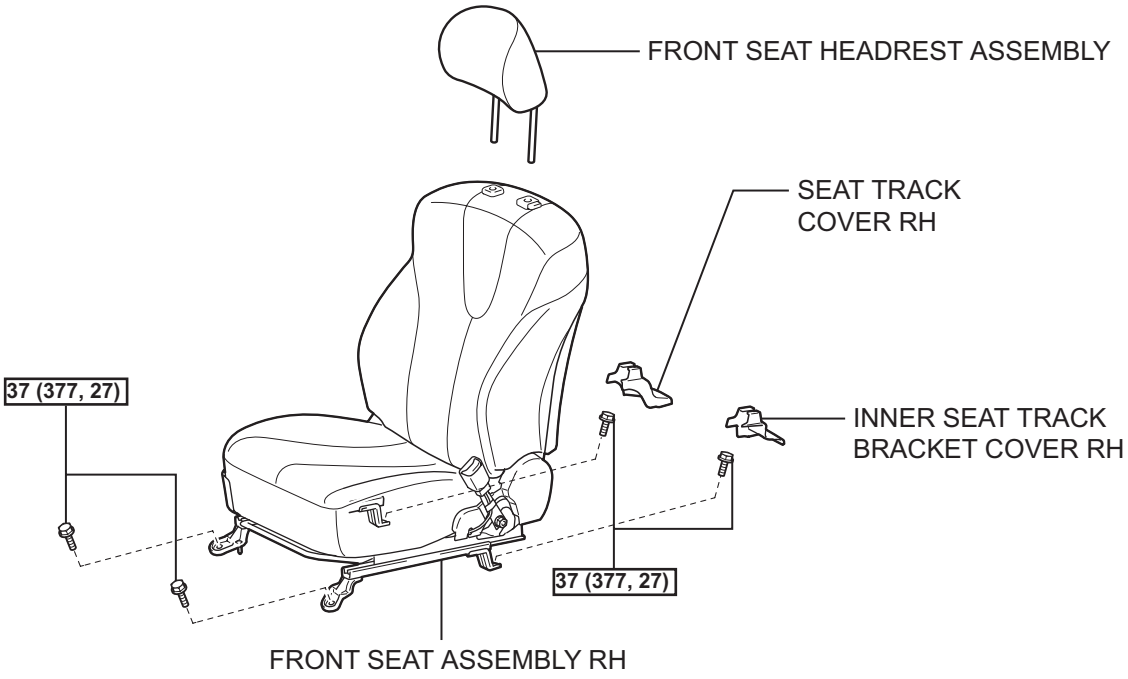

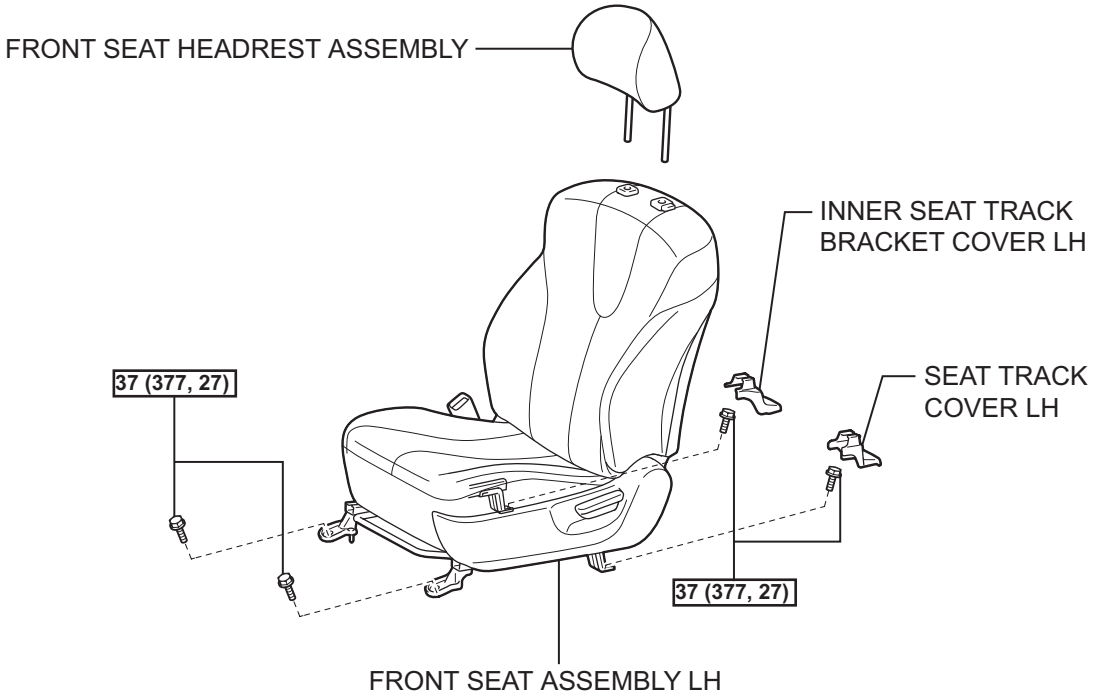

N*m (kgf*cm, ft.*lbf) : Specified torque

P

B132048E01

AV

for Power Seat:

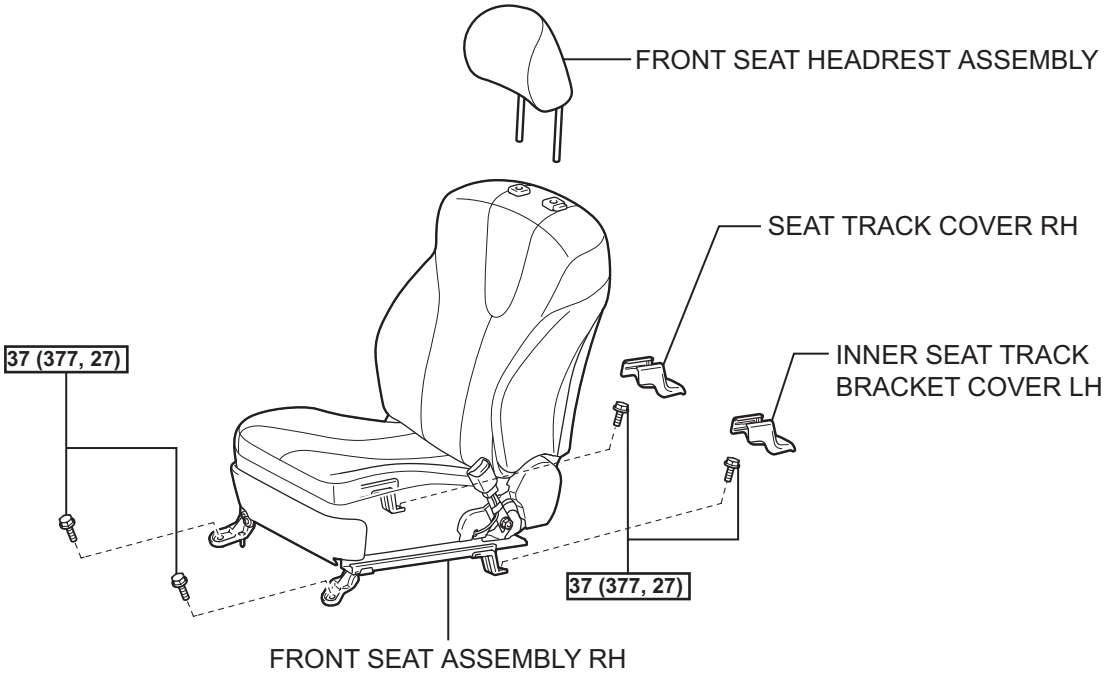

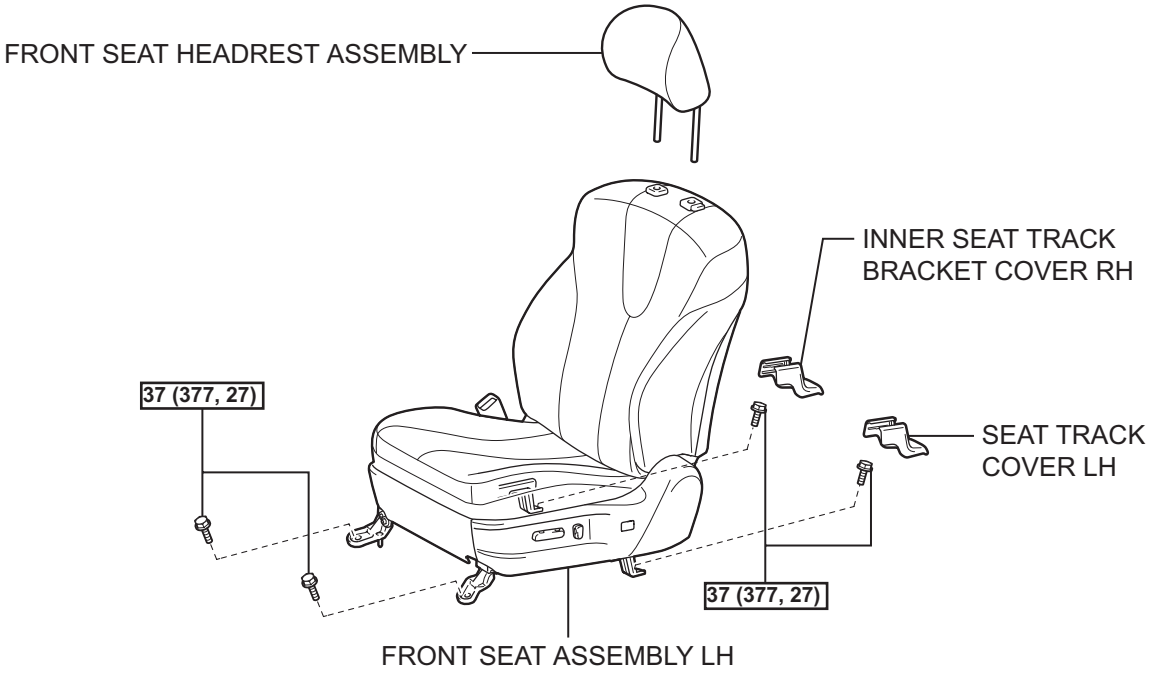

N*m (kgf*cm, ft.*lbf) : Specified torque

P

B132047E01

AV

for Fixed Seat Type:

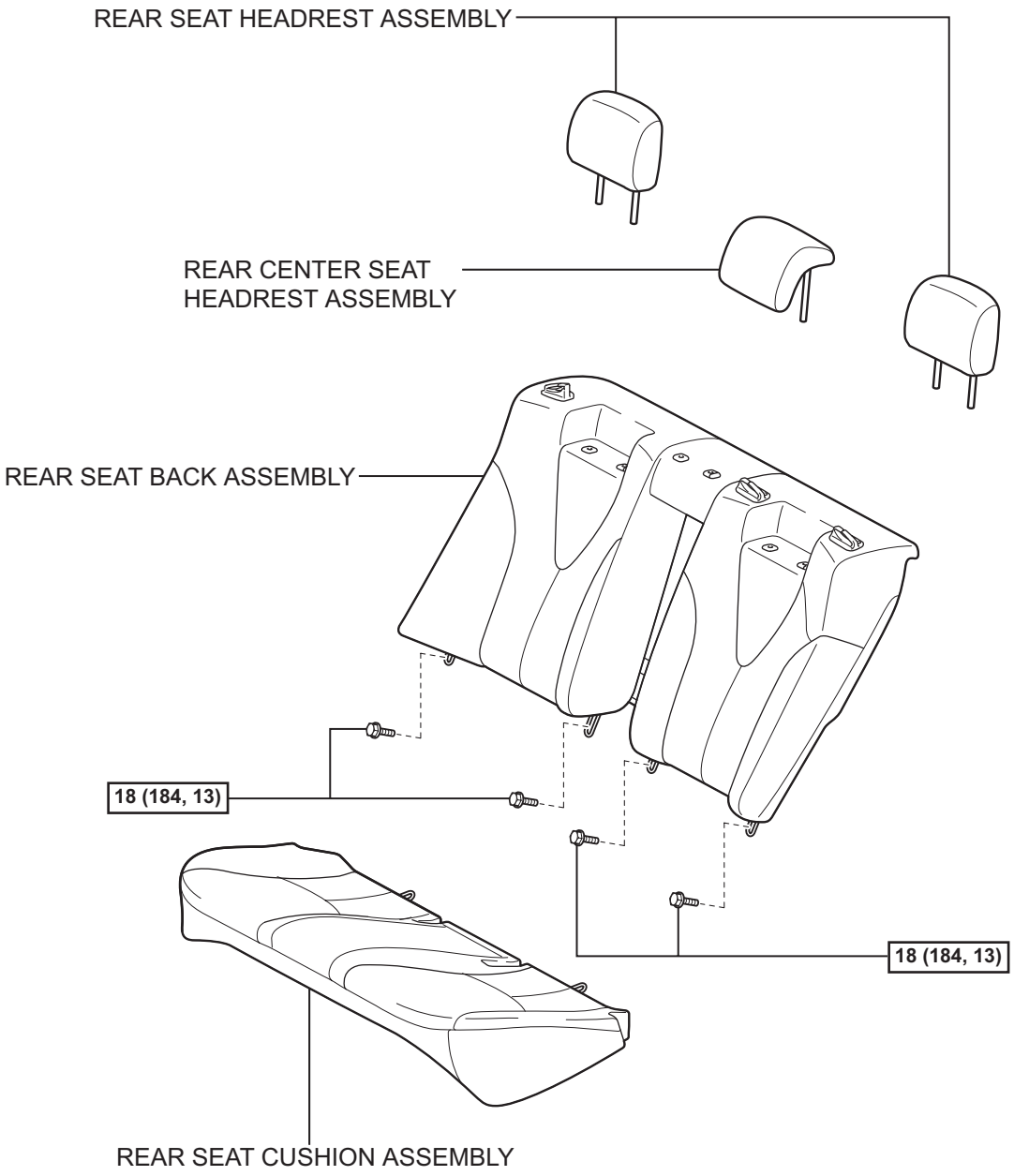

AV

N*m (kgf*cm, ft.*lbf) : Specified torque

P

B136589E02

for Fold Down Seat Type:

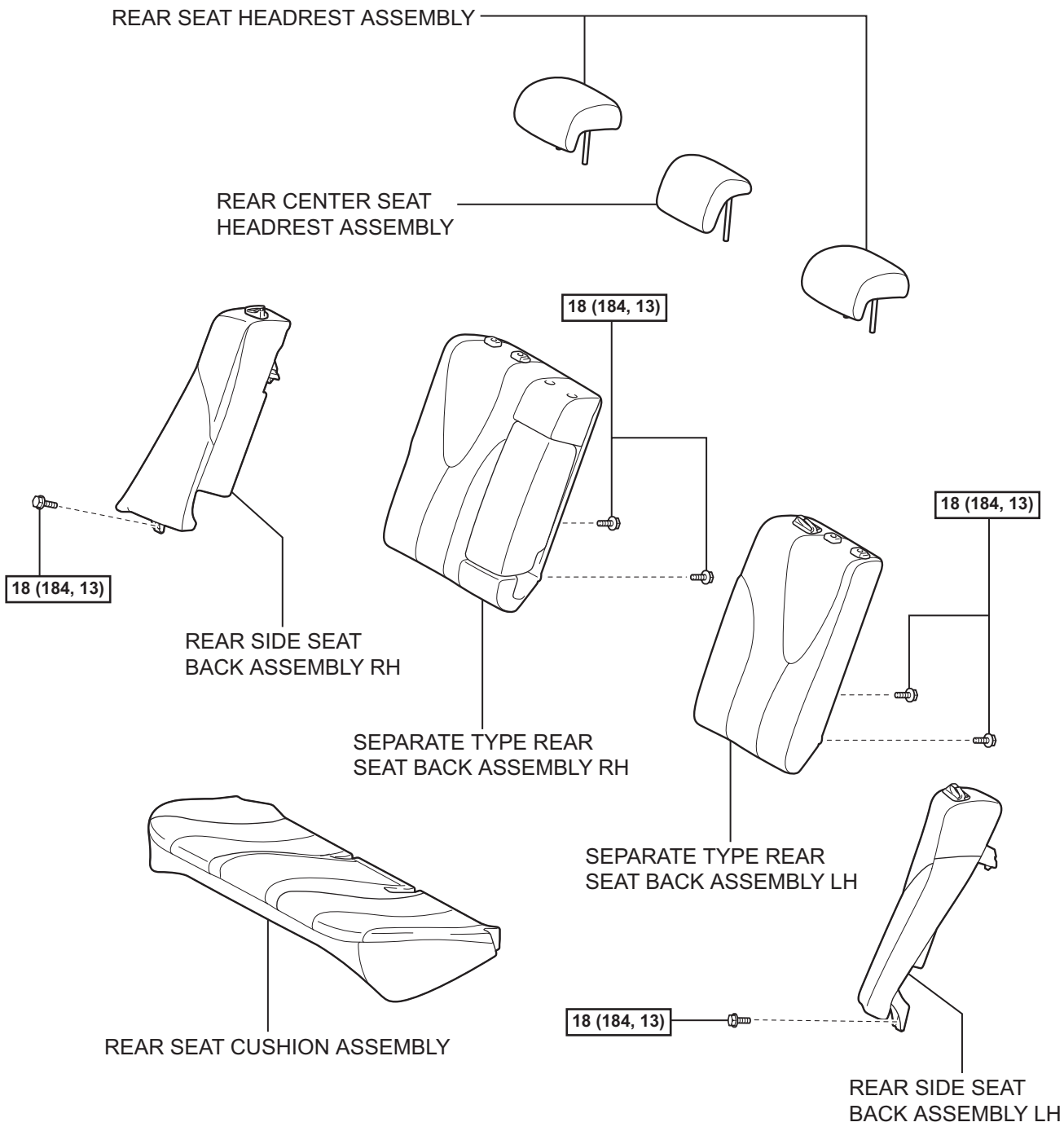

N*m (kgf*cm, ft.*lbf) : Specified torque

P

B136564E02

AV

for Reclining Seat Type:

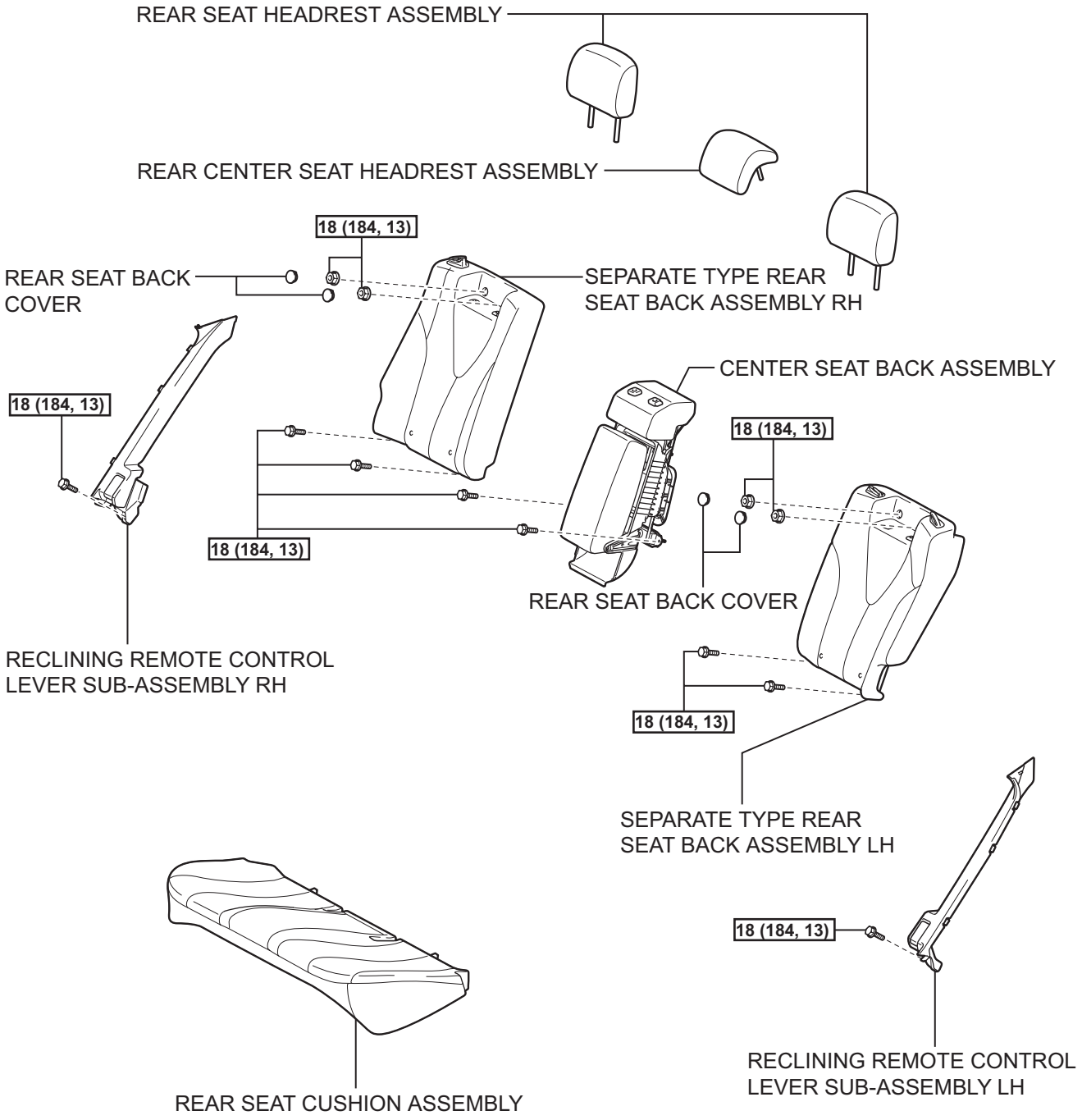

AV

N*m (kgf*cm, ft.*lbf) : Specified torque

P

B139577E01

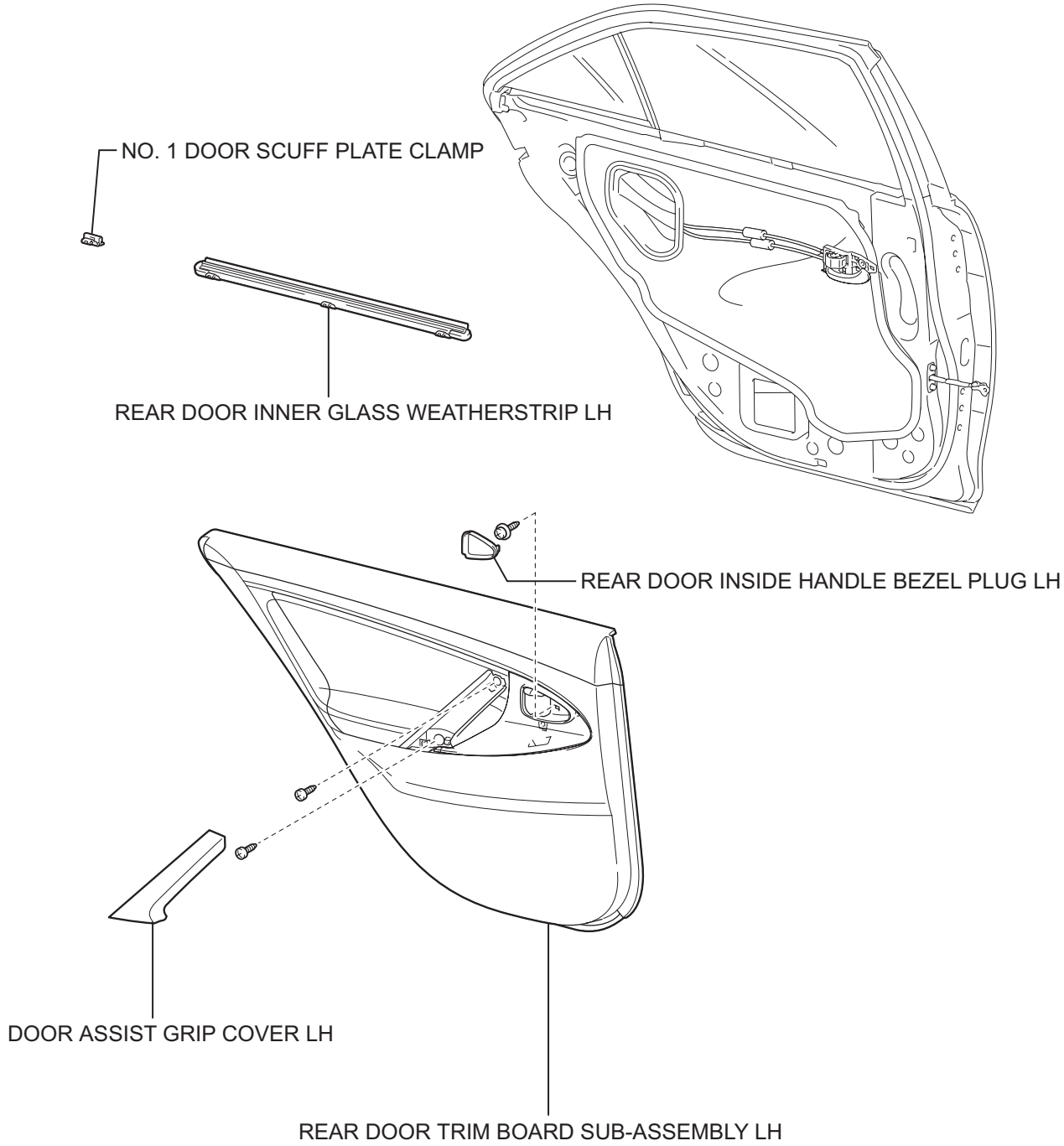

P

B139576E01

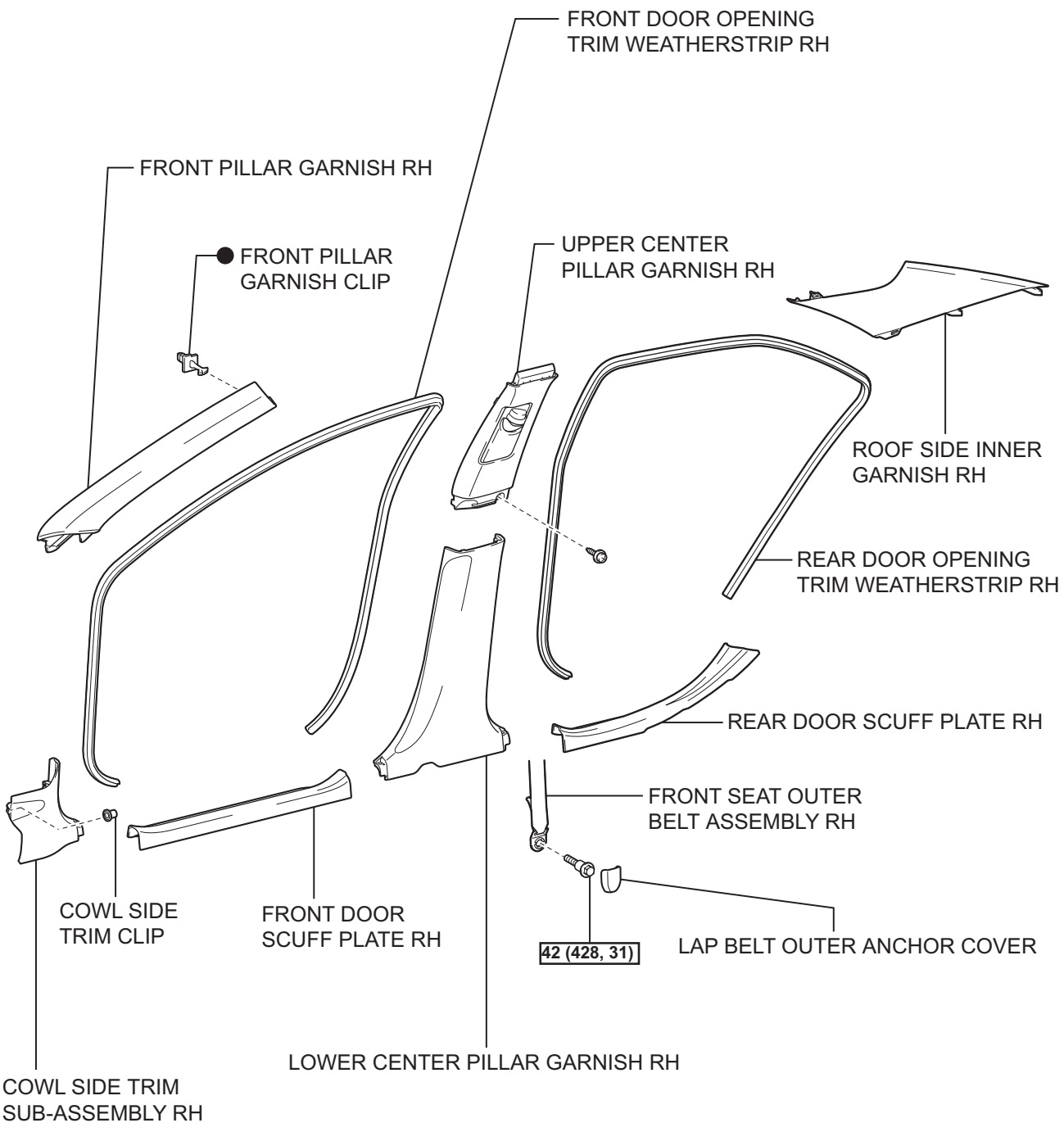

N*m (kgf*cm, ft.*lbf) : Specified torque

● Non-reusable part

P

B132050E01

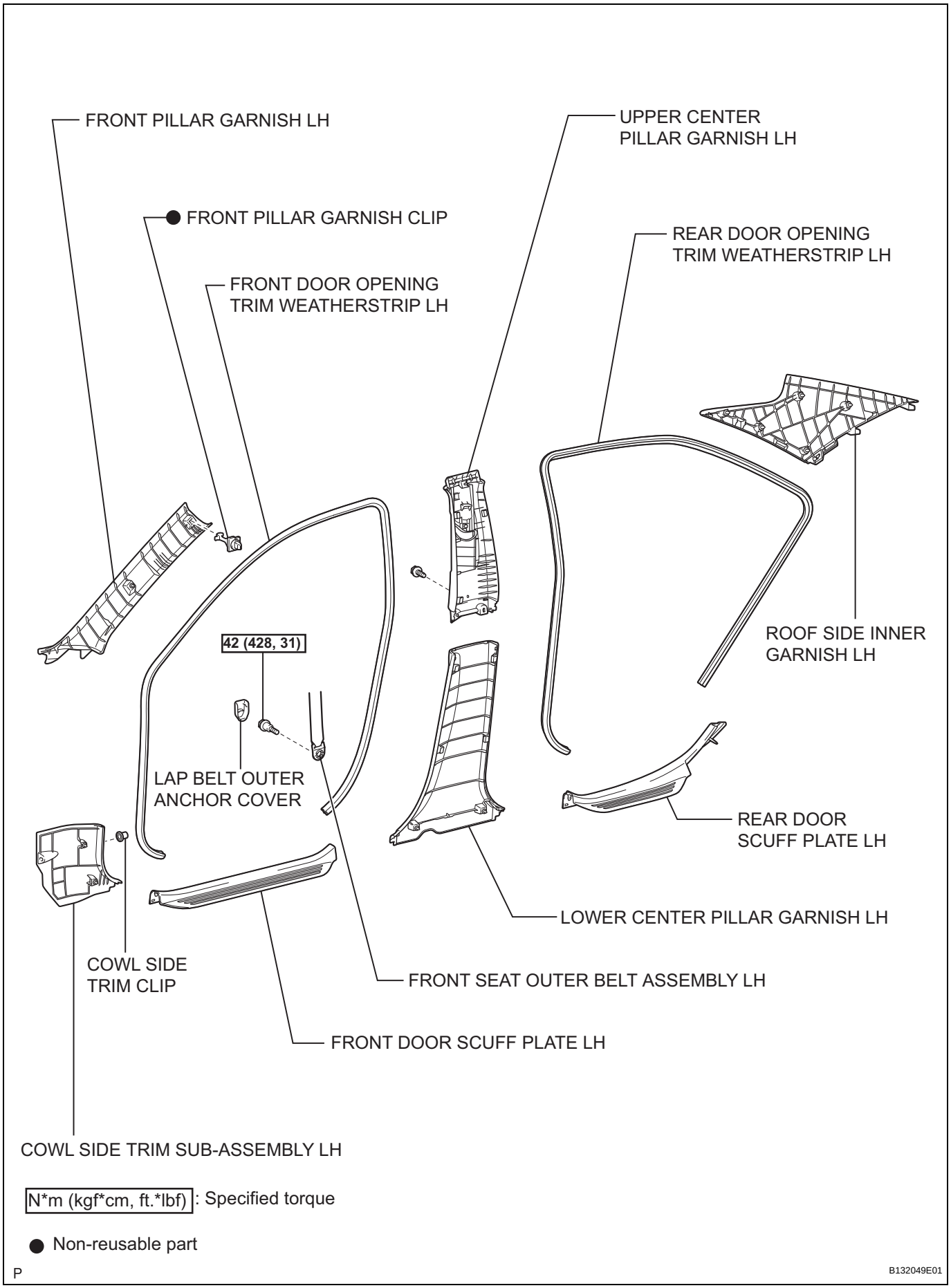
FRONT PILLAR GARNISH LH
UPPER CENTER PILLAR GARNISH LH
● FRONT PILLAR GARNISH CLIP
REAR DOOR OPENING TRIM WEATHERSTRIP LH
FRONT DOOR OPENING TRIM WEATHERSTRIP LH
ROOF SIDE INNER GARNISH LH
42 (428, 31)
LAP BELT OUTER ANCHOR COVER
REAR DOOR SCUFF PLATE LH
LOWER CENTER PILLAR GARNISH LH
COWL SIDE TRIM CLIP
FRONT SEAT OUTER BELT ASSEMBLY LH
FRONT DOOR SCUFF PLATE LH
COWL SIDE TRIM SUB-ASSEMBLY LH
N*m (kgf*cm, ft.*lbf) : Specified torque
● Non-reusable part
P
B132049E01

AV

without Sliding Roof:

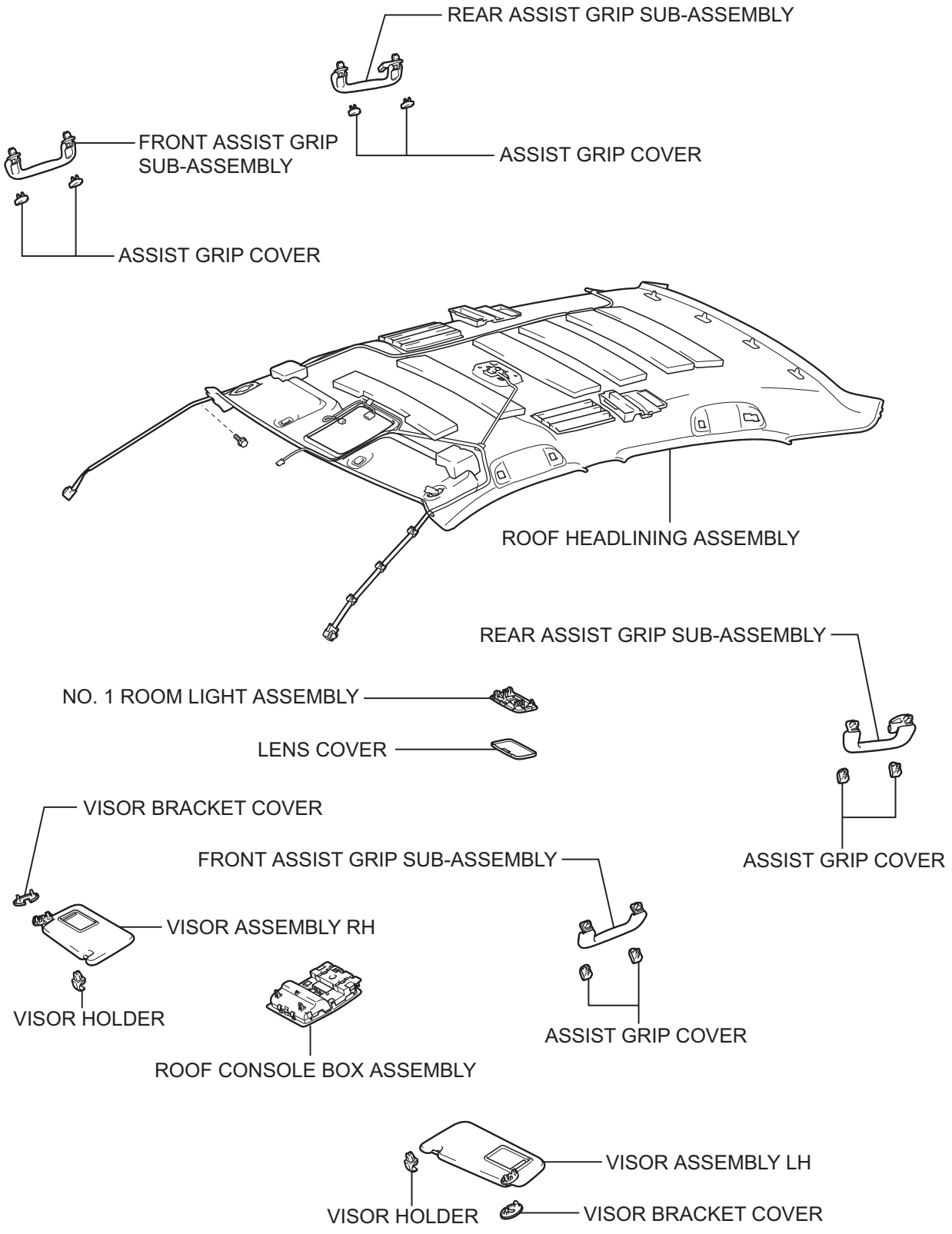

P

B132051E01

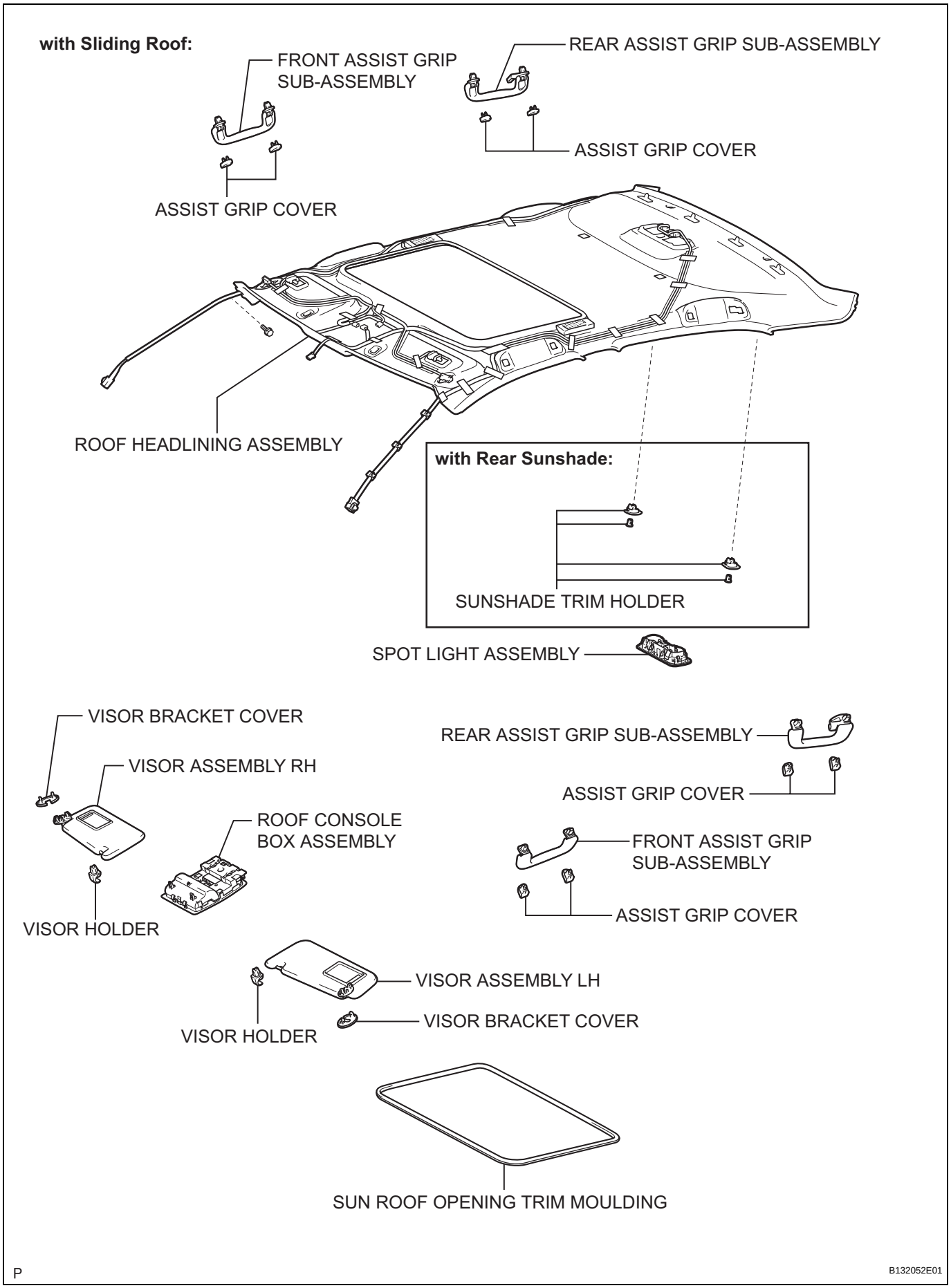
with Sliding Roof:
FRONT ASSIST GRIP SUB-ASSEMBLY
REAR ASSIST GRIP SUB-ASSEMBLY
ASSIST GRIP COVER
ASSIST GRIP COVER
ROOF HEADLINING ASSEMBLY
with Rear Sunshade:
SUNSHADE TRIM HOLDER
SPOT LIGHT ASSEMBLY
VISOR BRACKET COVER
VISOR ASSEMBLY RH
ROOF CONSOLE BOX ASSEMBLY
VISOR HOLDER
REAR ASSIST GRIP SUB-ASSEMBLY
ASSIST GRIP COVER
FRONT ASSIST GRIP SUB-ASSEMBLY
ASSIST GRIP COVER
VISOR ASSEMBLY LH
VISOR BRACKET COVER
VISOR HOLDER
SUN ROOF OPENING TRIM MOULDING
P
B132052E01

AV

without Sliding Roof:

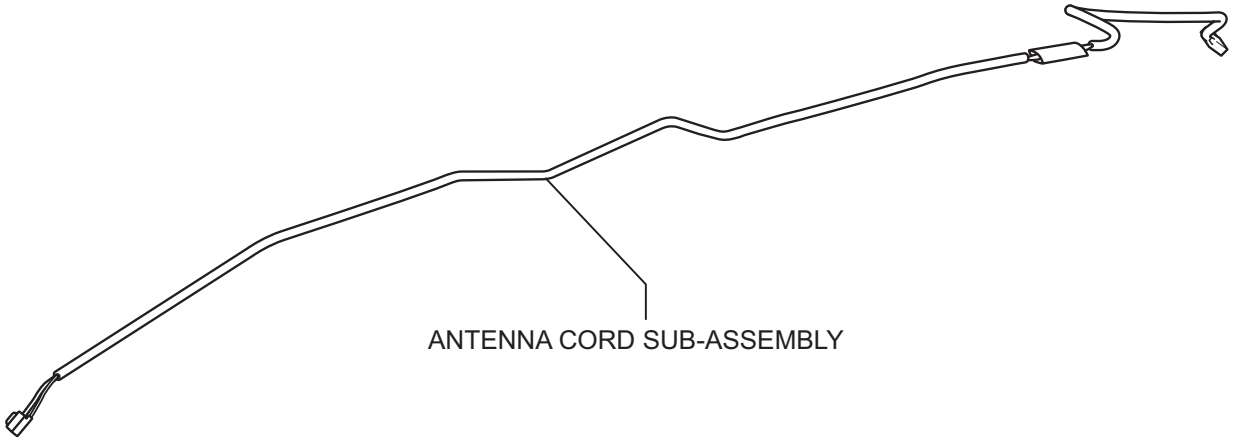

with Sliding Roof:

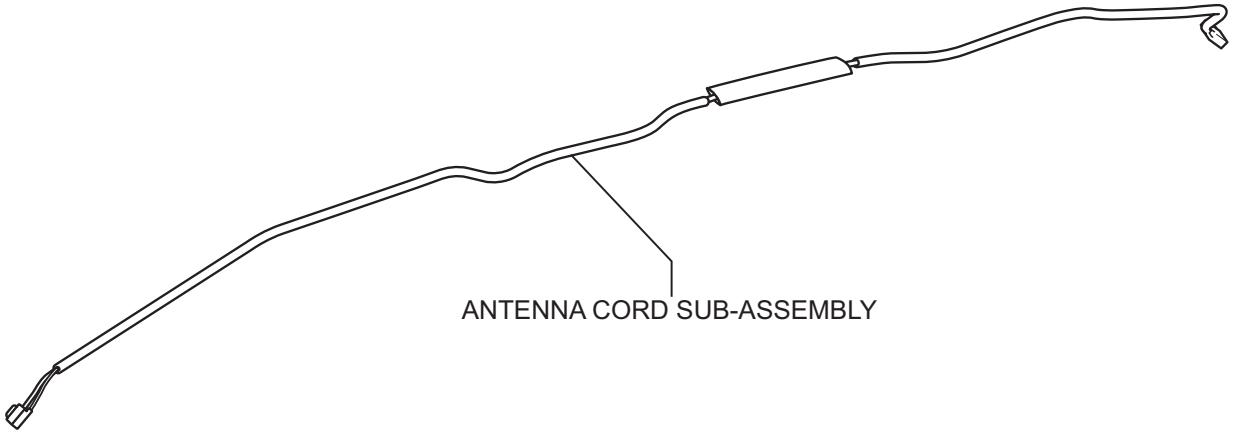

P

E129189E01

AMPLIFIER ANTENNA

COMPONENTS

for Fixed Seat Type:

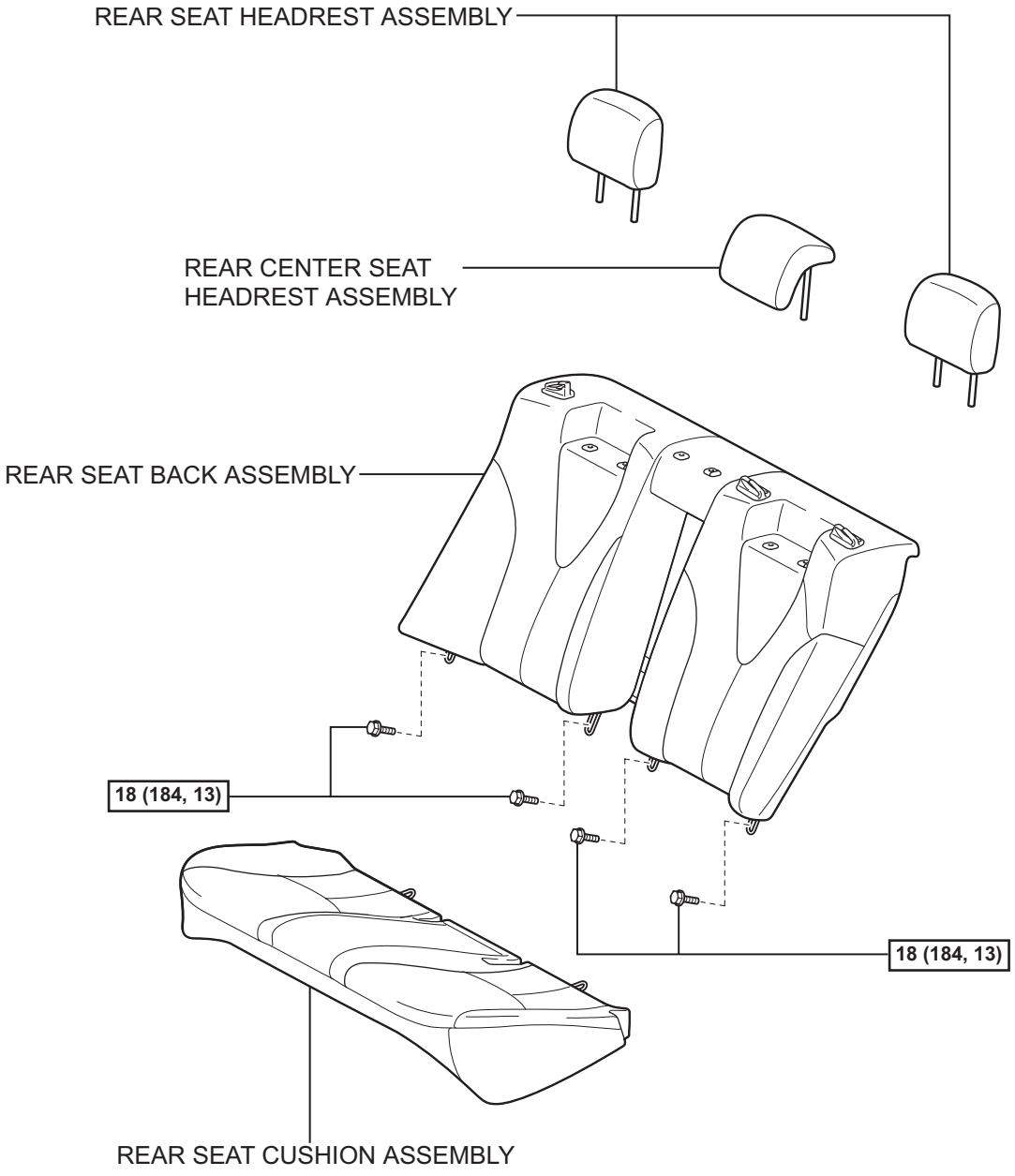

N*m (kgf*cm, ft.*lbf) : Specified torque

P

B136589E02

AV

for Fold Down Seat Type:

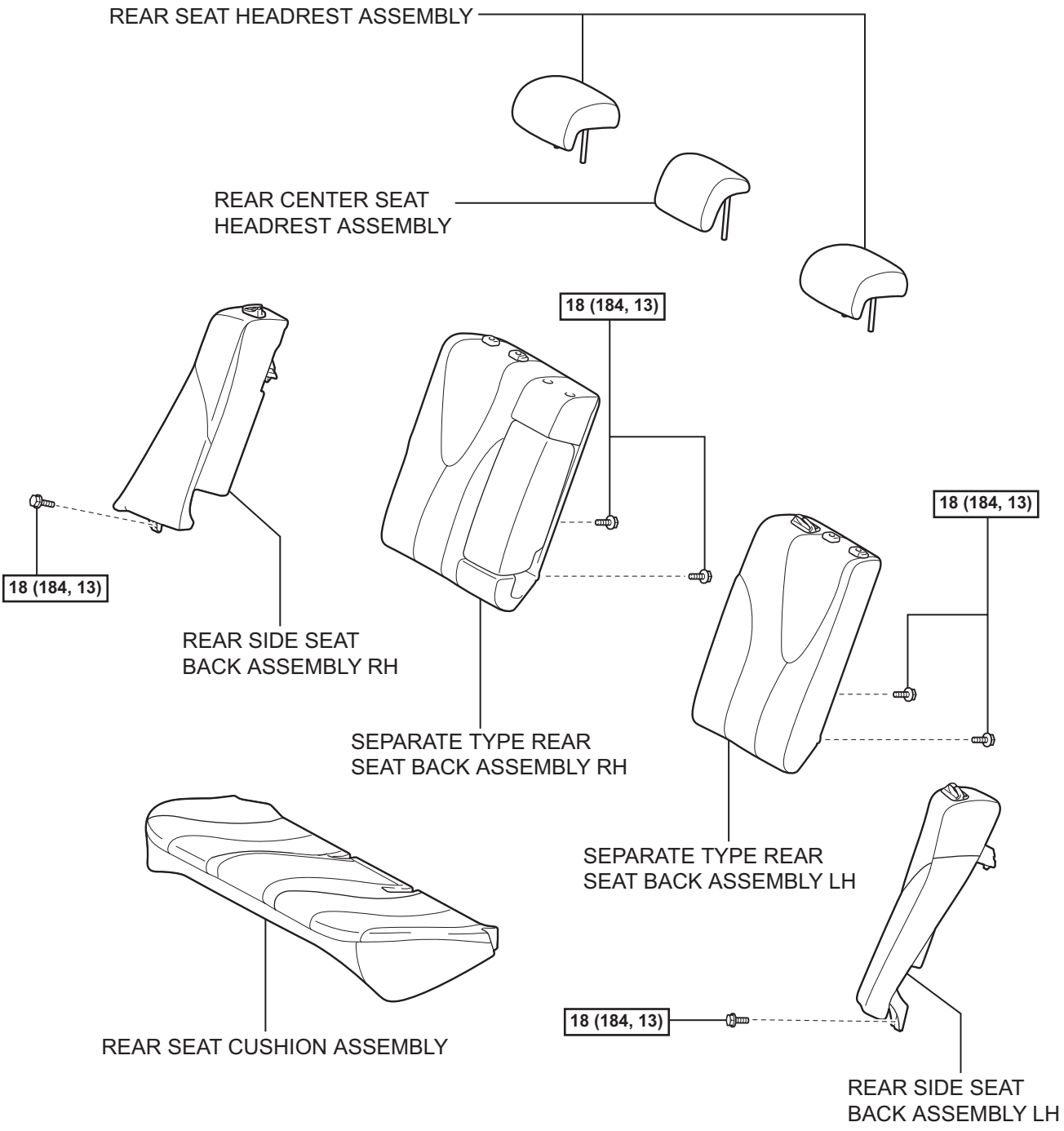

AV

N*m (kgf*cm, ft.*lbf) : Specified torque

P

B136564E02

for Reclining Seat Type:

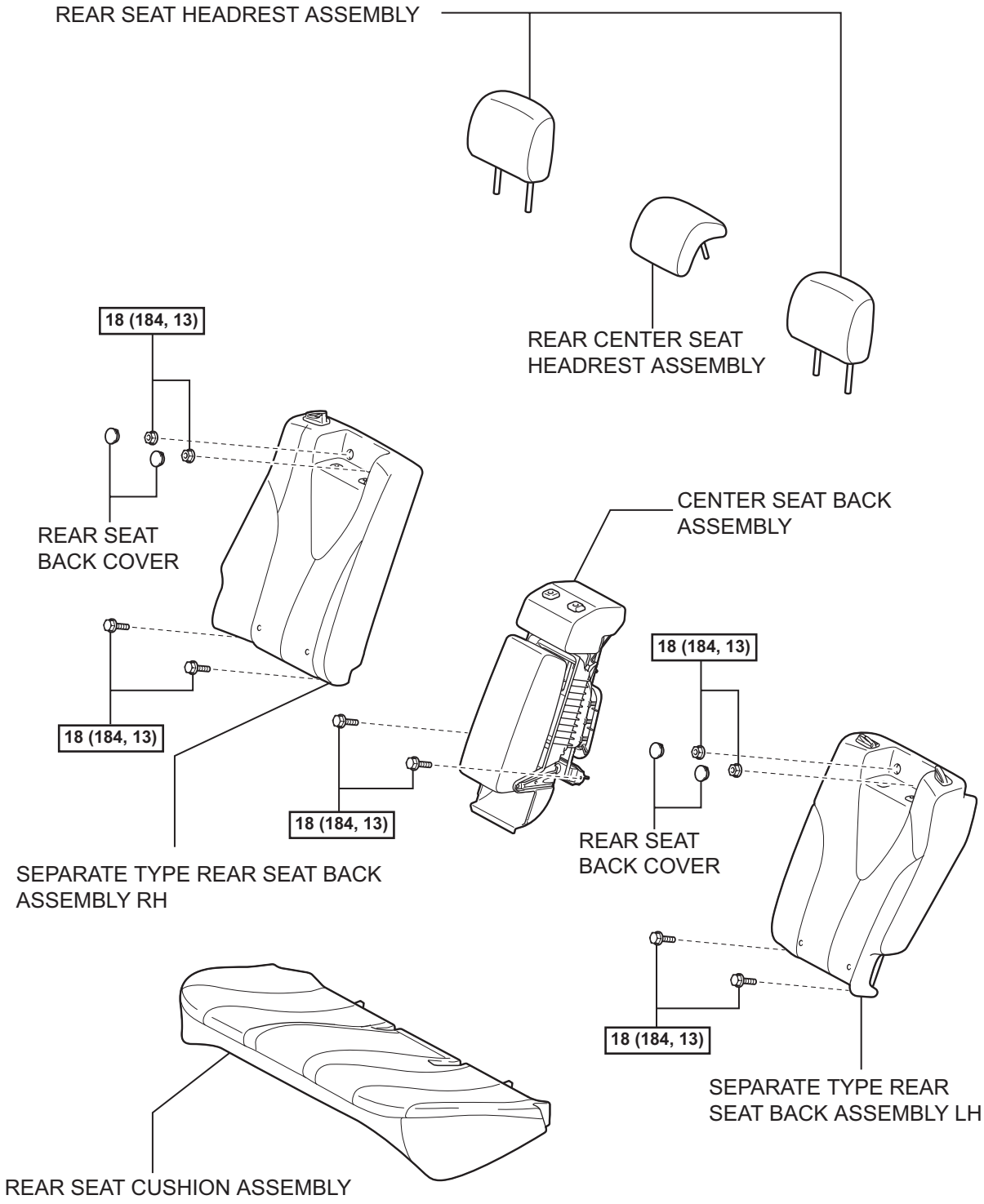

N*m (kgf*cm, ft.*lbf) : Specified torque

P

B139095E03

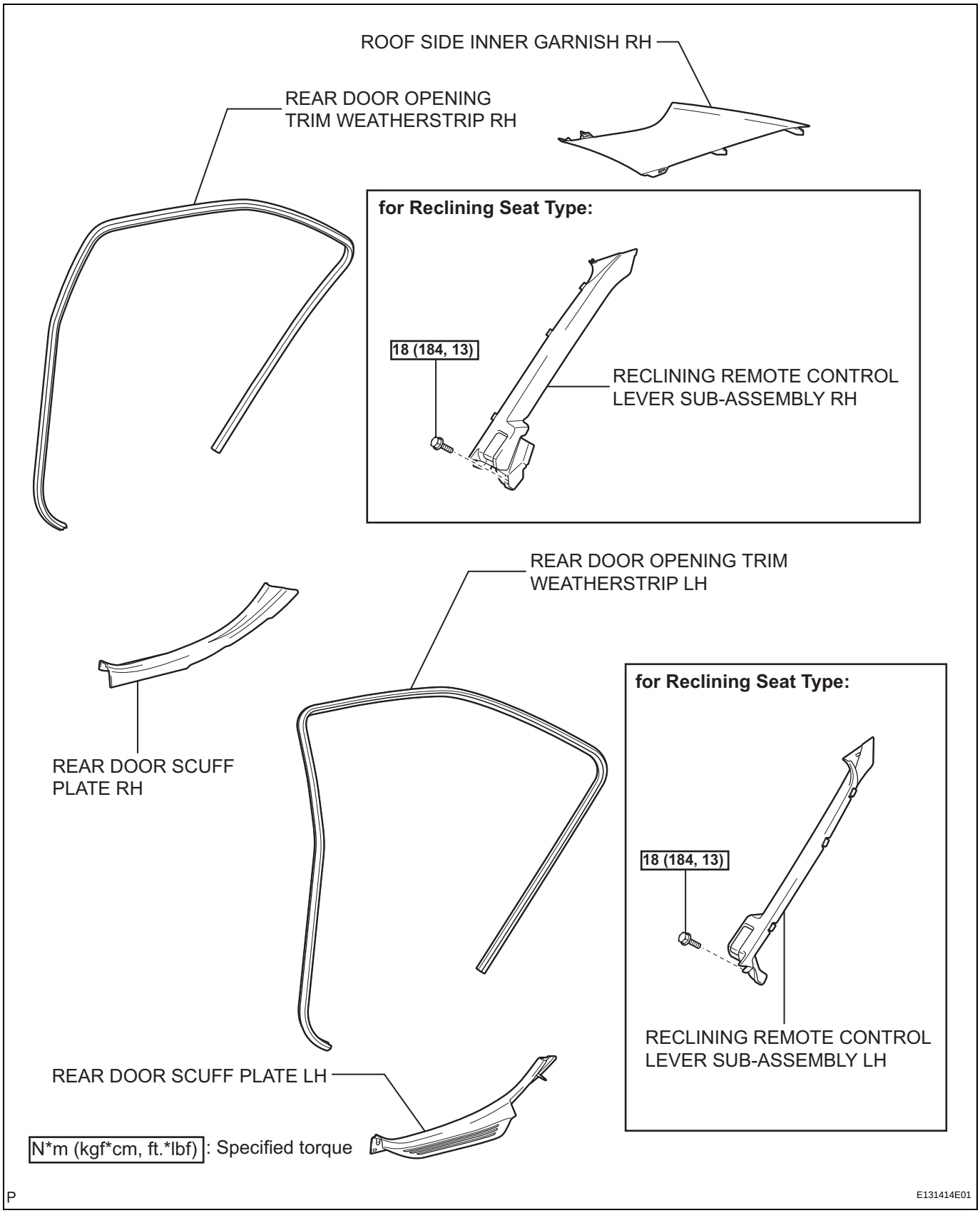
ROOF SIDE INNER GARNISH RH
REAR DOOR OPENING
TRIM WEATHERSTRIP RH
for Reclining Seat Type:
18 (184, 13)
RECLINING REMOTE CONTROL
LEVER SUB-ASSEMBLY RH
REAR DOOR OPENING TRIM
WEATHERSTRIP LH
REAR DOOR SCUFF
PLATE RH
for Reclining Seat Type:
18 (184, 13)
RECLINING REMOTE CONTROL
LEVER SUB-ASSEMBLY LH
REAR DOOR SCUFF PLATE LH
N*m (kgf*cm, ft.*lbf) : Specified torque
P
E131414E01

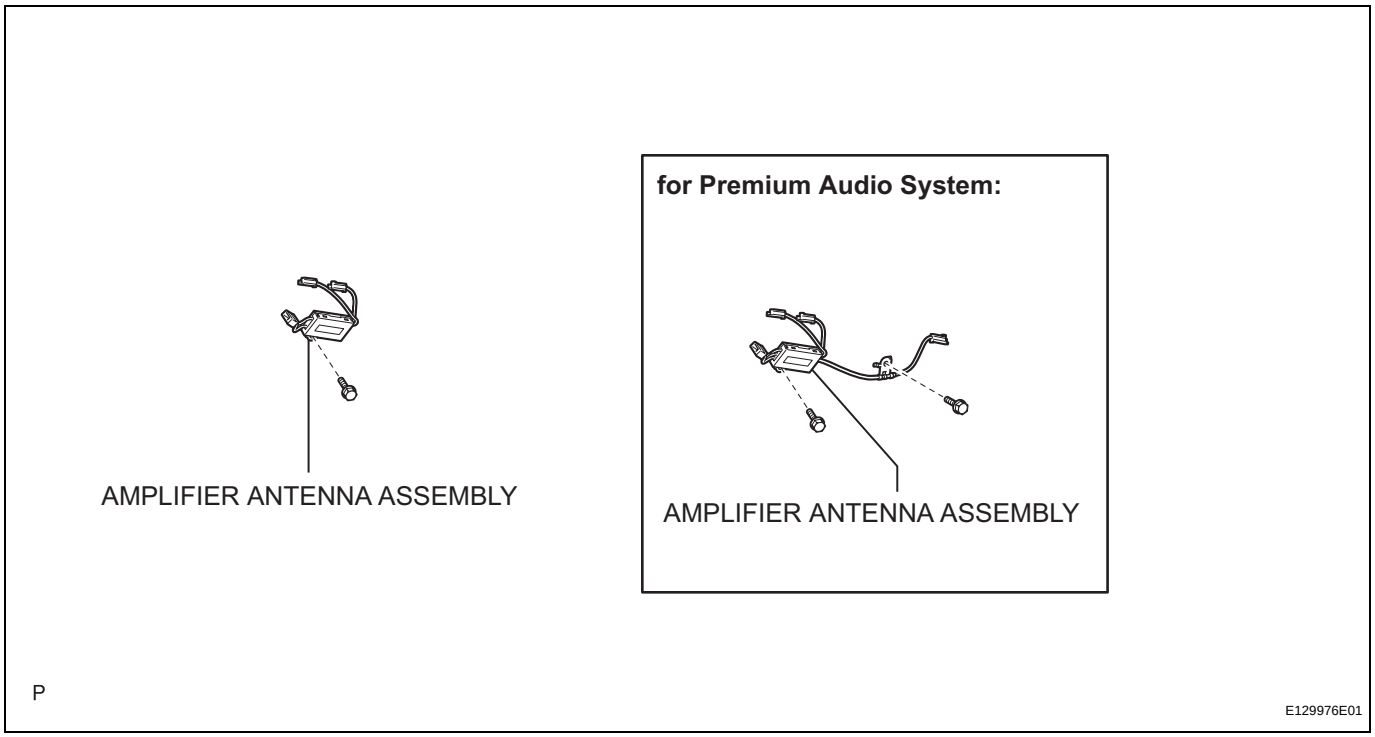
AMPLIFIER ANTENNA ASSEMBLY
for Premium Audio System:
AMPLIFIER ANTENNA ASSEMBLY
P
E129976E01

REMOVAL

1. **REMOVE REAR SEAT HEADREST ASSEMBLY**
2. **REMOVE REAR CENTER SEAT HEADREST ASSEMBLY**
3. **REMOVE REAR SEAT CUSHION ASSEMBLY (See page SE-62)**
4. **REMOVE REAR SEAT BACK ASSEMBLY (for Fixed Seat Type) (See page SE-77)**
5. **REMOVE SEPARATE TYPE REAR SEAT BACK ASSEMBLY RH (for Fold Down Seat Type) (See page SE-48)**
6. **REMOVE SEPARATE TYPE REAR SEAT BACK ASSEMBLY LH (for Fold Down Seat Type) (See page SE-47)**
7. **REMOVE REAR SIDE SEAT BACK ASSEMBLY LH (for Fold Down Seat Type) (See page SE-48)**
8. **REMOVE REAR SIDE SEAT BACK ASSEMBLY RH (for Fold Down Seat Type) (See page SE-48)**
9. **REMOVE REAR SEAT BACK COVER (for Reclining Seat Type) (See page SE-63)**
10. **REMOVE SEPARATE TYPE REAR SEAT BACK ASSEMBLY LH (for Reclining Seat Type) (See page SE-63)**
11. **REMOVE SEPARATE TYPE REAR SEAT BACK ASSEMBLY RH (for Reclining Seat Type) (See page SE-64)**
12. **REMOVE CENTER SEAT BACK ASSEMBLY (for Reclining Seat Type) (See page SE-64)**
13. **REMOVE REAR DOOR SCUFF PLATE LH (See page IR-24)**
14. **DISCONNECT REAR DOOR OPENING TRIM WEATHERSTRIP LH (for Reclining Seat Type)**
15. **REMOVE REAR DOOR SCUFF PLATE RH (See page IR-24)**
16. **DISCONNECT REAR DOOR OPENING TRIM WEATHERSTRIP RH (for Reclining Seat Type)**
17. **REMOVE RECLINING REMOTE CONTROL LEVER SUB-ASSEMBLY LH (for Reclining Seat Type) (See page SE-68)**
18. **REMOVE RECLINING REMOTE CONTROL LEVER SUB-ASSEMBLY RH (for Reclining Seat Type)**
19. **REMOVE ROOF SIDE INNER GARNISH RH**
    HINT:
    Use the same procedures for the RH side and the LH side (see page IR-26).

20. REMOVE AMPLIFIER ANTENNA ASSEMBLY

(a) Disconnect each connector.

(b) Standard audio system:

(1) Remove the bolt and amplifier antenna assembly.

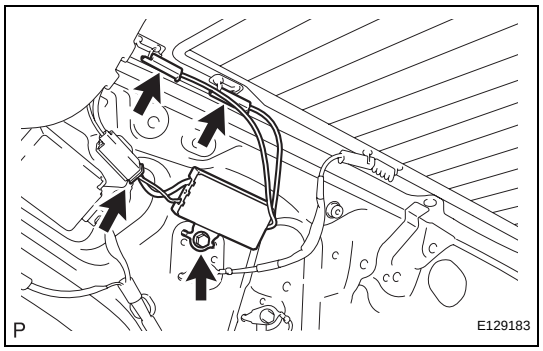

(c) Premium audio system:

(1) Remove the 2 bolts and amplifier antenna assembly.

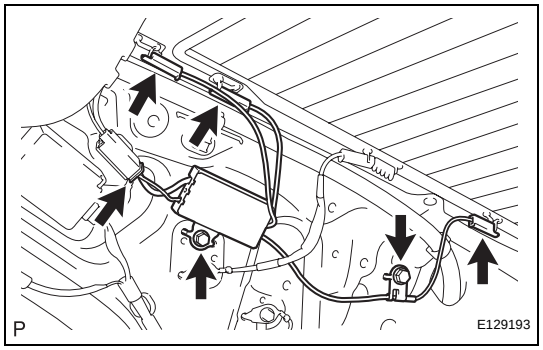

INSTALLATION

1. INSTALL AMPLIFIER ANTENNA ASSEMBLY

(a) Standard audio system:

(1) Install the amplifier antenna assembly with the bolt.

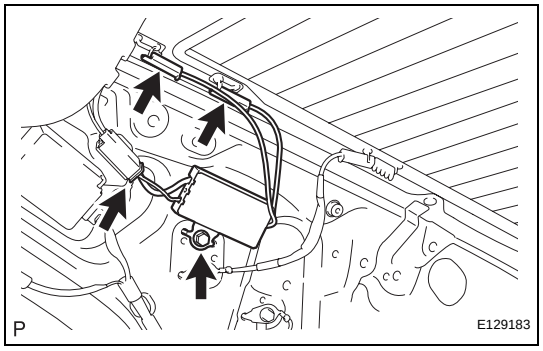

(b) Premium audio system:

(1) Install the amplifier antenna assembly with the 2 bolts.

(c) Connect each connector.

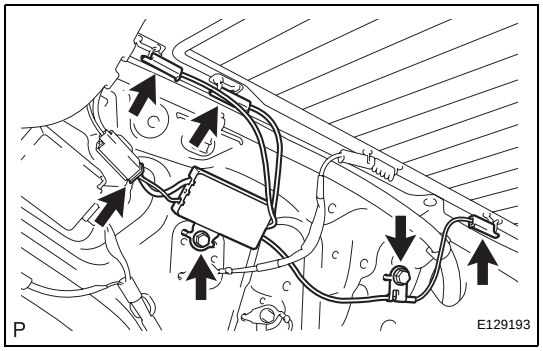

2. INSTALL ROOF SIDE INNER GARNISH RH

HINT:
Use the same procedures for the RH side and the LH side (see page IR-52).

3. INSTALL RECLINING REMOTE CONTROL LEVER SUB-ASSEMBLY LH (for Reclining Seat Type) (See page SE-69)

4. INSTALL RECLINING REMOTE CONTROL LEVER SUB-ASSEMBLY RH (for Reclining Seat Type) (See page SB-53)

5. CONNECT REAR DOOR OPENING TRIM WEATHERSTRIP LH (for Reclining Seat Type) (See page IR-55)

6. **INSTALL REAR DOOR SCUFF PLATE LH (See page IR-56)**
7. **CONNECT REAR DOOR OPENING TRIM WEATHERSTRIP RH (for Reclining Seat Type) (See page IR-56)**
8. **INSTALL REAR DOOR SCUFF PLATE RH (See page IR-56)**
9. **INSTALL CENTER SEAT BACK ASSEMBLY (for Reclining Seat Type) (See page SE-71)**
10. **INSTALL SEPARATE TYPE REAR SEAT BACK ASSEMBLY LH (for Reclining Seat Type) (See page SE-72)**
11. **INSTALL SEPARATE TYPE REAR SEAT BACK ASSEMBLY RH (for Reclining Seat Type) (See page SE-71)**
12. **INSTALL REAR SEAT BACK COVER (for Reclining Seat Type)**
13. **INSTALL REAR SIDE SEAT BACK ASSEMBLY LH (for Fold Down Seat Type) (See page SE-57)**
14. **INSTALL REAR SIDE SEAT BACK ASSEMBLY RH (for Fold Down Seat Type)**
15. **INSTALL SEPARATE TYPE REAR SEAT BACK ASSEMBLY LH (for Fold Down Seat Type) (See page SE-57)**
16. **INSTALL SEPARATE TYPE REAR SEAT BACK ASSEMBLY RH (for Fold Down Seat Type)**
17. **INSTALL REAR SEAT BACK ASSEMBLY (for Fixed Seat Type) (See page SE-84)**
18. **INSTALL REAR CENTER SEAT HEADREST ASSEMBLY**
19. **INSTALL REAR SEAT HEADREST ASSEMBLY**
20. **INSTALL REAR SEAT CUSHION ASSEMBLY (See page SE-58)**

AUDIO TERMINAL

COMPONENTS

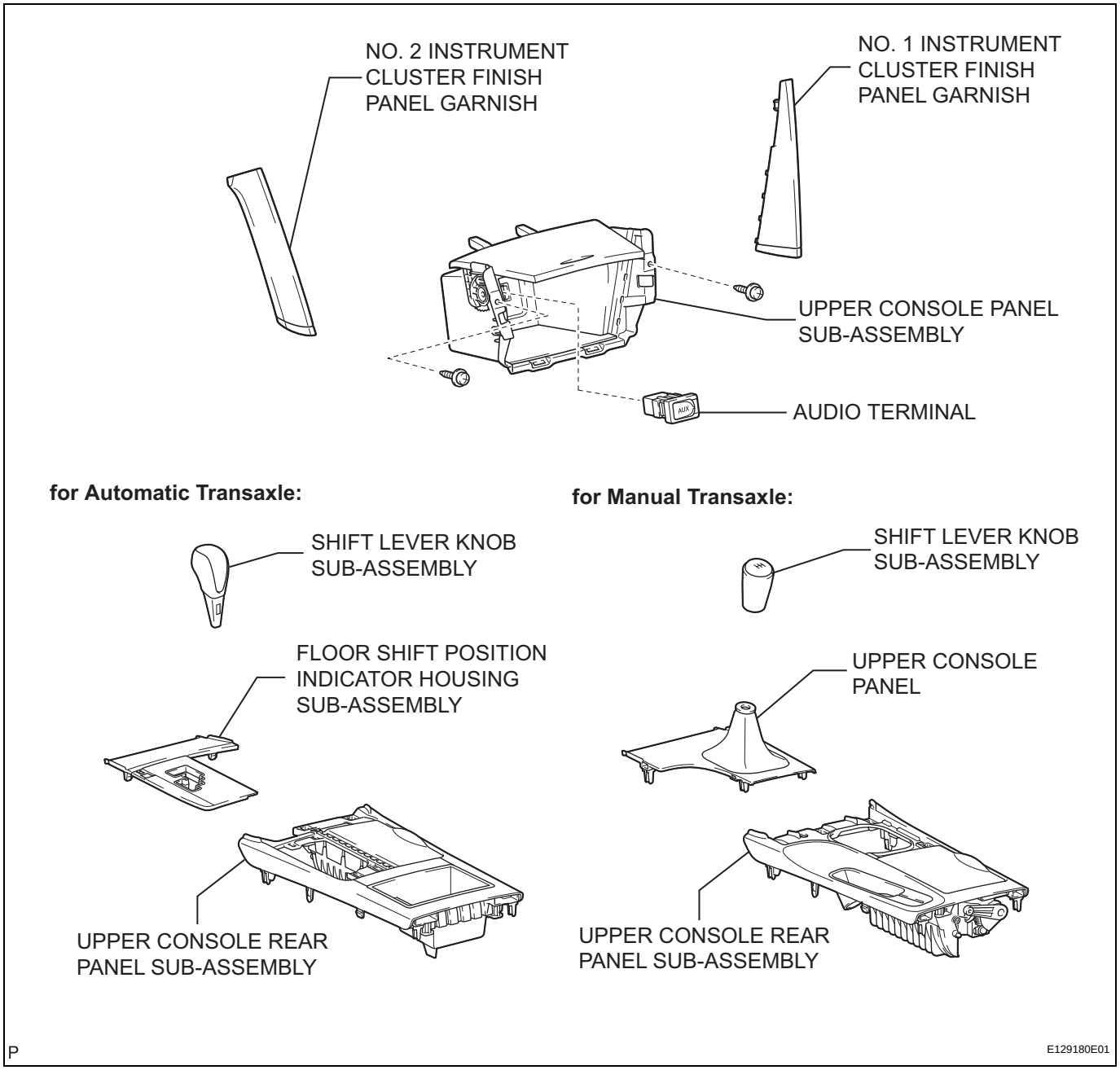

REMOVAL

1. **REMOVE SHIFT LEVER KNOB SUB-ASSEMBLY (for Automatic Transaxle) (See page IP-24)**
2. **REMOVE SHIFT LEVER KNOB SUB-ASSEMBLY (for Manual Transaxle) (See page IP-24)**
3. **REMOVE NO. 1 INSTRUMENT CLUSTER FINISH PANEL GARNISH (See page IP-24)**
4. **REMOVE NO. 2 INSTRUMENT CLUSTER FINISH PANEL GARNISH (See page IP-25)**
5. **REMOVE FLOOR SHIFT POSITION INDICATOR HOUSING SUB-ASSEMBLY (for Automatic Transaxle) (See page IP-25)**
6. **REMOVE UPPER CONSOLE PANEL (for Manual Transaxle) (See page IP-25)**
7. **REMOVE UPPER CONSOLE REAR PANEL SUB-ASSEMBLY (for Automatic Transaxle) (See page IP-26)**
8. **REMOVE UPPER CONSOLE REAR PANEL SUB-ASSEMBLY (for Manual Transaxle) (See page IP-26)**
9. **REMOVE UPPER CONSOLE PANEL SUB-ASSEMBLY (See page IP-27)**
10. **REMOVE AUDIO TERMINAL**
    (a) Disengage the 2 claws and remove the audio terminal.

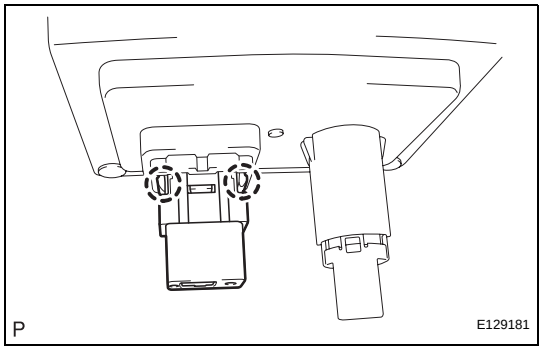

INSTALLATION

1. **INSTALL AUDIO TERMINAL**
    (a) Engage the 2 claws and install the audio terminal.
2. **INSTALL UPPER CONSOLE PANEL SUB-ASSEMBLY (See page IP-52)**
3. **INSTALL UPPER CONSOLE REAR PANEL SUB-ASSEMBLY (for Automatic Transaxle) (See page IP-53)**
4. **INSTALL UPPER CONSOLE REAR PANEL SUB-ASSEMBLY (for Manual Transaxle) (See page IP-53)**
5. **INSTALL FLOOR SHIFT POSITION INDICATOR HOUSING SUB-ASSEMBLY (for Automatic Transaxle) (See page IP-53)**
6. **INSTALL UPPER CONSOLE PANEL (for Manual Transaxle) (See page IP-54)**

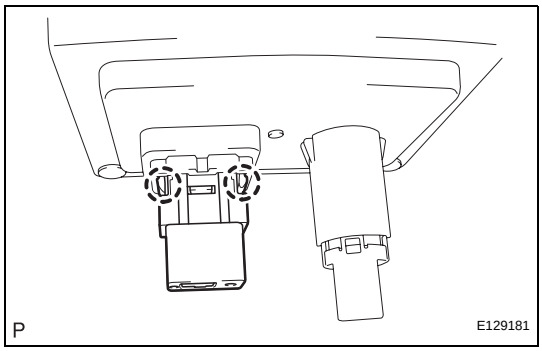

7. **INSTALL NO. 2 INSTRUMENT CLUSTER FINISH PANEL GARNISH (See page IP-54)**
8. **INSTALL NO. 1 INSTRUMENT CLUSTER FINISH PANEL GARNISH (See page IP-55)**
9. **INSTALL SHIFT LEVER KNOB SUB-ASSEMBLY (for Automatic Transaxle) (See page IP-55)**
10. **INSTALL SHIFT LEVER KNOB SUB-ASSEMBLY (for Manual Transaxle) (See page IP-55)**

STEERING PAD SWITCH

COMPONENTS

for 4 Spoke:

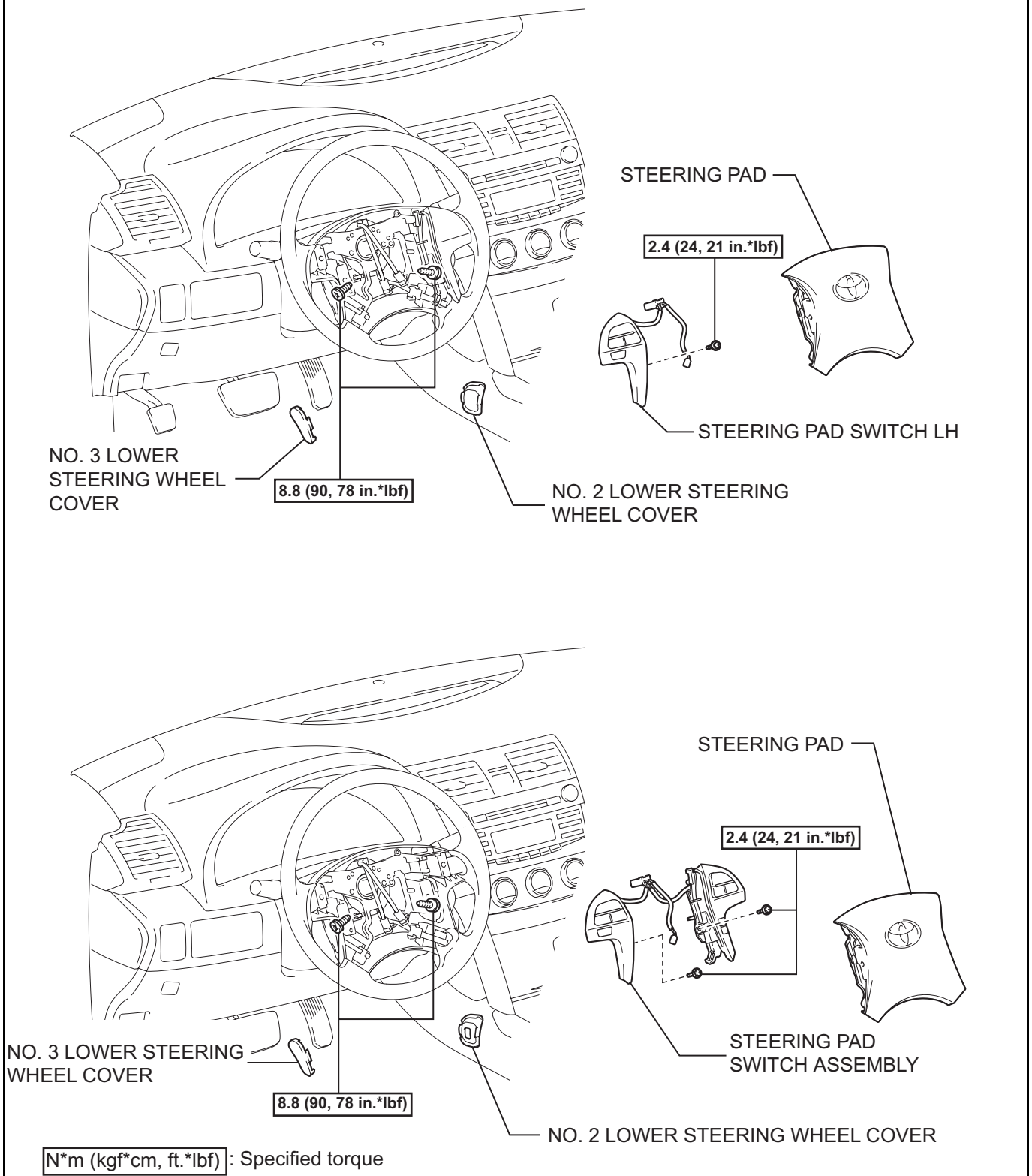

AV

for 3 Spoke:

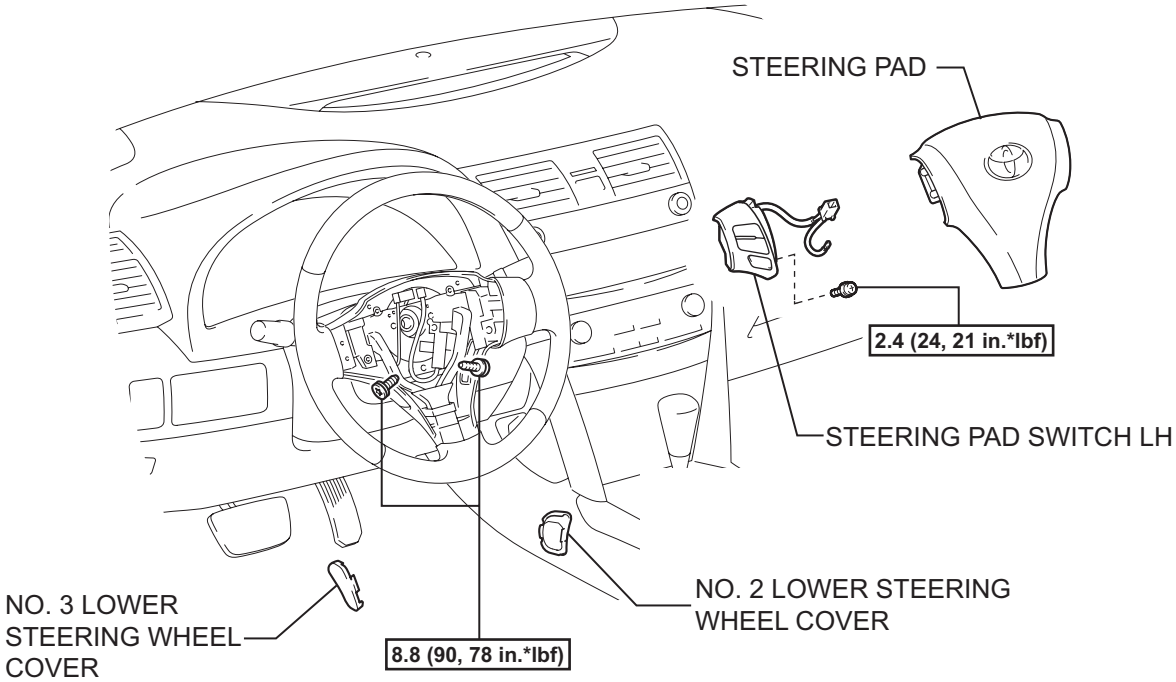

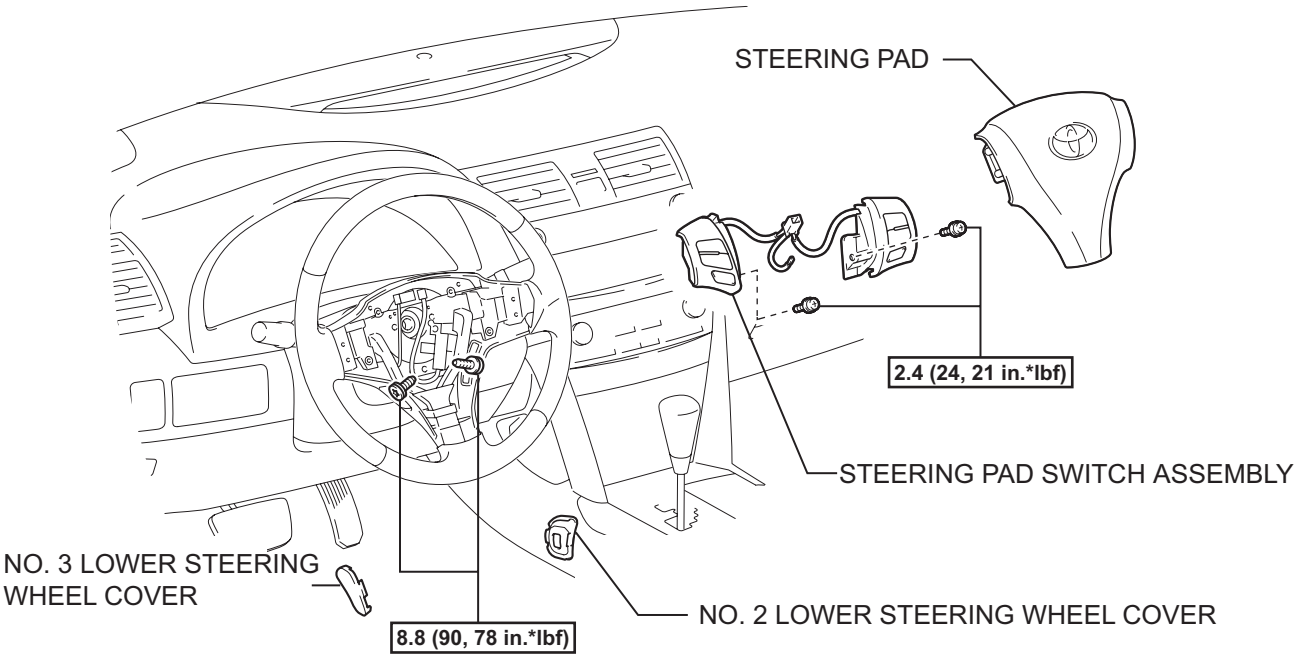

N*m (kgf*cm, ft.*lbf): Specified torque

P

E129201E01

REMOVAL

1. **DISCONNECT CABLE FROM NEGATIVE BATTERY TERMINAL**
   CAUTION:
   Wait for 90 seconds after disconnecting the cable to prevent the airbag working.
2. **REMOVE NO. 3 LOWER STEERING WHEEL COVER (See page RS-349)**
3. **REMOVE NO. 2 LOWER STEERING WHEEL COVER (See page RS-349)**
4. **REMOVE STEERING PAD (See page RS-350)**
5. **REMOVE STEERING PAD SWITCH LH (for 4 Spoke)**
   (a) Disconnect the pad switch connector from the spiral cable.
   (b) Remove the screw.
   (c) Disengage the 2 pins and remove the steering pad switch LH.

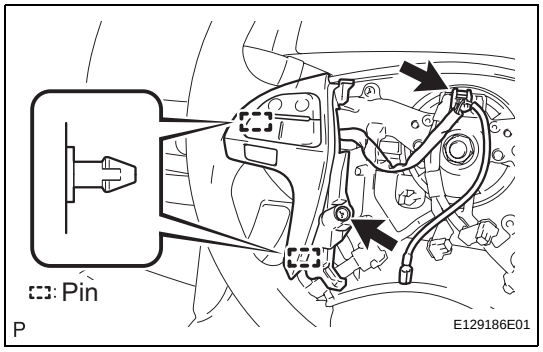

6. **REMOVE STEERING PAD SWITCH ASSEMBLY (for 4 Spoke)**
   (a) Disconnect the pad switch connector from the spiral cable.
   (b) Remove the screw.
   (c) Disengage the 2 pins and remove the steering pad switch.

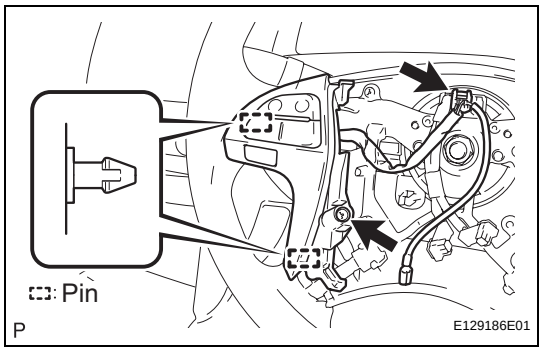

   (d) Remove the screw.
   (e) Disengage the 2 pins and remove the steering pad switch assembly.

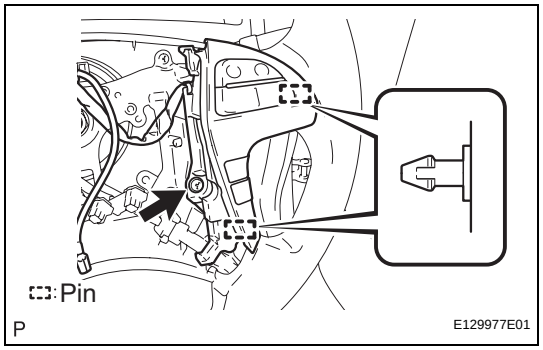

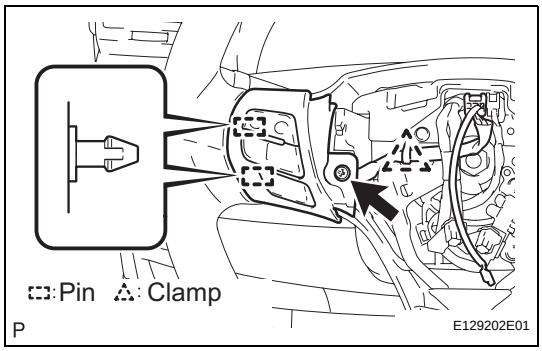

7. REMOVE STEERING PAD SWITCH LH (for 3 Spoke)

(a) Disconnect the pad switch connector from the spiral cable and disengage the clamp.
(b) Remove the screw.
(c) Disengage the 2 pins and remove the steering pad switch LH.

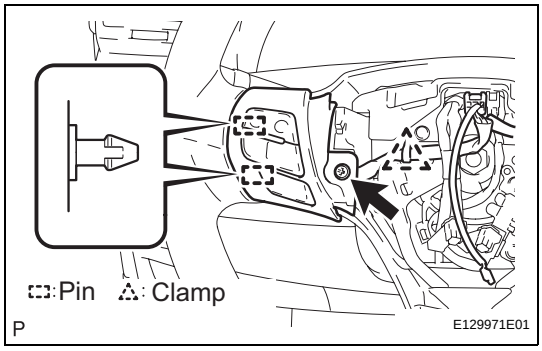

8. REMOVE STEERING PAD SWITCH ASSEMBLY (for 3 Spoke)

(a) Disconnect the pad switch connector from the spiral cable.
(b) Disengage the clamp and remove the screw.
(c) Disengage the 2 pins and remove the steering pad switch.

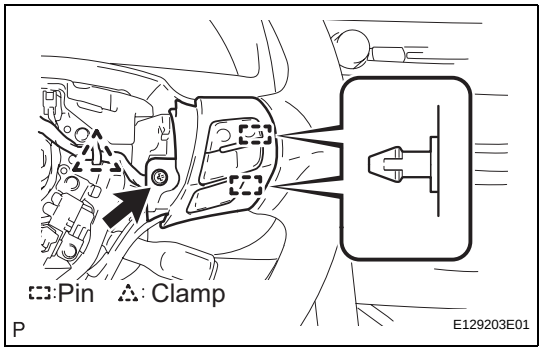

(d) Disengage the clamp and remove the screw.
(e) Disengage the 2 pins and remove the steering pad switch assembly.

INSPECTION

1. INSPECT STEERING PAD SWITCH

(a) Disconnect the steering pad switch assembly connector.

3 Spoke Model:

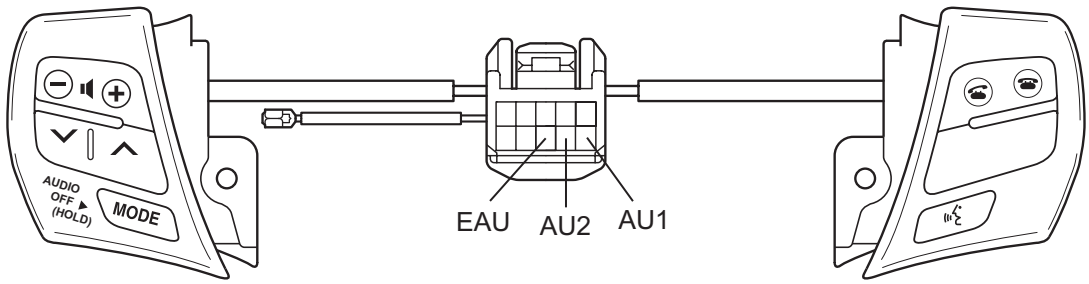

4 Spoke Model:

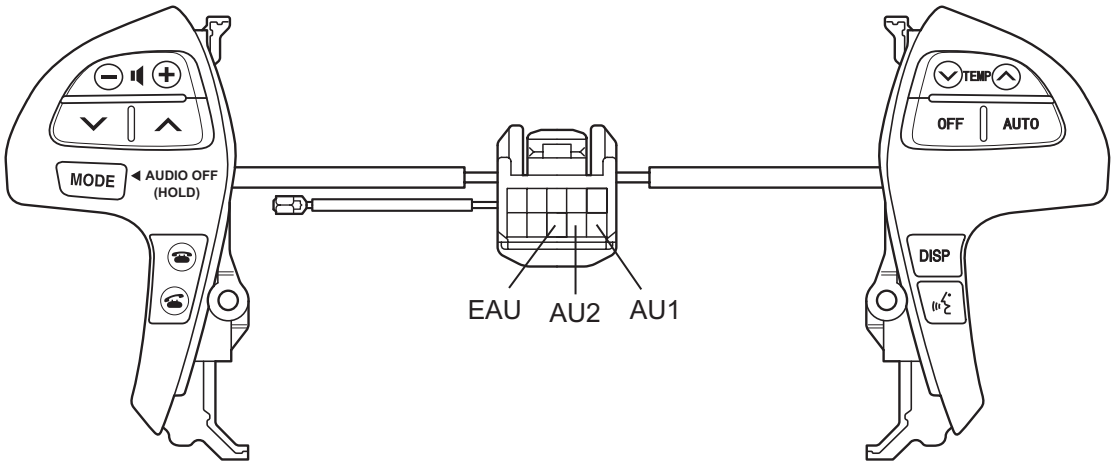

P

E129804E02

(b) Measure the resistance according to the values in the table below.

Standard resistance

Tester connection	Condition	Specified condition
AU1 - EAU	No switch is pushed	Approx. 100 kΩ
AU1 - EAU	SEEK+ switch: push	0 to 2.5 Ω
AU1 - EAU	SEEK- switch: push	Approx. 0.3 kΩ
AU1 - EAU	VOL+ switch: push	Approx. 1 kΩ
AU1 - EAU	VOL- switch: push	Approx. 3.1 kΩ
AU2 - EAU	No switch is pushed	Approx. 100 kΩ

Tester connection	Condition	Specified condition
AU2 - EAU	MODE switch: push	0 to 2.5 Ω
AU2 - EAU	VOICE switch: push (*1)	Approx. 3.1 kΩ
AU2 - EAU	ON HOOK switch: push (*2)	Approx. 0.3 kΩ
AU2 - EAU	OFF HOOK switch: push (*2)	Approx. 1 kΩ

*1: with Navigation System
*2: with "Bluetooth" Module
If the result is not as specified, replace the steering pad switch.

INSTALLATION

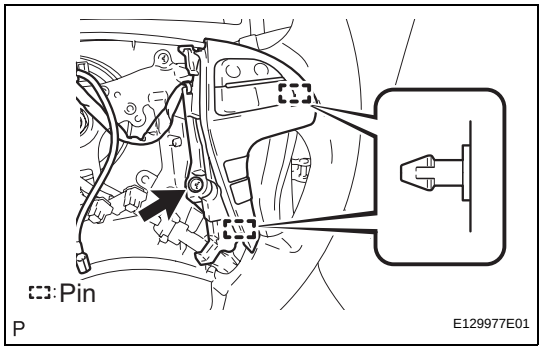

1. INSTALL STEERING PAD SWITCH ASSEMBLY (for 4 Spoke)

(a) Engage the 2 pins and install the steering pad switch assembly.
(b) Install the screw.
Torque: 2.4 N*m (24 kgf*cm, 21 in.*lbf)

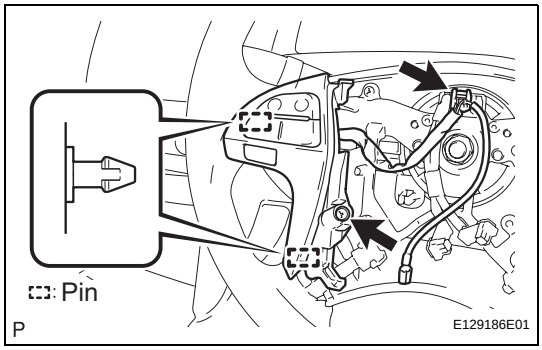

(c) Engage the 2 pins and install the steering pad switch assembly.
(d) Install the screw.
Torque: 2.4 N*m (24 kgf*cm, 21 in.*lbf)
(e) Connect the connector to the spiral cable.

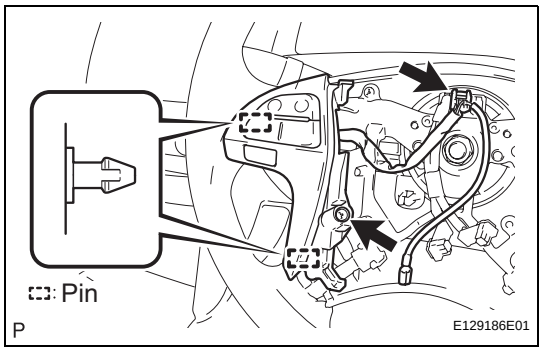

2. INSTALL STEERING PAD SWITCH LH (for 4 Spoke)

(a) Engage the 2 pins and install the steering pad switch LH.
(b) Install the screw.
Torque: 2.4 N*m (24 kgf*cm, 21 in.*lbf)
(c) Connect the connector to the spiral cable.

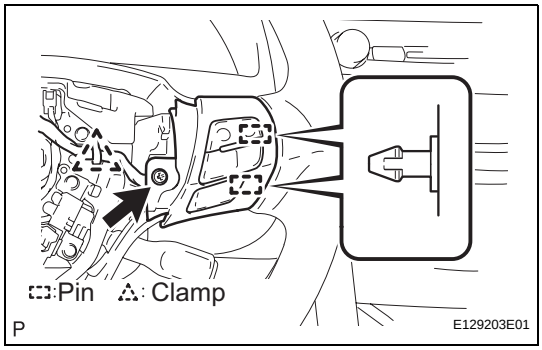

3. INSTALL STEERING PAD SWITCH ASSEMBLY (for 3 Spoke)

(a) Engage the 2 pins and install the steering pad switch assembly.
(b) Install the screw and engage the clamp.
Torque: 2.4 N*m (24 kgf*cm, 21 in.*lbf)

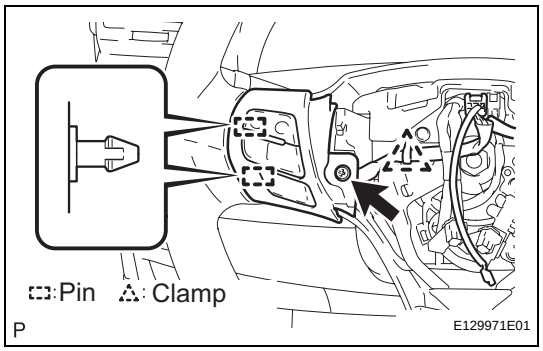

(c) Engage the 2 pins and install the steering pad switch assembly.
(d) Install the screw and engage the clamp.
Torque: 2.4 N*m (24 kgf*cm, 21 in.*lbf)
(e) Connect the connector to the spiral cable.

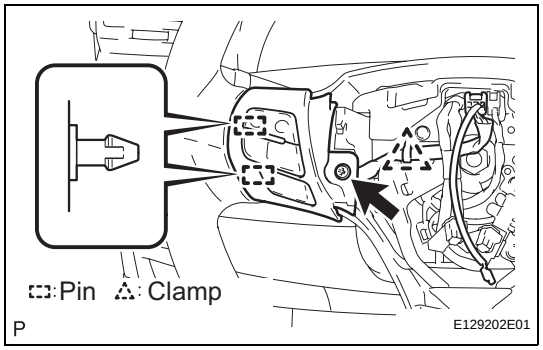

4. INSTALL STEERING PAD SWITCH LH (for 3 Spoke)
(a) Engage the 2 pins and install the steering pad switch LH.
(b) Install the screw and engage the clamp.
Torque: 2.4 N*m (24 kgf*cm, 21 in.*lbf)
(c) Connect the connector to the spiral cable.

5. INSTALL STEERING PAD (See page RS-350)

6. INSTALL NO. 3 LOWER STEERING WHEEL COVER (See page RS-351)

7. INSTALL NO. 2 LOWER STEERING WHEEL COVER (See page RS-352)

8. CONNECT CABLE TO NEGATIVE BATTERY TERMINAL

9. INSPECT SRS WARNING LIGHT
(See page RS-32)

MICROPHONE

COMPONENTS

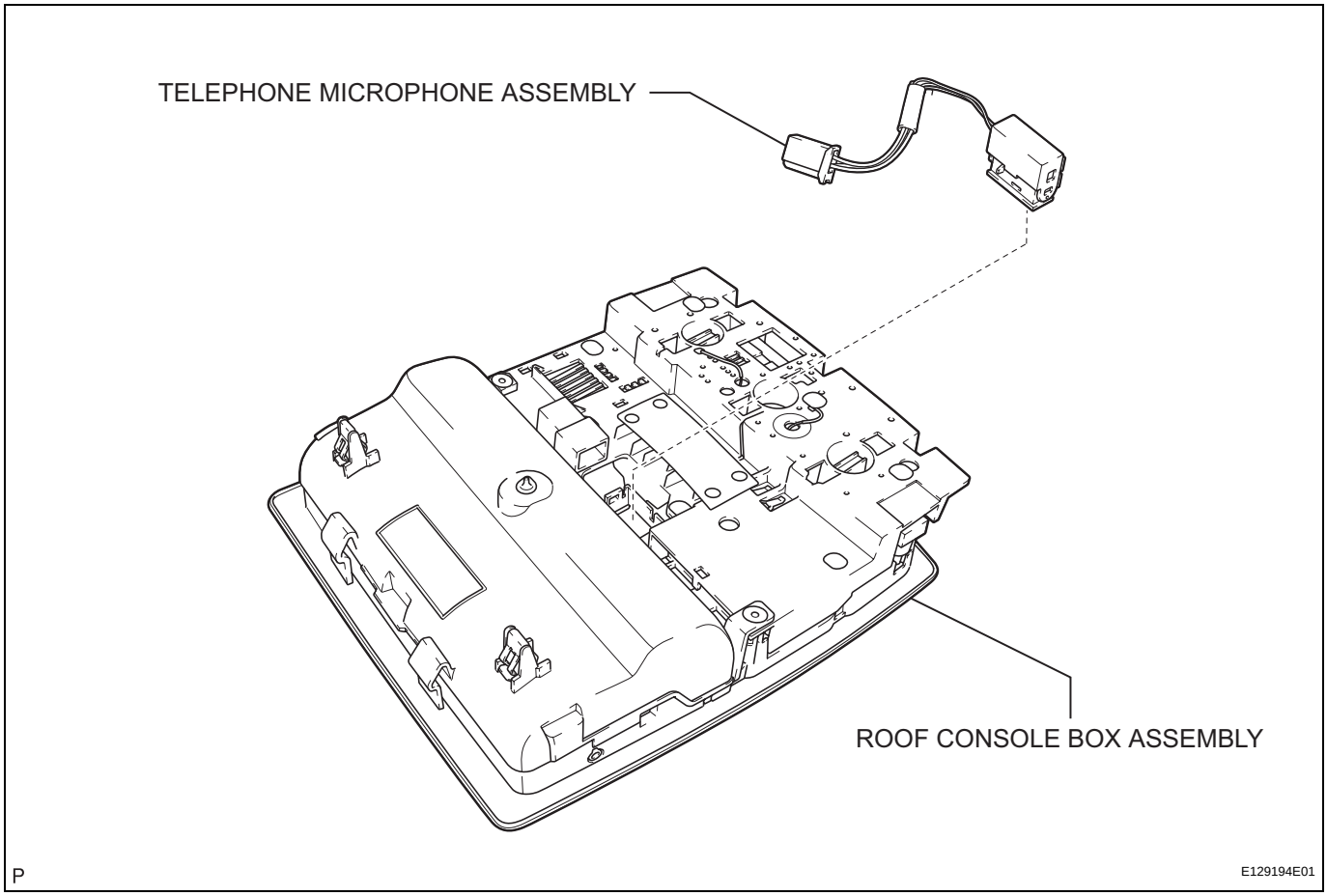

REMOVAL

1. **REMOVE ROOF CONSOLE BOX ASSEMBLY (See page IR-28)**
2. **REMOVE TELEPHONE MICROPHONE ASSEMBLY**
   (a) Disconnect the connector.
   (b) Disengage the 2 claws and remove the telephone microphone assembly.

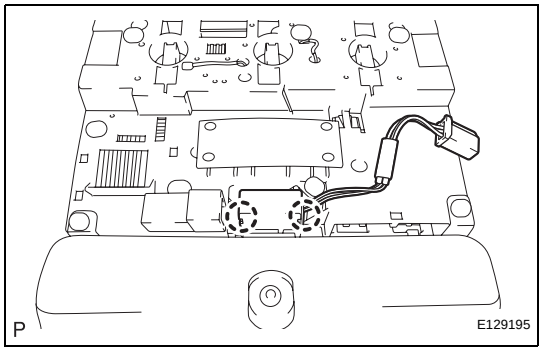

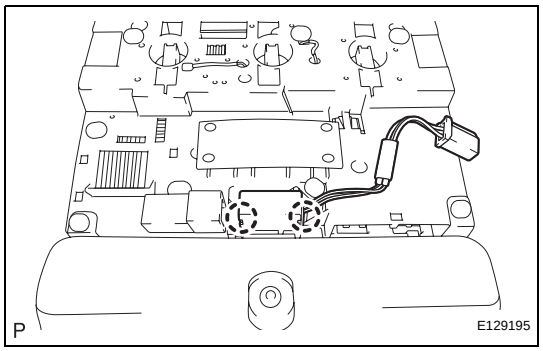

INSTALLATION

1. **INSTALL TELEPHONE MICROPHONE ASSEMBLY**
   (a) Engage the 2 claws and install the telephone microphone assembly.
   (b) Connect the connector.
2. **INSTALL ROOF CONSOLE BOX ASSEMBLY (See page IR-50)**

WINDOW GLASS ANTENNA WIRE

ON-VEHICLE INSPECTION

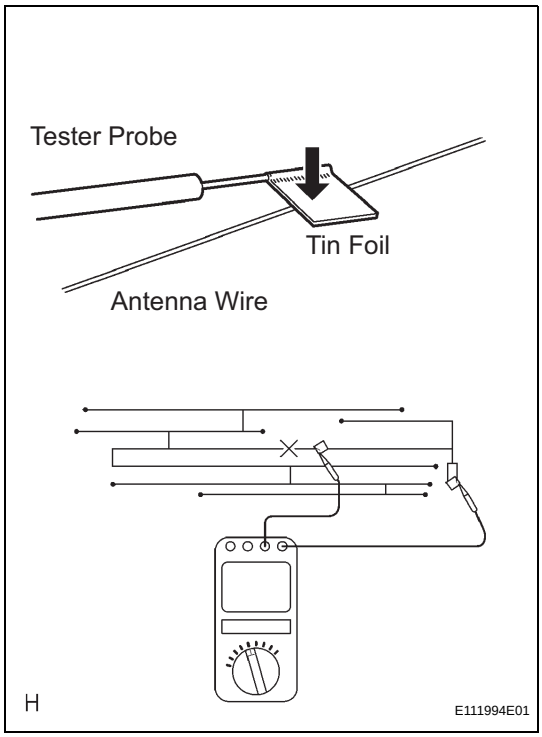

1. INSPECT WINDOW GLASS ANTENNA WIRE

(a) Check for continuity of the antenna.

HINT:

Check for continuity at the center of each antenna wire as shown in the illustration.

NOTICE:

- **When cleaning the glass, wipe it in the direction of the wire with a soft, dry cloth. Take care not to damage the wire. Do not use detergents or glass cleaners with abrasive ingredients.**
- **When measuring voltage, wrap a piece of tin foil around the tip of the negative probe and press the foil against the wire with your finger, as shown in the illustration.**

OK:

There is continuity in the antenna.

If the result is not as specified, repair the window glass antenna wire.

REPAIR

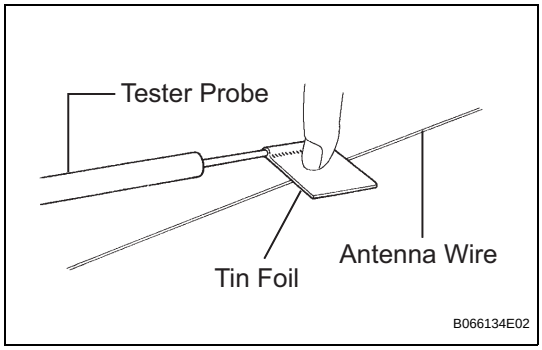

1. WINDOW GLASS ANTENNA WIRE

NOTICE:

- **When cleaning the glass, wipe it in the direction of the wire with a soft, dry cloth. Take care not to damage the wire. Do not use detergents or glass cleaners with abrasive ingredients.**
- **When measuring voltage, wrap a piece of tin foil around the tip of the negative probe and press the foil against the wire with your finger, as shown in the illustration.**

(a) Check the voltage at the center of each wire, as shown in the illustration.

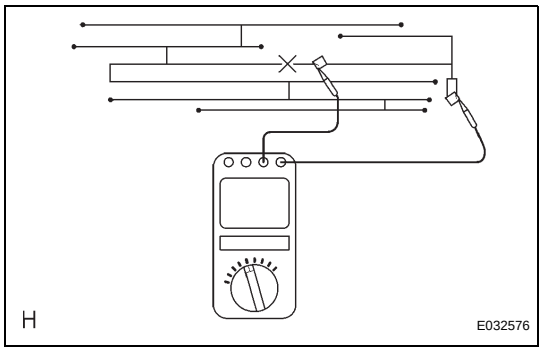

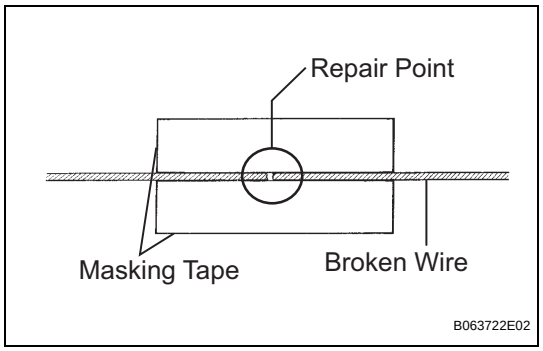

2. REPAIR WINDOW GLASS ANTENNA WIRE

(a) Clean the broken wire tips with a grease, wax and silicone remover.

(b) Place masking tape along both sides of the wire to be repaired.

(c) Thoroughly mix the repair agent (Dupont paste No. 4817 or equivalent).

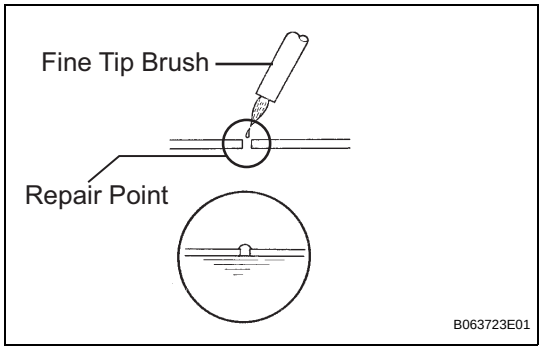

(d) Using a fine tip brush, apply a small amount of the repair agent to the wire.

(e) After a few minutes, remove the masking tape.