**Porsche European Delivery**
Imagine touring the factory in Zuffenhausen where your Porsche is meticulously crafted, then being presented with your keys...and an even more gratifying opportunity: the chance to tour Europe in rare style behind the wheel of a factory-fresh Porsche. What happens next is up to you. Contact your Porsche dealer for more information.

**Porsche Roadside Assistance**
Your ownership experience is enhanced with complimentary enrollment in the Porsche 24-hour Roadside Assistance program includes coverage 24 hours a day, 365 days a year, anywhere in North America for the duration of your New-Car Limited Warranty or Porsche Approved Pre-Owned Warranty. Contact your Porsche dealer for specifics.

**Porsche Approved**
Porsche Approved is the Certified pre-owned vehicle program. All Certified pre-owned vehicles must pass a rigorous 100+ point inspection before becoming eligible for the Porsche Approved Limited Warranty, including 24-hour Roadside Assistance. Contact your Porsche dealer for details.

**Porsche Financial Services**
Competitive, convenient and carefully crafted financing options can be customized to meet your needs. Ask your certified Porsche Sales Consultant for details.

**Porsche Tequipment**
A meticulously engineered range of accessories for enhancing your car's performance or appearance, Porsche Tequipment is available through your Porsche dealer. Each item is designed for a perfect fit and won't affect your warranty.

**Porsche Club of America**
Join other Porsche enthusiasts for PCA-sponsored rallies and other events. See **pca.org** for details.

**Porsche Design Driver's Selection**
Our distinctive collection of clothing and accessories combines timeless elegance with unmistakable quality. Visit your dealer or shop online at **porsche.com/shop.**

**Christophorus**
Our bimonthly magazine is packed with news, articles and exclusive interviews covering every aspect of Porsche automobiles and the Porsche lifestyle.

**Porsche Sport Driving School–USA**
Learn how to drive a Porsche to its full potential with instruction from famed Porsche racing drivers. Experience high-performance driver education at its best during these one- or two-day courses designed to take both you and your Porsche to exhilarating new levels. For more information, please visit **porschedriving.com.**

Porsche Cars North America, Inc.
980 Hammond Drive, Suite 1000
Atlanta, Georgia 30328

Dr. Ing. h.c. F. Porsche AG is the owner of numerous trademarks, both registered and unregistered, including without limitation the Porsche Crest®, Porsche®, Boxster®, Carrera®, Cayenne®, Cayman™, Tiptronic®, VarioCam®, PCM®, 911®, and the model numbers and distinctive shapes of Porsche's automobiles such as, the federally registered 911 automobile. The third party trademarks contained herein are the properties of their respective owners. Porsche Cars North America, Inc. believes the specifications to be correct at the time of printing. However, specifications, standard equipment and options are subject to change without notice. Some options may be unavailable when your car is built. Some vehicles may be shown with non-U.S. equipment. Please ask your dealer for advice concerning the current availability of options and verify the optional equipment that you ordered. Porsche recommends seat belt usage and observance of traffic laws at all times.

©2007 Porsche Cars North America, Inc. Printed in the U.S.A **MKT 001 104 08** **www.porsche.com** **1-800-PORSCHE**

MKT 001 104 08

**The 911 Turbo**

PORSCHE

# The 911 Turbo

Downloaded from www.Manualslib.com manuals search engine

## The 911 Turbo and 911 Turbo Cabriolet


An Overview pg 2

Performance pg 22

Safety pg 60

Environment pg 74

Comfort and Personalization pg 80

Exclusive pg 94

Options and Specifications pg 104


Downloaded from www.Manualslib.com manuals search engine

When Porsche develops a new 911 Turbo, driving enthusiasts don't expect us to push the envelope. They expect us to shred it.

The 911 Turbo and 911 Turbo Cabriolet are the first models to feature Variable Turbine Geometry. The first with actively controlled all-wheel drive. And the first to reach 60 mph in less than four seconds.

More power.
More responsive.
More refined.
Some things never change.

# The 911 Turbo and 911 Turbo Cabriolet





Downloaded from www.Manualslib.com manuals search engine

Downloaded from www.Manualslib.com manuals search engine

**Variable Turbine Geometry.**
**Constant innovation.**

**The 911 Turbo.**

In 1974, Porsche engineers transferred a dramatic power-boosting technology from our dominating 917 race car to a road-going 911. Ever since that first enhanced model, ultimate performance has been defined by a single word: Turbo.

But the process of dramatically enhancing performance did not originate at the track, our test center or even an engineer's drafting table. Instead, it began in a simple workshop in the Austrian village of Gmünd in 1948. It was here that Dr. Ferdinand Porsche and his son Ferry unveiled the very first Porsche—Type 356. Small and lightweight with its engine aft of the cockpit, this simple sports car employed revolutionary ideas and created a driving experience that was singularly pure. Yet to Ferdinand Porsche and his son, Porsche No. 1 was not a masterpiece, but a work in progress. A crucible in which to test, tune and enhance their designs in search of finer balance, quicker acceleration and a more intimate connection between car and driver.

This philosophy of relentless improvement that has driven every Porsche for nearly 60 years is mirrored in the evolution of the 911 Turbo. With each new model came increased handling stability, improved aerodynamics, better braking and, of course, more power. Every generation is more complete than the last. Each technical improvement brings a corresponding increase in passion felt behind the wheel. Now, more than three decades after the debut of the original model, we unveil the most powerful 911 Turbo ever. Engineered with Variable Turbine Geometry (VTG) and variable all-wheel drive, the 2008 911 Turbo Coupe and Cabriolet are uncompromising sports cars that, like every model before them, redefine performance in fewer seconds than the last.





Downloaded from www.Manualslib.com manuals search engine

The 1976 911 Turbo 3.0; the new 911 Turbo

**Porsche races ahead.**

The first turbocharged Porsche race car debuted in 1972. Fitted with a 12-cylinder, 5-liter engine, the legendary Porsche 917/10 fielded a twin-turbo design to produce a colossal 1,000 horsepower and a North American CanAm championship. One year later, the 917/30 became the most powerful racing Porsche of all time with a 5.4-liter, 1,100-hp engine that proved practically unbeatable. In typical Porsche fashion, this race-bred technology found its way into our production models.

**The 911 Turbo legend begins.**

In 1974, the first 911 Turbo was unveiled. Arriving in the midst of a global oil crisis, it was a bold statement—and looked the part. Wider wheel arches were sculpted to accommodate tires that were large enough to handle 256 lb.-ft. of torque—the highest ever achieved by a 3-liter engine at the time.

Aerodynamic refinements were also essential requirements, given its prodigious engine performance. These included a fixed front spoiler and the now-legendary rear wing, which helped to keep the tires firmly planted at speed. Producing 260 horsepower, the original 911 Turbo could sprint from 0–62 mph in 5.5 seconds. Maximum torque output of 256 lb.-ft. was unprecedented in a 3-liter engine, necessitating other innovations such as reinforced gears.

**Cooler, faster, stronger.**

The first evolution of the Porsche 911 Turbo arrived in 1978 with several notable advances. A larger 3.3-liter engine was the first to feature an intercooler, which further improved the engine's intake air density and helped it break the 300-hp barrier. Brake performance was also enhanced by combining four-piston, fixed aluminum calipers with cross-drilled discs.

In 1987, the 911 Turbo was joined by two open-topped models—the first 911 Turbo Cabriolet and the 911 Turbo Targa. In 1991, Porsche launched the last 911 Turbo with dedicated rear-wheel drive. Based on the Type 964 platform, it used a 3.6-liter engine to achieve a major boost in output—360 horsepower.

**Tour de force.**

Evolution gave way to revolution in 1996 with the introduction of the 911 Turbo's Type 993 successor, which set a range of new benchmarks in supercar performance. A unique all-wheel-drive system with rear-axle bias improved 911 driving dynamics while retaining its classic handling characteristics. Twin exhaust turbochargers offered improved throttle response and a more fluid buildup of power. The last 911 Turbo to feature an air-cooled engine design, it created a maximum output of 408 horsepower.

**A new millennium.**

The first water-cooled 911 Turbo debuted in the year 2001. This radically new 3.6-liter power plant used patented VarioCam Plus technology to drastically reduce fuel consumption while increasing output to 420 horsepower. The first 911 Turbo to couple all-wheel drive with an optional Tiptronic S transmission, it raced from 0–62 mph in 4.2 seconds with a top track speed of 193 mph. Five years later, a Turbo S version of the 911 Type 996 boosted power to 450 horsepower.

Downloaded from www.Manualslib.com manuals search engine

## Two models.
## One unmistakable purpose.

For over 30 years, the 911 Turbo has established itself not just as an icon, but as an iconoclast: Each generation has crushed old beliefs about the limits of sports-car performance. The 911 Turbo and 911 Turbo Cabriolet continue this time-honored tradition into a sixth generation. Their unprecedented acceleration and handling dynamics, together with heightened levels of comfort and poise, coalesce into the ultimate sports car—and the next masterpiece of Porsche engineering.

**More power, less weight.**

While the engine's horizontally opposed boxer layout and 3.6-liter displacement remain intact, power output has been markedly improved to the tune of 480 horsepower at 6000 rpm—60 horsepower more than that of the previous generation of 911 Turbo. A significant increase in torque is also present, with 460 lb.-ft. on tap from 1950 rpm all the way up to 5000 rpm with no drop-off.

Even more thrilling, this increased power is delivered in a lighter package. Aluminum doors and an aluminum trunk lid exemplify the extensive use of weight-saving materials and construction techniques that help these models shed 11 pounds of weight, giving the Coupe an impressive power-to-weight ratio of 7.28 lbs./hp. The new 911 Turbo Cabriolet sports an equally impressive 7.6 lbs./hp ratio. The payoff? Zero to 60 mph in 3.7/3.8 seconds (Coupe/Cabriolet) with a manual gearbox.

Equipped with the Tiptronic S transmission, the 0–60 mph Coupe acceleration time is 3.4 seconds and the Cabriolet time is 3.5 seconds. On the track, the 124-mph benchmark is eclipsed by the Tiptronic S Coupe in a mere 12.2 seconds; 12.5 seconds with a manual transmission. The Cabriolet records 12.6 seconds for the Tiptronic S and 12.8 seconds for the manual transmission.

**A revolution in turbo technology.**

To achieve these new benchmarks, Porsche created Variable Turbine Geometry (VTG). Traditionally, optimal turbocharging has been an exercise in compromise. At low engine speeds, a small turbine accelerates more quickly due to its low mass. A large turbocharger excels at higher engine speeds by creating less back pressure. By adjusting the turbine vanes inside each of the engine's twin turbochargers, VTG creates the optimal profile as engine speed rises or falls.

In effect, a large turbo is made to mimic the profile of a smaller turbo at low engine speeds. At higher speeds, the profile is increased.

Variable Turbine Geometry offers a range of performance benefits, including higher torque at low engine speeds, greater top-end power, and optimal torque output over a broader range of engine speeds.



Downloaded from www.Manualslib.com manuals search engine

## Power at every wheel.
## Control at every corner.

To make the most of the engine's elevated potential, both 911 Turbo models feature another first: actively controlled all-wheel drive with Porsche Traction Management (PTM). PTM continuously adjusts the delivery of power between the front and rear axles in response to road conditions and driver input. The result is a precise and fluid transfer of power ideally suited for twists, turns and every driving situation—as well as improved active safety, particularly in wet or icy conditions.

**Power meets poise.**

The 911 Turbo's unbridled power is matched by an exemplary ride quality on every type of road—a rare achievement among the world's supercars. Both models come standard with optimized Porsche Stability Management, which helps keep the car on its intended course under extreme situations, and Porsche Active Suspension Management, which adjusts suspension dampers in response to changes in road conditions. A limited-slip differential is also available for the rear axle as an option.

Another benchmark technology tuned for higher performance on the 911 Turbo is the braking system. Massive 13.8-inch ventilated discs secure each corner with 6-piston calipers in front and 4-piston units in the rear. Optional Porsche Ceramic Composite Brakes (PCCB) offer unrivaled fade-free consistency and unsurpassed braking power on both the roadway and raceway.

**Can it get any better?**

Yes, it's a rhetorical question. For even greater performance, both models can be equipped with the optional Sport Chrono Package Turbo. Key features include an "overboost" function that provides up to 45 lb.-ft. of additional torque under acceleration. The electronic throttle map is also adjusted for a more dynamic response to pedal inputs.

Other modifications under "Sport" mode include a higher trigger threshold for Porsche Stability Management (PSM) and a stiffer suspension setup with Porsche Active Suspension Management (PASM), enabling faster turn-in and better road contact.



Downloaded from www.Manualslib.com manuals search engine

## Exterior design.
## Pure synergy.

Both 911 Turbo models are the perfect synthesis of power, elegance and functionality—the embodiment of a design philosophy whose unflinching focus on performance has served as a blueprint for reinventing the future, even while it retains the spiritual ties that bind the Porsche models together as a family.

Virtually every angle of our flagship 911 has once again been revisited in an incessant effort to achieve greater aerodynamic efficiencies.

**Front view.**

The front is designed to put onrushing air to optimal use. Massive air inlets that reflect the 911 Turbo's purposeful character direct cooling air to twin radiators located in the car's nose. Oval-shaped headlights echo classic 911 styling cues within the powerful front-end design, with the modern advantage of ultra-bright Bi-Xenon headlights and integrated headlight washers. Compact fog lamps and turn indicators assist in creating undisturbed airflow.

**Side view.**

Behind the doors, side air intakes provide efficient air delivery to the twin intercoolers. Equally efficient are the cooling air ducts—typical of Porsche racing cars—for the front and rear brakes, which play a key role in eliminating brake fade. Black plastic sills along the sides of the body provide effective protection against chips caused by flying pieces of asphalt.

A 19-inch forged alloy wheel design featuring a relatively small spoke cross-section helps reduce lift and improve braking even further by drawing warm air out from the brake discs and around the sides of the car instead of beneath the chassis. Less evident than the wheels' standard two-tone finish is a special weight-saving construction that sheds unsprung weight for more precise cornering. Quicker stops. And improved driving comfort behind the wheel.



**Rear view.**

The chiseled, athletic body of the 911 Turbo features a flared rear section whose broad wheel track and wide-profile tires provide for exceptional lateral grip. An engine lid design integrates the distinctive split-wing spoiler that lessens both lift and drag as it channels cool air into the engine compartment. The upper wing automatically extends when the car's speed reaches 75 mph to keep the rear wheels faithfully in line—and the drag coefficient remarkably low at just 0.31. Twin tailpipes inspired by the Porsche Carrera GT are fully integrated within the rear apron.

**Interior.**

The interior of the 911 Turbo models is equally compelling, with a carefully considered interior geometry designed entirely around the driver. Ergonomic refinements over the previous models include deeper seat positions with the gas and brake pedals moved forward. Standard features include a full leather interior, a unique gearshift knob created exclusively for the 911 Turbo, and a three-spoke sports steering wheel in Smooth-Finish Leather.

Rear wing retracted

Rear wing deployed

Downloaded from www.Manualslib.com manuals search engine

**The power of nature raised to the power of Porsche.**

**The new 911 Turbo Cabriolet.**

Its unrelenting power and laser-sharp reflexes are identical to those of the 911 Turbo Coupe. But its power to stir your senses and connect you with the allures of wide-open, high-performance driving is in a class all its own.

The new 911 Turbo Cabriolet is the most advanced convertible we've ever built. It shares the same technical specs and engine output as its Coupe cousin, combining the full privileges of piloting a turbocharged Porsche with the immediacy of six-speed manual shifting or the versatility of our optional Tiptronic S transmission.

Naturally, the car's active and passive safety features reflect the heightened abilities of a 911 Turbo. The body structure is light yet robust, with a 10% increase in torsional and flexural resistance compared to that of its predecessor. Improvements in body rigidity allow for more precise, Cabriolet-specific tuning of the chassis. Behind the wheel, this translates into more responsiveness and better agility at higher speeds, in tight turns and on uneven roads.

**Open it up like never before.**

When raised, the classic fabric top shares the same trademark silhouette—and aerodynamic efficiencies—that defines the 911 Turbo Coupe. Fundamentally, the convertible top's design is based on that of its predecessor, with a few meticulous improvements so typical of a new Porsche model.

Optimizing seams on the hand-stitched canvas top has reduced wind noise, while the addition of integrated rain channels helps eliminate dripping when the doors are opened during inclement weather.

At the press of a button on the center console, the side windows automatically lower and the electrically powered top glides beneath the rear deck lid in a scant 20 seconds. For added convenience, the top can be opened or closed while the vehicle is traveling at speeds of up to 30 mph.

An efficient zig-zag folding action provides a compact, space-saving design that also ensures maximum protection for the top's interior lining. Made from a robust heat- and sound-insulating fabric, this lining helps reduce noise levels to approximate those of a 911 Coupe at speed.

Other luxurious appointments include a heated, scratch-resistant glass rear window that offers clear visibility, even in sub-zero temperatures, and an optional aluminum hardtop that provides an additional layer of security and insulation in unsettled weather. A detachable wind deflector helps ensure that excessive buffeting does not interrupt conversations inside the cockpit.

**Sensational sound.**

To match its high performance with high fidelity, the new 911 Turbo Cabriolet is enhanced with a new generation of the Bose® Surround Sound system. Twelve expertly placed speakers and a "sound adaptation to hood position" function create a superior audio experience that is second only to the Porsche driving experience itself.

Downloaded from www.Manualslib.com manuals search engine

Downloaded from www.Manualslib.com manuals search engine

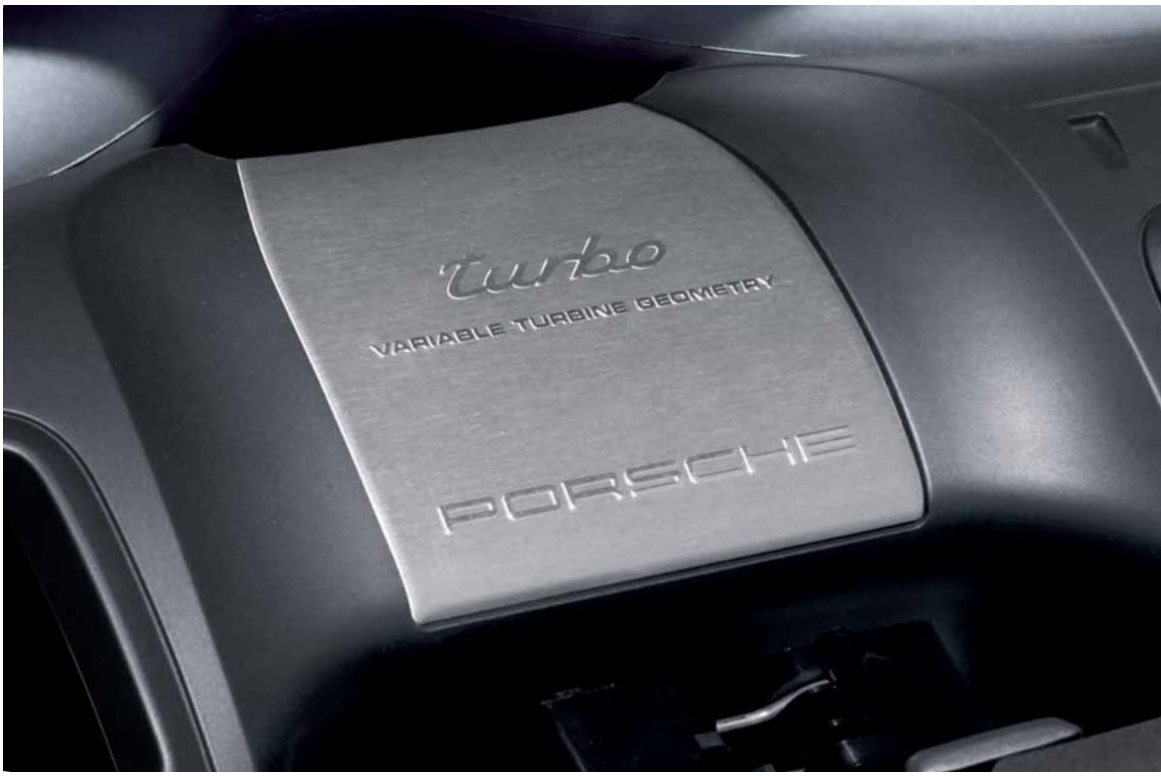


The poetry of performance in the 911 Turbo combines strength with grace, intelligence with sensation, precision with soul, and it raises performance to an art.

# Performance





Downloaded from www.Manualslib.com manuals search engine

## Engine.

### A tradition of innovation.

911 Turbo engine

F. A. Porsche pushed the envelope far indeed when he designed the first 911. With its flat-six cylinder layout and rear-mounted location, it broke the mold of sports-car design. The Turbo engine stays true to those 911 essentials, and to the Porsche spirit of innovation.

**A higher peak.**

Porsche has applied Variable Turbine Geometry (VTG) to the 911 Turbo gasoline engine. By improving the efficiency of the car's twin turbochargers, Variable Turbine Geometry contributes to a 14-percent increase in peak power over the previous-generation 996 Turbo, with the same 3.6-liter displacement. Output thus increases to 133 horsepower per liter.

**A broad plateau.**

Peak power is just part of the advantage. With Variable Turbine Geometry and Porsche VarioCam Plus working in concert, the engine's astonishing 460 lb.-ft. of maximum torque is fully available from 1950 to 5000 rpm. This impressive torque plateau translates to commanding acceleration throughout the revolution band.

Equipped with the optional Tiptronic S transmission, the 911 Turbo Coupe can accelerate from a standing start to 60 mph in just 3.4 seconds, reaching 124 mph in just 12.2 seconds. The Cabriolet accelerates from a standing start to 60 mph in just 3.5 seconds, reaching 124 mph in just 12.6 seconds. In appropriate track conditions, the top track speed is 193 mph for both the Coupe and the Cabriolet.

Downloaded from www.Manualslib.com manuals search engine

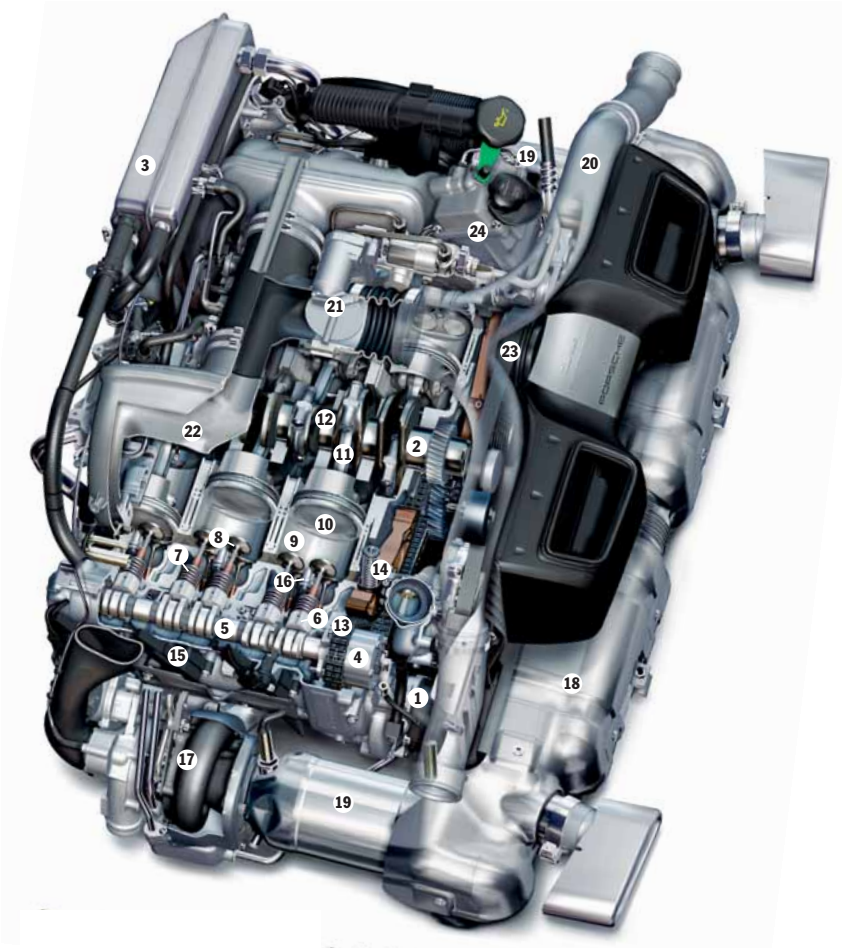


1. **Oil scavenge pump**
2. **Oil pressure pump (obscured)**
3. **Engine oil reservoir (dry-sump lubrication)**
4. **Camshaft adjuster (VarioCam Plus)**
5. **Intake camshaft**
6. **Tappets (with hydraulic valve clearance adjustment)**
7. **Valve springs**
8. **Intake valves**
9. **Nikasil-coated cylinder bore**
10. **Forged aluminum piston**
11. **Forged connecting rod**
12. **Crankshaft**
13. **Camshaft drive chain**
14. **Camshaft drive chain tensioner with guide rail**
15. **Single-spark ignition coil**
16. **Spark plug**
17. **Exhaust-gas turbocharger with Variable Turbine Geometry (VTG)**
18. **Exhaust system**
19. **Catalytic converter**
20. **Pressure pipe**
21. **Throttle valve (electronically actuated)**
22. **Plenum chamber**
23. **Ancillary drive belt**
24. **Fluid reservoir for power-steering system**

**Lightweight, high strength.**

Compared to conventional engines of similar displacement, the 911 Turbo engine has a wondrously compact design. Its two banks of cylinders are located on a horizontal plane, lowering its center of gravity. This "boxer" cylinder arrangement also provides good balance and reduced vibration.

Its compactness is complemented by lightweight materials. The crankcase, for example, is a lightweight alloy constructed in two main sections, one for each bank of cylinders. The pistons are aluminum. The cylinder heads are made from a lightweight alloy which is extremely resistant to high temperature.

Frictional resistance is also notable. The pistons run in Nikasil-coated aluminum liners, featuring individual oil-spray cooling. As in all 911 engines, dry-sump lubrication ensures consistent oiling. Vibration is further minimized by a crankshaft running on eight main bearings.

Each bank of cylinders has two overhead camshafts driving a set of four valves—two inlet and two exhaust—on each individual cylinder. The valves are arranged in a "V" configuration and feature a highly efficient dual-spring design.

These time-proven elements of Porsche engine design provide the ideal platform for performance-enhancing technologies, such as VarioCam Plus and Variable Turbine Geometry.





Downloaded from www.Manualslib.com manuals search engine

## Variable Turbine Geometry.

## Advancing the turbo concept.

Turbocharger with Variable Turbine Geometry (VTG)

The turbocharger has undergone a continuous evolution in the hands of Porsche engineers. Variations in turbine size, the addition of the intercooler, the move to twin turbochargers and advances in engine-management systems have all extracted greater performance from the basic concept of an exhaust-driven compressor. In the 911 Turbo, Variable Turbine Geometry (VTG) provides a revolutionary step forward.

**The turbo dilemma.**

It's well understood that a smaller turbine will generally reach optimal speed more quickly than a larger, heavier turbine. But as engine revolutions continue to climb, exhaust flow tends to overwhelm the smaller turbine; the resulting back pressure robs the engine of power at high rpm.

Larger turbo units have the opposite tendencies. They work well at mid- to high-range engine speeds, but it takes them longer to spin up to speed, resulting in "turbo lag."

**A virtuoso performance.**

The 911 Turbo offers a revolutionary solution to this dilemma. Its twin intercooled turbochargers feature the application of Variable Turbine Geometry. With Variable Turbine Geometry, the exhaust flow is channeled into the turbines by way of electronically adjustable guide vanes. By changing the angle of these vanes, the system can replicate the advantages of a small turbo at low rpm, and a larger turbo as the tachometer climbs.

While this technology has been used in diesel engines since 1996, Porsche uses Variable Turbine Geometry for the first time in the newest generation of 911 Turbo. The system is capable of handling the significantly hotter exhaust from a gasoline engine by using heat-resistant materials first developed for aerospace.

Downloaded from www.Manualslib.com manuals search engine

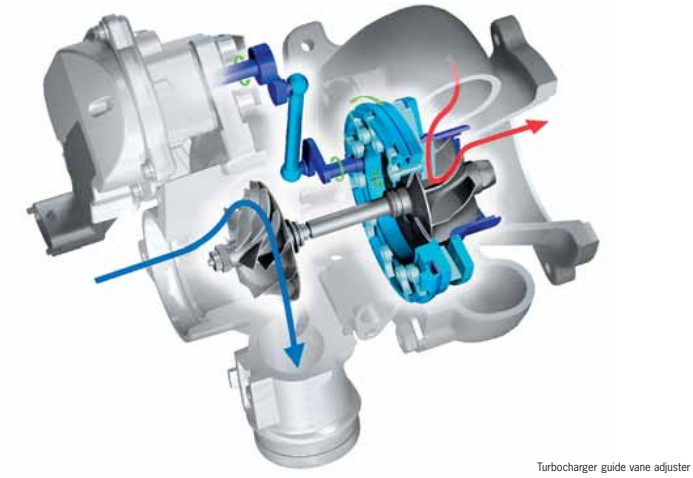

Turbocharger guide vane adjuster

**Commanding power.**

In the 911 Turbo, maximum torque is reached at a much lower rpm and retained across a wider revolution band. At every engine speed, throttle input is met with a commanding yet measured response. Once the boost pressure reaches its maximum value, the guide vanes are opened further. By varying the vane angle, it is possible to achieve and maintain the required boost pressure over the entire engine speed range. As a result, there is no need for a wastegate, as found on conventional turbocharged engines.

For brief bursts of additional power, the driver can select Sport mode on the optional Sport Chrono Package Turbo. Under full acceleration, this selection engages an "overboost" function for up to 10 seconds, temporarily raising the engine's torque to an astounding 505 lb.-ft.

Surprisingly, Variable Turbine Geometry also contributes to the new 911 Turbo's improved fuel efficiency, as well as its astonishing acceleration.

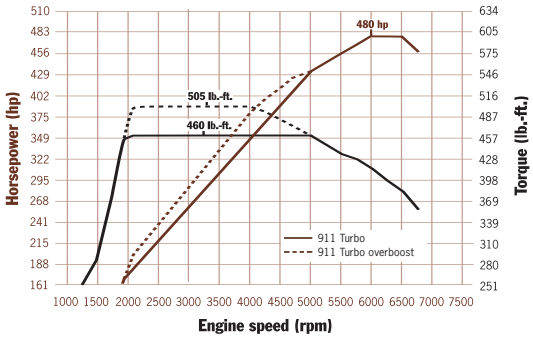






Downloaded from www.Manualslib.com manuals search engine

Guide vanes closed

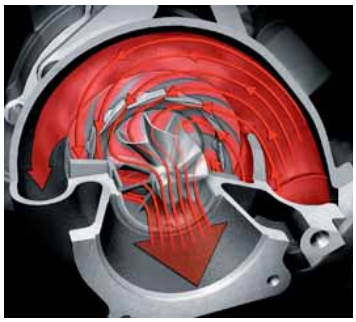

Guide vanes closed

Guide vanes open

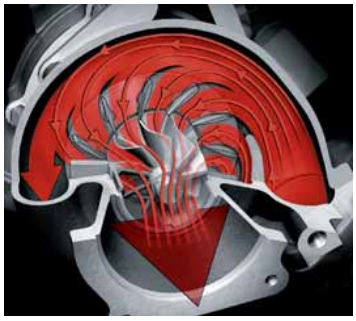

Guide vanes open



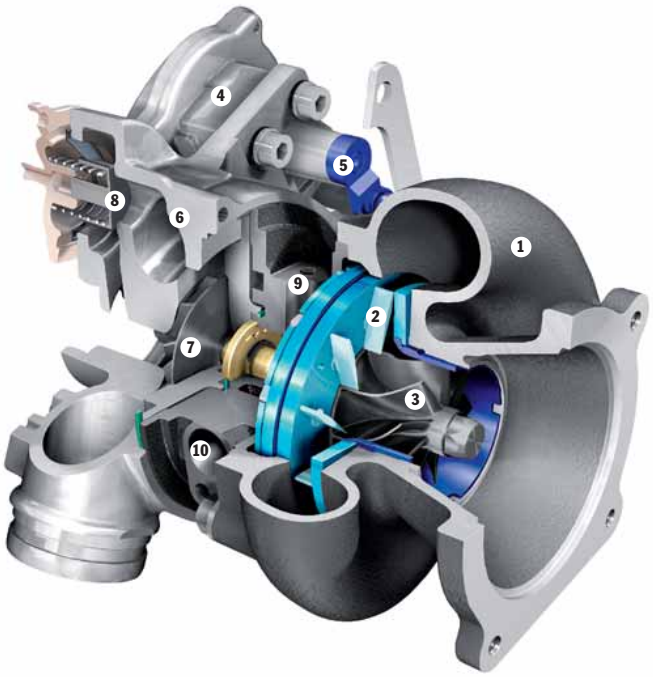


1. **Turbine casing**
2. **Movable guide vanes**
3. **Turbine wheel**
4. **Electric motor for guide vane adjustment**
5. **Guide vane adjuster**
6. **Compressor casing**
7. **Compressor wheel**
8. **Excess-pressure valve**
9. **Oil inlet**
10. **Coolant inlet**



Downloaded from www.Manualslib.com manuals search engine

1. Radiator module (left)
2. Radiator module (center)
3. Radiator module (right)
4. Coolant pipe
5. Coolant expansion tank
6. Air filter
7. Exhaust-gas turbocharger with Variable Turbine Geometry (VTG)
8. Intercoolers
9. Pressure pipe
10. Throttle valve (electronically actuated)
11. Exhaust system
12. Oil filter
13. Engine oil reservoir (dry-sump lubrication)
14. Generator
15. Porsche Active Suspension Management (PASM) damper
16. Tandem brake booster
17. Six-speed manual gearbox
18. Front differential
19. Fuel tank





Downloaded from www.Manualslib.com manuals search engine

## VarioCam Plus.

### Optimal valve timing, optimal valve lift.

VarioCam Plus is an innovative system that continually adjusts valve timing and valve lift for optimal performance. Its benefits include increased power and torque at all engine speeds, smoother running, better fuel economy and reduced exhaust emissions.

Essentially, VarioCam Plus offers two engines in one: one tuned for normal driving, the second tuned for high-performance road and track use. The system switches seamlessly between the two in response to driver input and conditions.

VarioCam Plus incorporates two cam profiles into each inlet camshaft. An electro-hydraulic mechanism engages the proper cam profile for a given engine speed. The timing of each valve is steplessly controlled by means of an electro-hydraulic rotary vane adjuster at the head of the corresponding camshaft. All operations are managed by a robust electronic control unit.

From the driver's perspective, the benefits of VarioCam are clear: copious torque when desired, with impressive fuel economy in daily driving, particularly compared to larger engines with similar output.



### Dry-sump lubrication.

Oil is the lifeblood of a high-performance engine. With a classic dry-sump system, the 911 Turbo ensures ideal oil pressure even under extreme g-force loads. After passing through the engine, every drop of oil is returned directly to an external reservoir. Flow to the reservoir is driven by two pairs of scavenge pumps in the cylinder heads and two pumps in the crankcase. A de-foaming device in the reservoir removes gases from the oil. The oil is returned to the lubrication points in the engine by means of a dedicated oil-feed pump. With an additional scavenge pump in each of the twin turbocharger units, the 911 Turbo has a total of nine separate oil pumps to assure continuous flow.

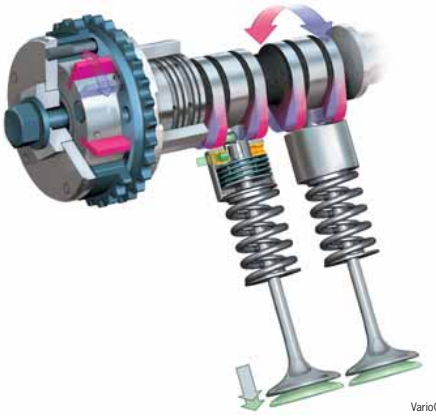

VarioCam Plus



Downloaded from www.Manualslib.com manuals search engine

**Engine cooling.**

An advanced cross-flow water-cooling system channels coolant separately to each individual cylinder, so that all six cylinders operate within the same temperature range. Consistent temperatures reduce the chance of pre-ignition knocking, extend valve life, improve fuel economy and lower emissions. Cleverly, the coolant channels are cast into the block, eliminating the need for hoses and related maintenance. Waste heat from the oil is transferred to the coolant via two oil/water heat exchangers. Coolant is routed through twin radiator units located ahead of the front wheels and a third unit placed in the car's nose.

**Engine management.**

In the 911 Turbo, an electronic brain assures optimal performance in all operating conditions. The Motronic ME 7.8.1 is the latest generation of Porsche's well-proven engine management system. This powerful system is responsible for all engine-related functions and assemblies (see diagram). Key among these are Variable Turbine Geometry (VTG), VarioCam Plus, the electronic throttle system and Porsche Stability Management (PSM). The results: optimal economy, emissions and performance, regardless of driving style.

Another important task performed by the engine management system is cylinder-specific knock control. By preventing pre-ignition at high engine speeds, it can avert costly damage to the pistons and cylinders.



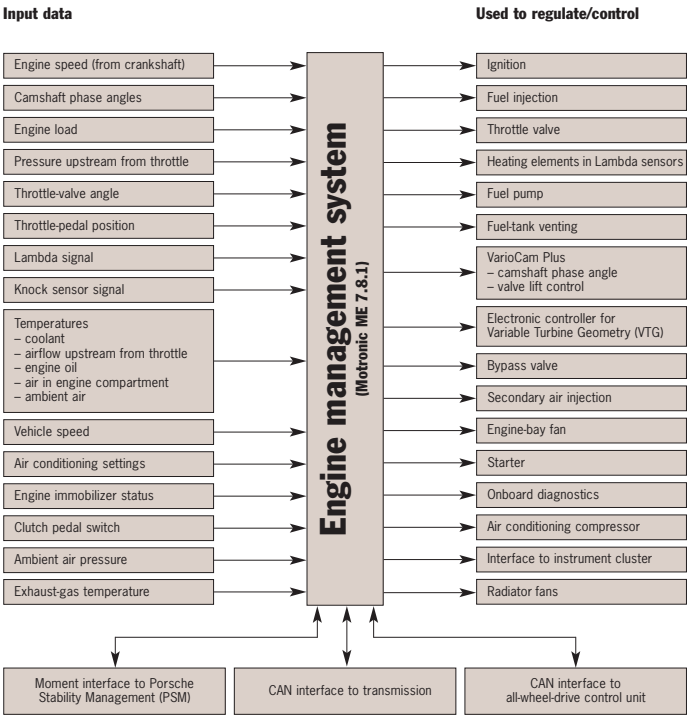




Downloaded from www.Manualslib.com manuals search engine

**Fuel injection.**

Fuel is supplied to each of the six cylinders by means of sequential fuel injection. The timing and volume of each injection are controlled by the engine management system. Adjustments are based on a range of variables, such as throttle position, engine speed, boost pressure, coolant temperature and exhaust-gas composition. In this way, both combustion and fuel consumption are optimized. A hot-film air-mass sensor monitors the density of the incoming air to ensure the optimal air/fuel mixture, regardless of weather and altitude.

**Ignition system.**

The 911 Turbo is equipped with a static high-voltage ignition system. Each individual plug has a separate ignition coil, ensuring reliable combustion every time. The role of distributor is performed by the engine management system, which operates the coils directly to assure optimal performance with minimal fuel consumption.

**Exhaust system.**

The exhaust system plays the final role in maximizing engine performance. The 911 Turbo's all-stainless-steel exhaust system consists of two separate tracts, one for each bank of cylinders. The catalytic converters are extremely heat-resistant, yet quick to reach temperature from a cold start, assuring good performance. Twin Lambda sensors in each of the exhausts enable continuous monitoring of the combustion process. An additional pair of sensors is used to measure the efficiency of the catalytic converters.

**Servicing.**

Our engineers developed the 911 Turbo to deliver peak performance with minimal service required. Some examples of their thoughtfulness include timing chains that are maintenance-free for the life of the car, an ignition system that requires no servicing beyond fresh spark plugs every 24,000 miles, valves that self-adjust automatically, and a self-adjusting belt that drives the generator, power-steering pump and air conditioning compressor, which has an average service life of over 50,000 miles. Thanks to excellent filtration and high-endurance synthetic oil, oil-change intervals are an astonishing 12,000 miles.

Downloaded from www.Manualslib.com manuals search engine

Downloaded from www.Manualslib.com manuals search engine

## Two engaging transmissions.

**Six-speed manual transmission.**

The 911 Turbo Coupe and Cabriolet feature as standard equipment a new six-speed manual gearbox, meticulously adapted to handle high torque. Designed primarily for sports driving, it features the ideal spread between successive gear ratios. Gearshift throws are short and properly weighted, enabling rewarding and decisive shifting. The linkage provides a direct connection with the gearbox while insulating the lever from engine vibration. A dual-mass flywheel assures smooth power delivery and quiet idling in neutral. One final detail—the new gear-lever design—is exclusive to the 911 Turbo.

**Tiptronic S.**

There was a time when the sports-car buyer was forced to choose between the control of driver-executed gearshifts and the ease of automatic shifting. Porsche changed all that with the introduction of Tiptronic, a highly sophisticated automatic transmission with a manual-shifting option.

The five-speed Tiptronic S, the latest advance of this technology, is now available as an option on the 911 Turbo. Far from compromising performance, its lightning-quick gearshifts actually reduce sprint times compared to that of the standard six-speed gearbox. Tiptronic S in the Coupe shaves 0.3 seconds in the sprint from 0 to 60 mph, and 0.3 seconds from 0 to 124 mph. The Tiptronic S in the Cabriolet reduces the 0–60 mph time by 0.3 seconds. The 0–124 mph time is reduced by 0.2 seconds.



The Tiptronic S offers you the choice of fully automatic five-speed shifting or manual control. In manual mode, shifts are executed using controls on the steering wheel. Simply press up to upshift, down to downshift. The clutch function is fully automatic.

In automatic mode, Tiptronic S displays almost prescient awareness of the driving situation and road conditions. Drivers quickly develop a feel for the system, and quite soon find themselves managing gear selection through throttle input alone.

Based on your driving style, the system selects from a wide range of shift patterns, from a conservative fuel-saving pattern all the way to a dedicated “Sport” pattern. Unlike conventional automatics, Tiptronic S prevents mid-corner gearshifts and unexpected weight transfer, enhancing stability and safety.

Under heavy braking, the system shifts down, using engine braking to slow the car, particularly helpful when approaching a corner. Under prolonged braking, additional downshifts are performed based on the amount of brake force applied.

The system’s incline sensor improves uphill acceleration and makes better use of engine braking on descent, reducing the brake-system load. If traction is lost under braking in rain or snow, Tiptronic S automatically shifts up to help restore lateral grip and bring the car back in line with the intended course.



Downloaded from www.Manualslib.com manuals search engine

## Electronically controlled all-wheel drive with Porsche Traction Management.

## The synthesis of brains and brawn.

An engine's twisting power is of limited use unless it can be turned into forward motion. This is no small challenge in the powerful 911 Turbo. To apply the engine's 460 lb.-ft. of torque to the road, Porsche engineers have developed a new traction control system for the car's full-time all-wheel drive.

In the previous 911 Turbo (Type 996), a viscous multi-disc clutch responded to relative front/rear speed differences to determine how much torque to apply at either axle. The new generation of 911 Turbo, by contrast, employs an electronically controlled multi-disc clutch that responds to traction changes almost instantaneously. Onboard sensors measure a range of values, including the rotational speed of all four wheels, the car's lateral and longitudinal acceleration, and the current steering angle. The sensor data are analyzed in real time, enabling immediate adjustments in the torque split between the front and rear axles.

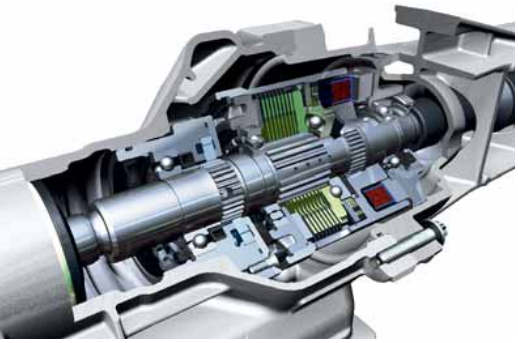

Electronically controlled multi-disc clutch

**Balanced performance.**

The benefits are wide-ranging. For example, if the rear wheels lose traction under acceleration, more drive torque is instantly transmitted to the front axle. The integral Anti-Slip Regulation (ASR) function also minimizes wheel-spin. When the vehicle is cornering, Porsche Traction Management (PTM) adjusts drive to the front wheels in order to maintain optimal lateral grip. On variable-grip surfaces, traction is enhanced using the Automatic Brake Differential (ABD) function. For optimal traction, manual-transmission cars can also be equipped with an optional mechanical limited-slip rear differential.



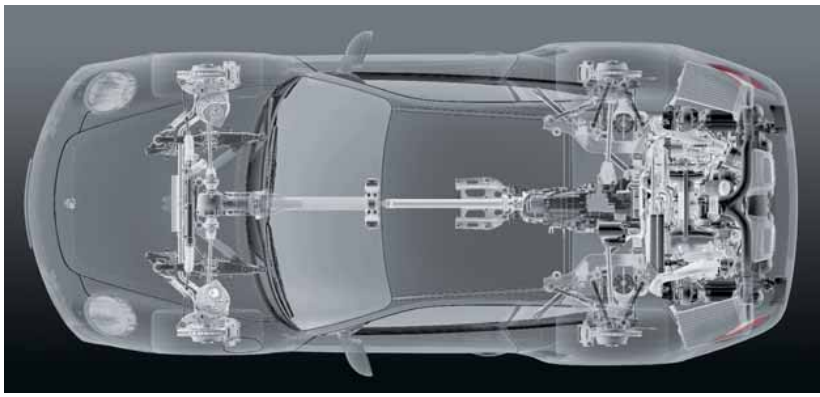

All-wheel-drive system

Assisting Porsche Traction Management is an upgraded version of Porsche Stability Management (PSM). Combined, these systems ensure optimal torque distribution as the road changes beneath you—through long straightaways, hairpin bends and the challenge of changing levels of road grip. The traction benefits of the new electronically controlled system are particularly apparent in wet conditions or on snow.

**Active safety.**

The system also plays a role in emergency braking. When the Anti-lock Brake System (ABS) is activated, Porsche Traction Management cuts all torque to the front axle, so that both front wheels can be controlled separately by the ABS without being influenced by the rear-wheel dynamics.



Downloaded from www.Manualslib.com manuals search engine

## Suspension.

### Precision, strength and lightweight design.

Front axle of the 911 Turbo

Rear axle of the 911 Turbo

These sculpted forms represent the ultimate evolution of Porsche suspension design. Their sporting prowess begins with sound geometry and lightweight materials. Reducing weight, particularly of the unsprung masses, brings significant benefits in driving dynamics.

At the front axle, MacPherson struts work in concert with longitudinal and transverse links to keep the tire patches firmly planted over the road's twists, turns and bumps. Brake spoiler elements provide efficient cooling for each of the front brake units.



The rear-axle assembly is a race-proven, multi-link design known as LSA—for lightweight, stable and agile. Its kinematics improve stability under acceleration by reducing excessive compression. Virtually all moving parts in the axle assemblies are made from light yet robust aluminum.

To suit changes in road conditions and driving style, the 911 Turbo models are equipped with an electronic damping system called Porsche Active Suspension Management (PASM).

With a suspension ideally tuned to the car's potential, the 911 Turbo delivers both the exhilaration of controlled high-performance driving, and the extra margin of safety that comes from driving a highly responsive, well-mannered sports car.



Downloaded from www.Manualslib.com manuals search engine

## Steering.

### Communication between car and driver.

In a high-performance car, the steering must do more than respond with precision; it must also communicate back to the driver the interaction of tire and road. The power-assist steering in the 911 Turbo achieves these objectives with true finesse.

One of the key features of the steering system is its variable-ratio gearing. Around the straight-ahead position, the ratio is less direct, enabling smoother maneuvers at highway speeds. Turn the wheel harder and the ratio becomes more direct, enabling better manageability through twisting back roads or in tight parking situations.

Sensitive, accurate and engaging, the steering is everything you expect from a 911 Turbo.



**Wheels.**

Strong and light, the standard 19-inch forged alloy wheels were engineered to extract every ounce of the 911 Turbo's thrilling performance potential. Their new design features a two-tone finish that further distinguishes the Turbo from other 911 models: The sides of each spoke are painted in a titanium tone, while the entire front surface, including the flange, has a polished finish.

The front wheel dimensions are 8.5J x 19, and are shod with 235/35 ZR 19 tires. As befits the car's rear bias, the rear wheels are a wider specification, 11J x 19, with 305/30 ZR 19 performance tires.

A range of optional 18- and 19-inch winter wheels (all snow chain-compatible) are available from Porsche Tequipment. Vehicles equipped with the optional Porsche Ceramic Composite Brake (PCCB) may only be fitted with the larger 19-inch winter wheels.

**Tire Pressure Monitoring System.**

The standard Tire Pressure Monitoring System (TPMS) informs the driver of pressure loss through the onboard computer display as well as a separate indicator light.

19-inch wheel



Downloaded from www.Manualslib.com manuals search engine

## Porsche Active Suspension Management.

### From ultimate comfort to optimal performance.

For the ultimate in comfort and control, the 911 Turbo is equipped with Porsche Active Suspension Management (PASM) as standard equipment. This system provides continuous adjustment of the damping force at all four corners of the car to suit your driving style and changing road conditions.

Porsche Active Suspension Management has two driver-selectable modes, "Normal" and "Sport," which share a minimal degree of overlap. In either mode, PASM reacts to changes in the road and your driving style by varying damping force at each wheel. The system uses a range of sensors to monitor the car's longitudinal and lateral acceleration, braking, steering angle, brake-pedal pressure and engine torque. A dedicated control unit analyzes all this data, and adjusts damping to suit the situation, within the parameters of the driver-selected mode.

Further driver input is not required, even if road conditions change. If Sport mode is selected, for example, the suspension is set to a harder damper rating. If the quality of the road surface falls below a certain threshold, the system immediately changes to a softer rating within the Sport range. This adjustment enhances occupant comfort as well as traction and grip. When the road surface improves, PASM automatically reverts to the original, harder rating.

Likewise, if Normal mode is selected and the car is driven more assertively, PASM automatically switches to a harder rating within the Normal setup range. As the dampers become stiffer, the car becomes more stable, ensuring higher levels of active safety and responsiveness.

With Porsche Active Suspension Management, agility is enhanced, without compromising overall ride quality. The result is a new level of harmony between comfort and control.

**Limited-slip differential.**

For enhanced grip in high-performance driving, Porsche offers an optional mechanical limited-slip rear differential for the 911 Turbo with manual gearbox.

Key benefits include greater rear-end traction when exiting hairpin bends, and improved traction on variable-grip surfaces. It also compensates for changes in wheel loads caused by throttle modulation when cornering.

Rebound in Normal mode—damper piston with bypass valve open

Rebound in Sport mode—damper piston with bypass valve closed

Compression in Normal mode—damper piston with bypass valve open

Compression in Sport mode—damper piston with bypass valve closed



Downloaded from www.Manualslib.com manuals search engine

## Porsche Stability Management.

## Enhancing the art of driving.

The latest evolution of Porsche Stability Management (PSM) is standard equipment on the 911 Turbo. While PSM cannot overcome the laws of physics, this advanced system can provide the driver with additional control in extreme situations.

PSM remains an invisible feature in most everyday driving. However, it is constantly monitoring a host of dynamic variables—including the car's direction, speed, yaw velocity (the speed at which the car rotates around its vertical axis) and lateral acceleration.

**Staying on course.**

If PSM perceives that the car is diverging from the driver's intended course, it applies selective braking at individual wheels to help bring the car in line. Porsche Stability Management also assists when accelerating on a slippery surface, applying the integrated Automatic Brake Differential (ABD) and Anti-Slip Regulation (ASR) functions to help maintain traction and stability. Whenever PSM intervenes, an indicator light is illuminated.

**Enhanced braking.**

The Anti-lock Brake System (ABS) is an integral function of Porsche Stability Management. If a wheel approaches the threshold of skidding under braking, PSM applies selective ABS braking to that wheel, to shorten the braking distance and enhance directional control. The ABS function is smooth and precise.

Active safety is further enhanced by two additional brake functions: electronic brake prefill and brake assist.

The prefill function is automatically enabled whenever the throttle pedal is suddenly released. The pressure in the brake lines is marginally increased, and brake pads come into light contact with the discs. Should the driver choose to brake, the system is thus prepared to apply the maximum force without delay.

The brake assist function is specifically designed for use in emergency stops. When the pressure on the brake pedal exceeds a predefined threshold, the brake assist function uses the PSM hydraulics to apply the pressure required for maximum deceleration. The result: shorter braking distances.

**Raising the threshold.**

When Sport mode is selected on the optional Sport Chrono Package Turbo, PSM's threshold for intervention is raised, allowing greater driver involvement.

If you'd rather enjoy your 911 Turbo unassisted, PSM can be set to standby at any time. In this case, it will only intervene under heavy braking, where both front wheels exceed the ABS threshold.

All PSM inputs are restrained, preserving the natural agility of the car. While safe driving is ultimately the driver's responsibility, PSM can provide an extra margin of safety when you need it most.





Downloaded from www.Manualslib.com manuals search engine

## Sport Chrono Package Turbo.

## Our idea of a command performance.

Like every Porsche, the 911 Turbo has plenty of performance in reserve. To help you further explore its potential, we offer the Sport Chrono Package Turbo. With this option, you have the ability to reprogram the car's electronic systems for maximum performance at the touch of a button, and to record performance figures.

Key features of the Sport Chrono Package Turbo include a swivel-mounted timer located on the dashboard, a "Sport" select button on the console, a performance display in the standard Porsche Communication Management (PCM), a personal memory function in PCM, and a special overboost function unique to the 911 Turbo Coupe and Cabriolet.

**One-button control.**

When Sport mode is selected, the engine management system modifies the throttle map, and engine variables are adapted to create a more aggressive level of power response. Under full acceleration, the overboost function temporarily increases (approx. 10 sec.) the available boost pressure by approximately 3 psi. The overboost is applied across the medium rev range, raising the standard 460 lb.-ft. of torque to as much as 505 lb.-ft.

Suspension variables are also retuned to the demands of more assertive driving. Porsche Active Suspension Management (PASM) switches to the firmer-damping Sport mode, enabling faster turn-in and flatter cornering. The all-wheel-drive system applies a greater proportion of drive torque to the rear, and the threshold for engagement of Porsche Stability Management (PSM) is raised, allowing a greater degree of throttle steer. For maximum maneuverability, PSM can be set to standby.

On vehicles with Tiptronic S, the basic gearshift pattern is automatically switched to high-performance mode. The gearshift action is virtually instantaneous, while the shift points are timed for maximum acceleration.

Sport button on center console

**Recording your performance.**

To help you monitor the car's increased performance, the timer includes an analog face and a digital field that can split times to the hundredth of a second. Times can be viewed, stored, compared and analyzed. Other useful features include a memory function that stores personal preferences for a range of features, including daytime running lights, "Welcome Home" lighting, climate control and door-locking functions.





Downloaded from www.Manualslib.com manuals search engine

Downloaded from www.Manualslib.com manuals search engine

The 911 Turbo showcases advanced active and passive safety technologies that were developed with your safety in mind.

# Safety





Downloaded from www.Manualslib.com manuals search engine

## First, avoid harm.

## Active safety in the 911 Turbo.

The best method of protecting a car's occupants is to aid the driver in avoiding accidents altogether. In the 911 Turbo, a poised, predictable chassis, responsive engine, powerful brakes, and electronic driver's aids all contribute to a generous reserve of safety. Lighting systems to see and be seen also assist in making a safer driving environment.

**Lighting systems.**

The most advanced headlights available, Bi-Xenon gas-discharge lamps are standard on the 911 Turbo. Nearly twice as bright as halogen, Bi-Xenon's blue-white light is virtually identical to the spectrum of daylight, improving color perception and reducing eyestrain. In the 911 Turbo, the light's swath is also wider and more consistent than that of conventional beams. To prevent the dazzling of oncoming traffic, dynamic headlamp leveling automatically adjusts the beams to compensate for changes in vehicle attitude during acceleration or braking. Integrated headlamp washers keep the lens crystal clear.

Equal care was taken in designing other lighting systems. The turn indicators feature bright and crisp LEDs for optimal visibility. Compact front fog lights are an effective and distinctive feature. At the rear of the car, the high-level third brake light is also equipped with fast-response LEDs. When either door is opened at night, a white curb light shines downward, lighting your way, while a red safety light warns cars approaching from behind that the door is open.

Bi-Xenon headlight

Third brake light





Downloaded from www.Manualslib.com manuals search engine

## Braking system.

### Always quick when you have to be slow.

The braking ability of the 911 Turbo is every bit as impressive as its acceleration. Powerful, precise braking begins with four massive discs. Measuring 13.78 in. (350 mm), each of the four discs is internally vented and cross-drilled for maximum cooling under heavy brake use and reliable braking in wet conditions.

Next come the calipers. A single block of aluminum forms the body of each monobloc caliper—a design that is extremely rigid, robust and lightweight to further reduce unsprung mass. The calipers feature six pistons in front and four in the rear. The brakes are quick to apply and release, while the pedal travel is short, precise and consistent. Air channels deliver cooling air to keep the system fade-free.

Finally, we add the latest driver's aids. Braking distances are reduced by the Anti-lock Brake System (ABS) and the electronic brake prefill and brake assist systems, which are integral to Porsche Stability Management (PSM).

Standard brake unit

**Porsche Ceramic Composite Brake.**

For the ultimate in high-performance braking technology, the 911 Turbo can be equipped with the optional Porsche Ceramic Composite Brake (PCCB) system.

The key components in PCCB are the molded ceramic discs, which are a larger 14.96 in. (380 mm) at the front, and 13.78 in. (350 mm) at the rear. As a result of an extremely complex manufacturing process, they are harder, more resistant to high temperatures, and only about half the weight of grey cast-iron discs—three reasons composite brakes are widely used in today's most advanced racing cars. The ceramic material is also corrosion-resistant and offers excellent acoustic damping properties.

PCCB

The carbon-composite discs work in concert with a special brake-pad compound, offering rapid deceleration and consistent friction properties. The pads are mounted in six-piston, monobloc, aluminum fixed calipers at the front, with four-piston units at the rear.

The ultimate advantages of PCCB are an extremely high braking force that remains exceptionally consistent under heavy use, and a significant reduction in unsprung mass, which improves the chassis's responsiveness. To distinguish Porsche Ceramic Composite Brakes at a glance, the calipers are painted yellow.



Downloaded from www.Manualslib.com manuals search engine

## Body structure.

### Lighter, yet stronger.

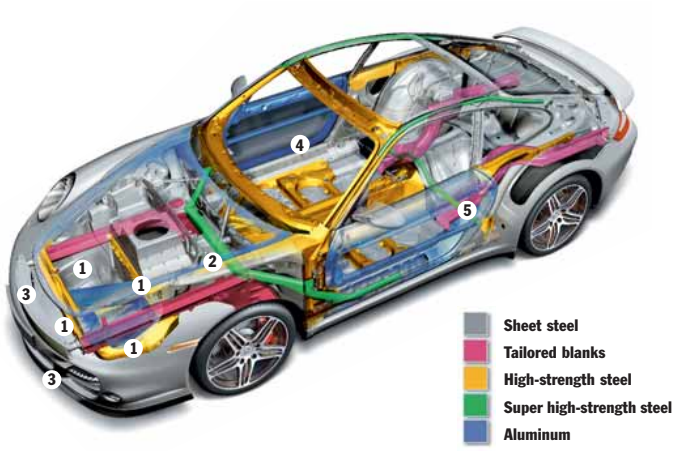


As a global benchmark in performance, the 911 Turbo is designed to meet the word's most stringent crash-safety regulations—including statutory requirements for frontal, side, diagonal, rear-impact and rollover protection. The reinforced bodyshell is designed around a highly resilient passenger cell, offering exceptional crash protection.

**Frontal protection.**

At the front of the car, the cell is protected by a patented system of longitudinal and transverse members **(1)**. In the event of an accident, energy is absorbed by three separate load paths, one above the other, which disperse the force of impact and minimize deformation of the passenger cell.

**Foot and leg protection.**

Additional features include an ultra-rigid bulkhead cross-member **(2)** made from super high-strength steel. This element is designed to absorb impact forces from the longitudinal members to protect the front footwells. In a minor collision, a system of easily replaceable impact absorbers **(3)** prevents costly damage to the underlying bodyshell structure.

**Door strength.**

The upper section of each door features additional reinforcements **(4)** which enhance the rigidity of the car. An additional load path **(5)** is used to channel energy through the upper part of the shell and protect the passenger cell. In 1985, Porsche began using super high-strength steel elements in its door design to provide greater occupant protection. On the 911 Turbo, this integral reinforcement is made from robust yet lightweight aluminum. By increasing the proportion of aluminum alloys and high-strength steel, we've also improved the car's power-to-weight ratio. No less than 20 percent of the 911 Turbo is made from aluminum.

**Corrosion protection.**

In 1975, Porsche was the first auto manufacturer to use a dual-sided, hot-dip galvanized steel shell. This was with the introduction of the 911 "J-Series." This exacting process is fundamental to the legendary durability of our cars, and ensures a consistently high standard of crash protection—even after many years on the road. To underscore our confidence in this exceptional build quality, Porsche provides a 10-year anti-corrosion warranty, 3-year paint warranty and 4-year/50,000-mile warranty on the car as a whole.



Downloaded from www.Manualslib.com manuals search engine

## Comprehensive passive safety systems.

More than a decade ago, Porsche was among the first manufacturers to outfit its entire range of production models with airbags as standard equipment.

A new-generation airbag system is found in the 911 Turbo models. Comprising an array of six airbags, the system uses a non-azide gas generator to inflate the airbags. In addition to making the airbags lighter and more compact, this organic propellant also makes them easier to recycle.

**Frontal crash protection.**

The dual front Advanced Airbags provide upper-body protection with an added degree of intelligence: A weight sensor in the passenger seat automatically switches off the passenger airbags when the seat is fitted with a child seat or is unoccupied.

**Side-impact protection.**

Complementing the front airbags is the latest generation of Porsche Side Impact Protection (POSIP). This comprehensive package includes two side airbags for each front seat and thorax airbags in the side of each backrest. Door panels protected by Boron steel side beams also include airbags that inflate to form a barrier between the occupants and the doors, while providing head protection over the entire seat-adjustment range.

**Additional safety features.**

Other standard features include integrated head restraints updated to complement three-point, height-adjustable seat belts, seat-belt pretensioners and force limiters, an energy-absorbing steering column and dashboard structures, and flame-retardant materials throughout the interior.



Downloaded from www.Manualslib.com manuals search engine

**911 Turbo Cabriolet passive safety for the open-air experience.**

On the road, top open or closed, the 911 Turbo Cabriolet has the safety to match its performance.

Torsional rigidity and flexural strength are exemplary for a two-plus-two convertible. Body flexing is minimal, ensuring better handling and greater active safety.

The 911 Turbo Cabriolet also comes equipped with automatically deployable supplemental safety bars, which provide additional protection if the car overturns. The system consists of two spring-loaded bars which are housed behind each of the rear seats. The rollover sensor—part of the airbag control unit—is used to monitor changes in vehicle attitude, longitudinal and lateral acceleration, as well as the car's contact with the road. If the car overturns, padded supplemental safety bars are automatically and immediately deployed.



Downloaded from www.Manualslib.com manuals search engine

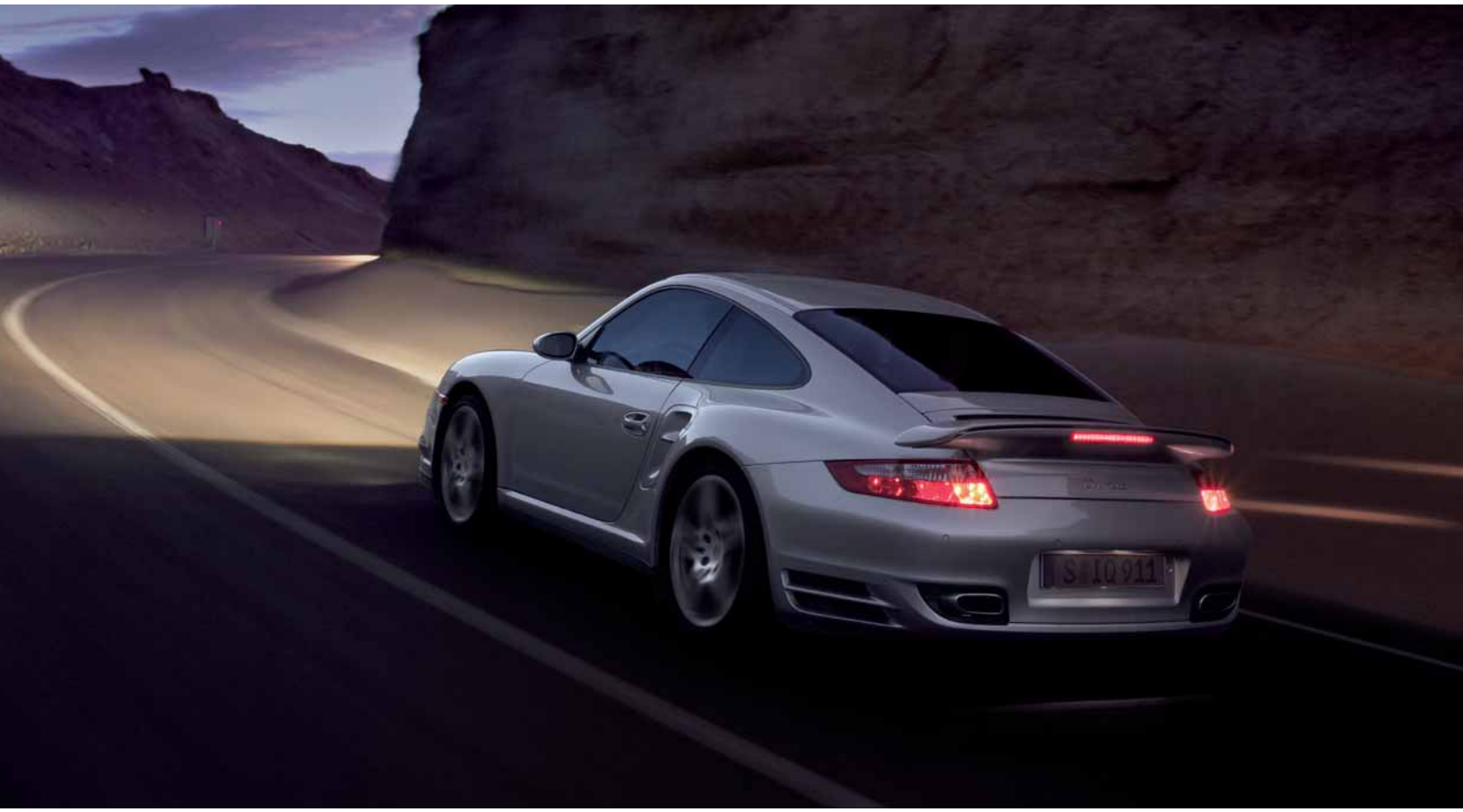


Downloaded from www.Manualslib.com manuals search engine

Harmony between car, road and the outside.

# Environment





Downloaded from www.Manualslib.com manuals search engine

**A new take on "pure performance."**

Since the 1960s, Porsche has devoted considerable effort to developing cars that are compatible with our desire for cleaner air, quieter roadways, and reduced chemical and landfill waste. The 911 Turbo models continue this tradition with several notable advances, including reduced fuel consumption, cleaner emissions, fewer pollutants and greater use of recyclables.

**Exhaust control.**

Among the cleanest sports cars in the world today, the 911 Turbo easily complies with both the United States emissions regulation, LEV II, and the stringent Euro 4 standard in the European Union.

This is achieved in part through VarioCam Plus. This valve lift and timing technology not only wrings more power from each ignition cycle, it also reduces emissions at the combustion source. After leaving the engine, the gases are cleaned by catalytic converters and monitored for oxygen levels by four Lambda sensors.



**Materials and recycling.**

Porsche has always considered lightweight design essential in the development of high-performance sports cars. Through the use of aluminum alloys and high-tensile metals, we're able to build cars that are lighter and stronger than those made of conventional steel—so they require less material to manufacture and burn less fuel every mile they're on the road.

All told, about 85 percent of the car's components can be recycled using today's technology. All synthetics are clearly labeled to simplify the recycling process.

The 911 Turbo is entirely free of asbestos, CFCs, or components manufactured using CFCs. Water-based paints are used throughout the car. This reduces the need for chemical solvents during production at the factory.

**Noise.**

In the 911 Turbo, precision engineering can be measured by high power output—and low noise output, which complies with worldwide noise restrictions.



Downloaded from www.Manualslib.com manuals search engine

Instead of encapsulating the engine in heavy sound-deadening materials, Porsche engineers eliminate noise at its source. Rigid engine components, light moving parts and tight tolerances prevent vibration and resonance. Highly durable, stainless-steel mufflers minimize exhaust noise throughout the life of the car. What comes through is the pure and distinct sound of a Porsche engine.

**Fuel system.**

Key developments in the fuel system include a further reduction in the evaporation of hydrocarbons. This is achieved through a combination of an active carbon filter and a specially coated fuel tank. All the fuel lines carrying liquid are made from aluminum, while those carrying vapors use multilayer plastic.



Downloaded from www.Manualslib.com manuals search engine

In the 911 Turbo, the familiar elements of good cockpit design are taken to a new level of refinement. With a host of personalization options, you can make an extraordinary car truly one of a kind.

# Comfort and Personalization





Downloaded from www.Manualslib.com manuals search engine

## Interior.

### Engage your senses in the art of driving.

At Porsche we've always believed that a great sports car would be incomplete without a fully engaged driver. Inside the 911 Turbo, our legendary attention to driver ergonomics is enhanced by rewarding materials.

Ergonomically designed seats assure excellent lateral support and adjustability. Perfectly placed for hand and eye, the instruments and controls facilitate fluent communication between car and driver.

Tinted front glass and an expansive rear window create a refreshing sense of openness, and provide views of the road around you. The front side windows have a water-repellent finish that automatically disperses moisture and dirt to help keep the view clear in rainy weather.

Sense and sensibility are both gratified by the abundance of hand-stitched leather—the standard material for the seats, dashboard, doors and rear side panels of the 911 Turbo. Matching leather is also used on the exclusive Turbo gearshift and the three-spoke sports steering wheel, which offers both telescopic and tilt adjustment.

The center console features the latest evolution of Porsche Communication Management (PCM), an integrated system that combines audio, onboard computer, satellite navigation and, if desired, an optional telephone module, electronic logbook and CD changer.

**Instruments.**

The instrument cluster in the 911 Turbo integrates new technologies within a time-honored shape. Five dials are all neatly combined inside the steering wheel, allowing the driver to take in essential information at a glance. The large analog gauges are embellished by digital displays featuring the latest dot-matrix technology for higher-resolution icons and text. Legibility is further enhanced with brilliant-white backlit illumination.

In keeping with Porsche tradition, the tachometer assumes its center position. Within its face you'll note the standard onboard computer display. This multi-purpose field contains a permanent digital speedometer, and can also display a wide variety of information summoned on cue—from performance boost pressure to the title of the CD track you're listening to.

When Sport mode is selected on the optional Sport Chrono Package Turbo, the temporary increase in torque is indicated by an arrow symbol in the boost pressure display.



Downloaded from www.Manualslib.com manuals search engine

Standard seat with power adjustments

Adaptive Sports Seat

Folding bucket seat.
Expected to be available 11/2007.

**Standard seats.**

Finished in hand-stitched leather, the standard seats are easily adapted to a wide range of driver and passenger sizes, thanks to full electric adjustment of fore/aft position, height, backrest angle, seat angle and lumbar support. The lowered seat base also provides added headroom for taller drivers. All-day driving comfort is assured by excellent lateral support and a dedicated spring system specifically designed to complement the car's suspension characteristics.

**Sports Seats.**

Available as a no-cost option, the Sports Seats offer firmer upholstery than that on the standard seats, together with higher side bolsters on the backrest and seat for added lateral support. In the Sports Seats, the fore/aft position and height are manually adjustable, while the backrest is electrically controlled.

**Adaptive Sports Seats.**

This seat option offers full electric adjustment of fore/aft position, seat height, backrest angle, lumbar support, seat side bolsters and backrest side bolsters. By varying the side bolsters, you can increase occupant comfort on long-distance journeys or maximize support on the racetrack. A driver memory function includes the exterior mirror position on the driver side and all driver seat settings, except for the bolster depth.

**Folding bucket seats.**

For the ultimate sports experience, there's a new folding bucket seat featuring a folding backrest, integral thorax airbag and manual fore/aft adjustment. The use of glass and carbon fiber-reinforced plastic contributes to weight savings—approximately 15 lbs. compared to the Sports Seats and approximately 19 lbs. compared to the Adaptive Sports Seats. The backrest pivots are positioned high in the side bolsters for added lateral support.

**Rear seats.**

There are many extraordinary features in the 911 Turbo. Often overlooked are the rear seats—which make this the rare supercar that can be enjoyed by a family.

Rear seat and storage area

The folding seats are surprisingly comfortable. Folding down both rear seats reveals an extra 6.71 cubic feet (190 liters) of storage space. The Cabriolet reveals approximately an extra 5.47 cubic feet (155 liters) of storage space.

**Child safety seat.**

We've given special consideration to your children's safety and comfort. The front passenger seat is engineered to accommodate a LATCH child safety seat. Our Tequipment program features a range of infant, child and booster seats. Ask your Porsche dealer for more information.

**Hidden storage.**

Some of the Turbo's interior design is cleverly hidden. A gentle touch reveals dual cupholders concealed within the dashboard trim. A lockable glove box features CD storage. It is complemented by additional closable storage compartments in each door and in the center console. Three 12-volt sockets provide convenient power for digital accessories.

**"Welcome Home" lighting.**

This standard feature illuminates the fog lights and taillights for 30 seconds following the locking or unlocking of your 911 Turbo with the key remote. The duration is user-adjustable in vehicles equipped with the optional Sport Chrono Package Turbo.

**ParkAssist.**

This optional parking aid uses six ultrasonic sensors to monitor the distance to obstacles behind your car. Shift the car into reverse, and an audio signal increases in frequency as objects draw near, helping you safely back into tight spaces.





Downloaded from www.Manualslib.com manuals search engine

**HomeLink® System.**

The HomeLink wireless control system is a convenient standard feature that integrates a garage-door opener into the roof console and stores remote settings for up to three devices. The system can also control compatible home-lighting and alarm systems.

**Rear wiper.**

Available as a no-cost option on the Coupe, the rear wiper features a streamlined blade that blends with the curves of the car.

**Auto-dimming mirrors.**

All three rearview mirrors on the 911 Turbo feature auto-dimming glass as standard equipment. The interior mirror also includes an integrated rain sensor for the front-wiper system.

**Slide/tilt sunroof.**

Extensive wind-tunnel testing helped determine the ideal tilt position for the standard electronic sunroof on the Coupe. It offers passengers adjustable views and the thrill of open-air driving, without excessive wind buffeting.

**Luggage compartment.**

In addition to the cargo space provided by the folding rear seat, there is a generous amount of space in the front luggage compartment. Lined with high-quality, scratch-resistant materials, the trunk accommodates 3.35 cubic feet (95 liters) of luggage—enough for two suitcases. Panels inside the trunk conceal and protect the amplifier for the standard Bose Surround Sound system and the standard navigation module DVD drive. The trunk is also designed to easily accommodate the optional CD changer.

**Roof Transport System.**

The optional Roof Transport System on the Coupe allows you to get away from it all while leaving nothing behind. Made from lightweight aluminum, the load-carrying bars accommodate a range of fitted attachments, including a roof box and carriers for bikes, snowboards and skis. The system can securely carry up to 165 pounds of gear.

**Anti-theft protection.**

Your 911 Turbo is well protected from intrusion and theft. An electronic immobilizer prevents the engine from starting after the key is removed from the ignition, while three levels of security—from contact-sensitive protection outside to radar monitoring inside—protect your car and its contents from unwanted attention.

Roof Transport System



Downloaded from www.Manualslib.com manuals search engine

## Porsche Communication Management.

## Precision control for auxiliary systems.

Precise control is the hallmark of a Porsche sports car. It's also characteristic of Porsche Communication Management (PCM), a standard feature of the 911 Turbo.

The centerpiece of PCM is a high-resolution color monitor that displays simple menus in plain language. A button array offers access to the standard Extended Navigation Module, Bose Surround Sound system, onboard computer and other PCM systems.

PCM also provides central control for optional equipment, including a six-disc MP3-compatible CD changer, a telephone module and an electronic logbook.

**Porsche navigation.**

The 911 Turbo is famous for reducing travel times. With a DVD/GPS navigation system now standard, you may get there even more quickly. To begin, pinpoint your destination by entering a street address, selecting a point of interest from any of several categories, or simply by pointing and clicking on a location displayed on the onscreen map. A progressive map and spoken instructions guide you to your destination. A GPS antenna inside the dashboard establishes a satellite link to show you the way to almost any location in the continental United States and Canada.

The system will automatically select the quickest route; or, if you prefer, it will avoid freeways and tolls. Tour planning and dynamic rerouting have also been enhanced with memory for 50 presets and additional zoom options. (With a separate DVD drive for the navigation system, you do not have to interrupt your favorite CD music.)

The standard Extended Navigation Module includes additional functions for automatic route recording and back-trace navigation. This module facilitates navigation in areas not covered by the DVD software, with the aid of a digital compass and GPS system.

**Onboard computer.**

The 911 Turbo comes standard with an onboard computer, offering a wide range of information that is displayed in the main instrument cluster. A control stalk on the steering column allows the driver to display average fuel consumption, average speed, remaining fuel range, Tire Pressure Monitor data and other useful information. The same control stalk is used to operate the timing functions in the optional Sport Chrono Package Turbo.

**Porsche CD changer.**

The optional Porsche CD changer holds up to six CDs for hours of uninterrupted listening pleasure. Concealed securely in the trunk and protected by an insulating panel, it features superb shock resistance and rapid CD changes.

**Antenna diversity.**

The PCM system includes four radio antennae that are discreetly encased in the windshield glass.

**Telephone module.**

The optional GSM phone is easily installed in the PCM unit. It features 900, 1800 and 1900 MHz, a hands-free microphone and backlit keypad. A passive handset with Leather-finish console is also available as an option.

**Electronic logbook.**

This option is ideal for the professional who logs business miles. The electronic logbook automatically logs the details of each journey, including the mileage, date and time, starting location and destination. Data can be downloaded using the PCM's infrared port, then evaluated on your PC using the software supplied.





Downloaded from www.Manualslib.com manuals search engine

## The Bose Surround Sound system.

A total of 13 individual speakers, enhanced by individual front and rear channels, creates a panorama of sound that duplicates the quality of live music.

The system is powered by a seven-channel digital amplifier and active equalization that match the sound to the cabin's acoustics. A fiber-optic network beneath the dashboard integrates 5x25-watt linear amps and a single 100-watt switching unit with sparkling signal quality, while a second switching amp in the active subwoofer offers an additional 100 watts of power.

The standard Bose Surround Sound system transforms the Sports Seats of your 911 Turbo into front-row concert seats. Created expressly for the car's unique acoustics, this system offers amazing sound reproduction, regardless of driving conditions.

The Bose approach to acoustic design mirrors our own philosophy: First, engineer each component to the highest standards of performance; then integrate them to make the whole greater than the sum of its parts.

Thousands of measurements were used to determine the precise placement of each component to counter road, wind and engine noise.

Low-range and mid-range speakers harmonize with Neodymium tweeters to flood the cockpit with deep, rich bass and sparkling high-range notes. The sense of depth is increased further with the aid of Bose Signal Processing and Centerpoint® technology that can split stereo recordings into five separate channels.

Bose signal processing modifies bass output to compensate for the reduced sensitivity of the human ear at lower volumes. The result is an amazing clarity of sound at all volumes, and natural voice reproduction. The system can even reach concert-hall volumes with no audible noise distortion.

Even when the vehicle is at speed, the Bose system ensures that you never miss a beat. Ingenious AudioPilot® noise compensation technology continuously monitors the cockpit for ambient noise and automatically adjusts tone and volume levels to filter it out.

On the 911 Turbo Cabriolet, there's an additional sound program to enhance the open-air sound experience. It is automatically enabled when the top is opened and disabled when closed. Like the 911 Turbo, it's tuned for the highest levels of performance.



Downloaded from www.Manualslib.com manuals search engine

Downloaded from www.Manualslib.com manuals search engine

The ultimate in personalization where every component is designed and crafted with detail, commitment and quality.

# Exclusive





Downloaded from www.Manualslib.com manuals search engine

## Exclusivity. Individuality. Craftsmanship.

Over half a century ago, Professor Porsche created an automobile company to build his dream car. His philosophy of exclusivity, individuality and craftsmanship became concepts that are the foundation of Porsche. The Porsche Exclusive program embodies that philosophy and allows you to customize your Porsche, directly from the factory.

With Porsche Exclusive, visual and technical enhancements for the interior and exterior of your vehicle are at your fingertips. To create your vision, simply tell us what you want and we will do our utmost to create it for you—provided, of course, that it is technically feasible and does not compromise quality.

The superb quality of Porsche craftsmanship is something from another time and place. Our master craftsmen utilize skills all but lost in today's mass-produced world. The fine arts of painting, polishing, sculpting and sewing are practiced by seasoned artisans. These steps required to customize a Porsche are not printed in any instruction manual and handed down to newly hired employees. It is a process of feel, not formula, practiced by veterans with a keen understanding of the Porsche Way.

Downloaded from www.Manualslib.com manuals search engine

## Colors and Materials.

**Rich beautiful colors, luxurious leather, exquisite fine-grained woods, high-tech carbon fiber, elegant aluminum and stylish stainless steel can all be used to create your dream car.**

Porsche Exclusive only uses materials of the finest quality, designed and handcrafted specifically for your vehicle. Every component we use has been tested and approved, ensuring that your Porsche remains a Porsche, but one that embodies your personal style.

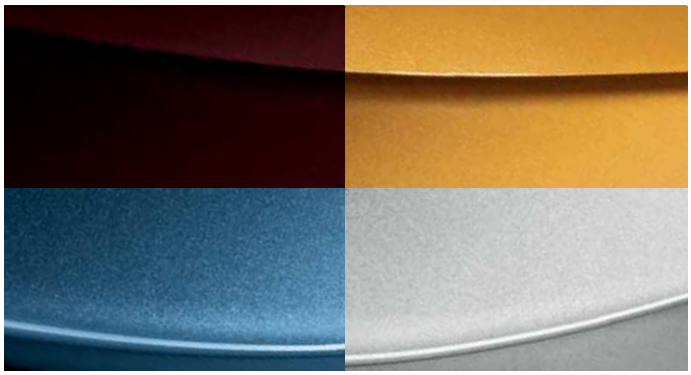

Selection of individual colors: Marrone Metallic, Nordic Gold Metallic, Azurro California Metallic, Polar Silver Metallic





**Leather**

Leather is a traditional natural material—a true classic. Items made of leather are both timeless and hard-wearing.

**Alcantara**

This high-quality material is easy-care, washable and has a pleasant feel.

**Makassar**

Makassar ebony is dark and distinctive with a modern, elegant look. The deep black heartwood has irregular reddish-brown streaks and a dramatic, marble-like texture.

**Sycamore**

Our second wood option has an understated, light-brown tone. Its fine, uniform grain lends an air of classic refinement to any car.

**Carbon Fiber**

Carbon Fiber is a light but highly durable material which has motorsport origins. Its high-tech look gives a sporty feel to the interior.

**Aluminum**

Aluminum or Aluminum-Look is a cool, elegant material that also reflects a classic motorsport heritage.

**Stainless Steel**

High-quality alloyed steel is resistant to both heat and corrosion. A definitive, enduring material for a distinguished look.

Downloaded from www.Manualslib.com manuals search engine

**911 Turbo**
**Fountain Blue Metallic**

Fountain Blue Metallic is an elegant solution and conveys a level of sophistication fitting for a 911 Turbo.

The sleek blue interior has a combination of custom leather and Aluminum-Look enhancements.

Downloaded from www.Manualslib.com manuals search engine

**911 Turbo Cabriolet**
**GT Silver Metallic**

The exterior finish, the choice of materials in the interior and the color of the leather are a tribute to another superlative sports car: the Carrera GT.

Two-tone steering wheel is not available in North America.

Downloaded from www.Manualslib.com manuals search engine

# Options and Specifications





Downloaded from www.Manualslib.com manuals search engine

## Exterior

| Option | 911 Turbo Coupe | 911 Turbo Cabriolet | Option Code |
|---|---|---|---|
| • Electric sliding/tilt sunroof | • | – | |
| • Exterior metallic paint | • | • | Code |
| • Exterior special colors | o | o | Code |
| • Exterior paint to sample | o | o | 98/99 |
| • Deletion of model designation | W | W | 498 |
| • Rear window wiper | W | – | 425 |
| • ParkAssist (parking aid at rear) | o | o | 635 |
| • Hardtop | – | o | 550 |
| • Roof Transport System | o | – | 549 |
| • Aerokit Turbo* | E | – | XAF |
| • Windstop with colored Porsche logo | – | E | CUL |
| • Rear footwell lighting | E | E | CEE |

911 Turbo Cabriolet with hardtop

Rear window wiper

Red taillights

Chrome-plated, stainless-steel tailpipes

## Exterior

| Option | 911 Turbo Coupe | 911 Turbo Cabriolet | Option Code |
|---|---|---|---|
| • Bi-Xenon headlights with dynamic headlights and headlight washers | • | • | |
| • Self-dimming mirrors and rain sensors | • | • | |
| • Windstop | – | • | |
| • Chrome-plated, stainless-steel tailpipes | • | • | |
| • Exterior Package Painted | E | E | DAJ |
| • Spoiler lip painted in exterior color | E | E | CNE |
| • Front air intakes painted in exterior color | E | E | CNF |
| • Front air intakes in Aluminum-Look | E | E | CNC |
| • Lower part of rear apron painted in exterior color | E | E | CNG |
| • Standard rocker panel painted in exterior color | E | E | XAJ |
| • Wheels painted in exterior color | E | E | XD9 |
| • Lower part of side mirror in matte Aluminum-Look | E | E | CNW |
| • Headlight cleaning-system cover painted in exterior color | E | E | CGA |
| • Side strips with model designation | E | E | CMX |
| • Model designation on rear lid painted in exterior color | E | E | CUC |
| • Red taillights | E | E | CXF |

*Expected to be available 09/2007.
– not available  O extra-cost option  E Porsche Exclusive  • standard equipment  W no-cost option



Downloaded from www.Manualslib.com manuals search engine

Aerokit Turbo and various options from Porsche Exclusive

## Engine, Transmission and Chassis

| Option | 911 Turbo Coupe | 911 Turbo Cabriolet | Option Code |
|---|---|---|---|
| • 19-inch Turbo wheels (forged, two-tone) | • | • | |
| • Porsche Active Suspension Management (PASM) | • | • | |
| • Tire Pressure Monitoring System | • | • | |
| • Tiptronic S | o | o | 249 |
| • Porsche Ceramic Composite Brake (PCCB) | o | o | 450 |
| • Sport Chrono Package Turbo (includes overboost function) | o | o | 640 |
| • Limited-slip rear differential lock (mechanical) | o | o | 220 |
| • Short shifter | E | E | XCZ |

– not available  O extra-cost option  E Porsche Exclusive  • standard equipment  W no-cost option





## Audio and Communication

| Option | 911 Turbo Coupe | 911 Turbo Cabriolet | Option Code |
|---|---|---|---|
| • Extended Navigation Module | • | • | |
| • Bose Surround Sound system | • | • | |
| • Rod antenna | W | W | 461 |
| • Electronic logbook for PCM | o | o | 641 |
| • Telephone module for PCM (900, 1800, 1900 MHz) GSM-based phone, requires SIM card | o | o | 666 |
| • Passive handset for telephone module | o | o | 668 |
| • CDC-4 six-disc CD changer* | o | o | 692 |

*May be incompatible with some copy-protected audio CDs.

CDC-4 six-disc CD changer



Downloaded from www.Manualslib.com manuals search engine

Sports Seat backs painted in exterior color

Cruise control

## Interior

| Option | 911 Turbo Coupe | 911 Turbo Cabriolet | Option Code |
|---|---|---|---|
| • Anti-theft system with immobilizer and interior sensor | • | • | |
| • HomeLink System (programmable garage-door opener) | • | • | |
| • Cruise control | • | • | |
| • Automatic climate control | • | • | |
| • Power seats | • | • | |
| • Sports Seats (manual) | W | W | P77 |
| • Adaptive Sports Seats (fully electric with driver-side memory) | o | o | P01 |
| • Folding bucket seats (manual)* | o | o | P03 |
| • Heated front seats | o | o | 342 |
| • Fire extinguisher | o | o | 509 |
| • Floor mats | o | o | 810 |
| • Sports Seat backs painted in exterior color | E | E | XSA |
| • Porsche Crest in headrest | E | E | XSC |
| • Instruments dials in Sand Beige/Speed Yellow/Carrara White | E | E | XFD/XFH/XFJ |
| • Foot rest in Aluminum | E | E | XXZ |
| • Rear center console painted in exterior color | E | E | XME |
| • Switch Panel Package painted in exterior color | E | E | CDG |
| • Door finishers painted in exterior color | E | E | CDH |
| • Door openers painted in exterior color | E | E | CMC |

*Expected to be available 11/2007.
– not available  O extra-cost option  E Porsche Exclusive  • standard equipment  W no-cost option



## Interior

| Option | 911 Turbo Coupe | 911 Turbo Cabriolet | Option Code |
|---|---|---|---|
| • Gear lever trim painted in exterior color | E | E | CDJ |
| • Trim strip painted in exterior color | E | E | CDM |
| • Air-vent slats painted in exterior color | E | E | CDN |
| • Instrument surround painted in exterior color | E | E | CDP |
| • Belt outlet B-pillar painted in exterior color | E | E | CDR |
| • PCM Package painted in exterior color | E | E | CUF |
| • PCM handset painted in exterior color | E | E | CER |
| • Rear center console painted in black | E | E | CMD |
| • PCM Package painted in black | E | E | CMF |
| • PCM handset painted in black | E | E | CML |
| • Switch Panel Package painted in black | E | E | CMG |
| • Door finishers painted in black | E | E | CMH |
| • Door openers painted in black | E | E | CDC |
| • Gear lever trim painted in black | E | E | CMJ |
| • Trim strip painted in exterior color | E | E | CMM |
| • Air-vent slats painted in exterior color | E | E | CMN |
| • Instrument surround painted in black | E | E | CMP |
| • Belt outlet B-pillar painted in black | E | E | CMR |

Instrument dials in Speed Yellow

Door finishers painted in exterior color

Air-vent slats painted in exterior color



Downloaded from www.Manualslib.com manuals search engine

Seat belts in Speed Yellow

Rear footwell lighting

## Interior

| Option | 911 Turbo Coupe | 911 Turbo Cabriolet | Option Code |
|---|---|---|---|
| • Back of rear seats carpet in deviating color | o | o | 00471 |
| • Front-seat stitching in deviating color | o | o | 24891 |
| • Dashboard stitching in deviating color | o | o | 24901 |
| • Door stitching in deviating color | o | o | 24902 |
| • Door-handle stitching in deviating color | o | o | 24903 |
| • Side center-console stitching in deviating color | o | o | 24904 |
| • Rear side panel in deviating color | o | o | 24905 |
| • Upper dash in deviating color | o | o | 24921 |
| • Lower dash in deviating color | o | o | 24922 |
| • Side center-console in deviating color | o | o | 24923 |
| • Deviating carpet | o | o | 24951 |
| • Door-airbag trim strip in deviating color | o | o | 25281 |
| • Front-seat inlays in deviating color | o | o | 25491 |
| • Door trim in deviating color | o | o | 25631 |
| • Upper dash with Sport Chrono in deviating color | o | o | 25731 |
| • Seat belts in Silver/Guards Red/Speed Yellow | E | E | XSH/XSX/XSY |

– not available  O extra-cost option  E Porsche Exclusive  • standard equipment  W no-cost option





## Interior: Leather

| Option | 911 Turbo Coupe | 911 Turbo Cabriolet | Option Code |
|---|---|---|---|
| • Leather Interior Package | | | |
| – in standard color | • | • | |
| – in special color | o | o | code |
| – in two-tone color | o | o | 970 + code |
| – in Natural Leather | o | o | 998 + code |
| – leather to sample | o | o | 99 |
| • Three-spoke sports steering wheel in Smooth-Finish Leather | • | • | |
| • Three-spoke steering wheel in Smooth-Finish Leather | W | W | 459 |
| • Three-spoke multifunction steering wheel in Smooth-Finish Leather | o | o | 431 |
| • Thicker three-spoke sports steering wheel in Smooth-Finish Leather | E | E | XPA |
| • Soft ruffled leather on seats | o | o | 982 |
| • Interior light cover in leather (Coupe) | E | – | XZD |
| • Interior light cover in leather (Cabriolet) | – | E | CZD |

Natural Leather interior in Carrera Red leather plus various options from Porsche Exclusive



Downloaded from www.Manualslib.com manuals search engine

Storage bin lid with model logo

Tiptronic gate in leather

## Interior: Leather

| Option | 911 Turbo Coupe | 911 Turbo Cabriolet | Option Code |
|---|---|---|---|
| • Storage bin lid with Turbo logo | E | E | CUV |
| • Storage bin lid with Porsche Crest | E | E | CPT |
| • Leather Package switch panel | E | E | EAA |
| • PCM handset in leather | E | E | XEA |
| • Roofliner in leather | E | – | XMA |
| • Sun visor and lighted mirror in leather | E | E | XMP |
| • Rear center-console in leather | E | E | XMZ |
| • Instrument surround in leather | E | E | XNG |
| • Steering column in leather | E | E | XNS |
| • Thicker three-spoke steering wheel with cross-stitched seam in leather | E | E | CPA |
| • Sports Seat backs in leather | E | E | XSB |
| • Inner door sill guards in leather | E | E | XTG |
| • Door finishers in leather | E | E | XTV |
| • Door and rear speakers in leather | E | E | CVT |

– not available  O extra-cost option  E Porsche Exclusive  • standard equipment  W no-cost option





## Interior: Leather

| Option | 911 Turbo Coupe | 911 Turbo Cabriolet | Option Code |
|---|---|---|---|
| • Seat-belt buckles in leather | E | E | CDT |
| • Belt outlet B-pillar in leather | E | E | CDU |
| • "Y" trim on steering wheel in leather | E | E | CDW |
| • Gear lever trim in leather | E | E | CDZ |
| • Tiptronic gate in leather | E | E | CFA |
| • Defroster trim in leather | E | E | CNA |
| • Defroster air vents in leather | E | E | CNB |
| • Key pouch in interior leather | E | E | CPU |
| • Fuse-box trim in leather | E | E | CUJ |
| • PCM package in leather | E | E | CUR |
| • Release rear-seat lever in leather | E | E | CUX |
| • Trim strip in leather | E | E | CVP |
| • Rearview mirror in leather | E | E | CVW |
| • Clothes-hook backrest in leather | E | E | CVY |

Instrument cluster surround in leather

Gear lever trim in leather

Thicker three-spoke multifunction steering wheel in Smooth-Finish Leather



Downloaded from www.Manualslib.com manuals search engine

Interior light cover, interior mirror, roof lining and sun visors in leather

A-pillar Interior Package in leather

B-pillar Interior Package in leather

## Interior: Leather

| Option | 911 Turbo Coupe | 911 Turbo Cabriolet | Option Code |
|---|---|---|---|
| • Bose subwoofer outlets in leather | E | – | CVZ |
| • A-pillar Leather Interior Package | E | E | DAA |
| • B-pillar Leather Interior Package | E | E | DAB |
| • C-pillar Leather Interior Package | E | – | DAC |
| • Luggage stop on rear-seat backrest in leather | E | – | CVD |
| • Floor mats with colored logo and leather surround | E | E | CFX |

– not available  O extra-cost option  E Porsche Exclusive  • standard equipment  W no-cost option





## Interior: Aluminum-Look

| Option | 911 Turbo Coupe | 911 Turbo Cabriolet | Option Code |
|---|---|---|---|
| • Three-spoke multifunction steering wheel in Aluminum-Look | E | E | XPV |
| • Aluminum-Look Switch Panel Package | E | E | EAE |
| • Sports Seat backs in Aluminum-Look | E | E | XCG |
| • Rear center-console in Aluminum-Look | E | E | XCK |
| • Instrument surround in Aluminum-Look | E | E | XCL |
| • Door finishers in Aluminum-Look | E | E | XTW |
| • PCM Package in Aluminum-Look | E | E | CCP |
| • PCM handset in Aluminum-Look | E | E | CCR |

Three-spoke multifunction steering wheel in Aluminum-Look plus various options from Porsche Exclusive



Downloaded from www.Manualslib.com manuals search engine

Air vents, three-spoke multifunction steering wheel Y-shaped trim, PCM Package and PCM handset in Aluminum-Look

Gear/handbrake lever in Aluminum-Look II

Gear/handbrake lever in Aluminum-Look I

Sports Seat backs in Aluminum-Look

**Interior: Aluminum-Look**

| Option | 911 Turbo Coupe | 911 Turbo Cabriolet | Option Code |
|---|---|---|---|
| • Gear lever/Tiptronic S selector trim in Aluminum-Look | • | • | |
| • Trim strip in Aluminum-Look | • | • | |
| • B-pillar seat-belt outlets in Aluminum-Look | E | E | CCW |
| • Air-vent slats in Aluminum-Look | E | E | CDA |
| • "Y" trim on steering wheel in Aluminum-Look | E | E | CDD |
| • Gear/handbrake lever in Aluminum-Look I | E | E | ECA |
| • Gear/handbrake lever in Aluminum-Look II | E | E | DAD |
| • Gear/handbrake lever in Aluminum-Look II with leather color to sample | E | E | DAW |
| • Handbrake lever in Aluminum-Look | E | E | CFP |

– not available  O extra-cost option  E Porsche Exclusive  • standard equipment  W no-cost option



Downloaded from www.Manualslib.com manuals search engine

Makassar Interior Package, three-spoke multifunction steering wheel in Makassar plus various options from Porsche Exclusive

**Interior: Makassar**

| Option | 911 Turbo Coupe | 911 Turbo Cabriolet | Option Code |
|---|---|---|---|
| • Makassar Interior Package | o | o | 801 |
| • Three-spoke multifunction steering wheel in Makassar | o | o | 451 |
| • Makassar Switch Panel Package | o | o | EAB |
| • Rear center console in Makassar | E | E | XJT |
| • Door finishers in Makassar | E | E | XTT |
| • PCM handset in Makassar | E | E | CFH |
| • B-pillar seat-belt outlet in Makassar | E | E | CFS |

– not available  O extra-cost option  E Porsche Exclusive  • standard equipment  W no-cost option





**Interior: Sycamore**

| Option | 911 Turbo Coupe | 911 Turbo Cabriolet | Option Code |
|---|---|---|---|
| • Sycamore Interior Package | o | o | 802 |
| • Three-spoke multifunction steering wheel in Sycamore | o | o | 452 |
| • Sycamore Switch Panel Package | o | o | EAC |
| • Rear center console in Sycamore | E | E | XJU |
| • Door finishers in Sycamore | E | E | XTU |
| • PCM handset in Sycamore | E | E | CFC |
| • B-pillar seat-belt outlet in Sycamore | E | E | CFE |

Sycamore Interior Package, three-spoke multifunction steering wheel in Sycamore plus various options from Porsche Exclusive



Downloaded from www.Manualslib.com manuals search engine

Carbon Fiber Interior Package, three-spoke multifunction steering wheel in Carbon Fiber plus various options from Porsche Exclusive

## Interior: Carbon Fiber

| Option | 911 Turbo Coupe | 911 Turbo Cabriolet | Option Code |
|---|---|---|---|
| • Carbon Fiber Interior Package | o | o | 803 |
| • Three-spoke multifunction steering wheel in Carbon Fiber | o | o | 453 |
| • Carbon Fiber Switch Panel Package | o | o | EAD |
| • Rear center console in Carbon Fiber | E | E | XMJ |
| • Door finisher in Carbon Fiber | E | E | XTL |
| • PCM handset in Carbon Fiber | E | E | CED |
| • B-pillar seat-belt outlet in Carbon Fiber | E | E | CJJ |

– not available  O extra-cost option  E Porsche Exclusive  • standard equipment  W no-cost option





## Interior: Alcantara

| Option | 911 Turbo Coupe | 911 Turbo Cabriolet | Option Code |
|---|---|---|---|
| • Door finishers in Alcantara | E | E | CLF |
| • Steering wheel in Alcantara | E | E | CLA |
| • Trim strip in Alcantara | E | E | CLE |
| • Gear/handbrake lever in Alcantara | E | E | DAT |
| • Tiptronic S selector/handbrake lever in Alcantara | E | E | DAU |
| • Lid of storage bin in Alcantara with Porsche logo | E | E | CLG |

Alcantara interior plus various options from Porsche Exclusive



Downloaded from www.Manualslib.com manuals search engine

Illuminated door-entry guards in Carbon Fiber

Illuminated door-entry guards in stainless steel

Door-entry guards in stainless steel

**Interior**

| Option | 911 Turbo Coupe | 911 Turbo Cabriolet | Option Code |
|---|---|---|---|
| • Door-entry guards in Carbon Fiber | E | E | X69 |
| • Illuminated door-entry guards in Carbon Fiber | E | E | CXD |
| • Door-entry guards in stainless steel | E | E | X70 |
| • Illuminated door-entry guards in stainless steel | E | E | CXB |

– not available  O extra-cost option  E Porsche Exclusive  • standard equipment  W no-cost option



Downloaded from www.Manualslib.com manuals search engine

# Specifications



| | 911 Turbo Coupe | 911 Turbo Cabriolet |
|---|---|---|
| **Engine** | | |
| Type | Rear-mounted, twin-parallel exhaust gas turbocharged, water-cooled, horizontally opposed six-cylinder with aluminum-alloy block, heads and pistons, dual overhead camshafts, four valves per cylinder with VarioCam Plus variable-valve timing system, two intercoolers | |
| Induction | Twin turbocharger with intercooling | |
| Displacement | 3.6 liters (3,601 cc) | |
| Horsepower (SAE) | 480 hp @ 6000 rpm | |
| Torque (SAE) | 460 lb.-ft. @ 1950–5000 rpm<br>(With optional Sport Chrono Package Turbo—Torque overboost: 505 lb.-ft.@ 2100–4000 rpm) | |
| Bore/Stroke | 3.94/3.01 in. (100/76.4 mm) | |
| Compression Ratio | 9.0:1 | |
| Engine Management | Motronic ME 7.8.1 system with electronic throttle (E-gas), high-voltage ignition with individual coils, sequential injection, variable-valve lift mechanism, boost pressure control, cylinder-selective knock control and stereo Lambda exhaust regulation, Variable Turbine Geometry and onboard diagnostics (OBD II) | |
| **Chassis** | | |
| Front Suspension | Independent MacPherson struts with forged aluminum control arms, coil springs, stabilizer bar and negative steering-roll radius | |
| Rear Suspension | Independent LSA multi-link with stabilizer bar, coil springs and self-stabilizing toe control | |
| Steering | Variable steering ratio, power-assist (hydraulic) | |
| Turning Circle Diameter | 35.76 ft. (10.9 m) | |
| Brakes | Internally ventilated brake disc, six-piston monobloc aluminum fixed calipers at the front and four-piston monobloc aluminum fixed calipers at rear. Brake calipers in red. ABS 8.0. Optional PCCB: Internally ventilated ceramic brake disc, six-piston monobloc aluminum fixed calipers at the front and four-piston monobloc aluminum fixed calipers at rear. Brake calipers in yellow. ABS 8.0. | |
| Disc Diameter | 13.78 in. (350 mm) front and rear. PCCB: 14.96 in. (380 mm) front, 13.78 in. (350 mm) rear | |
| Wheels | Forged alloy 8.5J x 19 ET 56 front, 11J x 19 ET 51 rear | |
| Tires | 235/35 ZR 19 front, 305/30 ZR 19 rear | |
| **Transmission** | | |
| Drivetrain | Actively controlled all-wheel drive, Porsche Traction Management, including ABD and ASR. Optional mechanical rear differential lock. 6-speed manual transmission or optional 5-speed Tiptronic S dual-mode transmission. | |
| Gear Ratio | | |

| | Manual | Tiptronic S |
|---|---|---|
| 1st gear | 3.82 | 3.60 |
| 2nd gear | 2.14 | 2.19 |
| 3rd gear | 1.48 | 1.41 |
| 4th gear | 1.18 | 1.00 |
| 5th gear | 0.97 | 0.83 |
| 6th gear | 0.79 | — |
| Final Drive (front/rear) | 3.33/3.44 | 2.96/3.06 |



| | 911 Turbo Coupe | 911 Turbo Cabriolet |
|---|---|---|
| **Safety** | | |
| Active | Actively controlled all-wheel drive, Bosch ABS 8.0, Porsche Stability Management | |
| Passive | Dual front Advanced Airbags, head and thorax side airbags, front and rear deformation zones, side-guard door beams, seat-belt pretensioners and load limiters, exterior/interior alarm system, central locking and Bi-Xenon headlights | Dual front Advanced Airbags, head and thorax side airbags, front and rear deformation zones, side-guard door beams, seat-belt pretensioners and load limiters, exterior/interior alarm system, central locking, Bi-Xenon headlights and supplemental safety bars |
| **Weights and Dimensions** | | |
| Curb Weight | 3,494 lbs.<br>3,572 lbs. with Tiptronic S | 3,649 lbs.<br>3,726 lbs. with Tiptronic S |
| Front/Rear Weight Distribution (%) | Manual: 39.1% Front/60.9% Rear<br>Tiptronic S: 38.6% Front/61.4% Rear | Manual: 38.7% Front/61.3% Rear<br>Tiptronic S: 38.2% Front/61.8% Rear |
| Length | 176.26 in. (4,477 mm) | |
| Width (w/o mirrors) | 72.91 in. (1,852 mm) | |
| Height | 51.18 in. (1,300 mm) | |
| Wheelbase | 92.52 in. (2,350 mm) | |
| Track (19-inch wheels) | 58.66 in. (1,490 mm) front, 60.94 in. (1,548 mm) rear | |
| Luggage Area Volume | 3.35-cubic-foot (95-liter) trunk | |
| Fuel Tank Capacity | 17.7 gal. (67 liters) | |
| **Performance** | | |
| 0–60 mph | Manual: 3.7 sec. Tiptronic S: 3.4 sec. | Manual: 3.8 sec. Tiptronic S: 3.5 sec. |
| Top Track Speed | 193 mph (310 km/h) | |
| Fuel Economy (city/highway) EPA Estimate | Manual: 16/23 Tiptronic S: 15/23 | Manual: 15/24 Tiptronic S: 15/23 |
| **Warranty** | | |
| To underscore our confidence in the quality of our cars, all new Porsche vehicles are covered by a 4-year/50,000-mile (whichever comes first) limited warranty and Roadside Assistance program. This warranty covers any defect in materials and workmanship. Porsche's limited corrosion warranty extends a full 10 years, regardless of mileage. | | |



Downloaded from www.Manualslib.com manuals search engine

## Index


**A**

Air conditioning 39, 40
Airbags 68, 69
All-wheel drive 2, 9, 11, 14, 46, 57
Antenna diversity 89
Anti-theft protection 86
Audio system 19, 83, 86, 88–91
AudioPilot 91
Axle 15, 46, 48, 49

**B**

Bi-Xenon headlights 16, 62
Bodyshell structure 66
Bose Surround Sound system 19, 86, 88–91
Brakes, standard 14, 16, 62, 64
Brakes, ceramic 14, 64. 65

**C**

Cabriolet 2, 9, 11–13, 18, 19, 25, 44, 56, 70, 71, 85, 91, 102
Catalytic converters 40, 76
CD changer 83, 86, 88, 89
Chassis 16, 18, 62, 65
Child seats 68, 85
Colors 98, 130

**D**

Design 16–19, 24, 27, 48, 49, 77
Driver memory function 84
Dry-sump lubrication 27, 34, 37
DVD navigation 86, 88, 89

**E**

Electronic logbook 83, 88, 89
Emissions control 36, 38, 76
Engine cooling 10, 11, 16, 17, 28, 29, 38
Engine management 28, 38–40, 56
Exhaust system 11, 27–29, 34, 36, 40, 76

**F**

Fire extinguisher 110
Fuel injection 39, 40
Fuel system 79

**G**

Glass rear window 19
GPS navigation system 82, 83, 89
GSM telephone 89

**H**

Hardtop 19
HomeLink System 86
Hot-dip galvanized sheet steel 67

**I**

Ignition system 40
Instruments 82, 83, 89
Interior 17, 82, 85, 96, 99, 101, 102
Interior, Aluminum-Look 99, 101
Interior, Carbon Fiber 98, 99
Interior, Makassar 99
Interior, Sycamore 99

**K**

Knock control, cylinder-specific 38

**L**

Leather 17, 82–84, 89, 98, 99, 101, 102
Limited-slip differential, mechanical 14, 47, 52
LSA 49
Lubrication 27, 37
Luggage compartment 86





**M**

Manual transmission 12, 13, 18, 35, 44–46, 52
Multifunction steering wheel 113, 115, 117, 118, 120–122
Multi-disc clutch, electronically controlled 46

**N**

Navigation system 83, 86, 88, 89
Noise 18, 77, 79, 90, 91

**O**

Onboard computer 51, 83, 88, 89
Onboard diagnostics 39
Optional equipment 11, 14, 15, 18, 19, 25, 30, 44, 46, 47, 51, 52, 55, 56, 64, 80, 83–86, 88, 89, 99, 104–125, 130

**P**

ParkAssist 85
Performance display 56
Personalization 80–91
Porsche Active Suspension Management (PASM) 14, 15, 49, 52, 57
Porsche Ceramic Composite Brake (PCCB) 14, 51, 64, 65
Porsche Communication Management (PCM) 56, 83, 88
Porsche Side Impact Protection (POSIP) 69
Porsche Stability Management (PSM) 14, 15, 38, 39, 47, 54, 55, 57, 64
Porsche Traction Management (PTM) 14, 46, 47

**R**

Rear seats 85
Recycling 68, 76, 77
Roof transport system 86

**S**

Safety, active 14, 18, 47, 52, 54, 60, 62, 71
Safety, passive 18, 60, 68–71
Seats 82, 84, 85
Seats, Adaptive Sports 84, 85
Seats, folding bucket 84, 85
Seats, Sports 84, 85
Servicing 40
Speakers 19, 90, 91
Sport button 56, 57
Sport Chrono Package Turbo 15, 30, 55, 56, 83, 85, 89
Stereo Lambda control 39, 40, 76
Sunroof, slide/tilt 86
Supplemental safety bars 71

**T**

Tandem brake booster 35
Telephone 83, 88, 89
Tiptronic S transmission 11, 13, 18, 25, 44, 45, 57
Transmission 11, 13, 18, 25, 44–46
Tire Pressure Monitoring System (TPMS) 51, 89

**V**

Variable Turbine Geometry (VTG) 2, 8, 9, 13, 24, 27–30, 34, 38
Variable-valve timing 27, 36, 38, 39, 126
VarioCam Plus 11, 24, 27, 36–39, 76

**W**

"Welcome Home" lighting 57, 85
Wheels 16, 51, 83
Wind deflector 19
Wiper, rear 86




Downloaded from www.Manualslib.com manuals search engine

**At Porsche we have always known how to match dynamic sports-car performance with unmistakable elegance. This year is no exception.**

**The 911 Turbo color choices represented on the following pages feature a carefully selected range of exterior and interior options.**

The exterior color collection includes a standard range of four solid and eight exterior metallic colors. You may also choose from a selection of special metallic colors.

The interior color schemes are carefully selected to complement the exterior colors and finish the high-performance ensemble of the 911 Turbo. There are twelve interior colors to choose from, including three two-tone leather combinations.

The new 911 Turbo Cabriolet features four color selections for the Cabriolet top.

For the ultimate in personalization, custom colors may be chosen. Your Authorized Porsche Sales Representative can offer suggestions and details.

To see how the available colors would look on your Porsche, consult with your local authorized dealer or visit www.porsche.com and use the online Porsche Car Configurator.

## Exterior and Interior Colors

**Cabriolet Top Colors**

Black | Stone Grey | Cocoa | Metropolitan Blue

| Solid Exterior Colors | Metallic Exterior Colors | | Special Metallic Exterior Colors | Interior Leather | Carpet | Special Leather | Special Carpet | Interior Two-tone Leather |
|---|---|---|---|---|---|---|---|---|
| Black | Cobalt Blue Metallic | Ruby Red Metallic | GT Silver Metallic | Black | Black | Terracotta | Terracotta | Black and Terracotta |
| Guards Red | Midnight Blue Metallic | Forest Green Metallic | Slate Grey Metallic | Sea Blue | Sea Blue | Cocoa | Cocoa | Black and Sand Beige |
| Speed Yellow | Macadamia Metallic | Meteor Grey Metallic | Dark Olive Metallic | Stone Grey | Stone Grey | Dark Grey | Dark Grey | Black and Stone Grey |
| Carrara White | Arctic Silver Metallic | Basalt Black Metallic | Malachite Green Metallic | Sand Beige | Sand Beige | Brown | Brown | |
| | | | Atlas Grey Metallic | | | Carrera Red | Carrera Red | |

Downloaded from www.Manualslib.com manuals search engine