Foreword

Welcome to the growing family of new NISSAN owners. This vehicle is delivered to you with confidence. It was produced using the latest techniques and strict quality control.

This manual was prepared to help you understand the operation and maintenance of your vehicle so that you may enjoy many miles of driving pleasure. Please read through this manual before operating your vehicle.

A separate Warranty Information Booklet explains details about the warranties covering your vehicle. The NISSAN Service and Maintenance Guide explains details about maintaining and servicing your vehicle. Additionally, a separate Customer Care/Lemon Law Booklet (U.S. only) will explain how to resolve any concerns you may have with your vehicle, as well as clarify your rights under your state's lemon law.

Your NISSAN dealer knows your vehicle best. When you require any service or have any questions, we will be glad to assist you with the extensive resources available to us.

READ FIRST — THEN DRIVE SAFELY

Before driving your vehicle, read your Owner's Manual carefully. This will ensure familiarity with controls and maintenance requirements, assisting you in the safe operation of your vehicle.

⚠ WARNING

IMPORTANT SAFETY INFORMATION REMINDERS FOR SAFETY!

Follow these important driving rules to help ensure a safe and comfortable trip for you and your passengers!

- **NEVER drive under the influence of alcohol or drugs.**
- **ALWAYS observe posted speed limits and never drive too fast for conditions.**
- **ALWAYS give your full attention to driving and avoid using vehicle features or taking other actions that could distract you.**
- **ALWAYS use your seat belts and appropriate child restraint systems. Pre-teen children should be seated in the rear seat.**
- **ALWAYS provide information about the proper use of vehicle safety features to all occupants of the vehicle.**
- **ALWAYS review this Owner's Manual for important safety information.**

ON-PAVEMENT AND OFF-ROAD DRIVING

This vehicle will handle and maneuver differently from an ordinary passenger car because it has a higher center of gravity for off-road use. As with other vehicles with features of this type, failure to operate this vehicle correctly may result in loss of control or an accident. Be sure to read "On-pavement and off-road driving precautions", "Avoiding collision and rollover" and "Driving safety precautions" in the "5. Starting and driving" section of this manual.

MODIFICATION OF YOUR VEHICLE

This vehicle should not be modified. Modification could affect its performance, safety or durability, and may even violate governmental regulations. In addition, damage or performance problems resulting from modification may not be covered under NISSAN warranties.

WHEN READING THE MANUAL

This manual includes information for all options available on this model. Therefore, you may find some information that does not apply to your vehicle.

All information, specifications and illustrations in this manual are those in effect at the time of printing. NISSAN reserves the right to change specifications or design at any time without notice.

IMPORTANT INFORMATION ABOUT THIS MANUAL

You will see various symbols in this manual. They are used in the following ways:

WARNING

This is used to indicate the presence of a hazard that could cause death or serious personal injury. To avoid or reduce the risk, the procedures must be followed precisely.

CAUTION

This is used to indicate the presence of a hazard that could cause minor or moderate personal injury or damage to your vehicle. To avoid or reduce the risk, the procedures must be followed carefully.

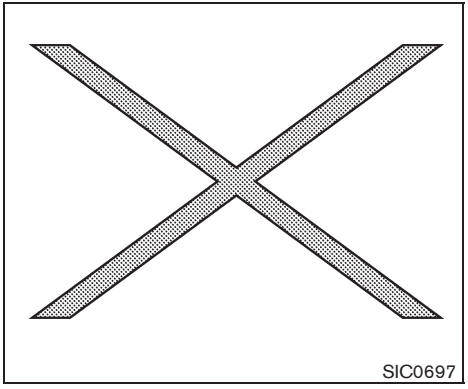

If you see the symbol above, it means **"Do not do this"** or **"Do not let this happen"**.

If you see a symbol similar to those above in an illustration, it means the arrow points to the front of the vehicle.

Arrows in an illustration that are similar to those above indicate movement or action.

Arrows in an illustration that are similar to those above call attention to an item in the illustration.

CALIFORNIA PROPOSITION 65 WARNING

WARNING

Engine exhaust, some of its constituents, and certain vehicle components contain or emit chemicals known to the State of California to cause cancer and birth defects or other reproductive harm. In addition, certain fluids contained in vehicles and certain products of component wear contain or emit chemicals known to the State of California to cause cancer and birth defects or other reproductive harm.

CALIFORNIA PERCHLORATE ADVISORY

Some vehicle parts, such as lithium batteries, may contain perchlorate material. The following advisory is provided: "Perchlorate Material - special handling may apply, See www.dtsc.ca.gov/hazardouswaste/perchlorate."

BLUETOOTH® is a trademark owned by Bluetooth SIG, Inc., U.S.A.

XM Radio® requires subscription, sold separately after first 90 days. Not available in Alaska, Hawaii or Guam. For more information, visit www.xmradio.com.

© 2008 NISSAN MOTOR CO., LTD.

All rights reserved. No part of this Owner's Manual may be reproduced or stored in a retrieval system, or transmitted in any form, or by any means, electronic, mechanical, photocopying, recording or otherwise, without the prior written permission of Nissan Motor Co., Ltd.

NISSAN CUSTOMER CARE PROGRAM

NISSAN CARES ...

Both NISSAN and your NISSAN dealer are dedicated to serving all your automotive needs. Your satisfaction with your vehicle and your NISSAN dealer are our primary concerns. Your NISSAN dealer is always available to assist you with all your automobile sales and service needs.

However, if there is something that your NISSAN dealer cannot assist you with or you would like to provide NISSAN directly with comments or questions, please contact the NISSAN Consumer Affairs Department using our toll-free number:

For U.S. customers
1-800-NISSAN-1
(1-800-647-7261)
For Canadian customers
1-800-387-0122

The Consumer Affairs Department will ask for the following information:

— Your name, address, and telephone number

— Vehicle identification number (attached to the top of the instrument panel on the driver's side)

— Date of purchase

— Current odometer reading

— Your NISSAN dealer's name

— Your comments or questions

OR

You can write to NISSAN with the information at:

For U.S. customers
Nissan North America, Inc.
Consumer Affairs Department
P.O. Box 685003
Franklin, TN 37068-5003

For Canadian customers
Nissan Canada Inc.
5290 Orbitor Drive
Mississauga, Ontario L4W 4Z5

We appreciate your interest in NISSAN and thank you for buying a quality NISSAN vehicle.

Table of Contents

Illustrated table of contents	0
Safety — Seats, seat belts and supplemental restraint system	1
Instruments and controls	2
Pre-driving checks and adjustments	3
Heater, air conditioner, audio and phone systems	4
Starting and driving	5
In case of emergency	6
Appearance and care	7
Maintenance and do-it-yourself	8
Technical and consumer information	9
Index	10

0 Illustrated table of contents

Seats, seat belts and Supplemental Restraint System (SRS) 0-2
Exterior front 0-3
Exterior rear 0-4
Passenger compartment 0-5
Instrument panel 0-6
Meters and gauges 0-7
Engine compartment 0-8
QR25DE engine 0-8

SEATS, SEAT BELTS AND SUPPLEMENTAL RESTRAINT SYSTEM (SRS)

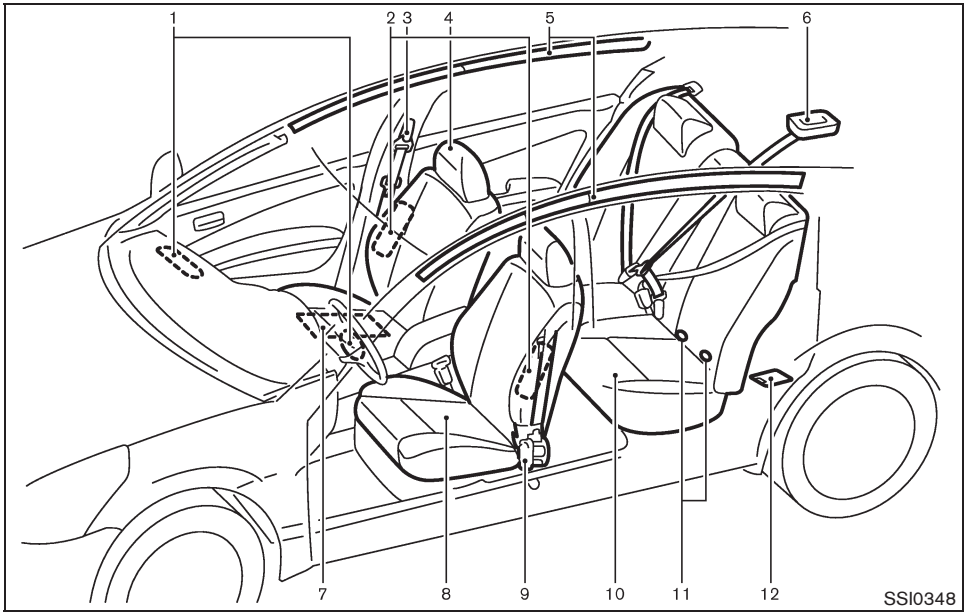

1. Supplemental front-impact air bags (Page 1-38)
2. Front seat-mounted side-impact supplemental air bags (P.1-38)
3. Seat belts (P.1-9)
4. Head restraints (P.1-7)
   — Front-seat Active Head Restraints (P.1-8)
5. Roof-mounted curtain side-impact and rollover supplemental air bags (P.1-38)
6. Rear center seat belt (P.1-16)
7. Occupant classification sensor (pattern sensor)
   — Advanced air bag system (P.1-44)
8. Front seats (P.1-3)
9. Seat belt pretensioner (P.1-50)
10. Rear seats (P.1-6)
    — Child restraints (P.1-19)
11. LATCH (Lower Anchors and Tethers for CHildren) system (P.1-21)
12. Child restraint anchor points (for top tether strap child restraint) (P.1-22)

EXTERIOR FRONT

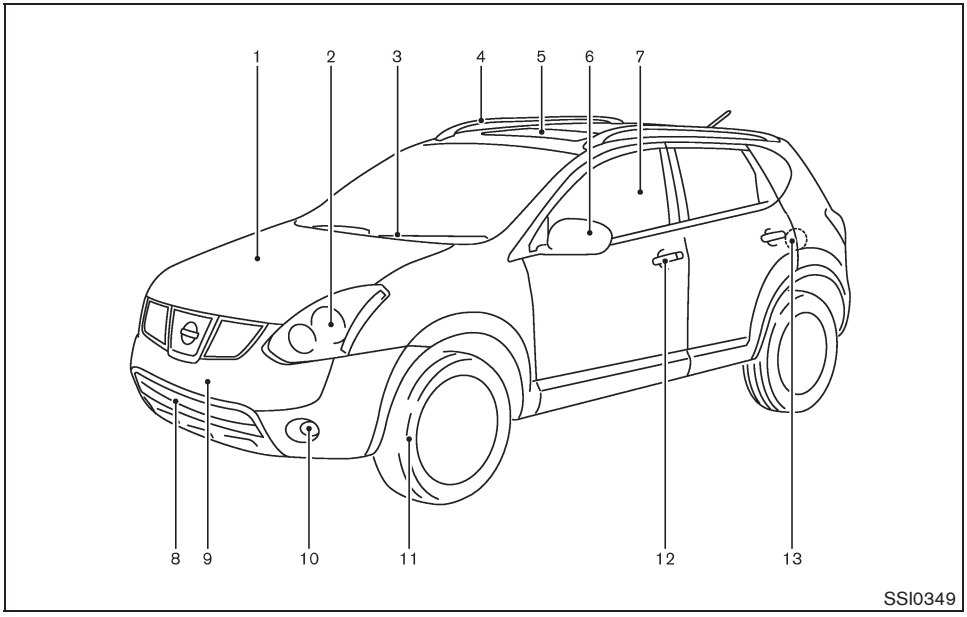

1. Hood (P.3-20)
2. Headlight and turn signal lights
   — Switch operation (P.2-25)
   — Bulb replacement (P.8-25)
3. Windshield wiper and washer
   — Switch operation (P.2-22)
   — Blade replacement (P.8-16)
   — Window washer fluid (P.8-12)
4. Roof rack (rail)* (P.2-39)
5. Moonroof* (P.2-42)
6. Outside mirrors (P.3-26)
7. Power windows (P.2-40)
8. Recovery hook (P.6-15)
9. License plate installation (P.9-11)
10. Fog lights*
    — Switch operation (P.2-29)
    — Bulb replacement (P.8-26)
11. Tires
    — Wheel and tires (P.8-29, P.9-7)
    — Flat tire (6-2)
    — Tire Pressure Monitoring System (TPMS) (P.2-14, P.5-3)
12. Doors
    — Keys (P.3-2)
    — Door locks (P.3-4)
    — Intelligent Key system* (P.3-8)
    — Remote keyless entry system* (P.3-6)
    — Security system (P.2-19)
13. Child safety rear door lock (P.3-6)

*: if so equipped

EXTERIOR REAR

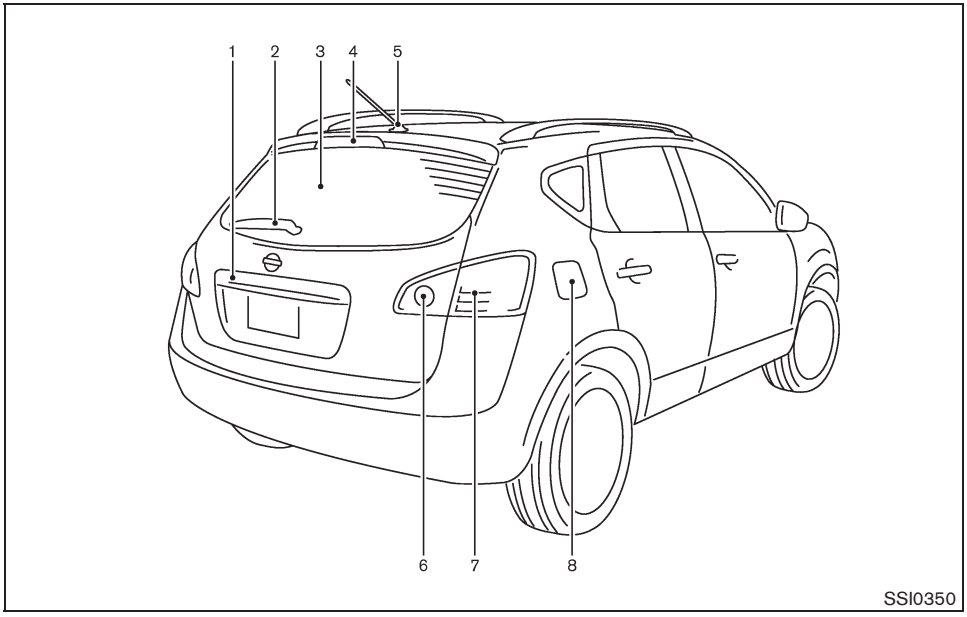

1. Lift gate (P.3-21)
   — Intelligent Key system* (P.3-8)
2. Rear window wiper and washer
   — Switch operation (P.2-23)
   — Window washer fluid (P.8-12)
3. Rear window defroster (P.2-24)
4. High-mounted stop light
   — Bulb replacement (P.8-26)
5. Antenna (P.4-24)
   — Satellite radio antenna* (P.4-7)
6. Back-up light
   — Bulb replacement (P.8-26)
7. Rear combination light
   — Bulb replacement (P.8-26)
8. Fuel-filler door
   — Operation (P.3-22)
   — Fuel recommendation (P.9-3)

*: if so equipped

PASSENGER COMPARTMENT

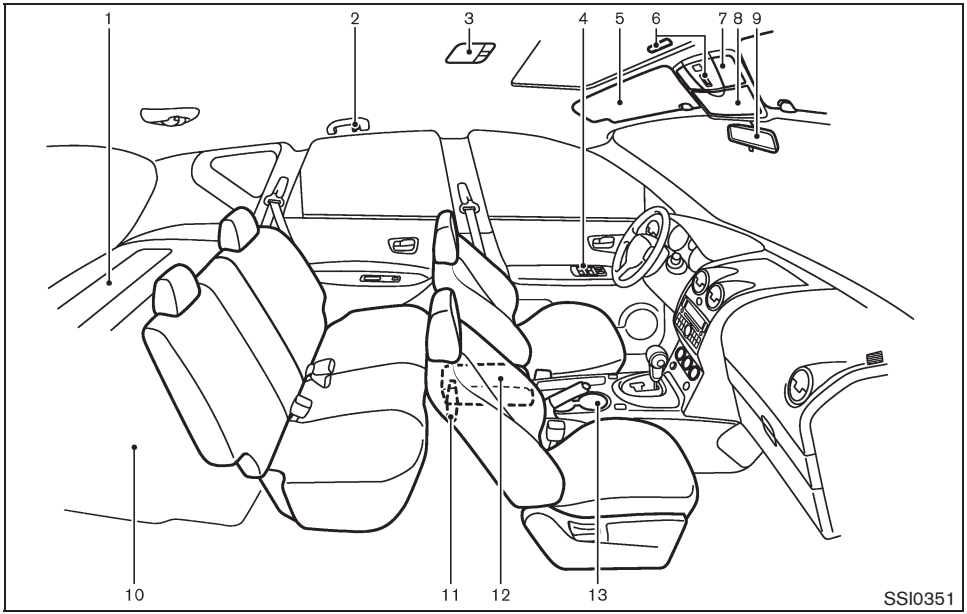

1. Cargo cover* (P.2-37)
2. Coat hooks (P.2-38)
3. Ceiling light (P.2-45)
4. Door armrest
   — Power window switch (P.2-40)
   — Power door lock switch (P.3-5)
5. Sun visors (P.3-24)
6. Moonroof* (P.2-42)
7. Front map lights (P.2-44)
8. Sunglasses holder (P.2-34)
9. Inside rearview mirror (P.3-25)
   — Anti-glare adjustment* (P.3-25)
   — HomeLink® universal transceiver* (P.2-47)
   — Compass* (P.2-8)
10. Cargo area
    — Storages (P.2-36)
    — Luggage hooks (P.2-38)
    — Cargo light* (P.2-46)
    — Spare tire (P.6-3)
11. Rear cup holders (P.2-33)
12. Console box (P.2-35)
    — Power outlet* (P.2-32)
13. Front cup holders (P.2-33)

*: if so equipped

INSTRUMENT PANEL

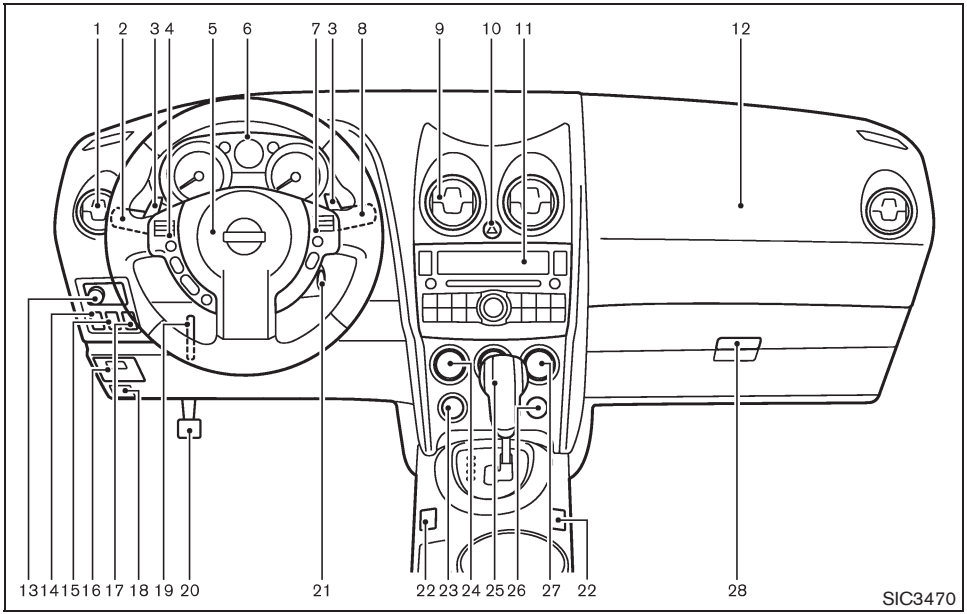

1. Side ventilator (P.4-2)
2. Headlight, fog light* and turn signal switch (P.2-25)
3. Paddle shifter* (P.5-15)
4. Steering-wheel-mounted controls (left side)*
   — Audio control* (P.4-23)
   — Bluetooth® Hands-Free Phone System control* (P.4-25)
5. Steering wheel
   — Horn (P.2-30)
   — Driver supplemental air bag (P.1-38)
   — Electric power steering system (P.5-26)
6. Meters and gauges (P.2-3)
7. Steering-wheel-mounted controls (right side)
   — Cruise control switches (P.5-19)
8. Wiper and washer switch (P.2-22)
9. Center ventilator (P.4-2)
10. Hazard warning flasher switch (P.2-29)
11. Audio system (P.4-6)
    — Clock (P.2-31)
12. Front passenger supplemental air bag (P.1-38)
13. Outside remote mirror control switch (P.3-26)
14. Headlight aiming control* (P.2-27)
15. All-Wheel Drive (AWD) LOCK switch* (P.5-22)
16. Fuse box cover (P.8-20)
17. Vehicle Dynamic Control (VDC) OFF switch (P.2-31, 5-28)
18. Hood release handle (P.3-20)
19. Tilting steering wheel lever (P.3-24)
20. Parking brake (P.5-18)
21. Ignition switch (P.5-9)
22. Heated seat switch* (P.2-30)
23. Power outlet (P.2-32)
24. Heater/air conditioner control (P.4-2)
25. Selector lever (P.5-13)
26. Front passenger air bag status light (P.1-45)
27. Rear window and outside mirror* defroster switch (P.2-24)
28. Glove box (P.2-35)

*: if so equipped

METERS AND GAUGES

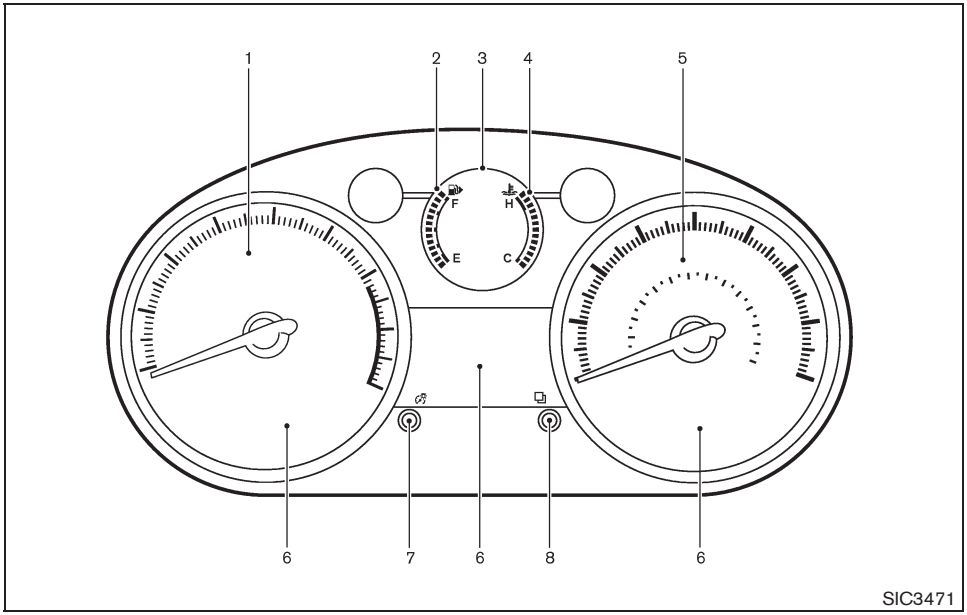

1. Tachometer (P.2-5)
2. Fuel gauge (P.2-6)
3. Vehicle information display (P.2-6)
   — Odometer/twin trip odometer (P.2-4)
   — Trip computer* (P.2-7)
   — Outside air temperature* (P.2-6)
   — Continuously Variable Transmission (CVT) position indicator (P.2-7)
4. Engine coolant temperature gauge (P.2-5)
5. Speedometer (P.2-4)
6. Warning/indicator lights (P.2-11)
7. Instrument brightness control knob (P.2-28)
8. RESET switch for trip odometer (P.2-4)/Trip computer* mode switch (P.2-7)

*: if so equipped

ENGINE COMPARTMENT

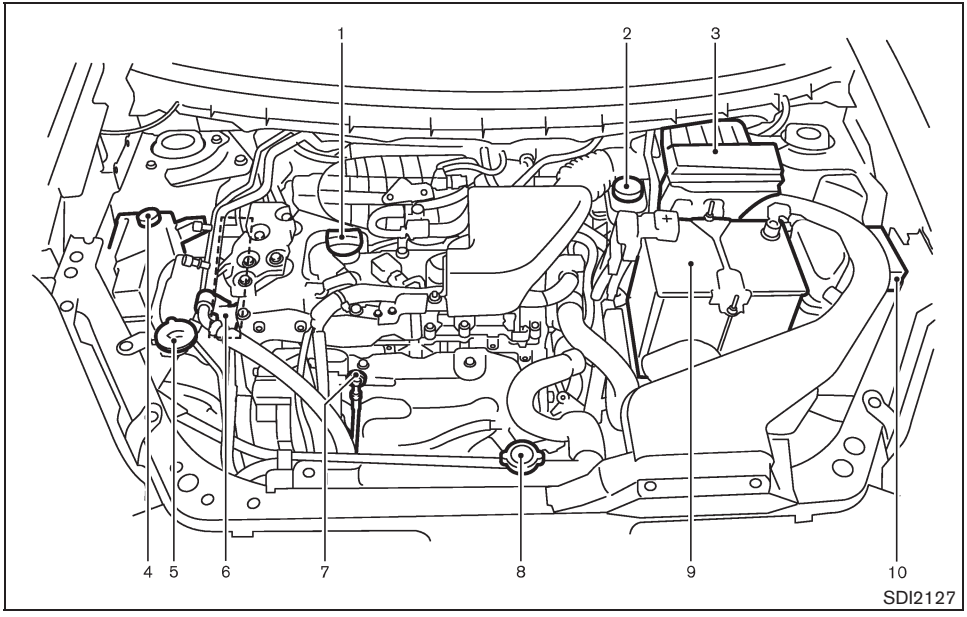

QR25DE ENGINE

1. Engine oil filler cap (P.8-8)
2. Brake fluid reservoir (P.8-11)
3. Air cleaner (P.8-16)
4. Engine coolant reservoir (P.8-8)
5. Window washer fluid reservoir (P.8-12)
6. Engine drive belt location (P.8-14)
7. Engine oil dipstick (P.8-8)
8. Radiator filler cap (P.8-7)
   — Vehicle overheat (P.6-11)
9. Battery (P.8-13)
   — Jump starting (P.6-9)
10. Fuse/fusible link holder (P.8-19)

1 Safety — Seats, seat belts and supplemental restraint system

Seats 1-2
Front seats 1-3
Rear seats 1-6
Head restraints 1-7
Front-seat Active Head Restraints 1-8
Seat belts 1-9
Precautions on seat belt usage 1-9
Child safety 1-11
Pregnant women 1-12
Injured persons 1-12
Three-point type seat belt 1-13
Seat belt extenders 1-18
Seat belt maintenance 1-19
Child restraints 1-19
Precautions on child restraints 1-19
Lower Anchors and Tethers for CHildren system (LATCH) 1-21
Top tether strap child restraint 1-22
Child restraint installation using LATCH 1-24
Child restraint installation using the seat belts 1-28
Booster seats 1-34
Precautions on booster seats 1-34
Booster seat installation 1-36
Supplemental restraint system 1-38
Precautions on supplemental restraint system 1-38
NISSAN Advanced Air Bag System (front seats) 1-44
Front seat-mounted side-impact supplemental air bag and roof-mounted curtain side-impact and rollover supplemental air bag systems 1-48
Seat belts with pretensioners (front seats) 1-50
Supplemental air bag warning labels 1-51
Supplemental air bag warning light 1-51
Repair and replacement procedure 1-52

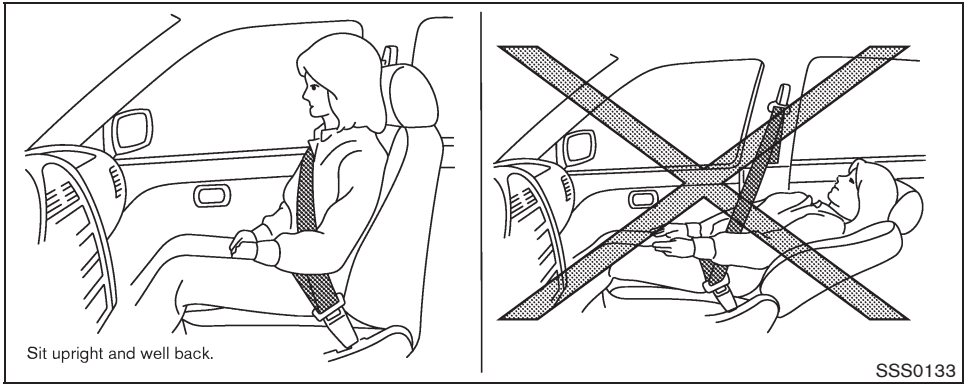

WARNING

- **Do not ride in a moving vehicle when the seatback is reclined. This can be dangerous. The shoulder belt will not be against your body. In an accident, you could be thrown into it and receive neck or other serious injuries. You could also slide under the lap belt and receive serious internal injuries.**
- **For the most effective protection when the vehicle is in motion, the seat should be upright. Always sit well back in the seat with both feet on the floor and adjust the seat properly. See "PRECAUTIONS ON SEAT BELT USAGE" later in this section.**
- **After adjustment, gently rock in the seat to make sure it is securely locked.**
- **Do not leave children unattended inside the vehicle. They could unknowingly activate switches or controls. Unattended children could become involved in serious accidents.**
- **Do not adjust the driver's seat while driving so full attention may be given to vehicle operation. The seat may move suddenly and could cause loss of control of the vehicle.**
- **The seatback should not be reclined any more than needed for comfort. Seat belts are most effective when the passenger sits well back and straight up in the seat. If the seatback is reclined, the risk of sliding under the lap belt and being injured is increased.**

CAUTION

When adjusting the seat positions, be sure not to contact any moving parts to avoid possible injuries and/or damages.

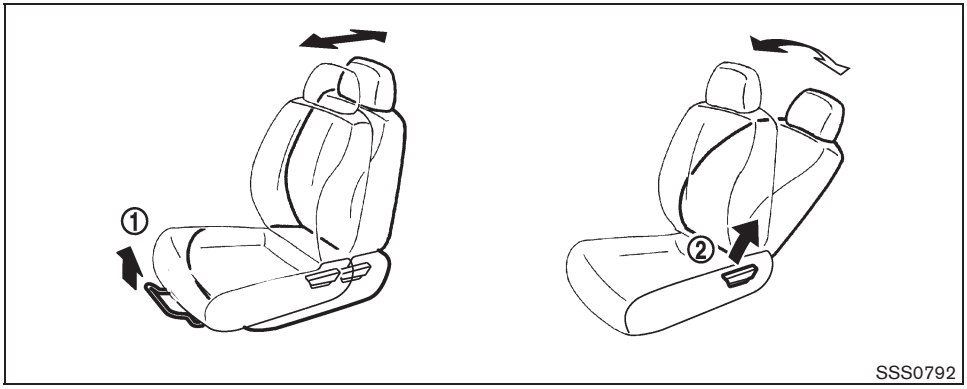

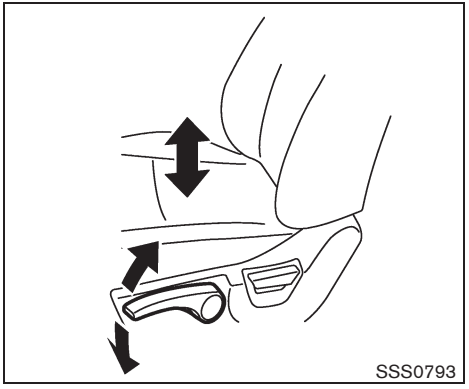

FRONT SEATS

Front manual seat adjustment

Forward and backward:

Pull the lever ① up and hold it while you slide the seat forward or backward to the desired position. Release the lever to lock the seat in position.

Reclining:

To recline the seatback, pull the lever ② up and lean back. To bring the seatback forward, pull the lever up and lean your body forward. Release the lever to lock the seatback in position.

The reclining feature allows adjustment of the seatback for occupants of different sizes for added comfort and to help obtain proper seat belt fit. (See “PRECAUTIONS ON SEAT BELT USAGE” later in this section.) Also, the seatback can be reclined to allow occupants to rest when the vehicle is stopped and the transmission in the P (Park) position with the parking brake fully applied.

Seat lifter (if so equipped):

Pull up or push down the adjusting lever to adjust the seat height until the desired position is achieved.

Front power seat adjustment

Operating tips:

- The seat motor has an auto-reset overload protection circuit. If the motor stops during operation, wait for a while, then reactivate the switch.
- Do not operate the power seat for a long period of time when the engine is off. This will discharge the battery.

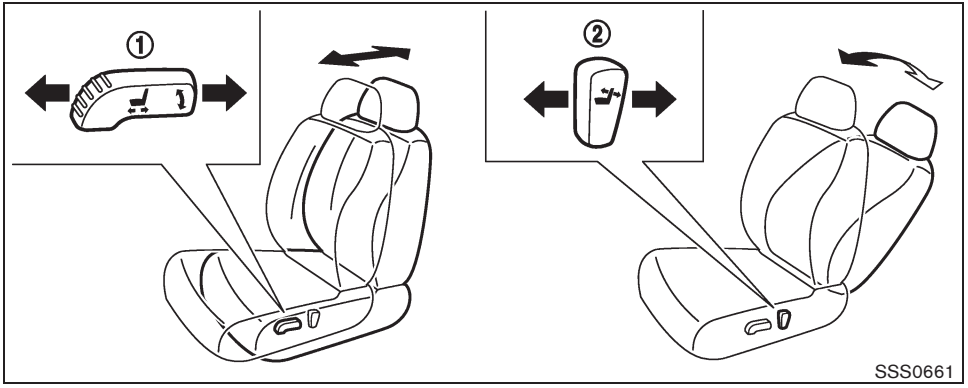

Forward and backward:

Moving the switch ① forward or backward will slide the seat forward or backward to the desired position.

Reclining:

Move the recline switch ② backward until the desired angle is obtained. To bring the seatback forward again, move the switch ② forward.

The reclining feature allows adjustment of the seatback for occupants of different sizes for added comfort and to help obtain proper seat belt fit. (See “PRECAUTIONS ON SEAT BELT USAGE” later in this section.) Also, the seatback can be reclined to allow occupants to rest when the vehicle is stopped and the transmission in the P (Park) position with the parking brake fully applied.

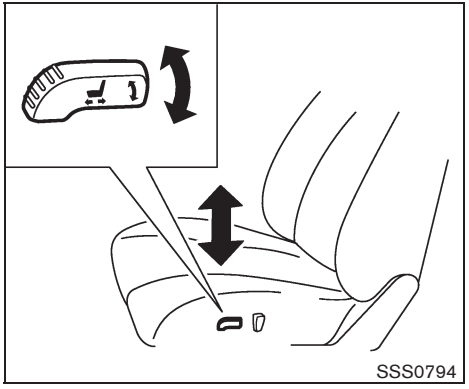

Seat lifter (if so equipped):

Pull up or push down the adjusting switch to adjust the height of the seat.

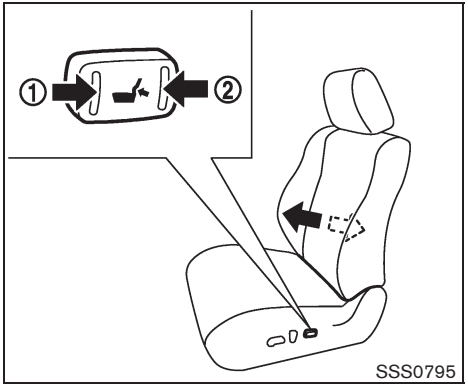

Lumbar support (if so equipped):

The lumbar support feature provides lower back support to the driver.

Push the front ① or back ② end of the switch to adjust the seat lumbar area.

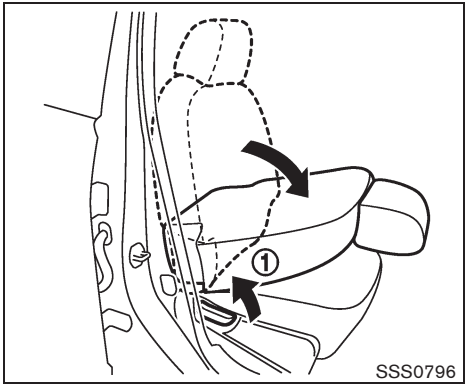

Folding front passenger's seat (if so equipped)

The front passenger's seatback can be folded down. Some long objects may be loaded in the vehicle when the rear seats are also folded down. (See "REAR SEATS" later in this section for folding rear seats.)

To fold the front passenger's seatback, pull the reclining lever all the way ①.

When returning the front passenger's seatback to a seating position, lift it up to an upright position. Pull the reclining lever and lean the seatback to a proper seating position. (See "Front manual seat adjustment" earlier in this section.)

WARNING

- **If you fold the front passenger's seatback down to carry longer objects, be sure this cargo is properly secured and not near an air bag. In a crash, an inflating air bag might force that object toward a person. This could cause severe injury or even death. Secure objects away from the area in which an air bag would inflate. See "PRECAUTIONS ON SUPPLEMENTAL RESTRAINT SYSTEM" later in this section.**
- **Never allow anyone to ride in the cargo area or on the front passenger's seat when it is in the fold-down position. Use of these areas by passengers could result in serious injury in an accident or sudden stop.**

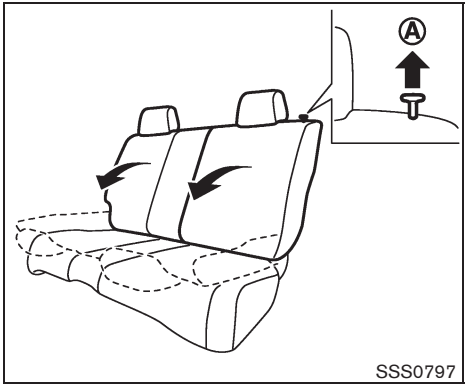

REAR SEATS

Folding

Before folding the rear seats:

- Secure the seat belts on the seat belt hooks on the side wall. (See "Seat belt hooks" later in this section.)
- Release the connector tongue of the rear center seat belt from the buckle, and store the connector and seat belt tongues into the retractor base on the ceiling. (See "Rear center seat belt" later in this section.)

To fold down the seatback of each rear seat, pull the adjusting knob Ⓐ .

To return the seatback to the seating position, lift up each seatback and push it to the upright position until it is latched.

WARNING

- **Never allow anyone to ride in the cargo area or on the rear seats when they are in the fold-down position. In a collision, people riding in these areas are more likely to be seriously injured or killed.**
- **Do not allow people to ride in any area of your vehicle that is not equipped with seats and seat belts. Be sure everyone in your vehicle is in a seat and using a seat belt properly.**
- **Do not fold down the rear seats when occupants are in the rear seat area or any luggage is on the rear seats.**
- **When returning the seatbacks to the upright position, be certain they are completely secured in the latched position. If they are not completely secured, passengers may be injured in an accident or sudden stop.**
- **Properly secure all cargo to help**

prevent it from sliding or shifting. Do not place cargo higher than the seatbacks. In a sudden stop or collision, unsecured cargo could cause personal injury.

- **When returning the seatbacks, be sure to attach the rear center seat belt connector.**
- **Do not unfasten the rear center seat belt connector except when folding down the rear seat.**
- **When attaching the rear center seat belt connector, be certain that the seatbacks are completely secured in the latched position and the rear center seat belt connector is completely secured.**
- **If the rear center seat belt connector and the seatbacks are not secured in the correct position, serious personal injury may result in an accident or sudden stop.**

HEAD RESTRAINTS

WARNING

Head restraints should be adjusted properly as they may provide significant protection against injury in an accident. Do not remove them. Check the adjustment after someone else uses the seat.

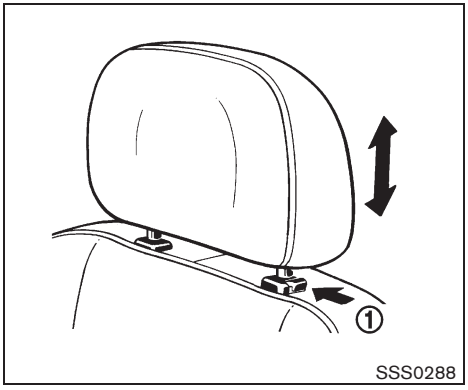

Adjustment (front seats)

To raise the head restraint, pull it up.

To lower, push and hold the lock knob (1) and push the head restraint down.

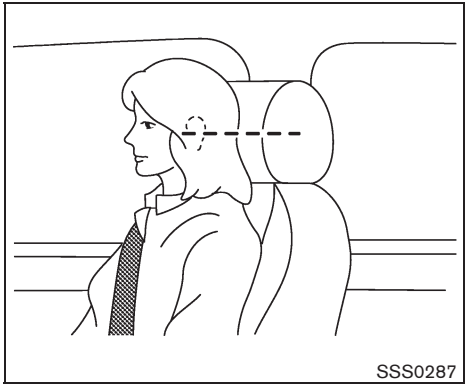

Adjust the head restraint so the center is level with the center of your ears.

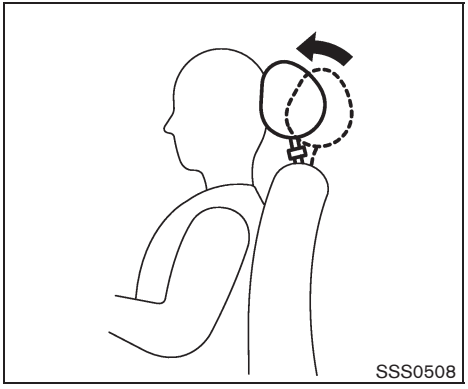

FRONT-SEAT ACTIVE HEAD RESTRAINTS

WARNING

- **Always adjust the head restraints properly as specified in this section. Failure to do so can reduce the effectiveness of the Active Head Restraint.**
- **Active Head Restraints are designed to supplement other safety systems. Always wear seat belts. No system can prevent all injuries in any accident.**
- **Do not attach anything to the head restraint stalks. Doing so could impair Active Head Restraint function.**

The Active Head Restraint moves forward utilizing the force that the seatback receives from the occupant in a rear-end collision. The movement of the head restraint helps support the occupant's head by reducing its backward movement and helping absorb some of the forces that may lead to whiplash-type injuries.

Active Head Restraints are effective for collisions at low to medium speeds in which it is said that whiplash injury occurs most.

Active Head Restraints operate only in certain rear-end collisions. After the collision, the head restraints return to their original positions.

Properly adjust the Active Head Restraints as described in this section.

PRECAUTIONS ON SEAT BELT USAGE

If you are wearing your seat belt properly adjusted, and you are sitting upright and well back in your seat with both feet on the floor, your chances of being injured or killed in an accident and/or the severity of injury may be greatly reduced. NISSAN strongly encourages you and all of your passengers to buckle up every time you drive, even if your seating position includes a supplemental air bag.

Most U.S. states and Canadian provinces or territories specify that seat belts be worn at all times when a vehicle is being driven.

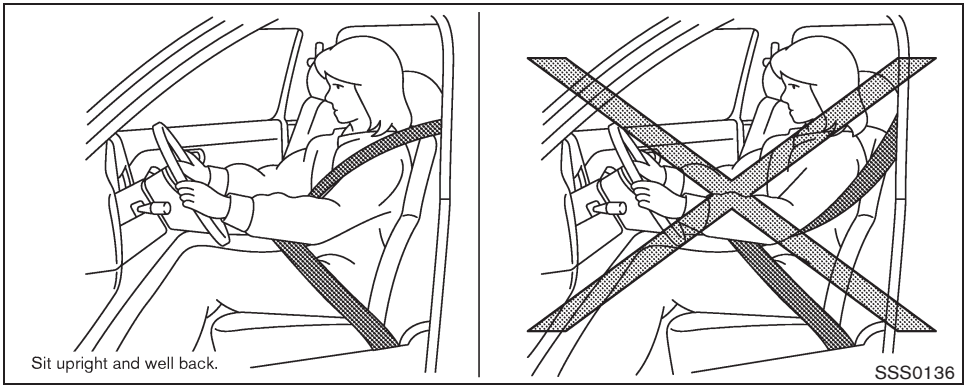

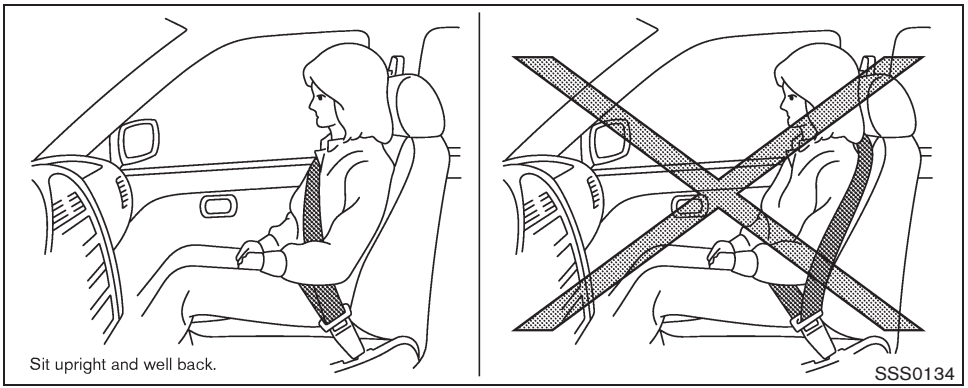

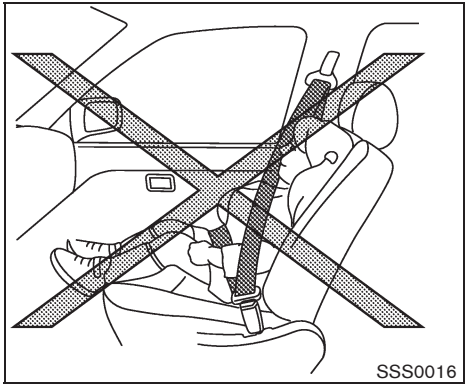

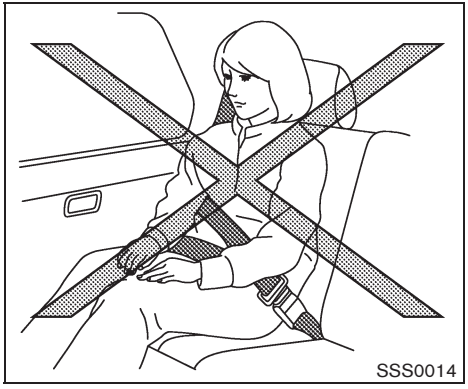

⚠ WARNING

- **Every person who drives or rides in this vehicle should use a seat belt at all times. Children should be properly restrained in the rear seat and, if appropriate, in a child restraint.**
- **The seat belt should be properly adjusted to a snug fit. Failure to do so may reduce the effectiveness of the entire restraint system and increase the chance or severity of injury in an accident. Serious injury or death can occur if the seat belt is not worn properly.**
- **Always route the shoulder belt over your shoulder and across your chest. Never put the belt behind your back, under your arm or across your neck. The belt should be away from your face and neck, but not falling off your shoulder.**
- **Position the lap belt as low and snug as possible AROUND THE HIPS, NOT THE WAIST. A lap belt worn too high could increase the risk of internal injuries in an accident.**
- **Be sure the seat belt tongue is securely fastened to the proper buckle.**
- **Do not wear the seat belt inside out or twisted. Doing so may reduce its effectiveness.**
- **Do not allow more than one person to use the same seat belt.**
- **Never carry more people in the vehicle than there are seat belts.**
- **If the seat belt warning light glows continuously while the ignition is turned ON with all doors closed and all seat belts fastened, it may indicate a malfunction in the system. Have the system checked by a NISSAN dealer.**
- **No changes should be made to the seat belt system. For example, do not modify the seat belt, add material, or install devices that may change the seat belt routing or tension. Doing so may affect the operation of the seat belt system. Modifying or tampering with the seat belt system may result in serious personal injury.**
- **Once a seat belt pretensioner has**

activated, it cannot be reused and must be replaced together with the retractor. See a NISSAN dealer.

- **Removal and installation of the pretensioner system components should be done by a NISSAN dealer.**
- **All seat belt assemblies, including retractors and attaching hardware, should be inspected after any collision by a NISSAN dealer. NISSAN recommends that all seat belt assemblies in use during a collision be replaced unless the collision was minor and the belts show no damage and continue to operate properly. Seat belt assemblies not in use during a collision should also be inspected and replaced if either damage or improper operation is noted.**
- **All child restraints and attaching hardware should be inspected after any collision. Always follow the restraint manufacturer's inspection instructions and replacement recommendations. The child restraints should be replaced if they are damaged.**

CHILD SAFETY

Children need adults to help protect them. They need to be properly restrained.

In addition to the general information in this manual, child safety information is available from many other sources, including doctors, teachers, government traffic safety offices, and community organizations. Every child is different, so be sure to learn the best way to transport your child.

There are three basic types of child restraint systems:

- Rear-facing child restraint
- Front-facing child restraint
- Booster seat

The proper restraint depends on the child's size. Generally, infants (up to about 1 year and less than 20 lb (9 kg)) should be placed in rear-facing child restraints. Front-facing child restraints are available for children who outgrow rear-facing child restraints and are at least 1 year old. Booster seats are used to help position a vehicle lap/shoulder belt on a child who can no longer use a front-facing child restraint.

WARNING

Infants and children need special protection. The vehicle's seat belts may not fit them properly. The shoulder belt may come too close to the face or neck. The lap belt may not fit over their small hip bones. In an accident, an improperly fitting seat belt could cause serious or fatal injury. Always use appropriate child restraints.

All U.S. states and Canadian provinces or territories require the use of approved child restraints for infants and small children. (See "CHILD RESTRAINTS" later in this section.)

Also, there are other types of child restraints available for larger children for additional protection.

NISSAN recommends that all pre-teens and children be restrained in the rear seat. According to accident statistics, children are safer when properly restrained in the rear seat than in the front seat.

This is especially important because your vehicle has a supplemental restraint system (air bag system) for the front passenger. (See "SUPPLEMENTAL RESTRAINT SYSTEM" later in this section.)

Infants

Infants up to at least 1 year old should be placed in a rear-facing child restraint. NISSAN recommends that infants be placed in child restraints

that comply with Federal Motor Vehicle Safety Standards or Canadian Motor Vehicle Safety Standards. You should choose a child restraint that fits your vehicle and always follow the manufacturer's instructions for installation and use.

Small children

Children that are over 1 year old and weigh at least 20 lb (9 kg) can be placed in a front-facing child restraint. Refer to the manufacturer's instructions for minimum and maximum weight and height recommendations. NISSAN recommends that small children be placed in child restraints that comply with Federal Motor Vehicle Safety Standards or Canadian Motor Vehicle Safety Standards. You should choose a child restraint that fits your vehicle and always follow the manufacturer's instructions for installation and use.

Larger children

Children who are too large for child restraints should be seated and restrained by the seat belts which are provided. The seat belt may not fit properly if the child is less than 4 ft 9 in (142.5 cm) tall and weighs between 40 lb (18 kg) and 80 lb (36 kg). A booster seat should be used to obtain proper seat belt fit.

NISSAN recommends that a child be placed in a commercially available booster seat if the shoulder belt in the child's seating position fits close to the face or neck or if the lap portion of the seat belt goes across the abdomen. The booster seat should raise the child so that the shoulder belt is properly positioned across the top, middle portion of the shoulder and the lap belt is low on the hips. A booster seat can only be used in seating positions that have a three-point type seat belt. The booster seat should fit the vehicle seat and have a label certifying that it complies with Federal Motor Vehicle Safety Standards or Canadian Motor Vehicle Safety Standards. Once the child has grown so the shoulder belt is no longer on or near the face and neck, use the shoulder belt without the booster seat.

WARNING

Never let a child stand or kneel on any seat and do not allow a child in the cargo areas while the vehicle is moving. The child could be seriously injured or killed in an accident or sudden stop.

PREGNANT WOMEN

NISSAN recommends that pregnant women use seat belts. The seat belt should be worn snug, and always position the lap belt as low as possible around the hips, not the waist. Place the shoulder belt over your shoulder and across your chest. Never put the lap/shoulder belt over your abdominal area. Contact your doctor for specific recommendations.

INJURED PERSONS

NISSAN recommends that injured persons use seat belts, depending on the injury. Check with your doctor for specific recommendations.

THREE-POINT TYPE SEAT BELT

WARNING

- **Every person who drives or rides in this vehicle should use a seat belt at all times.**
- **Do not ride in a moving vehicle when the seatback is reclined. This can be dangerous. The shoulder belt will not be against your body. In an accident, you could be thrown into it and receive neck or other serious injuries. You could also slide under the lap belt and receive serious internal injuries.**
- **For the most effective protection when the vehicle is in motion, the seat should be upright. Always sit well back in the seat with both feet on the floor and adjust the seat belt properly.**

Fastening the seat belts

1. Adjust the seat. (See “SEATS” earlier in this section.)

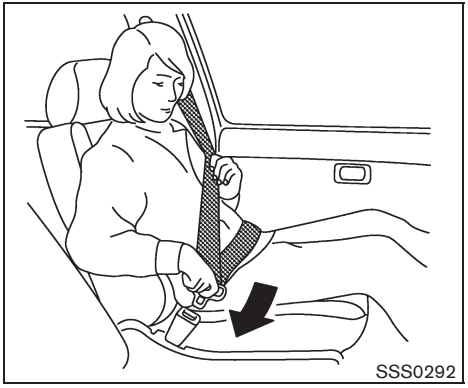

2. Slowly pull the seat belt out of the retractor and insert the tongue into the buckle until you hear and feel the latch engage.
   - **The retractor is designed to lock during a sudden stop or on impact. A slow pulling motion permits the belt to move and allows you some freedom of movement in the seat.**
   - **If the seat belt cannot be pulled from its fully retracted position, firmly pull the belt and release it. Then smoothly pull the belt out of the retractor.**

3. Position the lap belt portion **low and snug on the hips** as shown.
4. Pull the shoulder belt portion toward the retractor to take up extra slack. Be sure the shoulder belt is routed over your shoulder and across your chest.

The front passenger seat and the rear seating positions three-point seat belts have two modes of operation:

- Emergency Locking Retractor (ELR)
- Automatic Locking Retractor (ALR)

The Emergency Locking Retractor (ELR) mode allows the seat belt to extend and retract to

allow the driver and passengers some freedom of movement in the seat. The ELR locks the seat belt when the vehicle slows down rapidly or during certain impacts.

The Automatic Locking Retractor (ALR) mode (child restraint mode) locks the seat belt for child restraint installation.

When ALR mode is activated the seat belt cannot be extended again until the seat belt tongue is detached from the buckle and fully retracted. The seat belt returns to the ELR mode after the seat belt fully retracts. For additional information, see “CHILD RESTRAINTS” later in this section.

The ALR mode should be used only for child restraint installation. During normal seat belt use by an occupant, the ALR mode should not be activated. If it is activated, it may cause uncomfortable seat belt tension.

WARNING

When fastening the seat belts, be certain that seatbacks are completely secured in the latched position. If they are not completely secured, passengers may be injured in an accident or sudden stop.

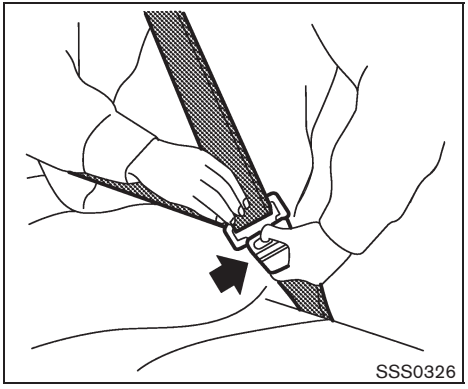

Unfastening the seat belts

To unfasten the seat belt, push the button on the buckle. The seat belt automatically retracts.

Checking seat belt operation

Seat belt retractors are designed to lock seat belt movement by two separate methods:

- When the belt is pulled quickly from the retractor.
- When the vehicle slows down rapidly.

To increase your confidence in the seat belts, check the operation as follows:

- Grasp the shoulder belt and pull forward quickly. The retractor should lock and restrict further belt movement.

If the retractor does not lock during this check or if you have any question about seat belt operation, see a NISSAN dealer.

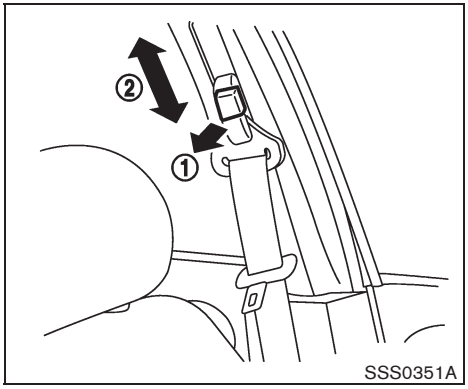

Shoulder belt height adjustment

The shoulder belt anchor height should be adjusted to the position best for you. (See “PRECAUTIONS ON SEAT BELT USAGE” earlier in this section.)

To adjust, pull the adjustment button ①, and then move the shoulder belt anchor to the desired position ②, so that the belt passes over the center of the shoulder. The belt should be away from your face and neck, but not falling off of your shoulder. Release the adjustment button to lock the shoulder belt anchor into position.

WARNING

- **After adjustment, release the adjustment button and try to move the shoulder belt anchor up and down to make sure it is securely fixed in position.**
- **The shoulder belt anchor height should be adjusted to the position best for you. Failure to do so may reduce the effectiveness of the entire restraint system and increase the chance or severity of injury in an accident.**

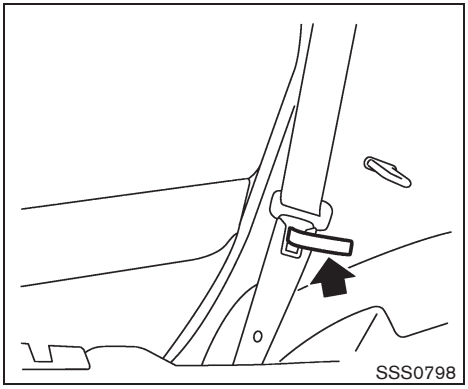

Seat belt hooks

When the rear seat belts are not in use and when folding down the rear seats, hook the rear outer seat belts on the seat belt hooks.

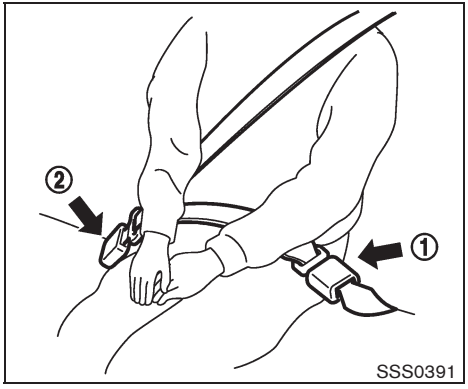

Rear center seat belt

The rear center seat belt has a connector tongue ① and a seat belt tongue ②. Both the connector tongue and the seat belt tongue must be securely latched for proper seat belt operation.

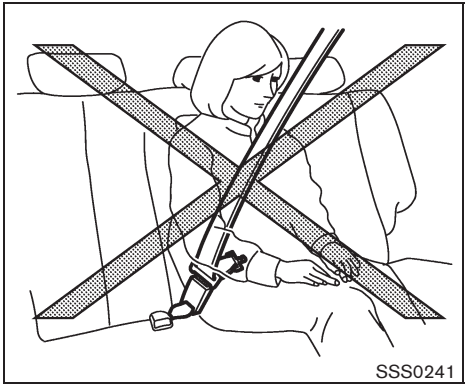

⚠ WARNING

- **Always fasten the connector tongue and the seat belt in the order shown.**
- **Always make sure both the connector tongue and the seat belt tongue are secured when using the seat belt or installing a child restraint. Do not use the seat belt or child restraint with only the seat belt tongue attached. This could result in serious personal injury in case of an accident or a sudden stop.**

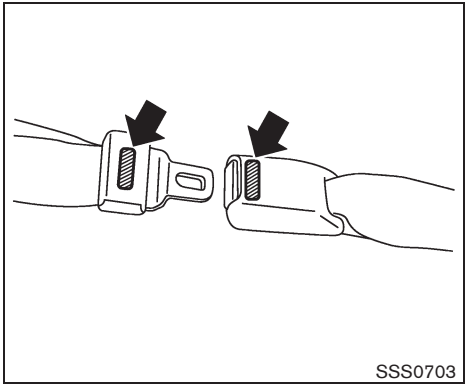

The center seat belt buckle and the tongue are identified by the CENTER mark. The center seat belt tongue can be fastened only into the center seat belt buckle.

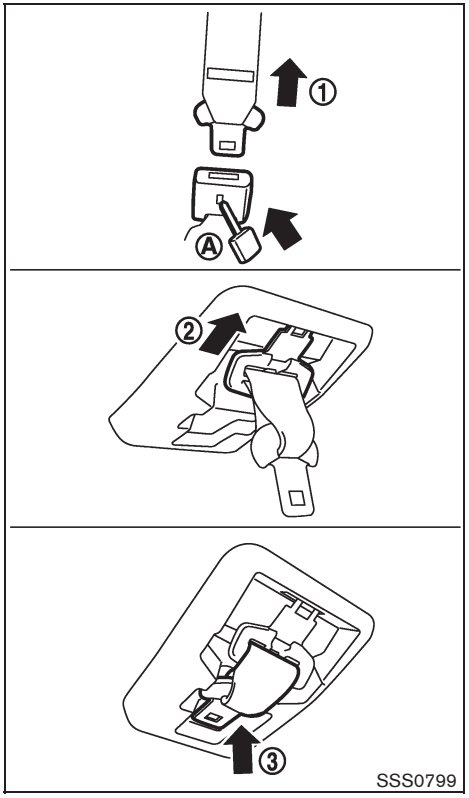

Stowing rear center seat belt:

When folding down the rear seat, the rear center seat belt can be retracted into a stowed position as follows:

1. Hold the connector tongue ① so that the seat belt does not retract suddenly when the tongue is released from the connector buckle. Release the connector tongue by inserting a suitable tool such as key Ⓐ into the connector buckle.
2. Insert the seat belt tongue into the retractor base first ②.
3. Then secure the connector tongue into the retractor base ③.

WARNING

- **Do not unfasten the rear center seat belt connector except when folding down the rear seat.**
- **When attaching the rear center seat belt connector, be certain that the seatbacks are completely secured in the latched position and the rear center seat belt connector is completely secured.**
- **If the rear center seat belt connector and the seatbacks are not secured in the correct position, serious personal injury may result in an accident or sudden stop.**

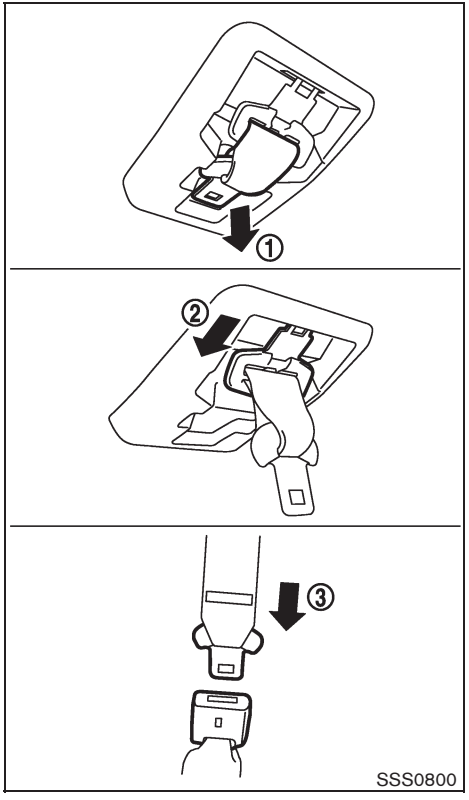

Attaching rear center seat belt:

Always be sure the rear center seat belt connector tongue and connector buckle are attached. Disconnect only when folding down the rear seat.

To connect the buckle:

1. Pull out the connector tongue from the retractor base ①.
2. Pull out the seat belt tongue from the retractor base ②.
3. Pull the seat belt and secure the connector buckle until it clicks ③.

The center seat belt connector tongue can be attached only into the rear center seat belt connector buckle.

To fasten the seat belt, see “Fastening the seat belts” earlier in this section.

WARNING

- **Do not unfasten the rear center seat belt connector except when folding down the rear seat.**
- **When attaching the rear center seat belt connector, be certain that the seatbacks are completely secured in the latched position and the rear center seat belt connector is completely secured.**
- **If the rear center seat belt connector and the seatbacks are not secured in the correct position, serious personal injury may result in an accident or sudden stop.**

SEAT BELT EXTENDERS

If, because of body size or driving position, it is not possible to properly fit the lap-shoulder belt and fasten it, an extender is available that is compatible with the installed seat belts. The extender adds approximately 8 in (200 mm) of length and may be used for either the driver or front passenger seating position. See a NISSAN dealer for assistance if an extender is required.

WARNING

- **Only NISSAN seat belt extenders, made by the same company which made the original equipment seat belts, should be used with NISSAN seat belts.**
- **Adults and children who can use the standard seat belt should not use an extender. Such unnecessary use could result in serious personal**

injury in the event of an accident.

- **Never use seat belt extenders to install child restraints. If the child restraint is not secured properly, the child could be seriously injured in a collision or a sudden stop.**

SEAT BELT MAINTENANCE

- **To clean the seat belt webbings,** apply a mild soap solution or any solution recommended for cleaning upholstery or carpets. Then wipe with a cloth and allow the seat belts to dry in the shade. Do not allow the seat belts to retract until they are completely dry.
- **If dirt builds up in the shoulder belt guide** of the seat belt anchors, the seat belts may retract slowly. Wipe the shoulder belt guide with a clean, dry cloth.
- **Periodically check to see that the seat belt and the metal components**, such as buckles, tongues, retractors, flexible wires and anchors, work properly. If loose parts, deterioration, cuts or other damage on the webbing is found, the entire seat belt assembly should be replaced.

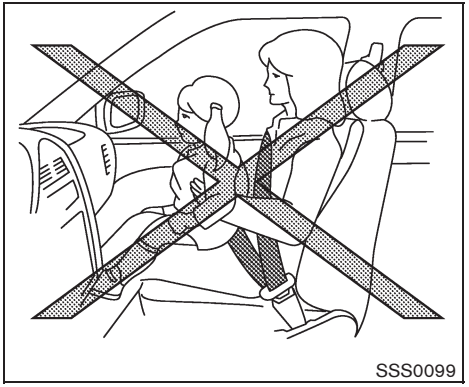
SSS0099

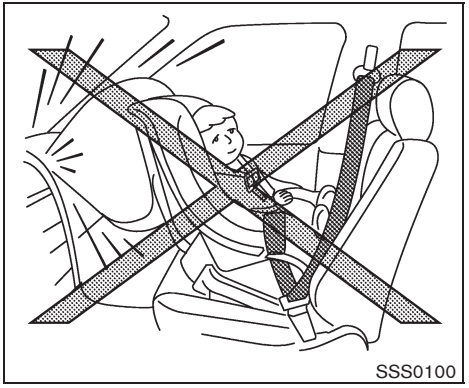
SSS0100

PRECAUTIONS ON CHILD RESTRAINTS

WARNING

- **Infants and small children should always be placed in an appropriate child restraint while riding in the vehicle. Failure to use a child restraint can result in serious injury or death.**
- **Infants and small children should never be carried on your lap. It is not possible for even the strongest adult to resist the forces of a severe accident. The child could be crushed between the adult and parts of the vehicle. Also, do not put the same seat belt around both your child and yourself.**
- **Even with the NISSAN Advanced Air Bag System, never install a rear-facing child restraint in the front seat. An inflating front air bag could seriously injure or kill your child. A rear-facing child restraint must only be used in the rear seat.**
- **NISSAN recommends that the child restraint be installed in the rear**

seat. According to accident statistics, children are safer when properly restrained in the rear seat than in the front seat. If you must install a front-facing child restraint in the front seat, see "CHILD RESTRAINT INSTALLATION USING THE SEAT BELTS" later in this section.

- **Improper use or improper installation of a child restraint can increase the risk or severity of injury for both the child and other occupants of the vehicle and can lead to serious injury or death in an accident.**
- **Follow all of the child restraint manufacturer's instructions for installation and use. When purchasing a child restraint, be sure to select one which will fit your child and vehicle. It may not be possible to properly install some types of child restraints in your vehicle.**
- **If the child restraint is not anchored properly, the risk of a child being injured in a collision or a sudden stop greatly increases.**
- **Child restraint anchor points are designed to withstand only those loads imposed by correctly fitted child restraints. Under no circumstances are they to be used for adult seat belts or harnesses.**
- **Adjustable seatbacks should be positioned to fit the child restraint, but as upright as possible.**
- **After attaching the child restraint, test it before you place the child in it. Push it from side to side while holding the seat near the LATCH attachment or by the seat belt path. The child restraint should not move more than 1 inch (25 mm) from side to side. Try to tug it forward and check to see if the belt holds the restraint in place. If the restraint is not secure, tighten the belt as necessary, or put the restraint in another seat and test it again. You may need to try a different child restraint. Not all child restraints fit in all types of vehicles.**
- **When your child restraint is not in use, keep it secured with the LATCH system or a seat belt to prevent it from being thrown around in case of a sudden stop or accident.**

⚠ CAUTION

Remember that a child restraint left in a closed vehicle can become very hot. Check the seating surface and buckles before placing your child in the child restraint.

This vehicle is equipped with a universal child restraint lower anchor system, referred to as the Lower Anchors and Tethers for CHildren System or LATCH. Some child restraints include two rigid or webbing-mounted attachments that can be connected to these lower anchors. For details, see "Lower Anchors and Tethers for CHildren SYSTEM (LATCH)" later in this section.

If you do not have a LATCH compatible child restraint, the vehicle seat belts can be used. (See "CHILD RESTRAINT INSTALLATION USING THE SEAT BELTS" later in this section.) In general, child restraints are also designed to be installed with a lap/shoulder seat belt.

Several manufacturers offer child restraints for infants and small children of various sizes. When selecting any child restraint, keep the following points in mind:

- Choose only a restraint with a label certifying that it complies with Federal Motor Vehicle Safety Standard 213 or Canadian Motor

Vehicle Safety Standard 213.

- Check the child restraint in your vehicle to be sure it is compatible with the vehicle's seat and seat belt system.
- If the child restraint is compatible with your vehicle, place your child in the child restraint and check the various adjustments to be sure the child restraint is compatible with your child. Choose a child restraint that is designed for your child's height and weight. Always follow all recommended procedures.

All U.S. states and Canadian provinces or territories require that infants and small children be restrained in an approved child restraint at all times while the vehicle is being operated. Canadian law requires the top tether strap on front-facing child restraints be secured to the designated anchor point on the vehicle.

Lower Anchors and Tethers for CHildren SYSTEM (LATCH)

Your vehicle is equipped with special anchor points that are used with Lower Anchors and Tethers for CHildren System (LATCH) compatible child restraints. This system may also be referred to as the ISOFIX or ISOFIX compatible system. With this system, you do not have to use a vehicle seat belt to secure the child restraint.

The LATCH anchor points are provided to install child restraints in the rear outboard seating positions only. Do not attempt to install a child restraint in the center position using the LATCH anchors.

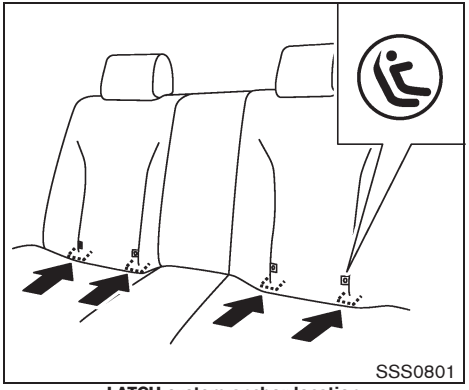

LATCH system anchor location

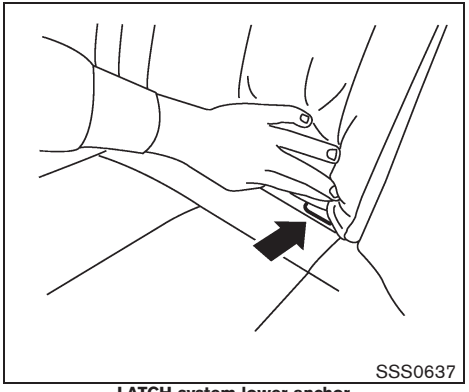

LATCH system lower anchor

LATCH lower anchor point locations

The LATCH anchors are located at the rear of the seat cushion near the seatback. A label is attached to the seatback to help you locate the LATCH anchors.

WARNING

- **Attach LATCH system compatible child restraints only at the locations shown in the illustration. If a child restraint is not secured properly, your child could be seriously injured or killed in an accident.**
- **Do not secure a child restraint in the center rear seating position using the LATCH anchors. The child restraint will not be secured properly.**
- **Child restraint anchor points are designed to withstand only those loads imposed by correctly fitted child restraints. Under no circumstances are they to be used for adult seat belts or harnesses.**

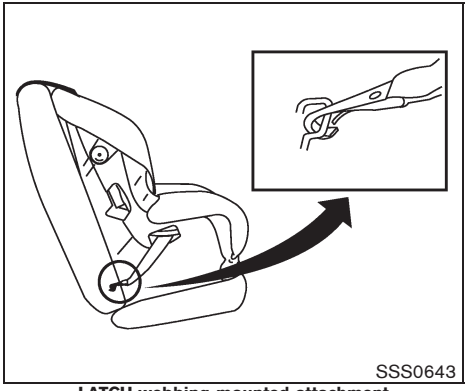

LATCH webbing-mounted attachment

Installing child restraint LATCH anchor attachments

LATCH compatible child restraints include two rigid or webbing-mounted attachments that can be connected to two anchors located at certain seating positions in your vehicle. With this system, you do not have to use a vehicle seat belt to secure the child restraint. Check your child restraint for a label stating that it is compatible with LATCH system. This information may also be in the instructions provided by the child restraint manufacturer.

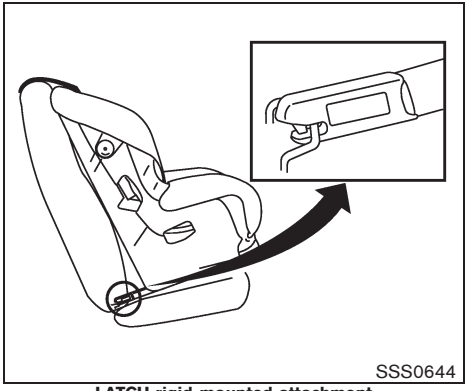

LATCH rigid-mounted attachment

LATCH child restraints generally require the use of a top tether strap. (See “TOP TETHER STRAP CHILD RESTRAINT” later in this section for installation instructions.)

When installing a child restraint, carefully read and follow the instructions in this manual and those supplied with the child restraint. (See “CHILD RESTRAINT INSTALLATION USING LATCH” later in this section.)

TOP TETHER STRAP CHILD RESTRAINT

If the manufacturer of your child restraint requires the use of a top tether strap, it must be secured to an anchor point.

WARNING

- **Child restraint anchor points are designed to withstand only those loads imposed by correctly fitted child restraints. Under no circumstances are they to be used for adult seat belts or harnesses.**
- **If the cargo cover contacts the top tether strap when it is attached to the top tether anchor, remove the cargo cover from the vehicle or secure it on the cargo floor below its attachment location. If the cargo cover is not removed, it may damage the top tether strap during a collision. Your child could be seriously injured or killed in a collision if the child restraint top tether strap is damaged.**
- **Do not allow cargo to contact the top tether strap when it is attached to the top tether anchor. Properly secure the cargo so it does not contact the top tether strap. Cargo that is not properly secured or that contacts the top tether strap may damage the top tether strap during a collision. Your child could be seriously injured or killed in a collision if the child restraint top tether strap is damaged.**

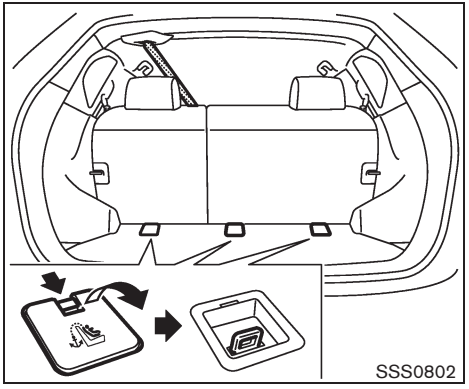

Top tether anchor point locations

Anchor points are located on the floor behind the outboard and center seating positions.

Installing top tether strap

First secure the child restraint with the LATCH system (rear outboard seating positions only) or the seat belt as applicable.

1. Remove the anchor cover from the anchor point which is located directly behind the child seat.
2. Position the top tether strap over the top of the seatback.
3. Secure the tether strap to the tether anchor

bracket that provides the straightest installation.

4. Tighten the tether strap according to the manufacturer's instructions to remove any slack.

If you have any questions when installing a top tether strap child restraint on the rear seat, consult your NISSAN dealer for details.

CHILD RESTRAINT INSTALLATION USING LATCH

WARNING

- **Attach LATCH system compatible child restraints only at the locations shown. For the LATCH lower anchor locations, see "Lower Anchors and Tethers for CHildren SYSTEM (LATCH)" earlier in this section. If a child restraint is not secured properly, your child could be seriously injured or killed in an accident.**
- **The LATCH anchors are designed to withstand only those loads imposed by correctly fitted child restraints. Under no circumstance are they to be used for adult seat belts or harnesses.**
- **Inspect the lower anchors by inserting your fingers into the lower anchor area and feeling to make sure there are no obstructions over the LATCH anchors, such as seat belt webbing or seat cushion material. The child restraint will not be secured properly if the LATCH anchors are obstructed.**

Front-facing

Follow these steps to install a front-facing child restraint using LATCH system:

1. Position the child restraint on the seat. Always follow the child restraint manufacturer's instructions.

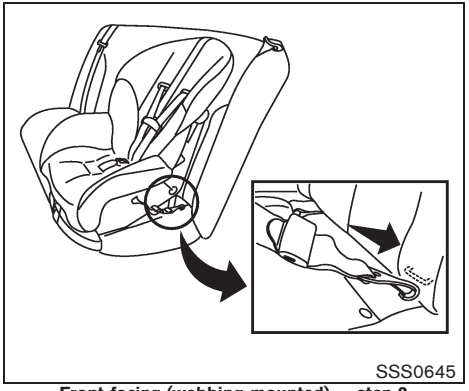

Front-facing (webbing-mounted) — step 2

2. Secure the child restraint anchor attachments to the LATCH lower anchors. Check to make sure the LATCH attachment is properly attached to the lower anchors.
3. The back of the child restraint should be secured against the vehicle seatback. If the seating position does not have an adjustable head restraint and it is interfering with the proper child restraint fit, try another seating position or a different child restraint.

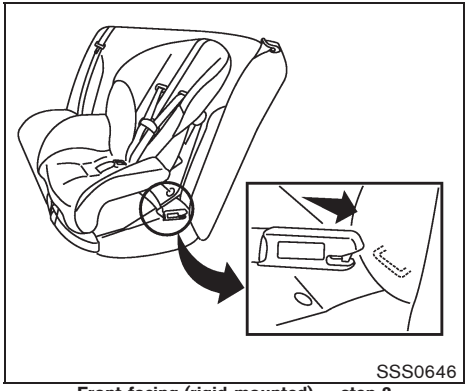

Front-facing (rigid-mounted) — step 2

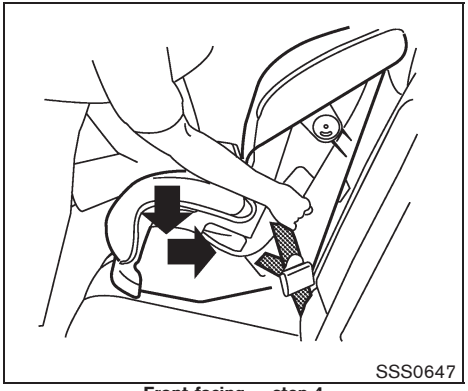

Front-facing — step 4

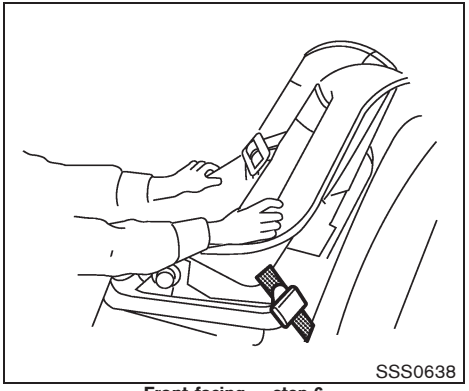

Front-facing — step 6

4. For child restraints that are equipped with webbing-mounted attachments, remove any additional slack from the anchor attachments. Press downward and rearward firmly in the center of the child restraint with your knee to compress the vehicle seat cushion and seatback while tightening the webbing of the anchor attachments.

5. If the child restraint is equipped with a top tether strap, route the top tether strap and secure the tether strap to the tether anchor point. (See “TOP TETHER STRAP CHILD RESTRAINT” earlier in this section.)

6. After attaching the child restraint, test it before you place the child in it. Push it from side to side while holding the seat near the LATCH attachment path. The child restraint should not move more than 1 inch (25 mm) from side to side. Try to tug it forward and check to see if the LATCH attachment holds the restraint in place. If the restraint is not secure, tighten the LATCH attachment as necessary, or put the restraint in another seat and test it again. You may need to try a different child restraint. Not all child restraints fit in all types of vehicles.

7. Check to make sure the child restraint is properly secured prior to each use. If the child restraint is loose, repeat steps 3 through 6.

Rear-facing

Follow these steps to install a rear-facing child restraint using LATCH system:

1. Position the child restraint on the seat. Always follow the child restraint manufacturer's instructions.

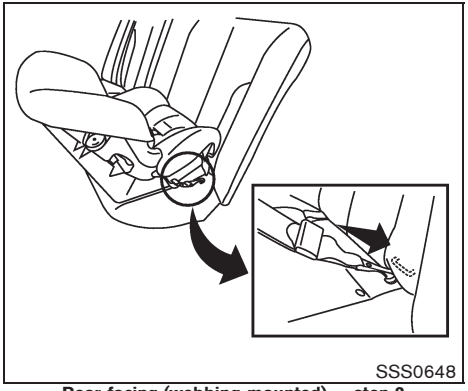

Rear-facing (webbing-mounted) — step 2

2. Secure the child restraint anchor attachments to the LATCH lower anchors. Check to make sure the LATCH attachment is properly attached to the lower anchors.

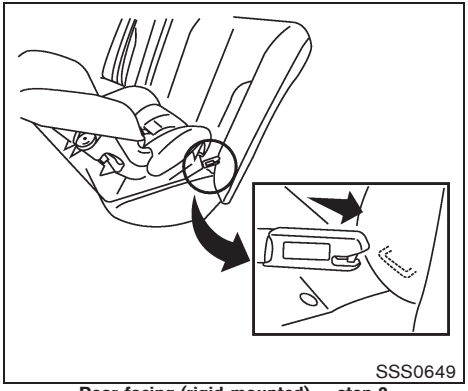

Rear-facing (rigid-mounted) — step 2

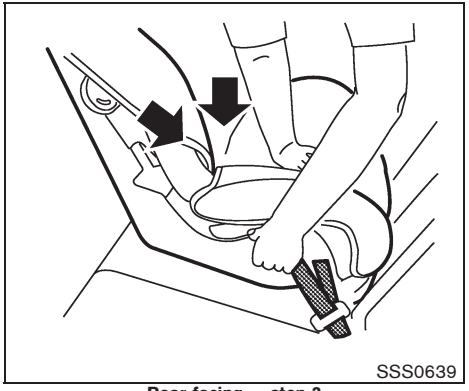

Rear-facing — step 3

3. For child restraints that are equipped with webbing-mounted attachments, remove any additional slack from the anchor attachments. Press downward and rearward firmly in the center of the child restraint with your hand to compress the vehicle seat cushion and seatback while tightening the webbing of the anchor attachments.

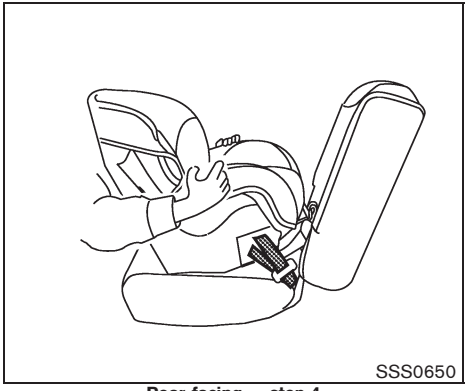

Rear-facing — step 4

4. After attaching the child restraint, test it before you place the child in it. Push it from side to side while holding the seat near the LATCH attachment path. The child restraint should not move more than 1 inch (25 mm) from side to side. Try to tug it forward and check to see if the LATCH attachment holds the restraint in place. If the restraint is not secure, tighten the LATCH attachment as necessary, or put the restraint in another seat and test it again. You may need to try a different child restraint. Not all child restraints fit in all types of vehicles.

5. Check to make sure the child restraint is properly secured prior to each use. If the child restraint is loose, repeat steps 3 through 4.

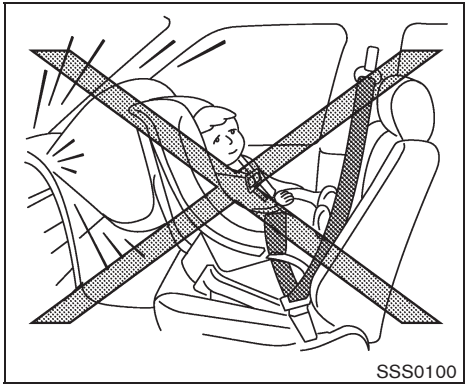

CHILD RESTRAINT INSTALLATION USING THE SEAT BELTS

WARNING

- **Even with the NISSAN Advanced Air Bag System, never install a rear-facing child restraint in the front passenger seat. Front air bags inflate with great force. A rear-facing child restraint could be struck by the front air bag in a crash and could seriously injure or kill your child.**
- **NISSAN recommends that child restraints be installed in the rear seat. However, if you must install a front-facing child restraint in the front passenger seat, move the passenger seat to the rearmost position. Also, be sure the front passenger air bag status light is illuminated to indicate the passenger air bag is OFF. See "Front passenger air bag and status light" later in this section for details.**
- **The three-point seat belt in your vehicle is equipped with an Automatic Locking Retractor (ALR) mode which must be used when installing a child restraint.**
- **Failure to use the ALR mode will result in the child restraint not being properly secured. The restraint could tip over or otherwise be unsecured and cause injury to the child in a sudden stop or collision.**
- **When using the rear center seat belt to install a child restraint, make sure the connector tongue and the seat belt tongue are secured. Do not use the seat belt with only the seat belt tongue attached. This could result in serious personal injury in case of an accident or sudden stop.**
- **A child restraint with a top tether strap should not be used in the front passenger seat.**

The instructions in this section apply to child restraint installation using the vehicle seat belts in the rear seat or the front passenger seat.

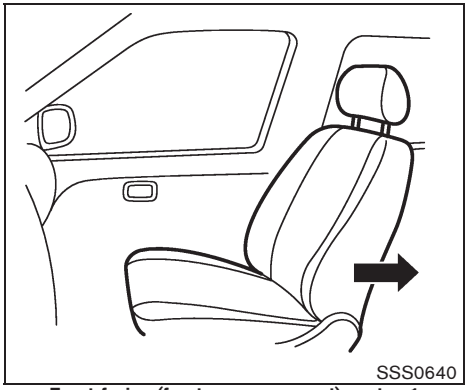

Front-facing (front passenger seat) — step 1

Front-facing

Follow these steps to install a front-facing child restraint using the vehicle seat belt in the rear seat or in the front passenger seat:

1. **If you must install a child restraint in the front seat, it should be placed in a front-facing direction only. Move the seat to the rearmost position. Child restraints for infants must be used in the rear-facing direction and therefore must not be used in the front seat.**
2. Position the child restraint on the seat. Always follow the child restraint manufacturer's instructions.

The back of the child restraint should be secured against the seatback.

If necessary, adjust or remove the head restraint (front passenger seat only) to obtain the correct child restraint fit. (See "HEAD RESTRAINTS" earlier in this section.)

If the head restraint is removed, store it in a secure place. Be sure to reinstall the head restraint when the child restraint is removed.

If the seating position does not have an adjustable head restraint and it is interfering with the proper child restraint fit, try another seating position or a different child restraint.

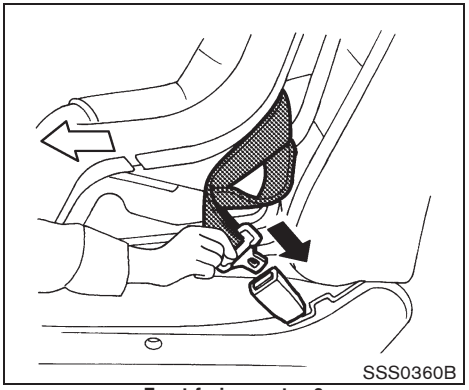

Front-facing — step 3

3. Route the seat belt tongue through the child restraint and insert it into the buckle until you hear and feel the latch engage. Be sure to follow the child restraint manufacturer's instructions for belt routing.

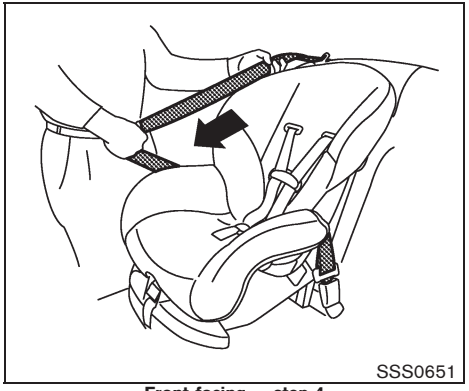

Front-facing — step 4

4. Pull the shoulder belt until the belt is fully extended. At this time, the seat belt retractor is in the Automatic Locking Retractor (ALR) mode (child restraint mode). It reverts to the Emergency Locking Retractor (ELR) mode when the seat belt is fully retracted.

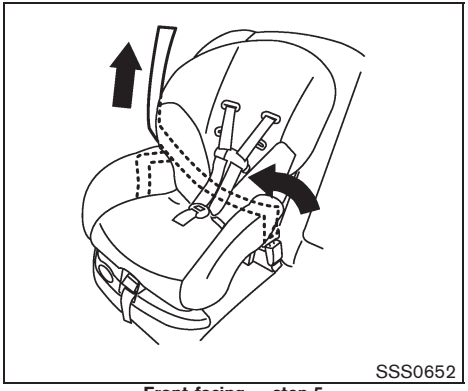

Front-facing — step 5

5. Allow the seat belt to retract. Pull up on the shoulder belt to remove any slack in the belt.

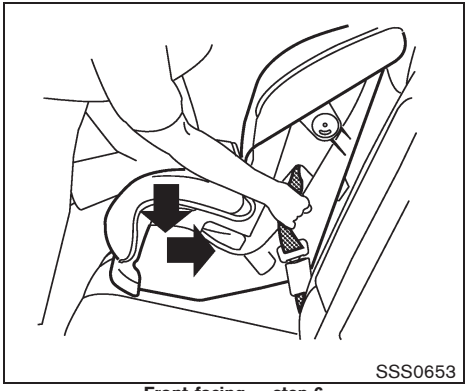

Front-facing — step 6

6. Remove any additional slack from the seat belt; press downward and rearward firmly in the center of the child restraint with your knee to compress the vehicle seat cushion and seatback while pulling up on the seat belt.

7. If the child restraint is equipped with a top tether strap, route the top tether strap and secure the tether strap to the tether anchor point (rear seat installation only). (See “TOP TETHER STRAP CHILD RESTRAINT” earlier in this section.) Do not install child restraints that require the use of a top tether strap to seating positions that do not have a top tether anchor.

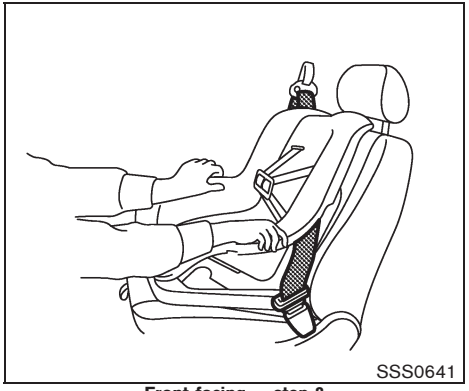

Front-facing — step 8

8. After attaching the child restraint, test it before you place the child in it. Push it from side to side while holding the seat by the seat belt path. The child restraint should not move more than 1 inch (25 mm) from side to side. Try to tug it forward and check to see if the belt holds the restraint in place. If the restraint is not secure, tighten the belt as necessary, or put the restraint in another seat and test it again. You may need to try a different child restraint. Not all child restraints fit in all types of vehicles.

9. Check that the retractor is in the ALR mode by trying to pull more seat belt out of the retractor. If you cannot pull any more belt webbing out of the retractor, the retractor is in the ALR mode.

10. Check to make sure the child restraint is properly secured prior to each use. If the seat belt is not locked, repeat steps 3 through 9.

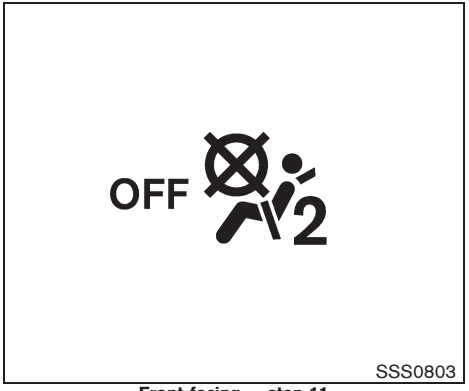

Front-facing — step 11

11. If the child restraint is installed in the front passenger seat, turn the ignition switch to the ON position. The front passenger air bag status light OFF 2 should illuminate. If this light is not illuminated, see “Front passenger air bag and status light” later in this section. **Move the child restraint to another seating position**. Have the system checked by a NISSAN dealer.

After the child restraint is removed and the seat belt is fully retracted, the ALR mode (child restraint mode) is canceled.

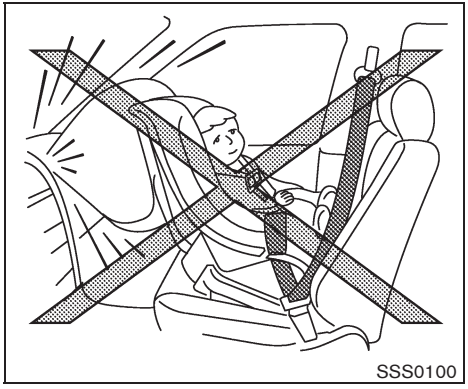

Rear-facing

Follow these steps to install a rear-facing child restraint using the vehicle seat belt in the rear seat:

1. **Child restraints for infants must be used in the rear-facing direction and therefore must not be used in the front seat.** Position the child restraint on the seat. Always follow the restraint manufacturer's instructions.

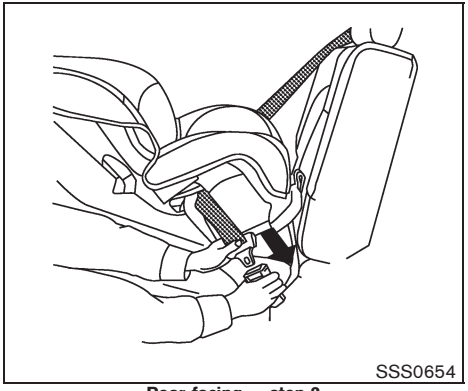

Rear-facing — step 2

2. Route the seat belt tongue through the child restraint and insert it into the buckle until you hear and feel the latch engage. Be sure to follow the child restraint manufacturer's instructions for belt routing.

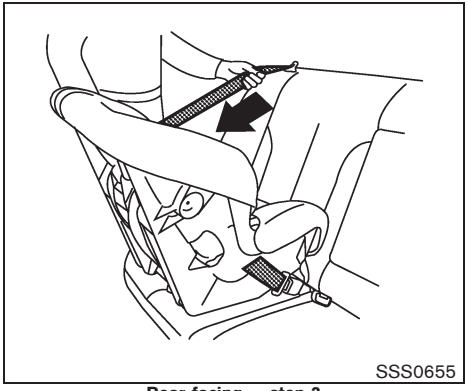

Rear-facing — step 3

3. Pull the shoulder belt until the belt is fully extended. At this time, the seat belt retractor is in the Automatic Locking Retractor (ALR) mode (child restraint mode). It reverts to the Emergency Locking Retractor (ELR) mode when the seat belt is fully retracted.

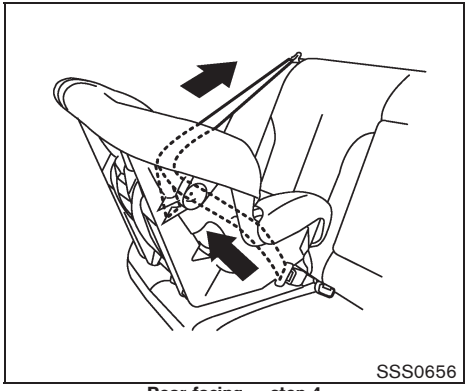

Rear-facing — step 4

4. Allow the seat belt to retract. Pull up on the shoulder belt to remove any slack in the belt.

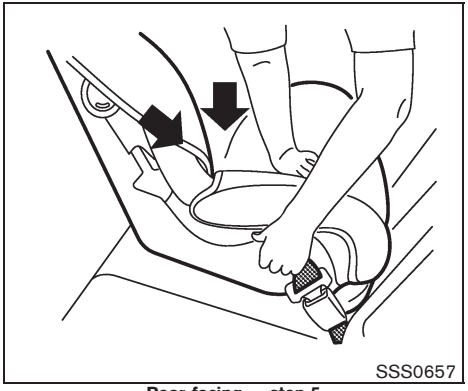

Rear-facing — step 5

5. Remove any additional slack from the child restraint; press downward and rearward firmly in the center of the child restraint with your hand to compress the vehicle seat cushion and seatback while pulling up on the seat belt.

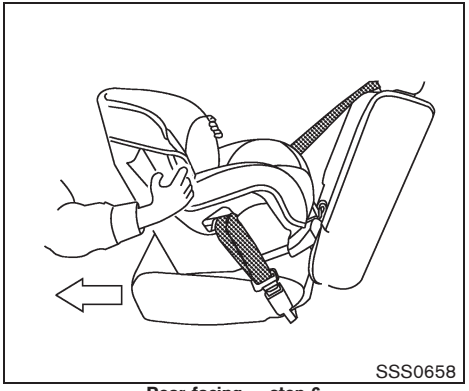

Rear-facing — step 6

6. After attaching the child restraint, test it before you place the child in it. Push it from side to side while holding the seat by the seat belt path. The child restraint should not move more than 1 inch (25 mm) from side to side. Try to tug it forward and check to see if the belt holds the restraint in place. If the restraint is not secure, tighten the belt as necessary, or put the restraint in another seat and test it again. You may need to try a different child restraint. Not all child restraints fit in all types of vehicles.

7. Check that the retractor is in the ALR mode by trying to pull more seat belt out of the retractor. If you cannot pull any more seat belt webbing out of the retractor, the retractor is in the ALR mode.
8. Check to make sure that the child restraint is properly secured prior to each use. If the seat belt is not locked, repeat steps 3 through 7.

After the child restraint is removed and the seat belt fully retracted, the ALR mode (child restraint mode) is canceled.

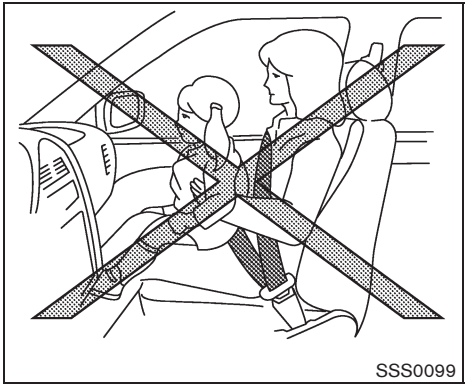

PRECAUTIONS ON BOOSTER SEATS

WARNING

- **Infants and small children should always be placed in an appropriate child restraint while riding in the vehicle. Failure to use a child restraint or booster seat can result in serious injury or death.**
- **Infants and small children should never be carried on your lap. It is not possible for even the strongest adult to resist the forces of a severe accident. The child could be crushed between the adult and parts of the vehicle. Also, do not put the same seat belt around both your child and yourself.**
- **NISSAN recommends that the booster seat be installed in the rear seat. According to accident statistics, children are safer when properly restrained in the rear seat than in the front seat. If you must install a booster seat in the front seat, see "BOOSTER SEAT INSTALLATION" later in this section.**
- **A booster seat must only be installed in a seating position that has a lap/shoulder belt. Failure to use a three-point type seat belt with a booster seat can result in a serious injury in sudden stop or collision.**
- **Improper use or improper installation of a booster seat can increase the risk or severity of injury for both the child and other occupants of the vehicle and can lead to serious injury or death in an accident.**
- **Do not use towels, books, pillows or other items in place of a booster seat. Items such as these may move**

during normal driving or a collision and result in serious injury or death. Booster seats are designed to be used with a lap/shoulder belt. Booster seats are designed to properly route the lap and shoulder portions of the seat belt over the strongest portions of a child's body to provide the maximum protection during a collision.

- **Follow all of the booster seat manufacturer's instructions for installation and use. When purchasing a booster seat, be sure to select one which will fit your child and vehicle. It may not be possible to properly install some types of booster seats in your vehicle.**
- **If the booster seat and seat belt is not used properly, the risk of a child being injured in a collision or a sudden stop greatly increases.**
- **Adjustable seatbacks should be positioned to fit the booster seat, but as upright as possible.**
- **After placing the child in the booster seat and fastening the seat belt, make sure the shoulder portion of the belt is away from the child's face and neck and the lap portion of the belt does not cross the abdomen.**
- **Do not put the shoulder belt behind the child or under the child's arm. If you must install a booster seat in the front seat, see "BOOSTER SEAT INSTALLATION" later in this section.**
- **When your booster seat is not in use, keep it secured with a seat belt to prevent it from being thrown around in case of a sudden stop or accident.**

CAUTION

Remember that a booster seat left in a closed vehicle can become very hot. Check the seating surface and buckles before placing your child in the booster seat.

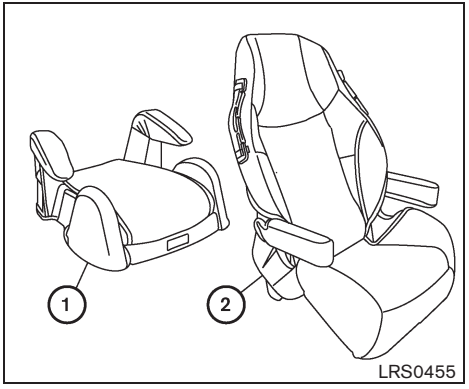

Booster seats of various sizes are offered by several manufacturers. When selecting any booster seat, keep the following points in mind:

- Choose only a booster seat with a label certifying that it complies with Federal Motor Vehicle Safety Standard 213 or Canadian Motor Vehicle Safety Standard 213.
- Check the booster seat in your vehicle to be sure it is compatible with the vehicle's seat and seat belt system.

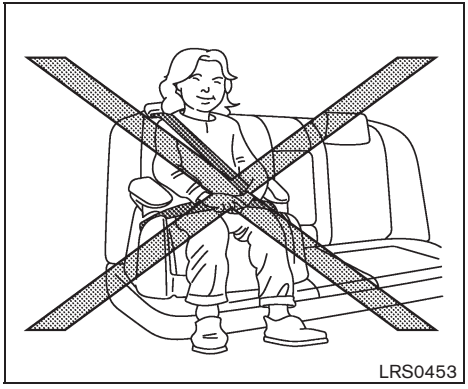

- Make sure the child's head will be properly supported by the booster seat or vehicle seat. The seatback must be at or above the center of the child's ears. For example, if a low back booster seat ① is chosen, the vehicle seatback must be at or above the center of the child's ears. If the seatback is lower than the center of the child's ears, a high back booster seat ② should be used.

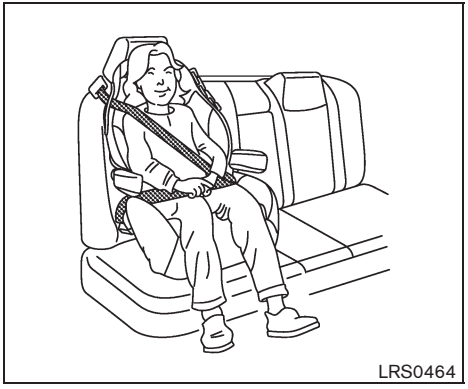

- If the booster seat is compatible with your vehicle, place your child in the booster seat and check the various adjustments to be sure the booster seat is compatible with your child. Always follow all recommended procedures.

All U.S. states and Canadian provinces or territories require that infants and small children be restrained in an approved child restraint at all times while the vehicle is being operated.

The instructions in this section apply to booster seat installation in the rear seats or the front passenger seat.

BOOSTER SEAT INSTALLATION

WARNING

NISSAN recommends that booster seats be installed in the rear seat. However, if you must install a booster seat in the front passenger seat, move the passenger's seat to the rearmost position.

CAUTION

Do not use the lap/shoulder belt Automatic Locking Retractor (ALR) mode when using a booster seat with the seat belts.

Follow these steps to install a booster seat in the rear seat or in the front passenger seat:

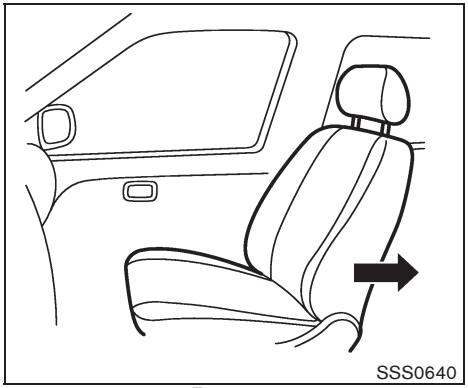

Front seat

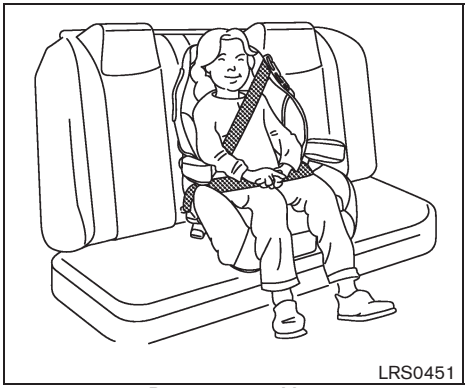

Rear center position

Rear outboard position

1. **If you must install a booster seat in the front seat, move the seat to the rear-most position.**
2. Position the booster seat on the seat. Only place it in a front-facing direction. Always follow the booster seat manufacturer's instructions.
3. The booster seat should be positioned on the vehicle seat so that it is stable.

   If necessary, adjust or remove the head restraint (front passenger seat only) to obtain the correct booster seat fit. (See "HEAD RESTRAINTS" earlier in this section.)

   If the head restraint is removed, store it in a secure place. Be sure to reinstall the head restraint when the booster seat is removed. If the seating position does not have an adjustable head restraint and it is interfering with the proper booster seat fit, try another seating position or a different booster seat.
4. Position the lap portion of the seat belt low and snug on the child's hips. Be sure to follow the booster seat manufacturer's instructions for adjusting the seat belt routing.
5. Pull the shoulder belt portion of the seat belt toward the retractor to take up extra slack. Be sure the shoulder belt is positioned across the top, middle portion of the child's shoulder. Be sure to follow the booster seat manufacturer's instructions for adjusting the seat belt routing.

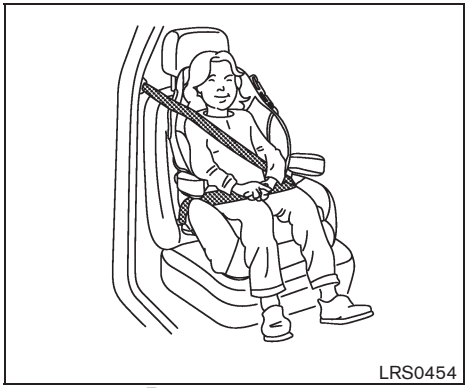

Front passenger seat

6. Follow the warnings, cautions and instructions for properly fastening a seat belt shown in the “THREE-POINT TYPE SEAT BELT” earlier in this section.

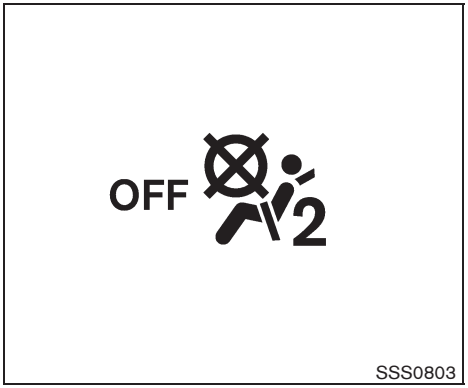

7. If the booster seat is installed in the front passenger seat, turn the ignition switch to the ON position. The front passenger air bag status light OFF 2 may or may not be illuminated depending on the size of the child and the type of booster seat used. (See “Front passenger air bag and status light” later in this section.)

SUPPLEMENTAL RESTRAINT SYSTEM

PRECAUTIONS ON SUPPLEMENTAL RESTRAINT SYSTEM

This Supplemental Restraint System (SRS) section contains important information concerning the following systems:

- Driver and passenger supplemental front-impact air bag (NISSAN Advanced Air Bag System)
- Front seat-mounted side-impact supplemental air bag
- Roof-mounted curtain side-impact and rollover supplemental air bag
- Seat belt pretensioner

Supplemental front-impact air bag system: The NISSAN Advanced Air Bag System can help cushion the impact force to the head and chest of the driver and front passenger in certain frontal collisions.

Front seat-mounted side-impact supplemental air bag system: This system can help cushion the impact force to the chest area of the driver and front passenger in certain side impact collisions. The side air bags are designed to inflate on the side where the vehicle is impacted.

Roof-mounted curtain side-impact and rollover supplemental air bag system: This system can help cushion the impact force to the

head of occupants in front and rear outboard seating positions in certain side impact or rollover collisions. In a side impact, the curtain and rollover air bags are designed to inflate on the side where the vehicle is impacted. In a rollover both curtain and rollover air bags are designed to inflate and remain inflated for a short period of time.

These supplemental restraint systems are designed to **supplement** the crash protection provided by the driver and passenger seat belts and are **not a substitute** for them. Seat belts should always be correctly worn and the occupant seated a suitable distance away from the steering wheel, instrument panel and door finishers. (See “SEAT BELTS” earlier in this section for instructions and precautions on seat belt usage.)

The supplemental air bags operate only when the ignition switch is in the ON position.

After turning the ignition switch to the ON position, the supplemental air bag warning light illuminates. The supplemental air bag warning light will turn off after about 7 seconds if the systems are operational.

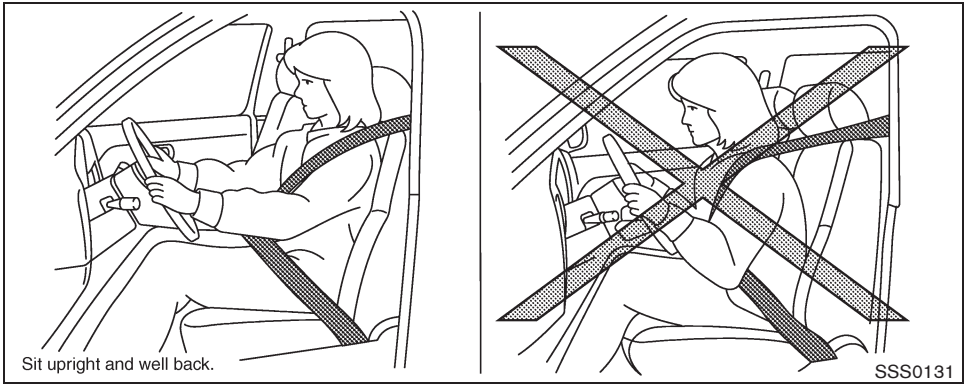

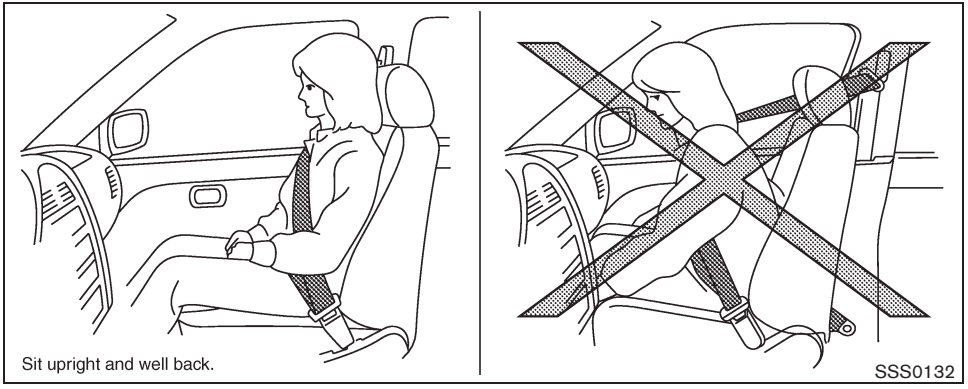

⚠ WARNING

- **The front air bags ordinarily will not inflate in the event of a side impact, rear impact, rollover, or lower severity frontal collision. Always wear your seat belts to help reduce the risk or severity of injury in various kinds of accidents.**
- **The front passenger air bag will not inflate if the passenger air bag status light is lit or if the front passenger seat is unoccupied. See "Front passenger air bag and status light" later in this section.**
- **The seat belts and the front air bags are most effective when you are sitting well back and upright in the seat with both feet on the floor. The front air bags inflate with great force. Even with the NISSAN Advanced Air Bag System, if you are unrestrained, leaning forward, sitting sideways or out of position in any way, you are at greater risk of injury or death in a crash. You may also receive serious or fatal injuries from the front air bag if you are up against it when it inflates. Always sit back against the seatback and as far-away as practical from the steering wheel or instrument panel. Always use the seat belts.**
- **The driver and front passenger seat belt buckles are equipped with sensors that detect if the seat belts are fastened. The Advanced Air Bag System monitors the severity of a collision and seat belt usage then inflates the air bags. Failure to properly wear seat belts can increase the risk or severity of injury in an accident.**
- **The front passenger seat is equipped with an occupant classification sensor (pattern sensor) that turns the front passenger air bag OFF under some conditions. This sensor is only used in this seat. Failure to be properly seated and wearing the seat belt can increase the risk or severity of injury in an accident. See "Front passenger air bag and status light" later in this section.**
- **Keep hands on the outside of the steering wheel. Placing them inside the steering wheel rim could increase the risk that they are injured if the front air bag inflates.**

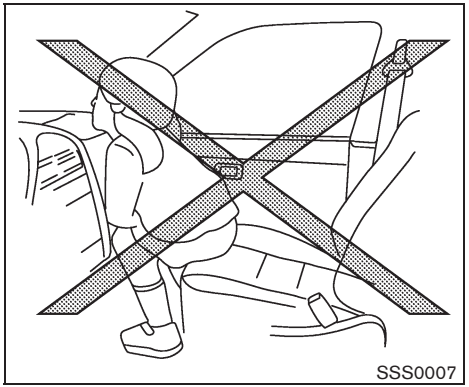
SSS0007

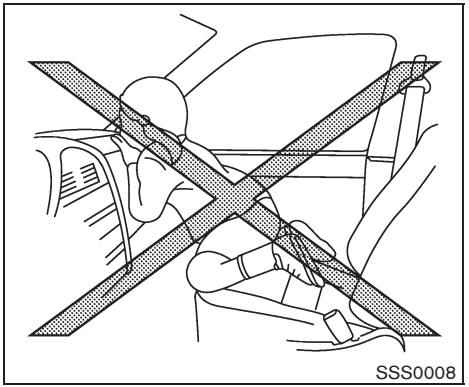
SSS0008

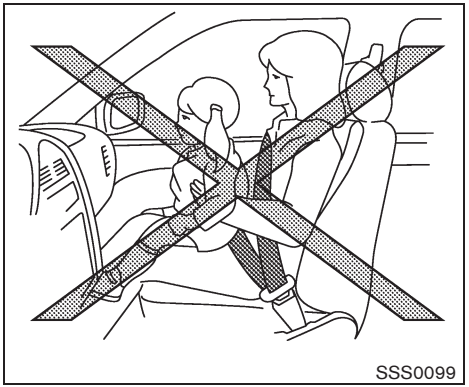
SSS0099

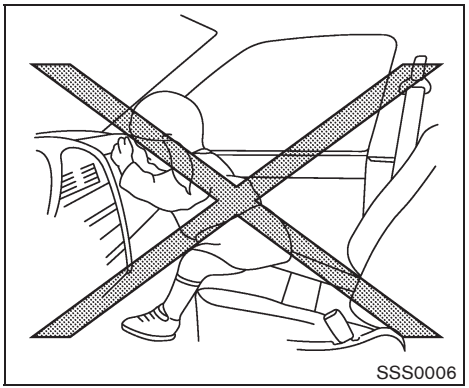
SSS0006

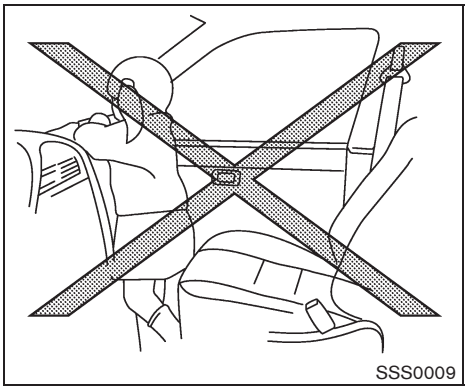
SSS0009

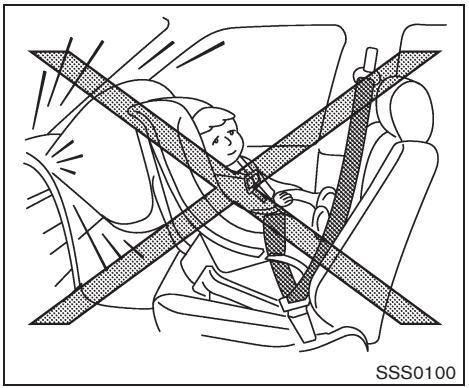
SSS0100

WARNING

- **Never let children ride unrestrained or extend their hands or face out of the window. Do not attempt to hold them in your lap or arms. Some examples of dangerous riding positions are shown in the illustrations.**
- **Children may be severely injured or killed when the front air bags, side air bags or curtain and rollover air bags inflate if they are not properly restrained. Pre-teens and children should be properly restrained in the rear seat, if possible.**
- **Even with the NISSAN Advanced Air Bag System, never install a rear-facing child restraint in the front seat. An inflating front air bag could seriously injure or kill your child. See "CHILD RESTRAINTS" earlier in this section for details.**

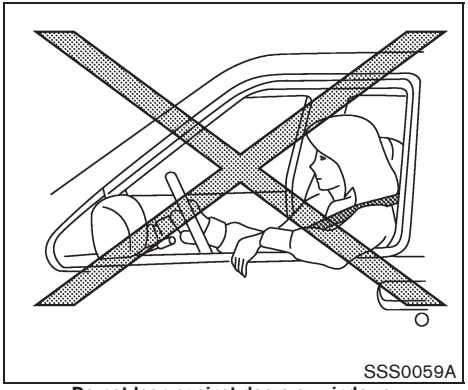

Do not lean against doors or windows.

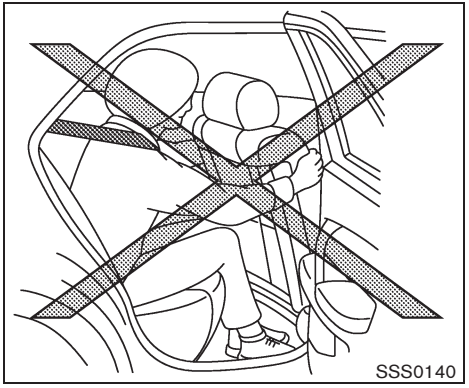

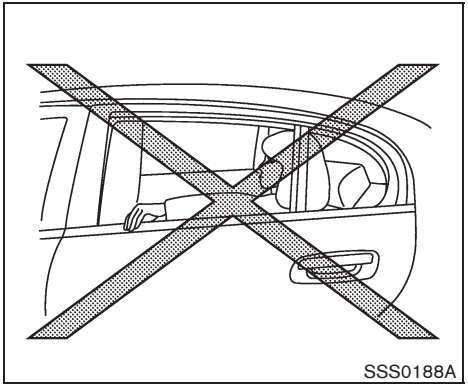

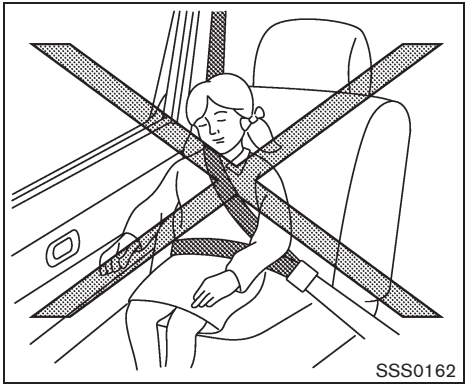

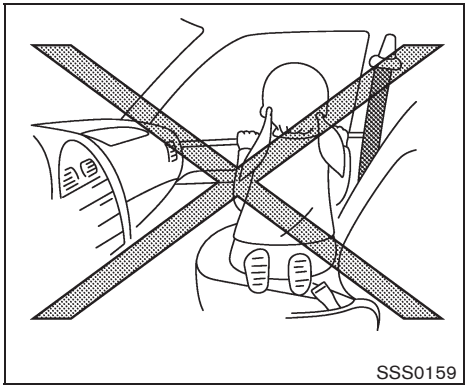

WARNING

Front seat-mounted side-impact supplemental air bags and roof-mounted curtain side-impact and rollover supplemental air bags:

- **The side air bags and curtain and rollover air bags ordinarily will not inflate in the event of a frontal impact, rear impact or lower severity side collision. Always wear your seat belts to help reduce the risk or severity of injury in various kinds of accidents.**
- **The seat belts, the side air bags and curtain and rollover air bags are most effective when you are sitting well back and upright in the seat. The side air bag and curtain and rollover air bag inflate with great force. Do not allow anyone to place their hand, leg or face near the side air bag on the side of the seatback of the front seat or near the side roof rails. Do not allow anyone sitting in the front seats or rear outboard seats to extend their hand out of the window or lean against the door. Some examples of dangerous riding positions are shown in the previous illustrations.**
- **When sitting in the rear seat, do not hold onto the seatback of the front seat. If the side air bag inflates, you may be seriously injured. Be especially careful with children, who should always be properly restrained. Some examples of dangerous riding positions are shown in the illustrations.**
- **Do not use seat covers on the front seatbacks. They may interfere with side air bag inflation.**

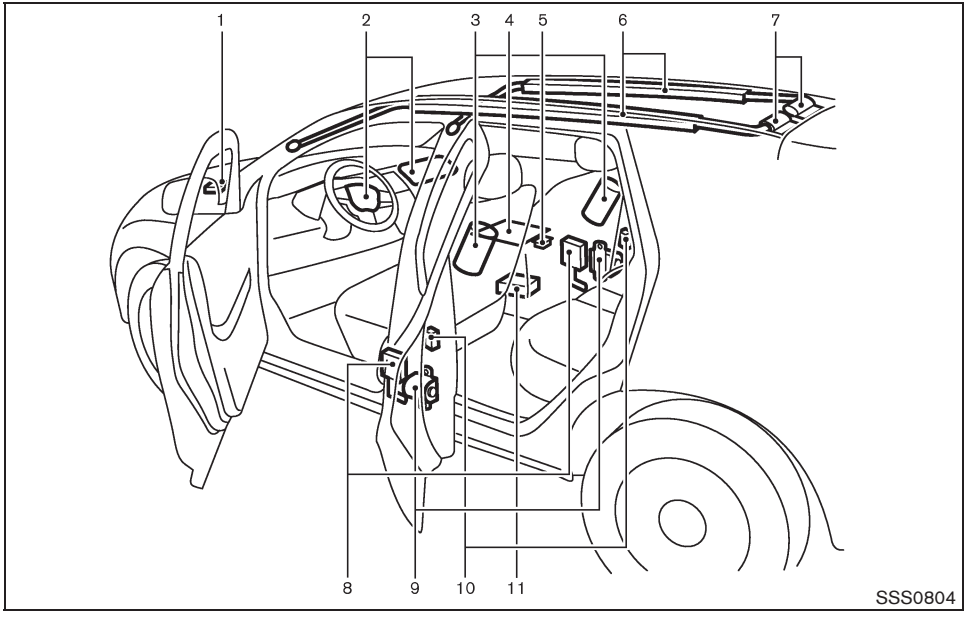

1. Crash zone sensor
2. Supplemental front-impact air bag modules
3. Front seat-mounted side-impact supplemental air bag modules
4. Occupant classification sensor (pattern sensor)
5. Occupant classification system control unit
6. Roof-mounted curtain side-impact and rollover supplemental air bags
7. Roof-mounted curtain side-impact and rollover supplemental air bag inflators
8. Lap outer pretensioners
9. Seat belt pretensioners
10. Satellite sensors
11. Air bag Control Unit (ACU)

NISSAN ADVANCED AIR BAG SYSTEM (front seats)

This vehicle is equipped with the NISSAN Advanced Air Bag System for the driver and front passenger seats. This system is designed to meet certification requirements under U.S. regulations. It is also permitted in Canada. **However, all of the information, cautions and warnings in this manual still apply and must be followed.**

The driver supplemental front-impact air bag is located in the center of the steering wheel; the passenger supplemental front-impact air bag is mounted in the instrument panel above the glove box. The front air bags are designed to inflate in higher severity frontal collisions, although they may inflate if the forces in another type of collision are similar to those of a higher severity frontal impact. They may not inflate in certain frontal collisions. Vehicle damage (or lack of it) is not always an indication of proper front air bag operation.

The NISSAN Advanced Air Bag System has dual stage air bag inflators. The system monitors information from the crash zone sensor, satellite sensor, Air bag Control Unit (ACU), seat belt buckle sensors and occupant classification sensor (pattern sensor). Inflator operation is based on the severity of a collision and seat belt usage for the driver. For the front passenger, the occupant classification sensor is also monitored.

Based on information from the sensors, only one front air bag may inflate in a crash, depending on the crash severity and whether the front occupants are belted or unbelted. Additionally, the front passenger air bag may be automatically turned OFF under some conditions, depending on the information provided by the occupant classification sensor. If the front passenger air bag is OFF, the passenger air bag status light will be illuminated (if the seat is unoccupied, the light will not be illuminated, but the air bag will be off). (See “Front passenger air bag and status light” later in this section for further details.) One front air bag inflating does not indicate improper performance of the system.

If you have any questions about your air bag system, contact NISSAN or a NISSAN dealer. If you are considering modification of your vehicle due to a disability, you may also contact NISSAN. Contact information is contained in the front of this Owner’s Manual.

When a front air bag inflates, a fairly loud noise may be heard, followed by release of smoke. This smoke is not harmful and does not indicate a fire. Care should be taken not to inhale it, as it may cause irritation and choking. Those with a history of a breathing condition should get fresh air promptly.

Front air bags, along with the use of seat belts, help to cushion the impact force on the head and chest of the front occupants. They can help save lives and reduce serious injuries. However, an inflating front air bag may cause facial abrasions or other injuries. Front air bags do not provide restraint to the lower body.

Even with NISSAN Advanced Air Bags, seat belts should be correctly worn and the driver and passenger seated upright as far as practical away from the steering wheel or instrument panel. The front air bags inflate quickly in order to help protect the front occupants. Because of this, the force of the front air bag inflating can increase the risk of injury if the occupant is too close to, or is against, the air bag module during inflation.

The front air bags will deflate quickly after a collision.

The front air bags operate only when the ignition switch is in the ON position.

After turning the ignition switch to the ON position, the supplemental air bag warning light illuminates. The supplemental air bag warning light will turn off after about 7 seconds if the system is operational.

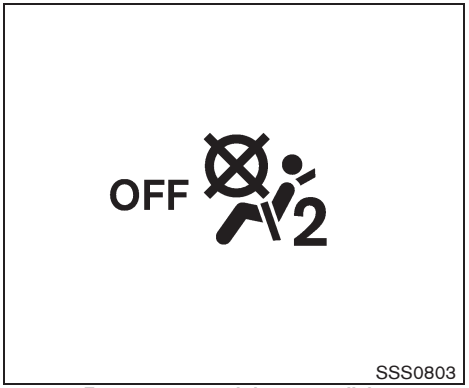

Front passenger air bag status light

Front passenger air bag and status light

WARNING

The front passenger air bag is designed to automatically turn OFF under some conditions. Read this section carefully to learn how it operates. Proper use of the seat, seat belt and child restraints is necessary for most effective protection. Failure to follow all instructions in this manual concerning the use of seats, seat belts and child restraints can increase the risk or severity of injury in an accident.

Status light:

The front passenger air bag status light OFF is located on the instrument panel below the air conditioner controls. The light operates as follows:

- Unoccupied passenger seat: The OFF light is OFF and the front passenger air bag is OFF and will not inflate in a crash.
- Passenger's seat occupied by a small adult, child or child restraint as outlined in this section: The OFF light illuminates to indicate that the front passenger air bag is OFF and will not inflate in a crash.
- Occupied passenger seat and the passenger meets the conditions outlined in this section: The OFF light is OFF to indicate that the front passenger air bag is operational.

Front passenger air bag:

The front passenger air bag is designed to automatically turn OFF when the vehicle is operated under some conditions as described below as permitted by U.S. regulations. If the front passenger air bag is OFF, it will not inflate in a crash. The driver air bag and other air bags in your vehicle are not part of this system.

The purpose of the regulation is to help reduce the risk of injury or death from an inflating air bag to certain front passenger seat occupants, such as children, by requiring the air bag to be automatically turned OFF.

The occupant classification sensor (pattern sensor) is in the front passenger seat cushion and is designed to detect an occupant and objects on the seat. For example, if a child is in the front passenger seat, the Advanced Air Bag System is designed to turn the passenger air bag OFF in accordance with the regulations. Also, if a child restraint of the type specified in the regulations is on the seat, the occupant classification sensor can detect it and cause the air bag to turn OFF.

Front passenger seat adult occupants who are properly seated and using the seat belt as outlined in this manual should not cause the passenger air bag to be automatically turned OFF. For small adults it may be turned OFF, however, if the occupant does not sit in the seat properly (for example, by not sitting upright, by sitting on an edge of the seat, or by otherwise being out of position), this could cause the sensor to turn the air bag OFF. Always be sure to be seated and wearing the seat belt properly for the most effective protection by the seat belt and supplemental air bag.

NISSAN recommends that pre-teens and children be properly restrained in a rear seat. NISSAN also recommends that appropriate child restraints and booster seats be properly installed in a rear seat. If this is not possible, the occupant classification sensor is designed to operate as described above to turn the front passenger air bag OFF for specified child restraints. Failing to properly secure child restrains and to use the Automatic Locking Retractor (ALR) mode (child restraint mode) may allow the restraint to tip or move in an accident or sudden stop. This can also result in the passenger air bag inflating in a crash instead of being OFF. (See "CHILD RESTRAINTS" earlier in this section for proper use and installation.)

If the front passenger seat is not occupied, the passenger air bag is designed not to inflate in a crash. However, heavy objects placed on the seat could result in air bag inflation, because of the object being detected by the occupant classification sensor. Other conditions could also result in air bag inflation, such as if a child is standing on the seat, or if two children are on the seat, contrary to the instructions in this manual. Always be sure that you and all vehicle occupants are seated and restrained properly.

Using the passenger air bag status light, you can monitor when the front passenger air bag is automatically turned OFF with the seat occupied. The light will not illuminate when the front passenger seat is unoccupied.

If an adult occupant is in the seat but the passenger air bag status light is illuminated

(indicating that the air bag is OFF), it could be that the person is a small adult, or is not sitting on the seat properly.

If a child restraint must be used in the front seat, the passenger air bag status light may or may not be illuminated, depending on the size of the child and the type of child restraint being used. If the air bag status light is not illuminated (indicating that the air bag might inflate in a crash), it could be that the child restraint or seat belt is not being used properly. Make sure that the child restraint is installed properly, the seat belt is used properly and the occupant is positioned properly. If the air bag status light is not illuminated, reposition the occupant or child restraint in a rear seat.

If the passenger air bag status light will not illuminate even though you believe that the child restraint, the seat belts and the occupant are properly positioned, the system may be sensing an unoccupied seat (in which case the air bag is OFF). Your NISSAN dealer can check that the system is OFF by using a special tool. However, until you have confirmed with your dealer that your air bag is working properly, reposition the occupant or child restraint in a rear seat.

The air bag system and passenger air bag status light will take a few seconds to register a change in the passenger seat status. However, if the seat becomes unoccupied, the air bag status light will remain off.

If a malfunction occurs in the front passenger air bag system, the supplemental air bag warning light , located in the meter and gauges area, will blink. Have the system checked by a NISSAN dealer.

Other supplemental front-impact air bag precautions

WARNING

- **Do not place any objects on the steering wheel pad or on the instrument panel. Also, do not place any objects between any occupant and the steering wheel or instrument panel. Such objects may become dangerous projectiles and cause injury if the front air bag inflates.**
- **Do not place objects with sharp edges on the seat. Also, do not place heavy objects on the seat that will leave permanent impressions in the seat. Such objects can damage the seat or occupant classification sensor (pattern sensor). This can affect the operation of the air bag system and result in serious personal injury.**
- **Do not use water or acidic cleaners (hot steam cleaners) on the seat. This can damage the seat or occupant classification sensor. This can also affect the operation of the air bag system and result in serious personal injury.**
- **Immediately after inflation, several front air bag system components will be hot. Do not touch them; you may severely burn yourself.**
- **No unauthorized changes should be made to any components or wiring of the supplemental air bag system. This is to prevent accidental inflation of the supplemental air bag or damage to the supplemental air bag system.**
- **Do not make unauthorized changes to your vehicle's electrical system, suspension system or front end structure. This could affect proper operation of the front air bag system.**
- **Tampering with the supplemental air bag system may result in serious personal injury. Tampering includes changes to the steering wheel and the instrument panel assembly by**

placing material over the steering wheel pad and above the instrument panel or by installing additional trim material around the air bag system.

- **Modifying or tampering with the front passenger seat may result in serious personal injury. For example, do not change the front seats by placing material on the seat cushion or by installing additional trim material, such as seat covers, on the seat that is not specifically designed to assure proper air bag operation. Additionally, do not stow any objects under the front passenger seat or the seat cushion and seatback. Such objects may interfere with the proper operation of the occupant classification sensor.**
- **No unauthorized changes should be made to any components or wiring of the seat belt system. This may affect the front air bag system. Tampering with the seat belt system may result in serious personal injury.**
- **Work on and around the front air bag system should be done by a NISSAN dealer. Installation of electrical equipment should also be done by a NISSAN dealer. The Supplemental Restraint System (SRS) wiring should not be modified or disconnected. Unauthorized electrical test equipment and probing devices should not be used on the air bag system.**
- **A cracked windshield should be replaced immediately by a qualified repair facility. A cracked windshield could affect the function of the supplemental air bag system.**
- **The SRS wiring harness connectors are yellow and orange for easy identification.**

When selling your vehicle, we request that you inform the buyer about the front air bag system and guide the buyer to the appropriate sections in this Owner's Manual.

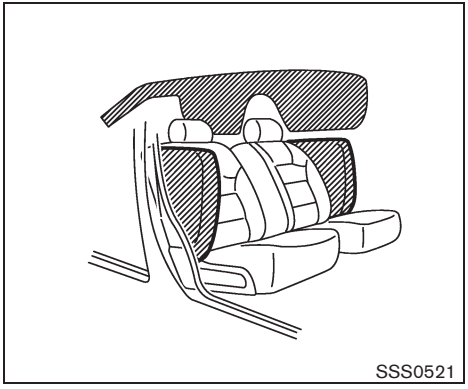

FRONT SEAT-MOUNTED SIDE-IMPACT SUPPLEMENTAL AIR BAG AND ROOF-MOUNTED CURTAIN SIDE-IMPACT AND ROLLOVER SUPPLEMENTAL AIR BAG SYSTEMS

The side air bags are located in the outside of the seatback of the front seats. The curtain and rollover air bags are located in the side roof rails. These systems are designed to meet voluntary guidelines to help reduce the risk of injury to out-of-position occupants. **However, all of the information, cautions and warnings in this manual still apply and must be followed.** The side air bags and curtain and rollover air bags are designed to inflate in higher severity

side collisions, although they may inflate if the forces in another type of collision are similar to those of a higher severity side impact. They are designed to inflate on the side where the vehicle is impacted. They may not inflate in certain side collisions on the side where the vehicle is impacted. Curtain and rollover air bags are also designed to inflate in certain types of rollover collisions or near rollovers.

Vehicle damage (or lack of it) is not always an indication of proper side air bag and curtain and rollover air bag operation.

When the side air bags and curtain and rollover air bags inflate, a fairly loud noise may be heard, followed by release of smoke. This smoke is not harmful and does not indicate a fire. Care should be taken not to inhale it, as it may cause irritation and choking. Those with a history of a breathing condition should get fresh air promptly.

Side air bags, along with the use of seat belts, help to cushion the impact force on the chest and pelvic area of the front occupants. Curtain and rollover air bags help to cushion the impact force to the head of occupants in the front and rear outboard seating positions. They can help save lives and reduce serious injuries. However, side air bags and curtain and rollover air bags may cause abrasions or other injuries. Side air bags and curtain and rollover air bags do not provide restraint to the lower body.

The seat belts should be correctly worn and the driver and passenger seated upright as far as practical away from the side air bags. Rear seat passengers should be seated as far away as practical from the door finishers and side roof rails. The side air bags and curtain and rollover air bags inflate quickly in order to help protect the occupants in the outboard seating positions. Because of this, the force of the side air bags and curtain and rollover air bags inflating can increase the risk of injury if the occupant is too close to, or is against, these air bag modules during inflation. The side air bags and curtain and rollover air bags will deflate quickly after the collision is over.

The side air bags and curtain and rollover air bags operate only when the ignition switch is in the ON position.

After turning the ignition switch to the ON position, the supplemental air bag warning light illuminates. The supplemental air bag warning light will turn off after about 7 seconds if the systems are operational.

WARNING

- **Do not place any objects near the seatback of the front seats. Also, do not place any objects (an umbrella, bag, etc.) between the front door finisher and the front seat. Such objects may become dangerous projectiles and cause injury if a side air bag inflates.**
- **Right after inflation, several side air bag and curtain and rollover air bag system components will be hot. Do not touch them; you may severely burn yourself.**
- **No unauthorized changes should be made to any components or wiring of the side air bag and curtain and rollover air bag systems. This is to prevent accidental inflation of the side air bag and curtain and rollover air bag or damage to the side air bag and curtain and rollover air bag systems.**
- **Do not make unauthorized changes to your vehicle's electrical system, suspension system or side panel. This could affect proper operation of the side air bag and curtain and rollover air bag systems.**
- **Tampering with the air bag system may result in serious personal injury. For example, do not change the front seats by placing material near**

the seatbacks or by installing additional trim material, such as seat covers, around the side air bag.

- **Work around and on the side air bag and curtain and rollover air bag systems should be done by a NISSAN dealer. Installation of electrical equipment should also be done by a NISSAN dealer. The SRS wiring harnesses* should not be modified or disconnected. Unauthorized electrical test equipment and probing devices should not be used on the side air bag and curtain and rollover supplemental air bag systems.**

* **The SRS wiring harnesses connectors are yellow and orange for easy identification.**

When selling your vehicle, we request that you inform the buyer about the side air bag and curtain and rollover air bag systems and guide the buyer to the appropriate sections in this Owner's Manual.

SEAT BELTS WITH PRETENSIONERS (front seats)

WARNING

- **The pretensioners cannot be reused after activation. They must be replaced together with the retractor and buckle as a unit.**
- **If the vehicle becomes involved in a frontal collision but a pretensioner is not activated, be sure to have the pretensioner system checked and, if necessary, replaced by a NISSAN dealer.**
- **No unauthorized changes should be made to any components or wiring of the pretensioner system. This is to prevent damage to or accidental activation of the pretensioners. Tampering with the pretensioner system may result in serious personal injury.**
- **Work around and on the pretensioner system should be done by a NISSAN dealer. Installation of electrical equipment should also be done by a NISSAN dealer. Unauthorized electrical test equipment and probing devices should not be used on the pretensioner system.**
- **If you need to dispose of a pretensioner or scrap the vehicle, contact a NISSAN dealer. Correct pretensioner disposal procedures are set forth in the appropriate NISSAN Service Manual. Incorrect disposal procedures could cause personal injury.**

The pretensioner system activates in conjunction with the front air bag system. The pretensioner system also activates with the curtain and rollover air bags in certain types of rollover collisions or near rollovers. Working with the seat belt retractor, it helps tighten the seat belt when the vehicle becomes involved in certain types of collisions, helping to restrain front seat occupants.

The pretensioner is encased with the seat belt retractor. These seat belts are used the same way as conventional seat belts.

When a pretensioner activates, smoke is released and a loud noise may be heard. The smoke is not harmful and does not indicate a fire. Care should be taken not to inhale it, as it may cause irritation and choking. Those with a history of a breathing condition should get fresh air promptly.

After pretensioner activation, load limiters allow the seat belt to release webbing (if necessary) to reduce forces against the chest.

If any abnormality occurs in the pretensioner system, the supplemental air bag warning light will not come on, will flash intermittently or will turn on for 7 seconds and remain on after the ignition switch has been turned to the ON position. In this case, the pretensioner may not function properly. They must be checked and repaired. Take your vehicle to the nearest NISSAN dealer.

When selling your vehicle, we request that you inform the buyer about the pretensioner system and guide the buyer to the appropriate sections in this Owner's Manual.

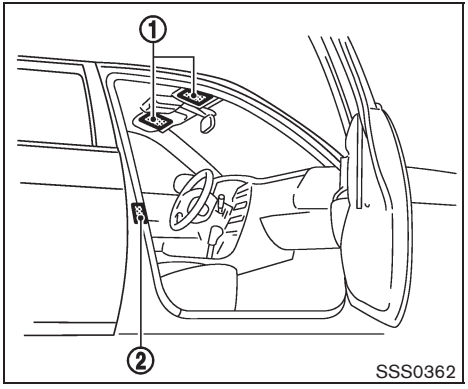

SUPPLEMENTAL AIR BAG WARNING LABELS

Warning labels about the supplemental front-impact air bag and front seat-mounted side-impact supplemental air bag systems are placed in the vehicle as shown in the illustration.

① SRS air bag

The warning labels are located on the surface of the sun visors.

② SRS side air bags

The warning label is located on the side of the passenger's side center pillar.

SUPPLEMENTAL AIR BAG WARNING LIGHT

The supplemental air bag warning light, displaying in the instrument panel, monitors the circuits of the supplemental front-impact air bag, front seat-mounted side-impact supplemental air bag, roof-mounted curtain side-impact and rollover supplemental air bag and seat belt pretensioner systems. The monitored circuits include Air bag Control Unit (ACU), crash zone sensor, satellite sensors, occupant classification system, front air bag modules, side air bag modules, curtain and rollover air bag modules, pretensioners and all related wiring.

When the ignition switch is in the ON position,

the supplemental air bag warning light illuminates for about 7 seconds and then turns off. This means the system is operational.

If any of the following conditions occur, the front air bag, side air bag, curtain and rollover air bag and pretensioner systems need servicing:

- The supplemental air bag warning light remains on after approximately 7 seconds.
- The supplemental air bag warning light flashes intermittently.
- The supplemental air bag warning light does not come on at all.

Under these conditions, the front air bag, side air bag, curtain and rollover air bag and pretensioner systems may not operate properly. It must be checked and repaired. Take your vehicle to the nearest NISSAN dealer.

WARNING

If the supplemental air bag warning light is on, it could mean that the front air bag, side air bag, curtain and rollover air bag and/or pretensioner systems will not operate in an accident. To help avoid injury to yourself or others, have your vehicle checked by a NISSAN dealer as soon as possible.

REPAIR AND REPLACEMENT PROCEDURE

The front air bags, side air bags, curtain and rollover air bags and pretensioners are designed to activate on a one-time-only basis. As a reminder, unless it is damaged, the supplemental air bag warning light will remain illuminated after inflation has occurred. Repair and replacement of these systems should be done only by a NISSAN dealer.

When maintenance work is required on the vehicle, the front air bags, side air bags, curtain and rollover air bags and pretensioners and related parts should be pointed out to the person performing the maintenance. The ignition switch should always be in the LOCK position when working under the hood or inside the vehicle.

WARNING

- **Once a front air bag, side air bag or curtain and rollover air bag has inflated, the air bag module will not function again and must be replaced. Additionally, if any of the front air bags inflate, the activated pretensioners must also be replaced. The air bag module and pretensioner system should be replaced by a NISSAN dealer. The air bag modules and pretensioner system cannot be repaired.**
- **The front air bag, side air bag and curtain and rollover air bag systems, and pretensioner system should be inspected by a NISSAN dealer if there is any damage to the front end or side portion of the vehicle.**

- **If you need to dispose of a supplemental air bag or pretensioner systems, or scrap the vehicle, contact a NISSAN dealer. Correct supplemental air bag and pretensioner system disposal procedures are set forth in the appropriate NISSAN Service Manual. Incorrect disposal procedures could cause personal injury.**

MEMO

2 Instruments and controls

Instrument panel 2-2
Meters and gauges..... 2-3
Speedometer and odometer 2-4
Tachometer..... 2-5
Engine coolant temperature gauge 2-5
Fuel gauge 2-6
Vehicle information display..... 2-6
Outside air temperature (if so equipped)..... 2-6
Continuously Variable Transmission (CVT) position indicator..... 2-7
Trip computer (if so equipped) 2-7
Compass (if so equipped)..... 2-8
Zone variation change procedure 2-9
Warning/indicator lights and audible reminders 2-11
Checking bulbs 2-11
Warning lights..... 2-12
Indicator lights..... 2-16
Audible reminders 2-18
Security systems..... 2-19
Vehicle security system..... 2-19
NISSAN Vehicle Immobilizer System..... 2-20
Windshield wiper and washer switch 2-22
Rear window wiper and washer switch..... 2-23
Rear window and outside mirror defroster switch..... 2-24
Headlight and turn signal switch 2-25
Xenon headlights (if so equipped)..... 2-25
Headlight switch 2-26
Turn signal switch 2-28
Fog light switch (if so equipped)..... 2-29
Hazard warning flasher switch..... 2-29
Horn 2-30
Heated seats (if so equipped)..... 2-30
Vehicle Dynamic Control (VDC) OFF switch 2-31
Clock 2-31
Adjusting the time 2-31
Power outlet 2-32
Storage 2-33
Cup holders..... 2-33
Sunglasses holder..... 2-34
Glove box 2-35
Console box 2-35
Luggage floor box (if so equipped)..... 2-36
Luggage side box..... 2-36
Cargo cover (if so equipped) 2-37
Luggage hooks (if so equipped) 2-38
Coat hooks (if so equipped) 2-38
Utility hook 2-39
Roof rack (if so equipped)..... 2-39
Windows 2-40
Power windows 2-40
Moonroof (if so equipped)..... 2-42
Automatic moonroof..... 2-42

Interior lights 2-44
Map lights 2-44
Ceiling light 2-45
Vanity mirror lights (if so equipped) 2-46
Cargo light (if so equipped)..... 2-46
HomeLink® Universal Transceiver (if so equipped).... 2-47
Programming HomeLink® 2-47
Programming HomeLink® for Canadian customers 2-49
Operating the HomeLink® Universal Transceiver 2-49
Programming trouble-diagnosis 2-49
Clearing the programmed information..... 2-49
Reprogramming a single HomeLink® button..... 2-49
If your vehicle is stolen 2-50

INSTRUMENT PANEL

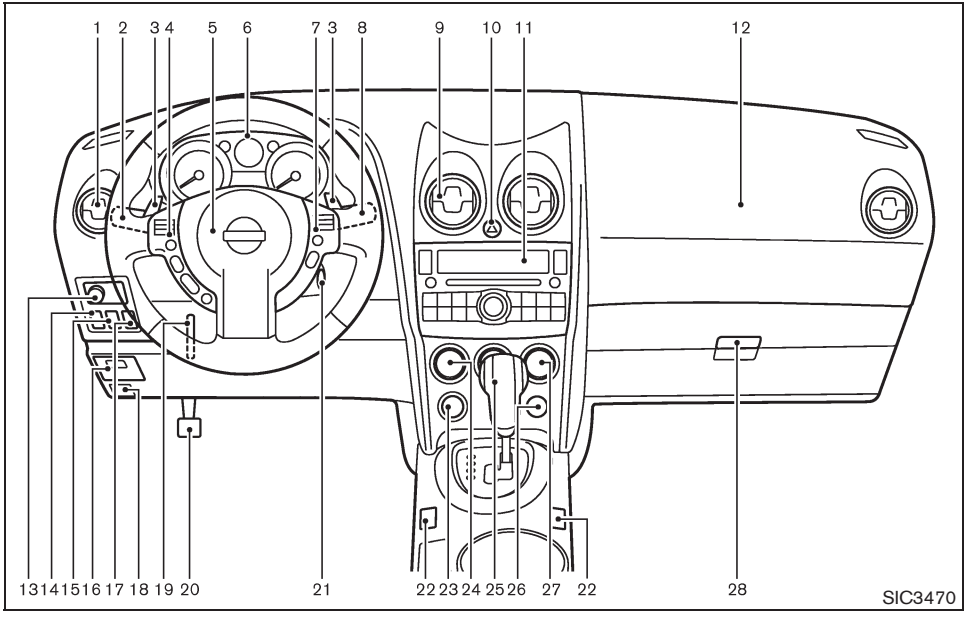

1. Side ventilator
2. Headlight, fog light (if so equipped) and turn signal switch
3. Paddle shifter (if so equipped)
4. Steering-wheel-mounted controls (left side)
   — Audio control
   — Bluetooth® Hands-Free Phone system control
5. Steering wheel
   — Horn
   — Driver supplemental air bag
6. Meters and gauges
7. Steering-wheel-mounted controls (right side)
   — Cruise control switches
8. Wiper and washer switch
9. Center ventilator
10. Hazard warning flasher switch
11. Audio system
    — Clock
12. Front passenger supplemental air bag
13. Outside remote mirror control switch
14. Headlight aiming control (if so equipped)
15. All-Wheel Drive (AWD) LOCK switch (if so equipped)
16. Fuse box cover
17. Vehicle Dynamic Control (VDC) OFF switch
18. Hood release handle
19. Tilting steering wheel lever
20. Parking brake
21. Ignition switch
22. Heated seat switch (if so equipped)
23. Power outlet
24. Heater/air conditioner control
25. Selector lever
26. Front passenger air bag status light
27. Rear window and outside mirror (if so equipped) defroster switch
28. Glove box

METERS AND GAUGES

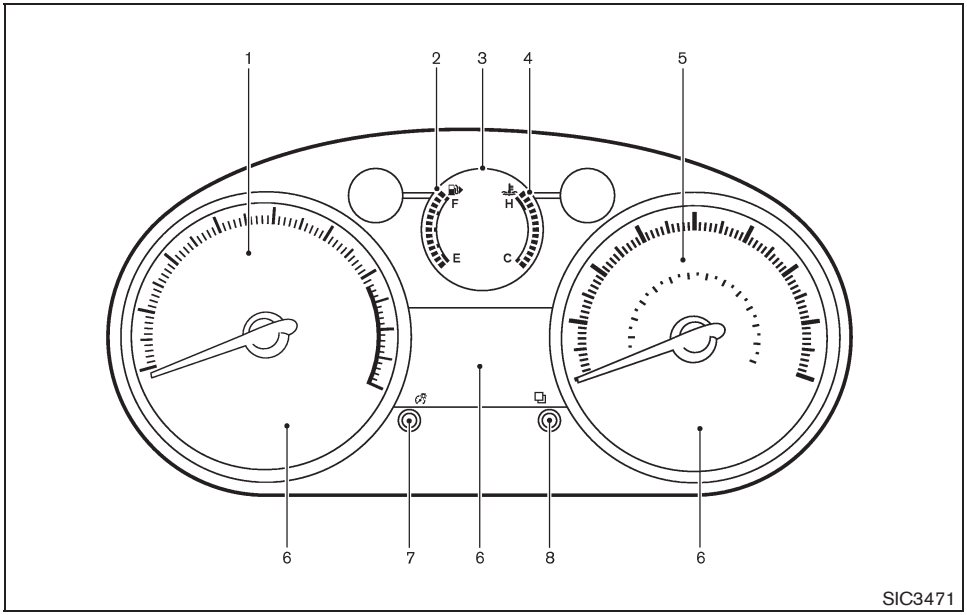

1. Tachometer
2. Fuel gauge
3. Vehicle information display
   — Odometer/twin trip odometer
   — Trip computer*
   — Outside air temperature*
   — Continuously Variable Transmission (CVT) position indicator
4. Engine coolant temperature gauge
5. Speedometer
6. Warning/indicator lights
7. Instrument brightness control knob
8. RESET switch for trip odometer/Trip computer* mode switch

*: if so equipped

The needle indicators may move slightly after the ignition switch is turned to the LOCK position. This is not a malfunction.

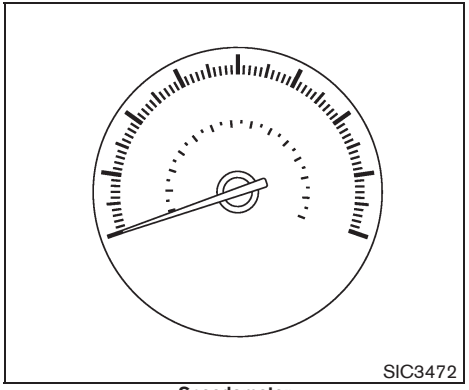

Speedometer

SPEEDOMETER AND ODOMETER

Speedometer

The speedometer indicates vehicle speed in miles per hour (MPH) and kilometers per hour (km/h).

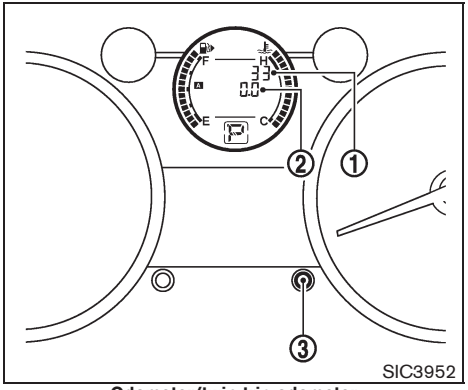

Odometer/twin trip odometer

Odometer/twin trip odometer

The odometer ① /twin trip odometer ② are displayed when the ignition switch is in the ON position.

The odometer records the total distance the vehicle has been driven.

The twin trip odometer records the distance of individual trips.

Changing the display:

Pushing the reset switch ③ located on the meter panel changes the display as follows:

TRIP A → TRIP B → Trip computer mode (if so equipped) → TRIP A

For trip computer information, see “TRIP COMPUTER” later in this section.

Resetting the trip odometer:

Pushing the reset switch ③ for approximately 1 second resets the trip odometer to zero.

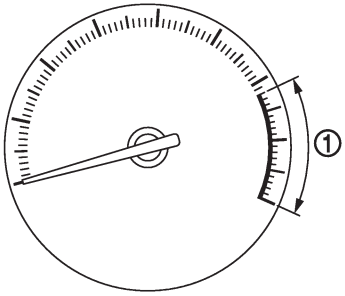

SIC3550

TACHOMETER

The tachometer indicates engine speed in revolutions per minute (RPM). **Do not rev the engine into the red zone ①.**

CAUTION

When engine speed approaches the red zone, shift to a higher gear or reduce engine speed. Operating the engine in the red zone may cause serious engine damage.

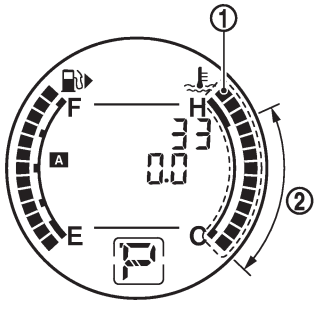

SIC3953

ENGINE COOLANT TEMPERATURE GAUGE

The gauge ① indicates the engine coolant temperature.

The engine coolant temperature is within the normal range when the gauge is within the zone ② shown in the illustration.

The engine coolant temperature varies with the outside air temperature and driving conditions.

CAUTION

If the gauge indicates engine coolant temperature near the hot (H) end of the normal range, reduce vehicle speed to decrease temperature. If gauge is over the normal range, stop the vehicle as soon as safely possible. If the engine is overheated, continued operation of the vehicle may seriously damage the engine. See "IF YOUR VEHICLE OVERHEATS" in the "6. In case of emergency" section for immediate action required.

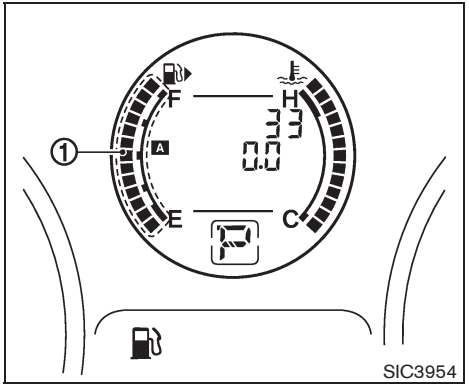

FUEL GAUGE

The gauge ① indicates the **approximate** fuel level in the tank.

The gauge may move slightly during braking, turning, acceleration, or going up or down hills.

Refill the fuel tank before the gauge registers E (Empty).

The low fuel warning light illuminates when the fuel tank is getting low. Refuel as soon as it is convenient, preferably before the gauge reaches E. There will be a small reserve of fuel in the tank when the fuel gauge reaches E.

The indicates that the fuel-filler door is located on the passenger's side of the vehicle.

CAUTION

- **If the vehicle runs out of fuel, the SERVICE ENGINE SOON malfunction indicator light (MIL) may come on. Refuel as soon as possible. After a few driving trips, the SERVICE ENGINE SOON light should turn off. If the light remains on after a few driving trips, have the vehicle inspected by a NISSAN dealer.**
- **For additional information, see "Malfunction Indicator Light (MIL)" later in this section.**

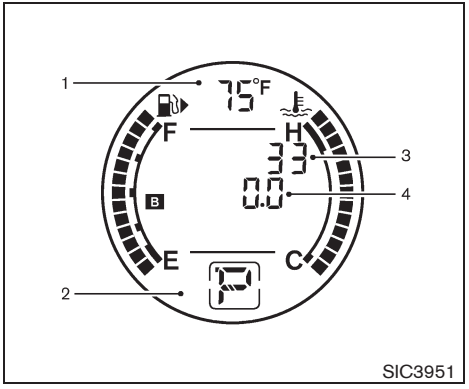

VEHICLE INFORMATION DISPLAY

When the ignition switch is turned to the ON position, the vehicle information display shows the following information:

1. Outside air temperature (if so equipped)
2. Continuously Variable Transmission (CVT) position indicator
3. Odometer/Instrument brightness control display
4. Twin trip odometer/Trip computer (if so equipped)

OUTSIDE AIR TEMPERATURE (if so equipped)

The outside air temperature is displayed in °F or °C.

When the outside air temperature becomes 37°F (3°C) or lower, the ICY indicator illuminates and the outside air temperature display blinks to give a warning. The ICY indicator will turn off and the display will stop blinking after 1 minute or when the outside air temperature becomes 39°F (4°C) or above.

The display may differ from the actual outside temperature displayed on various signs or billboards.

CONTINUOUSLY VARIABLE TRANSMISSION (CVT) POSITION INDICATOR

The Continuously Variable Transmission (CVT) position indicator indicates the selector lever position when the ignition switch is in the ON position.

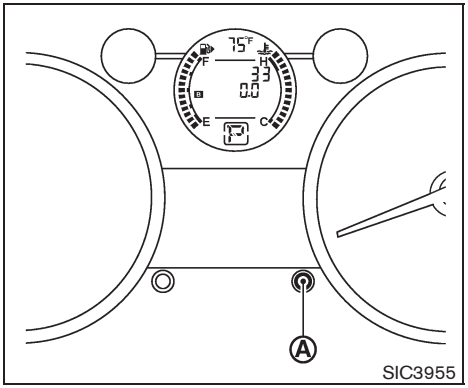

TRIP COMPUTER (if so equipped)

The switch for the trip computer is located on the meter panel.

When the ignition switch is turned to the ON position, modes of the trip computer can be selected by pushing the trip computer mode switch Ⓐ .

Each time the trip computer mode switch Ⓐ is pushed, the display will change as follows:

(TRIP A → TRIP B →) Distance to empty (dte) → Average fuel consumption → Average speed → Elapsed time (→ TRIP A)

Distance to empty (dte — mls or km)

The distance to empty (dte) mode provides you with an estimation of the distance that can be driven before refueling. The dte is constantly being calculated, based on the amount of fuel in the fuel tank and the actual fuel consumption.

The display is updated every 30 seconds.

The dte mode includes a low range warning feature. When the fuel level is low, the dte mode is automatically selected and the dte display will blink. Push the trip computer mode switch Ⓐ to return to the mode that was selected before the warning occurred.

When the fuel level drops even lower, the dte display will change to "——".

- If the amount of fuel added is small, the display just before the ignition switch is turned off may continue to be displayed.
- When driving uphill or rounding curves, the fuel in the tank shifts, which may momentarily change the display.

Average fuel consumption (mpg or l (liter)/100 km)

The average fuel consumption mode shows the average fuel consumption since the last reset. Resetting is done by pushing the trip computer mode switch Ⓐ for approximately 1 second.

The display is updated every 30 seconds. At about the first 1/3 mile (500 m) after a reset, the display shows "——".

Average speed (mph or km/h)

The average speed mode shows the average vehicle speed since the last reset. Resetting is done by pushing the trip computer mode switch Ⓐ for approximately 1 second.

The display is updated every 30 seconds. The first 30 seconds after a reset, the display shows "——".

Elapsed time

The elapsed time mode shows the time since the last reset. The displayed time can be reset by pushing the trip computer mode switch Ⓐ for approximately 1 second.

Resetting displays

Push the trip computer mode switch Ⓐ for longer than 3 seconds. The average fuel consumption, average speed, elapsed time and trip odometer (TRIP B only) displays will be reset at the same time.

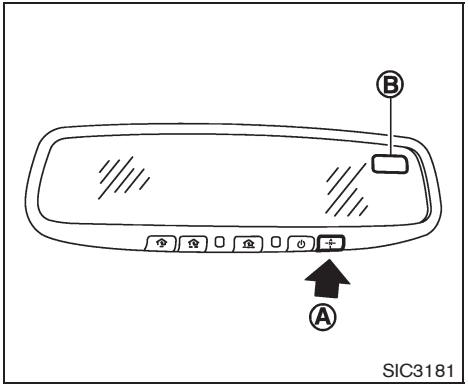

When the ignition switch is turned to the ON position, the compass display Ⓑ will indicate the direction of the vehicle's heading.

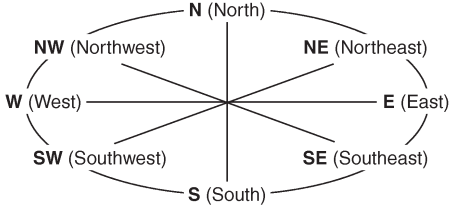

If the display reads "C", calibrate the compass by driving the vehicle in 3 complete circles at less than 5 MPH (8 km/h). You can also calibrate the compass by driving your vehicle on your everyday route. The compass will be calibrated once it has tracked 3 complete circles.

To turn on and off the compass manually, push the -N- switch Ⓐ while the ignition switch is in the ON position.

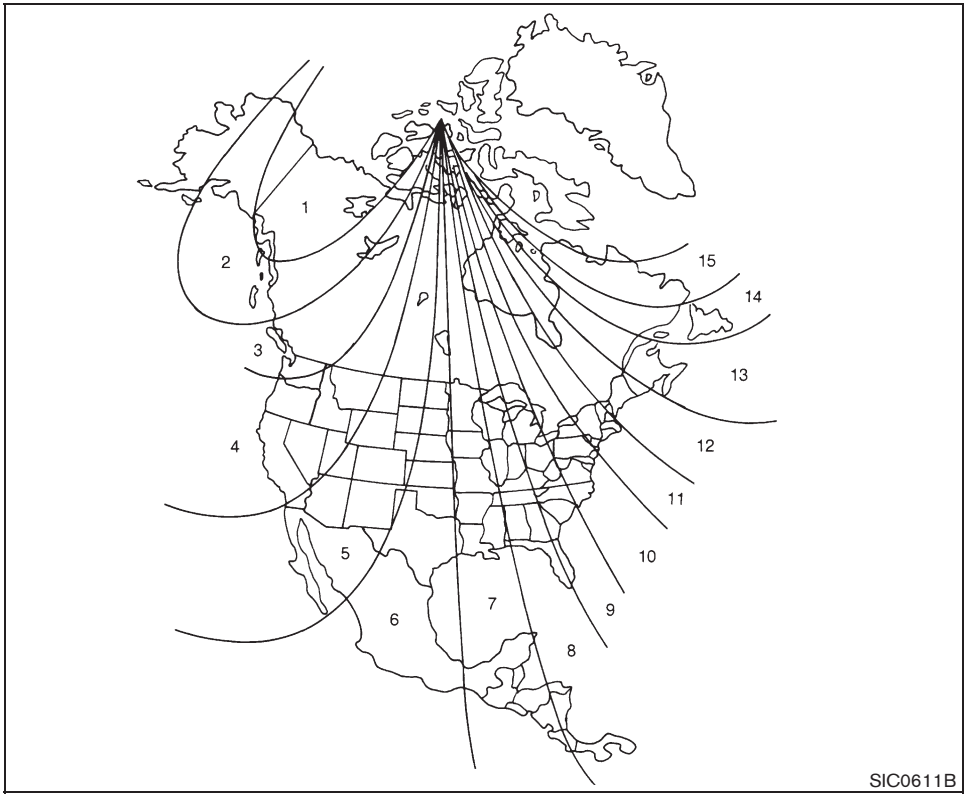

Zone map

ZONE VARIATION CHANGE PROCEDURE

The difference between magnetic north and geographical north is known as variance. In some areas, this difference can sometimes be great enough to cause false compass readings. Follow these instructions to set the variance for your particular location if this happens:

1. Push the -N- switch for more than 3 seconds. The current zone number will appear in the display.
2. Find your current location and variance number on the zone map.

NOTE:
Use zone number 5 for Hawaii.

3. Push the -N- switch repeatedly until the new zone number appears in the display, then release the switch. After you release the switch, the display will show a compass direction within a few seconds.
   - If the compass deviates from the correct indication soon after repeated adjustment, have the compass checked at a NISSAN dealer.
   - The compass may not indicate the correct compass point in tunnels or while driving up or down a steep hill. (The compass returns to the correct

compass point when the vehicle moves to an area where the geomagnetism is stabilized.)

CAUTION

- **Do not install a ski rack, antenna, etc., which are attached to the vehicle by means of a magnet. They affect the operation of the compass.**
- **When cleaning the mirror, use a paper towel or similar material dampened with glass cleaner. Do not spray glass cleaner directly on the mirror as it may cause the liquid cleaner to enter the mirror housing.**

WARNING/INDICATOR LIGHTS AND AUDIBLE REMINDERS

AWD	All-Wheel Drive (AWD) warning light (AWD models)*		Low fuel warning light		High beam indicator light (Blue)
ABS	Anti-lock Braking System (ABS) warning light		Low tire pressure warning light	SERVICE ENGINE SOON	Malfunction Indicator Light (MIL)
			Low washer fluid warning light*	O/D OFF	Overdrive off indicator light*
BRAKE	Brake warning light	P SHIFT	P position selecting warning light*		Security indicator light
			Seat belt warning light		Slip indicator light
	Charge warning light		Supplemental air bag warning light		Small light indicator light
	Door open warning light	OFF	Front passenger air bag status light		Turn signal/hazard indicator lights
PS	Electric power steering warning light	AWD LOCK	All-Wheel Drive (AWD) LOCK indicator light (AWD models)*	VDC OFF	Vehicle Dynamic Control (VDC) off indicator light
	Engine oil pressure warning light	CRUISE	Cruise main switch indicator light		
KEY	Intelligent Key system warning light*	SET	Cruise set indicator light	*: if so equipped	

CHECKING BULBS

With all doors closed, apply the parking brake and turn the ignition switch to the ON position without starting the engine. The following lights will come on:

, BRAKE or , , SERVICE ENGINE SOON, , AWD, PS

The following lights come on briefly and then go off (if so equipped):

, ABS or , , VDC OFF, , KEY, O/D OFF, AWD LOCK, P SHIFT

If any light does not come on, it may indicate a burned-out bulb or an open circuit in the electrical system. Have the system checked by a NISSAN dealer.

WARNING LIGHTS

AWD All-Wheel Drive (AWD) warning light (AWD models)

The light illuminates when the ignition switch is turned to the ON position. It turns off after the engine is started.

If the All-Wheel Drive (AWD) system malfunctions, or the diameter of the front and the rear wheels are different, the warning light will either remain illuminated or blink. (See “ALL-WHEEL DRIVE (AWD)” in the “5. Starting and driving” section.)

CAUTION

- **If the warning light comes on while driving there may be a malfunction in the AWD system. Reduce the vehicle speed and have your vehicle checked by a NISSAN dealer as soon as possible.**
- **If the AWD warning light blinks while driving:**
  - **— blinks rapidly (about twice a second):**

    Pull off the road in a safe area, and idle the engine. The driving mode will change to 2WD to prevent the AWD system from malfunctioning. If the warning light turns off, you can drive again.
  - **— blinks slowly (about once every 2 seconds):**

    Pull off the road in a safe area, and idle the engine. Check that all tire sizes are the same, tire pressure is correct and tires are not worn.
- **If the warning light is still on after the above operations, have your vehicle checked by a NISSAN dealer as soon as possible.**

ABS or (ABS) Anti-lock Braking System (ABS) warning light

When the ignition switch is in the ON position, the Anti-lock Braking System (ABS) warning light illuminates and then turns off. This indicates the ABS is operational.

If the ABS warning light illuminates while the engine is running, or while driving, it may indicate the ABS is not functioning properly. Have the system checked by a NISSAN dealer.

If an ABS malfunction occurs, the anti-lock function is turned off. The brake system then operates normally, but without anti-lock assistance. (See “BRAKE SYSTEM” in the “5. Starting and driving” section.)

BRAKE or (!) Brake warning light

This light functions for both the parking brake and the foot brake systems.

Parking brake indicator:

When the ignition switch is in the ON position, the light illuminates when the parking brake is applied.

Low brake fluid warning light:

When the ignition switch is in the ON position, the light warns of a low brake fluid level. If the light illuminates while the engine is running with the parking brake not applied, stop the vehicle and perform the following:

1. Check the brake fluid level. Add brake fluid as necessary. (See “BRAKE FLUID” in the “8. Maintenance and do-it-yourself” section.)
2. If the brake fluid level is correct, have the warning system checked by a NISSAN dealer.

Anti-lock Braking System (ABS) warning indicator:

When the parking brake is released and the brake fluid level is sufficient, if both the brake warning light and the Anti-lock Braking System (ABS) warning light illuminate, it may indicate the ABS is not functioning properly. Have the brake system checked, and if necessary repaired, by a NISSAN dealer promptly. (See "Anti-lock Braking System (ABS) warning light" earlier in this section.)

WARNING

- **Your brake system may not be working properly if the warning light is on. Driving could be dangerous. If you judge it to be safe, drive carefully to the nearest service station for repairs. Otherwise, have your vehicle towed because driving it could be dangerous.**
- **Pressing the brake pedal with the engine stopped and/or low brake fluid level may increase your stopping distance and braking will require greater pedal effort as well as pedal travel.**
- **If the brake fluid level is below the minimum or MIN mark on the brake fluid reservoir, do not drive until the brake system has been checked at a NISSAN dealer.**

Charge warning light

If the light illuminates while the engine is running, it may indicate the charging system is not functioning properly. Turn the engine off and check the alternator belt. If the belt is loose, broken, missing or if the light remains on, see a NISSAN dealer immediately.

CAUTION

Do not continue driving if the alternator belt is loose, broken or missing.

Door open warning light

This light illuminates when any of the doors and/or lift gate are not closed securely while the ignition switch is ON.

PS Electric power steering warning light

When the ignition switch is in the ON position, the electric power steering warning light illuminates. After starting the engine, the electric power steering warning light turns off. This indicates the electric power steering system is operational.

If the electric power steering warning light illuminates while the engine is running, it may indicate the electric power steering system is not functioning properly and may need servicing. Have the electric power steering system checked by a NISSAN dealer.

When the electric power steering warning light illuminates with the engine running, the power assist to the steering will cease operation but you will still have control of the vehicle. At this time, greater steering efforts are required to operate the steering wheel, especially in sharp turns and at low speeds.

See "ELECTRIC POWER STEERING SYSTEM" in the "5. Starting and driving" section.

Engine oil pressure warning light

This light warns of low engine oil pressure. If the light flickers or illuminates during normal driving, pull off the road in a safe area, stop the engine **immediately** and call a NISSAN dealer or other authorized repair shop.

The engine oil pressure warning light is not designed to indicate a low oil level. Use the dipstick to check the oil level. (See "ENGINE OIL" in the "8. Maintenance and do-it-

yourself” section.)

CAUTION

Running the engine with the engine oil pressure warning light on could cause serious damage to the engine almost immediately. Such damage is not covered by warranty. Turn off the engine as soon as it is safe to do so.

Intelligent Key system warning light (if so equipped)

This light illuminates in green when it is possible to turn the ignition switch.

When the light illuminates in red, it is not possible to turn the ignition switch.

- The warning light blinks in red when the Intelligent Key is outside the vehicle with the ignition switch in the ACC or ON position. Confirm the location of the key as soon as possible when the warning light blinks in red. Be sure to carry the Intelligent Key with you while driving the vehicle.
- The warning light turns off about 10 seconds after the Intelligent Key is brought inside the vehicle.

See “INTELLIGENT KEY SYSTEM” in the “3. Pre-driving checks and adjustments” section.

Low fuel warning light

This light illuminates when the fuel in the tank is getting low. Refuel as soon as it is convenient, preferably before the fuel gauge reaches the E (Empty) position.

There will be a small reserve of fuel remaining in the tank when the fuel gauge reaches E.

Low tire pressure warning light

Your vehicle is equipped with a Tire Pressure Monitoring System (TPMS) that monitors the tire pressure of all tires except the spare.

The low tire pressure warning light warns of low tire pressure or indicates that the TPMS is not functioning properly.

After the ignition switch is turned ON, this light illuminates for about 1 second and turns off.

Low tire pressure warning:

If the vehicle is being driven with low tire pressure, the warning light will illuminate.

When the low tire pressure warning light illuminates, you should stop and adjust the tire pressure to the recommended COLD tire pressure shown on the Tire and Loading Information label. The low tire pressure warning light does not automatically turn off when the tire pressure is adjusted. After the tire is inflated to the recommended pressure, the vehicle must be driven at speeds above 16 MPH (25 km/h) to activate the TPMS and turn off the low tire pressure warning light. Use a tire pressure gauge to check the tire pressure.

For additional information, see “TIRE PRESSURE MONITORING SYSTEM (TPMS)” in the “5. Starting and driving” section and “TIRE PRESSURE MONITORING SYSTEM (TPMS)” in the “6. In case of emergency” section.

TPMS malfunction:

If the TPMS is not functioning properly, the low tire pressure warning light will flash for approximately 1 minute when the ignition switch is turned ON. The light will remain on after 1 minute. Have the system checked by a NISSAN dealer.

For additional information, see “TIRE PRESSURE MONITORING SYSTEM (TPMS)” in the “5. Starting and driving” section.

WARNING

- **If the light does not illuminate with the ignition switch turned ON, have**

the vehicle checked by a NISSAN dealer as soon as possible.

- **If the light illuminates while driving, avoid sudden steering maneuvers or abrupt braking, reduce vehicle speed, pull off the road to a safe location and stop the vehicle as soon as possible. Driving with under-inflated tires may permanently damage the tires and increase the likelihood of tire failure. Serious vehicle damage could occur and may lead to an accident and could result in serious personal injury. Check the tire pressure for all four tires. Adjust the tire pressure to the recommended COLD tire pressure shown on the Tire and Loading Information label to turn the low tire pressure warning light OFF. If the light stays on after adjusting the tire pressure and driving over 16 MPH (25 km/h), have the system checked by a NISSAN dealer. If you have a flat tire, replace it with a spare tire as soon as possible.**
- **When a spare tire is mounted or a wheel is replaced, the TPMS will not function and the low tire pressure warning light will flash for approximately 1 minute. The light will remain on after 1 minute. Contact your NISSAN dealer as soon as possible for tire replacement and/or system resetting.**
- **Replacing tires with those not originally specified by NISSAN could affect the proper operation of the TPMS.**

CAUTION

- **The TPMS is not a substitute for the regular tire pressure check. Be sure to check the tire pressure regularly.**
- **If the vehicle is being driven at speeds of less than 16 MPH (25 km/h), the TPMS may not operate correctly.**
- **Be sure to install the specified size of tires to the front and rear.**

Low washer fluid warning light (if so equipped)

This light illuminates when the washer fluid is at a low level. Add washer fluid as necessary. (See "WINDOW WASHER FLUID" in the "8. Maintenance and do-it-yourself" section.)

P position selecting warning light (if so equipped)

The light blinks in red and warning buzzer beeps when the selector lever is not in the P (Park) position and you are outside the vehicle with the Intelligent Key.

When the warning light blinks, move the selector lever to the P (Park) position and return the ignition switch to the LOCK position.

See "INTELLIGENT KEY SYSTEM" in the "3. Pre-driving checks and adjustments" section.

Seat belt warning light

The light and chime remind you to fasten seat belts. The light illuminates whenever the ignition switch is turned to the ON position, and will remain illuminated until the driver's seat belt is fastened. At the same time, the chime will sound for about 6 seconds unless the driver's seat belt is securely fastened.

The seat belt warning light for the front passenger will illuminate if the seat belt is not fastened when the front passenger's seat is occupied. For 5 seconds after the ignition switch is in the ON position, the system does

not activate the warning light for the front passenger.

See “SEAT BELTS” in the “1. Safety — Seats, seat belts and supplemental restraint system” section for precautions on seat belt usage.

Supplemental air bag warning light

After turning the ignition switch to the ON position, the supplemental air bag warning light will illuminate. The supplemental air bag warning light will turn off after about 7 seconds if the supplemental front air bag and supplemental side air bag, curtain side-impact air bag systems and/or pretensioner seat belt are operational.

If any of the following conditions occur, the front air bag, side air bag, curtain and rollover air bag and pretensioner systems need servicing and your vehicle must be taken to your nearest NISSAN dealer.

- The supplemental air bag warning light remains on after approximately 7 seconds.
- The supplemental air bag warning light flashes intermittently.
- The supplemental air bag warning light does not illuminate at all.

Unless checked and repaired, the Supplemental Restraint Systems and/or the pretensioners may not function properly.

For additional information, see “SUPPLEMENTAL RESTRAINT SYSTEM” in the “1. Safety — Seats, seat belts and supplemental restraint system” section.

WARNING

If the supplemental air bag warning light is on, it could mean that the front air bag, side air bag, curtain and rollover air bag and/or pretensioner systems will not operate in an accident. To help avoid injury to yourself or others, have your vehicle checked by a NISSAN dealer as soon as possible.

INDICATOR LIGHTS

AWD LOCK All-Wheel Drive (AWD) LOCK indicator light (AWD models)

This light illuminates when the ignition switch is turned to the ON position, and turns off within 1 second.

When selecting the LOCK mode while the engine is running, this light will illuminate. (See “ALL-WHEEL DRIVE (AWD)” in the “5. Starting and driving” section.)

CRUISE Cruise main switch indicator light

This light illuminates when the cruise control main switch is pushed. The light turns off when the main switch is pushed again. When the cruise main switch indicator light illuminates, the cruise control system is operational. (See “CRUISE CONTROL” in the “5. Starting and driving” section.)

SET Cruise set indicator light

This light illuminates while the vehicle speed is controlled by the cruise control system. If the light blinks while the engine is running, it may indicate the cruise control system is not functioning properly. Have the system checked by a NISSAN dealer. (See “CRUISE CONTROL” in the “5. Starting and driving” section.)

OFF Front passenger air bag status light

The front passenger air bag status light will be lit and the passenger front air bag will be OFF depending on how the front passenger seat is being used.

For front passenger air bag status light operation, see “NISSAN ADVANCED AIR BAG SYSTEM (front seats)” in the “1. Safety —

Seats, seat belts and supplemental restraint system" section of this manual.

High beam indicator light (Blue)

This light illuminates when the headlight high beam is on and goes out when the low beam is selected.

SERVICE ENGINE SOON Malfunction Indicator Light (MIL)

If the malfunction indicator light illuminates steady or blinks while the engine is running, it may indicate a potential emission control and/or Continuously Variable Transmission (CVT) malfunction.

The malfunction indicator light may also illuminate steady if the fuel-filler cap is loose or missing, or if the vehicle runs out of fuel. Check to make sure the fuel-filler cap is installed and closed tightly, and that the vehicle has at least 3 US gallons (11.4 liters) of fuel in the fuel tank.

After a few driving trips, the SERVICE ENGINE SOON light should turn off if no other potential emission control system malfunction exists.

If this indicator light remains on for 20 seconds and then blinks for 10 seconds when the engine is not running, it indicates that the vehicle is not ready for an emission control system inspection/maintenance test. (See "READINESS FOR INSPECTION/MAINTENANCE (I/M) TEST" in the "9. Technical and consumer information" section.)

Operation:

The malfunction indicator light will illuminate in one of two ways:

- Malfunction indicator light illuminated steady — An emission control system and/or CVT malfunction has been detected. Check the fuel-filler cap. If the fuel-filler cap is loose or missing, tighten or install the cap and continue to drive the vehicle. The SERVICE ENGINE SOON light should turn off after a few driving trips. If the SERVICE ENGINE SOON light does not turn off after a few driving trips, have the vehicle inspected by a NISSAN dealer. You do not need to have your vehicle towed to the dealer.
- Malfunction indicator light blinking — An engine misfire has been detected which may damage the emission control system.

  To reduce or avoid emission control system damage:

  a) Do not drive at speeds above 45 MPH (72 km/h).

  b) Avoid hard acceleration or deceleration.

  c) Avoid steep uphill grades.

  d) If possible, reduce the amount of cargo being hauled or towed.

  The malfunction indicator light may stop blinking and remain illuminated.

  Have the vehicle inspected by a NISSAN dealer. You do not need to have your vehicle towed to the dealer.

⚠ CAUTION

Continued vehicle operation without having the emission control system and/or CVT system checked and repaired as necessary could lead to poor driveability, reduced fuel economy, and possible damage to the emission control system.

O/D OFF Overdrive off indicator light (if so equipped)

The overdrive off indicator light illuminates when the overdrive off mode is selected.

For additional information, see ""CONTINUOUSLY VARIABLE TRANSMISSION (CVT)" in the "5. Starting and driving" section of this manual.

Security indicator light

The light blinks when the ignition switch is in the ACC, OFF or LOCK position. This function indicates the security system equipped on the vehicle is operational.

If the security system is malfunctioning, this light will remain on while the ignition switch is in the ON position. For additional information, see “SECURITY SYSTEMS” later in this section.

Slip indicator light

The light will blink when the Vehicle Dynamic Control (VDC) system is operating, thus alerting the driver to the fact that the road surface is slippery and the vehicle is nearing its traction limits.

Small light indicator light

The light illuminates when the headlight switch is turned to the position.

Turn signal/hazard indicator lights

The light flashes when the turn signal switch lever or hazard switch is turned on.

Vehicle Dynamic Control (VDC) off indicator light

The light illuminates when the Vehicle Dynamic Control (VDC) off switch is pushed to OFF. This indicates that the VDC system is not operating. When the VDC off indicator light and slip indicator light illuminate with the VDC system turned on, this light alerts the driver to the fact that the VDC system’s fail-safe mode is operating, for example the VDC system may not be functioning properly. Have the system checked by a NISSAN dealer. If a malfunction occurs in the system, the VDC system function will be canceled but the vehicle is still driveable. For additional information, see “VEHICLE DYNAMIC CONTROL (VDC) SYSTEM” in the “5. Starting and driving” section of this manual.

AUDIBLE REMINDERS

Key reminder chime

The key reminder chime sounds if the driver’s side door is opened while the key is left in the ignition switch and the ignition switch is in the ACC, OFF or LOCK position. Remove the key and take it with you when leaving the vehicle.

Light reminder chime

The light reminder chime will sound when the driver side door is opened with the light switch in the or position, and the ignition switch is in the ACC, OFF or LOCK position.

Turn the light switch off when you leave the vehicle.

Brake pad wear warning

The disc brake pads have audible wear warnings. When a brake pad requires replacement, it will make a high pitched scraping sound when the vehicle is in motion. This scraping sound will first occur only when the brake pedal is depressed. After more wear of the brake pad, the sound will always be heard even if the brake pedal is not depressed. Have the brakes checked as soon as possible if the warning sound is heard.

Parking brake reminder chime

The parking brake reminder chime will sound if the vehicle is driven at more than 4 MPH (7 km/h) with the parking brake applied. Stop the vehicle and release the parking brake.

Seat belt warning chime

The seat belt warning chime will sound for about 6 seconds unless the driver’s seat belt is securely fastened.

Intelligent Key door buzzer (if so equipped)

When the chime or buzzer sounds from inside and outside the vehicle, check for the following:

- The ignition switch is turned to the LOCK position.
- The intelligent Key is not left inside the vehicle.
- Doors are closed securely.
- The selector lever is in the P position.

When the buzzer sounds, be sure to check both the vehicle and the Intelligent Key.

See “INTELLIGENT KEY SYSTEM” in the “3. Pre-driving checks and adjustments” section.

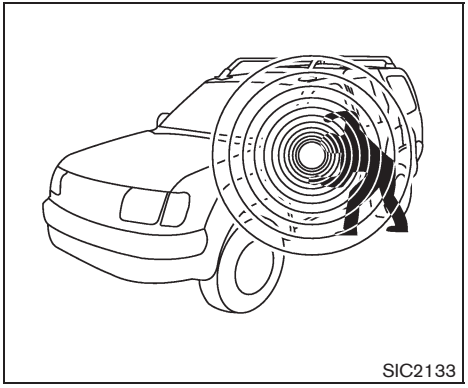

Your vehicle has two types of security systems, as follows:

- Vehicle security system
- NISSAN Vehicle Immobilizer System

The security condition will be shown by the security indicator light.

VEHICLE SECURITY SYSTEM

The vehicle security system provides visual and audio alarm signals if someone opens the doors, or lift gate when the system is armed. It is not, however, a motion detection type system that activates when a vehicle is moved or when a vibration occurs.

The system helps deter vehicle theft but cannot prevent it, nor can it prevent the theft of interior or exterior vehicle components in all situations. Always secure your vehicle even if parking for a brief period. Never leave your keys in the vehicle, and always lock it when unattended. Be aware of your surroundings, and park in secure, well-lit areas whenever possible.

Many devices offering additional protection, such as component locks, identification markers, and tracking systems, are available at auto supply stores and specialty shops. Your NISSAN dealer may also offer such equipment. Check with your insurance company to see if you may be eligible for discounts for various theft protection features.

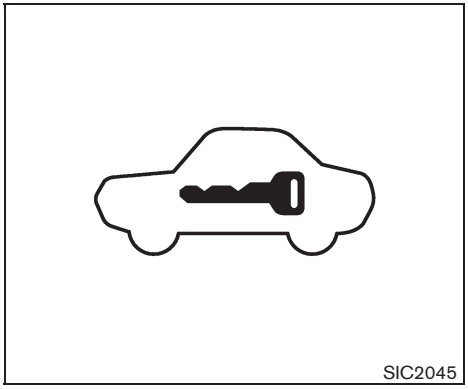

How to arm the vehicle security system

1. Close all windows.

   The system can be armed even if the windows are open.

2. Turn the ignition switch to the LOCK position and remove the key if it is inserted.
3. Close all doors. Lock all doors. The doors can be locked with:
   - the lock button on the keyfob or Intelligent Key (if so equipped)
   - any request switch (Intelligent Key equipped model)
   - the power door lock switch
   - the key — master or mechanical (Intelligent Key equipped model)
4. Confirm that the security indicator light illuminates. The security indicator light stays on for about 30 seconds. The vehicle security system is now pre-armed. After about 30 seconds the vehicle security system automatically shifts into the armed phase. The security light begins to flash once every approximately 3 seconds. If, during this 30-second pre-arm time period, the door is unlocked, or the ignition switch is turned to the ACC or ON position, the system will not arm.

Even when the driver and/or passengers are in the vehicle, the system will activate with all doors locked with the ignition switch in the LOCK position. When turning the ignition switch to the ACC or ON position, the system will be released.

Vehicle security system activation

The vehicle security system will give the following alarm:

- The headlights blink and the horn sounds intermittently.
- The alarm automatically turns off after approximately 50 seconds. However, the alarm reactivates if the vehicle is tampered with again.

The alarm is activated by:

- Unlocking the door without using the keyfob, the Intelligent Key (if so equipped) the request switch (if so equipped) or the key. (Even if the door is opened by releasing the door inside lock knob, the alarm will activate.)

How to stop an activated alarm

The alarm will stop by unlocking a door by pushing the unlock button on the keyfob or Intelligent Key, pushing the request switch or using the key. The alarm will not stop if the ignition switch is turned to the ACC or ON position.

If the system does not operate as described above, have it checked by a NISSAN dealer.

NISSAN VEHICLE IMMOBILIZER SYSTEM

The NISSAN Vehicle Immobilizer System will not allow the engine to start without the use of the registered key.

If the engine fails to start using the registered key, it may be due to interference caused by another registered key, an automated toll road

device or automated payment device on the key ring. Restart the engine using the following procedures:

1. Leave the ignition switch in the ON position for approximately 5 seconds.
2. Turn the ignition switch to the OFF or LOCK position and wait approximately 10 seconds.
3. Repeat step 1 and 2 again.
4. Restart the engine while holding the device (which may have caused the interference) separate from the registered key.

   If this procedure allows the engine to start, NISSAN recommends placing the registered key on a separate key ring to avoid interference from other devices.

Statement related to section 15 of FCC rules for NISSAN Vehicle Immobilizer System (CONT ASSY-BCM. ANT ASSY-IMMOBILISER)

This device complies with part 15 of the FCC Rules and RSS-210 of Industry Canada. Operation is subject to the following two conditions;

(1) This device may not cause harmful interference, and (2) this device must accept any interference received, including interference that may cause undesired operation of the device.

CHANGES OR MODIFICATIONS NOT EXPRESSLY APPROVED BY THE PARTY RESPONSIBLE FOR COMPLIANCE COULD VOID THE USER'S AUTHORITY TO OPERATE THE EQUIPMENT.

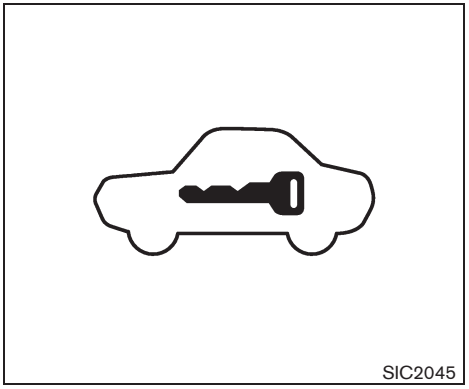

Security indicator light

The security indicator light is located on the meter panel. It indicates the status of the NISSAN Vehicle Immobilizer System.

The light blinks after the ignition switch was in the LOCK position. This function indicates the security systems equipped on the vehicle are operational.

If the NISSAN Vehicle Immobilizer System is malfunctioning, this light will remain on while the ignition switch is in the ON position.

If the light still remains on and/or the engine will not start, see a NISSAN dealer for NISSAN Vehicle Immobilizer System

service as soon as possible. Please bring all registered keys that you have when visiting a NISSAN dealer for service.

WINDSHIELD WIPER AND WASHER SWITCH

WARNING

In freezing temperatures the washer solution may freeze on the windshield and obscure your vision which may lead to an accident. Warm windshield with the defroster before you wash the windshield.

CAUTION

- **Do not operate the washer continuously for more than 30 seconds.**
- **Do not operate the washer if the reservoir tank is empty.**
- **Do not fill the window washer reservoir tank with washer fluid concentrates at full strength. Some methyl alcohol based washer fluid concentrates may permanently stain the grille if spilled while filling the window washer reservoir tank.**
- **Pre-mix washer fluid concentrates with water to the manufacturer's recommended levels before pouring the fluid into the window washer reservoir tank. Do not use the window washer reservoir tank to mix the washer fluid concentrate and water.**

If the windshield wiper operation is interrupted by snow or ice, the wiper may stop moving to protect its motor. If this occurs, turn the wiper switch to the OFF position and remove the snow or ice that is on and around the wiper arms. In approximately 1 minute, turn the switch on again to operate the wiper.

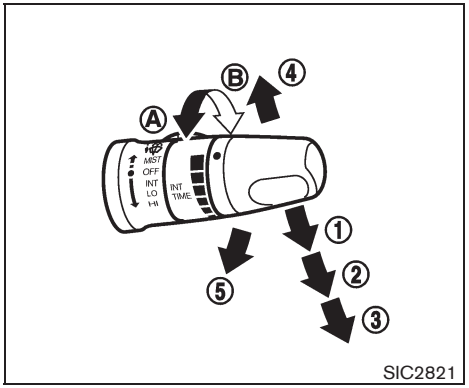

The windshield wiper and washer operates when the ignition switch is in the ON position.

Push the lever down to operate the wiper at the following speed:

① Intermittent — intermittent operation can be adjusted by turning the knob toward Ⓐ (Slower) or Ⓑ (Faster).

② Low — continuous low speed operation

③ High — continuous high speed operation

Push the lever up ④ to have one sweep operation of the wiper.

Pull the lever toward you ⑤ to operate the washer. Then the wiper will also operate several times.

REAR WINDOW WIPER AND WASHER SWITCH

WARNING

In freezing temperatures the washer solution may freeze on the rear window glass and obscure your vision. Warm the rear window with the defroster before you wash the rear window.

CAUTION

- **Do not operate the washer continuously for more than 30 seconds.**
- **Do not operate the washer if the reservoir tank is empty.**
- **Do not fill the window washer reservoir tank with washer fluid concentrates at full strength. Some methyl alcohol based washer fluid concentrates may permanently stain the grille if spilled while filling the window washer reservoir tank.**
- **Pre-mix washer fluid concentrates with water to the manufacturer's recommended levels before pouring the fluid into the window washer reservoir tank. Do not use the window washer reservoir tank to mix the washer fluid concentrate**

and water.

If the rear window wiper operation is interrupted by snow or ice, the wiper may stop moving to protect its motor. If this occurs, turn the wiper switch to the OFF position and remove the snow or ice that is on and around the wiper arms. In approximately 1 minute, turn the switch on again to operate the wiper.

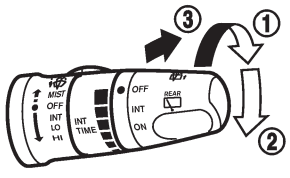

SIC3480

The rear window wiper and washer operate when the ignition switch is in the ON position.

Turn the switch clockwise from the OFF position to operate the wiper.

① Intermittent (INT) — intermittent operation (not adjustable)

② Low (ON) — continuous low speed operation

Push the switch forward ③ to operate the washer. Then the wiper will also operate several times.

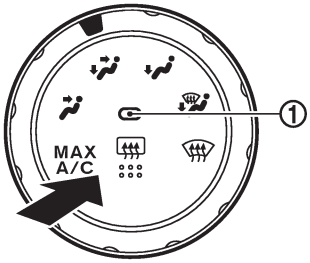

SIC3481

To defog/defrost the rear window glass and outside mirrors (if so equipped), start the engine and push the switch on. The indicator light ① will illuminate. Push the switch again to turn the defroster off.

It will automatically turn off in approximately 15 minutes.

CAUTION

When cleaning the inner side of the rear window, be careful not to scratch or damage the rear window defroster.

XENON HEADLIGHTS (if so equipped)

WARNING

HIGH VOLTAGE

- **When xenon headlights are on, they produce a high voltage. To prevent an electric shock, never attempt to modify or disassemble. Always have your xenon headlights replaced at a NISSAN dealer.**
- **Xenon headlights provide considerably more light than conventional headlights. If they are not correctly aimed, they might temporarily blind an oncoming driver or the driver ahead of you and cause a serious accident. If headlights are not aimed correctly, immediately take your vehicle to a NISSAN dealer and have the headlights adjusted correctly.**

When the xenon headlight is initially turned on, its brightness or color varies slightly. However, the color and brightness will soon stabilize.

- **The life of xenon headlights will be shortened by frequent on-off operation. It is generally desirable not to turn off the headlights for short intervals (for example, when the vehicle stops at a traffic signal).**
- **If the xenon headlight bulb is close to burning out, the brightness will drastically decrease, the light will start blinking, or the color of the light will become reddish. If one or more of the above signs appear, contact a NISSAN dealer.**

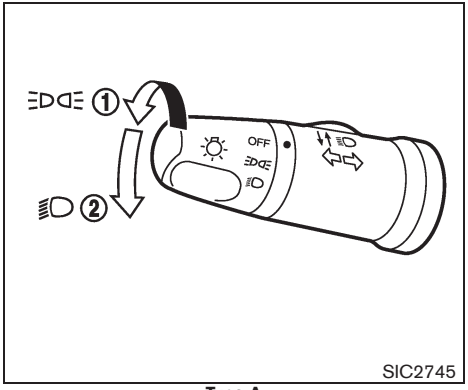

SIC2745

Type A

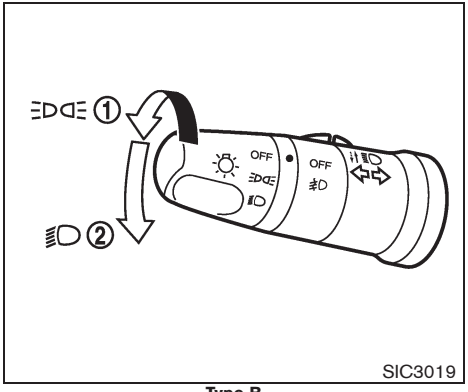

SIC3019

Type B

HEADLIGHT SWITCH

Lighting

① Turn the switch to the position:

The front park, side marker, tail, license plate and instrument lights will come on.

② Turn the switch to the position:

Headlights will come on and all the other lights remain on.

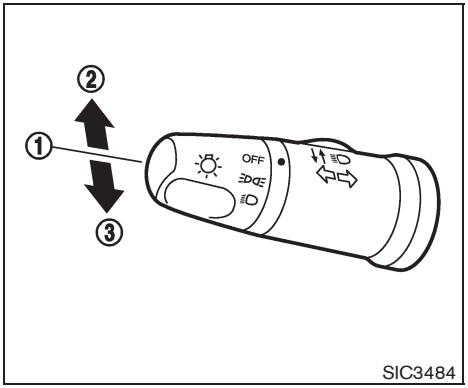

Headlight beam select

① To select the low beam, put the lever in the neutral position as shown.

② To select the high beam, push the lever forward while the switch is in the position. Pull it back to select the low beam.

③ Pulling the lever toward you will flash the headlight high beam even when the headlight switch is in the OFF position.

Battery saver system

- When the headlight switch is in the or position while the ignition switch is in the ON position, the lights will automatically turn off 5 minutes after the ignition switch has been pushed to the OFF position.
- When the headlight switch remains in the or position after the lights automatically turn off, the lights will turn on when the ignition switch is pushed to the ON position.

CAUTION

- **When you turn on the headlight switch again after the lights automatically turn off, the lights will not turn off automatically. Be sure to turn the light switch to the OFF position when you leave the vehicle for extended periods of time, otherwise the battery will be discharged.**
- **Never leave the light switch on when the engine is not running for extended periods of time even if the headlights turn off automatically.**

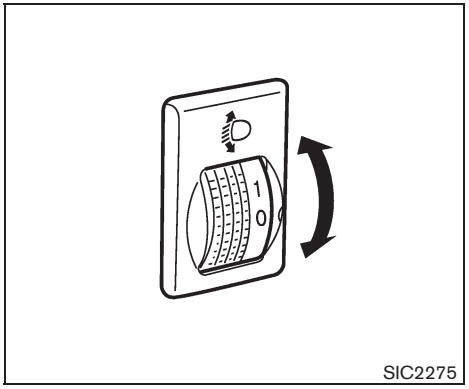

Headlight aiming control (if so equipped)

Depending on the number of occupants in the vehicle and the load it is carrying, the headlight axis may be higher than desired. If the vehicle is traveling on a hilly road, the headlights may directly hit the rearview mirror of the vehicle ahead or the windshield of the oncoming vehicle. The light axis can be lowered with the operation of the switch.

The larger the number designated on the switch, the lower the axis.

When traveling with no heavy load or on a flat road, select position 0.

WARNING

Xenon headlights are extremely bright compared to conventional headlights. If the xenon headlights hit the rearview mirror of the vehicle ahead or the windshield of oncoming vehicle, the driver of these vehicles may have difficulty driving because of the brightness. Use the headlight aiming control switch to lower the light axis. See "XENON HEADLIGHTS" earlier in this section for additional information.

Daytime running light system (Canada only)

The daytime running lights automatically illuminate when the engine is started with the parking brake released. The daytime running lights operate with the headlight switch in the OFF position or in the position. Turn the headlight switch to the position for full illumination when driving at night.

If the parking brake is applied before the engine is started, the daytime running lights do not illuminate. The daytime running lights illuminate once the parking brake is released. The daytime running lights will remain on until the ignition switch is turned to the OFF position.

WARNING

When the daytime running light system is active, tail lights on your vehicle are not on. It is necessary at dusk to turn on your headlights. Failure to do so could cause an accident injuring yourself and others.

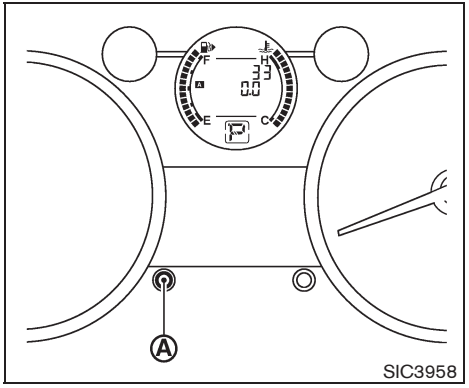

SIC3958

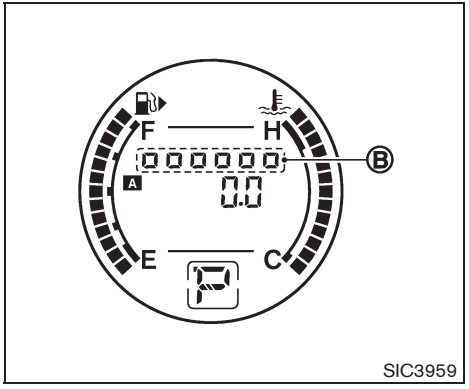

SIC3959

Instrument brightness control

The instrument brightness control operates when the headlight switch is in the ≡DC≡ or ≣D position.

Turn the control Ⓐ to adjust the brightness of the instrument panel lights. The brightness indicator Ⓑ will be shown briefly in the vehicle information display when the control is turned.

When the brightness level reaches the maximum or minimum, a beep will sound.

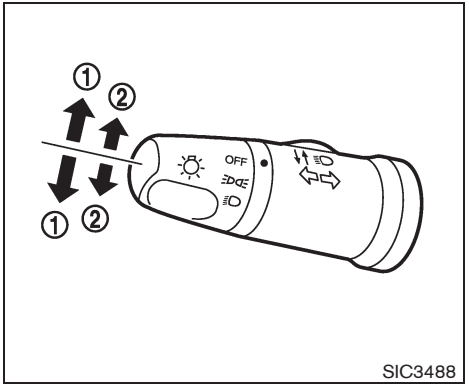

SIC3488

TURN SIGNAL SWITCH

① Turn signal

Move the lever up or down to signal the turning direction. When the turn is completed, the turn signals cancel automatically.

② Lane change signal

To indicate a lane change, move the lever up or down to the point where lights begin flashing.

HAZARD WARNING FLASHER SWITCH

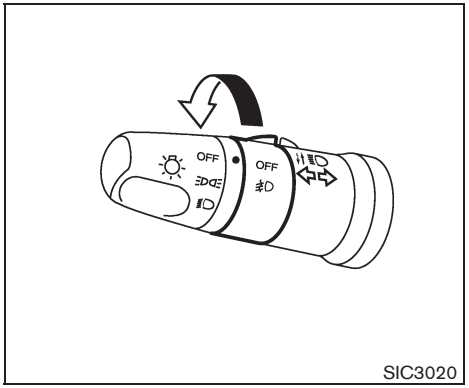

SIC3020

FOG LIGHT SWITCH (if so equipped)

To turn the fog lights on, turn the headlight switch to the position, then turn the switch to the position. To turn them off, turn the switch to the OFF position.

The headlights must be on for the fog lights to operate.

When the headlight high-beam is selected, the fog lights turn off.

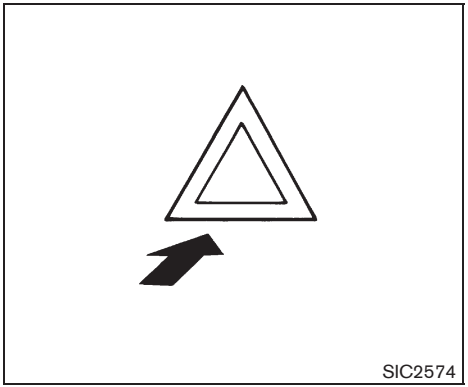
SIC2574

Push the switch on to warn other drivers when you must stop or park under emergency conditions. All turn signal lights will flash.

WARNING

- **If stopping for an emergency, be sure to move the vehicle well off the road.**
- **Do not use the hazard warning flashers while moving on the highway unless unusual circumstances force you to drive so slowly that your vehicle might become a hazard to other traffic.**
- **Turn signals do not work when the hazard warning flasher lights are on.**

The flasher can be actuated with the ignition switch in any position.

Some state laws may prohibit the use of the hazard warning flasher switch while driving.

HORN

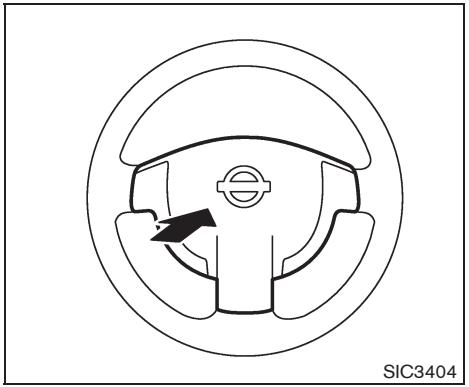
SIC3404

To sound the horn, push the center pad area of the steering wheel.

WARNING

Do not disassemble the horn. Doing so could affect proper operation of the supplemental front air bag system. Tampering with the supplemental front air bag system may result in serious personal injury.

HEATED SEATS (if so equipped)

CAUTION

- **The battery could run down if the seat heater is operated while the engine is not running.**
- **Do not use the seat heater for extended periods or when no one is using the seat.**
- **Do not put anything on the seat which insulates heat, such as a blanket, cushion, seat cover, etc. Otherwise, the seat may become overheated.**
- **Do not place anything hard or heavy on the seat or pierce it with a pin or similar object. This may result in damage to the heater.**
- **Any liquid spilled on the heated seat should be removed immediately with a dry cloth.**
- **When cleaning the seat, never use gasoline, thinner, or any similar materials.**
- **If any abnormalities are found or the heated seat does not operate, turn the switch off and have the system checked by a NISSAN dealer.**

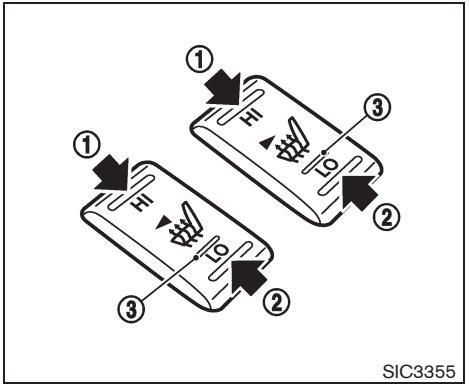

SIC3355

The front seats are warmed by built-in heaters. The switches located on the center console can be operated independently of each other.

1. Start the engine.
2. Select heat range.

   ① For high heat, push the HI (High) side of the switch.

   ② For low heat, push the LO (Low) side of the switch.

   The indicator light in the switch ③ will illuminate when low or high is selected.
3. To turn off the heater, return the switch to the level position. Make sure the indicator

light goes off.

The heater is controlled by a thermostat, automatically turning the heater on and off. The indicator light will remain on as long as the switch is on.

When the vehicle's interior is warmed, or before you leave the vehicle, be sure to turn off the switch.

VEHICLE DYNAMIC CONTROL (VDC) OFF SWITCH

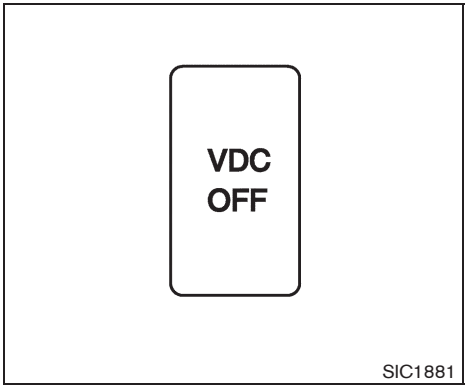

The vehicle should be driven with the Vehicle Dynamic Control (VDC) system on for most driving conditions.

If the vehicle is stuck in mud or snow, the VDC system reduces the engine output to reduce wheel spin. The engine speed will be reduced even if the accelerator is depressed to the floor. If maximum engine power is needed to free a stuck vehicle, turn the VDC system off.

To turn off the VDC system, push the VDC OFF switch. The VDC OFF indicator will illuminate.

Push the VDC OFF switch again or restart the engine to turn on the system. (See "VEHICLE DYNAMIC CONTROL (VDC) SYSTEM" in the "5. Starting and driving" section.)

CLOCK

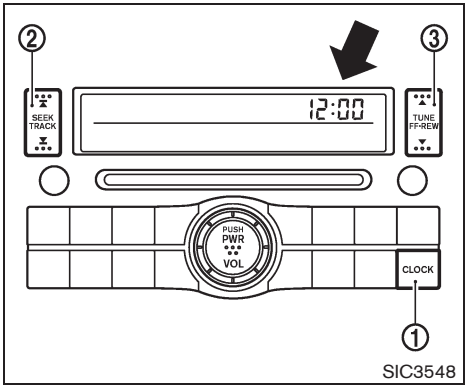

The digital clock (in the audio unit) displays time when the ignition switch is in the ACC or ON position.

Push the CLOCK button 1 to turn the clock on or off.

ADJUSTING THE TIME

1. Push and hold the CLOCK button 1 until the display shows "H-Seek M-Tune".
2. Push the SEEK/TRACK button 2 to adjust the hours.
3. Push the TUNE/FF·REW button 3 to adjust the minutes.
4. Push the CLOCK button 1 again to exit

the clock set mode.

The display will return to the regular clock display after 10 seconds.

If the power supply is disconnected, the clock will not indicate the correct time. Readjust the time.

POWER OUTLET

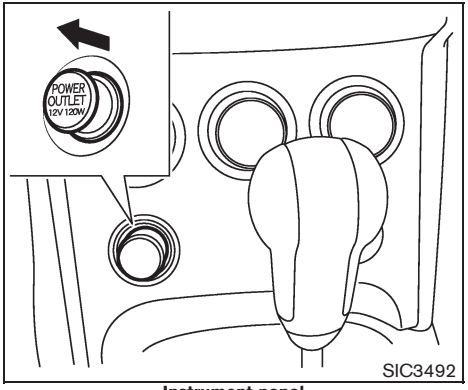

Instrument panel

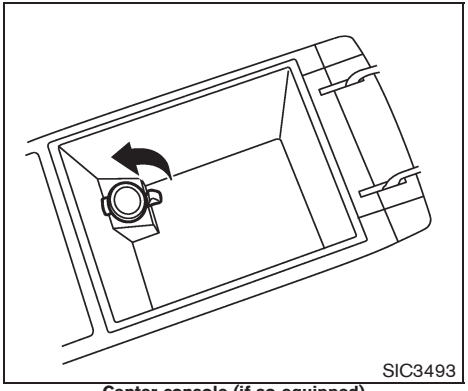

Center console (if so equipped)

The power outlet is located in the instrument panel and the center console (if so equipped).

CAUTION

- **The outlet and plug may be hot during or immediately after use.**
- **Do not use with accessories that exceed a 12 volt, 120W (10A) power draw. Do not use double adapters or more than one electrical accessory.**
- **Use power outlet with the engine running to avoid discharging the vehicle battery.**
- **Avoid using power outlet when the air conditioner, headlights or rear window defroster is on.**
- **This power outlet is not designed for use with a cigarette lighter unit.**
- **Push the plug in as far as it will go. If good contact is not made, the plug may overheat or the internal temperature fuse may open.**
- **Before inserting or disconnecting a plug, be sure the electrical accessory being used is turned OFF.**
- **When not in use, be sure to close the cap. Do not allow water to**

contact the outlet.

CUP HOLDERS

CAUTION

- **Avoid abrupt starting and braking when the cup holder is being used to prevent spilling the drink. If the liquid is hot, it can scald you or your passenger.**
- **Use only soft cups in the cup holder. Hard objects can injure you in an accident.**

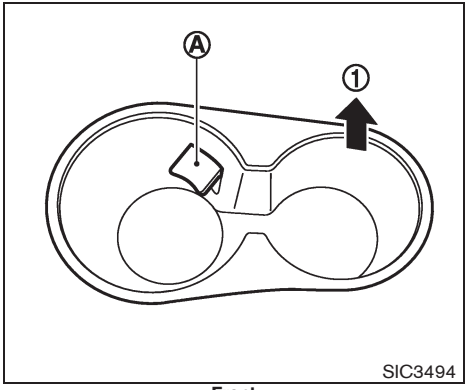

Front

The flap (A) will be folded down when inserting a large container.

To remove the inner tray for cleaning, pull it up as illustrated (1).

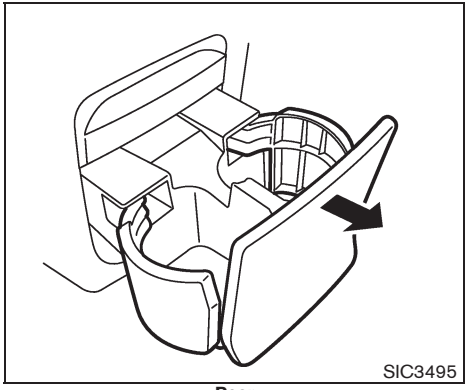

Rear

To open the cup holder, pull the lid.

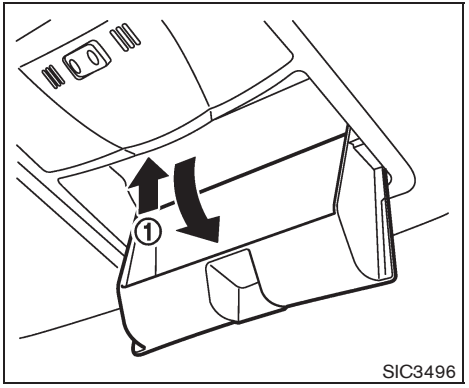

SUNGLASSES HOLDER

WARNING

Keep the sunglasses holder closed while driving to prevent an accident.

To open the sunglasses holder, push ①.

CAUTION

- **Do not use for anything other than glasses.**
- **Do not leave glasses in the sunglasses holder while parking in direct sunlight. The heat may damage the glasses.**

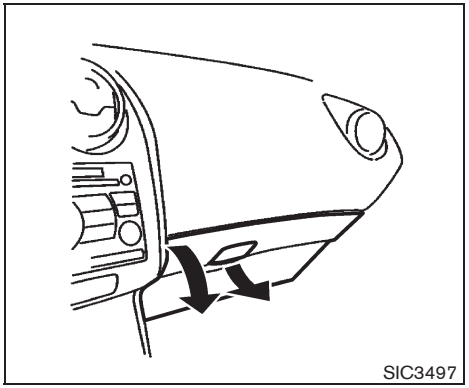

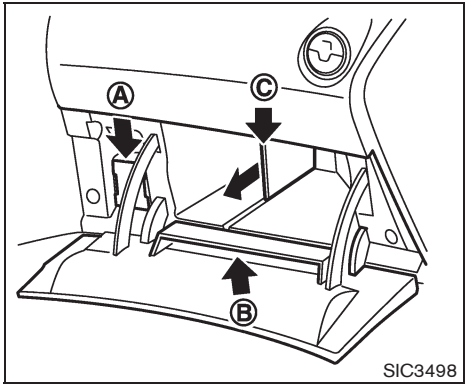

GLOVE BOX

WARNING

Keep glove box lid closed while driving to help prevent injury in an accident or a sudden stop.

To open the glove box, pull the handle.

To close, push the lid in until the lock latches. The glove box light illuminates when the headlight switch is turned on.

Ⓐ Card holder

Ⓑ Back side pocket of lid

Ⓒ Removable partition

To remove the partition, pull it out.

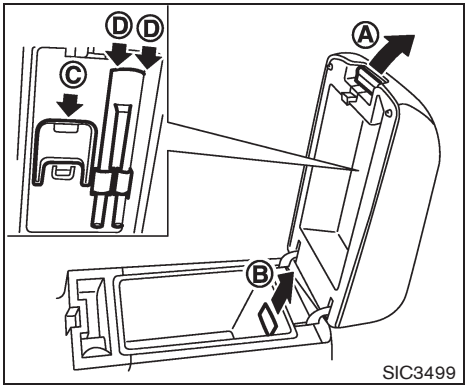

CONSOLE BOX

To open the console boxes, push up the knob Ⓐ and pull up the lid.

To close, push the lid down until latched.

To remove the inner box (if so equipped) for cleaning or storing a large object, pull it up as illustrated Ⓑ .

The inside of the console box lid is designed to be used as a card holder Ⓒ and pen holders Ⓓ .

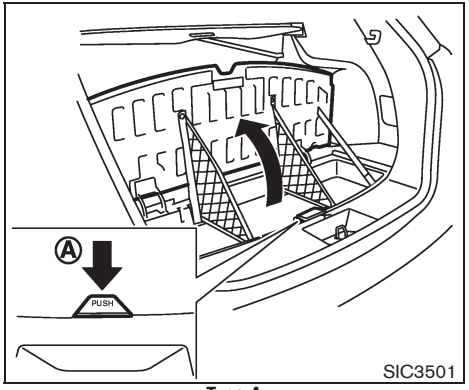

Type A

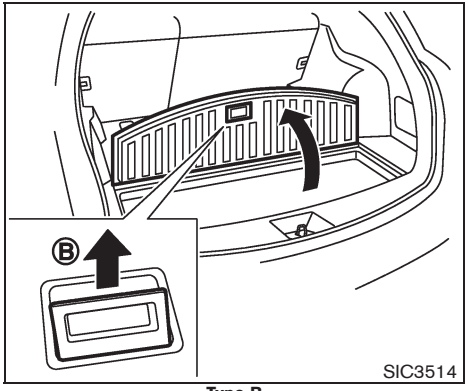

Type B

LUGGAGE FLOOR BOX (if so equipped)

Type A: To open the luggage floor box, push Ⓐ . To close, push the lid until the lock latches.

The net partitions can be folded to make a larger storage space.

CAUTION

To avoid damage, do not load more than 22 lbs (10 kg) of cargo into the luggage floor box.

Type B: To open the luggage floor box, pull the handle Ⓑ on the lid. To close, push the lid until the lock latches.

The luggage floor box needs to be removed when you need a spare tire. (See “FLAT TIRE” in the “6. In case of emergency” section.)

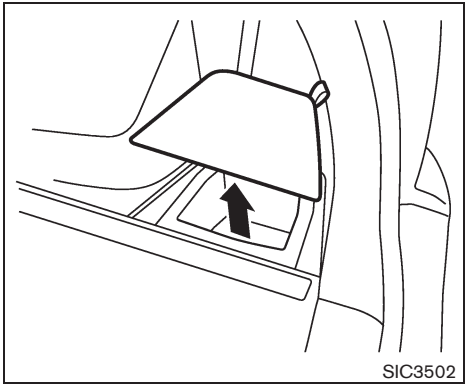

LUGGAGE SIDE BOX

To open the luggage side box, pull up the strap.

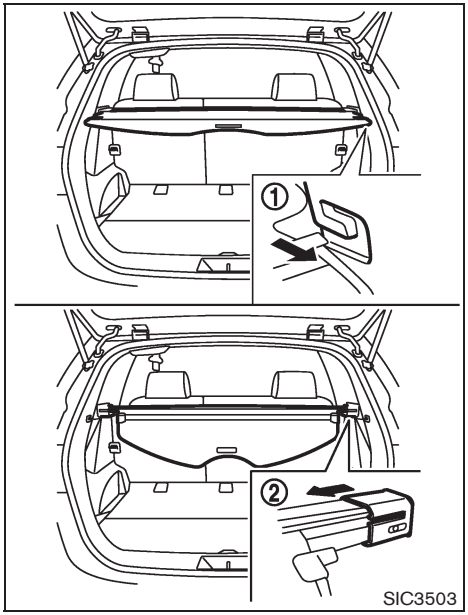

CARGO COVER (if so equipped)

The cargo cover keeps the contents in the cargo area hidden from the outside.

To use the cargo cover, pull it out and hang both sides on the hooks ①.

To stow the cargo cover, remove it from the hooks and hold until it is retracted.

To remove the cargo cover, stow the cover and pull the holder to the opposite side ②.

WARNING

- **Never put anything on the cargo cover, no matter how small. Any object on it could cause an injury in an accident or sudden stop.**
- **Close the cargo cover when folding the rear seat.**
- **Do not leave the cargo cover in the vehicle with it disengaged from the holder.**
- **Properly secure all cargo with ropes or straps to help prevent it from sliding or shifting. Do not place cargo higher than the seatbacks. In a sudden stop or collision, unsecured cargo could cause personal injury.**
- **If the cargo cover contacts the top tether strap when it is attached to the top tether anchor, remove the cargo cover from the vehicle or secure it on the cargo floor below its attachment location. If the cargo cover is not removed, it may damage the top tether strap during a collision. Your child could be seriously injured or killed in a collision if the child restraint top tether strap is damaged.**
- **Do not allow cargo to contact the top tether strap when it is attached to the top tether anchor. Properly secure the cargo so it does not contact the top tether strap. Cargo that is not properly secured or that contacts the top tether strap may damage the top tether strap during a collision. Your child could be seriously injured or killed in a collision if the child restraint top tether strap is damaged.**

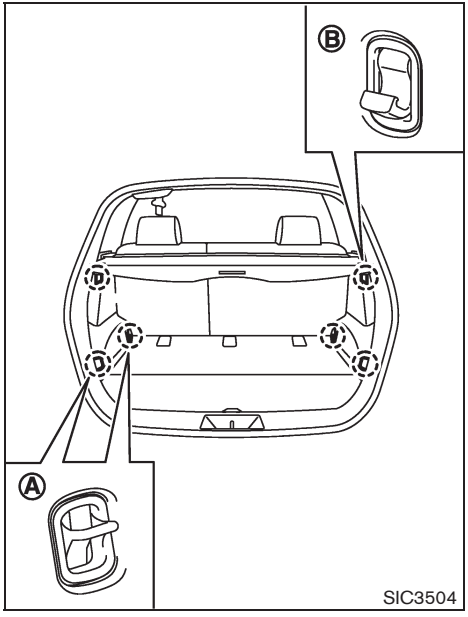

LUGGAGE HOOKS (if so equipped)

WARNING

- **Always make sure that the luggage is properly secured. Use the suitable ropes and hooks.**
- **Unsecured luggage can become dangerous in an accident or sudden stop.**

CAUTION

Do not apply a total load of more than 22 lb (10 kg) Ⓐ or 7 lb (3 kg) Ⓑ to a single hook.

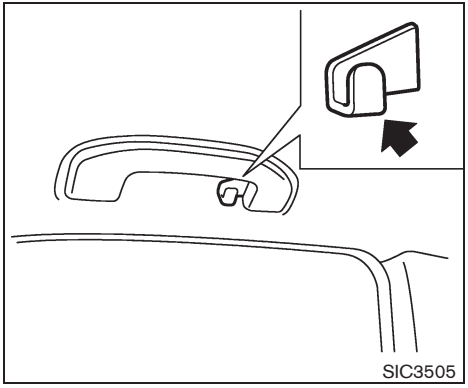

COAT HOOKS (if so equipped)

The coat hooks are equipped above the rear window.

CAUTION

Do not apply a total load of more than 2 lb (1 kg) to a single hook.

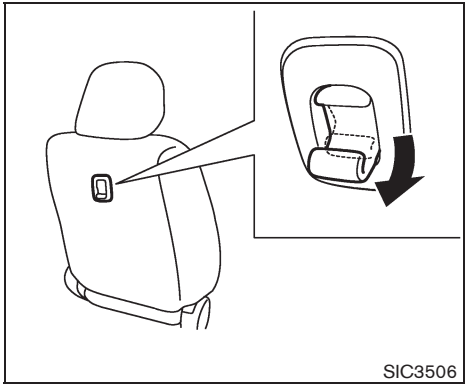

UTILITY HOOK

To use the utility hook on the seatback, pull it.

CAUTION

- **Do not apply a total load of more than 6 lb (3 kg) to the hook.**
- **Do not use the utility hook to pull the seatback to the upright and locked position. Doing so will cause the utility hook to break.**

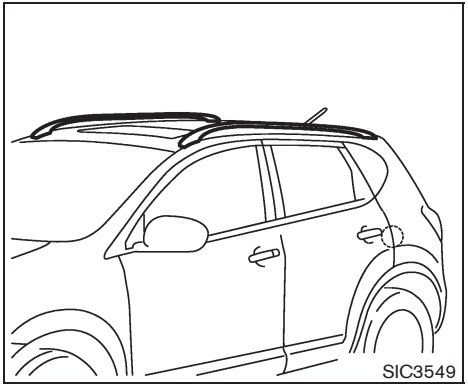

ROOF RACK (if so equipped)

Secure the crossbars to the roof rail before loading. The crossbars are available from a NISSAN dealer.

Always distribute the luggage evenly on the roof rack. Do not load more than 99 lb (45 kg). Be careful that your vehicle does not exceed the Gross Vehicle Weight Rating (GVWR) or its Gross Axle Weight Rating (GAWR front and rear). The GVWR and GAWR are located on the F.M.V.S.S. or C.V.M.S.S. certification label (located on the driver's door pillar). For more information regarding GVWR and GAWR, see "VEHICLE LOADING INFORMATION" in the "9. Technical and consumer information" section.

WARNING

- **Drive extra carefully when the vehicle is loaded at or near the cargo carrying capacity, especially if the significant portion of that load is carried on the roof rack.**
- **Heavy loading of the roof rack has the potential to affect the vehicle stability and handling during sudden or unusual handling maneuvers.**
- **Roof rack load should be evenly distributed.**
- **Do not exceed maximum roof rack load weight capacity.**
- **Properly secure all cargo with ropes or straps to help prevent it from sliding or shifting. In a sudden stop or collision, unsecured cargo could cause personal injury.**

CAUTION

Use care when placing or removing items from the roof rack. If you cannot comfortably lift the items onto the roof rack from the ground, use a ladder or

stool.

POWER WINDOWS

WARNING

- **Make sure that all passengers have their hands, etc. inside the vehicle while it is in motion and before closing the windows. Use the window lock switch to prevent unexpected use of the power windows.**
- **Do not leave children unattended inside the vehicle. They could unknowingly activate switches or controls and become trapped in the window. Unattended children could become involved in serious accidents.**

The power windows operate when the ignition switch is in the ON position, or for about 45 seconds after the ignition switch is turned to the OFF position. If the driver's or front passenger's door is opened during this period of about 45 seconds, power to the windows is canceled.

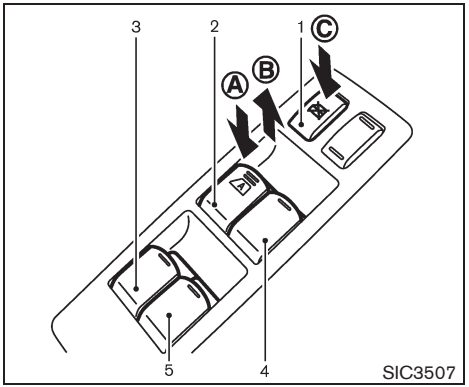

Main power window switch (driver's side)

1. Window lock button
2. Driver side window
3. Rear left passenger side window
4. Front passenger side window
5. Rear right passenger side window

To open or close the window, push down Ⓐ or pull up Ⓑ the switch and hold it. The main switch (driver side switches) will open or close all the windows.

Locking passengers' windows

When the lock button Ⓒ is pushed in, only the driver side window can be opened or closed.

Push it in again to cancel.

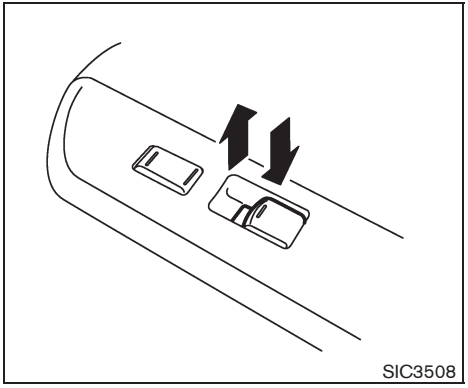

Passenger side power window switch

The passenger side switch will open or close only the corresponding window. To open or close the window, push down or pull up the switch and hold it.

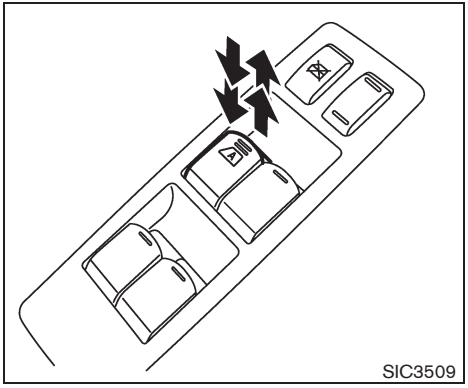

Automatic operation (if so equipped)

The automatic operation is available for the switch that has an A mark on its surface.

Type A: To fully open or close the window, push down or pull up the switch to the second detent and release it; the switch need not be held. The window will automatically open or close all the way. To stop the window, just push or lift the switch in the opposite direction.

Type B: To fully open the window, push down the switch to the second detent and release it; the switch need not be held. The window will automatically open all the way. To stop the window, just lift the switch. To fully close the window, push and hold the switch.

A light push or pull on the switch will cause the window to open or close until the switch is released.

Auto-reverse function (if so equipped)

WARNING

There are some small distances immediately before the closed position which cannot be detected. Make sure that all passengers have their hands, etc., inside the vehicle before closing the window.

If the control unit detects something caught in the window as it is closing, the window will be immediately lowered.

The auto reverse function can be activated when the window is closed by automatic operation when the ignition switch is in the ON position or for 45 seconds after the ignition switch is turned to the OFF position.

Depending on the environment or driving conditions, the auto reverse function may be activated if an impact or load similar to something being caught in the window occurs.

If the windows do not close automatically

If the power window automatic function (closing only) does not operate properly, perform the following procedure to initialize the power window system.

1. Turn the ignition switch to the ON position.
2. Close the door.
3. Open the window completely by operating the power window switch.
4. Pull the power window switch and hold it to close the window, and then hold the switch more than 3 seconds after the window is closed completely.
5. Release the power window switch. Operate the window by the automatic function to confirm the initialization is complete.

If the power window automatic function does not operate properly after performing the procedure above, have your vehicle checked by a NISSAN dealer.

WARNING

- **In an accident you could be thrown from the vehicle through an open moonroof. Always use seat belts and child restraints.**
- **Do not allow anyone to stand up or extend any portion of their body out of the moonroof opening while the vehicle is in motion or while the moonroof is closing.**

CAUTION

- **Remove water drops, snow, ice or sand from the moonroof before opening.**
- **Do not place any heavy object on the moonroof or surrounding area.**

AUTOMATIC MOONROOF

The moonroof only operates when the ignition switch is in the ON position.

The automatic moonroof is operational for about 45 seconds, even if the ignition switch is turned to the OFF position. If the driver's door or the passenger's door is opened during this period of

about 45 seconds, power to the moonroof is canceled.

Sunshade

The sunshade will open automatically when the moonroof is opened. However, it must be closed manually.

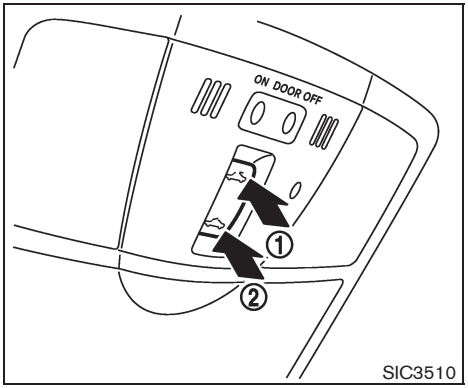

Sliding the moonroof

To fully open or close the moonroof, push the switch toward ① or ② and release it; it need not be held. The roof will automatically open or close all the way. To stop the roof, push the switch in any direction while it is opening or closing.

Tilting the moonroof

To tilt up, first close the moonroof by pushing the switch toward ②. Push the switch toward ② again and release it; it need not be held. To tilt down the moonroof, push the switch toward ①.

Auto reverse function

WARNING

There are some small distances immediately before the closed position which cannot be detected. Make sure that all passengers have their hands, etc., inside the vehicle before closing the moonroof.

If the control unit detects something caught in the moonroof when it is closing, the moonroof will be immediately opened.

The auto reverse function can be activated when the moonroof is closed by automatic operation when the ignition switch is in the ON position or for about 45 seconds after the ignition switch is turned to the OFF position.

If the moonroof cannot be closed automatically when the auto reverse function activates due to a malfunction, push and hold the switch toward ②.

Depending on the environment or driving conditions, the auto reverse function may be activated if an impact or load similar to something being caught in the moonroof occurs.

If the moonroof does not operate

If the moonroof does not operate properly, perform the following procedure to initialize the moonroof operation system.

1. If the moonroof is open, close it fully by repeatedly pushing the switch toward ②.
2. Push and hold the switch toward ② to tilt the moonroof up.
3. Release the moonroof switch after the moonroof moves slightly up and down.
4. Push and hold the switch toward ① to fully tilt the moonroof down.
5. Check if the moonroof switch operates normally.

If the moonroof does not operate properly after performing the procedure above, have your vehicle checked by a NISSAN dealer.

CAUTION

Do not use for extended periods of time with the engine stopped. This could result in a discharged battery.

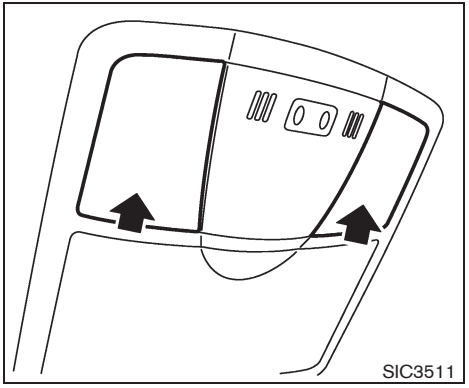

MAP LIGHTS

Push the light lens to turn the map light on or off.

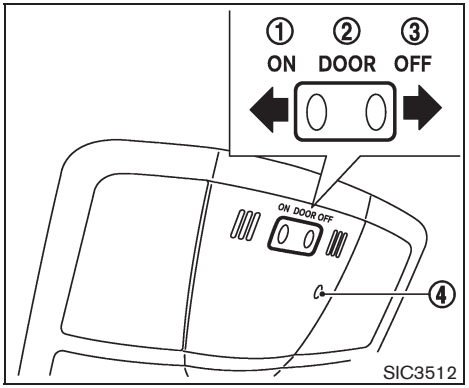

The map light control switch has three positions: ON ①, DOOR ② and OFF ③.

The light ④ (if so equipped) will illuminate when the headlight switch is turned to the ≡DC≡ or position.

ON position

When the switch is in the ON position ①, the map lights will illuminate.

DOOR position

When the switch is in the DOOR position ②, the map lights will illuminate under the following conditions:

- ignition switch is turned to the LOCK position
  - — remain on for about 15 seconds.
- doors are unlocked by pushing the unlock button (on the keyfob or Intelligent Key) or the request switch (Intelligent Key system equipped model), with the ignition switch in the LOCK position
  - — remain on for about 15 seconds.
- any door is opened and then closed with the ignition switch in the LOCK position
  - — remain on for about 15 seconds.
- any door is opened with the ignition switch in the ACC or ON position
  - — remain on while the door is opened. When the door is closed, the lights go off.

The lights will turn off after 30 minutes when the lights remain illuminated to prevent the battery from becoming discharged.

OFF position

When the switch is in the OFF position ③, the map lights will not illuminate, regardless of the condition.

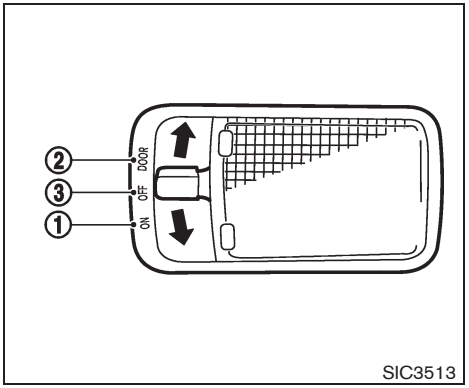

CEILING LIGHT

The ceiling light switch has three positions: ON, DOOR and OFF.

ON position

When the switch is in the ON position ①, the ceiling light will illuminate.

DOOR position

When the switch is in the DOOR position ②, the ceiling light will illuminate under the following conditions:

- ignition switch is turned to the LOCK position
  - — remain on for about 15 seconds.

- doors are unlocked by pushing the unlock button (on the keyfob or Intelligent Key) or the request switch (Intelligent Key system equipped model), with the ignition switch in the LOCK position

  — remain on for about 15 seconds.

- any door is opened and then closed with the ignition switch in the LOCK position

  — remain on for about 15 seconds.

- any door is opened with the ignition switch in the ACC or ON position

  — remain on while the door is opened. When the door is closed, the lights go off.

The light will turn off after 30 minutes when the lights remain illuminated to prevent the battery from becoming discharged.

OFF position

When the switch is in the OFF position ③, the ceiling light will not illuminate, regardless of the condition.

VANITY MIRROR LIGHTS (if so equipped)

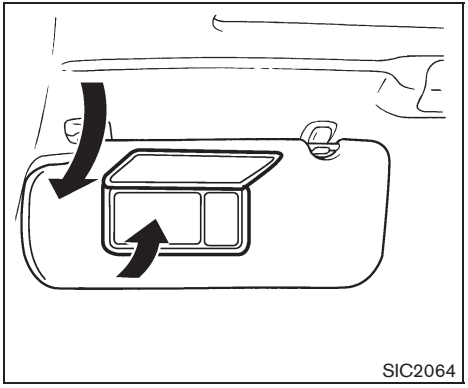

The light on the vanity mirror will turn on when the cover on the vanity mirror is opened.

When the cover is closed, the light will turn off.

The lights will turn off after 30 minutes when the lights remain illuminated to prevent the battery from becoming discharged.

CARGO LIGHT (if so equipped)

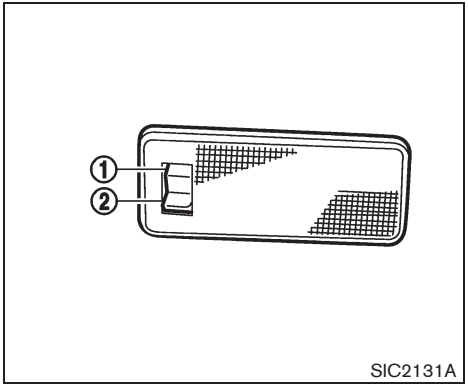

When the switch is in the ON position ①, the light illuminates while the lift gate is opened. When the lift gate is closed, the light will turn off.

When the switch is in the OFF position ②, the light will turn off.

The light will turn off after 30 minutes when the lights remain illuminated to prevent the battery from becoming discharged.

HomeLink® UNIVERSAL TRANSCEIVER (if so equipped)

HomeLink® Universal Transceiver provides a convenient way to consolidate the functions of up to three individual hand-held transmitters into one built-in device.

HomeLink® Universal Transceiver:

- Will operate most Radio Frequency (RF) devices such as garage doors, gates, home and office lighting, entry door locks and security systems.
- Is powered by your vehicle's battery. No separate batteries are required. If the vehicle's battery is discharged or is disconnected, HomeLink® will retain all programming.

Once HomeLink® Universal Transceiver is programmed, retain the original transmitter for future programming procedures (Example: new vehicle purchases). Upon sale of the vehicle, the programmed HomeLink® Universal Transceiver buttons should be erased for security purposes. For additional information, see "PROGRAMMING HomeLink®" later in this section.

WARNING

- **Do not use HomeLink® Universal Transceiver with any garage door opener that lacks safety stop and reverse features as required by federal safety standards. (These standards became effective for opener models manufactured after April 1, 1982.) A garage door opener which cannot detect an object in the path of a closing garage door and then automatically stop and reverse, does not meet current federal safety standards. Using a garage door opener without these features increases the risk of serious injury or death.**
- **During programming procedure, your garage door or security gate may open or close. Make sure that people and objects are clear of the garage door, gate, etc. that you are programming.**
- **Your vehicle's engine should be turned off while programming HomeLink® Universal Transceiver.**

PROGRAMMING HomeLink®

To program your HomeLink® Transceiver to operate a garage door, gate, or entry door opener, home or office lighting, you need to be at the same location as the device. Note: Garage door openers (manufactured after 1996) have "rolling code protection". To program a garage door opener equipped with "rolling code protection"; you will need to use a ladder to get up to the garage door opener motor to be able to access the "smart or learn" program button.

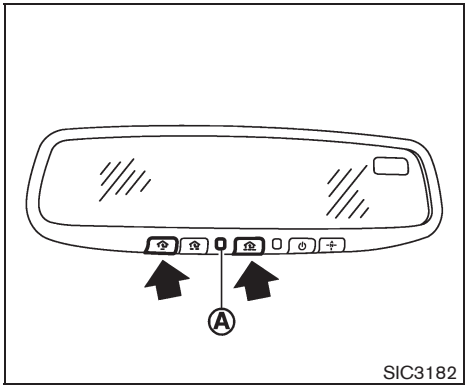

1. To begin, push and hold the 2 outer HomeLink® buttons (to clear the memory) until the indicator light Ⓐ blinks (after 20 seconds). Release both buttons.
2. Position the end of the hand-held transmitter 1-3 inches away from the HomeLink® surface.

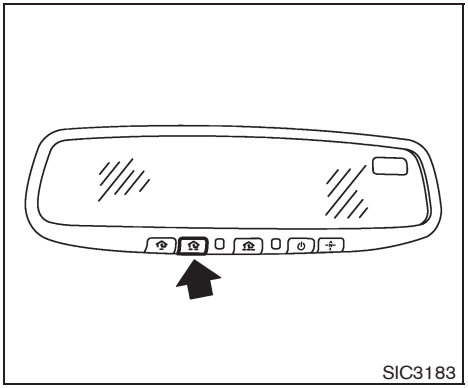

3. Using both hands, simultaneously push and hold both the HomeLink® button you want to program and the hand-held transmitter button.
   DO NOT release the buttons until step 4 has been completed.
4. Hold down both buttons until the indicator light on HomeLink® flashes, changing from a “slow blink” to a “rapid blink”. This could take up to 90 seconds. When the indicator light blinks rapidly, both buttons may be released. The rapidly flashing light indicates successful programming. To activate the garage door or other programmed device, push and hold the programmed HomeLink® button - releasing when the device begins to activate.
5. If the indicator light on HomeLink® blinks rapidly for two seconds and then turns solid, HomeLink® has picked up a “rolling code” garage door opener signal. You will need to proceed with the next steps to train HomeLink®, completing the programming may require a ladder and another person for convenience.
6. Push and release the program button located on the garage door opener’s motor to activate the “training mode”. This button is usually located near the antenna wire that hangs down from the motor. If the wire originates from under a light lens, you will need to remove the lens to access the training button.

NOTE:
Once you have pushed and released the training button on the garage door opener’s motor and the “training light” is lit, you have 30 seconds in which to perform step 7. For convenience, use the help of a second person to assist when performing this step.

7. Quickly (within 30 seconds of pushing and releasing the garage door opener training button) and firmly push and release the HomeLink® button you’ve just programmed. Push and release the HomeLink® button up

to three times to complete the training.

8. Your HomeLink® button should now be programmed. To program the remaining HomeLink® buttons for additional door or gate openers, follow steps 2 through 8 only.

NOTE:

Do not repeat step 1 unless you want to "clear" all previously programmed HomeLink® buttons.

If you have any questions or are having difficulty programming your HomeLink® buttons, please refer to the HomeLink® web site at: www.homelink.com or call 1-800-355-3515.

PROGRAMMING HomeLink® FOR CANADIAN CUSTOMERS

Prior to 1992, D.O.C. regulations required hand-held transmitters to stop transmitting after 2 seconds. To program your hand-held transmitter to HomeLink®, continue to push and hold the HomeLink® button (note steps 2 through 4 under "Programming HomeLink®") while you push and re-push ("cycle") your hand-held transmitter every 2 seconds until the indicator light flashes rapidly (indicating successful programming).

NOTE:

If programming a garage door opener, etc., it is advised to unplug the device during the "cycling" process to prevent possible damage to the garage door opener components.

OPERATING THE HomeLink® UNIVERSAL TRANSCEIVER

HomeLink® Universal Transceiver (once programmed) may now be used to activate the garage door, etc. To operate, simply push the appropriate programmed HomeLink® Universal Transceiver button. The red indicator light will illuminate while the signal is being transmitted.

PROGRAMMING TROUBLE-DIAGNOSIS

If HomeLink® does not quickly learn the hand-held transmitter information:

- replace the hand-held transmitter batteries with new batteries.
- position the hand-held transmitter with its battery area facing away from the HomeLink® surface.
- push and hold both the HomeLink® and hand-held transmitter buttons without interruption.
- position the hand-held transmitter 2 to 5 in (50 to 127 mm) away from the HomeLink® surface. Hold the transmitter in that position for up to 15 seconds. If HomeLink® is not programmed within that time, try holding the transmitter in another position - keeping the indicator light in view at all times.

If you continue to have programming difficulties, please contact the NISSAN Consumer Affairs Department. The phone numbers are located in the Foreword of this Owner's Manual.

CLEARING THE PROGRAMMED INFORMATION

Individual buttons cannot be cleared, however to clear all programming, push and hold the two outside buttons and release when the indicator light begins to flash (in approximately 20 seconds).

REPROGRAMMING A SINGLE HomeLink® BUTTON

To reprogram a HomeLink® Universal Transceiver button, complete the following.

1. Push and hold the desired HomeLink® button. **Do not** release the button until step 4 has been completed.
2. When the indicator light begins to flash slowly (after 20 seconds), position the hand-held transmitter 2 to 5 in (50 to 127 mm) away from the HomeLink® surface.
3. Push and hold the hand-held transmitter button.

4. The HomeLink® indicator light will flash, first slowly and then rapidly. When the indicator light begins to flash rapidly, release both buttons.

The HomeLink® Universal Transceiver button has now been reprogrammed. The new device can be activated by pushing the HomeLink® button that was just programmed. This procedure will not affect any other programmed HomeLink® buttons.

IF YOUR VEHICLE IS STOLEN

If your vehicle is stolen, you should change the codes of any non-rolling code device that has been programmed into HomeLink®. Consult the Owner's Manual of each device or call the manufacturer or dealer of those devices for additional information.

When your vehicle is recovered, you will need to reprogram the HomeLink® Universal Transceiver with your new transmitter information.

FCC Notice:

This device complies with FCC rules part 15. Operation is subject to the following two conditions: (1) This device may not cause harmful interference and (2) This device must accept any interference that may be received, including interference that may cause undesired operation.

The transmitter has been tested and complies with FCC and DOC/MDC rules. Changes or modifications not expressly approved by the party responsible for compliance could void the user's authority to operate the device.

DOC: ISTC 1763K1313

FCC I.D.: CB2V67690

3 Pre-driving checks and adjustments

Keys 3-2
NISSAN Vehicle Immobilizer System keys 3-2
Intelligent Keys (if so equipped)..... 3-3
Doors..... 3-4
Locking with key 3-4
Locking with inside lock knob 3-4
Locking with power door lock switch 3-5
Automatic door locks 3-5
Child safety rear door lock 3-6
Remote keyless entry system (if so equipped)..... 3-6
How to use remote keyless entry system 3-7
Intelligent Key system (if so equipped) 3-8
Intelligent Key operating range 3-10
Door locks/unlocks precaution 3-11
Intelligent Key operation..... 3-11
Warning lights and audible reminders 3-13
Troubleshooting guide 3-14
How to use remote keyless entry function 3-16
Hood 3-20
Lift gate 3-21
Lift gate release 3-22
Fuel-filler door 3-22
Opening the fuel-filler door..... 3-22
Fuel-filler cap 3-22
Steering wheel 3-24
Tilt operation..... 3-24
Sun visors 3-24
Mirrors..... 3-25
Inside mirror..... 3-25
Outside mirrors..... 3-26

A key number plate is supplied with your keys. Record the key number and keep it in a safe place (such as your wallet), not in the vehicle. If you lose your keys, see a NISSAN dealer for duplicates by using the key number. NISSAN does not record any key numbers so it is very important to keep track of your key number plate.

A key number is only necessary when you have lost all keys and do not have one to duplicate from. If you still have a key, this key can be duplicated by a NISSAN dealer.

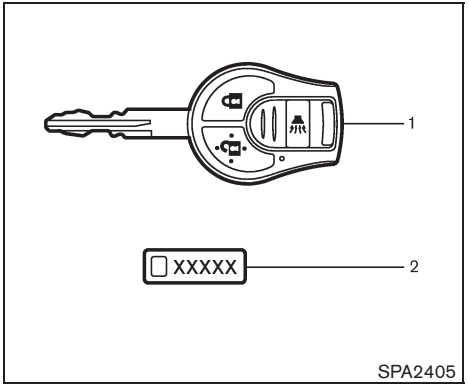

1. Master key (2)
2. Key number plate (1)

NISSAN VEHICLE IMMOBILIZER SYSTEM KEYS

Your vehicle can only be driven with the master keys which are registered to the NISSAN Vehicle Immobilizer System components in your vehicle. These keys have a transponder chip in the key head.

Never leave these keys in the vehicle.

Additional or replacement keys:

If you still have a key, the key number is not necessary when you need extra NISSAN Vehicle Immobilizer System keys. Your dealer can duplicate your existing key. As many as 5 keys can be used with one vehicle. You should bring all the registered keys that you have to a NISSAN dealer for registration. This is because the registration process will erase the memory of all key codes previously registered into the NISSAN Vehicle Immobilizer System. After the registration process, these components will only recognize keys coded into the NISSAN Vehicle Immobilizer System during registration. Any key that is not given to your dealer at the time of registration will no longer be able to start your vehicle.

CAUTION

Do not allow the NISSAN Vehicle Immobilizer System key, which contains an electrical transponder, to come in contact with salt water. This could cause the system to malfunction.

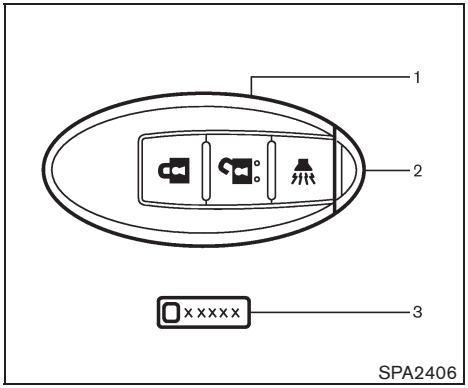

1. Intelligent Key (2)
2. Mechanical key (inside Intelligent Key) (2)
3. Key number plate (1)

INTELLIGENT KEYS (if so equipped)

Your vehicle can only be driven with the Intelligent Keys which are registered to your vehicle's Intelligent Key system components and NISSAN Vehicle Immobilizer System components. As many as 4 Intelligent Keys can be registered and used with one vehicle. The new keys must be registered by a NISSAN dealer prior to use with the Intelligent Key system and NISSAN Vehicle Immobilizer System of your vehicle. Since the registration process requires erasing all memory in the Intelligent Key components when registering new keys, be sure to take all Intelligent Keys that you have to the NISSAN dealer.

CAUTION

- **Do not allow the Intelligent Key, which contains electrical components, to come into contact with water or salt water. This could affect the system function.**
- **Do not drop the Intelligent Key.**
- **Do not strike the Intelligent Key sharply against another object.**
- **Do not place the Intelligent Key for an extended period in an area where temperatures exceed 140°F (60°C).**
- **Do not attach the Intelligent Key with a key holder that contains a magnet.**
- **Do not place the Intelligent Key near equipment that produces a magnetic field, such as a TV, audio equipment and personal computers.**

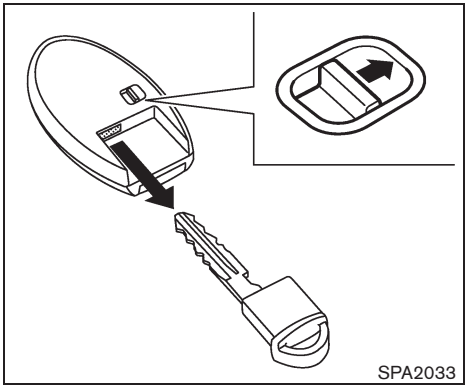

Mechanical key

To remove the mechanical key, release the lock knob at the back of the Intelligent Key.

To install the mechanical key, firmly insert it into the Intelligent Key until the lock knob returns to the lock position.

Use the mechanical key to lock or unlock the doors. (See "DOORS" later in this section.)

CAUTION

Always carry the mechanical key installed in the Intelligent Key.

WARNING

- **Always have the doors locked while driving. Along with the use of seat belts, this provides greater safety in the event of an accident by helping to prevent persons from being thrown from the vehicle. This also helps keep children and others from unintentionally opening the doors, and will help keep out intruders.**
- **Before opening any door, always look for and avoid oncoming traffic.**
- **Do not leave children unattended inside the vehicle. They could unknowingly activate switches or controls. Unattended children could become involved in serious accidents.**

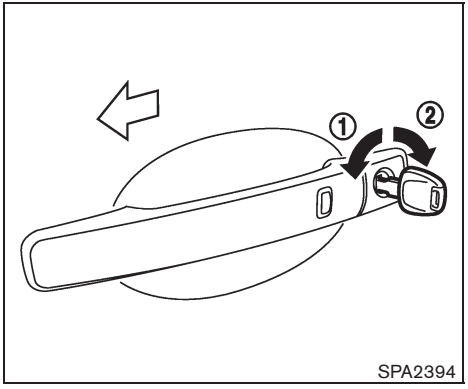

SPA2394

LOCKING WITH KEY

The power door lock system allows you to lock or unlock all doors simultaneously.

- Turning the driver's door key cylinder to the front of the vehicle (1) will lock all doors.
- Turning the driver's door key cylinder once to the rear of the vehicle (2) will unlock the driver's door. After returning the key to the neutral position, turning it to the rear again within 5 seconds will unlock all doors and the lift gate.

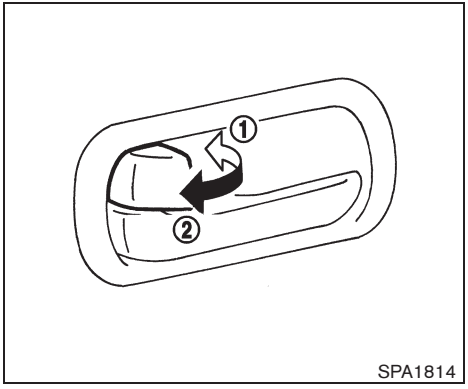

SPA1814

LOCKING WITH INSIDE LOCK KNOB

To lock the door without the key, move the inside lock knob to the lock position (1) then close the door.

To unlock, move the inside lock knob to the unlock position (2).

When locking the door without a key, be sure not to leave the key inside the vehicle.

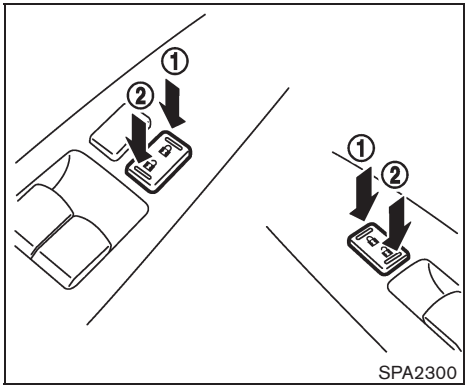

LOCKING WITH POWER DOOR LOCK SWITCH

Operating the power door lock switch will lock or unlock all the doors. The switches are located on the driver's and front passenger's door armrests.

To lock the doors, push the power door lock switch to the lock position ① with the driver's or front passenger's door open, then close the door.

When locking the door this way, be sure not to leave the key inside the vehicle.

To unlock the doors, push the power door lock switch to the unlock position ②.

Lockout protection

When the power door lock switch (driver or front passenger) is moved to the lock position with the key in the ignition switch or the Intelligent Key in the vehicle and any door open, all doors will lock and unlock automatically.

This function helps to prevent the keys from being accidentally locked inside the vehicle.

AUTOMATIC DOOR LOCKS

- All doors will be locked automatically when the vehicle speed reaches 15 MPH (24 km/h).
- All doors will be unlocked automatically when the ignition switch is turned to the ACC position.

The automatic lock and unlock functions can be deactivated or activated independently of each other.

To deactivate or activate the automatic lock or unlock system, perform the following procedure.

1. Close all doors.
2. Turn the ignition switch to the ON position.
3. Do one of the following within 20 seconds of performing step 2.
   - To change AUTO UNLOCK settings: push and hold the power door lock switch to the 🔓 position (UNLOCK) for more than 5 seconds.
   - To change AUTO LOCK settings: push and hold the power door lock switch to the 🔒 position (LOCK) for more than 5 seconds.
4. When activated, the hazard indicator will flash twice. When deactivated, the hazard indicator will flash once.
5. The ignition must be placed in the OFF and ON position again between each setting change.

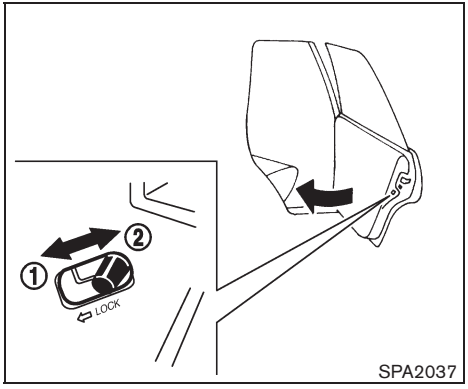

CHILD SAFETY REAR DOOR LOCK

Child safety rear door locks help prevent the rear doors from being opened accidentally, especially when small children are in the vehicle.

When the levers are in the lock position ①, the rear doors can be opened only from the outside.

To disengage, move the levers to the unlock position ②.

REMOTE KEYLESS ENTRY SYSTEM (if so equipped)

It is possible to lock/unlock all doors (including the lift gate), and activate the panic alarm by using the keyfob from outside the vehicle.

Before locking the doors, make sure the key is not left in the vehicle.

The keyfob can operate at a distance of approximately 33 ft (10 m) from the vehicle. (The effective distance depends upon the conditions around the vehicle.)

As many as 5 keyfobs can be used with one vehicle. For information concerning the purchase and use of additional keyfobs, contact a NISSAN dealer.

The keyfob will not function:

- When the keyfob is not within the operational range.
- When the doors are open or not closed securely.
- When the key is in the ignition switch.
- When the battery is discharged.

⚠ CAUTION

The following conditions or occurrences will damage the keyfob.

- **Do not allow the keyfob to become wet.**
- **Do not drop the keyfob.**
- **Do not strike the keyfob sharply against another object.**
- **Do not place the keyfob for an extended period in an area where temperatures exceed 140°F (60°C).**

If a keyfob is lost or stolen, NISSAN recommends erasing the ID code of that keyfob. This will prevent the keyfob from unauthorized use to unlock the vehicle. For information regarding the erasing procedure, please contact a NISSAN dealer.

If the indicator light on the keyfob does not illuminate when pushing the buttons, the keyfob battery may be discharged.

For information regarding the replacement of a battery, see “BATTERY REPLACEMENT” in the “8. Maintenance and do-it-yourself” section.

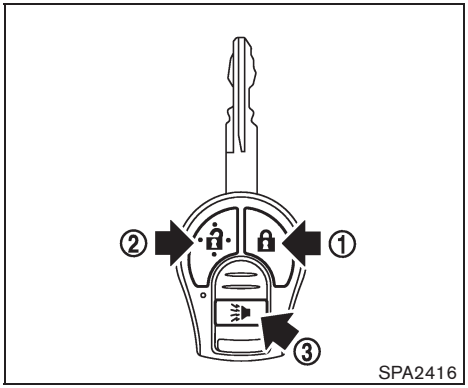

① LOCK button
② UNLOCK button
③ PANIC button

HOW TO USE REMOTE KEYLESS ENTRY SYSTEM

Locking doors

1. Remove the key from the ignition switch.
2. Close all the doors.
3. Push the LOCK button on the keyfob.
4. All the doors will lock.

   All of the doors will lock when the LOCK button is pushed even though a door remains open.

5. The hazard indicator flashes twice and the horn chirps once.

- When the LOCK button is pushed with all doors locked, the hazard indicator flashes twice and the horn chirps once as a reminder that the doors are already locked.
- Operate the door handles to confirm that the doors have been securely locked.

Unlocking doors

1. Push the UNLOCK button on the keyfob once.
   - The driver's door unlocks.
   - The hazard indicator flashes once if all doors are completely closed.
   - The interior light illuminates and the light timer activates for 15 seconds when the switch is in the DOOR position.
2. Push the UNLOCK button again within 5 seconds.
   - All the doors and the lift gate unlock.
   - The hazard indicator flashes once if all doors are completely closed.

All doors will be locked automatically unless one of the following operations is performed within 1 minute of pushing the UNLOCK button.

- Any door or lift gate is opened.
- The ignition switch is turned to the ON position.

The interior light can be turned off without waiting for 15 seconds by turning the ignition switch to the ON position or by locking the doors with the keyfob.

Using the panic alarm

If you are near your vehicle and feel threatened, you may activate the alarm to call attention by pushing and holding the PANIC button on the keyfob for **longer than 1 second** (with the key removed from the ignition switch).

The theft warning alarm and headlights will stay on for 25 seconds.

The panic alarm stops when:

- It has run for 25 seconds, or
- The LOCK button or the UNLOCK button is pushed, or
- The PANIC button is pushed on the keyfob for longer than 1 second.

OPERATION GUIDE

MODE (Push "LOCK" and "UNLOCK" buttons for more than 2 seconds to switch)		Switching indicator	LOCK	UNLOCK
Hazard indicator and horn →	HAZARD INDICATOR ONLY	HAZARD – 3 times	HAZARD – twice	No operation
Hazard indicator only →	HAZARD INDICATOR AND HORN	HAZARD – once HORN – once	HAZARD – twice HORN – once	HAZARD – once

SPA1260

Setting hazard indicator and horn mode

This vehicle is set in hazard indicator and horn mode when you first receive the vehicle.

In hazard indicator and horn mode, when the LOCK button is pushed, the hazard indicator flashes twice and the horn chirps once. When the UNLOCK button is pushed, the hazard indicator flashes once.

If hazard indicator and horn mode is not necessary, you can switch to hazard indicator only mode by following the switching procedure.

In hazard indicator only mode, when the LOCK button is pushed, the hazard indicator flashes twice. When the UNLOCK button is pushed, neither the hazard indicator nor the horn operates.

Switching procedure:

Push the LOCK and UNLOCK buttons simultaneously for more than 2 seconds to switch from one mode to the other.

When pushing the buttons to set hazard indicator only mode, the hazard indicator flashes 3 times.

When pushing the buttons to set hazard indicator and horn mode, the hazard indicator flashes once and the horn chirps once.

WARNING

- **Radio waves could adversely affect electric medical equipment. Those who use a pacemaker should contact the electric medical equipment manufacturer for the possible influences before use.**
- **The Intelligent Key transmits radio waves when the buttons are pushed. The FAA advises that the radio waves may affect aircraft navigation and communication systems. Do not operate the Intelligent Key while on an airplane. Make sure the buttons are not operated unintentionally when the unit is stored during a flight.**

The Intelligent Key system can operate all the door locks using the remote controller function or pushing the request switch on the vehicle without taking the key out from a pocket or purse. The operating environment and/or conditions may affect the Intelligent Key system operation.

Be sure to read the following before using the Intelligent Key system.

CAUTION

- **Be sure to carry the Intelligent Key with you when operating the vehicle.**
- **Never leave the Intelligent Key in the vehicle when you leave the vehicle.**

The Intelligent Key is always communicating with the vehicle as it receives radio waves. The Intelligent Key system transmits weak radio waves. Environmental conditions may interfere with the operation of the Intelligent Key system under the following operating conditions.

- When operating near a location where strong radio waves are transmitted, such as a TV tower, power station and broadcasting station.
- When in possession of wireless equipment, such as a cellular telephone, transceiver, and CB radio.
- When the Intelligent Key is in contact with or covered by metallic materials.
- When any type of radio wave remote control is used nearby.
- When the Intelligent Key is placed near an electric appliance such as a personal computer.
- When the vehicle is parked near a parking meter.

In such cases, correct the operating conditions before using the Intelligent Key function or use the mechanical key.

Although the life of the battery varies depending on the operating conditions, the battery's life is approximately 2 years. If the battery is discharged, replace it with a new one.

Since the Intelligent Key is continuously receiving radio waves, if the key is left near equipment which transmits strong radio waves, such as signals from a TV and personal computer, the battery life may become shorter.

For information regarding replacement of a battery, see "BATTERY REPLACEMENT" in the "8. Maintenance and do-it-yourself" section.

As many as 4 Intelligent Keys can be registered and used with one vehicle. For information about the purchase and use of additional Intelligent Keys, contact a NISSAN dealer.

CAUTION

- **Do not allow the Intelligent Key, which contains electrical components, to come into contact with water or salt water. This could affect the system function.**
- **Do not drop the Intelligent Key.**
- **Do not strike the Intelligent Key sharply against another object.**
- **Do not change or modify the Intelligent Key.**
- **Wetting may damage the Intelligent Key. If the Intelligent Key gets wet, immediately wipe until it is completely dry.**
- **Do not place the Intelligent Key for an extended period in an area where temperatures exceed 140°F (60°C).**
- **Do not attach the Intelligent Key with a key holder that contains a magnet.**
- **Do not place the Intelligent Key near equipment that produces a magnetic field, such as a TV, audio equipment, personal computers or cellular phone.**

If an Intelligent Key is lost or stolen, NISSAN recommends erasing the ID code of that Intelligent Key from the vehicle. This may prevent the unauthorized use of the Intelligent Key to operate the vehicle. For information regarding

the erasing procedure, contact a NISSAN dealer.

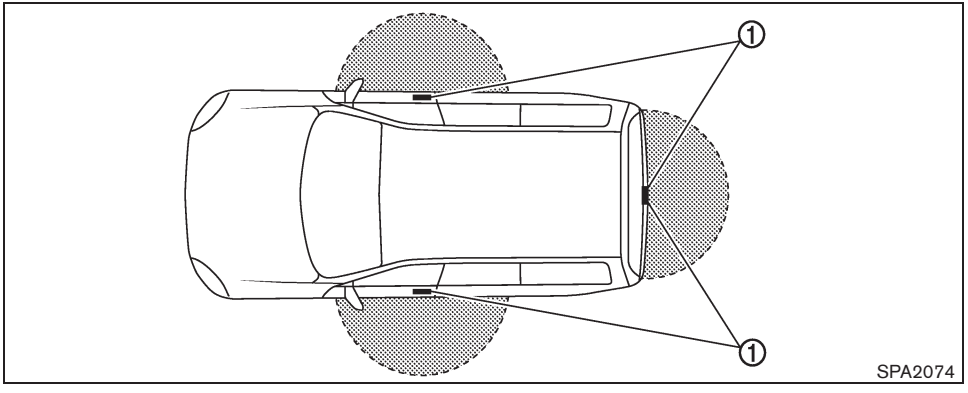

INTELLIGENT KEY OPERATING RANGE

The Intelligent Key functions can only be used when the Intelligent Key is within the specified operating range from the request switch ①.

When the Intelligent Key battery is discharged or strong radio waves are present near the operating location, the Intelligent Key system's operating range becomes narrower, and the Intelligent Key may not function properly.

The operating range is within 31.50 in (80 cm) from each request switch ①.

If the Intelligent Key is too close to the door glass, handle or rear bumper the request switches may not function.

When the Intelligent Key is within the operating range, it is possible for anyone who does not carry the Intelligent Key to push the request switch to lock/unlock the doors.

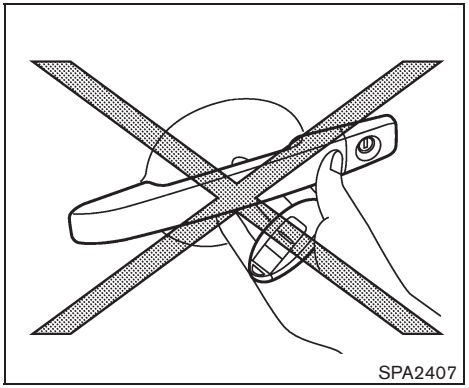

DOOR LOCKS/UNLOCKS PRECAUTION

- Do not push the door handle request switch with the Intelligent Key held in your hand as illustrated. The close distance to the door handle will cause the Intelligent Key system to have difficulty recognizing that the Intelligent Key is outside the vehicle.
- After locking with the door handle request switch, verify the doors are securely locked by testing them.
- To prevent the Intelligent Key from being left inside the vehicle, make sure you carry the key with you and then lock the doors.
- Do not pull the door handle before pushing the door handle request switch. The door will be unlocked but will not open. Release the door handle once and pull it again to open the door.

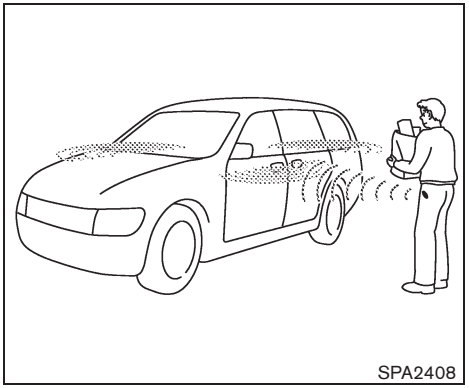

INTELLIGENT KEY OPERATION

You can lock or unlock the doors without taking the key out from your pocket or bag.

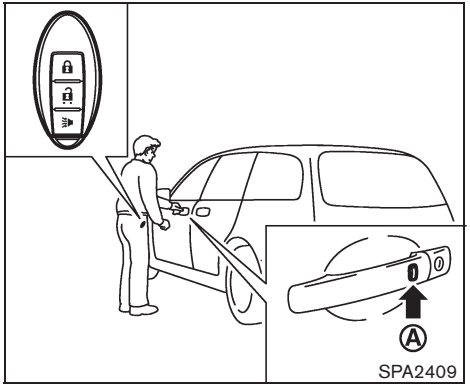

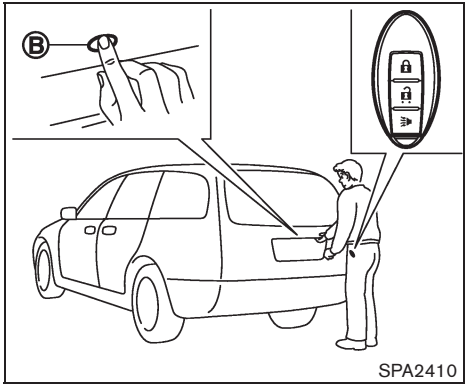

When you carry the Intelligent Key with you, you can lock or unlock all doors by pushing the door handle request switch (driver's or front passenger's) Ⓐ or lift gate request switch Ⓑ within the range of operation.

When you lock or unlock the doors, the hazard indicator will flash and the horn (or the outside chime) will sound as a confirmation. For details, see "Setting hazard indicator and horn mode" later in this section.

Locking doors

1. Turn the ignition switch to the LOCK position.*1
2. Carry the Intelligent Key with you.
3. Close all the doors.*2
4. Push the door handle request switch (driver's or front passenger's) Ⓐ or the lift gate request switch Ⓑ while carrying the Intelligent Key with you.*3
5. All the doors and the lift gate will lock.
6. The hazard indicator flashes twice and the outside chime sounds twice.

*1: Doors will lock with the request switch while the ignition switch is in the ACC or ON position.

*2: Doors will not lock with the request switch while any door is open.

*3: Doors will not lock with the request switch when the Intelligent Key is left inside the vehicle. However, when an Intelligent Key is inside the vehicle, doors can be locked with another registered Intelligent Key.

Unlocking doors

1. Push the door handle request switch Ⓐ or the lift gate request switch Ⓑ while carrying the Intelligent Key with you.
2. The hazard indicator flashes once and outside chime sounds once. The corresponding door or the lift gate will unlock.
3. Push the request switch again within 5 seconds.
4. The hazard indicator flashes once and outside chime sounds once again. All the doors and the lift gate will unlock.

All doors will be locked automatically unless one of the following operations is performed within 1 minute after pushing the request switch while the doors are locked.

- Opening any doors.
- Pushing the ignition switch.
- Inserting the mechanical key into the ignition switch.

During this 1-minute time period, if the UNLOCK button on the Intelligent Key is pushed, all doors will be locked automatically after another 1 minute.

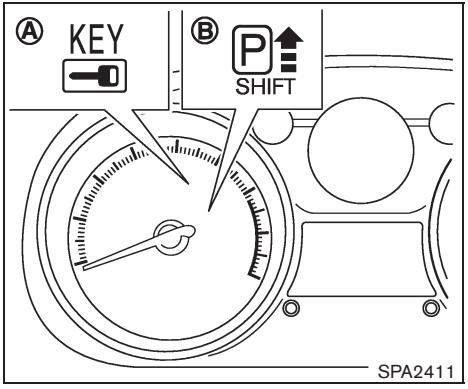

(A) Intelligent Key system warning light
(B) P position selecting warning light

WARNING LIGHTS AND AUDIBLE REMINDERS

The Intelligent Key system is equipped with a function that is designed to minimize improper operations and to help prevent the vehicle from being stolen. The warning buzzer sounds and the warning light illuminates when improper operations are detected.

CAUTION

When the buzzer sounds and the warning light illuminates, be sure to check both the vehicle and the Intelligent Key.

TROUBLESHOOTING GUIDE

Symptom		Possible cause	Action to take
When pushing the request switch	The outside buzzer sounds for approximately 2 seconds.	The doors cannot be locked.	Take out the Intelligent Key from the vehicle and push the request switch.
			Turn the ignition switch to the LOCK position and push the request switch while carrying the Intelligent Key with you.
			Close all the doors securely and push the request switch while carrying the Intelligent Key with you.
When closing the doors	The outside buzzer sounds for approximately 10 seconds.	The ignition switch is not turned to the LOCK position.	Turn the ignition switch to the LOCK position.
	The Intelligent Key system warning light in the instrument panel blinks in red and the outside buzzer sounds 3 times.	The Intelligent Key is not in the vehicle.	Carry the Intelligent Key with you.
	The outside buzzer sounds for approximately 3 seconds and all doors unlock.	The Intelligent Key has been left in the vehicle.	Carry the Intelligent Key from the vehicle and close the door.
When opening the driver's door	A warning chime sounds continuously.	The ignition switch is not in the LOCK position, or the mechanical key is inserted into the ignition switch.	Turn the ignition switch to the LOCK position.
			Remove the mechanical key from the ignition switch.
When stopping the engine	The P position selecting warning light in the instrument panel blinks in red.	The selector lever is not in the P (Park) position.	Shift the selector lever to the P (Park) position.
When turning the ignition switch	A warning chime sounds continuously.	The ignition switch is not turned to the LOCK position.	Turn the ignition switch to the LOCK position.
When starting the engine	The Intelligent Key system warning light in the instrument panel blinks in green.	The battery charge is low.	Replace the battery with a new one. (See "BATTERY REPLACEMENT" in the "8. Maintenance and do-it-yourself" section.)

Symptom		Possible cause	Action to take
When pushing the ignition switch	The Intelligent Key system warning light in the instrument panel illuminates in red.	The Intelligent Key is not in the vehicle.	If the key warning light illuminates in red even while you are carrying the Intelligent Key, the battery is completely discharged. Replace the battery with a new one. (See “BATTERY REPLACEMENT” in the “8. Maintenance and do-it-yourself” section.)

HOW TO USE REMOTE KEYLESS ENTRY FUNCTION

WARNING

- **Radio waves could adversely affect electric medical equipment. Those who use a pacemaker should contact the electric medical equipment manufacturer for the possible influences before use.**
- **The Intelligent Key transmits radio waves when the buttons are pushed. The FAA advises that the radio waves may affect aircraft navigation and communication systems. Do not operate the Intelligent Key while on an airplane. Make sure the buttons are not operated unintentionally when the unit is stored during a flight.**

CAUTION

- **Do not allow the Intelligent Key, which contains electrical components, to come into contact with water or salt water. This could affect the system function.**
- **Do not drop the Intelligent Key.**
- **Do not strike the Intelligent Key sharply against another object.**
- **Do not change or modify the Intelligent Key.**
- **Wetting may damage the Intelligent Key. If the Intelligent Key gets wet, immediately wipe until it is completely dry.**
- **Do not place the Intelligent Key for an extended period in an area where temperatures exceed 140°F (60°C).**
- **Do not attach the Intelligent Key with a key holder that contains a magnet.**
- **Do not place the Intelligent Key near equipment that produces a magnetic field, such as a TV, audio equipment, personal computers or cellular phone.**

The remote keyless entry function can operate all door locks using the remote keyless entry function of the Intelligent Key. The remote keyless entry function can operate at a distance of approximately 33 ft (10 m) from the vehicle. (The operating distance depends upon the conditions around the vehicle.)

The remote keyless entry function will not operate:

- When the Intelligent Key is not within the operational range.
- When the doors are open or not closed securely.
- When the Intelligent Key battery is discharged.

The remote keyless entry function can also operate the vehicle alarm.

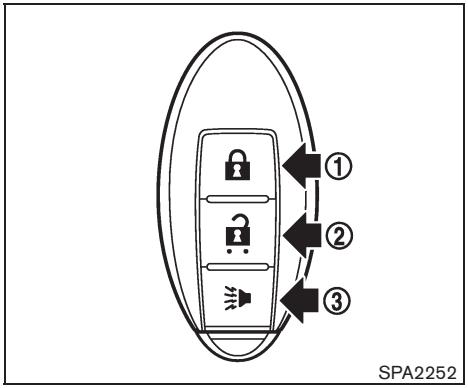

① LOCK button
② UNLOCK button
③ PANIC button

When you lock or unlock the doors, the hazard indicator will flash and the horn (or the outside chime) will sound as a confirmation. For details, see “Setting hazard indicator and horn mode” later in this section.

Locking doors

1. Turn the ignition switch to the LOCK position.*1
2. Carry the Intelligent Key with you.
3. Close all the doors.*2
4. Push the LOCK button ① on the Intelligent Key.
5. All the doors and the lift gate will lock.
6. The hazard indicator flashes twice and the horn chirps once.

*1: Doors will lock with the Intelligent Key while the ignition switch is in the ACC or ON position.

*2: Doors will not lock with the Intelligent Key while any door is open.

Operate the door handles to confirm that the doors have been securely locked.

Unlocking doors

1. Push the UNLOCK button ② on the Intelligent Key.
2. The hazard indicator flashes once. The driver’s door will unlock.
3. Push the UNLOCK button again within 5 seconds.
4. The hazard indicator flashes once. All the doors and the lift gate will unlock.

All doors will be locked automatically unless one of the following operations is performed within 1 minute after pushing the UNLOCK button while the doors are locked.

- Opening any doors.
- Pushing the ignition switch.
- Inserting the mechanical key into the ignition switch.

During this 1-minute time period, if the UNLOCK button is pushed, all doors will be locked automatically after another 1 minute.

Using panic alarm

If you are near your vehicle and feel threatened, you may activate the alarm to call attention as follows:

1. Push the PANIC button ③ on the Intelligent Key for **more than 1 second.**
2. The theft warning alarm and headlights will stay on for 25 seconds.
3. The panic alarm stops when:
   - It has run for 25 seconds, or
   - Any of the buttons on the Intelligent Key is pushed. (Note: Panic button must be pushed for more than 1 second.)

Setting hazard indicator and horn mode

This vehicle is set in hazard indicator and horn mode when you first receive the vehicle.

In hazard indicator and horn mode, when the LOCK button ① is pushed, the hazard

indicator flashes twice and the horn chirps once. When the UNLOCK button ② is pushed, the hazard indicator flashes once.

If horns are not necessary, the system can be switched to the hazard indicator mode.

In hazard indicator mode, when the LOCK button is pushed, the hazard indicator flashes twice. When the UNLOCK button is pushed, neither the hazard indicator nor the horn operates.

Hazard indicator and horn mode:

Operation	DOOR LOCK	DOOR UNLOCK
Pushing door handle request switch or lift gate request switch	HAZARD - **twice** OUTSIDE CHIME - **twice**	HAZARD - **once** OUTSIDE CHIME - **once**
Pushing or button	HAZARD - **twice** HORN - **once**	HAZARD - **once** HORN - none

Hazard indicator mode:

Operation	DOOR LOCK	DOOR UNLOCK
Pushing door handle request switch or lift gate request switch	HAZARD - **twice**	HAZARD - none
Pushing or button	HAZARD - **twice**	HAZARD - none

Switching procedure:

To switch the hazard indicator and horn operation, push the LOCK 🔒 ① and UNLOCK 🔓 ② buttons on the Intelligent Key simultaneously for more than 2 seconds.

- When the hazard indicator mode is set, the hazard indicator flashes 3 times.
- When the hazard indicator and horn mode is set, the hazard indicator flashes once and the horn chirps once.

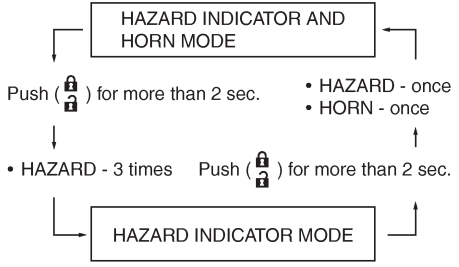

WARNING

- **Make sure the hood is completely closed and latched before driving. Failure to do so could cause the hood to fly open and result in an accident.**
- **If you see steam or smoke coming from the engine compartment, to avoid injury do not open the hood.**

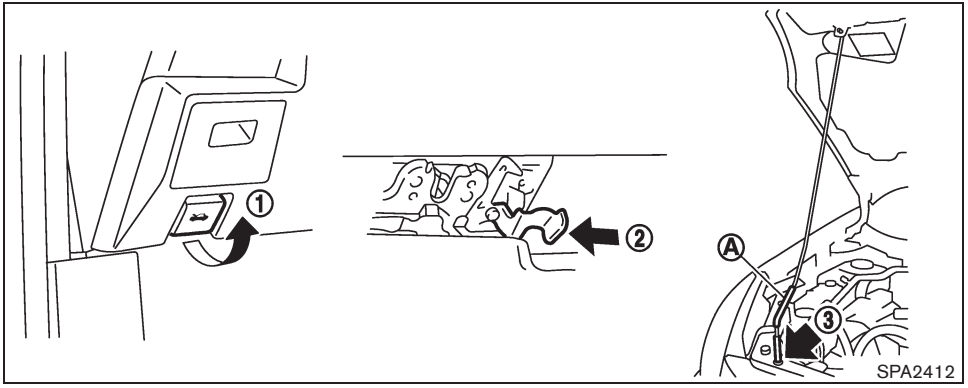

When opening the hood:

1. Pull the hood release handle ① located below the instrument panel; the hood will then spring up slightly.
2. Pull the lever ② up at the front of the hood with your fingertips.
3. Raise the hood.
4. Remove the support rod from the hood and insert it into the slot ③.

Hold the coated part Ⓐ when removing or resetting the support rod. Avoid direct contact with the metal parts, as they may be hot immediately after the engine has been stopped.

When closing the hood:

1. Return the support rod to its original position.
2. Slowly move the hood down to latch the lock.
3. Push the hood down to lock the hood securely into place.

WARNING

- **Always be sure the lift gate has been closed securely to prevent it from opening while driving.**
- **Do not drive with the lift gate open. This could allow dangerous exhaust gases to be drawn into the vehicle. See “EXHAUST GAS (carbon monoxide)” in the “5. Starting and driving” section of this manual.**
- **Make sure that all passengers have their hands, etc. inside the vehicle before closing the lift gate.**

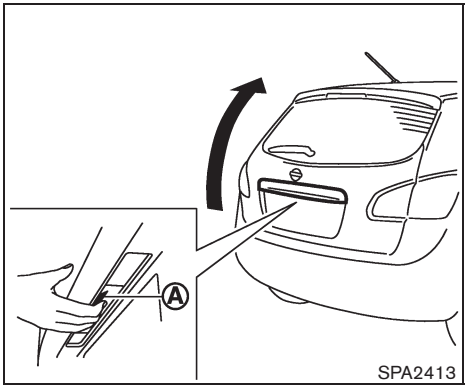

To open the lift gate, unlock it and push the opener switch Ⓐ . Pull up the lift gate to open.

The lift gate can be unlocked by:

— pushing the unlock button 🔓 on the keyfob or the Intelligent Key (if so equipped) twice.

— pushing the lift gate request switch (if so equipped).

— pushing the power door lock switch to the unlock position.

— inserting the key into the driver’s door key cylinder and turning it to the rear of the vehicle twice.

To close the lift gate, pull down until it securely locks.

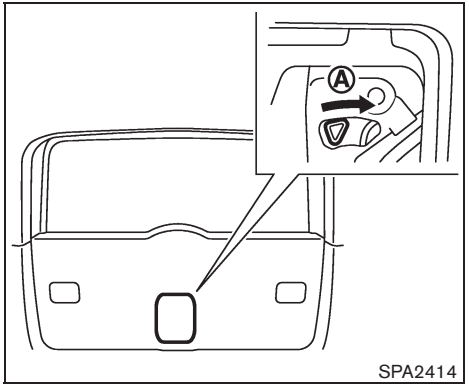

LIFT GATE RELEASE

If the lift gate cannot be opened due to a discharged battery, follow the these steps.

1. Remove the cover inside of the lift gate with a suitable tool.
2. Move the lever toward the direction Ⓐ as illustrated to open the lift gate.

Have the vehicle checked by a NISSAN dealer.

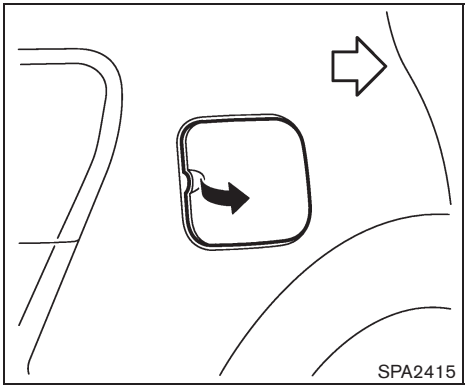

OPENING THE FUEL-FILLER DOOR

To open the fuel-filler door, pull the left side of the door.

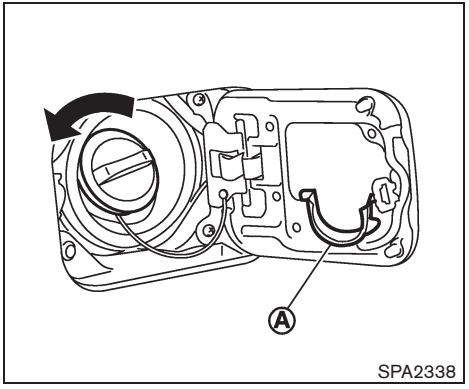

FUEL-FILLER CAP

The fuel-filler cap is a ratcheting type. Turn the cap counterclockwise to remove. To tighten, turn the cap clockwise until ratcheting clicks are heard.

Put the fuel-filler cap on the cap holder Ⓐ while refueling.

WARNING

- **Gasoline is extremely flammable and highly explosive under certain conditions. You could be burned or seriously injured if it is misused or**

mishandled. Always stop engine and do not smoke or allow open flames or sparks near the vehicle when refueling.

- Do not attempt to top off the fuel tank after the fuel pump nozzle shuts off automatically. Continued refueling may cause fuel overflow, resulting in fuel spray and possibly a fire.
- Use only an original equipment type fuel-filler cap as a replacement. It has a built-in safety valve needed for proper operation of the fuel system and emission control system. An incorrect cap can result in a serious malfunction and possible injury. It could also cause the malfunction indicator light to come on.
- Never pour fuel into the throttle body to attempt to start your vehicle.
- Do not fill a portable fuel container in the vehicle or trailer. Static electricity can cause an explosion of flammable liquid, vapor or gas in any vehicle or trailer. To reduce the risk of serious injury or death when filling portable fuel containers:
  - Always place the container on the ground when filling.
  - Do not use electronic devices when filling.
  - Keep the pump nozzle in contact with the container while you are filling it.
  - Use only approved portable fuel containers for flammable liquid.

CAUTION

- If fuel is spilled on the vehicle body, flush it away with water to avoid paint damage.
- Insert the cap straight into the fuel-filler tube, then tighten until the fuel-filler cap clicks. Failure to tighten the fuel-filler cap properly may cause the SERVICE ENGINE SOON malfunction indicator light (MIL) to illuminate. If the SERVICE ENGINE SOON light illuminates because the fuel-filler cap is loose or missing, tighten or install the cap and continue to drive the vehicle. The SERVICE ENGINE SOON light should turn off after a few driving trips. If the SERVICE ENGINE SOON light does not turn off after a few driving trips, have the vehicle inspected by a NISSAN dealer.

For additional information, see “Malfunction Indicator Light (MIL)” in the “2. Instruments and controls” section.

STEERING WHEEL

WARNING

Do not adjust the steering wheel while driving. You could lose control of your vehicle and cause an accident.

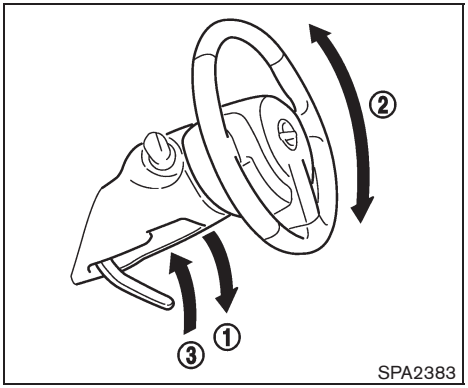

TILT OPERATION

Pull the lock lever down ① and adjust the steering wheel up or down ② to the desired position.

Push the lock lever up ③ securely to lock the steering wheel in place. A clicking noise may be heard when the lever is moved to the lock position.

SUN VISORS

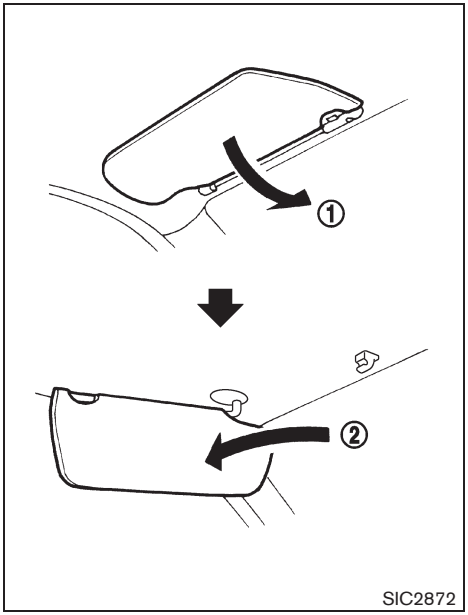

1. To block out glare from the front, swing down the sun visor ①.
2. To block glare from the side, remove the sun visor from the center mount and swing it to the side ②.

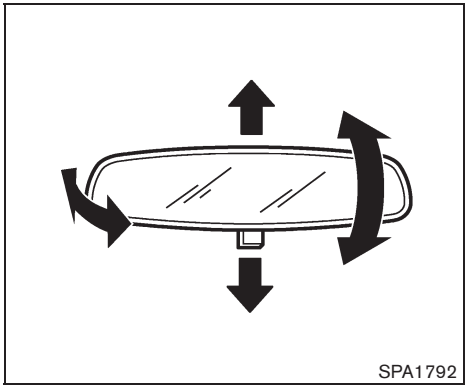

INSIDE MIRROR

Adjust the height and the angle of the inside mirror to the desired position.

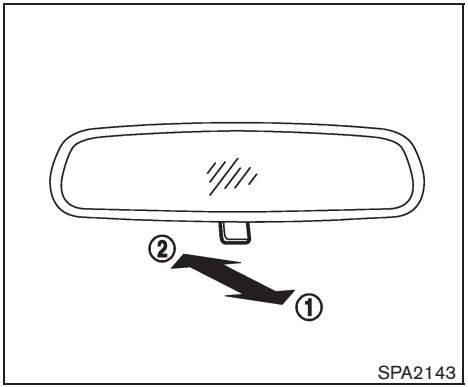

Manual anti-glare type

The night position ① will reduce glare from the headlights of vehicles behind you at night.

Use the day position ② when driving in daylight hours.

WARNING

Use the night position only when necessary, because it reduces rear view clarity.

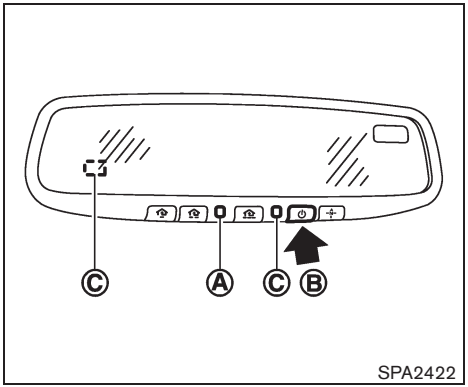

Automatic anti-glare type

The inside mirror is designed so that it automatically changes reflection according to the intensity of the headlights of the following vehicle.

The anti-glare system will be automatically turned on when the ignition switch is turned to the ON position.

When the system is turned on, the indicator light Ⓐ will illuminate and excessive glare from the headlights of the vehicle behind you will be reduced.

Push the ⏻ switch Ⓑ to make the inside rearview mirror operate normally and the indi-

cator light will turn off. Push the ⏻ switch again to turn the system on.

Do not allow any object to cover the sensors ⓒ or apply glass cleaner on them. Doing so will reduce the sensitivity of the sensors, resulting in improper operation.

For the compass operation, see “COMPASS” in the “2. Instruments and controls” section.

For the HomeLink® Universal Transceiver operation, see “HomeLink® UNIVERSAL TRANSCEIVER” in the “2. Instruments and controls” section.

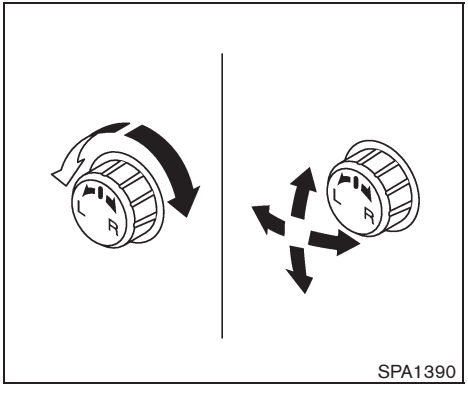

SPA1390

OUTSIDE MIRRORS

⚠ WARNING

Objects viewed in the outside mirror on the passenger side are closer than they appear. Be careful when moving to the right. Using only this mirror could cause an accident. Use the inside mirror or glance over your shoulder to properly judge distances to other objects.

Adjusting outside mirrors

The outside mirror control switch is located on the left side of the instrument panel.

The outside mirror will operate only when the ignition switch is in the ACC or ON position.

Turn the switch right or left to select the right or left side mirror, then adjust using the control switch.

Defrosting outside mirrors (if so equipped)

The outside mirrors will be heated when the rear window defroster switch is operated.

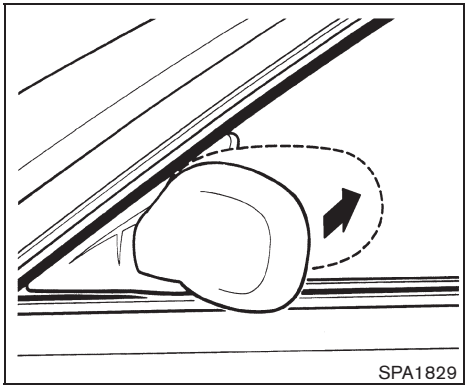

Foldable outside mirrors

Fold the outside mirror by pushing it toward the rear of the vehicle.

MEMO

4 Heater, air conditioner, audio and phone systems

Ventilators 4-2
Heater and air conditioner 4-2
Manual air conditioner 4-3
In-cabin microfilter 4-5
Servicing air conditioner 4-5
Audio system 4-6
Audio operation precautions 4-6
FM-AM radio with Compact Disc (CD) player 4-13
FM-AM-SAT radio with Compact Disc (CD) changer 4-17
CD care and cleaning 4-22
Steering wheel switch for audio control (if so equipped) 4-23
Antenna 4-24
Car phone or CB radio 4-24
Bluetooth® Hands-Free Phone System with NISSAN voice recognition (if so equipped) 4-25
Using system 4-27
Speaker Adaptation (SA) mode 4-36
Troubleshooting guide 4-39

VENTILATORS

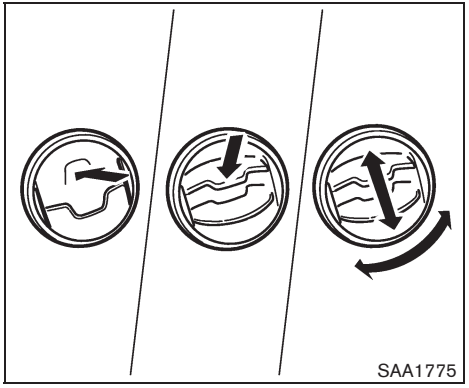

Open or close, and adjust the air flow direction of ventilators as illustrated.

HEATER AND AIR CONDITIONER

WARNING

- **The air conditioner cooling function operates only when the engine is running.**
- **Do not leave children or adults who would normally require the support of others alone in your vehicle. Pets should not be left alone either. On hot, sunny days, temperatures in a closed vehicle could quickly become high enough to cause severe or possibly fatal injuries to people or animals.**
- **Do not use the recirculation mode for long periods as it may cause the interior air to become stale and the windows to fog up.**

Start the engine and operate the air conditioner.

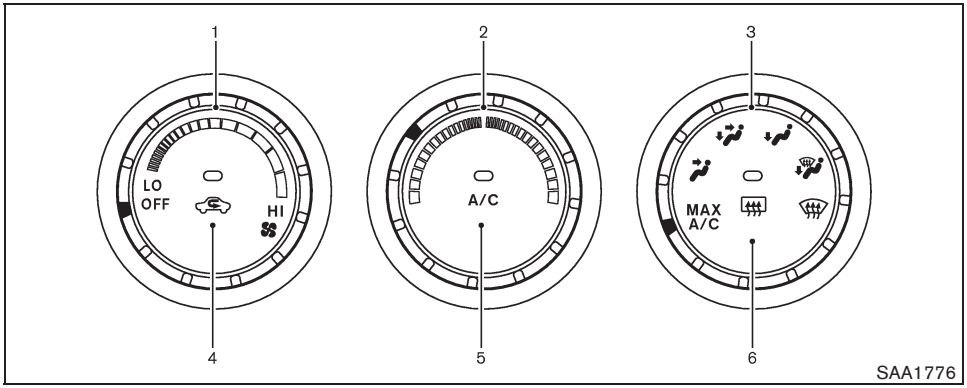

MANUAL AIR CONDITIONER

1. Fan speed control dial
2. Temperature control dial
3. Air flow control dial
4. Air recirculation button
5. A/C (Air Conditioner) button
6. Rear window defroster button (See “REAR WINDOW AND OUTSIDE MIRROR DEFROSTER SWITCH” in the “2. Instruments and controls” section.)

To turn off the heater and air conditioner, turn the fan speed control dial to the OFF position.

Controls

Outside air circulation:

Push the air recirculation button to turn off the indicator light on the button. The air flow is drawn from outside the vehicle.

Air recirculation:

Push the air recirculation button to turn on the indicator light on the button. The air flow is circulated inside the vehicle.

Air flow control:

Turn the air flow control dial to change the air flow mode.

MAX A/C — Air flows from the center and side ventilators with maximum cooling (air conditioning). (The air recirculation and A/C will be automatically turned on.)

— Air flows from the center and side ventilators.

— Air flows from the center and side ventilators and foot outlets.

— Air flows mainly from the foot outlets.

— Air flows from the defroster and foot outlets.

— Air flows mainly from the defroster outlets.

- You can also select the middle position between and or between and .
- When the , or position is selected, the air recirculation mode cannot be turned on to prevent the windows from being fogged up.

Fan speed control:

Turn the fan speed control dial clockwise (HI) to increase the fan speed.

Turn the fan speed control dial counterclockwise (LO) to decrease the fan speed.

A/C (Air Conditioner) operation:

Push the A/C button to turn on or off the air conditioner. When the air conditioner is on, the A/C indicator light on the button illuminates.

Temperature control:

Turn the temperature control dial to set the desired temperature. Turn the dial between the middle and the right position to select the hot temperature. Turn the dial between the middle and the left position to select the cool temperature.

Heater operation

Heating:

This mode is used to direct heated air to the foot outlets.

1. Push the air recirculation button to the OFF position. (The indicator light turns off.)
2. Turn the air flow control dial to the position.
3. Turn the fan speed control dial to the desired position.
4. Turn the temperature control dial to the desired position between the middle and the hot (right) position.

Ventilation:

This mode directs outside air to the side and center ventilators.

1. Push the air recirculation button to the OFF position. (The indicator light turns off.)
2. Turn the air flow control dial to the position.
3. Turn the fan speed control dial to the desired position.
4. Turn the temperature control dial to the desired position.

Defrosting or defogging:

This mode directs the air to the defroster outlets to defrost/defog the windows.

1. Turn the air flow control dial to the position.
2. Turn the fan speed control dial to the desired position.
3. Turn the temperature control dial to the desired position between the middle and the hot (right) position.

- To remove frost from the outside surface of the windshield quickly, turn the temperature control dial to the maximum hot position and the fan speed control dial to maximum (HI) position.
- If it is difficult to defog the windshield, turn the A/C button on.

Bi-level heating:

This mode directs cool air from the side and center vents and warm air from the foot outlets. When the temperature control dial is turned to the maximum hot or cool position, the air between the ventilators and the foot outlets is the same temperature.

1. Push the air recirculation button to the OFF position. (The indicator light turns off.)
2. Turn the air flow control dial to the position.
3. Turn the fan speed control dial to the desired position.
4. Turn the temperature control dial to the desired position.

Heating and defogging:

This mode heats the interior and defogs the windows.

1. Turn the air flow control dial to the position.
2. Turn the fan speed control dial to the desired position.
3. Turn the temperature control dial to the desired position.

Air conditioner operation

The air conditioner system should be operated for approximately 10 minutes at least once a month. This helps prevent damage to the air conditioner system due to the lack of lubrication.

Cooling:

This mode is used to cool and dehumidify the air.

1. Push the air recirculation button to the OFF position. (The indicator light turns off.)
2. Turn the air flow control dial to the position.
3. Turn the fan speed control dial to the desired position.
4. Push the A/C button on. (The A/C indicator light will illuminate.)
5. Turn the temperature control dial to the desired position between the middle and the cool (left) position.

- For quick cooling when the outside temperature is high, push the air recirculation button to the ON position. Be sure to push the air recirculation button to the OFF position for normal cooling.
- A visible mist may be seen coming from the ventilators in hot, humid conditions as the air is cooled rapidly. This does not indicate a malfunction.

Dehumidified heating:

This mode is used to heat and dehumidify the air.

1. Push the air recirculation button to the OFF position. (The indicator light turns off.)
2. Turn the air flow control dial to the position.
3. Turn the fan speed control dial to the desired position.
4. Push the A/C button on. (The A/C indicator light will illuminate.)
5. Turn the temperature control dial to the desired position between the middle and the hot (right) position.

Dehumidified defogging:

This mode is used to defog the windows and dehumidify the air.

1. Turn the air flow control dial to the position.
2. Turn the fan speed control dial to the desired position.
3. Push the A/C button on. (The A/C indicator light will illuminate.)
4. Turn the temperature control dial to the desired position.

IN-CABIN MICROFILTER

The air conditioning system is equipped with an in-cabin microfilter which collects dirt, pollen, dust, etc. To make sure the air conditioner heats, defogs, and ventilates efficiently, replace the filter according to the specified maintenance log shown in the NISSAN Service and Maintenance Guide. To replace the filter, contact a NISSAN dealer.

The filter should be replaced if the air flow decreases significantly or if windows fog up easily when operating the heater or air conditioning system.

SERVICING AIR CONDITIONER

The air conditioner system in your NISSAN is charged with a refrigerant designed with the environment in mind. **This refrigerant will not harm the earth's ozone layer.** Special charging equipment and lubricant are required when servicing your NISSAN air conditioner. Using improper refrigerants or lubricants will cause severe damage to your air conditioner system. (See "CAPACITIES AND RECOMMENDED FUEL/LUBRICANTS" in the "9. Technical and consumer information" section for air conditioner system refrigerant and lubricant recommendations.)

A NISSAN dealer will be able to service your environmentally friendly air conditioner system.

WARNING

The system contains refrigerant under high pressure. To avoid personal injury, any air conditioner service should be done only by an experienced technician with the proper equipment.

AUDIO OPERATION PRECAUTIONS

Radio

Turn the ignition switch to the ACC or ON position and push the PWR (power/VOL (volume) control to turn on the radio. If you listen to the radio with the engine not running, the ignition switch should be turned to the ACC position.

Radio reception is affected by station signal strength, distance from radio transmitter, buildings, bridges, mountains and other external influences. Intermittent changes in reception quality normally are caused by these external influences.

Using a cellular phone in or near the vehicle may influence radio reception quality.

Radio reception:

Your NISSAN radio system is equipped with state-of-the-art electronic circuits to enhance radio reception. These circuits are designed to extend reception range, and to enhance the quality of that reception.

However there are some general characteristics of both FM and AM radio signals that can affect radio reception quality in a moving vehicle, even when the finest equipment is used. These characteristics are completely normal in a given reception area, and do not indicate any malfunction in your NISSAN radio system.

Reception conditions will constantly change because of vehicle movement. Buildings, terrain, signal distance and interference from other vehicles can work against ideal reception. Described below are some of the factors that can affect your radio reception.

Some cellular phones or other devices may cause interference or a buzzing noise to come from the audio system speakers. Storing the device in a different location may reduce or eliminate the noise.

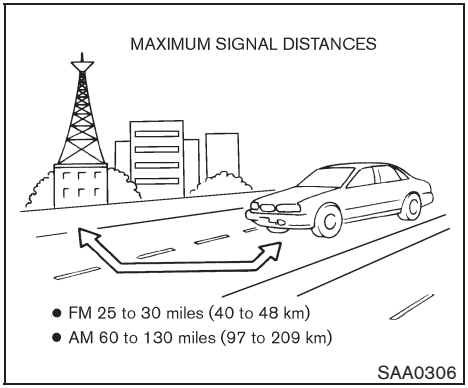

FM radio reception:

Range: FM range is normally limited to 25 to 30 miles (40 to 48 km), with monaural (single channel) FM having slightly more range than stereo FM. External influences may sometimes interfere with FM station reception even if the FM station is within 25 miles (40 km). The strength of the FM signal is directly related to the distance between the transmitter and receiver. FM signals follow a line-of-sight path, exhibiting many of the same characteristics as light. For example they will reflect off objects.

Fade and drift: As your vehicle moves away from a station transmitter, the signals will tend to fade and/or drift.

Static and flutter: During signal interference from buildings, large hills or due to antenna position, usually in conjunction with increased distance from the station transmitter, static or flutter can be heard. This can be reduced by lowering the treble setting to reduce the treble response.

Multipath reception: Because of the reflective characteristics of FM signals, direct and reflected signals reach the receiver at the same time. The signals may cancel each other, resulting in momentary flutter or loss of sound.

AM radio reception:

AM signals, because of their low frequency, can bend around objects and skip along the ground. In addition, the signals can be bounced off the ionosphere and bent back to earth. Because of these characteristics. AM signals are also subject to interference as they travel from transmitter to receiver.

Fading: Occurs while the vehicle is passing through freeway underpasses or in areas with many tall buildings. It can also occur for several seconds during ionospheric turbulence even in areas where no obstacles exist.

Static: Caused by thunderstorms, electrical power lines, electric signs and even traffic lights.

Satellite radio reception:

When the satellite radio (if so equipped) is first installed or the battery has been replaced, the satellite radio may not work properly. This is not a malfunction. Wait more than 10 minutes with the satellite radio ON and the vehicle away from any metal or large buildings for the satellite radio to receive all of the necessary data.

The satellite radio mode will be skipped unless an optional satellite receiver and antenna are installed and an XM® satellite radio service subscription is active. Satellite radio is not available in Alaska, Hawaii and Guam.

Satellite radio performance may be affected if cargo carried on the roof blocks the satellite radio signal.

If possible, do not put cargo near the satellite antenna.

A buildup of ice on the satellite radio antenna can affect satellite radio performance. Remove the ice to restore satellite radio reception.

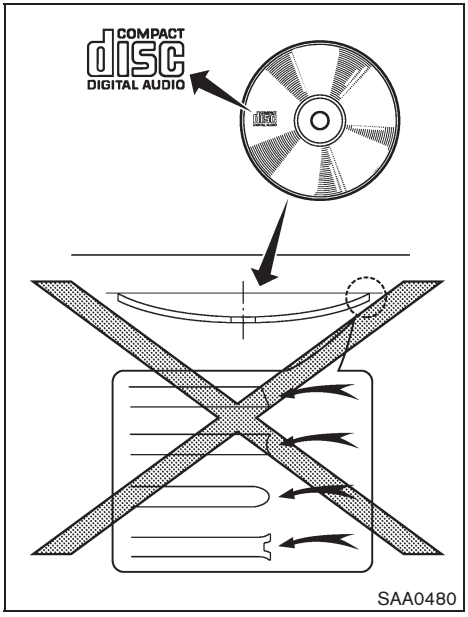

Compact Disc (CD) player

- **Do not force a compact disc into the CD insert slot. This could damage the CD and/or CD changer/player.**
- **Trying to load a CD with the CD door closed could damage the CD and/or CD changer.**
- **During cold weather or rainy days, the player may malfunction due to the humidity. If this occurs, remove the CD and dehumidify or ventilate the player completely.**
- **The player may skip while driving on rough roads.**
- **The CD player sometimes cannot function when the passenger compartment temperature is extremely high. Decrease the temperature before use.**
- **Only use high quality 4.7 in (12 cm) round discs that have the "COMPACT disc DIGITAL AUDIO" logo on the disc or packaging.**
- **Do not expose the CD to direct sunlight.**
- **CDs that are of poor quality, dirty, scratched, covered with fingerprints, or that have pin holes may not work properly.**
- **The following CDs may not work properly:**
  - **— Copy control compact discs (CCCD)**
  - **— Recordable compact discs (CD-R)**
  - **— Rewritable compact discs (CD-RW)**
- **Do not use the following CDs as they may cause the CD player to malfunction.**
  - **— 3.1 in (8 cm) discs**
  - **— CDs that are not round**
  - **— CDs with a paper label**
  - **— CDs that are warped, scratched, or have abnormal edges**
- **This audio system can only play prerecorded CDs. It has no capabilities to record or burn CDs.**
- **If the CD cannot be played, one of the following messages will be displayed.**

  Check Disc:

  — Confirm that the CD is inserted correctly (the label side is facing up, etc.).

  — Confirm that the CD is not bent or warped and it is free of scratches.

  Push Eject:

  This is an error due to the temperature inside the player is too high. Remove the CD by pushing the EJECT button, and after a short time reinsert the CD.

The CD can be played when the temperature of the player returns to normal.

Unplayable Track:

The file is unplayable in this audio system (only MP3 or WMA CD).

Compact Disc (CD) with MP3 or WMA (for 6CD changer model only)

Explanation of terms:

- MP3 — MP3 is short for Moving Pictures Experts Group Audio Layer 3. MP3 is the most well-known compressed digital audio file format. This format allows for near "CD quality" sound, but at a fraction of the size of normal audio files. MP3 conversion of an audio track from CD-ROM can reduce the file size by approximately 10:1 ratio (Sampling: 44.1 kHz, Bit rate: 128 kbps) with virtually no perceptible loss in quality. MP3 compression removes the redundant and irrelevant parts of a sound signal that the human ear doesn't hear.
- WMA — Windows Media Audio (WMA) is a compressed audio format created by Microsoft as an alternative to MP3. The WMA codec offers greater file compression than the MP3 codec, enabling storage of more digital audio tracks in the same amount of space when compared to MP3s at the same level of quality.
- Bit rate — Bit rate denotes the number of bits per second used by a digital music files. The size and quality of a compressed digital audio file is determined by the bit rate used when encoding the file.
- Sampling frequency — Sampling frequency is the rate at which the samples of a signal are converted from analog to digital (A/D conversion) per second.
- Multisession — Multisession is one of the methods for writing data to media. Writing data once to the media is called a single session, and writing more than once is called a multisession.
- ID3/WMA Tag — The ID3/WMA tag is the part of the encoded MP3 or WMA file that contains information about the digital music file such as song title, artist, album title, encoding bit rate, track time duration, etc. ID3 tag information is displayed on the Album/Artist/Track title line on the display.

* Windows® and Windows Media® are registered trademarks or trademarks of Microsoft Corporation in the United States of America and other countries of Microsoft Corporation of the USA.

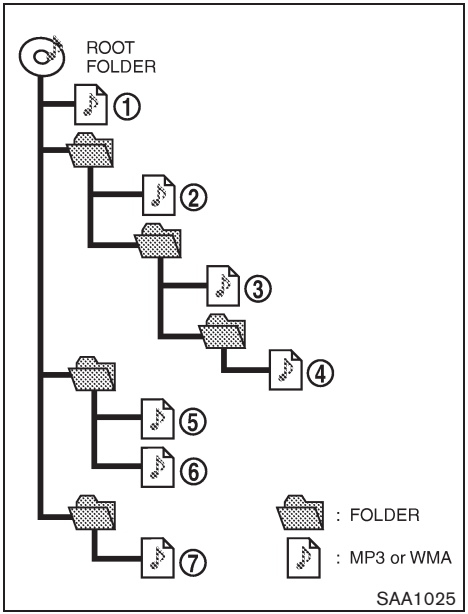

Playback order chart

Playback order:

Music playback order of a CD with MP3 or WMA files is as illustrated.

- The names of folders not containing MP3 or WMA files are not shown in the display.

- If there is a file in the top level of the disc, “Root Folder” is displayed.
- The playback order is the order in which the files were written by the writing software. Therefore, the files might not play in the desired order.

Specification chart:

Supported media			CD, CD-R, CD-RW
Supported file systems			ISO9660 LEVEL1, ISO9660 LEVEL2, Romeo, Joliet * ISO9660 Level 3 (packet writing) is not supported. * Files saved using the Live File System component (on a Windows Vista-based computer) are not supported.
Supported versions*1	MP3	Version	MPEG1, MPEG2, MPEG2.5
		Sampling frequency	8 kHz - 48 kHz
		Bit rate	8 kbps - 320 kbps, VBR
	WMA*2	Version	WMA7, WMA8, WMA9
		Sampling frequency	32 kHz - 48 kHz
		Bit rate	VER7, 8: 32 kbps - 192 kbps, VER9: 32 kbps - 320 kbps, VBR
Tag information (Song title and Artist name)			ID3 tag VER1.0, VER1.1, VER2.2, VER2.3 (MP3 only)
			WMA tag (WMA only)
Folder levels			Without navigation system: Folder levels: 8, Folders and files: 999 (Max. 255 files for one folder)
Text character number limitation			Without navigation system: 64 characters
Displayable character codes*3			01: ASCII, 02: ISO-8859-1, 03: UNICODE (UTF-16 BOM Big Endian), 04: UNICODE (UTF-16 Non-BOM Big Endian), 05: UNICODE (UTF-8), 06: UNICODE (Non-UTF-16 BOM Little Endian)

*1 Files created with a combination of 48 kHz sampling frequency and 64 kbps bit rate cannot be played.
*2 Protected WMA files (DRM) cannot be played.
*3 Available codes depend on what kind of media, versions and information are going to be displayed.

Troubleshooting guide:

Symptom	Cause and Countermeasure
Cannot play	Check if the disc was inserted correctly.
	Check if the disc is scratched or dirty.
	Check if there is condensation inside the player. If there is, wait until the condensation is gone (about 1 hour) before using the player.
	If there is a temperature increase error, the CD player will play correctly after it returns to the normal temperature.
	Files with extensions other than “.MP3”, “.WMA”, “.mp3” or “.wma” cannot be played. In addition, the character codes and number of characters for folder names and file names should be in compliance with the specifications.
	Check if the disc or the file is generated in an irregular format. This may occur depending on the variation or the setting of MP3/WMA writing applications or other text editing applications.
	Check if the finalization process, such as session close and disc close, is done for the disc.
	Check if the disc is protected by copyright.
Poor sound quality	Check if the disc is scratched or dirty.
	Bit rate may be too low.
It takes a relatively long time before the music starts playing.	If there are many folder or file levels on the MP3/WMA disc, or if it is a multisession disc, some time may be required before the music starts playing.
Music cuts off or skips	The writing software and hardware combination might not match, or the writing speed, writing depth, writing width, etc., might not match the specifications. Try using the slowest writing speed.
Skipping with high bit rate files	Skipping may occur with large quantities of data, such as for high bit rate data.
Move immediately to the next song when playing.	When a non-MP3/WMA file has been given an extension of “.MP3”, “.WMA”, “.mp3” or “.wma”, or when play is prohibited by copyright protection, there will be approximately 5 seconds of no sound and then the player will skip to the next song.
The songs do not play back in the desired order.	The playback order is the order in which the files were written by the writing software. Therefore, the files might not play in the desired order.

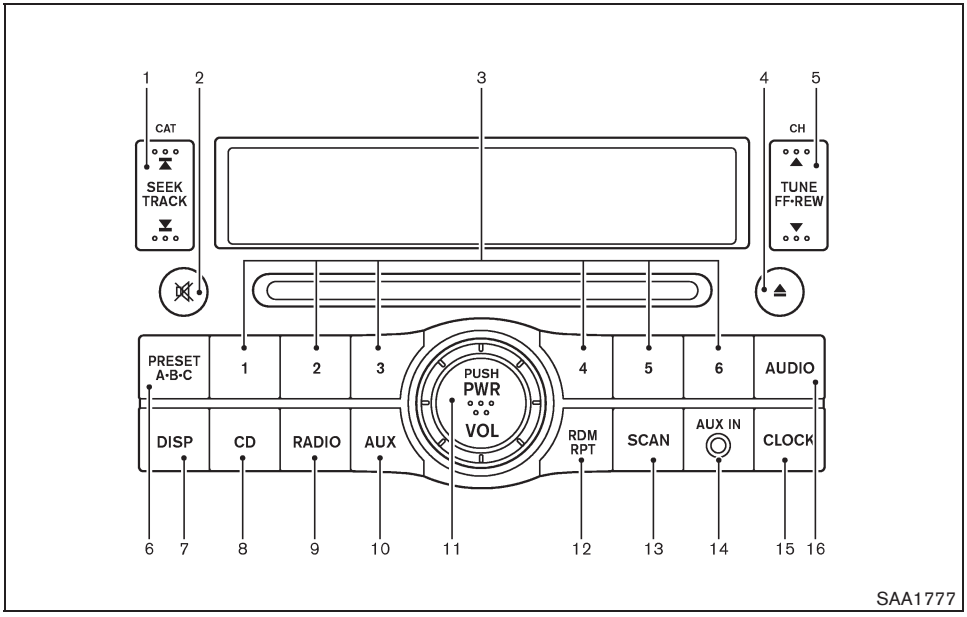

FM-AM RADIO WITH COMPACT DISC (CD) PLAYER

1. SEEK/TRACK button
2. MUTE button
3. Station and preset buttons
4. CD EJECT button
5. TUNE/FF·REW button
6. PRESET A·B·C button
7. DISP (display) button
8. CD PLAY button
9. RADIO button
10. AUX (auxiliary) button
11. ON·OFF/VOLUME control knob
12. RDM (random)/RPT (repeat) button
13. SCAN button
14. AUX IN jack
15. CLOCK button
16. AUDIO button

Audio main operation

For all operation precautions, see “AUDIO OPERATION PRECAUTIONS” earlier in this section.

ON·OFF/Volume control:

Turn the ignition switch to the ACC or ON position, and then push the ON·OFF/VOLUME control knob while the system is off to call up the mode (radio, CD or AUX) which was playing immediately before the system was turned off. When no CD is loaded, the radio will come on. While the system is on, pushing the ON·OFF/VOLUME control knob turns the system off.

Turn the ON·OFF/VOLUME control knob to adjust the volume.

AUDIO button:

Push the AUDIO button to change the selecting mode as follows.

BASS → TREBLE → FADER → BALANCE → BEEP → off

Push the TUNE (▼ , ▲) or SEEK (⧗ ,

▲) button to adjust Bass and Treble to the desired level. Use the TUNE or SEEK button also to adjust Fader or Balance modes. Fader adjusts the sound level between the front and rear speakers and Balance adjusts the sound between the right and left speakers.

To turn the Beep sound off or on, push the TUNE button until the desired mode is displayed. This turns on or off the beep sound when audio buttons are pushed.

Once the sound quality is set to the desired level, push the AUDIO button repeatedly until the radio or CD display appears. After 10 seconds, the radio or CD display reappears.

MUTE button:

Push the button to mute the audio sound. Push the button again to release the mute.

CLOCK button:

Push the CLOCK button to turn on or off the CLOCK display.

See "CLOCK" in the "2. Instruments and controls" section for the detailed clock adjustment operation.

DISP DISPLAY CHANGE:

This button will work during CD operation. (See "CD PLAY INFORMATION" later in this section).

Radio operation

RADIO RADIO (FM/AM) band select:

Pushing the RADIO band select button will change the band as follows:

AM → FM → AM

When RADIO button is pushed while the ignition switch is in the ACC or ON, the radio will come on at the station last played.

The last station played will also come on when the ON·OFF/VOL control knob is pushed to ON.

If a compact disc is playing when the RADIO band select button is pushed, the compact disc will automatically be turned off and the last radio station played will come on.

The FM stereo indicator ST will glow during FM stereo reception. When the stereo broadcast signal is weak, the radio will automatically change from stereo to monaural reception.

▼ ▲ TUNE (Tuning):

Push the TUNE button ▲ or ▼ for manual tuning. To move quickly through the stations, push and hold either side of the TUNE button down for more than 0.5 second.

▼ ▲ SEEK tuning:

Push the SEEK button ▼ or ▲ to tune from high to low or low to high frequencies and stops at the next broadcasting station.

SCAN SCAN tuning:

Push the SCAN button to tune from low to high frequencies and stops at each broadcasting station for 5 seconds. Pushing the button again during this 5 second period will stop SCAN tuning and the radio will remain tuned to that station.

If the SCAN button is not pushed within 5 seconds, SCAN tuning moves to the next station.

PRESET A·B·C PRESET select:

Push the PRESET A·B·C button to go to the next PRESET. After choosing from the PRESET A, B or C, you can select the desired station pushing the station preset buttons 1 to 6.

1 to 6 Station memory operations:

18 stations can be set for PRESET A, B and C. The PRESET A, B and C function allows you to store a combination of FM and AM stations for

easy access.

1. Push the PRESET A·B·C button to change between storage banks.
2. Tune to the desired station using the SEEK, SCAN or TUNE button.
3. Push and hold any of the desired station preset buttons (1-6) until a beep sound is heard. (The radio mutes when the select button is pushed.)
4. The station indicator will then come on and the sound will resume. Memorizing is now complete.
5. Other buttons can be set in the same manner.

If the battery cable is disconnected, or if the fuse opens, the radio memory will be erased. In that case, reset the desired stations.

Compact Disc (CD) player operation

Turn the ignition switch to the ACC or ON position and insert the compact disc into the slot with the label side facing up. The compact disc will be guided automatically into the slot and start playing.

After loading the disc, the number of tracks on the disc will appear on the display.

If the radio is already operating, it will automatically turn off and the compact disc will play.

If the system has been turned off while the compact disc was playing, pushing the ON·OFF/VOL control knob will start the compact disc.

Do not use 3.1 in (8 cm) discs.

CD CD PLAY:

When the CD (CD play) button is pushed with the system off and the compact disc loaded, the system will turn on and the compact disc will start to play.

When the CD button is pushed with the compact disc loaded but the radio playing, the radio will automatically be turned off and the compact disc will start to play.

DISP CD PLAY INFORMATION:

When the DISP button is pushed for less than 1.5 seconds while the CD is being played, the disc information display will change as follows:

When the DISP button is pushed for longer than 1.5 seconds, the disc information display will change automatically in the above order.

▲ ▼ FF (Fast Forward), REW (Rewind):

When the ▲ (fast forward) or ▼ (rewind) button is pushed while the compact disc is being played, the compact disc will play while fast forwarding or rewinding. When the button is released, the compact disc will return to normal play speed.

APS (Automatic Program Search) FF, APS REW/TRACK CHANGE:

When the (APS FF) button is pushed while the compact disc is being played, the program next to the present one will start to play from its beginning. Push several times to skip through programs. The compact disc will advance the number of times the button is pushed. (When the last program on the compact disc is skipped through, the first program will be played.) When the (APS REW) button is pushed, the program being played returns to its beginning. Push several times to skip back through programs. The compact disc will go back the number of times the button is pushed.

SCAN SCAN tuning:

When the SCAN tuning button is pushed while the CD is being played, the beginning of all the tracks of CD will be played for 10 seconds in

sequence.

Pushing the button again during this 10 second period will stop SCAN tuning. If the SCAN tuning button is not pushed within 10 seconds, SCAN tuning moves to the next CD program.

RDM RPT RANDOM (RDM)/REPEAT (RPT) play:

When the RDM/RPT button is pushed while the compact disc is being played, the play pattern can be changed as follows:

CD EJECT:

When the CD EJECT button is pushed with the compact disc loaded, the compact disc will be ejected.

When this button is pushed while the compact disc is being played, the compact disc will come out and the system will turn off.

If the compact disc comes out and is not removed, it will be pulled back into the slot to protect it.

CD IN indicator:

CD IN indicator appears on the display when the CD is loaded.

AUX AUX (Auxiliary) button:

The AUX IN jack is located on the audio unit. The AUX IN audio input jack accepts any standard analog audio input such as from a portable cassette tape/CD player, MP3 player or laptop computers.

Push the AUX button to play a compatible device when it is plugged into the AUX IN jack.

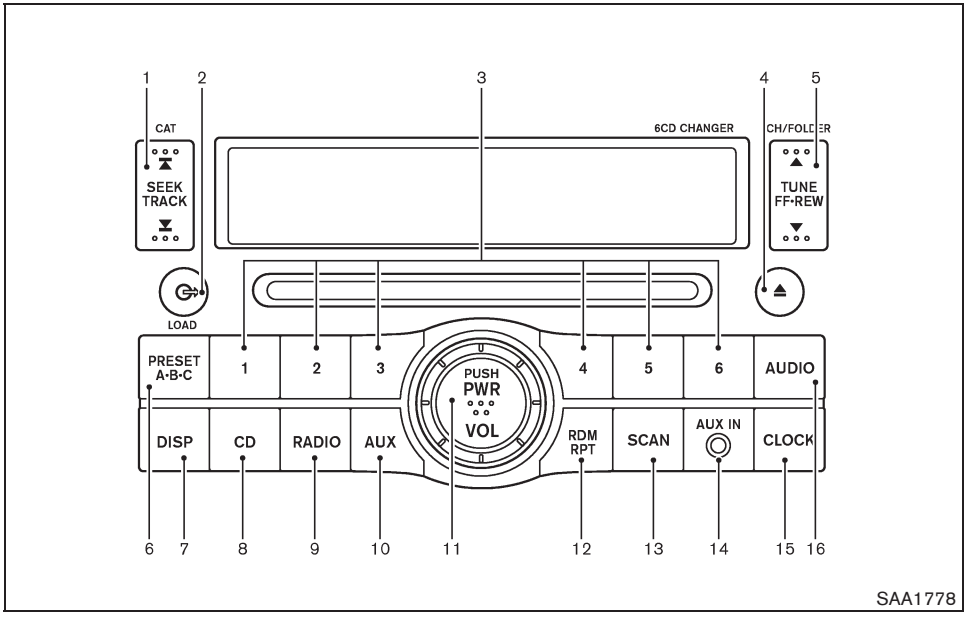

1. SEEK/TRACK button
2. CD LOAD button
3. Station and preset/CD select buttons
4. CD EJECT button
5. TUNE/FF·REW button
6. PRESET A·B·C button
7. DISP (display) button
8. CD PLAY button
9. RADIO button
10. AUX (auxiliary) button
11. ON·OFF/VOLUME control knob
12. RDM (random)/RPT (repeat) button
13. SCAN button
14. AUX IN jack
15. CLOCK button
16. AUDIO button

No satellite radio reception is available unless the optional satellite receiver and antenna are installed and there is an active XM® satellite radio service subscription.

FM-AM-SAT RADIO WITH COMPACT DISC (CD) CHANGER

For all operation precautions, see “AUDIO OPERATION PRECAUTIONS” earlier in this section.

No satellite radio reception is available when the SAT band option is selected unless the optional satellite receiver and antenna are installed, and there is an active XM® satellite radio service subscription.

It may take some time to receive the activation signal after subscribing to the XM® satellite radio provider. After receiving the activation signal, an available station list will be automatically updated in the radio. Turn the ignition switch from the LOCK to ACC position to update the station list.

Satellite radio is not available in Alaska, Hawaii and Guam.

Audio main operation

Head unit:

The radio has an FM diversity reception system, which employs two antennas printed on the rear window. This system automatically switches to the antenna which is receiving less interference.

The auto loudness circuit enhances the low and high frequency ranges automatically in both radio reception and CD playback.

ON·OFF/Volume control:

Turn the ignition switch to the ACC or ON position, and then push the ON·OFF/VOLUME control knob while the system is off to call up the mode (radio, CD or AUX) which was playing immediately before the system was turned off. While the system is on, pushing the ON·OFF/VOLUME control knob turns the system off.

Turn the ON·OFF/VOLUME control knob to adjust the volume.

AUDIO button:

Push the AUDIO button to change the selecting mode as follows.

BASS → TREBLE → FADER → BALANCE → SSV → BEEP → off

Push the TUNE (▲ , ▼) or SEEK (⏷ , ⏶) button to adjust Bass and Treble to the desired level. Use the TUNE or SEEK button also to adjust Fader or Balance modes. Fader adjusts the sound level between the front and rear speakers and Balance adjusts the sound between the right and left speakers.

To turn the beep sound off or on, push the TUNE button until the desired mode is displayed. This turns on or off the beep sound when audio buttons are pushed.

To change the Speed Sensitive Volume (SSV) mode to OFF, LOW, MID or HIGH, push the TUNE button until the desired mode is displayed.

Once you have adjusted the sound quality to the desired level, push the AUDIO button repeatedly until the radio or CD display reappears. Otherwise, the radio or CD display will automatically reappear after about 10 seconds.

CLOCK button:

Push the CLOCK button to turn on or off the CLOCK display.

See “CLOCK” in the “2. Instruments and controls” section for the detailed clock adjustment operation.

DISPLAY CHANGE:

This button will work during FM or satellite radio (if so equipped) and CD operation. Find the detailed function in the description of each item.

Radio operation

RADIO (FM/AM/SAT) band select:

Pushing the RADIO button will change the band as follows:

(Without satellite radio)

AM → FM → AM

(With satellite radio)

AM → FM → SAT (XM) → AM

When the RADIO button is pushed while the ignition switch is in the ACC or ON position, the radio will come on at the station last played.

The last station played will also come on when the ON·OFF/VOL control knob is pushed to ON.

The satellite radio mode will be skipped unless an optional satellite receiver and antenna are installed and an XM® satellite radio service subscription is active. Satellite radio is not available in Alaska, Hawaii and Guam.

If another audio source is playing when the RADIO button is pushed, the compact disc will

automatically be turned off and the last radio station played will turn on.

The FM stereo indicator ST will glow during FM stereo reception. When the stereo broadcast signal is weak, the radio will automatically change from stereo to monaural reception.

▼ ▲ TUNE (Tuning):

Push the TUNE button ▼ or ▲ for manual tuning. To move quickly through the channels, push and hold the TUNE button.

SEEK tuning:

- For AM and FM radio

  Push the SEEK button or to tune from low to high or high to low frequencies and to stop at the next broadcasting station.

- For satellite radio

  Push the SEEK button or to tune to the first station of the next or previous category.

SCAN SCAN tuning:

Push the SCAN button to tune from low to high frequencies and stops at each broadcasting station for 5 seconds. Pushing the button again during this 5 seconds period will stop SCAN tuning and the radio will remain tuned to that station.

If the SCAN tuning button is not pushed within 5 seconds, SCAN tuning moves to the next station.

PRESET A·B·C PRESET select:

Push the PRESET A·B·C button to go to the next PRESET. After choosing from the PRESET A, B or C, you can select the desired station by pushing the station preset buttons 1 to 6.

1 to 6 Station memory operations:

18 stations can be set for PRESET A, B and C. The PRESET A, B and C function allows you to store a combination of FM, AM and SAT (if so equipped) stations for easy access.

1. Push the PRESET A·B·C button to change between storage banks.
2. Tune to the desired station using the SEEK, SCAN or TUNE button.
3. Push and hold any of the desired station preset buttons (1-6) until a beep sound is heard. (The radio mutes when the select button is pushed.)
4. The station indicator will then come on and the sound will resume. Memorizing is now complete.
5. Other buttons can be set in the same manner.

If the battery cable is disconnected, or if the fuse opens, the radio memory will be erased. In that case, reset the desired stations.

Radio Data System (RDS):

RDS stands for Radio Data System, and is a data information service transmitted by some radio stations on the FM band (not AM band) encoded within a regular radio broadcast. Currently, most RDS stations are in large cities, but many stations are now considering broadcasting RDS data.

RDS can display:

- Station call sign, such as “WHFR 98.3”.
- Station name, such as “The Groove”.
- Music or programming type such as “Classical”, “Country” or “Rock”.
- Traffic reports about delays or construction.

If the station broadcasts RDS information, the RDS icon is displayed.

DISP RADIO DISPLAY CHANGE:

When the DISP button is pushed for less than 1.5 seconds during FM or SAT (if so equipped) radio mode, the radio display will change in the

following order. When the DISP button is pushed for longer than 1.5 seconds, the display will automatically switch to the next display.

(For FM radio)

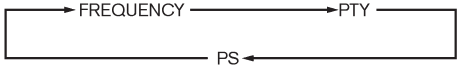

(For satellite radio)

Compact Disc (CD) changer operation

Turn the ignition switch to the ACC or ON position, push the LOAD button and insert the compact disc into the slot with the label side facing up. The compact disc will be guided automatically into the slot and start playing.

If the radio is already operating, it will automatically turn off and the compact disc will play.

If the system has been turned off while the compact disc was playing, pushing the ON·OFF/VOL control knob will start the compact disc.

Do not use 3.1 in (8 cm) discs.

CD LOAD:

To insert a CD in the CD changer, push the button for less than 1.5 seconds. Select the loading position by pushing the CD insert select button 1 to 6, then insert the CD.

To insert 6 CDs to the CD changer in succession, push the button for more than 1.5 seconds.

The inserted slot numbers (1 - 6) will illuminate on the display.

CD PLAY:

When the CD button is pushed with the system off and the compact disc loaded, the system will turn on and the compact disc will start to play.

When the CD button is pushed with the compact disc loaded and the radio playing, the radio will automatically be turned off and the compact disc will start to play.

DISP CD PLAY INFORMATION:

When the DISP button is pushed for less than 1.5 seconds while the CD is being played, the disc information display will change as follows:

CD:

CD with MP3 or WMA:

▲ ▼ FF (Fast Forward), REW (Rewind):

CD:

When the ▲ (fast forward) or ▼ (rewind) button is pushed while the compact disc is being played, the compact disc will play while fast forwarding or rewinding. When the button is released, the compact disc will return to normal play speed.

CD with MP3 or WMA:

When the ▲ or ▼ button is pushed for less than 1.5 seconds while the compact disc is being played, the folders in the compact disc will change.

When the ▲ or ▼ button is pushed for more than 1.5 seconds while the compact disc

is being played, the compact disc will play while forwarding or rewinding. When the button is released, the compact disc will return to the normal play speed.

APS (Automatic Program Search) FF, APS REW:

When the ▲ (APS FF) button is pushed while the compact disc is being played, the program next to the present one will start to play from its beginning. Push several times to skip through programs. The compact disc will advance the number of times the button is pushed. (When the last program on the compact disc is skipped through, the first program will be played.) When the ▼ (APS REW) button is pushed, the program being played returns to its beginning. Push several times to skip back through programs. The compact disc will go back the number of times the button is pushed.

SCAN tuning:

When the SCAN tuning button is pushed for less than 1.5 seconds while the CD is being played, the beginning of all the tracks of CDs will be played for 10 seconds in sequence.

When the SCAN tuning button is pushed for more than 1.5 seconds while the CD is being played, the first program in all the CDs will be played for 10 seconds.

Pushing the button again during this 10 second period will stop SCAN tuning.

If the SCAN tuning button is not pushed within 10 seconds, SCAN tuning moves to the next disc program.

CD PLAY selection:

To change to another CD already loaded into the player, push the CD play select buttons 1 to 6.

RANDOM (RDM)/REPEAT (RPT):

When the RDM/RPT button is pushed while the compact disc is played, the play pattern can be changed as follows:

(CDs without MP3 or WMA)

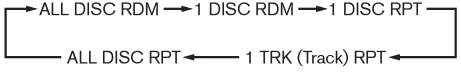

(CDs with MP3 or WMA)

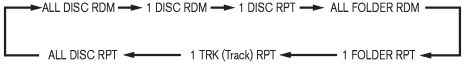

CD EJECT:

When the CD EJECT button is pushed with the compact disc loaded, the compact disc will be ejected.

To eject the discs selected by the CD select button, push the EJECT button for less than 1.5 seconds.

To eject all the discs, push the EJECT button for more than 1.5 seconds.

When this button is pushed while the compact disc is being played, the compact disc will come out and the system will turn off.

If the compact disc comes out and is not removed, it will be pulled back into the slot to protect it.

CD IN indicator:

CD IN indicator (inserted slot number ① - ⑥) appears on the display when the CD is loaded.

AUX (Auxiliary) button:

The AUX IN jack is located on the audio unit. The AUX IN audio input jack accepts any standard analog audio input such as from a portable cassette tape/CD player, MP3 player or laptop computers.

Push the AUX button to play a compatible device when it is plugged into the AUX IN jack.

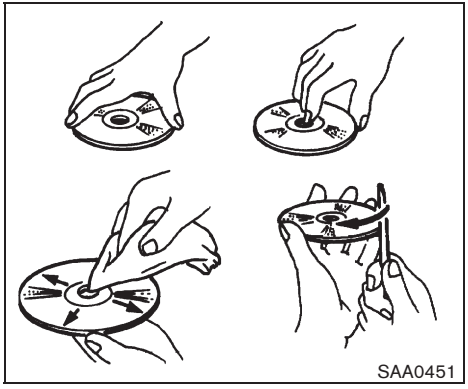

CD CARE AND CLEANING

CD

- Handle a CD by its edges. Never touch the surface of the disc. Do not bend the disc.
- Always place the discs in the storage case when they are not being used.
- To clean a disc, wipe the surface from the center to the outer edge using a clean, soft cloth. Do not wipe the disc using a circular motion.

  Do not use a conventional record cleaner or alcohol intended for industrial use.
- A new disc may be rough on the inner and outer edges. Remove the rough edges by rubbing the inner and outer edges with the side of a pen or pencil as illustrated.

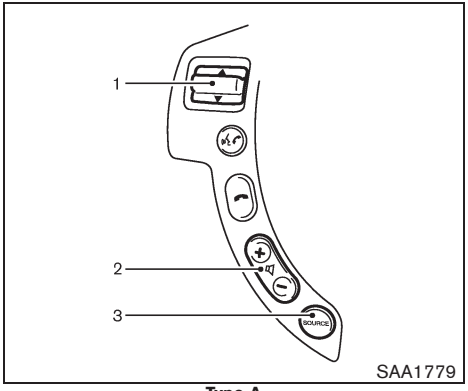

Type A

1. Tuning switch
2. VOLUME control switch
3. SOURCE select switch

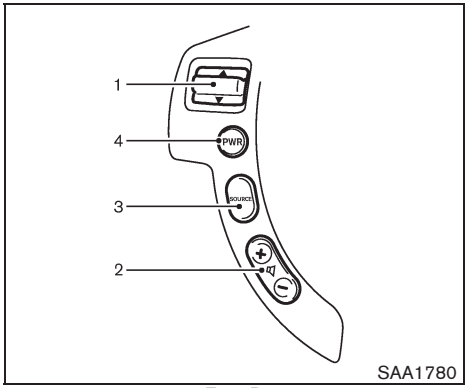

Type B

1. Tuning switch
2. VOLUME control switch
3. SOURCE select switch
4. POWER on/off switch

STEERING WHEEL SWITCH FOR AUDIO CONTROL (if so equipped)

The audio system can be operated using the controls on the steering wheel.

POWER on/off switch (Type B)

With the ignition switch turned to the ACC or ON position, push the POWER on/off switch to turn the audio system on or off.

SOURCE select switch (Type A)

With the ignition switch turned to the ACC or ON position, push the SOURCE select switch to turn the audio system on. Push the switch to change the mode in the sequence of AM, FM, SAT (if so equipped), CD and AUX.

If no CD is loaded or AUX is not connected, CD or AUX mode will be skipped.

SOURCE select switch (Type B)

Push the SOURCE select switch to change the mode.

Without satellite radio:

AM, FM, CD and AUX

With satellite radio:

AM, FM, SAT, CD and AUX

If no CD is loaded or AUX is not connected, the CD or AUX mode will be skipped.

VOLUME control switch

Push up or down the VOLUME control switch to increase or decrease the volume.

∨ ∧ Tuning switch

Memory change (radio):

Push up or down the tuning switch for less than 1.5 seconds to change the next or previous radio preset.

SEEK tuning (radio):

Push up or down the tuning switch for more than 1.5 seconds to seek the next or previous radio station.

APS (Automatic Program Search) FF, APS REW (CD or CD changer):

Push up or down the tuning switch for less than 1.5 seconds to return to the beginning of the present program or skip to the next program. Push several times to skip back or skip through programs.

This system searches for the blank intervals between selections. If there is a blank interval within one program or there is no interval between programs, the system may not stop in the desired or expected location.

FOLDER change (CD changer - CD with MP3 or WMA):

Push up or down the tuning switch for more than 1.5 seconds to change the folders (if there are any folders).

DISC change (CD changer - CD without MP3 or WMA):

Push up or down the tuning switch for more than 1.5 seconds to change the playing disc up or down.

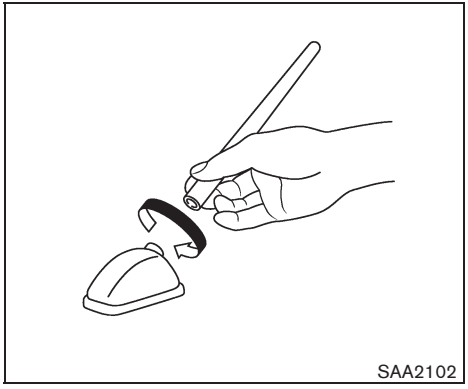

ANTENNA

To remove the antenna, hold the bottom of the antenna and turn it counterclockwise.

To install the antenna, turn the antenna clockwise and tighten.

CAUTION

- **To avoid damaging or deforming the antenna, be sure to remove the antenna under the following conditions.**
  - **— The vehicle enters an automatic car wash.**
  - **— The vehicle enters a garage with a low ceiling.**
  - **— The vehicle is covered with a car cover.**
- **Always properly tighten the antenna rod during installation. Otherwise, the antenna rod may break during vehicle operation.**

CAR PHONE OR CB RADIO

When installing a car phone or a CB radio in your NISSAN, be sure to observe the following precautions, otherwise the new equipment may adversely affect the electronic control modules and electronic control system harness.

WARNING

- **A cellular telephone should not be used while driving so full attention may be given to vehicle operation. Some jurisdictions prohibit the use of cellular telephones while driving.**
- **If you must make a call while your vehicle is in motion, the hands-free cellular phone operational mode (if so equipped) is highly recommended. Exercise extreme caution at all times so full attention may be given to vehicle operation.**
- **If a conversation in a moving vehicle requires you to take notes, pull off the road to a safe location and stop your vehicle before doing so.**

CAUTION

- Keep the antenna as far away as possible from the electronic control modules.
- Keep the antenna wire more than 8 in (20 cm) away from the electronic control system harness. Do not route the antenna wire next to any harness.
- Adjust the antenna standing-wave ratio as recommended by the manufacturer.
- Connect the ground wire from the CB radio chassis to the body.
- For details, consult a NISSAN dealer.

WARNING

- Use a phone after stopping your vehicle in a safe location. If you have to use a phone while driving, exercise extreme caution at all times so full attention may be given to vehicle operation.
- If you find yourself unable to devote full attention to vehicle operation while talking on the phone, pull off the road to a safe location and stop your vehicle before doing so.

CAUTION

To avoid discharging the vehicle battery, use a phone after starting the engine.

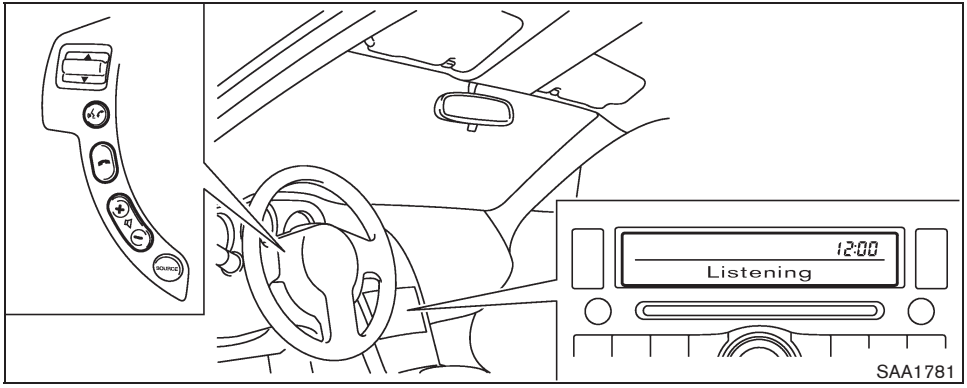

Your NISSAN is equipped with the Bluetooth® Hands-Free Phone System. If you are an owner of a compatible Bluetooth® enabled cellular phone, you can set up the wireless connection between your cellular phone and the in-vehicle phone module. With Bluetooth® wireless technology, you can make or receive a hands-free telephone call with your cellular phone in the vehicle.

Once your cellular phone is paired to the in-vehicle phone module, no other phone connecting procedure is required. Your phone is automatically connected with the in-vehicle phone module when the ignition switch is turned to the ON position with the registered cellular phone turned on and carried in the vehicle.

You can register up to 5 different Bluetooth® cellular phones to the in-vehicle phone module. However, you can talk on only one cellular phone at a time.

Before using the Bluetooth® Hands-Free Phone System, refer to the following notes.

- Set up the wireless connection between a compatible cellular phone and the in-vehicle phone module before using the Bluetooth® Hands-Free Phone System.
- Some Bluetooth® enabled cellular phones may not be recognized by the in-vehicle phone module. Please visit www.nissanusa.com/bluetooth for a recommended phone list.
- You will not be able to use a hands-free phone under the following conditions:
  - — Your vehicle is outside of the cellular service area.
  - — Your vehicle is in an area where it is difficult to receive a cellular signal; such as in a tunnel, in an underground parking garage, near a tall building or in a mountainous area.
  - — Your cellular phone is locked to prevent it from being dialed.
- When the radio wave condition is not ideal or ambient sound is too loud, it may be difficult to hear the other person's voice during a call.
- Immediately after the ignition switch is turned to the ON position, it may be impossible to receive a call for a short period of time.
- Do not place the cellular phone in an area surrounded by metal or far away from the in-vehicle phone module to prevent tone quality degradation and wireless connection disruption.
- While a cellular phone is connected through the Bluetooth® wireless connection, the

battery power of the cellular phone may discharge quicker than usual.

- If the Bluetooth® Hands-Free Phone System seems to be malfunctioning, please refer to “Troubleshooting guide” later in this section. You can also visit www.nissanusa.com/bluetooth for troubleshooting help.
- Some cellular phones or other devices may cause interference or a buzzing noise to come from the audio system speakers. Storing the device in a different location may reduce or eliminate the noise.
- Refer to the cellular phone Owner’s Manual regarding the telephone charges, cellular phone antenna and body, etc.

This device complies with Part 15 of the FCC Rules. Operation is subject to the following two conditions: (1) this device may not cause harmful interference, and (2) this device must accept any interference received, including interference that may cause undesired operation.

FCC Radiation Exposure Statement:

This equipment complies with FCC radiation exposure limits set forth for an uncontrolled environment. This equipment should be installed and operated with minimum distance 8 in (20 cm) between the radiator and your body. This Transmitter must not be co-located or operating in conjunction with any other antenna or transmitter.

USING SYSTEM

The NISSAN Voice Recognition system allows hands-free operation of the Bluetooth® Hands-Free Phone System.

If the vehicle is in motion, some commands may not be available so full attention may be given to vehicle operation.

Initialization

When the ignition switch is turned to the ON position, NISSAN Voice Recognition is initialized, which takes a few seconds. If the button is pushed before the initialization completes, the system will announce “Hands-free phone system not ready” and will not react to voice commands.

Operating tips

To get the best performance out of the NISSAN Voice Recognition system, observe the following:

- Keep the interior of the vehicle as quiet as possible. Close the windows to eliminate surrounding noises (traffic noises, vibration sounds, etc.), which may prevent the system from recognizing voice commands correctly.
- Wait until the tone sounds before speaking a command. Otherwise, the command will not be received properly.
- Start speaking a command within 5 seconds after the tone sounds.
- Speak in a natural voice without pausing between words.

Giving voice commands

To operate NISSAN Voice Recognition, push and release the button located on the steering wheel. After the tone sounds, speak a command.

The command given is picked up by the microphone, and voice feedback is given when the command is accepted.

- If you need to hear the available commands for the current menu again, say “Help” and the system will repeat them.
- If a command is not recognized, the system announces, “Command not recognized. Please try again.” Repeat the command in a clear voice.
- If you want to go back to the previous command, you can say “Go back” or “Correction” anytime the system is waiting for a response.
- You can cancel a command when the system is waiting for a response by saying,

"Cancel" or "Quit." The system announces "Cancel" and ends the voice recognition (VR) session. You can also push the button on the steering wheel at any time. Whenever the VR session is canceled, a double beep sounds to indicate you have exited the system.

- If you want to adjust the volume of the voice feedback, push the volume control switches (+ or −) on the steering wheel while being provided with feedback. You can also use the radio volume control knob.

How to say numbers:

NISSAN Voice Recognition requires a certain way to speak numbers in voice commands. Refer to the following rules and examples:

- Either "zero" or "oh" can be used for "0".

  Example: 1-800-662-6200

  —"One eight oh oh six six two six two oh oh", or

  —"One eight zero zero six six two six two oh oh"

- Words can be used for the first 4 digits places only.

  Example: 1-800-662-6200

  —"One eight hundred six six two six two oh oh",

  —NOT "One eight hundred six six two sixty two hundred, and

  —NOT "One eight oh oh six six two sixty two hundred.

- Numbers can be spoken in small groups. The system will prompt you to continuing entering digits, if desired.

  Example: 1-800-662-6200

  —"One eight oh oh"

  The system repeats the numbers and prompts you to enter more.

  —"six six two"

  The system repeats the numbers and prompts you to enter more.

  —"six two oh oh"

- You can say "Star" for * and "Pound" for # at anytime in any position of the phone number. (Available only when using "Call International" command.)

  Example: 1-555-1212 *123

  —"One five five five one two one two star one two three"

NOTE:

For best results, say phone numbers as single digits.

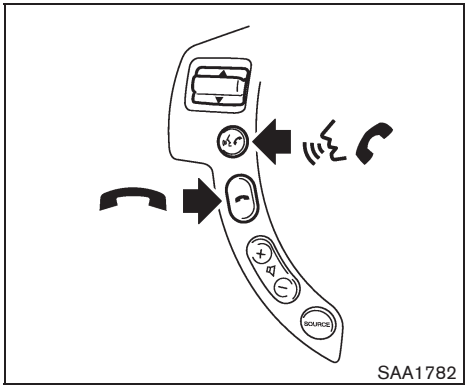

Control buttons

The control buttons for the Bluetooth® Hands-Free Phone System are located on the steering wheel.

TALK/PHONE SEND

Push the button to initiate a VR session or answer an incoming call.

You can also use the button to skip through system feedback and to enter commands during a call. (See "List of voice commands" later in this section and "During a call" later in this section for more information.)

PHONE END

Push the button to cancel a VR session or end a call.

Getting started

The following procedures will help you get started using the Bluetooth® Hands-Free Phone System with NISSAN Voice Recognition. For additional command options, see "List of voice commands" later in this section.

Choosing a language

You can interact with the Bluetooth® Hands-Free Phone System using English, Spanish or French.

To change the language, perform the following.

1. Push and hold the button for more than 5 seconds.
2. The system announces: "Press the PHONE SEND ( ) button for the hands-free phone system to enter the speaker adaptation mode or press the PHONE END ( ) button to select a different language."
3. Press the button.

   For information on speaker adaptation, see "SPEAKER ADAPTATION (SA) MODE" later in this section.
4. The system announces the current language and gives you the option to change the language to Spanish (in Spanish) or French in French). Use the following chart to select the language.

NOTE:
You must push the button or the button within 5 seconds to change the language.

Current language	Press (TALK/PHONE SEND) to select	Press (PHONE END) to select
English	Spanish	French
Spanish	English	French
French	English	Spanish

5. If you decide not to change the language, do not push either button. After 5 seconds, the VR session will end, and the language will not be changed.

Pairing procedure

NOTE:

The pairing procedure must be performed when the vehicle is stationary. If the vehicle starts moving during the procedure, the procedure will be cancelled.

Main menu
"Setup" Ⓐ
"Pair Phone" Ⓑ
"New Phone" Ⓒ
Initiate from handset Ⓓ
Name phone Ⓔ
Assign priority Ⓕ
Choose ringtone Ⓖ

1. Push the button on the steering wheel. The system announces the available commands.
2. Say: "Setup" Ⓐ. The system acknowledges the command and announces the next set of available commands.
3. Say: "Pair phone" Ⓑ. The system acknowledges the command and announces the next set of available commands.
4. Say: "New phone" Ⓒ. The system acknowledges the command and asks you to initiate pairing from the phone handset Ⓓ.

   When you are asked to enter a PIN code for pairing your Bluetooth® cellular phone, operate it to enter the code "1234". The code is always "1234" regardless of the number of phones paired.

   The pairing procedure of the cellular phone varies according to each cellular phone. See the cellular phone Owner's Manual for details. You can also visit www.nissanusa.com/bluetooth for instructions on pairing NISSAN recommended cellular phones.
5. The system asks you to say a name for the phone Ⓔ.

   If the name is too long or too short, the system tells you, then prompts you for a name again.

   Also, if more than one phone is paired and the name sounds too much like a name already used, the system tells you, then prompts you for a name again.
6. The system asks you to assign a priority level Ⓕ. The priority level determines which phone is active when more than one paired Bluetooth® phone is in the vehicle. Follow the instructions provided by the system or see "Setup" later in this section for more information on changing priorities.
7. The system will ask if you would like to select a custom ringtone Ⓖ. Follow the instructions provided by the system or see "Setup" later in this section for more information on selecting ringtones.

Making a call by entering a phone number

Main menu
"Call" Ⓐ
Number (speak digits) Ⓑ
"Dial" Ⓒ

1. Push the button on steering wheel. A tone will sound.
2. Say: "Call" Ⓐ. The system acknowledges the command and announces the next set of available commands.
3. Say the number you wish to call Ⓑ. For example, 555-1212 can be said as "five five five one two one two." (See "How to say numbers" earlier in this section for more information.)

   Say: "Call International" to dial more than 10 digits or any special characters.
4. When you have finished speaking the phone number, the system repeats it back and announces the available commands.
5. Say: "Dial" Ⓒ. The system acknowledges the command and makes the call.

For additional command options, see "List of voice commands" later in this section.

Receiving a call

When you hear the ringtone, push the button on the steering wheel.

Once the call has ended, push the button on the steering wheel.

NOTE:

If you do not wish to take the call when you hear the ringtone, push the button on the steering wheel to reject the call.

For additional command options, see “List of voice commands” later in this section.

List of voice commands

Main menu
- “Call”
- “Phone Book”
- “Memo Pad”
- “Setup”

When you push and release the button on the steering wheel, you can choose from the commands on the Main Menu. The following pages describe these commands and the commands in each sub-menu.

Remember to wait for the tone before speaking.

You can say “Help” to hear the list of commands currently available anytime the system is waiting for a response.

If you want to end an action without completing it, you can say “Cancel” or “Quit” at anytime the system is waiting for a response. The system will end the VR session. Whenever the VR session is canceled, a double beep is played to indicate you have exited the system.

If you want to go back to the previous command, you can say “Go back” or “Correction” anytime the system is waiting for a response.

When you get used to the menus in the system, you can talk ahead by saying more than one command at a time. For example, say, “Call five five five one two one two” or “Memo pad record.”

Also, when you get used to the system responses, you can skip ahead to the tone by pressing the button on the steering wheel. However, if you press the button when the system is waiting for a response from you it will end the VR session.

Call

Main menu
- “Call”
  - Name (speak name) Ⓐ
  - Number (speak digits) Ⓑ
  - “International” Ⓒ
  - “Redial” Ⓓ
  - “Call Back” Ⓔ

<Name> (speak name) Ⓐ

If you have stored entries in the Phone Book, you can dial a number associated with a name and location.

See “Phone book” later in this section to learn how to store entries.

When prompted by the system, say the name of the phone book entry you wish to call. The system acknowledges the name.

If there are multiple locations associated with the name, the system asks you to choose the location.

Once you have confirmed the name and location, the system begins the call.

<Number> (speak digits) Ⓑ

When prompted by the system, say the number you wish to call. (See “How to say numbers”

earlier in this section and “Making a call by entering a phone number” earlier in this section for more details.)

“International” Ⓒ

For dialing more than 10 digits or any special characters, say “international”. When the system acknowledges the command, the system will prompt you to speak the number.

“Redial” Ⓓ

Use the Redial command to call the last number that was dialed within the vehicle.

NOTE:

The system will not redial the last number dialed by the handset keypad.

The system acknowledges the command, repeats the number and begins dialing.

If a redial number does not exist, the system announces, “There is no number to redial” and ends the VR session.

“Call back” Ⓔ

Use the Call Back command to dial the number of the last incoming call within the vehicle.

The system acknowledges the command, repeats the number and begins dialing.

If a call back number does not exist, the system announces, “There is no number to call back” and ends the VR session.

During a call

During a call there are several command options available. Push the button on the steering wheel to mute the receiving voice and enter commands.

- “Help” — The system announces the available commands.
- “Go back/Correction” — The system announces “Go back,” ends the VR session and returns to the call.
- “Cancel/Quit” — The system announces “Cancel,” ends the VR session and returns to the call.
- “Send/Enter/Call/Dial” — Use the Send command to enter numbers during a call. For example, if you were directed to dial an extension by an automated system:

  Say: “Send one two three four.”

  The system acknowledges the command and sends the tones associated with the numbers. The system then ends the VR session and returns to the call.
- “Transfer Call” — Use the Transfer Call command to transfer the call from the Bluetooth® Hands-Free Phone System to the cellular phone when privacy is desired.

  The system announces, “Transfer call. Call transferred to privacy mode.” The system then ends the VR session.

  You can also issue the Transfer Call command again to return to a hands-free call through the vehicle.
- “Mute” — Use the Mute command to mute your voice so the other party cannot hear it. Use the mute command again to unmute your voice.

NOTE:

If a call is ended or the cellular phone network connection is lost while the Mute feature is on, the Mute feature may need to be reset to “off” for the next call so the other party can hear your voice.

Phone book

NOTE:

Phone book commands are not available when the vehicle is moving.

Main menu
"Phone Book"
"New Entry" Ⓐ
"Edit" Ⓑ
"Delete" Ⓒ
"List Names" Ⓓ

The Phone Book stores up to 40 names for each phone paired with the system. Each name can have up to 4 locations/phone numbers associated with it.

NOTE:

Each phone has its own separate phone book. You cannot access Phone A's phone book if you are currently connected with Phone B.

"New Entry" Ⓐ

Use the New Entry command to store a new name in the system.

When prompted by the system, say the name you would like to give the new entry.

For example, say: "Mary."

If the name is too long or too short, the system tells you, then prompts you for a name again.

Also, if the name sounds too much like a name already stored, the system tells you, then prompts you for a name again.

Once the system accepts the name and you confirm it is correct, the system asks for a location (Home, Office, Mobile or Other).

For example, say: "Home."

The system acknowledges the location.

The system will ask you to say a phone number or to transfer a phone number stored in the cellular phone's memory.

To enter a phone number by voice command:

For example, say: "five five five one two one two." (See "How to say numbers" earlier in this section for more information.)

To transfer a phone number stored in the cellular phone's memory (if so equipped):

Say "Transfer entry." The system acknowledges the command and asks you to initiate the transfer from the phone handset. The new contact phone number will be transferred from the cellular phone via the Bluetooth® communication link.

The transfer procedure varies according to each cellular phone. See the cellular phone Owner's Manual for details. You can also visit www.nissanusa.com/bluetooth for instructions on transferring phone numbers from NISSAN recommended cellular phones.

The system repeats the number and prompts you for the next command. When you have finished entering numbers, choose "Store."

The system confirms the name, location and number. The system then asks if you would like to store another location for the same name. If you do not wish to store another location, the system ends the VR session.

"Edit" Ⓑ

Use the Edit command to alter an existing phone book entry or to add a 2nd, 3rd or 4th phone number to an existing entry.

When prompted by the system, say the name of the entry you wish to edit.

The system acknowledges the name and asks you for the location you would like to edit.

Say the name of the location. The system acknowledges the location.

The system will ask you to say a phone number or to transfer a phone number stored in the cellular phone's memory.

To enter a phone number by voice command:

For example, say: "five five five one two one two." (See "How to say numbers" earlier in this section for more information.)

To transfer a phone number stored in the cellular phone's memory (if so equipped):

Say "Transfer entry." The system acknowledges the command and asks you to initiate the transfer from the phone handset. The new contact phone number will be transferred from the cellular phone via the Bluetooth® communication link.

The transfer procedure varies according to each cellular phone. See the cellular phone Owner's Manual for details. You can also visit www.nissanusa.com/bluetooth for instructions on transferring phone numbers from NISSAN recommended cellular phones.

The system repeats the number and prompts you for the next command. When you have finished entering numbers, choose "Store."

The system confirms the name, location and number, then announces that the entry has been stored. The system then ends the VR session.

"Delete" Ⓒ

Use the Delete command to erase one entry from the phone book, all entries from the phone book, the current redial number or the current call back number.

To delete entries from the phone book, say a name or "All entries" when prompted by the system.

The system acknowledges the command and asks you to confirm the deletion.

To delete the current redial number or call back number, say "redial number" or "call back number" when prompted by the system.

If a redial number or a call back number exists, the system deletes them without asking for confirmation.

If there is no number for the entry you are trying to delete, the system says so and ends the VR session.

"List Names" Ⓓ

Use the List Names command to hear all the names and locations in the phone book.

The system recites the phone book entries but does not include the actual phone numbers. When the playback of the list is complete the system returns to the main menu.

You can stop the playback of the list at any time by pushing the button on the steering wheel. The system ends the VR session.

Memo pad

Main menu
- "Memo Pad"
  - "Play" Ⓐ
  - "Record" Ⓑ
  - "Delete" Ⓒ

The Memo Pad records a maximum of 6 voice memos, each up to 20 seconds long.

"Play" Ⓐ

The system plays back all the memos in the order of newest to oldest. The system ends the VR session.

If there are no memos recorded, the system announces "No messages to play." The system ends the VR session.

"Record" Ⓑ

The system announces "Recording" and a tone sounds signaling you to begin.

Speak the information you wish to record clearly. When you are done, push the or button on the steering wheel.

A tone sounds and the system announces "Memo recorded." Another tone sounds to end the VR session.

If the memo pad is full, the system asks if you wish to record over the oldest memo.

“Delete” Ⓒ

The Delete command erases all memos. The system asks you to confirm this action before deleting all memos.

Setup

Main menu
- “Setup”
  - “Pair Phone” Ⓐ
  - “List Phones” Ⓑ
  - “Select Phone” Ⓒ
  - “Change Priority” Ⓓ
  - “Delete Phone” Ⓔ
  - “Select Ringtone” Ⓕ
  - “Bluetooth Off” Ⓖ

Use the Setup command to change options associated with the Bluetooth® Hands-Free Phone System.

“Pair Phone” Ⓐ

Use the Pair Phone command to pair a phone to the Bluetooth® Hands-Free Phone System.

When you are asked to enter a PIN code for pairing your Bluetooth® cellular phone, operate it to enter the code “1234”. The code is always “1234” regardless of the number of phones paired.

NOTE:

The pairing procedure must be performed when the vehicle is stationary. If the vehicle starts moving during the procedure, the procedure will be cancelled. Also, see “Pairing procedure” earlier in this section for additional information.

Up to 5 phones can be paired. If you try to pair a sixth phone, the system announces that you must first delete one phone or replace an existing phone.

If you try to pair a phone that has already been paired to your vehicle’s system, the system announces the name the phone is already using. The pairing procedure will then be canceled.

When prompted by the system, choose from the following commands:

- “New phone” — see “Pairing procedure” earlier in this section.
- “Replace phone” — The system announces the names of the phones already paired and asks which you would like to replace.

  Once you say the name of the phone you wish to replace, the paring procedure will begin. (See “Pairing procedure” earlier in this section.)
- “List phone” — See the description below.

“List Phones” Ⓑ

Use the List Phones command to hear the names of the phones currently paired. If no phones are paired, the system announces, “No paired phones to list.” The system then ends the VR session.

“Select Phone” Ⓒ

Use the Select Phone command to select a phone of lesser priority when two or more phones paired with Bluetooth® Hands-Free Phone System are in the vehicle at the same time.

The system asks you to name the phone and confirm the selection.

Once the selection is confirmed, the selected phone remains active until the ignition switch is turned OFF or you select a new phone.

“Change Priority” Ⓓ

Use the Change Priority command to change the priority level of the active phone.

The priority level determines which phone is active when more than one paired Bluetooth® phone is in the vehicle.

The system states the priority level of the active

phone and asks for a new priority level (1, 2, 3, 4, 5).

If the new priority level is already being used for another phone, the two phones will swap priority levels.

For example, if the current priority levels are:

Priority Level 1 = Phone A
Priority Level 2 = Phone B
Priority Level 3 = Phone C

and you change the priority level of Phone C to Level 1, then:

Priority Level 1 = Phone C
Priority Level 2 = Phone B
Priority Level 3 = Phone A

“Delete Phone” Ⓔ

Use the Delete Phone command to delete a specific phone or all phones from the Bluetooth® Hands-Free Phone System.

The system announces the names of the phones already paired with the system and their priority level. The system then gives you the option to delete a specific phone, all phones or listen to the list again.

Once you chose to delete a phone or all phones, the system asks you to confirm this action.

NOTE:

When you delete a phone, the associated phone book for that phone will also be deleted.

“Select Ringtone” Ⓕ

Use the Select Ringtone command to select the tone heard in the vehicle when an incoming call is received.

The system announces the name of the active phone and asks you to choose from the following commands:

- “Ringtone” — The system plays a ringtone and asks if you would like to select that tone. If you say no, the system plays the next ringtone available and continues to cycle through the ringtones until you select one or quit.
- “Silent” — The system asks you to confirm your wish to disable the ringtone.

“Bluetooth off” Ⓖ

Use the Bluetooth® Off command to turn off the Bluetooth Hands-Free Phone System.

When Bluetooth® Hands-Free Phone System is off, you will not be able to make or receive calls using NISSAN Voice Recognition. Also, you will not have access to the Phone Book.

You can still use the Memo Pad and access Setup.

SPEAKER ADAPTATION (SA) MODE

Speaker Adaptation allows up to two out-of dialect users to train the system to improve recognition accuracy. By repeating a number of commands, the users can create a voice model of their own voice that is stored in the system. The system is capable of storing a different speaker adaptation model for memory A and memory B.

If memory A is available, the system will use memory A to store the model. If memory A is in use and memory B is available, the system will use memory B to store the model. If both of the memory locations are in use, the system will ask the user to select which memory location should be overwritten.

Training procedure

The procedure for training a voice is as follows.

1. Position the vehicle in a reasonably quiet outdoor location.
2. Sit in the driver’s seat with the engine running, the parking brake applied, and the transmission in P (Park) position.
3. Push and hold the button for more than 5 seconds.
4. The system announces: “Press the PHONE

SEND ( ) button for the hands-free phone system to enter the speaker adaptation mode or press the PHONE END ( ) button to select a different language".

5. Push the button.
6. Voice memory A or memory B is selected automatically. If both memory locations are already in use, the system will prompt you to overwrite one. Follow the instructions provided by the system.
7. When preparation is complete and you are ready to begin, push the button.
8. The SA mode will be explained. Follow the instructions provided by the system.
9. When training is finished, the system will tell you an adequate number of phrases have been recorded.
10. The system will ask you to say your name. Follow the instructions to register your name.
11. The system will announce that speaker adaptation has been completed and the system is ready.

The SA mode will stop if:

- The button is pushed for more than 5 seconds in SA mode.
- The vehicle is driven during SA mode.
- The ignition switch is turned to the OFF or LOCK position.

Training phrases

During the SA mode, the system instructs you to say the following phrases. (The system will prompt you for each phrase.)

- phone book new entry
- dial three oh four two nine
- delete call back number
- setup pair phone
- memo pad play
- eight pause nine three two pause seven
- delete all entries
- call seven two four zero nine
- phone book delete entry
- memo pad record
- dial star two one seven oh
- Yes
- No
- select ringtone
- dial eight five six nine two
- Bluetooth on
- setup change priority
- call three one nine oh two
- nine seven pause pause three oh eight
- Cancel
- call back number
- call star two zero nine five
- delete phone
- dial eight three zero five one
- Home
- four three pause two nine pause zero
- delete redial number
- phone book list names
- call eight oh five four one
- Correction
- setup change ringtone
- dial seven four oh one eight
- setup main menu
- Delete
- dial nine seven two six six

- memo pad delete
- call seven six three oh one
- go back
- call five six two eight zero
- dial six six four three seven

TROUBLESHOOTING GUIDE

The system should respond correctly to all voice commands without difficulty. If problems are encountered, try the following solutions.

Where the solutions are listed by number, try each solution in turn, starting with number 1, until the problem is resolved.

Symptom	Solution
System fails to interpret the command correctly.	1. Ensure that the command format is valid. (See “List of voice commands” earlier in this section.)
	2. Ensure that the command is spoken after the tone.
	3. Speak clearly without pausing between words and at a level appropriate to the ambient noise level in the vehicle.
	4. Ensure that the ambient noise level is not excessive (for example, windows open or defroster on). NOTE: If it is too noisy to use the phone, it is likely that the voice commands will not be recognized.
	5. If more than one command was said at a time, try saying the commands separately.
	6. If the system consistently fails to recognize commands, the voice training procedure should be carried out to improve the recognition response for the speaker. (See “SPEAKER ADAPTATION (SA) MODE” earlier in this section.)
The system consistently selects the wrong entry from the phone book.	1. Ensure that the phone book entry name requested matches what was originally stored. This can be confirmed by using the “List Names” command. (See “Phone book” earlier in this section.)
	2. Replace one of the names being confused with a new name.

MEMO

5 Starting and driving

Precautions when starting and driving 5-2
Exhaust gas (carbon monoxide) 5-2
Three-way catalyst..... 5-2
Tire Pressure Monitoring System (TPMS)..... 5-3
Avoiding collision and rollover 5-5
On-pavement and off-road driving precautions..... 5-5
Off-road recovery..... 5-6
Rapid air pressure loss..... 5-6
Drinking alcohol/drugs and driving..... 5-7
Driving safety precautions 5-7
Ignition switch 5-9
Intelligent Key system (if so equipped) 5-9
Continuously Variable Transmission (CVT)..... 5-11
Steering lock..... 5-11
Key positions 5-11
Before starting the engine 5-12
Starting the engine 5-12
Driving the vehicle 5-13
Continuously Variable Transmission (CVT)..... 5-13
Parking brake 5-18
Cruise control 5-19
Precautions on cruise control..... 5-19
Cruise control operations 5-20
Break-in schedule 5-21
Increasing fuel economy 5-21
All-Wheel Drive (AWD) (if so equipped)..... 5-22
All-Wheel Drive (AWD) lock switch operations.... 5-22
AWD warning light 5-24
Parking/parking on hills..... 5-25
Electric power steering system 5-26
Brake system 5-26
Braking precautions..... 5-26
Parking brake break-in..... 5-27
Anti-lock Braking System (ABS) 5-27
Vehicle Dynamic Control (VDC) system 5-28
Cold weather driving..... 5-30
Freeing a frozen door lock..... 5-30
Anti-freeze..... 5-30
Battery 5-30
Draining of coolant water 5-30
Tire equipment 5-30
Special winter equipment..... 5-30
Driving on snow or ice 5-30
Engine block heater (if so equipped)..... 5-31

WARNING

- **Do not leave children or adults who would normally require the support of others alone in your vehicle. Pets should not be left alone either. They could accidentally injure themselves or others through inadvertent operation of the vehicle. Also, on hot, sunny days, temperatures in a closed vehicle could quickly become high enough to cause severe or possibly fatal injuries to people or animals.**
- **Properly secure all cargo with ropes or straps to help prevent it from sliding or shifting. Do not place cargo higher than the seatbacks. In a sudden stop or collision, unsecured cargo could cause personal injury.**

EXHAUST GAS (carbon monoxide)

WARNING

- **Do not breathe exhaust gases; they contain colorless and odorless carbon monoxide. Carbon monoxide is dangerous. It can cause unconsciousness or death.**
- **If you suspect that exhaust fumes are entering the vehicle, drive with all windows fully open, and have the vehicle inspected immediately.**
- **Do not run the engine in closed spaces such as a garage.**
- **Do not park the vehicle with the engine running for any extended length of time.**
- **Keep the lift gate closed while driving, otherwise exhaust gases could be drawn into the passenger compartment. If you must drive with the lift gate open, follow these precautions:**

  1. Open all the windows.

  2. Set the air recirculation to off and the fan control to high to circulate the air.
- **If electrical wiring or other cable connections must pass to a trailer through the seal on the lift gate or the body, follow the manufacturer's recommendation to prevent carbon monoxide entry into the vehicle.**
- **If a special body, camper or other equipment is added for recreational or other usage, follow the manufacturer's recommendation to prevent carbon monoxide entry into the vehicle. (Some recreational vehicle appliances such as stoves, refrigerators, heaters, etc. may also generate carbon monoxide.)**
- **The exhaust system and body should be inspected by a qualified mechanic whenever:**
  - **— The vehicle is raised for service.**
  - **— You suspect that exhaust fumes are entering into the passenger compartment.**
  - **— You notice a change in the sound of the exhaust system.**
  - **— You have had an accident involving damage to the exhaust system, underbody, or rear of the vehicle.**

THREE-WAY CATALYST

The three-way catalyst is an emission control device installed in the exhaust system. Exhaust gases in the three-way catalyst are burned at high temperatures to help reduce pollutants.

WARNING

- **The exhaust gas and the exhaust system are very hot. Keep people, animals or flammable materials away from the exhaust system components.**
- **Do not stop or park the vehicle over flammable materials such as dry grass, waste paper or rags. They may ignite and cause a fire.**

CAUTION

- **Do not use leaded gasoline. Deposits from leaded gasoline will seriously reduce the three-way catalyst's ability to help reduce exhaust pollutants.**
- **Keep your engine tuned up. Malfunctions in the ignition, fuel injection, or electrical systems can cause overrich fuel flow into the three-way catalyst, causing it to overheat. Do not keep driving if the engine misfires, or if noticeable loss of performance or other unusual operating conditions are detected. Have the vehicle inspected promptly by a NISSAN dealer.**
- **Avoid driving with an extremely low fuel level. Running out of fuel could cause the engine to misfire, damaging the three-way catalyst.**
- **Do not race the engine while warming it up.**
- **Do not push or tow your vehicle to start the engine.**

TIRE PRESSURE MONITORING SYSTEM (TPMS)

Each tire, including the spare (if provided), should be checked monthly when cold and inflated to the inflation pressure recommended by the vehicle manufacturer on the vehicle placard or tire inflation pressure label. (If your vehicle has tires of a different size than the size indicated on the vehicle placard or tire inflation pressure label, you should determine the proper tire inflation pressure for those tires.)

As an added safety feature, your vehicle has been equipped with a Tire Pressure Monitoring System (TPMS) that illuminates a low tire pressure telltale when one or more of your tires is significantly under-inflated. Accordingly, when the low tire pressure telltale illuminates, you should stop and check your tires as soon as possible, and inflate them to the proper pressure. Driving on a significantly under-inflated tire causes the tire to overheat and can lead to tire failure. Under-inflation also reduces fuel efficiency and tire tread life, and may affect the vehicle's handling and stopping ability.

Please note that the TPMS is not a substitute for proper tire maintenance, and it is the driver's responsibility to maintain correct tire pressure, even if under-inflation has not reached the level to trigger illumination of the TPMS low tire pressure telltale.

Your vehicle has also been equipped with a TPMS malfunction indicator to indicate when the system is not operating properly. The TPMS malfunction indicator is combined with the low tire pressure telltale. When the system detects a malfunction, the telltale will flash for approximately one minute and then remain continuously illuminated. This sequence will continue upon subsequent vehicle start-ups as long as the malfunction exists. When the malfunction indicator is illuminated, the system may not be able to detect or signal low tire pressure as intended. TPMS malfunctions may occur for a variety of reasons, including the installation of replacement or alternate tires or wheels on the vehicle that prevent the TPMS from functioning properly. Always check the TPMS malfunction telltale after replacing one or more tires or wheels on your vehicle to ensure that the replacement or

alternate tires and wheels allow the TPMS to continue to function properly.

Additional information

- The TPMS does not monitor the tire pressure of the spare tire.
- The TPMS will activate only when the vehicle is driven at speeds above 16 MPH (25 km/h). Also, this system may not detect a sudden drop in tire pressure (for example a flat tire while driving).
- The low tire pressure warning light does not automatically turn off when the tire pressure is adjusted. After the tire is inflated to the recommended pressure, the vehicle must be driven at speeds above 16 MPH (25 km/h) to activate the TPMS and turn off the low tire pressure warning light. Use a tire pressure gauge to check the tire pressure.
- Tire pressure rises and falls depending on the heat caused by the vehicle's operation and the outside temperature. Low outside temperature can lower the temperature of the air inside the tire which can cause a lower tire inflation pressure. This may cause the low tire pressure warning light to illuminate. If the warning light illuminates in low ambient temperature, check the tire pressure for all four tires.

For additional information, see "Low tire pressure warning light" in the "2. Instruments and controls" section and "TIRE PRESSURE MONITORING SYSTEM (TPMS)" in the "6. In case of emergency" section.

WARNING

- **If the low tire pressure warning light illuminates while driving, avoid sudden steering maneuvers or abrupt braking, reduce vehicle speed, pull off the road to a safe location and stop the vehicle as soon as possible. Driving with under-inflated tires may permanently damage the tires and increase the likelihood of tire failure. Serious vehicle damage could occur and may lead to an accident and could result in serious personal injury. Check the tire pressure for all four tires. Adjust the tire pressure to the recommended COLD tire pressure shown on the Tire and Loading Information label to turn the low tire pressure warning light OFF. If you have a flat tire, replace it with a spare tire as soon as possible. (See "FLAT TIRE" in the "6. In case of emergency" section for changing a flat tire.)**
- **When a spare tire is mounted or a wheel is replaced, the TPMS will not function and the low tire pressure warning light will flash for approximately 1 minute. The light will remain on after 1 minute. Contact your NISSAN dealer as soon as possible for tire replacement and/or system resetting.**
- **Replacing tires with those not originally specified by NISSAN could affect the proper operation of the TPMS.**
- **Do not inject any tire liquid or aerosol tire sealant into the tires, as this may cause a malfunction of the tire pressure sensors.**

CAUTION

- **The TPMS may not function properly when the wheels are equipped with tire chains or the wheels are buried in snow.**
- **Do not place metalized film or any metal parts (antenna, etc.) on the windows. This may cause poor reception of the signals from the tire**

pressure sensors, and the TPMS will not function properly.

Some devices and transmitters may temporarily interfere with the operation of the TPMS and cause the low tire pressure warning light to illuminate. Some examples are:

- Facilities or electric devices using similar radio frequencies are near the vehicle.
- If a transmitter set to similar frequencies is being used in or near the vehicle.
- If a computer (or similar equipment) or a DC/AC converter is being used in or near the vehicle.

FCC Notice:

Changes or modifications not expressly approved by the party responsible for compliance could void the user's authority to operate the equipment.

This device complies with Part 15 of the FCC Rules and RSS-210 of Industry Canada.

Operation is subject to the following two conditions: (1) This device may not cause harmful interference, and (2) this device must accept any interference received, including interference that may cause undesired operation of the device.

AVOIDING COLLISION AND ROLLOVER

WARNING

Failure to operate this vehicle in a safe and prudent manner may result in loss of control or an accident.

Be alert and drive defensively at all times. Obey all traffic regulations. Avoid excessive speed, high speed cornering, or sudden steering maneuvers, because these driving practices could cause you to lose control of your vehicle. **As with any vehicle, a loss of control could result in a collision with other vehicles or objects, or cause the vehicle to rollover, particularly if the loss of control causes the vehicle to slide sideways.** Be attentive at all times, and avoid driving when tired. Never drive when under the influence of alcohol or drugs (including prescription or over-the-counter drugs which may cause drowsiness). Always wear your seat belt as outlined in the "SEAT BELTS" in the "1. Safety — Seats, seat belts and supplemental restraint system" section of this manual, and also instruct your passengers to do so.

Seat belts help reduce the risk of injury in collisions and rollovers. **In a rollover crash, an unbelted or improperly belted person is significantly more likely to be injured or killed than a person properly wearing a seat belt.**

ON-PAVEMENT AND OFF-ROAD DRIVING PRECAUTIONS

Utility vehicles have a significantly higher rollover rate than other types of vehicles.

They have higher ground clearance than passenger cars to make them capable of performing in a variety of on-pavement and off-road applications. This gives them a higher center of gravity than ordinary cars. An advantage of higher ground clearance is a better view of the road, allowing you to anticipate problems. However, they are not designed for cornering at the same speeds as conventional passenger cars any more than low-slung sports cars are designed to perform satisfactorily under off-road conditions. If at all possible, avoid sharp turns or abrupt maneuvers, particularly at high speeds. As with other vehicles of this type, failure to operate this vehicle correctly may result in loss of control or vehicle rollover. Seat belts help reduce the risk of injury in collisions and rollovers. In a rollover crash, an unbelted or improperly belted person is significantly more likely to be injured or killed than a person properly wearing a seat belt.

Be sure to read "DRIVING SAFETY PRECAUTIONS" later in this section.

OFF-ROAD RECOVERY

While driving, the right side or left side wheels may unintentionally leave the road surface. If this occurs, maintain control of the vehicle by following the procedure below. Please note that this procedure is only a general guide. The vehicle must be driven as appropriate based on the conditions of the vehicle, road and traffic.

1. Remain calm and do not overreact.
2. Do not apply the brakes.
3. Maintain a firm grip on the steering wheel with both hands and try to hold a straight course.
4. When appropriate, slowly release the accelerator pedal to gradually slow the vehicle.
5. If there is nothing in the way, steer the vehicle to follow the road while the vehicle speed is reduced. Do not attempt to drive the vehicle back onto the road surface until vehicle speed is reduced.
6. When it is safe to do so, gradually turn the steering wheel until both tires return to the road surface. When all tires are on the road surface, steer the vehicle to stay in the appropriate driving lane.
   - If you decide that it is not safe to return the vehicle to the road surface based on vehicle, road or traffic conditions, gradually slow the vehicle to a stop in a safe place off the road.

RAPID AIR PRESSURE LOSS

Rapid air pressure loss or a “blow-out” can occur if the tire is punctured or is damaged due to hitting a curb or pothole. Rapid air pressure loss can also be caused by driving on under-inflated tires.

Rapid air pressure loss can affect the handling and stability of the vehicle, especially at highway speeds.

Help prevent rapid air pressure loss by maintaining the correct air pressure and visually inspect the tires for wear and damage. See “WHEELS AND TIRES” in the “8. Maintenance and do-it-yourself” section of this manual.

If a tire rapidly loses air pressure or “blows-out” while driving maintain control of the vehicle by following the procedure below. Please note that this procedure is only a general guide. The vehicle must be driven as appropriate based on the conditions of the vehicle, road and traffic.

WARNING

The following actions can increase the chance of losing control of the vehicle if there is a sudden loss of tire air pressure. Losing control of the vehicle may cause a collision and result in personal injury.

- **The vehicle generally moves or pulls in the direction of the flat tire.**
- **Do not rapidly apply the brakes.**
- **Do not rapidly release the accelerator pedal.**
- **Do not rapidly turn the steering wheel.**

1. Remain calm and do not overreact.
2. Maintain a firm grip on the steering wheel with both hands and try to hold a straight course.
3. When appropriate, slowly release the accelerator pedal to gradually slow the vehicle.
4. Gradually steer the vehicle to a safe location off the road and away from traffic if possible.
5. Lightly apply the brake pedal to gradually stop the vehicle.
6. Turn on the hazard warning flashers and either contact a roadside emergency service to change the tire or see “CHANGING A FLAT TIRE” in the “6. In case of emergency” section of this Owner’s Manual.

DRINKING ALCOHOL/DRUGS AND DRIVING

WARNING

Never drive under the influence of alcohol or drugs. Alcohol in the bloodstream reduces coordination, delays reaction time and impairs judgement. Driving after drinking alcohol increases the likelihood of being involved in an accident injuring yourself and others. Additionally, if you are injured in an accident, alcohol can increase the severity of the injury.

NISSAN is committed to safe driving. However, you must choose not to drive under the influence of alcohol. Every year thousands of people are injured or killed in alcohol-related accidents. Although the local laws vary on what is considered to be legally intoxicated, the fact is that alcohol affects all people differently and most people underestimate the effects of alcohol.

Remember, drinking and driving don't mix! And that is true for drugs, too (over-the-counter, prescription, and illegal drugs). Don't drive if your ability to operate your vehicle is impaired by alcohol, drugs, or some other physical condition.

DRIVING SAFETY PRECAUTIONS

Your NISSAN is designed for both normal and off-road use. However, avoid driving in deep water or mud as your NISSAN is mainly designed for leisure use, unlike a conventional off-road vehicle.

Remember that Two-Wheel Drive (2WD) models are less capable than All-Wheel Drive (AWD) models for rough road driving and extrication when stuck in deep snow, mud, or the like.

Please observe the following precautions:

WARNING

- **Drive carefully when off the road and avoid dangerous areas. Every person who drives or rides in this vehicle should be seated with their seat belt fastened. This will keep you and your passengers in position when driving over rough terrain.**
- **Do not drive across steep slopes. Instead drive either straight up or straight down the slopes. Off-road vehicles can tip over sideways much more easily than they can forward or backward.**
- **Many hills are too steep for any vehicle. If you drive up them, you may stall. If you drive down them, you may not be able to control your speed. If you drive across them, you may roll over.**
- **Do not shift ranges while driving on downhill grades as this could cause loss of control of the vehicle.**
- **Stay alert when driving to the top of a hill. At the top there could be a drop-off or other hazard that could cause an accident.**
- **If your engine stalls or you cannot make it to the top of a steep hill, never attempt to turn around. Your vehicle could tip or roll over. Always back straight down in R (Reverse) range. Never back down in N (Neutral), using only the brake, as this could cause loss of control.**
- **Heavy braking going down a hill could cause your brakes to overheat and fade, resulting in loss of control and an accident. Apply brakes lightly and use a low range to control your speed.**
- **Unsecured cargo can be thrown around when driving over rough**

terrain. Properly secure all cargo so it will not be thrown forward and cause injury to you or your passengers.

- To avoid raising the center of gravity excessively, do not exceed the rated capacity of the roof rack (if so equipped) and evenly distribute the load. Secure heavy loads in the cargo area as far forward and as low as possible. Do not equip the vehicle with tires larger than specified in this manual. This could cause your vehicle to roll over.
- Do not grip the inside or spokes of the steering wheel when driving off-road. The steering wheel could move suddenly and injure your hands. Instead drive with your fingers and thumbs on the outside of the rim.
- Before operating the vehicle, ensure that the driver and all passengers have their seat belts fastened.
- Always drive with the floor mats in place as the floor may became hot.
- Lower your speed when encountering strong crosswinds. With a higher center of gravity, your NISSAN is more affected by strong side winds. Slower speeds ensure better vehicle control.
- Do not drive beyond the performance capability of the tires, even with AWD engaged.
- For AWD equipped vehicles, do not attempt to raise two wheels off the ground and shift the transmission to any drive or reverse position with the engine running. Doing so may result in drivetrain damage or unexpected vehicle movement which could result in serious vehicle damage or personal injury.
- Do not attempt to test an AWD equipped vehicle on a 2-wheel dynamometer (such as the dynamometers used by some states for emissions testing), or similar equipment even if the other two wheels are raised off the ground. Make sure you inform test facility personnel that your vehicle is equipped with AWD before it is placed on a dynamometer. Using the wrong test equipment may result in drivetrain damage or unexpected vehicle movement which could result in serious vehicle damage or personal injury.
- When a wheel is off the ground due to an unlevel surface, do not spin the wheel excessively. (AWD models)
- Accelerating quickly, sharp steering maneuvers or sudden braking may cause loss of control.
- If at all possible, avoid sharp turning maneuvers, particularly at high speeds. Your vehicle has a higher center of gravity than a conventional passenger car. The vehicle is not designed for cornering at the same speeds as conventional passenger cars. Failure to operate this vehicle correctly could result in loss of control and/or a rollover accident.
- Always use tires of the same type, size, brand, construction (bias, bias-belted or radial), and tread pattern on all four wheels. Install traction devices on the front wheels when driving on slippery roads and drive carefully.
- Be sure to check the brakes imme-

diately after driving in mud or water. See "BRAKE SYSTEM" later in this section for wet brakes.

- **Avoid parking your vehicle on steep hills. If you get out of the vehicle and it rolls forward, backward or sideways, you could be injured.**
- **Whenever you drive off-road through sand, mud or water as deep as the wheel hub, more frequent maintenance may be required. See the maintenance information in the "NISSAN Service and Maintenance Guide".**
- **Spinning the front wheels on slippery surfaces may cause the AWD warning light to flash and the AWD system to automatically switch from the AWD mode to the 2WD mode. This could reduce traction. Be especially careful when towing a trailer. (AWD models)**

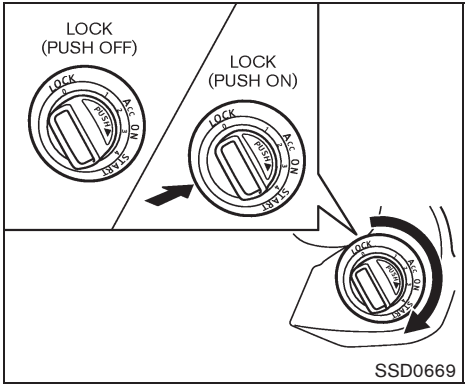

INTELLIGENT KEY SYSTEM (if so equipped)

The Intelligent Key system can operate the ignition switch without taking the key out from your pocket or purse. The operating environment and/or conditions may affect the Intelligent Key system operation.

CAUTION

- **Be sure to carry the Intelligent Key with you when operating the vehicle.**
- **Never leave the Intelligent Key inside the vehicle when you leave the vehicle.**
- **If the vehicle battery is discharged, the ignition switch cannot be moved from the LOCK position and if the steering lock is engaged, the steering wheel cannot be moved. Charge the battery as soon as possible. See "JUMP STARTING" in the "6. In case of emergency" section.**

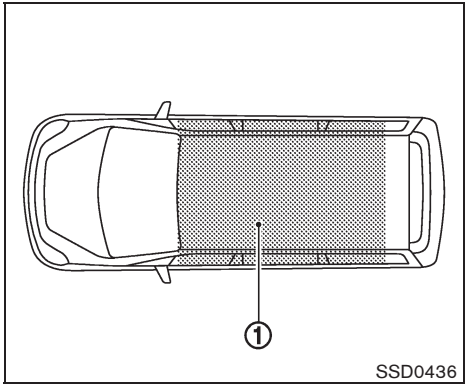

Operating range

The Intelligent Key functions can only be used for starting the engine when the Intelligent Key is within the specified operating range ①.

When the Intelligent Key battery is almost discharged or strong radio waves are present near the operating location, the Intelligent Key system's operating range becomes narrower and may not function properly.

If the Intelligent Key is within the operating range, it is possible for anyone, even someone who does not carry the Intelligent Key, to turn the ignition switch to start the engine.

- The cargo area is not included in the operating range, but the Intelligent Key may function.
- If the Intelligent Key is placed on the instrument panel, inside the glove box or door pocket, the Intelligent Key may not function.
- If the Intelligent Key is placed near the door or window outside the vehicle, the Intelligent Key may function.

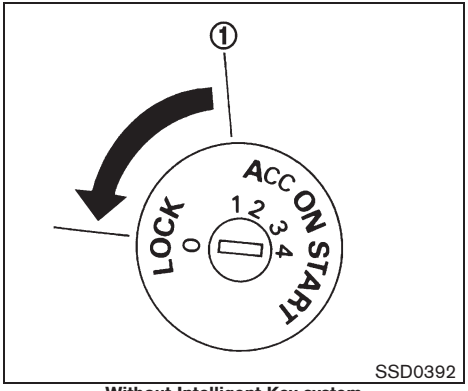

Without Intelligent Key system

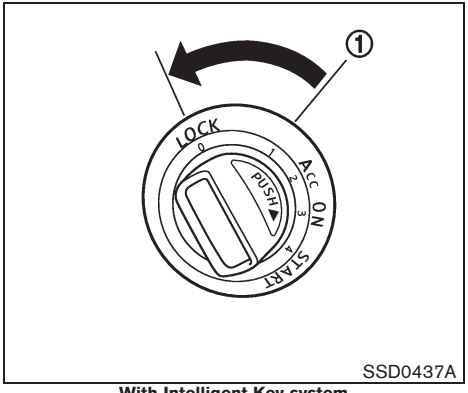

With Intelligent Key system

CONTINUOUSLY VARIABLE TRANSMISSION (CVT)

The ignition lock is designed so that the ignition switch cannot be turned to the LOCK position until the selector lever is moved to the P (Park) position.

- When turning the ignition switch to the LOCK position, make sure that the selector lever is in the P (Park) position.
- When removing the key from the ignition switch (if it is inserted), make sure that the selector lever is in the P (Park) position.

When the ignition switch cannot be turned to the LOCK position:

1. Move the selector lever to the P (Park) position.
2. Turn the ignition switch slightly in the ON direction.
3. Turn the ignition switch to the LOCK position.
4. Remove the key, if it is inserted in the ignition switch.

If the ignition switch is turned to the LOCK position, the selector lever cannot be moved from the P (Park) position. The selector lever can be moved if the ignition switch is in the ON position with the foot brake pedal depressed.

The OFF position ① is between the LOCK and ACC positions, although it is not marked on the ignition switch.

STEERING LOCK

To lock steering wheel

1. Turn the ignition switch to the LOCK position.
2. Remove the key, if it is inserted in the ignition switch.
3. Turn the steering wheel 1/6 of a turn clockwise from the straight up position.

To unlock steering wheel

1. Insert the key into the ignition switch, if necessary.
2. Gently turn the ignition switch while rotating the steering wheel slightly right and left.

KEY POSITIONS

LOCK (0)

Except for the Intelligent Key equipped model:

The key can only be removed from the ignition switch at this position.

The steering lock can only be locked at this position.

For the Intelligent Key equipped model:

PUSH OFF -
The steering lock can only be locked at this position.

PUSH ON -
The ignition switch will be unlocked while carrying the Intelligent Key.

OFF (1)

The engine is turned off with the steering wheel unlocked.

ACC (2)

The electrical accessory power activates without the engine turned on.

ON (3)

The ignition system and the electrical accessory power activate without the engine turned on.

START (4)

The engine starter activates and the engine will start. The ignition switch, when released, will automatically turn to the ON position.

⚠ CAUTION

As soon as the engine has started, release the ignition switch immediately.

BEFORE STARTING THE ENGINE

- Make sure the area around the vehicle is clear.
- Check fluid levels such as engine oil, coolant, brake fluid, and window washer fluid as frequently as possible, or at least whenever you refuel.
- Check that all windows and lights are clean.
- Visually inspect tires for their appearance and condition. Also check tires for proper inflation.
- Lock all doors.
- Position seat and adjust head restraints.
- Adjust inside and outside mirrors.
- Fasten seat belts and ask all passengers to do likewise.
- Check the operation of warning lights when the ignition key is turned to the ON position. (See "WARNING/INDICATOR LIGHTS AND AUDIBLE REMINDERS" in the "2. Instruments and controls" section.)

STARTING THE ENGINE

1. Apply the parking brake.
2. Move the selector lever to the P (Park) or N (Neutral) position. (P is recommended.)

   The starter is designed so that it does not operate unless the selector lever is in either of the above positions.
3. Crank the engine **with your foot off the accelerator pedal** by turning the ignition switch to START. Release the switch when the engine starts. If the engine starts, but fails to run, repeat the above procedure.
   - If the engine is very hard to start in extremely cold weather or when restarting, depress the accelerator pedal a little (approximately 1/3 to the floor) and hold it and then crank the engine. Release the accelerator pedal when the engine starts.
   - If the engine is very hard to start because it is flooded, depress the accelerator pedal all the way to the floor and hold it. Crank the engine for 5 - 6 seconds. After cranking the engine, release the accelerator pedal. Crank the engine **with your foot off the accelerator pedal** by turning the ignition switch to START. Release the ignition switch when the engine starts. If the engine starts, but fails to run, repeat the above procedure.

CAUTION

Do not operate the starter for more than 15 seconds at a time. If the engine does not start, turn the ignition switch off and wait 10 seconds before cranking again, otherwise the starter could be damaged.

4. **Warm-up**

   Allow the engine to idle for at least 30 seconds after starting. Do not race the engine while warming it up. Drive at moderate speed for a short distance first, especially in cold weather. In cold weather, keep the engine running for a minimum of 2 - 3 minutes before shutting it off. Starting and stopping the engine over a short period of time may make the vehicle more difficult to start.

CONTINUOUSLY VARIABLE TRANSMISSION (CVT)

The Continuously Variable Transmission (CVT) in your vehicle is electronically controlled to produce maximum power and smooth operation.

The recommended operating procedures for this transmission are shown on the following pages. Follow these procedures for maximum vehicle performance and driving enjoyment.

Engine power may be automatically reduced to protect the CVT if the engine speed increases quickly when driving on slippery roads or while being tested on some dynamometers.

Starting the vehicle

1. After starting the engine, fully depress the foot brake pedal before moving the selector lever out of the P (Park) position.

   This CVT is designed so that the foot brake pedal must be depressed before shifting from P (Park) to any driving position while the ignition switch is in the ON position.

   The selector lever cannot be moved out of the P (Park) position and into any of the other positions if the ignition switch is turned to the LOCK, OFF or ACC position or if the key is removed.

2. Keep the foot brake pedal depressed, push the selector lever button and move the selector lever to a driving position.
3. Release the parking brake and foot brake pedal, and then gradually start the vehicle in motion.

WARNING

- **Do not depress the accelerator pedal while shifting from P (Park) or N (Neutral) to R (Reverse), D (Drive), L (Low) or manual shift mode. Always depress the brake pedal until shifting is completed. Failure to do so could cause you to lose control and have an accident.**
- **Cold engine idle speed is high, so use caution when shifting into a forward or reverse gear before the engine has warmed up.**
- **Never shift to P (Park) or R (Reverse) while vehicle is moving. Failure to do so could cause you to lose control and have an accident.**

CAUTION

- **When stopping the vehicle on an uphill grade, do not hold the vehicle by depressing the accelerator pedal. The foot brake should be used for this purpose.**
- **Do not downshift abruptly on slippery roads. This may cause a loss of control.**

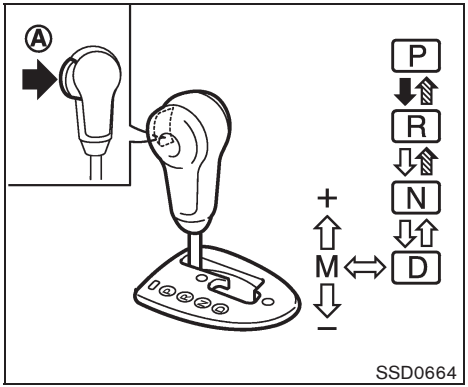

With manual shift mode

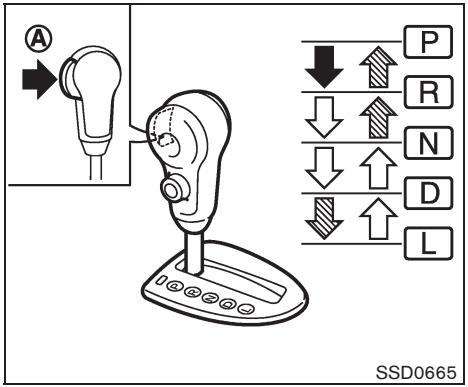

Without manual shift mode

Shifting

To move the selector lever,

➡: Push the button while depressing the brake pedal.

▨: Push the button.

⇨: Just move the selector lever.

After starting the engine, fully depress the brake pedal, push the selector lever button and move the selector lever from the P (Park) position to any of the desired shift positions.

⚠ WARNING

Apply the parking brake if the selector lever is in any position while the engine is not running. Failure to do so could cause the vehicle to move unexpectedly or roll away and result in serious personal injury or property damage.

If the ignition switch is turned to the OFF or ACC position for any reason while the selector lever is in any positions other than the P (Park), the ignition switch cannot be turned to the LOCK position.

If the ignition switch cannot be turned to the LOCK position, perform the following steps:

1. Apply the parking brake when the vehicle is stopped.
2. Turn the ignition switch to the ON position while depressing the foot brake pedal.
3. Move the selector lever to the P (Park) position.
4. Turn the ignition switch to the LOCK position.

⚠ CAUTION

To prevent transmission damage, use the P (Park) or R (Reverse) position only when the vehicle is completely stopped.

P (Park):

Use this selector position when the vehicle is parked or when starting the engine. Make sure the vehicle is completely stopped. **The brake pedal must be depressed and the selector lever button pushed in to move the selector lever from N (Neutral) or any drive position to P (Park).** Apply the parking brake. When parking on a hill, apply the parking brake first, then move the selector lever to the P (Park) position.

R (Reverse):

Use this position to back up. Make sure the vehicle is completely stopped before selecting

the R (Reverse) position. **The brake pedal must be depressed and the selector lever button pushed in to move the selector lever from P (Park), N (Neutral) or any driving position to R (Reverse).**

N (Neutral):

Neither forward nor reverse gear is engaged. The engine can be started in this position. You may shift to N (Neutral) and restart a stalled engine while the vehicle is moving.

D (Drive):

Use this position for all normal forward driving.

L (Low) (if so equipped):

Use this position for maximum engine braking on steep downhill gradients/climbing steep slopes and whenever approaching sharp bends. Do not use the L position in any other circumstances.

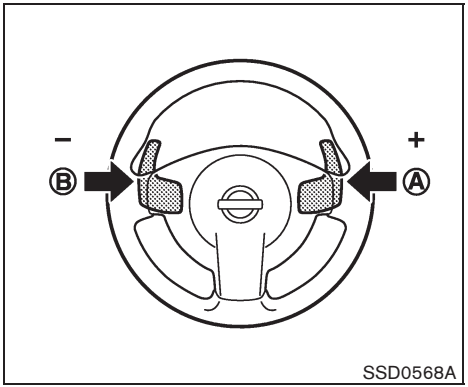

Paddle shifter

Manual shift mode (if so equipped)

When the selector lever is shifted from the D position to the manual shift gate, the transmission enters the manual shift mode. Shift ranges can be selected manually by operating the selector lever or the paddle shifter on the steering wheel.

In the manual shift mode, the shift range is displayed on the position indicator in the meter.

Shift ranges up or down one by one as follows:

M1 ⇄ M2 ⇄ M3 ⇄ M4 ⇄ M5 ⇄ M6

- When shifting up, move the selector lever to the + (up) side or pull the right-side paddle shifter (+) Ⓐ . The transmission shifts to a higher range.
- When shifting down, move the selector lever to the − (down) side or pull the left-side paddle shifter (−) Ⓑ . The transmission shifts to a lower range.
- Moving the selector lever to the same side twice or pulling the same paddle shifter twice will shift the ranges in succession. However, if this motion is rapidly done, the second shifting may not be completed properly.
- When canceling the manual shift mode, return the selector lever to the D (Drive) position. The transmission returns to the normal driving mode.
- When you pull the paddle shifter while in the D (Drive) position, the transmission will shift to the upper or lower range temporarily. The transmission will automatically return to the D (Drive) position after a short period of time. If you want to return to the D (Drive) position manually, pull and hold the paddle shifter for about 1.5 seconds.

M6 (6th):

Use this position for all normal forward driving at highway speeds.

M5 (5th):

Use this position when driving up long slopes, or for engine braking when driving down long slopes.

M4 (4th), M3 (3rd) and M2 (2nd):

Use for hill climbing or engine braking on downhill grades.

M1 (1st):

Use this position when climbing steep hills slowly or driving slowly through deep snow, sand or mud, or for maximum engine braking on steep downhill grades.

- Remember not to drive at high speeds for extended periods of time in lower than M6 range. This reduces fuel economy.
- **In the manual shift mode, the transmission may not shift to the selected range. This helps maintain driving performance and reduces the chance of vehicle damage or loss of control.**
- **In the manual shift mode, the transmission automatically shifts down to 1st gear before the vehicle comes to a stop. When accelerating again, it is necessary to shift up to the desired range.**
- When the CVT fluid temperature is extremely low, the manual shift mode may not work and automatically shift as a drive mode. This is not a malfunction. In this case, return the selector lever to the D position and drive for a while and then shift to the manual shift mode.
- When the CVT fluid temperature is high, the shift range may upshift at a lower engine speed than usual. This is not a malfunction.

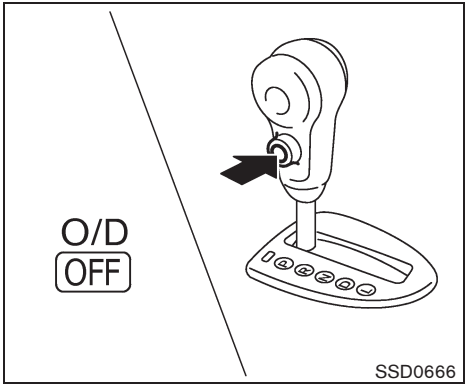

Overdrive (O/D) OFF switch (if so equipped)

When the O/D OFF switch is pushed with the selector lever in the D (Drive) position, the O/D OFF indicator light in the instrument panel illuminates.

Use the overdrive off mode when you need improved engine braking.

To turn off the overdrive off mode, push the O/D OFF switch again. The O/D OFF indicator light will turn off.

Each time the engine is started, or when the selector lever is shifted to any position other than the D (Drive) position, the overdrive off mode will be automatically turned off.

Accelerator downshift
— In D position —

For passing or hill climbing, fully depress the accelerator pedal to the floor. This shifts the transmission down into a lower gear, depending on the vehicle speed.

High fluid temperature protection mode

This transmission has a high fluid temperature protection mode. If the fluid temperature becomes too high (for example, when climbing steep grades in high temperature with heavy loads, such as when towing a trailer), engine power and, under some conditions, vehicle speed will be decreased automatically to reduce the chance of transmission damage. Vehicle speed can be controlled with the accelerator pedal, but the engine and vehicle speed may be limited.

Fail-safe

If the vehicle is driven under extreme conditions, such as excessive wheel spinning and subsequent hard braking, the fail-safe system may be activated. The MIL may illuminate to indicate the fail-safe mode is activated. (See "Malfunction Indicator Light (MIL)" in the "2. Instruments and controls" section.) This will occur even if all electrical circuits are functioning properly. In this case, turn the ignition switch to the OFF position and wait for 10 seconds. Then turn the switch back to the ON position. The vehicle should return to its normal operating condition. If it does not return to its normal operating condition, have a NISSAN dealer check the transmission and repair if necessary.

WARNING

When the high fluid temperature protection mode or fail-safe operation occurs, vehicle speed may be gradually reduced. The reduced speed may be lower than other traffic, which could increase the chance of a collision. Be especially careful when driving. If necessary, pull to the side of the road at a safe place and allow the transmission to return to normal operation, or have it repaired if necessary.

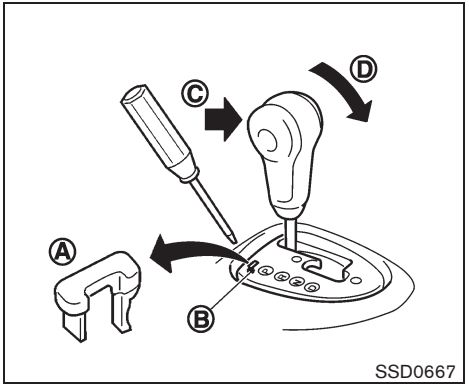

Shift lock release

If the battery charge is low or discharged, the selector lever may not be moved from the P (Park) position even with the brake pedal depressed and the selector lever button pushed.

To move the selector lever, release the shift lock. The selector lever can be moved to the N (Neutral) position. However, the steering wheel will be locked unless the ignition switch is turned to the ON position. This allows the vehicle to be moved if the battery is discharged.

To release the shift lock, perform the following procedure:

1. Turn the ignition switch to the LOCK

position, and remove the key if it is inserted.

2. Apply the parking brake.
3. Remove the shift lock release cover Ⓐ using a suitable tool.
4. Push down the shift lock release Ⓑ using a suitable tool.
5. Push the selector lever button Ⓒ and move the selector lever to the N (Neutral) position Ⓓ while holding down the shift lock release.

Turn the ignition switch to the ON position to unlock the steering wheel. The vehicle may be moved to the desired location.

Replace the removed shift lock release cover after the operation.

If the selector lever cannot be moved out of the P (Park) position, have a NISSAN dealer check the CVT system as soon as possible.

WARNING

If the selector lever cannot be moved from the P (Park) position while the engine is running and the brake pedal is depressed, the stop lights may not work. Malfunctioning stop lights could cause an accident injuring yourself and others.

PARKING BRAKE

WARNING

- **Be sure the parking brake is fully released before driving. Failure to do so can cause brake failure and lead to an accident.**
- **Do not release the parking brake from outside the vehicle.**
- **Do not use the gear shift in place of the parking brake. When parking, be sure the parking brake is fully engaged.**
- **Do not leave children unattended in a vehicle. They could release the parking brake and cause an accident.**

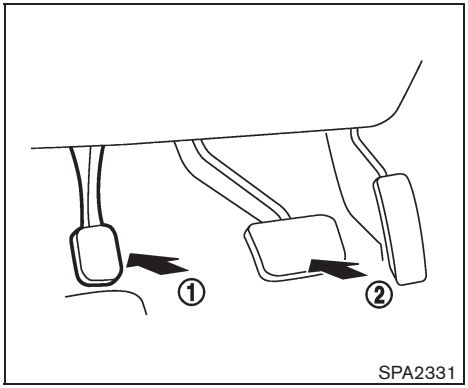

To apply: Fully depress the parking brake pedal ①.

To release:

1. Firmly apply the foot brake ②.
2. Depress the parking brake pedal ① and the parking brake will be released.
3. Before driving, be sure the brake warning light goes out.

PRECAUTIONS ON CRUISE CONTROL

- If the cruise control system malfunctions, it will cancel automatically. The SET indicator light on the meter panel will then blink to warn the driver.
- If the engine coolant temperature becomes excessively high, the cruise control system will cancel automatically.
- If the SET indicator light blinks, turn the cruise control main switch off and have the system checked by a NISSAN dealer.
- The SET indicator light may blink when the cruise control main switch is turned ON while pushing the RESUME/ACCELERATE, SET/COAST or CANCEL switch. To properly set the cruise control system, perform the following procedures.

⚠ WARNING

Do not use the cruise control when driving under the following conditions:

- **when it is not possible to keep the vehicle at a set speed**
- **in heavy traffic or in traffic that varies in speed**
- **on winding or hilly roads**
- **on slippery roads (rain, snow, ice, etc.)**
- **in very windy areas**

Doing so could cause a loss of vehicle control and result in an accident.

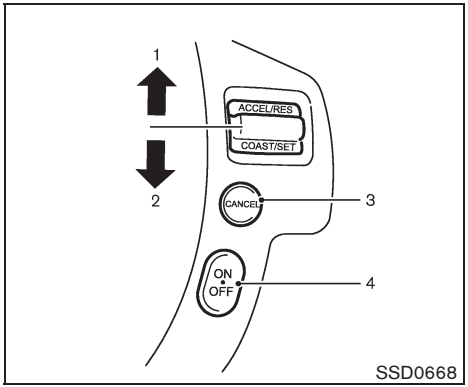

1. RESUME/ACCELERATE switch
2. SET/COAST switch
3. CANCEL switch
4. MAIN (ON·OFF) switch

CRUISE CONTROL OPERATIONS

The cruise control allows driving at a speed between 25 to 89 MPH (40 to 144 km/h) without keeping your foot on the accelerator pedal.

To turn on the cruise control, push the MAIN switch on. The CRUISE indicator light will illuminate.

To set cruising speed, accelerate the vehicle to the desired speed, push the SET/COAST switch and release it. (The SET indicator light in the instrument panel will illuminate.) Take your foot off the accelerator pedal. Your vehicle will maintain the set speed.

- **To pass another vehicle,** depress the accelerator pedal. When you release the pedal, the vehicle will return to the previously set speed.
- The vehicle may not maintain the set speed on winding or hilly roads. If this happens, drive without the cruise control.

To cancel the preset speed, use one of the following methods:

a) Push the CANCEL switch. The SET indicator light will turn off.

b) Tap the brake pedal. The SET indicator light will turn off.

c) Turn the MAIN switch off. Both the CRUISE and SET indicator lights will turn off.

- If you depress the brake pedal while pushing the RESUME/ACCELERATE or SET/COAST switch and reset at the cruising speed, the cruise control will disengage. Turn the MAIN switch off once and then turn it on again.
- The cruise control will automatically cancel if the vehicle slows more than 8 MPH (12 km/h) below the set speed.
- If you move the selector lever to the N (Neutral) position, the cruise control will be canceled.

To reset at a faster cruising speed, use one of the following methods:

- Depress the accelerator pedal. When the vehicle attains the desired speed, push and release the SET/COAST switch.
- Push and hold the RESUME/ACCELERATE switch. When the vehicle attains the desired speed, release the switch.
- Push, then quickly release the RESUME/ACCELERATE switch. Each time you do this, the set speed will increase by about 1 MPH (1.6 km/h).

To reset at a slower cruising speed, use one of the following methods:

- Lightly tap the brake pedal. When the vehicle attains the desired speed, push the SET/COAST switch and release it.
- Push and hold the SET/COAST switch. Release the switch when the vehicle slows down to the desired speed.
- Push, then quickly release the SET/COAST switch. Each time you do this, the set speed will decrease by about 1 MPH (1.6 km/h).

To resume the preset speed, push and release the RESUME/ACCELERATE switch. The vehicle will resume the last set cruising speed when the vehicle speed is over 25 MPH (40 km/h).

BREAK-IN SCHEDULE

CAUTION

During the first 1,200 miles (2,000 km), follow these recommendations to obtain maximum engine performance and ensure the future reliability and economy of your new vehicle. Failure to follow these recommendations may result in shortened engine life and reduced engine performance.

- Avoid driving for long periods at constant speed, either fast or slow. Do not run the engine over 4,000 rpm.
- Do not accelerate at full throttle in any gear.
- Avoid quick starts.
- Avoid hard braking as much as possible.
- Do not tow a trailer for the first 500 miles (800 km). Your engine, axle or other parts could be damaged.

INCREASING FUEL ECONOMY

- Accelerate slowly and smoothly. Maintain cruising speeds with a constant accelerator position.
- Drive at moderate speeds on the highway. Driving at high speed lowers fuel economy.
- Avoid unnecessary stopping and braking. Keep a safe distance behind other vehicles.
- Select a gear range suitable to road conditions.
- Avoid unnecessary engine idling.
- Keep your engine tuned up.
- Follow the recommended periodic maintenance schedule.
- Keep the tires inflated to the correct pressure. Low tire pressure increases tire wear and lowers fuel economy.
- Keep the wheels in correct alignment. Improper alignment increases tire wear and lowers fuel economy.
- Air conditioner operation lowers fuel economy. Use the air conditioner only when necessary.
- When cruising at highway speeds, it is more economical to use the air conditioner and leave the windows closed to reduce drag.

- Use the recommended viscosity engine oil. (See “ENGINE OIL AND OIL FILTER RECOMMENDATION” in the “9. Technical and consumer information” section.)

WARNING

- **For AWD equipped vehicles, do not attempt to raise two wheels off the ground and shift the transmission to any drive or reverse position with the engine running. Doing so may result in drivetrain damage or unexpected vehicle movement which could result in serious vehicle damage or personal injury.**
- **Do not attempt to test an AWD equipped vehicle on a 2-wheel dynamometer (such as the dynamometers used by some states for emissions testing) or similar equipment even if the other two wheels are raised off the ground. Make sure that you inform the test facility personnel that your vehicle is equipped with AWD before it is placed on a dynamometer. Using the wrong test equipment may result in drivetrain damage or unexpected vehicle movement which could result in serious vehicle damage or personal injury.**

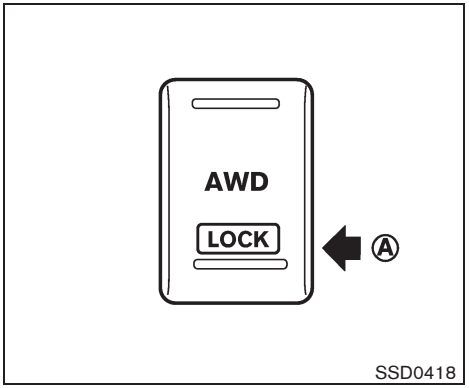

ALL-WHEEL DRIVE (AWD) LOCK SWITCH OPERATIONS

The AWD LOCK switch located on the lower side of the instrument panel. This switch is used to select the AUTO or LOCK mode depending on the driving conditions.

Each time you push the lower part of the switch Ⓐ , the AWD mode will switch:
AUTO → LOCK → AUTO.

LOCK mode

The AWD LOCK indicator light AWD LOCK will illuminate.

AUTO mode

The AWD LOCK indicator light will turn off.

AWD mode	Wheel driven	AWD LOCK indicator light	Use conditions
AUTO	Distribution of torque to the front and rear wheels changes automatically, depending on road conditions encountered [100:0] ↔ [50:50]. This results in improved driving stability.*1	Turns off.	For driving on paved or slippery roads
LOCK	All-Wheel Drive (AWD)*2, *3	AWD LOCK AWD LOCK	For driving on rough roads

*1: When the rotation difference between the front and rear wheels is large, the AWD mode may change from AUTO to LOCK for a while, however, this is not a malfunction.

*2: LOCK mode will change to AUTO mode automatically when the vehicle has been driven at a high speed. The AWD LOCK indicator light turns off.

*3: LOCK mode will automatically be cancelled when the ignition switch is turned to the OFF position.

- If the AWD LOCK switch is operated while accelerating or decelerating, or if the ignition switch is turned off, you may feel a jolt. This is normal.
- The oil temperature of power train parts will increase if the vehicle is continuously operated under conditions where the difference in rotation between the front and rear wheels is large (wheel slip), such as when driving the vehicle on rough roads through sand, mud or freeing a stuck vehicle. In these cases, the AWD warning light blinks rapidly and the AWD mode changes to 2WD to protect the powertrain parts. If you stop driving with the engine idling and wait until the warning light stops blinking, the AWD returns to the AUTO mode.

WARNING

- **When driving straight, shift the AWD LOCK switch to AUTO. Do not operate the AWD LOCK switch when making a turn or backing up.**
- **Do not operate the AWD LOCK switch with the front wheel spinning.**
- **Engine idling speed is high while warming up the engine. Be especially careful when starting or driving on slippery surfaces.**
- **When turning the vehicle in LOCK mode on paved roads, you may feel a braking effect. This is a normal condition of the AWD model.**

Warning light	Comes on or blinks when
AWD Comes on	There is a malfunction in the All-Wheel Drive (AWD) system.
AWD Blinks rapidly	The powertrain oil temperature rises extremely.
AWD Blinks slowly	The difference in wheel rotation is large.

SSD0336B

AWD WARNING LIGHT

The AWD warning light is located in the meter.

The AWD warning light illuminates when the ignition switch is turned to the ON position. It turns off soon after the engine is started.

If any malfunction occurs in the AWD system while the engine is running, the warning light will come on.

The warning light may blink rapidly (about twice per second) while trying to free a stuck vehicle due to high powertrain oil temperature. The driving mode may change to 2WD. AUTO mode may change to LOCK mode before the warning light blinks. If the warning light blinks rapidly during operation, stop the vehicle with the engine idling in a safe place immediately. Then if the light turns off after a while, you can continue driving.

A large difference between the diameters of front and rear wheels will make the warning light blink slowly (about once per two seconds). Pull off the road in a safe area, and idle the engine. Check that all tire sizes are the same, tire pressure is correct and tires are not worn.

CAUTION

- **If the warning light remains on after the above operation, have your vehicle checked by a NISSAN dealer as soon as possible.**
- **If the warning light comes on while driving there may be a malfunction in the AWD system. Reduce the vehicle speed and have your vehicle checked by a NISSAN dealer as soon as possible.**
- **The powertrain may be damaged if you continue driving with the warning light blinking rapidly.**
- **Never drive on dry hard surface roads in the LOCK mode, as this will overload the powertrain and may cause a serious malfunction.**

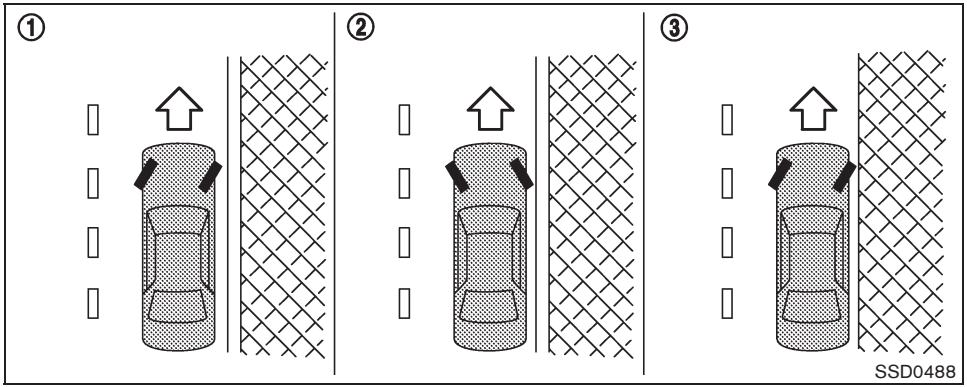

WARNING

- **Do not stop or park the vehicle over flammable materials such as dry grass, waste paper or rags. They may ignite and cause a fire.**
- **Safe parking procedures require that both the parking brake be set and the transmission placed into P (Park). Failure to do so could cause the vehicle to move unexpectedly or roll away and result in an accident. Make sure the selector lever has been pushed as far forward as it can go and cannot be moved without depressing the foot brake pedal.**
- **Never leave the engine running while the vehicle is unattended.**
- **Do not leave children unattended inside the vehicle. They could unknowingly activate switches or controls. Unattended children could become involved in serious accidents.**

1. Firmly apply the parking brake.
2. Move the selector lever to the P (Park) position.
3. To help prevent the vehicle from rolling into traffic when parked on an incline, it is a good practice to turn the wheels as illustrated.
   - HEADED DOWNHILL WITH CURB: ①
     Turn the wheels into the curb and move the vehicle forward until the curb side wheel gently touches the curb.
   - HEADED UPHILL WITH CURB: ②
     Turn the wheels away from the curb and move the vehicle back until the curb side wheel gently touches the curb.
   - HEADED UPHILL OR DOWNHILL, NO CURB: ③
     Turn the wheels toward the side of the road so the vehicle will move away from the center of the road if it moves.
4. Turn the ignition switch to the LOCK position and remove the key, if inserted.

ELECTRIC POWER STEERING SYSTEM

WARNING

- **If the engine is not running or is turned off while driving, the power assist for the steering will not work. Steering will be harder to operate.**
- **When the electric power steering warning light illuminates with the engine running, the power assist for the steering will cease operation. You will still have control of the vehicle but the steering will be harder to operate.**

The electric power steering system is designed to provide power assist while driving to operate the steering wheel with light force.

When the steering wheel is operated repeatedly or continuously while parking or driving at a very low speed, the power assist for the steering wheel will be reduced. This is to prevent overheating of the electric power steering system and protect it from getting damaged. While the power assist is reduced, steering wheel operation will become heavy. When the temperature of the electric power steering system goes down, the power assist level will return to normal. Avoid repeating such steering wheel operations that could cause the electric power steering system to overheat.

You may hear a fricative sound when the steering wheel is operated quickly. However, this is not a malfunction.

If the electric power steering warning light **PS** illuminates while the engine is running, it may indicate the electric power steering system is not functioning properly and may need servicing. Have the electric power steering system checked by a NISSAN dealer. (See “Electric power steering warning light” in the “2. Instruments and controls” section.)

When the electric power steering warning light illuminates with the engine running, the power assist for the steering will cease operation. You will still have control of the vehicle. However, greater steering effort is needed, especially in sharp turns and at low speeds.

BRAKE SYSTEM

BRAKING PRECAUTIONS

The brake system has two separate hydraulic circuits. If one circuit malfunctions, you will still have braking at two wheels.

You may feel a small click and hear a sound when the brake pedal is fully depressed slowly. This is not a malfunction and indicates that the brake assist mechanism is operating properly.

Vacuum assisted brakes

The brake booster aids braking by using engine vacuum. If the engine stops, you can stop the vehicle by depressing the brake pedal. However, greater foot pressure on the brake pedal will be required to stop the vehicle and the stopping distance will be longer.

Using the brakes

Avoid resting your foot on the brake pedal while driving. This will cause overheating of the brakes, wearing out the brake and pads faster and reduce gas mileage.

To help reduce brake wear and to prevent the brakes from overheating, reduce speed and downshift to a lower gear before going down a slope or long grade. Overheated brakes may reduce braking performance and could result in loss of vehicle control.

WARNING

- **While driving on a slippery surface, be careful when braking, accelerating or downshifting. Abrupt braking or accelerating could cause the wheels to skid and result in an accident.**
- **If the engine is not running or is turned off while driving, the power assist for the brakes will not work. Braking will be harder.**

Wet brakes

When the vehicle is washed or driven through water, the brakes may get wet. As a result, your braking distance will be longer and the vehicle may pull to one side during braking.

To dry brakes, drive the vehicle at a safe speed while lightly tapping the brake pedal to heat-up the brakes. Do this until the brakes return to normal. Avoid driving the vehicle at high speeds until the brakes function correctly.

PARKING BRAKE BREAK-IN

Break in the parking brake shoes whenever the stopping effect of the parking brake is weakened or whenever the parking brake shoes and/or drums/rotors are replaced, in order to assure the best braking performance.

This procedure is described in the vehicle service manual and can be performed by a NISSAN dealer.

ANTI-LOCK BRAKING SYSTEM (ABS)

WARNING

- **The Anti-lock Braking System (ABS) is a sophisticated device, but it cannot prevent accidents resulting from careless or dangerous driving techniques. It can help maintain vehicle control during braking on slippery surfaces. Remember that stopping distances on slippery surfaces will be longer than on normal surfaces even with ABS. Stopping distances may also be longer on rough, gravel or snow covered roads, or if you are using tire chains. Always maintain a safe distance from the vehicle in front of you. Ultimately, the driver is responsible for safety.**
- **Tire type and condition may also affect braking effectiveness.**
  - **When replacing tires, install the specified size of tires on all four wheels.**
  - **When installing a spare tire, make sure that it is the proper size and type as specified on the Tire and Loading Information label. See “TIRE AND LOADING INFORMATION LABEL” in the “9. Technical and consumer information” section of this manual.**
  - **For detailed information, see “WHEELS AND TIRES” in the “8. Maintenance and do-it-yourself” section of this manual.**

The Anti-lock Braking System (ABS) controls the brakes so the wheels do not lock during hard braking or when braking on slippery surfaces. The system detects the rotation speed at each wheel and varies the brake fluid pressure to prevent each wheel from locking and sliding. By preventing each wheel from locking, the system helps the driver maintain steering control and helps to minimize swerving and spinning on slippery surfaces.

Using the system

Depress the brake pedal and hold it down. Depress the brake pedal with firm steady pressure, but do not pump the brakes. The ABS will operate to prevent the wheels from

locking up. Steer the vehicle to avoid obstacles.

WARNING

Do not pump the brake pedal. Doing so may result in increased stopping distances.

Self-test feature

The ABS includes electronic sensors, electric pumps, hydraulic solenoids and a computer. The computer has a built-in diagnostic feature that tests the system each time you start the engine and move the vehicle at a low speed in forward or reverse. When the self-test occurs, you may hear a “clunk” noise and/or feel a pulsation in the brake pedal. This is normal and does not indicate a malfunction. If the computer senses a malfunction, it switches the ABS off and illuminates the ABS warning light on the instrument panel. The brake system then operates normally, but without anti-lock assistance.

If the ABS warning light illuminates during the self-test or while driving, have the vehicle checked by a NISSAN dealer.

Normal operation

The ABS operates at speeds above 3 to 6 MPH (5 to 10 km/h). The speed varies according to road conditions.

When the ABS senses that one or more wheels are close to locking up, the actuator rapidly applies and releases hydraulic pressure. This action is similar to pumping the brakes very quickly. You may feel a pulsation in the brake pedal and hear a noise from under the hood or feel a vibration from the actuator when it is operating. This is normal and indicates that the ABS is operating properly. However, the pulsation may indicate that road conditions are hazardous and extra care is required while driving.

VEHICLE DYNAMIC CONTROL (VDC) SYSTEM

When accelerating or driving on slippery surfaces, the tires may spin or slide. With the Vehicle Dynamic Control (VDC) system, sensors detect these movements and control the braking and engine output to help improve vehicle stability.

- When the VDC system is operating, the “SLIP” indicator in the instrument panel blinks.
- If the “SLIP” indicator blinks, the road conditions are slippery. Be sure to adjust your speed and driving to these conditions. Be sure to drive carefully. (See “Slip indicator light” in the “2. Instruments and controls” section, and “Vehicle Dynamic Control (VDC) off indicator light” in the “2. Instruments and controls” section.)
- Indicator light

  If a malfunction occurs in the system, the “SLIP” and “VDC OFF” indicator lights illuminate in the instrument panel. As long as these indicators are illuminated, the VDC system function is canceled.

The VDC system uses an Active Brake Limited Slip (ABLS) function to improve vehicle traction. The ABLS system works when one of the driving wheels is spinning on a slippery surface. The ABLS system brakes the spinning wheel, which distributes the driving power to the other drive

wheel. If the vehicle is operated with the VDC OFF switch pushed and the VDC system turned off, all VDC systems will be turned off. The ABLS system and ABS will still operate with the VDC system off. If the ABLS system is activated, the “SLIP” indicator will blink and you may hear a clunk noise and/or feel a pulsation in the brake pedal. This is normal and is not an indication of a malfunction.

While the VDC system is operating, you may feel a pulsation in the brake pedal and hear a noise or feel a vibration from under the hood. This is normal and indicates that the VDC system is working properly.

The VDC system computer has a built-in diagnostic feature that tests the system each time you start the engine and move the vehicle at a low speed forward or backward. When the self-test occurs, you may hear a “clunk” noise and/or feel a pulsation in the brake pedal. This is normal and is not an indication of a malfunction.

WARNING

- **The VDC system is designed to help improve driving stability but does not prevent accidents due to abrupt steering operation at high speeds or due to careless or dangerous driving techniques. Reduce vehicle speed and be especially careful when driving and cornering on slippery surfaces and always drive carefully.**
- **Do not modify the vehicle’s suspension. If suspension parts such as shock absorbers, struts, springs, stabilizer bars and bushings and wheels are not NISSAN approved or are extremely deteriorated the VDC system may not operate properly. This could adversely affect vehicle handling performance, and the “VDC OFF” indicator or “SLIP” indicator or both indicator lights may illuminate.**
- **If brake related parts such as brake pads, rotors and calipers are not standard equipment or are extremely deteriorated, the “VDC OFF” indicator or “SLIP” indicator or both indicator lights may illuminate.**
- **If engine related parts such as muffler are not standard equipment or are extremely deteriorated, the “VDC OFF” indicator or “SLIP” indicator or both indicator lights may illuminate.**
- **When driving on extremely inclined surfaces such as higher banked corners, the VDC system may not operate properly and the “VDC OFF” indicator or “SLIP” indicator or both indicator lights may illuminate. Do not drive on these types of roads.**
- **When driving on unstable surfaces such as a turntable, ferry, elevator or ramp, the “VDC OFF” indicator or “SLIP” indicator or both indicator lights may illuminate. This is not a malfunction. Restart the engine after driving onto a stable surface.**
- **If wheels or tires other than those recommended are used, the VDC system may not operate properly and “VDC OFF” indicator or “SLIP” indicator or both indicator lights may illuminate.**
- **The VDC system is not a substitute for winter tires or tire chains on a snow covered road.**

FREEING A FROZEN DOOR LOCK

To prevent a door lock from freezing, apply deicer through the key hole. If the lock becomes frozen, heat the key before inserting it into the key hole or use the remote keyless entry keyfob.

ANTI-FREEZE

In the winter when it is anticipated that the outside temperature will drop below 32°F (0°C), check the anti-freeze to assure proper winter protection. For additional information, see "ENGINE COOLING SYSTEM" in the "8. Maintenance and do-it-yourself" section.

BATTERY

If the battery is not fully charged during extremely cold weather conditions, the battery fluid may freeze and damage the battery. To maintain maximum efficiency, the battery should be checked regularly. For additional information, see "BATTERY" in the "8. Maintenance and do-it-yourself" section.

DRAINING OF COOLANT WATER

If the vehicle is to be left outside without anti-freeze, drain the cooling system, including the engine block. Refill before operating the vehicle. For details, see "ENGINE COOLING SYSTEM" in the "8. Maintenance and do-it-yourself" section.

TIRE EQUIPMENT

SUMMER tires have a tread designed to provide superior performance on dry pavement. However, the performance of these tires will be substantially reduced in snowy and icy conditions. If you operate your vehicle on snowy or icy roads, NISSAN recommends the use of MUD & SNOW or ALL SEASON tires on all four wheels. Consult a NISSAN dealer for the tire type, size, speed rating and availability information.

For additional traction on icy roads, studded tires may be used. However, some U.S. states and Canadian provinces prohibit their use. Check local, state and provincial laws before installing studded tires.

Skid and traction capabilities of studded snow tires, on wet or dry surfaces, may be poorer than that of non-studded snow tires.

Tire chains may be used. For details, see "TIRE CHAINS" in the "8. Maintenance and do-it-yourself" section of this manual.

All-Wheel Drive (AWD) model

If you install snow tires, they must also be the same size, brand, construction and tread pattern on all four wheels.

SPECIAL WINTER EQUIPMENT

It is recommended that the following items be carried in the vehicle during winter:

- A scraper and stiff-bristled brush to remove ice and snow from the windows and wiper blades.
- A sturdy, flat board to be placed under the jack to give it firm support.
- A shovel to dig the vehicle out of snow-drifts.
- Extra window washer fluid to refill the reservoir tank.

DRIVING ON SNOW OR ICE

WARNING

- **Wet ice (32°F, 0°C and freezing rain), very cold snow or ice can be slick and very hard to drive on. The vehicle will have much less traction or "grip" under these conditions. Try to avoid driving on wet ice until the road is salted or sanded.**
- **Whatever the condition, drive with caution. Accelerate and slow down with care. If accelerating or down-shifting too fast, the drive wheels**

will lose even more traction.

- **Allow more stopping distance under these conditions. Braking should be started sooner than on dry pavement.**
- **Allow greater following distances on slippery roads.**
- **Watch for slippery spots (glare ice). These may appear on an otherwise clear road in shaded areas. If a patch of ice is seen ahead, brake before reaching it. Try not to brake while on the ice, and avoid any sudden steering maneuvers.**
- **Do not use cruise control on slippery roads.**
- **Snow can trap dangerous exhaust gases under your vehicle. Keep snow clear of the exhaust pipe and from around your vehicle.**

ENGINE BLOCK HEATER (if so equipped)

Engine block heaters are available through NISSAN dealers to assist in cold temperature starting. The engine block heater should be used when the outside temperature is 20°F (−7°C) or lower.

To use the engine block heater

1. Turn the engine off.
2. Open the hood and unwrap the engine block heater cord.
3. Plug the engine block heater cord into a grounded 3-wire, 3-pronged extension cord.
4. Plug the extension cord into a Ground Fault Interrupt (GFI) protected, grounded 110-volt AC (VAC) outlet.
5. The engine block heater must be plugged in for at least 2 - 4 hours, depending on outside temperatures, to properly warm the engine coolant. Use an appropriate timer to turn the engine block heater on.
6. Before starting the engine, unplug and properly store the cord to keep it away from moving parts.

WARNING

- **Do not use your engine block heater with an ungrounded electrical system or a 2-pronged adapter. You can be seriously injured by an electrical shock if you use an ungrounded connection.**
- **Disconnect and properly store the engine block heater cord before starting the engine. Damage to the cord could result in an electrical shock and can cause serious injury.**
- **Use a heavy-duty 3-wire, 3-pronged extension cord rated for at least 10A. Plug the extension cord into a Ground Fault Interrupt (GFI) protected, grounded 110-VAC outlet. Failure to use the proper extension cord or a grounded outlet can result in a fire or electrical shock and cause serious personal injury.**

MEMO

6 In case of emergency

Flat tire 6-2
Tire Pressure Monitoring System (TPMS) 6-2
Changing a flat tire 6-2
Jump starting 6-9
Push starting 6-10
If your vehicle overheats 6-11
Towing your vehicle 6-12
Towing recommended by NISSAN 6-13
Vehicle recovery (freeing a stuck vehicle) 6-15

TIRE PRESSURE MONITORING SYSTEM (TPMS)

This vehicle is equipped with the Tire Pressure Monitoring System (TPMS). It monitors tire pressure of all tires except the spare. When the low tire pressure warning light is lit, one or more of your tires is significantly under-inflated. If the vehicle is being driven with low tire pressure, the TPMS will activate and warn you of it by the low tire pressure warning light. This system will activate only when the vehicle is driven at speeds above 16 MPH (25 km/h). For more details, see "WARNING/INDICATOR LIGHTS AND AUDIBLE REMINDERS" in the "2. Instruments and controls" section and "TIRE PRESSURE MONITORING SYSTEM (TPMS)" in the "5. Starting and driving" section.

WARNING

- **If the low tire pressure warning light illuminates while driving, avoid sudden steering maneuvers or abrupt braking, reduce vehicle speed, pull off the road to a safe location and stop the vehicle as soon as possible. Driving with under-inflated tires may permanently damage the tires and increase the likelihood of tire failure. Serious vehicle damage could occur and may lead to an accident and could result in serious personal injury. Check the tire pressure for all four tires. Adjust the tire pressure to the recommended COLD tire pressure shown on the Tire and Loading Information label to turn the low tire pressure warning light OFF. If you have a flat tire, replace it with a spare tire as soon as possible.**
- **When a spare tire is mounted or a wheel is replaced, the TPMS will not function and the low tire pressure warning light will flash for approximately 1 minute. The light will remain on after 1 minute. Contact your NISSAN dealer as soon as possible for tire replacement and/or system resetting.**
- **Replacing tires with those not originally specified by NISSAN could affect the proper operation of the TPMS.**
- **Do not inject any tire liquid or aerosol tire sealant into the tires, as this may cause a malfunction of the tire pressure sensors.**

CHANGING A FLAT TIRE

If you have a flat tire, follow the instructions below.

Stopping the vehicle

1. Safely move the vehicle off the road and away from traffic.
2. Turn on the hazard warning flashers.
3. Park on a level surface and apply the parking brake. Move the selector lever to the P (Park) position.
4. Turn off the engine.
5. Raise the hood to warn other traffic, and to signal professional road assistance personnel that you need assistance.
6. Have all passengers get out of the vehicle and stand in a safe place, away from traffic and clear of the vehicle.

WARNING

- **Make sure the parking brake is securely applied and the transmission is shifted into the P (Park) position.**
- **Never change tires when the vehicle is on a slope, ice or slippery areas. This is hazardous.**

- **Never change tires if oncoming traffic is close to your vehicle. Wait for professional road assistance.**

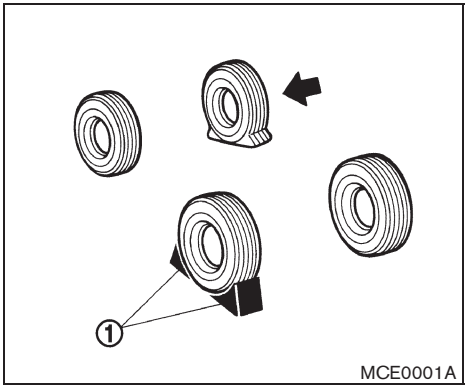

Blocking wheels

Place suitable blocks ① at both the front and back of the wheel diagonally opposite the flat tire to prevent the vehicle from moving when it is jacked up.

WARNING

Be sure to block the wheel as the vehicle may move and result in personal injury.

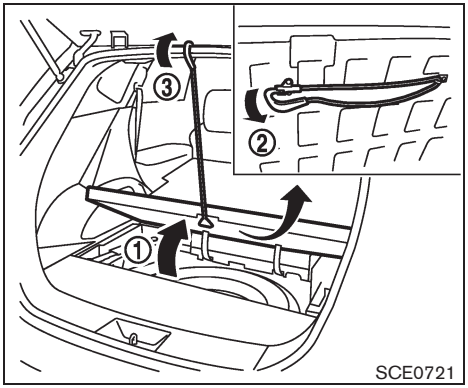

Getting the spare tire and tools

1. Open the lift gate.
2. Remove the cargo cover (if so equipped). (See “CARGO COVER” in the “2. Instruments and controls” section.)
3. Lift up the luggage floor board ① (foldable or separate type).
4. Remove the strap from the back side of the board ②, and hang it on the opening of the lift gate ③ as shown.

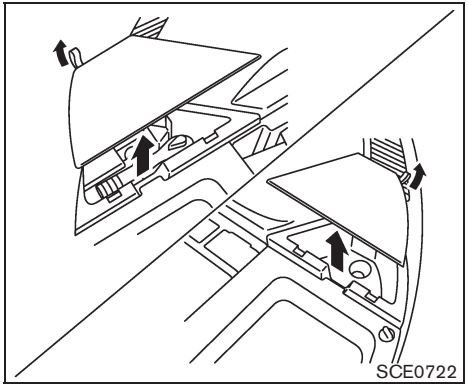

5. Remove the lids of the luggage side boxes.

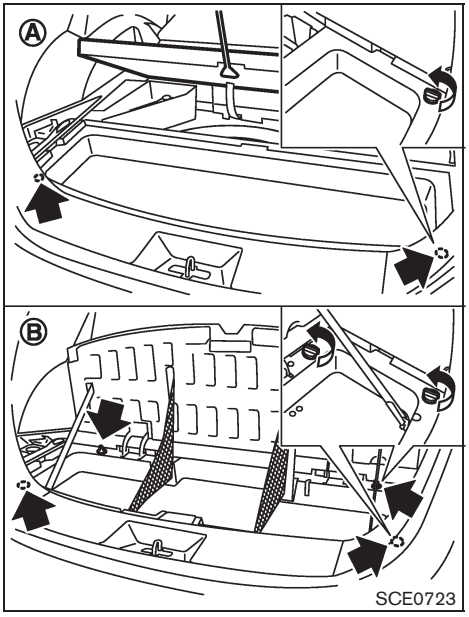

6. Remove the luggage floor box (Type A or B) by turning the clips counterclockwise.

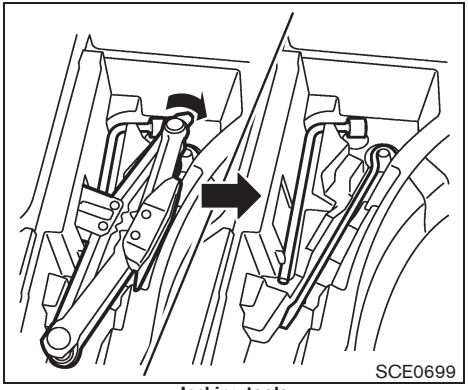

Jacking tools

7. Remove the jacking tools and the spare tire.

   Jacking tools: Remove the jack by turning it, then remove the other tools.

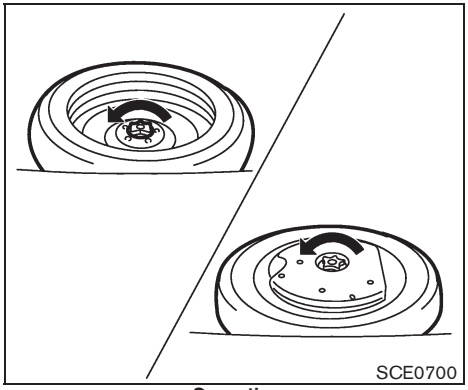

Spare tire

Spare tire: Turn the clamp to remove the tire.

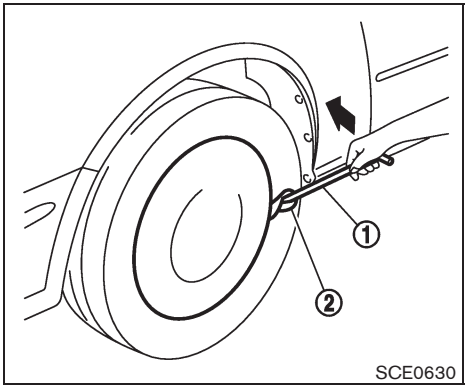

Removing wheel cover (if so equipped)

WARNING

Never use your hands to remove the wheel cover. This may cause personal injury.

To remove the wheel cover, use the jack rod ① as illustrated.

Apply cloth ② between the wheel and jack rod to prevent damaging the wheel and wheel cover.

Jacking up the vehicle and removing the damaged tire

WARNING

- **Never get under the vehicle while it is supported only by the jack. If it is necessary to work under the vehicle, support it with safety stands.**
- **Use only the jack provided with your vehicle to lift the vehicle. Do not use the jack provided with your vehicle on other vehicles. The jack is designed for lifting only your vehicle during a tire change.**
- **Use the correct jack-up points. Never use any other part of the vehicle for jack support.**
- **Never jack up the vehicle more than necessary.**
- **Never use blocks on or under the jack.**
- **Do not start or run the engine while vehicle is on the jack, as it may cause the vehicle to move.**
- **Do not allow passengers to stay in the vehicle while it is on the jack.**

Carefully read the caution label attached to the jack body and the following instructions.

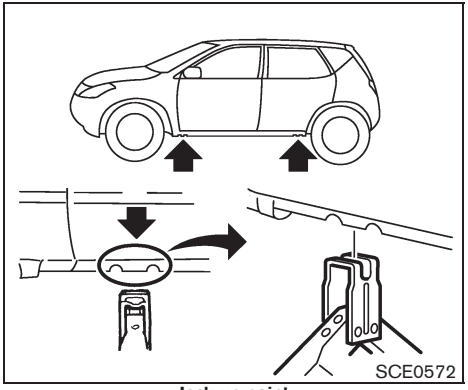

Jack-up point

1. Place the jack directly under the jack-up point as illustrated so the top of the jack contacts the vehicle at the jack-up point. Align the jack head between the two notches in the front or the rear as shown. Also fit the groove of the jack head between the notches as shown.

   The jack should be used on level firm ground.

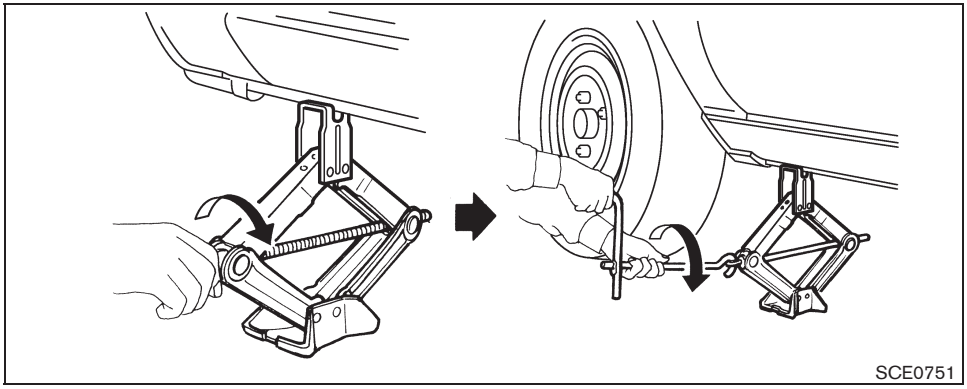

2. Loosen each wheel nut one or two turns by turning counterclockwise with the wheel nut wrench. **Do not remove the wheel nuts until the tire is off the ground.**
3. To lift the vehicle, securely hold the jack lever and rod with both hands as shown above. Carefully raise the vehicle until the tire clears the ground. Remove the wheel nuts, and then remove the tire.

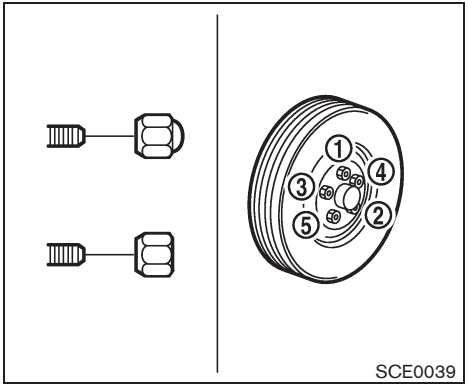

Installing the spare tire

The spare tire is designed for emergency use. (See specific instructions under the heading "WHEELS AND TIRES" in the "8. Maintenance and do-it-yourself" section.)

1. Clean any mud or dirt from the surface between the wheel and hub.
2. Carefully put the spare tire on and tighten the wheel nuts finger tight. Check that all the wheel nuts contact the wheel surface horizontally.
3. With the wheel nut wrench, tighten wheel nuts alternately and evenly in the sequence as illustrated (①, ②, ③, ④, ⑤), more

than 2 times, until they are tight.

4. Lower the vehicle slowly until the tire touches the ground. Then, with the wheel nut wrench, tighten the wheel nuts securely in the sequence as illustrated. Lower the vehicle completely.

WARNING

- **Incorrect wheel nuts or improperly tightened wheel nuts can cause the wheel to become loose or come off. This could cause an accident.**
- **Do not use oil or grease on the wheel studs or nuts. This could cause the nuts to become loose.**
- **Retighten the wheel nuts when the vehicle has been driven for 600 miles (1,000 km) (also in cases of a flat tire, etc.).**

- **As soon as possible, tighten the wheel nuts to the specified torque with a torque wrench.**

Wheel nut tightening torque:
80 ft-lb (108 N·m)

The wheel nuts must be kept tightened to specification at all times. It is recommended that wheel nuts be tightened to specifications at each lubrication interval.

- **Adjust tire pressure to the COLD pressure.**

COLD pressure:

After the vehicle has been parked for three hours or more or driven less than 1 mile (1.6 km).

COLD tire pressures are shown on the Tire and Loading Information label affixed to the driver side center pillar.

Stowing the damaged tire and the tools

1. Securely store the damaged tire, jack and tools in the storage area.
2. Replace the luggage floor box.
3. Replace the lids on the luggage side boxes.
4. Remove the strap from the lift gate opening and store it to the original place. Close the luggage floor board.
5. Replace the cargo cover (if so equipped).
6. Close the lift gate.

WARNING

- **Always make sure that the spare tire and jacking equipment are properly secured after use. Such items can become dangerous projectiles in an accident or sudden stop.**
- **The T-type spare tire and small size spare tire are designed for emergency use. See specific instructions under the heading "WHEELS AND TIRES" in the "8. Maintenance and do-it-yourself" section.**

JUMP STARTING

To start your engine with a booster battery, the instructions and precautions below must be followed.

WARNING

- **If done incorrectly, jump starting can lead to a battery explosion, resulting in severe injury or death. It could also damage your vehicle.**
- **Explosive hydrogen gas is always present in the vicinity of the battery. Keep all sparks and flames away from the battery.**
- **Do not allow battery fluid to come into contact with eyes, skin, clothing or painted surfaces. Battery fluid is a corrosive sulfuric acid solution which can cause severe burns. If the fluid should come into contact with anything, immediately flush the contacted area with water.**
- **Keep the battery out of the reach of children.**
- **The booster battery must be rated at 12 volts. Use of an improperly rated battery can damage your vehicle.**
- **Whenever working on or near a battery, always wear suitable eye protectors (for example, goggles or industrial safety spectacles) and remove rings, metal bands, or any other jewelry. Do not lean over the battery when jump starting.**
- **Do not attempt to jump start a frozen battery. It could explode and cause serious injury.**
- **Your vehicle has an automatic engine cooling fan. It could come on at any time. Keep hands and other objects away from it.**

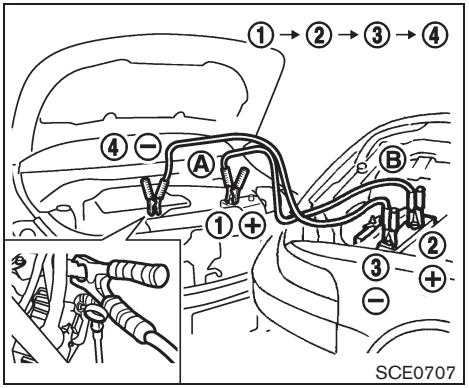

WARNING

Always follow the instructions below. Failure to do so could result in damage to the charging system and cause personal injury.

1. If the booster battery is in another vehicle Ⓑ, position the two vehicles (Ⓐ and Ⓑ) to bring their batteries into close proximity to each other.

   Do not allow the two vehicles to touch.

2. Apply the parking brake. Move the selector lever to the P (Park) position. Switch off all

unnecessary electrical systems (lights, heater, air conditioner, etc.).

3. Remove vent caps on the battery (if so equipped). Cover the battery with a firmly wrung out moist cloth to reduce explosion hazard.
4. Connect jumper cables in the sequence as illustrated (① → ② → ③ → ④).

   For the vehicle equipped with Intelligent Key system:

   If the battery is discharged, the ignition switch cannot be moved from the LOCK position and, if the steering lock is engaged, the steering wheel cannot be moved. Connect the jumper cables to the booster vehicle Ⓑ before turning the ignition switch and disengaging the steering lock.

CAUTION

- **Always connect positive (+) to positive (+) and negative (–) to body ground (for example, as illustrated), not to the battery.**
- **Make sure the jumper cables do not touch moving parts in the engine compartment and that the cable clamps do not contact any other metal.**

5. Start the engine of the booster vehicle Ⓑ and let it run for a few minutes.
6. Keep the engine speed of the booster vehicle Ⓑ at about 2,000 rpm, and start the engine of the vehicle Ⓐ being jump started.

CAUTION

Do not keep the starter motor engaged for more than 10 seconds. If the engine does not start right away, turn the ignition switch to the OFF position and wait 10 seconds before trying again.

7. After starting your engine, carefully disconnect the negative cable and then the positive cable (④ → ③ → ② → ①).
8. Replace the vent caps (if so equipped). Be sure to dispose of the cloth used to cover the vent holes as it may be contaminated with corrosive acid.

PUSH STARTING

Do not attempt to start the engine by pushing.

CAUTION

Continuously Variable Transmission (CVT) models cannot be push-started or tow-started. Attempting to do so may cause transmission damage.

IF YOUR VEHICLE OVERHEATS

CAUTION

- **Do not continue to drive if your vehicle overheats. Doing so could cause engine damage or a vehicle fire.**
- **To avoid the danger of being scalded, never remove the radiator cap while the engine is still hot. When the radiator cap is removed, pressurized hot water will spurt out, possibly causing serious injury.**
- **Do not open the hood if steam is coming out.**

If your vehicle is overheating (indicated by an extremely high temperature gauge reading), or if you feel a lack of engine power, detect abnormal noise, etc., take the following steps:

1. Move the vehicle safely off the road, apply the parking brake and move the selector lever to the P (Park) position.

   Do not stop the engine.

2. Turn off the air conditioner. Open all the windows, move the heater or air conditioner temperature control to maximum hot and fan control to high speed.
3. Get out of the vehicle. Look and listen for steam or coolant escaping from the radiator before opening the hood. (If steam or coolant is escaping, turn off the engine.) Do not open the hood further until no steam or coolant can be seen.
4. Open the engine hood.

WARNING

If steam or water is coming from the engine, stand clear to prevent getting burned.

5. Visually check drive belts for damage or looseness. Also check if the cooling fan is running. The radiator hoses and radiator should not leak water. If coolant is leaking, the water pump belt is missing or loose, or the cooling fan does not run, stop the engine.

WARNING

Be careful not to allow your hands, hair, jewelry or clothing to come into contact with, or get caught in, engine belts or the engine cooling fan. The engine cooling fan can start at any time.

6. After the engine cools down, check the coolant level in the reservoir tank with the engine running. Add coolant to the reservoir tank if necessary. Have your vehicle repaired at a NISSAN dealer.

TOWING YOUR VEHICLE

When towing your vehicle, all State (Provincial in Canada) and local regulations for towing must be followed. Incorrect towing equipment could damage your vehicle. Towing instructions are available from a NISSAN dealer. Local service operators are familiar with the applicable laws and procedures for towing. To assure proper towing and to prevent accidental damage to your vehicle, NISSAN recommends that you have a service operator tow your vehicle. It is advisable to have the service operator carefully read the following precautions.

WARNING

- **Never ride in a vehicle that is being towed.**
- **Never get under your vehicle after it has been lifted by a tow truck.**

CAUTION

- **When towing, make sure that the transmission, axles, steering system and powertrain are in working condition. If any unit is damaged, dollies must be used.**
- **Always attach safety chains before towing.**

For information about towing your vehicle behind a recreational vehicle (RV), see “FLAT TOWING” in the “9. Technical and consumer information” section of this manual.

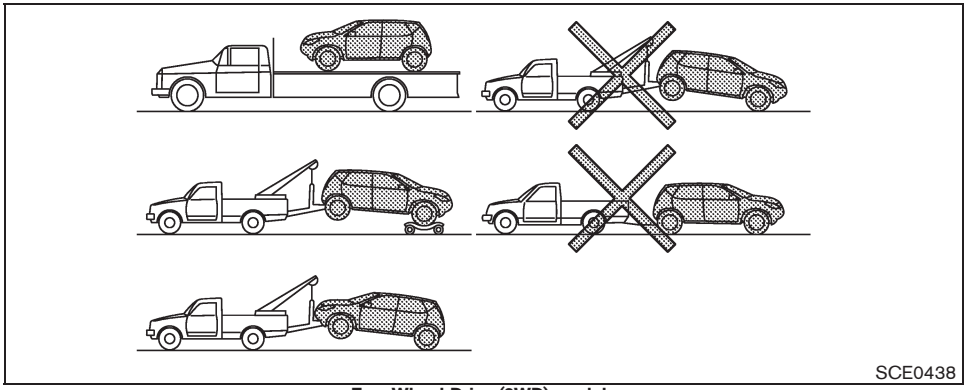

Two-Wheel Drive (2WD) models

TOWING RECOMMENDED BY NISSAN

Two-Wheel Drive (2WD) models

NISSAN recommends that your vehicle be towed with the driving (front) wheels off the ground or place the vehicle on a flat bed truck as illustrated.

CAUTION

- **Never tow Continuously Variable Transmission (CVT) models with the front wheels on the ground or four wheels on the ground (forward or backward), as this may cause serious and expensive damage to the transmission. If it is necessary to tow the vehicle with the rear wheels raised, always use towing dollies under the front wheels.**
- **When towing CVT models with the front wheels on towing dollies:**
  - **Turn the ignition switch to the OFF position, and secure the steering wheel in a straight-ahead position with a rope or similar device. Never secure the steering wheel by turning the ignition switch to the LOCK position. This may damage the steering lock mechanism.**
  - **Move the selector lever to the N (Neutral) position.**
- **When towing a CVT model with the rear wheels on the ground (if you do not use towing dollies): Always release the parking brake.**

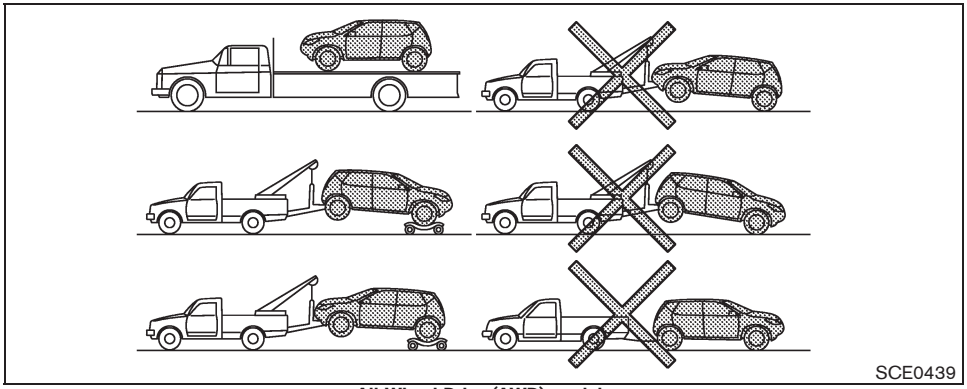

All-Wheel Drive (AWD) models

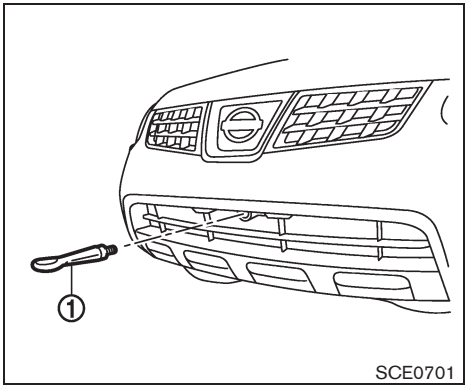

Front

All-Wheel Drive (AWD) models

NISSAN recommends that towing dollies be used when towing your vehicle or place the vehicle on a flatbed truck as illustrated.

CAUTION

Never tow AWD models with any of the wheels on the ground as this may cause serious and expensive damage to the powertrain.

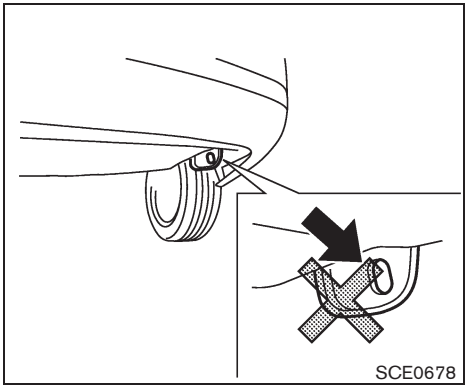

Rear

VEHICLE RECOVERY (freeing a stuck vehicle)

WARNING

- **Stand clear of a stuck vehicle.**
- **Do not spin your tires at high speed. This could cause them to explode and result in serious injury. Parts of your vehicle could also overheat and be damaged.**

Pulling a stuck vehicle

Do not use the tie down hooks for towing or vehicle recovery.

Front:

Securely install the vehicle recovery hook ① (stored in the cargo area) as illustrated. Make sure that the hook is properly secured in the original place after use.

Rear:

Do not use the tie down hook to pull the vehicle.

CAUTION

- **Tow chains or cables must be attached only to the main structural members of the vehicle or the recovery hook. Otherwise, the vehicle body will be damaged.**
- **Do not use the vehicle tie down hooks to free a vehicle stuck in sand, snow, mud, etc. Never tow a vehicle using the vehicle tie down hooks.**
- **Always pull the cable straight out from the front of the vehicle. Never pull on the vehicle at an angle.**
- **Pulling devices should be routed so they do not touch any part of the suspension, steering, brake or cooling systems.**
- **Pulling devices such as ropes or canvas straps are not recommended for use in vehicle towing or recovery.**

Rocking a stuck vehicle

If your vehicle is stuck in sand, snow, mud, etc., use the following procedure:

1. Turn off the Vehicle Dynamic Control (VDC) system.
2. Make sure the area in front and behind the vehicle is clear of obstructions.
3. Turn the steering wheel right and left to clear an area around the front tires.
4. Slowly rock the vehicle forward and backward.
   - Shift back and forth between R (Reverse) and D (Drive).
   - Apply the accelerator as little as possible to maintain the rocking motion.
   - Release the accelerator pedal before shifting between R and D.
   - Do not spin the tires above 35 MPH (55 km/h).
5. If the vehicle cannot be freed after a few tries, contact a professional towing service to remove the vehicle.

MEMO

7 Appearance and care

Cleaning exterior 7-2
Washing 7-2
Waxing 7-2
Removing spots 7-3
Underbody 7-3
Glass 7-3
Aluminum alloy wheels 7-3
Chrome parts 7-3
Tire dressing 7-3
Cleaning interior 7-4
Floor mats 7-4
Seat belts 7-5
Corrosion protection 7-5
Most common factors contributing to vehicle corrosion 7-5
Environmental factors influence the rate of corrosion 7-5
To protect your vehicle from corrosion 7-5

CLEANING EXTERIOR

In order to maintain the appearance of your vehicle, it is important to take proper care of it.

To protect the paint surfaces, wash your vehicle as soon as you can:

- after a rainfall to prevent possible damage from acid rain
- after driving on coastal roads
- when contaminants such as soot, bird droppings, tree sap, metal particles or bugs get on the paint surface
- when dust or mud builds up on the surface

Whenever possible, store or park your vehicle inside a garage or in a covered area.

When it is necessary to park outside, park in a shady area or protect the vehicle with a body cover.

Be careful not to scratch the paint surface when putting on or removing the body cover.

WASHING

Wash dirt off the vehicle with a wet sponge and plenty of water. Clean the vehicle thoroughly using a mild soap, a special vehicle soap or general purpose dishwashing liquid mixed with clean, lukewarm (never hot) water.

CAUTION

- **Do not use car washes that use acid in the detergent. Some car washes, especially brushless ones, use some acid for cleaning. The acid may react with some plastic vehicle components, causing them to crack. This could affect their appearance, and also could cause them not to function properly. Always check with your car wash to confirm that acid is not used.**
- **Do not wash the vehicle with strong household soap, strong chemical detergents, gasoline or solvents.**
- **Do not wash the vehicle in direct sunlight or while the vehicle body is hot, as the surface may become water-spotted.**
- **Avoid using tight-napped or rough cloths, such as washing mitts. Care must be taken when removing caked-on dirt or other foreign substances so the paint surface is not scratched or damaged.**

Rinse the vehicle thoroughly with plenty of clean water.

Inside flanges, seams and folds on the doors, hatches and hood are particularly vulnerable to the effects of road salt. Therefore, these areas must be regularly cleaned. Take care that the drain holes in the lower edge of the door are open. Spray water under the body and in the wheel wells to loosen the dirt and wash away road salt.

Avoid leaving water spots on the paint surface by using a damp chamois to dry the vehicle.

WAXING

Regular waxing protects the paint surface and helps retain new vehicle appearance. Polishing is recommended to remove built-up wax residue and to avoid a weathered appearance before reapplying wax.

A NISSAN dealer can assist you in choosing the proper product.

- Wax your vehicle only after a thorough washing. Follow the instructions supplied with the wax.
- Do not use a wax containing any abrasives, cutting compounds or cleaners that may damage the vehicle finish.

Machine compound or aggressive polishing on a base coat/clear coat paint finish may dull the finish or leave swirl marks.

REMOVING SPOTS

Remove tar and oil spots, industrial dust, insects, and tree sap as quickly as possible from the paint surface to avoid lasting damage or staining. Special cleaning products are available at a NISSAN dealer or any automotive accessory stores.

UNDERBODY

In areas where road salt is used in winter, the underbody must be cleaned regularly. This will prevent dirt and salt from building up and causing the acceleration of corrosion on the underbody and suspension. Before the winter period and again in the spring, the underseal must be checked and, if necessary, re-treated.

GLASS

Use glass cleaner to remove smoke and dust film from the glass surfaces. It is normal for glass to become coated with a film after the vehicle is parked in the hot sun. Glass cleaner and a soft cloth will easily remove this film.

CAUTION

When cleaning the inside of the windows, do not use sharp-edged tools, abrasive cleaners or chlorine-based disinfectant cleaners. They could damage the electrical conductors, radio antenna elements or rear window defroster elements.

ALUMINUM ALLOY WHEELS

Wash regularly with a sponge dampened in a mild soap solution, especially during winter months in areas where road salt is used. Salt could discolor the wheels if not removed.

CAUTION

Follow the directions below to avoid staining or discoloring the wheels:

- **Do not use a cleaner that uses strong acid or alkali contents to clean the wheels.**
- **Do not apply wheel cleaners to the wheels when they are hot. The wheel temperature should be the same as ambient temperature.**
- **Rinse the wheel to completely remove the cleaner within 15 minutes after the cleaner is applied.**

CHROME PARTS

Clean chrome parts regularly with a non-abrasive chrome polish to maintain the finish.

TIRE DRESSING

NISSAN does not recommend the use of tire dressings. Tire manufacturers apply a coating to the tires to help reduce discoloration of the rubber. If a tire dressing is applied to the tires, it may react with the coating and form a compound. This compound may come off the tire while driving and stain the vehicle paint.

If you choose to use a tire dressing, take the following precautions:

- Use a water-based tire dressing. The coating on the tire dissolves more easily with an oil-based tire dressing.
- Apply a light coat of tire dressing to help prevent it from entering the tire tread/grooves (where it would be difficult to remove).
- Wipe off excess tire dressing using a dry towel. Make sure the tire dressing is completely removed from the tire tread/grooves.
- Allow the tire dressing to dry as recommended by tire dressing manufacturer.

CLEANING INTERIOR

Occasionally remove loose dust from the interior trim, plastic parts and seats using a vacuum cleaner or soft bristled brush. Wipe the vinyl and leather surfaces with a clean, soft cloth dampened in mild soap solution, then wipe clean with a dry soft cloth.

Regular care and cleaning is required in order to maintain the appearance of the leather.

Before using any fabric protector, read the manufacturer's recommendations. Some fabric protectors contain chemicals that may stain or bleach the seat material.

Use a cloth dampened only with water, to clean the meter and gauge lens.

WARNING

Do not use water or acidic cleaners (hot steam cleaners) on the seat. This can damage the seat or occupant classification sensor. This can also affect the operation of the air bag system and result in serious personal injury.

CAUTION

- **Never use benzine, thinner, or any similar material.**
- **Small dirt particles can be abrasive and damaging to the leather surfaces and should be removed promptly. Do not use saddle soap, car waxes, polishes, oils, cleaning fluids, solvents, detergents or ammonia-based cleaners as they may damage the leather's natural finish.**
- **Never use fabric protectors unless recommended by the manufacturer.**
- **Do not use glass or plastic cleaner on meter or gauge lens covers. It may damage the lens cover.**

FLOOR MATS

The use of genuine NISSAN floor mats can extend the life of your vehicle carpet and make it easier to clean the interior. **No matter what mats are used, be sure they are fitted for your vehicle and are properly positioned in the footwell to prevent interference with pedal operation.** Mats should be maintained with regular cleaning and replaced if they become excessively worn.

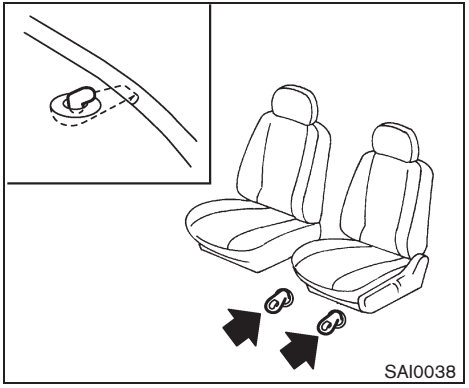

Floor mat positioning aid (driver's side only)

This vehicle includes front floor mat brackets to act as floor mat positioning aid. NISSAN floor mats have been specially designed for your vehicle model. The driver's side floor mat has grommet holes in it. To install, position the mat by placing the floor mat bracket hook through the floor mat grommet hole while centering the mat in the footwell.

Periodically check to make certain that the mats are properly positioned.

SEAT BELTS

The seat belts can be cleaned by wiping them with a sponge dampened in a mild soap solution. Allow the belts to dry completely in the shade before using them.

See “SEAT BELTS” in the “1. Safety — Seats, seat belts and supplemental restraint system” section.

WARNING

Do not allow wet seat belts to roll up in the retractor. NEVER use bleach, dye, or chemical solvents to clean the seat belts, since these materials may severely weaken the seat belt webbing.

MOST COMMON FACTORS CONTRIBUTING TO VEHICLE CORROSION

- The accumulation of moisture-retaining dirt and debris in body panel sections, cavities, and other areas.
- Damage to paint and other protective coatings caused by gravel and stone chips or minor traffic accidents.

ENVIRONMENTAL FACTORS INFLUENCE THE RATE OF CORROSION

Moisture

Accumulation of sand, dirt and water on the vehicle body underside can accelerate corrosion. Wet floor coverings will not dry completely inside the vehicle, and should be removed for drying to avoid floor panel corrosion.

Relative humidity

Corrosion will be accelerated in areas of high relative humidity, especially those areas where the temperatures stay above freezing where atmospheric pollution exists, or where road salt is used.

Temperature

A temperature increase will accelerate the rate of corrosion to those parts which are not well ventilated.

Air pollution

Industrial pollution, the presence of salt in the air in coastal areas, or heavy road salt use will accelerate the corrosion process. Road salt will also accelerate the disintegration of paint surfaces.

TO PROTECT YOUR VEHICLE FROM CORROSION

- Wash and wax your vehicle often to keep the vehicle clean.
- Always check for minor damage to the paint and repair it as soon as possible.
- Keep drain holes at the bottom of the doors open to avoid water accumulation.
- Check the underbody for accumulation of sand, dirt or salt. If present, wash with water as soon as possible.

CAUTION

- **NEVER remove dirt, sand or other debris from the passenger compartment by washing it out with a hose. Remove dirt with a vacuum cleaner or broom.**
- **Never allow water or other liquids to come in contact with electronic**

components inside the vehicle as this may damage them.

Chemicals used for road surface deicing are extremely corrosive. They accelerate corrosion and deterioration of underbody components such as the exhaust system, fuel and brake lines, brake cables, floor pan and fenders.

In winter, the underbody must be cleaned periodically.

For additional protection against rust and corrosion, which may be required in some areas, consult a NISSAN dealer.

8 Maintenance and do-it-yourself

Maintenance requirement 8-2
Scheduled maintenance..... 8-2
General maintenance 8-2
Where to go for service..... 8-2
General maintenance 8-2
Explanation of maintenance items..... 8-2
Maintenance precautions 8-5
Engine compartment check locations 8-6
QR25DE engine 8-6
Engine cooling system..... 8-7
Checking engine coolant level..... 8-8
Changing engine coolant 8-8
Engine oil..... 8-8
Checking engine oil level 8-8
Changing engine oil and filter..... 8-9
Continuously Variable Transmission (CVT) fluid..... 8-11
Brake fluid..... 8-11
Window washer fluid 8-12
Battery 8-13
Jump starting 8-14
Drive belts..... 8-14
Spark plugs 8-15
Replacing spark plugs..... 8-15
Air cleaner..... 8-16
Windshield wiper blades..... 8-16
Cleaning 8-16
Replacing..... 8-17
Rear window wiper blade..... 8-18
Brakes..... 8-18
Self-adjusting brakes 8-18
Brake pad wear indicators..... 8-18
Fuses..... 8-19
Engine compartment 8-19
Passenger compartment 8-20
Battery replacement..... 8-21
Keyfob..... 8-21
Intelligent Key battery..... 8-22
Lights..... 8-24
Headlights..... 8-25
Exterior and interior lights..... 8-26
Wheels and tires..... 8-29
Tire pressure..... 8-29
Tire labeling..... 8-33
Types of tires 8-35
Tire chains..... 8-36
Changing wheels and tires 8-37

MAINTENANCE REQUIREMENT

Your new NISSAN has been designed to have minimum maintenance requirements with long service intervals to save you both time and money. However, some day-to-day and regular maintenance is essential to maintain your NISSAN's fine mechanical condition, as well as its emission and engine performance.

It is the owner's responsibility to make sure that the scheduled maintenance, as well as general maintenance, is performed.

As the vehicle owner, you are the only one who can ensure that your vehicle receives the proper maintenance. You are a vital link in the maintenance chain.

SCHEDULED MAINTENANCE

For your convenience, both required and optional scheduled maintenance items are described and listed in your "NISSAN Service and Maintenance Guide". You must refer to that guide to ensure that necessary maintenance is performed on your NISSAN at regular intervals.

GENERAL MAINTENANCE

General maintenance includes those items which should be checked during normal day-to-day operation. They are essential for proper vehicle operation. It is your responsibility to perform these procedures regularly as prescribed.

Performing general maintenance checks requires minimal mechanical skill and only a few general automotive tools.

These checks or inspections can be done by yourself, a qualified technician or, if you prefer, a NISSAN dealer.

WHERE TO GO FOR SERVICE

If maintenance service is required or your vehicle appears to malfunction, have the systems checked and serviced by a NISSAN dealer.

NISSAN technicians are well-trained specialists and are kept up-to-date with the latest service information through technical bulletins, service tips, and in-dealership information systems. They are completely qualified to work on NISSAN vehicles **before** work begins.

You can be confident that a NISSAN dealer's service department performs the best job to meet the maintenance requirements on your vehicle — in a reliable and economical way.

GENERAL MAINTENANCE

During the normal day-to-day operation of the vehicle, general maintenance should be performed regularly as prescribed in this section. If you detect any unusual sounds, vibrations or smell, be sure to check for the cause or have a NISSAN dealer do it promptly. In addition, you should notify a NISSAN dealer if you think that repairs are required.

When performing any checks or maintenance work, see "MAINTENANCE PRECAUTIONS" later in this section.

EXPLANATION OF MAINTENANCE ITEMS

Additional information on the following items with "*" is found later in this section.

Outside the vehicle

The maintenance items listed here should be performed from time to time, unless otherwise specified.

Doors and engine hood: Check that all doors and the engine hood operate properly. Also ensure that all latches lock securely. Lubricate hinges, latches, latch pins, rollers and links if necessary. Make sure that the secondary latch keeps the hood from opening when the primary latch is released.

When driving in areas using road salt or other corrosive materials, check lubrication frequently.

Lights*: Clean the headlights on a regular basis. Make sure that the headlights, stop lights, tail lights, turn signal lights, and other lights are all operating properly and installed securely. Also check headlight aim.

Road wheel nuts (lug nuts)*: When checking the tires, make sure no wheel nuts are missing, and check for any loose wheel nuts. Tighten if necessary.

Tire rotation*: Tires should be rotated every 7,500 miles (12,000 km).

Tires*: Check the pressure with a gauge often and always prior to long distance trips. If necessary, adjust the pressure in all tires, including the spare, to the pressure specified. Check carefully for damage, cuts or excessive wear.

Tire Pressure Monitoring System (TPMS) transmitter components: Replace the TPMS transmitter grommet seal, valve core and cap when the tires are replaced due to wear or age.

Wheel alignment and balance: If the vehicle should pull to either side while driving on a straight and level road, or if you detect uneven or abnormal tire wear, there may be a need for wheel alignment.

If the steering wheel or seat vibrates at normal highway speeds, wheel balancing may be needed.

For additional information regarding tires, refer to “Important Tire Safety Information” (US) or “Tire Safety Information” (Canada) in the Warranty Information Booklet.

Windshield: Clean the windshield on a regular basis. Check the windshield at least every six months for cracks or other damage. Have a damaged windshield repaired by a qualified repair facility.

Windshield wiper blades*: Check for cracks or wear if they do not wipe properly.

Inside the vehicle

The maintenance items listed here should be checked on a regular basis, such as when performing scheduled maintenance, cleaning the vehicle, etc.

Accelerator pedal: Check the pedal for smooth operation and make sure the pedal does not catch or require uneven effort. Keep the floor mat away from the pedal.

Brake pedal: Check the pedal for smooth operation. If the brake pedal suddenly goes down further than normal, the pedal feels spongy or the vehicle seems to take longer to stop, see a NISSAN dealer immediately. Keep the floor mat away from the pedal.

Brakes: Check that the brakes do not pull the vehicle to one side when applied.

Continuously Variable Transmission (CVT) P (Park) position mechanism: On a fairly steep hill, check that the vehicle is held securely with the selector lever in the P (Park) position without applying any brakes.

Parking brake: Check the parking brake operation regularly. The vehicle should be securely held on a fairly steep hill with only the parking brake applied. If the parking brake needs adjusted, see a NISSAN dealer.

Seat belts: Check that all parts of the seat belt system (for example, buckles, anchors, adjusters and retractors) operate properly and smoothly, and are installed securely. Check the belt webbing for cuts, fraying, wear or damage.

Seats: Check seat position controls such as seat adjusters, seatback recliner, etc. to ensure they operate smoothly and that all latches lock securely in every position. Check that the head restraints move up and down smoothly and that the locks (if so equipped) hold securely in all latched positions.

Steering wheel: Check for changes in the steering conditions, such as excessive free play, hard steering or strange noises.

Warning lights and chimes: Make sure that all warning lights and chimes are operating properly.

Windshield defroster: Check that the air comes out of the defroster outlets properly and in sufficient quantity when operating the heater or air conditioner.

Windshield wiper and washer*: Check that the wipers and washer operate properly and that the wipers do not streak.

Under the hood and vehicle

The maintenance items listed here should be checked periodically (for example, each time you check the engine oil or refuel).

Battery*: Check the fluid level in each cell. It should be between the MAX and MIN lines. Vehicles operated in high temperatures or under severe condition require frequent checks of the battery fluid level.

Brake fluid level*: Make sure that the brake fluid level is between the MAX and MIN lines on the reservoir.

Engine coolant level*: Check the coolant level when the engine is cold.

Engine drive belts*: Make sure that the drive belts are not frayed, worn, cracked or oily.

Engine oil level*: Check the level after parking the vehicle on a level surface and turning off the engine. Wait more than 10 minutes for the oil to drain back into the oil pan.

Exhaust system: Make sure there are no loose supports, cracks or holes. If the sound of the exhaust seems unusual or there is a smell of exhaust fumes, immediately have the exhaust system inspected by a NISSAN dealer. (See "PRECAUTIONS WHEN STARTING AND DRIVING" in the "5. Starting and driving" section for exhaust gas (carbon monoxide).)

Fluid leaks: Check under the vehicle for fuel, oil, water or other fluid leaks after the vehicle has been parked for a while. Water dripping from the air conditioner after use is normal. If you should notice any leaks or if gasoline fumes are evident, check for the cause and have it corrected immediately.

Radiator and hoses: Check the front of the radiator and clean off any dirt, insects, leaves, etc., that may have accumulated. Make sure the hoses have no cracks, deformation, rot or loose connections.

Underbody: The underbody is frequently exposed to corrosive substances such as those used on icy roads or to control dust. It is very important to remove these substances, otherwise rust will form on the floor pan, frame, fuel lines and around the exhaust system. At the end of winter, the underbody should be thoroughly flushed with plain water, being careful to clean those areas where mud and dirt may accumulate. For additional information, see "CLEANING EXTERIOR" in the "7. Appearance and care" section.

Windshield washer fluid*: Check that there is adequate fluid in the reservoir.

MAINTENANCE PRECAUTIONS

When performing any inspection or maintenance work on your vehicle, always take care to prevent serious accidental injury to yourself or damage to the vehicle. The following are general precautions which should be closely observed.

WARNING

- **Park the vehicle on a level surface, apply the parking brake securely and block the wheels to prevent the vehicle from moving. Move the selector lever to P (Park).**
- **Be sure the ignition switch is in the OFF or LOCK position when performing any parts replacement or repairs.**
- **If you must work with the engine running, keep your hands, clothing, hair and tools away from moving fans, belts and any other moving parts.**
- **It is advisable to secure or remove any loose clothing and remove any jewelry, such as rings, watches, etc. before working on your vehicle.**
- **Always wear eye protection whenever you work on your vehicle.**
- **If you must run the engine in an enclosed space such as a garage, be sure there is proper ventilation for exhaust gases to escape.**
- **Never get under the vehicle while it is supported only by a jack. If it is necessary to work under the vehicle, support it with safety stands.**
- **Keep smoking materials, flame and sparks away from fuel tank and the battery.**
- **The fuel filter or fuel lines should be serviced by a NISSAN dealer because the fuel lines are under high pressure even when the engine is off.**

CAUTION

- **Do not work under the hood while the engine is hot. Turn the engine off and wait until it cools down.**
- **Avoid direct contact with used engine oil and coolant. Improperly disposed engine oil, and engine coolant and/or other vehicle fluids can damage the environment. Always conform to local regulations for disposal of vehicle fluid.**
- **Never leave the engine or the CVT related component harnesses disconnected while the ignition switch is in the ON position.**
- **Never connect or disconnect the battery or any transistorized component while the ignition switch is in the ON position.**
- **Your vehicle is equipped with an automatic engine cooling fan. It may come on at any time without warning, even if the ignition key is in the OFF position and the engine is not running. To avoid injury, always disconnect the negative battery cable before working near the fan.**

This “8. Maintenance and do-it-yourself” section gives instructions regarding only those items which are relatively easy for an owner to perform.

A genuine NISSAN Service Manual is also available. (See “OWNER’S MANUAL/SERVICE MANUAL ORDER INFORMATION” in the “9. Technical and consumer information” section.)

You should be aware that incomplete or improper servicing may result in operating difficulties or excessive emissions, and could affect warranty coverage. **If in doubt about any servicing, we recommend that it be**

done by a NISSAN dealer.

ENGINE COMPARTMENT CHECK LOCATIONS

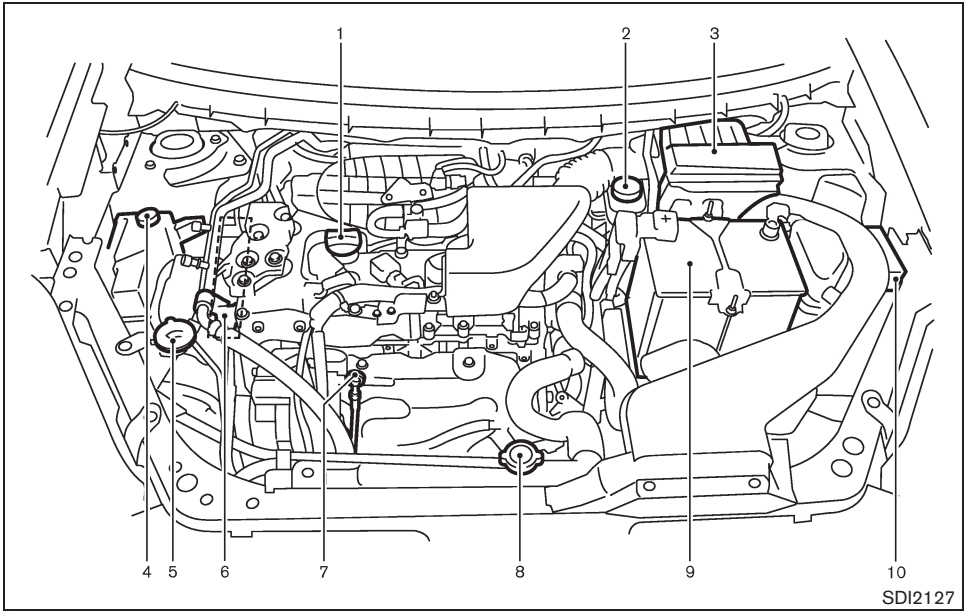

QR25DE ENGINE

1. Engine oil filler cap
2. Brake fluid reservoir
3. Air cleaner
4. Engine coolant reservoir
5. Window washer fluid reservoir
6. Drive belt location
7. Engine oil dipstick
8. Radiator filler cap
9. Battery
10. Fuse/fusible link holder

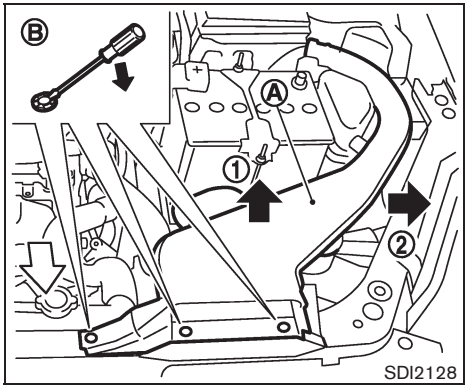

Removing the air duct

Remove the air duct Ⓐ if necessary.

1. Remove the clips Ⓑ with a suitable tool.
2. Pull the air duct upward ① and then sideways ②.

Install the air duct securely after any inspection or maintenance work is performed.

The engine cooling system is filled at the factory with a high-quality, year-round, anti-freeze coolant solution. The anti-freeze solution contains rust and corrosion inhibitors, therefore additional cooling system additives are not necessary.

WARNING

- **Never remove the radiator or coolant reservoir cap when the engine is hot. Wait until the engine and radiator cool down. Serious burns could be caused by high pressure fluid escaping from the radiator. See precautions in "IF YOUR VEHICLE OVERHEATS" in the "6. In case of emergency" section of this manual.**
- **The radiator is equipped with a pressure type radiator cap. To prevent engine damage, use only a genuine NISSAN radiator cap.**

CAUTION

When adding or replacing coolant, be sure to use only a Genuine NISSAN Long Life Antifreeze/Coolant (green) or equivalent with the proper mixture ratio of 50% anti-freeze and 50% demineralized or distilled water. The use of other types of coolant solutions may damage the engine cooling system.

Outside temperature down to		Anti-freeze	Demineralized water or distilled water
°C	°F		
−35	−30	50%	50%

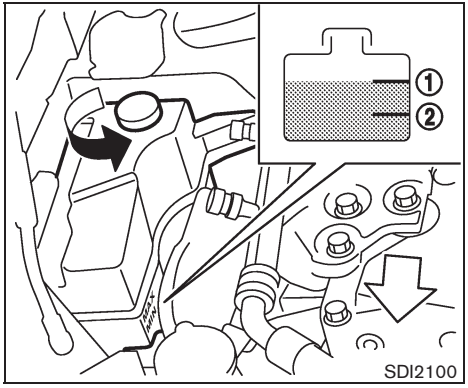

CHECKING ENGINE COOLANT LEVEL

Check the coolant level **in the reservoir when the engine is cold.** If the coolant level is below the MIN level ②, open the reservoir cap and add coolant up to the MAX level ①. If the reservoir is empty, check the coolant level in the radiator **when the engine is cold.** If there is insufficient coolant in the radiator, fill the radiator with coolant up to the filler opening and also add it to the reservoir up to the MAX level ①.

If the cooling system frequently requires coolant, have it checked by a NISSAN dealer.

CHANGING ENGINE COOLANT

Major cooling system repairs should be performed by a NISSAN dealer. The service procedures can be found in the appropriate NISSAN Service Manual.

Improper servicing can result in reduced heater performance and engine overheating.

⚠ WARNING

- **To avoid the danger of being scalded, never change the coolant when the engine is hot.**
- **Never remove the radiator cap when the engine is hot. Serious burns could be caused by high pressure fluid escaping from the radiator.**
- **Avoid direct skin contact with used coolant. If skin contact is made, wash thoroughly with soap or hand cleaner as soon as possible.**
- **Keep coolant out of reach of children and pets.**

Engine coolant must be disposed of properly. Check your local regulations.

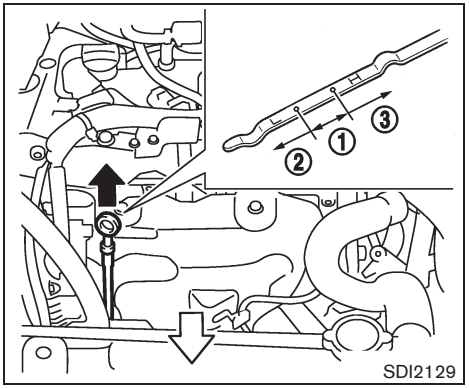

CHECKING ENGINE OIL LEVEL

1. Park the vehicle on a level surface and apply the parking brake.
2. Run the engine until it reaches operating temperature.
3. Turn off the engine. **Wait more than 10 minutes for the oil to drain back into the oil pan.**
4. Remove the dipstick and wipe it clean. Reinsert it all the way.
5. Remove the dipstick again and check the oil level. It should be within the range ①. If the oil level is below ②, remove the oil filler cap

and pour recommended oil through the opening. **Do not overfill ③.**

6. Recheck oil level with the dipstick.

It is normal to add some oil between oil maintenance intervals or during the break-in period, depending on the severity of operating conditions.

CAUTION

Oil level should be checked regularly. Operating the engine with an insufficient amount of oil can damage the engine, and such damage is not covered by warranty.

CHANGING ENGINE OIL AND FILTER

Change the engine oil and filter according to the maintenance log shown in the NISSAN Service and Maintenance Guide.

Vehicle set-up

1. Park the vehicle on a level surface and apply the parking brake.
2. Start the engine and let it idle until it reaches operating temperature.
3. Turn the engine off and wait more than 10 minutes.
4. Raise and support the vehicle using a suitable floor jack and safety jack stands.
   - Place the safety jack stands under the vehicle jack-up points.
   - A suitable adapter should be attached to the jack stand saddle.

CAUTION

Make sure the correct lifting and support points are used to avoid vehicle damage.

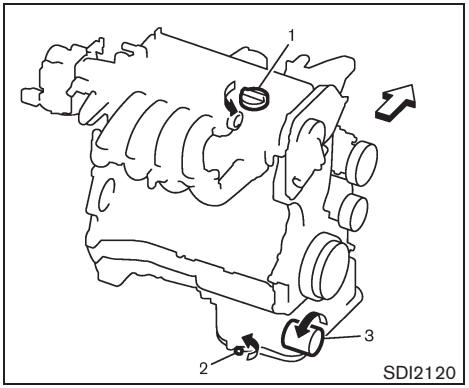

1. Oil filler cap
2. Oil drain plug
3. Oil filter

Engine oil and filter

1. Place a large drain pan under the drain plug.
2. Remove the oil filler cap.
3. Remove the drain plug with a wrench and completely drain the oil.

CAUTION

Be careful not to burn yourself, as the engine oil is hot.

- **Waste oil must be disposed of properly.**
- **Check your local regulations.**

Perform steps 4 to 9 when the engine oil filter change is needed.

4. Remove the plastic cover over the oil filter location by removing the small plastic clips.
5. Loosen the oil filter with an oil filter wrench. Remove the oil filter by turning it by hand.
6. Wipe the engine oil filter mounting surface with a clean rag.

CAUTION

Be sure to remove any old gasket material remaining on the mounting surface of the engine. Failure to do so could lead to engine damage.

7. Coat the gasket on the new filter with clean engine oil.
8. Screw in the oil filter clockwise until a slight resistance is felt, then tighten additionally more than 2/3 turn.
   Oil filter tightening torque:
   11 to 15 ft-lb
   (14.7 to 20.5 N·m)
9. Install the plastic cover.
10. Clean and re-install the drain plug with a new washer. Securely tighten the drain plug with a wrench.
    Drain plug tightening torque:
    22 to 29 ft-lb
    (29 to 39 N·m)

    Do not use excessive force.
11. Refill engine with recommended oil through the oil filler opening, and install the oil filler cap securely.

    See “CAPACITIES AND RECOMMENDED FUEL/LUBRICANTS” in the “9. Technical and consumer information” section for drain and refill capacity. The drain and refill capacity depends on the oil temperature and drain time. Use these specifications for reference only. Always use the dipstick to determine the proper amount of oil in the engine.
12. Start the engine and check for leakage around the drain plug and the oil filter. Correct as required.
13. Turn the engine off and wait more than 10 minutes. Check the oil level with the dipstick. Add engine oil if necessary.

After the operation

1. Lower the vehicle carefully to the ground.
2. Dispose of waste oil and filter properly.

WARNING

- **Prolonged and repeated contact with used engine oil may cause skin cancer.**
- **Try to avoid direct skin contact with used oil. If skin contact is made, wash thoroughly with soap or hand cleaner as soon as possible.**
- **Keep used engine oil out of reach of children.**

CONTINUOUSLY VARIABLE TRANSMISSION (CVT) FLUID

CAUTION

- **Use only Genuine NISSAN CVT Fluid NS-2. Do not mix with other fluids.**
- **Using transmission fluid other than Genuine NISSAN CVT Fluid NS-2 will damage the CVT, which is not covered by the NISSAN new vehicle limited warranty.**

When checking or replacement is required, we recommend a NISSAN dealer for servicing.

BRAKE FLUID

For additional brake fluid information, see “CAPACITIES AND RECOMMENDED FUEL/LUBRICANTS” in the “9. Technical and consumer information” section of this manual.

WARNING

- **Use only new fluid from a sealed container. Old, inferior or contaminated fluid may damage the brake system. The use of improper fluids can damage the brake system and affect the vehicle’s stopping ability.**
- **Clean the filler cap before removing.**
- **Brake fluid is poisonous and should be stored carefully in marked containers out of the reach of children.**

CAUTION

Do not spill the fluid on any painted surfaces. This will damage the paint. If fluid is spilled, immediately wash the surface with water.

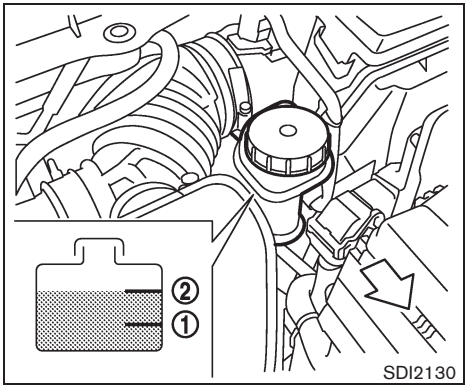

Check the fluid level in the reservoir. If the fluid is below the MIN line ① or the brake warning light comes on, add Genuine NISSAN Super Heavy Duty Brake Fluid or equivalent **DOT 3** fluid up to the MAX line ②. If fluid must be added frequently, the system should be checked by a NISSAN dealer.

WINDOW WASHER FLUID

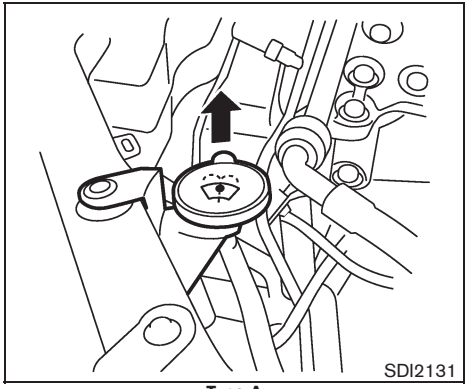

Type A

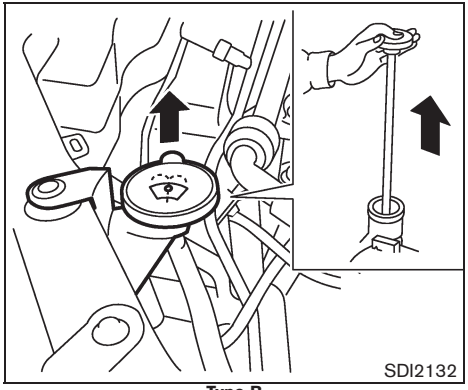

Type B

Fill the window washer fluid reservoir periodically. Add window washer fluid when the low window washer fluid warning light illuminates (if so equipped).

To fill the window washer fluid reservoir, lift the cap and pour the window washer fluid into the reservoir opening.

Add a washer solvent to the water for better cleaning. In the winter season, add a windshield washer antifreeze. Follow the manufacturer's instructions for the mixture ratio.

Refill the reservoir more frequently when driving conditions require an increased amount of window washer fluid.

Recommended fluid:
Genuine NISSAN Windshield Washer Concentrate Cleaner & Antifreeze or equivalent

CAUTION

- **Do not substitute engine anti-freeze coolant for window washer solution. This may result in damage to the paint.**
- **Do not fill the window washer reservoir tank with washer fluid concentrates at full strength. Some methyl alcohol based washer fluid concentrates may permanently stain the grille if spilled while filling the window washer reservoir tank.**
- **Pre-mix washer fluid concentrates with water to the manufacturer's recommended levels before pouring the fluid into the window washer reservoir tank. Do not use the window washer reservoir tank to mix the washer fluid concentrate and water.**

- Keep the battery surface clean and dry. Clean the battery with a solution of baking soda and water.
- Make certain the terminal connections are clean and securely tightened.
- If the vehicle is not to be used for 30 days or longer, disconnect the negative (–) battery terminal cable to prevent discharging it.

WARNING

- **Do not expose the battery to flames or electrical sparks. Hydrogen gas generated by the battery is explosive. Do not allow battery fluid to contact your skin, eyes, fabrics, or painted surfaces. After touching a battery or battery cap, do not touch or rub your eyes. Thoroughly wash your hands. If the acid contacts your eyes, skin or clothing, immediately flush with water for at least 15 minutes and seek medical attention.**
- **Do not operate the vehicle if the fluid in the battery is low. Low battery fluid can cause a higher load on the battery which can generate heat, reduce battery life, and in some cases lead to an explosion.**
- **When working on or near a battery, always wear suitable eye protection and remove all jewelry.**
- **Battery posts, terminals and related accessories contain lead and lead compounds. Wash hands after handling.**
- **Keep the battery out of the reach of children.**

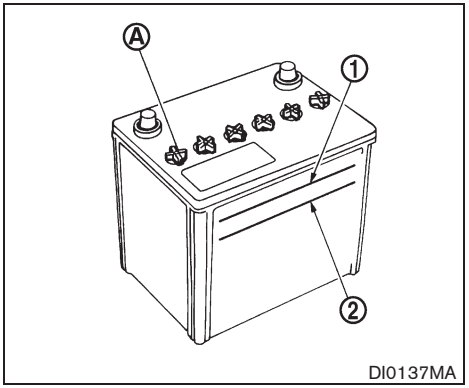

Check the fluid level in each cell. (Remove the battery cover if it is necessary.) It should be between the UPPER LEVEL (1) and LOWER LEVEL (2) lines.

If it is necessary to add fluid, add only distilled water to bring the level to the indicator in each filler opening. **Do not overfill.**

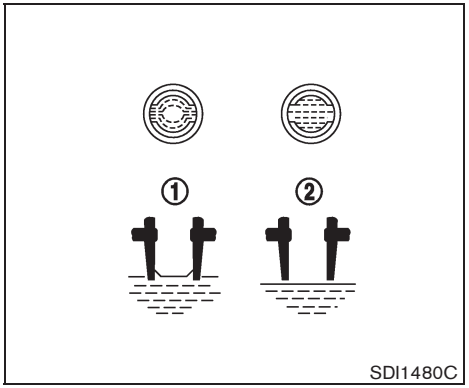

1. Remove the cell plugs Ⓐ .
2. Add distilled water up to the UPPER LEVEL ① line.

   If the side of the battery is not clear, check the distilled water level by looking directly above the cell; the condition ① indicates OK and the conditions ② needs more to be added.
3. Tighten cell plugs Ⓐ .

Vehicles operated in high temperatures or under severe conditions require frequent checks of the battery fluid level.

JUMP STARTING

If jump starting is necessary, see “JUMP STARTING” in the “6. In case of emergency” section. If the engine does not start by jump starting, the battery may have to be replaced. Contact a NISSAN dealer.

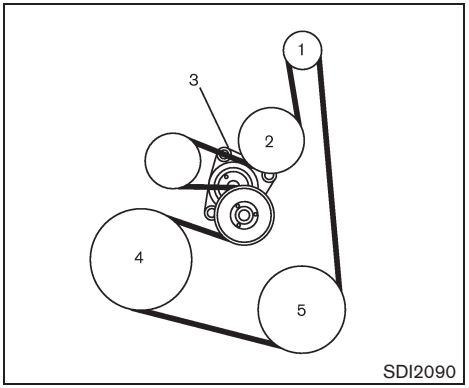

1. Alternator
2. Water pump
3. Drive belt auto-tensioner
4. Crankshaft pulley
5. Air conditioner compressor

WARNING

Be sure the ignition switch is in the OFF or LOCK position before servicing drive belts. The engine could rotate unexpectedly.

1. Visually inspect each belt for signs of unusual wear, cuts, fraying or looseness. If the belt is in poor condition or loose, have it

replaced or adjusted by a NISSAN dealer.

2. Have the belts checked regularly for condition.

WARNING

Be sure the engine and ignition switch are off and that the parking brake is engaged securely.

CAUTION

Be sure to use the correct socket to remove the spark plugs. An incorrect socket can damage the spark plugs.

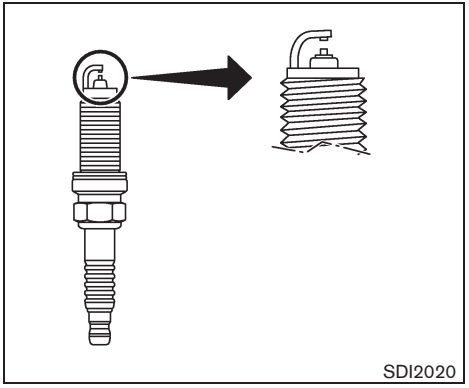

REPLACING SPARK PLUGS

If replacement is required, see a NISSAN dealer for servicing.

Iridium-tipped spark plugs

It is not necessary to replace the iridium-tipped spark plugs as frequently as the conventional type spark plugs since they will last much longer. Follow the maintenance log shown in the “NISSAN Service and Maintenance Guide”. Do not reuse spark plugs by cleaning or regapping.

Always replace spark plugs with recommended or equivalent ones.

AIR CLEANER

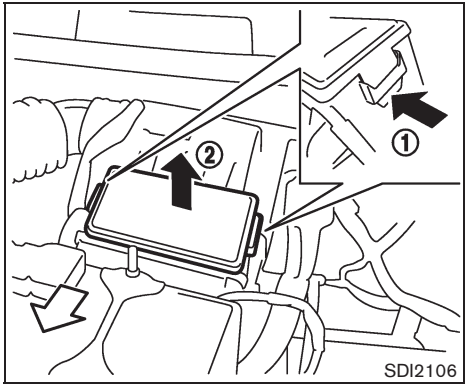

Push the tabs ① and pull out the filter element ②.

The air cleaner filter should not be cleaned and reused. Replace it according to the maintenance log shown in the "NISSAN Service and Maintenance Guide". When replacing the filter, wipe the inside of the air cleaner housing and the cover with a damp cloth.

WARNING

- **Operating the engine with the air cleaner removed can cause you or others to be burned. The air cleaner not only cleans the air, it stops flame if the engine backfires. If it isn't there, and the engine backfires, you could be burned. Do not drive with the air cleaner removed, and be careful when working on the engine with the air cleaner removed.**
- **Never pour fuel into the throttle body or attempt to start the engine with the air cleaner removed. Doing so could result in serious injury.**

WINDSHIELD WIPER BLADES

CLEANING

If your windshield is not clear after using the windshield washer or if a wiper blade chatters when running, wax or other material may be on the blade or windshield.

Clean the outside of the windshield with a washer solution or a mild detergent. Your windshield is clean if beads do not form when rinsing with clear water.

Clean each blade by wiping it with a cloth soaked in a washer solution or a mild detergent. Then rinse the blade with clear water. If your windshield is still not clear after cleaning the blades and using the wiper, replace the blades.

CAUTION

Worn windshield wiper blades can damage the windshield and impair driver vision.

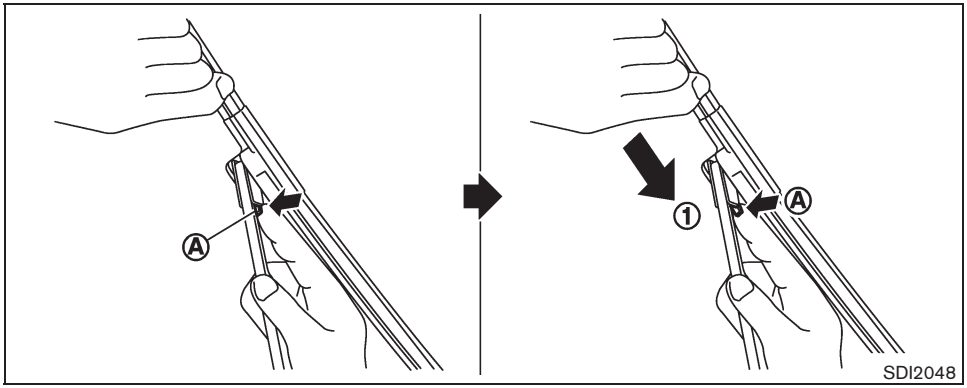

REPLACING

Replace the wiper blades if they are worn.

1. Lift the wiper arm away from the windshield.
2. Push and hold the release tab Ⓐ, and move the wiper blade down the wiper arm ①.
3. Insert the new wiper blade onto the wiper arm until a click sounds.
4. Rotate the wiper blade so that the dimple is in the groove.

CAUTION

- **After wiper blade replacement, return the wiper arm to its original position; otherwise it may be damaged when the hood is opened.**
- **Make sure the wiper blades contact the glass; otherwise the arm may be damaged from wind pressure.**

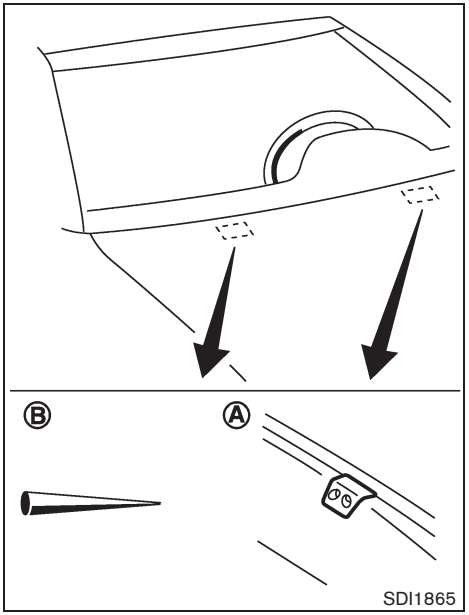

If you wax the surface of the hood, be careful not to let wax get into the washer nozzle Ⓐ. This may cause clogging or improper windshield washer operation. If wax gets into the nozzle, remove it with a needle or small pin Ⓑ.

REAR WINDOW WIPER BLADE

Contact a NISSAN dealer if checking or replacement is required.

BRAKES

If the brakes do not operate properly, have the brakes checked by a NISSAN dealer.

SELF-ADJUSTING BRAKES

Your vehicle is equipped with self-adjusting brakes.

The disc-type brakes self-adjust every time the brake pedal is applied.

WARNING

See a NISSAN dealer for a brake system check if the brake pedal height does not return to normal.

BRAKE PAD WEAR INDICATORS

The disc brake pads have audible wear warnings. When a brake pad requires replacement, it will make a high pitched scraping sound when the vehicle is in motion. This scraping sound will first occur only when the brake pedal is depressed. After more wear of the brake pad, the sound will always be heard even if the brake pedal is not depressed. Have the brakes checked as soon as possible if the wear warning sound is heard.

Under some driving or climate conditions, occasional brake squeak, squeal or other noise may be heard. Occasional brake noise during light to moderate stops is normal and does not affect the function or performance of the brake system.

Proper brake inspection intervals should be followed. For additional information, see the maintenance log section of your “NISSAN Service and Maintenance Guide”.

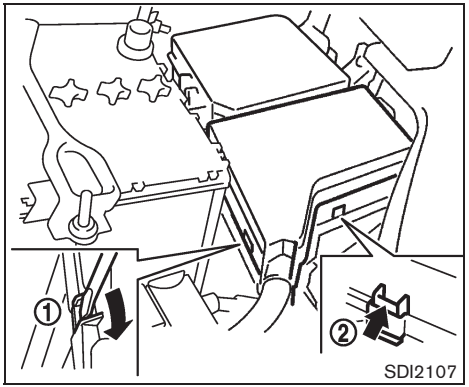

ENGINE COMPARTMENT

CAUTION

Never use a fuse of a higher or lower amperage rating than that specified on the fuse box cover. This could damage the electrical system or cause a fire.

If any electrical equipment does not operate, check for an open fuse.

1. Be sure the ignition switch and the headlight switch are turned off.
2. Open the engine hood.
3. Remove the air cleaner duct. (See “ENGINE COMPARTMENT CHECK LOCATIONS” earlier in this section.)
4. Remove the fuse/fusible link holder cover using a suitable tool ① and pushing the tab ②.
5. Remove the fuse with the fuse puller located in the passenger compartment fuse box.

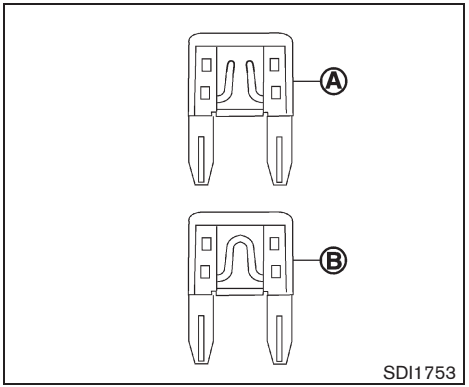

6. If the fuse is open Ⓐ, replace it with a new fuse Ⓑ.
7. If a new fuse also opens, have the electrical system checked and repaired by a NISSAN dealer.

Fusible links

If any electrical equipment does not operate and fuses are in good condition, check the fusible links. If any of these fusible links are melted, replace only with genuine NISSAN parts.

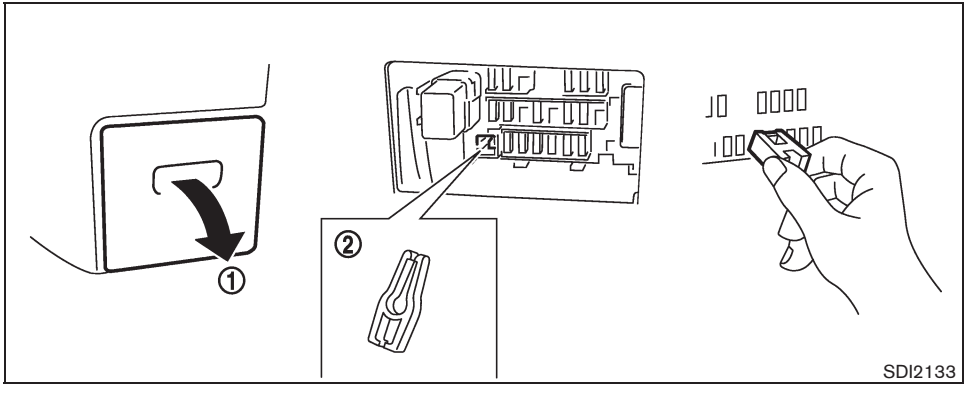

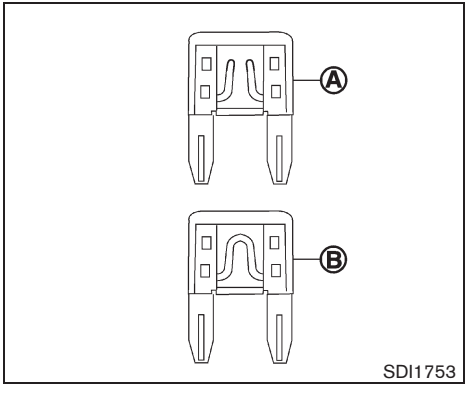

PASSENGER COMPARTMENT

CAUTION

Never use a fuse of a higher or lower amperage rating than that specified on the fuse box cover. This could damage the electrical system or cause a fire.

If any electrical equipment does not operate, check for an open fuse.

1. Be sure the ignition switch and the headlight switch are turned off.
2. Pull to remove the fuse box cover ①.
3. Remove the fuse with the fuse puller ②.
4. If the fuse is open Ⓐ, replace it with a new fuse Ⓑ.
5. If a new fuse also opens, have the electrical system checked and repaired by a NISSAN dealer.

CAUTION

Be careful not to allow children to swallow the battery and removed parts.

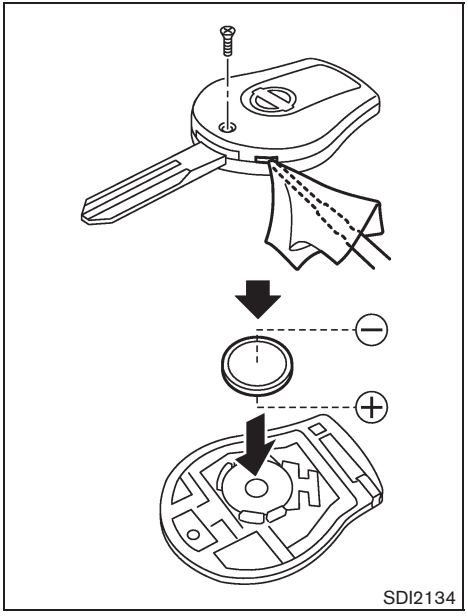

KEYFOB

Replace the battery in the keyfob as follows:

1. Remove the screw.
2. Insert a small screwdriver into the slit of the corner and twist it to separate the upper part from the lower part. Use a cloth to protect the casing.
3. Replace the battery with a new one.

   Recommended battery:

   CR1620 or equivalent

   - Do not touch the internal circuit and electric terminals as doing so could cause a malfunction.
   - Hold the battery by the edges. Holding the battery across the contact points will seriously deplete the storage capacity.
   - Make sure that the ⊕ side faces the bottom case.
4. Close the lid securely and install the screw.
5. Operate the buttons to check its operation.

See a NISSAN dealer if you need any assistance for replacement.

FCC Notice:

Changes or modifications not expressly approved by the party responsible for compliance could void the user's authority to operate the equipment.

This device complies with Part 15 of the FCC Rules and RSS-210 of Industry Canada.

Operation is subject to the following two conditions: (1) This device may not cause harmful interference, and (2) this device must accept any interference received, including interference that may cause undesired operation of the device.

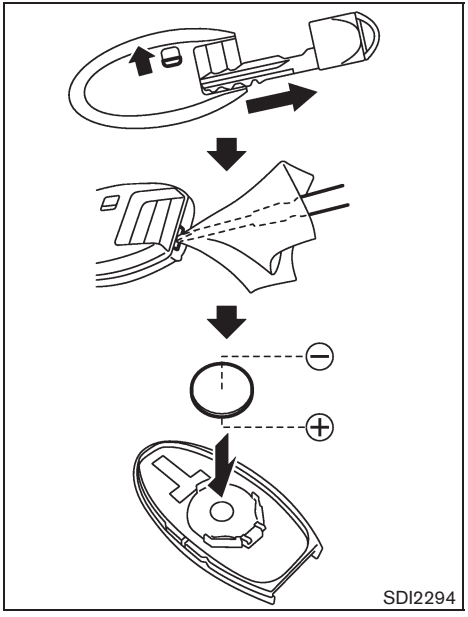

INTELLIGENT KEY BATTERY

Replace the battery in the Intelligent Key as follows:

1. Remove the mechanical key from the Intelligent Key.
2. Insert a small screwdriver into the slit of the corner and twist it to separate the upper part from the lower part. Use a cloth to protect the casing.
3. Replace the battery with a new one.

   Recommended battery:

   CR2025 or equivalent

   - Do not touch the internal circuit and electric terminals as doing so could cause a malfunction.
   - Hold the battery by the edges. Holding the battery across the contact points will seriously deplete the storage capacity.
   - Make sure that the ⊕ side faces the bottom case.

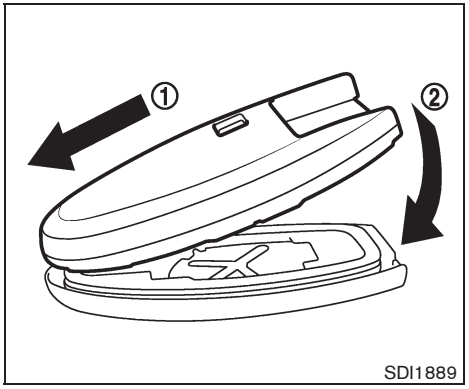

4. Align the tips of the upper and lower parts ①, and then push them together ② until it is securely closed.
5. Operate the buttons to check its operation.

See a NISSAN dealer if you need any assistance for replacement.

FCC Notice:

This equipment has been tested and found to comply with the limits for a Class B digital device pursuant to part 15 of the FCC Rules. These limits are designed to provide reasonable protection against harmful interference in a residential installation. This equipment generates, uses and can radiate radio frequency energy and, if not installed and used in accordance with the instructions, may cause harmful interference to radio communications. However, there is no guarantee that interference will not occur in a particular installation. If this equipment does cause harmful interference to radio or television reception, which can be determined by turning the equipment off and on, the user is encouraged to try to correct the interference by one or more of the following measures:

- **Reorient or relocate the receiving antenna.**
- **Increase the separation between the equipment and the receiver.**
- **Connect the equipment into an outlet on a circuit different from that to which the receiver is connected.**
- **Consult the dealer or an experienced radio/TV technician for help.**

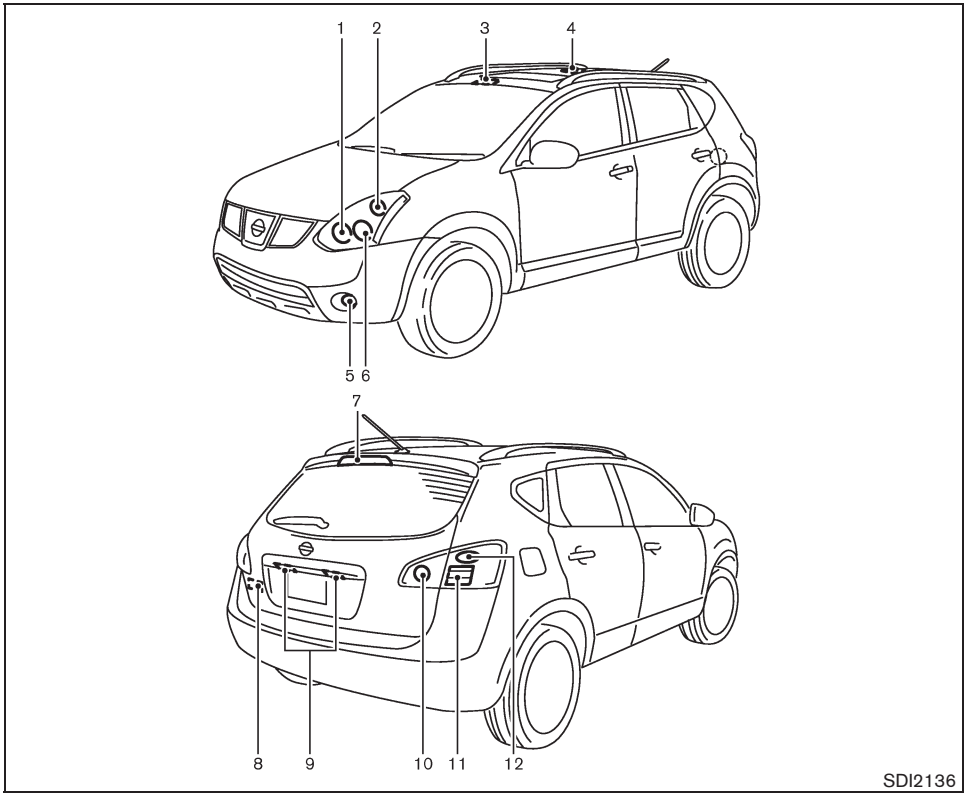

1. Headlight (high-beam)
2. Front turn signal/park/side marker light
3. Front map light
4. Ceiling light
5. Front fog light
6. Headlight (low-beam)
7. High-mounted stop light
8. Cargo light
9. License plate light
10. Back-up light
11. Rear combination light (stop/tail/side marker light)
12. Rear turn signal light

HEADLIGHTS

Fog may temporarily form inside the lens of the exterior lights in the rain or in a car wash. A temperature difference between the inside and the outside of the lens causes the fog. This is not a malfunction. If large drops of water collect inside the lens, contact a NISSAN dealer.

Replacing

Xenon headlight model:

WARNING

HIGH VOLTAGE

When xenon headlights are on, they produce a high voltage. To prevent an electric shock, never attempt to modify or disassemble. Always have your xenon headlights replaced at a NISSAN dealer. For additional information, see "HEADLIGHT AND TURN SIGNAL SWITCH" in the "2. Instruments and controls" section.

If replacement is required, see a NISSAN dealer.

Use the same number and wattage as originally installed:

Low beam:
Wattage: 35
Bulb no.: D2R
High beam:
Wattage: 60
Bulb no.: HB3

Halogen headlight model:

The headlight is a semi-sealed beam type which uses a replaceable headlight (halogen) bulb.

CAUTION

- **Do not leave the bulb out of the headlight reflector for a long period of time. Dust, moisture, smoke, etc. entering the headlight body may affect bulb performance.**
- **High pressure halogen gas is sealed inside the halogen bulb. The bulb may break if the glass envelope is scratched or the bulb is dropped.**
- **Only touch the plastic base when handling the bulb. Never touch the glass envelope.**
- **Aiming is not necessary after replacing the bulb. When aiming adjustment is necessary, contact a NISSAN dealer.**

Use the same number and wattage as originally installed:

Low beam:
Wattage: 55
Bulb no.: H11
High beam:
Wattage: 60
Bulb no.: HB3

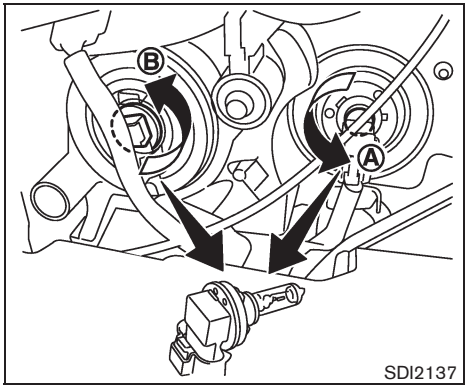

Disconnect the battery negative cable before replacing bulbs.

Ⓐ High-beam bulb

Ⓑ Low-beam bulb

EXTERIOR AND INTERIOR LIGHTS

Item	Wattage (W)	Bulb No.
Front turn signal/parking/side marker light	27/8	S25
Front fog light (if so equipped)	55	H11
Rear combination light		
back-up	18	W16W
turn signal	21	W21W
stop/tail/side marker	21/5	W21/5W
License plate light	5	W5W
Front map light	8	—
Vanity mirror light (if so equipped)	2	—
High-mounted stop light*	LED	—
Ceiling light (if so equipped)	8	—
Cargo light (if so equipped)	8	—
Glove box light*	3.4	—

*: See a NISSAN dealer for replacement.
NOTE: Always check with the Parts Department at a NISSAN dealer for the latest information about parts.

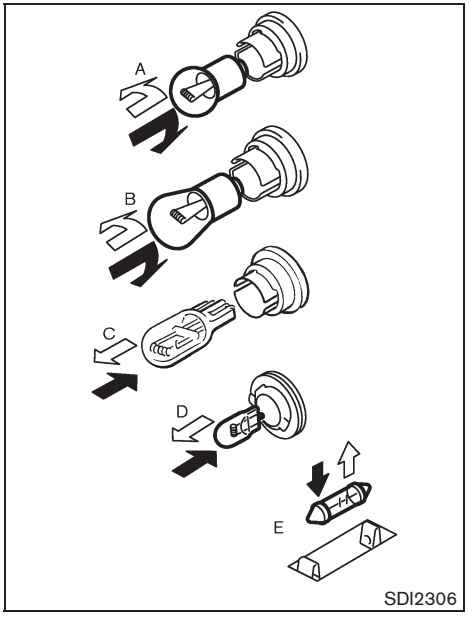

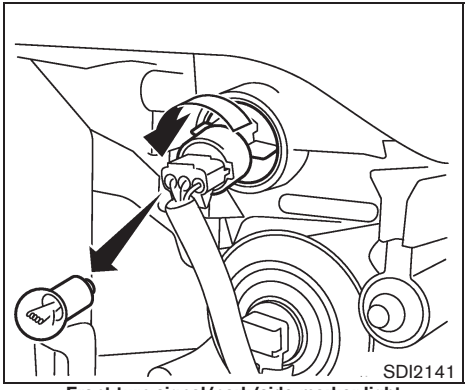

Front turn signal/park/side marker light (Halogen headlight model)

Xenon headlight model: See a NISSAN dealer for replacement.

Halogen headlight model: Remove the bulb as illustrated.

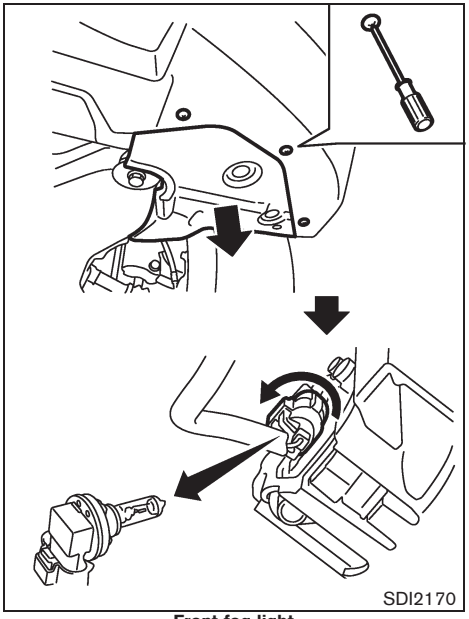

Front fog light

⇨: REMOVE

➡: INSTALL

Replacement procedures

All other lights are either type A, B, C, D or E. When replacing a bulb, first remove the lens and/or cover.

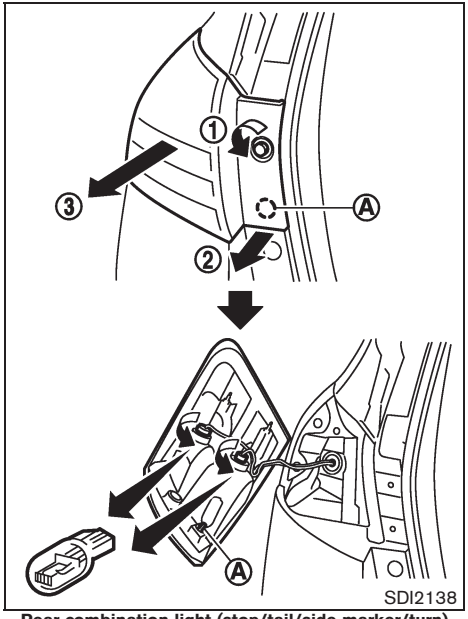

Rear combination light (stop/tail/side marker/turn)

Open the lift gate to remove the rear combination light assembly.

Ⓐ : Clip

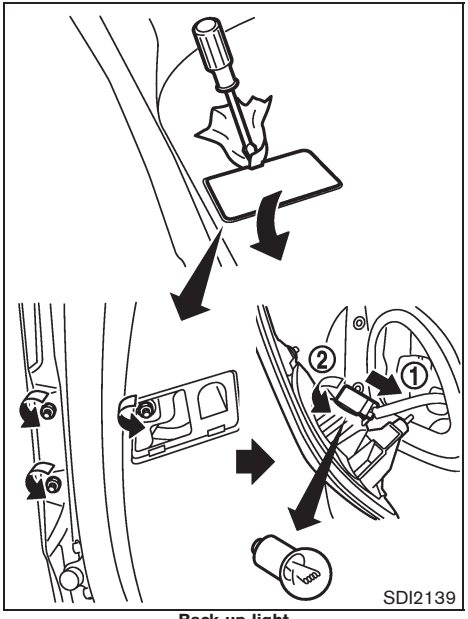

Back-up light

Open the lift gate to remove the back-up light assembly. One screw is located behind the cover on the lift gate.

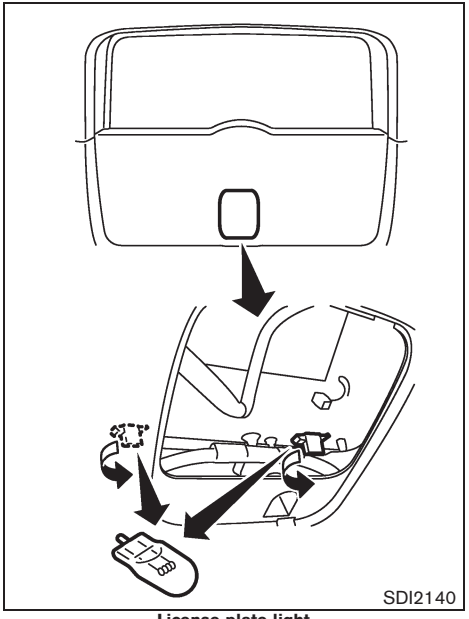

License plate light

The license plate light bulb can be accessed by removing the cover on the inside of the lift gate.

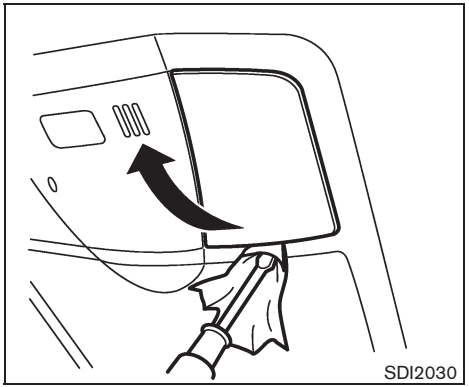

Front map light

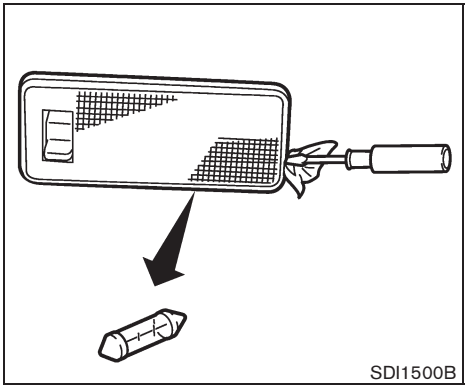

Cargo light

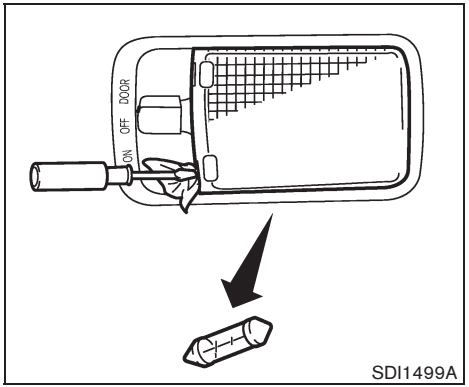

Ceiling light

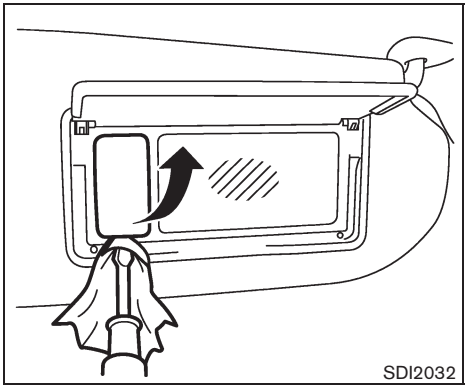

Vanity mirror light

If you have a flat tire, see "FLAT TIRE" in the "6. In case of emergency" section.

TIRE PRESSURE

Tire Pressure Monitoring System (TPMS)

This vehicle is equipped with the Tire Pressure Monitoring System (TPMS). It monitors tire pressure of all tires except the spare. When the low tire pressure warning light is lit, one or more of your tires is significantly under-inflated.

The TPMS will activate only when the vehicle is driven at speeds above 16 MPH (25 km/h). Also, this system may not detect a sudden drop in tire pressure (for example a flat tire while driving).

For more details, see "Low tire pressure warning light" in the "2. Instruments and controls" section, "TIRE PRESSURE MONITORING SYSTEM (TPMS)" in the "5. Starting and driving" section and "TIRE PRESSURE MONITORING SYSTEM (TPMS)" in the "6. In case of emergency" section.

Tire inflation pressure

Check the pressure of the tires (including the spare) often and always prior to long distance trips. The recommended tire pressure specifications are shown on the Tire and Loading Information label under the "Cold Tire Pressure" heading. The Tire

and Loading Information label is affixed to the driver side center pillar. Tire pressures should be checked regularly because:

- Most tires naturally lose air over time.
- Tires can lose air suddenly when driven over potholes or other objects or if the vehicle strikes a curb while parking.

The tire pressures should be checked when the tires are cold. The tires are considered COLD after the vehicle has been parked for 3 or more hours, or driven less than 1 mile (1.6 km) at moderate speeds.

Incorrect tire pressure, including under inflation, may adversely affect tire life and vehicle handling.

WARNING

- **Improperly inflated tires can fail suddenly and cause an accident.**
- **The Gross Vehicle Weight rating (GVWR) is located on the F.M.V.S.S./C.M.V.S.S. certification label. The vehicle weight capacity is indicated on the Tire and Loading Information label. Do not load your vehicle beyond this capacity. Overloading your vehicle may result in reduced tire life, unsafe operating conditions due to premature tire failure, or unfavorable handling characteristics and could also lead to a serious accident. Loading beyond the specified capacity may also result in failure of other vehicle components.**
- **Before taking a long trip, or whenever you heavily load your vehicle, use a tire pressure gauge to ensure that the tire pressures are at the specified level.**
- **For additional information regarding tires, refer to "Important Tire Safety Information" (US) or "Tire Safety Information" (Canada) in the Warranty Information Booklet.**

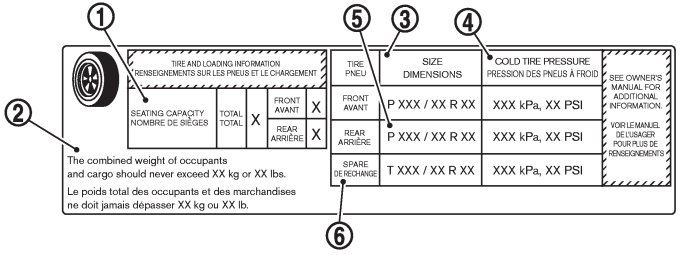

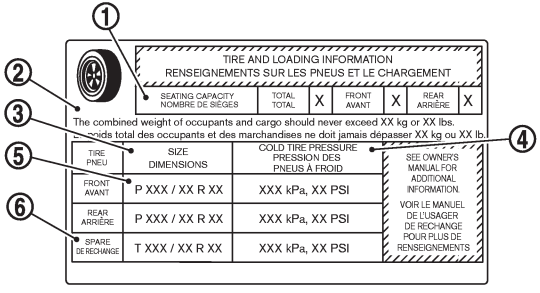

SDI2340

Tire and Loading Information label

① Seating capacity: The maximum number of occupants that can be seated in the vehicle.

② Vehicle load limit: See “VEHICLE LOADING INFORMATION” in the “9. Technical and consumer information” section.

③ Original size: The size of the tires originally installed on the vehicle at the factory.

④ Cold tire pressure: Inflate the tires to this pressure when the tires are cold. Tires are considered COLD after the vehicle has been parked for 3 or more hours, or driven less than 1 mile (1.6 km) at moderate speeds. The recommended cold tire inflation is set by the manufacturer to provide the best balance of tire wear, vehicle handling, driveability, tire noise, etc., up to the vehicle’s GVWR.

⑤ Tire size — see “TIRE LABELING” later in this section.

⑥ Spare tire size or compact spare tire size (if so equipped)

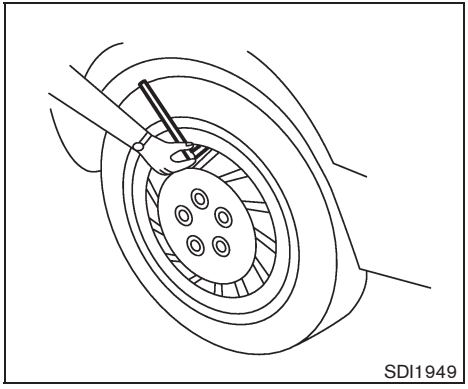

Checking the tire pressure

1. Remove the valve stem cap from the tire.
2. Press the pressure gauge squarely onto the valve stem. Do not press too hard or force the valve stem sideways, or air will escape. If the hissing sound of air escaping from the tire is heard while checking the pressure, reposition the gauge to eliminate this leakage.
3. Remove the gauge.
4. Read the tire pressure on the gauge stem and compare it to the specification shown on the Tire and Loading Information label.
5. Add air to the tire as needed. If too much air is added, press the core of the valve stem briefly with the tip of the gauge stem to release pressure. Recheck the pressure and add or release air as needed.
6. Install the valve stem cap.
7. Check the pressure of all other tires, including the spare.

	SIZE	COLD TIRE INFLATION PRESSURE
FRONT ORIGINAL TIRE	P215/70-R16 99H	230 kPa, 33 PSI
	P225/60-R17 98H	230 kPa, 33 PSI
REAR ORIGINAL TIRE	P215/70-R16 99H	230 kPa, 33 PSI
	P225/60-R17 98H	230 kPa, 33 PSI
SPARE TIRE	Original tire	230 kPa, 33 PSI
	T155/90-D16	420 kPa, 60 PSI

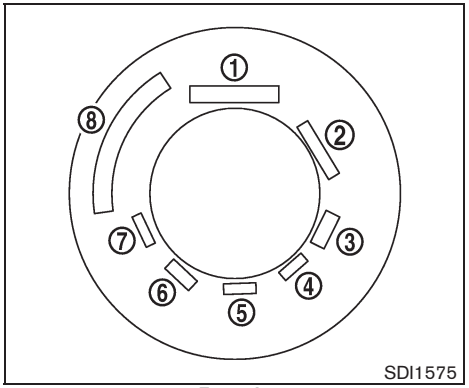

Example

TIRE LABELING

Federal law requires tire manufacturers to place standardized information on the sidewall of all tires. This information identifies and describes the fundamental characteristics of the tire and also provides the tire identification number (TIN) for safety standard certification. The TIN can be used to identify the tire in case of a recall.

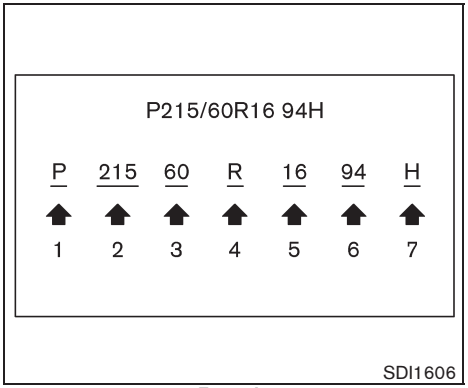

Example

① Tire size (example: P215/60R16 94H)

1. P: The “P” indicates the tire is designed for passenger vehicles. (Not all tires have this information.)
2. Three-digit number (215): This number gives the width in millimeters of the tire from sidewall edge to sidewall edge.
3. Two-digit number (60): This number, known as the aspect ratio, gives the tire’s ratio of height to width.
4. R: The “R” stands for radial.
5. Two-digit number (16): This number is the wheel or rim diameter in inches.
6. Two- or three-digit number (94): This number is the tire’s load index. It is a measurement of how much weight each tire can support. You may not find this information on all tires because it is not required by law.
7. H: Tire speed rating. You should not drive the vehicle faster than the tire speed rating.

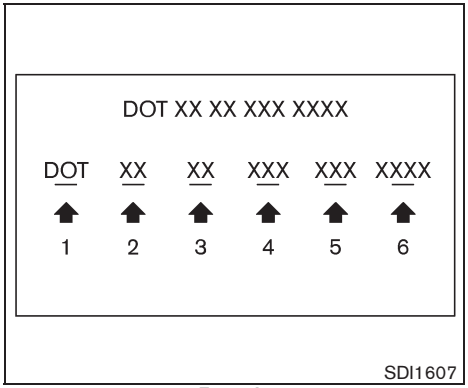

Example

② TIN (Tire Identification Number) for a new tire (example: DOT XX XX XXX XXXX)

1. DOT: Abbreviation for the “Department of Transportation”. The symbol can be placed above, below or to the left or right of the Tire Identification Number.
2. Two-digit code: Manufacturer’s identification mark
3. Two-digit code: Tire size
4. Three-digit code: Tire type code (Optional)
5. Three-digit code: Date of Manufacture
6. Four numbers represent the week and year the tire was built. For example, the numbers 3103 means the 31st week of 2003. If these numbers are missing, then look on the other sidewall of the tire.

③ Tire ply composition and material

The number of layers or plies of rubber-coated fabric in the tire.
Tire manufacturers also must indicate the materials in the tire, which include steel, nylon, polyester, and others.

④ Maximum permissible inflation pressure

This number is the greatest amount of air pressure that should be put in the tire. Do not exceed the maximum permissible inflation pressure.

⑤ Maximum load rating

This number indicates the maximum load in kilograms and pounds that can be carried by the tire. When replacing the tires on the vehicle, always use a tire that has the same load rating as the factory installed tire.

⑥ Term of “tubeless” or “tube type”

Indicates whether the tire requires an inner tube (“tube type”) or not (“tubeless”).

⑦ The word “radial”

The word “radial” is shown, if the tire has radial structure.

⑧ Manufacturer or brand name

Manufacturer or brand name is shown.

Other tire-related terminology:

In addition to the many terms that are defined throughout this section, Intended Outboard Sidewall is (1) the sidewall that contains a whitewall, bears white lettering or bears manufacturer, brand and/or model name molding that is higher or deeper than the same molding on the other sidewall of the tire, or (2) the outward facing sidewall of an asymmetrical tire that has a particular side that must always face outward when mounted on a vehicle.

TYPES OF TIRES

WARNING

- **When changing or replacing tires, be sure all four tires are of the same type (Example: Summer, All Season or Snow) and construction. A NISSAN dealer may be able to help you with information about tire type, size, speed rating and availability.**
- **Replacement tires may have a lower speed rating than the factory equipped tires, and may not match the potential maximum vehicle speed. Never exceed the maximum speed rating of the tire.**
- **Replacing tires with those not originally specified by NISSAN could affect the proper operation of the TPMS.**
- **For additional information regarding tires, refer to "Important Tire Safety Information" (US) or "Tire Safety Information" (Canada) in the Warranty Information Booklet.**

All season tires

NISSAN specifies all season tires on some models to provide good performance all year, including snowy and icy road conditions. All Season tires are identified by ALL SEASON and/or M&S (Mud and Snow) on the tire sidewall. Snow tires have better snow traction than All Season tires and may be more appropriate in some areas.

Summer tires

NISSAN specifies summer tires on some models to provide superior performance on dry roads. Summer tire performance is substantially reduced in snow and ice. Summer tires do not have the tire traction rating M&S on the tire sidewall.

If you plan to operate your vehicle in snowy or icy conditions, NISSAN recommends the use of SNOW tires or ALL SEASON tires on all four wheels.

Snow tires

If snow tires are needed, it is necessary to select tires equivalent in size and load rating to the original equipment tires. If you do not, it can adversely affect the safety and handling of your vehicle.

Generally, snow tires will have lower speed ratings than factory equipped tires and may not match the potential maximum vehicle speed. Never exceed the maximum speed rating of the tire.

If you install snow tires, they must be the same size, brand, construction and tread pattern on all four wheels.

For additional traction on icy roads, studded tires may be used. However, some U.S. states and Canadian provinces prohibit their use. Check local, state and provincial laws before installing studded tires. Skid and traction capabilities of studded snow tires, on wet or dry surfaces, may be poorer than that of non-studded snow tires.

All-Wheel Drive (AWD) models

CAUTION

- **Always use tires of the same type, size, brand, construction (bias, bias-belted or radial), and tread pattern on all four wheels. Failure to do so may result in a circumference difference between tires on the front and rear axles which will cause excessive tire wear and may damage the transmission, transfer case and differential gears.**

- **ONLY use spare tires specified for the AWD model.**

If excessive tire wear is found, it is recommended that all four tires be replaced with tires of the same size, brand, construction and tread pattern. The tire pressure and wheel alignment should also be checked and corrected as necessary. Contact a NISSAN dealer.

TIRE CHAINS

CAUTION

NISSAN recommends using the following tire cables made by Peerless Chain Company for this vehicle due to limited tire clearance. Call 800-533-8056 to order tire chains for your vehicle.

- **215/70R16 - Sno-trac1000 part number 0103855 with chain tightener part number 2007020**
- **225/60R17 - Sno-trac1000 part number 0103855 with chain tightener part number 2007190**

Failure to use the correct traction device will cause damage to the brakes, suspension or other vehicle parts.

The tire chain part numbers and Peerless Chain Company phone number are correct at the time of printing that is shown on the back cover of this Owner's Manual. Always confirm the correct part numbers with Peerless Chain Company before ordering.

Only use other types of traction devices if the traction device manufacturer recommends it for use on your specific vehicle and the tire and wheel installed on your vehicle.

Use of traction devices may be prohibited according to location. Check the local laws before installing traction devices. When installing traction devices, make sure they are the proper size for the tires on your vehicle and are installed according to the traction device manufacturer's suggestions. When using traction devices, avoid fully loading your vehicle and drive at reduced speeds. Failure to do so may cause damage to the brakes and suspension and adversely affect handling and performance.

Traction devices must be installed only on the front wheels and not on the rear wheels.

Do not drive with traction devices on paved roads that are clear of snow. Driving with traction devices in such conditions can cause damage to the various mechanisms of the vehicle due to some overstress.

CAUTION

- **Do not use traction devices on dry roads.**
- **Never install traction devices on a T-type spare tire as doing so could damage the brakes, suspension or other vehicle parts.**

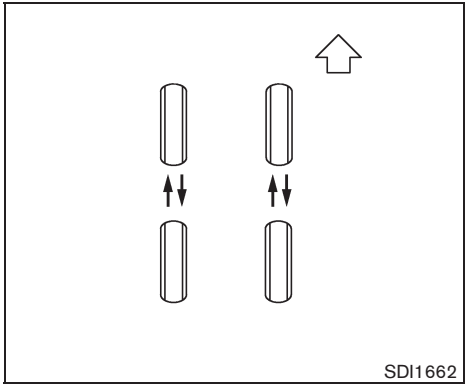

CHANGING WHEELS AND TIRES

Tire rotation

NISSAN recommends rotating the tires every 7,500 miles (12,000 km). (See “FLAT TIRE” in the “6. In case of emergency” section for tire replacing procedures.)

As soon as possible, tighten the wheel nuts to the specified torque with a torque wrench.

Wheel nut tightening torque:
80 ft-lb (108 N·m)

The wheel nuts must be kept tightened to the specification at all times. It is recommended that wheel nuts be tightened to the specification at each tire rotation interval.

WARNING

- **After rotating the tires, check and adjust the tire pressure.**
- **Retighten the wheel nuts when the vehicle has been driven for 600 miles (1,000 km) (also in cases of a flat tire, etc.).**
- **Do not include the spare tire or any other small size spare tire in the tire rotation.**
- **For additional information regarding tires, refer to “Important Tire Safety Information” (US) or “Tire Safety Information” (Canada) in the Warranty Information Booklet.**

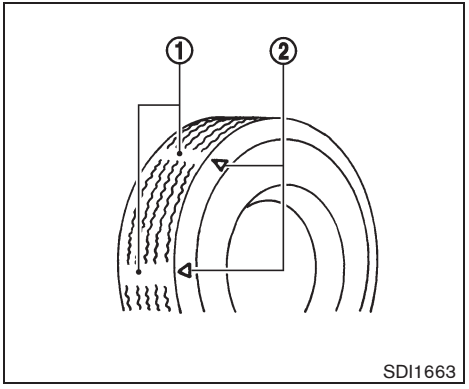

1. Wear indicator
2. Wear indicator location mark

Tire wear and damage

WARNING

- **Tires should be periodically inspected for wear, cracking, bulging or objects caught in the tread. If excessive wear, cracks, bulging or deep cuts are found, the tire(s) should be replaced.**
- **The original tires have built-in tread wear indicators. When**

wear indicators are visible, the tire(s) should be replaced.

- **Tires degrade with age and use. Have tires, including the spare, over 6 years old checked by a qualified technician, because some tire damage may not be obvious. Replace the tires as necessary to prevent tire failure and possible personal injury.**
- **Improper service of the spare tire may result in serious personal injury. If it is necessary to repair the spare tire, contact a NISSAN dealer.**
- **For additional information regarding tires, refer to "Important Tire Safety Information" (US) or "Tire Safety Information" (Canada) in the Warranty Information Booklet.**

Replacing wheels and tires

When replacing a tire, use the same size, tread design, speed rating and load carrying capacity as originally equipped. (See "SPECIFICATIONS" in the "9. Technical and consumer information" section for recommended types and sizes of tires and wheels.)

WARNING

- **The use of tires other than those recommended or the mixed use of tires of different brands, construction (bias, bias-belted or radial), or tread patterns can adversely affect the ride, braking, handling, ground clearance, body-to-tire clearance, tire chain clearance, speedometer calibration, headlight aim and bumper height. Some of these effects may lead to accidents and could result in serious personal injury.**
- **If the wheels are changed for any reason, always replace with wheels which have the same off-set dimension. Wheels of a different off-set could cause premature tire wear, degrade vehicle handling characteristics and/or interference with the brake discs/drums. Such interference can lead to decreased braking efficiency and/or early brake pad/shoe wear. See "WHEELS AND TIRES" in the "9. Technical and consumer information" section of this manual for wheel off-set dimensions.**
- **When a spare tire is mounted or a wheel is replaced, the TPMS will not function and the low tire pressure warning light will flash for approximately 1 minute. The light will remain on after 1 minute. Contact your NISSAN dealer as soon as possible for tire replacement and/or system resetting.**
- **Replacing tires with those not originally specified by NISSAN could affect the proper operation of the TPMS.**
- **Do not install a damaged or deformed wheel or tire even if it has been repaired. Such wheels or tires could have structural damage and could fail without warning.**
- **The use of retread tire is not recommended.**
- **For additional information regarding tires, refer to "Important Tire Safety Information" (US) or "Tire Safety Information" (Canada) in the Warranty Information Booklet.**

CAUTION

Always use tires of the same type, size, brand, construction (bias, bias-belted or radial), and tread pattern on all four wheels. Failure to do so may result in a circumference difference between tires on the front and rear axles which will cause excessive tire wear and may damage the transmission, transfer case and differential gears (AWD models).

Wheel balance

Unbalanced wheels may affect vehicle handling and tire life. Even with regular use, wheels can get out of balance. Therefore, they should be balanced as required.

Wheel balance service should be performed with the wheels off the vehicle. Spin balancing the wheels on the vehicle could lead to mechanical damage.

For additional information regarding tires, refer to “Important Tire Safety Information” (US) or “Tire Safety Information” (Canada) in the Warranty Information Booklet.

Care of wheels

- Wash the wheels when washing the vehicle to maintain their appearance.
- Clean the inner side of the wheels when the wheel is changed or the underside of the vehicle is washed.
- Do not use abrasive cleaners when washing the wheels.
- Inspect wheel rims regularly for dents or corrosion. Such damage may cause loss of pressure or poor seal at the tire bead.
- NISSAN recommends that the road wheels be waxed to protect against road salt in areas where it is used during winter.

Spare tire

When a spare tire is mounted (TEMPORARY USE ONLY or conventional), the TPMS will not function.

Observe the following precautions if the TEMPORARY USE ONLY spare tire must be used, otherwise your vehicle could be damaged or involved in an accident.

WARNING

- **The TEMPORARY USE ONLY spare tire should be used for emergency use. It should be replaced with the standard tire at the first opportunity to avoid possible tire or differential damage.**
- **Drive carefully while the TEMPORARY USE ONLY spare tire is installed. Avoid sharp turns and abrupt braking while driving.**
- **Periodically check spare tire inflation pressure. Always keep the pressure of the TEMPORARY USE ONLY spare tire at 60 psi (420 kPa, 4.2 bar). Always keep the pressure of the full size spare tire (if so equipped) at the recommended pressure for standard tires, as indicated on the Tire and Loading Information label.**
- **With the TEMPORARY USE ONLY spare tire installed do not drive your vehicle at speeds faster than 50 MPH (80 km/h).**
- **When driving on roads covered with snow or ice, the TEMPORARY USE ONLY spare tire should be used on the rear wheels and original tire used on the front wheels (drive wheels). Use tire chains only on the front (original) tires.**
- **Tire tread of the TEMPORARY USE ONLY spare tire will wear at a faster rate than the standard tire. Replace**

the spare tire as soon as the tread wear indicators appear.

- Do not use the spare tire on other vehicles.
- Do not use more than one spare tire at the same time.
- Do not tow a trailer while the TEMPORARY USE ONLY spare tire is installed.

CAUTION

- Do not use tire chains on a TEMPORARY USE ONLY spare tire. Tire chains will not fit properly and may cause damage to the vehicle.
- Because the TEMPORARY USE ONLY spare tire is smaller than the original tire, ground clearance is reduced. To avoid damage to the vehicle, do not drive over obstacles. Also do not drive the vehicle through an automatic car wash since it may get caught.

9 Technical and consumer information

Capacities and recommended fuel/lubricants 9-2
Fuel recommendation 9-3
Engine oil and oil filter recommendation..... 9-5
Air conditioning system refrigerant and lubricant recommendations 9-6
Specifications..... 9-7
Engine..... 9-7
Wheels and tires..... 9-7
Dimensions and weights 9-8
When traveling or registering your vehicle in another country..... 9-8
Vehicle identification 9-8
Vehicle Identification Number (VIN) plate 9-8
Vehicle identification number (chassis number)..... 9-9
Engine serial number 9-9
F.M.V.S.S./C.M.V.S.S. certification label 9-9
Emission control information label 9-10
Tire and loading information label..... 9-10
Air conditioner specification label..... 9-10
Installing front license plate 9-11
Vehicle loading information 9-12
Terms..... 9-12
Vehicle load capacity 9-13
Securing the load..... 9-15
Loading tips..... 9-16
Measurement of weights..... 9-16
Towing a trailer..... 9-16
Maximum load limits..... 9-17
Maximum Gross Vehicle Weight (GVW)/ maximum Gross Axle Weight (GAW) 9-18
Towing load/specification 9-20
Towing safety..... 9-21
Flat towing 9-24
Uniform tire quality grading..... 9-25
Treadwear 9-25
Traction AA, A, B and C..... 9-25
Temperature A, B and C..... 9-25
Emission control system warranty..... 9-26
Reporting safety defects (US only)..... 9-26
Readiness for Inspection/Maintenance (I/M) test..... 9-27
Event Data Recorders (EDR) 9-28
Owner's Manual/Service Manual order information ... 9-28
In the event of a collision 9-29

CAPACITIES AND RECOMMENDED FUEL/LUBRICANTS

The following are approximate capacities. The actual refill capacities may be a little different. When refilling, follow the procedure instructed in the "8. Maintenance and do-it-yourself" section to determine the proper refill capacity.

	Capacity (Approximate)			Recommended specifications
	US measure	Imp measure	Liter	
Fuel	15-7/8 gal	13-1/4 gal	60	Unleaded gasoline with an octane rating of at least 87 AKI (RON 91)*1
Engine oil*2				
Drain and refill				
With oil filter change	4-7/8 qt	4 qt	4.6	• Engine oil with API Certification Mark*3 • Viscosity SAE 5W-30
Without oil filter change	4-1/2 qt	3-3/4 qt	4.3	
Cooling system				
With reservoir	7-3/4 qt	6-3/8 qt	7.3	50% Genuine NISSAN Long Life Antifreeze/Coolant or equivalent 50% Demineralized or distilled water
Reservoir	3/4 qt	5/8 qt	0.75	
Continuously Variable Transmission (CVT) fluid	—	—	—	Genuine NISSAN CVT Fluid NS-2*4
Differential gear oil	—	—	—	Genuine NISSAN Differential Oil Hypoid Super GL-5 80W-90 or API GL-5 Viscosity SAE 80W-90*5
Transfer oil	—	—	—	Genuine NISSAN Differential Oil Hypoid Super GL-5 80W-90 or API GL-5 Viscosity SAE 80W-90
Brake fluid	Refill to the proper oil level according to the instructions in the "8. Maintenance and do-it-yourself" section.			Genuine NISSAN Super Heavy Duty Brake Fluid*6 or equivalent DOT 3
Multi-purpose grease	—	—	—	NLGI No. 2 (Lithium soap base)
Air conditioning system refrigerant	—	—	—	HFC-134a (R-134a)*7
Air conditioning system lubricants	—	—	—	NISSAN A/C System Oil Type S or exact equivalent
Window washer fluid	1-1/6 gal	1 gal	4.5	Genuine NISSAN Windshield Washer Concentrate Cleaner & Antifreeze or equivalent

*1: For additional information, see "FUEL RECOMMENDATION" later in this section.
*2: For additional information, see "ENGINE OIL" in the "8. Maintenance and do-it-yourself" section for changing engine oil.
*3: For additional information, see "ENGINE OIL AND OIL FILTER RECOMMENDATION" later in this section.
*4: **Use only Genuine NISSAN CVT Fluid NS-2. Using transmission fluid other than Genuine NISSAN CVT Fluid NS-2 will damage the CVT, which is not covered by the NISSAN new vehicle limited warranty.**
*5: For hot climates, viscosity SAE 90 is suitable for ambient temperatures above 32°F (0°C).
*6: Available in mainland U.S.A. through a NISSAN dealer.
*7: For additional information, see "VEHICLE IDENTIFICATION" later in this section for air conditioner specification label.

FUEL RECOMMENDATION

Use unleaded regular gasoline with an octane rating of at least 87 AKI (Anti-Knock Index) number (Research octane number 91).

CAUTION

- **Using a fuel other than that specified could adversely affect the emission control system, and may also affect warranty coverage.**
- **Under no circumstances should a leaded gasoline be used, because this will damage the three-way catalyst.**
- **Do not use E-85 fuel in your vehicle. Your vehicle is not designed to run on E-85 fuel. Using E-85 fuel can damage the fuel system components and is not covered by the NISSAN new vehicle limited warranty.**

Gasoline specifications

NISSAN recommends using gasoline that meets the World-Wide Fuel Charter (WWFC) specifications where it is available. Many of the automobile manufacturers developed this specification to improve emission control system and vehicle performance. Ask your service station manager if the gasoline meets the WWFC specifications.

Reformulated gasoline

Some fuel suppliers are now producing reformulated gasolines. These gasolines are specially designed to reduce vehicle emissions. NISSAN supports efforts towards cleaner air and suggests that you use reformulated gasoline when available.

Gasoline containing oxygenates

Some fuel suppliers sell gasoline containing oxygenates such as ethanol, MTBE and methanol with or without advertising their presence. NISSAN does not recommend the use of fuels of which the oxygenate content and the fuel compatibility for your NISSAN cannot be readily determined. If in doubt, ask your service station manager.

If you use oxygenate-blend gasoline, please take the following precautions as the usage of such fuels may cause vehicle performance problems and/or fuel system damage.

- **The fuel should be unleaded and have an octane rating no lower than that recommended for unleaded gasoline.**
- **If an oxygenate-blend, other than methanol blend is used, it should contain no more than 10% oxygenate. (MTBE may, however, be added up to 15%.)**
- **If a methanol blend is used, it should contain no more than 5% methanol (methyl alcohol, wood alcohol). It should also contain a suitable amount of appropriate cosolvents and corrosion inhibitors. If not properly formulated with appropriate cosolvents and corrosion inhibitors, such methanol blends may cause fuel system damage and/or vehicle performance problems. At this time, sufficient data is not available to ensure that all methanol blends are suitable for use in NISSAN vehicles.**

If any driveability problems such as engine stalling and difficult hot-starting are experienced after using oxygenate-blend fuels, immediately change to a non-oxygenate fuel or a fuel with a low blend of MTBE.

Take care not to spill gasoline during refueling. Gasoline containing oxygenates can cause paint damage.

E-85 fuel

E-85 fuel is a mixture of approximately 85% fuel ethanol and 15% unleaded gasoline. E-85 can only be used in a Flexible Fuel Vehicle (FFV). Do not use E-85 fuel in your vehicle. U.S. government regulations require fuel ethanol dispensing

pumps to be identified by a small, square, orange and black label with the common abbreviation or the appropriate percentage for that region.

Aftermarket fuel additives

NISSAN does not recommend the use of any aftermarket fuel additives (for example, fuel injector cleaner, octane booster, intake valve deposit removers, etc.) which are sold commercially. Many of these additives intended for gum, varnish or deposit removal may contain active solvent or similar ingredients that can be harmful to the fuel system and engine.

Octane rating tips

Using unleaded gasoline with an octane rating lower than recommended can cause persistent, heavy "spark knock". (Spark knock is a metallic rapping noise.) If severe, this can lead to engine damage. If you detect a persistent heavy spark knock even when using gasoline of the stated octane rating, or if you hear steady spark knock while holding a steady speed on level roads, have a NISSAN dealer correct the condition. Failure to correct the condition is misuse of the vehicle, for which NISSAN is not responsible.

Incorrect ignition timing will result in spark knock, after-run and/or overheating, which may cause excessive fuel consumption or engine damage. If any of the above symptoms are encountered, have your vehicle checked at a NISSAN dealer.

However, now and then you may notice light spark knock for a short time while accelerating or driving up hills. This is not a cause for concern, because you get the greatest fuel benefit when there is light spark knock for a short time under heavy engine load.

1. API certification mark
2. API service symbol

ENGINE OIL AND OIL FILTER RECOMMENDATION

Selecting the correct oil

It is essential to choose the correct grade, quality, and viscosity engine oil to ensure satisfactory engine life and performance, see “CAPACITIES AND RECOMMENDED FUEL/LUBRICANTS” earlier in this section. NISSAN recommends the use of an energy conserving oil in order to improve fuel economy.

Select only engine oils that meet the American Petroleum Institute (API) certification or International Lubricant Standardization and Approval Committee (ILSAC) certification and SAE viscosity standard. These oils have the API certification mark on the front of the container. Oils which do not have the specified quality label should not be used as they could cause engine damage.

Oil additives

NISSAN does not recommend the use of oil additives. The use of an oil additive is not necessary when the proper oil type is used and maintenance intervals are followed.

Oil which may contain foreign matter or has been previously used should not be used.

Oil viscosity

The engine oil viscosity or thickness changes with temperature. Because of this, it is important to select the engine oil viscosity based on the temperatures at which the vehicle will be operated before the next oil change. Choosing an oil viscosity other than that recommended could cause serious engine damage.

Selecting the correct oil filter

Your new NISSAN vehicle is equipped with a high-quality genuine NISSAN oil filter. When replacing, use a genuine NISSAN oil filter or its equivalent for the reason described in “Change intervals”.

Change intervals

The oil and oil filter change intervals for your engine are based on the use of the specified quality oils and filters. Using an engine oil and filter other than the specified quality, or exceeding recommended oil and filter change intervals could reduce engine life. Damage to the engine caused by improper maintenance or use of incorrect oil and filter quality and/or viscosity is not covered by the NISSAN new vehicle limited warranty.

Your engine was filled with a high quality engine oil when it was built. You do not have to change the oil before the first recommended change interval. Oil and filter change intervals depend

upon how you use your vehicle.

Operation under the following conditions may require more frequent oil and filter changes.

- repeated short distance driving at cold outside temperatures
- driving in dusty conditions
- extensive idling
- towing a trailer
- stop and go commuting

Refer to the “NISSAN Service and Maintenance Guide” for the maintenance schedule.

AIR CONDITIONING SYSTEM REFRIGERANT AND LUBRICANT RECOMMENDATIONS

The air conditioning system in your NISSAN vehicle must be charged with the refrigerant HFC-134a (R-134a) and the oil, NISSAN A/C system oil Type S or the exact equivalents.

CAUTION

The use of any other refrigerant or oil will cause severe damage to the air conditioning system and will require the replacement of all air conditioner system components.

The refrigerant HFC-134a (R-134a) in your NISSAN vehicle will not harm the earth’s ozone layer. Although this refrigerant does not affect the earth’s atmosphere, certain governmental regulations require the recovery and recycling of any refrigerant during automotive air conditioning system service. A NISSAN dealer has the trained technicians and equipment needed to recover and recycle your air conditioning system refrigerant.

Contact a NISSAN dealer when servicing your air conditioning system.

SPECIFICATIONS

ENGINE

Model		QR25DE
Type		Gasoline, 4-cycle, DOHC
Cylinder arrangement		4-cylinder, in-line
Bore × Stroke	in (mm)	3.5 × 3.9 (89.0 × 100.0)
Displacement	cu in (cm^3)	151.82 (2,488)
Firing order		1-3-4-2
Idle speed	rpm	No adjustment is necessary.
Ignition timing (B.T.D.C.)	degree/rpm	
Spark plug	Standard	DILKAR6A-11
Spark plug gap (Normal)	in (mm)	0.043 (1.1)
Camshaft operation		Timing chain

This spark ignition system complies with the Canadian standard ICES-002.

WHEELS AND TIRES

Road wheel

Type	Size	Offset in (mm)
Steel	16 × 6-1/2JJ	1.57 (40)
Aluminum	17 × 7J	1.57 (40)
T-type	16 × 4T	1.18 (30)

Tire

Type	Size	Pressure PSI (kPa) [Cold]
Conventional	P215/70R16 99H	33 (230)
	P225/60R17 98H	
T-type	T155/90D16	60 (420)

DIMENSIONS AND WEIGHTS

Overall length	in (mm)	182.9 (4,645)
Overall width	in (mm)	70.9 (1,800)
Overall height	in (mm)	65.3 (1,658) 66.3 (1,683)*
Front tread	in (mm)	60.6 (1,540)
Rear tread	in (mm)	61.0 (1,550)
Wheelbase	in (mm)	105.9 (2,690)
Gross Vehicle Weight Rating (GVWR)	lb (kg)	See the F.M.V.S.S. or C.M.V.S.S. certification label on the driver's side center pillar.
Gross Axle Weight Rating (GAWR)		
Front	lb (kg)	
Rear	lb (kg)	

*: With roof rail

WHEN TRAVELING OR REGISTERING YOUR VEHICLE IN ANOTHER COUNTRY

When planning to travel in another country, you should first find out if the fuel available is suitable for your vehicle's engine.

Using fuel with an octane rating that is too low may cause engine damage. All gasoline vehicles must be operated with unleaded gasoline. Therefore, avoid taking your vehicle to areas where appropriate fuel is not available.

When transferring the registration of your vehicle to another country, state, province or district, it may be necessary to modify the vehicle to meet local laws and regulations.

The laws and regulations for motor vehicle emission control and safety standards vary according to the country, state, province or district; therefore, vehicle specifications may differ.

When any vehicle is to be taken into another country, state, province or district and registered, its modifications, transportation, and registration are the responsibility of the user. NISSAN is not responsible for any inconvenience that may result.

VEHICLE IDENTIFICATION

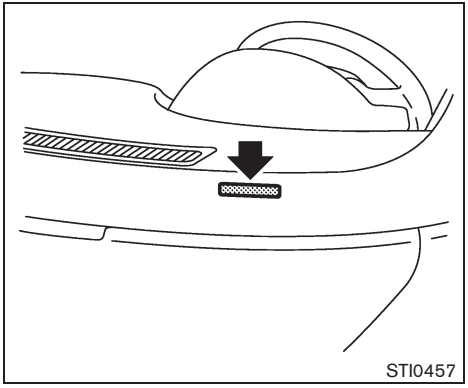

VEHICLE IDENTIFICATION NUMBER (VIN) PLATE

The vehicle identification number plate is attached as shown. This number is the identification for your vehicle and is used in the vehicle registration.

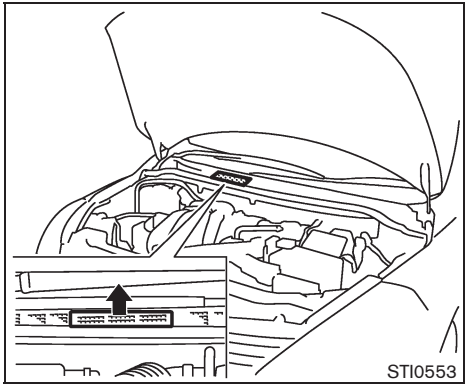

VEHICLE IDENTIFICATION NUMBER (chassis number)

The vehicle identification number is located as shown.

Remove the cover to access the number.

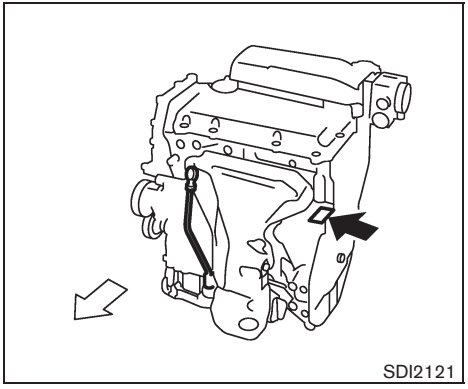

ENGINE SERIAL NUMBER

The number is stamped on the engine as shown.

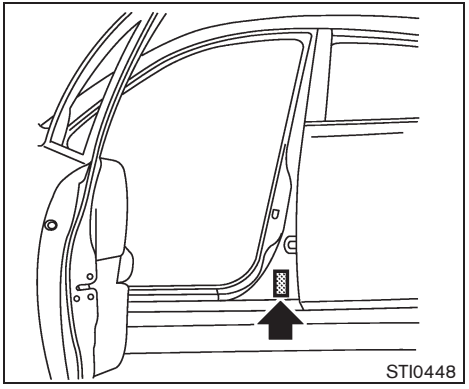

F.M.V.S.S./C.M.V.S.S. CERTIFICATION LABEL

The Federal/Canadian Motor Vehicle Safety Standards (F.M.V.S.S./C.M.V.S.S.) certification label is affixed as shown. This label contains valuable vehicle information, such as: Gross Vehicle Weight Ratings (GVWR), Gross Axle Weight Rating (GAWR), month and year of manufacture, Vehicle Identification Number (VIN), etc. Review it carefully.

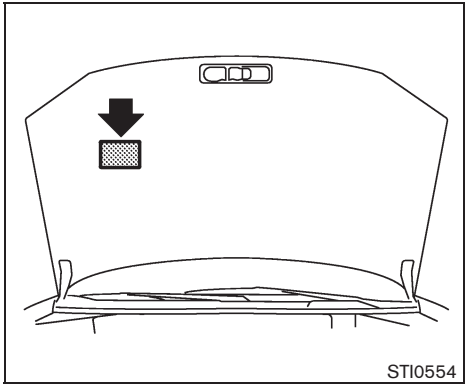

EMISSION CONTROL INFORMATION LABEL

The emission control information label is attached to the underside of the hood as shown.

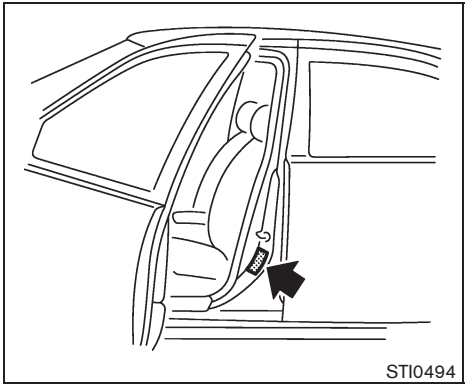

TIRE AND LOADING INFORMATION LABEL

The cold tire pressure is shown on the Tire and Loading Information label affixed to the pillar as illustrated.

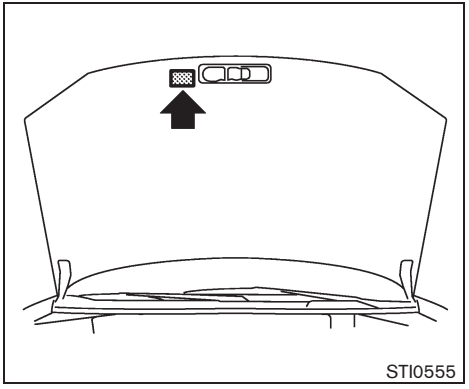

AIR CONDITIONER SPECIFICATION LABEL

The air conditioner specification label is attached as shown.

INSTALLING FRONT LICENSE PLATE

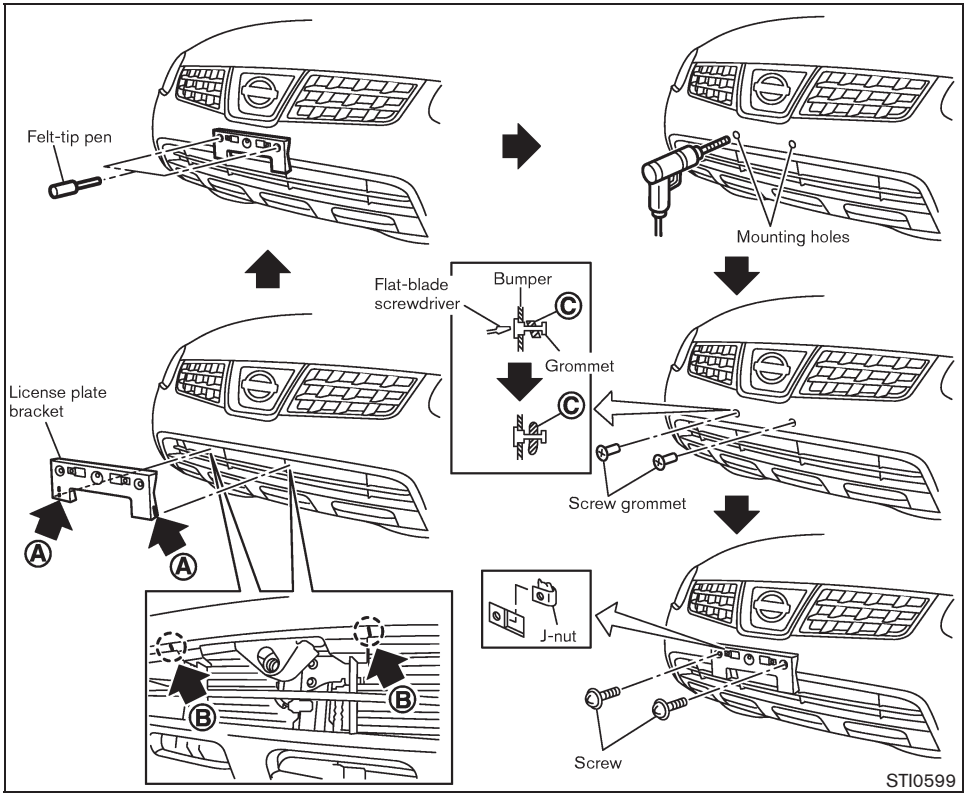

Use the following steps to mount the license plate:

Before mounting the license plate, confirm that the following parts are enclosed in the plastic bag.

- License plate bracket
- J-nut × 2
- Screw × 2
- Screw grommet × 2

1. Temporarily place the license plate bracket by aligning the lower part Ⓐ of it with the lines Ⓑ on the bumper.
2. Mark the pilot hole points with a felt-tip pen through the holes of the license plate bracket.
3. Remove the license plate bracket.
4. Carefully drill two pilot holes using a 0.39 in (10 mm) drill bit at the marked locations. **(Be sure that the drill only goes through the fascia, or damage to the nut may occur.)**
5. Insert grommets into the hole on the fascia.
6. Insert a flat-blade screwdriver into the grommet hole to add 90° turn onto the part Ⓒ .

7. Insert a J-nut into the license plate bracket before placing the license plate bracket on the fascia.
8. Install the license plate bracket with screws.
9. Install the license plate with bolts that are no longer than 0.55 in (14 mm).

WARNING

- **It is extremely dangerous to ride in a cargo area inside the vehicle. In a collision, people riding in these areas are more likely to be seriously injured or killed.**
- **Do not allow people to ride in any area of your vehicle that is not equipped with seats and seat belts.**
- **Be sure everyone in your vehicle is in a seat and using a seat belt properly.**

TERMS

It is important to familiarize yourself with the following terms before loading your vehicle:

- Curb Weight (actual weight of your vehicle) - vehicle weight including: standard and optional equipment, fluids, emergency tools, and spare tire assembly. This weight **does not** include passengers and cargo.
- GVW (Gross Vehicle Weight) - curb weight plus the combined weight of passengers and cargo.
- GVWR (Gross Vehicle Weight Rating) - maximum total combined weight of the unloaded vehicle, passengers, luggage, hitch, trailer tongue load and any other optional equipment. This information is located on the F.M.V.S.S./C.M.V.S.S. label.
- GAWR (Gross Axle Weight Rating) - maximum weight (load) limit specified for the front or rear axle. This information is located on the F.M.V.S.S./C.M.V.S.S. label.
- GCWR (Gross Combined Weight Rating) - The maximum total weight rating of the vehicle, passengers, cargo, and trailer.
- Vehicle Capacity Weight, Load limit, Total load capacity - maximum total weight limit specified of the load (passengers and cargo) for the vehicle. This is the maximum combined weight of occupants and cargo that can be loaded into the vehicle. If the vehicle is used to tow a trailer, the trailer tongue weight must be included as part of the cargo load. This information is located on the Tire and Loading Information label.

- Cargo capacity - permissible weight of cargo, the subtracted weight of occupants from the load limit.

VEHICLE LOAD CAPACITY

Do not exceed the load limit of your vehicle shown as “The combined weight of occupants and cargo” on the Tire and Loading Information label. Do not exceed the number of occupants shown as “Seating Capacity” on the Tire and Loading Information label.

To get “the combined weight of occupants and cargo”, add the weight of all occupants, then add the total luggage weight. Examples are shown in the following illustration.

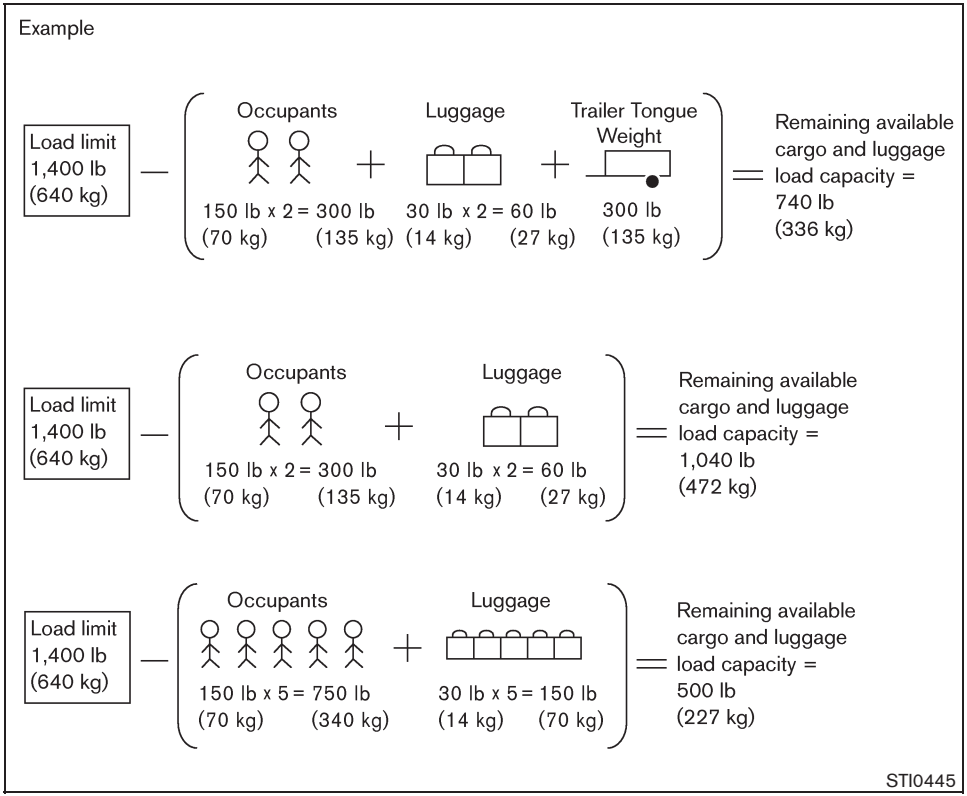

Steps for determining correct load limit

1. Locate the statement “The combined weight of occupants and cargo should never exceed XXX kg or XXX lbs” on your vehicle’s placard.
2. Determine the combined weight of the driver and passengers that will be riding in your vehicle.
3. Subtract the combined weight of the driver and passengers from XXX kg or XXX lbs.
4. The resulting figure equals the available amount of cargo and luggage load capacity. For example, if the XXX amount equals 1400 lbs. and there will be five 150 lb. passengers in your vehicle, the amount of available cargo and luggage load capacity is 650 lbs. (1400 – 750 (5 x 150) = 650 lbs) or (640 – 340 (5 x 70) = 300 kg.)
5. Determine the combined weight of luggage and cargo being loaded on the vehicle. That weight may not safely exceed the available cargo and luggage load capacity calculated in Step 4.

6. If your vehicle will be towing a trailer, load from your trailer will be transferred to your vehicle. Consult this manual to determine how this reduces the available cargo and luggage load capacity of your vehicle.

Before driving a loaded vehicle, confirm that you do not exceed the Gross Vehicle Weight Rating (GVWR) or the Gross Axle Weight Rating (GAWR) for your vehicle. (See “MEASUREMENT OF WEIGHTS” later in this section.)

Also check tires for proper inflation pressures. See the Tire and Loading Information label.

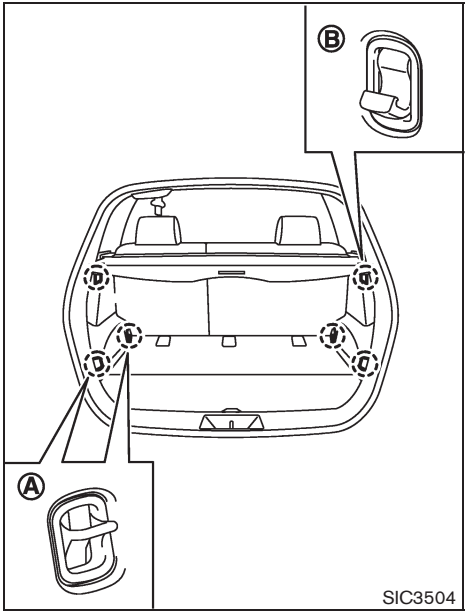

SECURING THE LOAD

There are tie down hooks located in the cargo area as shown. The tie down hooks can be used to secure cargo with ropes or other types of straps.

Do not apply a total load of more than 22 lb. (98 N) to a single hook Ⓐ or 7 lb. (31 N) to a single hook Ⓑ when securing cargo.

⚠ WARNING

- **Properly secure all cargo with ropes or straps to help prevent it from sliding or shifting. Do not place cargo higher than the seatbacks. In a sudden stop or collision, unsecured cargo could cause personal injury.**
- **The child restraint top tether strap may be damaged by contact with items in the cargo area. Secure any items in the cargo area. Your child could be seriously injured or killed in a collision if the top tether strap is damaged.**
- **Do not load your vehicle any heavier than the GVWR or the maximum front and rear GAWRs. If you do, parts of your vehicle can break, tire damage could occur, or it can change the way your vehicle handles. This could result in loss of control and cause personal injury.**

LOADING TIPS

- The GVW must not exceed GVWR or GAWR as specified on the F.M.V.S.S./C.M.V.S.S. certification label.
- Do not load the front and rear axle to the GAWR. Doing so will exceed the GVWR.

WARNING

- **Properly secure all cargo with ropes or straps to help prevent it from sliding or shifting. Do not place cargo higher than the seatbacks. In a sudden stop or collision, unsecured cargo could cause personal injury.**
- **Do not load your vehicle any heavier than the GVWR or the maximum front and rear GAWRs. If you do, parts of your vehicle can break, tire damage could occur, or it can change the way your vehicle handles. This could result in loss of control and cause personal injury.**
- **Overloading not only can shorten the life of your vehicle and the tire, but can cause unsafe vehicle handling and longer braking distances. This may cause a premature tire failure, which could result in a serious accident and personal injury. Failures caused by overloading are not covered by the vehicle's warranty.**

MEASUREMENT OF WEIGHTS

Secure loose items to prevent weight shifts that could affect the balance of your vehicle. When the vehicle is loaded, drive to a scale and weigh the front and the rear wheels separately to determine axle loads. Individual axle loads should not exceed either of the Gross Axle Weight Ratings (GAWR). The total of the axle loads should not exceed the Gross Vehicle Weight Rating (GVWR). These ratings are given on the vehicle certification label. If weight ratings are exceeded, move or remove items to bring all weights below the ratings.

WARNING

Overloading or improper loading of a trailer and its cargo can adversely affect vehicle handling, braking and performance and may lead to accidents.

CAUTION

- **Do not tow a trailer or haul a heavy load for the first 500 miles (800 km). Your engine, axle or other parts could be damaged.**
- **For the first 500 miles (800 km) that you tow a trailer, do not drive over 50 MPH (80 km/h) and do not make starts at full throttle. This helps the engine and other parts of your vehicle wear in at the heavier loads.**

Your new vehicle was designed to be used primarily to carry passengers and cargo. Remember that towing a trailer places additional loads on your vehicle's engine, drivetrain, steering, braking and other systems.

A NISSAN Towing Guide (U.S. only) is available on the website at www.nissanusa.com. This guide includes information on trailer towing capability and the special equipment required

for proper towing.

MAXIMUM LOAD LIMITS

Maximum trailer loads

Never allow the total trailer load to exceed the value specified in the “Towing Load/Specification” chart. The total trailer load equals trailer weight plus its cargo weight.

- **When towing a trailer load of 1,000 lbs (454 kg) or more, trailers with a brake system MUST be used.**

The maximum GCWR (Gross Combined Weight Rating) should not exceed the value specified in the following “Towing Load/Specification” chart.

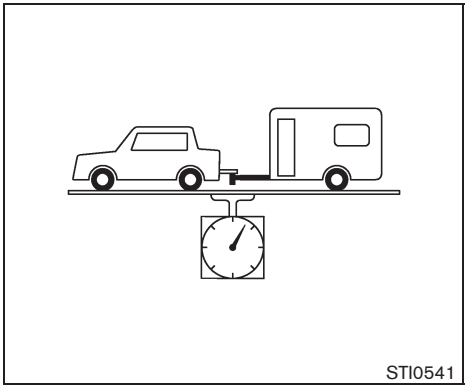

The GCWR equals the combined weight of the towing vehicle (including passengers and cargo) plus the total trailer load. Towing loads greater than these or using improper towing equipment could adversely affect vehicle handling, braking and performance.

The ability of your vehicle to tow a trailer is not only related to the maximum trailer loads, but also the places you plan to tow. Tow weights appropriate for level highway driving may have to be reduced on very steep grades or for low traction situations (for example, on slippery boat ramps).

Temperature conditions can also affect towing. For example, towing a heavy trailer in high outside temperatures on graded roads can affect engine performance and cause overheating. The transmission high fluid temperature protection mode, which helps reduce the chance of transmission damage, could activate and automatically decrease engine power. Vehicle speed may decrease under high load. Plan your trip carefully to account for trailer and vehicle load, weather and road conditions.

WARNING

Overheating can result in reduced engine power and vehicle speed. The reduced speed may be lower than other traffic, which could increase the chance of a collision. Be especially careful when driving. If the vehicle cannot maintain a safe driving speed, pull to the side of the road in a safe area. Allow the engine to cool and return to normal operation. See “IF YOUR VEHICLE OVERHEATS” in the “6. In case of emergency” section of this manual.

CAUTION

Vehicle damage resulting from improper towing procedures are not covered by NISSAN warranties.

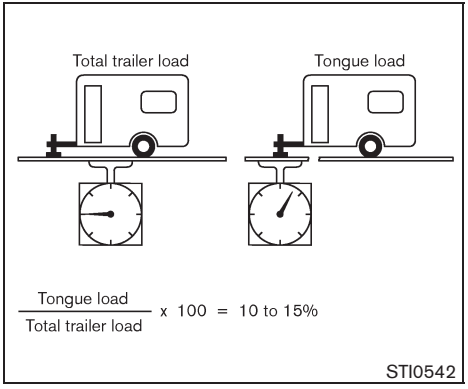

Tongue load

When using a weight carrying or a weight distributing hitch, keep the tongue load between 10 to 15% of the total trailer load within the maximum tongue load limits shown in the following “Towing Load/Specification” chart. If the tongue load becomes excessive, rearrange cargo to allow for proper tongue load.

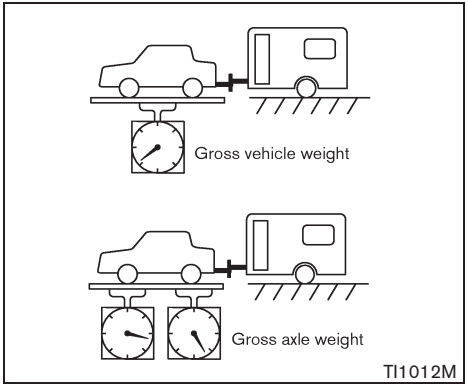

MAXIMUM GROSS VEHICLE WEIGHT (GVW)/MAXIMUM GROSS AXLE WEIGHT (GAW)

The GVW of the towing vehicle must not exceed the Gross Vehicle Weight Rating (GVWR) shown on the F.M.V.S.S./C.M.V.S.S. certification label. The GVW equals the combined weight of the unloaded vehicle, passengers, luggage, hitch, trailer tongue load and any other optional equipment. In addition, front or rear GAW must not exceed the Gross Axle Weight Rating (GAWR) shown on the F.M.V.S.S./C.M.V.S.S. certification label.

Towing capacities are calculated assuming a base vehicle with driver and any options

required to achieve the rating. Additional passengers, cargo and/or optional equipment, such as the trailer hitch, will add weight to the vehicle and reduce your vehicle's maximum towing capacity and trailer tongue load.

The vehicle and trailer need to be weighed to confirm the vehicle is within the GVWR, Front GAWR, Rear GAWR, Gross Combined Weight Rating (GCWR) and Towing capacity.

All vehicle and trailer weights can be measured using platform type scales commonly found at truck stops, highway weigh stations, building supply centers or salvage yards.

To determine the available payload capacity for tongue load, use the following procedure.

1. Locate the GVWR on the F.M.V.S.S./C.M.V.S.S. certification label.
2. Weigh your vehicle on the scale with all of the passengers and cargo that are normally in the vehicle when towing a trailer.
3. Subtract the actual vehicle weight from the GVWR. The remaining amount is the available maximum tongue load.

To determine the available towing capacity, use the following procedure.

1. Find the GCWR for your vehicle on the "Towing Load/Specification" chart found later in this section.
2. Subtract the actual vehicle weight from the GCWR. The remaining amount is the available maximum towing capacity.

To determine the Gross Trailer Weight, weigh your trailer on a scale with all equipment and cargo, that are normally in the trailer when it is towed. Make sure the Gross trailer weight is not more than the Gross Trailer Weight Rating shown on the trailer and is not more than the calculated available maximum towing capacity.

Also weigh the front and rear axles on the scale to make sure the Front Gross Axle Weight and Rear Gross Axle Weight are not more than Front Gross Axle Weight and Rear Gross Axle Weight on the F.M.V.S.S./C.M.V.S.S. certification label. The cargo in the trailer and vehicle may need to be moved or removed to meet the specified ratings.

Example:

- Gross Vehicle Weight (GVW) as weighed on a scale - including passengers, cargo and hitch - 4,133 lb. (1,874 kg).
- Gross Vehicle Weight Rating (GVWR) from F.M.V.S.S./C.M.V.S.S. certification label - 4,233 lb. (1,920 kg).
- Gross Combined Weight Rating (GCWR) from "Towing Load/Specification" chart - 5,136 lb. (2,329 kg).
- Maximum Trailer towing capacity from "Towing Load/Specification" chart - 1,000 lb. (453 kg).

4,233 lb. (1,920 kg)	GVWR
– 4,133 lb. (1,874 kg)	GVW
= 100 lb. (45 kg)	Available for tongue weight
5,136 lb. (2,329 kg)	GCWR
– 4,133 lb. (1,874 kg)	GVW
= 1,003 lb. (455 kg)	Capacity available for towing
100 lb. (45 kg) /	Available tongue weight
1,003 lb. (455 kg)	Available capacity
	= 10 % tongue weight

The available towing capacity may be less than the maximum towing capacity due to the passenger and cargo load in the vehicle.

Remember to keep trailer tongue weight between 10 to 15% of the trailer weight. If the tongue load becomes excessive, rearrange the cargo to obtain the proper tongue load. Do not exceed the 10 to 15% tongue weight specification even if the calculated available tongue weight is greater than 15%. If the calculated tongue weight is less than 10%, reduce the total trailer weight to match the available tongue weight.

Always verify that available capacities are within the required ratings.

TOWING LOAD/SPECIFICATION

TOWING LOAD/SPECIFICATION CHART Unit: lb (kg)		
Model: CVT	With manual mode	Without manual mode
MAXIMUM TRAILER WEIGHT*1	1,500 (680)	1,000 (453)
MAXIMUM TONGUE LOAD	150 (68)	
GROSS COMBINED WEIGHT RATING (GCWR)	5,636 (2,556)	5,136 (2,329)
RECOMMENDED EQUIPMENT*2	Sway Control Device (SCD)	

1: All towing above 1,000 lb (454 kg) requires the use of trailer brakes.
2: Sway control devices are not offered by NISSAN. See a professional trailer/hitch outlet for a properly designed sway control device for your trailer.

TOWING SAFETY

Trailer hitch

Choose a proper hitch for your vehicle and trailer. A genuine NISSAN trailer hitch is available from a NISSAN dealer. Make sure the trailer hitch is securely attached to the vehicle to help avoid personal injury or property damage due to sway caused by crosswinds, rough road surfaces or passing trucks.

Hitch ball

Choose a hitch ball of the proper size and weight rating for your trailer:

- The required hitch ball size is stamped on most trailer couplers. Most hitch balls also have the size printed on top of the ball.
- Choose the proper class hitch ball based on the trailer weight.
- The diameter of the threaded shank of the hitch ball must be matched to the ball mount hole diameter. The hitch ball shank should be no more than 1/16″ smaller than the hole in the ball mount.
- The threaded shank of the hitch ball must be long enough to be properly secured to the ball mount. There should be at least 2 threads showing beyond the lock washer and nut.

Sway control device

Sudden maneuvers, wind gusts and buffeting caused by other vehicles can affect trailer handling. Sway control devices may be used to help control these affects. If you choose to use one, contact a reputable trailer hitch supplier to make sure the sway control device will work with the vehicle, hitch, trailer and the trailer's brake system. Follow the instructions provided by the manufacturer for installing and using the sway control device.

Class I hitch

Class I trailer hitch equipment (receiver, ball mount and hitch ball) can be used to tow trailers of a maximum weight of 2,000 lb (909 kg).

CAUTION

- **The hitch should not be attached to or affect the operation of the impact-absorbing bumper.**
- **Do not use axle-mounted hitches.**
- **Do not modify the vehicle exhaust system, brake system, etc. to install a trailer hitch.**
- **To reduce the possibility of additional damage if your vehicle is struck from the rear, where practical, remove the hitch and/or receiver when not in use. After the hitch is removed, seal the bolt holes to prevent exhaust fumes, water or dust from entering the passenger compartment.**
- **Regularly check that all trailer hitch mounting bolts are securely mounted.**

Tire pressures

- When towing a trailer, inflate the vehicle tires to the recommended cold tire pressure indicated on the Tire and Loading Information label.
- Trailer tire condition, size, load rating and proper inflation pressure should be in accordance with the trailer and tire manufacturers' specifications.

Safety chains

Always use a suitable chain between your vehicle and the trailer. The safety chains should be crossed and should be attached to the hitch, not to the vehicle bumper or axle. The safety chains can be attached to the bumper if the hitch ball is mounted to the bumper. Be sure to leave enough slack in the chains to permit turning corners.

Trailer lights

CAUTION

When splicing into the vehicle electrical system, a commercially available power-type module/converter must be used to provide power for all trailer lighting. This unit uses the vehicle battery as a direct power source for all trailer lights while using the vehicle tail light, stoplight and turn signal circuits as a signal source. The module/converter must draw no more than 15 milliamps from the stop and tail lamp circuits. Using a module/converter that exceeds these power requirements may damage the vehicle's electrical system. See a reputable trailer dealer to obtain the proper equipment and to have it installed.

Trailer lights should comply with federal and/or local regulations. For assistance in hooking up trailer lights, contact a NISSAN dealer or reputable trailer dealer.

Trailer brakes

If your trailer is equipped with a braking system, make sure it conforms to federal and/or local regulations and that it is properly installed.

WARNING

Never connect a trailer brake system directly to the vehicle brake system.

Pre-towing tips

- Be certain your vehicle maintains a level position when a loaded or unloaded trailer is hitched. Do not drive the vehicle if it has an abnormal nose-up or nose-down condition; check for improper tongue load, overload, worn suspension or other possible causes of either condition.
- Always secure items in the trailer to prevent load shift while driving.
- Keep the cargo load as low as possible in the trailer to keep the trailer center of gravity low.
- Load the trailer so approximately 60% of the trailer load is in the front half and 40% is in the back half. Also make sure the load is balanced side to side.
- Check your hitch, trailer tire pressure, vehicle tire pressure, trailer light operation, and trailer wheel lug nuts every time you attach a trailer to the vehicle.
- Be certain your rearview mirrors conform to all federal, state or local regulations. If not, install any mirrors required for towing before driving the vehicle.
- Determine the overall height of the vehicle and trailer so the required clearance is known.

Trailer towing tips

In order to gain skill and an understanding of the vehicle's behavior, you should practice turning, stopping and backing up in an area which is free from traffic. Steering stability, and braking performance will be somewhat different than under normal driving conditions.

- Always secure items in the trailer to prevent load shift while driving.
- Lock the trailer hitch coupler with a pin or lock to prevent the coupler from inadvertently becoming unlatched.
- Avoid abrupt starts, acceleration or stops.
- Avoid sharp turns or lane changes.
- Always drive your vehicle at a moderate speed. Some states or provinces have specific speed limits for vehicles that are towing trailers. Obey the local speed limits.
- When backing up, hold the bottom of the steering wheel with one hand. Move your hand in the direction in which you want the trailer to go. Make small corrections and

back up slowly. If possible, have someone guide you when you are backing up.

Always block the wheels on both vehicle and trailer when parking. Parking on a slope is not recommended; however, if you must do so:

CAUTION

If you move the shift selector lever to the P (Park) position before blocking the wheels and applying the parking brake, transmission damage could occur.

1. Apply and hold the brake pedal.
2. Have someone place blocks on the downhill side of the vehicle and trailer wheels.
3. After the wheel blocks are in place, slowly release the brake pedal until the blocks absorb the vehicle load.
4. Apply the parking brake.
5. Shift the transmission into P (Park).
6. Turn off the engine.

To drive away:

1. Apply and hold the brake pedal.
2. Start the engine.
3. Shift the transmission into gear.
4. Release the parking brake.
5. Drive slowly until the vehicle and trailer are clear from the blocks.
6. Apply and hold the brake pedal.
7. Have someone retrieve and store the blocks.

- When going down a hill, shift into a lower gear and use the engine braking effect. When going up a long grade, downshift the transmission to a lower gear and reduce speed to reduce chances of engine overloading and/or overheating.
- If the engine coolant rises to an extremely high temperature when the air conditioning system is on, turn off the air conditioner. Coolant heat can be additionally vented by opening the windows, switching the fan control to high and setting the temperature control to the HOT position.
- Trailer towing requires more fuel than normal circumstances.
- Avoid towing a trailer for the first 500 miles (800 km).
- Have your vehicle serviced more often than at intervals specified in the recommended maintenance schedule in the NISSAN Service and Maintenance Guide.
- When making a turn, your trailer wheels will be closer to the inside of the turn than your vehicle wheels. To compensate for this, make a larger than normal turning radius during the turn.
- Crosswinds and rough roads will adversely affect vehicle/trailer handling, possibly causing vehicle sway. When being passed by larger vehicles, be prepared for possible changes in crosswinds that could affect vehicle handling. If swaying does occur, firmly grip the steering wheel, steer straight ahead, and immediately (but gradually) reduce vehicle speed. This combination will help stabilize the vehicle. Never increase speed.

Do the following if the trailer begins to sway:

1. Take your foot off the accelerator pedal to allow the vehicle to coast and steer as straight ahead as the road conditions allow. This combination will help stabilize the vehicle.
   — Do not correct trailer sway by steering or applying the brakes.
2. When the trailer sway stops, gently apply the brakes and pull to the side of the road in a safe area.
3. Try to rearrange the trailer load so it is balanced as described earlier in this section.

- Be careful when passing other vehicles. Passing while towing a trailer requires considerably more distance than normal passing. Remember the length of the trailer must also pass the other vehicle before you can safely change lanes.
- Down shift the transmission to a lower gear for engine braking when driving down steep or long hills. This will help slow the vehicle without applying the brakes.
- Avoid holding the brake pedal down too long or too frequently. This could cause the brakes to overheat, resulting in reduced braking efficiency.
- Increase your following distance to allow for greater stopping distances while towing a trailer. Anticipate stops and brake gradually.
- Do not use cruise control while towing a trailer.
- Some states or provinces have specific regulations and speed limits for vehicles that are towing trailers. Obey the local speed limits.
- Check your hitch, trailer wiring harness connections, and trailer wheel lug nuts after 50 miles (80 km) of travel and at every break.
- When stopped in traffic for long periods of time in hot weather, put the vehicle in the P (Park) position.
- When launching a boat, don't allow the water level to go over the exhaust tail pipe or rear bumper.
- Make sure you disconnect the trailer lights before backing the trailer into the water or the trailer lights may burn out.

When towing a trailer, the transmission fluid should be changed more frequently. For additional information, see the "8. Maintenance and do-it-yourself" section earlier in this manual.

FLAT TOWING

Towing your vehicle with all four wheels on the ground is sometimes called flat towing. This method is sometimes used when towing a vehicle behind a recreational vehicle, such as a motor home.

CAUTION

- **Failure to follow these guidelines can result in severe transmission damage.**
- **Whenever flat towing your vehicle, always tow forward, never backward.**
- **DO NOT tow any continuously variable transmission vehicle with all four wheels on the ground (flat towing). Doing so WILL DAMAGE internal transmission parts due to lack of transmission lubrication.**
- **DO NOT tow an All-Wheel Drive (AWD) vehicle with any of the wheels on the ground. Doing so may cause serious and expensive damage to the powertrain.**
- **For emergency towing procedures refer to "TOWING RECOMMENDED BY NISSAN" in the "6. In case of emergency" section of this manual.**

Continuously Variable Transmission (CVT)

All-Wheel Drive (AWD) models:

Do not tow an AWD vehicle with any of the wheels on the ground.

Two-Wheel Drive (2WD) models:

To tow a vehicle equipped with a Continuously Variable Transmission (CVT), an appropriate vehicle dolly **MUST** be placed under the towed vehicle's driving wheels. **Always** follow the dolly manufacturer's recommendations when using

their product.

DOT (Department Of Transportation) Quality Grades: All passenger car tires must conform to federal safety requirements in addition to these grades.

Quality grades can be found where applicable on the tire sidewall between tread shoulder and maximum section width. For example:

Treadwear 200 Traction AA Temperature A

TREADWEAR

The treadwear grade is a comparative rating based on the wear rate of the tire when tested under controlled conditions on a specified government test course. For example, a tire graded 150 would wear one and one-half (1 1/2) times as well on the government course as a tire graded 100. The relative performance of tires depends upon actual conditions of their use, however, and may depart significantly from the norm due to variations in driving habits, service practices and differences in road characteristics and climate.

TRACTION AA, A, B AND C

The traction grades, from highest to lowest, are AA, A, B and C. Those grades represent the tire's ability to stop on wet pavement as measured under controlled conditions on specified government test surfaces of asphalt and concrete. A tire marked C may have poor traction performance.

WARNING

The traction grade assigned to this tire is based on straight-ahead braking traction tests, and does not include acceleration, cornering, hydroplaning, or peak traction characteristics.

TEMPERATURE A, B AND C

The temperature grades A (the highest), B, and C, representing the tire's resistance to the generation of heat and its ability to dissipate heat when tested under controlled conditions on a specified indoor laboratory test wheel. Sustained high temperature can cause the material of the tire to degenerate and reduce tire life, and excessive temperature can lead to sudden tire failure. The grade C corresponds to a level of performance which all passenger car tires must meet under the Federal Motor Vehicle Safety Standard No. 109. Grades B and A represent higher levels of performance on the laboratory test wheel than the minimum required by law.

WARNING

The temperature grade for this tire is established for a tire that is properly inflated and not overloaded. Excessive speed, under-inflation, or excessive

loading, either separately or in combination, can cause heat build-up and possible tire failure.

EMISSION CONTROL SYSTEM WARRANTY

Your NISSAN is covered by the following emission warranties.

For US:

- Emission Defects Warranty
- Emissions Performance Warranty

Details of these warranties may be found with other vehicle warranties in your Warranty Information Booklet which comes with your NISSAN. If you did not receive a Warranty Information Booklet, or it has become lost, you may obtain a replacement by writing to:

- Nissan North America, Inc.
  Consumer Affairs Department
  P.O. Box 685003
  Franklin, TN 37068-5003

For Canada:

Emission Control System Warranty

Details of this warranty may be found with other vehicle warranties in your Warranty Information Booklet which comes with your NISSAN. If you did not receive a Warranty Information Booklet, or it has become lost, you may obtain a replacement by writing to:

- Nissan Canada Inc.
  5290 Orbitor Drive
  Mississauga, Ontario,
  L4W 4Z5

REPORTING SAFETY DEFECTS (US only)

If you believe that your vehicle has a defect which could cause a crash or could cause injury or death, you should immediately inform the National Highway Traffic Safety Administration (NHTSA) in addition to notifying NISSAN.

If NHTSA receives similar complaints, it may open an investigation, and if it finds that a safety defect exists in a group of vehicles, it may order a recall and remedy campaign. However, NHTSA cannot become involved in individual problems between you, your dealer, or NISSAN.

To contact NHTSA, you may call the Vehicle Safety Hotline toll-free at 1-888-327-4236 (TTY: 1-800-424-9153); go to http://www.safercar.gov; or write to: Administrator, NHTSA, 400 Seventh Street, SW., Washington, D.C. 20590. You can also obtain other information about motor vehicle safety from http://www.safercar.gov.

You may notify NISSAN by contacting our Consumer Affairs Department, toll-free, at 1-800-NISSAN-1 (1-800-647-7261).

READINESS FOR INSPECTION/ MAINTENANCE (I/M) TEST

A vehicle equipped with All-Wheel Drive (AWD) should never be tested using a two wheel dynamometer (such as the dynamometers used by some states for emissions testing), or similar equipment. Make sure you inform test facility personnel that your vehicle is equipped with AWD before it is placed on a dynamometer. Using the wrong test equipment may result in transmission damage or unexpected vehicle movement which could result in serious vehicle damage or personal injury.

Due to legal requirements in some states/areas or provinces, your vehicle may be required to be in what is called the "ready condition" for an Inspection/Maintenance (I/M) test of the emission control system.

The vehicle is set to the "ready condition" when it is driven through certain driving patterns. Usually, the "ready condition" can be obtained by ordinary usage of the vehicle.

If a powertrain system component is repaired or the battery is disconnected, the vehicle may be reset to a "not ready condition". Before taking the I/M test, check the vehicle's inspection/ maintenance test readiness condition. Turn the ignition switch to the ON position without starting the engine. If the Malfunction Indicator Light (MIL) comes on steady for 20 seconds and then blinks for 10 seconds, the I/M test condition is "not ready". If the MIL does not blink after 20 seconds, the I/M test condition is "ready".

If the MIL indicates the vehicle is in a "not ready" condition, drive the vehicle through the following pattern to set the vehicle to the "ready condition". If you cannot or do not want to perform the driving pattern, a NISSAN dealer can conduct it for you.

WARNING

Always drive the vehicle in a safe and prudent manner according to traffic conditions and obey all traffic laws.

1. Start the engine. Allow the engine to idle until the engine coolant temperature gauge needle points between the C and H (normal operating temperature).
2. Accelerate the vehicle to 55 MPH (88 km/h), then quickly release the accelerator pedal completely and keep it released for at least 10 seconds.
3. Quickly depress the accelerator pedal for a moment, then drive the vehicle at a speed of 53 to 60 MPH (86 to 96 km/h) for at least 9 minutes.
4. Stop the vehicle. Leave the engine running.
5. Accelerate the vehicle to 35 MPH (55 km/h) and maintain the speed for 20 seconds.
6. Repeat steps 4 and 5 at least 10 times.
7. Accelerate the vehicle to 55 MPH (88 km/h) and maintain the speed for at least 3 minutes.
8. Stop the vehicle. Place the transmission selector lever in the P (Park) or N (Neutral) position.
9. Turn the engine off.
10. Repeat steps 1 through 8 at least one more time.

If step 1 through 7 is interrupted, repeat the preceding step. Any safe driving mode is acceptable between steps. Do not stop the engine until step 7 is completed.

EVENT DATA RECORDERS (EDR)

This vehicle is equipped with an Event Data Recorder (EDR). The main purpose of an EDR is to record, in certain crash or near crash-like situations, such as an air bag deployment or hitting a road obstacle, data that will assist in understanding how a vehicle's systems performed. The EDR is designed to record data related to vehicle dynamics and safety systems for a short period of time, typically 30 seconds or less. The EDR in this vehicle is designed to record such data as:

- How various systems in your vehicle were operating;
- Whether or not the driver and passenger safety belts were buckled/fastened;
- How far (if at all) the driver was depressing the accelerator and/or brake pedal; and,
- How fast the vehicle was traveling.
- Sounds are not recorded.

These data can help provide a better understanding of the circumstances in which crashes and injuries occur.

NOTE: EDR data are recorded by your vehicle only if a nontrivial crash situation occurs; no data are recorded by the EDR under normal driving conditions and no personal data (e.g. name, gender, age and crash location) are recorded. However, other parties, such as law enforcement, could combine the EDR data with the type of personally identifying data routinely acquired during a crash investigation.

To read data recorded by an EDR, special equipment is required and access to the vehicle or the EDR is needed. In addition to the vehicle manufacturer and NISSAN dealer, other parties, such as law enforcement, that have the special equipment, can read the information if they have access to the vehicle or the EDR. EDR data will only be accessed with the consent of the vehicle owner or lessee or as otherwise required or permitted by law.

OWNER'S MANUAL/SERVICE MANUAL ORDER INFORMATION

A genuine NISSAN Service Manual is the best source of service and repair information for your vehicle. Filled with wiring diagrams, illustrations and step-by-step diagnostic and adjustment procedures, this manual is the same one used by the factory trained technicians working at a NISSAN dealer. Also available are genuine NISSAN Owner's Manuals, and genuine NISSAN Service and Owner's Manuals for older NISSAN models.

In the USA:

For current pricing and availability of genuine **NISSAN Service Manuals** for the 2000 model year and later, contact:

1-800-450-9491
www.nissan-techinfo.com

For current pricing and availability of genuine **NISSAN Service Manuals** for the 1999 model year and prior, see a NISSAN dealer, or contact:

1-800-247-5321

For current pricing and availability of genuine **NISSAN Owner's Manuals** for this model year and prior, see a NISSAN dealer, or contact:

1-800-247-5321

In Canada:

To purchase a copy of a genuine NISSAN Service Manual or Owner's Manual please contact a NISSAN dealer. For the phone number

and location of a NISSAN dealer in your area call the NISSAN Information Center at 1-800-387-0122 and a bilingual NISSAN representative will assist you.

Also available are genuine NISSAN Service and Owner's Manuals for older NISSAN models.

IN THE EVENT OF A COLLISION

Unfortunately, accidents do occur. In this unlikely event, there is some important information you should know.

Many insurance companies routinely authorize the use of non-genuine collision parts in order to cut costs, among other reasons.

Insist on the use of Genuine NISSAN Collision Parts!

If you want your vehicle to be restored using parts made to NISSAN's original exacting specifications — if you want to help it to last and hold its resale value, the solution is simple. **Tell your insurance agent and your repair shop to only use Genuine NISSAN Collision Parts.** NISSAN does not warrant non-NISSAN parts, nor does NISSAN's warranty apply to damage caused by a non-genuine part.

Using Genuine NISSAN Parts can help protect your personal safety, preserve your warranty protection and maintain the resale value of your vehicle. And if your vehicle was leased, using Genuine NISSAN Parts may prevent or limit unnecessary excess wear and tear expenses at the end of your lease.

NISSAN designs its hoods with crumple zones to minimize the risk that the hood will penetrate the windshield of your vehicle in an accident. Non-genuine (imitation) parts may not provide such built-in safeguards. Also, non-genuine parts often show premature wear, rust and corrosion.

Why should you take a chance?

In over 40 states, the law says you must be advised if non-genuine parts are used to repair your vehicle. And some states have enacted laws that restrict insurance companies from authorizing the use of non-genuine collision parts during the new vehicle warranty. These laws help protect you, so you can take action to protect yourself.

It's your right!

If you should need further information visit us at:

www.nissanusa.com (for U.S. customers) or **www.nissan.ca** (for Canadian customers)

10 Index

A

ABS (Anti-lock Braking System) 5-27
Advanced air bag system 1-44
Aiming control, Headlights 2-27
Air bag system
  Advanced air bag system 1-44
  Front passenger air bag and status light 1-45
  Front-seat mounted side-impact supplemental air bag system 1-48
  Roof-mounted curtain side-impact and rollover supplemental air bag system 1-48
Air bag warning labels 1-51
Air bag warning light 1-51, 2-16
Air cleaner housing filter 8-16
Air conditioner
  Air conditioner operation 4-2
  Air conditioner service 4-5
  Air conditioner specification label 9-10
  Air conditioning system refrigerant and lubricant recommendations 4-5, 9-6
  In-cabin microfilter 4-5
Alarm, How to stop alarm (see vehicle security system) 2-20
Alcohol, drugs and driving 5-7
All-wheel drive (AWD) 5-22
All-wheel drive (AWD) warning light 2-12
Antenna 4-24
Anti-lock Braking System (ABS) 5-27
Anti-lock braking system (ABS) warning light ... 2-12
Appearance care
  Exterior appearance care 7-2
  Interior appearance care 7-4
Audible reminders 2-18
Audio operation precautions 4-6
Audio system 4-6
  Steering wheel audio controls 4-23
Autochanger, Compact Disc (CD) 4-20
Automatic door locks 3-5
Average fuel consumption 2-7
Average speed 2-8
Avoiding collision and rollover 5-5

B

Back door (See lift gate) 3-21
Battery 8-13
  Battery replacement, Intelligent Key 8-22
  Battery replacement, Keyfob 8-21
  Battery saver system 2-26
  Keyfob battery replacement 8-21
Before starting the engine 5-12
Belts (See drive belts) 8-14
Bluetooth® Hands-Free Phone System 4-25
Booster seats 1-34
Brake
  Anti-lock Braking System (ABS) 5-27
  Brake fluid 8-11
  Brake system 5-26
  Parking brake operation 5-18
  Warning light 2-12
Break-in schedule 5-21
Brightness control, Instrument panel 2-28
Bulb check/instrument panel 2-11
Bulb replacement 8-24

C

Cabin air filter 4-5
Capacities and recommended fuel/lubricants 9-2
Car phone or CB radio 4-24
Cargo cover 2-37
Cargo light 2-46
Catalytic converter, Three way catalyst 5-2
CD care and cleaning 4-22
Ceiling light 2-45
Child restraints 1-19
  Booster seats 1-34
  Installation using LATCH 1-24
  Installation using the seat belts 1-28
  LATCH system 1-21
  Precautions on child restraints 1-19
  Top tether strap 1-22
Child safety 1-11
Child safety rear door lock 3-6
Chimes, Audible reminders 2-18
Circuit breaker, Fusible link 8-19
Cleaning exterior and interior 7-2, 7-4
Clock 2-31
Coat hooks 2-38
Cold weather driving 5-30
Command (See Bluetooth® Hands-Free Phone System) ... 4-31
Compact Disc (CD) changer (See audio system) 4-20
Compact Disc (CD) player (See audio system) 4-15
Compass 2-8
Console box 2-35

Continuously Variable Transmission (CVT) fluid 8-11
Controls, Steering wheel audio controls 4-23
Coolant
Capacities and recommended fuel/lubricants 9-2
Changing engine coolant 8-8
Checking engine coolant level 8-8
Corrosion protection 7-5
Cover, Cargo cover 2-37
Cruise control 5-19
Cup holders 2-33
CVT, Driving with CVT (Continuously Variable Transmission) 5-11, 5-13

D

Daytime running light system 2-27
Defroster switch, Rear window and outside mirror defroster switch 2-24
Dimensions and weights 9-8
Door open warning light 2-13
Drive belts 8-14
Driving
All-wheel drive (AWD) 5-22
Cold weather driving 5-30
Driving with CVT (Continuously Variable Transmission) 5-11, 5-13
On-pavement and off-road driving 5-5
Precautions when starting and driving 5-2
Safety precautions 5-7

E

Economy, Fuel 5-21
Elapsed time 2-8
Electric power steering system 5-26
Electric power steering warning light 2-13
Emission control information label 9-10
Emission control system warranty 9-26
Engine
Before starting the engine 5-12
Break-in schedule 5-21
Capacities and recommended fuel/lubricants 9-2
Changing engine coolant 8-8
Changing engine oil and filter 8-9
Checking engine coolant level 8-8
Checking engine oil level 8-8
Coolant temperature gauge 2-5
Engine block heater 5-31
Engine compartment check locations 8-6
Engine cooling system 8-7
Engine oil 8-8
Engine oil and oil filter recommendation 9-5
Engine oil viscosity 9-5
Engine serial number 9-9
Engine specifications 9-7
If your vehicle overheats 6-11
Starting the engine 5-12
Event Data Recorders (EDR) 9-28
Exhaust gas (carbon monoxide) 5-2

F

F.M.V.S.S./C.M.V.S.S. certification label 9-9
Filter
Air cleaner housing filter 8-16
Changing engine oil and filter 8-9
Flashers (See hazard warning flasher switch) ... 2-29
Flat tire 6-2
Flat towing 9-24
Floor mat cleaning 7-4
Fluid
Brake fluid 8-11
Capacities and recommended fuel/lubricants 9-2
Continuously Variable Transmission (CVT) fluid 8-11
Engine coolant 8-7
Engine oil 8-8
Window washer fluid 8-12
FM-AM radio with Compact Disc (CD) player 4-13
FM-AM-SAT radio with Compact Disc (CD) changer 4-17
Fog light switch 2-29
Front manual seat adjustment 1-3
Front passenger air bag and status light 1-45
Front power seat adjustment 1-4
Front seat adjustment 1-3
Front-seat active head restraints 1-8
Fuel
Capacities and recommended fuel/lubricants 9-2
Distance to empty 2-7
Fuel economy 5-21
Fuel octane rating 9-3
Fuel recommendation 9-3
Fuel-filler cap 3-22
Fuel-filler door 3-22
Gauge 2-6
Fuses 8-19
Fusible links 8-19

G

Garage door opener, HomeLink® Universal Transceiver 2-47
Gas cap 3-22
Gauge 2-3
- Engine coolant temperature gauge 2-5
- Fuel gauge 2-6
- Odometer 2-4
- Speedometer 2-4
- Tachometer 2-5
- Trip computer 2-7

General maintenance 8-2
Glove box 2-35

H

Hands-free phone system, Bluetooth® 4-25
Hazard warning flasher switch 2-29
Head restraints 1-7
Headlights
- Aiming control 2-27
- Bulb replacement 8-25
- Headlight switch 2-26
- Xenon headlights 2-25

Heated seats 2-30
Heater
- Engine block heater 5-31
- Heater and air conditioner operation 4-2

HomeLink® Universal Transceiver 2-47
Hood release 3-20
Hook
- Coat hooks 2-38
- Luggage hook 2-38
- Utility hook 2-39

Horn 2-30

I

Ignition switch 5-9
- Key positions 5-11

Immobilizer system 2-20
In-cabin microfilter 4-5
Indicator lights 2-16
Inside mirror 3-25
Inspection/maintenance (I/M) test 9-27
Instrument brightness control 2-28
Instrument panel 2-2
Intelligent Key system 3-8
- Intelligent Key system warning light 2-14
- Key operating range 3-10
- Key operation 3-11
- P position selecting warning light 2-15
- Remote keyless operation 3-16

Interior light replacement 8-26
Interior lights 2-44
ISOFIX child restraint 1-21

J

Jump starting 6-9

K

Keyless entry
- (See remote keyless entry system) 3-6
- With Intelligent Key system (See Intelligent Key system) 3-16

Keys 3-2
Keys, For Intelligent Key system 3-8

L

Labels
- Air bag warning labels 1-51
- Air conditioner specification label 9-10
- Emission control information label 9-10
- Engine serial number 9-9
- F.M.V.S.S./C.M.V.S.S. certification label 9-9
- Tire and Loading Information label 8-31, 9-10
- Vehicle identification number (VIN) 9-8

LATCH system 1-21
License plate, Installing front license plate 9-11
Lift gate 3-21
Light
- Air bag warning light 1-51
- Bulb replacement 8-24
- Cargo light 2-46
- Ceiling light 2-45
- Fog light switch 2-29
- Headlight switch 2-26
- Headlights bulb replacement 8-25
- Indicator lights 2-16
- Interior lights 2-44
- Map lights 2-44
- Replacement 8-24
- Vanity mirror lights 2-46
- Warning/indicator lights and audible reminders 2-12
- Xenon headlights 2-25

Lights, Exterior and interior light replacement 8-26
Loading information (See vehicle loading information) 9-12
Lock
- Automatic door locks 3-5
- Door locks 3-4

Glove box lock 2-35
Lift gate lock 3-21
Power door lock 3-4
Low fuel warning light 2-14
Low tire pressure warning light 2-14
Low tire pressure warning system (See tire pressure monitoring system (TPMS)) 5-3
Luggage floor box 2-36
Luggage hooks 2-38
Luggage side box 2-36

M

Maintenance
Battery 8-13
General maintenance 8-2
Inside the vehicle 8-3
Maintenance precautions 8-5
Maintenance requirements 8-2
Outside the vehicle 8-2
Seat belt maintenance 1-19
Malfunction indicator light (MIL) 2-17
Manual front seat adjustment 1-3
Map lights 2-44
Mechanical key (Intelligent Key system) 3-3
Meter, Trip computer 2-7
Meters and gauges 2-3
Meters and gauges, Instrument brightness control 2-28
Mirror
Inside mirror 3-25
Outside mirrors 3-26
Moonroof 2-42

N

New vehicle break-in 5-21
NISSAN Vehicle Immobilizer System 2-20

O

Odometer 2-4
Oil
Capacities and recommended fuel/lubricants 9-2
Changing engine oil and filter 8-9
Checking engine oil level 8-8
Engine oil 8-8
Engine oil viscosity 9-5
Outside air temperature display 2-6
Outside mirrors 3-26
Overdrive OFF switch 5-16
Overheat, If your vehicle overheats 6-11
Owner's Manual/Service Manual order information 9-28

P

Panic alarm 3-17
Parking
Brake break-in 5-27
Parking brake operation 5-18
Parking on hills 5-25
Phone
Bluetooth® Hands-Free Phone System 4-25
Car phone or CB radio 4-24
Power
Electric power steering system 5-26
Front seat adjustment 1-4
Power door lock 3-4
Power outlet 2-32
Power windows 2-40
Precautions
Audio operation 4-6
Braking precautions 5-26
Child restraints 1-19
Cruise control 5-19
Driving safety 5-7
Maintenance 8-5
On-pavement and off-road driving 5-5
Seat belt usage 1-9
Supplemental restraint system 1-38
When starting and driving 5-2
Push starting 6-10

R

Radio 4-6
Car phone or CB radio 4-24
FM-AM radio with Compact Disc (CD) changer 4-17
FM-AM radio with Compact Disc (CD) player 4-13
Steering wheel audio controls 4-23
Readiness for inspection/maintenance (I/M) test 9-27
Rear center seat belt 1-16
Rear door lock, Child safety rear door lock 3-6
Rear power point 2-32
Rear seats 1-6
Rear window and outside mirror defroster switch 2-24
Rear window wiper and washer switch 2-23
Recorders, Event data 9-28
Registering your vehicle in another country 9-8

Remote keyless entry
Function, For Intelligent Key system 3-16
System 3-6
Reporting safety defects (US only) 9-26
Rollover 5-5
Roof
Moonroof 2-43
Roof rack 2-39

S

Safety
Child seat belts 1-11
Reporting safety defects (US only) 9-26
Towing safety 9-21
Seat adjustment
Folding front passenger's seat 1-5
Front manual seat adjustment 1-3
Front power seat adjustment 1-4
Front seats 1-3
Seat belt(s)
Child safety 1-11
Infants 1-11
Injured persons 1-12
Larger children 1-12
Precautions on seat belt usage 1-9
Pregnant women 1-12
Rear center seat belt 1-16
Seat belt cleaning 7-5
Seat belt extenders 1-18
Seat belt hooks 1-15
Seat belt maintenance 1-19
Seat belt warning light 2-15
Seat belts 1-9
Seat belts with pretensioners 1-50
Shoulder belt height adjustment 1-15
Small children 1-12
Three-point type 1-13
Seat(s)
Heated seats 2-30
Seats 1-2
Security system
(NISSAN Vehicle Immobilizer System),
Engine start 2-20
Security system, Vehicle security system 2-19
Selector lever, Shift lock release 5-17
Servicing air conditioner 4-5
Shift lock release, Transmission 5-17
Shifting
CVT (Continuously Variable
Transmission) 5-11, 5-13
Shoulder belt height adjustment 1-15
Spare tire 8-39, 9-7
Spark plugs 8-15
Speedometer 2-4
Starting
Before starting the engine 5-12
Jump starting 6-9
Precautions when starting and driving 5-2
Push starting 6-10
Starting the engine 5-12
Status light, Front passenger air bag 1-45
Steering
Electric power steering system 5-26
Steering lock 5-11
Steering wheel switch for audio controls 4-23
Tilting steering wheel 3-24
Storage 2-33
Sun visors 3-24
Sunglasses holder 2-34
Supplemental air bag warning labels 1-51
Supplemental air bag warning light 1-51, 2-16
Supplemental restraint system 1-38
Precautions on supplemental restraint
system 1-38
Switch
Audio control steering wheel switch 4-23
Fog light switch 2-29
Hazard warning flasher switch 2-29
Headlight aiming control 2-27
Headlight switch 2-26
Ignition switch 5-9
Overdrive OFF switch 5-16
Power door lock switch 3-5
Rear window and outside mirror defroster
switch 2-24
Turn signal switch 2-28
Vehicle dynamic control (VDC) off switch 2-31

T

Tachometer 2-5
Temperature display 2-6
Temperature gauge, Engine coolant
temperature gauge 2-5
Theft (NISSAN Vehicle Immobilizer System),
Engine start 2-20
Three-way catalyst 5-2
Tilting steering wheel 3-24
Tire pressure, Low tire pressure
warning light 2-14
Tires
Flat tire 6-2
Low tire pressure warning system 5-3
Tire and Loading information label 8-31

Tire and Loading Information label 9-10
Tire chains..... 8-36
Tire dressing 7-3
Tire pressure 8-29
Tire pressure monitoring system (TPMS) 5-3, 6-2
Tire rotation 8-37
Types of tires..... 8-35
Uniform tire quality grading 9-25
Wheel/tire size 9-7
Wheels and tires..... 8-29
Tonneau cover (see cargo cover)..... 2-37
Top tether strap child restraints 1-22
Towing
Flat towing..... 9-24
Tow truck towing..... 6-12
Towing a trailer..... 9-16
Towing load/specification chart..... 9-16
Towing safety 9-21
TPMS, Tire pressure monitoring system 5-3
TPMS, Tire pressure warning system 6-2
Trailer towing..... 9-16
Transceiver, HomeLink® Universal Transceiver 2-47
Transmission
Continuously Variable Transmission (CVT) fluid 8-11
Driving with CVT (Continuously Variable Transmission)..... 5-11, 5-13
Transmission selector lever lock release 5-17
Transmitter (See remote keyless entry system).... 3-6
Transmitter, With Intelligent Key system (See Intelligent Key system) 3-16
Traveling or registering your vehicle in another country..... 9-8
Trip computer 2-7
Turn signal switch..... 2-28

U

Underbody cleaning 7-3
Uniform tire quality grading 9-25
Utility hook..... 2-39

V

Vanity mirror lights 2-46
Vehicle
Dimensions and weights 9-8
Identification number (VIN)..... 9-8
Loading information..... 9-12
Recovery (freeing a stuck vehicle)..... 6-15
Security system 2-19
Vehicle dynamic control (VDC) off switch ... 2-31
Vehicle dynamic control (VDC) system 5-28
Ventilators 4-2
Voice command (See Bluetooth® Hands-Free Phone System) ... 4-31

W

Warning labels, Air bag warning labels 1-51
Warning light
Air bag warning light 1-51, 2-16
All-wheel drive (AWD) warning light 2-12
Anti-lock braking system (ABS) warning light 2-12
AWD warning light 5-24
Brake warning light 2-12
Door open warning light..... 2-13
Electric power steering warning light 2-13
Intelligent Key system warning light 2-14
Low fuel warning light 2-14
Low tire pressure warning light..... 2-14
Seat belt warning light 2-15
Warning lights..... 2-12
Warning, Hazard warning flasher switch..... 2-29
Warning, Tire pressure monitoring system (TPMS) 5-3, 6-2
Warning, Warning/indicator lights and audible reminders..... 2-11
Warranty, Emission control system warranty..... 9-26
Washer switch
Rear window wiper and washer switch..... 2-23
Windshield wiper and washer switch 2-22
Washing 7-2
Waxing..... 7-2
Weights (See dimensions and weights) 9-8
Wheel/tire size 9-7
Wheels and tires..... 8-29
Cleaning aluminum alloy wheels..... 7-3
Window washer fluid 8-12
Window(s)
Cleaning 7-3
Power windows 2-40
Windshield wiper and washer switch 2-22
Wiper
Rear window wiper and washer switch..... 2-23
Rear window wiper blade 8-18
Windshield wiper and washer switch 2-22
Wiper blades..... 8-16

X

Xenon headlights 2-25

MEMO

GAS STATION INFORMATION

FUEL RECOMMENDATION:

Use unleaded regular gasoline with an octane rating of at least 87 AKI (Anti-Knock Index) number (Research octane number 91).

CAUTION

- **Using a fuel other than that specified could adversely affect the emission control systems, and may also affect warranty coverage.**
- **Under no circumstances should a leaded gasoline be used, since this will damage the three way catalyst.**
- **Do not use E-85 fuel in your vehicle. Your vehicle is not designed to run on E-85 fuel. Using E-85 fuel can damage the fuel system components and is not covered by the NISSAN new vehicle limited warranty.**

For additional information, see “CAPACITIES AND RECOMMENDED FUEL/LUBRICANTS” in the “9. Technical and consumer information” section.

ENGINE OIL RECOMMENDATION:

- Engine oil with API Certification Mark
- Viscosity SAE 5W-30

See “CAPACITIES AND RECOMMENDED FUEL/LUBRICANTS” in the “9. Technical and consumer information” section for engine oil and oil filter recommendation.

COLD TIRE PRESSURES:

The label is typically located on the driver side center pillar or on the driver’s door. For additional information, see “WHEELS AND TIRES” in the “8. Maintenance and do-it-yourself” section.

NEW VEHICLE BREAK-IN PROCEDURES RECOMMENDATION:

During the first 1,200 miles (2,000 km) of vehicle use, follow the recommendations outlined in the “BREAK-IN SCHEDULE” in the “5. Starting and driving” section of this Owner’s Manual. Follow these recommendations for the future reliability and economy of your new vehicle.