Table of Contents

CVM AND CONVERTIBLE TOP

Subject	Page
Introduction	3
System Components	
Top and Frame	4
CVM	5
Hydraulic Unit	6
Hydraulic Cylinders	7
Hydraulic Solenoids	9
Storage Cover Motor	10
Windshield Frame Lock Assembly	11
Top Switch	12
Hall Sensors	13
Angle Hall Sensors	19
Compartment Floor Micro Switch	20
I P O	22
System Operation	23
Emergency Operation	28
Comfort Operation	29
Diagnosis	30
Hard Top	33
Workshop Hints	35
CVM Worksheets	39
Review Questions	41

cardiagn.com

Initial Print Date: 02/2000 Revision Date: 1/22/01

CVM AND CONVERTIBLE TOP

Model: E46 Convertible

Production Date: 01/00

Objectives:

After completing this module, you should be able to:

- Describe the lowering and raising sequence of the Convertible soft top in details.
- Name all the sensors and their functions that are used to open or close the soft top.
- Identify and describe electro-hydraulic components used in the Convertible top.
- Describe the information that is exchanged between the CVM II and the GM V.
- Describe the operation of the Storage Compartment Cover Lock Motor.
- Identify all the hall sensors, angle hall sensors and micro-switches used in the soft top.
- Explain all of the pre-conditions for Convertible soft top operation.
- Describe the wiring of the Hard Top Locks on the left and right.
- Diagnosis a Faulted CVM System.
- Describe the locking / unlocking procedure for the manual soft top.

cardiagn.com

INTRODUCTION

Purpose of the System:

The E46 Convertible-top is a fully automatic electro-hydraulic system that completely opens and closes the soft-top using hydraulic cylinders and electric motors. It consist of the convertible module (CVM II) which controls and monitors the complete operation of the system. The CVM II interacts with the General Module which controls the operation the convertible-top storage compartment cover and window operation when lowering or raising the soft-top.

Convertible top features:

- Electro-hydraulic operation.
- Comfort opening using FZV key or door lock cylinder.
- Comfort closing using only the door lock cylinder (No anti-trap protection).
- Glass window
- Top operation monitored using hall sensors and hall angle sensors.

ardiagn.com

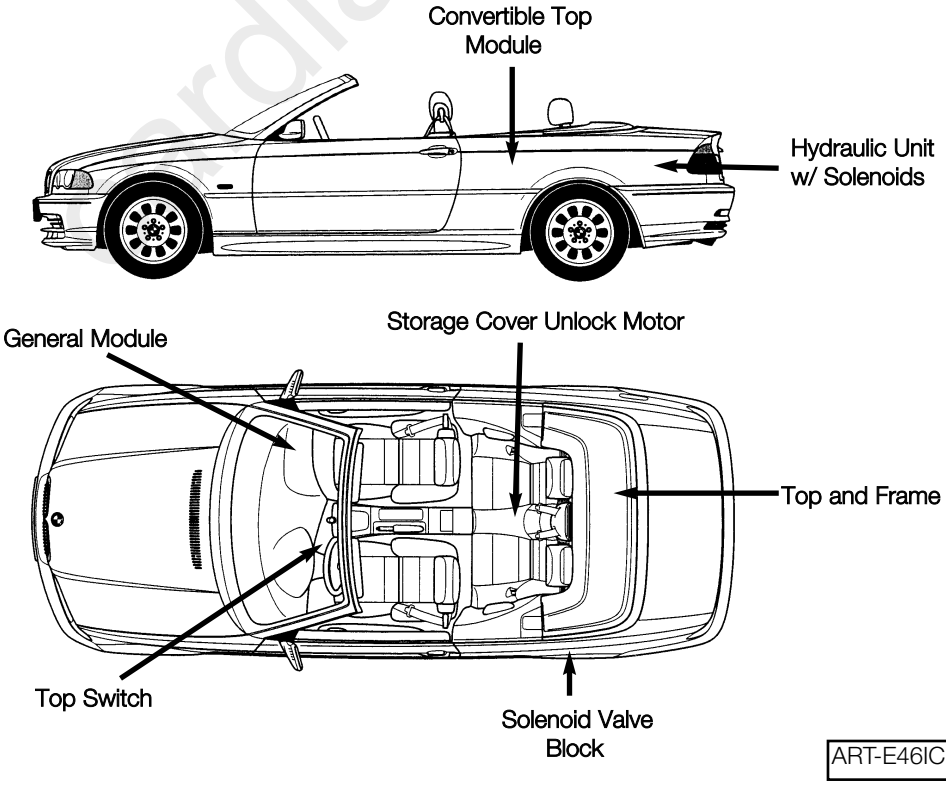

ART-E46ICBODY

Components of the System:

Top and Frame

The top frame is similar to the E36iC with modifications for the adoption of the hydraulic cylinders used for raising/lowering the top. The unlock motor and gear drive assemblies are attached to the front of the top frame as on the E36iC.
The convertible top consists of three layers:

- The outer layer is fabric with a non-replaceable glass rear window.

- A middle fleece liner is installed between the fabric and inner liner for sound and weather insulating purposes.

- The inner liner is similar to the E36iC and is attached to the top frame so that it stretches tight when the top is closed.

Convertible-Top Module (CVM II)

The convertible-top module (CVM II) is installed in the left rear quarter panel behind the interior trim panel. It contains the processing, controlling and monitoring electronics for the complete top operation. The CVM II communicates with the GM over the K-Bus for operation of the top storage cover and windows.

Operation of the hydraulic cylinders is controlled via final stages and solenoids mounted on the hydraulic unit and top frame.

The CVM is fully diagnoseable and contains a fault memory for storage of monitored faults. Diagnosis is carried out over the K-Bus with the DIS or MoDiC.

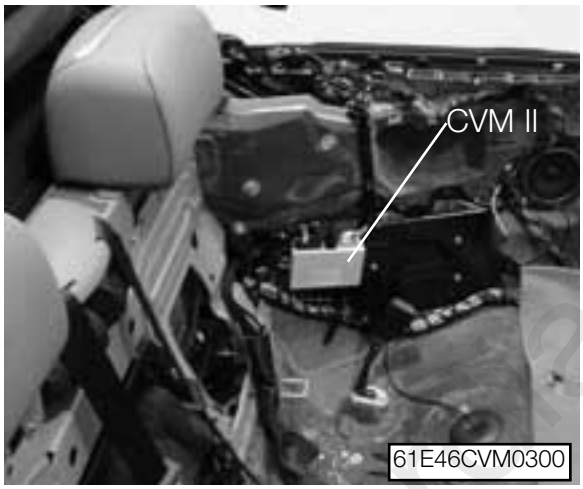

carmagn.com

Hydraulic Unit

The hydraulic unit is mounted in the trunk on the left side behind the trim cover. It is mounted on a rubber bushing and covered by sound insulation for noise reduction during pump operation. The hydraulic unit consists of:

- Motor,
- Pump,
- Storage Cover Solenoid Valve/ Drain Solenoid Valve
- Reservoir.
- Temperature Sensor - hydraulic fluid

The hydraulic unit provides an operating pressure of up to 200 bar for the tops operation. A temperature sensor on the hydraulic unit will signal the top module to cease operation if the fluid temperature exceeds 95° C. Any function started will be completed before the system is switched off. If the temperature exceeds 105°C, the system is immediately switched off and the emergency closing procedure will be required for closing the top.

When the temperature drops below 95^0, the operation of the top can be resumed.

Filling or checking the hydraulic fluid is only carried out when the top is lowered in the storage compartment. The recommended fluid is “ARAL VITAMOL” PN 54 34 8 410 000 (Refer to the repair manual for filling procedures)

Hydraulic Cylinders

Top Storage Compartment Cover

Two hydraulic cylinders are positioned on the left and right sides in the trunk for opening and closing the top storage compartment cover. A Hall sensor is positioned on the left cylinder to detect the full opened position of the cover.

Cylinder Removed

Cylinder Installed

Tensioning Bow (Clamping Bracket)

Two hydraulic cylinders are positioned on the left and right sides of the tensioning bow, on the top frame linkage for raising and lowering the bow. An angle hall sensor is installed on the left tensioning bow linkage to detect the positioning of the bow. The hydraulic lines for the right side tensioning bow cylinder are routed under the top fabric along the tensioning bow.

Main Pillar

Two hydraulic cylinders are positioned on the left and right sides of the top frame linkage for raising and lowering the soft top frame. An angle hall sensor is used to detect the positioning of the main top linkage. The hydraulic lines for the right side main pillar cylinder are routed under the top fabric along the tension bow.

A gas filled piston strut is mounted on the right side frame linkage, next to the hydraulic cylinder, to dampen the raising and lowering of the top frame.

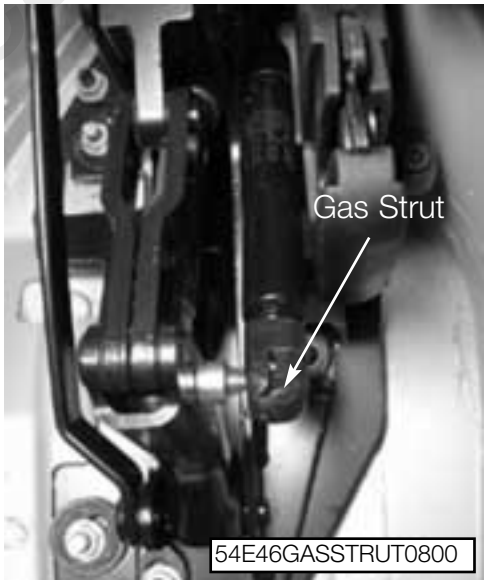

Hydraulic Solenoids

54E46HYDRAULICCONNECTOR0600

Two hydraulic solenoids are mounted on the hydraulic unit:

- One solenoid valve (V1: I01043 convertible top cover) controls the opening and closing of the storage compartment cover
- The second solenoid valve (V5: I01061, pressure deactivation) is the drain solenoid for relieving pressure in the hydraulic cylinders when the key is switched off. The drain solenoid also holds system pressure when the top switch is released during operation.

ARTSOLBLOCK

Three hydraulic solenoids are mounted on the valve block on the left side of the top frame.

- Solenoid valve (V2: I01027, extend main pillar) controls the operation of the main pillar hydraulic cylinder.
- Solenoid valve (V3: I01028, extend tensioning bow) controls the tension bow hydraulic cylinders for lowering.
- Solenoid valve (V4: I01029, retract tensioning bow) controls the tension bow hydraulic cylinders for raising.

cardiagn.com

Top Storage Compartment Cover Lock Motor

The top storage compartment cover lock motor is located on the drive shaft tunnel under the rear seat. It consists of the motor with a hall sensor **(S700)**, gear linkage assembly and two bowden cables. Two locks are located on the right and left sides for locking the storage compartment cover. The lock motor hall sensor **(S700)** detects the locked/unlocked position of the storage cover.

During the soft top operation, when the tensioning bow is raised or when the top is in the storage compartment, the CVM signals the GM over the K-Bus to unlock the storage compartment cover. The GM activates the lock motor and the motor turns 180 degrees to unlock the cover latches. The motor always turns in the same direction to unlock/lock the cover.

Once the motor has turned 180 degrees, the hall sensor **(S700)** input signal will cause the GM to switch off the motor. At the same time, the GM will signal the CVM to continue top operation.

cardiagn.com

ART-KT-5380

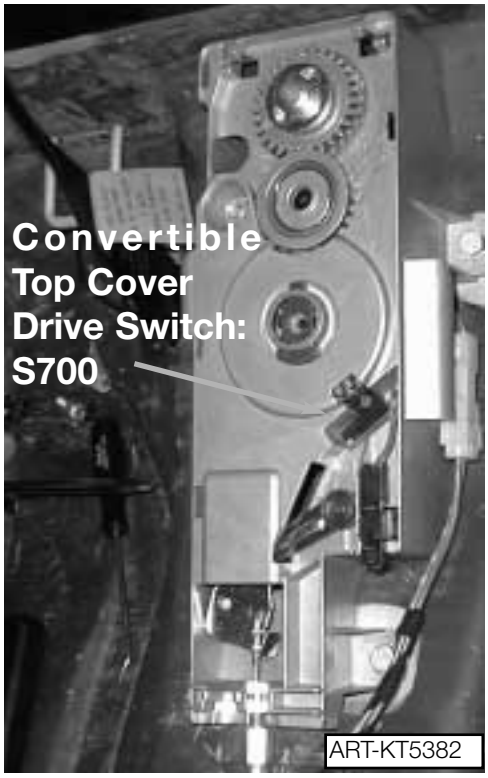

ART-KT5382

Windshield Frame Lock Assembly

The windshield frame lock assembly consists of the top lock motor positioned in the center of the top frame and two lock drive mechanisms positioned on the left and right sides of the top frame. The operation of the lock motor and drive mechanisms is similar to the E36 fully automatic top system. The drive mechanisms have been redesigned for smoother operation, however they still are responsible for unlocking the top from the windshield and raising the front of the top past the tension point. Flexible drive shafts are used activate the lock assemblies and drive the tension linkage rods to raise the top past the tension position.

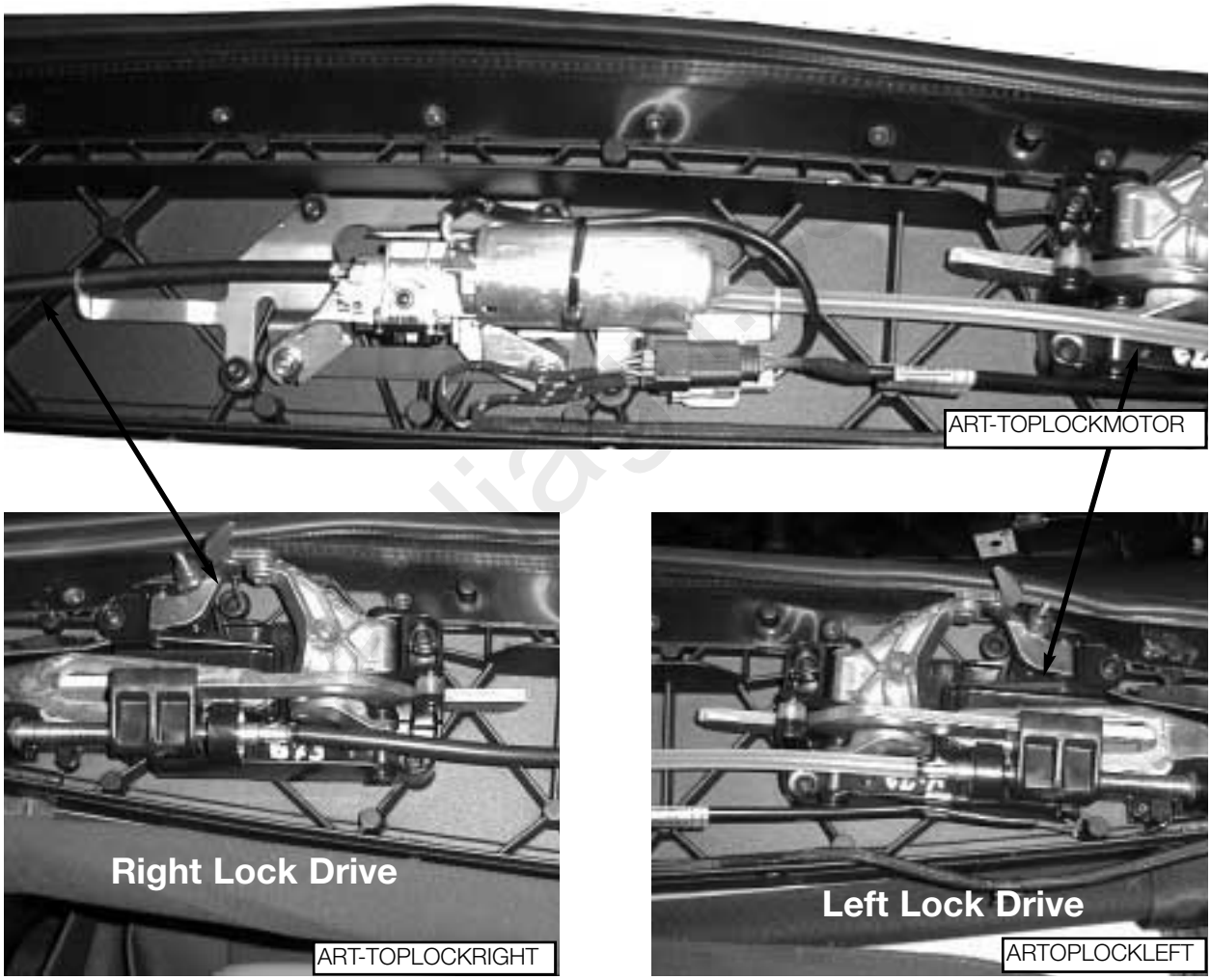

Two hall sensor switches located on the left lock drive assembly are used to detect the position of the top against the windshield frame.

Convertible Top Switch

The convertible-top switchs are located in the Center Console Switching Center (SZM). There are two push button switches, one for each direction of travel, that provide a ground input signal to the CVM for top operation.

Two LEDs are positioned in the center of the switch. The top LED will flash whenever the top is in operation and not locked to the windshield frame or stored completely in the compartment. The lower LED will illuminate, if the top switch is pressed and the storage compartment floor is in the “UP” position.

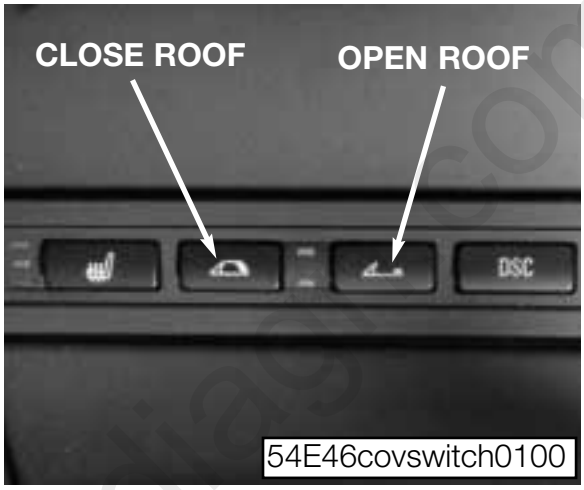

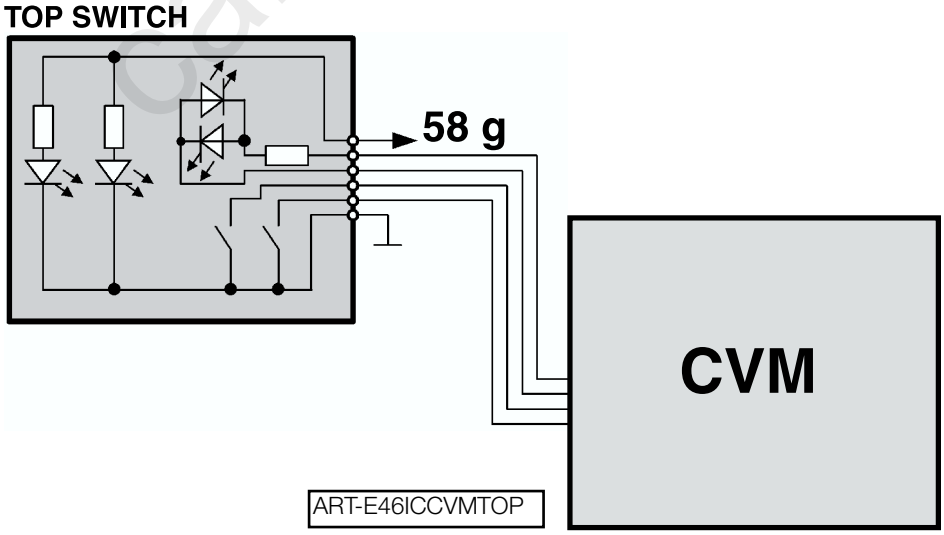

cardiagn.com

Sensors and Switches

The hall sensors, hall angle sensors and micro switches provide feedback status to the CVM and GM for soft top positioning and top sequencing during operation.

Hall sensors:
- Locking Hook Closed (cowl locked) hall sensor: S142
- Locking Hook Open (cowl released) hall sensor: S145
- Two Top Storage Compartment Cover Locks hall sensors: S161 and S158
- Top Storage Compartment Cover hall sensor: S188
- Top Storage Compartment Cover Motor hall sensor: S700
- Hard Top Lock hall sensor: S164

Angle Hall sensors:
- Tension Bow (clamping bracket) hall angle sensor: I01026
- Main Pillar hall angle sensor: I01025

Micro Switch
- Top Storage Compartment Floor micro switch: S239

Component Locations

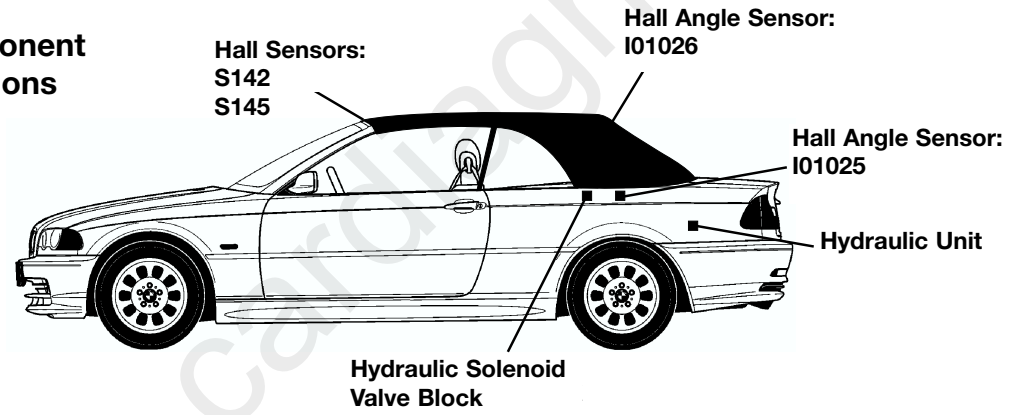

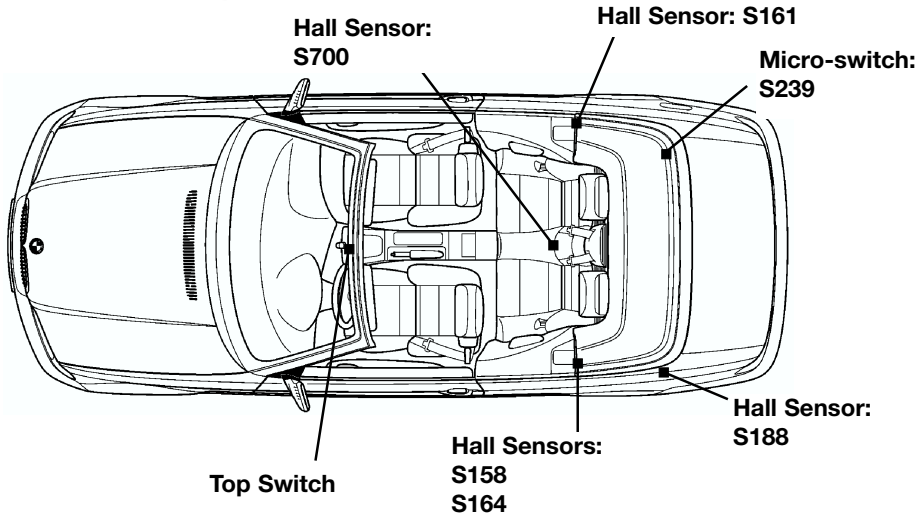

cardiagn.com

Windshield Frame Lock Drive Hall Sensors

Two hall sensor switches are installed on the left side top lock drive assembly. Both sensors receive power and ground from the CVM. One switch is the soft top locked to the windshield frame **(S142 cowl locked/locking hook closed)**. The second switch is the locking hooks of the convertible top open **(S145 cowl released/Locking hook open)**. As the slide assembly on the worm gear moves, it covers and uncovers the hall sensors to cause the high/low switching to take place.

The "Locking hook closed" **(S142)** input provides a high signal when the top frame is locked and a low signal when it is unlocked from the windshield (LED in the soft top switch will start to flash).

The "Locking hook open" **(S145)** input provides a high signal when the top frame is raised past the tension point.

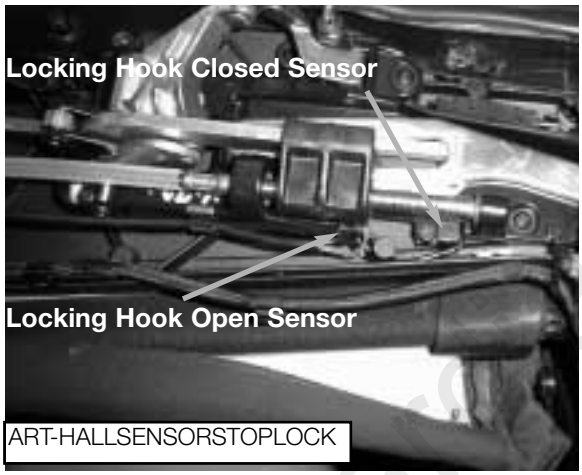

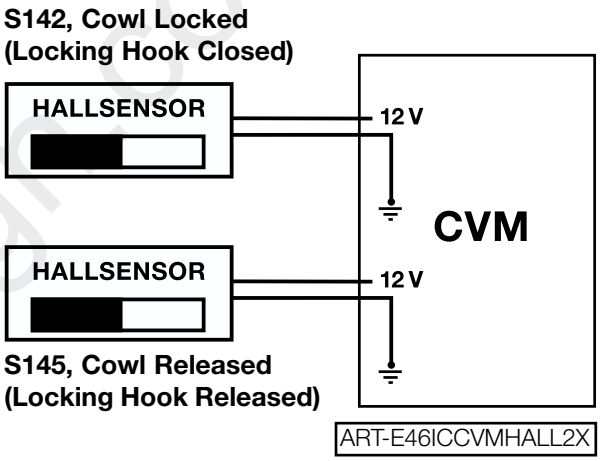

Note: The Diagnosis Requests list in Control Unit Functions refers to a "CONVERTIBLE TOP LOCKED" switch input (S141). That display is a redundant signal from switch S142. Production E46 Convertibles are not fitted with S141.

Storage Compartment Cover Lock Hall Sensors

There are two storage compartment cover lock hall sensor switches **(S161: right, S158: left)** one mounted on each storage cover lock. The sensors receive power and ground from the CVM. Each sensor input provides a high signal when the cover is unlocked and the cover is raised by the hydraulic cylinders far enough to clear the latches.

When the storage cover is completely lowered by the hydraulic cylinders, the hall sensors send a signal to the CVM. The CVM then signals the GM to re-lock the storage cover.

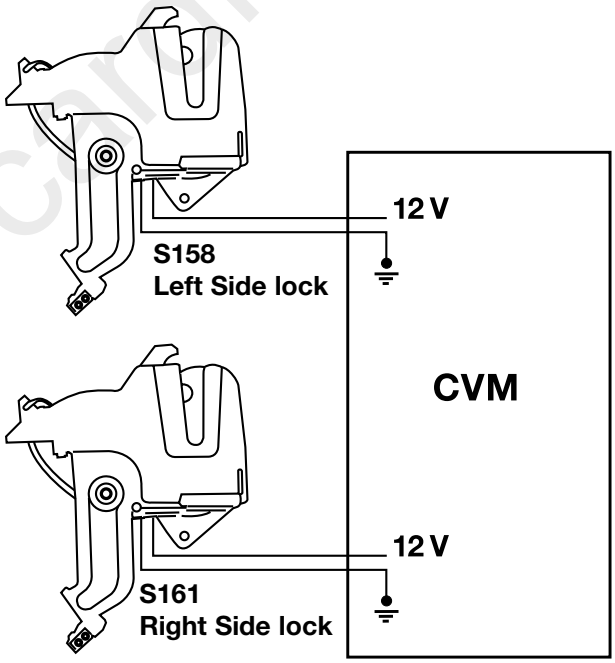

ART-TPCVRLCK.CVM

cardiagn

Storage Compartment Cover Hall Sensor (S188 Convertible Top Open)

The storage cover hall sensor switch **(S188)** is mounted on the left side storage cover hydraulic cylinder in the trunk. It receives power and ground from the CVM. The switch provides a high signal input when the top storage cover is fully open.

The CVM uses the signal from the switch for top storage cover positioning and switching operation during soft top lowering and raising. The CVM uses this input signal as a switching point for activating the tensioning bow solenoid **(V3)** during top lowering or activation of the main pillar solenoid during top raising.

Trunk-Left Side

S188: (Convertible Top Open sensor)

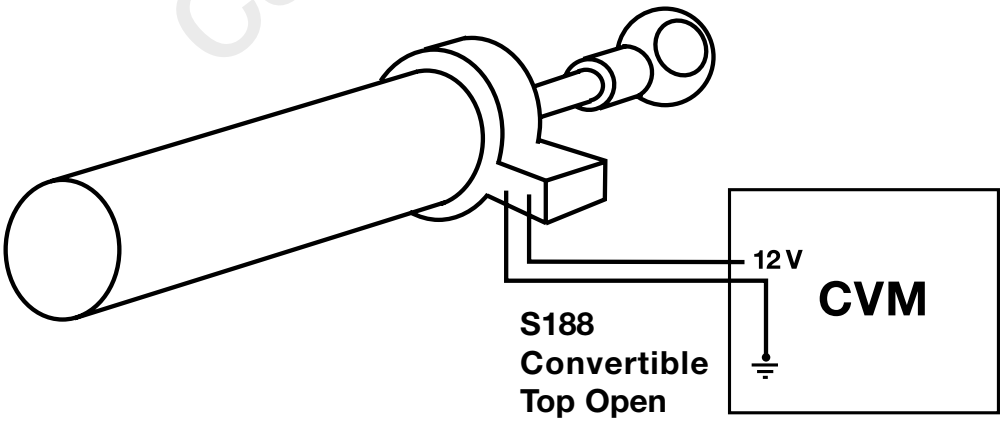

ART-E46ICCVMRAMROD

Storage Compartment Cover Motor Hall Sensor (S700 Switch, Convertible Top Cover drive)

The storage cover motor hall sensor **(S700)** is mounted on the gear drive assembly of the motor. It receives voltage from the General Module.

The GM uses this input to switch the unlock motor “OFF”. Additionally, the GM will electrically lockout the trunk any time the storage cover is unlocked. The CVM receives a signal over the K-bus of the unlock/lock status of the storage compartment cover.

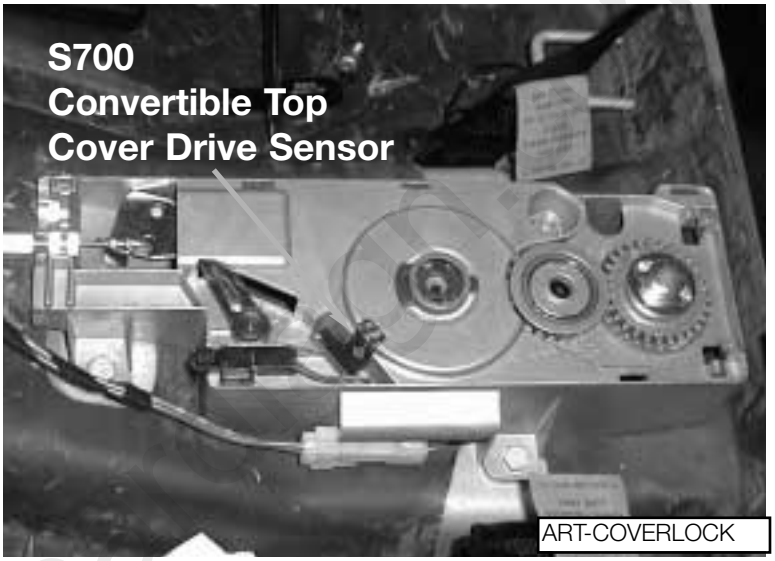

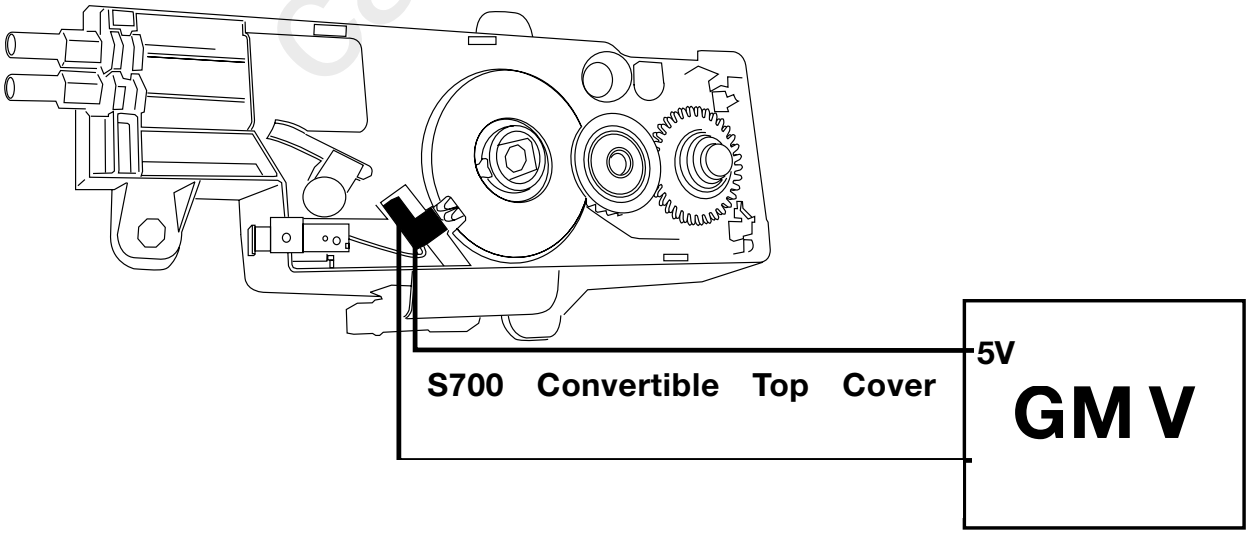

E46ICGM12V.

Hard Top Lock Hall Sensor (S164 Switch, Hard Top Recognition)

The hard top recognition hall sensor is positioned on the left hard top lock. It receives power and ground from the CVM and provides a high signal input when the hard top is installed on the vehicle. The connector on the top of the lock is used as the power and ground supply for the rear window defroster of the hard top.

The CVM uses the input signal of the hall sensor to lock out soft top operation while the hard top is installed.

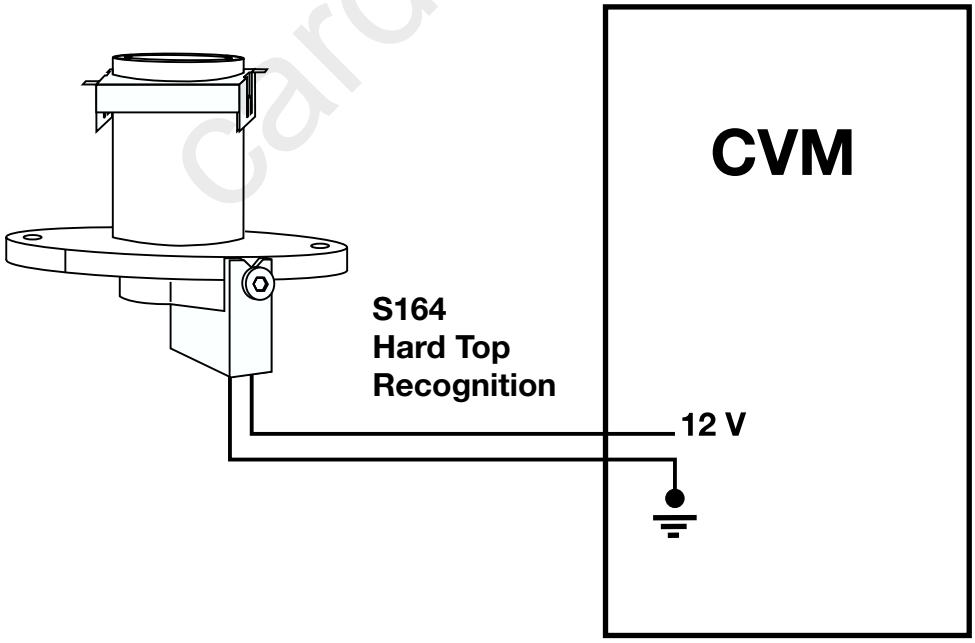

HRDTPLCK.CVM

cardiagn.com

Tensioning Bow (Clamping Bracket) - Hall Angle Sensor
(I01026 Position Switch, Tensioning Bow)

The angle sensor for the Tensioning Bow is mounted on the left side of the top linkage by the Tensioning Bow hydraulic cylinder. The angle sensor receives power (5 volts) and ground from the CVM. It provides a linear voltage signal input from approximately 0.5 to 3.5 volts as the Tensioning Bow moves from a vertical to horizontal position.

The CVM uses the signal from the Tensioning Bow angle sensor to determine positioning of the tensioning bow and switching operation during soft top lowering and raising.

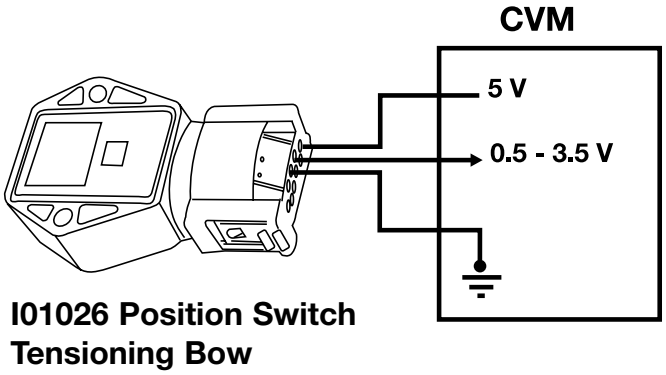

ART-E46ICTENBOW.

Hall Angle Sensor - Main Pillar
(I01025 Position Switch, Main Pillar)

The angle sensor for the Main Pillar is mounted on the left side top linkage by the left main pillar hydraulic cylinder. The angle sensor receives power (5 volts) and ground from the CVM. It provides a linear voltage signal input from approximately 0.5 to 3.5 volts as the top frame is lowered into and raised out of the storage compartment.

The CVM uses the input signal from the Main Pillar angle sensor for top frame positioning

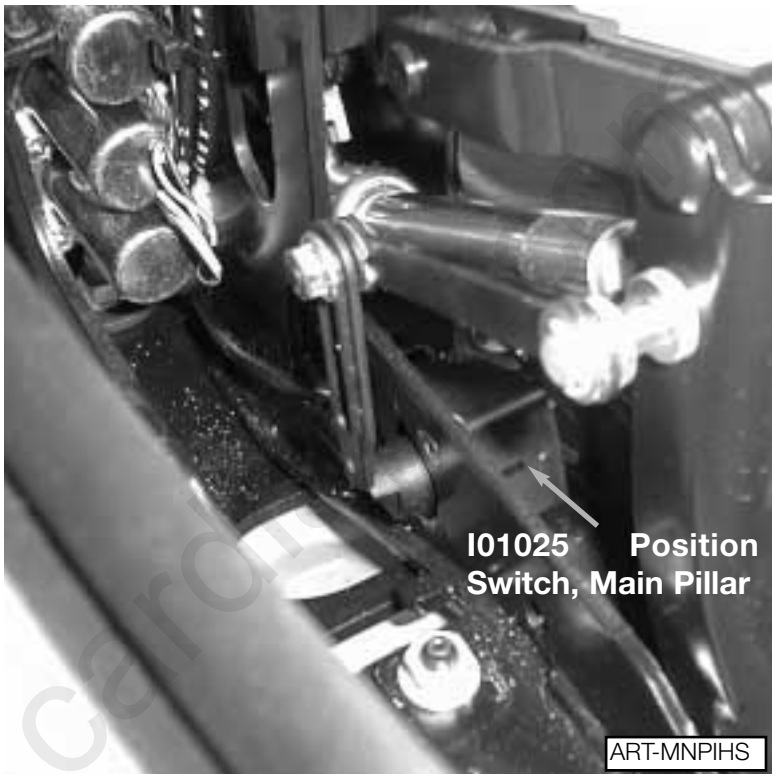

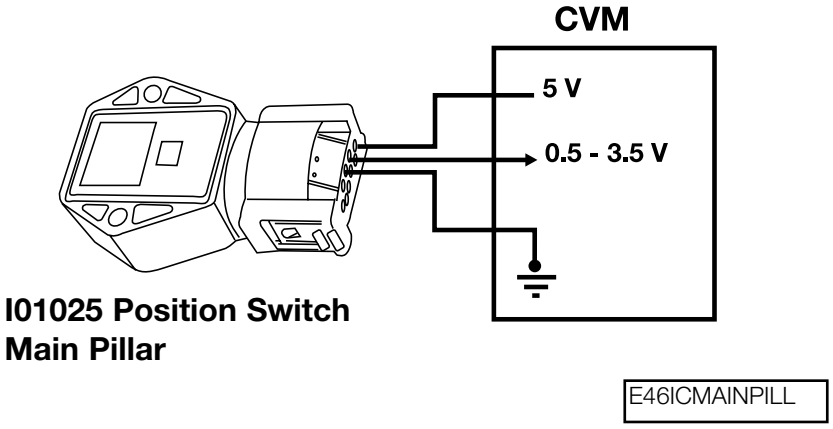

Storage Compartment Floor Micro-Switch
(S239 Switch, Convertible Top Compartment Floor)

The Storage Compartment Floor micro-switch is installed on the hinge of the compartment floor on the right side. It provides a high/low input signal to the CVM based on the position of the compartment floor.

When the floor is in the raised position, the soft top operation is locked out.

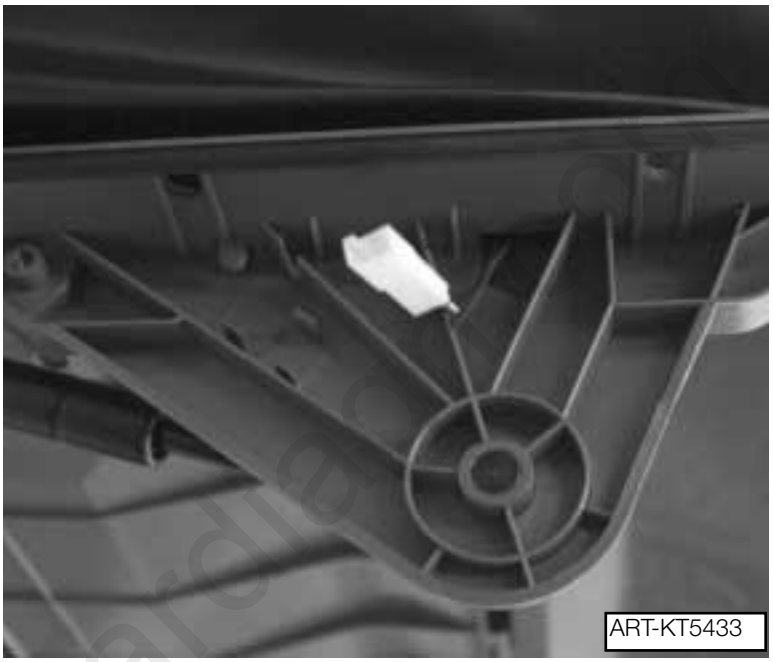

S239 Convertible Top Compartment floor Switch

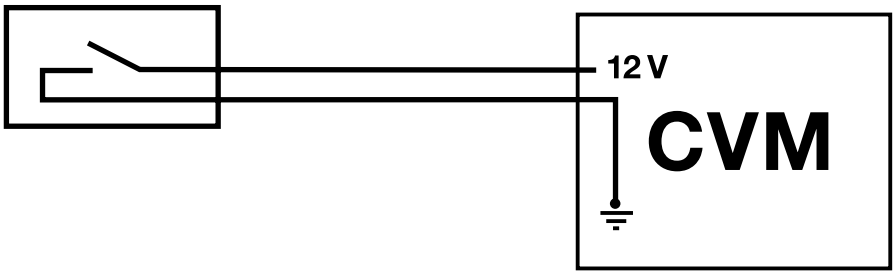

ART-E46ICCVM12V.EPS

CVM IPO

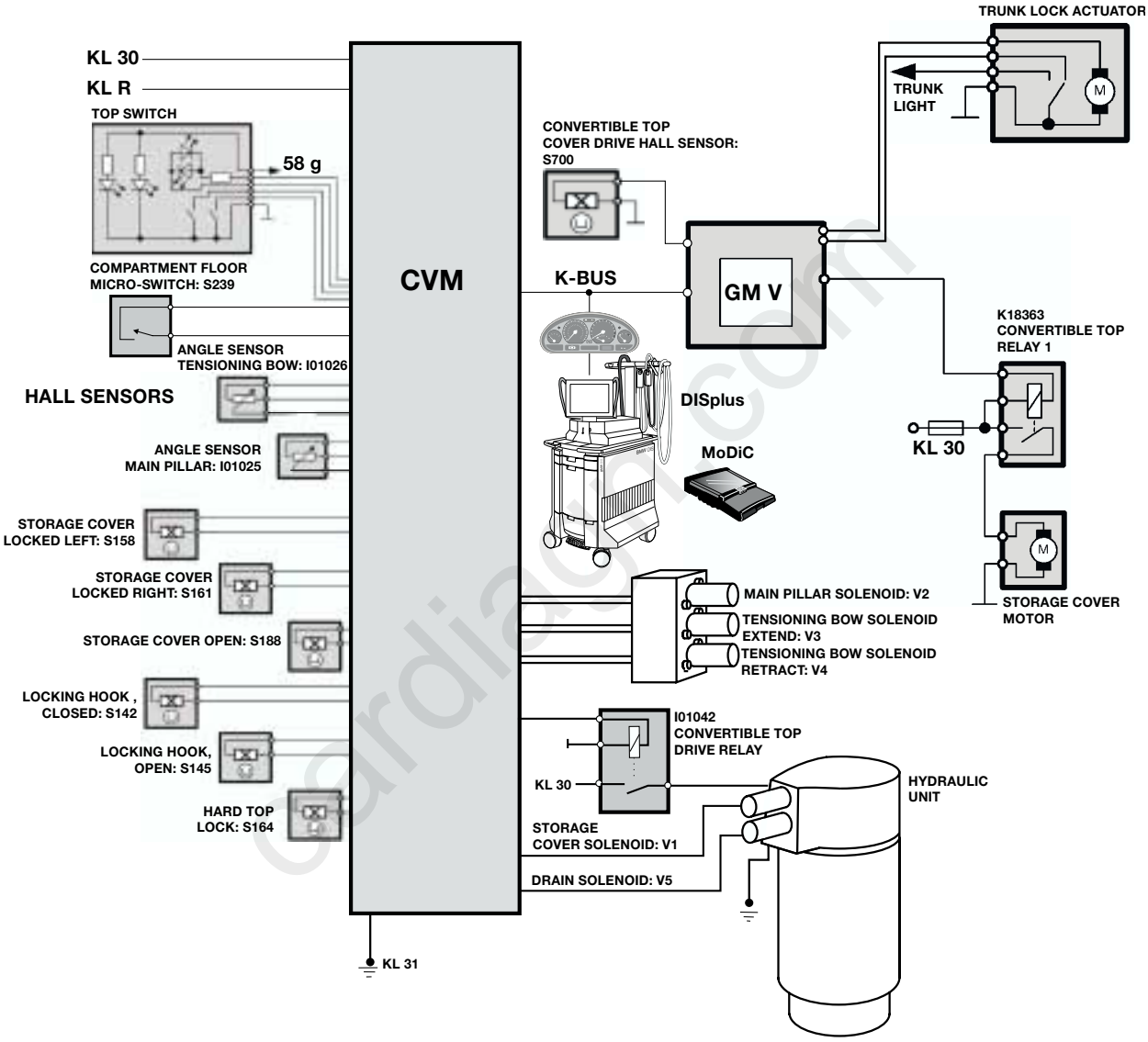

ART-E46ICEHYDD.EPS

System Operation

Pre-Conditions for Soft Top Operation

- Ignition key in position “R” - (Except for comfort operation)
- Road speed < 2.5 MPH
- Hydraulic unit temperature < 95 degrees
- Trunk lid closed
- Top storage compartment floor in lower position with top raised
- No hard top installed with top lowered

In addition, there must be no faults present at any of the switch inputs or outputs.

ART-TOPDOWN1

Top Lowering Sequence

Top Switch Pressed “Open”

- CVM activates the top lock motor and the top is unlocked and raised past the tension point (LED switch flashing).

- At the same time, the CVM signals the GM to lower the windows (if closed) for approximately 1.5 seconds.

- Top lock motor is switched OFF - signal from cowl released hall sensor (S145).

cardiagn

- CVM activates hydraulic pump and switches the tension bow solenoid (V4) to raise the tension bow.
- Tension bow is raised to its vertical position - signal from tensioning bow angle hall sensor.
- CVM signals GM to unlock storage compartment cover.
- Storage compartment cover unlocked - signal from motor hall sensor (S700) - storage cover lock motor is switched off.
- CVM receives status of cover lock from GM over K-bus - switches storage cover solenoid (V1).
- Storage cover raised to its open position - signal from cover hall sensor (S188).
- CVM switches to the lowering solenoid for the tension bow (V3) - top starts lowering into storage compartment.
- CVM switches the main pillar solenoid (v2) - top is fully lowered into storage compartment.

54E46TOPLOWERING0000

ART-TOPDOWN3

cardiagn.com

- CVM switches solenoid for top cover (V1) - cover is lowered - signal from storage cover lock hall sensors (S161 and S158).
- CVM signals GM to lock storage compartment cover.
- GM activates cover lock motor - cover is pulled closed by lock assemblies.
- GM switches off lock motor - signal from motor hall sensor (S700).
- CVM switches off hydraulics and LED.

cardiagn.com

Top Raising Sequence

Top Switch Pressed - “Closed”

- Windows are lowered (if closed) - CVM to GM
- Storage compartment cover is unlocked - CVM to GM
- Storage cover is opened
- Top is raised out of storage compartment
- Tension bow is raised
- Storage cover is closed
- Storage cover is locked - CVM to GM
- Tension bow is lowered
- Top is lowered and locked to cowl - Top locked, is confirmed by S142 and Tensioning bow angle sensor (Tensioning bow horizontal)
- Windows are closed - if switch is held

Hydraulic System Operation

The pump in the hydraulic unit is energized by the CVM and supplies hydraulic fluid under pressure to the solenoids mounted on the pump and solenoid valve block. The solenoids are energized by the CVM and the pressure is supplied to the hydraulic cylinders, based on the input signals from the angle hall sensors and hall switches. The hydraulic operation of the solenoids and cylinders is as follows:

• The storage cover cylinders receive hydraulic pressure on the lowering side of the piston ram when the hydraulic pump is energized. When the solenoid is energized, hydraulic pressure is applied to the raising side of the ram. The cover is opened because the greater raising pressure overcomes the pressure on the small side of the ram. When the cover is lowered, the solenoid switches to drain and the lowering pressure closes the cover.

• The main pillar cylinders receive hydraulic pressure on both sides of the ram when the pump is switched on. The main pillar solenoid is switched to drain to lower the top frame into the storage compartment. The solenoid is switched to pressure to raise the top frame out of the storage compartment. The greater pressure on the raise side of the piston will overcome the lowering pressure to raise the frame.

• The raise tension bow solenoid is energized to apply pressure to the tension bow cylinders and raise the tension bow. The tension bow lower solenoid is switched to drain.

• The lower tension bow solenoid is energized to supply pressure to the tension bow cylinders to lower the tension bow. The tension bow raise solenoid is switched to drain.

• The drain solenoid is energized whenever the pump is switched on. It holds pressure in the system when any of the cylinder solenoids are not energized. It also holds pressure in the system if the top switch is released during operation.

The drain solenoid is switched when the hydraulic pump is switched off as the top reaches one of its end positions. This allows the pressure in the cylinders to be relieved and drained back to the reservoir.

The drain solenoid switches off as the key is switched off. This will cause the pressure to drain slowly in steps.

cardiagn.com

Hydraulic System Operation

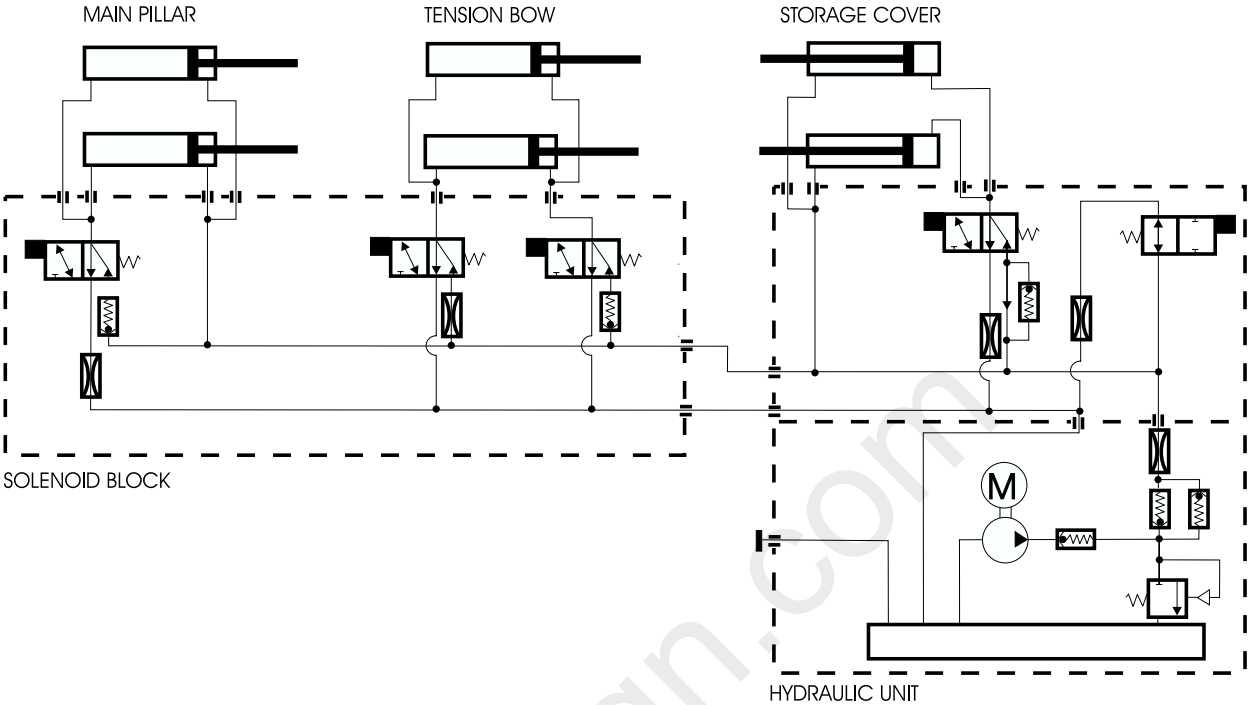

ART-E46ICCVM.EPS

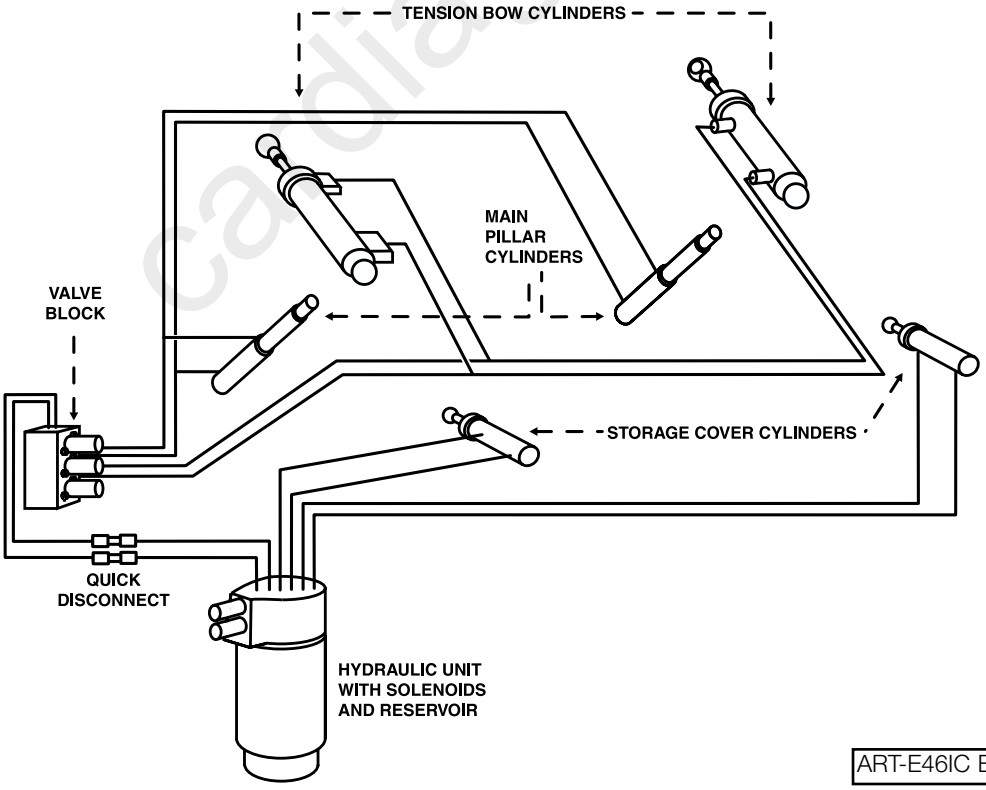

ART-E46IC E HYD.EPS

cardiagn.com

Emergency Operation

Emergency locking/unlocking of the top storage cover is carried out at the motor assembly. The motor assembly is accessed by removing the center arm rest and lifting the seat upholstery below the ski bag.

Pressing the button on the motor assembly will release the motor from the gear linkage.

The linkage assembly can then be turned, through the access hole in the motor assembly cover, using the hand crank stored on the assembly cover. This will unlock/lock the storage cover locks for manually raising the top.

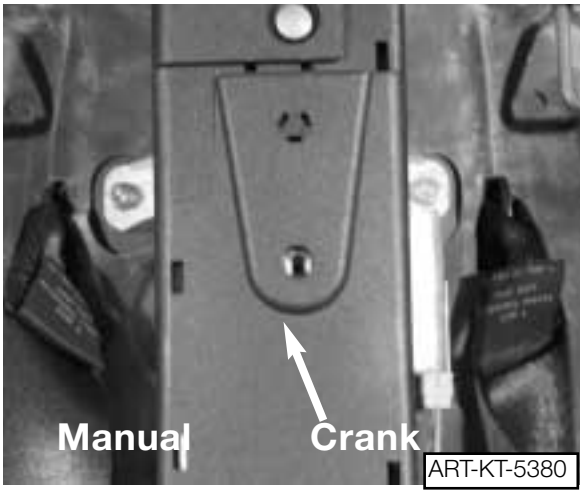

cardiagn.com

Comfort Closing/Opening

Comfort closing/opening of the top is possible at the driver's door lock cylinder. If the key is held in the locking position the top will be raised and the windows closed in the raising sequence.

If the Variable Storage Compartment floor is in the raised position only the windows will be lowered during the convenience opening sequence.

Residual Closing/Opening

It is possible to finish raising or lowering the top at speeds > 2 MPH if:

- The signal from the main pillar angle sensor indicates that the top is fully extended out of the storage compartment.
- The signal from the main pillar angle sensor indicates that the top is fully lowered in the storage compartment.

Safety in the Intermediate Positions

All movements of the top stop once the switch is released. The hydraulics hold the position of the top and remain under pressure for approximately 20 minutes if the ignition key is left in the ON position.

If the ignition is switched OFF, in the intermediate position, the pressure will be released in steps after approximately 10 seconds until all pressure is drained from the cylinders. This allows the top to be manually moved for servicing procedures.

NOTE: *Depending on the position, the top may collapse into the storage compartment if the ignition is switched off with the top in the partially raised position.*

cardiagn.com

Fault Memory

The fault memory of the CVM is stored in an NVRAM which can store up to a maximum of 16 faults. The fault are stored in the order of occurrence and a distinction is made between permanent and sporadic faults.

Operation in the Event of Faults

If a fault occurs during raising or lowering the top, all movement will cease and the fault will be stored in the fault memory. The emergency closing procedure must be used to close the top and the vehicle taken to the dealership for repair.

Depending on the location and type of fault, it may be possible to raise or lower the top fully by pressing the switch in the opposite direction from which the fault occurred.

If the top switch is held > 20 seconds after completing a raising/lowering procedure, a fault will set in the CVM. The control module assumes a fault to ground in the switch or lead. The ignition switch must be cycled to clear the fault before the top will again function. The fault will remain in the module until cleared with the Tester or MoDiC.

All sequenced movements of the top have time out limits set in the control module. If a time out occurs before the end position is reached, the specific movement will be switched off to prevent damage to any of the top components.

cardiagn.com

E46iC MANUAL TOP

The E46iC - 323/325 models are equipped with a manual top as standard equipment. Raising or lowering the top frame assembly is carried out by hand. However, the manual top features an electrically operated storage cover lock system. The unlocking/locking of the storage cover is a function of the general module.

The frame of the manual top is similar to the fully automatic system, with two piston dampers mounted on the assembly to aid in its operation. The front of the top frame features a manual handle that is used to operate the cowl locks on the left and right sides.

MANUAL TOP STORAGE COVER OPERATION

The storage cover locking assembly consists of the following components:

- General Module
- Switch assembly
- Storage Cover Motor assembly - with hall sensor and bowden cables
- Two Storage Cover Locks - with a hall sensor
- Variable Top Storage Compartment Floor - micro switch

When the button is pressed to unlock the storage cover, the GM will lower the windows and activate the relay to unlock the storage cover. After raising the tension bow, the storage cover is raised manually and the top is lowered into the storage compartment. The storage cover is then lowered onto the locks and the signals from the storage cover hall sensors will signal the GM to relock the cover.

The signal from the variable storage compartment floor micro switch will prevent the storage cover from opening when the floor is in the open position.

The GM will lock out the operation of the storage cover lock motor whenever the trunk is opened.

candiagn.com

Manual Top Storage Cover Operation Diagram

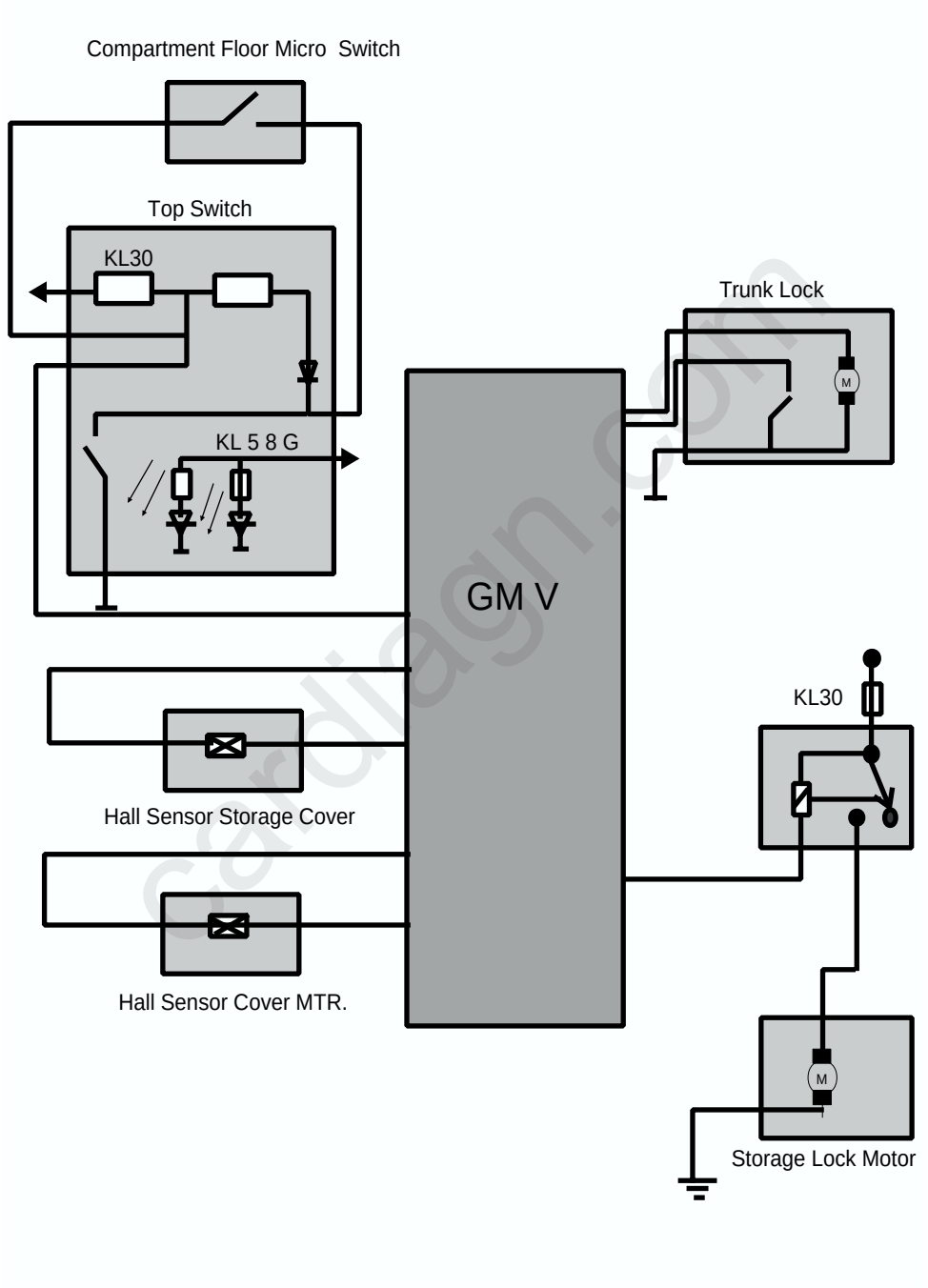

61460014

Hard Top

An accessory hard top is available for the E46iC. It is constructed from aluminum with a finished fabric upholstery on the inside. Roof rack mounting points are integrated into the top on the left and right sides.

ART-HARDTOP

The hard top attaches to the vehicle at four places:

- Two hard top locks on the left and right sides in the rear.
- Two cowl locks at the front.

ART-HLOCK1

ART-HRT-HLOCK2

cardiagn.com

The hard top locks on the left and right, in the rear, have integrated wiring connectors for power and ground supplies to the rear window defogger and interior lights.

ART-HARDTOPLOCKLEFT

The connector on the left side contains two separate strips, one for power supply to the rear defogger and the other for power supply to the interior lights

ART-HARDTOPCONN

The connector on the right side contains two separate strips, one for the ground connection for the rear defogger and the other for

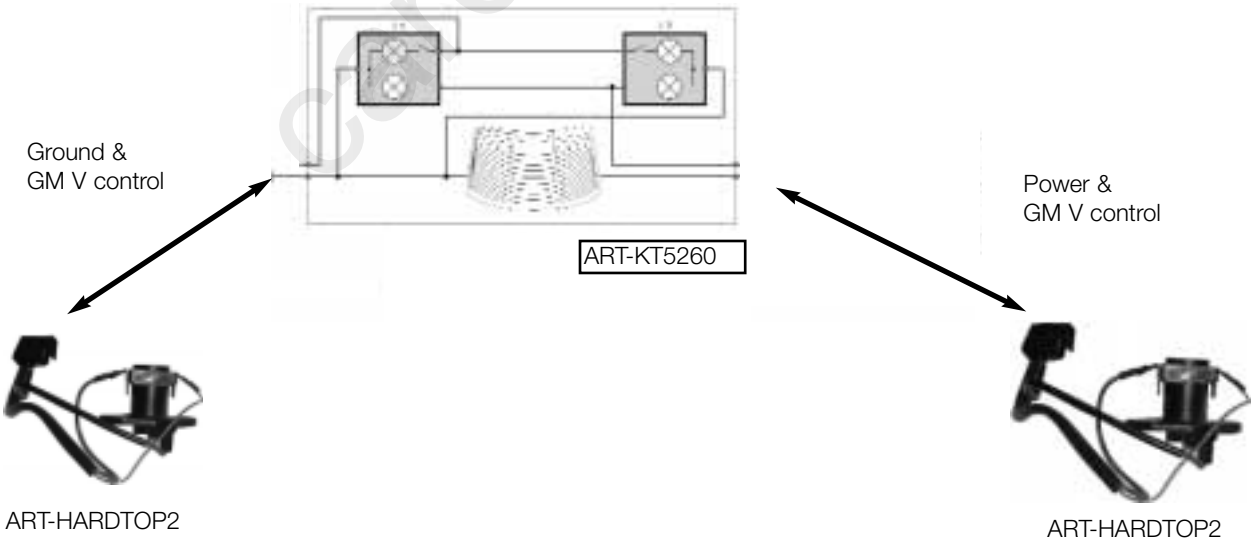

Workshop Hints:

Convertible Removal/Installation Top

This section of the handout will cover highlights of soft top removal and installation. The "REPAIR MANUAL" should always be referenced for the complete procedure on top removal/installation and adjustments. Removal of the soft top assembly requires removing the rear seat and interior trim panels to gain access to the fastening points and wiring connections.

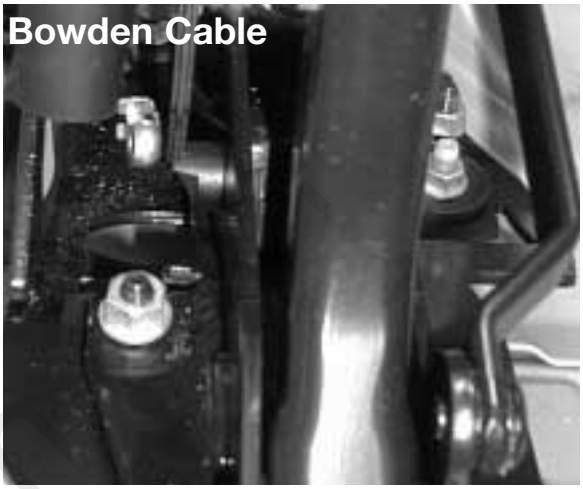

The top storage cover should be removed prior to removing the top assembly. The hard top lock post and storage cover locks must be removed from the top frame assembly. The cover locks are connected to the unlock motor through a bowden cable that must be disconnected when removing the lock assemblies.

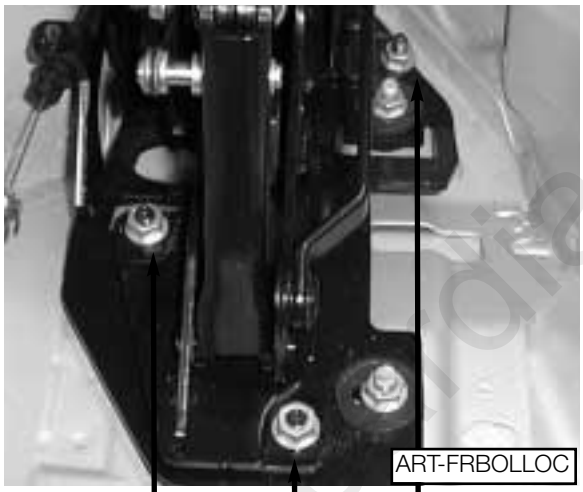

Fastening Points

The top and frame assembly is bolted to the main top bracket at four points. The top must be raised with the tension bow in the vertical position to access three of the nuts.

The fourth mounting point for the top frame assembly is on the front of the top mounting bracket. This should be loosened after the top is lowered into the storage compartment.

The supply and drain lines from the hydraulic unit to the solenoid block on the top frame are connected through quick disconnect couplings located on the left side of the top storage compartment. Care should be taken when disconnecting the lines not to drip the hydraulic fluid onto the top fabric.

Ensure that all wiring is disconnected from the top frame before removing the top assembly. There are three connectors on each side of the top assembly in front of the top storage compartment. The main wiring harness (18 Pin ELO) from the CVM to the top frame must also be disconnected.

THE TOP FRAME IS UNBOLTED FROM THE FRAME MOUNTING BRACKETS, MOUNTED IN THE STORAGE COMPARTMENT. THESE BRACKETS ARE PRE-SET AND ADJUSTED FOR TOP ALIGNMENT AT THE FACTORY AND MUST NOT BE REMOVED OR ADJUSTED WHEN CARRYING OUT SERVICE WORK ON THE TOP.

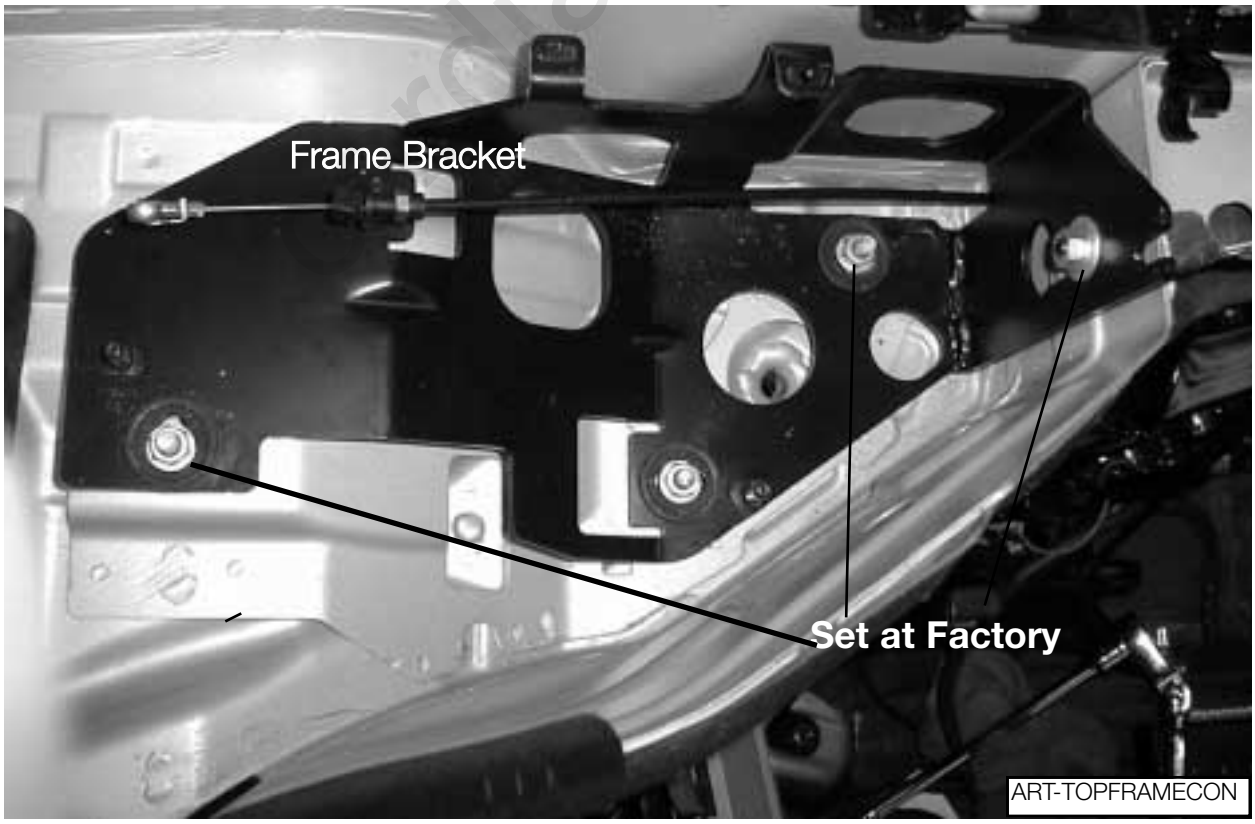

Service Adjustments

The convertible top storage compartment cover is made of magnesium, a spacer plate must be used when installing the cover to the mounting brackets. the brackets have elongated holes for adjustment of the cover to the body.

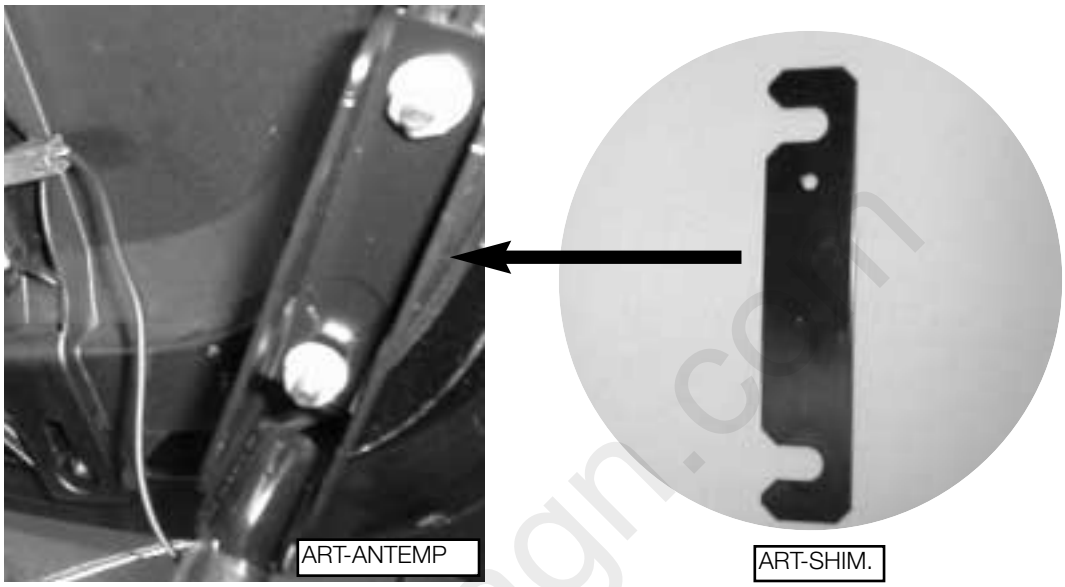

The height of the rear of the storage compartment cover is adjusted at the mounting brackets for the hydraulic cylinders located in the trunk. This adjustment must be carried out by removing the rear tail light assemblies due to the lock out of the trunk lid and storage cover.

cardiagn.com

The front of the storage compartment cover is adjusted at two places. The latch brackets are mounted through elongated holes for alignment of the brackets to the cover latches.

The front of the storage compartment cover's height is adjusted by adjusting the bowden cable length at the storage cover lock motor. The cover should close flush with the body.

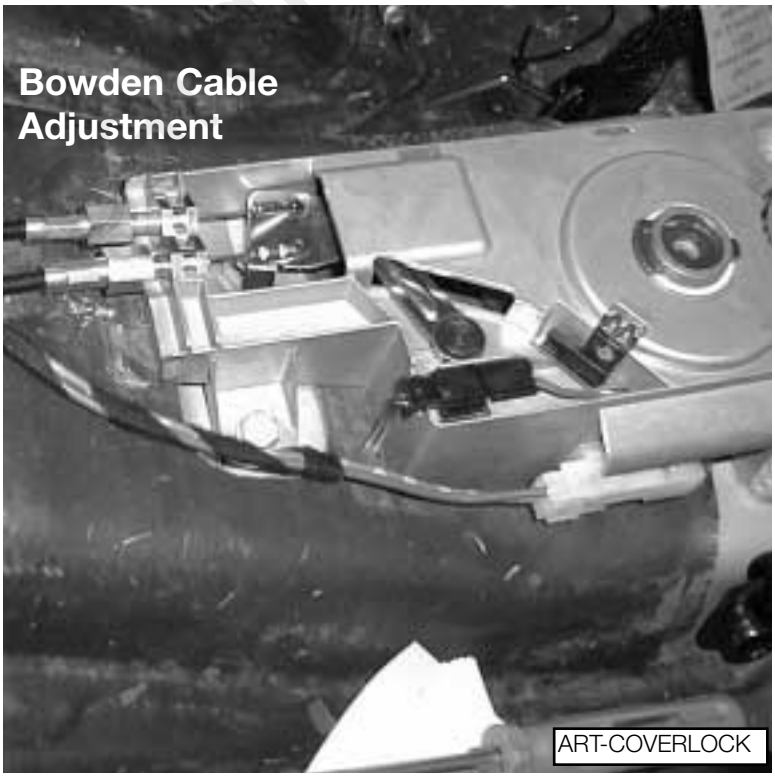

NAME OF SIGNAL OR FUNCTION: Hall sensor inputs to the CVM

Vehicle: E46iC **M Y:** 2000 **System:** Convertible Top - CVM

#1. Cowl Lock/Tension Point Hall Sensors:

The Cowl Lock input to the CVM is at pin# _____ and pin# _____.
The signal from the cowl lock sensor is _____ volts with the top locked to the cowl.
The signal from the cowl lock sensor is _____ volts when the top is unlocked from the cowl.
The status display on the DIS shows _____ when the top is locked to the cowl and _____ when the top is unlocked.

The Tension Point input to the CVM is at pin# _____ and pin# _____.
The signal from the tension point sensor is _____volts with the top locked to the cowl.
The signal from the tension point sensor is _____ volts when the top lock motor switches off.
The status display on the DIS shows _____ when the top is locked to the cowl and _____ when the top lock motor switches off.

#2. Storage Cover Lock Hall Sensors:

The storage cover lock inputs to the CVM are at: pin# _____ and pin# _____ LEFT
pin# _____ and pin# _____ RIGHT
The signal from the storage cover lock sensor is _____ volts when the cover is closed and locked.
The signal from the storage cover sensor lock is _____ volts when the cover is unlocked.
The status display on the DIS shows _____ when the cover is closed and locked and _____ when the cover is unlocked.

#3. Storage Cover Hall Sensor:

The storage cover input to the CVM is at pin#_____ and pin # _____.
The signal from the storage cover sensor is _____ volts when the cover is closed.
The signal from the storage cover sensor is _____ volts when the cover is open.
The status display on the DIS shows _____ when the cover is closed and _____ when the cover is open.

cardiagn.com

NAME OF SIGNAL OR FUNCTION: Angle Hall Sensor inputs to CVM

Vehicle: E46iC **M Y:** 2000 **System:** Convertible Top - CVM

#1. Main Pillar Angle Hall Sensor:

The power supply for the main pillar angle hall sensor is _____ volts at pin # _____ of the CVM and ground at pin # _____ of the CVM.

The input signal to the CVM from the main pillar sensor is _____ volts with the top fully raised and _____ volts with the top lowered into the storage compartment.

The status display on the DIS of the main pillar sensor input is _____ with the top fully raised and _____ with the top lowered into the storage compartment.

#2. Tension Bow Angle Hall Sensor (Clamping Bracket):

The power supply for the tension bow angle hall sensor is _____ volts at pin # _____ of the CVM and ground at pin # _____ of the CVM.

The input signal to the CVM from the tension bow sensor is:
_____ volts with the top locked to the cowl.
_____ volts with the tension bow in the vertical position.
_____ volts with the tension bow lowered into the storage compartment.

The status display on the DIS of the tension bow input is:
_____ with the top locked to the cowl.
_____ with the tension bow in the vertical position.
_____ with the tension bow lowered into the storage compartment.

cardiagn.com

Review Questions

1. What are the major changes to the E46iC fully automatic top operation compared to the E36iC?

   _____

   _____

   _____

2. How many hydraulic solenoids are used in the operation of the E46iC top?

   _____

3. The locking/unlocking function of the storage compartment cover is controlled by which module?

   _____

4. Which hall sensors control the flashing of the LED in the top switch?

   _____

5. What happens to the soft top/frame if the ignition is switched off during its operation?

   _____

6. Describe the emergency closing procedure for the soft top:

   _____

   _____

   _____

7. What type of input is provided by the angle hall sensors for top operation?

   _____

8. The only micro switch used in the operation of the soft top is?

   _____

9. What indication is shown if the variable compartment floor is open when the top switch is pressed?

   _____

cardiagn.com