Original BMW Accessories.
Installation Instructions.

Aerodynamic Peripheries Retrofit Kit.
BMW 5 Series Saloon (G30)
BMW 5 Series Touring (G31)

Retrofit kit number

Number	Component designation	Type	Installation time (h)
51 19 2 414 137	Carbon left/right front add-on section	G30/G31	1.00
51 19 2 414 139	Carbon front add-on section	G30/G31	0.75
51 19 2 411 019	Matt black sill add-on section, left	G30/G31	0.50
51 19 2 411 020	Matt black sill add-on section, right	G30/G31	0.50
51 19 2 414 142	Carbon rear spoiler	G30	0.75
51 19 2 414 144	Matt black rear spoiler	G30	0.75
51 19 2 412 405	Carbon rear diffuser	G30/G31	0.50
51 19 2 412 406	Matt black rear diffuser	G30/G31	0.50
51 19 2 412 409	Matt black rear bumper cover	G30/G31	0.25
51 19 2 412 410	Matt black rear bumper cover	G30/G31	0.25

Installation time
Installation time, see table. This may vary depending on the condition of the vehicle and its equipment.

The installation time shown does not include any time spent on programming/coding.

The calculation of the total costs for the programming time must be factored into the calculation of retrofitting costs (no invoicing via warranty).

Important information

The "Carbon front add-on section" **C** may only be installed on the car with a "Carbon rear spoiler" **BA** (see EPC for information and part numbers).

The "Carbon rear spoiler" **BA** may only be installed on the car with a "Carbon front add-on section" **C** or "Air guide, centre" (see EPC for information and part numbers).

The "Carbon rear diffuser" **FA cannot** be installed on cars with trailer tow hitch SA 3AC. The installation of the "Carbon rear diffuser" **FA** on cars with Comfort Access SA 322 results in the "Smart Opener" function of this option being no longer available which means that it can no longer be used.

After the installation of the "Carbon rear diffuser" **FA** retrofit kit, it must be programmed/coded via the – **Conversions** – path.

These installation instructions are primarily designed for use within the BMW dealership organisation and by authorised BMW service companies.

These installation instructions are intended for use by qualified specialist staff trained on BMW vehicles with the relevant expert knowledge.

All work must be completed using the latest BMW repair manuals, wiring diagrams, servicing manuals and work instructions, in a logical order, using the prescribed tools (special tools) and observing current health and safety regulations.

cardiagn.com

If you experience installation or function problems, restrict troubleshooting to approx. 0.5 hours for mechanical work and 1.0 hour for electrical work.
To avoid unnecessary extra work and/or costs, send an inquiry straight away to the technical parts support team via the Aftersales Assistance Portal (ASAP).

Quote the following information:

- Chassis number,
- Retrofit kit part number,
- A detailed description of the problem,
- any work already carried out.

Do not archive the hard copy of these installation instructions since daily updates are provided via ASAP.

Pictograms

⚠ Denotes instructions that draw your attention to dangers.

▷ Denotes instructions that draw your attention to special features.

◀ Denotes the end of the instruction or other text.

Installation information

- All contact/bonding surfaces on the components being installed must be absolutely dry, clean, and free of wax, silicon and grease. These surfaces must be treated with suitable BMW cleaner or BMW primer (see EPC for details), as set out in the appropriate product application instructions
- If you use adhesive tape, it must be applied using a contact pressure of between 10 N/cm^2 and 50 N/cm^2
- Take care not to damage the parts when opening the packaging
- Check that all the parts fit accurately on the car before fitting them
- All the components and their bonding surfaces must be at room temperature for installation. The ideal relative humidity is 50%. Different values will change the specified times
- After completing the gluing and installation work, the car must remain stationary at room temperature for at least **12 hours**
- If adhesives are used the car may be driven after **24 hours**, and may be taken through a car wash after **48 hours**. The car must not be driven above a speed of v_{max} < 100 km/h for 24-48 hours
- The installed parts may become loose and fly off the car if you fail to wait for the full reaction time of the primer/adhesive. **Danger of accidents.**
- Some of the installation steps are shown only on one side of the car. Proceed in the same way on the other side of the car
- All pictures show LHD cars; proceed accordingly on RHD cars

Terminology used

Initial installation: "Carbon front add-on section" **C** is installed for the first time.

Re-installation (for example in the event of a repair): The corresponding "Carbon front add-on" **C** must be re-installed.

cardiagn.com

Painting instructions
Check that all the parts fit accurately on the car before painting them. Primed parts must be pre-treated accordingly before painting.

To ensure correct painting, the EBA must be provided to the painter.

The BMW painting instructions must be observed (see ISTA No. 99 00 ...).

Ordering instructions
The materials such as liquid adhesive, cleaner and activators are assigned to the relevant products in the EPC (see EPC for information and part numbers). If the EPC does not explicitly specify the materials, always use cleaner, adhesive and activator from the BMW product range.

Special tools required
None

Information to be provided to the customer
The following add-on sections can be painted if required by the customer:

- "Matt black sill add-on section, right" **AA**
- "Matt black left side sill add-on section" **AB**
- "Matt black rear spoiler" **CA**
- "Matt black rear bumper cover" **DB**
- "Matt black rear diffuser" **EA**

Once the "Carbon front add-on section" **C** has been installed, the ramp angle and ground clearance are reduced.

▷ The "Carbon front add-on section" **C** reduces the car's ground clearance and overhang angle at the front. Both must be checked at regular intervals for damage caused by collisions and, in the event of any such damage, replaced by trained specialist personnel. ◀

cardiagn.com

Table of contents

Section	Page
1. Preparatory work	5
2. Parts list for front peripheries	6
3. "Matt black side sill add-on section" parts list	8
4. "Carbon rear spoiler" parts list	9
5. "Matt black rear spoiler" parts list	10
6. "Matt black rear bumper cover" parts list	11
7. "Matt black rear diffuser" parts list	12
8. "Carbon rear diffuser" parts list	13
9. Installing the "Carbon front add-on section, right/left"	14
10. Installing "Carbon front add-on section"	16
11. Installing the "Side sill film"	21
12. Installing the "Matt black side sill add-on section"	22
13. Installing the "Carbon rear spoiler"	25
14. Installing the "Matt black rear spoiler"	27
15. Installing the "Exhaust system support adapter cover"	29
16. Installing the "Matt black rear diffuser	32
17. Installing the "Carbon rear diffuser"	34
18. Concluding work and coding	37

cardiagn.com

1. Preparatory work

The following components must be removed first of all	ISTA No.
Only if installing the "Carbon front add-on section left/right"	
Left/right air guide	---
Only if installing the "Carbon front add-on section left/right" and "Carbon front add-on section"	
Left/right air guide and front engine shield	---
Only if installing the "Carbon rear spoiler"	
Rear spoiler (if standard component already installed)	---
Only if installing the "Matt black rear diffuser" and "Carbon rear diffuser"	
Underfloor trim	---
Rear trim	51 12 ...

Control units and antennas from "Exhaust system support adapter cover"	---
Left/right rear reflector	---

cardiagn.com

2. Parts list for front peripheries

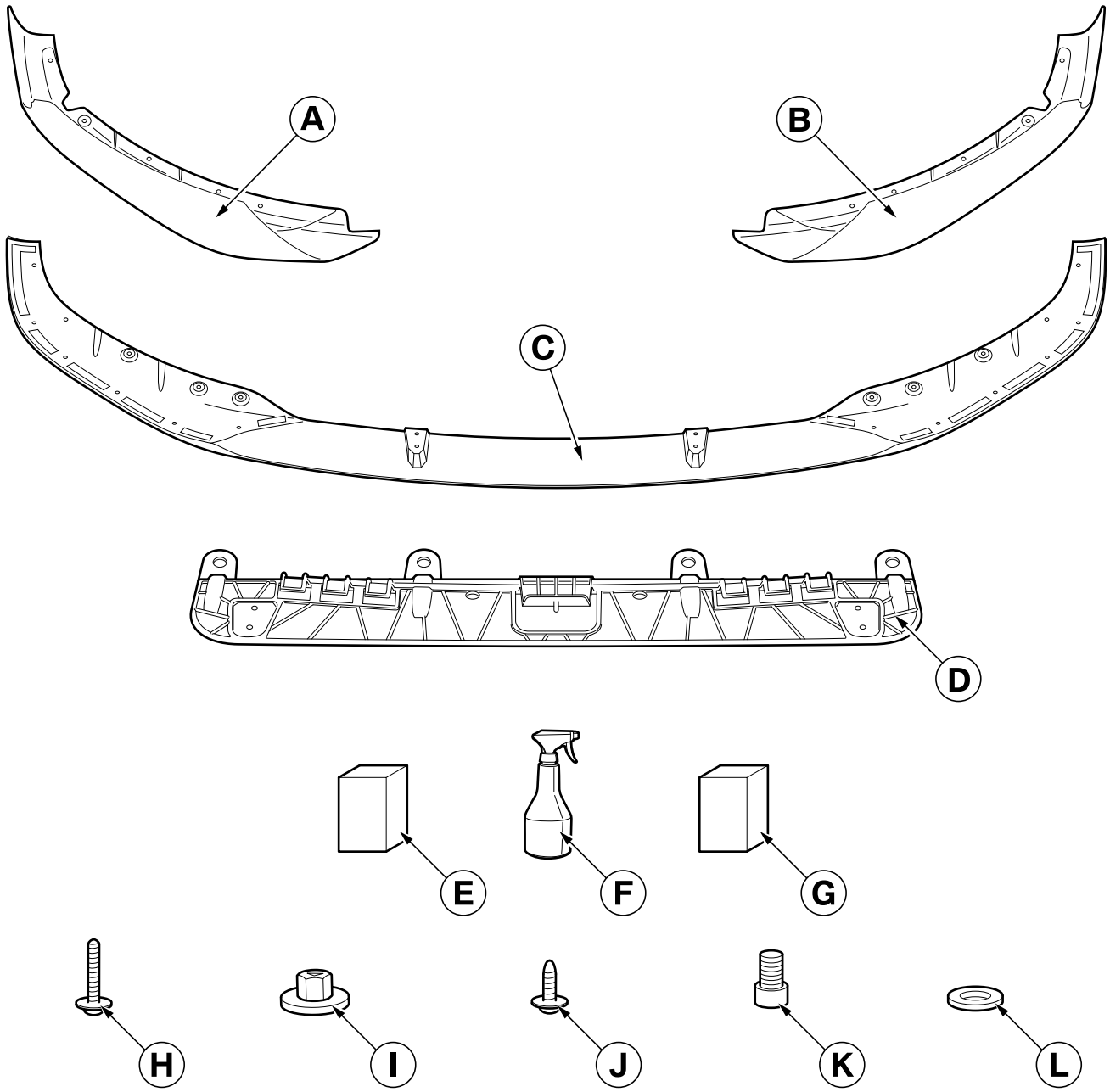

G30 0282 M

Legend

		"Carbon front add-on section left/right" Quantity included in kit 51 19 2 414 137	"Carbon front add-on section" Quantity included in kit 51 19 2 414 139	BMW part number
A	Carbon left front add-on section	1	---	51 11 2 414 131
B	Carbon right front add-on section	1	---	51 11 2 414 132
C	Carbon front add-on section	---	1	51 11 2 414 135
D	Front upper adapter	---	1	51 11 2 431 033
E	Liquid adhesive (not included in kit, see EPC for details)	---	---	---

cardiagn.com

2. Parts list for front peripheries

		"Carbon front add-on section left/right" Quantity included in kit 51 19 2 414 137	"Carbon front add-on section" Quantity included in kit 51 19 2 414 139	BMW part number
F	Cleaner (not included in kit, see EPC for details)	---	---	---
G	Black touch-up stick (not included in kit, see EPC for details)	---	---	---
H	Screw	6	4	07 12 9 907 535
I	Plastic cap nut with washer	6	---	07 14 7 169 847
J	Cross head screw for plastic	---	10	07 14 6 959 925
K	M5 Allen screw	---	4	---
L	M5 washer	---	4	---

cardiagn.com

3. "Matt black side sill add-on section" parts list

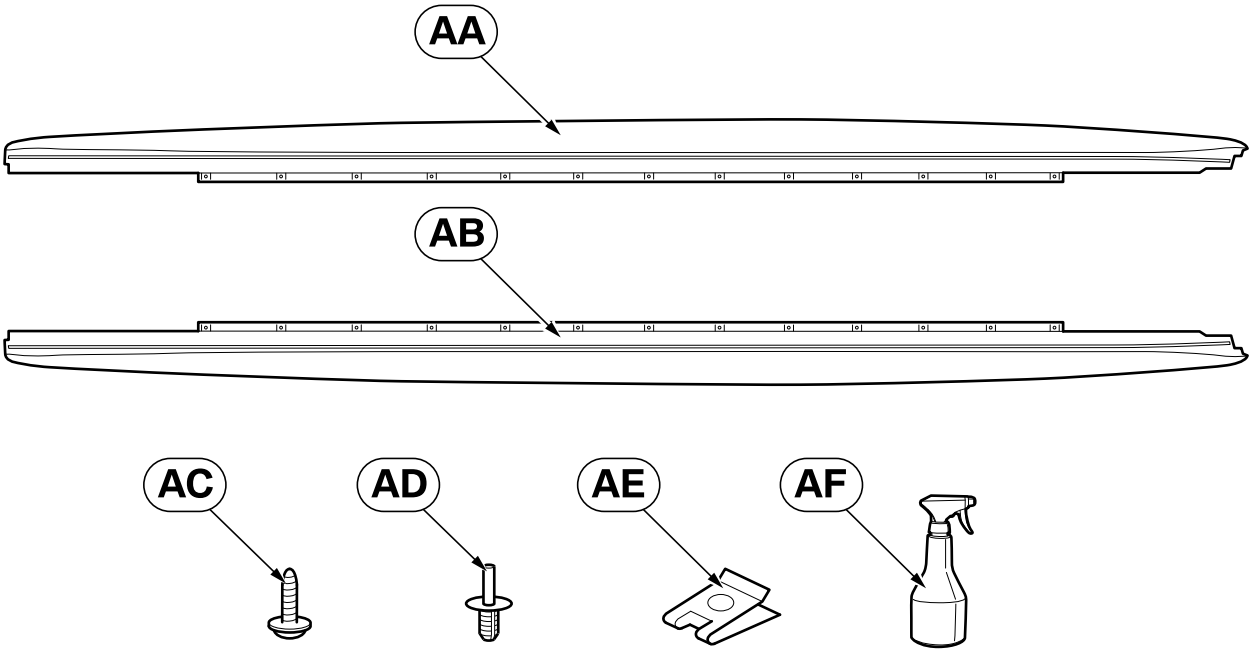

G30 0229 M

Legend

		"Matt black left side sill add-on section" Quantity included in kit 51 19 2 411 019	"Matt black sill add-on section, right" Quantity included in kit 51 19 2 411 020	BMW part number
AA	Matt black sill add-on section, right	---	1	51 77 2 411 018
AB	Matt black sill add-on section, left	1	---	51 77 2 411 015
AC	Oval-head self-tapping screw	14	14	07 14 7 133 553
AD	Expanding rivet	18	18	51 71 7 002 953
AE	Sheet metal nut	1	1	07 14 9 282 347
AF	Cleaner (not included in kit, see EPC for details)	---	---	---

cardiagn.com

4. "Carbon rear spoiler" parts list

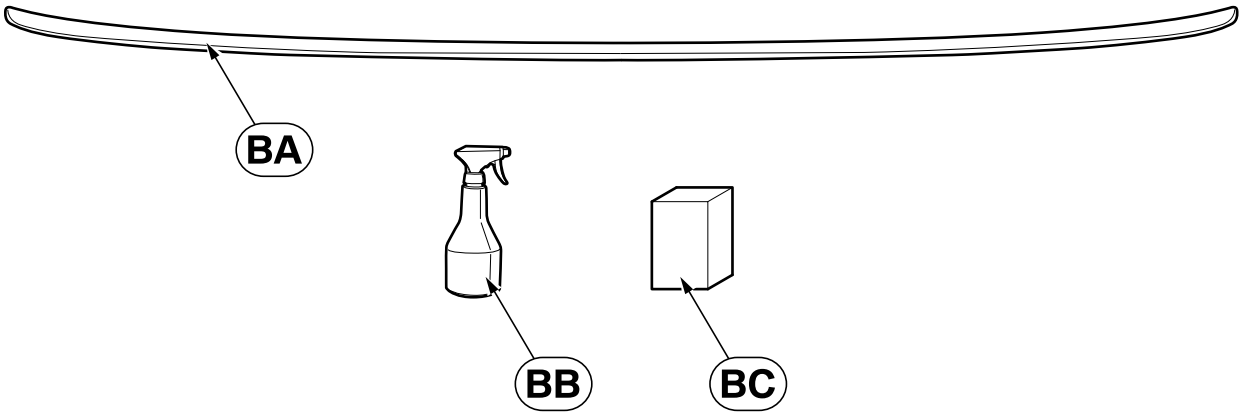

G30 0240 M

Legend

BA Carbon rear spoiler
BB Cleaner (not included in kit, see EPC for details)
BC Liquid adhesive (not included in kit, see EPC for details)

cardiagn.com

5. "Matt black rear spoiler" parts list

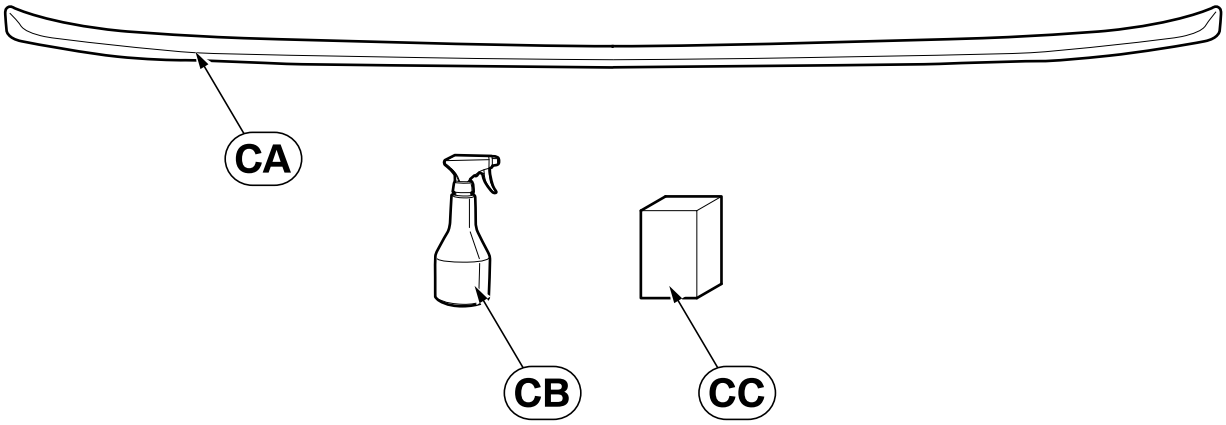

G30 0241 M

Legend

CA Matt black rear spoiler
CB Cleaner (not included in kit, see EPC for details)
CC Liquid adhesive (not included in kit, see EPC for details)

cardiagn.com

6. "Matt black rear bumper cover" parts list

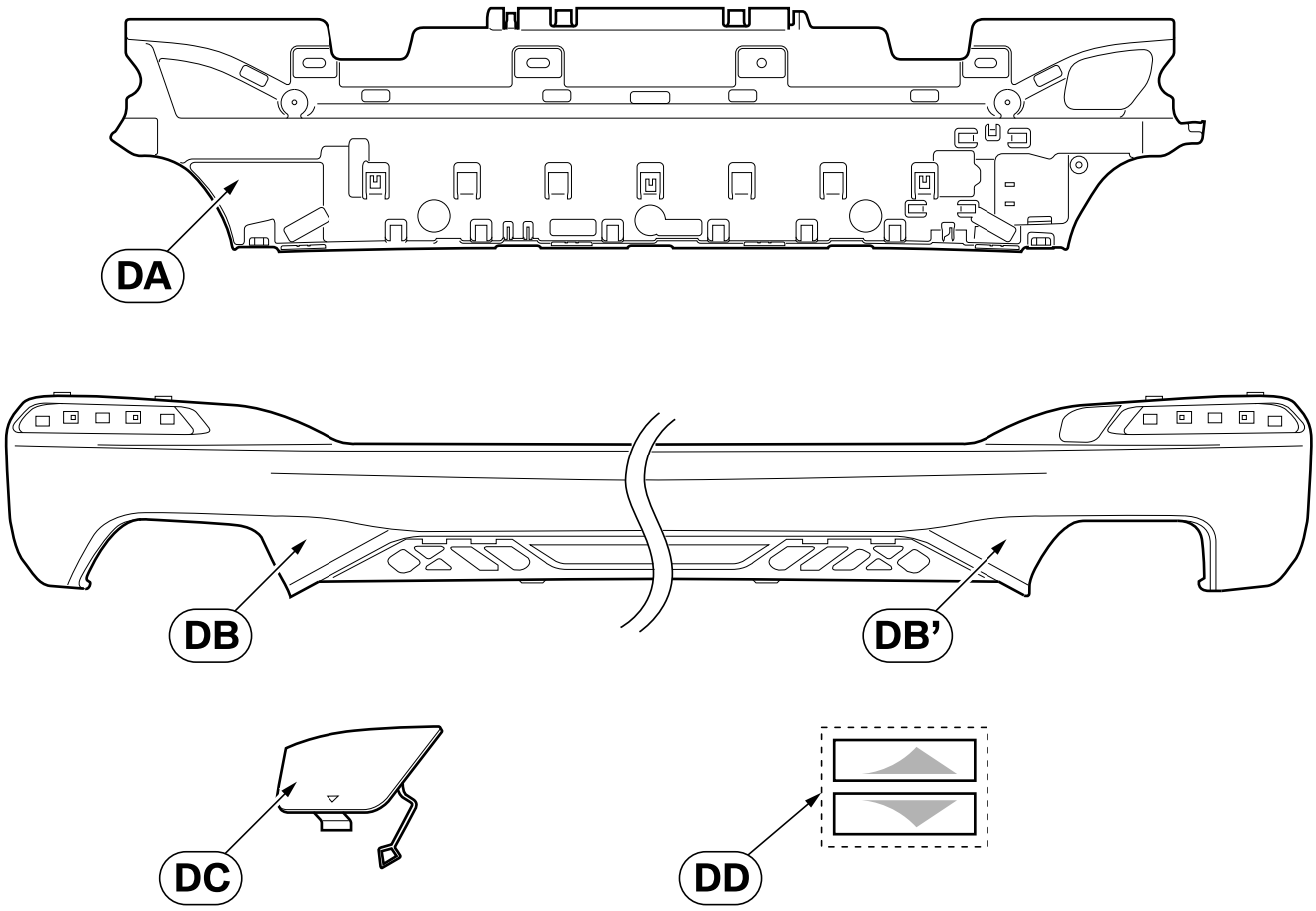

G30 0260 M

Legend

		"Matt black rear bumper cover" Quantity included in kit 51 19 2 412 409 (For information, see EPC)	"Matt black rear bumper cover" Quantity included in kit 51 19 2 412 410 (For information, see EPC)	BMW part number
DA	Exhaust system support adapter cover	1	1	51 12 2 433 186
DB	Matt black rear bumper cover	1	---	51 12 2 414 413
DB'	Matt black rear bumper cover	---	1	51 12 2 414 414
DC	Towing eyelet cover	1	1	51 12 2 412 408
DD	Cutting template (only required for cars with large underfloor trim) – Red template for right-hand side of the car – Blue template for left-hand side of the car	1	1	---

For the sake of simplicity, all illustrations show the"Matt black rear bumper cover" **DB**, 6-cylinder look. If you are installing the "Matt black rear bumper cover" **DB'** 8-cylinder look, proceed accordingly.

cardiagn.com

7. "Matt black rear diffuser" parts list

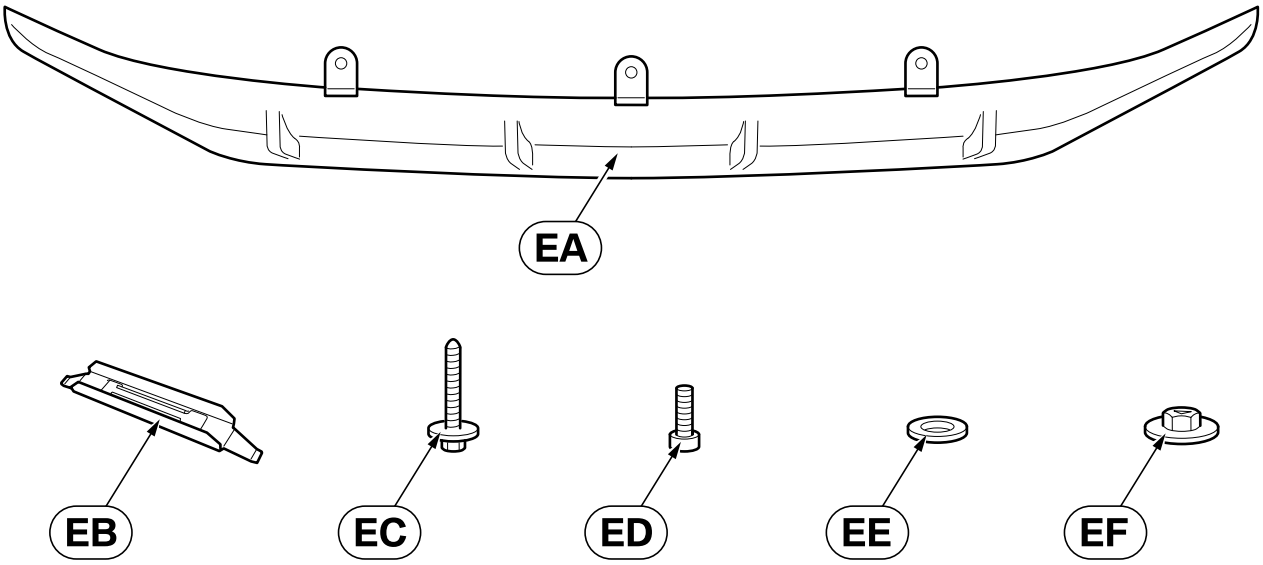

G30 0261 M

Legend

		"Matt black rear diffuser" Quantity included in kit 51 19 2 412 406	BMW part number
EA	Matt black rear diffuser	1	51 12 2 412 411
EB	Clamp	10	07 14 9 241 763
EC	Hexagon screw for plastic	3	07 14 9 110 670
ED	ISA screw with washer	2	07 12 9 905 262
EE	Washer	2	07 11 9 904 206
EF	Hexagon nut with washer	2	51 16 9 157 035

cardiagn.com

8. "Carbon rear diffuser" parts list

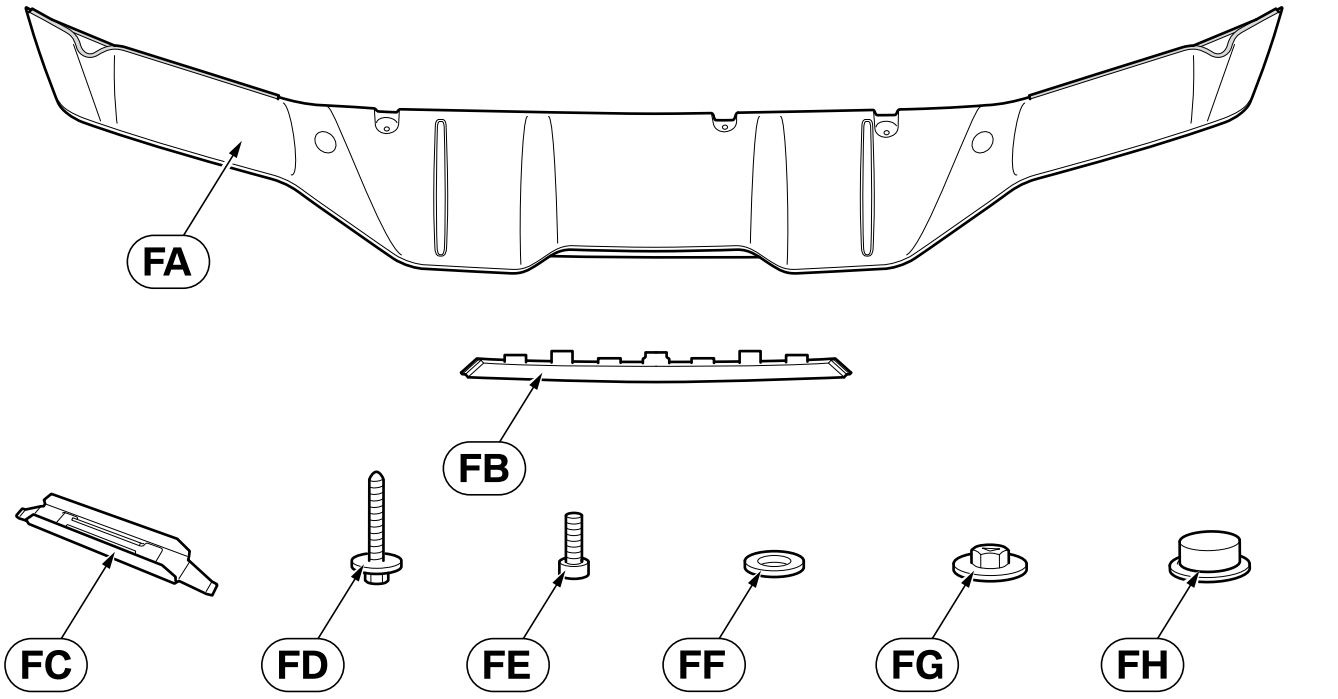

G30 0262 M

Legend

		"Carbon rear diffuser" Quantity included in kit 51 19 2 412 405	BMW part number
FA	Carbon rear diffuser (including pre-installed edge protector)	1	51 12 2 412 412
FB	Matt black rear side scuttle	1	51 12 2 412 407
FC	Clamp	15	07 14 9 241 763
FD	Hexagon screw	2	07 14 9 213 164
FE	ISA screw with washer	2	07 12 9 905 262
FF	Washer	2	07 11 9 904 206
FG	Hexagon nut with washer	2	51 16 9 157 035
FH	Sealing bung Ø 25.5 mm	2	---

cardiagn.com

9. Installing the "Carbon front add-on section, right/left"

All illustrations show the installation of the "Carbon front add-on section, right" **B**.
To install the "Carbon front add-on section, left" **A**, proceed accordingly.

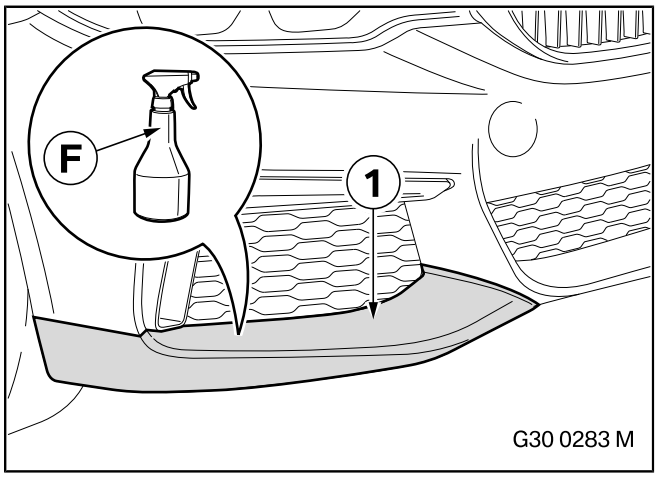

The bonding surfaces must be completely dry, clean and free from wax or grease.

Clean the surface (1) of the car with cleaner **F** (not included in parts kit, see EPC further information).

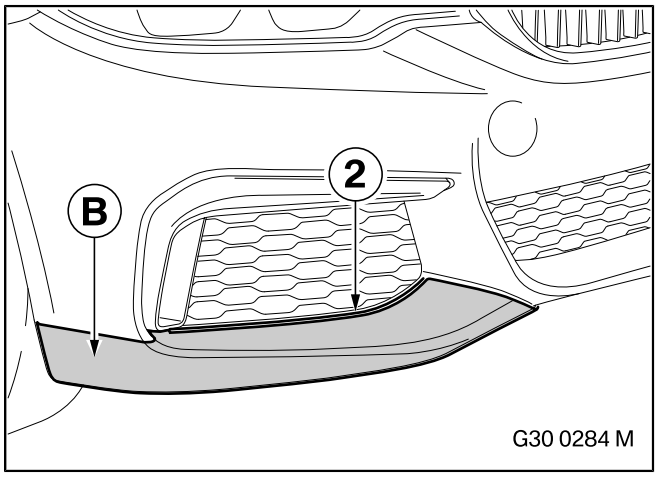

For light paint colours only:

Position "Carbon front add-on section, right" **B**, align it and draw a mark on the inside (2).

Remove "Carbon front add-on section, right" **B**.

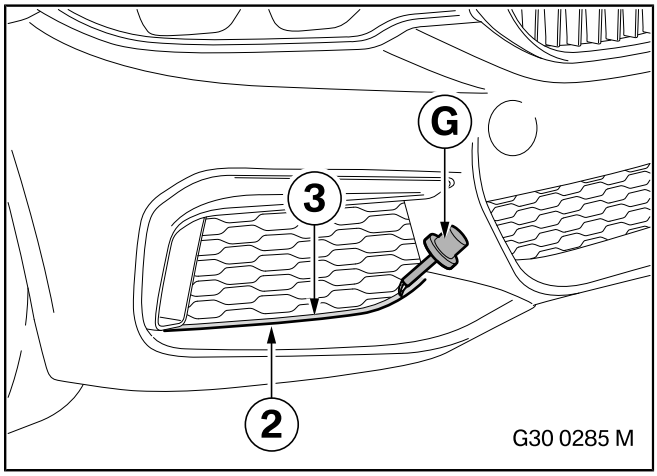

For light paint colours only:

Paint the surface (3) between the Mark (2) and the grille with "Black touch-up pen" **G**.

cardiagn.com

9. Installing the "Carbon front add-on section, right/left"

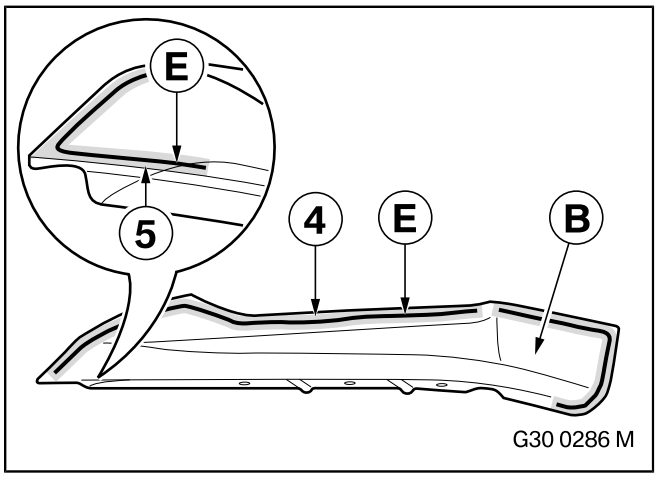

The bonding surfaces must be completely dry, clean and free from wax or grease. ◀

Sand and clean surfaces (4) and (5) on "Carbon front add-on section, right" **B** using suitable products.

Apply an adequate quantity of liquid adhesive **E**, as shown in the form of a bead, **generously** to "Carbon front add-on section, right" **B**.

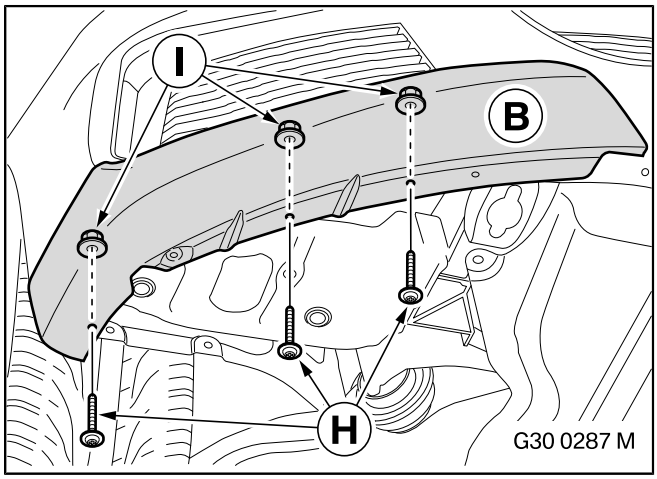

Remove any excess liquid adhesive **E** immediately. ◀

Position "Carbon front add-on section, right" **B**, align it, press it into place and secure it with screws **H** and plastic cap nuts with washer **I**.

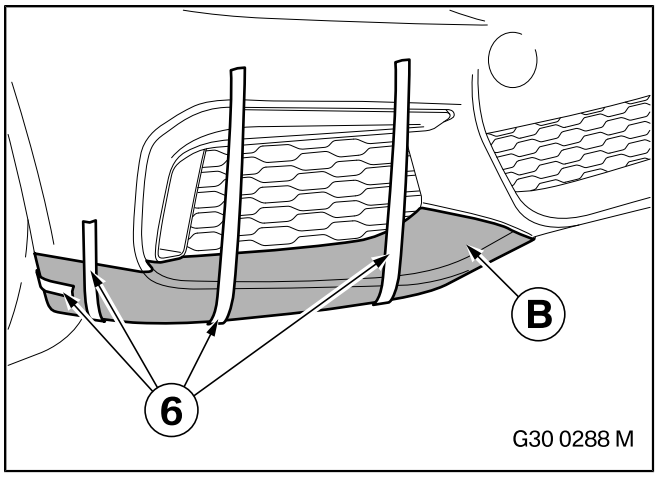

Ensure that the gaps are uniform. ◀

Fix the "Carbon front add-on section, right" **B** with adhesive tape (6) so that the gaps are uniform.

The adhesive tape (6) can be removed after at least 6 hours.

If, in addition to the "Carbon front add-on section, left" **A** and "Carbon front add-on section, right" **B**, the "Carbon front add-on section" **C** is to be installed, miss out this step. ◀

Fit the air guide (2) as described in **ISTA**.

cardiagn.com

10. Installing "Carbon front add-on section"

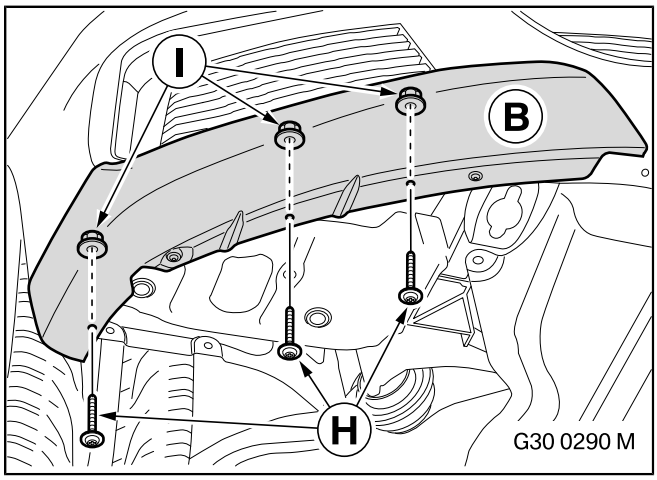

If the "Carbon front add-on section, left" **A** and "Carbon front add-on section, right" **B** have already been installed, observe the curing time for the liquid adhesive **E** of 6 hours. ◀

Remove the air guide and "Front engine shield" as described in **ISTA**.

Remove screws **H** and plastic cap nuts with washer **I**.

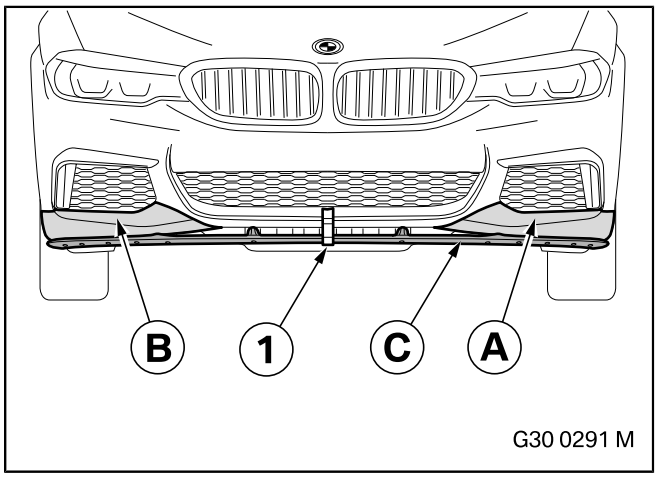

A second person is required for this work. ◀

Position the "Carbon front add-on section" **C** and centre it. Ensure that the gaps to the "Carbon front add-on section, left" **A** and "Carbon front add-on section, right" **B** are uniform.

Secure the "Carbon front add-on section" **C** in the centre with adhesive tape (1).

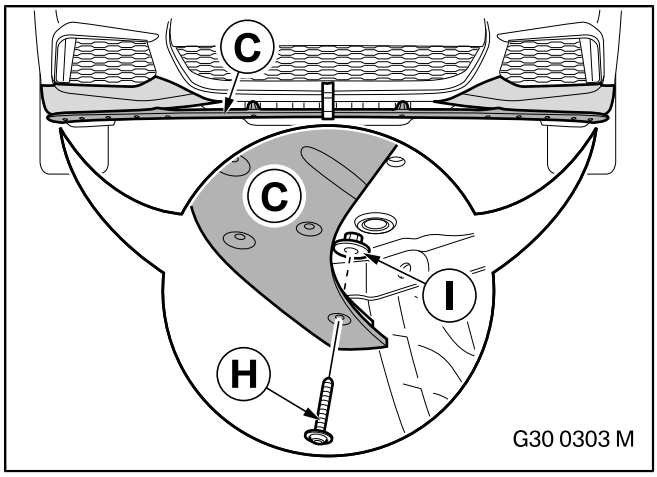

A second person is required for this work. ◀

Secure the "Carbon front add-on section" **C** with screws **H** and plastic cap nuts with washer **I**.

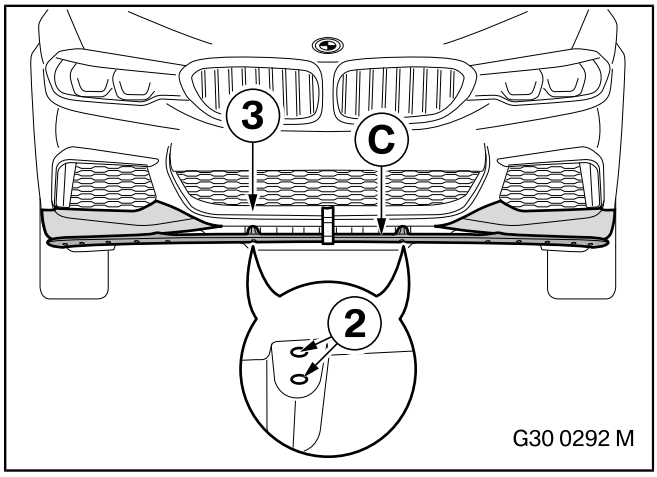

Mark the fastening points (2) for the "Carbon front add-on section" **C** on the bumper support (3) using suitable tools (4x).

Remove "Carbon front add-on section" **C**.

cardiagn.com

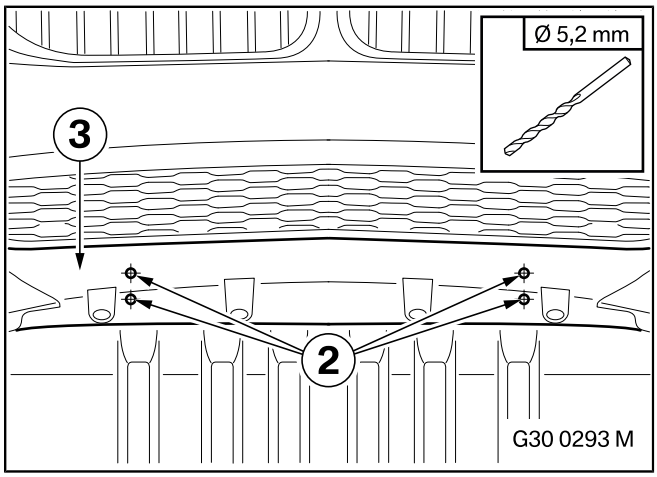

When drilling down to the drill depth, take care not to damage parts underneath. ◀

Use a Ø 5.2 mm drill bit to drill the fastening points (2) in the bumper support (3).

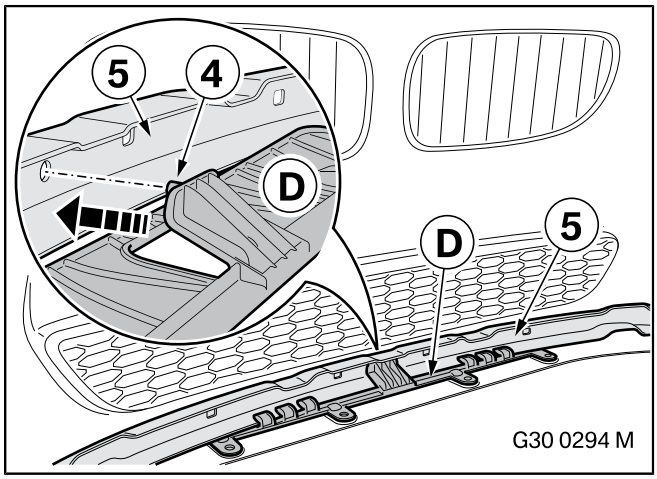

Insert the "Adapter front top" **D** with bolt (4) in the direction indicated by the arrow in the cross member (5).

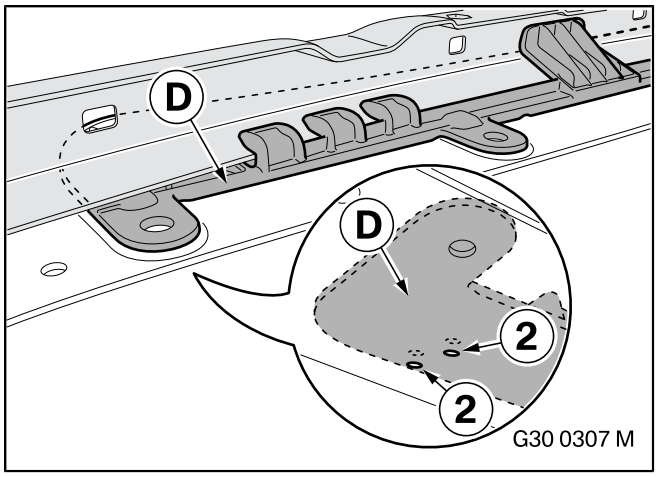

Align the "Adapter front top" **D** with the fastening points (2).

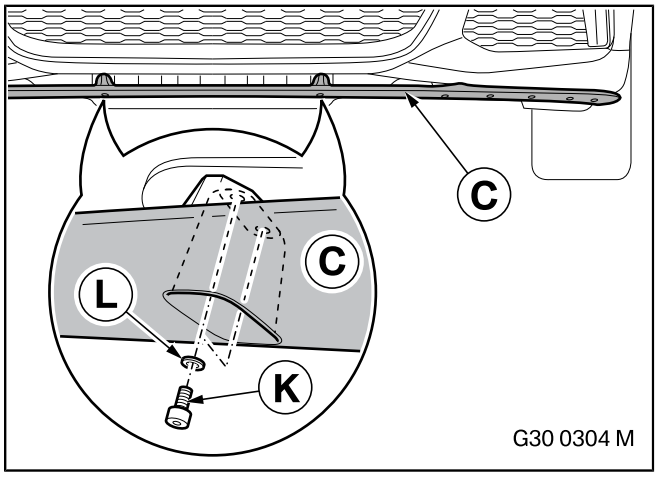

Install the "Carbon front add-on section" **C** using Alan screws **K** and washers **L**.

cardiagn.com

10. Installing "Carbon front add-on section"

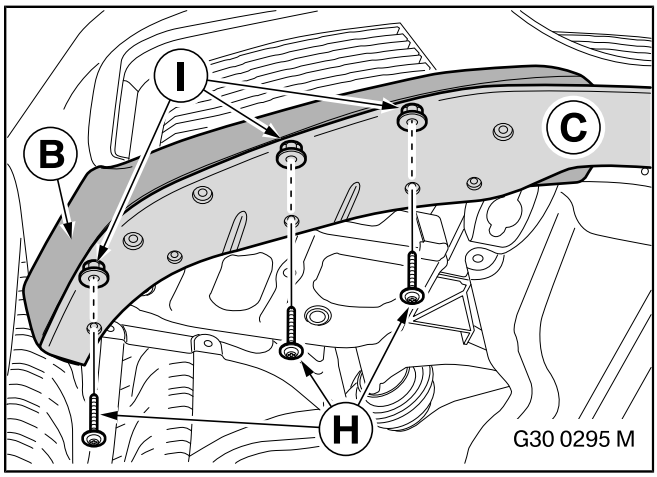

Align the "Carbon front add-on section" **C** and install it with screws **H** and plastic cap nuts with washer **I**. Ensure that the gaps to the "Carbon front add-on section, left" **A** and "Carbon front add-on section, right" **B** are uniform.

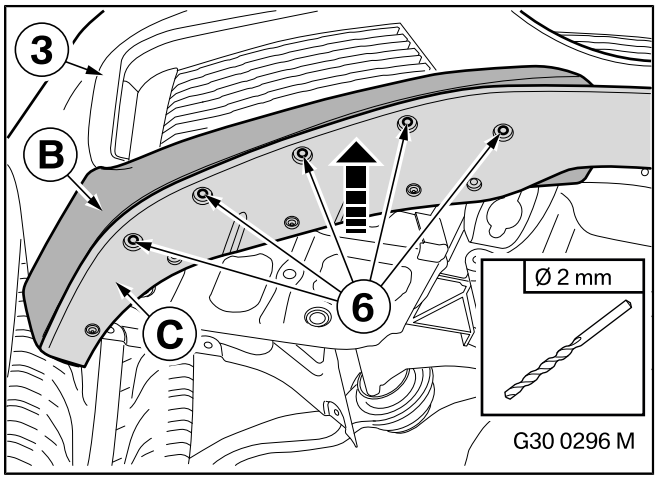

The holes must be drilled through the "Carbon front add-on section, left" **A**, "Carbon front add-on section, right" **B** and the bumper support (3). When drilling down to the drill depth, take care not to damage parts underneath. ◀

Press "Carbon front add-on section" **C** into place.

Use a Ø 2 mm drill bit to drill the fastening points (6).

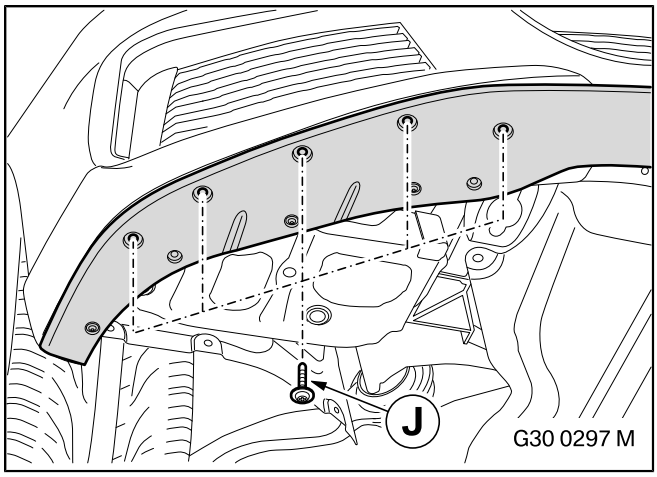

Use the specified torque during the installation process. ◀

Tighten the cross head screws for plastic **J** to a torque of 5 Nm.

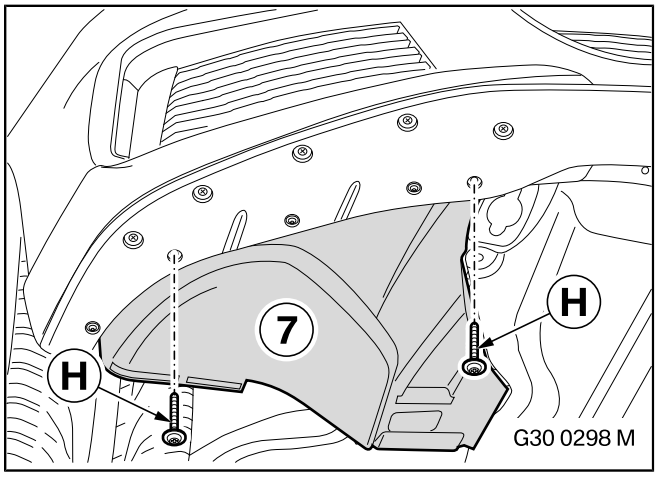

Install the air guide (7) with screws **H**.

Install the remaining screw connections for the air guide (7) as described in **ISTA**.

Install the "Front engine shield" as described in **ISTA**.

cardiagn.com

Re-installation only (for example in the event of a repair)

In the event of re-installation, glue the "Carbon front add-on section, left" **A** and "Carbon front add-on section, right" **B** to the "Carbon front add-on section" **C**.

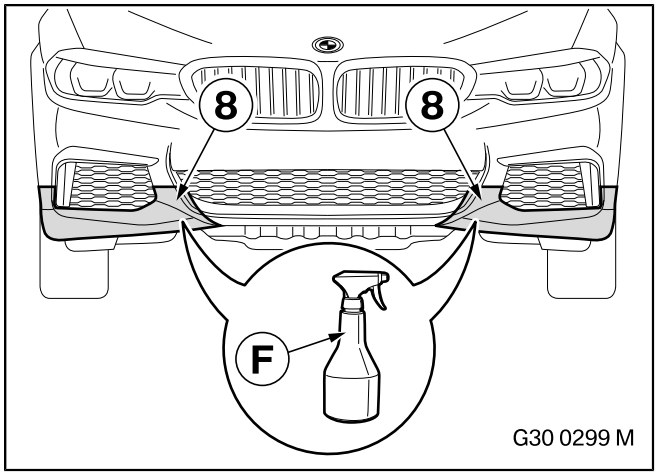

Remove the air guide and "Front engine shield" as described in **ISTA**.

Remove the damaged "Carbon front add-on section" **C**.

The bonding surfaces must be completely dry, clean and free from wax or grease.

Clean the surfaces (8) of the car with cleaner **F** (not included in parts kit, see EPC further information).

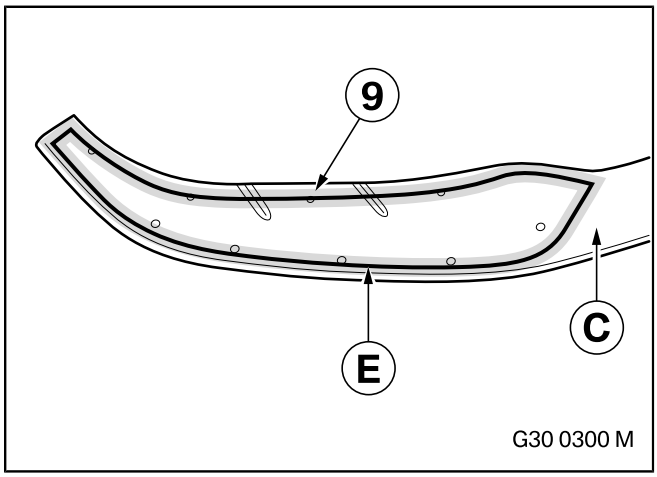

The bonding surfaces must be completely dry, clean and free from wax or grease.

Sand and clean surface (9) on "Carbon front add-on section" **C** using suitable products.

Apply an adequate quantity of liquid adhesive **E**, as shown in the form of a bead, **generously** to "Carbon front add-on section" **C**.

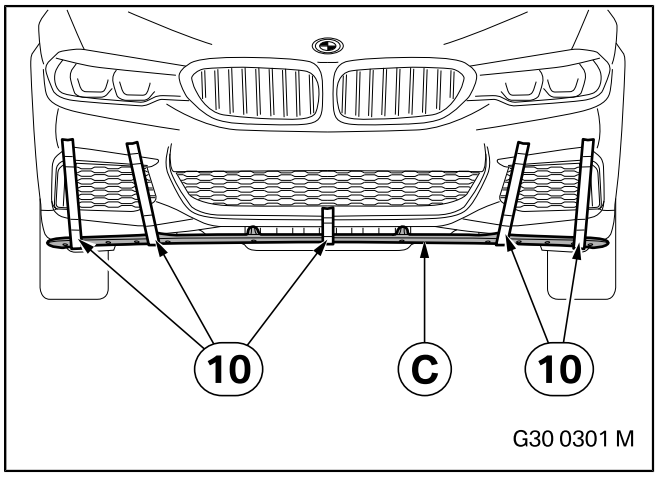

Remove any excess liquid adhesive **E** immediately.

Ensure that the gaps are uniform.

Position, align and press the "Carbon front add-on section" **C** into place and secure it with adhesive tape (10) so that the gaps are uniform.

The adhesive tape (10) can be removed after at least 6 hours.

cardiagn.com

10. Installing "Carbon front add-on section"

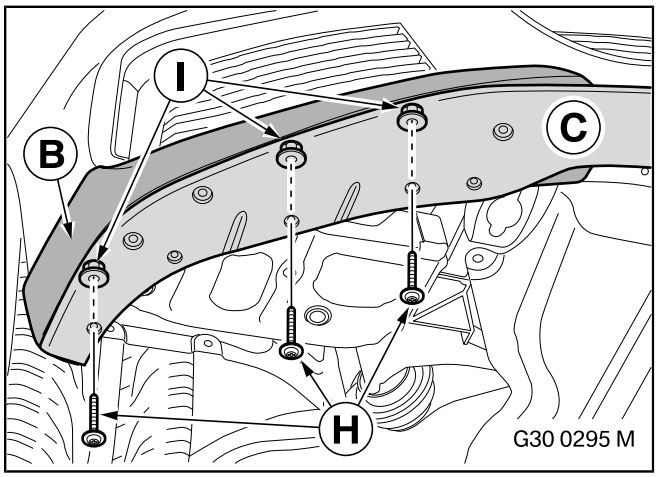

Install the "Carbon front add-on section" **C** with screws **H** and plastic cap nuts with washer **I**.

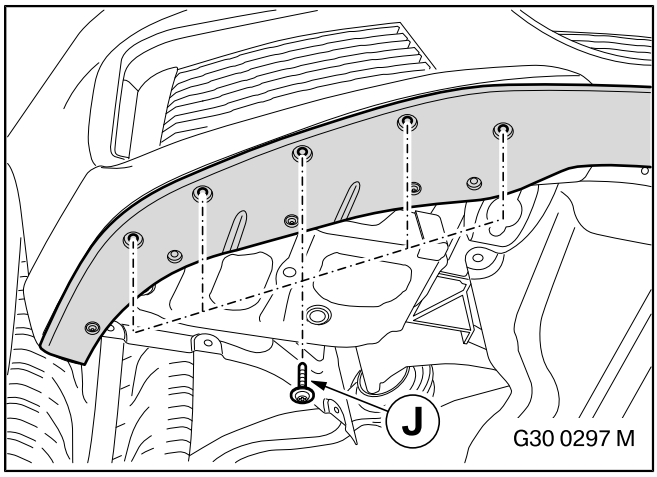

Use the specified torque during the installation process. ◀

Tighten the cross head screws for plastic **J** to a torque of 5 Nm.

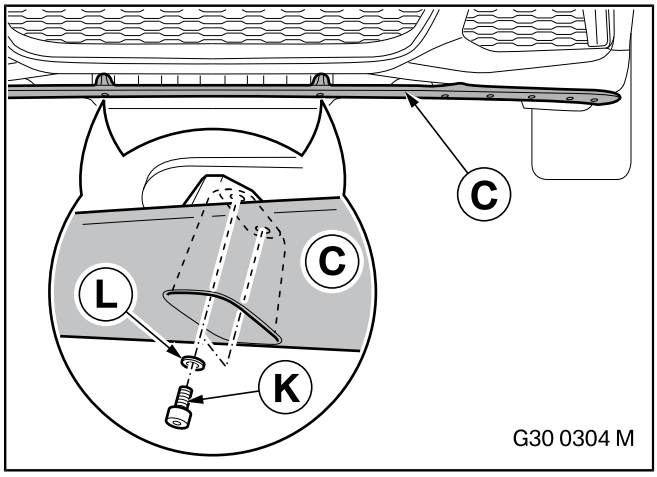

Install the "Carbon front add-on section" **C** using Alan screws **K** and washers **L**.

Install the air guide and "Front engine shield" as described in **ISTA**.

cardiagn.com

11. Installing the "Side sill film"

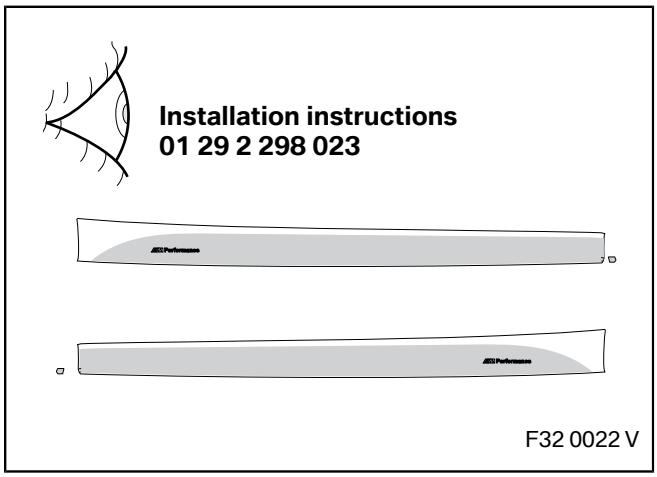

Install the "Side sill film" as described in the installation instructions bearing part number 01 29 2 298 023.

cardiagn.com

12. Installing the "Matt black side sill add-on section"

All illustrations show the installation of the "Matt black front add-on section, left" **AB**. To install the "Matt black front add-on section, write" **AA**, proceed accordingly. ◀

Ensure that if you are also installing the "Side sill film", it is a fixed to the car before you install the "Matt black side sill at-on section" **AA** and **AB**. ◀

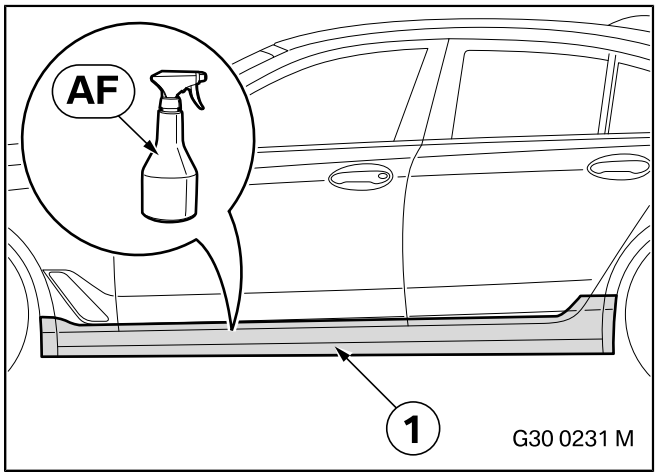

The bonding surfaces must be completely dry, clean and free from wax or grease. ◀

Clean the surface (1) of the car with cleaner **AF** (not included in parts kit, see EPC further information).

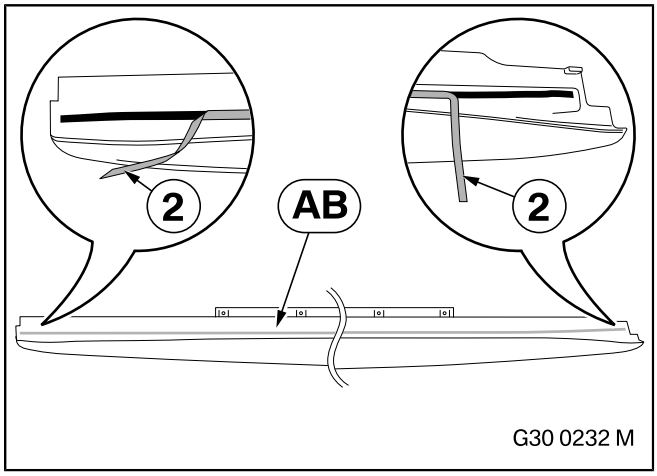

Release a little of the adhesive backing film (2) on both sides of the "Matt black side sill add-on section, left" **AB**.

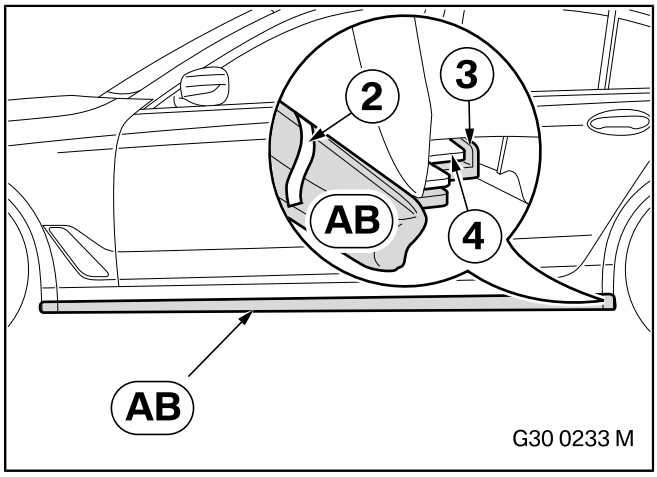

Ensure that the released ends of the adhesive backing film (2) are visible. ◀

Position the "Matt black side sill add-on section, left" **AB** so that the stop (3) is behind the edge of the car (4).

Centre the "Matt black left side sill add-on section" **AB.**

cardiagn.com

12. Installing the "Matt black side sill add-on section"

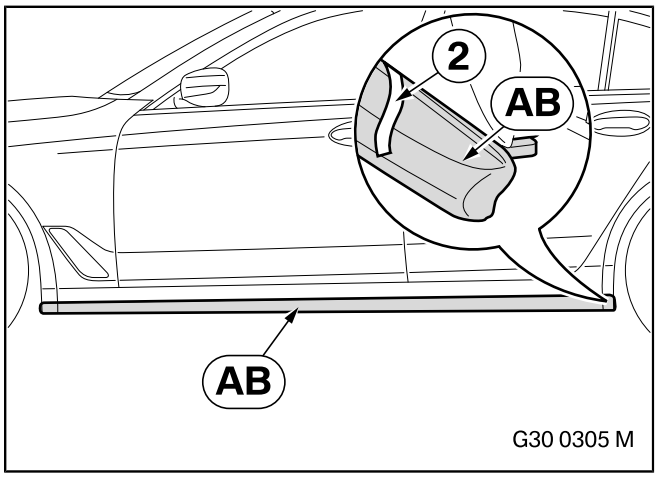

Carefully remove the adhesive backing film (2) from the outside inwards and firmly press on the "Matt black side sill add-on section, left" **AB**.

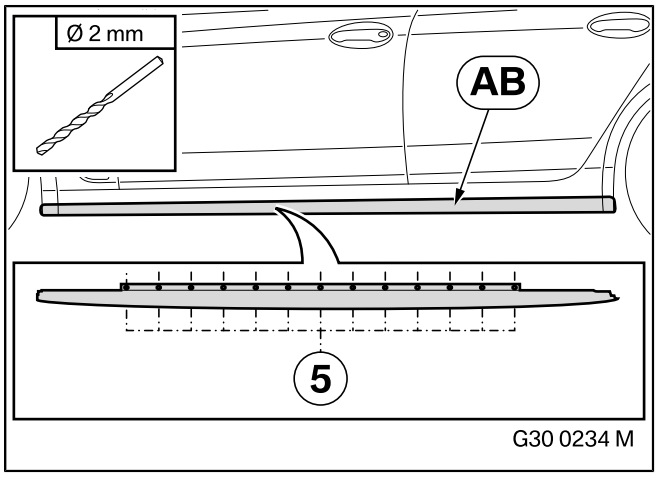

When drilling down to the drill depth, take care not to damage parts underneath.

Use a Ø 2 mm drill bit to mark the 13 holes (5) in the "Matt black side sill add-on section, left" **AB** on the side sill.

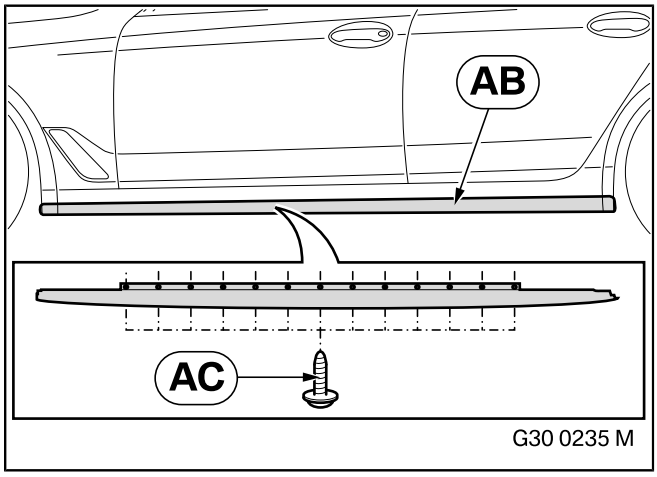

Install the "Matt black side sill add-on section, left" **AB** using oval-head self-tapping screws **AC**.

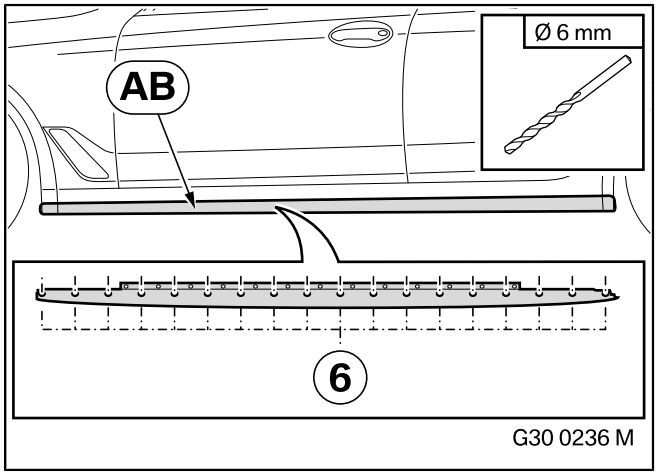

When drilling down to the drill depth, take care not to damage parts underneath.

Use a Ø 6 mm drill bit to drill the 18 holes (6) in the "Matt black side sill add-on section, left" **AB** and transfer them to the side sill.

cardiagn.com

12. Installing the "Matt black side sill add-on section"

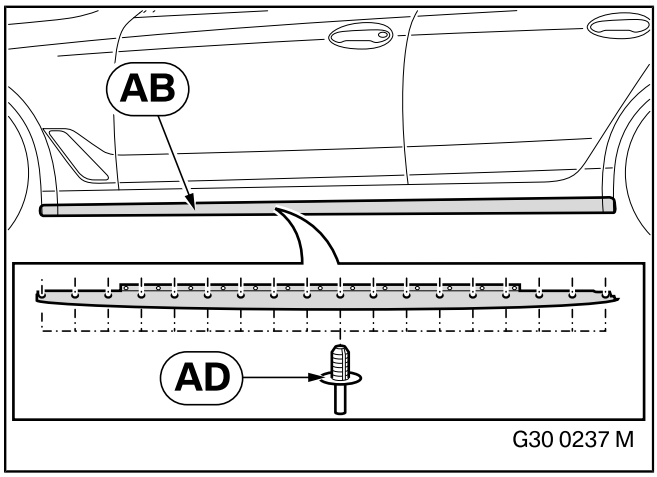

Install the "Matt black side sill add-on section, left" **AB** using expanding rivets **AD**.

Release the "Rear wheel arch trim" a little.

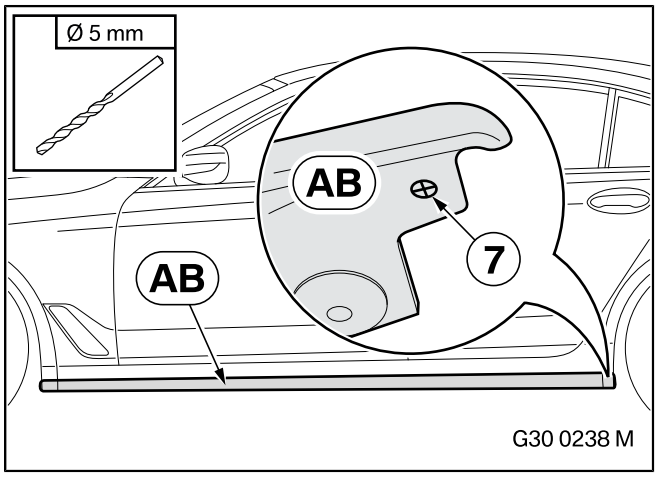

When drilling down to the drill depth, take care not to damage parts underneath. ◀

Use a Ø 5 mm drill bit to mark the hole (7) on the mark from "Matt black side sill add-on section, left" **AB** on the side sill.

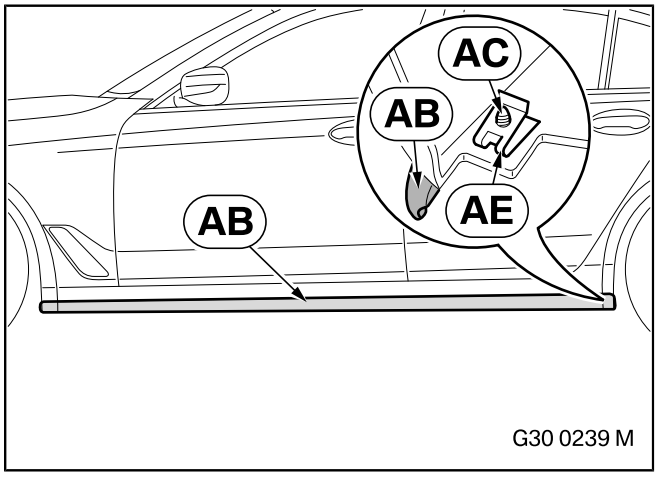

Install sheet metal nut **AE** using oval-head self-tapping screw **AC** on "Matt black side sill add-on section, left" **AB**.

Return the "Rear wheel arch trim" to its original position.

cardiagn.com

13. Installing the "Carbon rear spoiler"

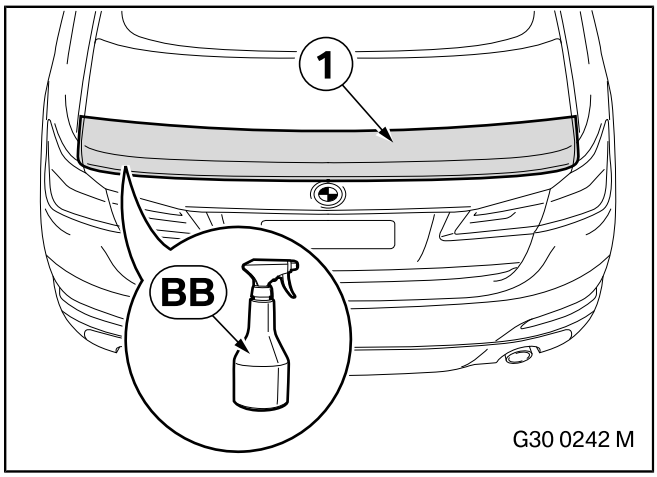

The bonding surfaces must be completely dry, clean and free from wax or grease.

Clean the surface (1) of the car with cleaner **BB** (not included in parts kit, see EPC further information).

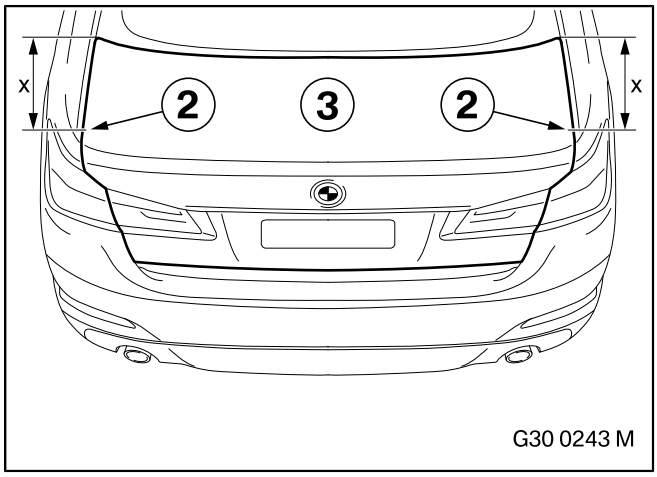

Make a mark (2) with dimension x = 436 mm measured from the front corner of the boot lid (3) using suitable tools.

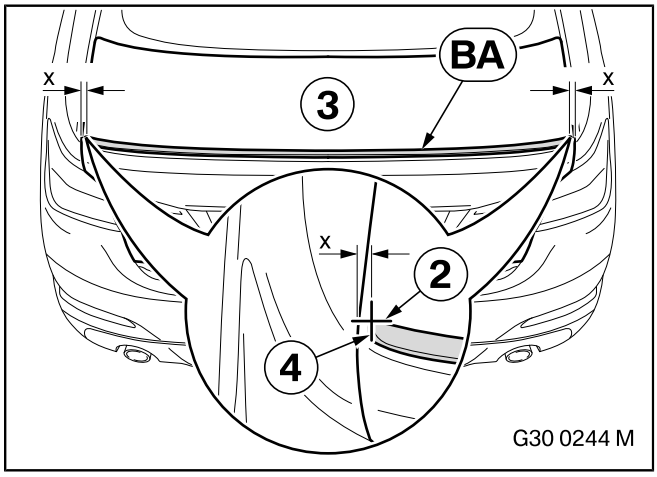

Position the "Carbon rear spoiler" **BA** on the marks (2) you made earlier on the boot lid (3), centre it and mark the position (4) with suitable tools.

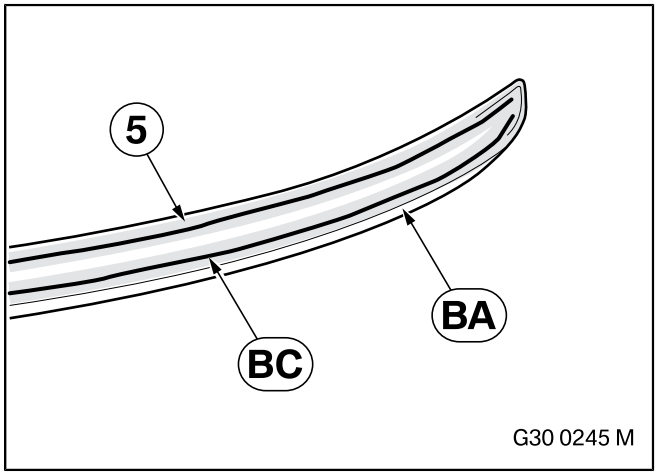

Sand and clean the edge area (5) of the "Carbon rear spoiler" **BA** using suitable products.

Apply an adequate quantity of liquid adhesive **BC**, as shown in the form of a bead, **generously** to "Carbon rear spoiler" **BA**.

cardiagn.com

13. Installing the "Carbon rear spoiler"

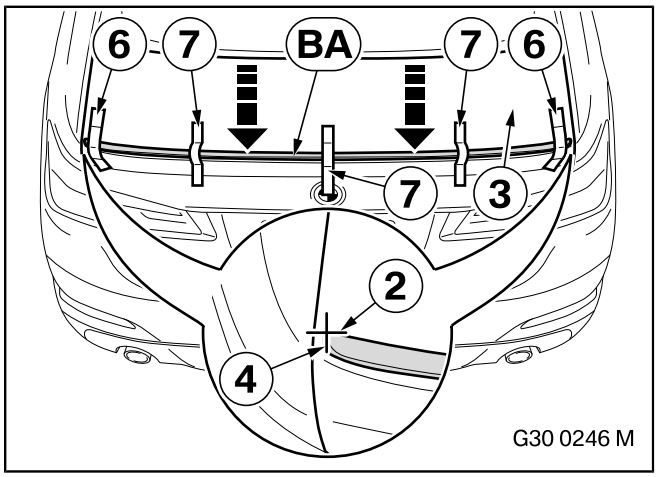

Remove any excess liquid adhesive **BC** immediately. ◀

Ensure that the gaps are uniform. ◀

Position the "Carbon your spoiler" **BA** between the marks (2) and (4), align it and press it into position.

Secure the "Carbon rear spoiler" **BA** first with the outer adhesive tape (6) and then with the inner adhesive tape (7). Ensure that the gaps are uniform.

The adhesive tape (6) and (7) can be removed after at least 6 hours.

cardiagn.com

14. Installing the "Matt black rear spoiler"

Painting instructions

Check that all the parts fit accurately on the car before painting them. Primed parts must be pre-treated accordingly before painting.

The BMW painting instructions must be observed (see ISTA 99 00 ...).

▷ The "Matt black rear spoiler" **CA** can be partially painted as required by the customer. ◀

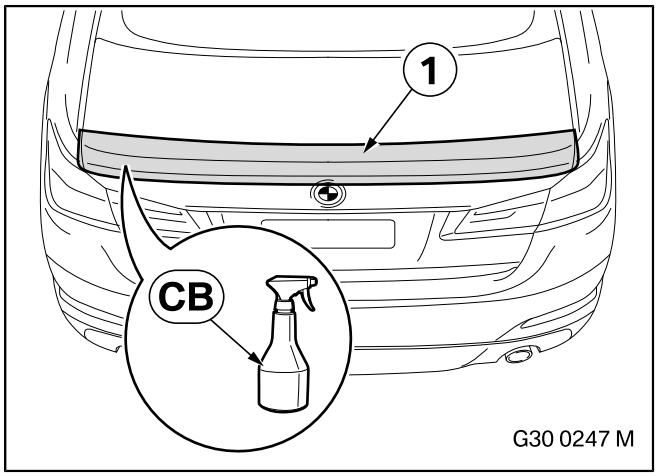

▷ The bonding surfaces must be completely dry, clean and free from wax or grease. ◀

Clean the surface (1) of the car with cleaner **CB** (not included in parts kit, see EPC further information).

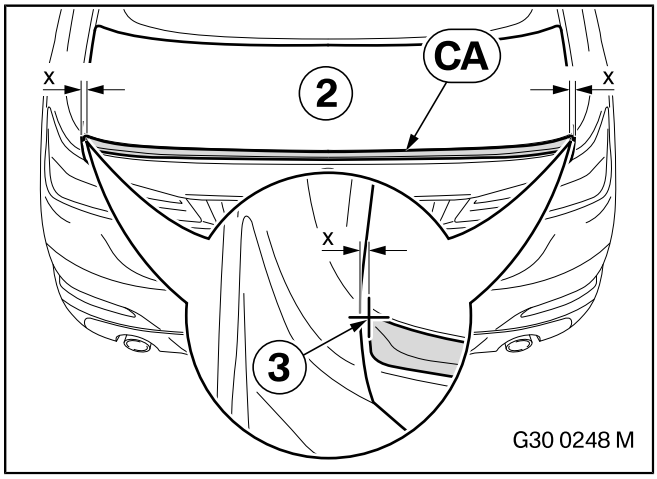

Position the "Matt black rear spoiler" **CA** on the marks (2) you made earlier on the boot lid (2), centre it and mark the position (3) with suitable tools.

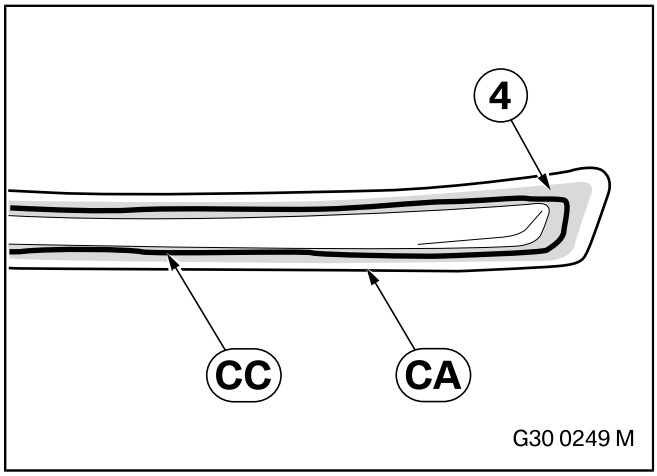

Sand and clean the edge area (4) of the "Matt black rear spoiler" **CA** using suitable products.

Apply an adequate quantity of liquid adhesive **CC**, as shown in the form of a bead, **generously** to "Matt black rear spoiler" **CA**.

cardiagn.com

14. Installing the "Matt black rear spoiler"

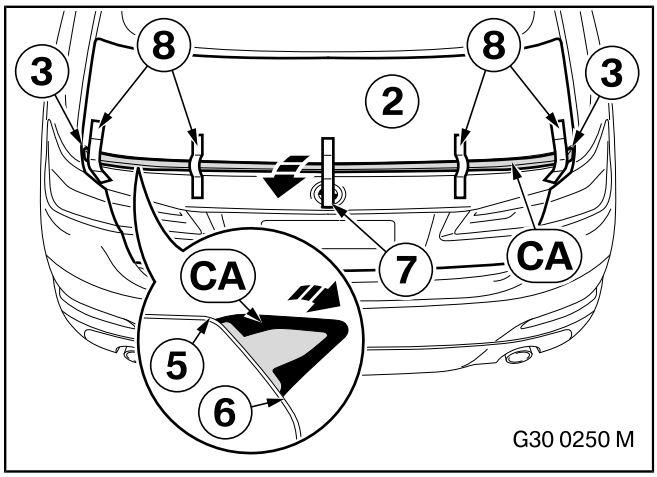

Remove any excess liquid adhesive **CC** immediately. ◀

Position the "Matt black rear spoiler" **CA** between the marks (3) and align it.

Pull the centre of the "Matt black rear spoiler" **CA** to the rear in the direction shown by the arrow until the front gap (5) has closed. Then press the "Matt black rear spoiler" **CA** onto the boot lid (2) so that the bottom gap (6) also closes.

Secure the "Matt black rear spoiler" **CA** first in the centre with adhesive tape (7) and then with the outer adhesive tape (8).

The adhesive tape (7) and (8) can be removed after at least 6 hours.

cardiagn.com

15. Installing the "Exhaust system support adapter cover"

Underfloor trim versions

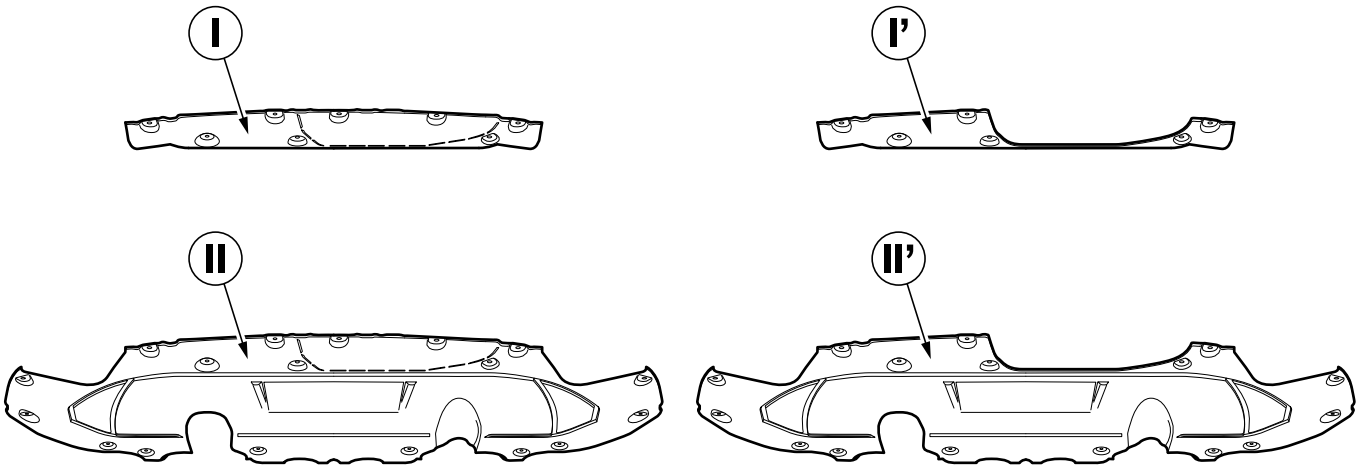

G30 0263 M

I Small underfloor trim for cars without trailer tow hitch SA 3AC
II Large underfloor trim for cars without trailer tow hitch SA 3AC
I' Small underfloor trim for cars with trailer tow hitch SA 3AC
II' Large underfloor trim for cars with trailer tow hitch SA 3AC

▷ For the sake of simplicity, all the illustrations for installing the "Matt black rear diffuser" **EA** and "Carbon rear diffuser" **FA** on the car show the small underfloor trim for cars without trailer tow hitch SA 3AC **I**. Proceed accordingly to install it on cars with the **II**, **I'** and **II'** versions of the underfloor trim. ◀

▷ For the sake of simplicity, in the following description the designations "small underfloor trim" **I** and "large underfloor trim" **II** are used.

For all retrofitted items

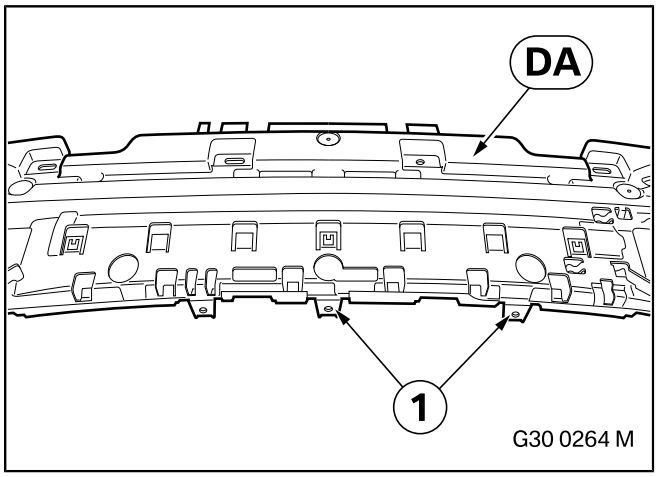

G30 0264 M

For cars with trailer tow hitch SA 3AC:

Break the lugs (1) off the "Exhaust system support adapter cover" **DA** with a suitable tool.

For all cars:

Install the control units and antennas from the standard "Exhaust system support adapter cover" on the "Exhaust system support adapter cover" **DA** as described in **ISTA**.

Install the "Exhaust system support adapter cover" **DA** as described in **ISTA**.

cardiagn.com

15. Installing the "Exhaust system support adapter cover"

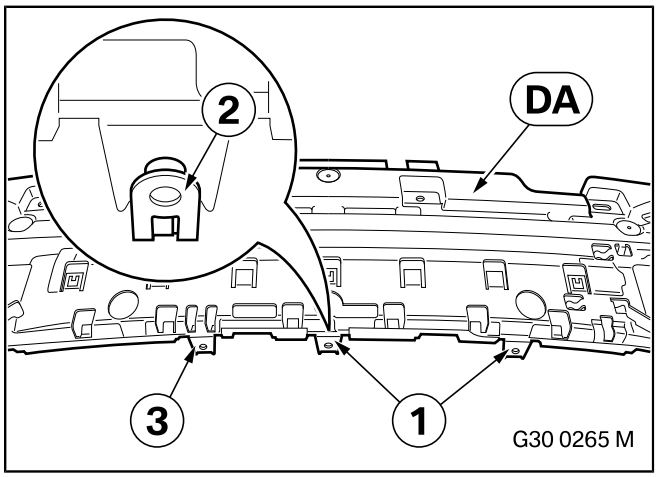

The lugs (1) are only left on cars without a trailer tow hitch SA 3AC. ◀

Place clips (2) from the standard "Exhaust system support adapter cover" on the lugs (1) and (3) of the "Exhaust system support adapter cover" **DA**.

Install the rear cover without the "Bottom rear trim" as described in **ISTA**.

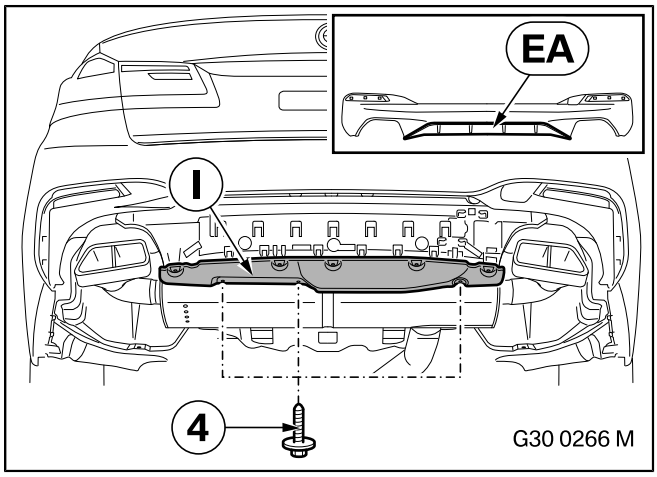

For cars with "Small underfloor trim" I to install "Matt black rear diffuser" EA:

Install "Small underfloor trim" **I** as described in **ISTA**. Only tighten the hexagon screws (4) on the standard component shown here.

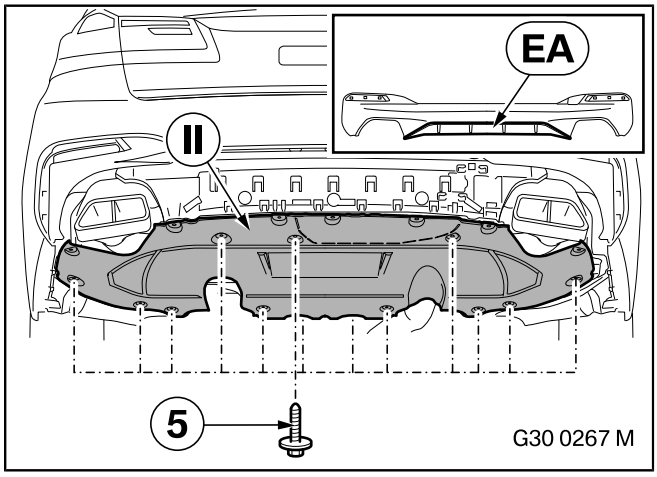

For cars with "Large underfloor trim" II to install "Matt black rear diffuser" EA:

Install "Large underfloor trim" **II** as described in **ISTA**. Only tighten the hexagon screws (5) on the standard component shown here.

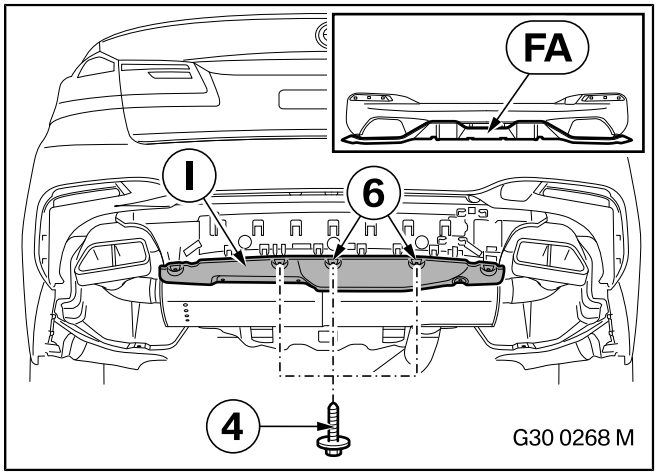

For cars with "Small underfloor trim" I to install "Carbon rear diffuser" FA:

The fastening points (6) are only to be installed on cars without a trailer tow hitch SA 3AC. ◀

Install "Small underfloor trim" **I** as described in **ISTA**. Only tighten the hexagon screws (4) on the standard component shown here.

cardiagn.com

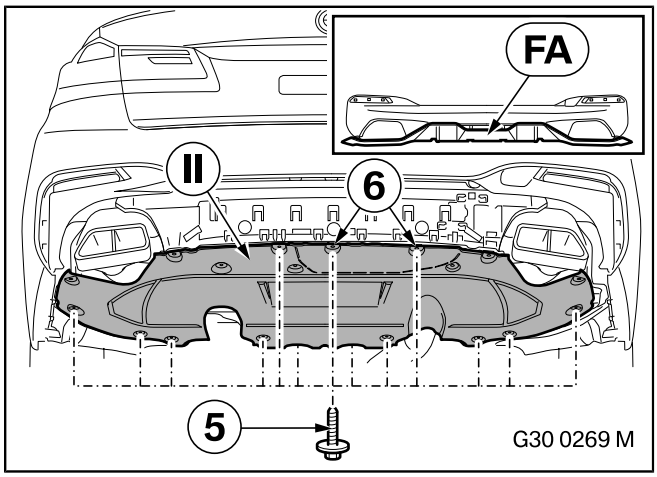

For cars with "Large underfloor trim" II to install "Carbon rear diffuser" FA:

▷ The fastening points (6) are only to be installed on cars without a trailer tow hitch SA 3AC. ◀

Install "Large underfloor trim" **II** as described in **ISTA**. Only tighten the hexagon screws (5) on the standard component shown here.

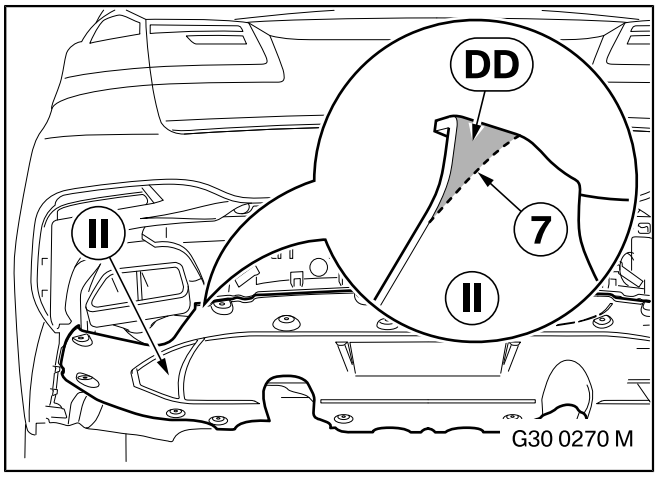

For cars with "Large underfloor trim" II:

Affix the blue template **DD** to the left-hand side and the red template **DD** to the right hand side of the "Large underfloor trim" **II**.

Cut the "Large underfloor trim" **II** along the cutting edge (7) using a suitable tool.

cardiagn.com

16. Installing the "Matt black rear diffuser

Painting instructions
Check that all the parts fit accurately on the car before painting them. Primed parts must be pre-treated accordingly before painting.

The BMW painting instructions must be observed (see ISTA 99 00 ...).

▷ The "Matt black rear bumper trim" **DB** and the "Matt black rear diffuser" **EA** can be painted as required by the customer. ◀

▷ Ensure that the "Exhaust system support adapter cover" **DA** has been installed. ◀

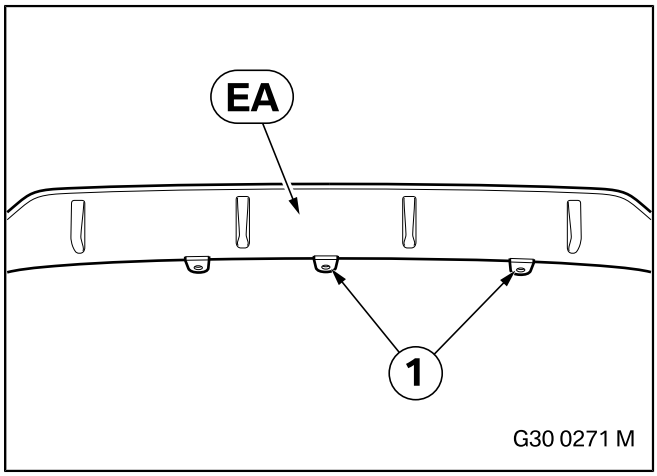

For cars with trailer tow hitch SA 3AC:

Remove the lugs (1) from the "Matt black rear diffuser" **EA** using a suitable tool.

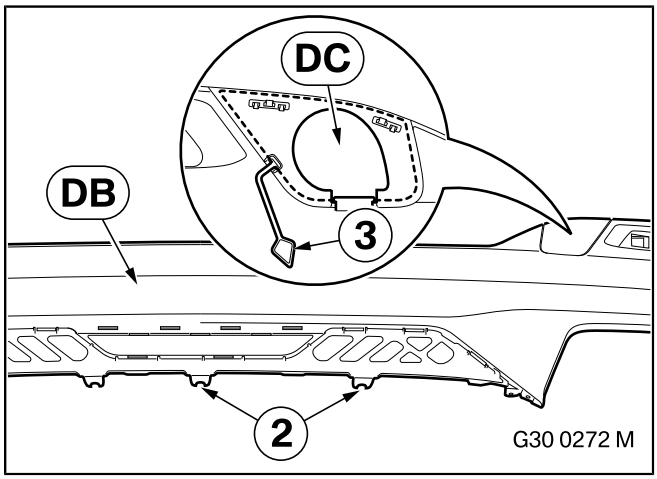

For cars with trailer tow hitch SA 3AC:

Remove the lugs (2) from the "Matt black rear bumper trim" **DB** using a suitable tool.

For all cars:

Insert the "Towing eyelet cover" **DC** with retaining hook (3) into the "Matt black rear bumper trim" **DB** as shown.

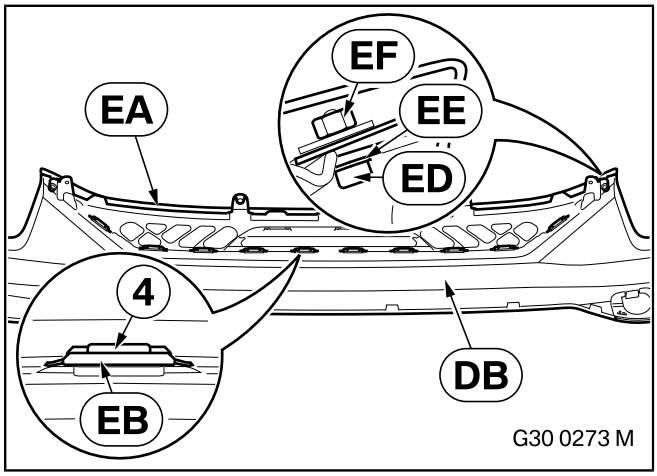

Insert the "Matt black rear diffuser" **EA** with lugs (4) into the "Matt black rear bumper trim" **DB**.

Install the clips **EB** on the lugs (4) using a suitable tool.

Secure "Matt black rear diffuser" **EA** at the left and right using ISA screws **ED**, washers **EE** and hexagon nuts with washer **EF** to the "Matt black rear bumper trim" **DB**.

cardiagn.com

16. Installing the "Matt black rear diffuser

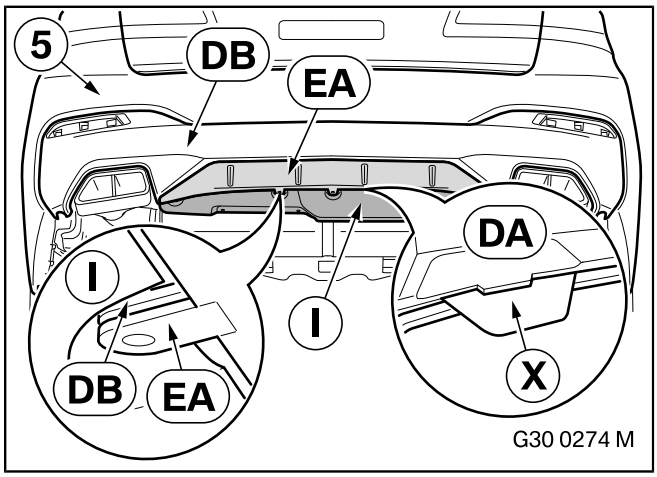

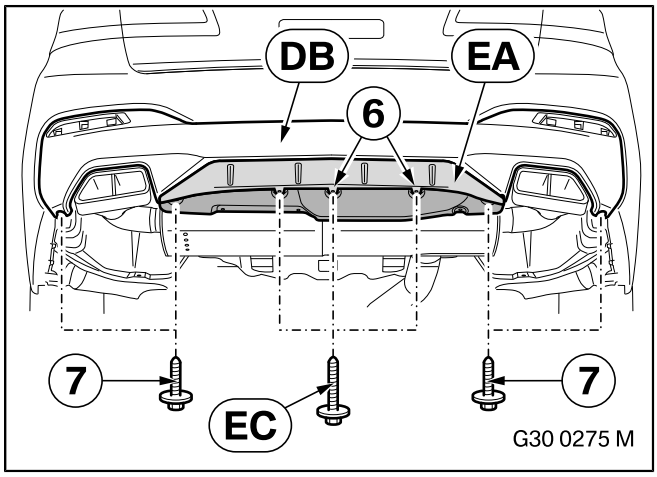

For the sake of simplicity, the following installations show the "small underfloor trim" **I**.
All the screw connections are also to be made on cars with "Large underfloor trim" **II**. ◀

Insert the assembly of "Matt black rear bumper trim" **DB** and "Matt black rear diffuser" **EA** in the rear trim (5) so that the four lugs (X) on the "Matt black rear bumper trim" **DB** are completely inserted in the "Exhaust system support adapter cover" **DA**.

The "Matt black rear bumper trim" **DB** and "Matt black rear diffuser" **EA** must be under the "Small underfloor trim" **I**.

Ensure that the four lugs (X) inserted in the "Exhaust system support adapter cover" **DA**do not slip out during the remainder of the installation work. ◀

The fastening points (6) are only to be installed on cars without a trailer tow hitch SA 3AC. ◀

Install the assembly of the "Matt black rear bumper trim" **DB** and "Matt black rear diffuser" **EA** using hexagon screws **EC** and hexagon screws (7) from the standard component.

Install the rear reflector from the standard component as described in **ISTA**.

cardiagn.com

17. Installing the "Carbon rear diffuser"

Painting instructions

Check that all the parts fit accurately on the car before painting them. Primed parts must be pre-treated accordingly before painting.

The BMW painting instructions must be observed (see ISTA 99 00 ...).

▷ The "Matt black rear bumper trim" **DB** and the "Matt black rear side scuttle" **FB** can be painted as required by the customer. ◀

▷ Ensure that the "Exhaust system support adapter cover" **DA** has been installed. ◀

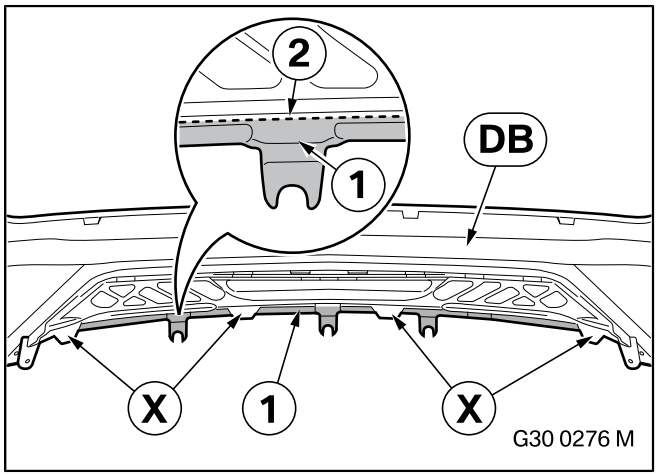

▷ Ensure that the four lugs (X) are not removed from the "Matt black rear bumper trim" **DB**. ◀

Cut the flange (1) along the cutting line (2) using a suitable tool.

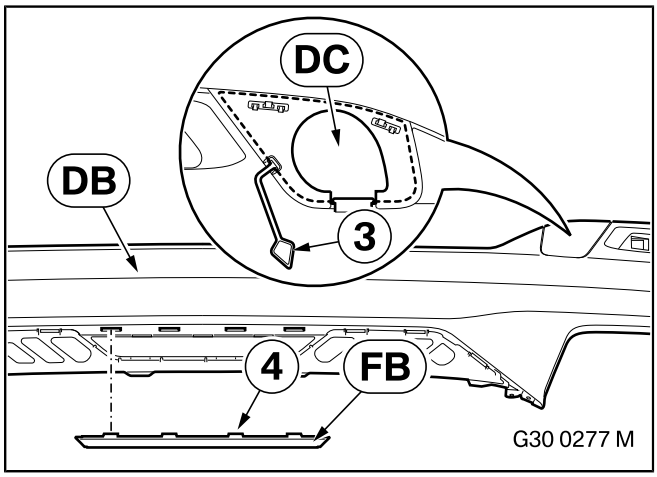

Insert the "Towing eyelet cover" **DC** with retaining hook (3) into the "Matt black rear bumper trim" **DB** as shown.

Insert the lugs (4) from the "Matt black rear side scuttle" **FB** into the "Matt black rear bumper trim" **DB**.

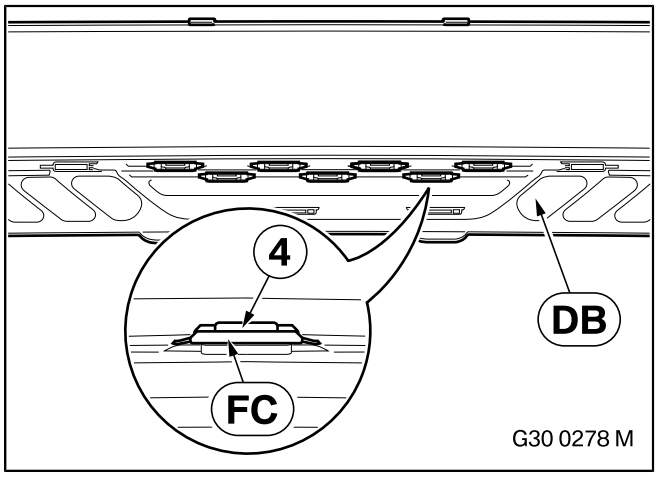

Install the clips **FC** on the lugs (4) using a suitable tool.

cardiagn.com

17. Installing the "Carbon rear diffuser"

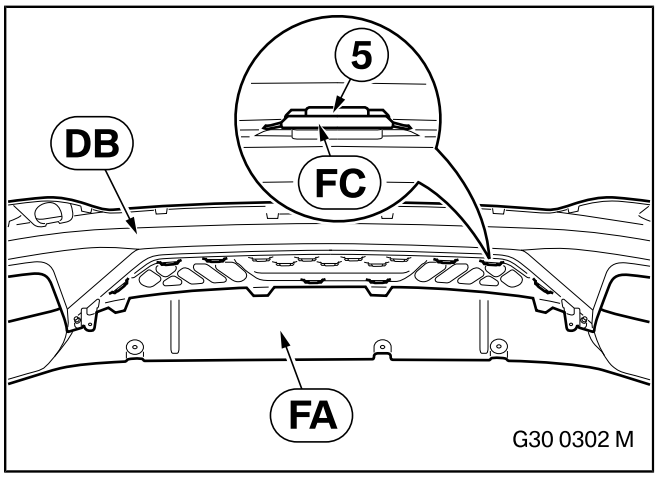

Insert the "Carbon rear diffuser" **FA** with lugs (5) into the "Matt black rear bumper trim" **DB**.

Install the clips **FC** on the lugs (5) using a suitable tool.

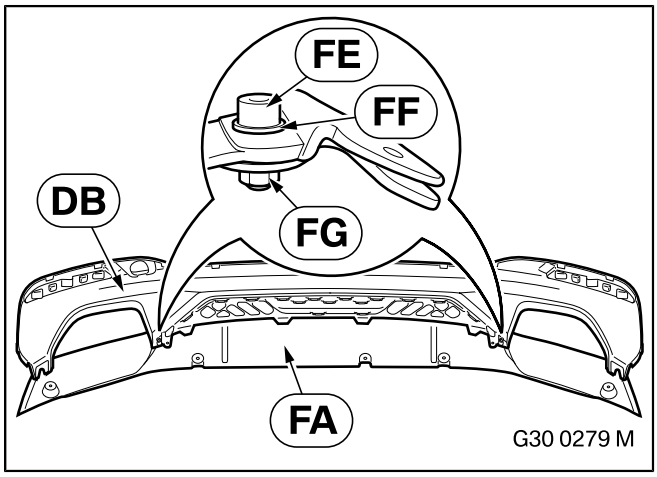

Secure "Carbon rear diffuser" **FA** at the left and right using ISA screws **FE**, washers **FF** and hexagon nuts with washer **FGF** to the "Matt black rear bumper trim" **DB**.

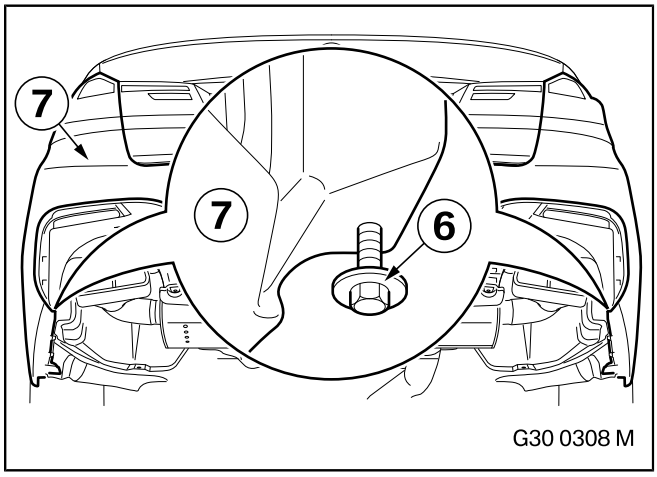

For the sake of simplicity, the following installations show the "small underfloor trim" **I**.
All the screw connections are also to be made on cars with "Large underfloor trim" **II**. ◀

Unscrew the hexagon screws (6) for the standard component a few turns out of the rear trim (7).

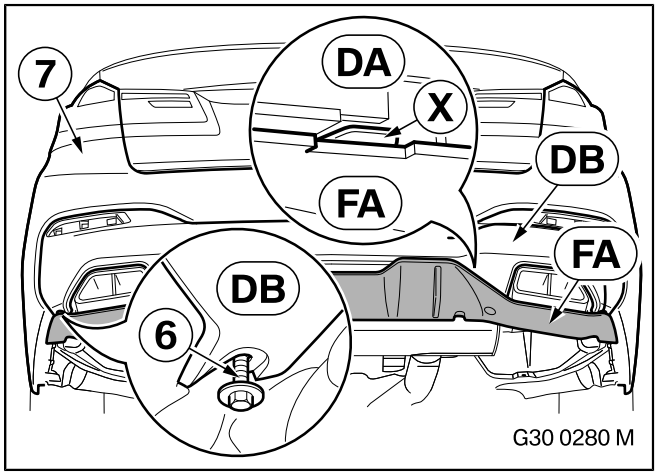

Insert the assembly of "Matt black rear bumper trim" **DB** and "Carbon rear diffuser" **FA** in the rear trim (7) so that the four lugs (X) are completely inserted in the "Exhaust system support adapter cover" **DA**.

Ensure that the hexagon screws (6) are positioned in the recess of the "Matt black rear bumper trim" **DB**.

Tighten the hexagon screws (6) on the left and right of the rear trim (7).

cardiagn.com

17. Installing the "Carbon rear diffuser"

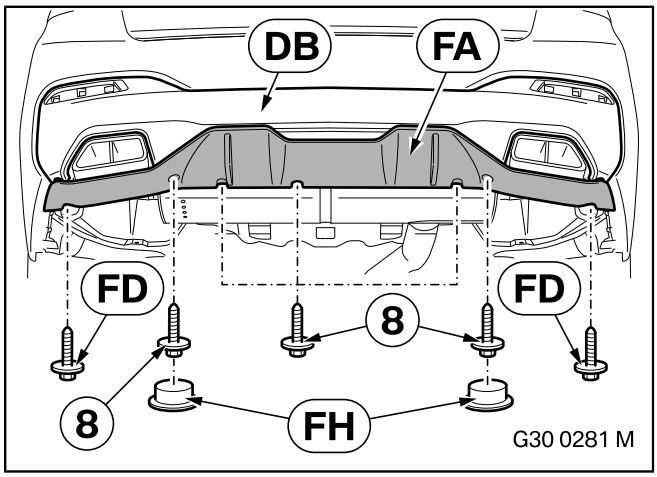

Ensure that the four lugs (X) inserted in the "Exhaust system support adapter cover" **DA**do not slip out during the remainder of the installation work. ◀

Install the assembly of the "Matt black rear bumper trim" **DB** and "Carbon rear diffuser" **FA** using hexagon screws **FD** and hexagon screws (8) from the standard component.

Insert sealing bung **FH** into the "Carbon rear diffuser" **FA**.

Install the rear reflector from the standard component as described in **ISTA**.

cardiagn.com

18. Concluding work and coding

The retrofit system is relevant to programming/coding only if the "Carbon rear diffuser" retrofit kit **FA** is installed.

- Connect the battery
- Connect the battery charger to the car
- Connect the car to the ISTA workshop system
- Open the ISTA/P car programming facility
- If using ISTA/P, please note the instructions provided in the ISTA/P application documentation
- Retrofit K-word: Select "DSMO" via the - **Conversion** - path and work through the created action plan
- If necessary, carry out a vehicle test using the ISTA system and note, or work through, any error memory that has been entered
- Conduct a function test
- Re-assemble the car
- Give the customer the customer information

cardiagn.com