SUBARU

SVX

1992

Page
S SPECIFICATIONS 2
A: 2-DOOR COUPE 2

S SPECIFICATIONS

A: 2-DOOR COUPE

MODEL	FWD	AWD	
	LS*1		LS-L*2
ITEM	4AT		

1. DIMENSIONS

Overall length			mm (in)	4,625 (182.1)		
Overall width			mm (in)	1,770 (69.7)		
Overall height			mm (in)	1,300 (51.2)		
Com-partment	Leg room	Front Max.	mm (in)	1,105 (43.5)		
		Rear Min.	mm (in)	715 (28.1)		
	Head room	Front	mm (in)	965 (38.0)		
		Rear	mm (in)	890 (35.0)		
	Shoul-der room	Front	mm (in)	1,420 (55.9)		
		Rear	mm (in)	1,385 (54.5)		
Wheelbase			mm (in)	2,610 (102.8)		
Tread		Front	mm (in)	1,500 (59.1)		
		Rear	mm (in)	1,480 (58.3)		
Minimum road clearance (at C.W.)			mm (in)	135 (5.3)		

2. WEIGHT

Curb weight	Front	kg (lb)	944 (2,080)	955 (2,105)	965 (2,125)
	Rear	kg (lb)	598 (1,320)	645 (1,420)	660 (1,455)
	Total	kg (lb)	1,542 (3,400)	1,600 (3,525)	1,625 (3,580)
Gross vehicle weight	Front	kg (lb)	1,085 (2,395)	1,090 (2,405)	
	Rear	kg (lb)	885 (1,950)	930 (2,050)	
	Total	kg (lb)	1,970 (4,345)	2,020 (4,455)	

*1: The weight of the air conditioning is included in the C.W.
*2: The weight of the sunroof and air conditioning is included in the C.W.

MODEL	FWD	AWD	
	LS*1		LS-L*2
ITEM	4AT		

3. ENGINE

Engine type	Horizontally opposed, liquid cooled, 6-cylinder, 4-stroke gasoline engine
Valve arrangement	Overhead camshaft type
Bore x Stroke mm (in)	96.9 x 75 (3.815 x 2.95)
Displacement cm^3 (cu in)	3,318 (202.46)
Compression ratio	10.0
Firing order	1-6-3-2-5-4
Idling speed at N or P position rpm	610 ± 100 (No load) 800 ± 50 (Air conditioning ON)
Maximum output HP/rpm	230 at 5,400
Maximum torque N·m (kg-m, ft-lb) /rpm	309 (31.5, 228) at 4,400

4. ELECTRICAL

Ignition timing at idling speed	BTDC/rpm	20° at 610
Spark plug	Type and manufacturer	NGK: PFR6G-11, PFR 6B-11 NIPPONDENSO: PK20PR-11
Generator		12 V — 95 A
Battery	Type	80D26R-MF
	Reserve capacity min.	133
	Cold cranking amperes amp.	582

5. TRANSMISSION

Clutch type		Torque converter clutch
Transmission type		Electronically controlled fully-automatic, 4-forward and 1-reverse
Gear ratio	1st	2.785
	2nd	1.545
	3rd (Drive)	1.000
	4th	0.694
	Reverse	2.272

*1: The weight of the air conditioning is included in the C.W.
*2: The weight of the sunroof and air conditioning is included in the C.W.

MODEL			FWD	AWD	
				LS*1	LS-L*2
ITEM			4AT		
Reduction gear (Front drive)	1st reduction	Type of gear	Helical		
		Gear ratio	0.927	1.000	
	Final reduction	Type of gear	Hypoid		
		Gear ratio	3.700	3.545	
Reduction gear (Rear drive)	Transfer reduction	Type of gear	—	Helical	
	Gear ratio		—	1.000	
	Final reduction	Type of gear	—	Hypoid	
		Gear ratio	—	3.545	

6. STEERING

Type	Rack and Pinion
Turns, lock to lock	3.1
Minimum turning circle m (ft)	Wall to wall ..... 11.8 (38.7) Curb to curb 10.8 (35.4)

7. SUSPENSION

Front	Macpherson strut type, Independent, Coil spring
Rear	Dual link strut type, Independent, Coil spring

8. BRAKE

Service brake system	Dual circuit hydraulic with vacuum suspended power unit
Front	Ventilated disc brake
Rear	Disc brake
Parking brake	Mechanical on rear brakes

9. TIRE

Size	P 225/50R16 91V
Type	Steel belted radial, Tubeless

*1: The weight of the air conditioning is included in the C.W.
*2: The weight of the sunroof and air conditioning is included in the C.W.

MODEL	FWD	AWD	
	LS*1		LS-L*2
ITEM	4AT		

10. CAPACITY

Fuel tank		ℓ (US gal, Imp gal)	70 (18.5, 15.4)	
Engine oil	Upper level	ℓ (US qt, Imp qt)	6.0 (6.3, 5.3)	
	Lower level	ℓ (US qt, Imp qt)	5.0 (5.3, 4.4)	
Automatic transmission fluid		ℓ (US qt, Imp qt)	9.5 — 9.8 (10.0 — 10.4, 8.4 — 8.6)	
AT differential gear oil		ℓ (US qt, Imp qt)	1.1 — 1.3 (1.2 — 1.4, 1.0 — 1.1)	
4WD rear differential gear oil		ℓ (US qt, Imp qt)	—	0.8 (0.9, 0.7)
Power steering fluid		ℓ (US qt, Imp qt)	1.0 (1.1, 0.9)	
Engine coolant		ℓ (US qt, Imp qt)	7.5 (7.9, 6.6)	

*1: The weight of the air conditioning is included in the C.W.
*2: The weight of the sunroof and air conditioning is included in the C.W.

SUBARU

SVX

1992

Page

1. GENERAL PRECAUTIONS 2
2. PRECAUTION FOR SUPPLEMENTAL RESTRAINT SYSTEM (AIRBAG) 4
3. VEHICLE IDENTIFICATION NUMBER (V.I.N.) 5
4. IDENTIFICATION NUMBER AND LABEL LOCATIONS 6
5. THEFT PREVENTION 7
6. RECOMMENDED FUEL, LUBRICANTS, SEALANTS AND ADHESIVES 9
7. TIGHTENING TORQUE OF STANDARD BOLTS AND NUTS 12
8. LIFTING, TOWING AND TIE-DOWN POINTS 13
9. FRONT HOOD STAY INSTALLATION POINTS 16

1. General Precautions

A: BEFORE STARTING SERVICE

1) Be sure to perform the jobs listed in the Periodic Maintenance Schedule.
2) When a vehicle is brought in for maintenance, carefully listen to the owner's explanations of the symptoms exhibited by the vehicle. List the problems in your notebook, and refer to them when trying to diagnose the trouble.
3) All jewelry should be removed. Suitable work clothes should be worn.
4) Be sure to wear goggles.
5) Use fender, floor and seat covers to prevent the vehicle from being scratched or damaged.
6) Never smoke while working.
7) Before removing underfloor bolts (including the rear differential filler plug) coated with bituminous wax, remove old wax. Re-coat with new wax after reinstallation.
8) When removing rear body or suspension parts, place balance weights, etc. in the trunk compartment, taking into account the weight distribution on the front and rear of the car; then lift the vehicle up.
9) Before tightening suspension parts, lower the vehicle to the ground and ensure that the car is curb weight (with the spare tire, jack, and service tools set in position and with a full fuel tank).

B: WHILE WORKING

1) When jacking up the vehicle, be sure to use safety stands.
2) When jacking up the front or rear end of the car body, be sure to choke the tires remaining in contact with the ground.
3) Keep the parking brake applied when working on the vehicle. Set the shift lever to REVERSE, when the parking brake cannot be applied, such as when the brakes are being worked on.
4) Keep the ignition key turned "OFF" if at all possible.
5) Be cautious while working when the ignition key is "ON"; if the engine is hot, the cooling fan may start to operate.
6) While the engine is in operation, properly ventilate the workshop.
7) While the engine is in operation, be aware of any moving parts, such as the cooling fan and the drive belt.
8) Keep your hands off any metal parts such as the radiator, exhaust manifold, exhaust pipe, and muffler, to prevent burning yourself.
9) When servicing the electrical system or the fuel system, disconnect the ground cable from the battery.
10) When disassembling, arrange the parts in the order that they were disassembled.
11) When removing a wiring connector, do not pull the wire but pull the connector itself.
12) When removing a hose or tube, remove the clip first. Then, pull the hose or tube while holding its end fitting.
13) Replace gaskets, O-rings, snap rings, lock washers, etc. with new ones.
14) When tightening a bolt or nut, tighten it to the specified torque.
15) When performing work requiring special tools, be sure to use the designated ones.
16) After completing work, make certain that the hoses, tubes and wiring harnesses are securely connected.
17) After completing work, be sure to wash the vehicle.

C: FULL TIME AWD AT MODELS

1. BEFORE CHECKING OR SERVICING CARS WITH THE FRONT WHEELS RAISED OR ON ROLLERS (BRAKE TESTER, CHASSIS DYNAMOMETER, ETC.)

Always set the car in the FWD mode.
To set the car in the FWD mode. disconnect the AWD circuit by inserting a fuse in the FWD connector inside the engine compartment. Also chock the rear wheels firmly.
Ensure that the FWD pilot light is on. If the car is left in the AWD mode, it will surge abruptly when the wheels turn, possibly damaging the transfer clutch.

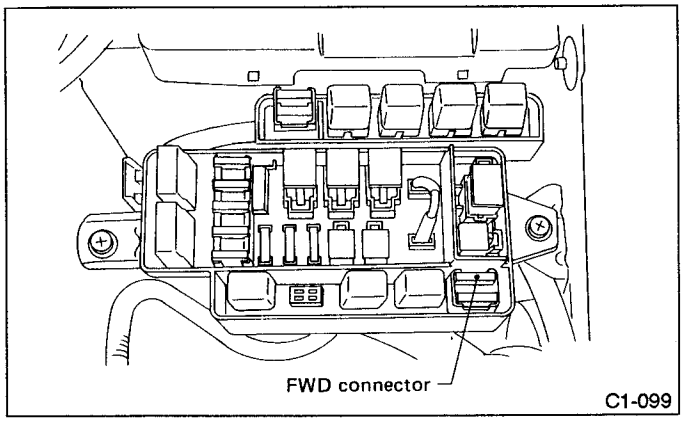

Fig. 1

2. TOWING

1) Loading vehicle onto dolly or flat-bed truck
a. Transport vehicle using a dolly or flat-bed truck whenever possible.
b. Place the selector lever in "P" position and apply the parking brake.

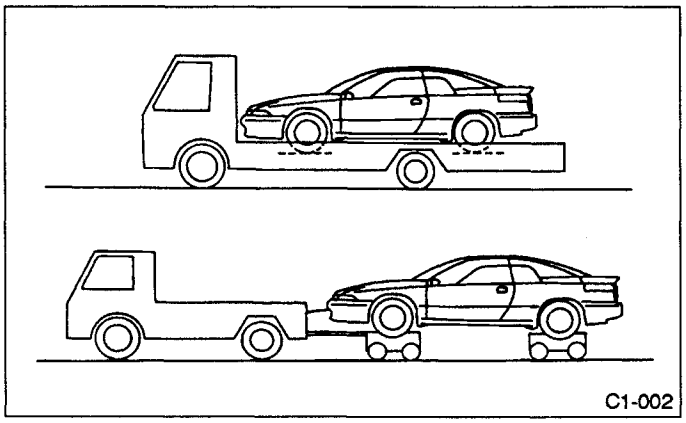

Fig. 2

2) Towing with a rope

a. Tow vehicle with a rope only when power train and all wheels are operating properly.

b. Put a spare fuse inside the FWD connector and never exceed 30 km/h (19 MPH). Also, do not tow for more than 10 km (6 miles).

c. Place the selector lever in "N" position.

d. The ignition switch should be in the "ACC" position while the vehicle is being towed.

e. Never use the tie down tabs for towing.

f. Remember that brake booster and power steering will not work when the engine is "OFF". You will have to use greater effort for the brake pedal and steering wheel.

g. Before towing, check transmission oil and differential oil levels and top up to the specified level if necessary.

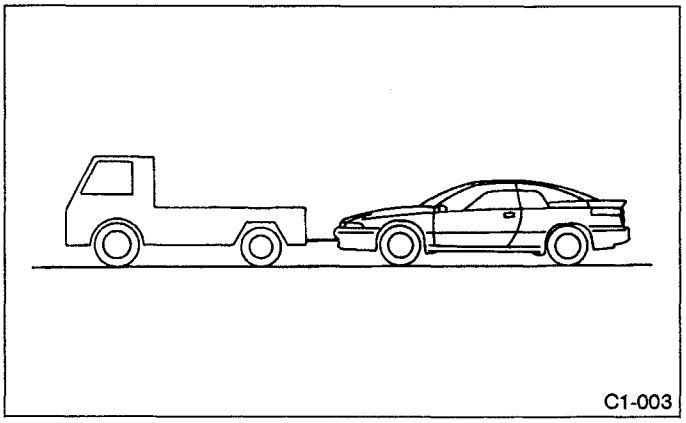

Fig. 3

3) Towing with front or rear wheels raised

a. Do not tow vehicle with only front or rear wheels placed on towing dolly or flat-bed truck. This may degrade viscous coupling performance or cause vehicle to jump off dolly or truck.

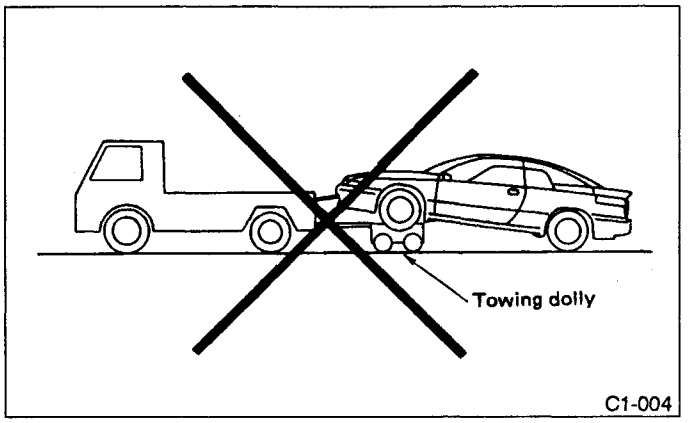

Fig. 4

b. Do not tow vehicle with rear wheels raised under any circumstances since this will damage bumper.

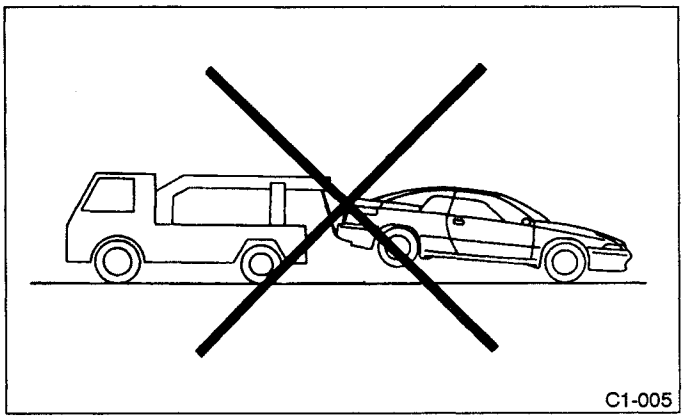

Fig. 5

c. Do not tow vehicle with front wheels raised under any circumstances since this will damage bumper.

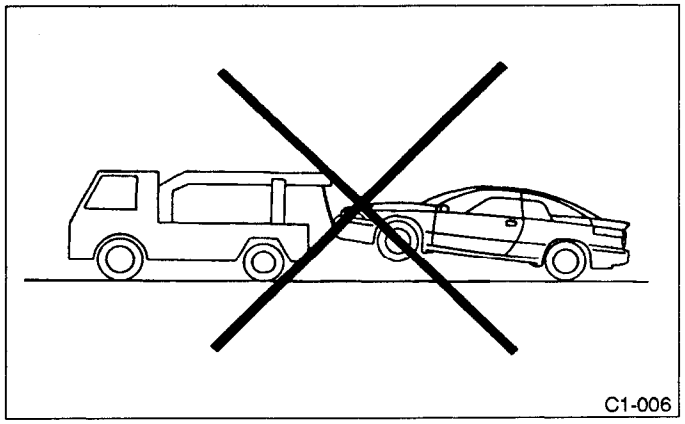

Fig. 6

2. Precaution for Supplemental Restraint System (Airbag)

The Supplemental Restraint System (Airbag) has been implemented in all Subaru SVX models. For proper and safe maintenance of this system, please ensure that you carefully read the precautionary notes given in "5-5 SUPPLEMENTAL RESTRAINT SYSTEM" in the Service Manual before servicing.

It should also be noted that in the SM table of contents, an AIRBAG mark is added to each of the items which do not directly concern the airbag system but need to be considered in their relationship to it. So, during the service work for such items, make sure you refer to "5-5 SUPPLEMENTAL RESTRAINT SYSTEM".

a. Take utmost care to follow faithfully the service procedures specified for the airbag, since otherwise it might deploy unexpectedly.

b. With the airbag system, failures such as faulty connection of harness connectors or neglect of tightening sensor mounting bolts can lead to failure of deployment in an accident.

Recheck each check point after maintenance work and use the on-board self-diagnosis to ensure there is nothing wrong with the system.

c. All wire harnesses of the airbag system are encased in a yellow cover to make them distinct from those of other systems.

The following are the parts involved in the airbag installation:

1) Steering wheel
2) Steering column
3) Toe-board (center, left & right ends)
4) Front seat floor and side seal
5) Inside left and right front fenders
6) Front pillar (left, lower)
7) Combination meter

Care should be taken when servicing in areas where the above parts are installed since it can affect the airbag system.

• Examples of service work involving the airbag system:

1) Replacement of steering gear
2) Steering maintenance and repair of the area adjoining toe-board
3) Removal and installation of combination meter
4) Installation of car stereo and other optional extras
5) Sheet metal repair paint work on the body front

3. Vehicle Identification Number (V.I.N.)

1. APPLICABLE V.I.N. IN THIS MANUAL

2-Door Coupe	AWD LS	4AT with passive belt & SRS airbag	J	F	1	C	X	3	4	3	X	P	H	1	0	0	0	0	1	and after
	AWD LS-L	4AT with passive belt & SRS airbag	J	F	1	C	X	3	5	3	X	P	H	1	0	0	0	0	1	and after

2. THE MEANING OF V.I.N.

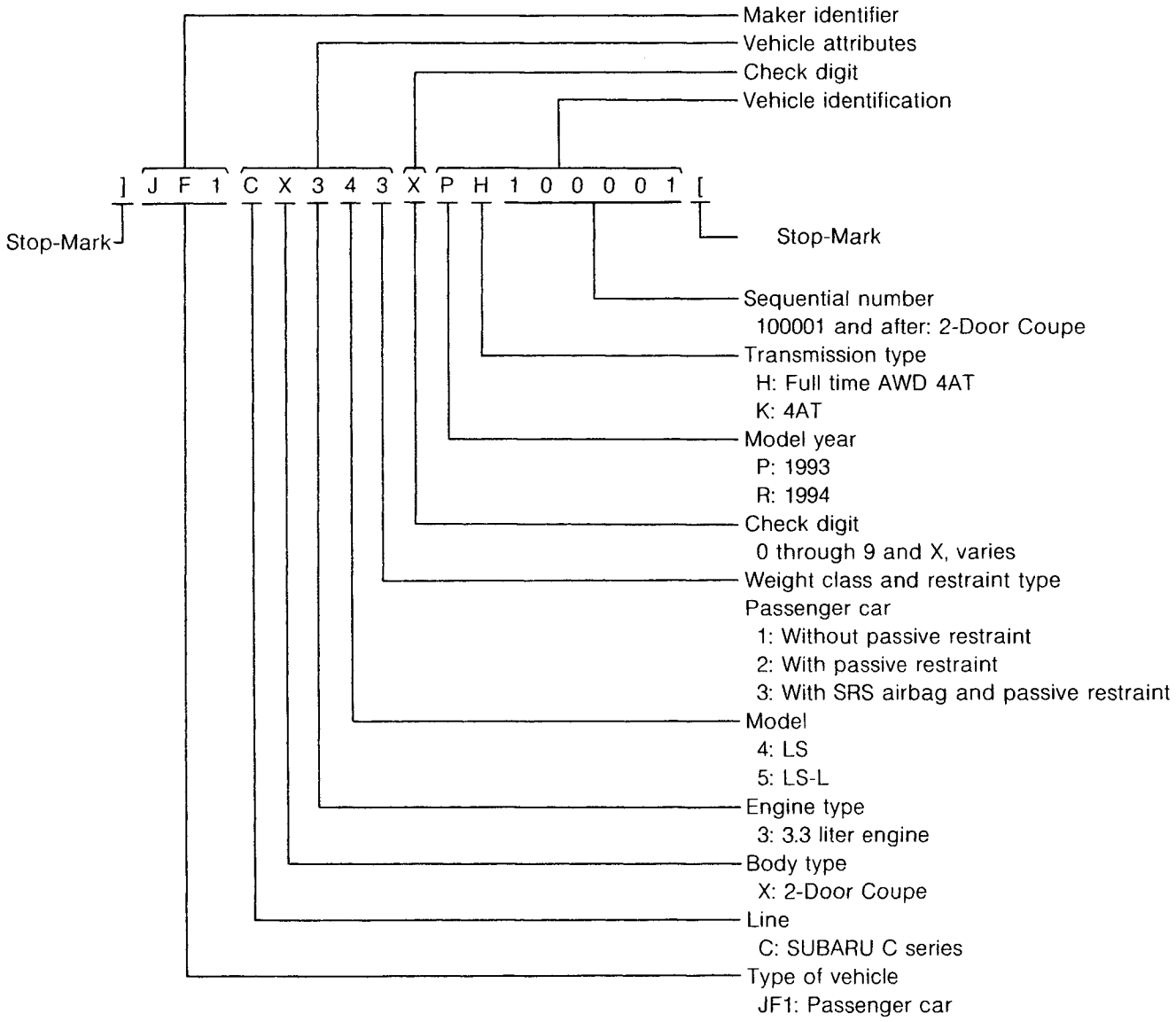

4. Identification Number and Label Locations

Engine, transmission and vehicle identification numbers are used for factory communications such as Technical information, Service bulletins and other information.

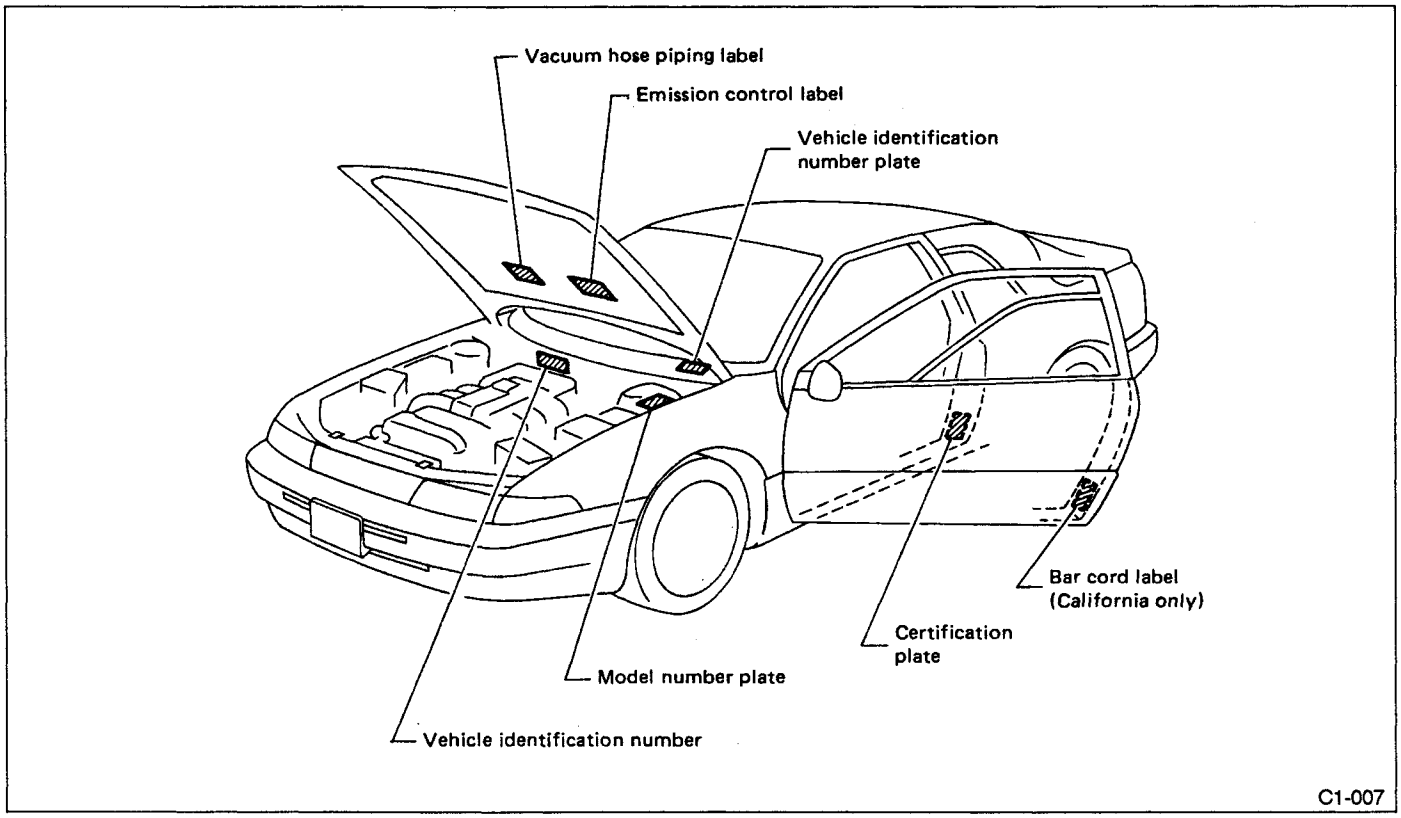

Fig. 7

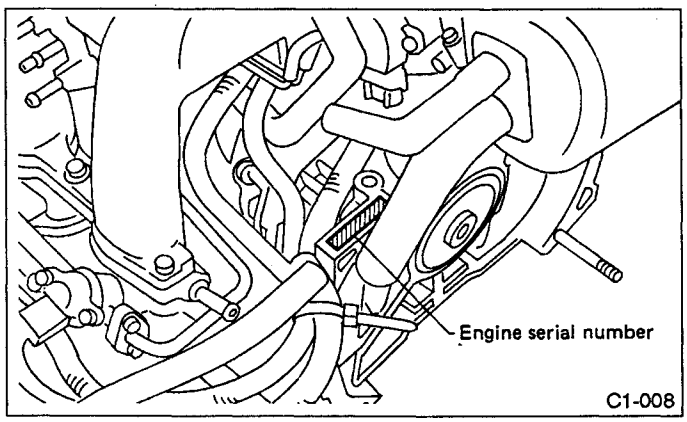

Fig. 8

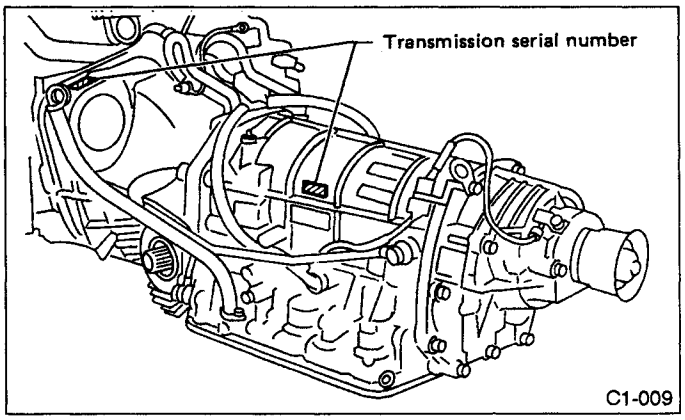

Fig. 9

5. Theft Prevention

The Theft Prevention (T.P.) label is stuck or V.I.N. is stamped on the main line installed parts shown below. Additionally, the "R DOT" label is stuck or "⑦ R DOT" is stamped on the main spare parts shown below.

1. T.P. label and "R DOT" label

(A) T.P. label

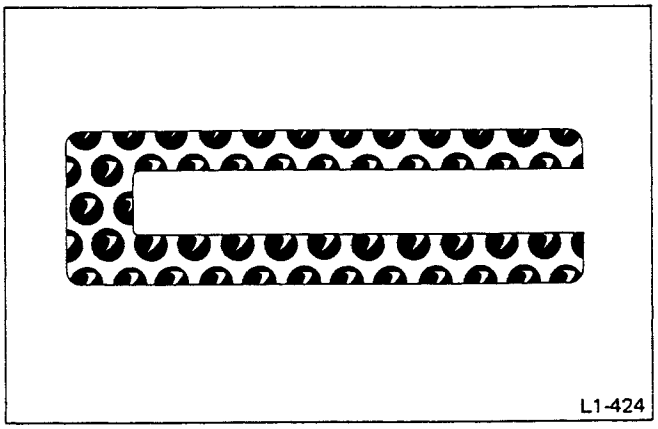

For engine and transmission, "V.I.N." is stamped.

(B) "R DOT" label

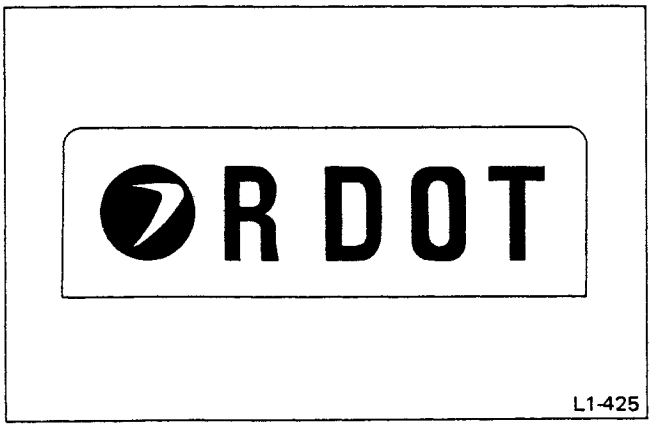

For engine and transmission, "⑦ R DOT" is stamped.

Fig. 10

2. Location

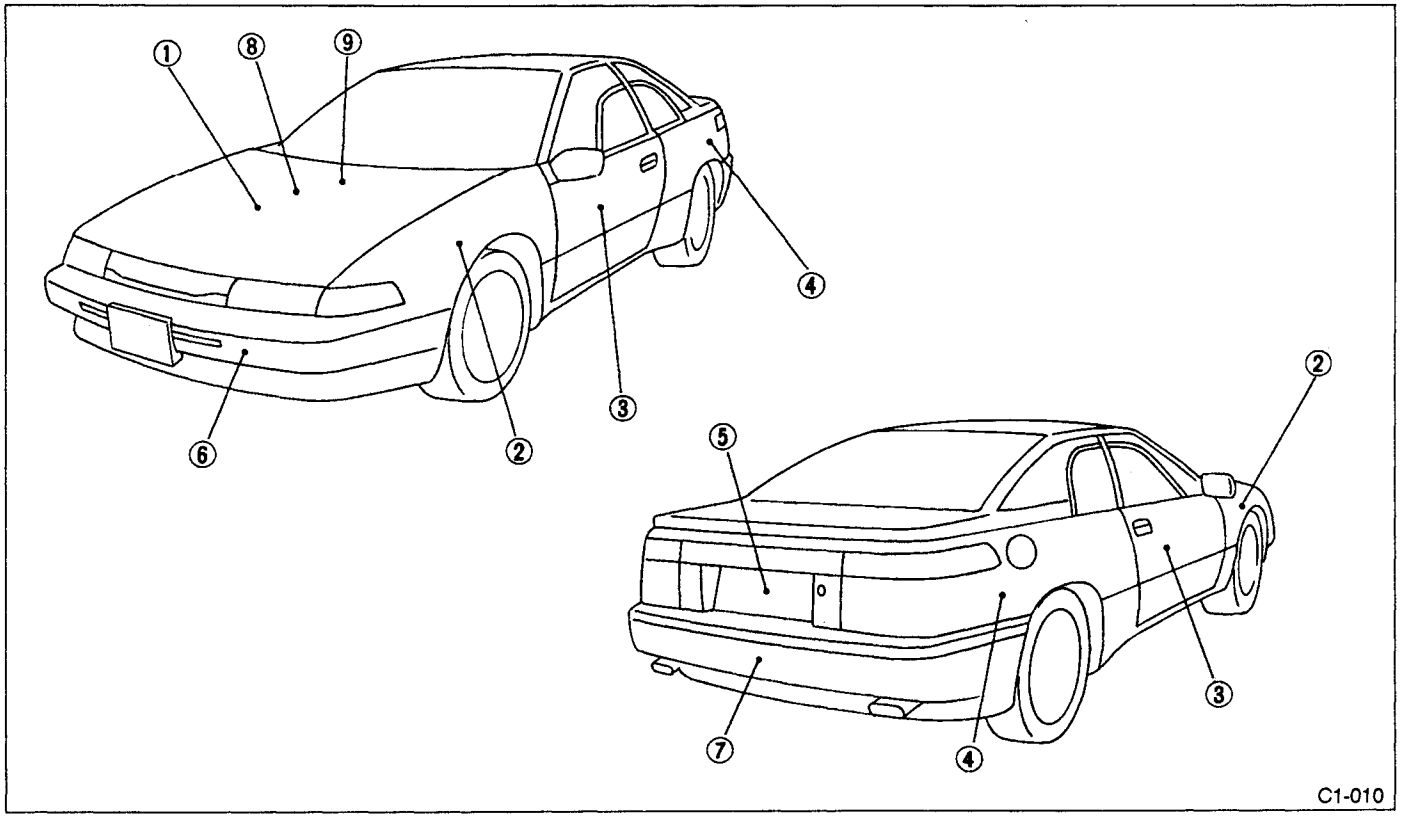

Fig. 11

① Front hood

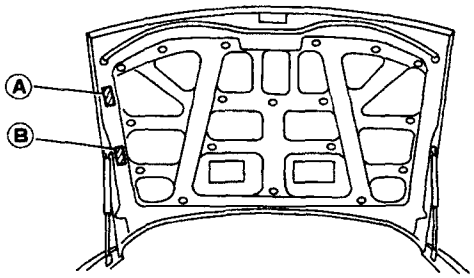

② Fender

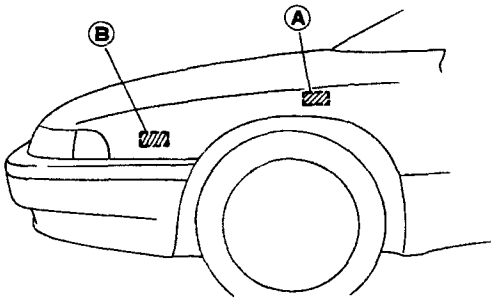

③ Door

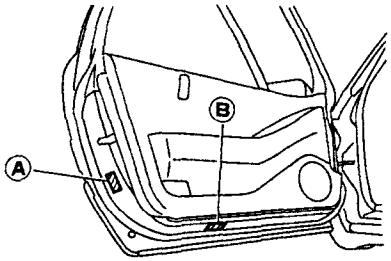

④ Rear quarter

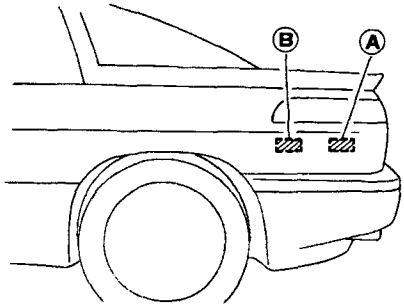

⑤ Truck lid

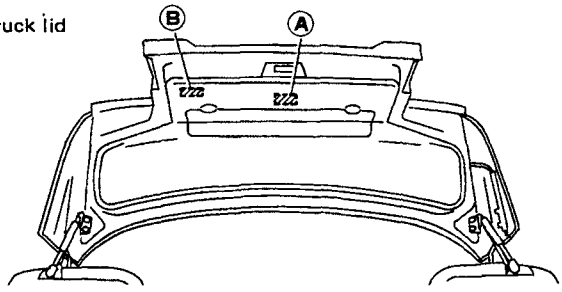

⑥ Front bumper

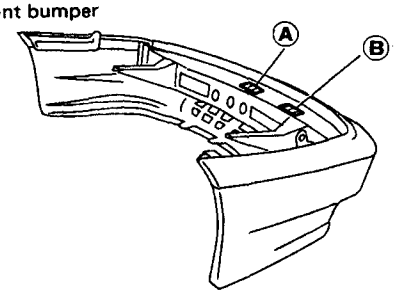

⑦ Rear bumper

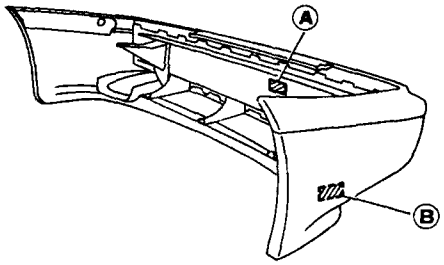

⑧ Engine

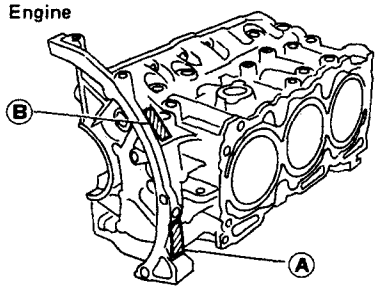

⑨ Automatic transmission

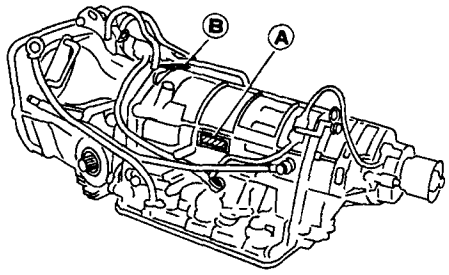

C1-011

Fig. 12

6. Recommended Fuel, Lubricants, Sealants and Adhesives

1. FUEL

The SUBARU engine is designed to use only unleaded gasoline with an octane rating of 91 AKI or higher. [This octane rating is the average of the Research Octane and Motor Octane numbers and is commonly referred to as the Anti-Knock Index (AKI).] Use of fuels containing proper detergents is recommended for good performance and emission control. The neck of the fuel filler pipe is designed to accept only an unleaded gasoline filler nozzle. Under no circumstances should leaded gasoline be used since it will damage the emission control system and may impair driveability and fuel economy.

2. FUELS CONTAINING ALCOHOL

Some gasoline blends sold at service stations contain alcohol or other oxygenates even though that fact may not be fully disclosed. If you are not sure whether there is alcohol present in the fuel, ask your service station operator. Do not use such fuels unless the gasoline/alcohol blend is suitable for your vehicle as explained below:

- The fuel should be unleaded and have an octane rating no lower than that recommended above.
- Never use fuel containing more than 10% ethanol (ethyl or grain alcohol).
- Methanol (methyl or wood alcohol) is sometimes mixed with unleaded gasoline. Methanol can be used in your vehicle ONLY if it does not exceed 5% of the fuel mixture AND it is accompanied by sufficient quantities of the proper cosolvents and corrosion inhibitors required to prevent fuel system damage. Otherwise, fuel containing methanol should not be used.
- Unleaded fuel blends which contain no more than 15% MTBE (methyl tertiary butyl ether) or other oxygenates and which are approved by the Environmental Protection Agency may be used.
- You should avoid using fuels mixed with alcohol or other oxygenates on an exclusive basis. If driving problems such as engine stalling or hard starting result when such fuels are used, immediately discontinue their use and switch back to unleaded gasoline that does not contain alcohol or other oxygenates.

Take care not to spill fuel during refueling. Fuels containing alcohol may cause paint damage.

Lubricants	Specifications	Remarks
• Engine oil	• API Classification: SF or SG	• For SAE viscosity number, refer to the following table.
• Front differential gear oil • AWD rear differential gear oil	• API Classification: GL-5	• For SAE viscosity number, refer to the following table.
• Automatic transmission and power steering fluid	• DEXRON II	—
• Coolant	• Genuine SUBARU Coolant (Part No. 000016218) (Anti-freeze, anti-corrosive ethylene glycol base)	• For further coolant specifications, refer to the following table.
• Brake fluid	• DOT3 or DOT4	• FMVSS NO. 116 • Avoid mixing brake fluid of different brands to prevent the fluid performance from degrading. • When brake fluid is added, be careful not to allow any dust into the reservoir.

Lubricants	Recommended	Application	Equivalent
• Spray lubricants	SUBARU CRC (P/N 004301003)	O_2 sensor	—
• Grease	SUNLIGHT 2 (P/N 003602010)	Steering shaft bearing	—
	Valiant grease M-2 (P/N 003608001)	Steering gearbox	—
	Niglube RX-2 (P/N 003606000)	Piston boot of rear disc brake and sliding pin	—
	(P/N 725191040)	Piston boot of front disc brake and sliding pin	—
	(P/N 003602000)	Contacting surfaces of drum brake shoes and shoe clearance adjuster	—
	(P/N 623029980)	BJ and DOJ joints of axle shafts (for AT)	—
	Slicolube G-30M (P/N 004404002)	Control cables and carburetor linkages subject to cold weather, water-pump impeller, door latch, striker, battery terminals etc.	—

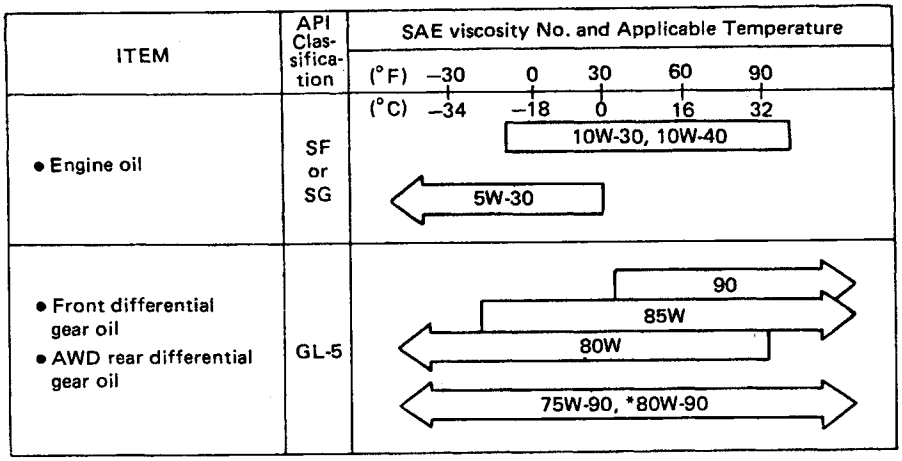

C1-012

Fig. 13

a. Each oil manufacturer has its base oil and additives. Thus, do not mix two or more brands (Except engine oil).
b. When replenishing oil, it does not matter if the oil to be added is a different brand from that in the engine, however, use oil having the API classification and SAE viscosity No. designated by SUBARU.
c. SAE 5W-30 is not recommended for sustained high speed driving.
d. If vehicle is used in desert areas or areas with very high temperatures or for other heavy duty applications, the following viscosity oils may be used:
30, 40, 10W-50, 20W-40, 20W-50
e. * For differential gear oil (AT)

Coolant Specifications							
Lowest anticipated atmospheric temperature	SUBARU coolant-to-*water ratio (Volume) %	Specification gravity					Freezing point
		at 10°C (50°F)	at 20°C (68°F)	at 30°C (86°F)	at 40°C (104°F)	at 50°C (122°F)	
Above —30°C (—22°F)	50 — 50	1.084	1.079	1.074	1.068	1.062	—36°C (—33°F)
Above —15°C (—5°F)	30 — 70	1.053	1.049	1.044	1.039	1.034	—36°C (—33°F)

* It is commended that distilled water be used.

a. Avoid using any coolant or only water other than this designated type to prevent corrosion.
b. SUBARU's engine is aluminum alloy, and so special care is necessary.

3. SEALANTS

	Recommended	Application	Equivalent
Sealant	Three Bond 1105 (P/N 004403010)	Rear differential oil drain plug, oil pressure switch, etc.	Dow Corning's No. 7038
	Three Bond 1215 (P/N 004403007)	Matching surface of oil pump, crank case, transmission case, etc. Engine service hole plug, coolant drain plug, etc.	Dow Corning's No. 7038
	Starcalking B-33A (P/N 000018901)	Sealing against water and dust entry through weatherstrips, grommets, etc.	Butyl Rubber Sealant
	Three Bond 1207C (P/N 004403012)	Matching surface of oil pan	—

4. ADHESIVES

Adhesive	Cemedine 5430L	Weatherstrips and other rubber parts, plastic and textiles except soft vinyl parts.	3M's EC-1770 EC-1368
	Cemedine 540	Soft vinyl parts, and other parts subject to gasoline, grease or oil. e.g. trim leather, gear shift boot, door inner remote cover, etc.	3M's EC-776 EC-847 EC-1022 (Spray Type)
	Cemedine 3000	Bonding metals, glass, plastic and rubber parts. Repairing slightly torn weatherstrips, etc.	Armstrong's Eastman 910
	Essex Chemical Corp's Urethane E	Windshield to body panel.	Sunstar 580

7. Tightening Torque of Standard Bolts and Nuts

1. ENGINE AND TRANSMISSION

Unit: N•m (kg-m, ft-lb)

Dia. x Pitch (mm)	5T	7T	9T	10T
4 x 0.75	1.0 — 1.5 (0.105 — 0.155, 0.8 — 1.1)	1.5 — 2.0 (0.155 — 0.205, 1.1 — 1.5)	2.5 — 3.0 (0.255 — 0.305, 1.8 — 2.2)	3.0 — 3.5 (0.305 — 0.355, 2.2 — 2.6)
5 x 0.9	2.5 — 3.0 (0.255 — 0.305, 1.8 — 2.2)	2.9 — 3.9 (0.30 — 0.40, 2.2 — 2.9)	4.9 — 5.9 (0.50 — 0.60, 3.6 — 4.3)	5.4 — 6.4 (0.55 — 0.65, 4.0 — 4.7)
6 x 1.0	4.4 — 5.4 (0.45 — 0.55, 3.3 — 4.0)	5.9 — 6.9 (0.60 — 0.70, 4.3 — 5.1)	9.4 — 10.8 (0.955 — 1.105, 6.9 — 8.0)	10 — 12 (1.0 — 1.2, 7 — 9)
8 x 1.25	12 — 14 (1.2 — 1.4, 9 — 10)	14.2 — 17.2 (1.45 — 1.75, 10.5 — 12.7)	23 — 26 (2.3 — 2.7, 17 — 20)	25 — 28 (2.5 — 2.9, 18 — 21)
10 x 1.25	25 — 28 (2.5 — 2.9, 18 — 21)	30 — 36 (3.1 — 3.7, 22 — 27)	46 — 54 (4.7 — 5.5, 34 — 40)	49.5 — 58.4 (5.05 — 5.95, 36.5 — 43.0)
12 x 1.5	41 — 49 (4.2 — 5.0, 30 — 36)	53 — 63 (5.4 — 6.4, 39 — 46)	84 — 98 (8.6 — 10.0, 62 — 72)	88 — 106 (9.0 — 10.8, 65 — 78)
14 x 1.6	71 — 84 (7.2 — 8.6, 52 — 62)	88 — 106 (9.0 — 10.8, 65 — 78)	139 — 165 (14.2 — 16.8, 103 — 122)	147 — 175 (15.0 — 17.8, 108 — 129)

2. BODY

Unit: N•m (kg-m, ft-lb)

	Dia. (mm)	4T	7T	9T
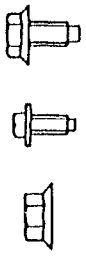 B1-026	4	1.7 — 2.6 (0.17 — 0.27, 1.2 — 2.0)	—	—
	5	2.9 — 5.9 (0.30 — 0.60, 2.2 — 4.3)	—	—
	6	5.4 — 9.3 (0.55 — 0.95, 4.0 — 6.9)	—	—
	8	12.7 — 22.6 (1.30 — 2.30, 9.4 — 16.6)	22.6 — 42.2 (2.30 — 4.30, 16.6 — 31.1)	31.4 — 51.0 (3.20 — 5.20, 23.1 — 37.6)
	10	27.5 — 47.1 (2.80 — 4.80, 20.3 — 34.7)	51.0 — 86.3 (5.20 — 8.80, 37.6 — 63.7)	62.8 — 107.9 (6.40 — 11.00, 46.3 — 79.6)
	12	52.0 — 85.3 (5.30 — 8.70, 38.3 — 62.9)	88.3 — 156.9 (9.00 — 16.00, 65.1 — 115.7)	117.7 — 196.1 (12.00 — 20.00, 86.8 — 144.7)
Including bolt or nut with washer or spring washer only 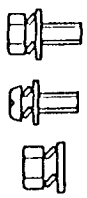 B1-027	4	1.2 — 2.2 (0.12 — 0.22, 0.9 — 1.6)	—	—
	5	2.5 — 4.4 (0.25 — 0.45, 1.8 — 3.3)	—	—
	6	4.4 — 7.4 (0.45 — 0.75, 3.3 — 5.4)	—	—
	8	9.8 — 17.7 (1.00 — 1.80, 7.2 — 13.0)	17.7 — 31.4 (1.80 — 3.20, 13.0 — 23.1)	23.5 — 39.2 (2.40 — 4.00, 17.4 — 28.9)
	10	22.6 — 36.3 (2.30 — 3.70, 16.6 — 26.8)	37.3 — 66.7 (3.80 — 6.80, 27.5 — 49.2)	48.1 — 83.4 (4.90 — 8.50, 35.4 — 61.5)
	12	39.2 — 64.7 (4.00 — 6.60, 28.9 — 47.7)	68.6 — 117.7 (7.00 — 12.00, 50.6 — 86.8)	88.3 — 147.1 (9.00 — 15.00, 65.1 — 108.5)

The mark is embossed on the bolt head as follows:

4T — 4 **9T — 9**
5T — 5 **10T — 10**
7T — 7

8. Lifting, Towing and Tie-down Points

Be sure to lift, tow and tie-down the vehicle at the designated positions.

1. GARAGE JACK

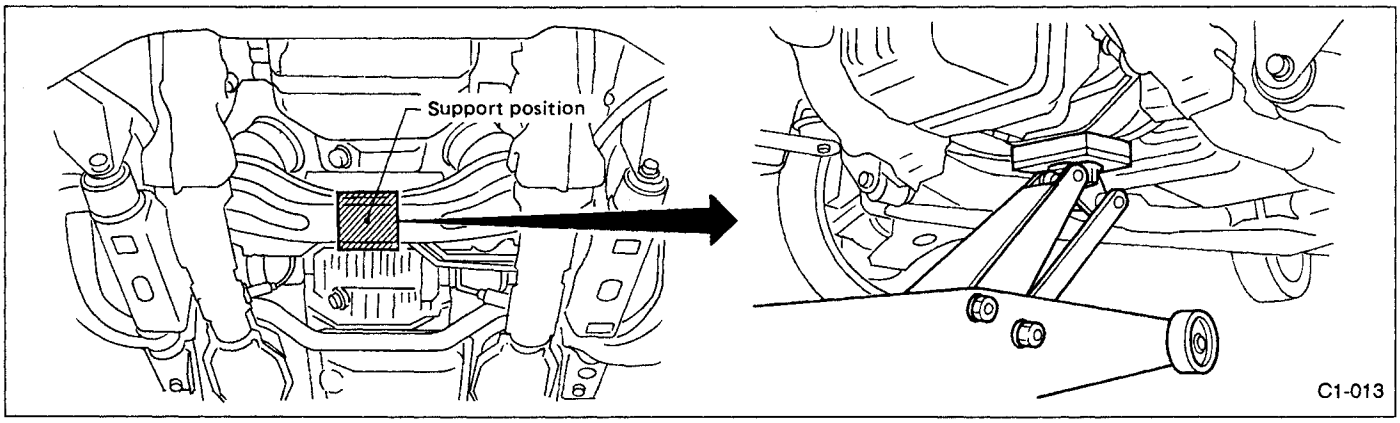

Fig. 14

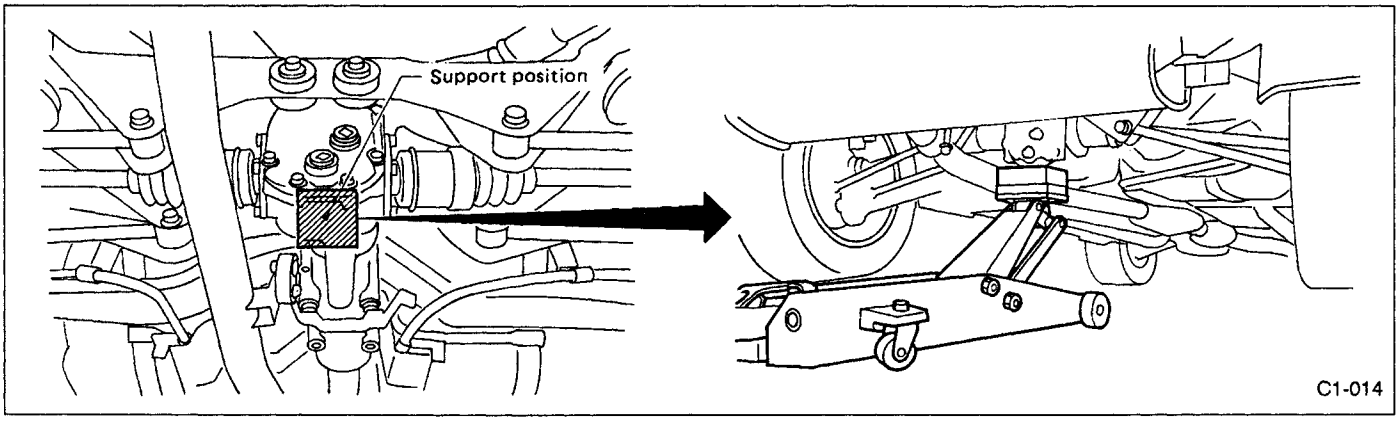

Fig. 15

a. Never get under the vehicle while it is supported by a jack.
b. When jacking up the vehicle, place chocks to hold wheels.
c. After jacking up the vehicle with garage jack, be sure to support the vehicle with safety stands.
d. Be sure to lift vehicle at the same four positions as those or screw jack.

2. SCREW-JACK, LIFT AND SAFETY STAND

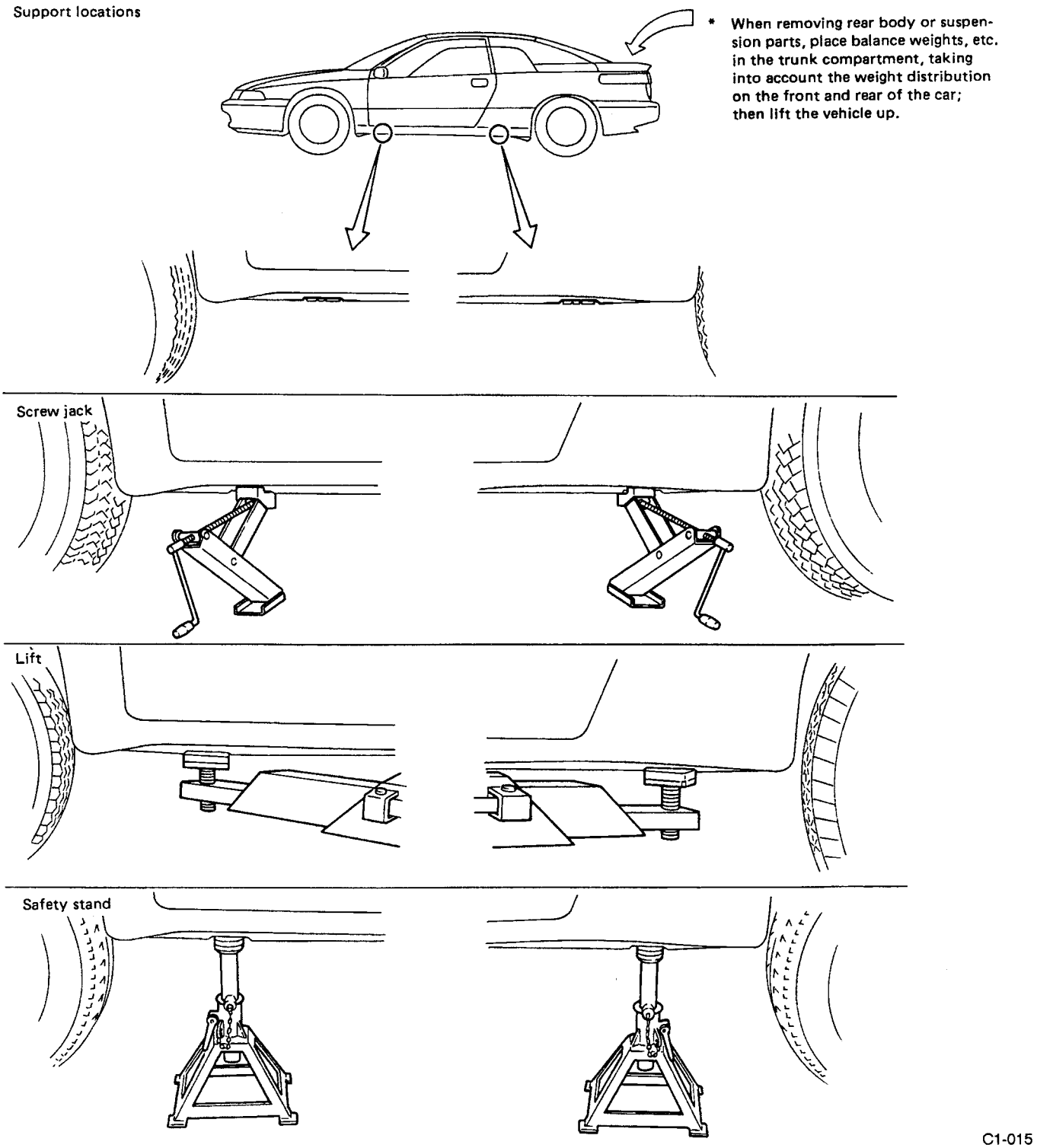

Fig. 16

a. Never get under the vehicle while it is supported only by the jack. Always use safety stands to support body when you have to get under the car.
b. Block the wheels diagonally by wheel chocks.
c. Make sure the jack is set at the correct position on the flange of side still.
d. Be careful not to set the jack at the air flap portion.

3. TOWING AND TIE-DOWN HOOKS

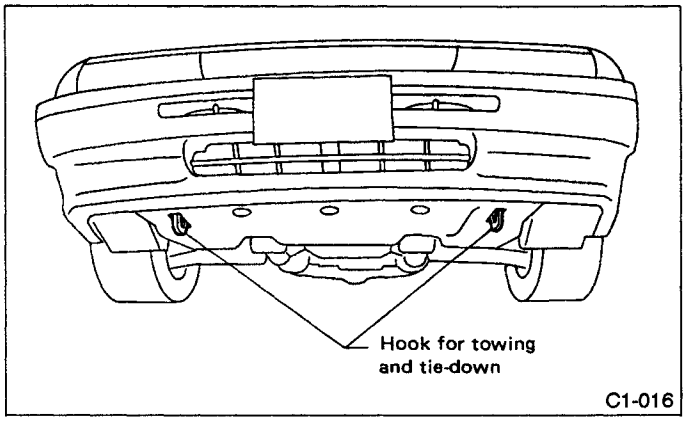

Fig. 17

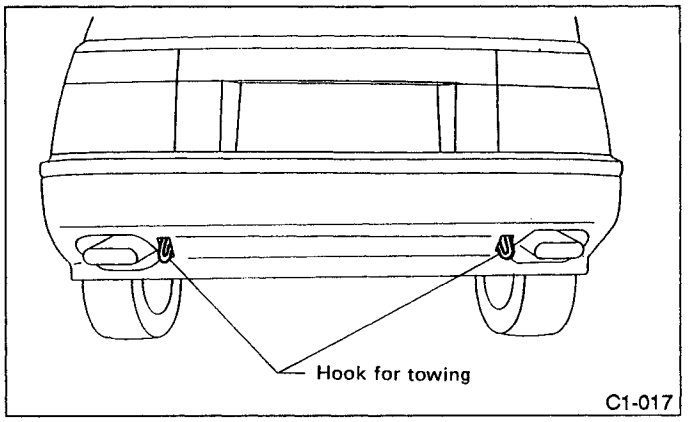

Fig. 18

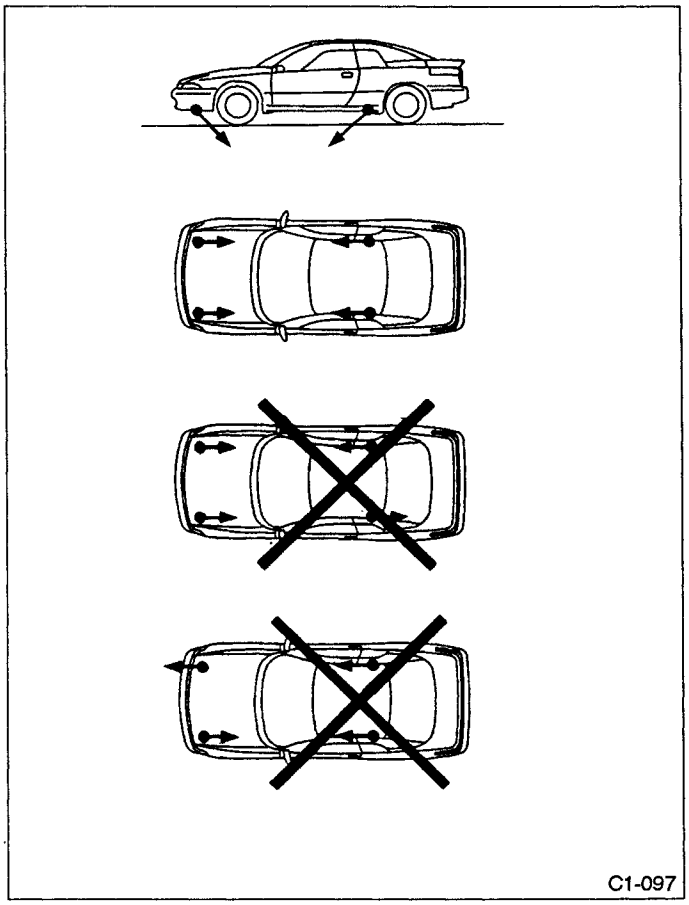

Fig. 19

a. Avoid towing another car with front towing hooks.
b. Do not tow a vehicle which is heavier than towing vehicle.
c. Do not apply excessive lateral load to towing hook.
d. Wrap the towing rope with cloth to prevent damaging bumper, etc.
e. Keep the vehicle level during towing.
f. Tie the front and rear tie-down hooks in the same direction.

4. TIE-DOWN SERVICE HOLES

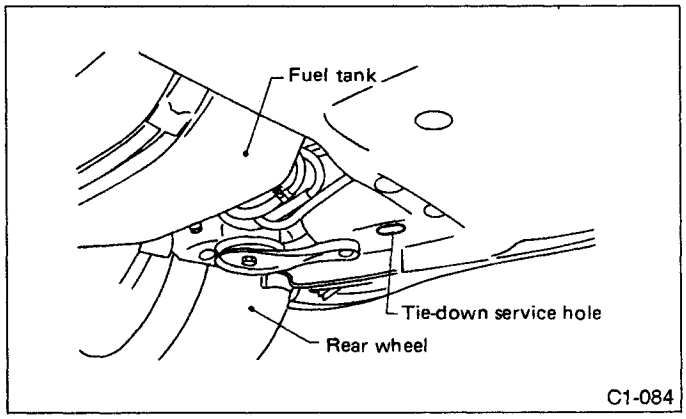

Fig. 20

9. Front Hood Stay Installation Points

1. FRONT HOOD STAY

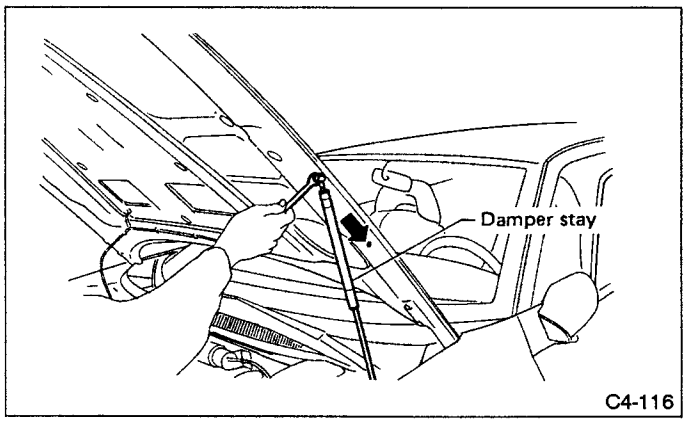

Fig. 21

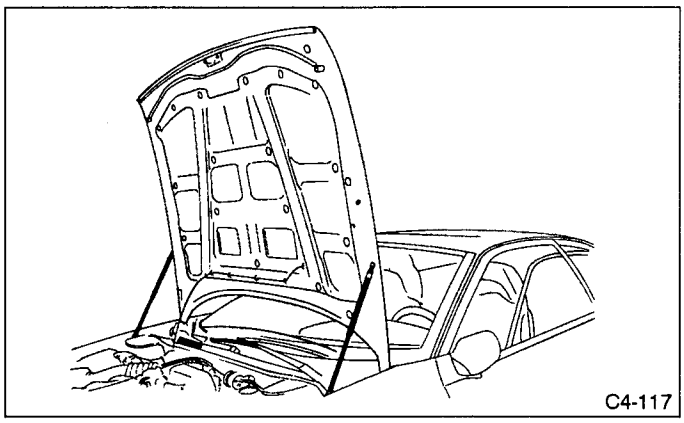

Fig. 22

a. If front hood must be opened fully for ease of operation, change the mounting position of the front hood stay.

SUBARU

SVX

1992

	Page
1. Pre-road Test Inspection	2
A: HOOD OPERATION	2
B: DOOR OPERATION AND DOOR LOCK	2
C: TRUNK LID AND FUEL LID OPERATION	2
D: BRAKE FLUID LEVEL AND BRAKE PIPING INSTALLATION	2
E: BATTERY FLUID LEVEL AND BATTERY INSTALLATION	3
F: COOLANT LEVEL AND COOLING FAN INSTALLATION	4
G: ENGINE OIL LEVEL	4
H: DIFFERENTIAL GEAR OIL LEVEL	5
I: BELT TENSION ...Refer to 1-5 [01A0]	—
J: AIR CLEANER	6
K: JACK INSTALLATION	6
L: WINDSHIELD WASHER AND WINDSHIELD WIPERS	6
M: REAR WINDOW WASHER AND WIPER	6
N: WHEEL NUTS FOR LOOSENESS AND TIRE INFLATION PRESSURE	7
O: SEAT ADJUSTER AND SEAT BELTS	7
P: FUSES	8
Q: DIAGNOSIS CONNECTOR	8
R: PREPARATION FOR UNDERSIDE INSPECTION ... Refer to 1-3 [0602]	—
S: AIRBAG INDICATOR LIGHT	9
T: LIGHTS AND SWITCHES	9
U: INSTALLATION OF STEERING COMPONENTS	9
V: EXHAUST PIPE AND MUFFLER	9
W: TIE-DOWN SERVICE HOLES	10
X: FUEL SYSTEM FOR LEAKAGE	10
2. Road Test Inspection	10
A: OPERATION OF INDICATOR LIGHTS AND GAUGES	10
B: TACHOMETER, RADIO, ETC.	10
C: DRIVING TEST	11
3. Post-road Test Inspection	13
A: IGNITION TIMING ...Refer to 2-2 [02A0]	—
B: AUTOMATIC TRANSMISSION FLUID (ATF) LEVEL	13
C: POWER STEERING FLUID LEVEL	13
D: TOE	13
E: UNDERSIDE	13
F: WATER LEAKAGE	13
G: EXTERNAL APPEARANCE AND EQUIPMENT	14

1. Pre-road Test Inspection

A: HOOD OPERATION

CHECK POINTS
1. Operation of hood release and lock
2. Condition of lock
3. Fitting hood

B: DOOR OPERATION AND DOOR LOCK

CHECK POINTS
1. Door "Open-close" operation
2. Operation of door release and lock
3. Loose or damage parts
4. Position of door window glass
5. Operation of power window switches
6. Auto-door locking operation

C: TRUNK LID AND FUEL LID OPERATION

CHECK POINTS
1. Trunk lid and fuel lid "open-close" operation
2. Operation of trunk lid (release and lock)
3. Fitting of trunk lid and fuel lid
4. Operation of trunk lid opener release lever

D: BRAKE FLUID LEVEL AND BRAKE PIPING INSTALLATION

CHECK POINTS
1. Fluid level in brake reserve tank
2. Wiring of fluid leveller and its operation
3. Brake booster, master cylinder and pressure control valve for proper installation; brake pipe, brake hose and connectors for proper fitting
4. Leakage in any of the above

- Check fluid leveller operation while pushing it down with a screwdriver.

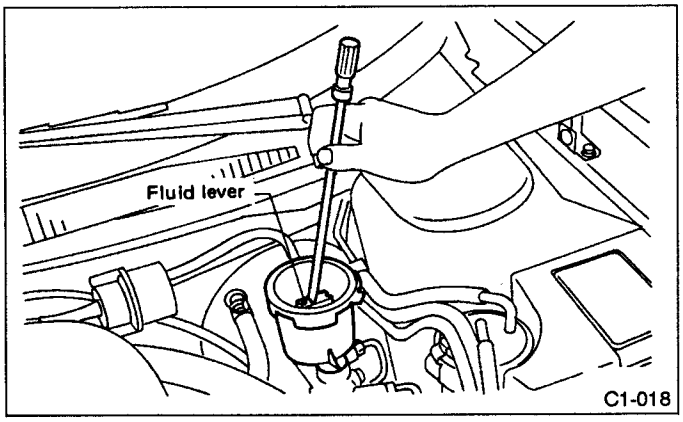

Fig. 1

Recommended brake fluid

FMVSS No. 116, fresh DOT3 or DOT4 brake fluid

a. The fluid level must be kept at "MAX" level.
b. Do not mix different brands of brake fluid.
c. When adding brake fluid, be careful not to allow any dirt, water, or oil around the fluid tank to enter it.
d. Never use engine oil, gear oil, or any mineral oil.
e. Use extreme care not to allow any water to get into the fluid; water in the brake fluid will lower the fluid's boiling point and cause vapor-lock.
f. Use special care not to spill any brake fluid on the vehicle's painted surfaces, because it will quickly erode them. In case of an accident, wipe it off as quickly and as cleanly as possible.
g. If the too much brake fluid is missing, check the brake line for possible leakage.
h. After adding brake fluid, any excess must be stored in a tightly sealed container.
i. When checking the operation of leveller, use clean screwdriver or the like and be careful not to allow dirt or dust to get into the tank.

E: BATTERY FLUID LEVEL AND BATTERY INSTALLATION

CHECK POINTS

1. **External parts**
2. **Electrolyte level**
3. **Specific gravity**

1. Check for the existence of dirt or cracks on the battery case, top cover, vent plugs, and terminal posts. If necessary, clean with water and wipe with a dry cloth. Apply a thin coat of grease on the terminal posts to prevent corrosion.

Check the electrolyte level in each cell. If the level is below MIN LEVEL, bring the level to MAX LEVEL by pouring distilled water into the battery cell. Do not fill beyond MAX LEVEL.

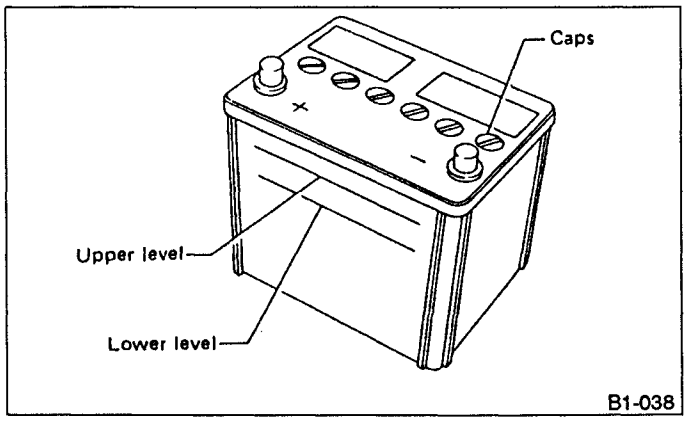

Fig. 2

a. Electrolyte has toxicity; be careful handling the fluid.
b. Avoid contact with skin, eyes or clothing. Especially contact with eyes, flush with water for 15 minutes and get prompt medical attention.
c. Batteries produce explosive gasses. Keep sparks, flame, cigarettes away.
d. Ventilate when charging or using in enclosed space.

3. The specific gravity of electrolyte can be measured with a hydrometer. Holding the glass tube vertically, slowly draw the liquid into the tube. Take the reading on the float scale at the highest point of the liquid.
When reading, the eye should be level with the surfaced of the liquid.

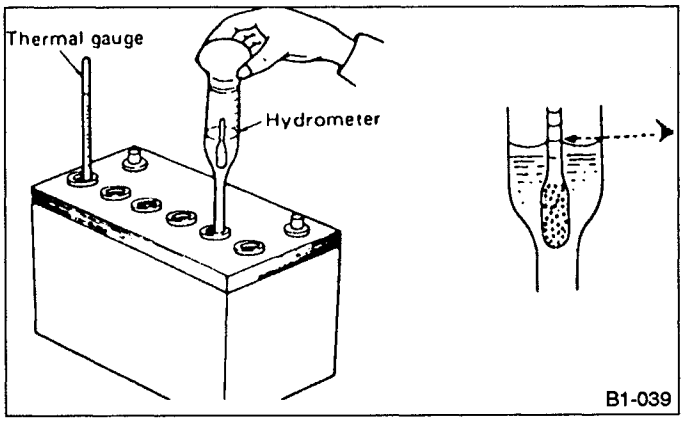

Fig. 3

Serviceable specific gravity

1.220 — 1.280 at 20°C (68°F)

If the specific gravity reading is below 1.220 at 20°C (68°F), the battery must be recharged and, if necessary, the specific gravity of the electrolyte must be adjusted. The specific gravity changes according to temperature. The standard temperature is considered to be 20°C (68°F).
When measuring the specific gravity, calculate as follows:

$$S = St + 0.0007 (t - 20)$$

S = Specific gravity corrected for 20°C (68°F)
St = Measured specific gravity at t°C
t = Electrolyte temperature on centigrade scale (°C)
0.0007 = Temperature coefficient
[EXAMPLE]
A hydrometer reading of 1.273 at 30°C (86°F) is corrected to 1.280 at 20°C (68°F), indicating that the battery is fully charged. On the other hand, a reading of 1.251 at − 10°C (14°F) is corrected to 1.230 at 20°C (68°F), indicating that the battery is partially charged.

F: COOLANT LEVEL AND COOLING FAN INSTALLATION

CHECK POINTS

1. Coolant level
2. Cooling fan motor and wiring
3. Water leakage and hose damage

a. Always inspect and add at reserve tank when engine is cold.
b. The level must be kept at "FULL" level.
c. Use only genuine SUBARU Coolant (P/N000016218).
d. Avoid using any coolant or only water other than this designated type to prevent corrosion.
e. SUBARU's engine is aluminum alloy, and so special care is necessary.
f. If reserve tank is empty, check coolant level in radiator. Add coolant up to filler neck of radiator, if necessary.
g. The radiator is a high pressure type. Never attempt to open the radiator cap when the coolant's temperature is high; otherwise boiling water will spurt out. Be sure to wait until the engine cools down before opening the radiator cap.
h. When retightening the hose clamps, be careful not to over-tighten them, as doing so could damage the hose.

G: ENGINE OIL LEVEL

CHECK POINTS

- Engine oil level

1) Park vehicle on a level surface.
2) Remove oil level gauge and wipe it clean.
3) Reinsert the level gauge all the way. Be sure that the level gauge is correctly inserted with the symbol on the top appearing as shown in the figure 4.
4) Remove level gauge again, and check to ensure that oil level is between F and L marks on gauge rod. If the engine oil level is below the "L" line, add oil to bring the level up to the "F" line (Fig. 5).
a. Before checking oil level, ensure that engine is cold.
b. Do not check oil level immediately after engine or vehicle has stopped; wait at least 10 minutes.
c. Just after driving or while the engine is warm, the engine oil level may be in the range between the "F" line and the "notch" mark. This is caused by thermal expansion of the engine oil.
d. To prevent overfilling the engine oil, do not add oil above the "F" line when the engine is cold.

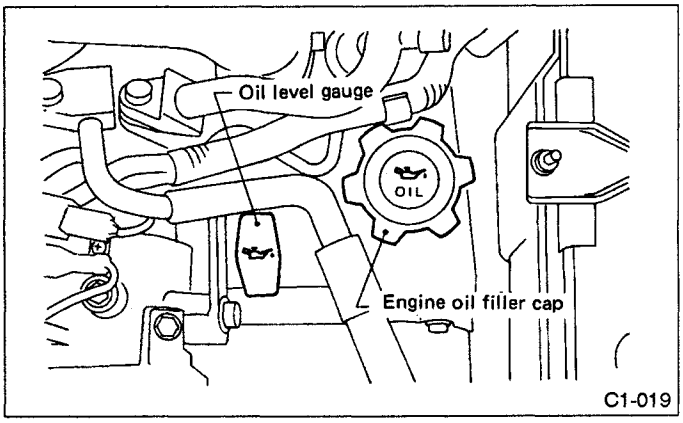

Fig. 4

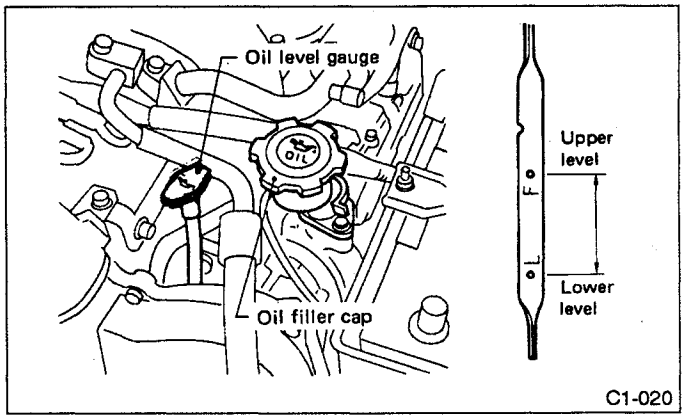

Fig. 5

Engine oil capacity:
Upper level
6.0 ℓ (6.3 US qt, 5.3 Imp qt)
Lower level
5.0 ℓ (5.3 US qt, 4.4 Imp qt)

- Recommended oil

API classification: SF or SG

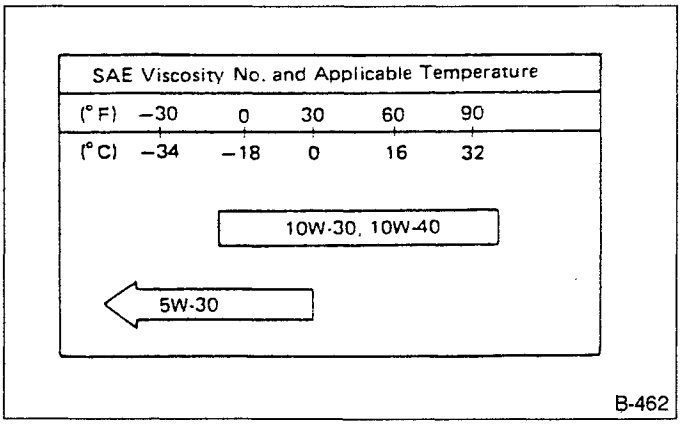

Fig. 6

a. When replenishing oil, it does not matter if the oil to be added is a different brand from that in the engine, however, use oil having the API classification and SAE viscosity No. designated by SUBARU.
b. SAE 5W-30 is not recommended for sustained high speed driving.
c. If vehicle is used in desert areas or areas with very high temperatures or for other heavy dry applications, the following viscosity oils may be used:

"30, 40, 10W-50, 20W-40, 20W-50"

H: DIFFERENTIAL GEAR OIL LEVEL

CHECK POINTS

1. **Level of differential gear oil for automatic transmission**
2. **Level of rear differential gear oil for AWD model**

- The level should be within the specified range marked on the gauge.

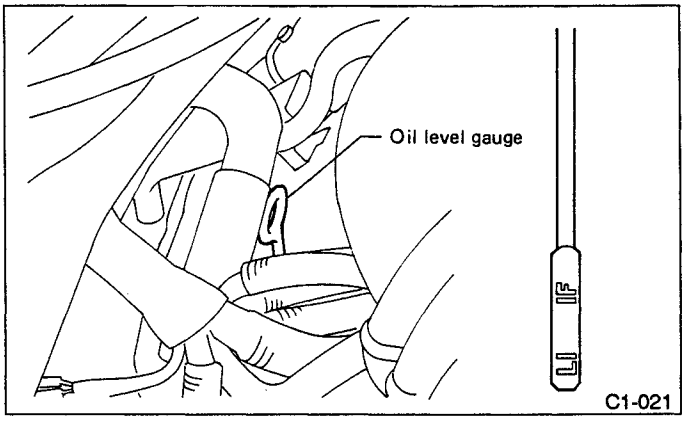

Fig. 7 Differential for automatic transmission

When inserting the level gauge into differential for automatic transmission, align the protrusion on the side of the top part of the level gauge with the notch in the gauge hole.

- Insert a finger into the filler port to determine whether the oil is level with the port opening.

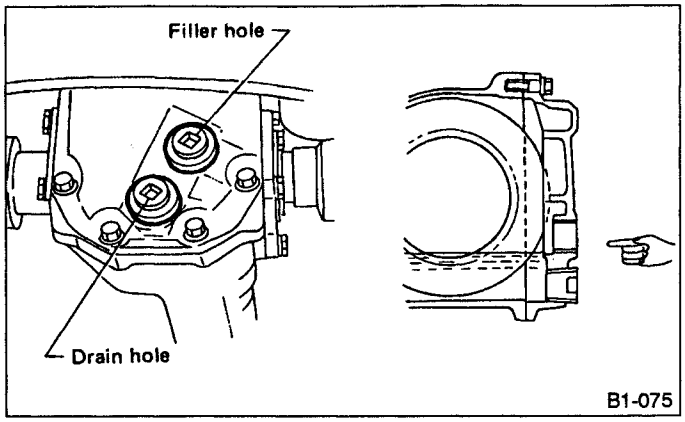

Fig. 8 AWD rear differential

- Recommended oil

a. For rear differential gear

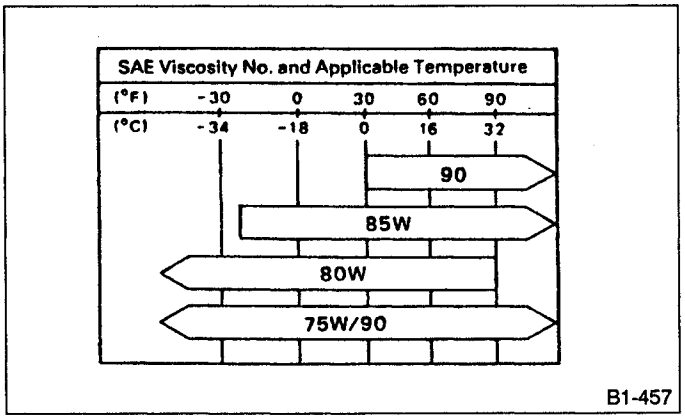

Fig. 9

b. For differential gear (AT)

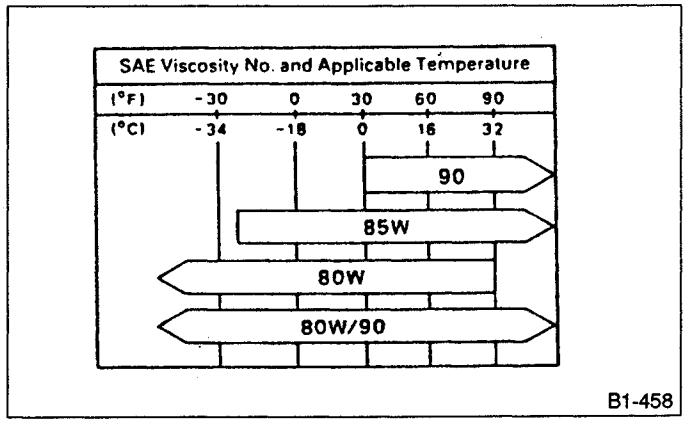

Fig. 10

c. Oil grade is classified as API classification GL-5.
d. Oil manufactures each have their own base oils and additives. Do not mix different brands together.

J: AIR CLEANER

CHECK POINTS
1. Contamination of air cleaner element
2. Related parts

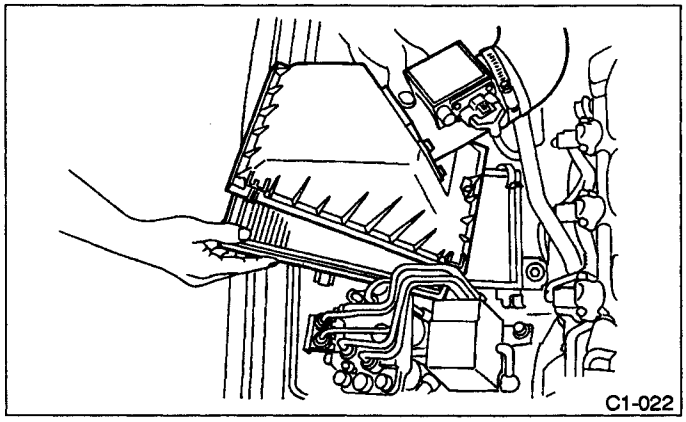

Fig. 11

a. The air cleaner element is a viscous type, which should not be washed or cleaned.
b. If the air cleaner element is broken or damaged, replace it with a new one.

K: JACK INSTALLATION

CHECK POINTS
- Installed condition of jack

L: WINDSHIELD WASHER AND WINDSHIELD WIPERS

CHECK POINTS
1. Installation of windshield washer tank
2. Checking of fluid level
3. Direction and quantity of windshield washer fluid sprayed
4. Operation of windshield wiper and washer

- In areas where water freezes in winter, use SUBARU windshield washer fluid (003406401) or an equivalent.

The relationship between fluid to water ratio and freezing point is as follows:

Fluid to water ratio (%)	Freezing point °C (°F)
30	– 12 (10)
50	– 20 (– 4)
100 (undiluted)	– 45 (– 49)

a. Before raising wiper arm up, set wiper mode switch under lower cover to "WINTER".
b. Before checking the windshield wiper, remove the blade protective cover and clean the windshield glass.

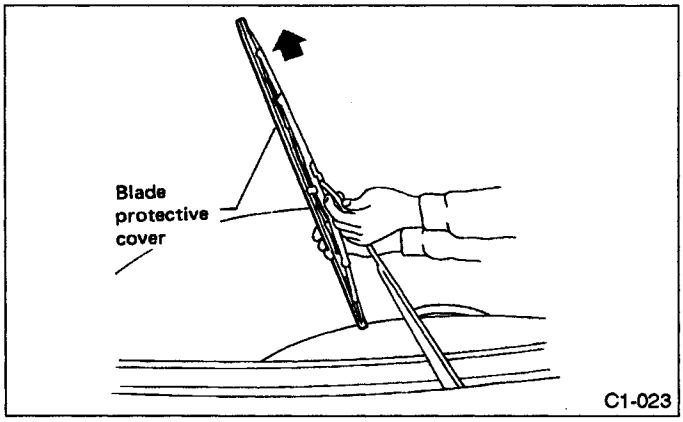

Fig. 12

c. Do not operate the windshield wiper when the reservoir is empty.
d. Before operating the windshield wipers, be sure to eject windshield washer fluid onto the windshield.
If the windshield is dry, the wipers' operating speed and angle of operation will be different from when it is wet.
e. If the position at which washer fluid is ejected is wrong: Using an eyeleteer or similar tool, adjust the direction of the nozzle, be careful not to damage the nozzle hole.
f. Do not operate the windshield washer continuously for more than 10 seconds at a time.

M: REAR WINDOW WASHER AND WIPER

CHECK POINTS
1. Quantity of washer fluid
2. Direction and quantity of washer fluid sprayed
3. Operation of rear window washer and wiper

N: WHEEL NUTS FOR LOOSENESS AND TIRE INFLATION PRESSURE

CHECK POINTS

1. **Wheel nut tightening torque**
2. **Tire inflation pressure and tire specification**
3. **Damage to tire and rim**

Tightening torque:
98 — 118 N•m (10.0 — 12.0 kg-m, 72 — 87 ft-lb)
Tire pressure:
Front: 226 kPa (2.3 kg/cm², 33 psi)
Rear: 196 kPa (2.0 kg/cm², 28 psi)
T type tire: 412 kPa (4.2 kg/cm², 60 psi)

a. When checking the wheel nuts, be sure to use a torque wrench, and tighten the nuts to the specified torque.
b. After inspecting and adjusting the tire pressure, be sure to put the valve cap back.

O: SEAT ADJUSTER AND SEAT BELTS

CHECK POINTS

1. **Front and rear seats, and their facing materials**
2. **Front seat operation**
3. **Rear seat folding operation**
4. **Seat belts and their fit**
3. **Installing procedure for child anchor**

- Automatic belt type

a. After inserting shoulder belt into emergency release buckle, open and close the door to check that shoulder anchor moves smoothly without binding.
b. Check that tongue unlatches when emergency release button is pushed. Also check that tongue clicks and latches when inserted into place.
c. The seat belt warning light on the instrument panel comes on for approximately six seconds when the ignition switch is turned "ON".
d. And the warning chime sounds if the driver's lap belt is not fastened or Automatic shoulder belt-emergency release buckle is released.
e. Make sure that the warning system works normally.

- Installing procedure for child anchor

When top strap anchor is used for rear seat:
1) Take out the anchor set from inside the glove box and check that its components are assembled as shown in Fig.

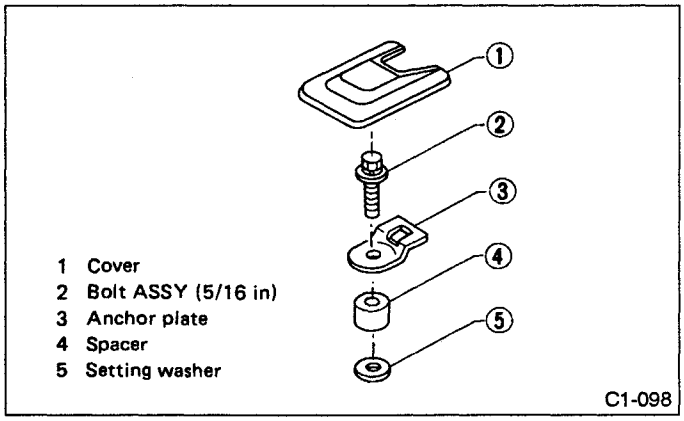

Fig. 13

2) The anchor installation points are covered with caps. Remove the cap at the desired anchor installation points.

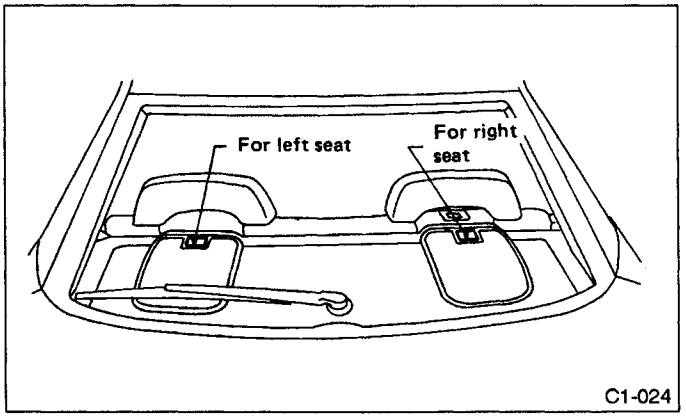

Fig. 14

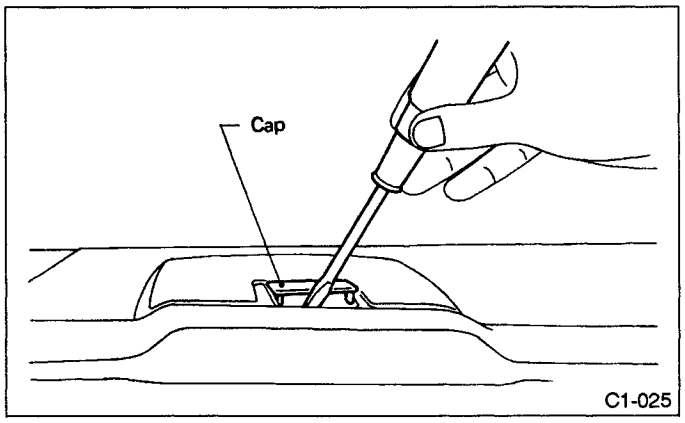

Fig. 15

3) Install the anchor at the installation point.
Tighten the bolt so that the anchor is completely secured.
4) Attach the cover to the anchor plate.
5) Route top strap under pillow.
6) Attach the hook of the top strap to the anchor.

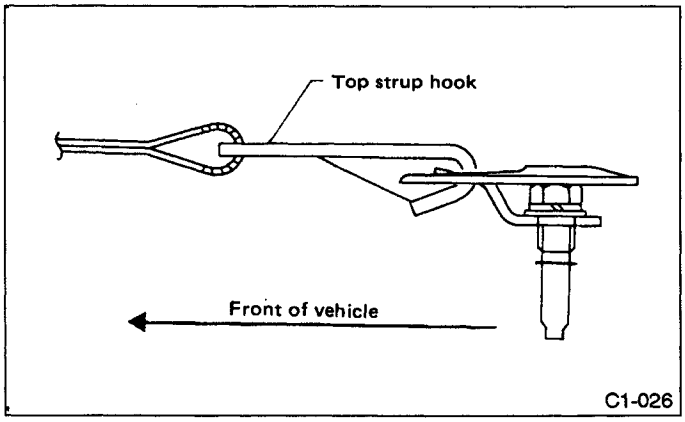

Fig. 16

a. Be sure to install the plate anchor set in the correct direction.
b. Before tightening the plate anchor set, position the plate in the pawl of the cover. Do not allow the cover base to be caught between the plate anchor and spacer.
c. Always use a genuine top strap anchor.
d. Be careful not to scratch seat cover when installing top strap hook.

P: FUSES

CHECK POINTS
1. **Fuse installation**
2. **Spare fuse**

Fuse as shown in Figure 17 is disconnected to avoid discharging the battery.
Insert fuse (10A) in the main fuse box inside the engine compartment.
Use fuse indicated by arrow in Figure 17.

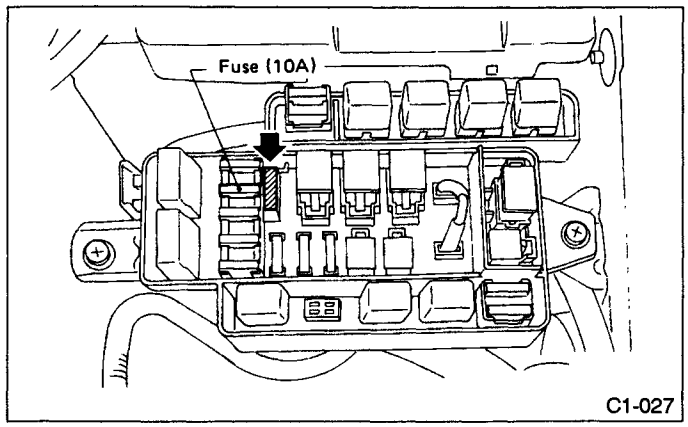

Fig. 17

Q: DIAGNOSIS CONNECTOR

CHECK POINTS
1. **Check engine light flashing.**
2. **Jumper connector removal.**

- Check the check engine light flashing.

a. With the jumper connector connected, set the ignition switch to ON (with engine OFF and ON). Flashing of the check engine light indicates no trouble.
b. If the check engine light displays a trouble code when the ignition switch is set to ON (with engine OFF), or if the check engine light illuminates with engine ON, this indicates that a trouble has occurred. Check Troubleshooting. Refer to 2-7: FUEL INJECTION SYSTEM.
c. If engine fails to turn over when the ignition switch is set to START, check the spark plugs. Refer to 6-1: Spark Plug [W4A0].

- Check the jumper connector removal.

a. Disconnect the jumper connector after checking that there is no trouble in the engine.
1) Remove the A pillar lower trim of driver side front pillar.

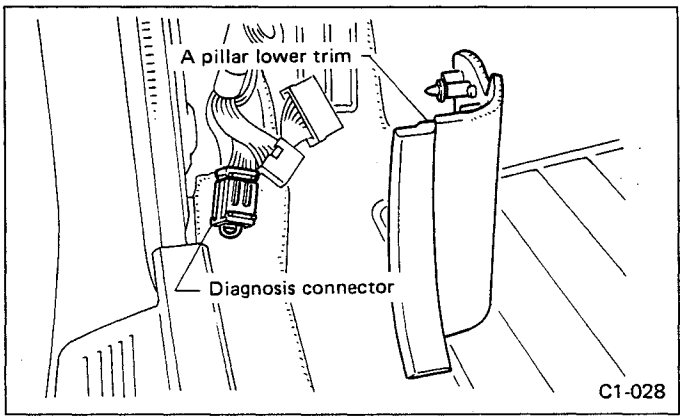

Fig. 18

2) Disconnect the jumper connector from diagnosis connector.

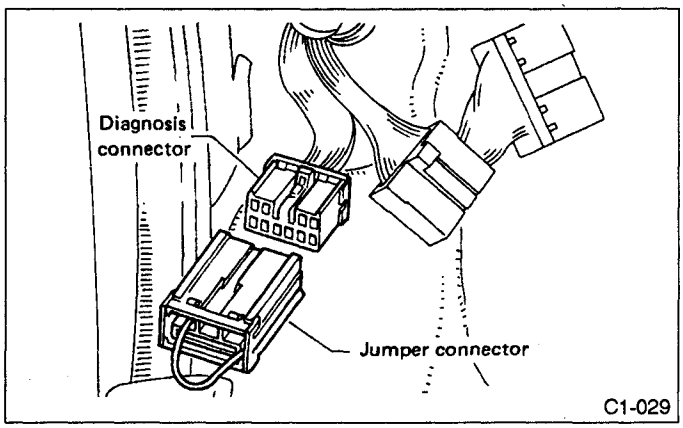

Fig. 19

3) Discard jumper connector after removal.

S: AIRBAG INDICATOR LIGHT

CHECK POINTS
- **Operation of AIRBAG indicator light**

When the ignition switch is turned to the "ON" position, the Supplemental Restraint System (AIRBAG) indicator light will come on for about 8 seconds, to show normal system operation, and then turn off.

T: LIGHTS AND SWITCHES

CHECK POINTS
1. **Visual inspection of lights (installation, damage, dirty lenses, water inside, etc.)**
2. **Operation of all lights and switches**
3. **Horn operation**
4. **Operation of heater and ventilator**
5. **Removing the clip for room light switch**

U: INSTALLATION OF STEERING COMPONENTS

CHECK POINTS
1. **Installation of universal joints**
2. **Steering gear box for looseness, play, or backlash, and boots for damage**
3. **Tie-rod and tie-rod end for proper installation, or damage**

1. Check the universal joint for looseness.
When checking, turn ignition switch to "ACC" position.

Tightening torque:
21 — 26 N•m (2.1 — 2.7 kg-m, 15 — 20 ft-lb)

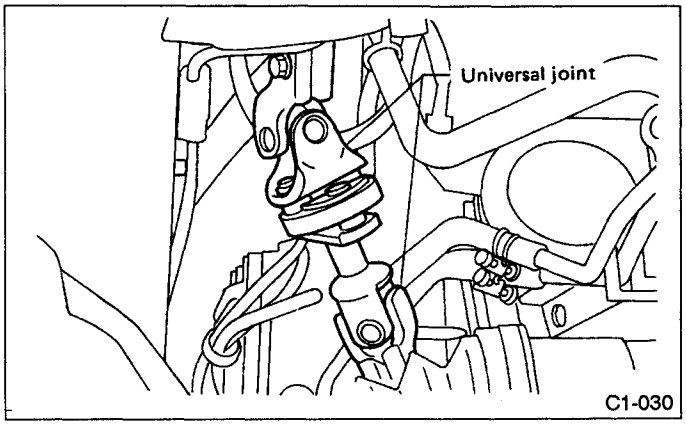

Fig. 20

2. Check the gear box mounting bolt for looseness.

Tightening torque:
47 — 71 N•m (4.8 — 7.2 kg-m, 35 — 52 ft-lb)

3. Check the tie-rod end lock nut for looseness.

Tightening torque:
78 — 88 N•m (8.0 — 9.0 kg-m, 58 — 65 ft-lb)

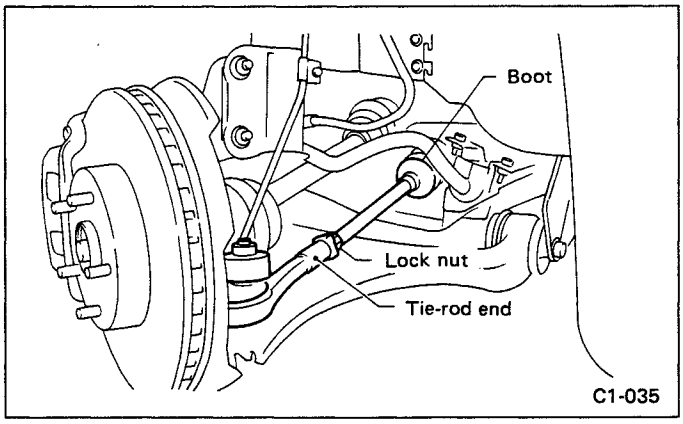

Fig. 21

4. Carefully check the root portion of the boots, and the condition of the clips.

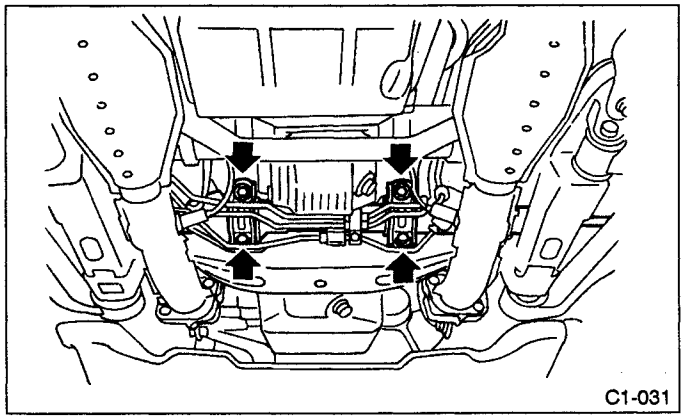

Fig. 22

V: EXHAUST PIPE AND MUFFLER

CHECK POINTS
1. **Exhaust system's installation**
2. **Exhaust gas leakage**

1. Check the exhaust system's installation for looseness, damage and possible interference with other parts. (Refer to Chapter 2-9 for tightening torque.)
When the engine is running, and for a short time after it is stopped, the exhaust system remains very hot; use extreme care and don't get burnt during this evolution.

W: TIE-DOWN SERVICE HOLES

CHECK POINTS
- **Installation of plugs**

1. Install plugs which are stored in console box into tie-down service holes in rear gusset frame.

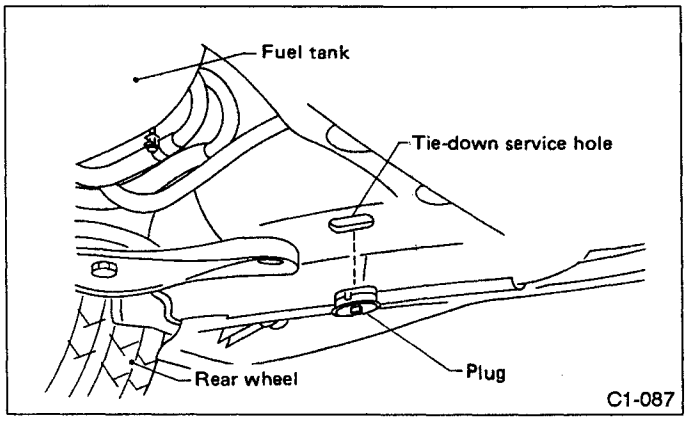

Fig. 23

X: FUEL SYSTEM FOR LEAKAGE

CHECK POINTS
1. **Installation of fuel hose and pipe. And condition of clamps**
2. **Fuel system for leakage**

1. Check the fuel hose's layout, and also search for interference with other parts, twists, or damage, check the condition of the clamps.
Check the fuel and air breather pipes visually or by feeling with your fingers from the underside. Retighten the clamps if necessary.
a. When retightening the clamps, do not tighten them excessively.
b. When checking the fuel system, use extreme care to prevent accidental fires.
2. Without starting the engine, turn the ignition switch to the ON position, and operate the fuel pump to pressurize the fuel system. Then check the fuel system for leakage.

2. Road Test Inspection

A: OPERATION OF INDICATOR LIGHTS AND GAUGES

CHECK POINTS
1. **Operation of indicator lights**
2. **Operation of gauges**

Check the operation according to the "Owner's manual".
a. Perform this inspection with the selector lever in the "P" position.
b. Set the parking brake.
c. Do not race the engine excessively.

B: TACHOMETER, RADIO, ETC.

CHECK POINTS
- **Operation of tachometer, radio, cigarette lighter, etc.**

- Tachometer

Race the engine two or three times, and check the tachometer's operation.
Do not race the engine more than necessary.
- Radio

Check the operation according to the "Owner's manual".
- Cigarette lighter

To operate, push in the knob completely and wait for a moment. The lighter will click out of holder automatically when ready to use.
CAUTION:
a. To avoid the possibility of being burned, do not hold the cigarette lighter in by hand. This may also cause damage to the lighter heating element.
b. When replacing the knob, it is recommended that you use only a genuine part. If you use either non-genuine parts or any combination of parts different from original knob-and-socket combination, it may cause overheating due to a short circuit.

C: DRIVING TEST

CHECK POINTS

1. **Operation of foot brake and parking brake**
2. **Operation of selector lever (Automatic transmission models only)**
3. **Operation of steering and position of steering wheel**
4. **Operation of turn signal cancel cam**
5. **Operation of ventilation system and heater**
6. **Abnormal noises or vibration**
7. **Operation of cruise control**

1. Check the foot and parking brakes' operation.

1) Drive on a dry, level, paved road, and apply normal braking. Look for uneven or improper operation, or pulling to one side.

Be sure to perform this test in a safe area.

2) Press the brake pedal in two or three times, and keep it fully depressed. Make sure that the brake can be kept that way for at least five seconds. Also check for air in the brake system, or brake fluid leakage.

3) Perform the adjustment of operating rod ASSY as follows:

(1) Be sure engine is off. (No vacuum is applied to brake booster).

(2) There should be play between brake booster clevis and pin at brake pedal installing portion.

[Depress brake pedal pad with a force of less than 10 N (1 kg, 2 lb) to a stroke of 1 to 3 mm (0.04 to 0.12 in).]

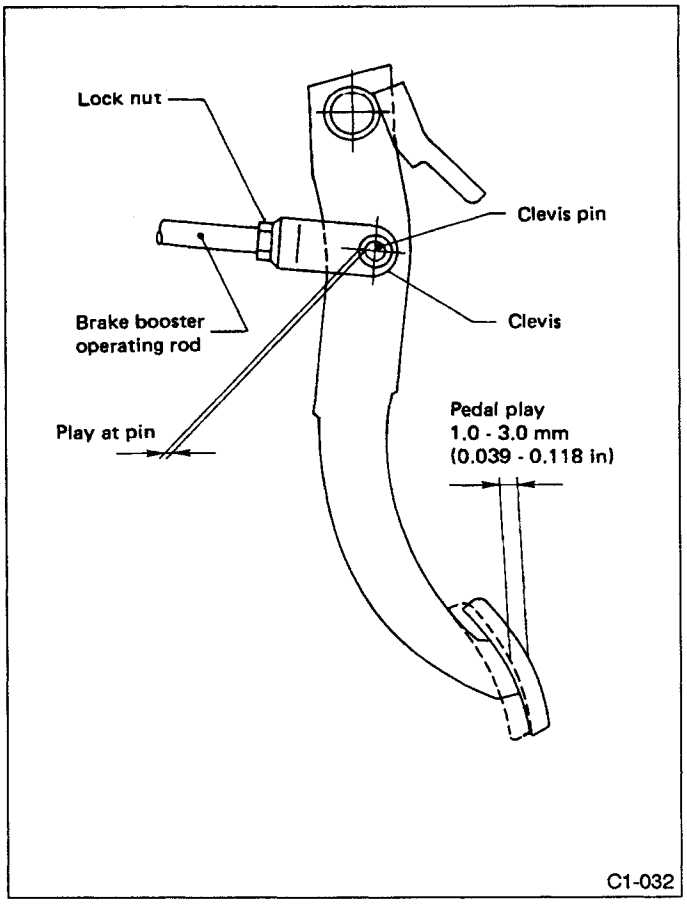

Fig. 24

(3) Depress the surface of brake pad by hand.

(4) If there is no free play between clevis pin and clevis, loosen lock nut for operating rod and adjust operating rod by turning in the direction that shortens it.

(5) After adjustment, make sure there is no brake dragging.

4) Pull the parking brake lever completely out, and check its operation. Also check the ratchet for normal functioning.
Check the parking brake as follows: With the engine running, pull the parking brake lever completely out, and place the gear shift lever in 1st gear. Run the engine slightly faster than idle, and engage the clutch. The engine should stall.
If the parking brake is functioning normally, the engine will stall; if not, the vehicle will continue to roll.

Parking brake lever stroke:
Standard:
6 — 7 notches/196 N (20 kg, 44 lb)

2. Operation of selector lever (Automatic transmission models only)
1) Check the operation of shift lock system and key interlock.
Ensure that selector lever is shifted from "P" to any other position only after brake pedal is depressed.
Also ensure that ignition key is removed from key cylinder only when selector lever is set to "P" position.
2) Place the selector lever in each position, and make sure that the pointer indicates the position of each range correctly.

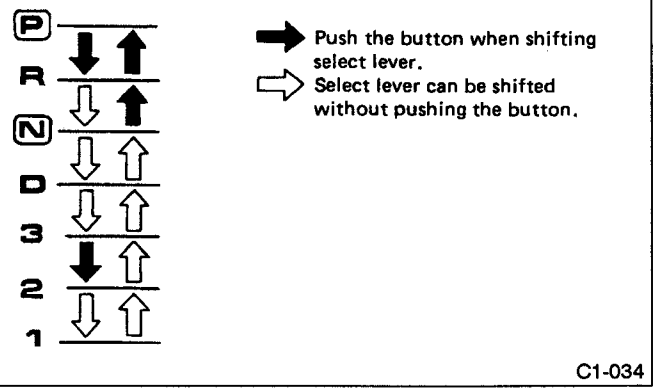

Fig. 25

3. Operation of steering and position of steering wheel
1) Check the steering wheel for free play.

Steering wheel free play:
0 — 17 mm (0 — 0.67 in)

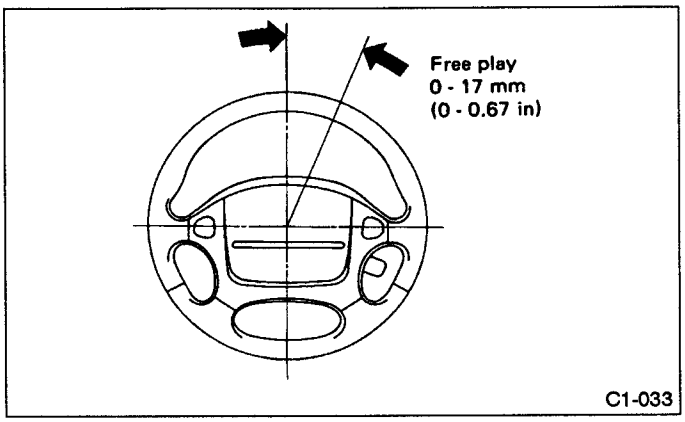

Fig. 26

2) With the car moving straight ahead, check for hard steering, shimmy, or other abnormalities.
3) Make a turn, and check for hard or heavy steering wheel operation, or poor stability.
4) Make a right or left turn with the turn signal on, and make sure that the turn signal switch returns automatically to the OFF position when the steering wheel is returned to the straight ahead position.
4. Operation of ventilation system and heater.
1) While driving, move the control lever and dial into each position, and check the ventilation system's operation. Also check for unusual vibration or noises.
2) Move the temperature control lever and fan switch, and make sure that warm air is discharged into the compartment.
5. Abnormal noises or vibration
1) When starting the engine, and while driving the vehicle, check the engine, transmission, body, suspension, and steering system for any unusual noises or vibration.
Do this when idling the engine, accelerating, decelerating, and running at low, middle and high speeds.
2) Depress the accelerator pedal, and make sure that the engine rpms increase smoothly and that the vehicle accelerates smoothly.
3) While driving, turn the steering wheel right and left to test the vehicle's stability and response.
Be sure to perform this test in a safe area.
6. Check the operation of the cruise control according to "Owner's manual".

3. Post-road Test Inspection

B: AUTOMATIC TRANSMISSION FLUID (ATF) LEVEL

CHECK POINTS
- **Level of ATF**

The ATF should be maintained at the proper level as follows:
1) Drive the car several miles to bring the transmission to the normal operating temperature. 60 to 80°C (140 to 176°F) is normal.
2) Park the car on a level surface.
3) While idling the engine, shift select lever to all positions. Then return it to "P".
4) Remove the level gauge and wipe it clean.
5) Reinsert the level gauge completely.
6) Remove it again and note its reading.
If the fluid level is at the lower mark or below, add enough recommended automatic transmission fluid to bring the level to the high mark. ATF is added through the fluid level gauge hole.
Do not fill above the high mark level.

C: POWER STEERING FLUID LEVEL

CHECK POINTS
- **Level of power steering fluid**

The power steering fluid should be maintained at a proper level.
Check level as follows:
1) Drive the car several miles or kilometers to bring power steering system up to the normal operating temperature of about 60°C (140°F).
2) Park the car on a level surface and stop the engine.
3) Remove the level gauge and wipe it clean.
4) Reinstall the level gauge firmly.
5) Remove it again and read the level on the "HOT" side.
If the fluid level is at the lower level or below it, add recommended power steering fluid up to the high level. When the fluid level is to be checked without warming up the power steering system [at approximately 21°C (70°F)], read the fluid level at the "COLD" position of the level gauge.
a. The available power steering fluid is the automatic transmission fluid.
Be sure to use the recommended fluid.
b. When power steering fluid is added, be careful not to allow any dust into the tank.

D: TOE

CHECK POINTS
- **Toe of front and rear wheels**

1) To check the toe, make sure that the spare tire, floor mats and service tool are in place. No other weight should be present.
a. Before checking wheel alignment with a sideslip tester, check the following:
(1) Left and right tires are the same type and size.
(2) Tires are inflated to specified pressure.
b. When driving over the sideslip tester, be sure to drive the vehicle slowly with the steering wheel fixed in the straight ahead position.
2) If the measured toe or sideslip value is not within the standard range, refer to Chapter 4-1 and adjust them.

E: UNDERSIDE

CHECK POINTS
1. **Leakage of engine oil, differential gear oil, etc.**
2. **Leakage of coolant**
3. **Leakage of brake fluid**
4. **Loose suspension mountings or steering mounting**

Raise the vehicle body and perform these checks from the underside.
1. Visually check for any signs of engine oil, differential gear oil, etc. leakage.
2. Visually check for any sign of coolant leakage.
3. Visually check for any sign of brake fluid leakage.
4. Check the suspension mounting and steering mounting for any loose or unconnected parts.

F: WATER LEAKAGE

CHECK POINTS
- **Water leakage by pouring water**

1) Before performing the water leakage test, remove anything that may obstruct the operation or which must be kept dry.
2) Close all of the windows completely, and then close all of the doors tightly. Close the hood and trunk lid before starting the test.
3) Connect a hose to a tap, and spray water on the vehicle. The rate of water discharge must be approx. 20 to 25 liters (5.3 to 6.6 US gal, 4.4 to 5.5 Imp gal) per minute. When spraying water on areas adjacent to the floor and wheel house, increase the pressure.
When directing water on areas other than the floor portion and wheel house, decrease the pressure. But

the force of water must be made strong occasionally by pressing the end of the hose.
Be sure to keep the hose at least 10 cm (3.9 in) from the vehicle.
4) Check the following areas:
(1) Front window and body framework mating portion
(2) Door mating portions
(3) Glass mating portions
(4) Rear quarter windows mating portions
(5) Rear window and body framework mating portion
(6) Trunk lid mating portion
(7) Around roof drips
If any dampness in the compartments is discovered after the water has been applied, check all areas that may have possibly contributed to the leak carefully.

G: EXTERNAL APPEARANCE AND EQUIPMENT

CHECK POINTS
1. Paint
2. Scratches or damage to glass
3. Rust formation
4. Contamination of interior parts
5. Installation of equipment

1. Check the paint after removing the paint protective agent and washing the vehicle.
Before removing the protective agent, be sure to wash the vehicle, because the painted surface may be scratched if the surface is rubbed with sand or other hard particles which may be attached to the protective agent.
• Check the whole vehicle body for stains, flaking, damage caused by transportation, rust, dirt, cracks, or blistering.
a. It is better to determine an inspection pattern in order to avoid missing an area, since the total area is not small.
b. It is desirable not to make corrections to the body paint unless absolutely needed. However, if any corrections are required to remove scratches or rust, the area to be corrected must be limited as much as possible. Re-painting and spray painting must be avoided whenever possible.
2. Carefully check each window glass for scratches. Slight damage may be removed by polishing with cerium oxide. (Half-fill a cup with cerium oxide, and add warm water to it. Then agitate the contents until it turns to wax. Apply this wax to a soft cloth, and polish the glass.)
3. Check each portion of the vehicle body and underside components for the formation of rust. If rust is discovered, remove it with #80 — #180 emery paper, and treat the surface with rust preventive. After this treatment is completed, flush the portion thoroughly, and prepare the surface for repair painting.
• Check each portion of the body and all of the chrome parts for deformation or distortion. Also check each lamp lens for cracks.
4. Check the following interior parts for contamination.
1) Instrument panel and meter glass
2) Glove box
3) Sun visor
4) Room mirror
5) Assist rail
6) Roof trim
7) Door trim
8) Inner trim
9) Front and rear seats
10) Luggage shelf
11) Floor mat
12) Others
If the meter glass is contaminated, wipe it gently with a clean soft cloth that has been dampened with water. Do not rub the meter glass hard; otherwise, the transparent resin plate on it may become cloudily due to the formation of scratches.
5. Check the interior and exterior equipment to make sure that they are installed securely. Also make sure that the equipment conforms to the vehicle's specifications.

Make sure that the spare tire, jack, spare key, tools, owner's manual, warranty & service booklet, etc. are all present.

SUBARU

SVX

1992

Page

SCHEDULE OF INSPECTION AND MAINTENANCE SERVICES 2
1. DRIVE BELT(S) [EXCEPT CAMSHAFT] (INSPECT DRIVE BELT TENSION) 4
2. TIMING BELT (CAMSHAFT DRIVE BELT) 6
3. ENGINE OIL 10
4. ENGINE OIL FILTER 12
5. REPLACE ENGINE COOLANT AND INSPECT COOLING SYSTEM, HOSES AND CONNECTIONS 13
6. REPLACE FUEL FILTER AND INSPECT FUEL SYSTEM, LINES AND CONNECTIONS 15
7. AIR FILTER ELEMENTS 17
8. SPARK PLUG 18
9. DIFFERENTIAL (FRONT AND REAR) LUBRICANTS (GEAR OIL) 19
10. AUTOMATIC TRANSMISSION FLUID 21
11. BRAKE FLUID 22
12. DISC BRAKE PADS AND DISC/FRONT AND REAR AXLE BOOTS AND AXLE SHAFT JOINT PORTIONS 23
13. BRAKE LININGS AND DRUMS (PARKING BRAKE) 25
14. INSPECT BRAKE LINE AND CHECK OPERATION OF PARKING AND SERVICE BRAKE SYSTEM 27
15. STEERING AND SUSPENSION 29
16. FRONT AND REAR WHEEL BEARING LUBRICANT 36
17. SUPPLEMENTAL RESTRAINT SYSTEM (AIR-BAG) 38

SCHEDULE OF INSPECTION AND MAINTENANCE SERVICES

Continue periodic maintenance beyond 96,000 km (60,000 miles) or 60 months by returning to the first column of the maintenance schedule and adding 96,000 km (60,000 miles) or 60 months to the column headings.

Symbols used:
R: Replace
I: Inspect, and then adjust, correct or replace if necessary.
P: Perform
(I) or (P): Recommended service for safe vehicle operation
*: This maintenance operation is required for all states except California.
However, we do recommend that this operation be performed on California vehicles as well.

	MAINTENANCE ITEM	MAINTENANCE INTERVAL (Number of months or km (miles), whichever occurs first)									REMARKS
		Months	3	7.5	15	22.5	30	37.5	45	52.5	60	
		x1,000 km	4.8	12	24	36	48	60	72	84	96	
		x1,000 miles	3	7.5	15	22.5	30	37.5	45	52.5	60	
1	Drive belt(s) [Except camshaft] (Inspect drive belt tension)						I				R	
2	Timing belt (Camshaft drive belt)						I*				R	
3	Engine oil		R	R	R	R	R	R	R	R	R	See NOTE 1)
4	Engine oil filter		R	R	R	R	R	R	R	R	R	
5	Replace engine coolant and inspect cooling system, hoses and connections						P				P	
6	Replace fuel filter and inspect fuel system hoses and connections						(P)				P	See NOTE 2), 6) & 7)
7	Air filter elements						R				R	
8	Spark plug										R	
9	Differential (Front & Rear) Lubricants (Gear oil)						I					See NOTE 3)
10	Automatic transmission fluid						I					See NOTE 4)
11	Brake fluid						R				R	See NOTE 5)
12	Disc brake pad and disc, Front and rear axle boots and axle shaft joints				I		I		I		I	See NOTE 6)
13	Brake linings and drums (Parking brake)						I				I	See NOTE 6)
14	Inspect brake line and check operation of parking and service brake system				P		P		P		P	See NOTE 6)
15	Steering and suspension				I		I		I		I	See NOTE 6)
16	Front and rear wheel bearing lubricant										(I)	
17	Supplemental restraint system	Inspect every 10 years.										

1) When the vehicle is used under severe driving conditions such as those mentioned below, the engine oil should be changed more often.**

2) When the vehicle is used in extremely cold or hot weather areas, contamination of the filter may occur and filter replacement should be performed more often.

3) When the vehicle is frequently operated under severe conditions, replacement should be performed every 48,000 km (30,000 miles).

4) When the vehicle is frequently operated under severe conditions, replacement should be performed every 24,000 km (15,000 miles).

5) When the vehicle is used in high humidity areas or in mountainous areas, change the brake fluid every 24,000 km (15,000 miles) or 15 months, whichever occurs first.

6) When the vehicle is used under severe driving conditions such as those mentioned below, inspection should be performed every 12,000 km (7,500 miles) or 7.5 months, whichever occurs first.**

7) This inspection is not required to maintain emission warranty eligibility and it does not affect the manufacturer's obligations under EPA's in-use compliance program.

**** Examples of severe driving conditions:**

(1) Repeated short distance driving. (item 3, 12 and 13 only)

(2) Driving on rough and/or muddy roads. (Item 12, 13 and 15 only)

(3) Driving in dusty conditions.

(4) Driving in extremely cold weather. (Item 3 and 15 only)

(5) Driving in areas where roads salts or other corrosive materials are used. (Item 6, 12, 13, 14 and 15 only)

(6) Living in coastal areas. (Item 6, 12, 13, 14 and 15 only)

1. Drive Belt(s) [Except Camshaft] (Inspect drive belt tension)

MAINTENANCE INTERVAL (Number of months or km (miles), whichever occurs first)									
Months	3	7.5	15	22.5	30	37.5	45	52.5	60
x1,000 km	4.8	12	24	36	48	60	72	84	96
x1,000 miles	3	7.5	15	22.5	30	37.5	45	52.5	60
					I				R

A: INSPECTION

1) Replace belts, if cracks, fraying or wear is found.
2) Check drive belt tension and adjust it if necessary by changing alternator installing position and/or idler pulley installing position.
3) When using a tension gauge to adjust the air conditioner drive belt, remove the alternator in advance.

Pulley arrangement	Belt tension			
	Gauge		Belt tension [with 98 N (10 kg, 22 lb) force]	
	A	B	A	B
New belt	637 — 785 N (65 — 80 kg, 143 — 176 lb)	637 — 736 N (65 — 75 kg, 143 — 165 lb)	4.0 — 5.0 mm (0.157 — 0.197 in)	6.0 — 7.0 mm (0.236 — 0.276 in)
Existing belt	392 — 588 N (40 — 60 kg, 88 — 132 lb)	343 — 441 N (35 — 45 kg, 77 — 99 lb)	5.0 — 6.0 mm (0.197 — 0.236 in)	7.0 — 8.0 mm (0.276 — 0.315 in)

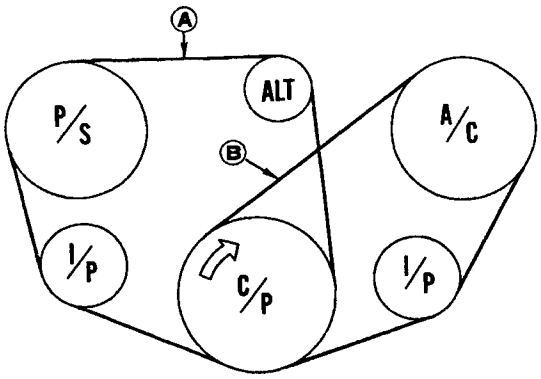

C1-037

Fig. 1

C/P: Crankshaft pulley
ALT: Alternator pulley
P/S: Power steering oil pump pulley
A/C: Air conditioner compressor pulley
I/P: Idler pulley

*1: When replacing belt with a new one, adjust its tension to the specification and then readjust it to the same specification after running engine for 5 minutes in consideration of its initial expansion.

B: REPLACEMENT

1. V-BELT COVER

1) Remove drive belt cover.
   (1) Remove the two bolts.

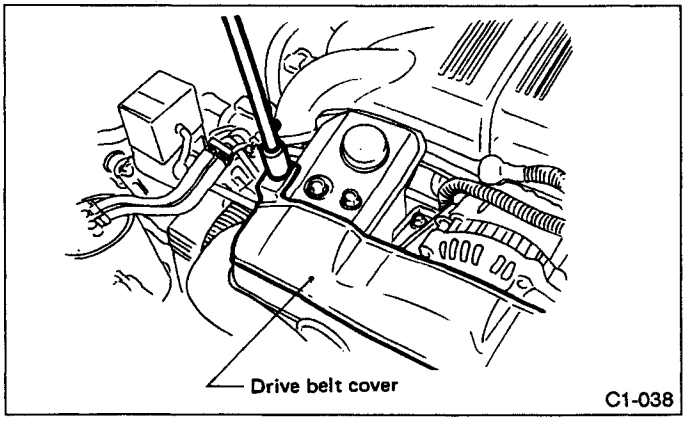

Fig. 2

2. FRONT SIDE BELT (Driving Power Steering Oil Pump and Alternator)

1) Loosen the lock nut.
2) Loosen the slider bolt.

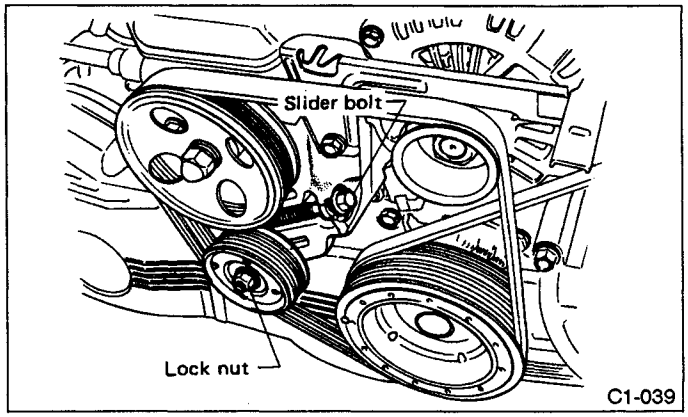

Fig. 3

3) Remove the front side belt.
4) Install a new belt, and tighten the slider bolt so as to obtain the specified belt tension shown in the above table.
5) Tighten the lock nut.

Wipe off any oil or water on the belt and pulley.

3. REAR SIDE BELT (Driving Air Conditioner)

Before removing the rear side belt, remove the front side belt.

1) Loosen the lock nut.
2) Loosen the lock bolt.

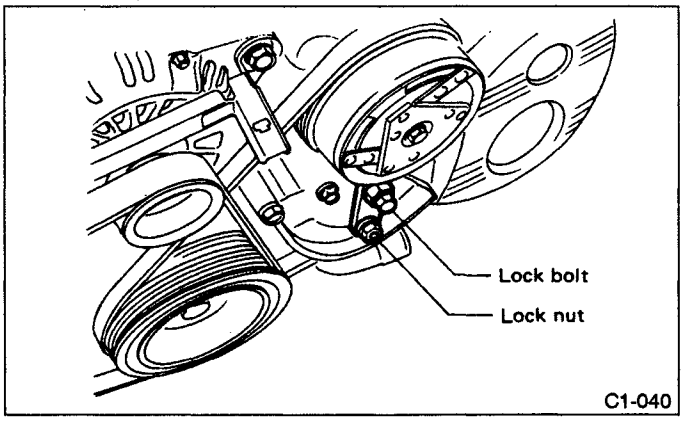

Fig. 4

3) Remove the rear side belt.
4) Install a new belt, and tense the belt with stay.
5) Tighten the lock nut so as to obtain the specified belt tension shown in the above table.
6) Tighten the lock bolt.

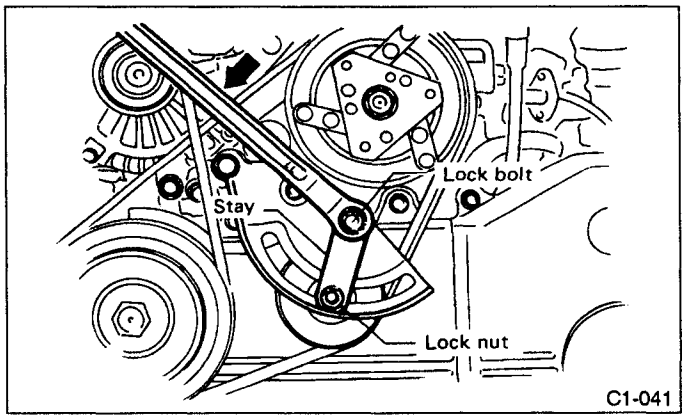

Fig. 5

2. Timing Belt (Camshaft drive belt)

MAINTENANCE INTERVAL (Number of months or km (miles), whichever occurs first)									
Months	3	7.5	15	22.5	30	37.5	45	52.5	60
x1,000 km	4.8	12	24	36	48	60	72	84	96
x1,000 miles	3	7.5	15	22.5	30	37.5	45	52.5	60
					I*				R

A: REPLACEMENT

1) Open the front hood.
2) Disconnect the ground cable from the battery.
3) Remove the under cover.
4) Remove the two bolts which connect the power steering fluid cooling hose to body.
(Do not remove the power steering fluid cooling hose.)

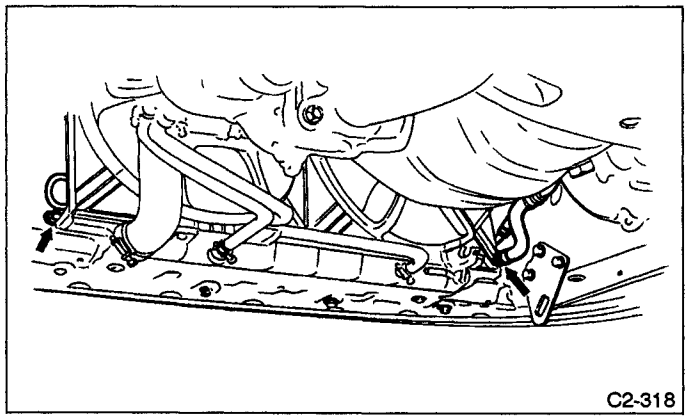

Fig. 6

5) Disconnect the radiator main fan motor connector and radiator sub fan motor connector.

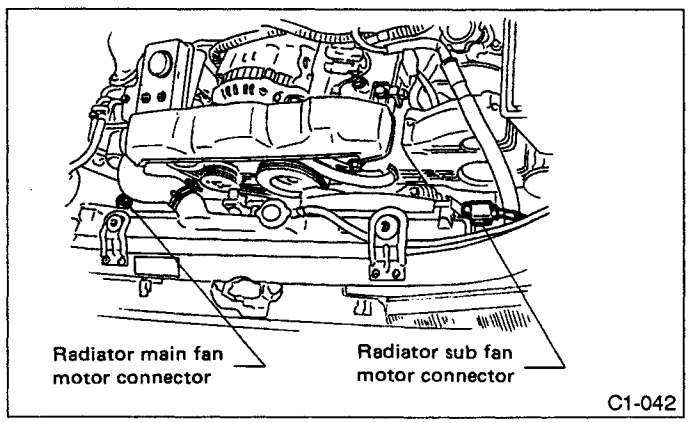

Fig. 7

6) Remove the drive belt cover.
(1) Remove the two bolts.

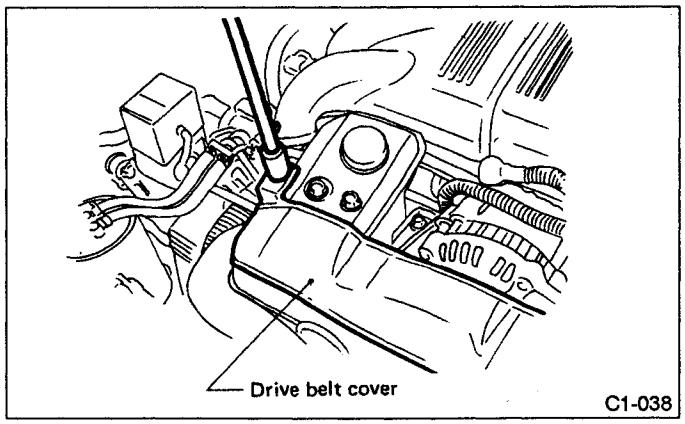

Fig. 8

(2) Remove the drive belt cover.
7) Remove the radiator upper brackets.

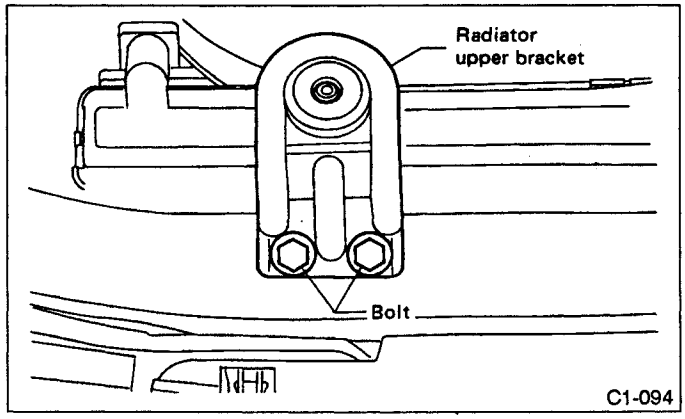

Fig. 9

8) Remove the radiator fan ASSY.
(1) Remove the two bolts from the upper side of the shroud.
(2) Remove the radiator sub fan ASSY.
Remove the radiator main fan ASSY in same steps described in the removal of radiator sub fan ASSY. For removal of the radiator sub fan ASSY and radiator main fan ASSY, refer to "2-5 ENGINE COOLING SYSTEM" [W5B0].

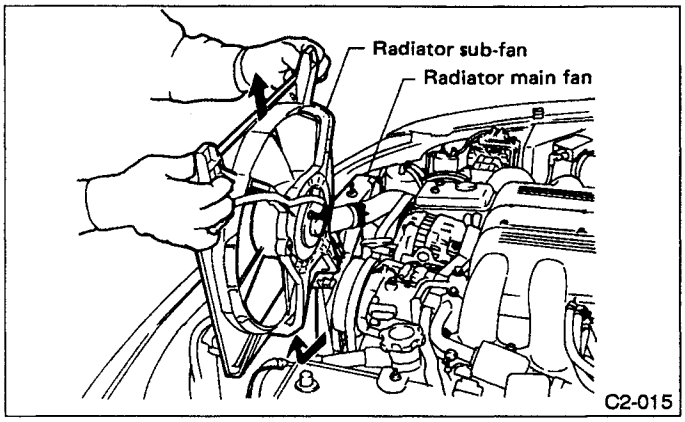

Fig. 10

9) Remove the canister and the bracket.
(1) Remove the hose clamp and pull off the hose.
(2) Remove the canister from the bracket.
(3) Remove the bracket from body.

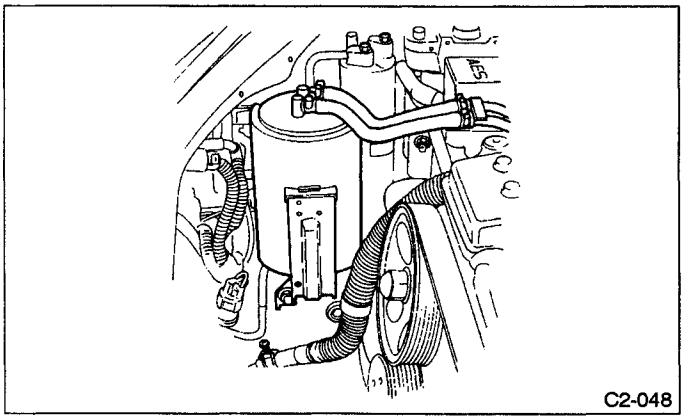

Fig. 11

10) Remove the drive belt.
[Refer to "Drive Belt(s)"]
11) Remove the alternator.
(1) Disconnect the alternator connector and B terminal.
(2) Remove the alternator mounting bolts and drive belt cover bracket.
(3) Remove the alternator.

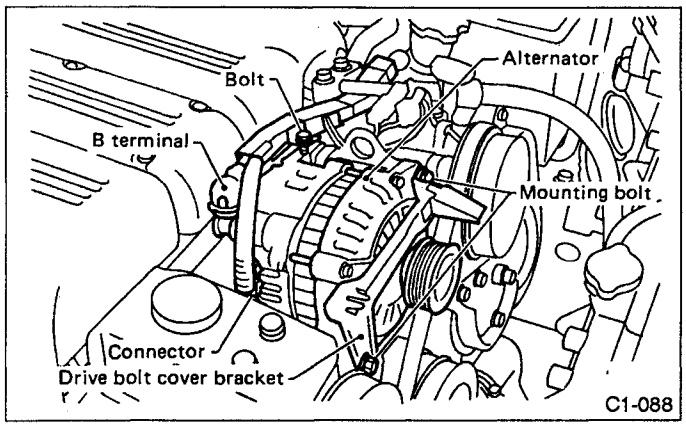

Fig. 12

12) Remove the idler pulley ASSY.
(1) Remove the three bolts.

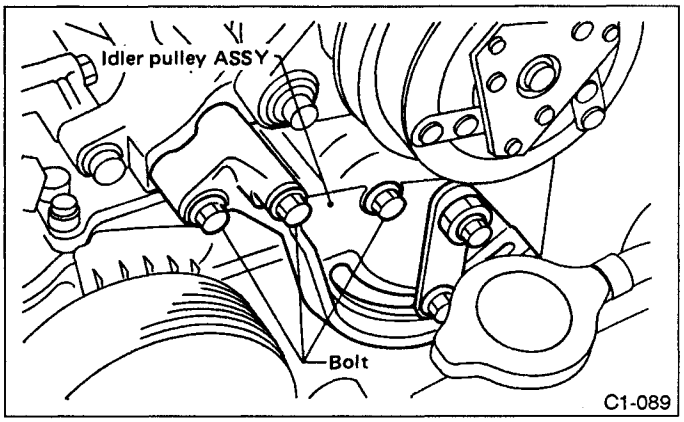

Fig. 13

(2) Remove the idler pulley ASSY.
13) Remove the power steering pump bracket ASSY.
(1) Remove the bolts which hold the power steering fluid pipe to cylinder head.

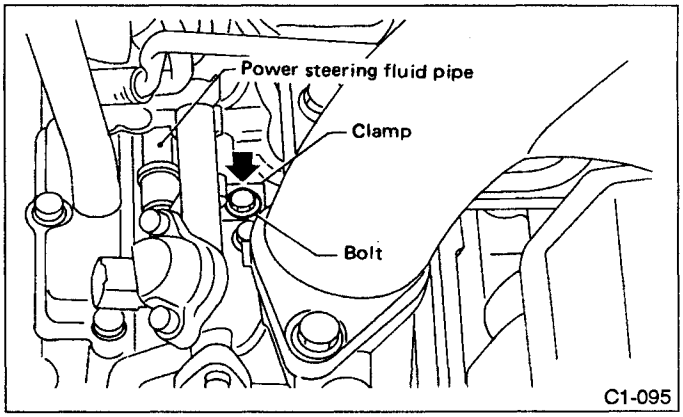

Fig. 14

(2) Remove the power steering pump from the power steering pump bracket ASSY.

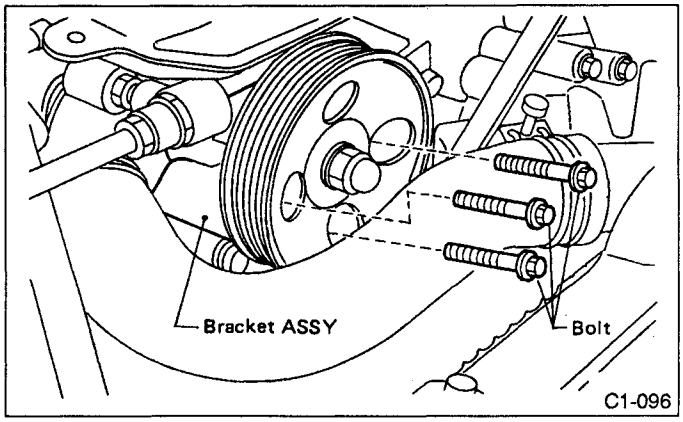

Fig. 15

(3) Remove the three bolts which install the power steering pump bracket ASSY to cylinder block.

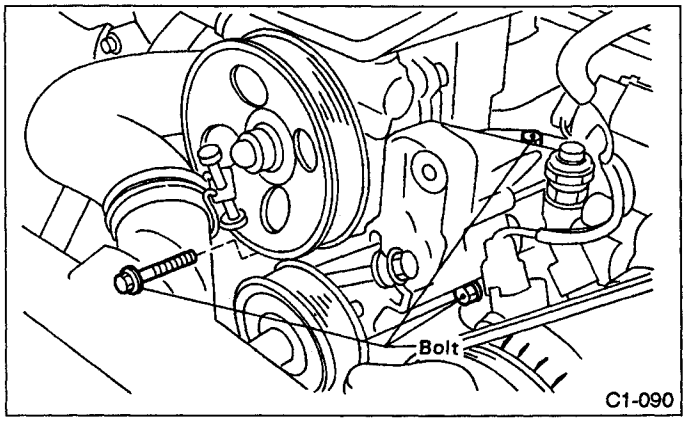

Fig. 16

(4) Remove the power steering pump bracket ASSY.

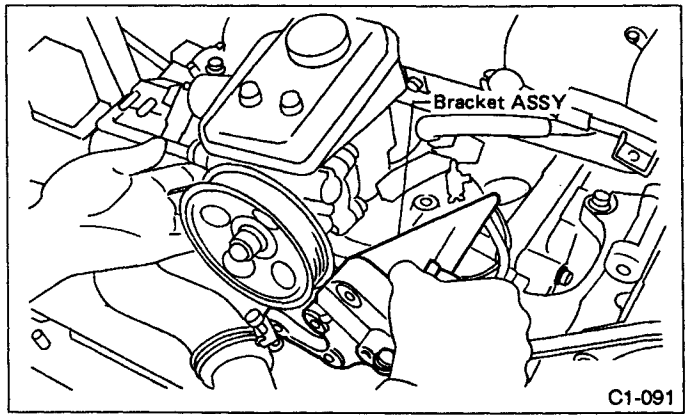

Fig. 17

14) Remove the crankshaft pulley.
15) Remove the front timing belt covers.
16) Remove the timing belt (camshaft drive belt).
For removal of the timing belt, refer to "2-3 ENGINE" [W2A2].

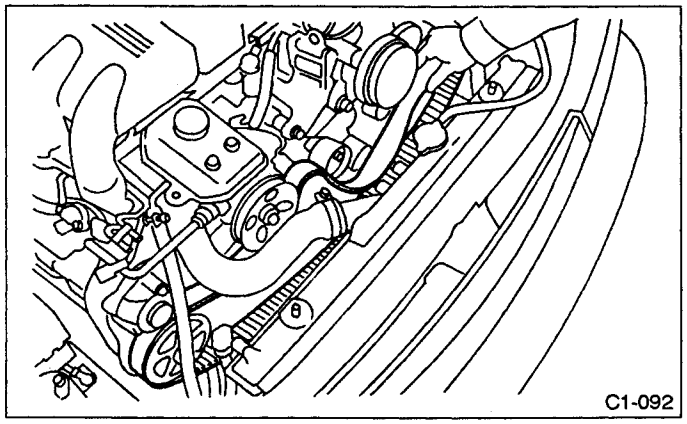

Fig. 18

17) Remove the timing belt tension adjuster.

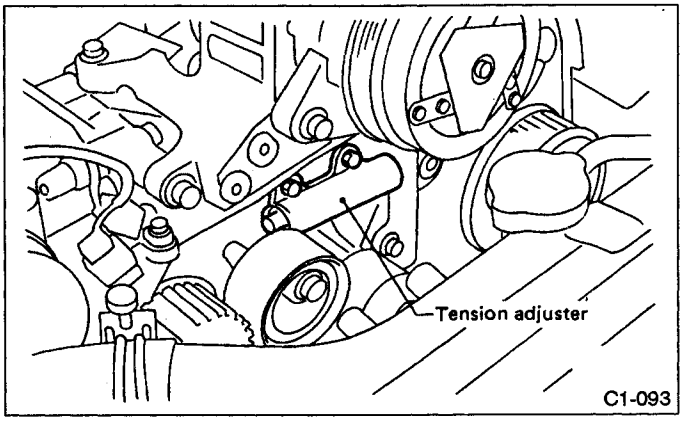

Fig. 19

B: INSTALLATION

To install, reverse order of removal procedures. For installation of tensioner adjuster and timing belt, refer to "2-3 ENGINE" [W2C2] [W2C3].

C: INSPECTION

1) Remove left and right timing belt covers ① and ②.

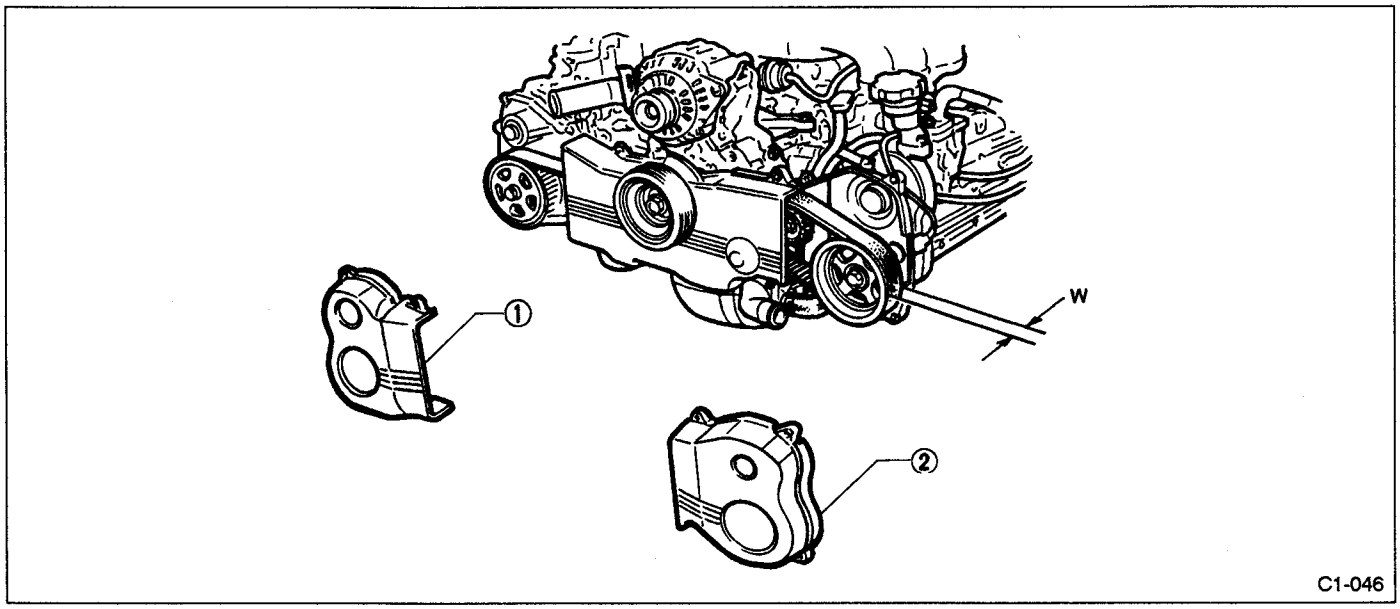

Fig. 20

2) While cranking engine at least four rotations, check timing belt back surface for cracks or damage. If a fault is found replace the belt with a new one.
3) Measure timing belt width W. If it is less than 34 mm (1.34 in), check idlers, tensioner, water pump pulley and cam sprocket to determine idler alignment (squareness). Replace worn timing belt.
4) Install left and right timing belt covers ① and ②.

3. Engine Oil

MAINTENANCE INTERVAL (Number of months or km (miles), whichever occurs first)									
Months	3	7.5	15	22.5	30	37.5	45	52.5	60
x1,000 km	4.8	12	24	36	48	60	72	84	96
x1,000 miles	3	7.5	15	22.5	30	37.5	45	52.5	60
	R	R	R	R	R	R	R	R	R

A: REPLACEMENT

1) Drain engine oil by loosening engine oil drain plug.

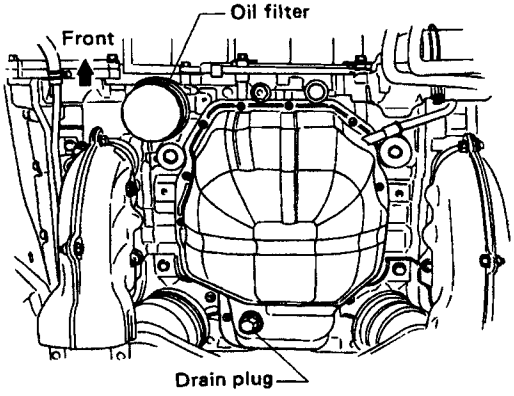

Fig. 21

2) Open engine oil filler cap for quick draining of the engine oil.

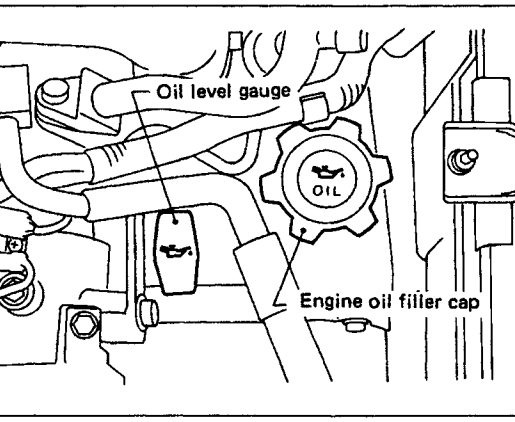

Fig. 22

3) Tighten engine oil drain plug after draining engine oil.

Tightening torque:
44 N•m (4.5 kg-m, 33 ft-lb)

4) Fill engine oil through filler pipe up to upper point on level gauge. Make sure that vehicle is placed level when checking oil level. Use engine oil of proper quality and viscosity, selected in accordance with the table below.
- Recommended oil

API classification: SF or SG

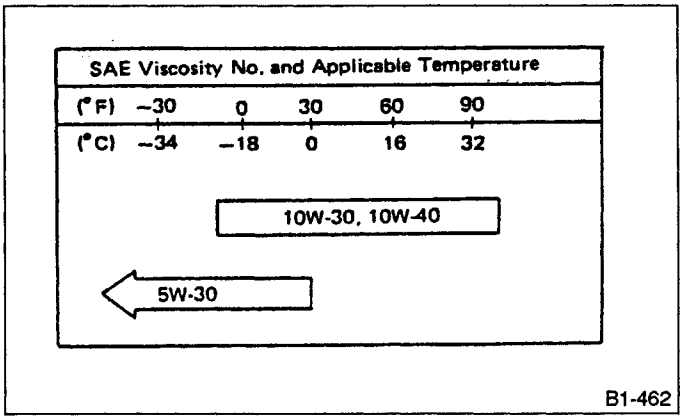

Fig. 23

The proper viscosity helps car get good cold and hot starting by reducing viscous friction and thus increasing cranking speed.

a. Insert the oil level gauge into gauge hole in proper direction as figure.

b. When replenishing oil, it does not matter if the oil to be added is a different brand from that in the engine, however, use oil having the API classification and SAE viscosity No. designated by SUBARU.

c. SAE 5W-30 is not recommended for sustained high speed driving.

d. If vehicle is used in desert areas or areas with very high temperatures or for other heavy duty applications, the following viscosity oils may be used:

30, 40, 10W-50, 20W-40, 20W-50

5) Close engine oil filler cap.
6) Recheck the oil level.

B: INSPECTION

1) Park vehicle on a level surface.
2) Remove oil level gauge and wipe it clean.
3) Reinsert the level gauge all the way. Be sure that the level gauge is correctly inserted with the symbol on the top appearing as shown in the figure.
4) Remove gauge again and check to ensure that oil level is between F and L marks on gauge rod. If the engine oil level is below the "L" line, add oil to bring the level up to the "F" line.

a. Before checking oil level, ensure that engine is cold.

b. Do not check oil level immediately after engine or vehicle has stopped; wait at least 10 minutes.

c. Just after driving or while the engine is warm, the engine oil level may be in the range between the "F" line and the "notch" mark. This is caused by thermal expansion of the engine oil.

d. To prevent overfilling the engine oil, do not add oil above the "F" line when the engine is cold.

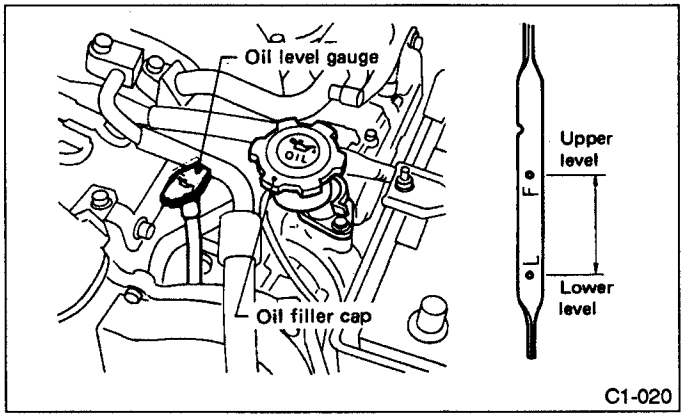

Fig. 24

Engine oil capacity:
Upper level
6.0 ℓ (6.3 US qt, 5.3 Imp qt)
Lower level
5.0 ℓ (5.3 US qt, 4.4 Imp qt)

4. Engine Oil Filter

MAINTENANCE INTERVAL (Number of months or km (miles), whichever occurs first)									
Months	3	7.5	15	22.5	30	37.5	45	52.5	60
x1,000 km	4.8	12	24	36	48	60	72	84	96
x1,000 miles	3	7.5	15	22.5	30	37.5	45	52.5	60
	R	R	R	R	R	R	R	R	R

A: REPLACEMENT

1) Remove oil filter with an oil filter wrench.
2) Get a new oil filter and apply a thin coat of engine oil to the seal rubber.
3) Install oil filter by turning it with hand, being careful not to damage seal rubber.
4) Tighten by approximately two thirds of a turn after the seal rubber contacts the cylinder block. Do not tighten excessively, or oil may leak.
5) After installing oil filter, run engine and make sure that no oil is leaking around seal rubber.

The filter element and filter case are permanently joined; therefore, interior cleaning is not necessary.

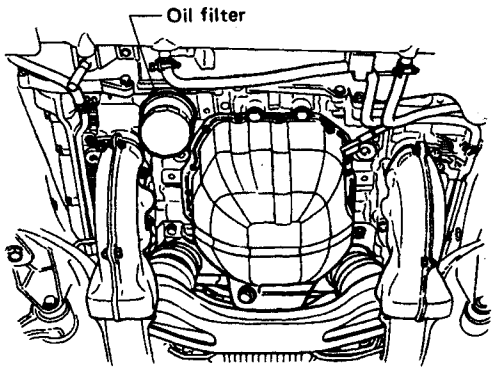

Fig. 25

5. Replace Engine Coolant and Inspect Cooling System, Hoses and Connections

MAINTENANCE INTERVAL (Number of months or km (miles), whichever occurs first)									
Months	3	7.5	15	22.5	30	37.5	45	52.5	60
x1,000 km	4.8	12	24	36	48	60	72	84	96
x1,000 miles	3	7.5	15	22.5	30	37.5	45	52.5	60
					P				P

A: REPLACEMENT

1. REPLACEMENT OF COOLANT

1) Prepare a vinyl tube 150 mm (5.91 in) long, 8 mm (0.31 in) dia., and 1 mm (0.04 in) thick.
2) Insert vinyl tube into drain pipe via hole in under-cover.

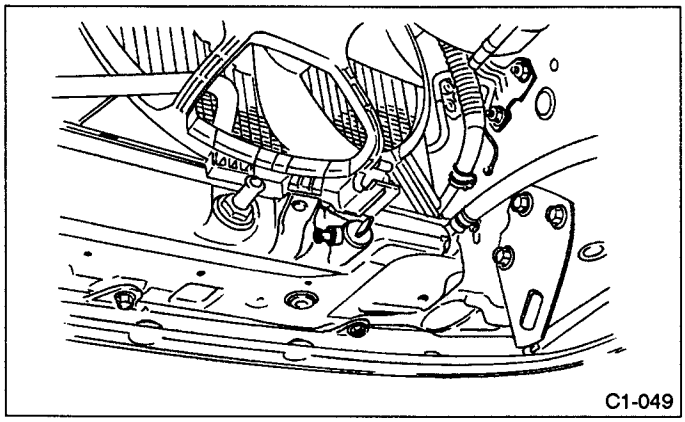

Fig. 26

3) Place a container under drain tube, and loosen drain plug.
4) Loosen radiator cap to drain coolant.
5) Drain coolant from reserve tank.
6) Remove two drain plugs on engine side, and drain coolant.

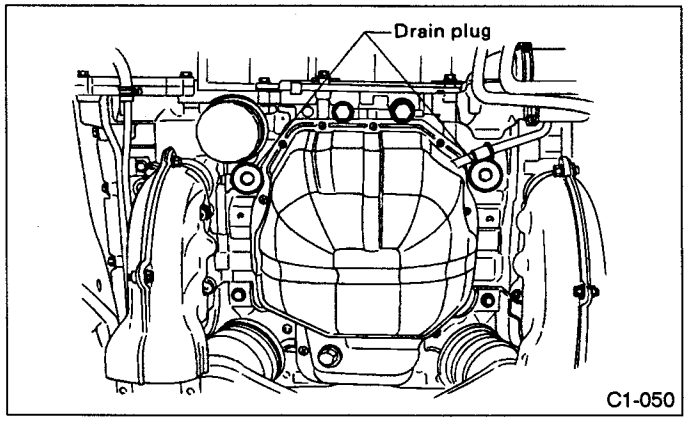

Fig. 27

7) Securely tighten engine side drain plugs.
8) Tighten radiator drain plug securely. (Drain tube may face to center.)
9) Install reserve tank to original position.
10) Slowly pour prepared coolant from radiator filler port to neck of filler, then pour into reserve tank up to "FULL" level.

Coolant capacity (Pour up to "FULL" level.)
Approx. 7.0 ℓ (7.4 US qt, 6.2 Imp qt)

The SUBARU Genuine Coolant containing anti-freeze and anti-rust agents is especially made for SUBARU engine, which has an aluminum crankcase. Always use SUBARU Genuine Coolant, since other coolant may cause corrosion.
11) Securely install radiator cap.
12) Run engine for more than five minutes at 2,000 to 3,000 rpm. (Run engine until radiator becomes hot in order to purge air trapped in cooling system.)
13) Stop engine and wait until coolant temperature lowers. Then open radiator cap to check coolant level and add coolant up to radiator filler neck. Next, add coolant into reserve tank up to "FULL" level.
The radiator is of the pressurized type. Do not attempt to open the radiator cap immediately after the engine has been stopped.
14) After adding coolant, securely install radiator and reserve tank caps.

2. RELATIONSHIP OF SUBARU COOLANT CONCENTRATION AND FREEZING TEMPERATURE

The concentration and safe operating temperature of the SUBARU coolant is shown in the following diagram. Measuring the temperature and specific gravity of the coolant will provide this information.

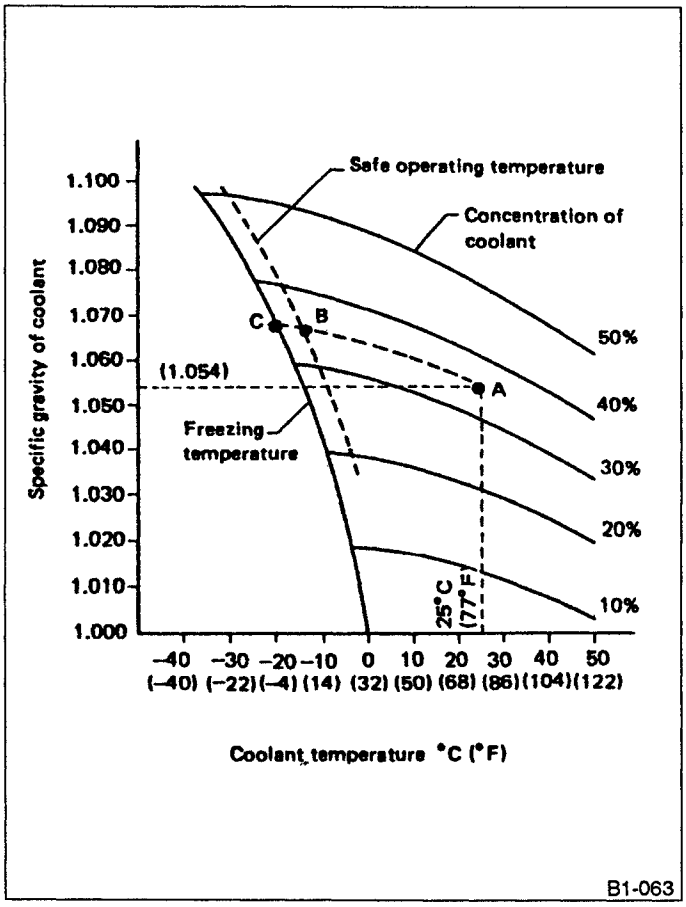

Fig. 28

[Example]

If the coolant temperature is 25°C (77°F) and its specific gravity is 1.054, the concentration is 35%(point A), the safe operating temperature is —14°C (7°F) (point B), and the freezing temperature is —20°C (—4°F) (point C).

3. PROCEDURE TO ADJUST THE CONCENTRATION OF THE COOLANT

To adjust the concentration of the coolant, replace the all amount of coolant with an undiluted solution of SUBARU genuine coolant (concentration 50).

B: INSPECTION

1) Check the radiator reserve tank and hoses for damage or clogging.
2) Check the hose connections for leakage.
3) Check the valve, spring and packing in the cap for damage.
4) Check rubber seal on cap for tears, cracks or deterioration after cleaning it.

Install the cap on a tester and if cap does not hold or does not release the specified pressure, replace cap.

Cap relief pressure:
88 kPa (0.9 kg/cm^2, 13 psi)

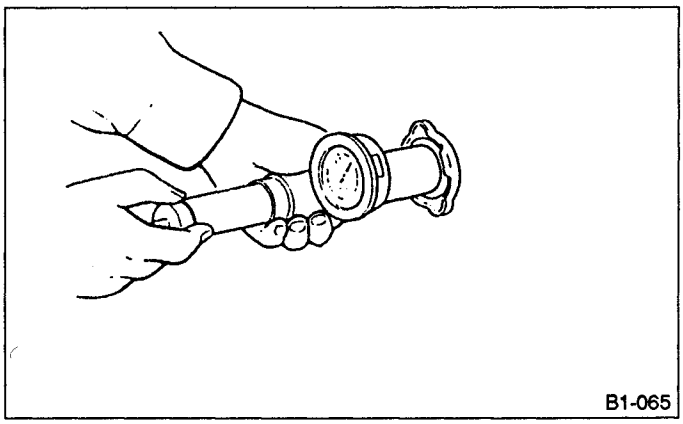

Fig. 29

5) Check the radiator for leakage.

Inspect radiator for leakage using a cap tester and applying a pressure of 157 kPa (1.6 kg/cm^2, 23 psi).
If a leakage is detected, repair or replace the radiator.

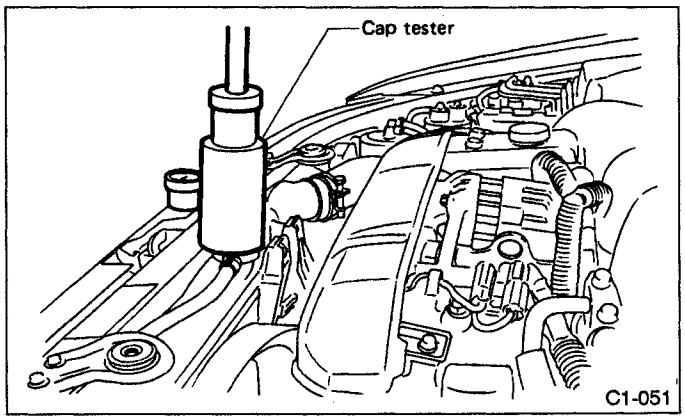

Fig. 30

6) If the coolant temperature exceeds 76.0 to 80.0°C (169 to 176°F) while radiator is not so hot, check thermostat.
7) If thermostat does not open at 76.0 to 80.0°C (169 to 170°F), replace it with a new one.

6. Replace Fuel Filter and Inspect Fuel System, Lines and Connections

MAINTENANCE INTERVAL (Number of months or km (miles), whichever occurs first)									
Months	3	7.5	15	22.5	30	37.5	45	52.5	60
x1,000 km	4.8	12	24	36	48	60	72	84	96
x1,000 miles	3	7.5	15	22.5	30	37.5	45	52.5	60
					(P)				P

A: REPLACEMENT

a. Before starting the job, be sure to carry out the following.

- **Place "No fire" signs near the working area.**
- **Disconnect ground cable from battery.**

b. Be careful not to spill fuel on the floor.

1) Removal

(1) Before removing the hose, filter, pump, etc., be sure to release the fuel pressure, as follows:

- Disconnect the wiring connector of the fuel pump.
- Crank the engine for more than five seconds.

If the engine starts, let the engine run until it stops.

- After turning IG switch OFF, connect the wiring connector of the fuel pump.

(2) Loosen the screw of the hose clamp and pull off the hose from the filter.

(3) Remove the filter from the holder.

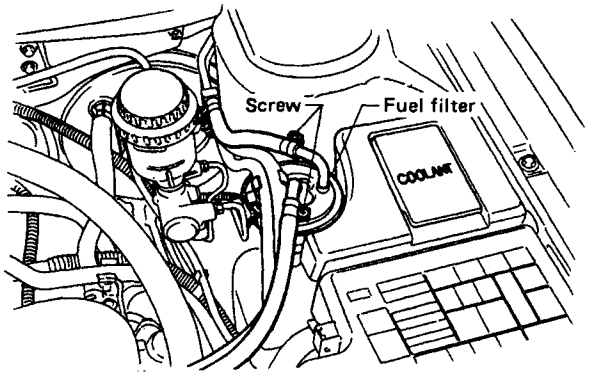

Fig. 31

2) Installation

(1) Install the filter to the holder.

(2) Connect the hose as illustrated below:

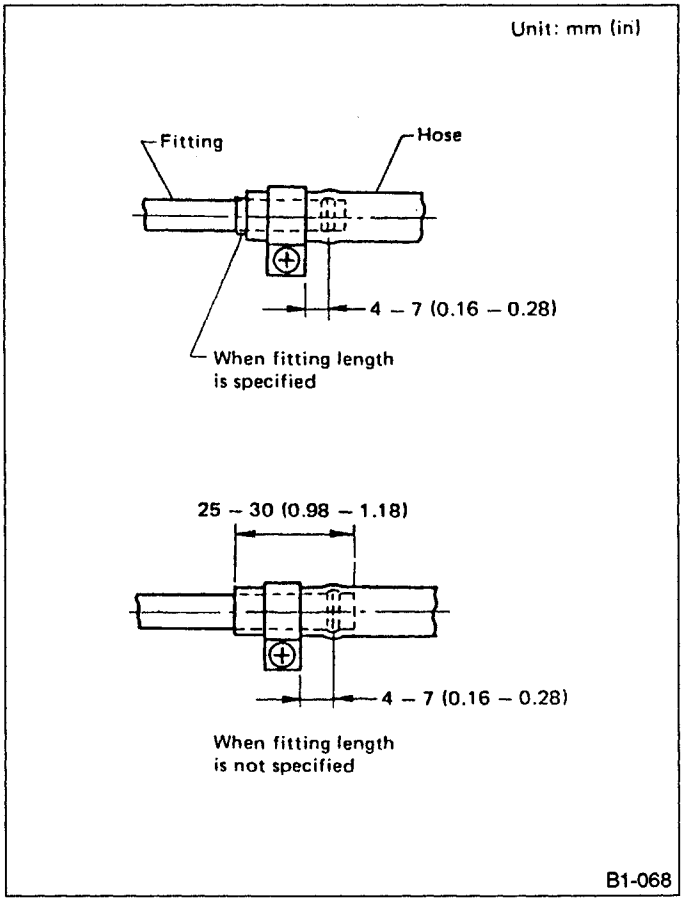

Fig. 32

(3) Tighten the hose clamp screw to the specified torque.

Tightening torque:
1.0 — 1.5 N•m (0.1 — 0.15 kg-m, 0.7 — 1.1 ft-lb)

a. If the hose is damaged at the clamping portion, replace the hose with a new one.
b. If the hose clamp is too deformed, replace with a new one.
c. Correct the hose position by removing any twist so that it will not interfere with the filter body or washer tank, before tightening the screw of the hose clamp.

B: INSPECTION

1. FUEL PIPING AND CONNECTIONS

Check fuel piping and connections for leakage, scratches, swelling and corrosion.

7. Air Filter Elements

MAINTENANCE INTERVAL (Number of months or km (miles), whichever occurs first)									
Months	3	7.5	15	22.5	30	37.5	45	52.5	60
x1,000 km	4.8	12	24	36	48	60	72	84	96
x1,000 miles	3	7.5	15	22.5	30	37.5	45	52.5	60
					R				R

A: REPLACEMENT

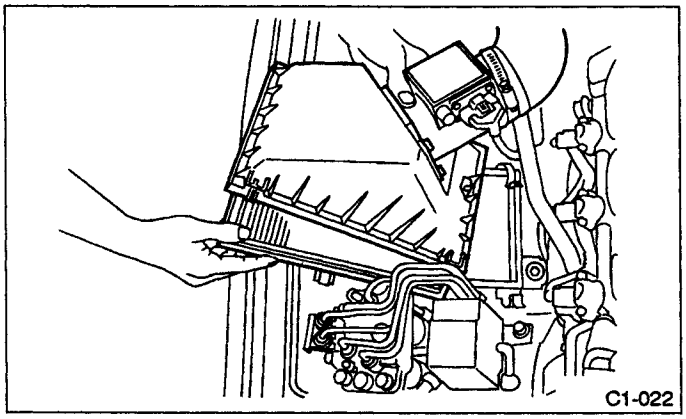

Fig. 33

a. Do not attempt to clean the air cleaner element. The filter paper of the element is wetted with a special non- inflammable slow-evaporating viscous liquid. It is resistant to cold weather and has a long service life. Dirt adhering to this filter paper forms porous laminations with the viscous liquid, which function as a filtration layer to reduce dust penetration into the filter paper. If this filter paper is cleaned, the filtration layer thus formed will be lost along with the viscous liquid.

b. Under extremely dusty conditions, replace it more frequently.

8. Spark Plug

MAINTENANCE INTERVAL (Number of months or km (miles), whichever occurs first)									
Months	3	7.5	15	22.5	30	37.5	45	52.5	60
x1,000 km	4.8	12	24	36	48	60	72	84	96
x1,000 miles	3	7.5	15	22.5	30	37.5	45	52.5	60
									R

A: REPLACEMENT

Recommended spark plug:

NGK	**PFR6G-11**
NIPPONDENSO	**PK20PR-11**

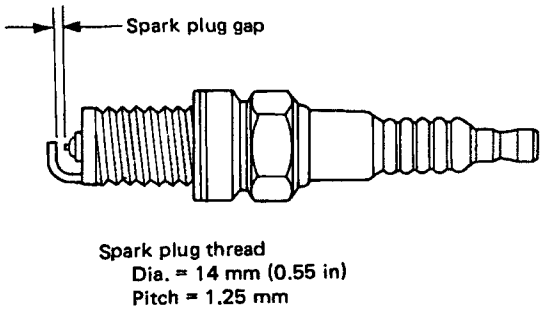

Fig. 34

Spark plug gap:
1.0 — 1.1 mm (0.039 — 0.043 in)

When installing spark plugs on cylinder head, tighten to the specified torque.

Tightening torque:
18 — 24 N•m (1.8 — 2.4 kg-m, 13 — 17 ft-lb)

a. Be sure to place the gasket between the cylinder head and spark plug.
b. If torque wrench is not available, tighten spark plug until gasket contacts cylinder head; then tighten further 1/4 to 1/2 turns.

9. Differential (Front and rear) Lubricants (Gear oil)

MAINTENANCE INTERVAL (Number of months or km (miles), whichever occurs first)									
Months	3	7.5	15	22.5	30	37.5	45	52.5	60
x1,000 km	4.8	12	24	36	48	60	72	84	96
x1,000 miles	3	7.5	15	22.5	30	37.5	45	52.5	60
					I				

A: INSPECTION

1. FRONT DIFFERENTIAL (Automatic Transmission)

Oil level should be maintained between two points on the level gauge. If the oil level is at lower point or below, add some oil up to upper point.

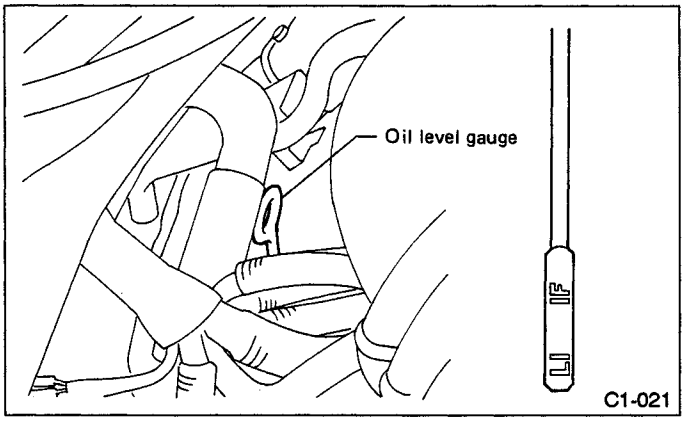

Fig. 35

Oil capacity:
1.1 — 1.3 ℓ (1.2 — 1.4 US qt, 1.0 — 1.1 Imp qt)

2. REAR DIFFERENTIAL (AWD Vehicle)

Remove plug of filler hole and check the oil level. Oil level should be maintained fully to the filler hole.
If the oil level is below the mouth of filler hole, and some oil up to the mouth.

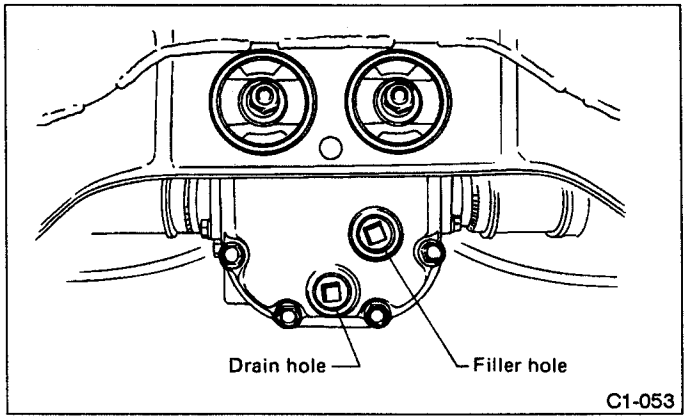

Fig. 36

Oil capacity:
0.8 ℓ (0.8 US qt, 0.7 Imp qt)

Fluid packing:
Three Bond 1105 or equivalent
Drain plug tightening torque:
44 N•m (4.5 kg-m, 33 ft-lb)

〈Recommended oil〉
a. For rear differential gear.

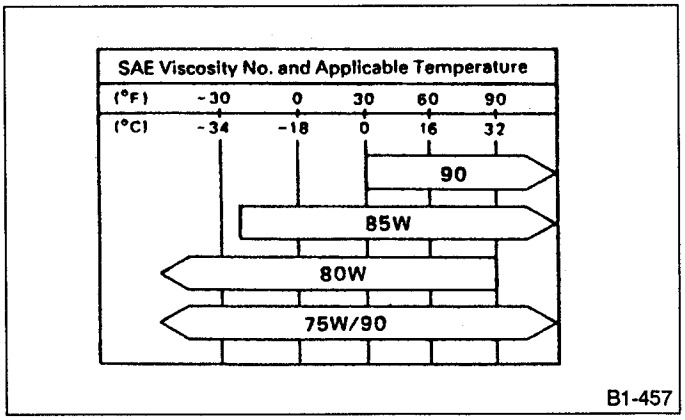

Fig. 37

b. For front differential gear (AT)

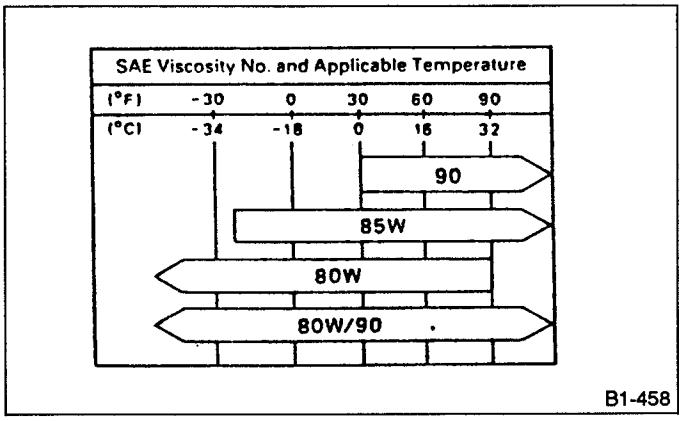

Fig. 38

c. Oil grade is classified as API classification GL-5.
d. Oil manufactures each have their own base oils and additives. Do not mix different brands together.

10. Automatic Transmission Fluid

MAINTENANCE INTERVAL (Number of months or km (miles), whichever occurs first)									
Months	3	7.5	15	22.5	30	37.5	45	52.5	60
x1,000 km	4.8	12	24	36	48	60	72	84	96
x1,000 miles	3	7.5	15	22.5	30	37.5	45	52.5	60
					I				

A: INSPECTION

1) Drive vehicle several km (miles) to bring automatic transmission fluid (ATF) up to normal operation temperature. Normal operating temperature is 60 to 80°C (140 to 176°F).
2) Park vehicle on a level surface.
3) After selecting all positions, place selector lever in "P" position and run engine on at idling speed.
4) Remove level gauge and wipe it clean.
5) Reinsert the level gauge all the way.
6) Remove it again and note reading. If the fluid level is below the center between high and low marks, add recommended ATF until the fluid level is within the specified range (above the center between high and low marks.) When transmission is hot, the level should be above the center of upper and lower marks, and when it is cold, the level should be below the center of these two marks.
ATF level gauge hole also serves as fluid filler.
NOTE:
Do not fill the fluid above upper point of level gauge.
Recommended automatic transmission fluid (ATF Dexron II)

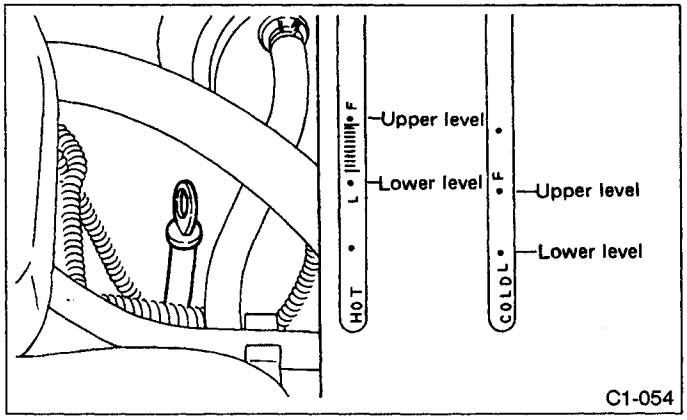

Fig. 39

Recommended automatic transmission fluid (ATF Dexron II)

B: REPLACEMENT

1) Drain fluid by removing drain plug after allowing the engine to cool for 3 to 4 hours.

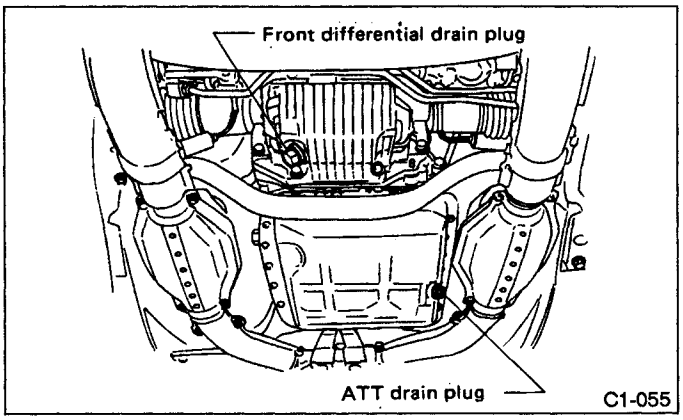

Fig. 40

2) Reinstall drain plug after draining fluid, and tighten it to the specified torque.

Tightening torque:
25 N•m (2.5 kg-m, 18 ft-lb)

a. Be sure to place a gasket between oil pan and drain plug.
b. Replace the gasket with new one.
3) Fill ATF through the fluid level gauge hole.

Fluid capacity:
9.5 — 9.8 ℓ (10.0 — 10.4 US qt, 8.4 — 8.6 Imp qt)

4) Run the vehicle until the ATF temperature rises to 60 to 80°C (140 to 176°F) and the check the ATF level.

11. Brake Fluid

MAINTENANCE INTERVAL (Number of months or km (miles), whichever occurs first)									
Months	3	7.5	15	22.5	30	37.5	45	52.5	60
x1,000 km	4.8	12	24	36	48	60	72	84	96
x1,000 miles	3	7.5	15	22.5	30	37.5	45	52.5	60
					R				R

A: REPLACEMENT

Recommended brake fluid:
FMVSS No. 116, fresh DOT3 or DOT4 brake fluid

• **BRAKE SYSTEM WITH ABS (Anti-lock brake system)**

Air bleeding operations are generally performed in the following sequence.

1) Bleed air from primary side of circuit between hydraulic unit and master cylinder using FL and RR primary air bleeders on top of hydraulic unit.
2) Bleed air from secondary side of circuit pressure reducing circuit, using FR and RL secondary air bleeders on top of hydraulic unit.
3) Bleed air from line between hydraulic unit and wheel cylinder using FR wheel cylinder air bleeder.
4) Using step 3) above, air is bled from RL wheel cylinder.
5) Using step 3) above, air is bled from FL wheel cylinder.
6) Using step 3) above, air is bled from RR wheel cylinder.
7) Depress brake pedal to check pedal stroke. Also check pedal-to-floor clearance and pedal feel. Repeat steps 1) through 6) above if necessary.

Tightening torque (Cone screw):
7 — 9 N•m (0.7 — 0.9 kg-m, 5.1 — 6.5 ft-lb)

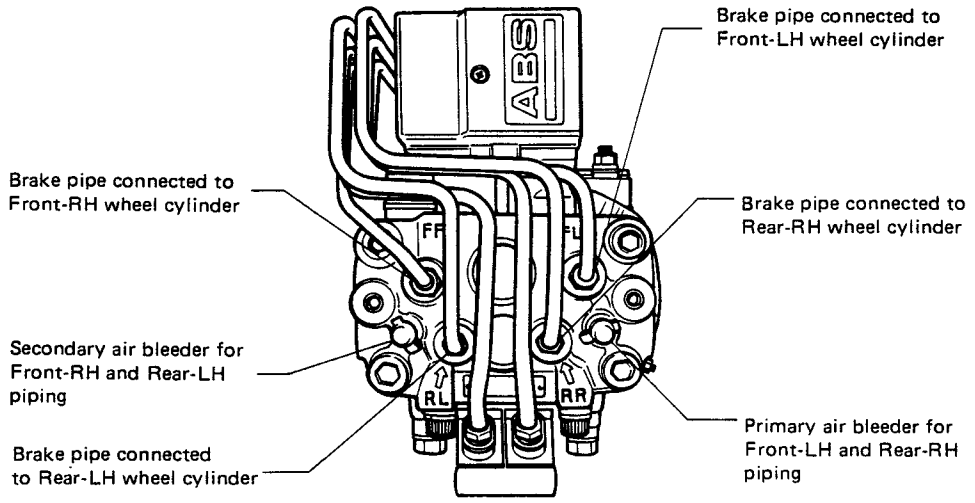

Fig. 41

SCHEDULE OF INSPECTION AND MAINTENANCE SERVICES

12. Disc Brake Pads and Disc/ Front and Rear Axle Boots and Axle Shaft Joint Portions

MAINTENANCE INTERVAL (Number of months or km (miles), whichever occurs first)									
Months	3	7.5	15	22.5	30	37.5	45	52.5	60
x1,000 km	4.8	12	24	36	48	60	72	84	96
x1,000 miles	3	7.5	15	22.5	30	37.5	45	52.5	60
			I		I		I		I

A: INSPECTION

1. DISC BRAKE PAD AND DISC (Front and Rear)

1) Jack-up vehicle and support with rigid racks. Then remove wheels.

2) Visually check pad thickness through inspection hole of disc brake assembly. Replace pad if necessary.

FRONT

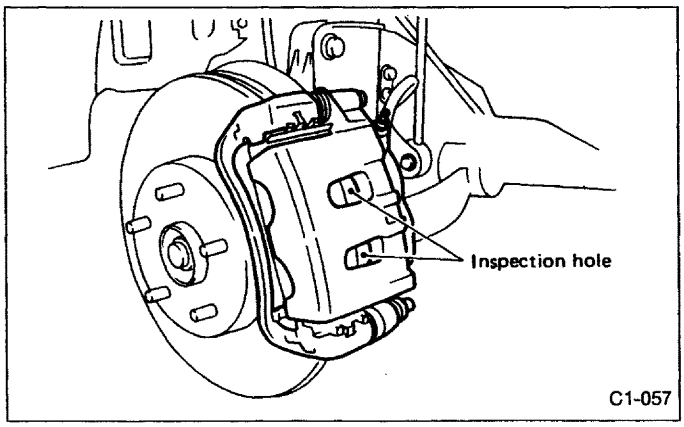

Fig. 1

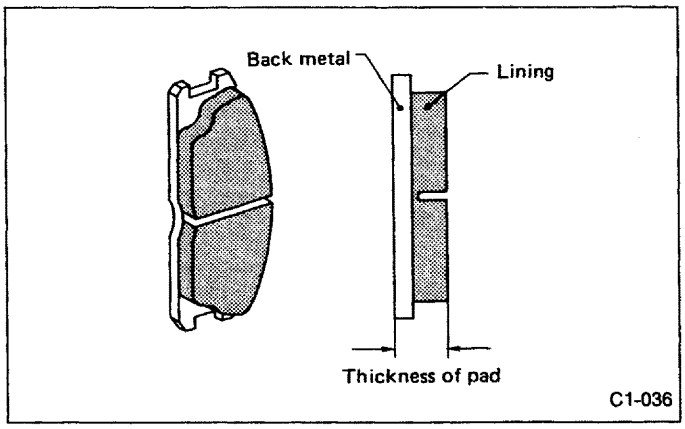

Fig. 2

REAR

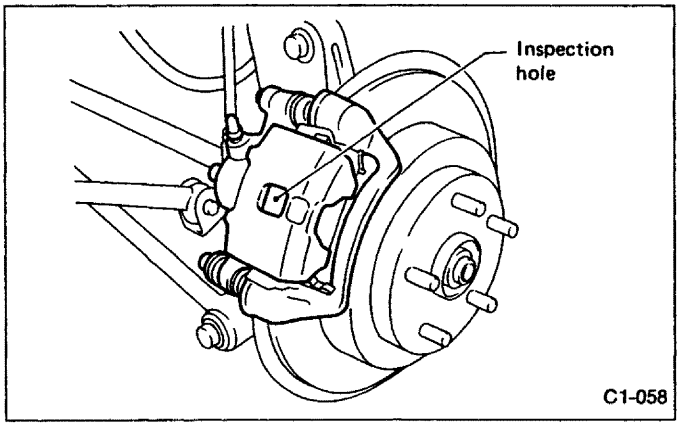

Fig. 3

Pad thickness including back metal mm (in)		
	Front	Rear
Standard	17 (0.67)	15 (0.59)
Wear limit	7.5 (0.295)	6.5 (0.256)
Wear limit (exclude back metal)	1.5 (0.059)	1.5 (0.059)

a. When replacing a pad, always replace the pads for both the left and right wheels at the same time. Also replace pad clips if they are twisted or worn.

b. The clip incorporated with pad is also used as a warning device for worn pads. When wear occurs on the pad to such an extent that the clip comes into contact with the rotor, unusual noise (squeak) is produced. If such a noise is noticed, replace the pads.

3) Disc rotor
Check for wear and damage, and correct or replace if abnormal.

Brake disc thickness mm (in)		
	Front	Rear
Standard	28 (1.10)	10 (0.39)
Wear limit	26 (1.02)	8.5 (0.335)

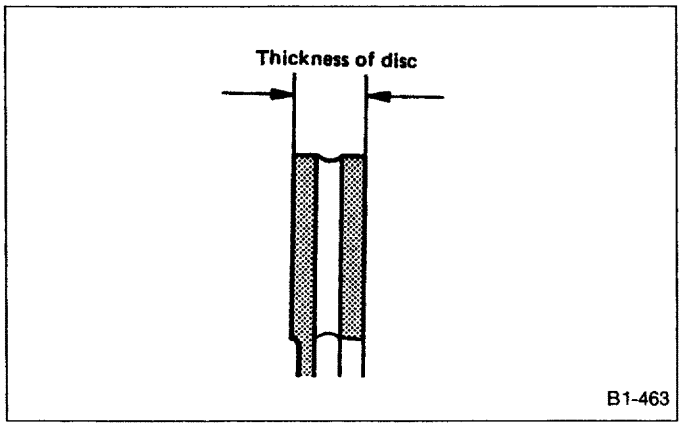

Fig. 4

Disc rotor runout:
Limit 0.075 mm (0.0030 in)

Measure the disc rotor runout at a point less than 5 mm (0.20 in) from the outer periphery of the rotor.

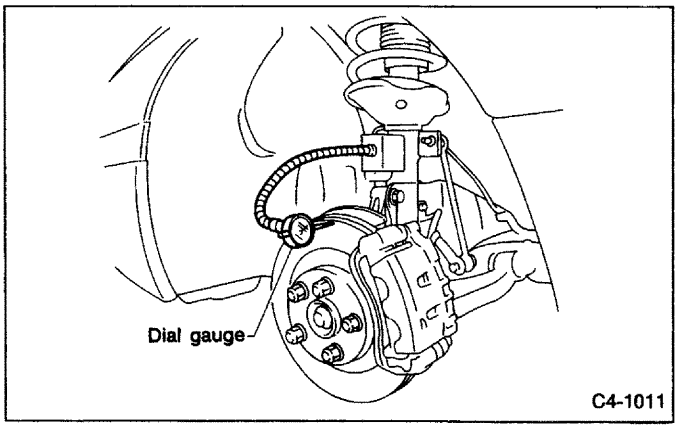

Fig. 5

13. Brake Linings and Drums (Parking brake)

MAINTENANCE INTERVAL (Number of months or km (miles), whichever occurs first)									
Months	3	7.5	15	22.5	30	37.5	45	52.5	60
x1,000 km	4.8	12	24	36	48	60	72	84	96
x1,000 miles	3	7.5	15	22.5	30	37.5	45	52.5	60
					I				I

A: INSPECTION

Inspect brake linings and drums of both sides of the rear brake at the same time by removing brake drums.

1) Inspect brake shoes for damage or deformities and check brake linings for wear.

Always replace both primary and secondary brake shoes for the left and right wheels at the same time.

Brake lining thickness excluding back metal:
Standard
3.2 mm (0.126 in)
Wear limit
1.5 mm (0.059 in)

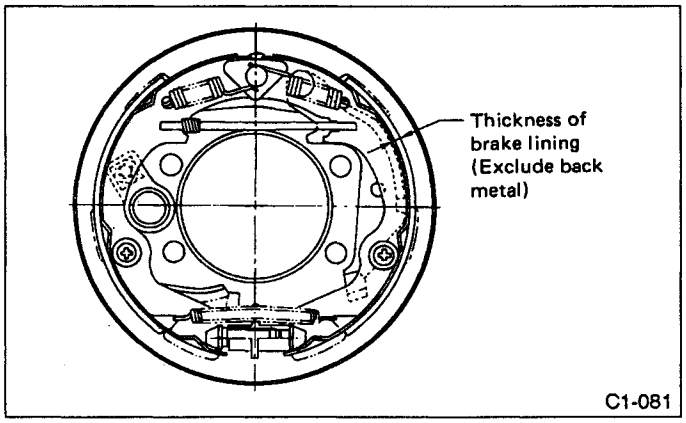

Fig. 49

2) Check brake drum for wear, dents or other damage. If the inside surface of brake drum is streaked, correct the surface with emery cloth (#200 or more). If it is unevenly worn, taperingly streaked, or the outside surface of brake drum is damaged, correct or replace it.

Brake drum inside diameter:
Standard
190 mm (7.48 in)
Wear limit
191 mm (7.52 in)

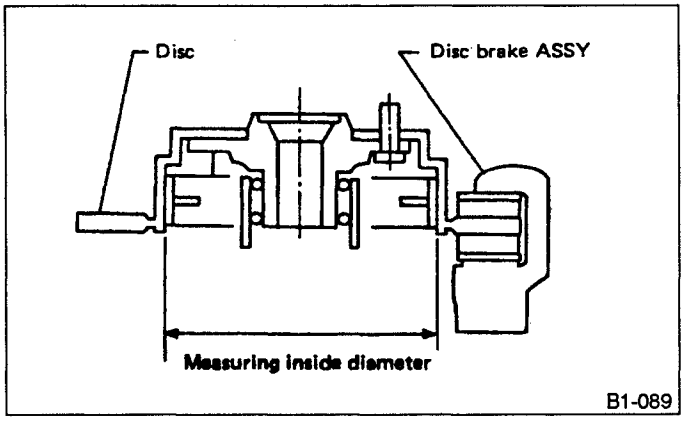

Fig. 50

3) If the deformation or wear of back plate, shoe, etc. are notable, replace them.

4) When the shoe return spring tension is excessively weakened, replace it, taking care to identify upper and lower springs.

B: ADJUSTMENT

1) Remove rear cover (rubber) installed at back plate.
2) Turn adjuster toward arrow mark (upward) until it is locked slightly, by using slot-type screw driver as shown in illustration below.

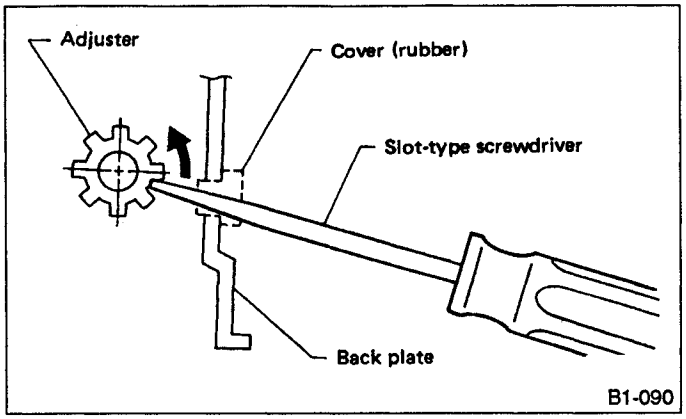

Fig. 51

3) Turn back (downward) adjuster 3 to 4 notches.
4) Install cover (rubber) at original position correctly.

14. Inspect Brake Line and Check Operation of Parking and Service Brake System

MAINTENANCE INTERVAL (Number of months or km (miles), whichever occurs first)									
Months	3	7.5	15	22.5	30	37.5	45	52.5	60
x1,000 km	4.8	12	24	36	48	60	72	84	96
x1,000 miles	3	7.5	15	22.5	30	37.5	45	52.5	60
			P		P		P		P

A: INSPECTION

1. BRAKE LINE

1) Check scratches, swelling, corrosion and/or traces of fluid leakage on brake hoses or pipe joints.

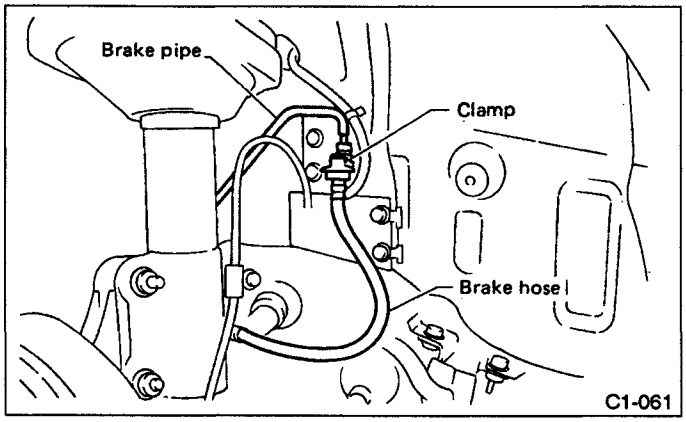

Fig. 52

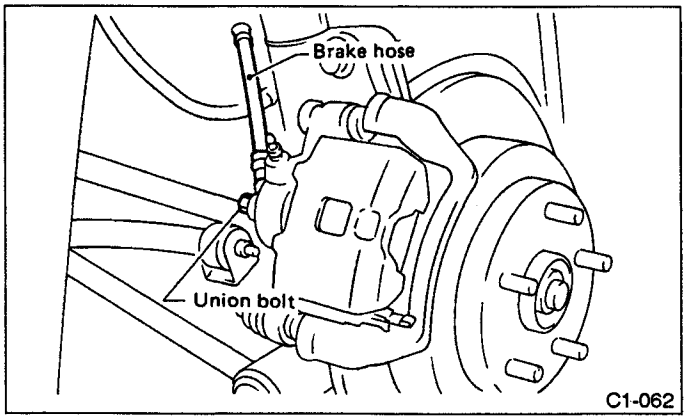

Fig. 53

2) Check the possibility of adjacent parts interfering with brake pipes/hoses during driving, and loose connections/clamps.

3) Check any trace of fluid leakage, scratches, etc. on master cylinder, wheel cylinder, pressure control valve.

When the brake fluid level in the reservoir tank is lower than the specified limit, the brake fluid warning light on the instrument panel will come on.

B: CHECKING

1. SERVICE BRAKE

1) Check the free play of brake pedal with a force of less than 10 N (1 kg, 2 lb).

Brake pedal free play:
1.0 — 3.0 mm (0.039 — 0.118 in)

If the free play is out of specifications above, adjust the brake pedal as follows:

(1) Be sure engine is off. (No vacuum is applied to brake booster.)

(2) There should be play between brake booster clevis and pin at brake pedal installing portion.
(Depress brake pedal pad with a force of less than 10 N (1 kg, 2 lb) to a stroke of 1.0 to 3.0 mm [0.039 to 0.118 in].

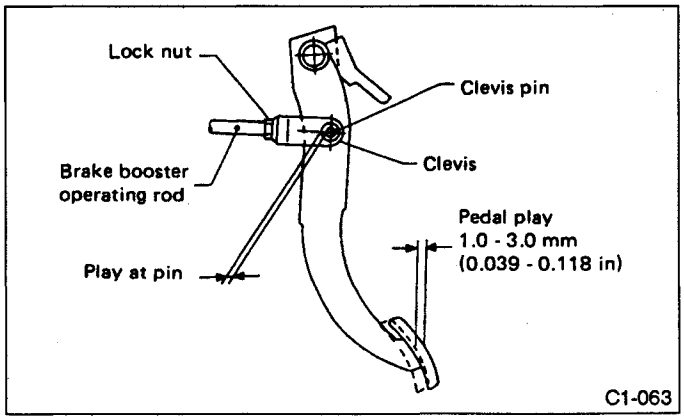

Fig. 54

(3) Depress the surface of brake pedal pad by hand.

(4) If there is no free play between clevis pin and clevis, loosen lock nut for operating rod and adjust operating rod by turning in the direction that shortens it.

2) Measure the distance between brake pedal and floor when the pedal is depressed with a force of approximately 294 N (30 kg, 66 lb).

Brake pedal reserve distance:
More than 120 mm (4.72 in)/294 N (30 kg, 66 lb)

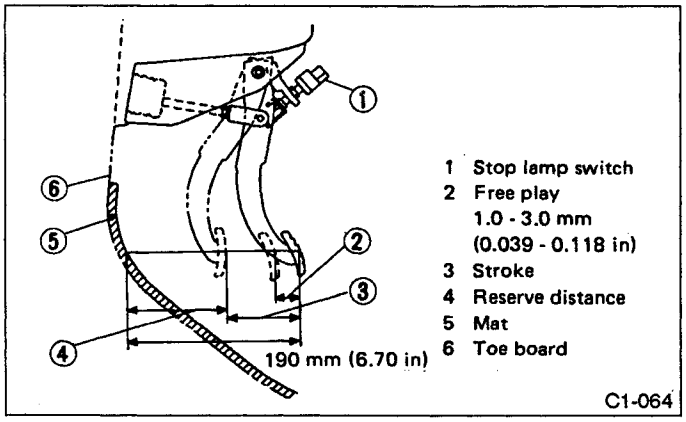

Fig. 55

3) Check to see if air is in the hydraulic brake line by the feel of pedal operation. If air appears to exist in the line, bleed it from the system.
4) Check for even operation of all brakes, using a brake tester or by driving the vehicle for a short distance on a straight road.

2. PARKING BRAKE SYSTEM

1) Remove console box.
2) Adjust parking brake level by turning adjuster (double nut) until parking brake lever stroke is set at 6 to 7 notches with operating force of 196 N (20 kg, 44 lb).

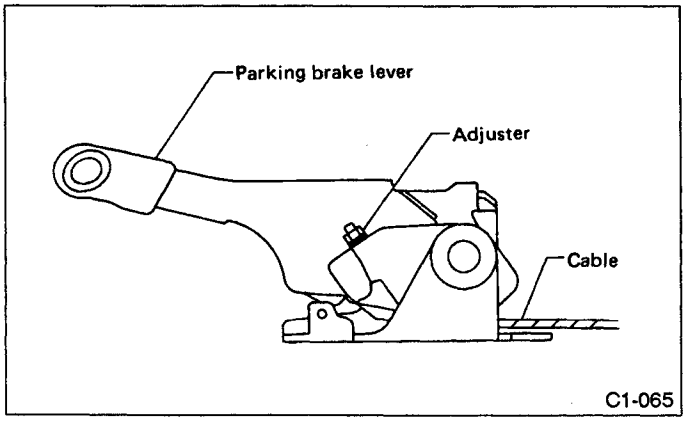

Fig. 56

3. BRAKE SERVO SYSTEM

1) With the engine off, depress the brake pedal several times applying the same pedal force: Make sure the travel distance should not change.
2) With the brake pedal depressed, start the engine: Make sure the pedal should move slightly toward the floor.
3) With the brake pedal depressed, stop the engine and keep the pedal depressed for 30 seconds: Make sure the pedal height should not change.
4) Check valve is built into vacuum hose. Disconnect vacuum hose to inspect function of check valve.
Blow air into vacuum hose from its brake booster side end: Air must flow out of engine side end of hose. Next blow air into hose from engine side: Air should not flow out of hose.
Replace both check valve and vacuum hose if check valve is faulty. Engine side of vacuum hose is indicated by marking "ENGINE" as shown.

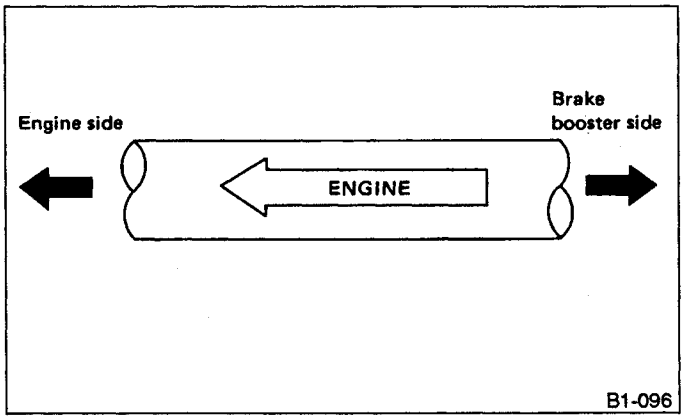

Fig. 57

5) Check vacuum hose for cracks or other damage.
When installing the vacuum hose on the engine and brake booster, do not use soapy water or lubricating oil on their connections.
6) Check vacuum hose to make sure it is tight and secure.

15. Steering and Suspension

MAINTENANCE INTERVAL (Number of months or km (miles), whichever occurs first)									
Months	3	7.5	15	22.5	30	37.5	45	52.5	60
x1,000 km	4.8	12	24	36	48	60	72	84	96
x1,000 miles	3	7.5	15	22.5	30	37.5	45	52.5	60
			I		I		I		I

A: INSPECTION

1. STEERING WHEEL

1) Set steering wheel in a straight-ahead position, and check wheel spokes to make sure they are correctly set in their specified positions.
2) Lightly turn steering wheel to the left and right to determine the point where front wheels start to move. Measure the distance of the movement of steering wheel at the outer periphery of wheel.

Steering wheel free play:
0 — 17 mm (0 — 0.67 in)

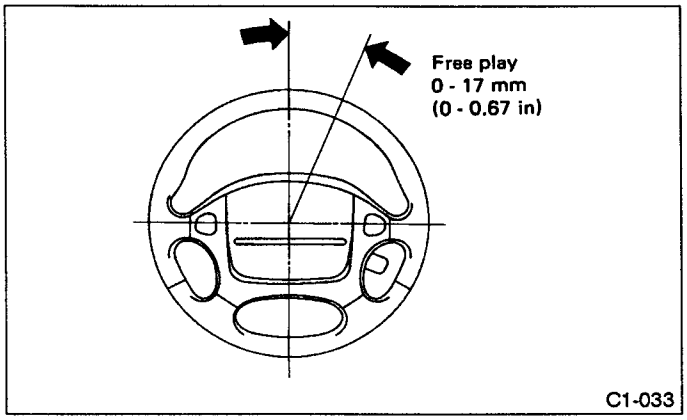

Fig. 58

3) Move steering wheel vertically toward the shaft to ascertain if there is play in that direction.

Maximum permissible play:
0.5 mm (0.020 in)

4) Drive vehicle and check the following items during operation.
(1) Steering force .....
The effort required for steering should be smooth and even at all points, and should not vary.
(2) Pull to one side .....
Steering wheel should not be pulled to either side while driving on a level surface.
(3) Wheel runout .....
Steering wheel should not show any sign of runout.
(4) Return factor .....
Steering wheel should return to its original position after it has been turned and then released.

2. STEERING SHAFT JOINT

1) When steering wheel free play is excessive, disconnect universal joint of steering shaft and check it for any play and yawing torque (at the point of the crossing direction). Also inspect for any damage to sealing or worn serrations.

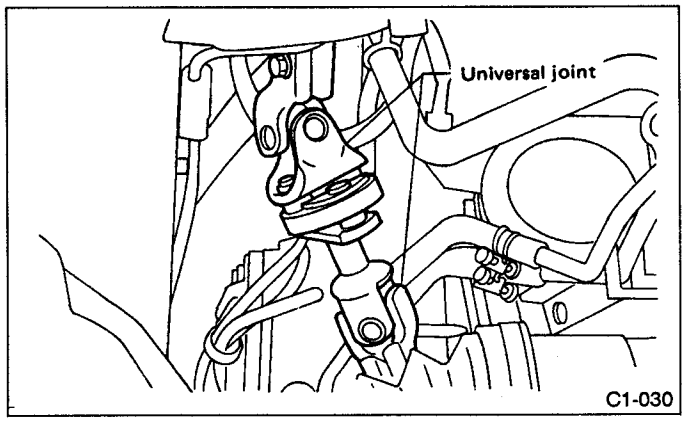

Fig. 59

If the joint is loose, retighten the mounting bolts to the specified torque.

Tightening torque:
21 — 26 N•m (2.1 — 2.7 kg-m, 15 — 20 ft-lb)

3. GEARBOX

1) Disconnect ground cable from battery.
2) Disconnect both oxygen sensor and steering harness (solenoid valve) connector.
3) Raise vehicle with a jack and remove front wheels.
4) Remove engine compartment's under cover.
5) With wheels placed on a level surface, turn steering wheel 90° in both the left and right directions.
While wheel is being rotated, reach under vehicle and check for looseness in gearbox.

Tightening torque:
47 — 71 N·m (4.8 — 7.2 kg-m, 35 — 52 ft-lb)

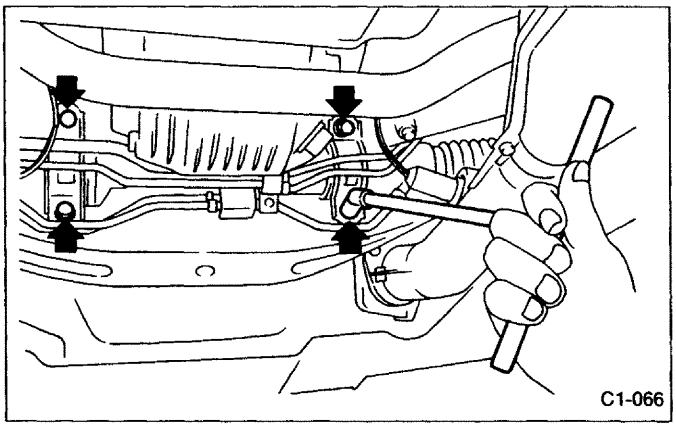

Fig. 6

6) Check boot for damage, cracks or deterioration.

MAINTENANCE INTERVAL (Number of months or km (miles), whichever occurs first)									
Months	3	7.5	15	22.5	30	37.5	45	52.5	60
x1,000 km	4.8	12	24	36	48	60	72	84	96
x1,000 miles	3	7.5	15	22.5	30	37.5	45	52.5	60
			I		I		I		I

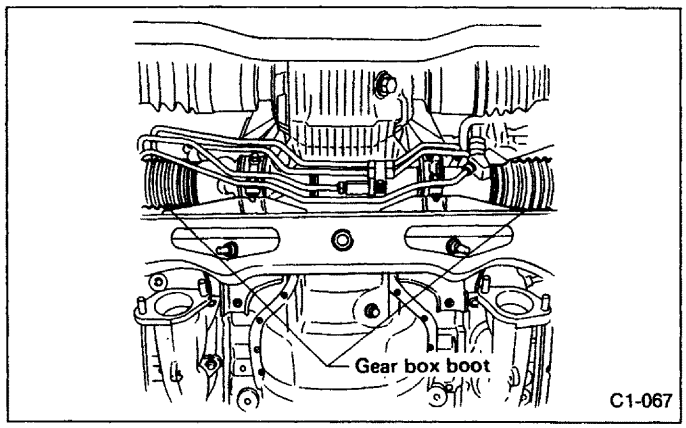

Fig. 7

7) With vehicle on a level surface, quickly turn steering wheel to the left and right.
While steering wheel is being rotated, check the gear backlash. If any unusual noise is noticed, adjust the gear backlash in the following manner.

(1) Remove front stabilizer and stabilizer lever from stabilizer links and disconnect stabilizer lever from front stabilizer.

Before disconnecting stabilizer lever, put matching marks on affected parts.

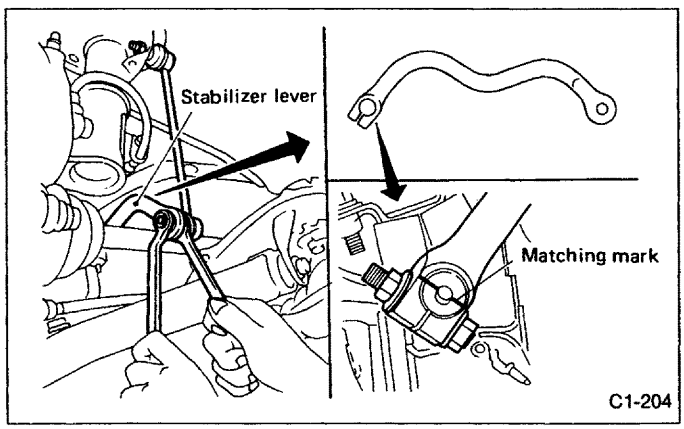

Fig. 8

(2) Remove both sides clamp and rubber bush.

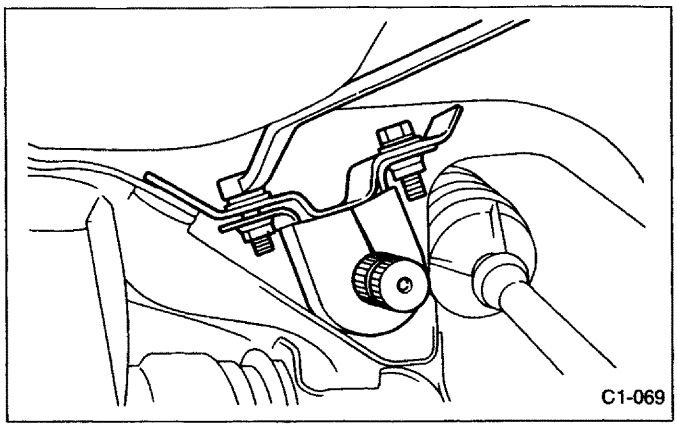

Fig. 9

(3) Position stabilizer to free.
(4) Loosen the adjusting screw.

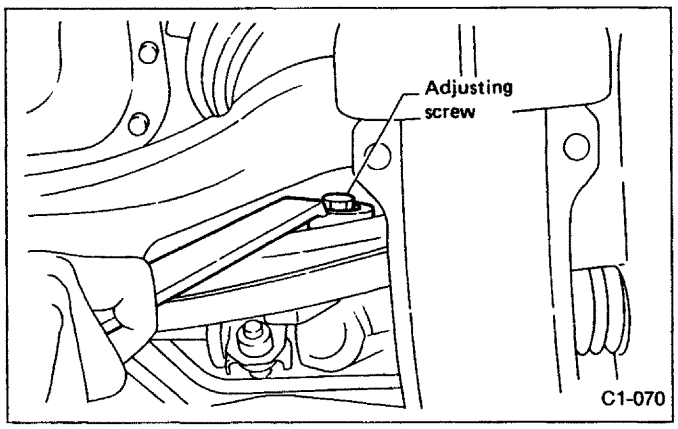

Fig. 10

(5) Set steering wheel in straight-ahead direction.
(6) Tighten adjusting screw two turns.
(7) Tighten adjusting screw and plug at the same time so that the entire thread area is coated with liquid gasket.

Liquid packing:
Three Bond 1102 (P/N 004403006) or equivalent

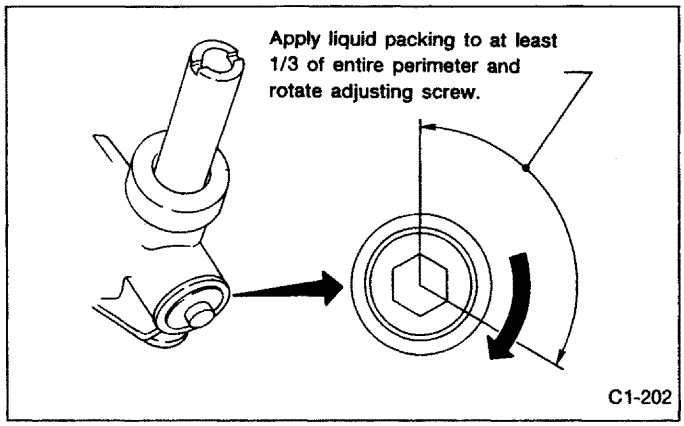

Fig. 11

(8) Tighten adjusting screw to 5 N·m (0.5 kg-m, 3.6 ft-lb) and then loosen. Repeat this operation twice to fit the sleeve.
(9) Retighten adjusting screw to 5 N·m (0.5 kg-m, 3.6 ft-lb) and back off 30°.
(10) Install lock nut. While holding adjusting screw using a closed wrench, tighten lock nut with LOCK NUT WRENCH (34099PA100).

Tightening torque (Lock nut):
29 — 49 N·m (3.0 — 5.0 kg-m, 22 — 36 ft-lb)

Hold the adjusting screw with a wrench to prevent it from turning while tightening the lock nut.

4. TIE-ROD

1) Check tie-rod and tie-rod ends for bends, scratches or other damage.
2) Check connections of knuckle ball joints for play, inspect for damage on dust seals, and check the free play of ball studs.
3) Make sure that the cotter pin is installed correctly in the castle nut of the tie-rod end.

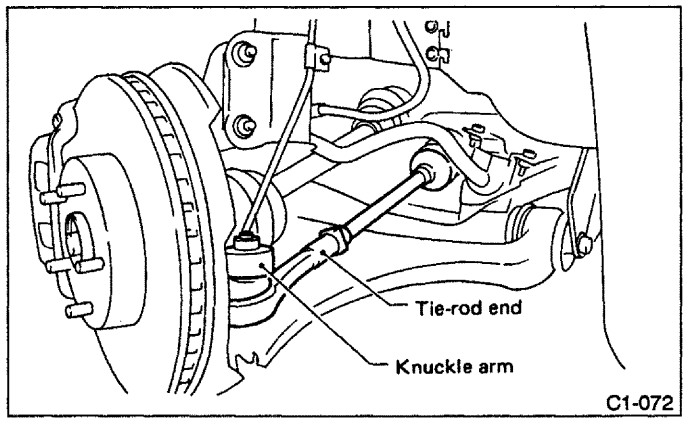

Fig. 66

5. POWER STEERING FLUID LEVEL

1) Place vehicle with engine "off" on the flat and level surface.
2) Check the fluid level by removing filler cap of oil pump.
(1) Check at temperature 21°C (70°F) of fluid temperature.

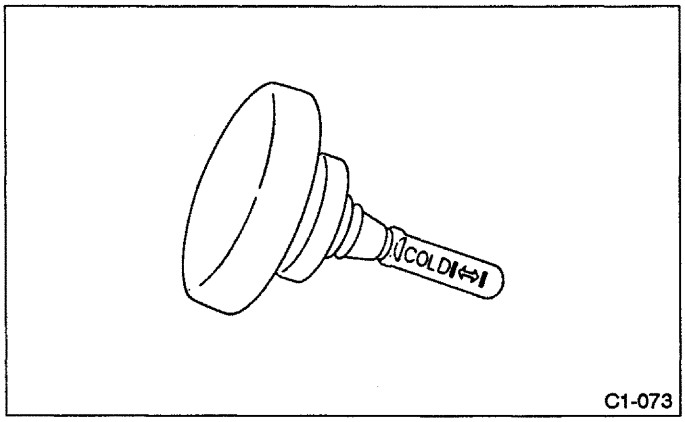

C1-073

Fig. 67

(2) Check at temperature 60°C (140°F) of fluid temperature.

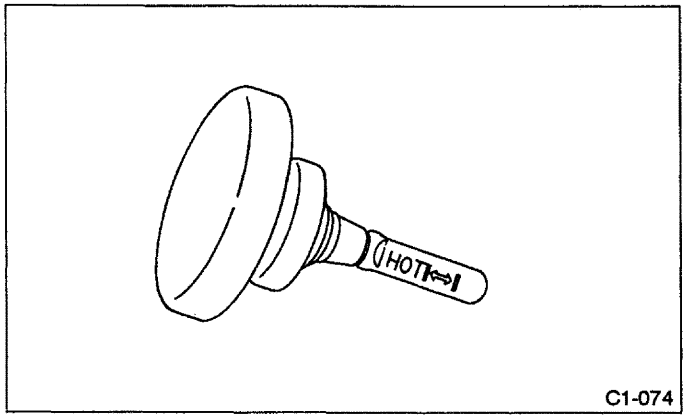

C1-074

Fig. 68

3) Fluid level should be maintained in the each specified range on the indicator of filler cap.
If fluid level is at lower point or below, add fluid to keep the level in the specified range of indicator.
If fluid level is at upper point or above, drain fluid to keep the level in the specified range of indicator by using a syringe or the like.

Recommended fluid	Manufacturer
ATF Dexron II	B.P.
	CALTEX
	CASTROL
	MOBIL
	SHELL
	TEXACO

Fluid capacity:
1.0 ℓ (1.1 US qt, 0.9 Imp qt)

6. POWER STEERING FLUID FOR LEAKS

Inspect the underside of oil pump and gearbox for power steering system, hoses, piping and their couplings for fluid leaks.
If fluid leaks are found, correct them by retightening their fitting bolts (or nuts) and/or replacing their parts.
a. Wipe the leakage fluid off after correcting fluid leaks, or a wrong diagnosis is taken later.
b. Also pay attention to clearances between hoses (or pipings) and other parts when inspecting fluid leaks.

7. HOSES OF OIL PUMP FOR DAMAGES

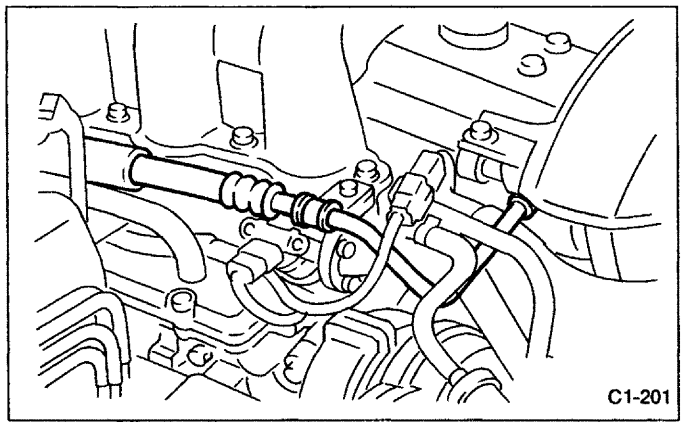
C1-201

Fig. 12

1) Check pressure hose and return hose of oil pump for crack, swell or damage. Replace hose with new one if necessary.

Prevent hoses from revolving and/or turning when installing hoses.

8. POWER STEERING PIPES FOR DAMAGE

Check power steering pipes for corrosion and damage. Replace pipes with new one if necessary.

9. GEARBOX BOOTS

Inspect both sides of gearbox boots as follows, and correct the defects if necessary.

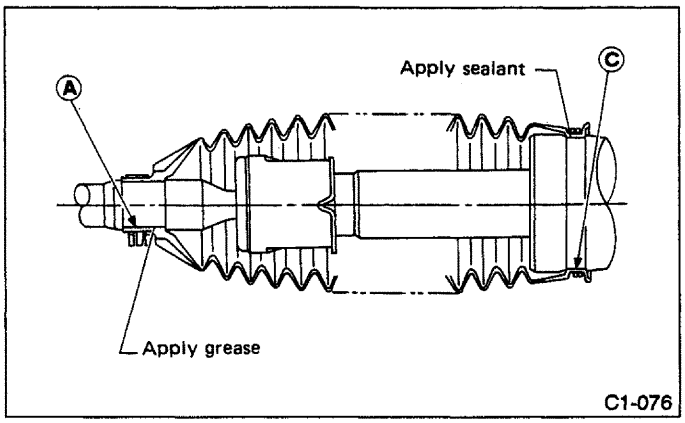

Fig. 70

1) Ⓐ and Ⓒ position of gearbox boot are fitted correspondingly in A and C grooves of gearbox and the rod.
2) Clips are fitted outside of Ⓐ and Ⓒ positions of boot.
3) Boot does not have crack, hole.
Rotate Ⓒ position of gearbox boot against twist of it produced by adjustment of toe-in, etc.

10. FITTING BOLTS AND NUTS

Inspect fitting bolts and nuts of oil pump and bracket for looseness, and retighten them if necessary.
Inspect and/or retighten them when engine is cold.

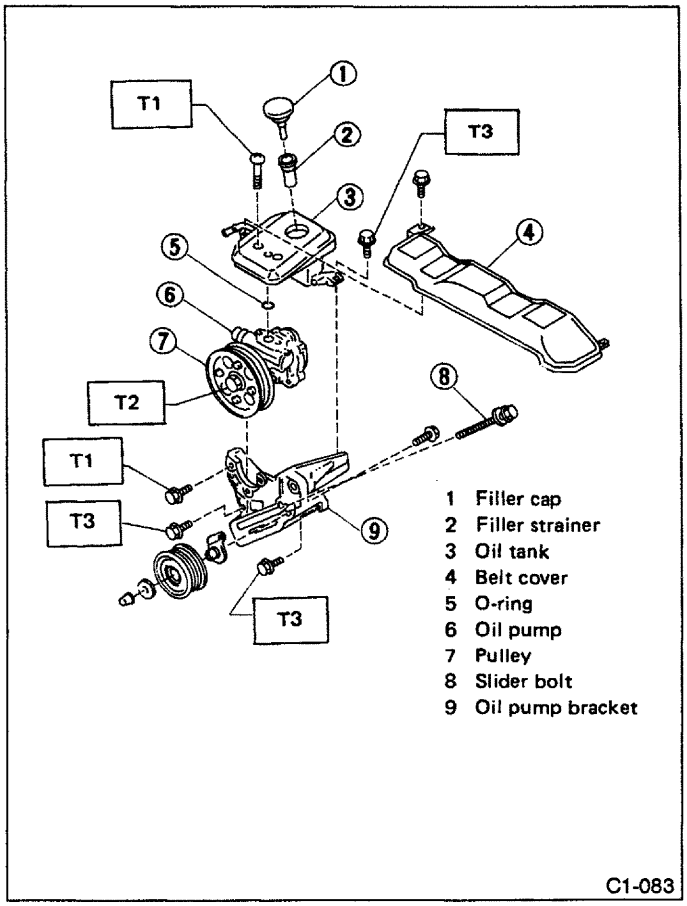

Fig. 71

Tightening torque: N•m (kg-m, ft-lb)
T1: 18 — 23 (1.8 — 2.3, 13 — 17)
T2: 42 — 62 (4.3 — 6.3, 31 — 46)
T3: 20 — 24 (2.0 — 2.4, 14 — 17)

11. SUSPENSION SYSTEM

1) Play of front ball joint ..... Inspect every 24,000 km (15,000 miles) or 15 months, whichever occurs first.
(1) Jack-up vehicle until front wheels are off ground.
(2) Next, grasp bottom of tire and move it in and out. If relative movement is observed between brake disc cover and end of lower arm, ball joint may be excessively worn.

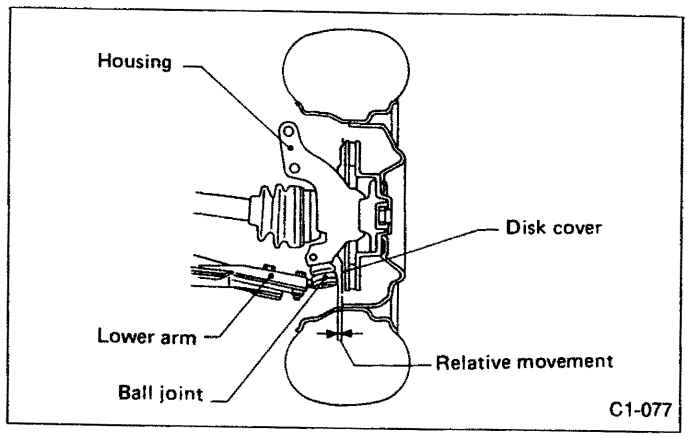

Fig. 13

(3) Next, grasp end of lower arm and move it up and down. Relative movement between housing and lower arm indicates ball joint may be excessively worn.

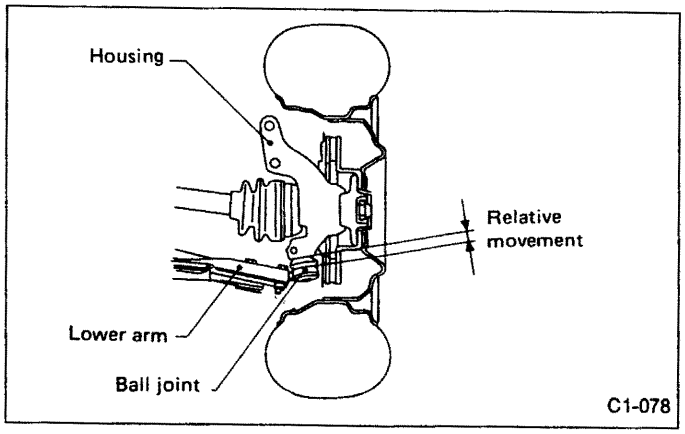

Fig. 14

(4) If relative movement is observed in tests (2) and (3) above, remove and inspect ball joint according to chapter 4-1. If looseness exceeds standard, replace ball joint.

2) Damage of dust cover ..... Inspect every 24,000 km (15,000 miles) or 15 months, whichever occurs first.
Visually inspect ball joint dust cover. If it is damaged, remove ball joint as instructed in chapter 4-1 and mea sure looseness of ball joint.

(1) When looseness exceeds standard value or dust cover is damaged, replace ball joint assembly.

When lower arm ball joint has been removed or replaced, check toe-in of front wheel.
If front wheel toe-in is not within the tolerance, adjust according to chapter 4-1 so that toe-in conforms to service standard.

3) Lower arm's liquid-filled bushing with new one.
Check oil leaks at or around liquid-filled bushing. If oil leaks, replace bushing with new one.
4) Wheel alignment and ground clearance ..... Inspect every 48,000 km (30,000 miles) or 30 months, whichever occurs first.

(1) Unload cargoes and set vehicle in curb weight (empty) condition.
(2) Then, check ground clearance of front and rear suspensions to conform to standard values.

(Adjusting procedure) — Ground clearance

When ground clearance is out of tolerance, visually inspect following components and replace deformed parts.
- Suspension components [Front: strut assembly, Rear: strut assembly]
- Body parts to which suspensions are installed.

When no components are deformed, adjust ground clearance by replacing coil spring in the strut assembly whose ground clearance is out of tolerance.
(3) Check alignment of front suspension to ensure that following items conform to standard values provided in chapters 4-1 and 4-3.
- Toe-in
- Camber angle
- Caster angle
- Turning angle of tire

(Adjusting procedure) — Front suspension alignment

(a) Caster angles are not adjustable. When caster angle is not within the tolerance, visually inspect following components and replace deformed parts.
- Suspension components [Strut assembly, sub frame, lower arm, etc.]
- Body parts to which suspensions are installed.

(b) When toe-in is not within the tolerance, adjust by the method described in chapter 4-1 so that it conforms to service standard.
(c) When right-and-left turning angles of tire are not within the tolerance, adjust to standard value by method described in chapter 4-3.

(4) Check alignment of rear suspension to ensure that following items conform to standard values provided in chapter 4-1.
- Toe-in
- Camber angle

(Adjusting procedure) — Rear suspension alignment

Camber angle can not be adjusted.
When toe-in or camber angle is not within the tolerance, visually inspect parts listed below. If deformation is observed, replace damaged parts.
- Suspension components [Strut assembly, lateral links, trailing link, sub frame, etc.]
- Body parts to which suspensions are installed.

When no components are deformed, adjust alignment by the method described in chapter 4-1 so that it confirms to service standard.

5) Oil leakage of strut ..... Inspect every 48,000 km (30,000 miles) or 30 months, whichever occurs first.
Remove tire and visually inspect strut for oil leakage as instructed in chapter 4-1. Replace strut if oil leaks excessively.
6) Tightness of bolts and nuts ..... Inspect every 48,000 km (30,000 miles) or 30 months, whichever occurs first.
Check bolts and nuts for looseness. Retighten bolts and nuts to specified torque. If self-locking nuts are loose, replace with new ones and tighten to specified torque. Further, check that cotter pin in place as shown below. If not, install new cotter pin.

FRONT

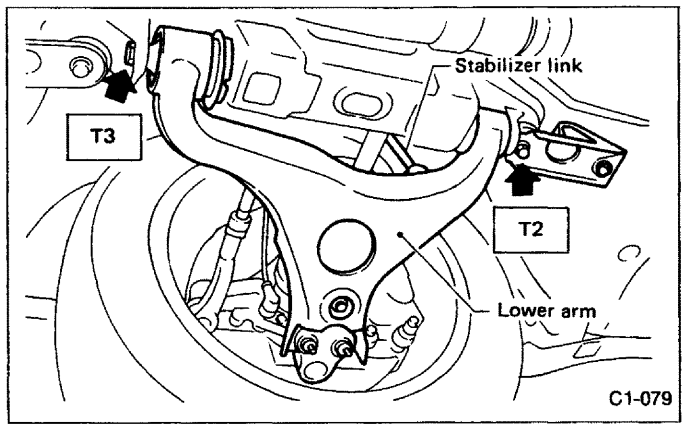

Fig. 15

REAR

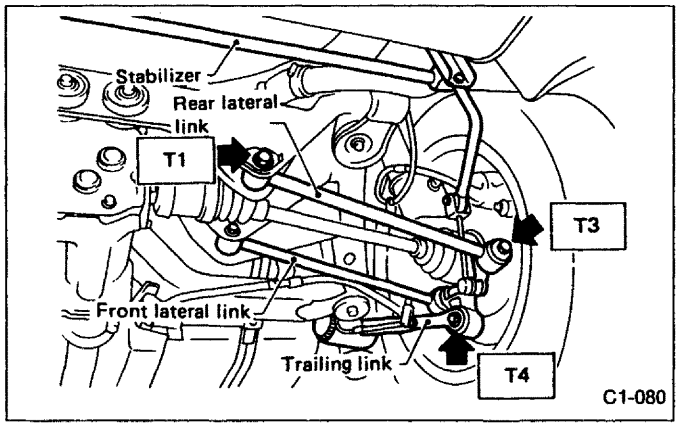

Fig. 16

Tightening torque: N·m (kg-m, ft-lb)
T1: 83 — 113 (8.5 — 11.5, 61 — 83)
T2: 127 — 167 (13 — 17, 94 — 123)
T3: 98 — 137 (10 — 14, 72 — 101)
T4: 142 — 181 (14.5 — 18.5, 105 — 134)

7) Damage to suspension parts
Check the following parts and the fastening portion of the vehicle body for deformity or excessive rusting which impairs the suspension. Replace faulty parts. If minor rust formation, pitting, etc. are noted, remove rust and apply remedial anti-corrosion measures.

(1) Front suspension
- Lower arm ASSY
- Sub frame
- Strut

(2) Rear suspension
- Sub frame
- Lateral links
- Trailing link
- Strut

16. Front and Rear Wheel Bearing Lubricant

MAINTENANCE INTERVAL (Number of months or km (miles), whichever occurs first)									
Months	3	7.5	15	22.5	30	37.5	45	52.5	60
x1,000 km	4.8	12	24	36	48	60	72	84	96
x1,000 miles	3	7.5	15	22.5	30	37.5	45	52.5	60
									(I)

A: INSPECTION

Inspect the condition of front and rear wheel bearing grease as follows:

1. FRONT WHEEL BEARING

1) Jack up the front of vehicle.
2) While holding front wheel by hand, swing it in and out to check bearing free play.
3) Loosen wheel nuts and remove front wheel.
4) If bearing free play exists in step 2) above, attach a dial gauge to hub and measure axial displacement in axial direction.

Service limit:
Straight-ahead position within 0.05 mm (0.0020 in)

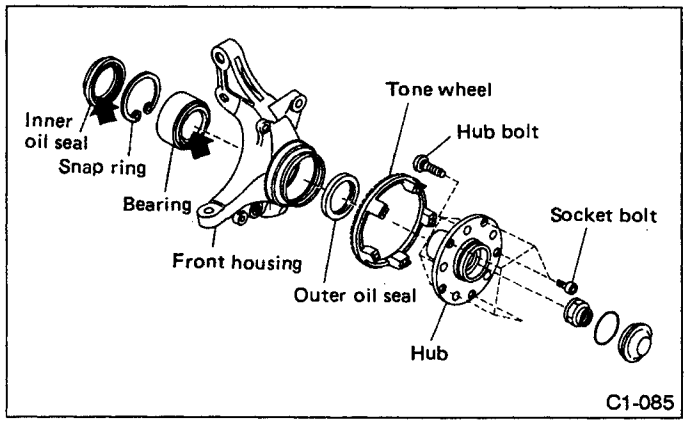

Fig. 76

5) Remove the FTJ of front drive shaft from transmission spindle.
For removal of FTJ, refer to "4-2 WHEELS AND AXELS" [W2A0].

6) While supporting front drive shaft horizontally with one hand, turn hub with the other to check for noise or binding.
If hub is noisy or binds, disassemble front axle and check condition of oil seals, bearing, etc.

2. REAR WHEEL BEARING

1) Jack up the rear of vehicle.
2) While holding rear wheel by hand, swing it in and out to check bearing free play.
3) Loosen wheel nuts and remove rear wheel.
4) If bearing free play exists in step 2) above, attach a dial gauge to hub and measure axial displacement in axial direction.

Service limit:
Straight-ahead position within 0.05 mm (0.0020 in)

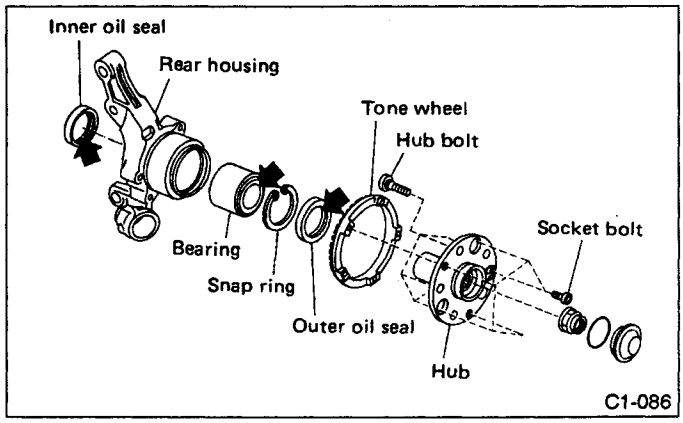

Fig. 77

5) Remove the DOJ of rear drive shaft from rear differential.
For removal of DOJ, refer to "4-2 WHEELS AND AXELS" [W5A0].

6) While supporting rear drive shaft horizontally with one hand, turn hub with the other to check for noise or binding. If hub is noisy or binds, disassemble rear axle and check condition of oil seals, bearings, etc.

17. Supplemental Restraint System (Airbag)

MAINTENANCE INTERVAL (Number of months or km (miles), whichever occurs first)									
Months	3	7.5	15	22.5	30	37.5	45	52.5	60
x1,000 km	4.8	12	24	36	48	60	72	84	96
x1,000 miles	3	7.5	15	22.5	30	37.5	45	52.5	60
	Inspect every 10 years								

A: INSPECTION

Check the airbag system in accordance with the result of the self-diagnosis. Refer to "5-5. SUPPLEMENTAL RESTRAINT SYSTEM ."

1) Ensure that airbag connectors are connected. If not, properly connect (also double lock the connector). When the ignition switch is turned ON with the connector(s) disconnected, the airbag warning light blinks to identify the fault.

2) Turn the ignition switch ON, and connect the airbag diagnosis terminal of the service connector (located inside the lower front pillar, trim panel) to the ground terminal.

3) The warning light blinks to indicate a trouble code (a fault is identified). When the airbag system is in good order (no trouble codes are stored in the memory), the warning light blinks on and off at 0.6 second intervals (as long as the diagnosis terminal is connected to the ground terminal).

4) When the warning light indicates a trouble code, check the airbag system in accordance with the trouble-shooting procedure outlined under "5-5. SUPPLEMENTAL RESTRAINT SYSTEM."

SUBARU

SVX

1992

	Page
1. ENGINE TOOLS	2
2. MANUAL TRANSMISSION AND DIFFERENTIAL TOOLS	—
3. AUTOMATIC TRANSMISSION AND DIFFERENTIAL TOOLS	5
4. REAR FINAL DRIVE SYSTEM (AWD MODELS) TOOLS	8
5. SUSPENSION TOOLS	10
6. WHEELS AND AXLES TOOLS	11
7. STEERING SYSTEM TOOLS	13
8. BODY TOOLS	15
9. SUPPLEMENTAL RESTRAINT SYSTEM TOOLS	16

1. Engine Tools

498267500★	498497200★	499207200★	499897100★
CYLINDER HEAD TABLE	CRANKSHAFT STOPPER CP	CAMSHAFT GEAR WRENCH CP	CAMSHAFT GEAR PLIERS
• For replacing valve guides. • Used to remove and install valve springs.	Used to stop rotation of flywheel when loosening and tightening crankshaft pulley bolt, etc.	Used to set the position of camshaft sub-gear when installing camshaft in cylinder head.	Used to remove and install camshaft (Intake) snap ring.
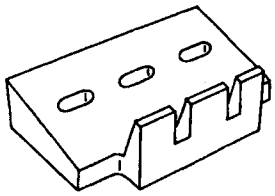 C1-100	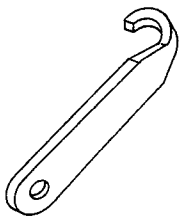 C1-101	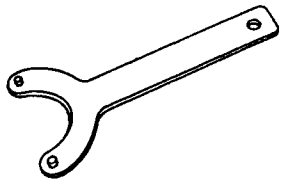 C1-102	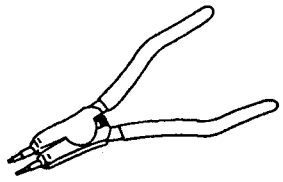 C1-103

498747100	498857100	499017100	499037100
PISTON GUIDE	VALVE OIL SEAL GUIDE CP	PISTON PIN GUIDE	CONNECTING ROD BUSHING REMOVER & INSTALLER
Used to install piston in cylinder.	For press-fitting of intake and exhaust valve guide oil seals.	Used to install piston pin piston and connecting rod.	Used to remove and install connecting rod bushing.
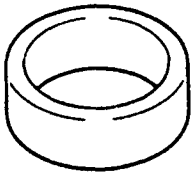 B1-130	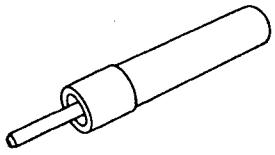 C1-104	 B1-132	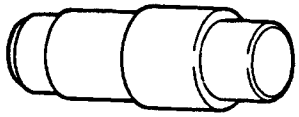 B1-133

499097500	499207100	499587300★	499587200
PISTON PIN REMOVER ASSY	CAMSHAFT SPROCKET WRENCH CP	CAMSHAFT OIL SEAL INSTALLER	CRANKSHAFT OIL SEAL INSTALLER
Used to remove piston pin.	Used to remove and install camshaft sprocket.	• Used to install crankshaft oil seal. • Used with CAMSHAFT OIL SEAL GUIDE (499597000).	• Used to install crankshaft oil seal. • Used with CRANKSHAFT OIL SEAL GUIDE (499597100).
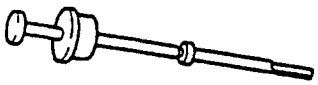 B1-134	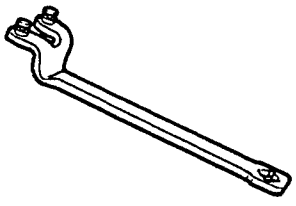 B1-135	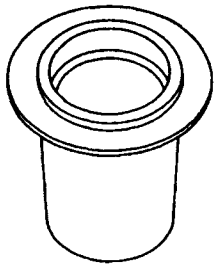 C1-105	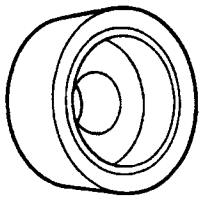 B1-137

★ Newly adopted tool.

499597000	499597100	499718000	499767500★
CAMSHAFT OIL SEAL GUIDE	CRANKSHAFT OIL SEAL GUIDE	VALVE SPRING REMOVER	VALVE GUIDE ADJUSTER
• Used to install camshaft oil seal. • Used with CAMSHAFT OIL SEAL INSTALLER (499587100).	• Used to install camshaft oil seal. • Used with CAMSHAFT OIL SEAL INSTALLER (499587200).	• Used to remove and install valve spring. • Used with CYLINDER HEAD TABLE (498267500).	Used to install intake and exhaust valve guides.
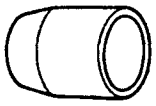 B1-138	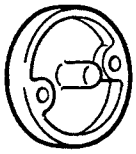 B1-139	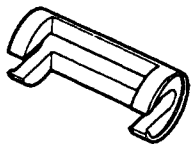 B1-140	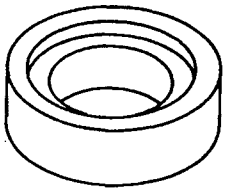 C1-106

499767200	499767400	499817300★	499817400★
VALVE GUIDE REMOVER	VALVE GUIDE REAMER	ENGINE STAND COMPL. RH	ENGINE STAND COMPL. LH
For removing valve guides.	For reaming valve guides.	Stand used for engine disassembly and ASSY.	Stand used for engine disassembly and ASSY.
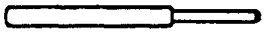 B1-170	 B1-171	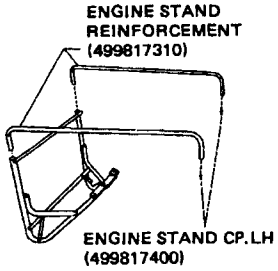 C1-107	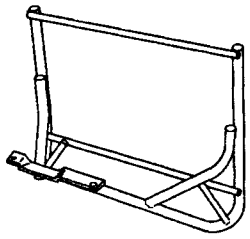 C1-108

499987500	499990110	498037100★	498547000
CRANKSHAFT SOCKET	O_2 SENSOR SOCKET	CAMSHAFT JOURNAL PLUG INSTALLER	OIL FILTER WRENCH
Used to rotate crankshaft.	Used to remove and install oxygen (O_2) sensor.	Used to install camshaft journal plug.	Used to remove and install oil filter.
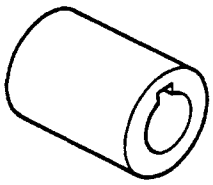 B1-143	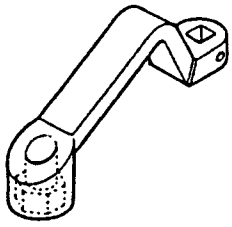 B1-173	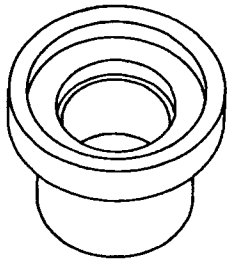 C1-109	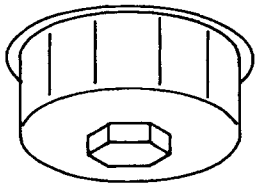 C1-110

★ Newly adopted tool.

499977000	499897200★	499587100	899521421
CRANK PULLEY WRENCH CP	PISTON CIRCLIP PLIERS	CAMSHAFT OIL SEAL INSTALLER	PULLER
Used to stop rotation of crankshaft pulley when loosening and tightening crankshaft pulley bolts.	Used to remove and install piston circlip.	Used to install oil pump oil seal.	Used to draw out crankshaft sprocket.
 B1-142	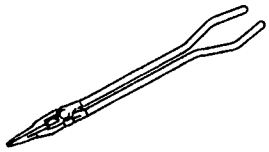 C1-111	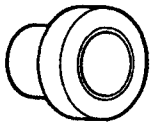 B1-136	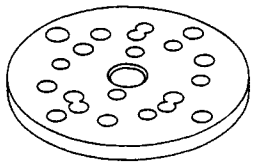 C1-151

499525500	498307500	498348500★
BOLT	SELECT MONITOR KIT	CARTRIDGE (SELECT MONITOR)
• Used to draw out crankshaft sprocket. • Used with PULLER (899521421).	Troubleshooting for electrical system.	Used with SELECT MONITOR (498307500).
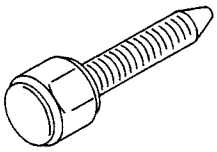 C1-152	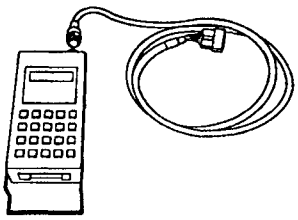 B1-316	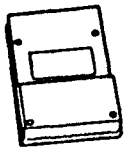 B1-317

★ Newly adopted tool.

3. Automatic Transmission and Differential Tools

398177700	398487700	398527700	498057300
INSTALLER	DRIFT	PULLER ASSY	INSTALLER
Used to install reverse clutch and high clutch snap rings.	Used to remove and install transmission case roller bearing.	Used to remove and install extension case roller bearing.	Used to install extension oil seal.
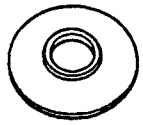 B1-205	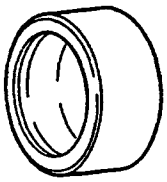 B1-206	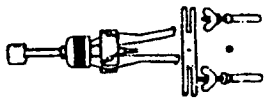 B1-207	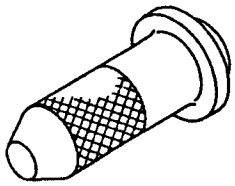 B1-208

498077000	498267400	498575400	498677010
REMOVER	TABLE	OIL PRESSURE GAUGE ASSY	COMPRESSOR
For removing differential taper roller bearing.	Used to remove transfer piston seal.	Used when measuring oil pressure.	Used to remove band piston servo.
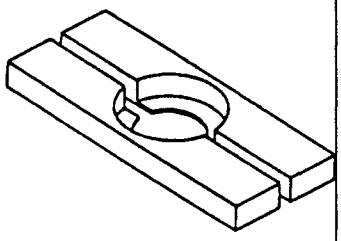 B1-210	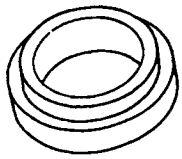 B1-147	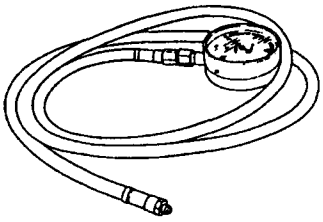 B1-211	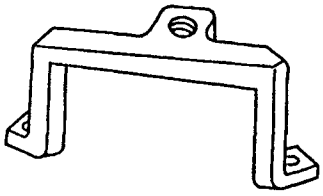 B1-212

498897200		499247400	499257300
ADAPTER CP		INSTALLER	GUIDE
Used on oil pump housing when measuring reverse clutch pressure and line pressure.	Used when measuring oil pressure at the following two points.	• Used to install transfer outer snap ring. • Used with GUIDE (499257300).	• Used to install transfer outer snap ring. • Used with INSTALLER (499247400).
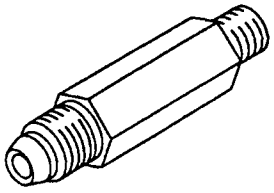 B1-213	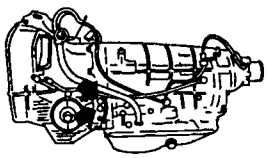 C1-112	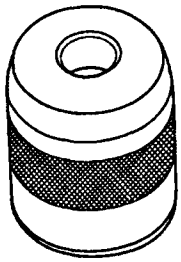 B1-148	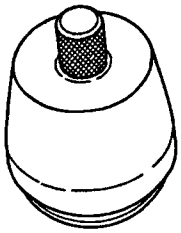 B1-149

499257400	499787000	398437700	398497701
GAUGE GUIDE	WRENCH ASSY	DRIFT	INSTALLER
Used to install transfer piston seal.	Used to remove and install differential side retainer.	Used to install converter case oil seal.	Used to install converter case oil seal.
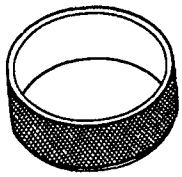 B1-150	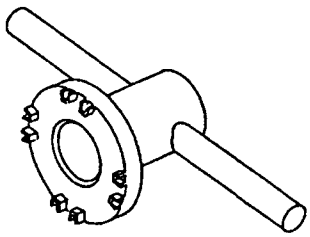 B1-215	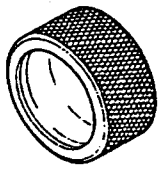 B1-223	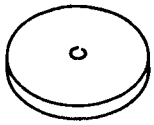 B1-318
398603610	398673600	399703600	399893600
SOCKET	COMPRESSOR	PULLER	PLIERS
Used to remove and install brake band.	Used to remove and install clutch spring.	Used to install band servo.	Used to remove and install clutch spring.
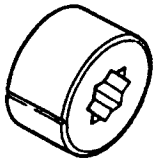 B1-340	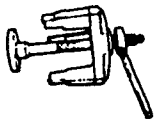 B1-342	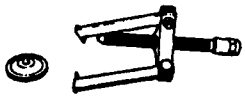 B1-343	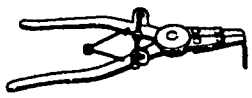 B1-344
498247001	498247100	498517000	498627000
MAGNET BASE	DIAL GAUGE	REPLACER	SEAT
Used when measuring gear backlash. Used with DIAL GAUGE (498247100).	Used when measuring gear backlash. Used with MAGNET BASE (498247001).	Used to remove front roller bearing.	Used to install clutch spring.
 B1-182	 B1-183	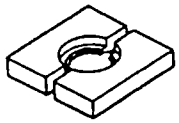 B1-184	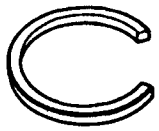 B1-345

498937100	499095500	499247300	499267300
HOLDER	REMOVER ASSY	INSTALLER	STOPPER PIN
Used to remove and install drive pinion lock nut.	Used to remove axle shaft.	Used to remove axle shaft. Used with REMOVER (499095500).	Used to install inhibitor switch.
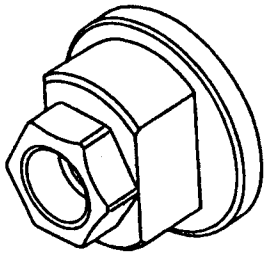 B1-347	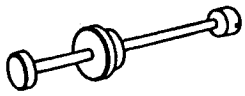 B1-348	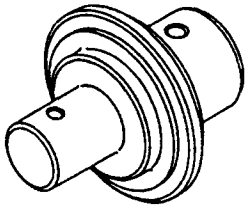 B1-349	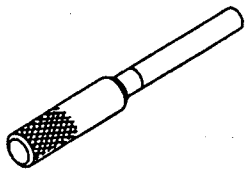 B1-350
499787100	**499827000**	**899524100**	**498307500**
WRENCH ASSY	PRESS	PULLER SET	SELECT MONITOR KIT
Used to remove and install drive pinion lock nut.	Used to install speedometer shaft oil seal.	Used to remove reduction gear.	Troubleshooting for electrical system.
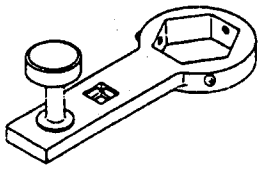 B1-352	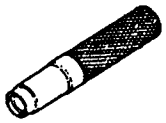 B1-193	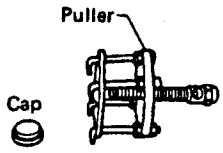 B1-353	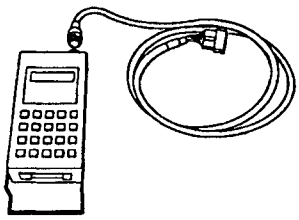 B1-316

498348500★
CARTRIDGE (SELECT MONITOR)
Used with SELECT MONITOR (498307500).
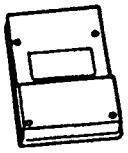 B1-317

★ Newly adopted tool.

4. Rear Final Drive System (AWD Models) Tools

397471600	398177700	398217700	398227700
HANDLE & DRIFT KIT	INSTALLER	ATTACHMENT SET	WEIGHT
Front and rear bearing cup.	Rear bearing cone.	Differential case.	Side bearing.
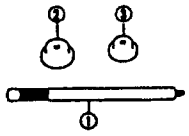 1 HANDLE (398477701) 2 DRIFT (398477702) 3 DRIFT 2 (398477703) B1-216	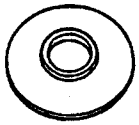 B1-217	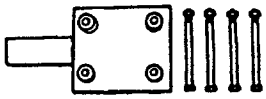 B1-218	 B1-219

398237700	398417700	498427200★	398437700
GAUGE	DRIFT	FLANGE WRENCH	DRIFT
Side bearing.	Oil seal.	Companion flange.	Oil seal.
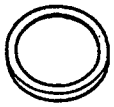 B1-220	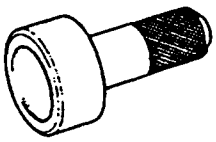 B1-221	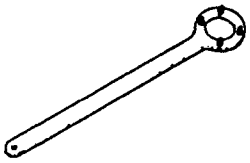 B1-222	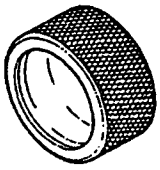 B1-223

398457700	398467700	398487700	398507701
ATTACHMENT	DRIFT	DRIFT	GAUGE
Side bearing retainer.	Drive pinion, Pilot bearing, Front bearing cone.	Side bearing cone.	Pinion height adjustment.
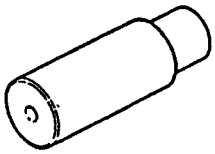 B1-224	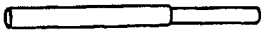 B1-225	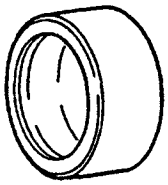 B1-226	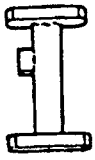 B1-227

★ Newly adopted tool.

398507702	398507703	398507704	398517700
DUMMY SHAFT	DUMMY COLLAR	BLOCK	REPLACER
Pinion height and Preload adjustment.	Pinion height and Preload adjustment.	Pinion height and Preload adjustment.	Rear bearing cone.
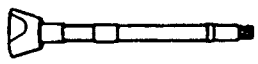 B1-228	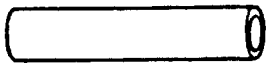 B1-229	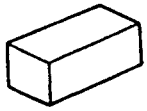 B1-230	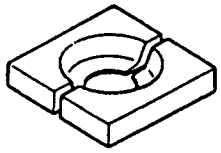 B1-231

398527700	399527700	399780104	899580100
PULLEY ASSY	PULLER SET	WEIGHT	INSTALLER
Oil seal, Side bearing cup.	Side bearing cone.	Front bearing cone, Pilot bearing, Companion flange.	Front bearing cone, Pilot bearing.
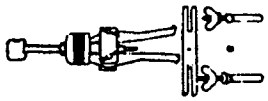 B1-232	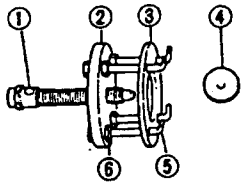 1 BOLT (899521412) 2 PULLER (399527702) 3 HOLDER (399527703) 4 ADAPTER (398497701) 5 BOLT (899520107) 6 NUT (021008000) B1-233	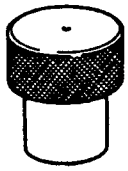 B1-234	 B1-235

899874100
INSTALLER
Companion flange.
 B1-236

5. Suspension Tools

927380000	20099PA000★	20099PA010★	927700000
ADAPTER	STRUT MOUNT SOCKET	INSTALLER & REMOVER	INSTALLER & REMOVER
Used as an adapter for Camber & Caster Gauge when measuring camber and caster.	Used to disassemble and assemble strut mount.	Used to install and remove lateral link pillow ball bushing.	Used to replace lateral link bushing (14 dia.).
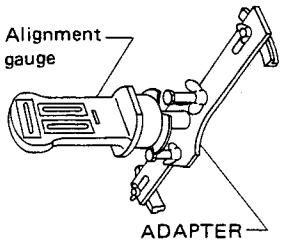 C1-149	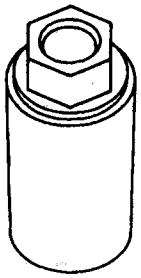 C1-114	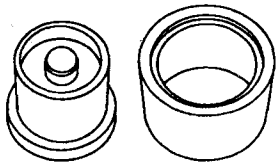 C1-115	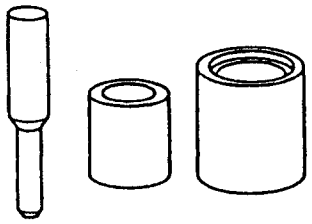 B1-389

★ Newly adopted tool.

6. Wheels and Axles Tools

922431000	925091000	926470000	28099PA040★
AXLE SHAFT INSTALLER	BAND TIGHTENING TOOL	AXLE SHAFT REMOVER	HUB REMOVER "FRONT"
• Used to install axle shaft into housing. • Used with ADAPTER (927390000).	For tightening boot band.	Used to remove front axle shaft.	Used to remove front hub.
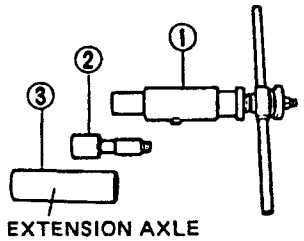 B1-242	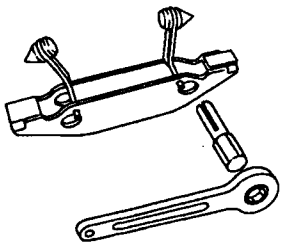 C1-125	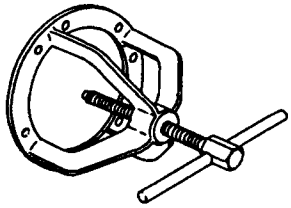 C1-126	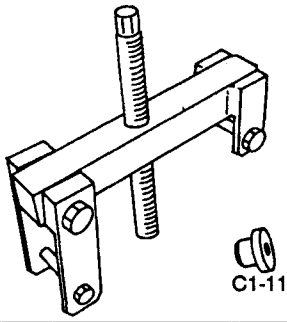 C1-116
28099PA080★	**927100000**	**28099PA110★**	**927390000**
HUB STAND	BEARING INSTALLER "REAR"	AXLE SHAFT REMOVER PLATE	ADAPTER
• Used to disassemble and assemble hub bolt in front and rear hub CP. • Used to assemble front and rear hub in front and rear housing.	• Used to disassemble and assemble rear housing bearing. • Used with HOUSING STAND "REAR" (28099PA060).	Same as plate 2 included in AXLE SHAFT PULLER (926470000).	Used as an adapter for AXLE SHAFT INSTALLER (922431000).
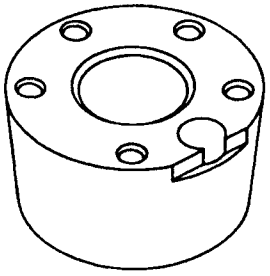 C1-117	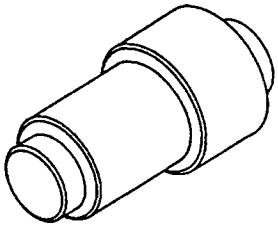 B1-247	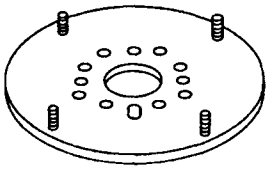 C1-150	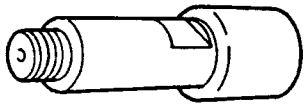 B1-153
28099PA010★	**28099PA030★**	**28099PA050★**	**28099PA060★**
HOUSING STAND "FRONT"	OIL SEAL INSTALLER "FRONT"	HUB REMOVER "REAR"	HOUSING STAND "REAR"
• Used to disassemble and assemble front housing bearing. • Used to install oil seal into front housing.	• Used to install oil seal into front housing. • Used with HOUSING STAND "FRONT" (28099PA010).	Used to remove rear hub CP.	• Used to disassemble and assemble rear housing bearing. • Used to install oil seal into rear housing.
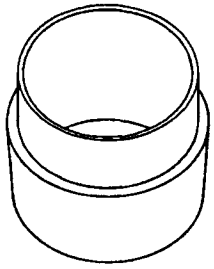 C1-118	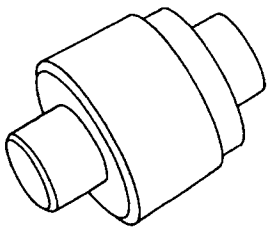 C1-119	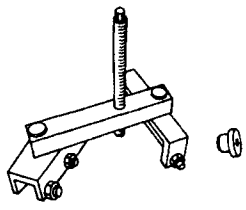 C1-120	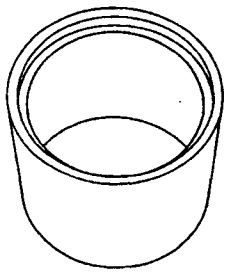 C1-121

★ Newly adopted tool.

28099PA000★	28099PA020★	28099PA070★	927120000
BEARING FRONT INSTALLER	HUB INSTALLER FRONT	OIL SEAL INSTALLER "REAR"	HUB INSTALLER "REAR"
• Used to disassemble and assemble front housing bearing. • Used with HOUSING STAND "FRONT" (28099PA010).	• Used to press front hub CP into housing ASSY. • Used with HOUSING STAND "FRONT" (28099PA010).	• Used to install oil seal into rear housing. • Used with HOUSING STAND "REAR" (28099PA060).	• Used to press rear hub CP into housing ASSY. • Used with HOUSING STAND "REAR" (28099PA060).
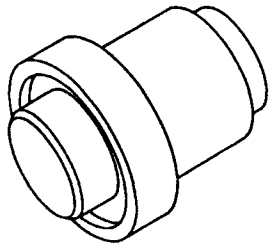 C1-122	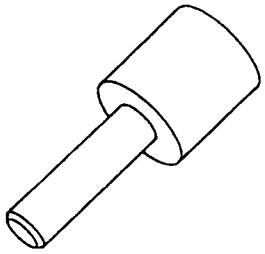 C1-123	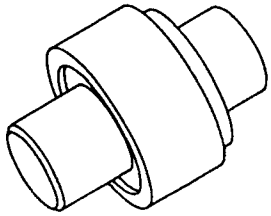 C1-124	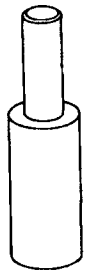 B1-392

28099PA100★	28099PA090★
DRIVE SHAFT REMOVER	OIL SEAL PROTECTOR
• Used to remove rear drive shaft from rear differential.	• Used to install rear drive shaft into rear differential. • For protecting oil seal.
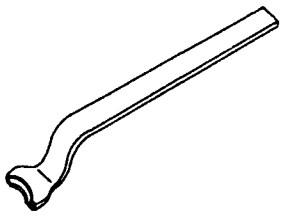 C1-127	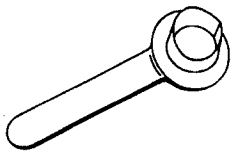 C1-113

★ Newly adopted tool.

7. Steering System Tools

925711000	926200000	926210000	926220000
PRESSURE GAUGE	STAND	ADAPTER A	ADAPTER B
For measuring oil pump pressure.	Used when inspecting characteristic of gearbox ASSY and disassembling it. Vise this tool and secure gearbox ASSY using gearbox clamps.	Used with PRESSURE GAUGE (925711000).	Used with PRESSURE GAUGE (925711000).
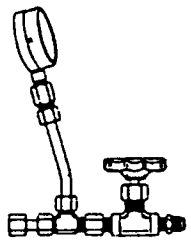 B1-251	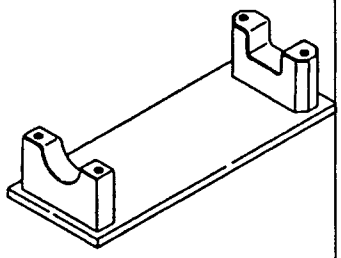 B1-252	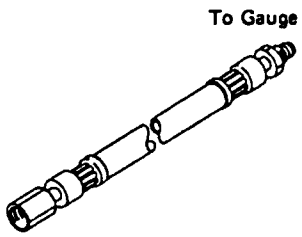 B1-254	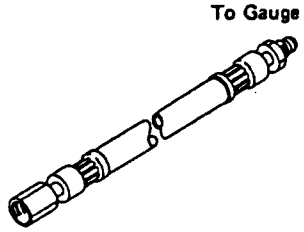 B1-263
34099PA100★	926450000	926280000	34099PA090★
LOCK NUT WRENCH	COVER	FORMER	PINION GUIDE
• For the lock nut when adjusting backlash of gearbox. • Measurement of rotating resistance of gearbox ASSY.	Used to install oil seal	Seal ring	Used to install oil seal
 C1-153	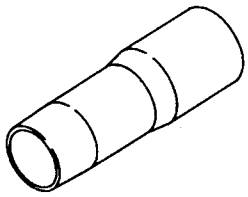 C1-154	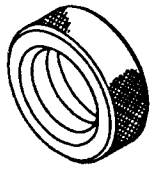 B1-409	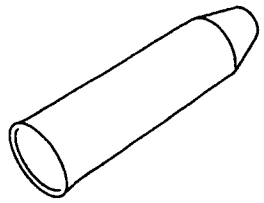 C1-128
927540000	34099PA000★	927580000	927590000
REMOVER	FORMER	REMOVER	WRENCH
Used to remove bearing, seal, etc. for valve ASSY	Seal ring	Used to remove back-up ring and oil seal.	Used to remove wire from boot.
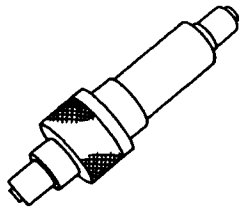 C1-129	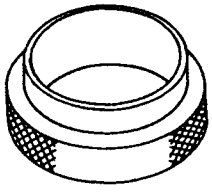 C1-130	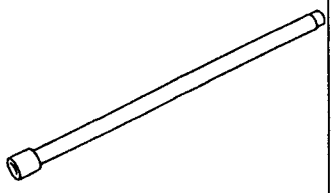 C1-131	 C1-132

★ Newly adopted tool.

34099PA020★	927560000	927570000	34099PA080★
GUIDE	SPACER	SPACER	OIL SEAL INSTALLER
Used to install holder ASSY into rack housing.	Used to install ball-bearing into valve housing ASSY.	Used to install oil seal to pinion ASSY.	Used to install dust seal, Y-packing, back-up washer into valve housing.
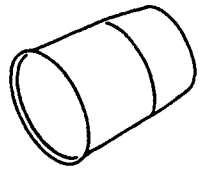 C1-133	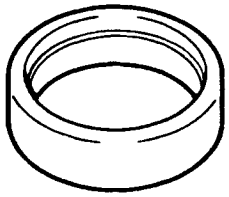 B1-478	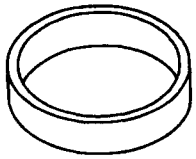 C1-134	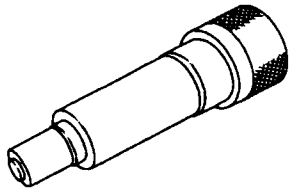 C1-135
34099PA060★	34099PA030★	34099PA040★	34099PA050★
BEARING INSTALLER	INSTALLER A	INSTALLER B	INSTALLER D
Used to remove oil seal and bearing oil valve housing.	Used to install oil seal into rack ASSY.	Used to install oil seal into rack ASSY.	Used to install pinion bearing.
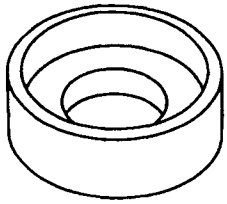 C1-136	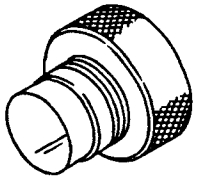 C1-137	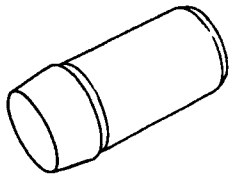 C1-138	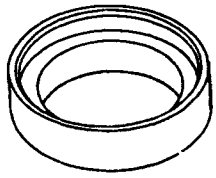 C1-139
927530000	34099PA010★	34099PA070★	926310000
INSTALLER E	REMOVER	REMOVER	GUIDE
Used to install pinion bearing.	Used to install oil seal into rack ASSY.	Used to remove pinion bearing.	For installing input shaft.
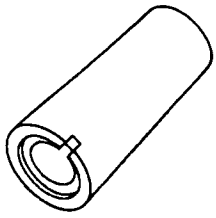 C1-140	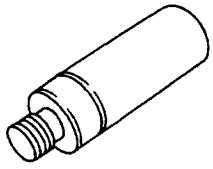 C1-141	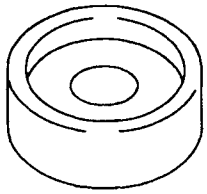 C1-155	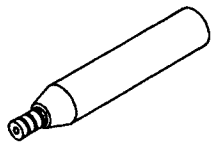 C1-156

★ Newly adopted tool.

8. Body Tools

925580000	925610000	41099PA000	86399PA000★
PULLER	WRENCH	ENGINE SUPPORT ASSY	PLIERS
Trim clip	Door hinge	• For supporting engine.	Used to remove and install the power antenna.
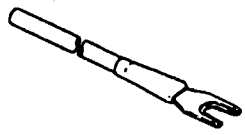 B1-267	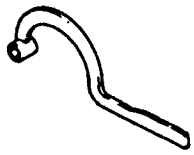 B1-268	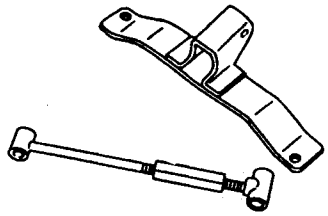 C1-142	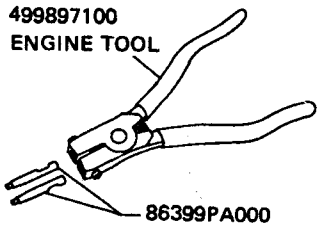 C1-143

42199PA000★
REPLACER
Used to remove and install fuel tank cap.
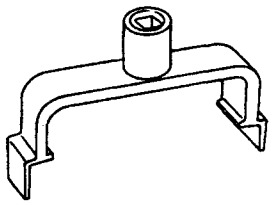 C1-144

★ Newly adopted tool.

9. Supplemental Restraint System Tools

98299PA000	98299PA010	98299PA020	98299PA030
HARNESS A	HARNESS B	HARNESS C	DEPLOYMENT TOOL
Used to check the supplemental restraint system.	Used to check the supplemental restraint system.	Used to check the supplemental restraint system.	Used to operate the supplemental restraint system when scrapping the vehicle.
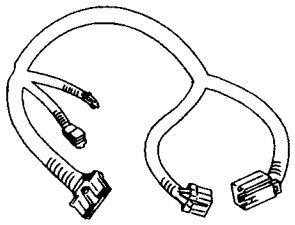 C1-145	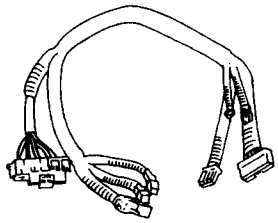 C1-146	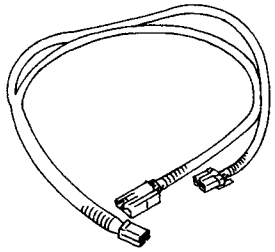 C1-147	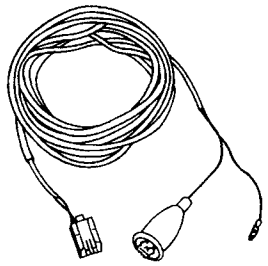 C1-148

98299PA040
AIRBAG RESISTOR
Used to check the supplemental restraint system.
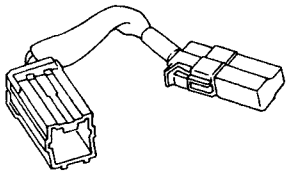 C1-203

SUBARU®

SVX

SERVICE MANUAL

FOREWORD

This service manual has been prepared to provide SUBARU service personnel with the necessary information and data for the correct maintenance and repair of SUBARU SVX.
This manual include the procedures for maintenance disassembling, reassembling, inspection and adjustment of components and troubleshooting for guidance of both the fully qualified and the less-experienced mechanics.
Please peruse and utilize this manual fully to ensure complete repair work for satisfying our customers by keeping their vehicle in optimum condition. When replacement of parts during repair work is needed, be sure to use SUBARU genuine parts.
All information, illustration and specifications contained in this manual are based on the latest product information available at the time of publication approval.

FUJI HEAVY INDUSTRIES LTD.

All right reserved. This book may not be reproduced or copied, in whole or in part, without the written permission of
FUJI HEAVY INDUSTRIES LTD., TOKYO JAPAN.

SUBARU, and ❼ are trademarks of
FUJI HEAVY INDUSTRIES LTD.

© Copyright 1991 FUJI HEAVY INDUSTRIES LTD.

2 ENGINE SECTION

EMISSION CONTROL SYSTEM AND VACUUM FITTING 2-1
ON-CAR SERVICES 2-2
ENGINE 2-3
ENGINE LUBRICATION SYSTEM 2-4
ENGINE COOLING SYSTEM 2-5
★ ★ ★ ★ ★ ★ ★ ★ ★ ★ ★ ★ ★ ★ ★ ★ ★ 2-6
FUEL INJECTION SYSTEM 2-7
FUEL SYSTEM 2-8
EXHAUST SYSTEM 2-9
★ ★ ★ ★ ★ ★ ★ ★ ★ ★ ★ ★ ★ ★ ★ ★ ★ 2-10
ENGINE AND TRANSMISSION MOUNTING SYSTEM 2-11

3 TRANSMISSION AND DIFFERENTIAL SECTION

★ ★ ★ ★ ★ ★ ★ ★ ★ ★ ★ ★ ★ ★ ★ ★ ★ 3-1
AUTOMATIC TRANSMISSION AND DIFFERENTIAL 3-2
TRANSMISSION CONTROL SYSTEM 3-3
AWD SYSTEM 3-4

EMISSION CONTROL SYSTEM AND VACUUM FITTING 2-1

SUBARU

SVX

1992

		Page
1.	System Application	2
2.	Schematic Drawing	3
3.	General Precautions	4
4.	Crankcase Emission Control System	4
5.	Three-way Catalyst	5
6.	A/F Control System	5
7.	Ignition Control System	6
8.	EGR (Exhaust Gas Recirculation) System	7
9.	Evaporative Emission Control System	9
10.	Fuel Pump Discharge Flow Control System	11
11.	Vacuum Fitting	13

1. System Application

There are three emission control systems which are as follows:

1) Crankcase emission control system
2) Exhaust emission control system
   - Three-way catalyst system
   - A/F control system
   - Ignition control system
   - EGR system
3) Evaporative emission control system
4) Fuel pump discharge flow control system

Item			Main components	Function
Crankcase emission control system			PCV valve	Draws blow-by gas into intake manifold from crankcase and burns it together with air-fuel mixture. Amount of blow-by gas to be drawn in is controlled by intake manifold pressure.
Exhaust emission control system	Catalyst system	Front (LH & RH)	Three-way catalyst	Oxidizes HC and CO contained in exhaust gases as well as reducing NOx.
		Rear		
	A/F control system		ECU (Electric control unit)	Receives input signals from various sensors, compares signals with stored data, and emits a signal for optimal control of air-fuel mixture ratio.
			O_2 sensor 1 & 2	Detects density of oxygen contained exhaust gases.
			Air flow sensor	Detects amount of intake air.
			Throttle sensor	Detects throttle position.
	Ignition control system		ECU	Receives various signals, compares signals with basic data stored in memory, and emits a signal for optimal control of ignition timing.
			Crank angle sensor 1 & 2	Detects engine speed (Revolution).
			Cam angle sensor	Detects reference signal for combustion cylinder discrimination.
			Water temperature sensor	Detects coolant temperature.
			Knock sensor	Detects knocking in combustion chamber of each cylinder.
	EGR system		ECU	Receives various signals, compares signals with basic data stored in memory, and emits ON-OFF signal for EGR solenoid valve.
			EGR valve	Controls amount of exhaust gas to send to collector chamber.
			BPT	Controls quantity of recirculation gas depending upon engine operating conditions.
			EGR solenoid valve	Controls intake manifold pressure to transmit EGR valve for ON-OFF signal emitted from ECU.
Evaporative emission control system			Canister	Absorbs evaporative gas which occurs in fuel tank when engine stops, and sends it to combustion chambers for a complete burn when engine is started. This prevents HC from being discharged into atmosphere.
			Purge control solenoid valve	Receives a signal from ECU and controls purge of evaporative gas absorbed by canister.
Fuel pump discharge flow control system			ECU	Receives various signals, compares signals, and emits ON-OFF signal for fuel pump modulator.
			Fuel pump modulator	Receives a signal from ECU and controls the discharge flow of fuel pump.

2. Schematic Drawing

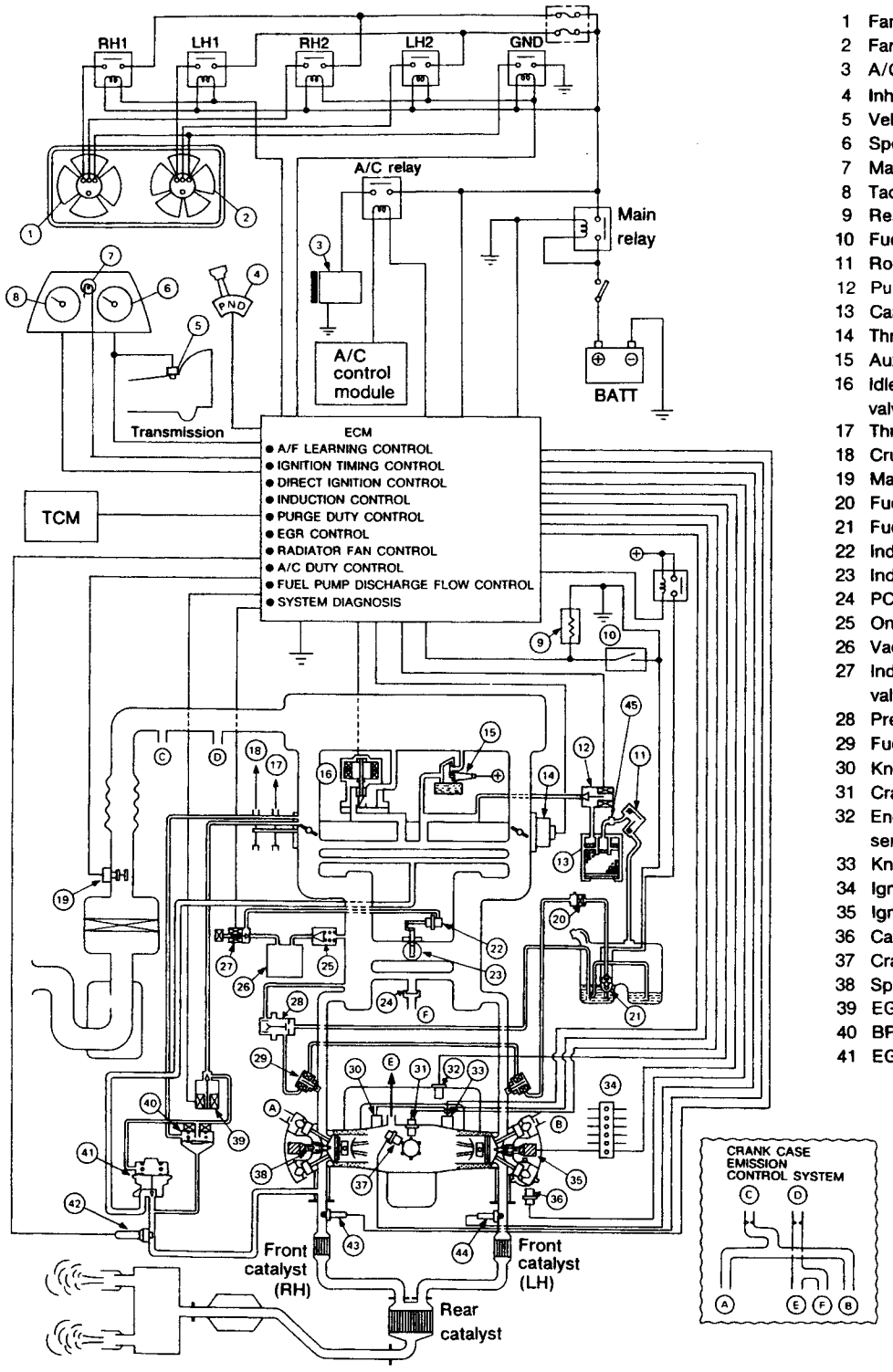

1 Fan control (Main)
2 Fan control (Sub)
3 A/C compressor
4 Inhibitor switch
5 Vehicle speed sensor 2
6 Speedometer
7 Malfunction indicator lamp
8 Tachometer
9 Resistor
10 Fuel pump modulator
11 Roll over valve
12 Purge control solenoid valve (EVAP)
13 Canister
14 Throttle position sensor
15 Auxiliary air control valve
16 Idle air control solenoid valve
17 Throttle cable
18 Cruise control cable
19 Mass air flow sensor
20 Fuel filter
21 Fuel pump
22 Induction valve diaphragm
23 Induction control valve
24 PCV valve
25 One-way valve
26 Vacuum tank
27 Induction control solenoid valve
28 Pressure regulator
29 Fuel injector
30 Knock sensor 1 (RH)
31 Crank position sensor 2
32 Engine coolant temperature sensor
33 Knock sensor 2 (LH)
34 Ignitor
35 Ignition coil
36 Cam position sensor
37 Crank position sensor 1
38 Spark plug
39 EGR solenoid valve
40 BPT
41 EGR valve
42 Exhaust Recirculation gas temperature sensor (California only)
43 Oxygen sensor 1 (RH)
44 Oxygen sensor 2 (LH)
45 Two-way valve (EVAP)

C2-513

Fig. 1

3. General Precautions

1) Know the importance of periodic maintenance services.
   (1) Every service item in the periodic maintenance schedule must be performed.
   (2) Failing to do even one item can cause the engine to run poorly and increase exhaust emissions.
2) Determine if you have an engine or emission system problem.
   (1) Engine problems are usually not caused by the emission control systems.
   (2) When troubleshooting, always check the engine and the MPFI system first.
3) Check hose and wiring connections first.
The most frequent cause of problems is simply a bad connection in the wiring or vacuum hoses. Always make sure that connections are secure and correct.
4) Avoid coasting with the ignition turned off and prolonged engine braking.
5) Do not damage parts.
   (1) To disconnect vacuum hoses, pull on the end, not the middle of the hose.
   (2) To pull apart electrical connectors, pull on the connector itself, not the wire.
   (3) Be careful not to drop electrical parts, such as sensors, or relays.
   If they are dropped on a hard floor, they should be replaced and not reused.
   (4) When checking continuity at the wire connector, the test bar should be inserted carefully to prevent terminals from bending.
6) Use SUBARU genuine parts.
7) Record how hoses are connected before disconnecting.
   (1) When disconnecting vacuum hoses, use tags to identify how they should be reconnected.
   (2) After completing a job, double check to see that the vacuum hoses are properly connected. See the "Vacuum connections label" under the hood.

4. Crankcase Emission Control System

A: DESCRIPTION

The positive crankcase ventilation (PCV) system is employed to prevent air pollution which will be caused by blow-by gas being emitted from the crankcase.
The system consists of a sealed oil filler cap, rocker covers with fresh air inlet, connecting hoses, PCV valve and an air intake duct.
At the part throttle, the blow-by gas in the crankcase flows into the intake manifold through the connecting hose of crank case and PCV valve by the strong vacuum of the intake manifold. Under this condition, the fresh air is introduced into the crankcase through connecting hose of rocker cover.
At wide open throttle, a part of blow-by gas flows into the air intake duct through the connecting hose and is drawn to the throttle chamber, because under this condition, the intake manifold vacuum is not so strong as to introduce all blow-by gases increasing with engine speed directly through the PCV valve.

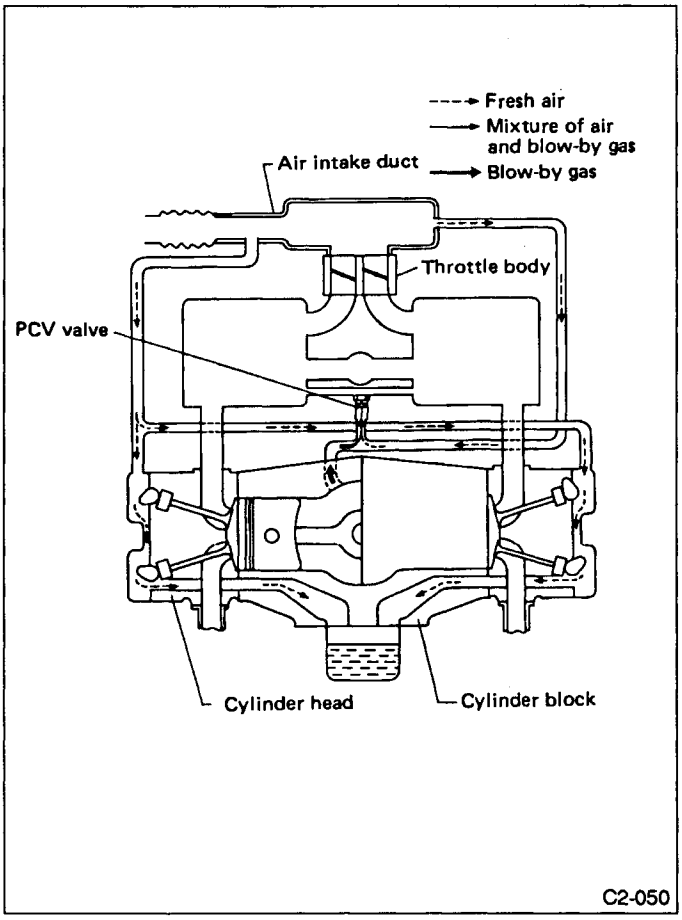

Fig. 2

B: INSPECTION

1) Check the positive crankcase ventilation hoses and connections for leaks and clogging. The hoses may be cleared with compressed air.
2) Check the oil filler cap to insure that the gasket is not damaged and the cap fits firmly on the filler cap end.
3) Check the PCV valve as the following procedure.
   (1) Disconnect the hose from the PCV valve.
   (2) With a finger attaching top of the valve, then lightly open and close the throttle valve (increase and decrease the engine speed a little).
   (3) The valve is in good condition if a vacuum is felt by the finger. If not, replace the valve.
   (4) The valve alone may be checked by shaking it. It is normal when you hear it move. Replace it if it fails to move.

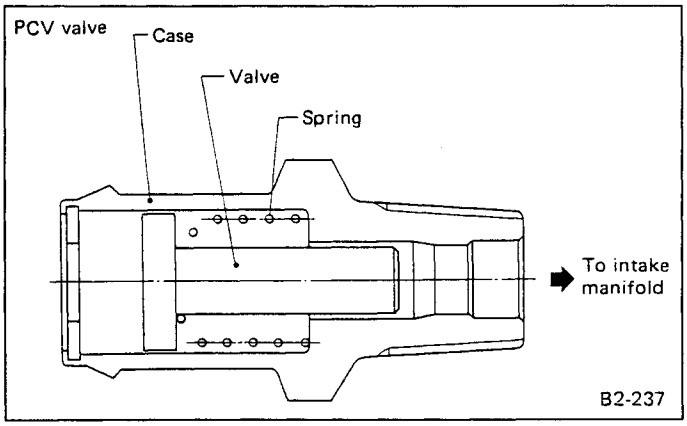

Fig. 3

5. Three-way Catalyst

The basic material of three-way catalyst is platinum (Pt) and rhodium (Rh), and a thin film of their mixture is applied onto honeycomb or porous ceramics of an oval shape (carrier). To avoid damaging the catalyst, only unleaded gasoline should be used.
The catalyst is used to reduce HC, CO and NOx in exhaust gases, and permits simultaneous oxidation and reduction. To obtain an excellent purification efficiency on all components HC, CO and NOx, a balance should be kept among the concentrations of the components. These concentrations vary with the air-fuel ratio.
The air-fuel ratio needs to be controlled to a value within the very narrow range covering around the theoretical (stoichiometric) air-fuel ratio to purify the components efficiently.
Refer to 2-9 "EXHAUST SYSTEM" as for removal and installation.

6. A/F Control System

The air/fuel control system compensates for the basic amount of fuel injection in response to a signal sent from the O_2 sensor to provide proper feedback control of the mixture. Thus, the theoretical air-fuel ratio is maintained to provide effective operation of the three-way catalyst. The basic amount of fuel injection is preset according to engine speed and loads, as well as the amount of intake air.
This system also has a "learning" control function which stores the corrected data in relation to the basic amount of fuel injection in the memory map. A new air-fuel ratio correction is automatically added for quick response to the deviation of the air-fuel ratio. Thus, the air-fuel ratio is optimally maintained under various conditions while stabilizing exhaust gases, improving driving performance and compensating for changes in sensors' performance quality with elapse of time.
Refer to 2-7 "FUEL INJECTION SYSTEM".

7. Ignition Control System

The ignition control system is controlled by the ECU. The ECU determines the optimal ignition timing according to signals sent from various sensors (which monitor the operating conditions of the engine), and sends a signal to the igniters.

The ECU has a "learning" control function which provides superb transient characteristics for responsive ignition timing control.

Refer to 2-7 "FUEL INJECTION SYSTEM".

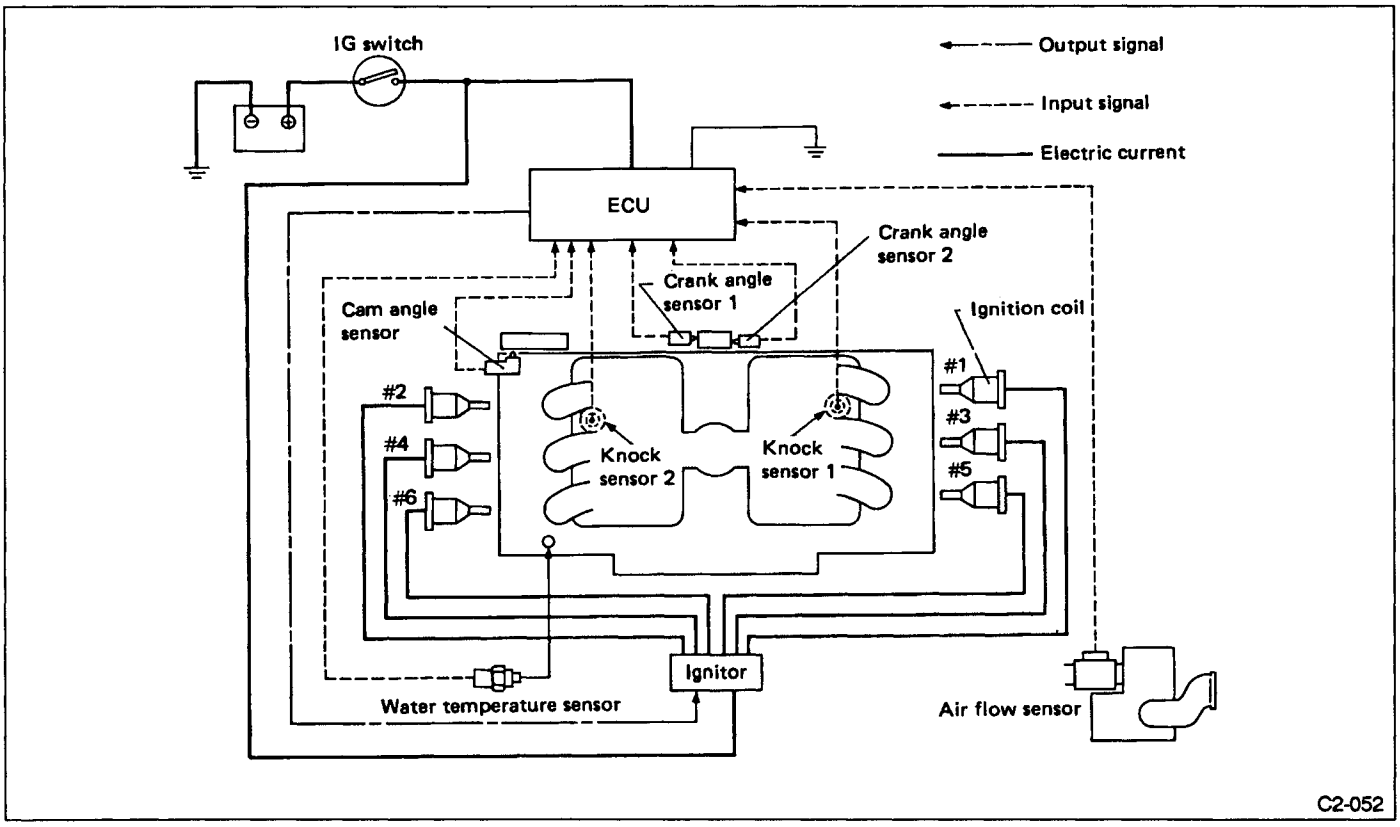

Fig. 4

8. EGR (Exhaust Gas Recirculation) System

A: DESCRIPTION

1. GENERAL

The EGR system recirculates a part of the exhaust gas into the throttle body from the exhaust manifold to decrease combustion temperature and thereby reduce NOx and improve fuel consumption.

The intake manifold pressure is transmitted to the EGR valve diaphragm when the EGR solenoid valve is opened by the signal from ECU, and the EGR valve is opened. As a result, the exhaust gas is sent into the collector chamber.

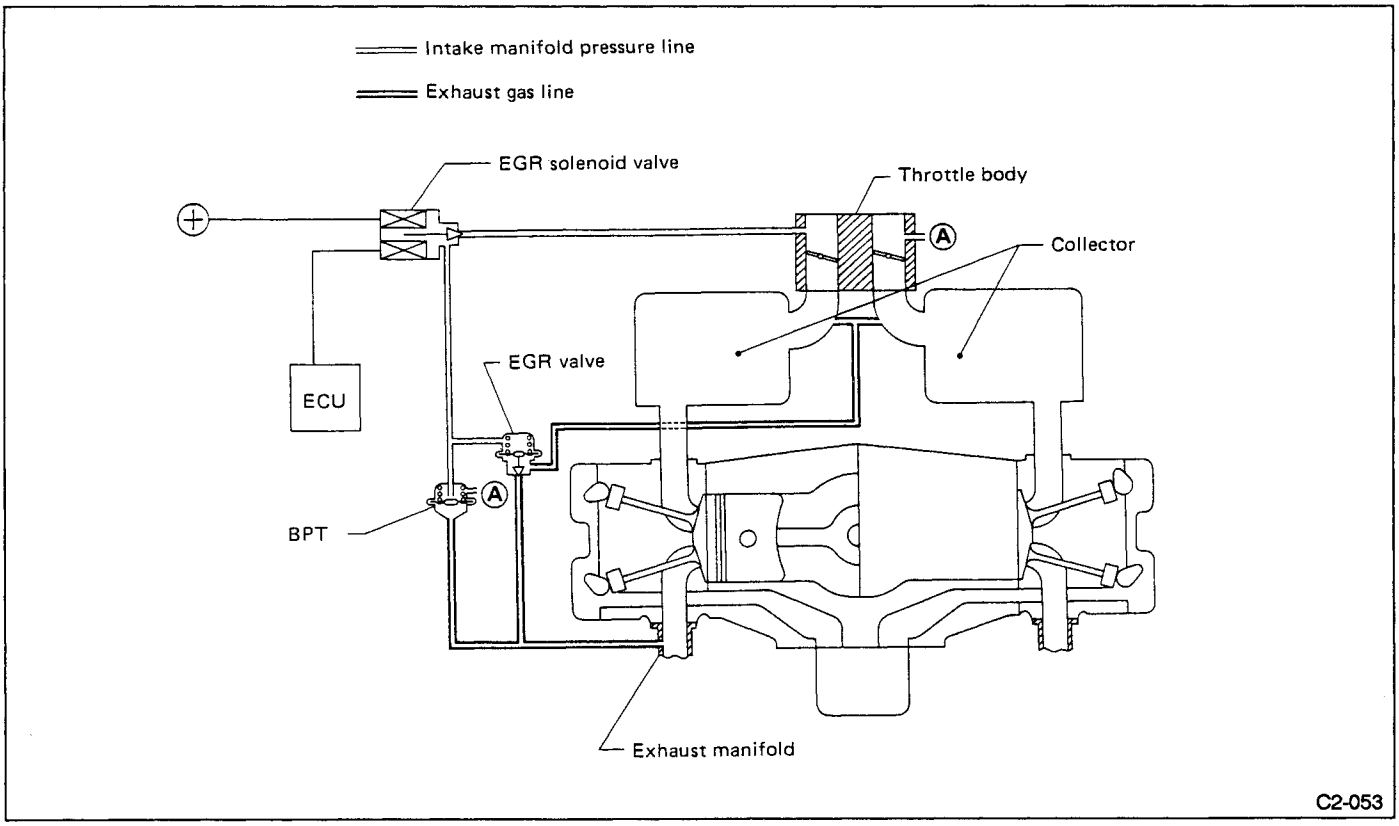

Fig. 5

2. EGR VALVE

The EGR valve is situated between the exhaust manifold and collector. After opening EGR solenoid valve, EGR valve is opened for receiving throttle port pressure on diaphragm. Then, part of the exhaust gas is recirculated into collector chamber.

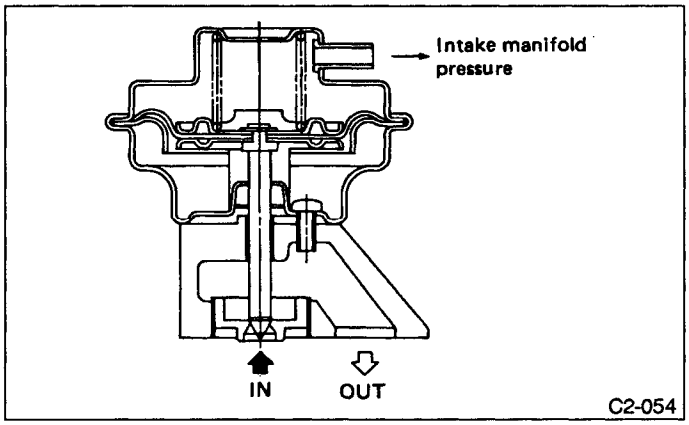

Fig. 6

3. EGR SOLENOID VALVE

The EGR solenoid valve is situated between the throttle body and EGR valve. EGR solenoid valve is opened by a signal emitted from the ECU. Therefore, throttle port pressure is transmitted to diaphragm of EGR valve.

4. BPT

The EGR solenoid valve is either ON or OFF. The EGR vacuum controller performs control corresponding to a change in the engine operating condition after the solenoid valve is opened.

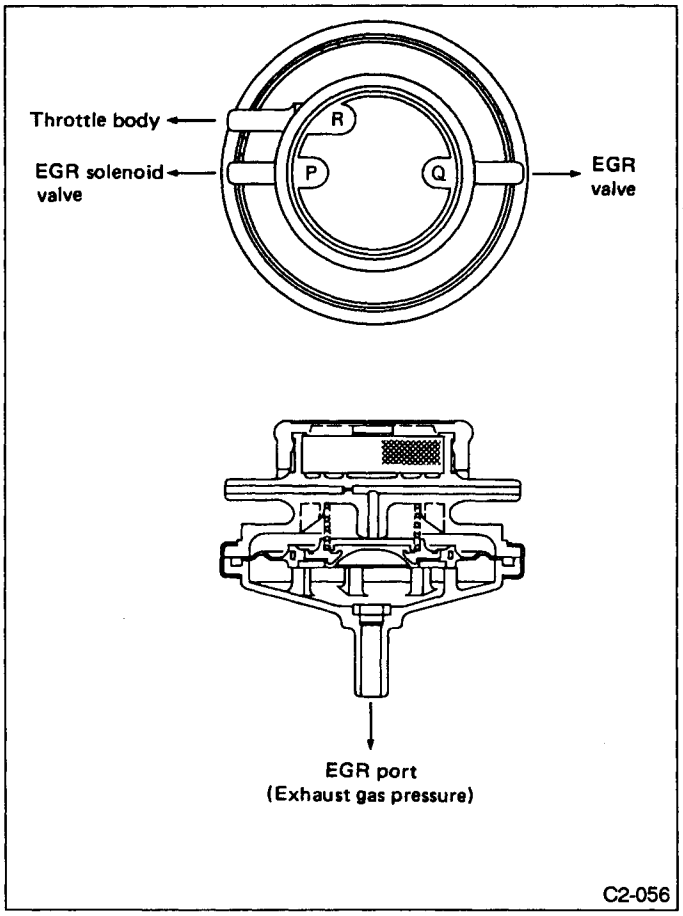

Fig. 7

9. Evaporative (EVAP) Emission Control System

A: DESCRIPTION

1. GENERAL

The evaporative emission control system is employed to prevent evaporative fuel from being discharged into ambient atmosphere. This system includes a canister, purge control solenoid valve, fuel cut valve, their connecting lines, etc.

Gasoline vapor evaporated from the fuel in the fuel tank is introduced into the canister located in the engine compartment through the evaporation line, and is absorbed on activated carbon in it. A fuel cut valve is also incorporated on the tank fuel line.

The purge control solenoid valve is controlled by the ECU and provides optimal purge control according to the coolant temperature, engine load and vehicle speed.

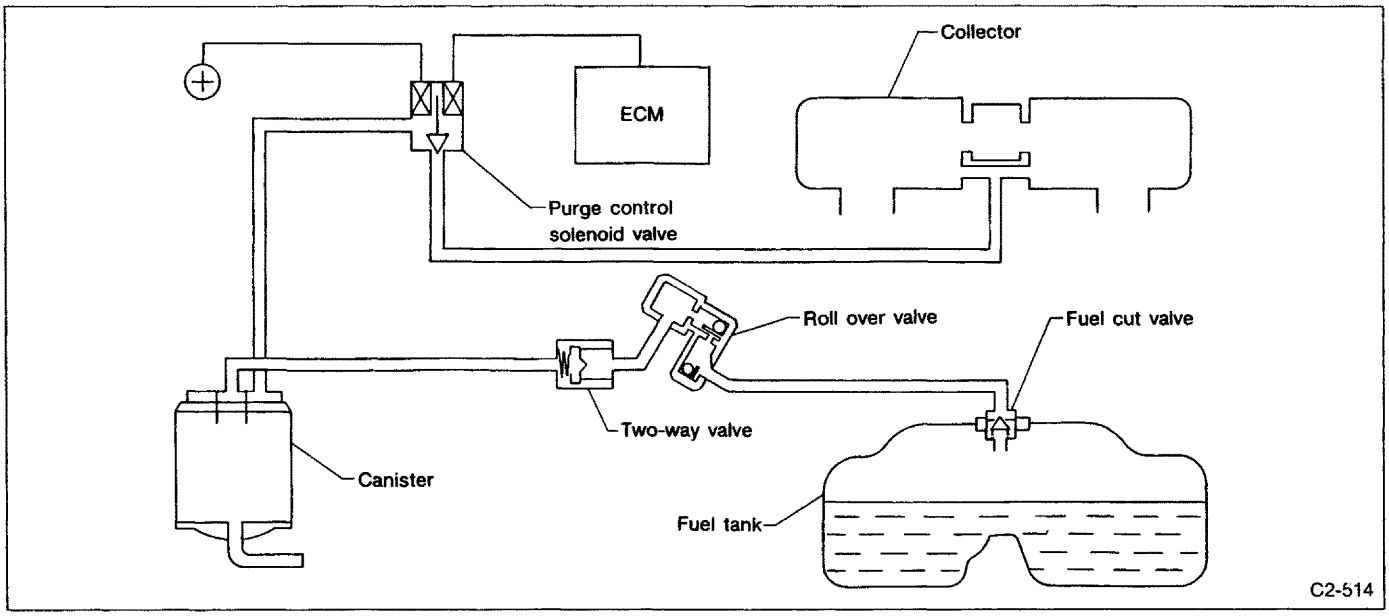

Fig. 2

2. FUEL CUT VALVE

The fuel cut valve is built onto the evaporation pipe of the fuel tank cap. The rising level of the fuel from the fuel tank causes the float to move up and close the cap hole so that no fuel can enter during evaporation line.

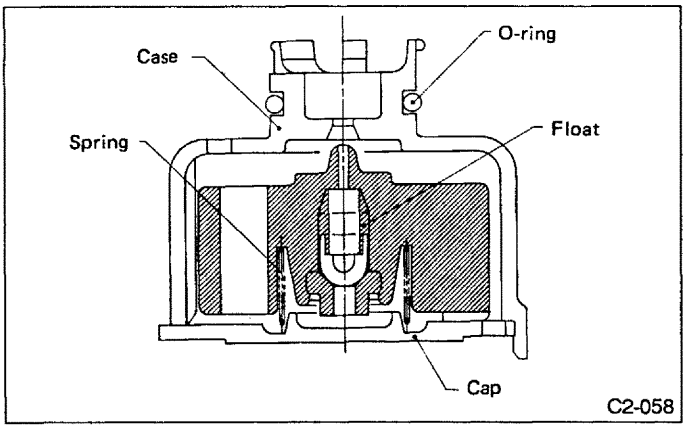

Fig. 9

3. FUEL CAP

The relief valve is adopted to prevent the development of vacuum in the fuel tank which may occur in case of trouble in the fuel vapor line.

In normal condition, the filler pipe is sealed at Ⓐ and at the packing pressed against the filler pipe end. As vacuum develops in the fuel tank, atmospheric pressure forces the spring down to open the valve; consequently air is led into the fuel tank controlling the inside pressure.

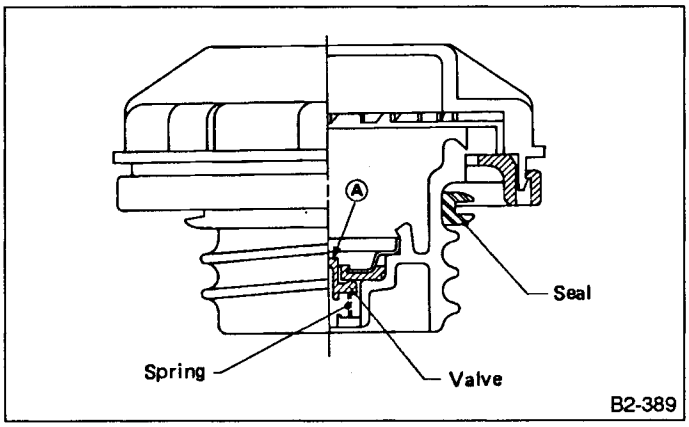

Fig. 10

4. CANISTER

The canister temporarily stores the evaporation gas. When the purge control solenoid valve is opened from a signal sent from the ECU, the evaporation gas is sent into the collector chamber after being mixed with fresh external air.

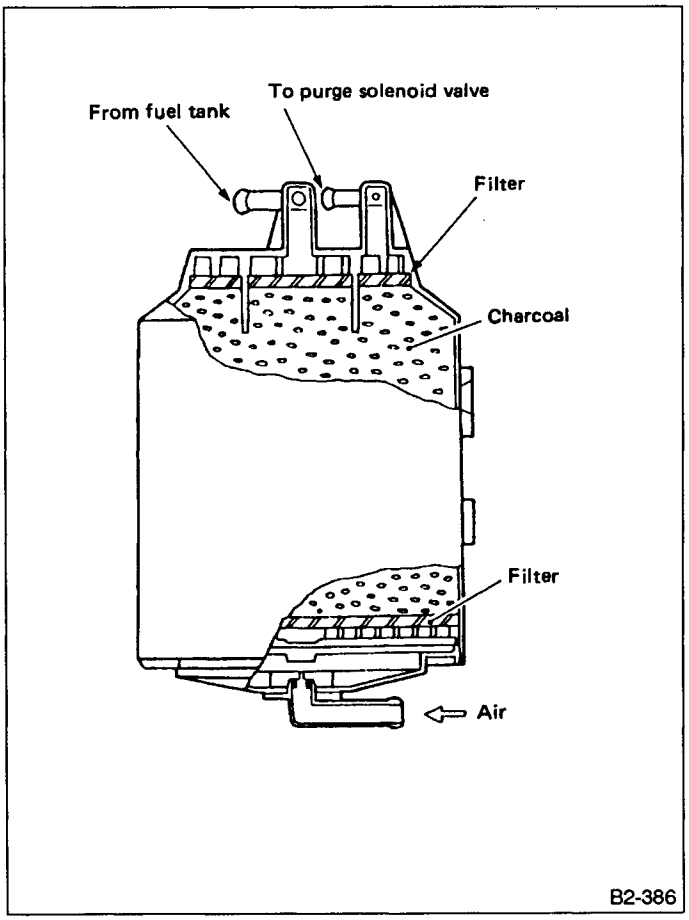

Fig. 11

Refer to 2-8 "Fuel System" as for removal procedure.

5. PURGE CONTROL SOLENOID VALVE

The purge control solenoid valve is on the evaporation line between canister and collector chamber. It is built on the inside of collector chamber.

B: INSPECTION

1) Remove fuel filler cap.
2) Disconnect evaporation hose from canister. Check for unobstructed evaporation line by blowing air into hose.
3) Disconnect purge hose from canister. Blow air through hose to ensure that air does not leak.
Be careful not to suck on the hose as this causes fuel evaporating gas to enter your mouth.
4) Check the exterior of the canister to ensure that it is not cracked or scratched.

10. Fuel Pump Discharge Flow Control System

A: GENERAL

If the fuel pump discharge is always constant, the injection amount from the jet pump increases at high engine speeds, and this leads to increased generation of evaporation gas.
This fuel pump discharge flow control system reduces the fuel pump discharge and return flow to reduce the injection quantity from the jet pump, thereby reducing the generation of evaporation gas at higher engine speeds.

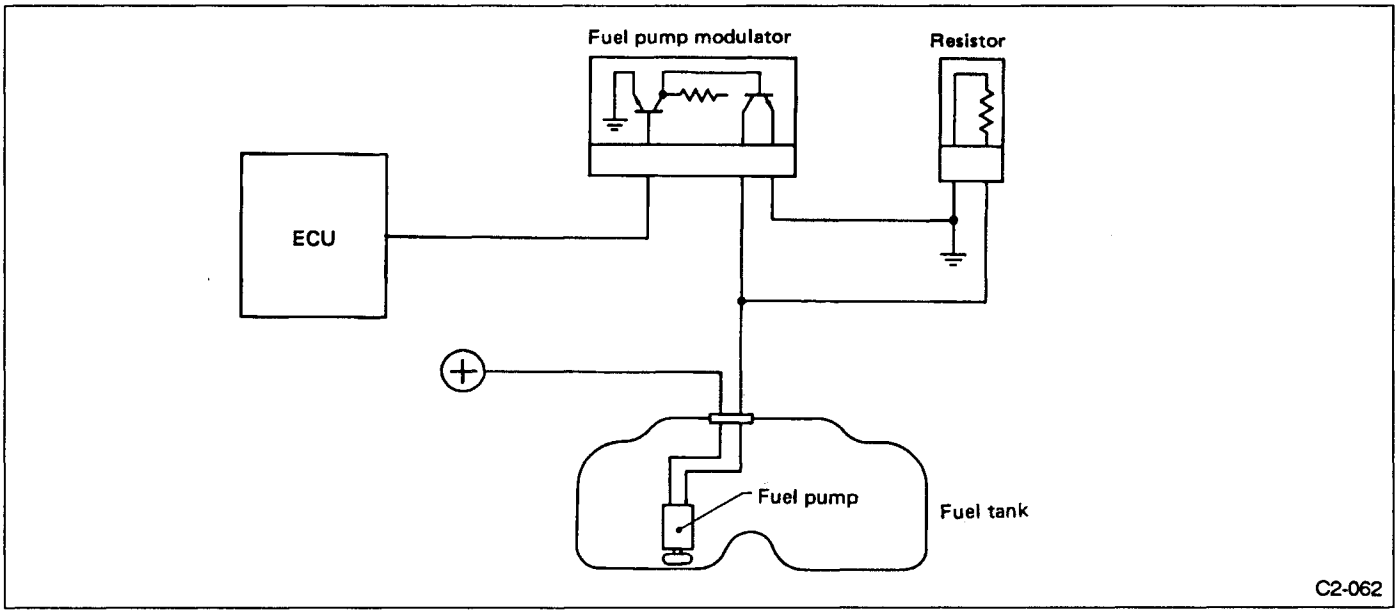

Fig. 12

B: FUNCTION

1) At low engine speeds, the source current flows directly through the fuel pump to the ground, and the fuel pump sends fuel at the specified discharge rate.
2) As the engine speed increases, the ECU sends a signal out to the fuel pump modulator to allow the source current to flow through the fuel pump modulator and resistor to ground.
3) In this way, the amount of current flowing through the fuel pump varies with engine speed, thus fuel pump discharge is controlled.

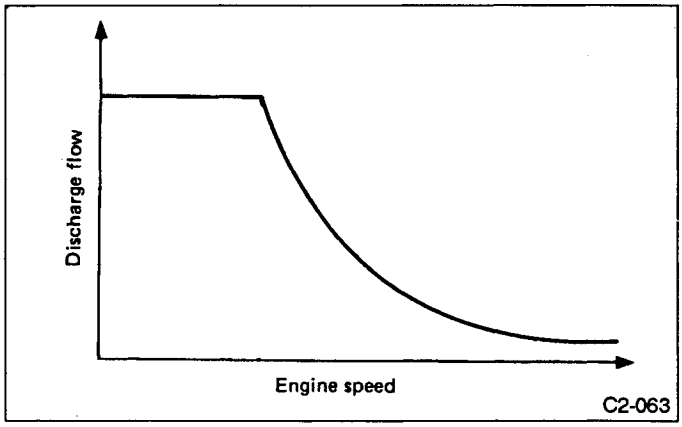

Fig. 13

C: INSPECTION

1) Warm up engine until radiator fan starts to operate.
2) Stop engine, and connect the voltage meter to fuel pump connector.

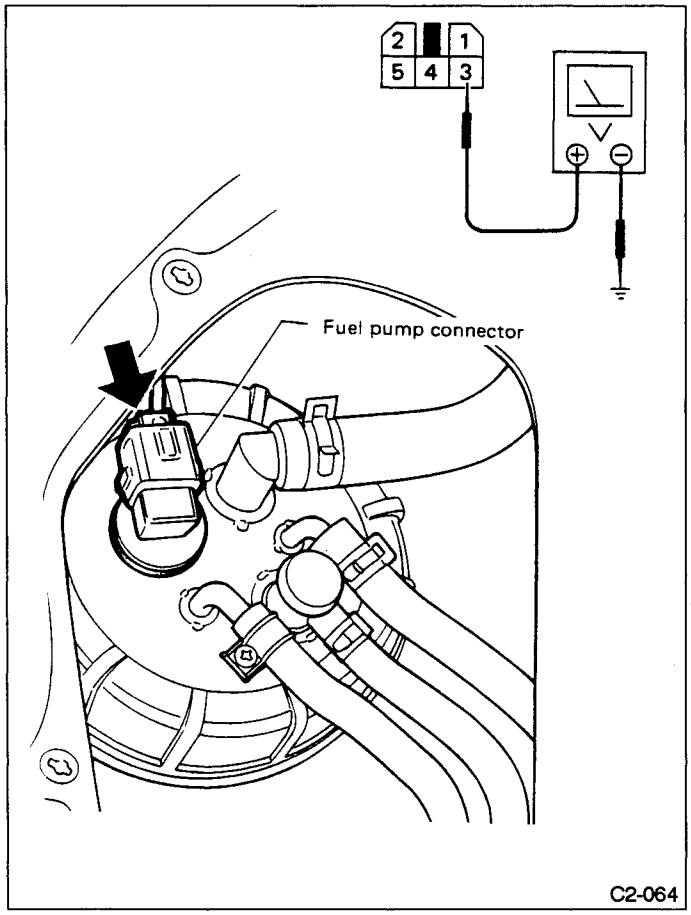

Fig. 14

3) Check voltage while engine is running.

Specified voltage:
No. 3 — Body / 10V, min.

4) Gradually higher1 engine speed, and see that voltage lowers.

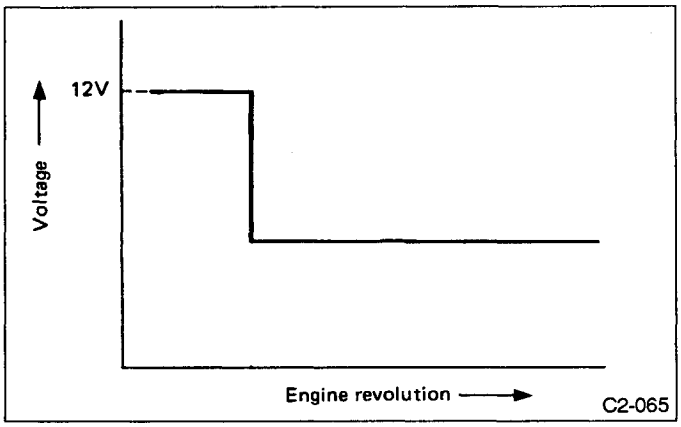

Fig. 15

5) If voltage did not change, check for following.
(1) Measure voltage between ECU and body.

Specified voltage:
(B61) No. 14 — Body / 5V, min.

(2) Remove fuel pump modulator, and measure resistance of harness connector between modulator and fuel pump.

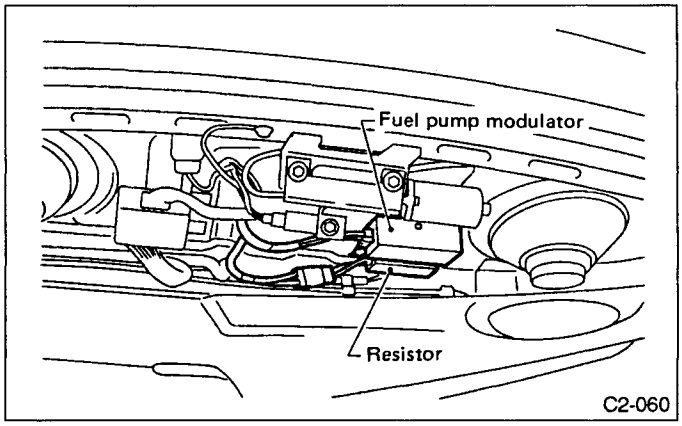

Fig. 16

Specified resistance:
(R33) No. 1 — (R23) No. 4 / 0 Ω
(R33) No. 3 — (R23) No. 1 / 0 Ω

(3) Measure resistance of harness connector between modulator and resistor.

Specified resistance:
(R33) No. 1 — (R34) No. 2 / 0 Ω

11. Vacuum Fitting

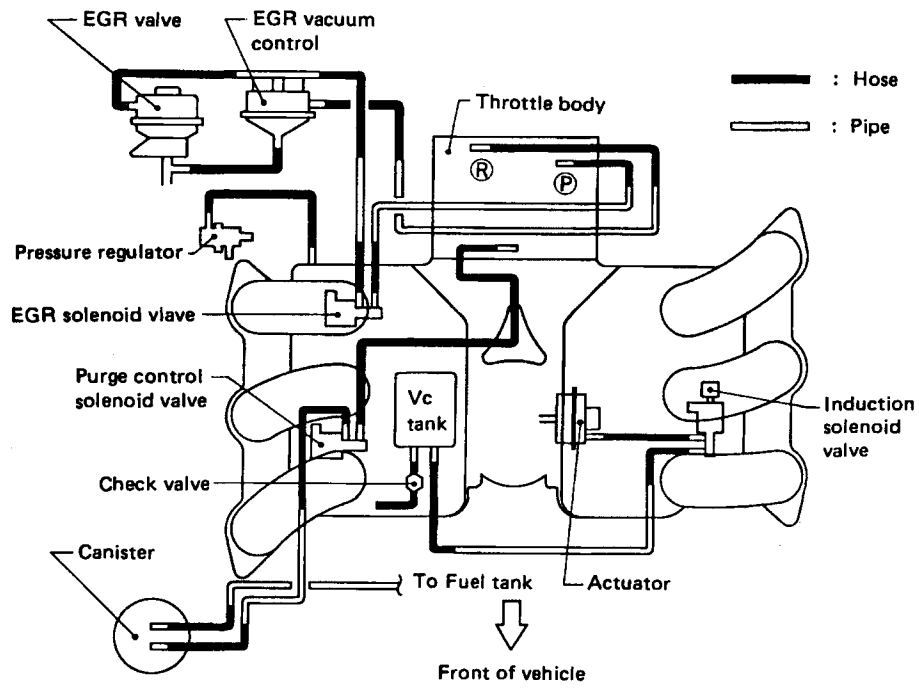

Fig. 17

SUBARU

SVX

1992

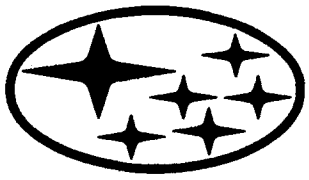

	Page
C COMPONENT PARTS	2
1. Engine Mounting	2
2. Transmission Mounting	3
W SERVICE PROCEDURE	4
1. General Precautions	4
2. Engine	5
3. Front Cushion Rubber	15
4. Transmission	19
5. Rear Cushion Rubber	29

C COMPONENT PARTS

1. Engine Mounting

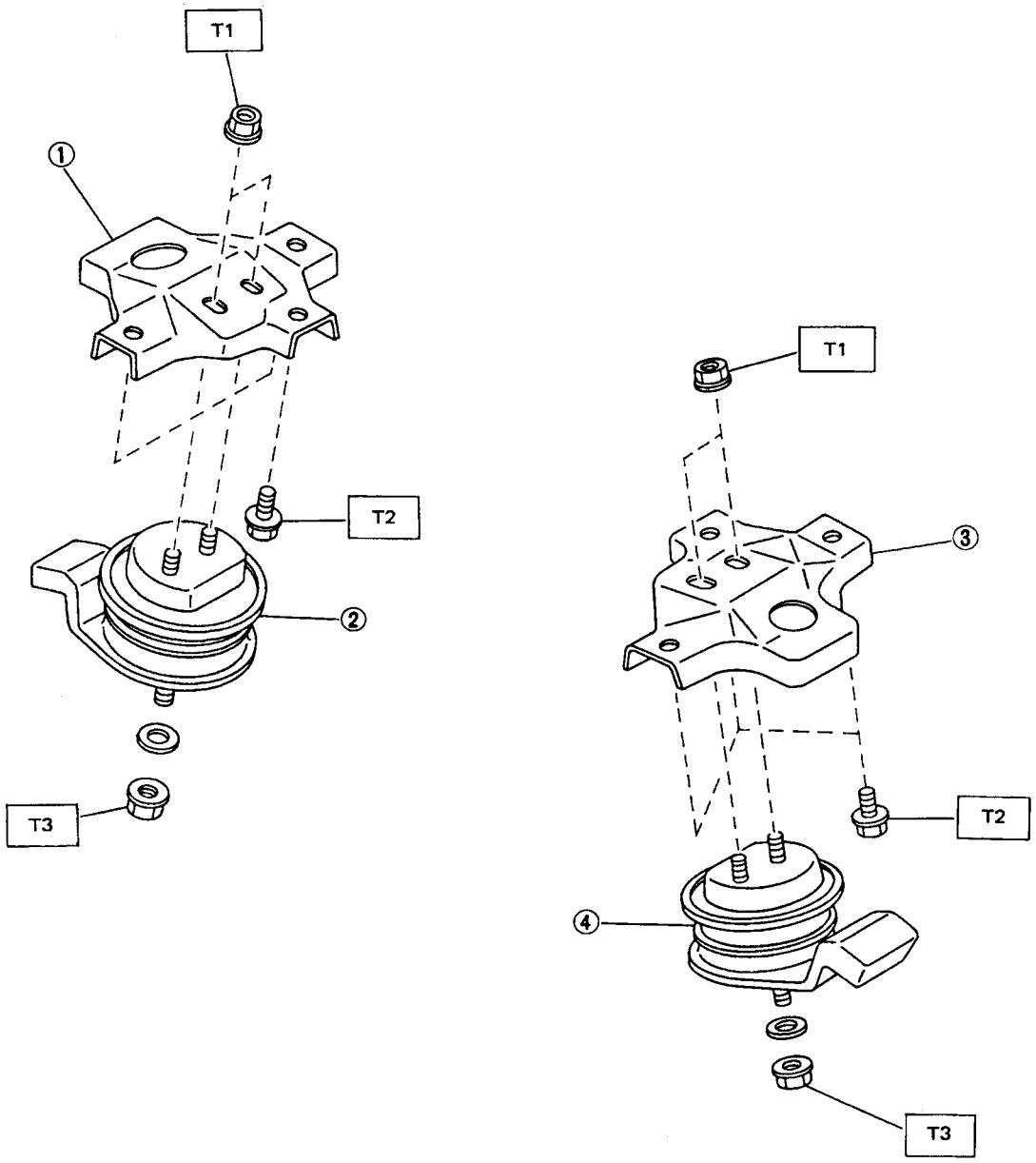

Tightening torque: N·m (kg-m, ft-lb)
T1: 49 – 69 (5 – 7, 36 – 51)
T2: 20 – 33 (2 – 3.4, 14 – 25)
T3: 54 – 83 (5.5 – 8.5, 40 – 61)

1 Front engine mounting bracket RH
2 Front cushion rubber RH
3 Front engine mounting bracket LH
4 Front cushion rubber LH

C2-077

Fig. 1

C COMPONENT PARTS

2. Transmission Mounting

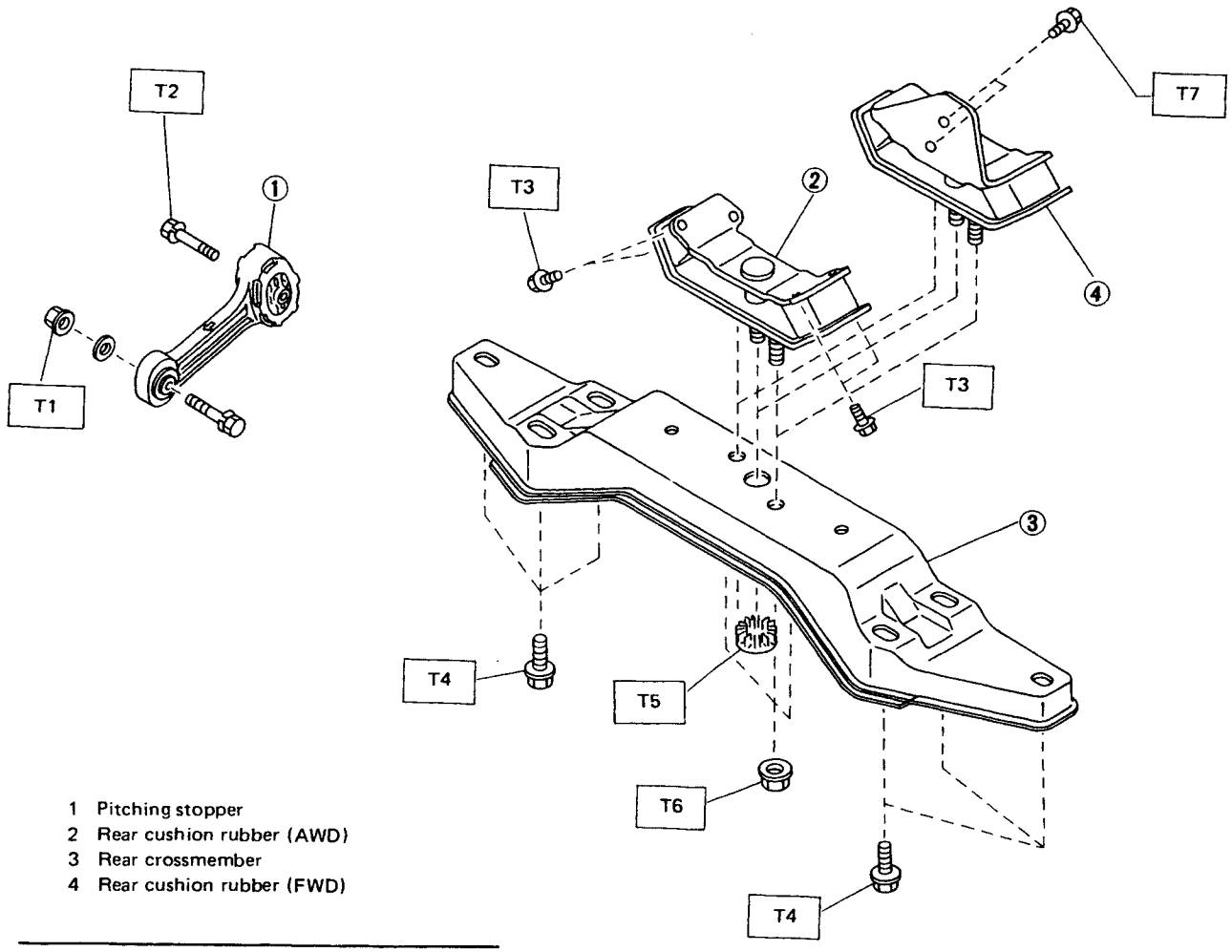

1 Pitching stopper
2 Rear cushion rubber (AWD)
3 Rear crossmember
4 Rear cushion rubber (FWD)

Tightening torque: N·m (kg-m, ft-lb)
T1: 44 — 54 (4.5 — 5.5, 33 — 40)
T2: 47 — 67 (4.8 — 6.8, 35 — 49)
T3: 18 — 31 (1.8 — 3.2, 13 — 23)
T4: 54 — 83 (5.5 — 8.5, 40 — 61)
T5: 23 — 36 (2.3 — 3.7, 17 — 27)
T6: 27 — 47 (2.8 — 4.8, 20 — 35)
T7: 20 — 33 (2.0 — 3.4, 14 — 25)

C2-526

Fig. 1

W SERVICE PROCEDURE

1. General Precautions

1) Remove or install engine and transmission in an area where chain hoists, lifting devices, etc. are available for ready use.
2) Be sure not to damage coated surfaces of body panels with tools or stain seats and windows with coolant or oil. Place a cover over fenders, as required, for protection.
3) Prior to starting work, prepare the following:
Service tools, clean cloth, containers to catch coolant and oil, wire ropes, chain hoist, transmission jacks, etc.
4) Lift up or down car when necessary. Make sure to support the correct positions. (Refer to Chapter 1-3 "General Information".)

2. Engine

A: REMOVAL

1. Set the vehicle on lift arms.
2. Move damper, and open front hood fully.

↓

3. Release fuel pressure.
4. Disconnect battery ground cable.
5. Remove under cover, and Drain coolant.

↓

6. Remove cooling system.

↓

7. Collect refrigerant, and remove pressure hoses.

↓

8. Remove air intake system.

↓

9. Disconnect accelerator cable.

↓

10. Disconnect cruise control cable.

↓

11. Disconnect harness connectors and hoses.

↓

12. Remove canister and bracket.

↓

13. Remove exhaust system.

↓

14. Disconnect power steering hoses from gear box.
15. Disconnect ATF cooler hoses.

↓

16. Remove nuts, which hold lower side of engine to transmission, and install lower side of starter.
17. Remove nuts which install front cushion rubber to sub-frame.

↓

18. Separate torque converter from drive plate.

↓

19. Remove pitching stopper and bracket.

↓

20. Disconnect fuel delivery hose, return hose and evaporation hose.

↓

21. Support engine with a lifting device and wire ropes.
22. Support transmission with a garage jack.

↓

23. Remove bolts which hold upper side of engine to transmission.

↓

24. Remove engine from vehicle.

1) Set the vehicle on lift arms.
2) Move damper, and open front hood fully.
Refer to C.1-3.
3) Release fuel pressure.
   (1) Disconnect fuel pump connector.
   (2) Start the engine, and run until it stalls.
   (3) After the engine stalls, crank it for more five seconds.
   (4) Turn ignition switch "OFF".
Refer to C.2-8 Section 1 [W101].
4) Disconnect battery ground cable.
5) Remove under cover, and drain coolant.
   (1) Raise the vehicle.
   (2) Remove under cover.

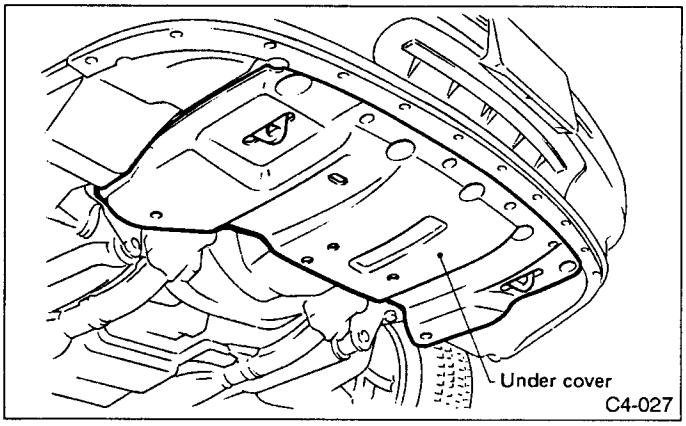

Fig. 3

   (3) Fit one end of vinyl tube into drain pipe.
   (4) Loosen drain cock, and drain coolant.

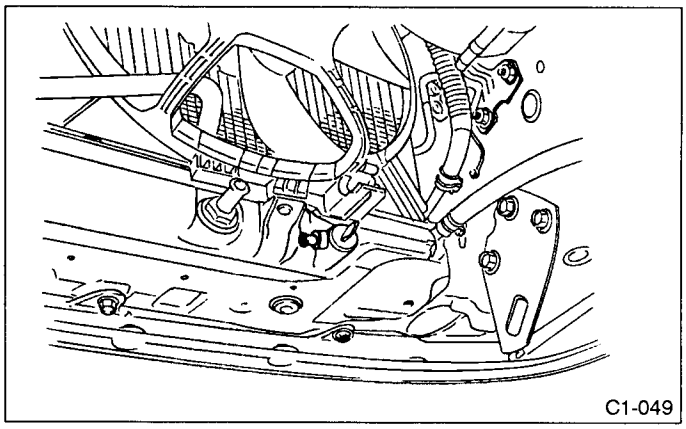

Fig. 4

Drain coolant into container.

6) Remove cooling system.
   (1) Disconnect radiator outlet hose from thermostat.
   (2) Disconnect ATF cooler hoses from pipes.

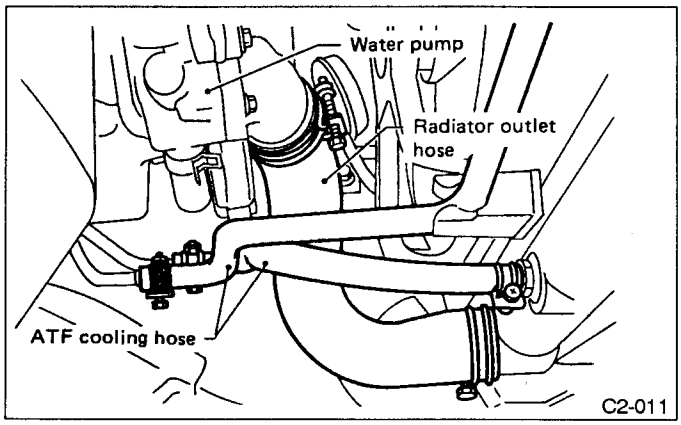

Fig. 5

   (3) Lower the vehicle.
   (4) Remove V-belt cover.
   (5) Disconnect radiator inlet hose from water pipe.

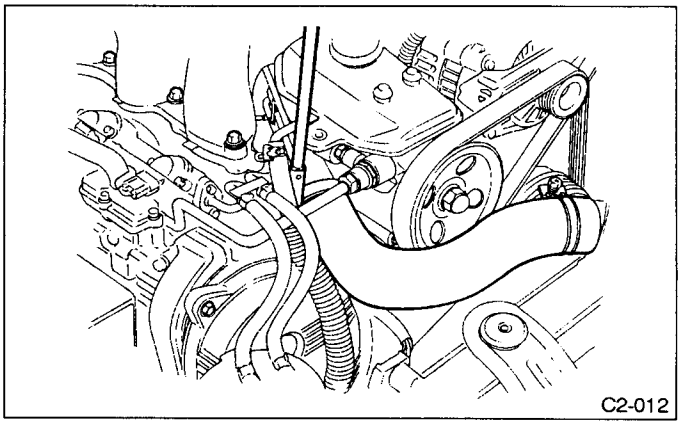

Fig. 6

   (6) Disconnect radiator main fan and sub-fan connector.
   (7) Remove upper bracket, and remove radiator ASSY from vehicle.

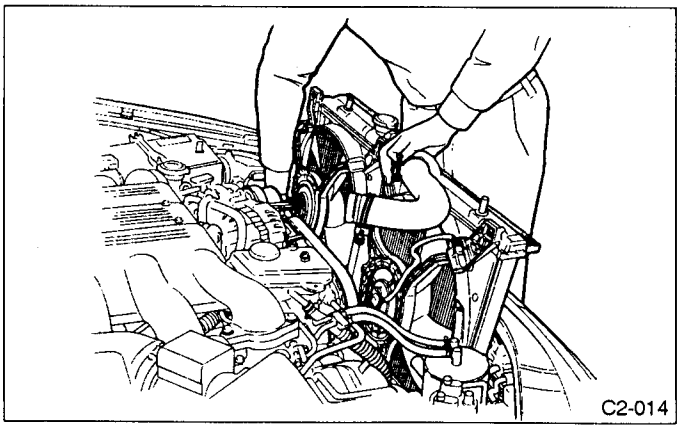

Fig. 7

7) Collect refrigerant, and remove pressure hoses.

(1) Place and connect the attachment hose to the refrigerant recycle system.
(2) Collect refrigerant from A/C system.
Refer to C.4-7.

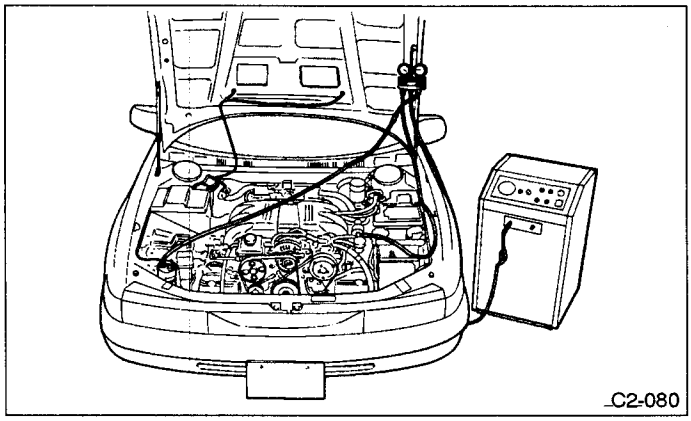

Fig. 8

(3) Disconnect high-pressure hose and low-pressure hose from A/C compressor.
a. Be careful not to lose O-ring in low-pressure hose.
b. Plug the opening to prevent foreign matter from getting in.

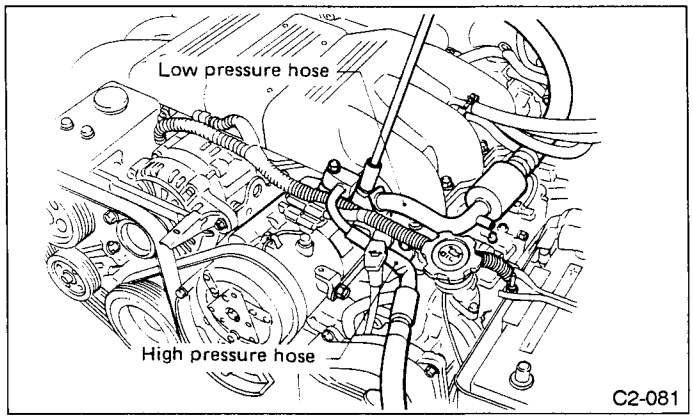

Fig. 9

8) Remove air intake system.
(1) Remove collector cover.
(2) Remove air intake boot.

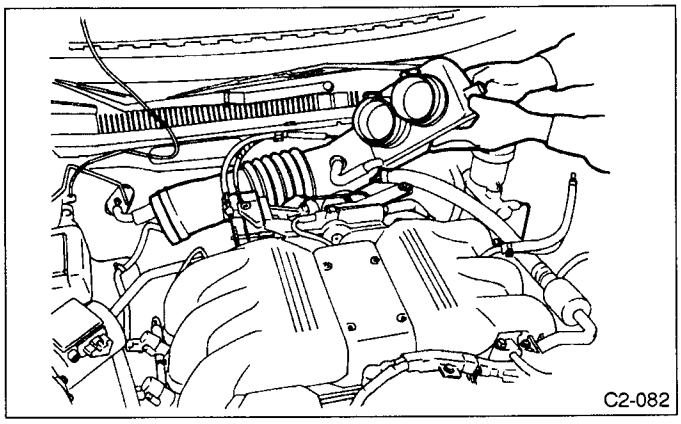

Fig. 10

(3) Remove air cleaner upper cover and element.

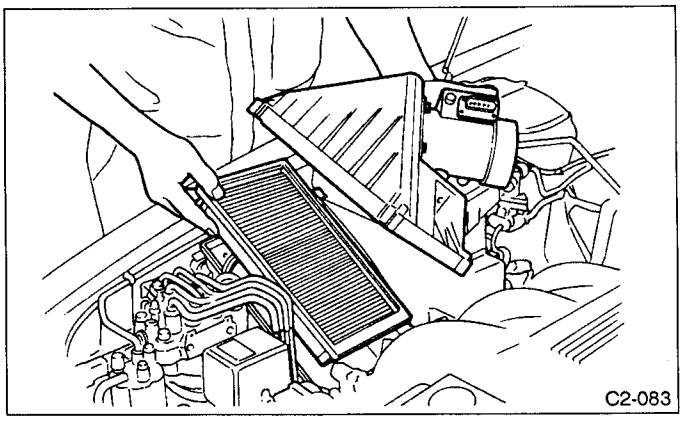

Fig. 11

9) Disconnect accelerator cable.
10) Disconnect cruise control cable.

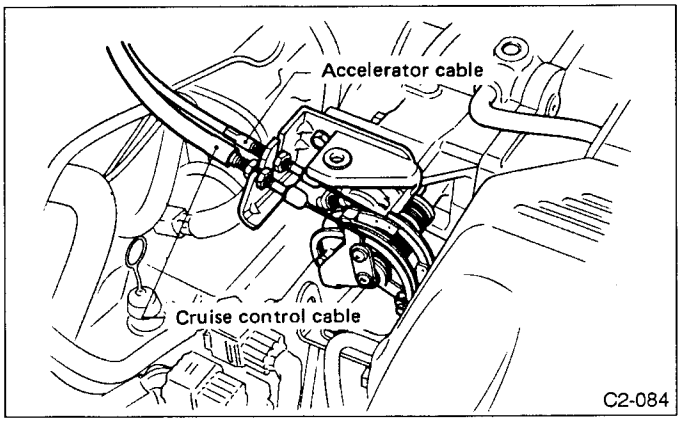

Fig. 12

11) Disconnect harness connectors and hoses.
   (1) Disconnect the following harness connectors.
   - Engine harness connector
   - Ignition coil harness connector
   - O_2 sensor 1 & 2 (RH & LH) connector
   - Vehicle speed sensor 2 connector
   - Power steering harness connector
   - Engine ground terminal
   - Alternator connector and terminal
   - A/C compressor connector

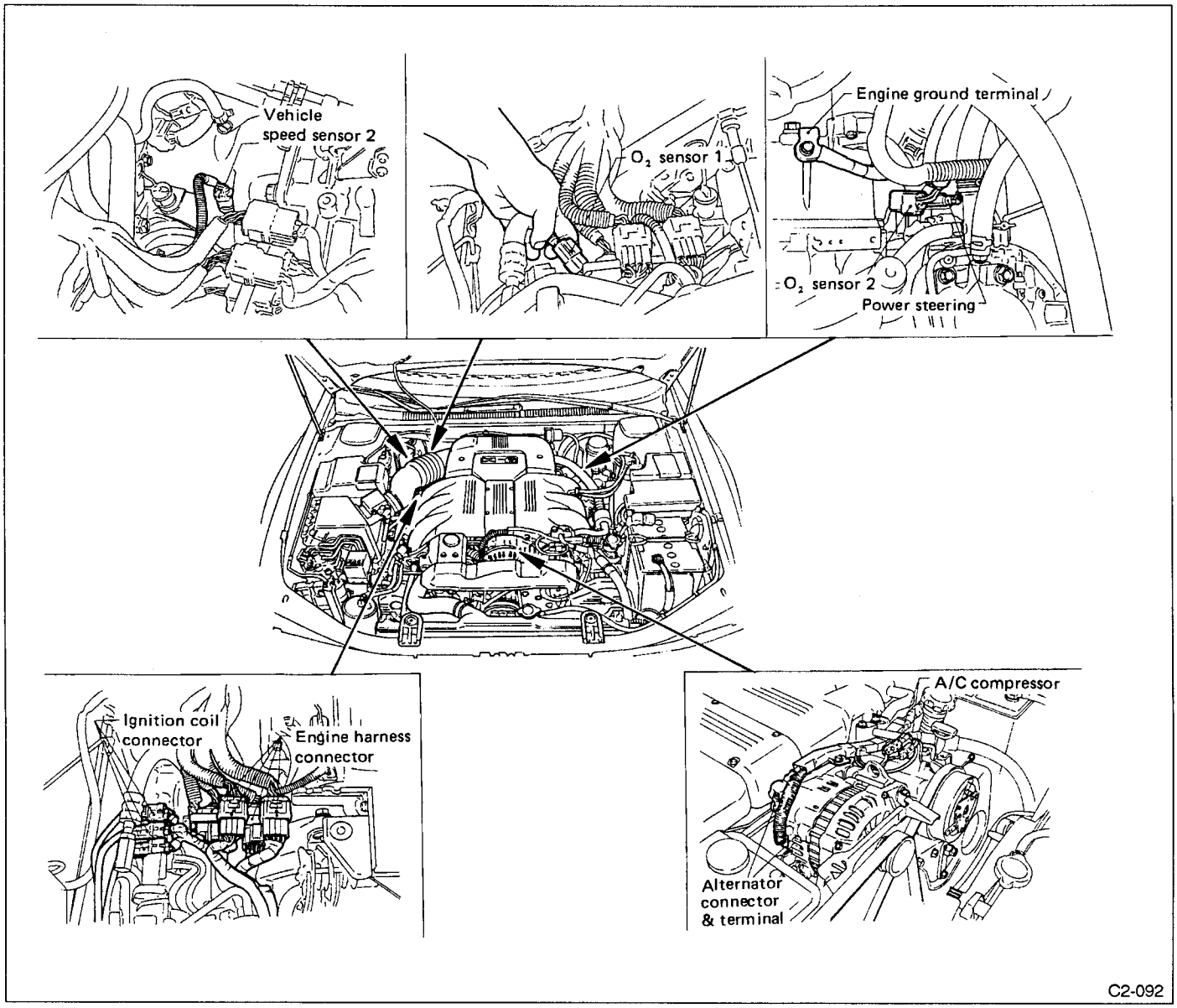

Fig. 13

(2) Disconnect the following hoses.
- Brake booster vacuum hose
- Heater hose (Inlet and outlet)
- Power steering hose (from gear box pipe)
- Power steering hose (to reservoir tank)
- Power steering hose (to cooling pipe)

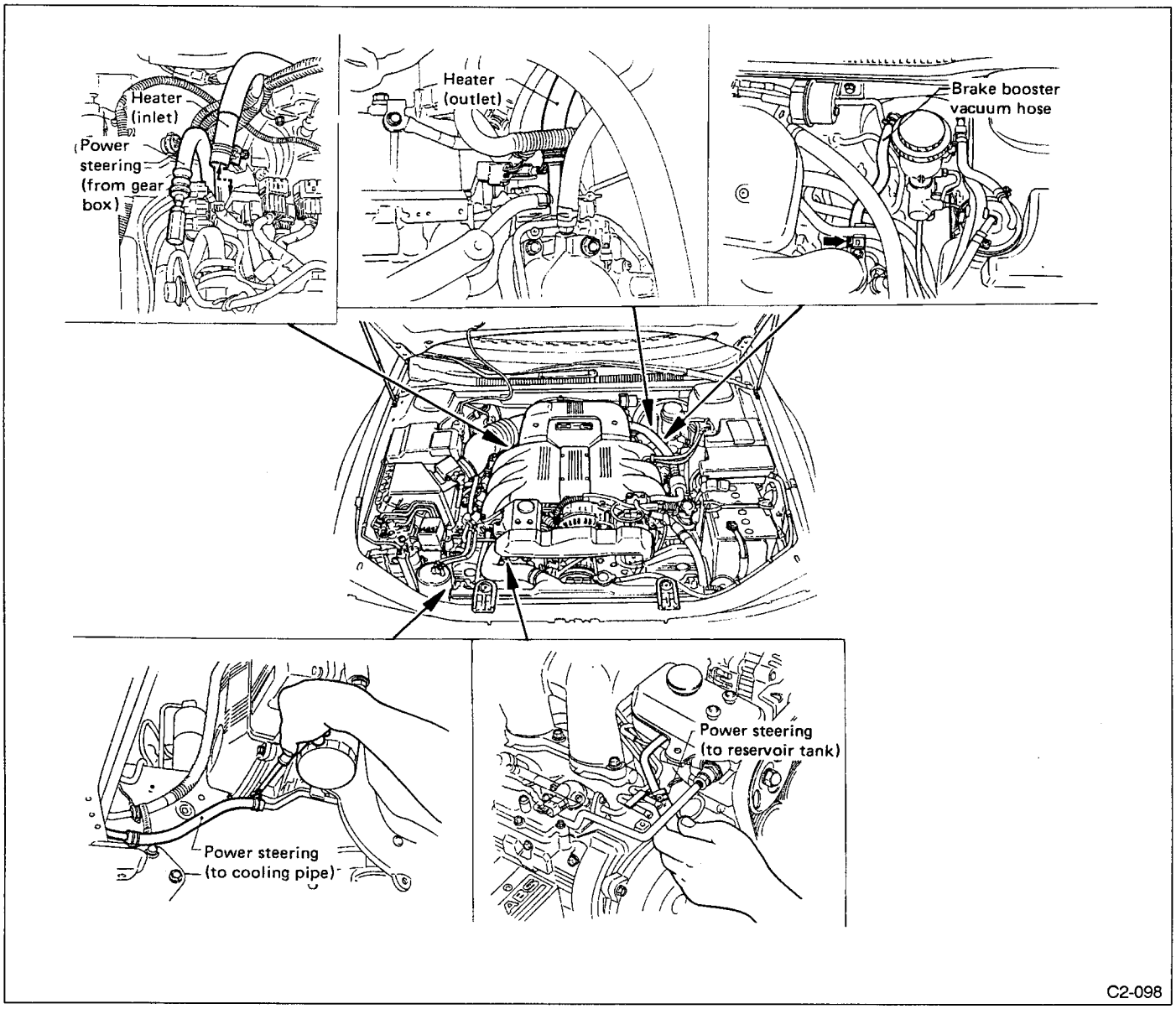

Fig. 14

Catch fluid and coolant into each container.

12) Remove canister and bracket.

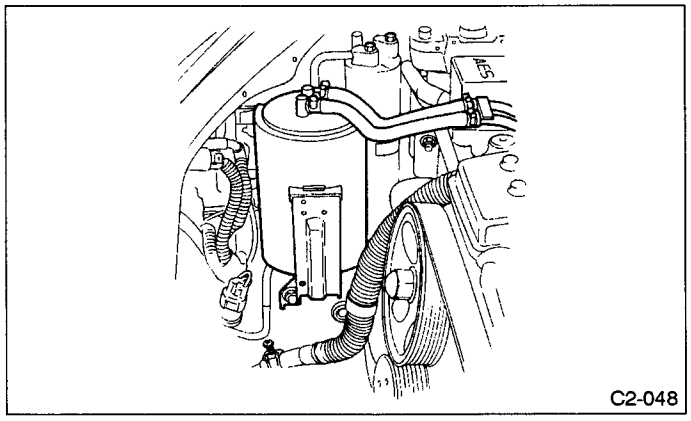

Fig. 15

13) Remove exhaust system.
(1) Lift up the vehicle.
(2) Remove O_2 sensor harness from clip.
(3) Remove front exhaust pipes and rear catalyst converter.

Refer to C.2-9.

14) Disconnect power steering hose from gear box pipe.

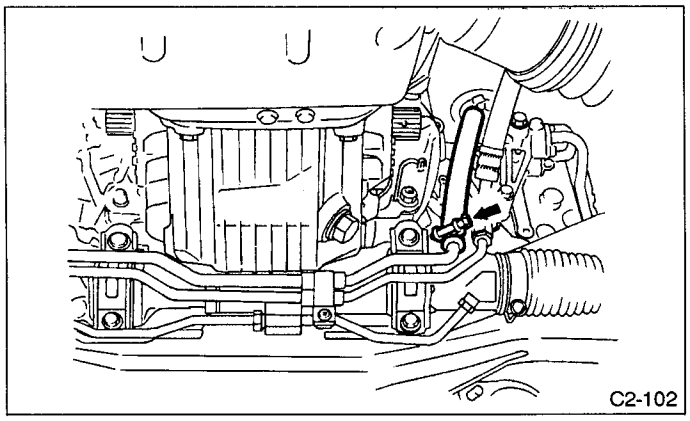

Fig. 16

Catch power steering oil into container.

15) Disconnect ATF cooler hose from pipe on transmission side.

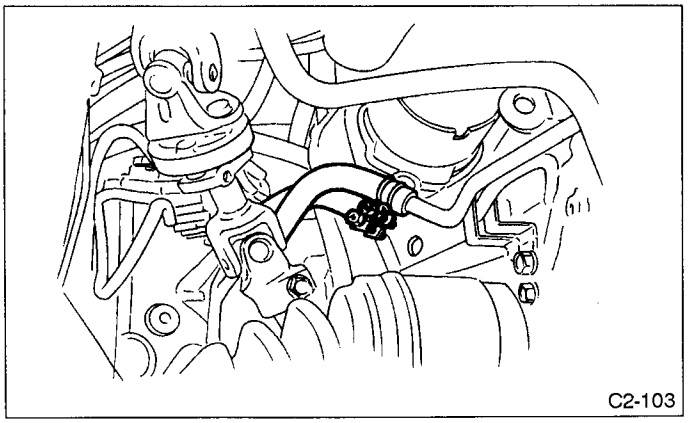

Fig. 17

Catch ATF into container.

16) Remove nuts which hold lower side of transmission and starter to engine.

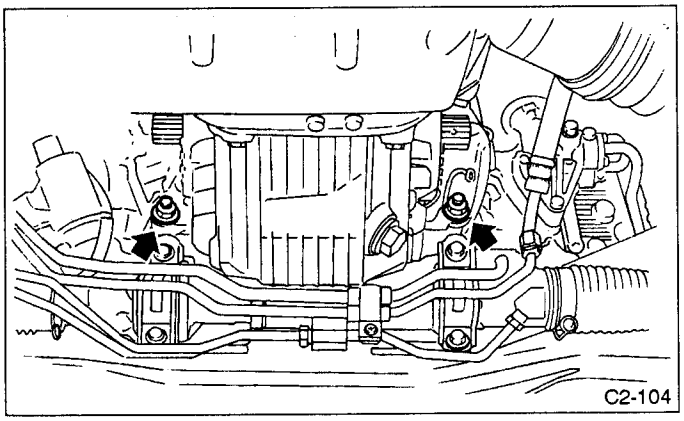

Fig. 18

17) Remove nuts which install front cushion rubber to sub-frame.

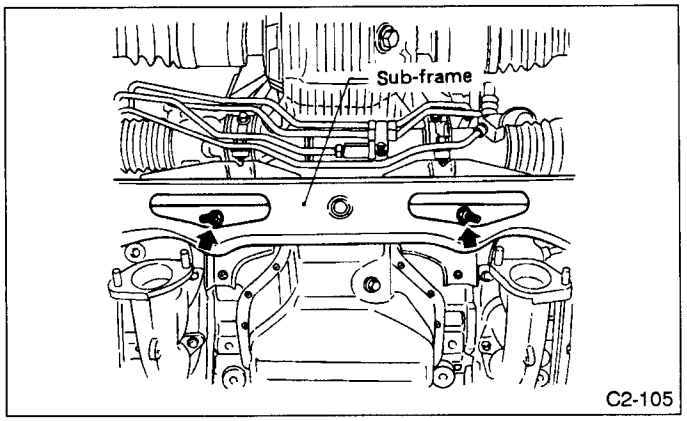

Fig. 19

18) Separate torque converter from drive plate.
(1) Lower the vehicle.
(2) Remove service hole plug.
(3) Remove bolts which hold torque converter to drive plate.

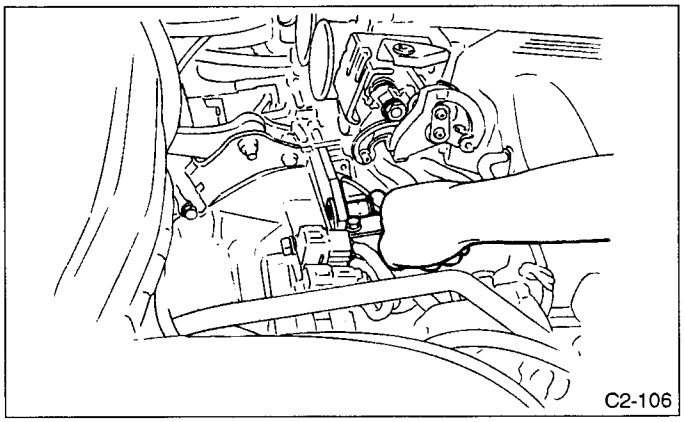

Fig. 20

(4) While cranking the engine, remove other bolts.

19) Remove pitching stopper from bracket.

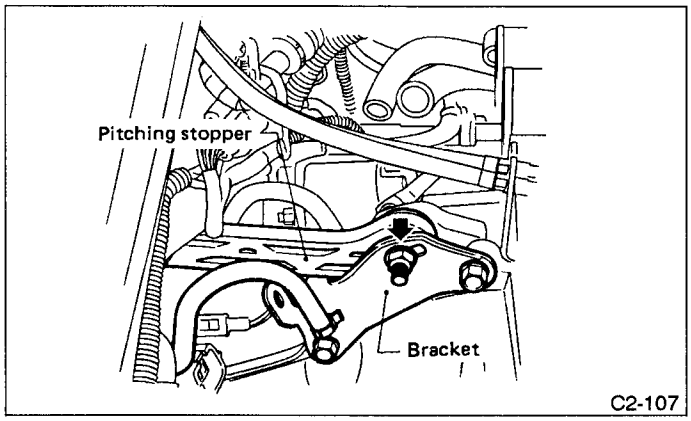

Fig. 21

20) Disconnect fuel delivery hose, return hose and evaporation hose.

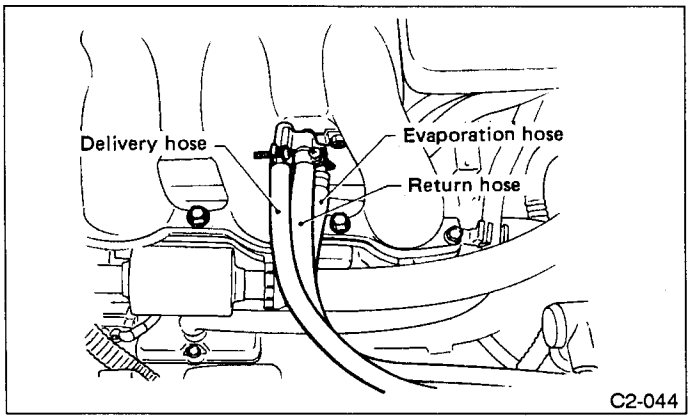

Fig. 22

Catch fuel from hose into container.

21) Support engine with a lifting device and wire ropes.

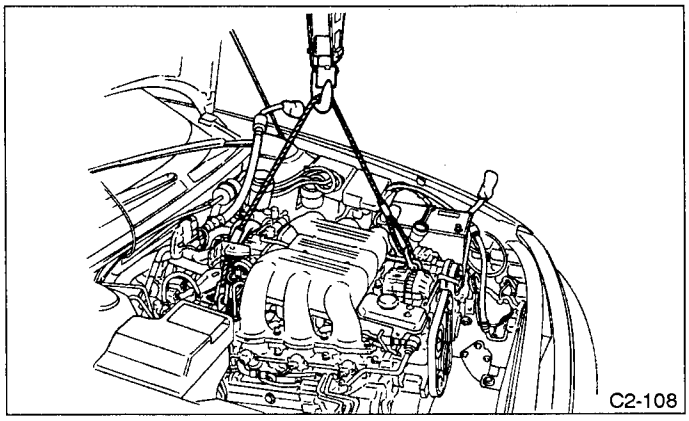

Fig. 23

Protect throttle body with cloth, etc. so as not to damage it by wire rope.

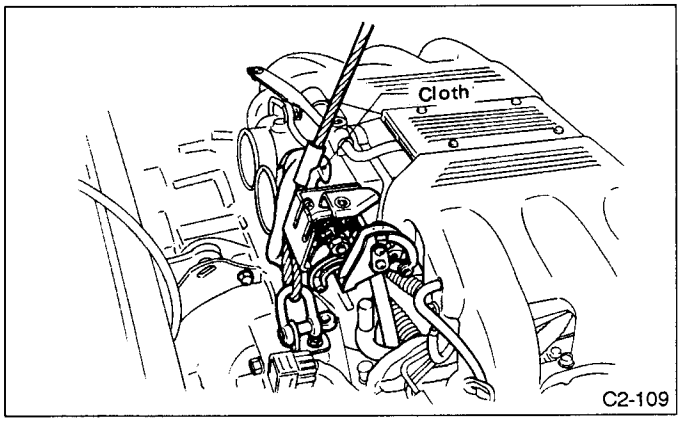

Fig. 24

22) Support transmission with garage jack.

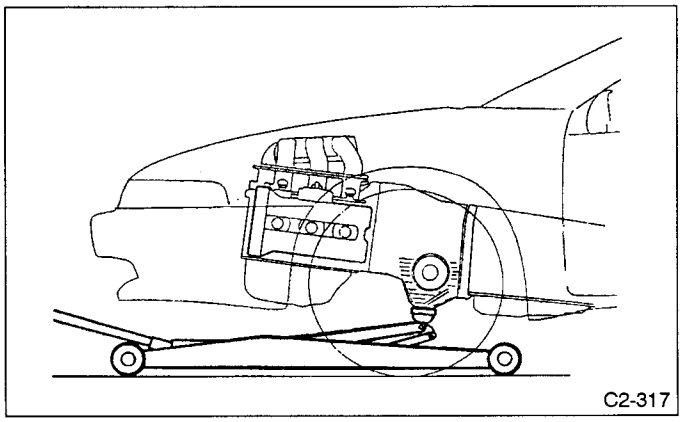

Fig. 25

23) Remove bolts which hold right upper side of engine to transmission.

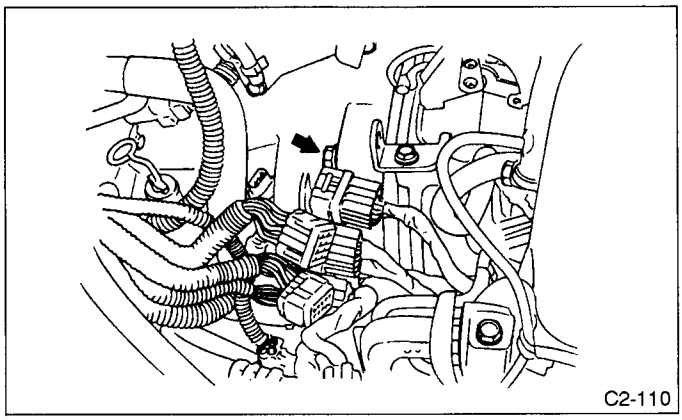

Fig. 26

24) Remove engine itself.
(1) Slightly raise engine.
(2) Raise transmission with garage jack.
(3) Move engine horizontally.
(4) Slowly raise up engine away from engine compartment.

Be careful not to damage adjacent parts or body panels with crank pulley, etc.

B: INSTALLATION

1. Install engine to transmission.
2. Tighten bolt which hold right upper side of engine to transmission.
3. Remove a lifting device and wire ropes.
4. Remove a garage jack.
5. Install pitching stopper onto bracket.
6. Install torque converter to drive plate.
7. Connect hoses.
8. Install canister and bracket.
9. Install cooling system.
10. Tighten nuts, which hold lower side of engine to transmission, and install lower side of starter.
11. Tighten nuts which install front cushion rubber to sub-frame.
12. Connect power steering hoses to gear box.
13. Connect ATF cooler hoses.
14. Install exhaust system.
15. Install under cover.
16. Connect harness connectors.
17. Connect accelerator cable.
18. Connect cruise control cable.
19. Connect pressure hose onto A/C compressor, and charge with refrigerant.
20. Install air intake system.
21. Connect battery ground cable.
22. Fill coolant.
23. Check ATF level, and correct if necessary.
24. Correct power steering oil, and bleed air.
25. Move damper, and close front hood.
26. Take off the vehicle from lift arm.

1) Install engine to transmission.
Position engine in engine compartment and align it with transmission.
Be careful not to damage adjacent parts or body panels with crank pulley, oil pressure gauge, etc.
2) Tighten bolts which hold right upper side of engine to transmission.

Tightening torque: N•m (kg-m, ft-lb)
46 — 54 (4.7 — 5.5, 34 — 40)

3) Remove lifting device and wire ropes.
4) Remove garage jack.
5) Install pitching stopper on to bracket.

Tightening torque: N•m (kg-m, ft-lb)
44 — 54 (4.5 — 5.5, 33 — 40)

6) Install torque converter to drive plate.
(1) Tighten bolts which install torque converter to drive plate.
Be careful not to drop bolts into torque converter housing.

Tightening torque: N•m (kg-m, ft-lb)
23 — 26 (2.3 — 2.7, 17 — 20)

(2) Clog plug onto service hole.
7) Connect hoses.
- Fuel delivery hose, return hose and evaporation hose
- Heater inlet and outlet hoses
- Brake booster vacuum hose
- Power steering oil hose (to cooler hose)
- Power steering oil hose (to gear box pipe)
- Power steering oil hose (to reservoir tank)

8) Install canister and bracket.
(1) Install canister bracket on body.
(2) Install canister onto bracket.
(3) Connect canister hoses to pipes.

9) Install cooling system.
(1) Position radiator ASSY into engine compartment.
(2) Install radiator upper bracket.
(3) Connect radiator inlet hose to water pipe.
(4) Connect radiator main fan and sub-fan connector.
(5) Install V-belt cover.
(6) Lift up the vehicle.
(7) Connect radiator outlet hose to thermostat, and ATF cooler hoses to pipes.

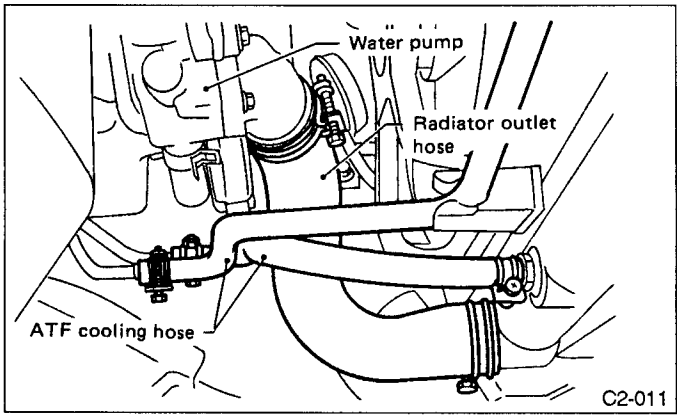

Fig. 27

10) Tighten nuts, which hold lower side of engine to transmission, and install lower side of starter.

Tightening torque: N•m (kg-m, ft-lb)
46 — 54 (4.7 — 5.5, 34 — 40)

11) Tighten nuts which install front cushion rubber to sub-frame.
Make sure that the locator is into the elliptical hole in sub-frame.

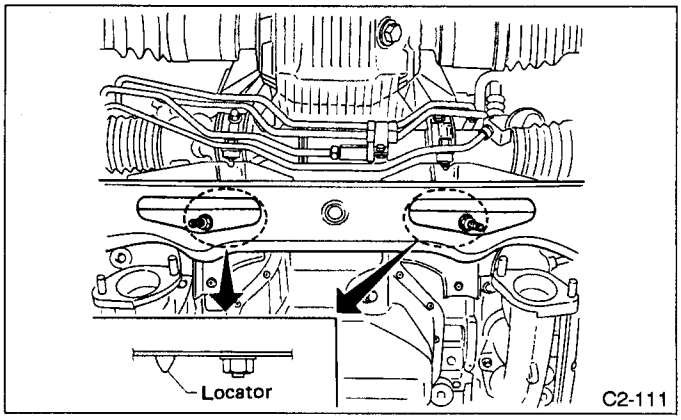

Fig. 28

Tightening torque: N•m (kg-m, ft-lb)
54 — 83 (5.5 — 8.5 , 40 — 61)

12) Connect power steering fluid hoses to gear box pipes.

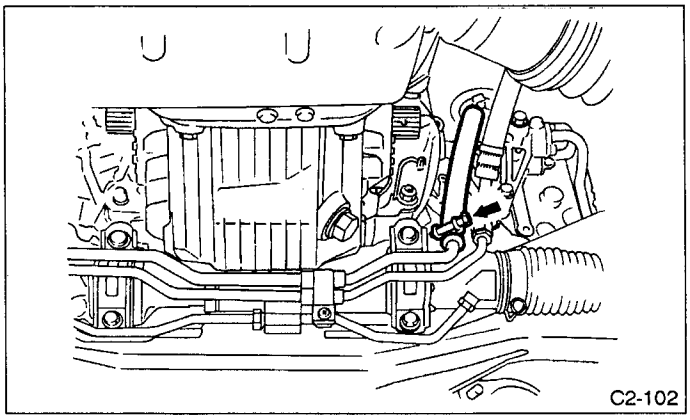

Fig. 29

13) Connect ATF cooler hoses to pipes on transmission side.

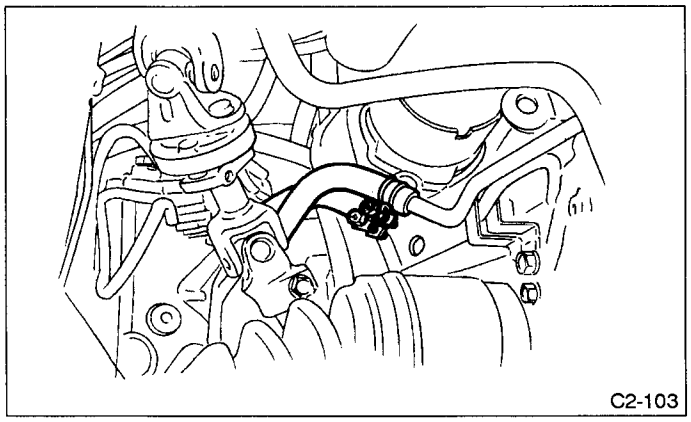

Fig. 30

14) Install exhaust system.
   (1) Install rear heat sealed cover.
   (2) Install rear catalyst converter and front exhaust pipes.
   (3) Install O_2 sensor harness to clip.

Refer to C.2-9.

15) Install under cover.
16) Connect harness connectors.

After lowering the vehicle, connect the following connectors.

- Engine harness connector
- Ignition coil connector
- Vehicle speed sensor 2 connector
- O_2 sensor 1 & 2 (RH & LH) connector
- Power steering harness connector
- Engine ground terminal
- Alternator connector and terminal
- A/C compressor connector

17) Connect accelerator cable.
18) Connect cruise control cable.

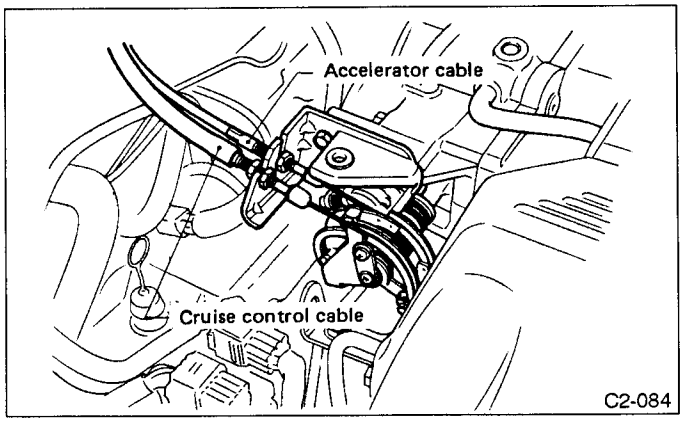

Fig. 31

19) Connect pressure hose onto A/C compressor, and charge with refrigerant.
   (1) Connect high pressure and low pressure hoses onto A/C compressor.

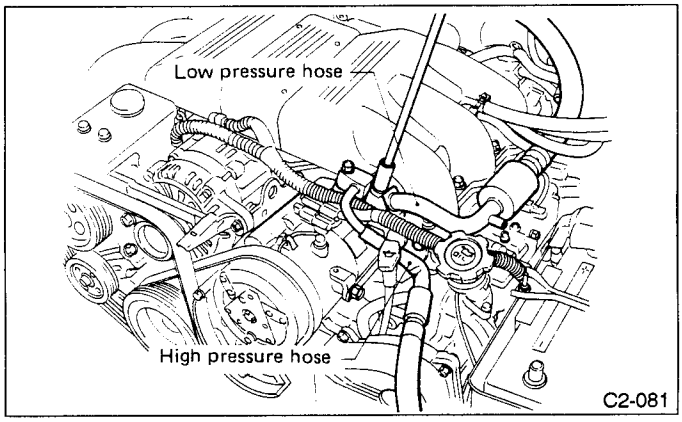

Fig. 32

Tightening torque: N•m (kg-m, ft-lb)
18 — 31 (1.8 — 3.2, 13 — 23)

   (2) Charge A/C system with refrigerant.

Refer to C.4-7.

20) Install air intake system.
   (1) Install air cleaner element and upper cover.
   (2) Install air intake boot and collector cover.
   (3) Install air cleaner element and upper cover.
21) Connect battery ground cable.
22) Fill with coolant.

Refer to C.1-5 Section 8.

23) Check ATF level, and correct if necessary.

Refer to C.1-5 Section 10.

24) Correct power steering fluid, and bleed air.

Refer to C.4-2.

25) Move damper, and close front hood.
26) Take off the vehicle from lift arms.

Refer to C.1-3.

3. Front Cushion Rubber

A: REMOVAL

1) Set the vehicle on lift arm.
2) Move damper, and open front hood fully.
3) Remove air intake system.
   (1) Remove throttle body cover.
   (2) Remove air intake boot.
4) Remove grille ASSY.
5) Remove radiator bracket and A/C condenser installing bolts.

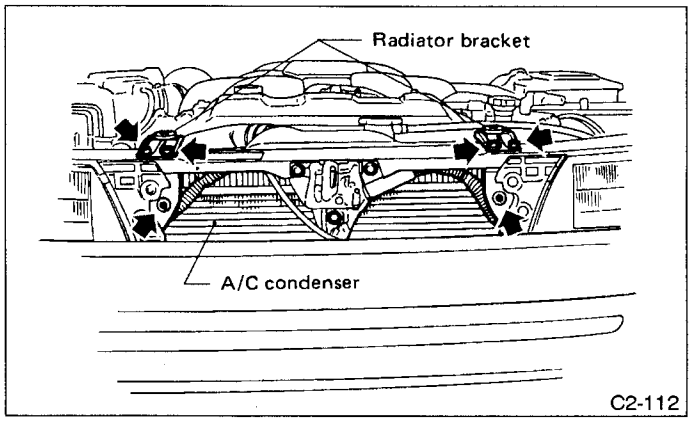

Fig. 33

6) Disconnect O_2 1 & 2 (RH & LH) connectors.
7) Remove pitching stopper.

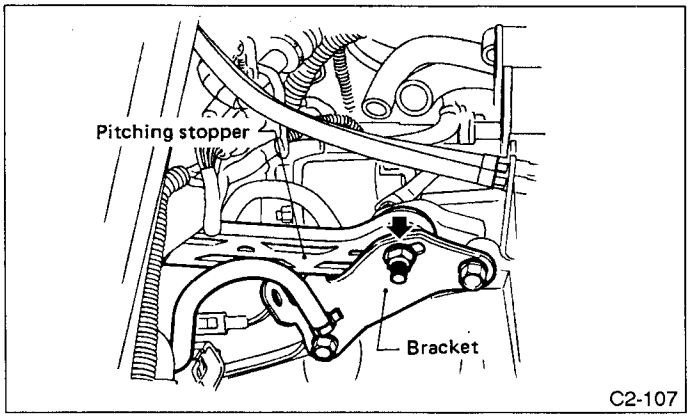

Fig. 34

8) Support engine with a lifting device and wire ropes.

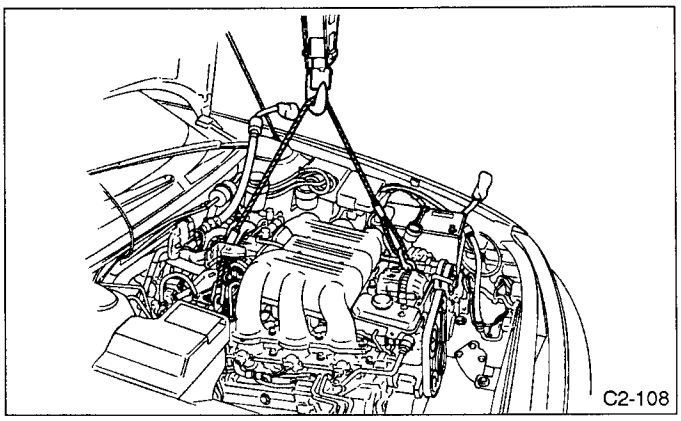

Fig. 35

Protect throttle body with cloth, etc. so as not to damage it by wire rope.

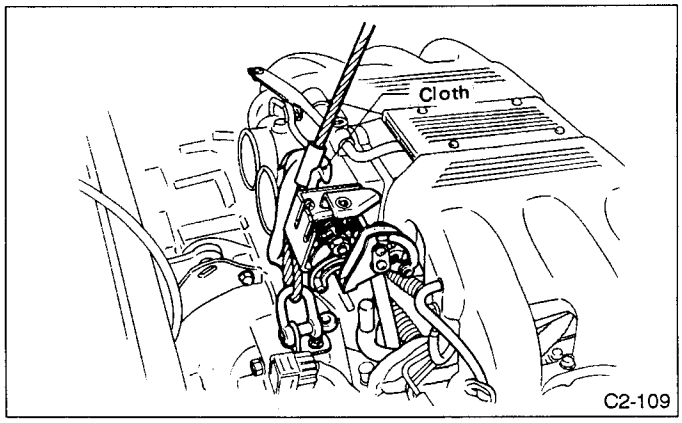

Fig. 36

9) Remove left and right front wheels.
10) Raise the vehicle.
At this time, raise up wire ropes.

11) Remove exhaust system
(1) Remove under cover.
(2) Remove O_2 harness from clip.
(3) Remove front exhaust pipes.
(4) After removing EGR pipe, remove right exhaust manifold.
(5) Remove left exhaust manifold.
Refer to C.2-9.
12) Remove bolts which install power steering fluid cooling hose onto body.

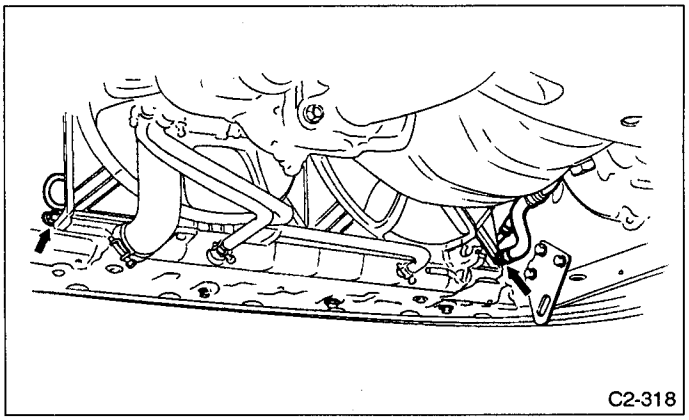
C2-318

Fig. 37

13) Remove stabilizer ASSY.
(1) Remove right side brake hose and ABS harness from strut.
(2) Remove stabilizer link.
(3) After marking with paint between stabilizer lever and stabilizer CP, separate stabilizer lever from stabilizer CP.

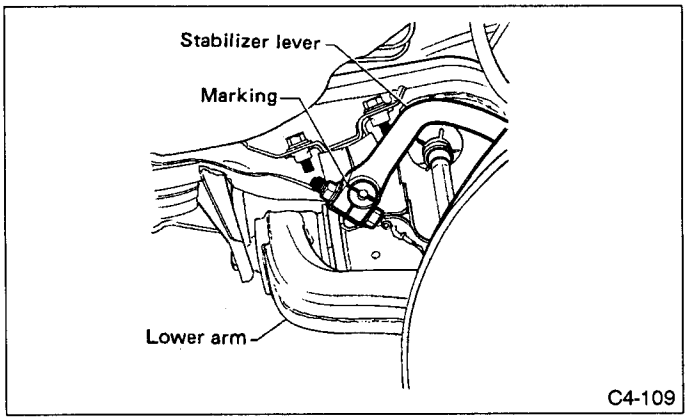

C4-109

Fig. 38

(4) Remove stabilizer clump from sub-frame.
(5) Remove stabilizer CP.
14) Remove nuts which install cushion rubber onto sub-frame.

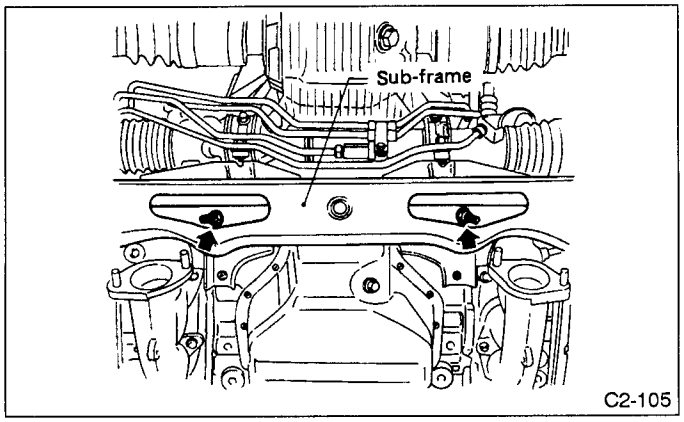

C2-105

Fig. 39

15) Raise up engine while cushion rubbers separate from sub-frame surely.
16) Remove bolts which install cushion rubber bracket onto engine block.

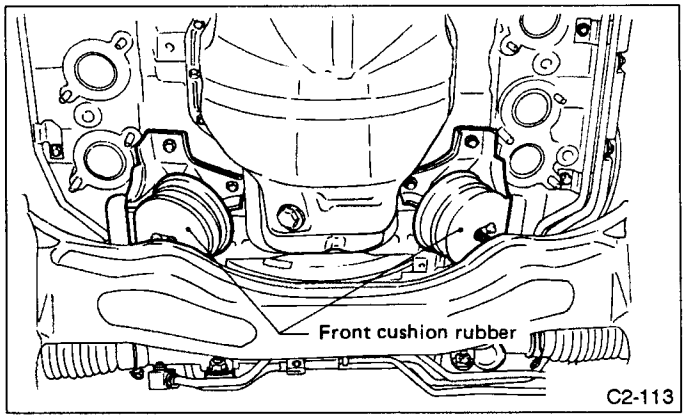

C2-113

Fig. 40

B: INSTALLATION

Installation is in the reverse order of removal.

1) Install cushion rubber onto lower side of engine block.

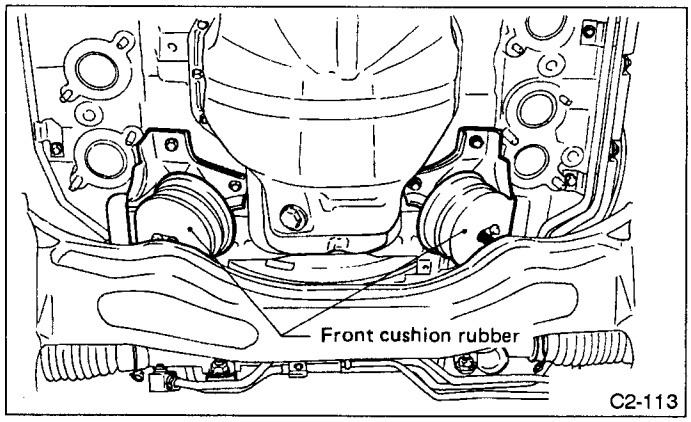

Fig. 41

Tightening torque: N•m (kg-m, ft-lb)
20 — 33 (2 — 3.4, 14 — 25)

2) Lower engine down onto sub-frame.

Make sure that the cushion rubber locator is in the elliptical hole in sub-frame.

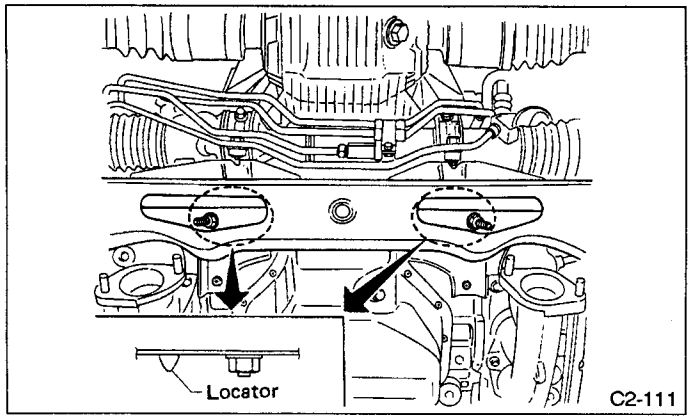

Fig. 42

3) Tighten bolts which install cushion rubber onto sub-frame.

Tightening torque: N•m (kg-m, ft-lb)
54 — 83 (5.5 — 8.5, 40 — 61)

4) Install stabilizer ASSY.
   (1) Install stabilizer CP, and temporarily tighten bolts which install stabilizer clump onto sub-frame.
   (2) Install stabilizer lever to stabilizer CP.

Align the point mark between stabilizer CP and lever.

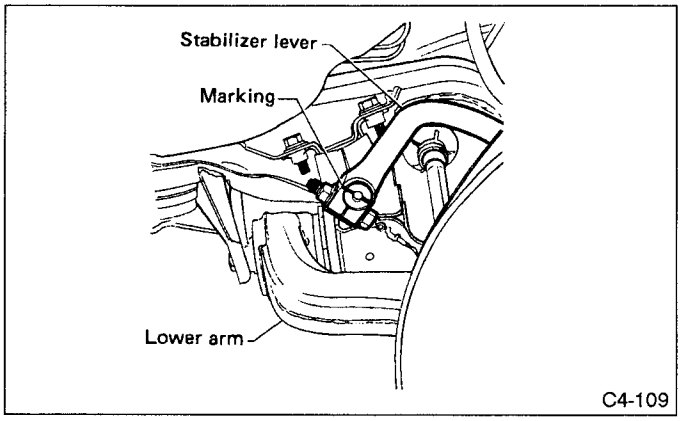

Fig. 43

Tightening torque: N•m (kg-m, ft-lb)
45 — 58 (4.6 — 5.9, 33.2 — 42.8)

(3) Install stabilizer link to stabilizer lever.

Tightening torque: N•m (kg-m, ft-lb)
32 — 42 (3.3 — 4.3, 23.6 — 31.0)

(4) Tighten stabilizer clump installing bolts.

Tightening torque: N•m (kg-m, ft-lb)
21 — 29 (2.1 — 3.0, 15.5 — 21.4)

(5) Install right side brake hose and ABS sensor harness on strut.

5) Install bolts which install power steering fluid cooling pipe onto body.
6) Install exhaust system.
   (1) Install front exhaust pipes.
Refer to C.2-9.
   (2) Install O_2 sensor harness to clip.
   (3) Install under cover.
   (4) Lower the vehicle.
In this time, loose wire ropes.
7) Connect O_2 sensor 1 & 2 connectors.
8) Remove wire ropes and lifting device.
9) Install pitching stopper.

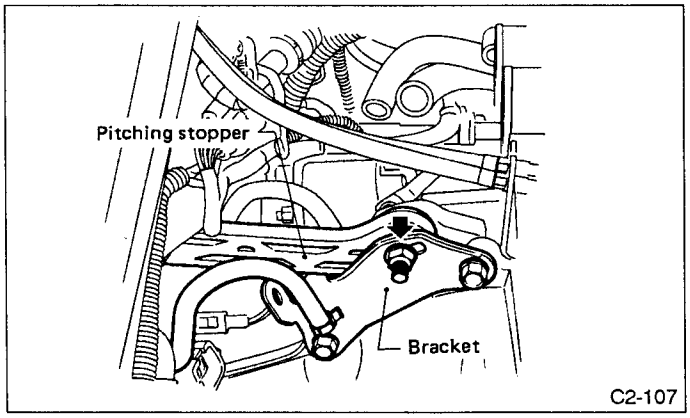

Fig. 44

Tightening torque: N•m (kg-m, ft-lb)
To bracket side:
44 — 54 (4.5 — 5.5, 33 — 40)
To body side:
47 — 67 (4.8 - 6.8, 35 — 49)

10) Install air intake system.
   (1) Install air intake boot.
   (2) Install throttle body cover.
11) Install radiator bracket, and install A/C condenser to body.

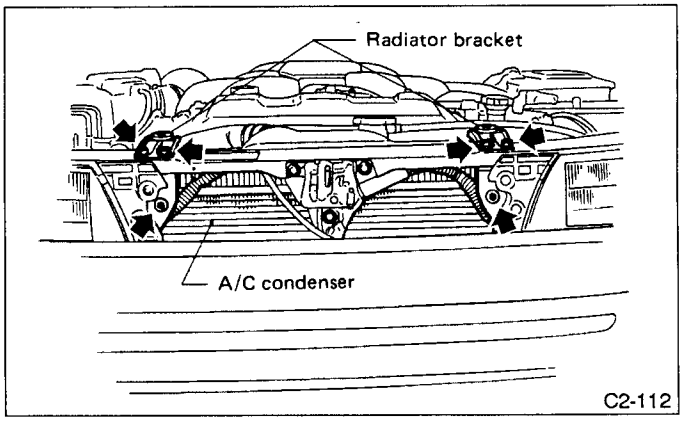

Fig. 45

12) Install grille ASSY.
13) Move damper, and close front hood.
14) Take off the vehicle from lift arms.
Refer to C. 1-3.

4. Transmission

A: REMOVAL

1. Set the vehicle on lift arm.
2. Open front hood fully.

↓

3. Disconnect battery ground cable.

↓

4. Remove air intake system.
5. Remove engine hook.

↓

6. Remove pitching stopper and bracket.

↓

7. Disconnect hoses.

↓

8. Disconnect harness connectors.

↓

9. Remove starter ASSY.

↓

10. Separate torque converter from drive plate.

↓

11. Set special tools.

↓

12. Remove bolt which hold upper side of transmission to engine.

↓

13. Remove ATF level gauge and front differential oil level gauge.

↓

14. Remove under cover.

↓

15. Remove exhaust system.

↓

16. Remove propeller shaft.

↓

17. Remove selector cable from selector lever ASSY.
18. Remove selector cable bracket from body.

↓

19. Remove performance rod.

↓

20. Remove front axle shaft from transmission.

↓

21. Disconnect ATF cooler hoses from pipes on transmission side.

↓

22. Remove nuts which hold lower side of transmission to engine.

↓

23. Place transmission jack under transmission.

↓

24. Remove transmission rear crossmember.

↓

25. Remove transmission.

1) Set the vehicle on lift arm.
2) Move damper, and open front hood fully.
Refer to C.1-3.
3) Disconnect battery ground cable.
4) Remove air intake system.
   (1) Remove throttle body cover.
   (2) Remove air intake boot.

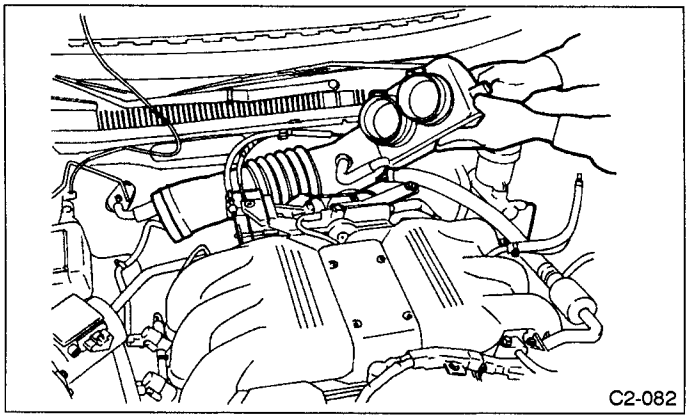

Fig. 46

5) Remove engine hook under throttle body.

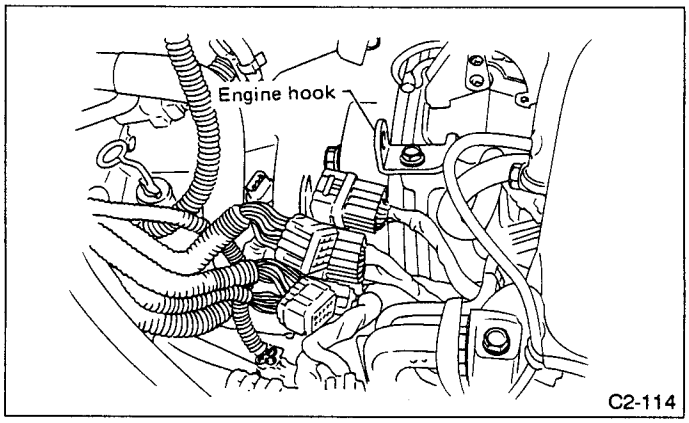

Fig. 47

6) Remove pitching stopper and bracket.
   (1) Remove pitching stopper.
   (2) After disconnecting transmission air vent hoses from bracket, remove bracket from transmission case.

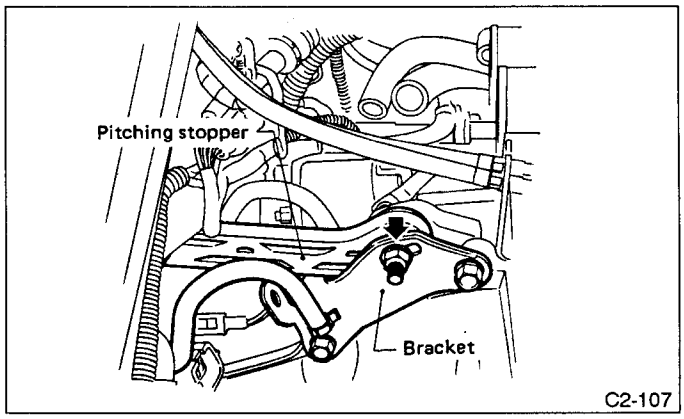

Fig. 48

7) Disconnect hoses.
Disconnect the following hoses;
- PCV valve hose
- Blow-by hose (From crank case to collector)

8) Disconnect harness connectors.
   - Transmission harness connectors
   - Transmission ground terminal connector
   - Vehicle speed sensor 2 connector
   - O_2 sensor 1 & 2 (RH & LH) connectors

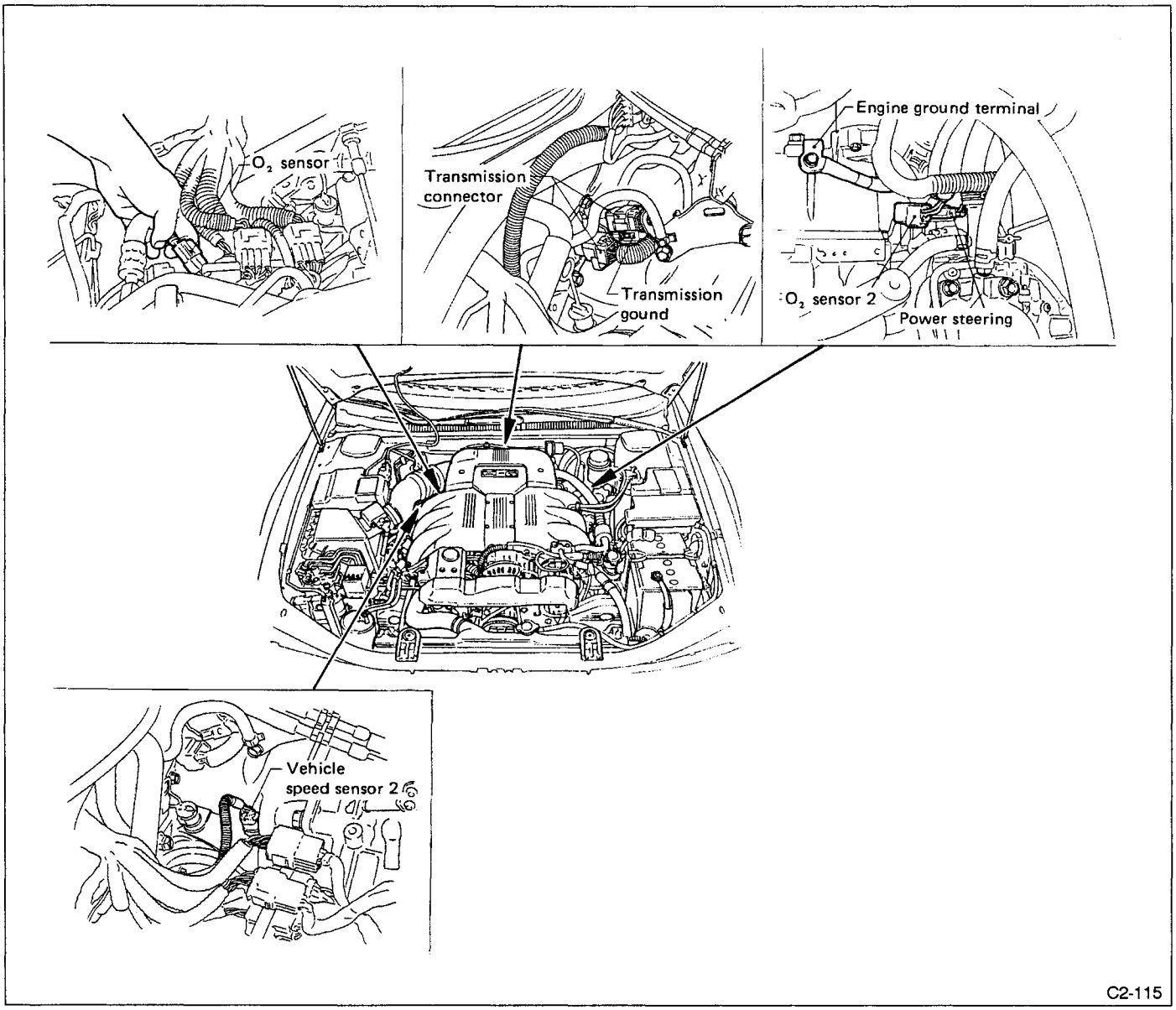

Fig. 49

9) Remove starter ASSY.
(1) Raise the vehicle.
(2) Remove nut which install lower side of starter to transmission case.
(3) Lower the vehicle.
(4) Disconnect power supply terminal and magnet coil connector.
(5) Remove bolts which install upper side of starter, and remove starter ASSY.

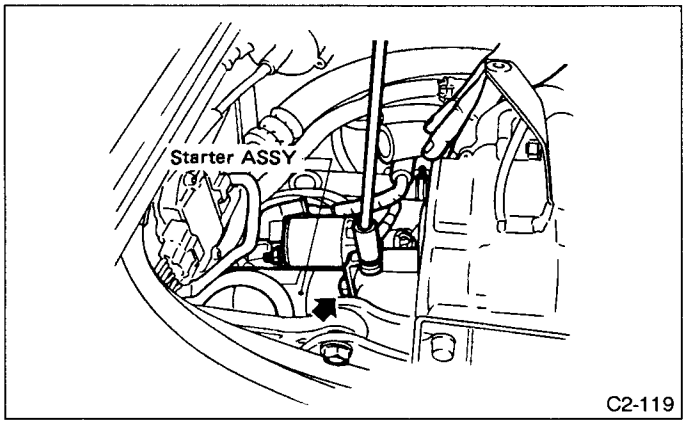

Fig. 50

10) Separate torque converter from drive plate.
(1) Remove service hole plug.
(2) Remove bolts which hold torque converter to drive plate.

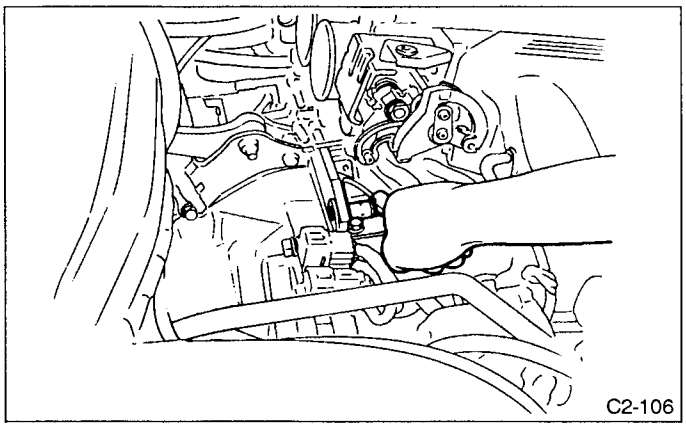

Fig. 51

(3) While cranking the engine, remove other bolts.

11) Set special tools.

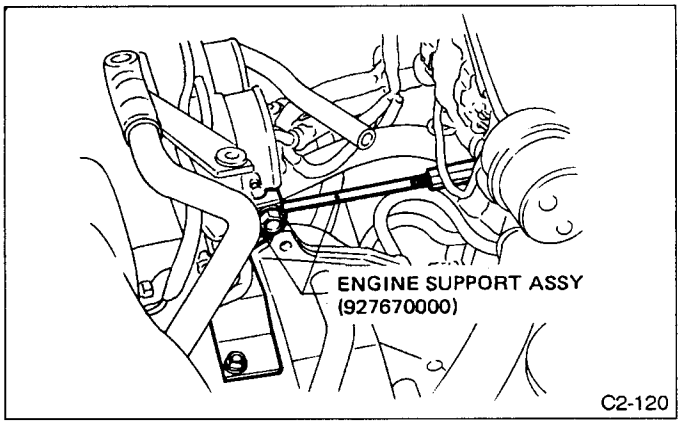

Fig. 52

12) Remove bolts which hold right upper side of transmission to engine.

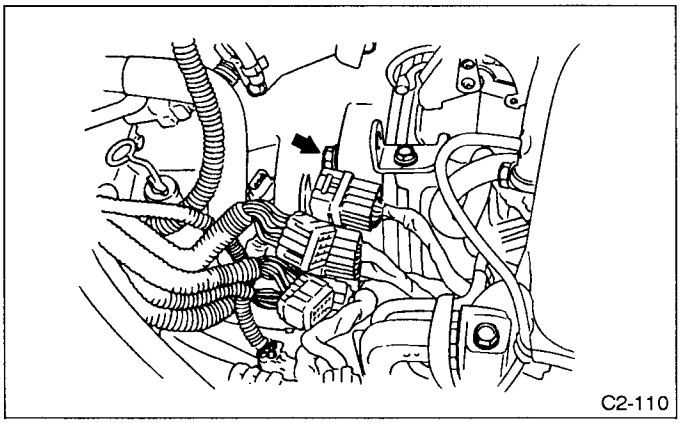

Fig. 53

13) Remove ATF level gauge and front differential oil level gauge.
14) Remove under cover.
(1) Lift up the vehicle.
(2) Remove under cover.

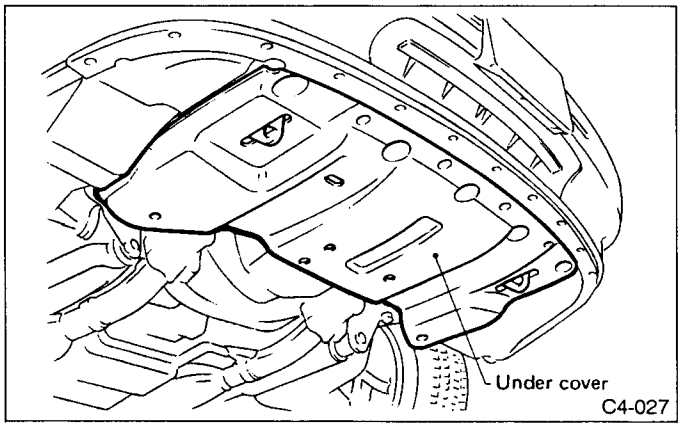

Fig. 54

15) Remove exhaust system.
(1) Remove O_2 sensor harness from clip.
(2) Remove front exhaust pipes and rear catalyst converter.
(3) Remove front exhaust cover.
Refer to C.2-9.
16) Remove propeller shaft.
(1) Remove bolts which install propeller shaft to companion flange of rear differential.
(2) Remove bolts which hold center bearing to body.
(3) Remove propeller shaft from transmission.
Be sure to plug the opening in the transmission after removal of propeller shaft.
17) Remove selector cable from selector lever ASSY.
18) Remove selector cable bracket from body.

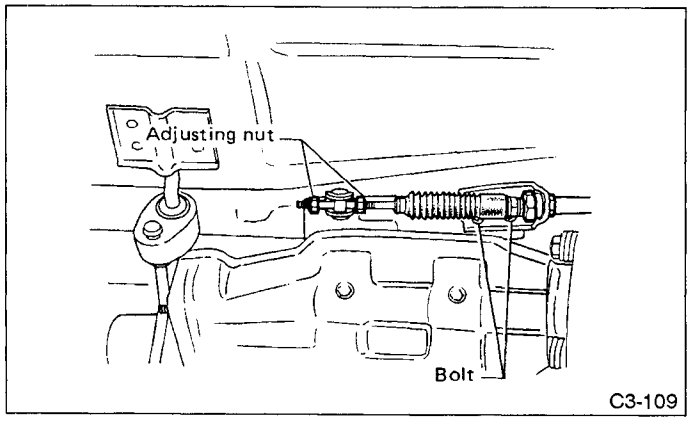

Fig. 55

19) Remove performance rod.

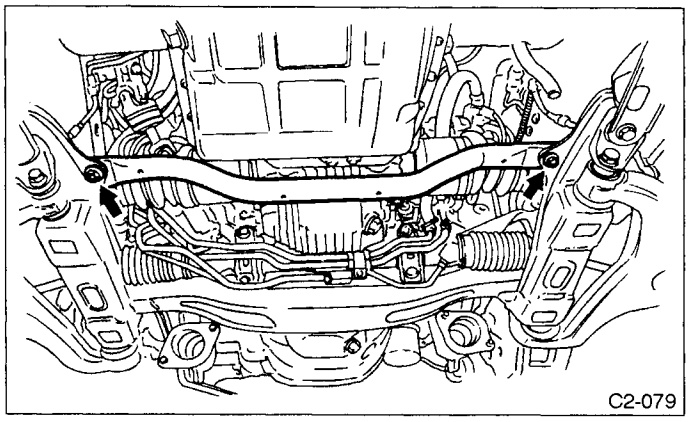

Fig. 56

20) Remove front axle shaft from transmission.
(1) Remove ball joint of lower arm from knuckle arm of housing.
(2) Remove stabilizer link from bracket.
(3) Remove brake hose and ABS sensor harness from start bracket.
(4) Remove spring pin which holds axle shaft into front differential drive shaft.

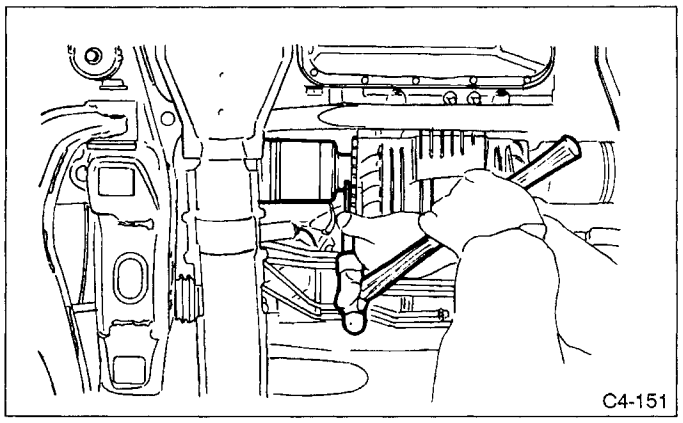

Fig. 57

(5) Remove axle shaft from transmission.
Refer to C.4-1.
21) Disconnect ATF cooler hoses from pipes on transmission side.

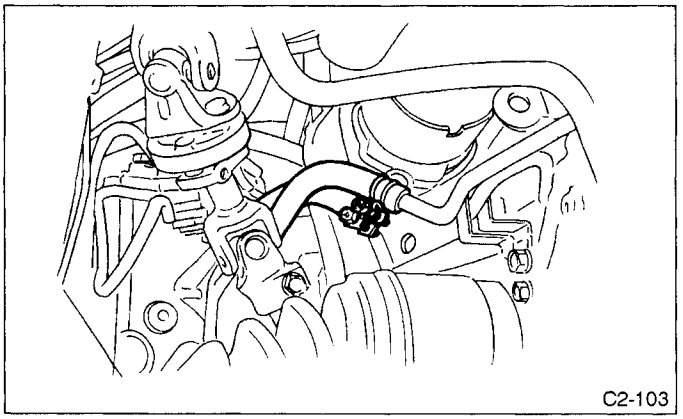

Fig. 58

Catch ATF into container.
22) Remove nuts which hold lower side of transmission to engine.

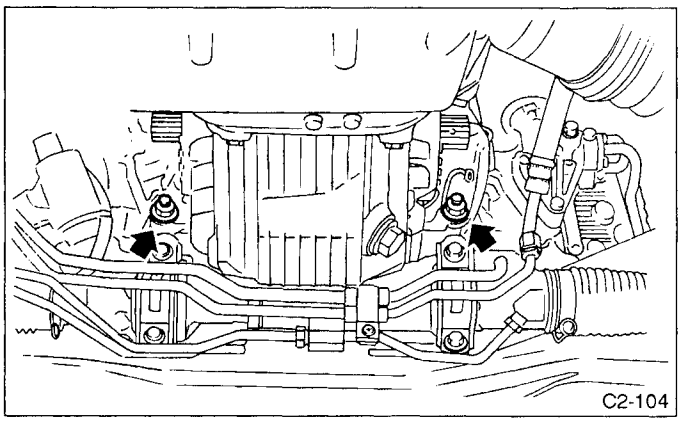

Fig. 59

23) Place transmission jack under transmission.

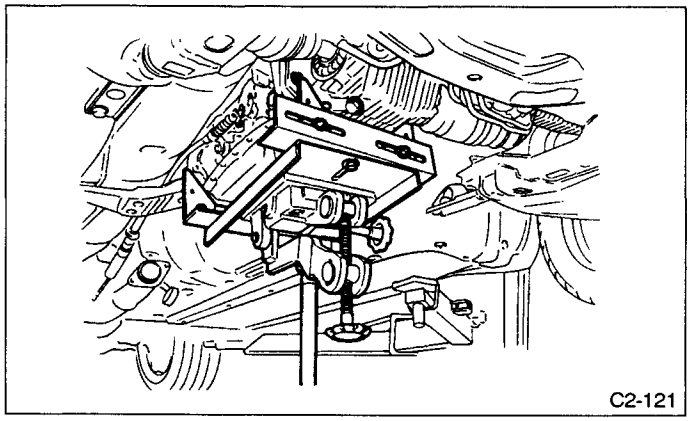

Fig. 60

24) Remove bolts which are installing rear crossmember to body.

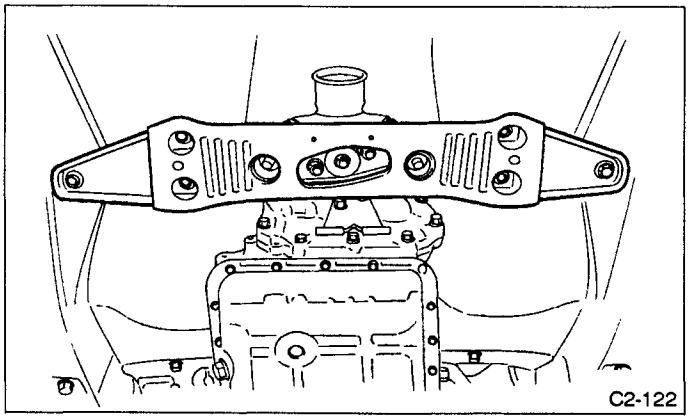

Fig. 61

25) Remove transmission.
Move torque converter and transmission as a unit away from the engine.

B: INSTALLATION

1. Install transmission to engine.
2. Install transmission rear crossmember.
3. Take off transmission jack.
4. Tighten nuts which hold lower side of transmission to engine.
5. Connect ATF cooler hoses to pipes on transmission side.
6. Tighten bolt which hold upper side of transmission to engine.
7. Install ATF level gauge and front differential oil level gauge.
8. Install torque converter to drive plate.
9. Remove special tools.
10. Install pitching stopper and bracket.
11. Install starter ASSY.
12. Install front axle shaft into transmission.
13. Install selector cable to selector lever ASSY
14. Install selector cable bracket onto body.
15. Install performance rod.
16. Install propeller shaft.
17. Install exhaust system.
18. Install under cover.
19. Connect harness connector and hoses.
20. Install engine hook.
21. Install air intake system.
22. Check ATF level, and correct if necessary.
23. Connect battery ground cable.
24. Remove front hood stay, and close front hood.
25. Check selector lever operation.
26. Take off the vehicle from lift arms.
27. Check the vehicle with road test.

1) Install transmission on engine.
   (1) Gradually raise transmission with transmission jack.
   (2) Engage them at splines.
2) Install transmission rear crossmember to body.

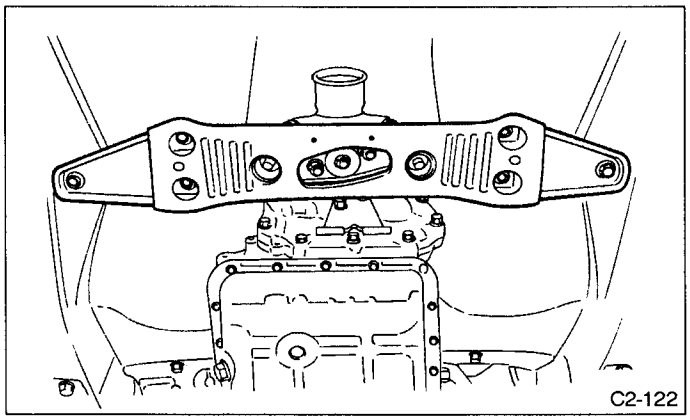

Fig. 62

Tightening torque: N•m (kg-m, ft-lb)
54 — 83 (5.5 — 8.5, 40 — 61)

3) Take off transmission jack.
4) Tighten nuts which hold lower side of transmission to engine.

Tightening torque: N•m (kg-m, ft-lb)
46 — 54 (4.7 — 5.5, 34 — 40)

5) Connect ATF cooler hoses to pipes on transmission side.

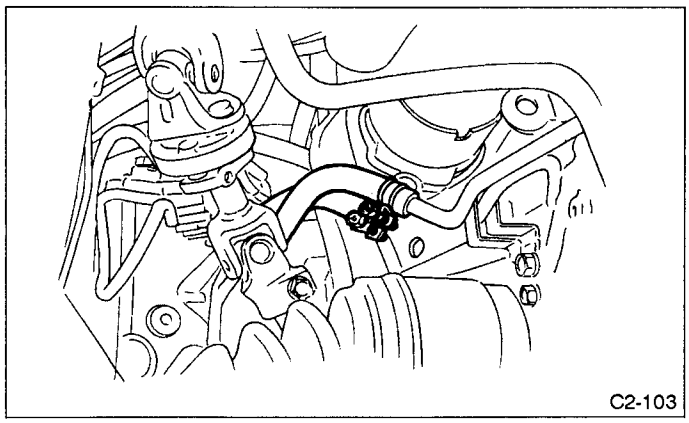

Fig. 63

6) Tighten bolts which hold upper side of transmission to engine.
   (1) Lower the vehicle.
   (2) Tighten transmission installing bolt.

Tightening torque: N•m (kg-m, ft-lb)
46 — 54 (4.7 — 5.5, 34 — 40)

7) Install ATF level gauge and front differential oil level gauge.
8) Install torque converter to drive plate.
   (1) Tighten bolts which hold torque converter to drive plate.
   (2) While cranking the engine, tighten other bolts.

Be careful not to drop bolts into torque converter housing.

Tightening torque: N•m (kg-m, ft-lb)
23 — 26 (2.3 — 2.7, 17 — 20)

   (3) Clog plug onto timing hole.
   (4) Install V-belt cover.
9) Remove special tools.

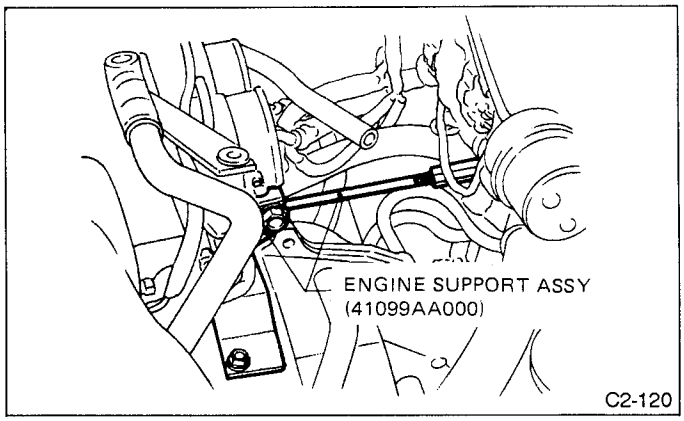

Fig. 64

10) Install pitching stopper and bracket.
(1) Install pitching stopper bracket on transmission torque converter case.

Tightening torque: N•m (kg-m, ft-lb)
36 — 42 (3.7 — 4.3, 27 — 31)

(2) Install pitching stopper.

Tightening torque: N•m (kg-m, ft-lb)
To body side: 47 — 67 (4.8 — 6.8, 35 — 49)
To bracket side: 34 — 54 (3.5 — 5.5, 25 — 40)

11) Install starter ASSY.
(1) Install starter ASSY onto transmission case.
(2) Connect magnet coil connector and power supply terminal.
(3) Tighten bolts which install upper side of starter to transmission.

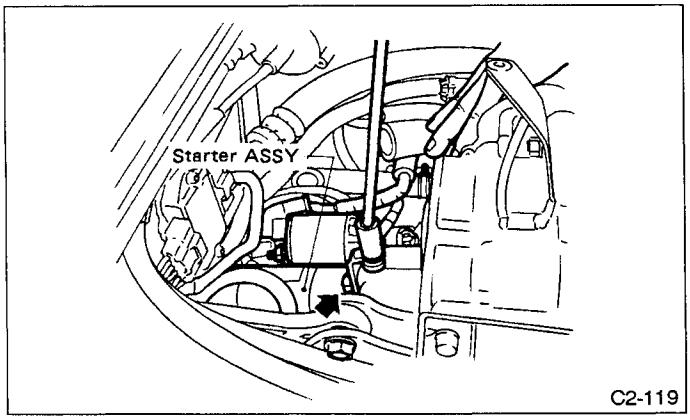

Fig. 65

Tightening torque: N•m (kg-m, ft-lb)
46 — 54 (4.7 — 5.5, 34 — 40)

(4) Lift up the vehicle.
(5) Tighten nut which install lower side of starter to transmission.

Tightening torque: N•m (kg-m, ft-lb)
46 — 54 (4.7 — 5.5, 34 — 40)

12) Install front axle shaft into transmission.
(1) Install front axle shaft into drive shaft.
(2) Install spring pin.
Use new spring pin.
(3) Install ball joint of lower arm into knuckle arm of housing, and tighten installing bolt.

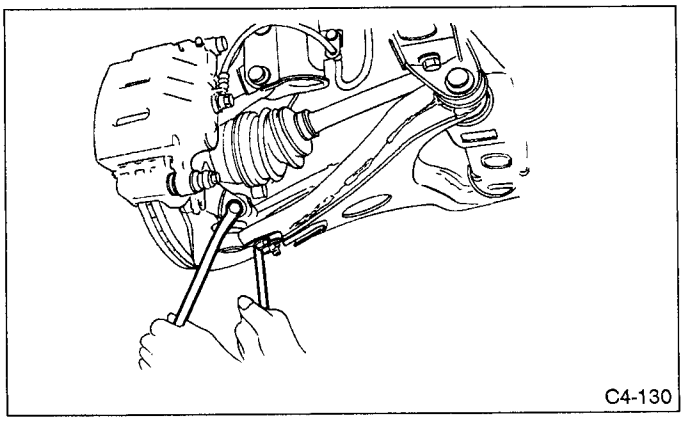

Fig. 66

Tightening torque: N•m (kg-m, ft-lb)
45 — 58 (4.6 — 5.9, 33.2 — 42.8)

(4) Install ABS sensor harness and brake pipe onto strut bracket.
Refer to C.4-1.
13) Install selector cable into selector lever ASSY.
14) Install selector cable bracket onto body.
Tighten selector cable adjusting and lock nut after checking selector lever operation [Step. 23)].

15) Install performance rod.

Tightening torque: N•m (kg-m, ft-lb)
45 — 58 (4.6 — 5.9, 33.2 — 42.8)

16) Install propeller shaft.
(1) Install propeller shaft into transmission.
(2) Tighten bolts and nut which install propeller shaft onto companion flange.

Tightening torque: N•m (kg-m, ft-lb)
24 — 39 (2.4 — 4.0, 17 — 29)

(3) Install center bearing bracket on body.

Tightening torque: N•m (kg-m, ft-lb)
47 — 57 (4.8 — 5.8, 35 — 42)

Refer to C.3-4.
17) Install exhaust system.
(1) Install front exhaust cover.
(2) Install rear catalyst converter and front exhaust pipes.
(3) Install O_2 sensor harness to clip.
Refer to C.2-9.
18) Install under cover.
19) Connect harness connectors and hoses.
(1) Lower the vehicle.
(2) Connect the following harness connectors.
- Transmission harness connector
- Transmission ground terminal connector
- Vehicle speed sensor 2 connector
- O_2 sensor 1 & 2 (RH & LH) connector

(3) Connect the following hoses.
- PCV valve hose
- Blow-by hose

20) Install engine hook.
21) Install air intake system.
(1) Install air intake boot.
(2) Install throttle body cover.
22) Check ATF level, and correct if necessary.
Refer to C.1-4.
23) Connect battery ground cable.
24) Move damper, and close front hood.
Refer to C.1-3.
25) Check selector lever operation.
Refer to C.3-3.
26) Remove vehicle from lift arms.
Refer to C.1-3.
27) Check the vehicle with road test.
Refer to C.3-2.

5. Rear Cushion Rubber

A: REMOVAL

1) Set the vehicle on lift arm.
Refer to C.1-3.
2) Open front hood.
3) Remove exhaust system.
   (1) Disconnect O_2 sensor 1 & 2 (RH & LH) connector.
   (2) Lift up the vehicle.
   (3) Remove under cover.
   (4) Remove O_2 sensor harness from clip.
   (5) Remove front exhaust pipe and rear catalyst converter.
Refer to C.2-9.
4) Place transmission jack under transmission.
5) Remove transmission rear crossmember.

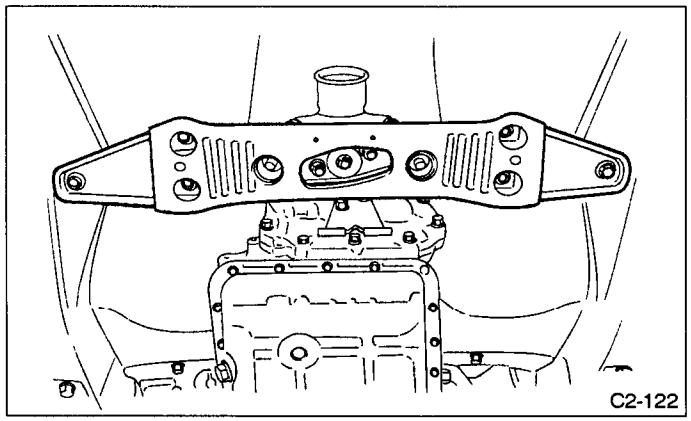

Fig. 67

6) Remove rear cushion rubber.

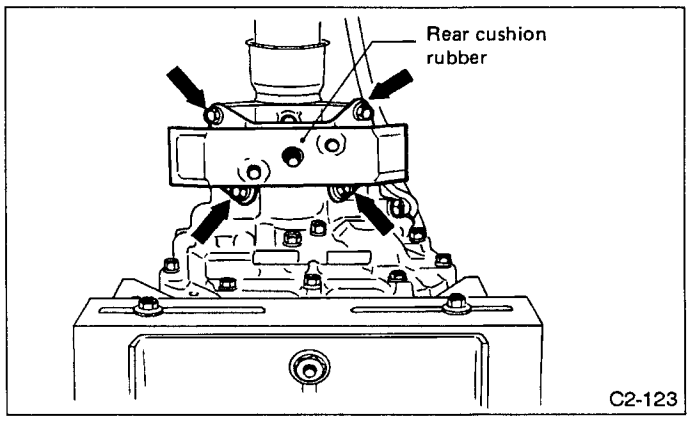

Fig. 68

B: INSTALLATION

Installation is in the reverse order of removal procedures.
1) Install rear cushion rubber.

Tightening torque: N•m (kg-m, ft-lb)
18 — 31 (1.8 — 3.2, 13 — 23)

2) Install transmission rear crossmember.

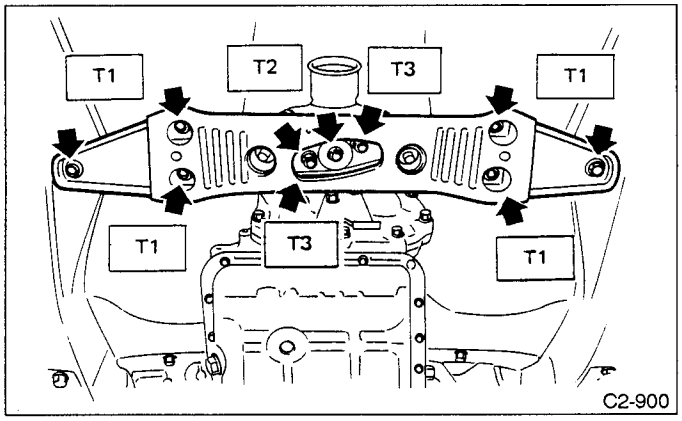

Fig. 69

Tightening torque: N•m (kg-m, ft-lb)
T1: 54 — 83 (5.5 — 8.5, 40 — 61)
T2: 23 — 36 (2.3 — 3.7, 17 — 27)
T3: 27 — 47 (2.8 — 4.8, 20 — 35)

3) Take off transmission jack.
4) Install exhaust system.
   (1) Install rear catalyst converter and front exhaust pipes.
   (2) Install O_2 sensor harness to clip.
   (3) Install under cover.
   (4) Lower the vehicle.
   (5) Connect O_2 sensor 1 & 2 connector.
Refer to C.2-9.
5) Close front hood.
6) Remove vehicle from lift arm.
Refer to C.1-3.

SUBARU

SVX

1992

Page

1. Foreword 2
2. Ignition Timing 2
3. Engine Idle Speed 2
4. Engine Compression 2
5. Intake Manifold Vacuum 3
6. Cylinder Head Cover 4
7. Fuel Injector 5
8. Collector and Intake Manifold ASSY 5
9. Oxygen (O_2) Sensor 7

1. Foreword

This chapter describes major inspection and service procedures for the engine mounted on the body. For procedures not found in this chapter, refer to the service procedure section in the applicable chapter.

2. Ignition Timing

A: INSPECTION

1) Warm up the engine (A/C switch "OFF").
2) Connect "Select Monitor" and measure ignition timing. (Function mode "07")
If the timing is not correct, check the ignition control system. (Refer to "2-7 Fuel Injection System".)

Ignition timing [BTDC/rpm]:
20°± 8°/610

3. Engine Idle Speed

A: INSPECTION

1) Before checking idle speed, check the following:
   (1) Ensure that air cleaner element is free from clogging, ignition timing is correct, spark plugs are in good condition, and that hoses are connected properly.
   (2) Ensure that CHECK ENGINE light is off.
2) Warm up the engine.
3) Connect "Select Monitor" and measure engine rpm. (Function model "04")
4) Check idle speed when unloaded (with headlights, heater fan, rear defroster, radiator fan, air conditioner, etc. OFF).

Idle speed (No load and gears in N or D position)
610± 100 rpm

5) Check idle speed when loaded. (Turn air conditioner switch "ON" and operate compressor for at least one minute before measurement.)

Idle speed (A/C switch "ON" and gears in N position)
800± 50 rpm
(A/C switch "ON" and gears in D position)
700± 50 rpm

If idle speed is outside specifications, refer to General Troubleshooting chart under "2-7 Fuel Injection System".

4. Engine Compression

A: MEASUREMENT

1) After warming up the engine, turn off the ignition switch.
2) Make sure that the battery is fully charged.
3) Remove all the spark plugs.
〈Refer to "6-1 Spark plug [W4A0]".〉
4) Disconnect connectors from fuel injector.
5) Fully open the throttle valve.
6) Check the starter motor for satisfactory performance and operation.
7) Connect compression gauge to spark plug hole.
8) Crank the engine by means of the starter motor, and read the maximum value on the gauge when the pointer is steady.
9) Perform at least two measurements per cylinder, and make sure that the values are correct.

Compression (200 — 300 rpm and fully open throttle):
Standard
1,177 — 1,422 kPa
(12.0 — 14.5 kg/cm², 171 — 206 psi)
Limit
981 kPa (10.0 kg/cm², 142 psi)
Difference between cylinders
196 kPa (2.0 kg/cm², 28 psi)

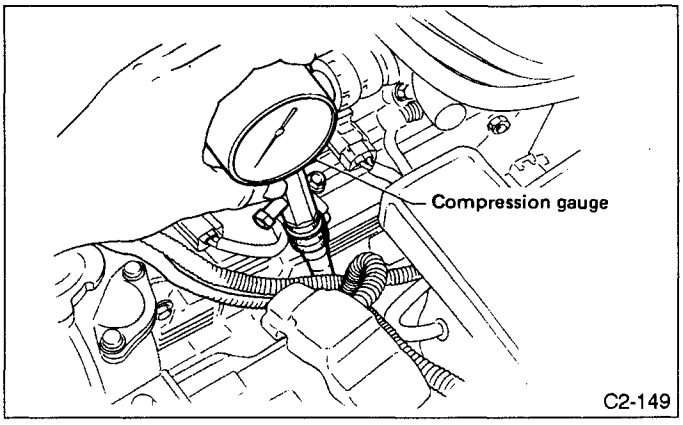

Fig. 1

5. Intake Manifold Vacuum

A: MEASUREMENT

1) Warm up the engine.
2) Disconnect the vacuum hose and install the vacuum gauge to the hose fitting on the manifold.
3) Keep the engine at the idle speed and read the vacuum gauge indication.
By observing the gauge needle movement, the internal condition of the engine can be diagnosed as described in Table below.

Vacuum pressure (at idling, A/C "OFF"):
More than 68.0 kPa (510 mmHg, 20.08 inHg)

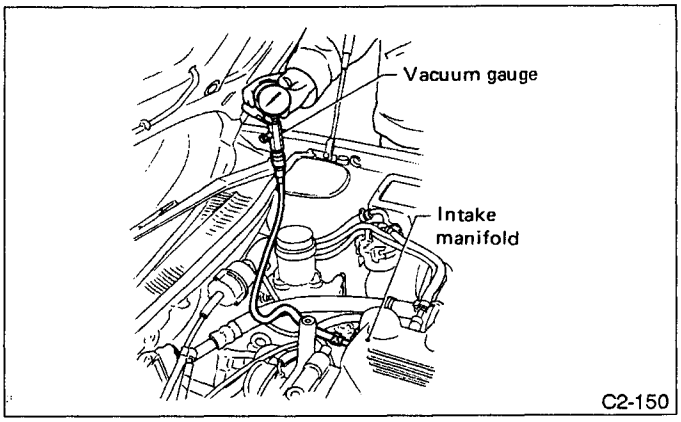

Fig. 2

Diagnosis of engine condition by measurement of manifold vacuum	
Vacuum gauge indication	Possible engine condition
1. Needle is steady but lower than normal position. This tendency becomes more evident as engine temperature rises.	Leakage around air intake system.
2. When engine speed is reduced slowly from higher speed, needle stops temporarily when it is lowering or becomes steady above normal position.	Back pressure too high, or exhaust muffler clogged.
3. Needle intermittently drops to position lower than normal position.	Leakage around cylinder.
4. Needle drops suddenly and intermittently from normal position.	Sticky valves.
5. When engine speed is gradually increased, needle begins to vibrate rapidly at certain speed, and then vibration increases as engine speed increases.	Weak or broken valve springs.
6. Needle vibrates above and below normal position in narrow range.	Defective ignition system or throttle chamber idle adjustment.

6. Cylinder Head Cover

A: REMOVAL

1. CYLINDER HEAD COVER LH

1) Disconnect battery cables and remove battery.
2) Disconnect blow-by hose from cylinder head cover.
3) Remove harness clamps.

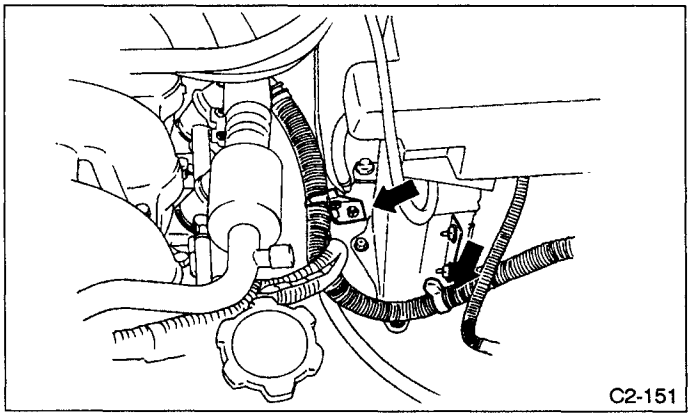

Fig. 3

4) Remove ignition coils.
〈Refer to 6-1 "Ignition coil [W3A0]".〉
5) Disconnect connectors from fuel injectors.
6) Raise the vehicle.
7) Remove under cover.
8) Remove cylinder head cover.
   (1) Remove bolts ① through ④ while getting under the car.

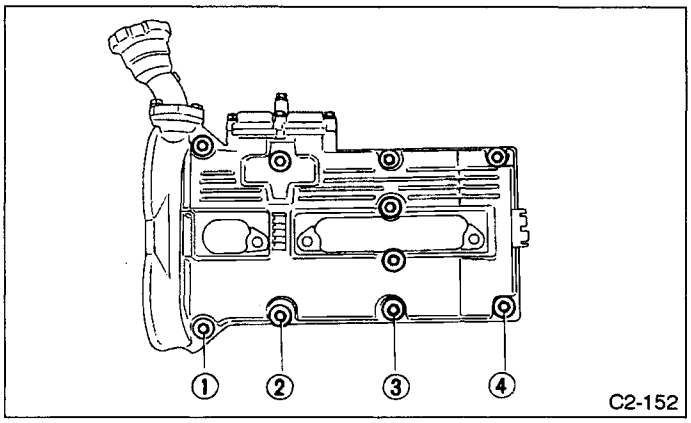

Fig. 4

   (2) Lower the vehicle.
   (3) Remove the remaining bolts and the cylinder head cover.
9) Remove cylinder head cover gasket.

2. CYLINDER HEAD COVER RH

1) Disconnect ground cable of battery.
2) Remove air intake boots and air cleaner case.
3) Disconnect blow-by hose from cylinder head cover.
4) Remove ignition coil harness clamp from cylinder head cover.
5) For subsequent removal operation, follow the same procedures [steps 5) through 10)] that are outlined under the "CYLINDER HEAD COVER LH."

B: INSTALLATION

Installation is in the reverse order of removal procedures.

Tightening torque:
Cylinder head cover bolts:
4.4 — 5.4 N•m (0.45 — 0.55 kg-m, 3.3 — 4.0 ft-lb)

7. Fuel Injector

A: REMOVAL

1) Fuel pressure elimination
   (1) Disconnect fuel pump connector.
   (2) Start engine.
   (3) Run engine until it stalls.
   (4) After it stalls, crank starter for approximately 5 seconds and turn ignition switch to "OFF".
2) Disconnect connector from fuel injector.
3) Remove fuel injector cover.

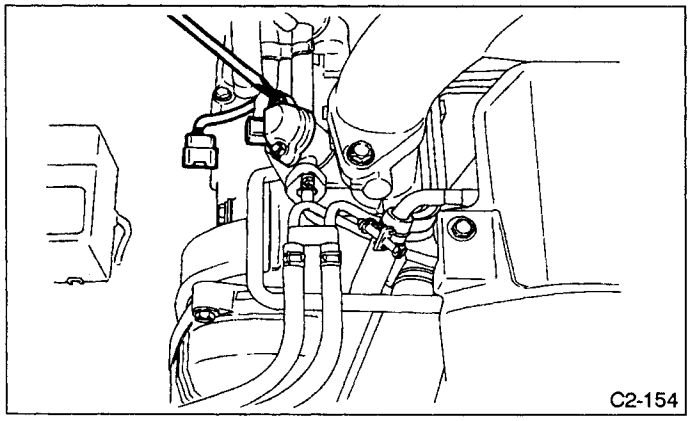

Fig. 5

4) Extract while turning fuel injectors.
a. Do not attempt to pry injectors with a screwdriver or similar tool. Do not pinch injector pin with pliers.
b. Be careful not to damage O-ring.
c. If injector is difficult to remove with your hand, remove injector and fuel pipe as a unit, and push injector out from the back side.
5) To install, reverse order of removal procedures.

8. Collector and Intake Manifold ASSY

A: REMOVAL

1) Fuel pressure elimination
   (1) Disconnect fuel pump connector.
   (2) Start engine.
   (3) Run engine until it stalls.
   (4) After it stalls, crank starter for approximately 5 seconds and turn ignition switch to "OFF".
2) Remove corrector cover.
3) Disconnect throttle cable and cruise control cable from throttle lever.
4) Remove air intake boots.
5) Disconnect engine harness connectors.
6) Disconnect female connectors of engine harness from bracket.

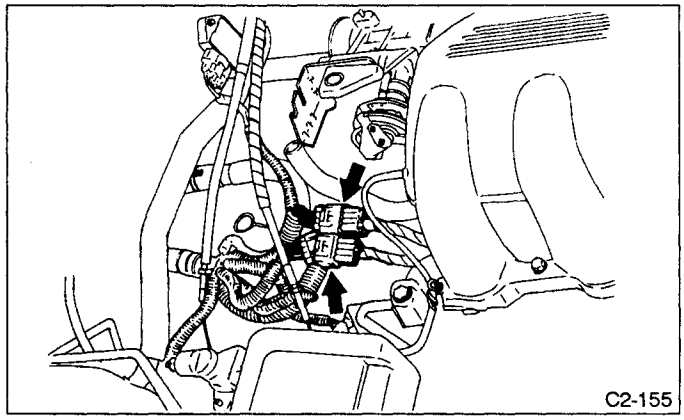

Fig. 6

7) Disconnect connector from auxiliary air control valve.
8) Disconnect two coolant hoses from throttle body. (They are located under the throttle body.)
9) Disconnect auxiliary air control valve hose from throttle body.
10) Disconnect PCV hose from connector PCV.
11) Remove blow-by hose from cylinder head cover RH.
12) Disconnect EGR control hoses from intake manifold.
13) Remove EGR pipe and cover.
14) Disconnect power steering pump SW connector.
15) Disconnect brake booster hose from intake manifold.
16) Disconnect fuel hoses (delivery, return and evaporation lines) from fuel pipes.
Place a container to catch fuel from fuel hose.

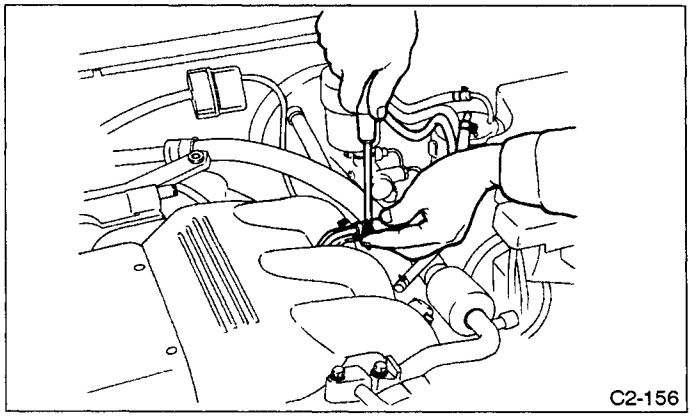

Fig. 7

17) Remove drive belt cover and drive belts.
(Refer to 1-5 "Drive Belts [01A0]".)
18) Disconnect alternator B terminal and connector.
19) Remove bolt securing the alternator harness cover.
20) Remove alternator.
21) Remove A/C belt idler pulley ASSY.
22) Remove all bolts securing the A/C compressor bracket. Move the A/C compressor and bracket forward as a unit to facilitate removal of intake manifold mounting bolts.
When moving the compressor and bracket, take care not to over-stretch the pipes and hoses.

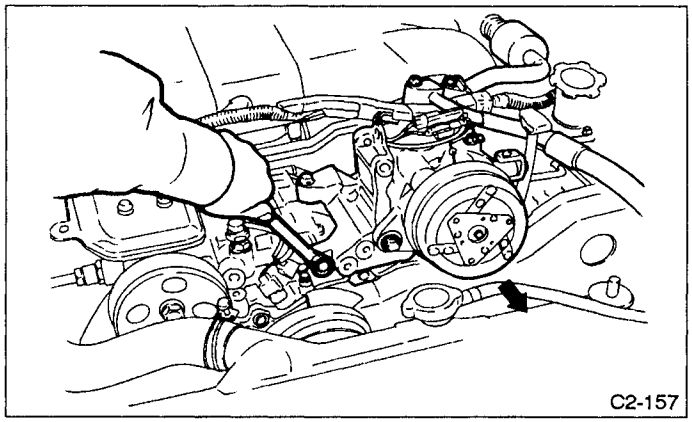

Fig. 8

23) Remove collector and intake manifold ASSY.

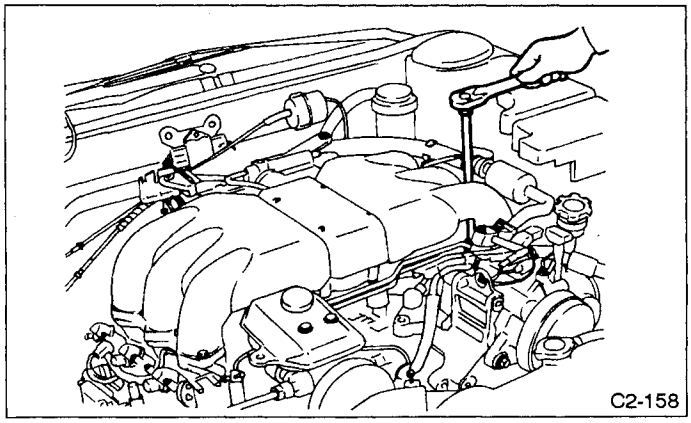

Fig. 9

B: INSTALLATION

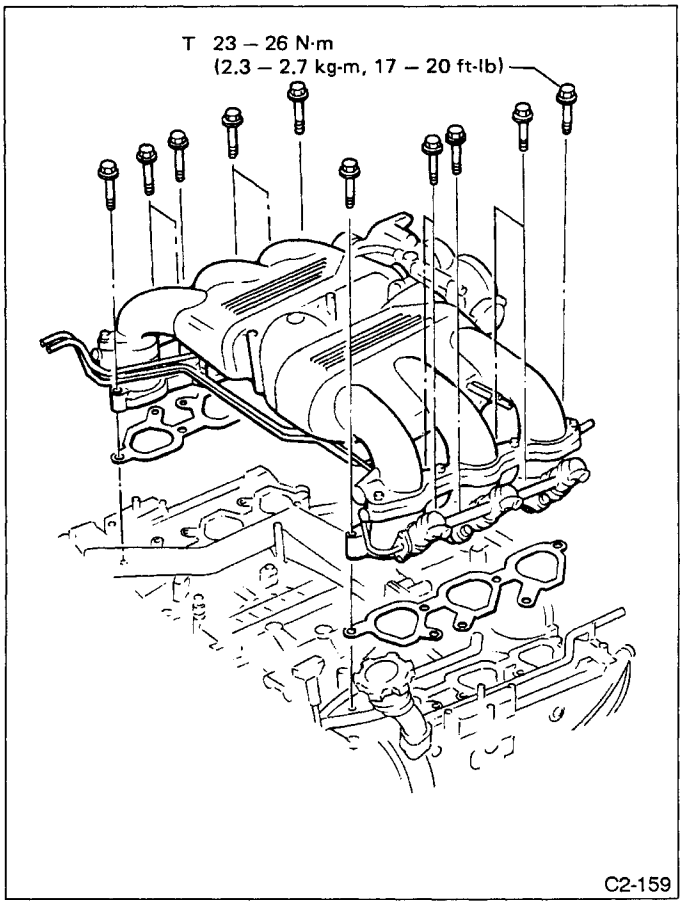

Fig. 10

Installation is in the reverse order of removal procedure. Observe the following.
1) Remove traces of gasket from the mating surfaces of the intake manifold and cylinder head before installation.
2) Be sure to use new gaskets.
3) Be careful not to catch hoses or harnesses between intake manifold and cylinder head.
4) Before installing A/C compressor bracket, apply fluid packing to thread portion of bolt which indicating arrow mark in Figure.

Fluid packing
Three bond 1344 or equivalent

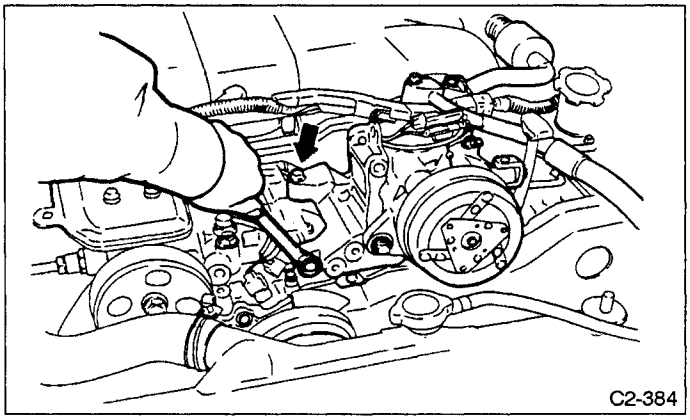

Fig. 11

9. Oxygen (O_2) Sensor

A: REPLACEMENT

Oxygen (O_2) sensor is one of the important emission control parts. Therefore, replace it as follows only when it is damaged by external force, or if it seems to be out of order according to troubleshooting etc.

1. REMOVAL

1) Disconnect O_2 sensor cord.
2) Apply SUBARU CRC (004301003) or its equivalent to threaded portion of oxygen (O_2) sensor, and leave it for one minute or more.
3) Loosen oxygen (O_2) sensor by turning it 10 to 40 degrees with special tool (SOCKET: 499990110) and wrench.
4) Apply SUBARU CRC (004301003) to threaded portion of oxygen (O_2) sensor again, and leave it for one minute or more.
5) Remove oxygen (O_2) sensor by using socket and wrench.

When removing, do not force oxygen (O_2) sensor especially when exhaust pipe is cold; otherwise it will damage the exhaust pipe.

2. INSTALLATION

1) Apply anti-seize compound ("SS-30" made by JET-LUBE Inc. in U.S.A. or its equivalent) only to threaded portion of oxygen (O_2) sensor to make the next removal easier.

Never apply anti-seize compound to protector of oxygen (O_2) sensor.

2) By using socket and torque wrench, install oxygen (O_2) sensor onto front exhaust pipe by tightening it to the specified torque.

Torque [oxygen (O_2) sensor]:
25 — 34 N•m (2.5 — 3.5 kg-m, 18 — 25 ft-lb)

3) Securely connect oxygen (O_2) sensor cord.

SUBARU

SVX

1992

		Page
M	MECHANISM AND FUNCTION	2
	1. General	2
	2. Timing Belt	3
	3. Belt Tension Adjuster	4
	4. Belt Cover	5
	5. Camshaft	5
	6. Hydraulic Lash Adjuster	6
	7. Cylinder Head	7
	8. Cylinder Block	8
	9. Crankshaft	9
	10. Piston	9
S	SPECIFICATIONS AND SERVICE DATA	10
	A: SPECIFICATIONS	10
	B: SERVICE DATA	11
C	COMPONENT PARTS	15
	1. Timing Belt	15
	2. Cylinder Head and Camshaft	16
	3. Cylinder Head and Valve ASSY	17
	4. Cylinder Block	18
	5. Crankshaft and Piston	19
W	SERVICE PROCEDURE	20
	1. General Precautions	20
	2. Timing Belt	21
	3. Camshaft	31
	4. Cylinder Head	45
	5. Cylinder Block	56
T	TROUBLESHOOTING	76
	1. Engine Trouble in General	76
	2. Engine Noise	79

M MECHANISM AND FUNCTION

1. General

The Subaru 3300cc, 6-cylinders engine is made from aluminum alloy and is horizontally opposed. It is a 4-stroke cycle, water-cooled, DOHC 24-valve engine. The fuel system utilizes an MPFI (multiple fuel injection) design.

A summary of the major construction and function features is given below.

- The cylinder head is a center-plug type that utilizes pentroof combustion chambers. The four valve design is provided with two intake valves and two exhaust valves per cylinder. The intake and exhaust ports are arranged in a cross-flow design.
- The exhaust camshafts on the left and right banks are driven by a single timing belt, and a gear on the exhaust side camshaft engages with a gear on the intake side camshaft to drive it.
- A single timing belt drives two camshafts on the left and right banks and the water pump on the right bank. Belt tension is automatically adjusted to eliminate maintenance.
- The crankshaft is supported by seven bearings to provide high rigidity and strength.
- The cylinder block is made from aluminum diecast which is integrated with cast-iron cylinder liners.

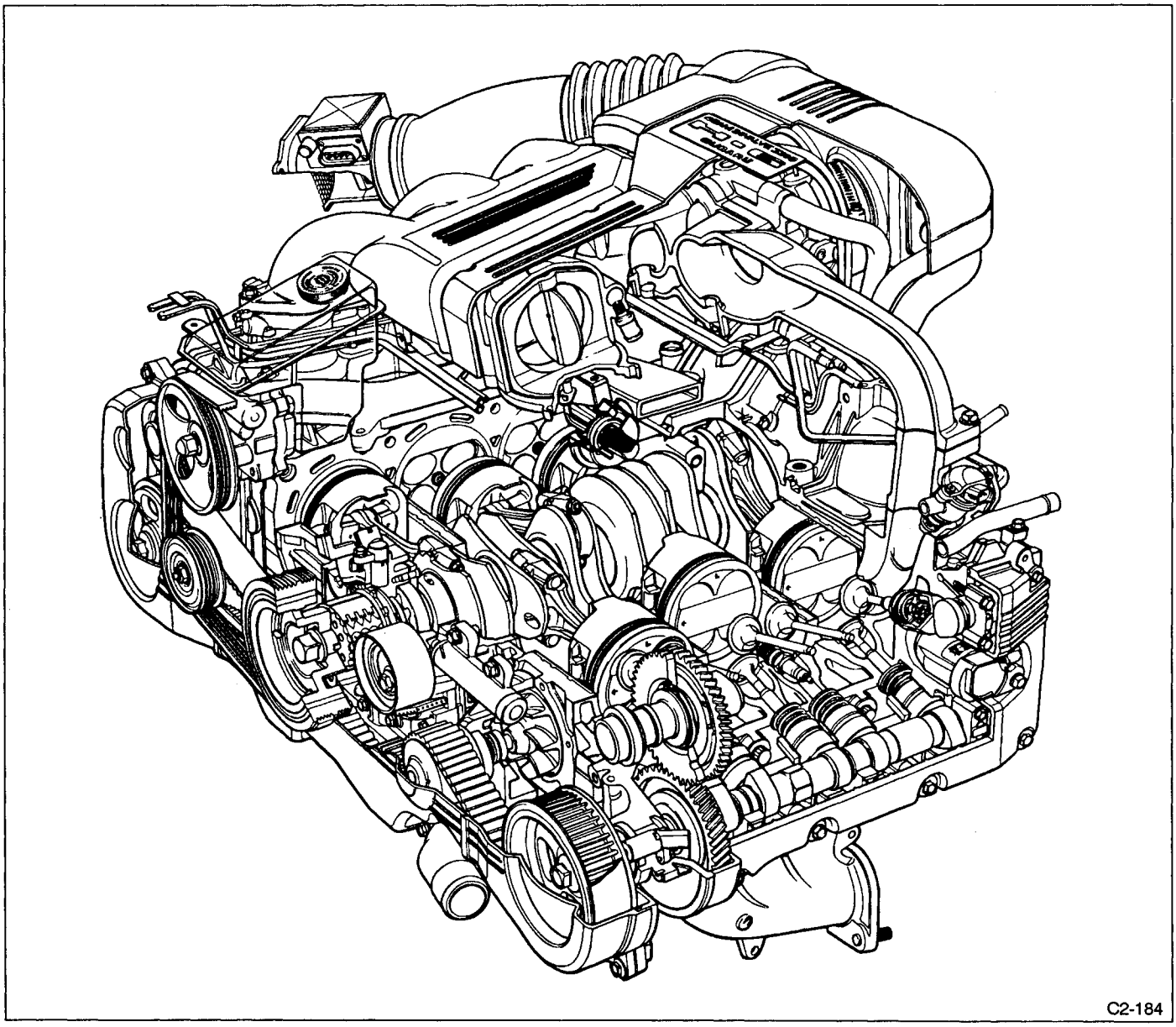

Fig. 1

2. Timing Belt

A single timing belt drives two exhaust camshafts (one in the left bank and one in the right bank). The back of the belt also drives the water pump.
The timing belt teeth have a specially designed round profile to provide quiet operation. The timing belt is composed of a strong and inflexible core wire, a wear-resistant canvas and heat-resistant rubber material.
A hydraulic belt-tension adjuster constantly maintains specified belt tension to properly drive the camshafts, as well as to provide a "maintenance-free" advantage.

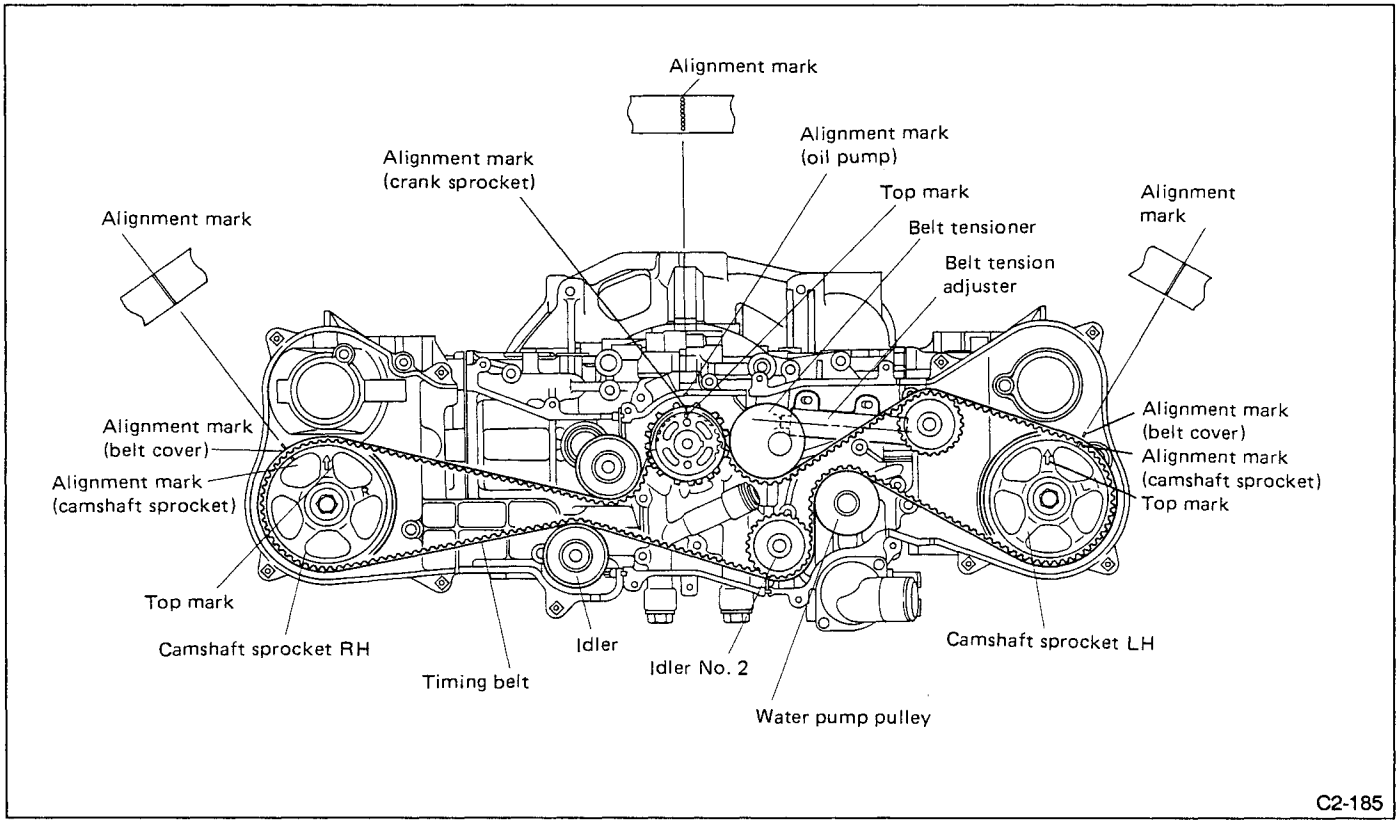

Fig. 2

3. Belt Tension Adjuster

The belt tension adjuster provides a constant value of tension for the timing belt. Proper belt tension is maintained using a rod to push the tension pulley. The location of the tensioner pulley shaft center is offset in relation to the center of the pulley's outside diameter. The tensioner adjuster rod provides a rotary movement for the tensioner pulley by both tension of the spring housed in the adjuster.

(1) Action when the belt is loose

When the belt is loose, the force between the arm and rod is unbalanced so that the rod is pushed out to the left by the force of the main spring. Then, the oil pressure in the reservoir compressed by the pressure of the main spring is increased more than in the oil pressure chamber, and the oil in the reservoir pushes past the check ball to flow into the oil pressure chamber. In this way the rod is pushed to the left until the force between the arm and rod is balanced. Since the thrust F works to the arm, the pulley is rotated counterclockwise, giving tension PB to the belt.

(2) Action for balancing the belt tension

When tension PB is given to the belt and the belt tension reaches the normal level, the belt generates the reaction TB, which works as the reaction P at the pressure cone apex of the rod. Since the reaction force pushes the rod to the right, the check ball in the oil pressure chamber is closed. When the rod is pushed to the left by the oil inflow, the balance between the rod and arm is maintained to stop the arm, and the belt tension is maintained at the fixed level.

(3) Action when the belt is too tight

When the timing belt reaction force increases to such an extent that the belt will be too tight, the arm force P is larger than the rod thrust F. Consequently, the oil in the oil pressure chamber passes through the clearance between the adjuster body and rod and is returned to the reservoir in small amounts. This oil return is stopped when the rod thrust F and arm force P are balanced to maintain tension at the fixed level.

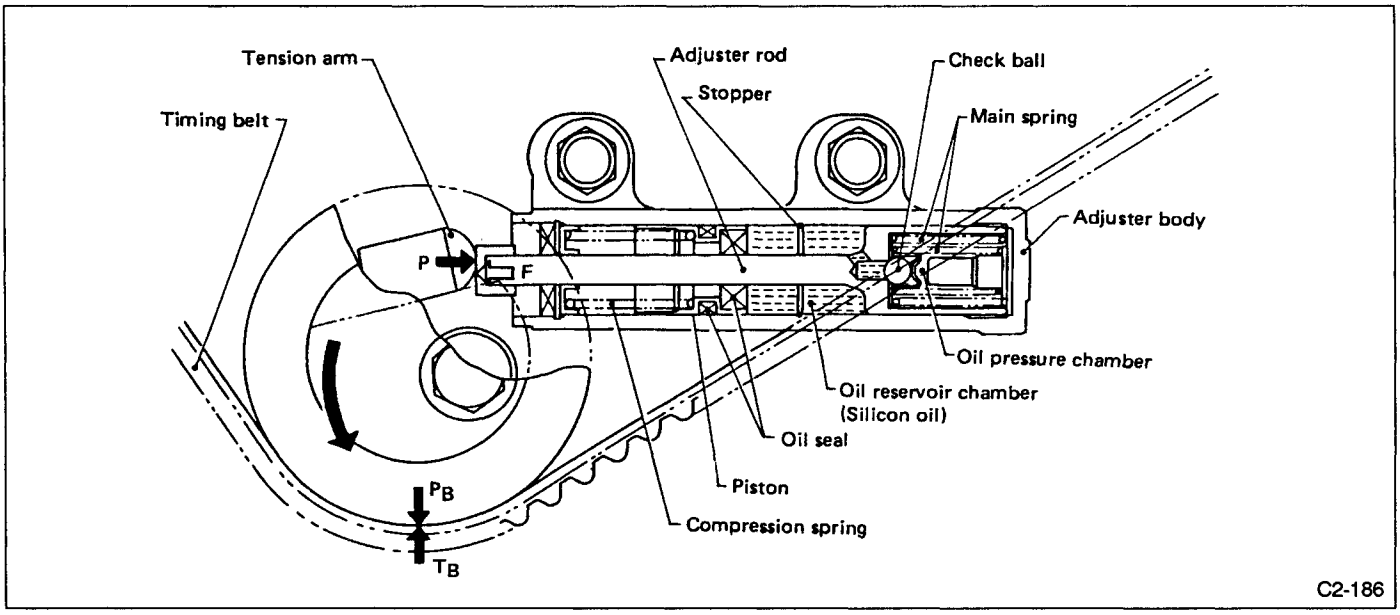

Fig. 3

4. Belt Cover

The belt cover is made of synthetic resin molding which is lightweight and heat resistant. It has a totally enclosed design that utilizes rubber packing at the mating surface of the cylinder block. This eliminates the chance of dust and water from entering the interior.
A floating design is utilized by placing rubber mounting between the cylinder block and belt cover to prevent the transmission of noise and vibration.
The front belt cover has a graduated line for ignition-timing confirmation.

5. Camshaft

The DOHC engine uses four camshafts in all; intake and exhaust camshafts on the RH bank and intake and exhaust camshafts on the LH bank.
Each camshaft has a gear which allows the exhaust camshaft to drive the intake camshaft. The intake camshaft also has a sub gear for eliminating gear backlash, thereby reducing gear noise.
The cam nose part is finished with "chill" treatment to increase wear resistance and anti-scuffing properties.
Each camshaft is supported by four journals with three camshaft caps and a front camshaft cap. Each camshaft flange is supported by a groove provided in the cylinder head to receive thrust force.

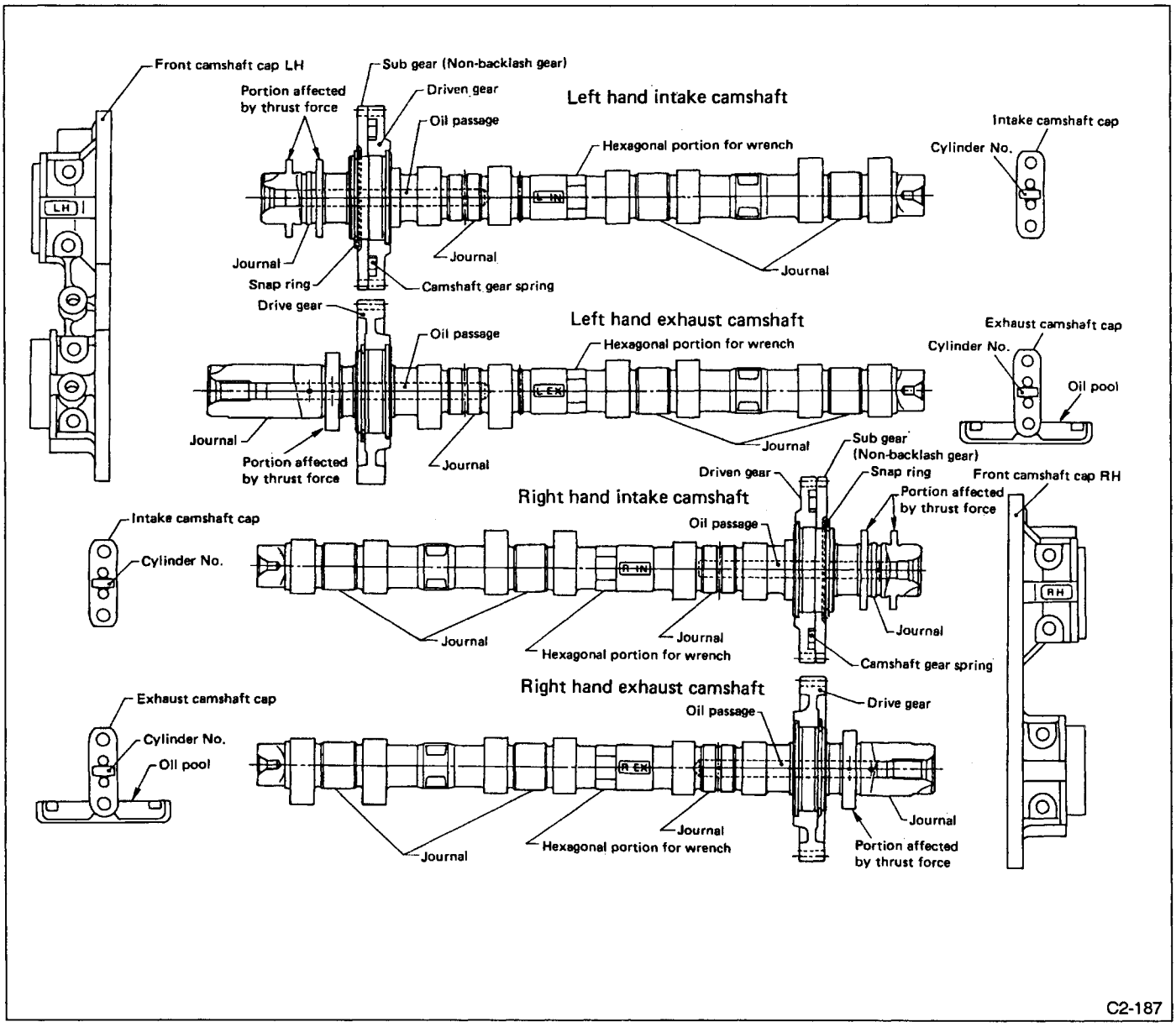

Fig. 4

6. Hydraulic Lash Adjuster

The hydraulic lash adjuster is located between the camshaft and valve stem. The top surface of the hydraulic lash adjuster is always in contact with the cam face. The cam directly pushes the lash adjuster to open or close the valve.

The engine oil flows through the cylinder head and goes into the lash adjuster so as to always maintain zero valve clearance.

1) Action when the valve starts to lift

When the cam begins to push the lash adjuster, the bucket and plunger are pushed down. At the same time, the body is pushed up by the reaction from the valve stem. This causes the high pressure chamber to compress, increasing the oil pressure in the high pressure chamber.

2) Action while the valve is lifted

As long as the cam is pushed by the lash adjuster, the oil pressure in the high pressure chamber is held high. The oil in the high pressure chamber leaks through a very small clearance between the plunger and body. Since the high pressure chamber is compressed in a very short time, almost no change occurs in the oil quantity inside the high pressure chamber. Accordingly, the bucket, plunger and adjuster body work as an integral unit to push down the valve stem to open the valve. The passage for supplying oil from the cylinder head to the lash adjuster is closed during this period, and no oil flows into the lash adjuster.

3) Action when the valve stops lifting

When the cam completes its lash adjuster pressing stroke, the passage for supplying oil from the cylinder head to the lash adjuster opens, allowing oil to flow from the cylinder head into reservoir II of the lash adjuster. Since the pressure in the high pressure chamber is lower than the pressure in reservoir II,the check ball is pushed down by the oil pressure in reservoir II. Accordingly, oil flows into the pressure chamber until the oil pressure becomes equal between the high pressure chamber and reservoir II. Under the action of this oil pressure, the body is pressed against the valve stem and the bucket against the camshaft.

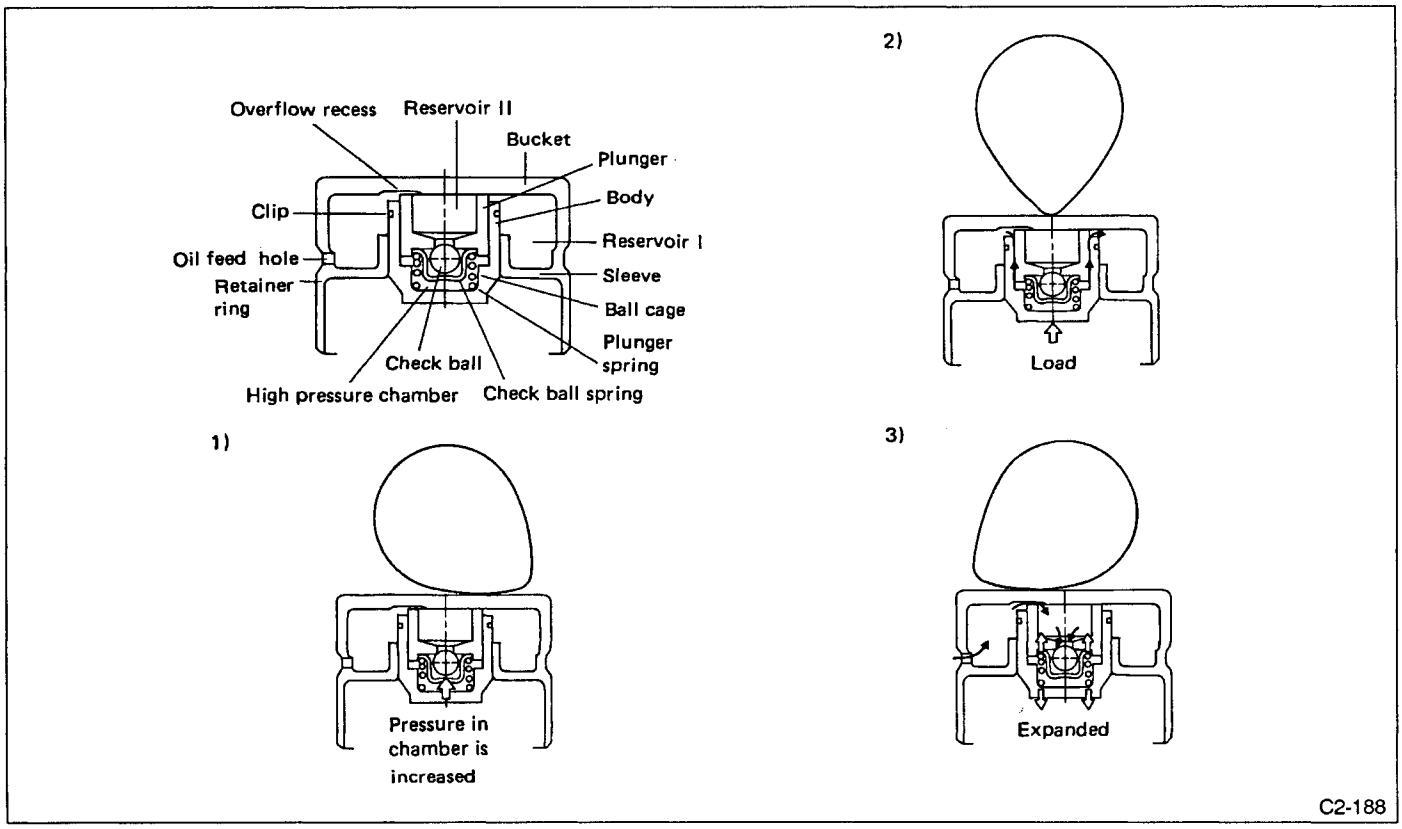

Fig. 5

7. Cylinder Head

Combustion chambers in the cylinder head are compact, center plug, pentroof types which feature a wide "squish" area for increased combustion efficiency.
Four valves (two intake and two exhaust), which are arranged in a cross-flow design, are used per cylinder.
The cylinder head gasket is made from carbon material (not asbestos). Its core is metal provided with metal hooks to increase resistance to both heat and wear.
The inner side of grommets used in the cylinder bore are reinforced with wire to withstand both high combustion pressure and temperature.

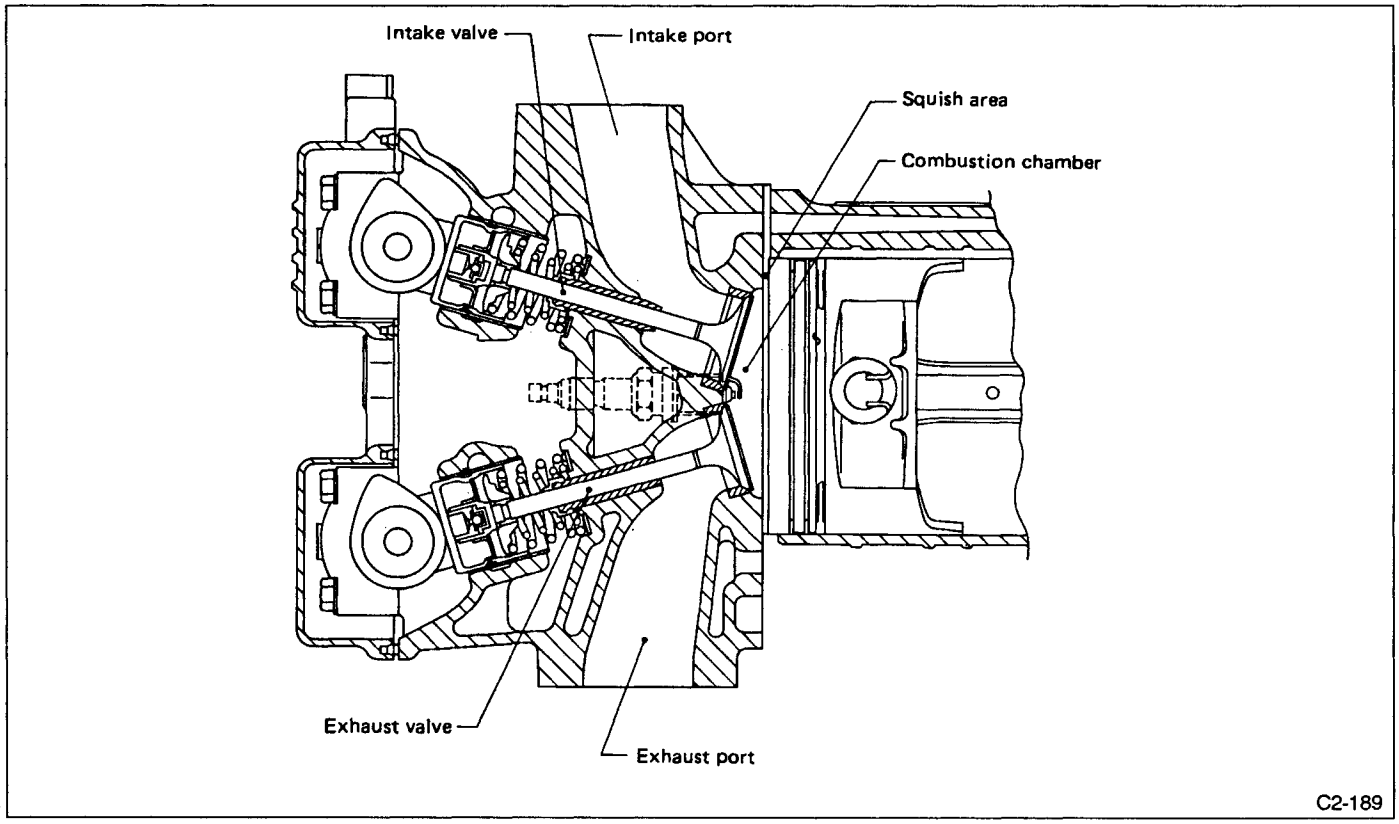

Fig. 6

8. Cylinder Block

The cylinder block is made from aluminum diecast. The cylinder perimeter has an open-deck design which is lightweight, highly rigid and has superb cooling efficiency.
The cylinder liners are made from cast iron and are dry types which are totally cast with aluminum cylinder block. Seven main journal block designs are employed to increase stiffness and quiet operation. The oil pump is located in the front center of the cylinder block and the water pump is located at the front of the left-cylinder bank. At the rear of the right-cylinder block is a separator which eliminates oil mist contained in the blow-by gas.

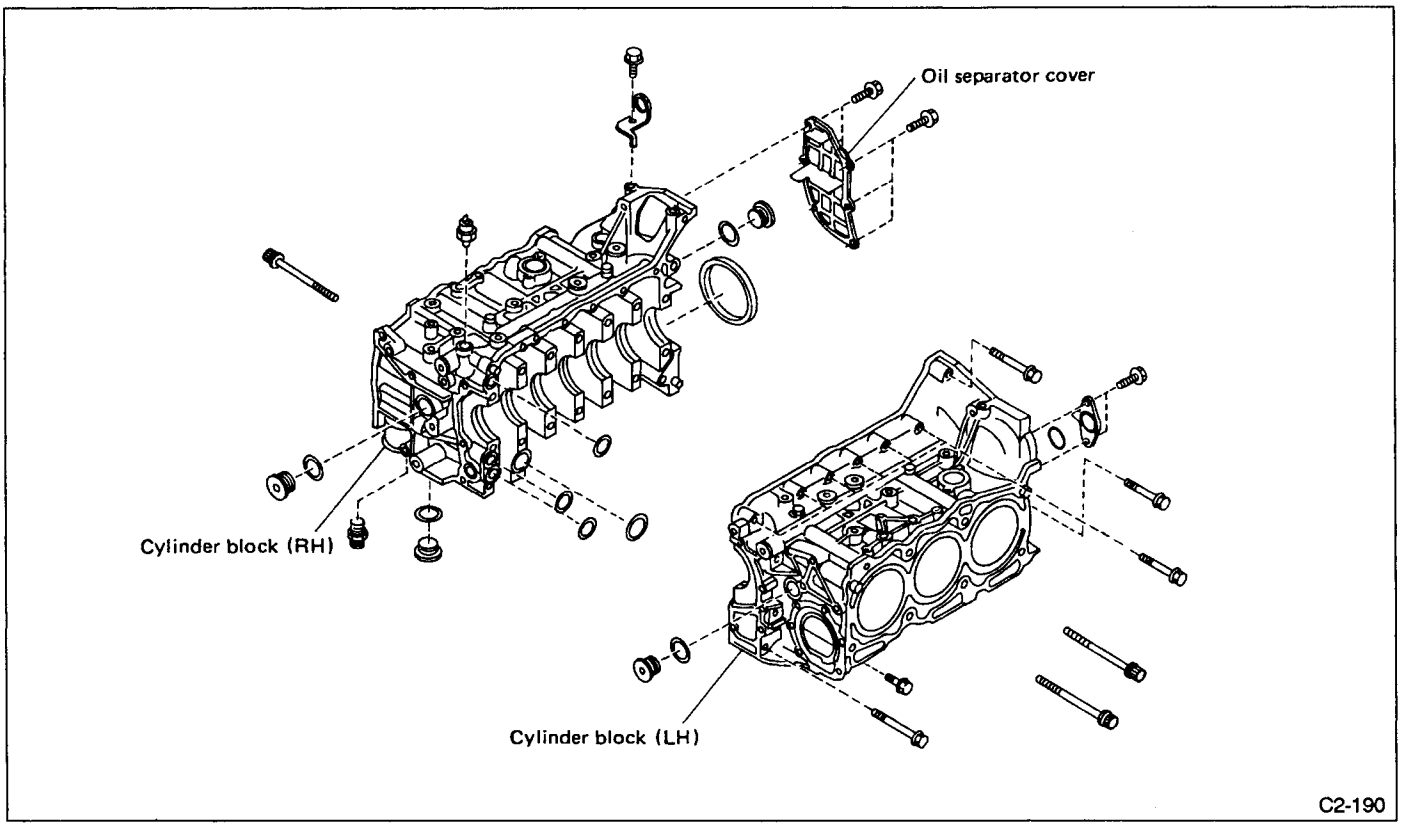

Fig. 7

9. Crankshaft

The crankshaft is supported by seven bearings to provide high rigidity and strength. The corners of the crankshaft journals and webs, as well as the crank pins and webs, are finished with fillet-roll work to increase strength. The seven crankshaft bearings are made from aluminum alloy and the No. 5 bearing is provided with a flanged metal to receive thrust force.

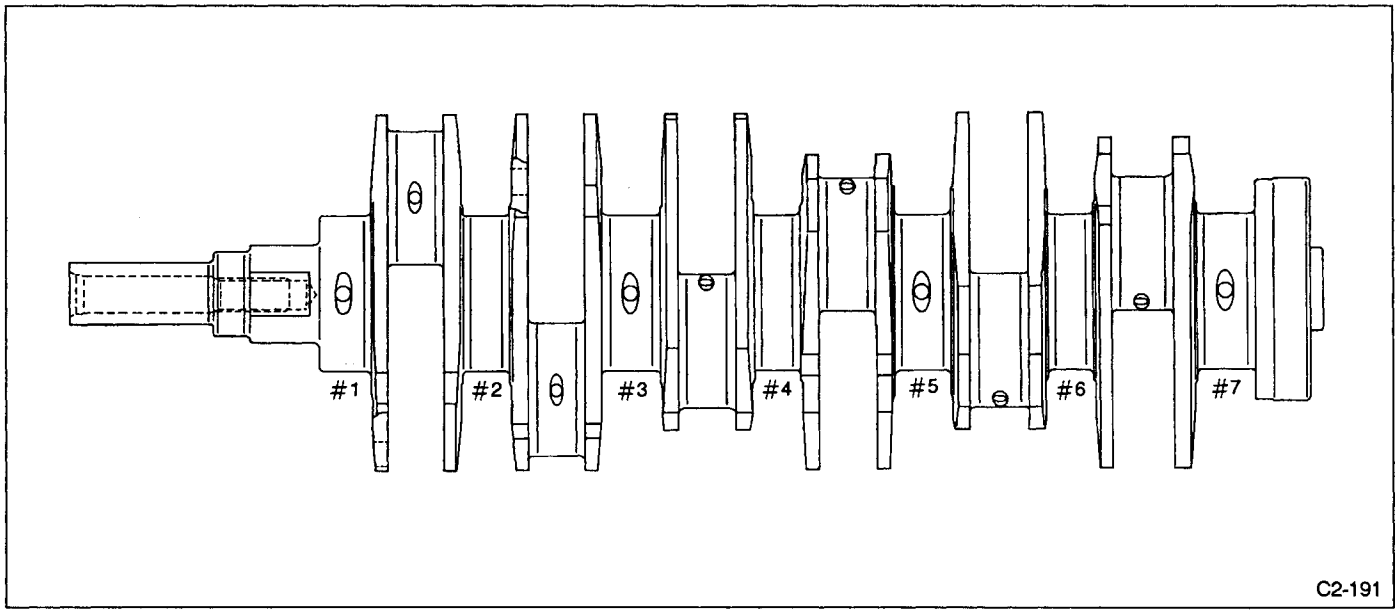

Fig. 8

10. Piston

The piston skirt has a "slipper" design to reduce weight and sliding. The oil control ring groove utilizes a slit design.

The piston pin is located in an offset position. The Nos. 1, 3 and 5 pistons are offset in the lower direction while the Nos. 2, 4 and 6 pistons are offset in the upper direction.

The piston head is recessed for both the intake and exhaust valves. It also has symbols used to identify the location and the direction of installation.

Three piston rings are used for each piston-two compression rings and one oil ring. The top piston ring has an inner-bevel design and the second piston ring has an interrupt design to reduce oil consumption.

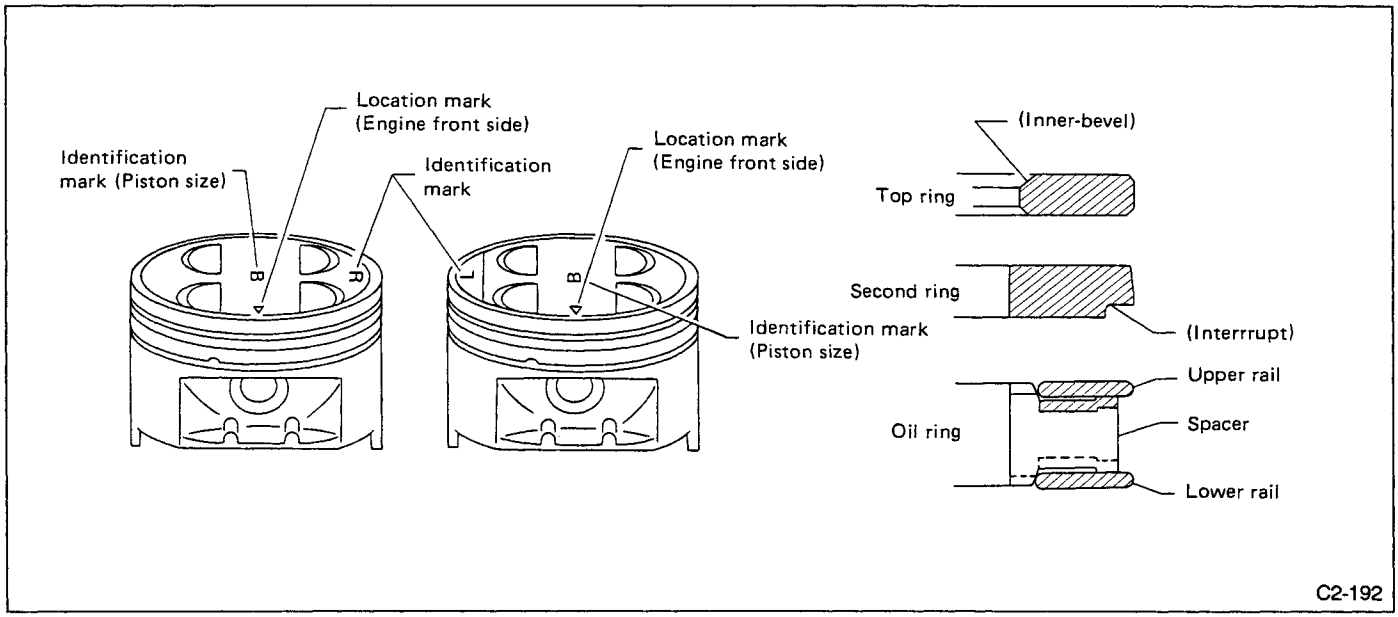

Fig. 9

S SPECIFICATIONS AND SERVICE DATA

A: SPECIFICATIONS

ENGINE	Type		Horizontally opposed, liquid cooled, 6-cylinder, 4-stroke gasoline engine
	Valve arrangement		Belt driven, double over-head camshaft, 4-valve/cylinder
	Bore x Stroke	mm (in)	96.9 x 75 (3.815 x 2.95)
	Piston displacement	cm^3 (cu in)	3,318 (202.46)
	Compression ratio		10.0
	Compression pressure (at 200 - 300 rpm)	kPa (kg/cm^2, psi)	1,177 - 1,422 (12 - 14.5, 171 - 206)
	Number of piston rings		Pressure ring: 2, Oil ring: 1
	Intake valve timing	Opening	4° BTDC
		Closing	52° ABDC
	Exhaust valve timing	Opening	55° BBDC
		Closing	9° ATDC
	Idling speed [At N or D position]	rpm	610± 100 (No load)
	Firing order		1 → 6 → 3 → 2 → 5 → 4
	Ignition timing	BTDC/rpm	20± 8°/610

B: SERVICE DATA

Unit: mm (in)

Belt tension adjuster	Adjuster rod protrusion			15.4 - 16.4 (0.606 - 0.646)
Belt tensioner	Spacer O.D.			16 (0.63)
	Tensioner bush I.D.			16.16 (0.6362)
	Clearance between spacer and bush		STD	0.117 - 0.180 (0.0046 - 0.0071)
			Limit	0.230 (0.0091)
	Side clearance of spacer		STD	0.37 - 0.54 (0.0146 - 0.0213)
			Limit	0.8 (0.031)
Camshaft	Bend limit			0.02 (0.0008)
	Cam lobe height	Intake	STD	39.05 - 39.15 (1.5374 - 1.5413)
			Limit	38.90 (1.5315)
		Exhaust	STD	39.85 - 39.95 (1.5689 - 1.5728)
			Limit	39.70 (1.5630)
	Camshaft journal OD	#1		31.946 - 31.963 (1.2577 - 1.2584)
		#2, #3, #4		27.946 - 27.963 (1.1002 - 1.1009)
	Thrust clearance	Intake	STD	0.03 - 0.09 (0.0012 - 0.0035)
			Limit	0.13 (0.0051)
		Exhaust	STD	0.02 - 0.08 (0.0008 - 0.0031)
			Limit	0.12 (0.0047)
	Oil clearance		STD	0.037 - 0.072 (0.0015 - 0.0028)
			Limit	0.10 (0.0039)
Camshaft gear	Backlash		STD	0.029 - 0.175 (0.0011 - 0.0069)
			Limit	0.30 (0.0118)
	Free distance between camshaft spring ends			24.88 - 28.88 (0.9795 - 1.1370)
Cylinder head	Surface warping limit			0.05 (0.0020)
	Surface grinding limit			0.30 (0.0118)
	Standard height			127.5 (5.020)
Valve seat	Refacing angle			90°
	Contacting width	Intake	STD	1.0 (0.039)
			Limit	1.7 (0.067)
		Exhaust	STD	1.5 (0.059)
			Limit	2.2 (0.087)
Valve guide	Inner diameter			6.000 - 6.012 (0.2362 - 0.2367)
	Height above head			8.5 (0.335)
Valve	Head edge thickness	Intake	STD	0.8 (0.031)
			Limit	0.6 (0.024)
		Exhaust	STD	1.0 (0.039)
			Limit	0.8 (0.031)
	Stem diameter	Intake		5.955 - 5.970 (0.2344 - 0.2350)
		Exhaust		5.945 - 5.960 (0.2341 - 0.2346)

STD: Standard ID: Inner diameter OD: Outer diameter

Unit: mm (in)

Valve	Stem oil clearance	Intake	STD	0.030 - 0.057 (0.0012 - 0.0022)
			Limit	0.10 (0.0039)
		Exhaust	STD	0.040 - 0.067 (0.0016 - 0.0026)
			Limit	0.10 - (0.0039)
	Overall length	Intake		90.00 (3.5433)
		Exhaust		90.85 (3.5768)
Valve spring	Free length	Outer spring		36.4 (1.433)
		Inner spring		34.9 (1.374)
	Squareness	Outer spring		2.5°, 1.6 (0.063)
		Inner spring		2.5°, 1.5 (0.059)
	Tension/spring height	Outer spring		124.5 - 142.2 N (12.7 - 14.5 kg, 28.0 - 32.0 lb)/29 (1.14) 308.9 - 356.0 N (31.5 - 36.3 kg, 69.5 - 80.0 lb)/21.1 (0.831)
		Inner spring		58.8 - 66.7 N (6 - 6.8 kg, 13.2 - 15.0lb)/27.5 (1.083) 147.1 - 168.7 N (15 - 17.2 kg, 33.1 - 37.9 lb)/19.6 (0.772)
Hydraulic lash adjuster	Outer diameter			32.965 - 32.975 (1.2978 - 1.2982)
	Bush I.D.			33.009 - 33.031 (1.2996 - 1.3004)
	Oil clearance		STD	0.028 - 0.078 (0.0011 - 0.0031)
			Limit	0.110 (0.0043)
Cylinder block	Surface warpage limit (mating with cylinder head)			0.05 (0.0020)
	Surface grinding limit			0.4 (0.016)
	Cylinder bore	STD	A	96.905 - 96.915 (3.8151 - 3.8155)
			B	96.895 - 96.905 (3.8148 - 3.8151)
			C	96.885 - 96.895 (3.8144 - 3.8148)
	Taper		STD	0.015 (0.0006)
			Limit	0.050 (0.0020)
	Outer-of-roundness		STD	0.010 (0.0004)
			Limit	0.050 (0.0020)
	Piston clearance		STD	0.010 - 0.030 (0.0004 - 0.0012)
			Limit	0.060 (0.0024)
	Enlarging (boring) limit			0.5 (0.020)
Piston	Outer diameter	STD	A	96.885 - 96.895 (3.8144 - 3.8148)
			B	96.875 - 96.885 (3.8140 - 3.8144)
			C	96.865 - 96.875 (3.8136 - 3.8140)
		0.25 mm (0.0098 in) OS		97.125 - 97.135 (3.8238 - 3.8242)
		0.50 mm (0.0197 in) OS		97.375 - 97.385 (3.8337 - 3.8340)

STD: Standard ID: Inner diameter OS: Over size

Unit: mm (in)

Piston pin	Standard clearance between piston pin and hole in piston			0.004 - 0.008 (0.0002 - 0.0003)
	Degree of fit			Piston pin must be fitted into position with thumb at 20°C (68°F).
Piston ring	Piston ring gap	Top ring	STD	0.20 - 0.30 (0.0079 - 0.0118)
			Limit	0.5 (0.020)
		Second ring	LTD	0.37 - 0.52 (0.0146 - 0.0205)
			Limit	1.0 (0.039)
		Oil ring	STD	0.20 - 0.60 (0.0079 - 0.0236)
			limit	1.5 (0.059)
	Clearance between piston ring and piston ring groove	Top ring	STD	0.04 - 0.09 (0.0016 - 0.0035)
			Limit	0.15 (0.0059)
		Second ring	STD	0.03 - 0.07 (0.0012 - 0.0028)
			Limit	0.15 (0.0059)
Connecting rod	Bend twist per 100 mm (3.94 in) length		Limit	0.10 (0.0039)
	Side clearance		STD	0.070 - 0.330 (0.0028 - 0.0130)
			Limit	0.4 (0.016)
Connecting rod bearing	Oil clearance		STD	0.020 - 0.046 (0.0008 - 0.0018)
			Limit	0.05 (0.0020)
	Thickness at center portion	STD		1.486 - 1.498 (0.0585 - 0.0590)
		0.03 mm (0.0012 in) U.S.		1.496 - 1.509 (0.0589 - 0.0594)
		0.05 mm (0.0020 in) U.S.		1.506 - 1.519 (0.0593 - 0.0598)
		0.25 mm (0.0098 in) U.S.		1.606 - 1.619 (0.0632 - 0.0637)
Connecting rod bushing	Clearance between piston pin and bushing		STD	0 - 0.018 (0 - 0.0007)
			Limit	0.030 (0.0012)
Crankshaft	Bend limit			0.035 (0.0014)
	Crank pin and crank journal	Out of roundness		0.03 (0.0012) or less
		Taper limit		0.07 (0.0028)
		Grinding limit		0.25 (0.0098)
	Crankpin outer diameter		STD	51.984 - 52.000 (2.0466 - 2.0472)
			0.03 mm (0.0012 in) U.S.	51.954 - 51.970 (2.0454 - 2.0461)
			0.05 mm (0.0020 in) U.S.	51.934 - 51.950 (2.0446 - 2.0453)
			0.25 mm (0.0098 in) U.S.	51.734 - 51.750 (2.0368 - 2.0374)
	Crank journal outer diameter		STD	59.992 - 60.008 (2.3619 - 2.3625)
			0.03 mm (0.0012 in) U.S.	60.022 - 60.038 (2.3631 - 2.3637)
			0.05 mm (0.0020 in) U.S.	60.042 - 60.058 (2.3639 - 2.3645)
			0.25 mm (0.0098 in) U.S.	60.242 - 60.258 (2.3717 - 2.3724)

STD: Standard U.S.: Undersize

Unit: mm (in)

Crankshaft	Thrust clearance		STD	0.030 - 0.115 (0.0012 - 0.0045)
			Limit	0.25 (0.0098)
	Oil clearance	STD	#1, #3, #7	0.005 - 0.035 (0.0002 - 0.0014)
			#2, #4, #6	0.013 - 0.038 (0.0005 - 0.0015)
			#5	0.013 - 0.034 (0.0005 - 0.0013)
		Limit	#1, #2, #6, #7	0.045 (0.0018)
			#3, #4, #5	0.040 (0.0016)
Crankshaft bearing	Crankshaft bearing thickness	#1, #3, #7	STD	1.998 - 2.011 (0.0787 - 0.0792)
			0.03 mm (0.0012 in) U.S.	2.017 - 2.020 (0.0794 - 0.0795)
			0.05 mm (0.0020 in) U.S.	2.027 - 2.030 (0.0798 - 0.0799)
			0.25 mm (0.0098 in) U.S.	2.127 - 2.130 (0.0837 - 0.0839)
		#2, #4, #6	STD	2.000 - 2.013 (0.0787 - 0.0793)
			0.03 mm (0.0012 in) U.S.	2.019 - 2.022 (0.0795 - 0.0796)
			0.05 mm (0.0020 in) U.S.	2.029 - 2.032 (0.0799 - 0.0800)
			0.25 mm (0.0098 in) U.S.	2.129 - 2.132 (0.0838 - 0.0839)
		#5	STD	2.000 - 2.013 (0.0787 - 0.0793)
			0.03 mm (0.0012 in) U.S.	2.019 - 2.022 (0.0795 - 0.0796)
			0.05 mm (0.0020 in) U.S.	2.029 - 2.032 (0.0799 - 0.0800)
			0.25 mm (0.0098 in) U.S.	2.129 - 2.132 (0.0838 - 0.0839)

STD: Standard U.S.: Under size

C COMPONENT PARTS

1. Timing Belt

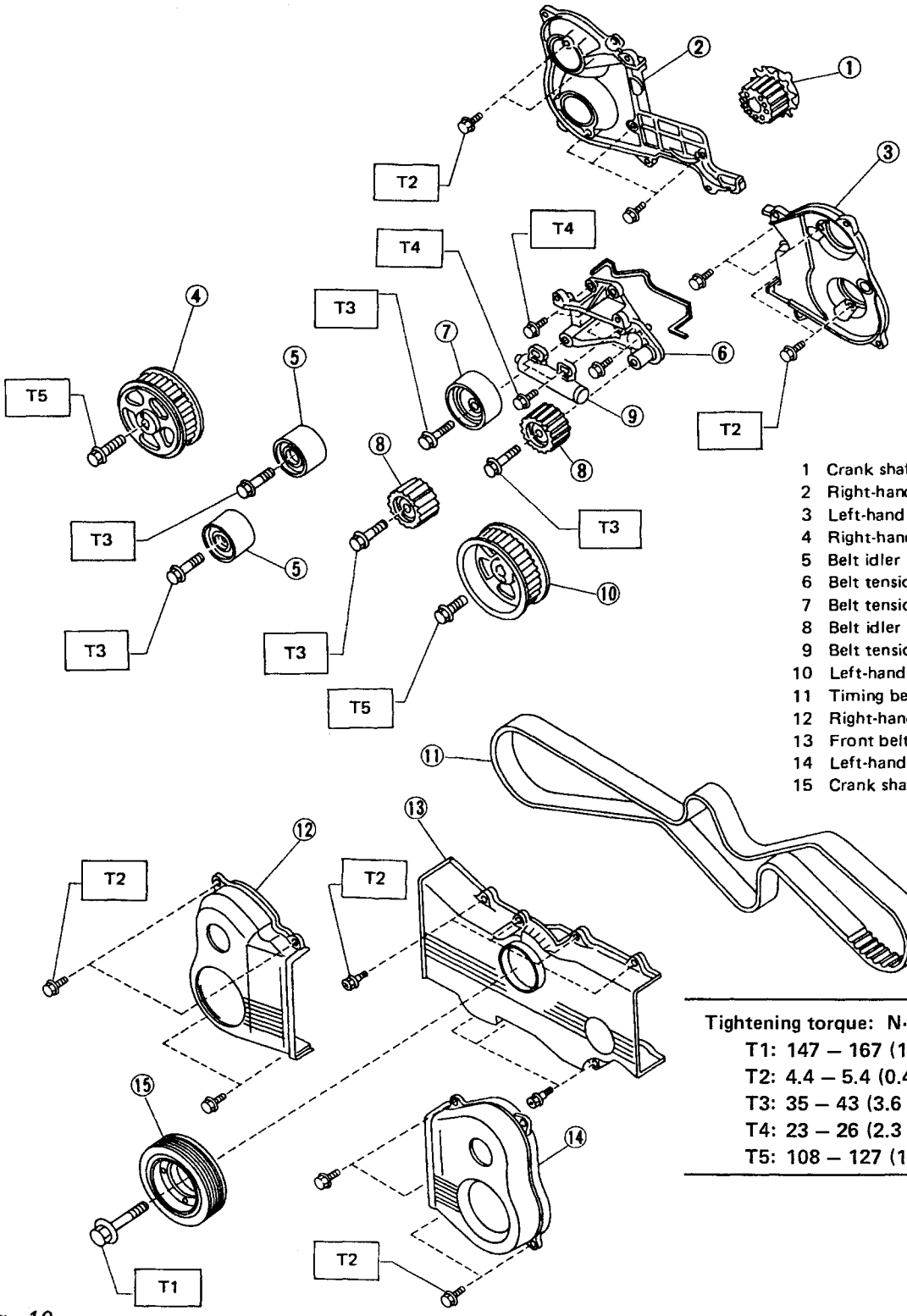

1 Crank shaft sprocket
2 Right-hand belt cover No. 2
3 Left-hand belt cover No. 2
4 Right-hand camshaft sprocket
5 Belt idler
6 Belt tensioner bracket
7 Belt tensioner
8 Belt idler No. 2
9 Belt tension adjuster
10 Left-hand camshaft sprocket
11 Timing belt
12 Right-hand belt cover
13 Front belt cover
14 Left-hand belt cover
15 Crank shaft pulley

Tightening torque: N·m (kg-m, ft-lb)
T1: 147 – 167 (15 – 17, 108 – 123)
T2: 4.4 – 5.4 (0.45 – 0.55, 3.3 – 4.0)
T3: 35 – 43 (3.6 – 4.4, 26 – 32)
T4: 23 – 26 (2.3 – 2.7, 17 – 20)
T5: 108 – 127 (11 – 13, 80 – 94)

C2-193

Fig. 10

2. Cylinder Head and Camshaft

Tightening torque: N.m (kg-m, ft-lb)
T1: Refer to [W4E1].
T2: 9.1 – 10.5 (0.93 – 1.07, 6.7 – 7.7)
T3: 4.4 – 5.4 (0.45 – 0.55, 3.3 – 4.0)

1 Cylinder head cover (RH)
2 Cylinder head cover gasket (RH)
3 Intake camshaft cap
4 Exhaust camshaft cap
5 Front camshaft cap (RH)
6 Intake camshaft (RH)
7 Camshaft gear spring
8 Sub gear
9 Wave washer
10 Snap ring
11 Camshaft plug
12 Exhaust camshaft (RH)
13 Camshaft oil seal
14 Cylinder head bolt (short)
15 Cylinder head bolt (long)
16 Intake valve guide
17 Exhaust valve guide
18 Cylinder head (RH)
19 Cylinder head gasket (RH)
20 Cyolinder head gasket (LH)
21 Cylinder head (LH)
22 Intake camshaft (LH)
23 Exhaust camshaft (LH)
24 Intake camshaft cap
25 Exhaust camshaft cap
26 Front camshaft cap (LH)
27 Cylinder head cover gasket (LH)
28 Cylinder head cover

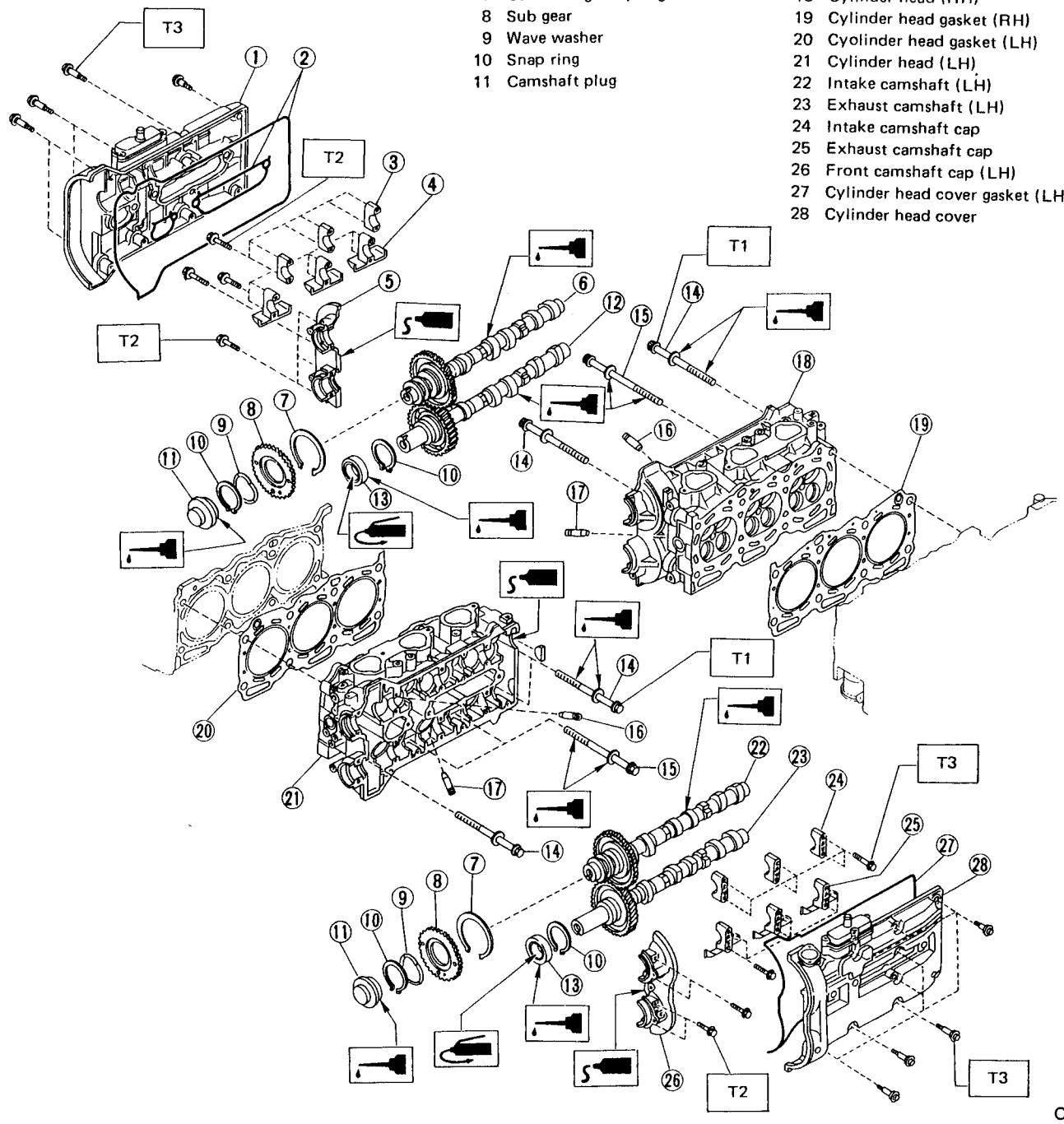

Fig. 11

3. Cylinder Head and Valve ASSY

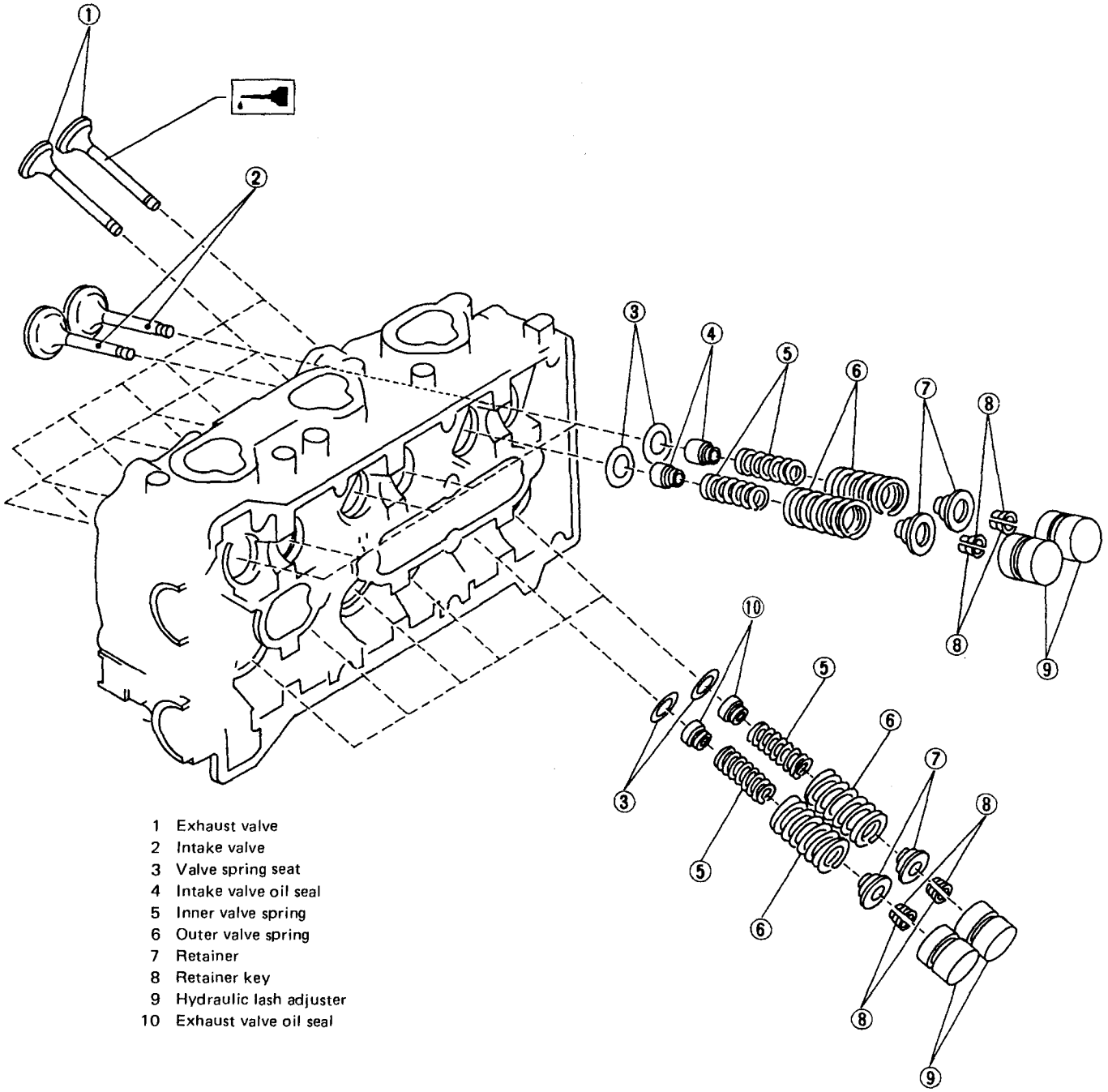

1 Exhaust valve
2 Intake valve
3 Valve spring seat
4 Intake valve oil seal
5 Inner valve spring
6 Outer valve spring
7 Retainer
8 Retainer key
9 Hydraulic lash adjuster
10 Exhaust valve oil seal

C2-195

Fig. 12

4. Cylinder Block

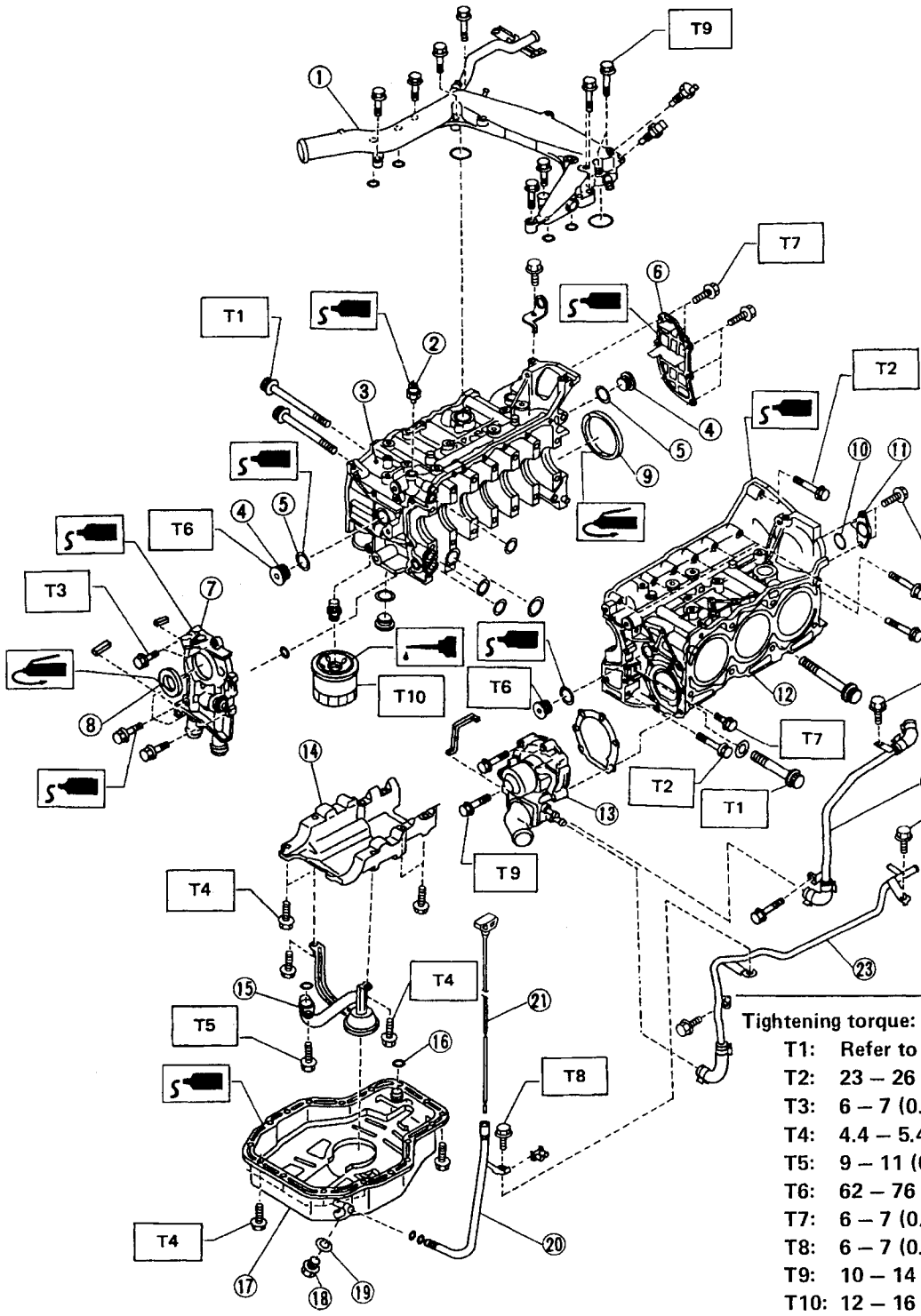

1 Water pipe
2 Oil pressure switch
3 Cylinder block (RH)
4 Service hole plug
5 Gasket
6 Oil separator cover
7 Oil pump
8 Front oil seal
9 Rear oil seal
10 O-ring
11 Service hole cover
12 Cylinder block (LH)
13 Water pump
14 Buffle plate
15 Oil strainer
16 Gasket
17 Oil pan
18 Oil drain plug
19 Gasket
20 Oil level gauge guide
21 Oil level gauge
22 Water by-pass pipe
23 Heater pipe

Tightening torque: N·m (kg-m, ft-lb)

T1:	Refer to [W502]
T2:	23 – 26 (2.3 – 2.7, 17 – 20)
T3:	6 – 7 (0.6 – 0.7, 4.3 – 5.1)
T4:	4.4 – 5.4 (0.45 – 0.55, 3.3 – 4.0)
T5:	9 – 11 (0.9 – 1.1, 6.5 – 8.0)
T6:	62 – 76 (6.3 – 7.7, 46 – 56)
T7:	6 – 7 (0.6 – 0.7, 4.3 – 5.1)
T8:	6 – 7 (0.6 – 0.7, 4.3 – 5.1)
T9:	10 – 14 (1.0 – 1.4, 7 – 10)
T10:	12 – 16 (1.2 – 1.6, 8.7 – 11.6)

C2-196

Fig. 13

5. Crankshaft and Piston

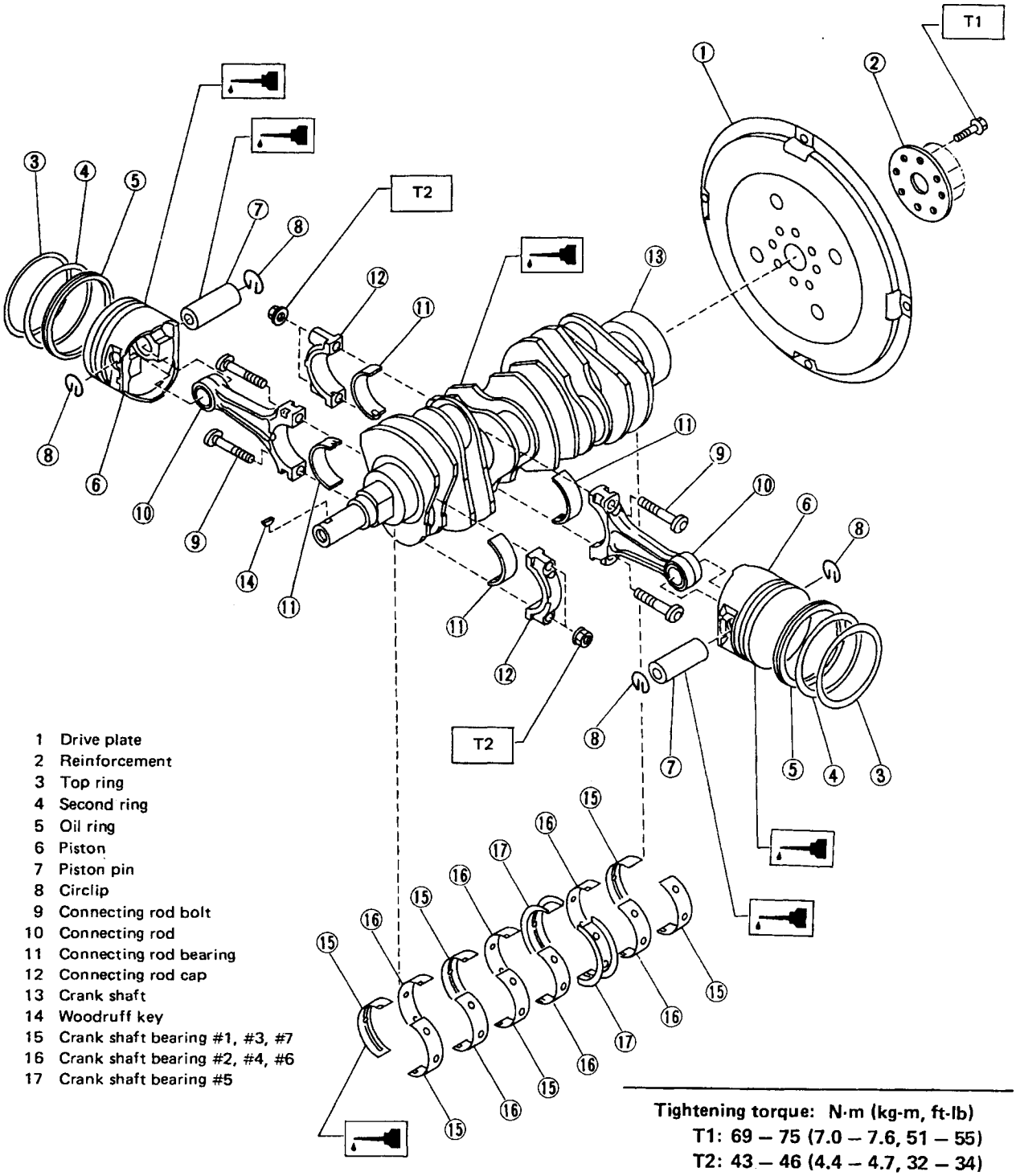

1 Drive plate
2 Reinforcement
3 Top ring
4 Second ring
5 Oil ring
6 Piston
7 Piston pin
8 Circlip
9 Connecting rod bolt
10 Connecting rod
11 Connecting rod bearing
12 Connecting rod cap
13 Crank shaft
14 Woodruff key
15 Crank shaft bearing #1, #3, #7
16 Crank shaft bearing #2, #4, #6
17 Crank shaft bearing #5

Tightening torque: N·m (kg-m, ft-lb)
T1: 69 – 75 (7.0 – 7.6, 51 – 55)
T2: 43 – 46 (4.4 – 4.7, 32 – 34)

C2-197

Fig. 14

W SERVICE PROCEDURE

1. General Precautions

1) Before disassembling engine, install on ENGINE STAND .

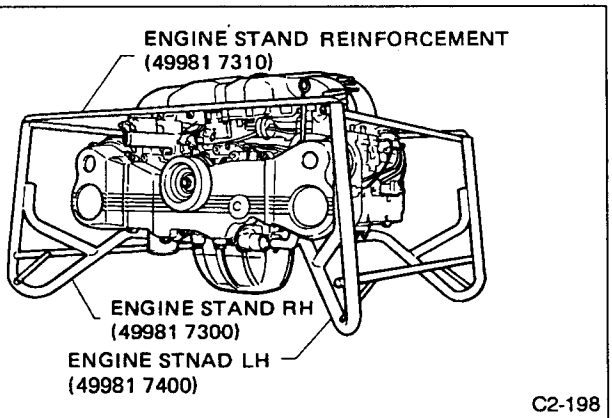

Fig. 15

2) Since the engine is very heavy, be sure to use more than four persons when lifting the engine.
Never hold ENGINE STAND REINFORCEMENT when lifting the engine.

3) All parts should be thoroughly cleaned, paying special attention to the engine oil passages, pistons and bearings.
4) Rotating parts and sliding parts such as piston, bearing and gear should be coated with oil prior to assembly.
5) Be careful not to let oil, grease or coolant contact the timing belt.
6) All removed parts, if to be reused, should be reinstalled in the original positions and directions.
7) Gaskets and lock washers must be replaced with new ones. Liquid gasket should be used where specified to prevent leakage.
8) Bolts, nuts and washers should be replaced with new ones as required.
9) Even if necessary inspections have been made in advance, proceed with assembly work while making rechecks.

2. Timing Belt

A: REMOVAL

1. RELATED PARTS

1) Remove V-belts.
〈Refer to 1-5 Drive Belts [01B1].〉
2) Remove power steering pump.
3) Remove alternator and V-belt cover bracket.

2. CRANKSHAFT PULLEY AND BELT COVER

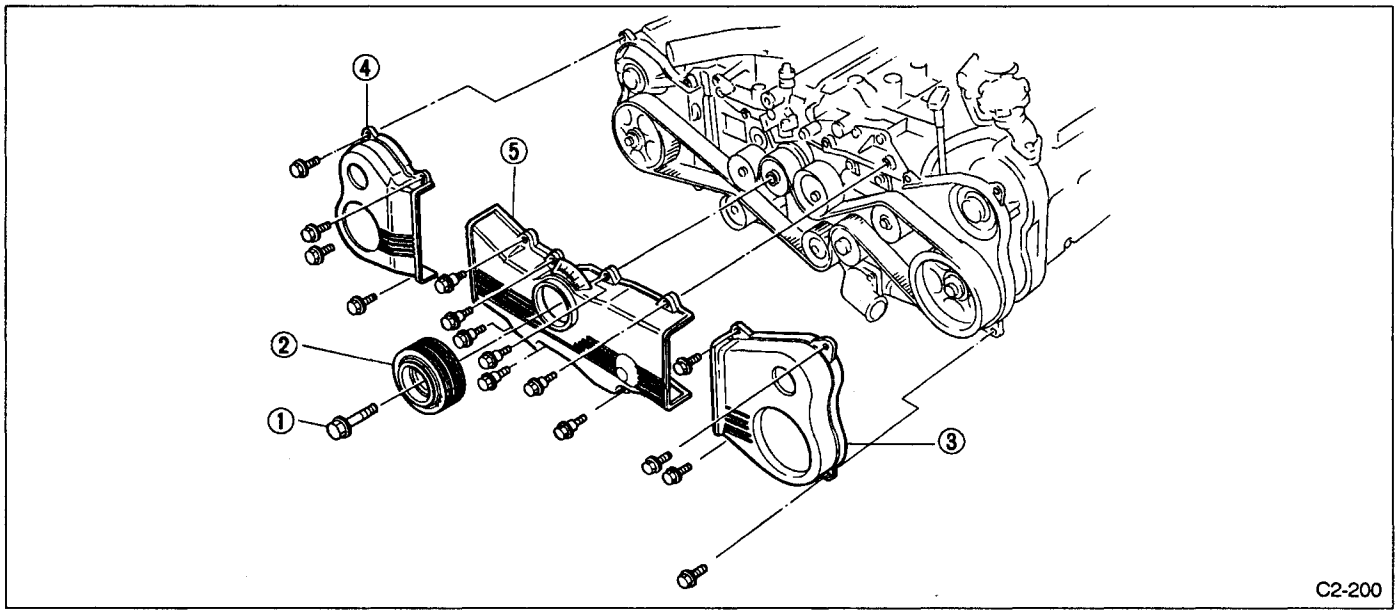

Fig. 16

1) Remove pulley bolt. To lock crankshaft, use Special Tool.

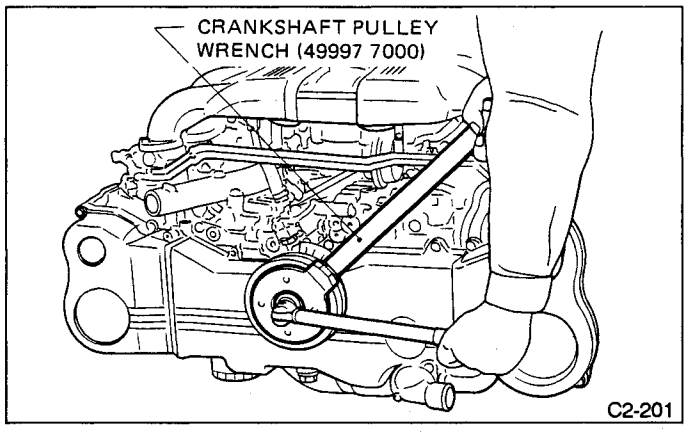

Fig. 17

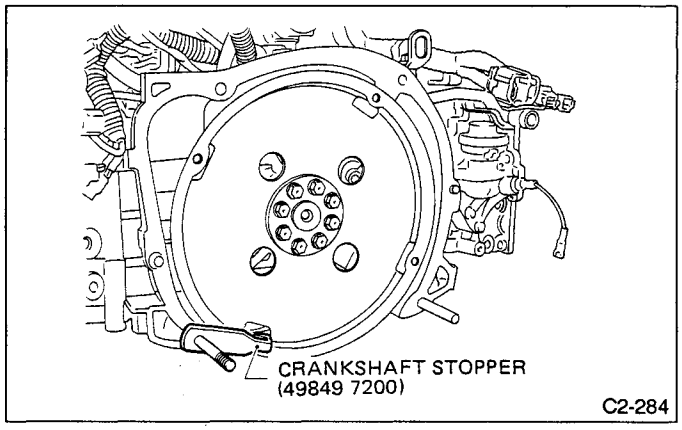

Fig. 18

4) Remove power steering pump bracket.
5) Remove A/C belt tensioner bracket.
6) Remove A/C compressor.
7) Remove A/C compressor bracket.

2) Remove crankshaft pulley.
3) Remove left-hand belt cover.
4) Remove right-hand belt cover.
5) Remove front belt cover.

3. TIMING BELT

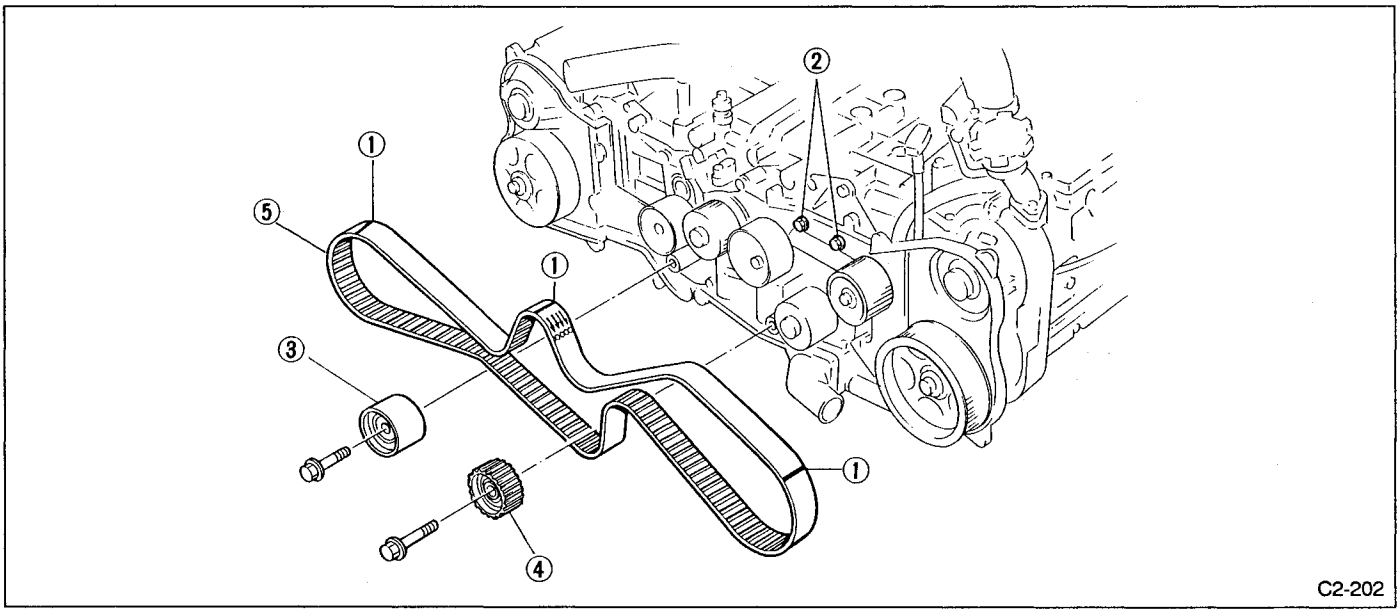

Fig. 19

1) If alignment mark and/or arrow mark (which indicates rotation direction) on timing belt fade away, put new marks before removing timing belt as follows:
   (1) Turn crankshaft, and align alignment marks on crankshaft sprocket, and left and right camshaft sprockets with marks of belt cover and cylinder block.

Special tool: CRANKSHAFT SOCKET (499987500)

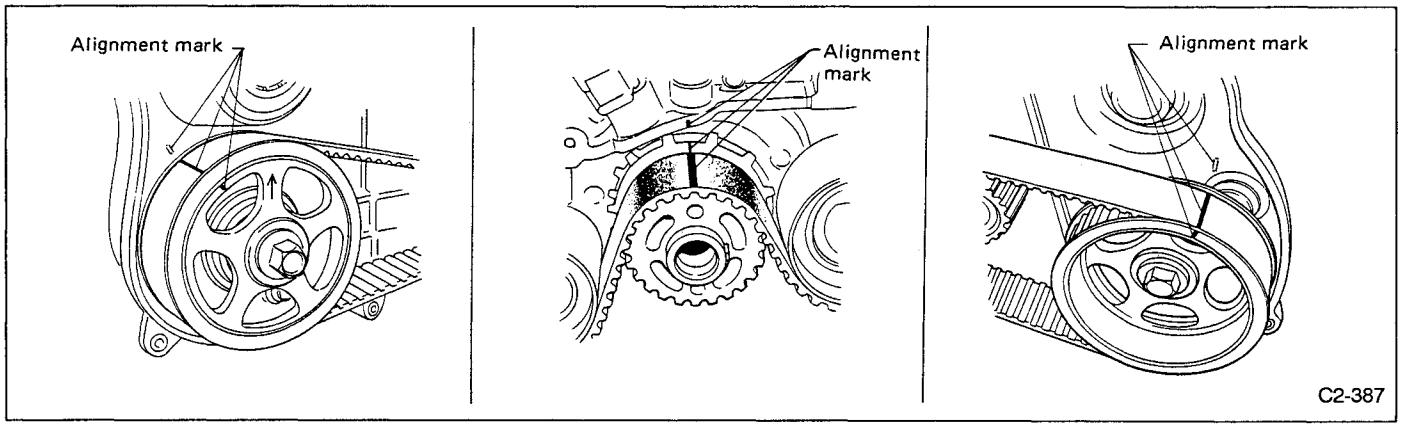

Fig. 20

(2) Using white paint, put alignment and/or arrow marks on timing belts in relation to the sprockets.

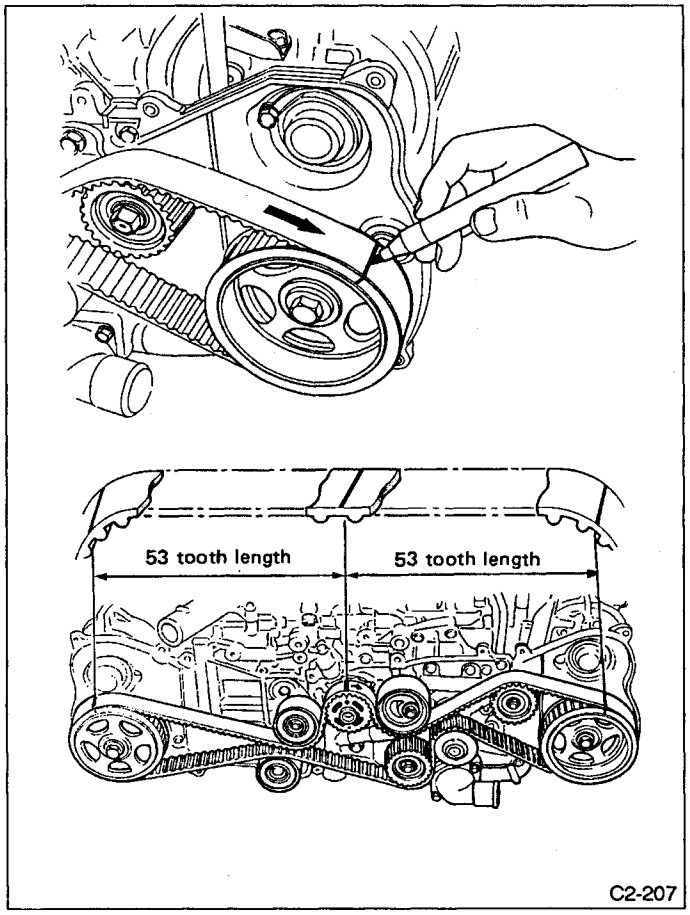

Fig. 21

2) Loosen tensioner adjuster mounting bolts.
3) Remove belt idler.
4) Remove belt idler No. 2
5) Remove timing belt.

4. BELT TENSIONER AND IDLER

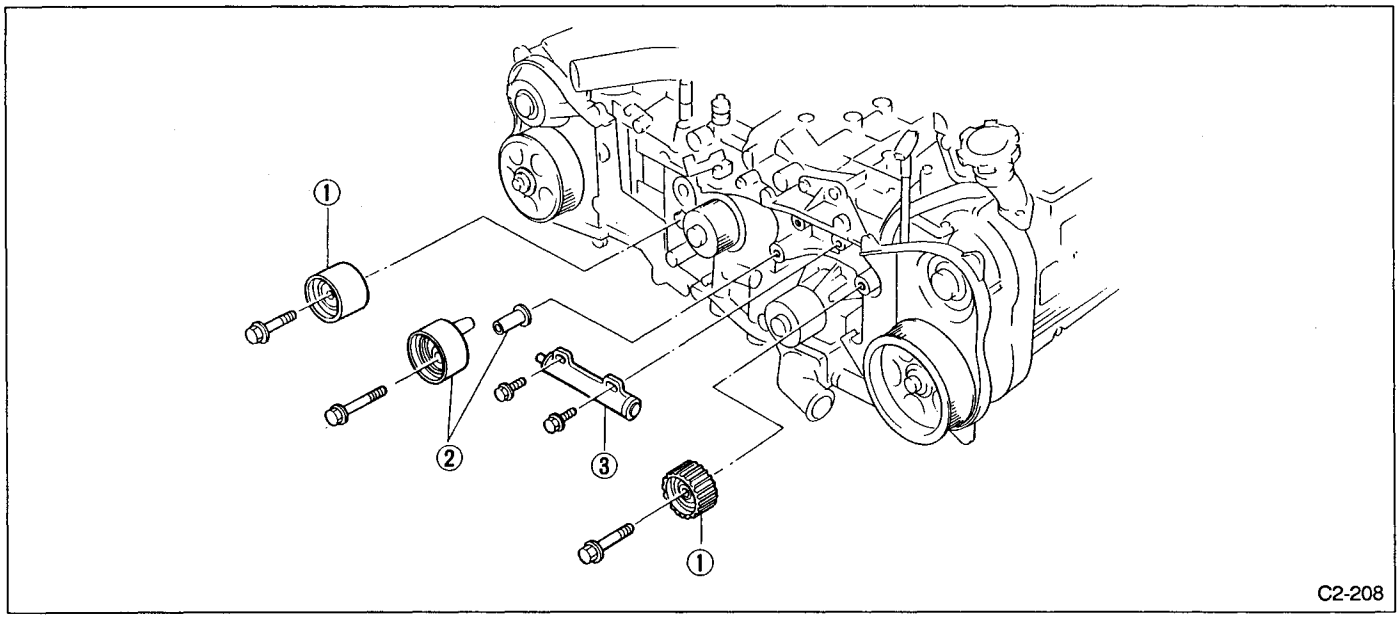

Fig. 22

1) Remove belt idlers.
2) Remove belt tensioner and spacer.

3) Remove belt tension adjuster.

5. SPROCKET

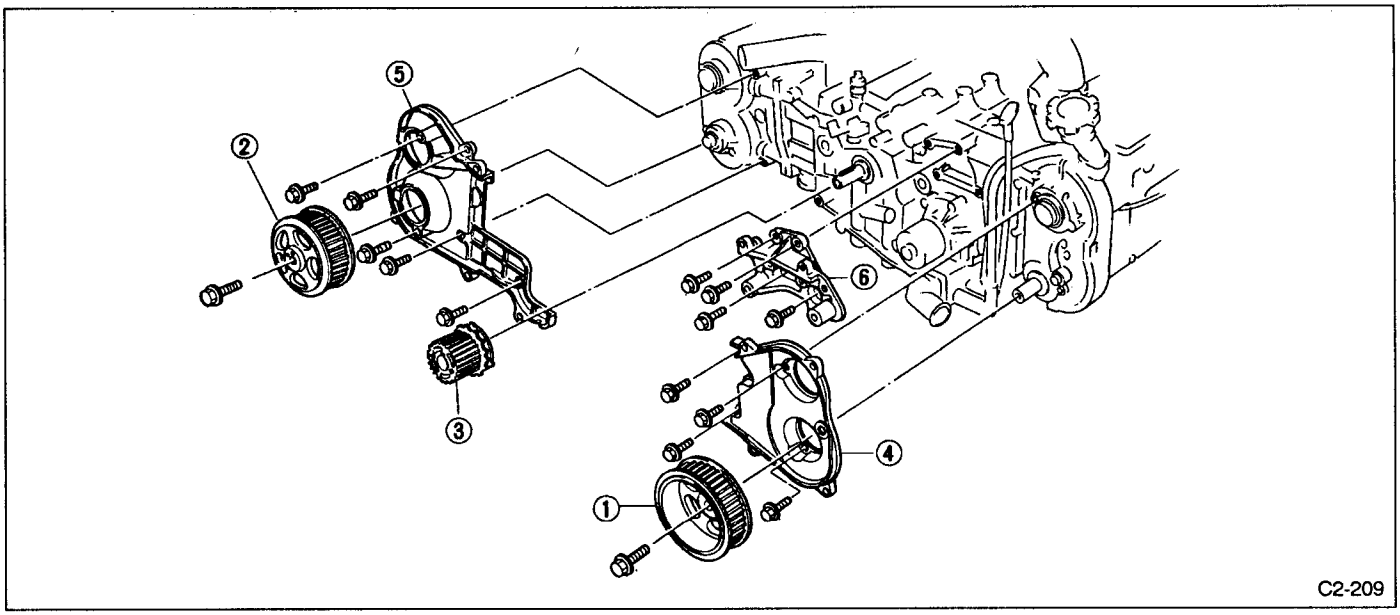

Fig. 23

1) Remove left-hand camshaft sprocket.

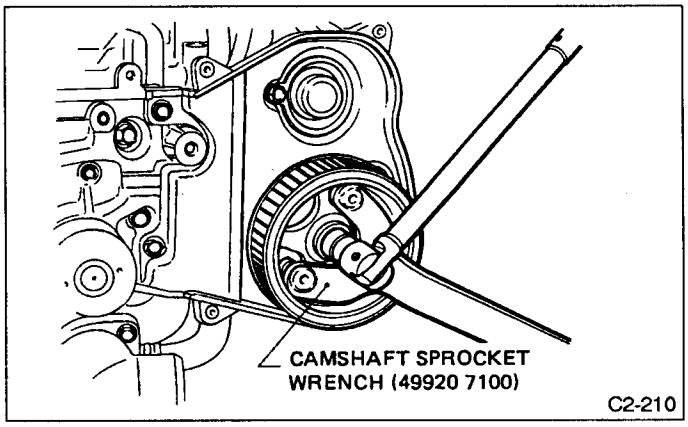

Fig. 24

2) Remove right-hand camshaft sprocket. To lock camshaft, use CAMSHAFT SPROCKET WRENCH.
3) Remove crankshaft sprocket.

If unable to remove crankshaft sprocket, tap two holes in crankshaft sprocket, and remove using PULLER and BOLT.
But this PULLER has no holes to fit crank shaft sprocket holes.
Therefore drill two holes in PULLER to fit crankshaft sprocket holes to following dimensions:

Hole center — to — hole center (Pitch):
41 mm (1.61 in)
Hole diameter:
10 mm (0.39 in)

Recommended tap :
Thread diameter 8mm (0.31 in)
Thread pitch 1.25 mm (0.0492 in)

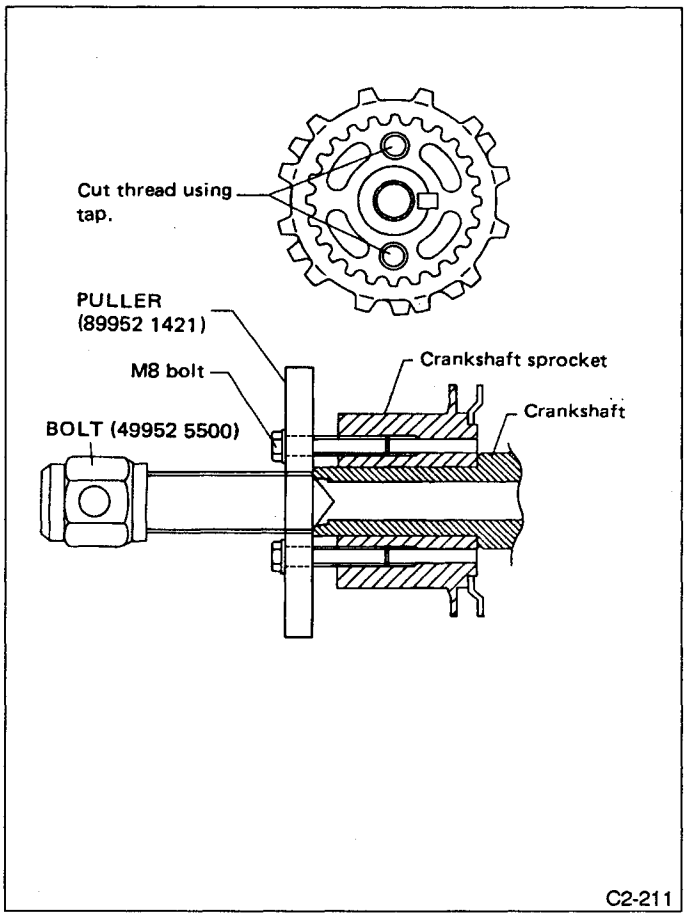

Fig. 25

4) Remove left-hand belt cover No. 2.
5) Remove right-hand belt cover No. 2.
6) Remove tensioner bracket.

B: INSPECTION

1. TIMING BELT

1) Check timing belt teeth for breaks, cracks, and wear. If any fault is found, replace belt.
2) Check the condition of back side of belt; if any crack is found, replace belt.

a. Be careful not to let oil, grease or coolant contact the belt. Remove quickly and thoroughly if this happens.

b. Do not bend the belt sharply. [The bending radius must be greater than 60 mm (2.36 in).]

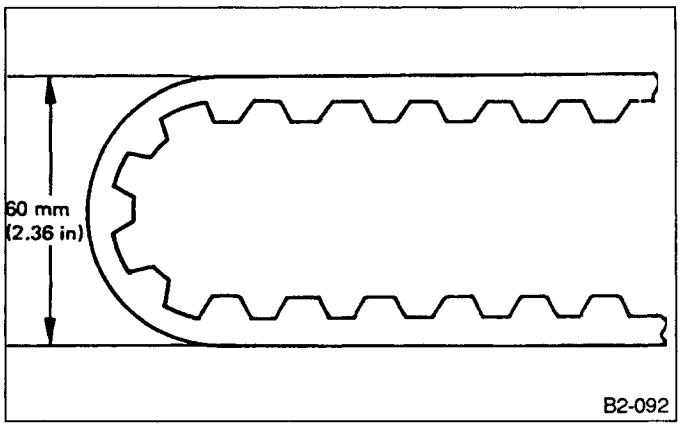

Fig. 26

2. BELT TENSION ADJUSTER

1) Visually check oil seals for leaks, and rod ends for abnormal wear or scratches. If necessary, replace faulty parts.

Slight traces of oil at rod' oil seal does not indicate a problem.

2) While holding tensioner with both hands, push the rod section against floor or wall with a force of 147 to 490 N (15 to 50 kg, 33 to 110 lb) to ensure that the rod section does not move. If it moves, replace tension adjuster with a new one.
3) Measure the extension of rod beyond the body. If it is not within specifications, replace with a new one.

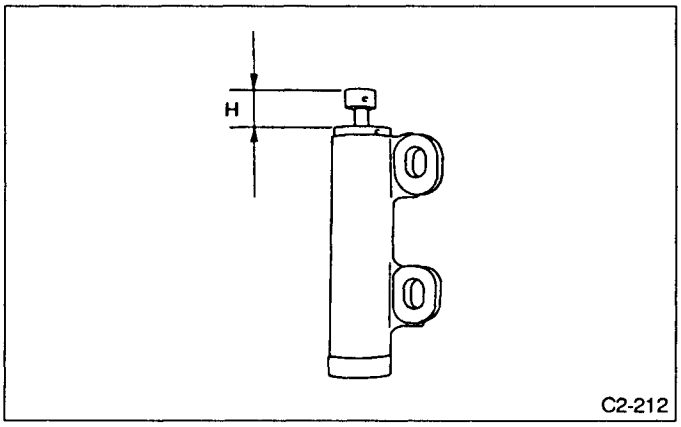

Fig. 27

Rod extension H:
15.4 — 16.4 mm (0.606 — 0.646 in)

3. BELT TENSIONER

1) Check mating surfaces of timing belt and contact point of tension adjuster rod for abnormal wear or scratches. Replace belt tensioner if faulty.
2) Check spacer and tensioner bushing for wear.

4. BELT IDLER

Check idler for smooth rotation. Replace if noise or excessive play is noted.

C: INSTALLATION

1. SPROCKET

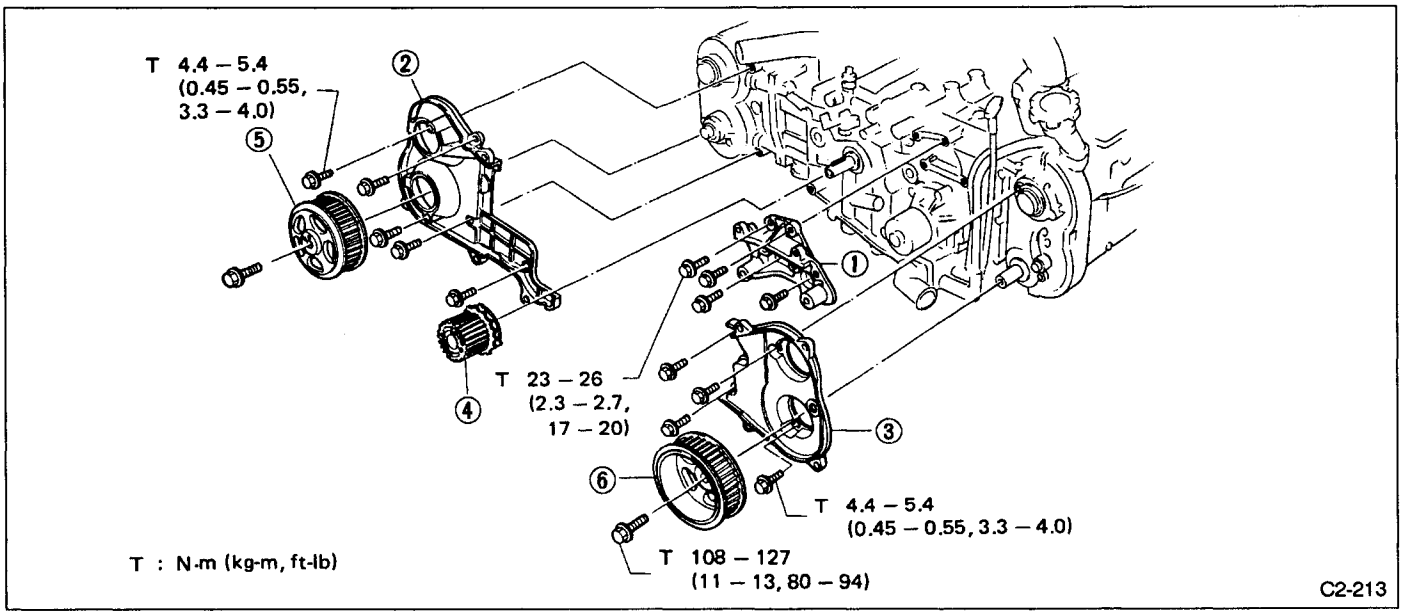

Fig. 28

1) Install tensioner bracket.
2) Install right-hand belt cover No. 2.
3) Install left-hand belt cover No. 2.
4) Install crankshaft sprocket.
5) Install right-hand camshaft sprocket.

To lock camshaft, use CAMSHAFT SPROCKET WRENCH.

6) Install left-hand camshaft sprocket.

Do not confuse left- and right-hand camshaft sprockets during installation. The left-hand camshaft sprocket is identified by a projection used to monitor cam-angle sensor.

2. BELT TENSIONER AND IDLER

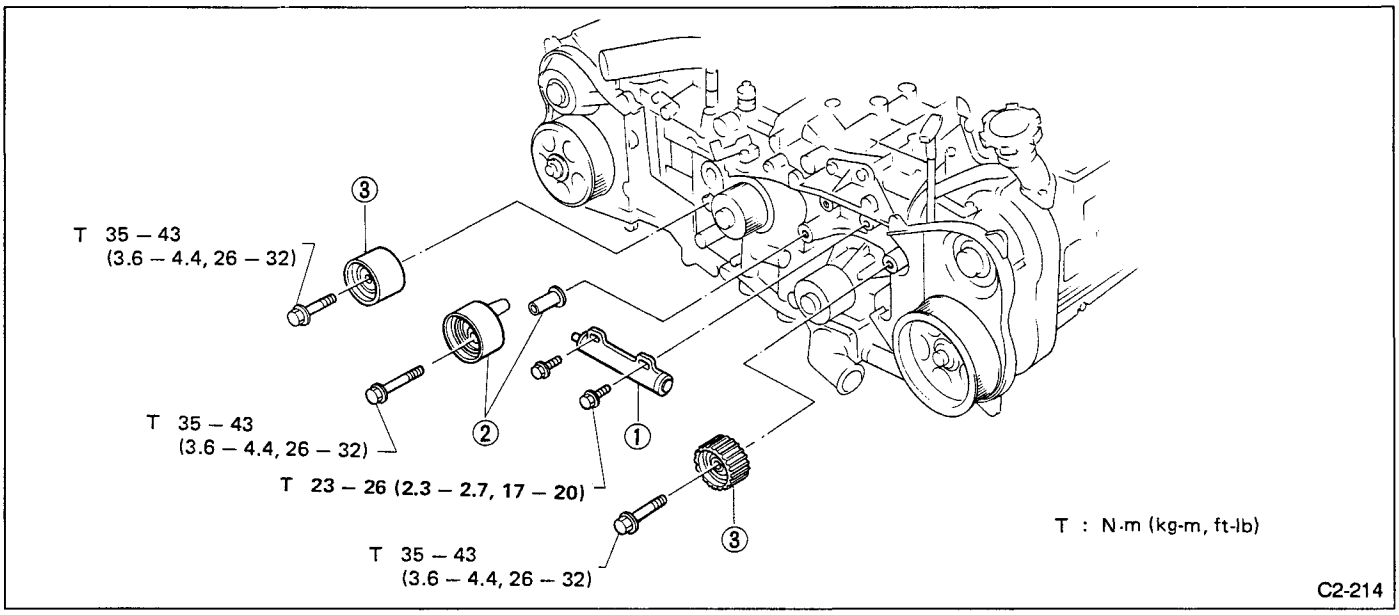

Fig. 29

1) Installation of belt tension adjuster.
   (1) Insert stopper pin 1.5 mm (0.059 in) dia. into place while pushing tension adjuster rod into body using a press.

a. Do not allow press pressure to exceed 9,807 N (1,000 kg, 2,205 lb).

b. Do not release press pressure until stopper pin is completely inserted.

c. Push tension adjuster rod vertically.

   (2) Temporarily tighten bolts while tension adjuster is pushed all the way to the right.

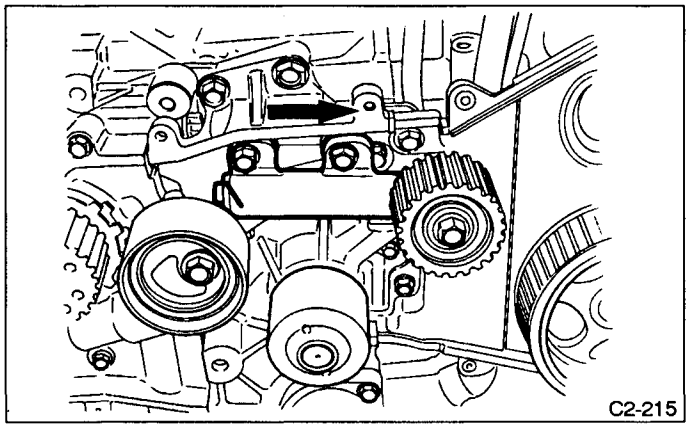

Fig. 30

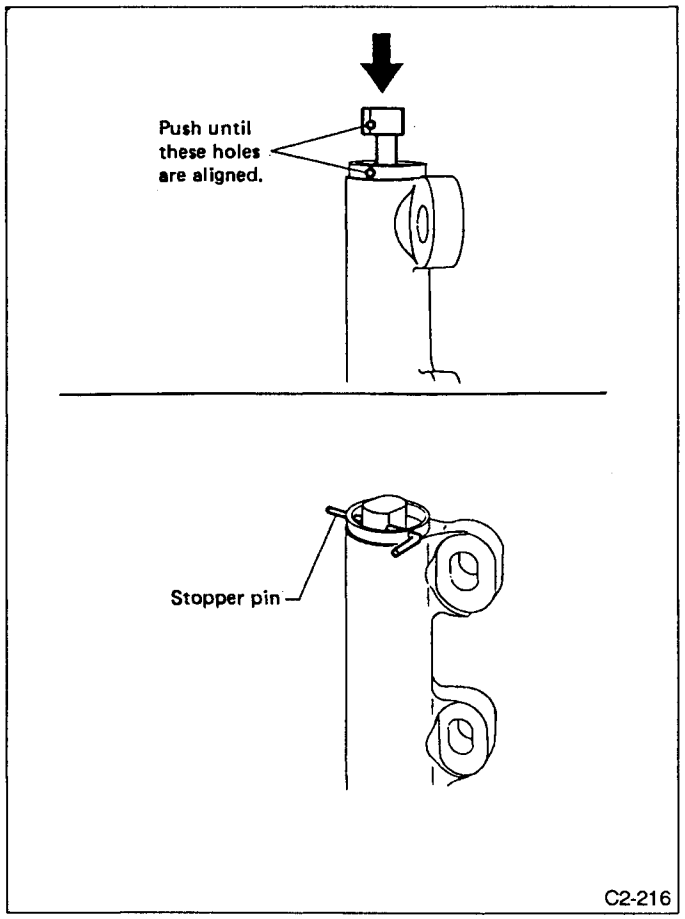

Fig. 31

2) Install belt tensioner.
3) Install belt idlers.

3. TIMING BELT

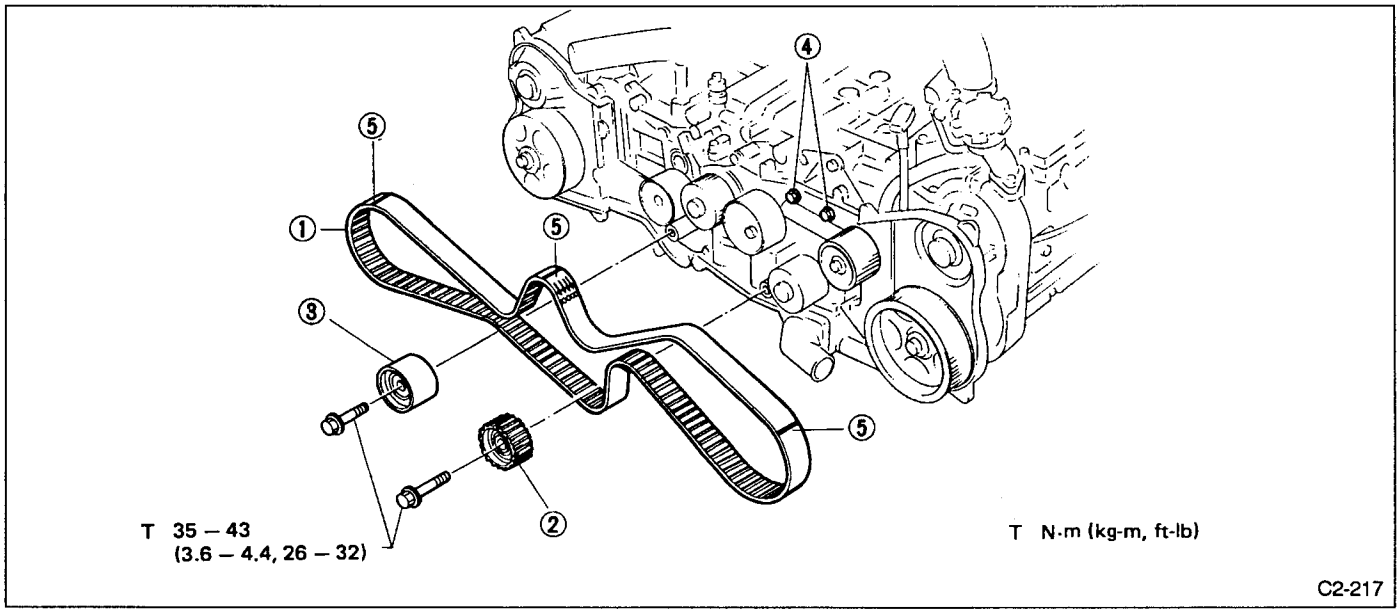

Fig. 32

1) Installation of timing belt
   (1) Using SPROCKET WRENCH, turn sprockets and align their alignment marks with marks of belt covers and oil pump.

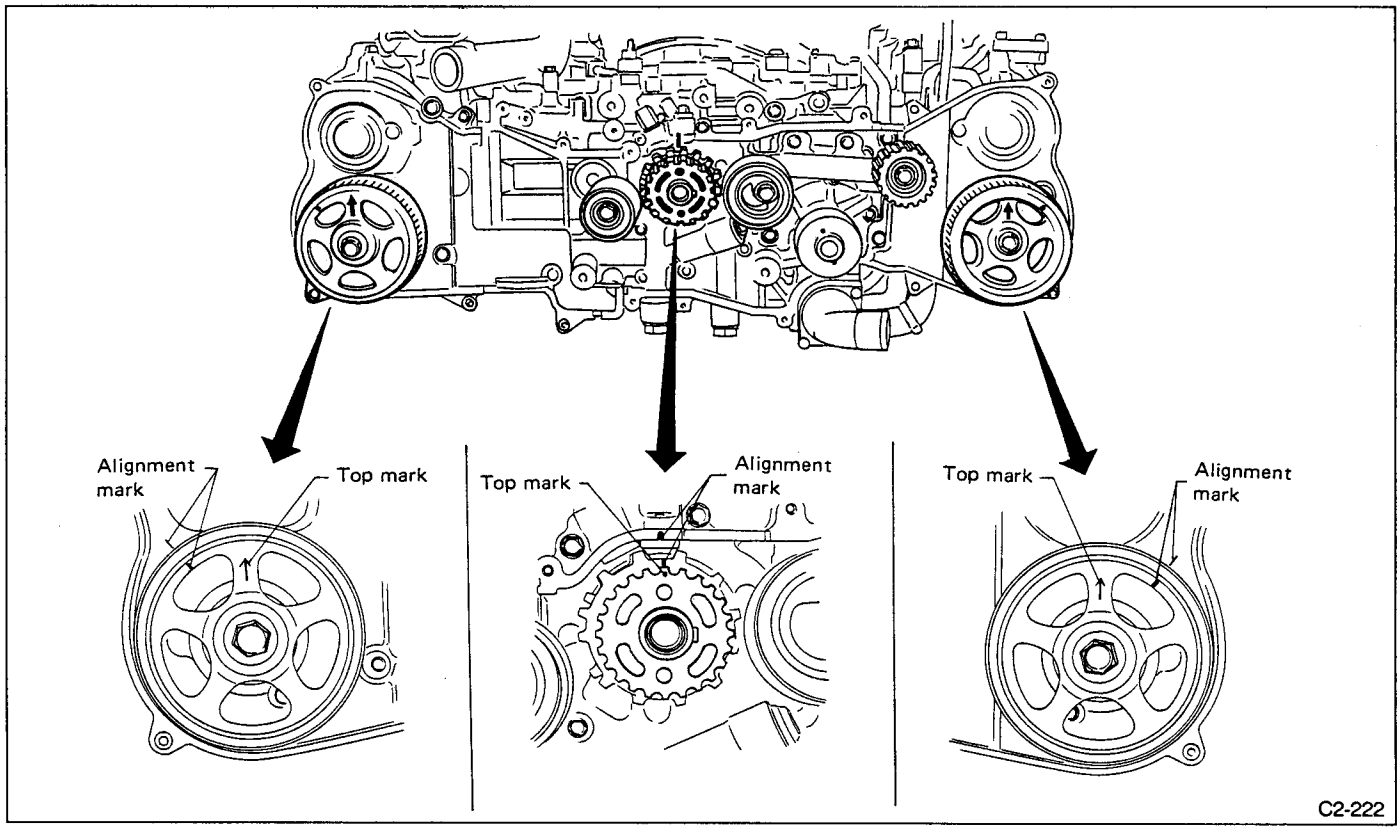

Fig. 33

(2) While aligning alignment mark on timing belt with marks on sprockets, position timing belt properly.

Ensure belts rotating direction is correct.

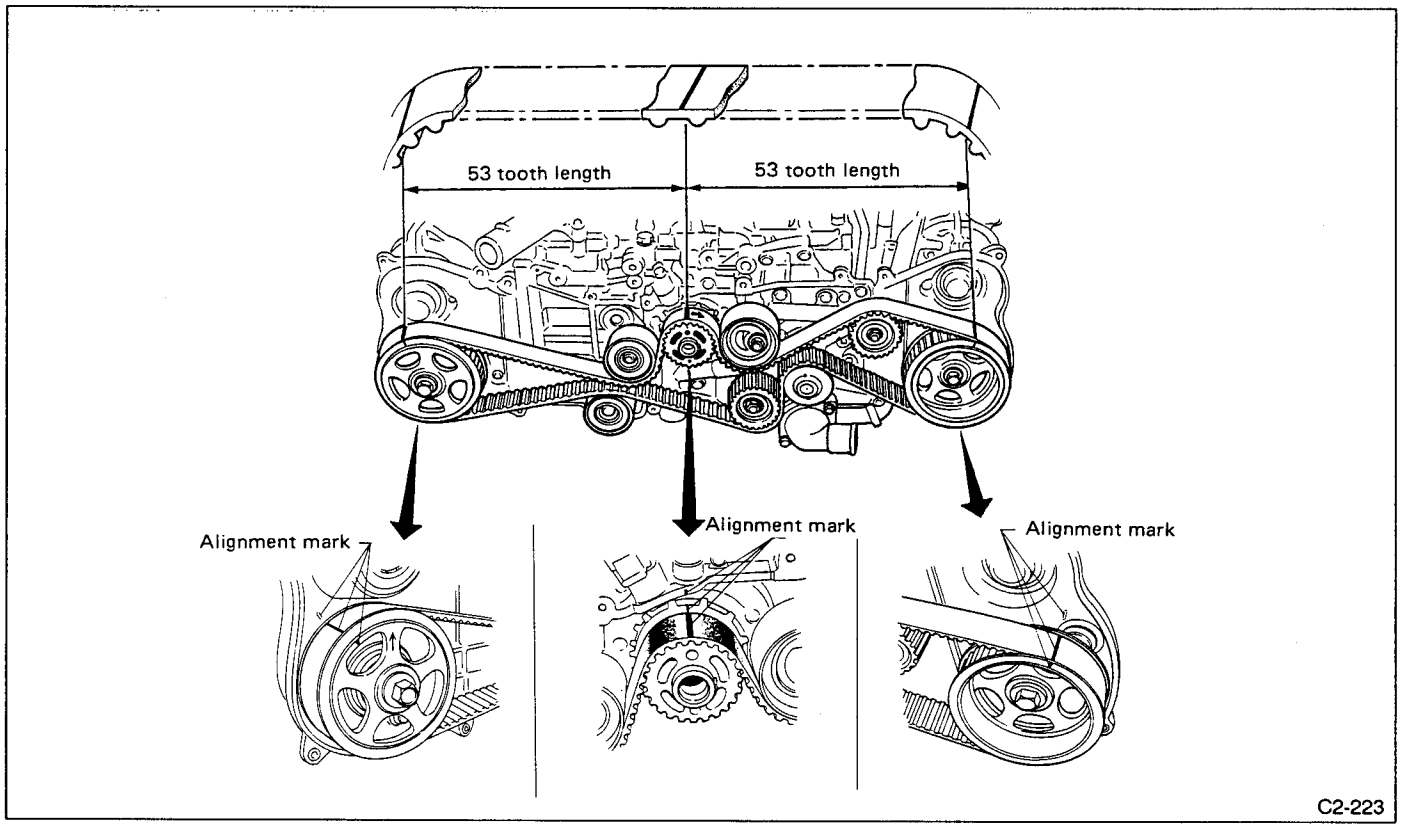

Fig. 34

2) Install belt idler No. 2.
3) Install belt idler.
4) Loosen tension adjuster attaching bolts and move adjuster all the way to the left. Tighten the bolts.

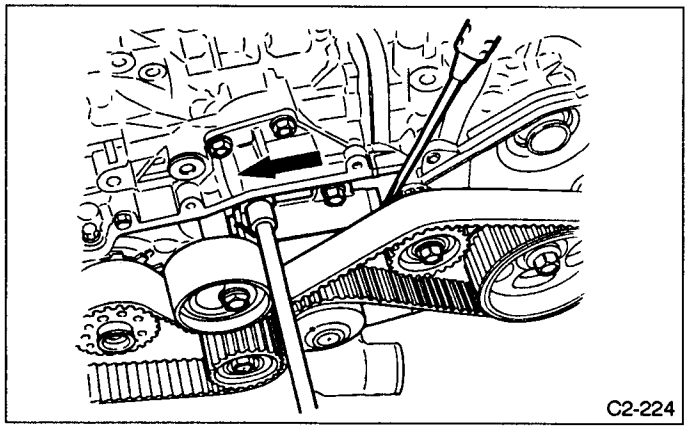

Fig. 35

5) After ensuring that the marks on timing belt and sprockets are aligned, remove stopper from tension adjuster.

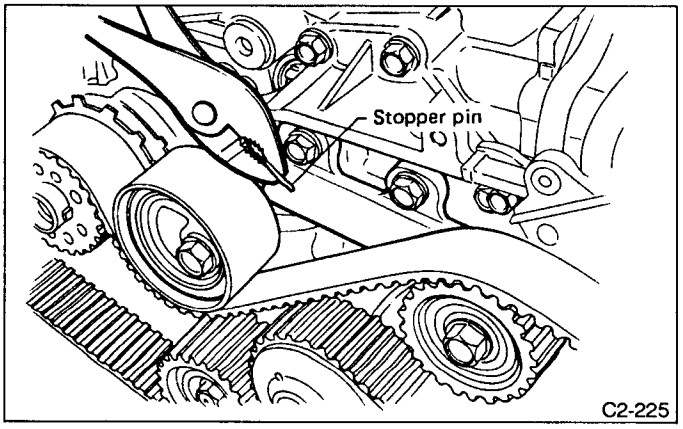

Fig. 36

4. CRANKSHAFT PULLEY AND BELT COVER

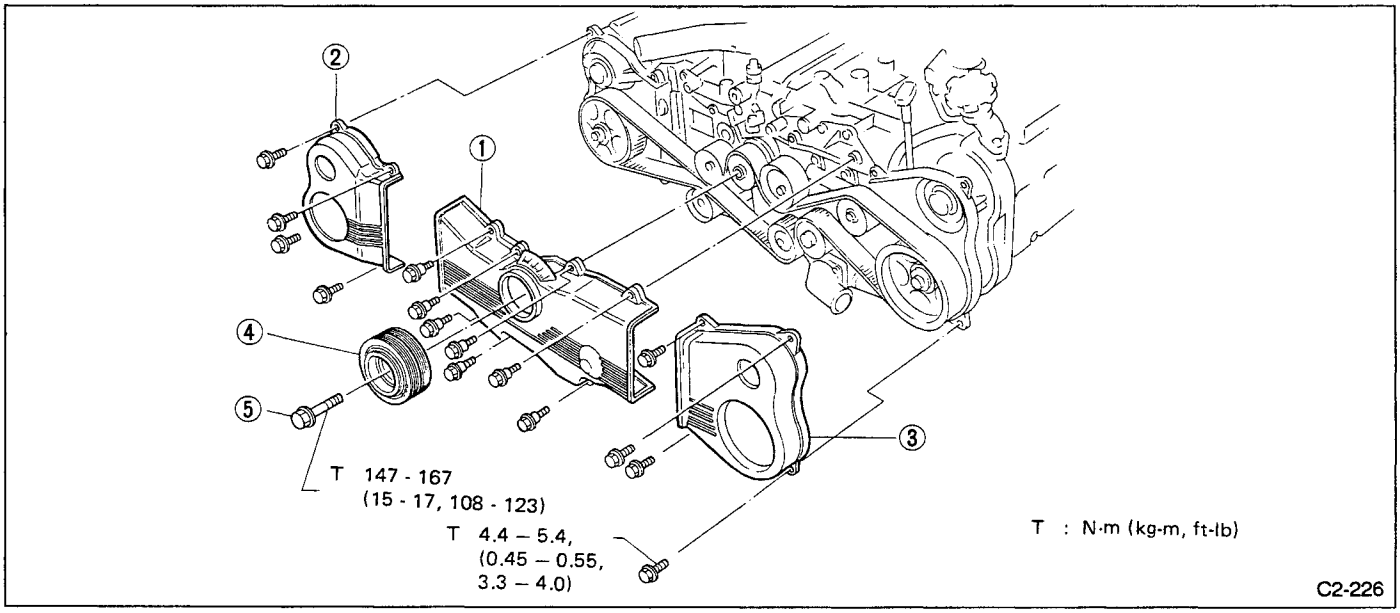

Fig. 37

1) Install front belt cover.
2) Install right-hand belt cover.
3) Install left-hand belt cover.
4) Install crankshaft pulley.
5) Install pulley bolt. To lock crankshaft, use CRANKSHAFT PULLEY WRENCH.

5. RELATED PARTS

1) Install A/C compressor bracket.
2) Install A/C compressor.
3) Install A/C belt tensioner bracket.
4) Install power steering pump bracket.
5) Install alternator and V-belt cover bracket.
6) Install power steering pump.
7) Install V-belts.

⟨Refer to 1-5 Drive Belts [01B1].⟩

3. Camshaft

A: REMOVAL

1. RELATED PARTS

1) Remove timing belt, camshaft sprockets and related parts
〈Refer to Timing Belt [W2A0].〉
2) Disconnect cam angle sensor connector.
3) Disconnect ignition coil connectors.

2. CAMSHAFTS LH

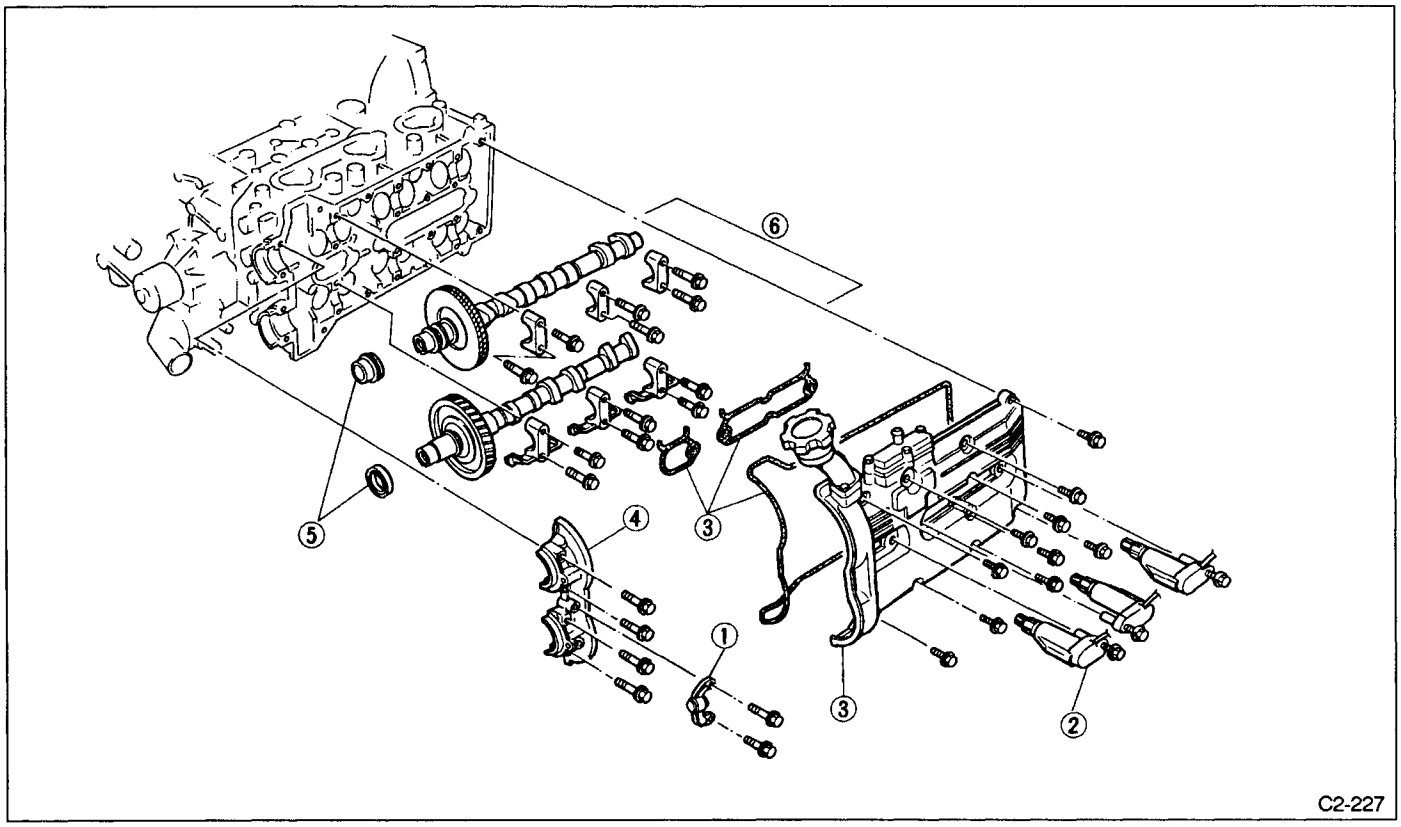

Fig. 38

1) Remove cam angle sensor with bracket.
2) Remove ignition coils.
Fully loosen ignition coil mounting bolts, and pull the bolt head using pliers.
Be careful not to pull any harness by mistake.
3) Disconnect blow-by hose and remove cylinder head cover and gasket.
4) Remove front camshaft cap.
5) Remove camshaft oil seal and plug.
6) Removal of intake and exhaust camshafts.
Since the camshaft thrust clearance is small, the camshaft must be removed by holding it parallel to the cylinder head. If the camshaft is not parallel to the cylinder head, the cylinder head thrust bearing portion may be damaged by the camshaft. To avoid this, proceed as follows:

(1) Rotate the intake camshaft (upper) and exhaust camshaft (lower) so that the notch at the front end of each camshaft faces directly downward, by applying a wrench to the hexagonal portion of the camshafts.

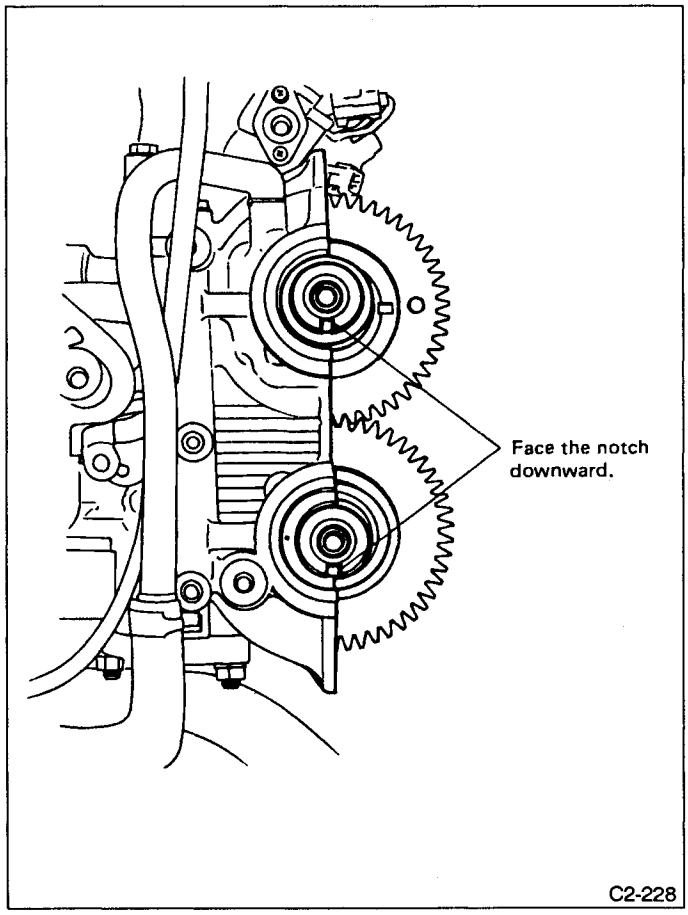

Fig. 39

(2) See the rear side of the camshaft gears, and make sure that the match marks of the intake camshaft gear (driven gear) and exhaust camshaft gear (drive gear) are aligned.

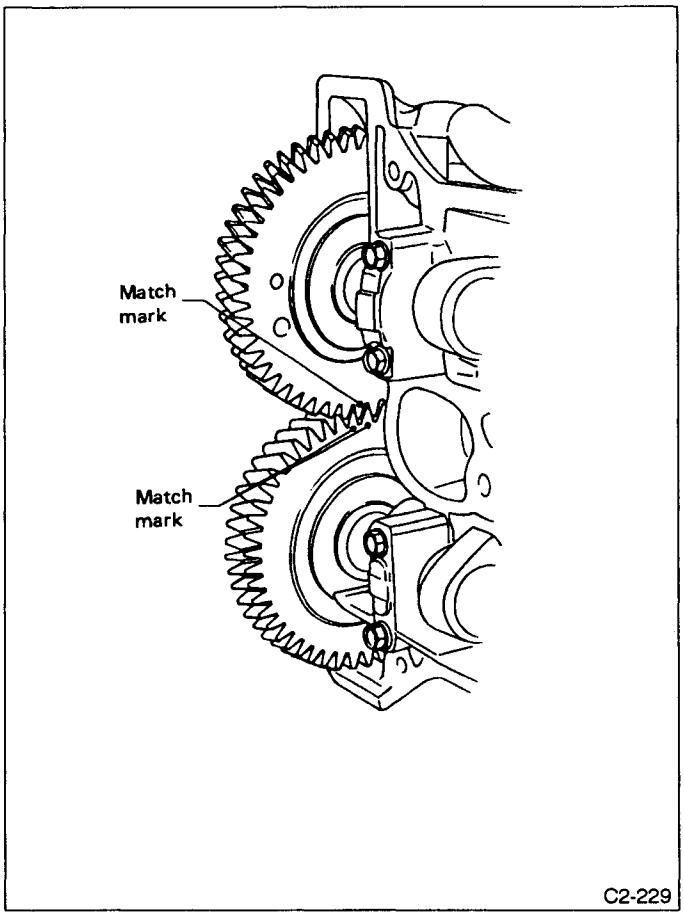

Fig. 40

(3) Install a service bolt to the sub-gear mounting bolt hole of the intake camshaft gear to secure the sub-gear and driven gear.

Recommended service bolt:
Thread diameter
6 mm (0.24 in)
Thread pitch
1.0 mm (0.039 in)
Bolt length
16 — 20 mm (0.63 — 0.79 in)

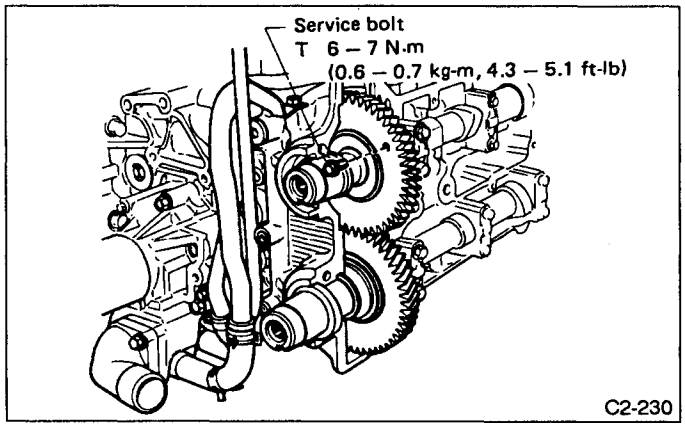

Fig. 41

When removing camshafts, make certain that the torsional spring force of the sub-gear has been eliminated by the above operation.

(4) Loosen six bolts on three intake camshaft caps equally, a little at a time, in the numerical sequence as illustrated.

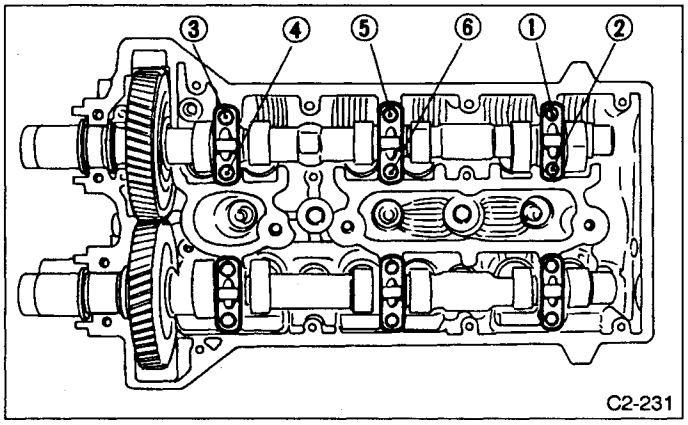

Fig. 42

Make sure that, as the bolts are loosened, the clearance between the camshaft journal and the cylinder head journal bearing increases evenly at three places. If not, tighten the bolts by reversing the illustrated numerical sequence, and then repeat step (4) above.

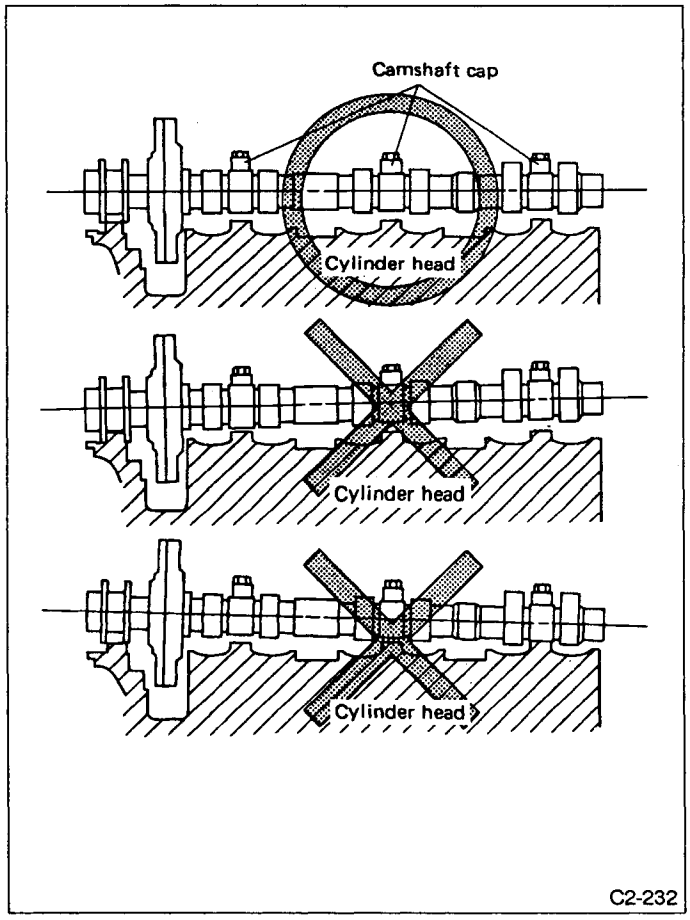

Fig. 43

(5) Remove the camshaft cap while holding the intake camshaft with one hand, and then remove the camshaft. If it is hard to remove the camshaft, rotate the exhaust camshaft clockwise.

Arrange the camshaft caps in correct order.

(6) Loosen six bolts of three exhaust camshaft caps equally, a little at a time, in the numerical sequence as illustrated.

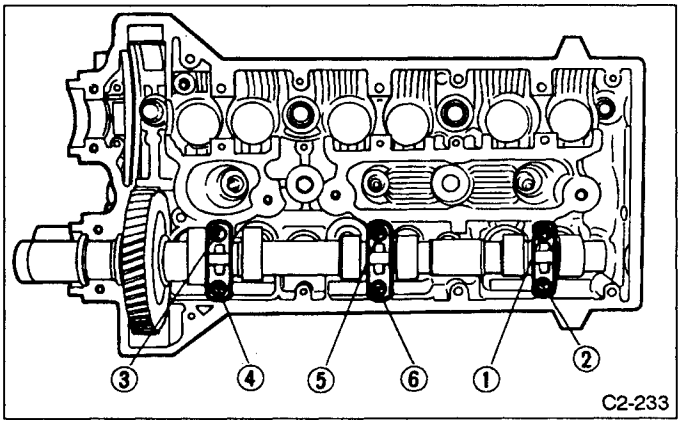

Fig. 44

Make sure that, as the bolts are loosened, the clearance between the camshaft journal and the cylinder head journal bearing increases evenly at three places. If not, tighten the bolts by reversing the illustrated numerical sequence, and then repeat step (6) above.

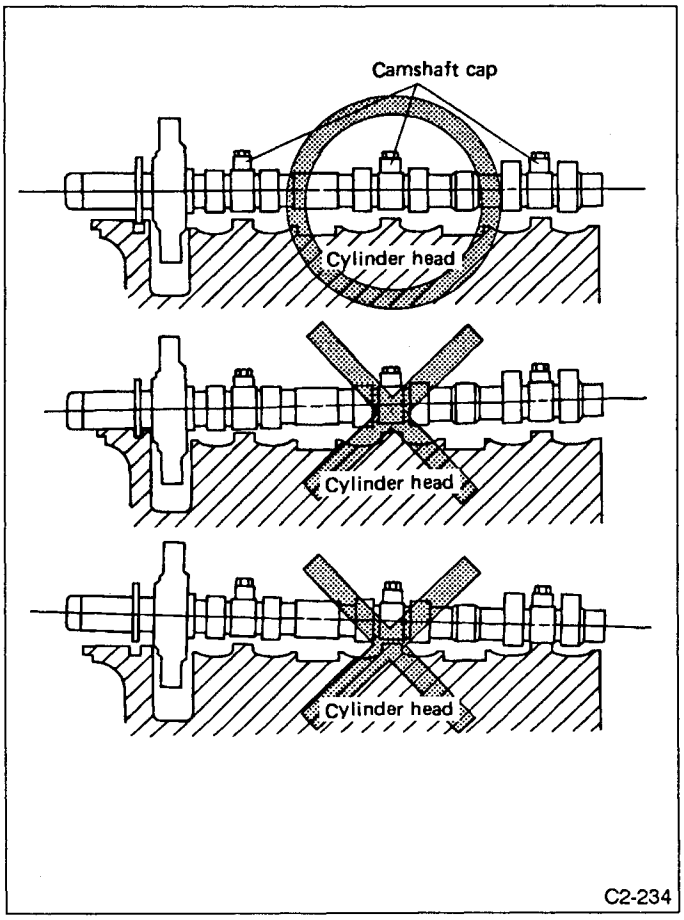

Fig. 45

(7) Remove the camshaft cap while holding the exhaust camshaft with one hand, and then remove the camshaft.

Arrange the camshaft caps in correct order.

7) Remove hydraulic lash adjusters.
Arrange the hydraulic lash adjusters in order so that they can be installed in their original positions.

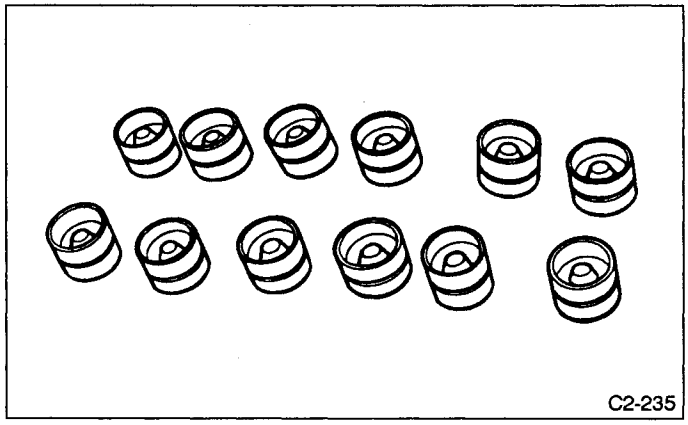

Fig. 46

3. CAMSHAFTS RH

Operation precautions are the same as those for the LH camshafts, except the method for aligning the camshaft gear match marks before removing camshafts.

1) Remove ignition coils.
2) Disconnect blow-by hose and remove cylinder head cover and gasket.
3) Remove front camshaft cover.
4) Remove camshaft oil seal and plug.
5) Removal of intake and exhaust camshafts
   (1) Rotate the intake camshaft (upper) and exhaust camshaft (lower) so that the notch at the front end of each camshaft faces directly upward.

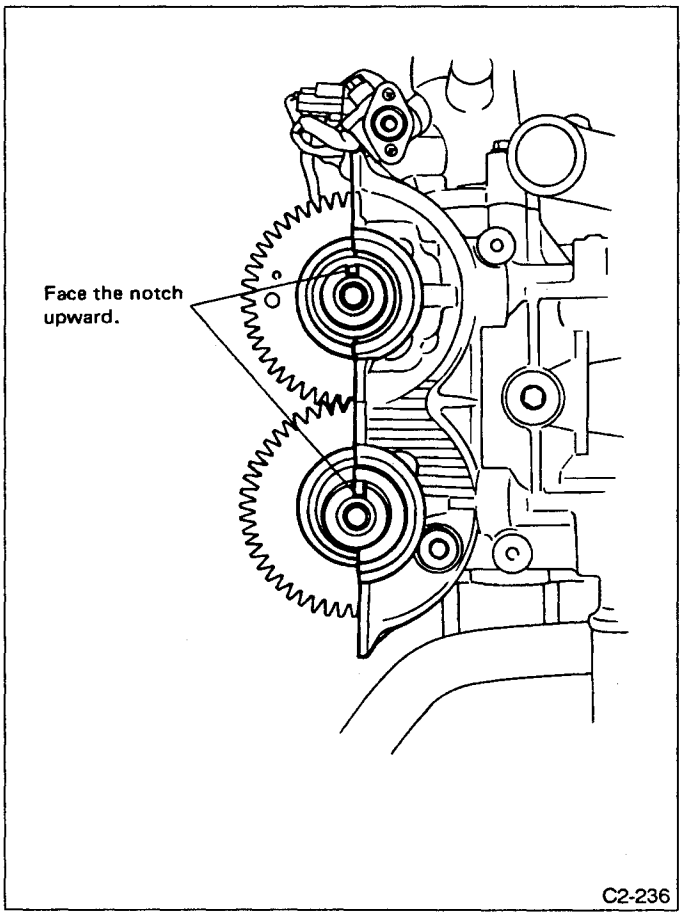

Fig. 47

(2) See the rear side of the camshaft gears, and make sure that the match marks of the intake camshaft gear (driven gear) and exhaust camshaft gear (drive gear) are aligned.

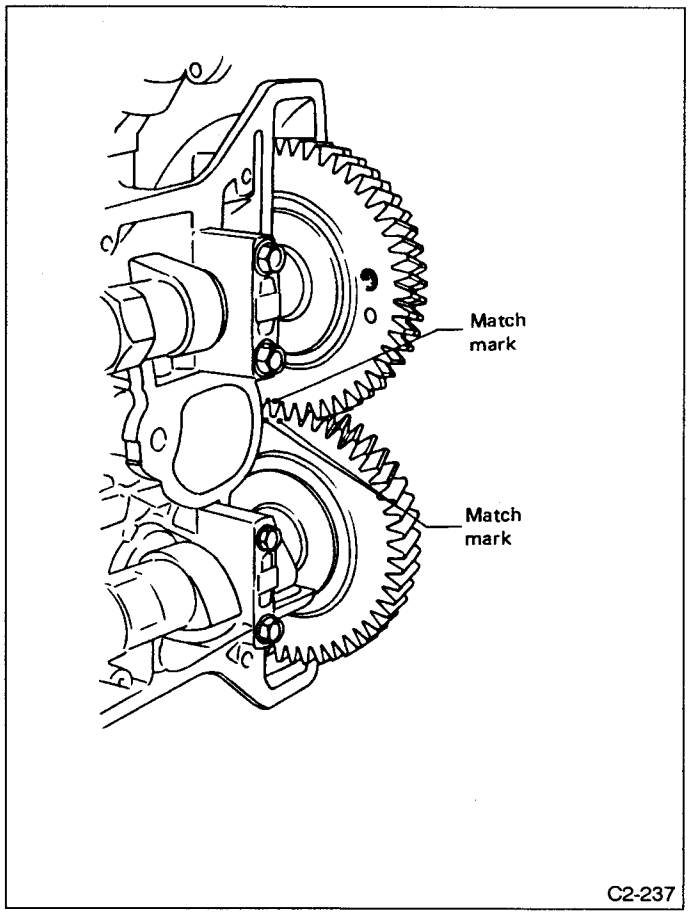

Fig. 48

(3) Install a service bolt to the sub-gear mounting bolt hole of the intake camshaft gear to secure the sub-gear and driven gear.

(4) Loosen six bolts on three intake camshaft caps equally, a little at a time, in the numerical sequence as illustrated.

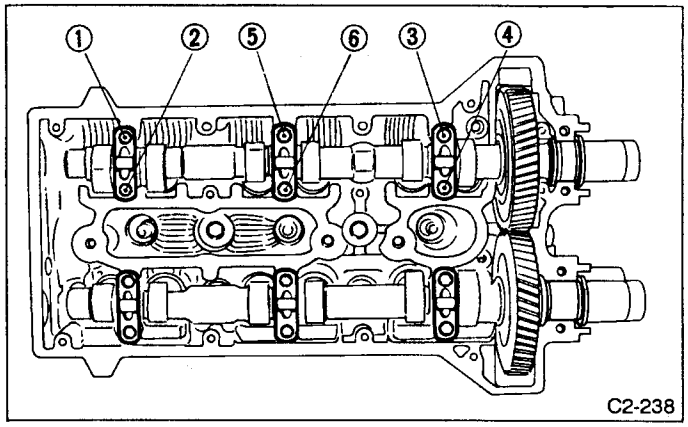

Fig. 49

Make sure that, as the bolts are loosened, the clearance between the camshaft journal and the cylinder head journal bearing increases evenly at three places. If not, tighten the bolts by reversing the illustrated numerical sequence, and then repeat step (4) above.

(5) Remove the camshaft cap while holding the intake camshaft with one hand, and then remove the camshaft. If it is hard to remove the camshaft, rotate the exhaust camshaft counterclockwise.

Arrange the camshaft caps in correct order.

(6) Loosen six bolts of three exhaust camshaft caps equally, a little at a time, in the numerical sequence as illustrated.

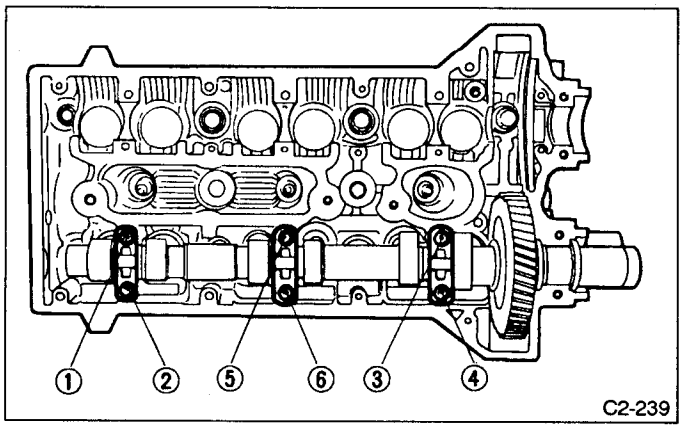

Fig. 50

Make sure that, as the bolts are loosened, the clearance between the camshaft journal and the cylinder head journal bearing increases evenly at three places. If not, tighten the bolts by reversing the illustrated numerical sequence, and then repeat step (6) above.

(7) Remove the camshaft cap while holding the exhaust camshaft with one hand, and then remove the camshaft.

Arrange the camshaft caps in correct order.

6) Remove hydraulic lash adjusters.

Arrange the hydraulic lash adjusters in order so that they can be installed in their original positions.

B: DISASSEMBLY

1. INTAKE CAMSHAFT

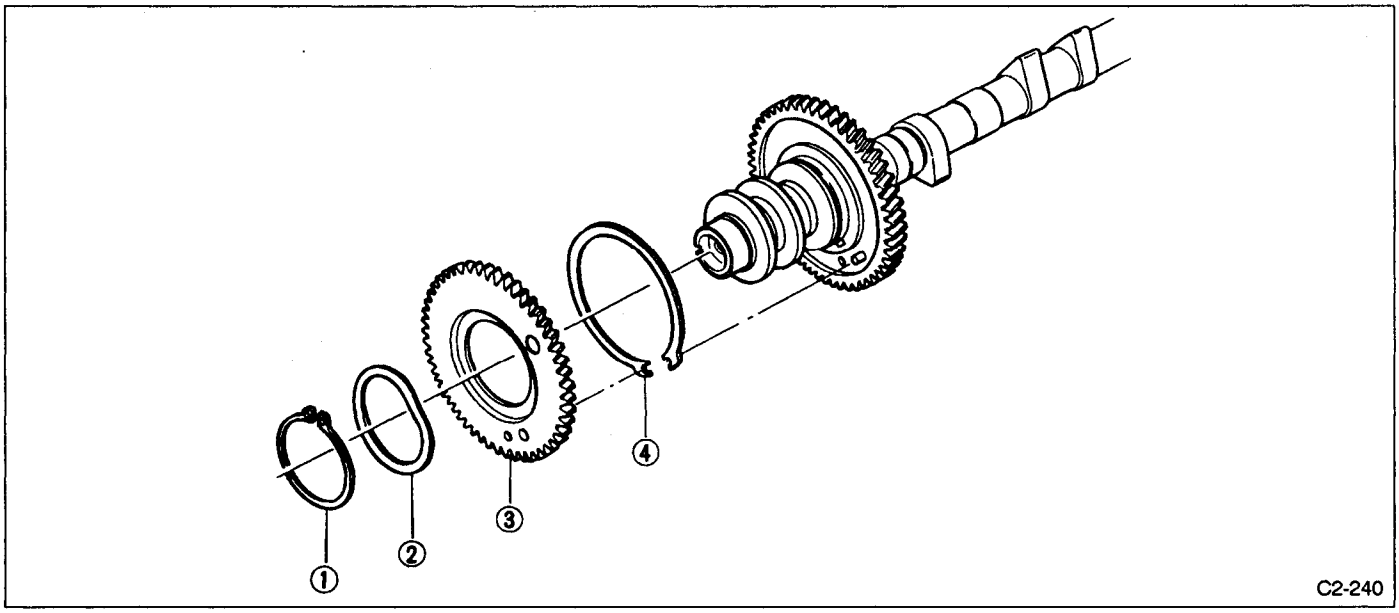

Fig. 51

1) Removal of snap ring

(1) Secure the shaft portion of the camshaft in a vice using a rag.

a. Never attempt to hold the cam lobe or journal in the vice.

b. Pay attention not to damage the cam lobe and journal.

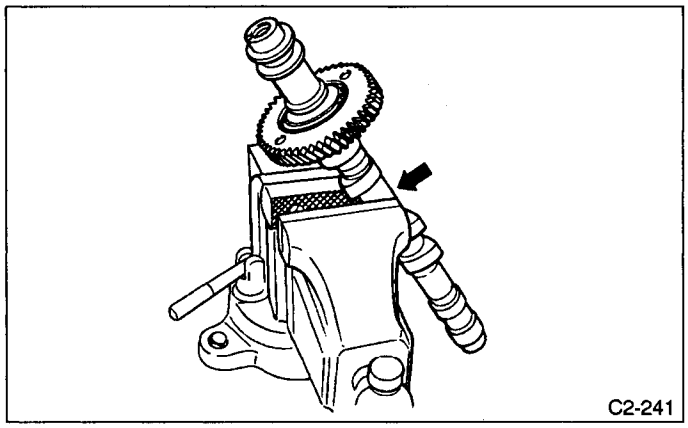

Fig. 52

(2) Turn the sub-gear clockwise using CAMSHAFT GEAR WRENCH, and remove service bolt.

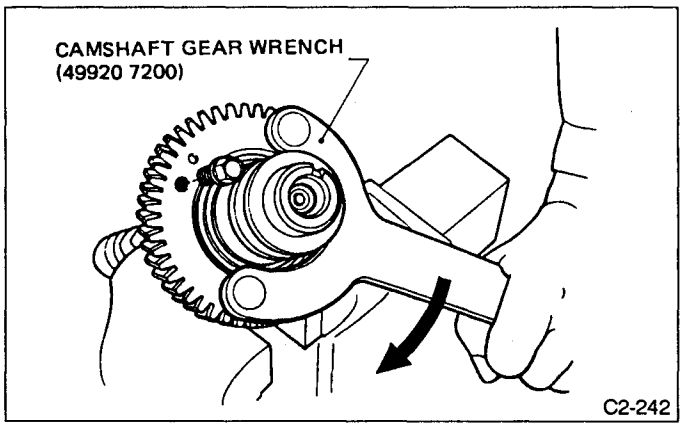

Fig. 53

(3) Remove snap ring using CAMSHAFT GEAR PLIERS.

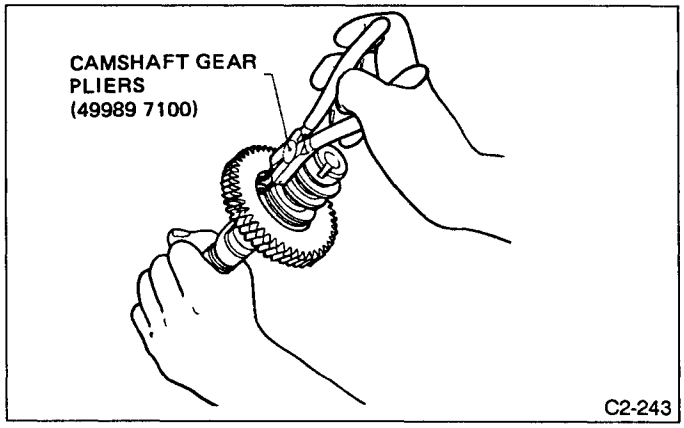

Fig. 54

2) Remove wave washer.
3) Remove camshaft sub-gear.
4) Remove camshaft gear spring.
Arrange the camshaft sub-gears and gear springs.

C: INSPECTION

1. CAMSHAFT

1) Visually check the camshafts for scratches flaking and wear.
2) Measurement of the camshaft bend.
(1) Place the camshaft on V-blocks at the No. 2 and No.4 journal.
(2) Measure the camshaft runout at the No.3 journal.

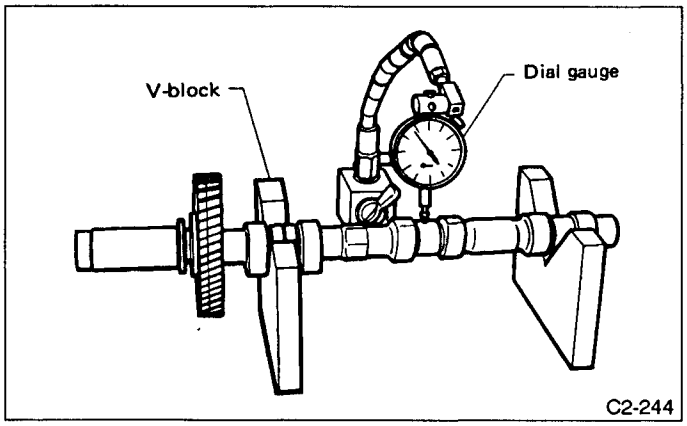

Fig. 55

Limit:
0.02 mm (0.0008 in)

(3) If it exceeds the limit, replace camshaft.
3) Measure outside diameter of the camshaft journal. If the journal diameter is not as specified, check the oil clearance.

Camshaft journal outer diameter		
	#1	#2, #3, #4
Standard	31.943 — 31.963 mm (1.2576 — 1.2584 in)	27.946 — 27.963 mm (1.1002 — 1.1009 in)

4) Measure the cam height H.
If it exceeds the limit, replace camshaft.

Standard cam height H:
Intake: 39.05 — 39.15 mm (1.5374 — 1.5413 in)
Wear limit
38.90 mm (1.5315 in)
Exhaust: 39.85 — 39.95 mm (1.5689 — 1.5728 in)
Wear limit
39.70 mm (1.5630 in)

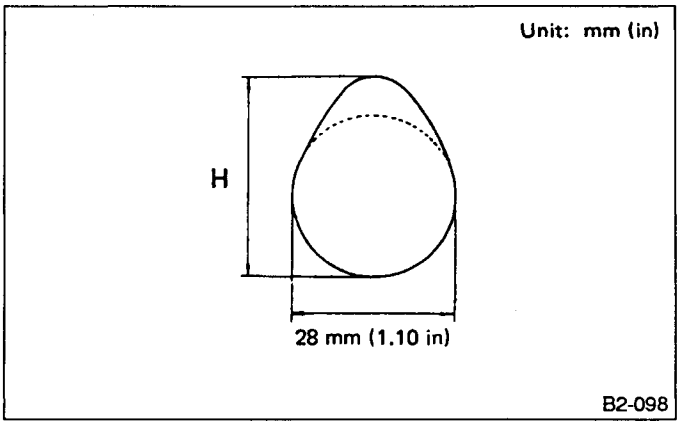

Fig. 56

5) Visually check the camshaft caps for scratches, flaking and wear.
If the camshaft caps are damaged, replace the camshaft caps and cylinder head as a set.
6) Measurement of the thrust clearance of camshaft
Measure the clearance of each camshaft.
(1) Install camshaft without installing valve lash adjusters.
〈Refer to [W3E1].〉
Be sure to install the camshaft at the specified position.
(2) Measure the thrust clearance of the camshaft.

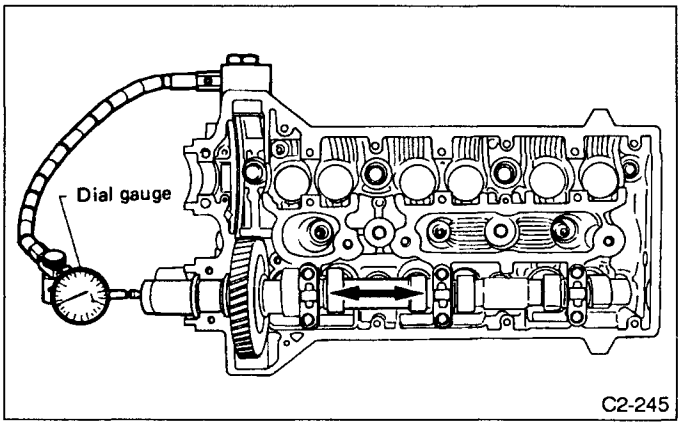

Fig. 57

Standard camshaft thrust clearance:
Intake:0.03 — 0.09 mm (0.0012 — 0.0035 in)
Wear limit
0.13 mm (0.0051 in)
Exhaust:0.02 — 0.08 mm (0.0008 — 0.0031 in)
Wear limit
0.12 mm (0.0047 in)

(3) If the thrust clearance exceeds the limit, replace the camshaft caps and cylinder head as a set. If necessary, replace the camshaft.

7) Measurement of the camshaft journal oil clearance
(1) Clean the bearing caps and camshaft journals.
(2) Place the camshafts on the cylinder head. (Without installing lash adjuster.)
(3) Place plastigauge across each of the camshaft journals.
(4) Install the bearing caps.
⟨Refer to [W3E1].⟩
Do not turn the camshaft.
(5) Remove the bearing caps.
(6) Measure the widest point of the plastigauge on each journal.
If the oil clearance exceeds the limit, replace the camshaft. If necessary, replace the camshaft caps and cylinder head as a set.

Standard oil clearance:
0.037 — 0.072 mm (0.0015 — 0.0028 in)
Limit:
0.10 mm (0.0039 in)

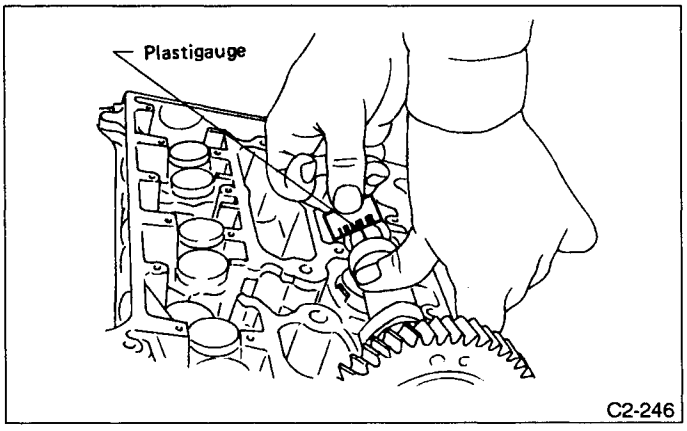

Fig. 58

(7) Completely remove the plastigauge.

2. CAMSHAFT GEAR

1) Inspection of camshaft gear backlash.
(1) Install the intake and exhaust camshafts without installing hydraulic lash adjusters.
⟨Refer to [W3E1].⟩
Do not install the intake camshaft sub-gear.
(2) Measure the backlash using dial gauge. If the backlash exceeds the limit, replace the intake and exhaust camshafts as a set.

Standard camshaft gear backlash:
0.029 — 0.175 mm (0.0011 — 0.0069 in)
Limit:
0.30 mm (0.0118 in)

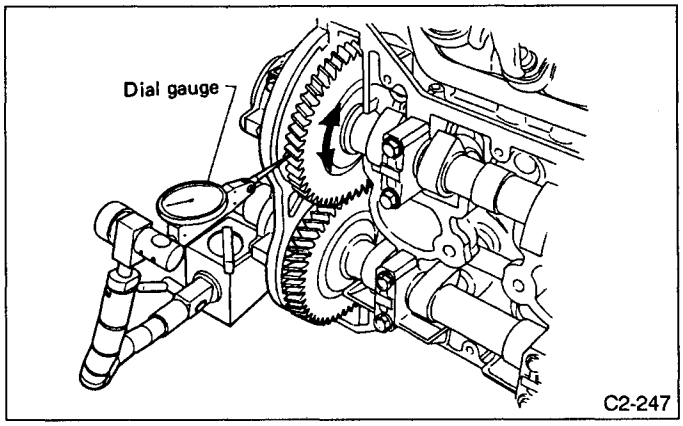

Fig. 59

2) Measure the free distance between the camshaft gear spring ends.
If the free distance is not as specified, replace the gear spring.

Free distance:
24.88 — 28.88 mm (0.9795 — 1.1370 in)

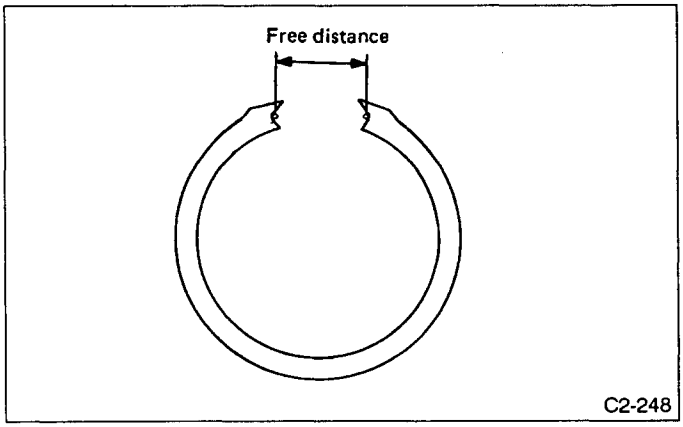

Fig. 60

D: ASSEMBLY

1. INTAKE CAMSHAFTS

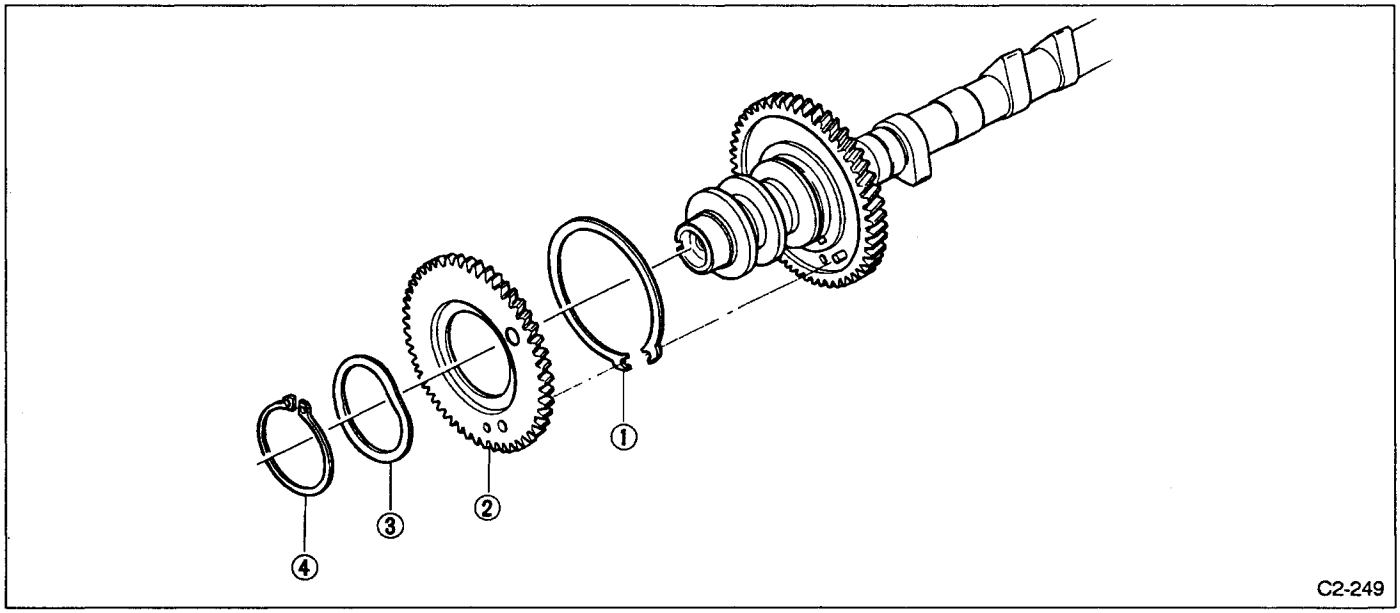

Fig. 61

1) Install camshaft gear spring.
2) Install camshaft sub-gear.
3) Install wave washer.
4) Install snap ring using CAMSHAFT GEAR PLIERS.

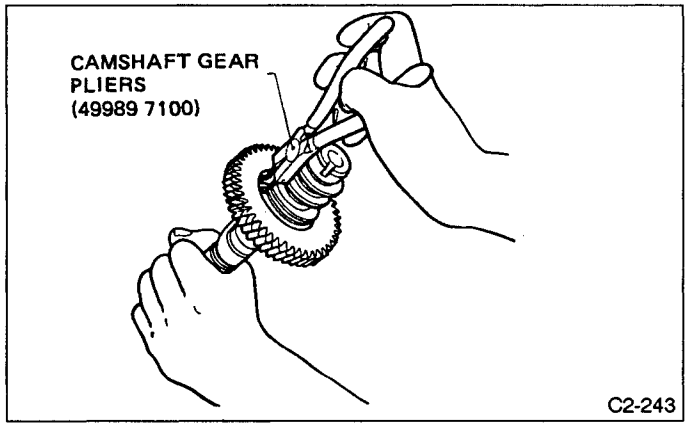

Fig. 62

5) Installation of service bolt
   (1) Secure the shaft portion of the camshaft in a vice using a rag.

a. Never attempt to hold the cam lobe or journal in the vice.

b. Pay attention not to damage the cam lobe and journal.

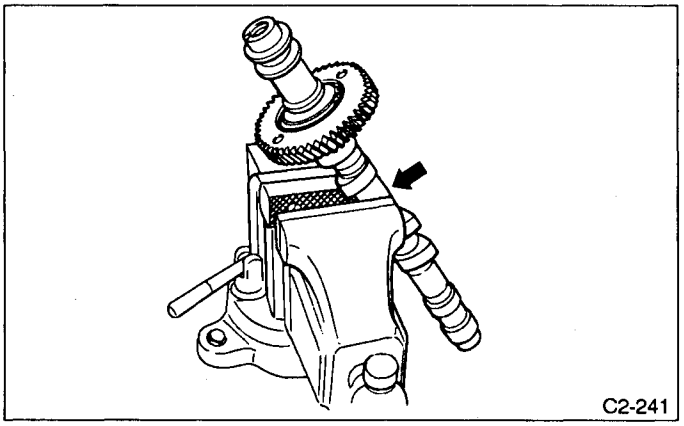

Fig. 63

(2) Turn the sub-gear clockwise and align the holes of the camshaft driven gear and sub-gear using CAMSHAFT GEAR WRENCH, and install service bolt.

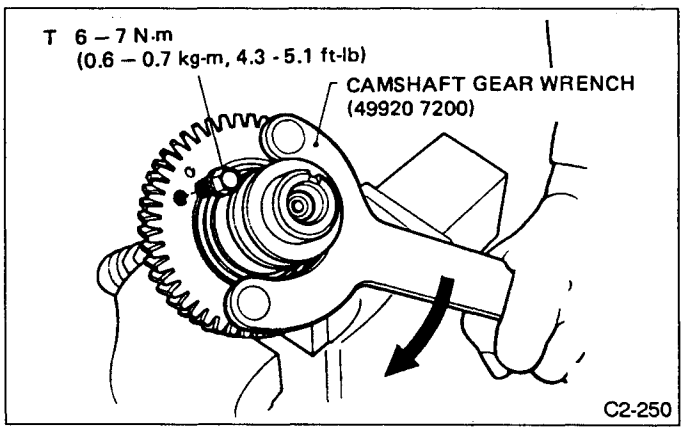

Fig. 64

E: INSTALLATION

1. CAMSHAFTS LH

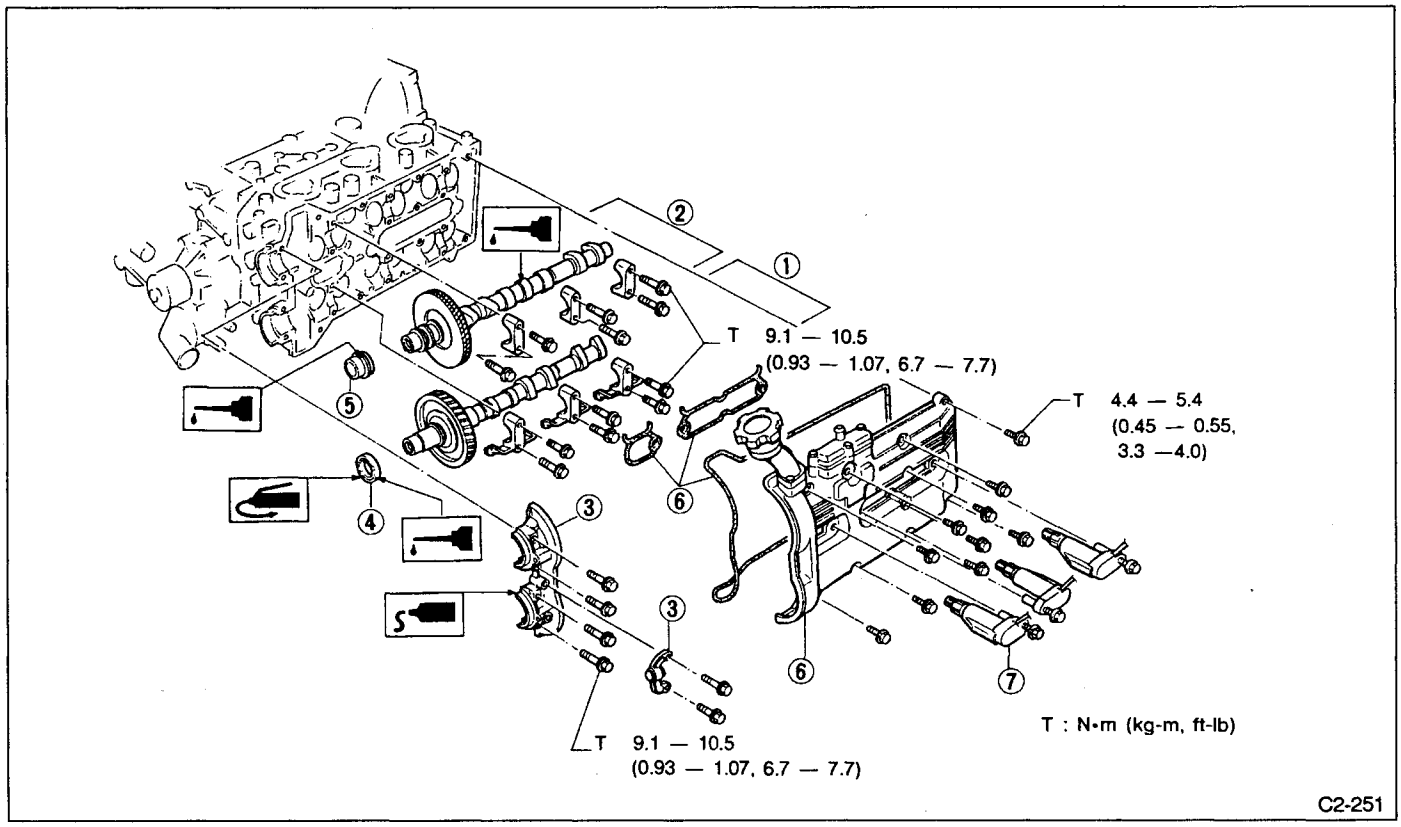

Fig. 65

Since the camshaft thrust clearance is small, the camshaft must be installed by holding it parallel to the cylinder head. If the camshaft is not parallel to the cylinder head, the cylinder head thrust bearing portion may be damaged by the camshaft. To avoid this, proceed as follows:

1) Installation of exhaust camshaft
   (1) Apply a coat of engine oil to the hydraulic lash adjuster surface and insert hydraulic lash adjusters.
   (2) Apply a coat of engine oil to the camshaft journals.
   (3) Set the exhaust camshaft on the cylinder head with the front end notch of the camshaft facing directly downward. Then attach three camshaft caps to the correct positions, and fully hand-tighten the cap bolts.

Hold the camshaft with one hand so that it will not drop while tightening the camshaft caps.

   (4) Tighten six bolts on three exhaust camshaft caps equally, a little at a time, in the numerical sequence as illustrated.

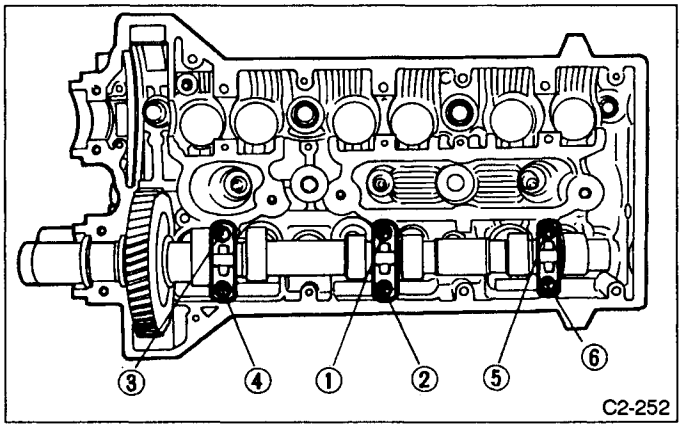

Fig. 66

Make sure that, as the bolts are tightened, the clearance between the camshaft journal and the cylinder head journal bearing decreases evenly at three places. If not, loosen the bolts by reversing the illustrated numerical sequence, and then repeat step (4) above.

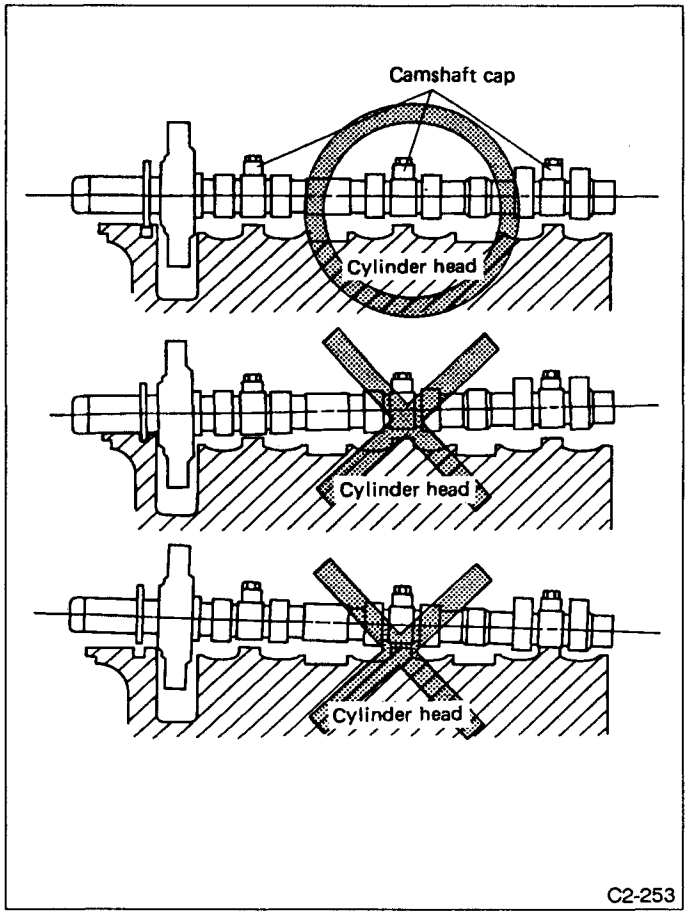

Fig. 67

(5) Tighten each bolt to the specified torque in the sequence explained in step (4).

2) Installation of intake camshaft

Each intake and exhaust camshaft gear has match marks at two places. Accordingly, if the match marks are incorrectly aligned, the cam timing will be misaligned by 180° between the intake side and exhaust side. To avoid this, be sure to use the following method when assembling the camshafts.

(1) Apply a coat of engine oil to the hydraulic lash adjuster surface and insert hydraulic lash adjusters.

(2) Apply a coat of engine oil to the camshaft journals.

(3) Align the intake camshaft match mark with the match mark of the exhaust camshaft which is already installed. In this case, make sure that the notch on the front end of the intake camshaft and that of the exhaust camshaft are facing the same direction (facing downward). After that, install the three camshaft caps at the specified positions, and fully hand-tighten the bolts.

Be sure to hold the camshaft with one hand so that it will not drop while installing the camshaft caps.

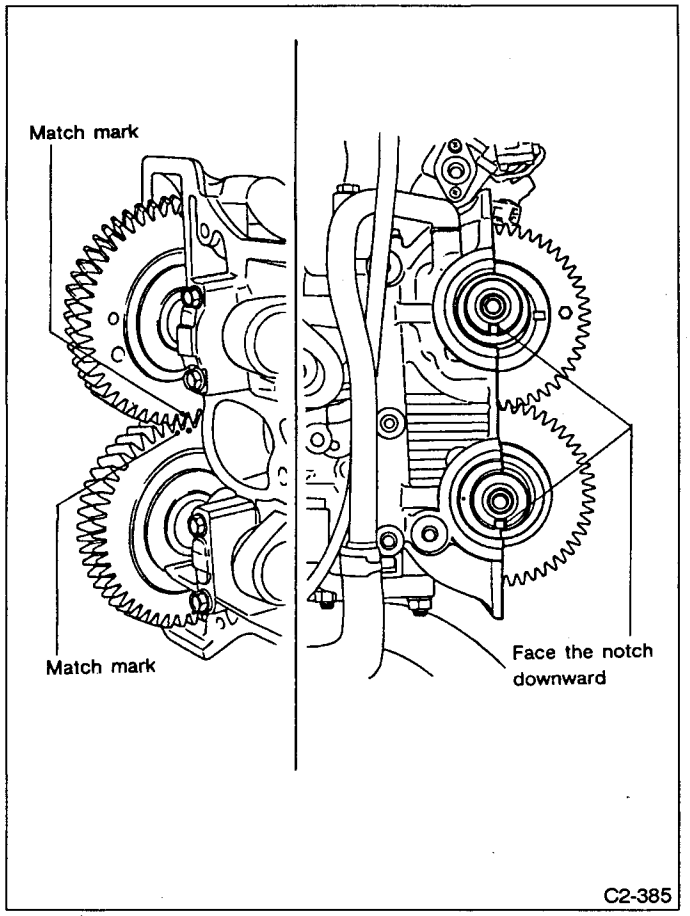

Fig. 68

(4) See the rear side of the camshaft gears, and make sure that the match marks of the camshaft gears are aligned. If not, re- assemble the camshaft using procedure (3) again.

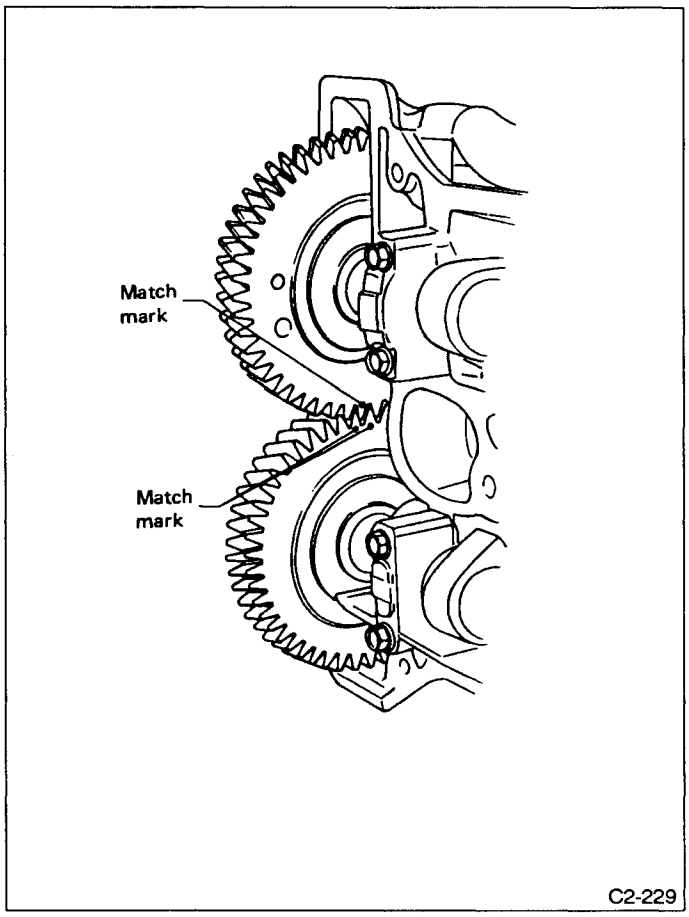

Fig. 69

(5) Tighten six bolts of three intake camshaft caps equally, a little at a time, in the numerical sequence as illustrated.

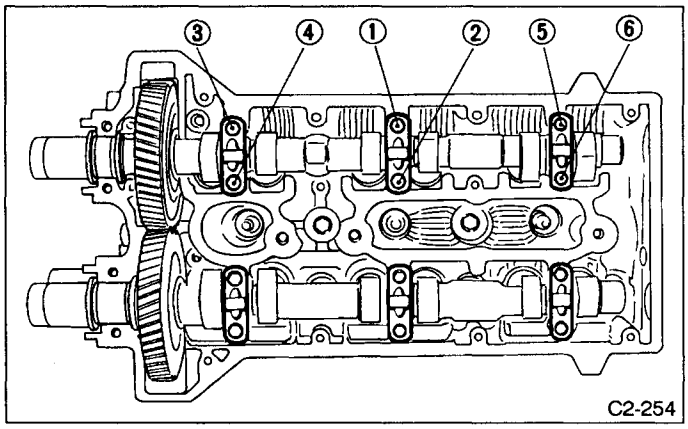

Fig. 70

Make sure that, as the bolts are tightened, the clearance between the camshaft journal and the cylinder head journal decreases evenly at three places. If not, loosen the bolts by reversing the illustrated numerical sequence, and then repeat step (5) above.

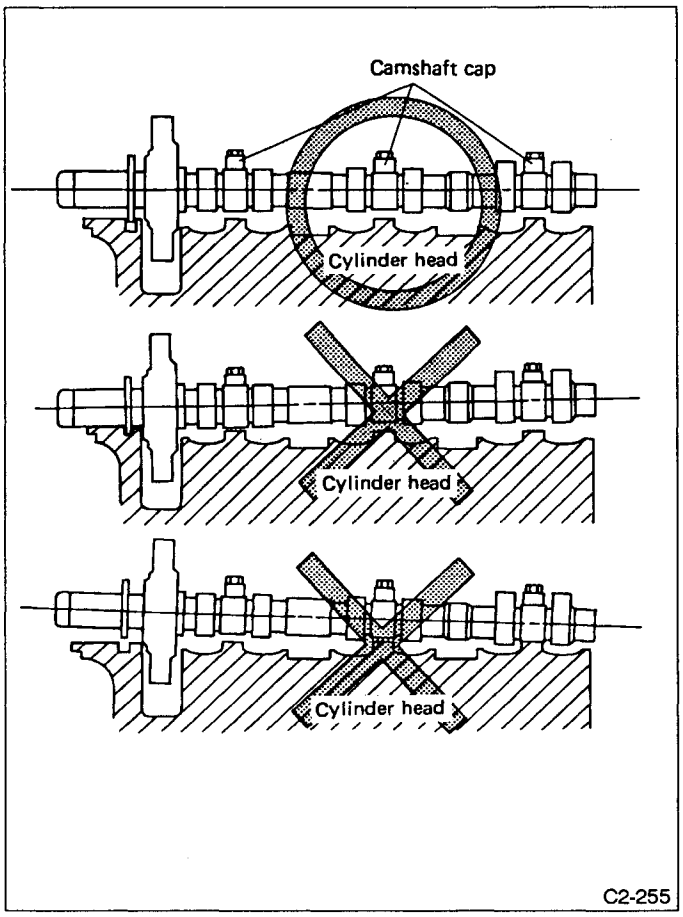

Fig. 71

(6) Tighten each bolts to the specified torque in the sequence explained in step (5).

(7) Remove the sub-gear securing service bolt from the intake camshaft gear.

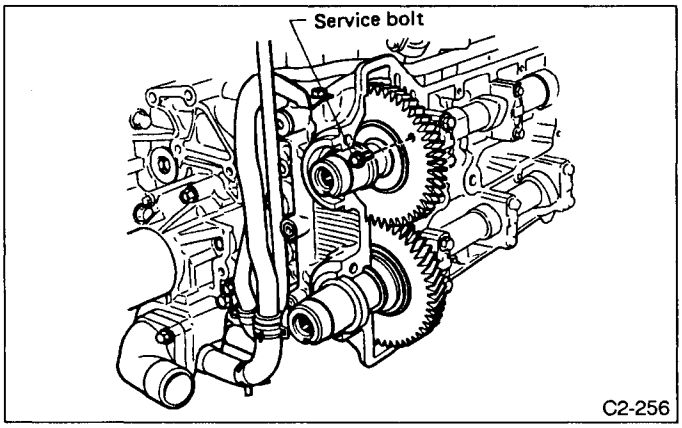

Fig. 72

3) Installation of front camshaft cap

(1) Apply fluid packing for mating surface of front camshaft cover.

Use only enough fluid packing to avoid its entrance into the camshaft oil hole.

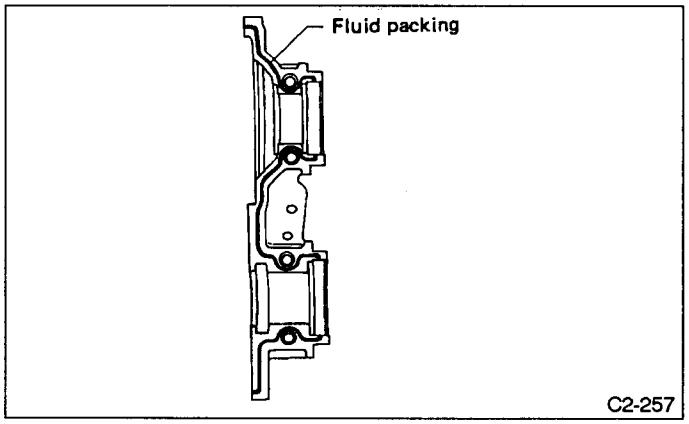

Fig. 73

(2) Install front camshaft cover.

4) Apply a coat of grease to oil seal lips and install oil seal.

Use a new oil seal.

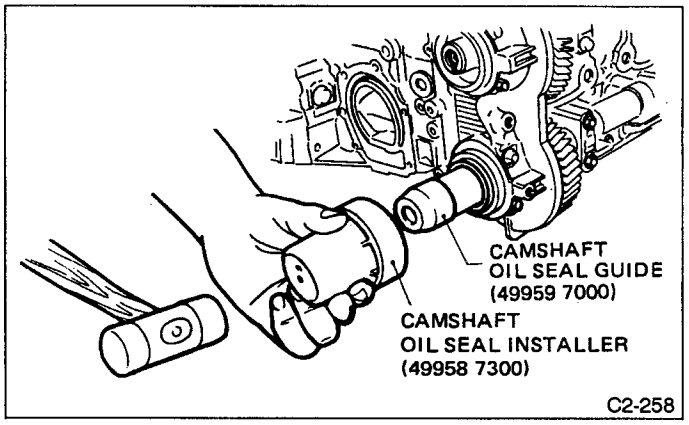

Fig. 74

5) Install camshaft plug.

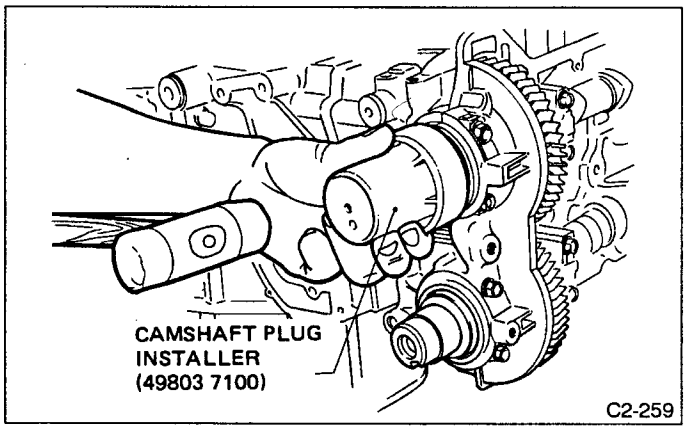

Fig. 75

6) Installation of cylinder head cover

(1) Completely remove excess fluid packing from location Ⓐ in the figure.

(2) Apply soapy water over Ⓐ and Ⓑ shown in the figure.

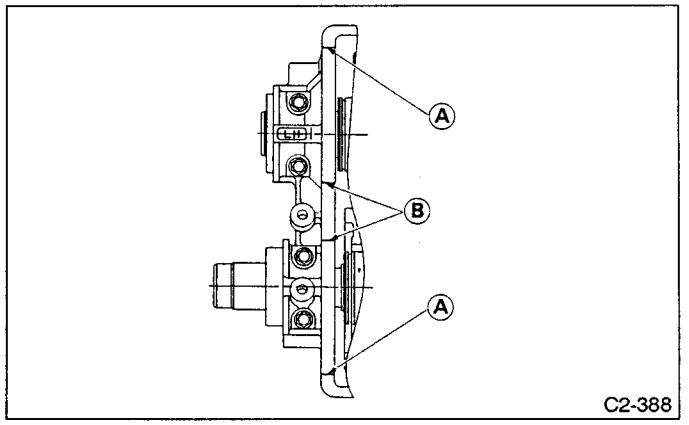

Fig. 76

(3) Install cylinder head cover and gasket.

(4) Connect blow-by hose.

7) Install ignition coils.

8) Install cam angle sensor.

2. CAMSHAFT RH

Operation precautions are the same as those for the LH camshafts, except the method of aligning the camshaft gear match marks.

1) Installation of exhaust camshaft

(1) Apply a coat of engine oil to the hydraulic lash adjuster surface and insert hydraulic lash adjusters.

(2) Apply a coat of engine oil to the camshaft journals.

(3) Set the exhaust camshaft on the cylinder head with the front end notch of the camshaft facing directly downward. Then attach three camshaft caps to the correct positions, and fully hand- tighten the cap bolts.

Hold the camshaft with one hand so that it will not drop while tightening the camshaft caps.

(4) Tighten six bolts on three exhaust camshaft caps equally, a little at a time, in the numerical sequence as illustrated.

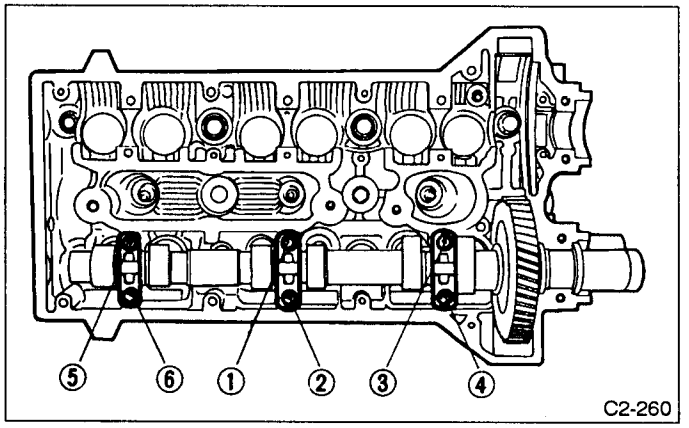

Fig. 77

Make sure that, as the bolts are tightened, the clearance between the camshaft journal and the cylinder head journal decreases evenly at three places. If not, loosen the bolts by reversing the illustrated numerical sequence, and then repeat step (4) above.

(5) Tighten each bolt to the specified torque in the sequence explained in step (4).

2) Installation of intake camshaft

Each intake and exhaust camshaft gear has match marks at two places. Accordingly, if the match marks are incorrectly aligned, the cam timing will be misaligned by 180° between the inside and exhaust side. To avoid this, be sure to use the following method when assembling the camshafts.

(1) Apply a coat of engine oil to the hydraulic lash adjuster surface and insert hydraulic lash adjusters.

(2) Apply a coat of engine oil to the camshaft journals.

(3) Align the intake camshaft match mark with the match mark of the exhaust camshaft which is already installed. In this case, make sure that the notch on the front end of the intake camshaft and that of the exhaust camshaft are facing the same direction (facing upward). After that, install the three camshaft caps at the specified positions, and fully hand-tighten the bolts.

Be sure to hold the camshaft with one hand so that it will not drop while installing the camshaft caps.

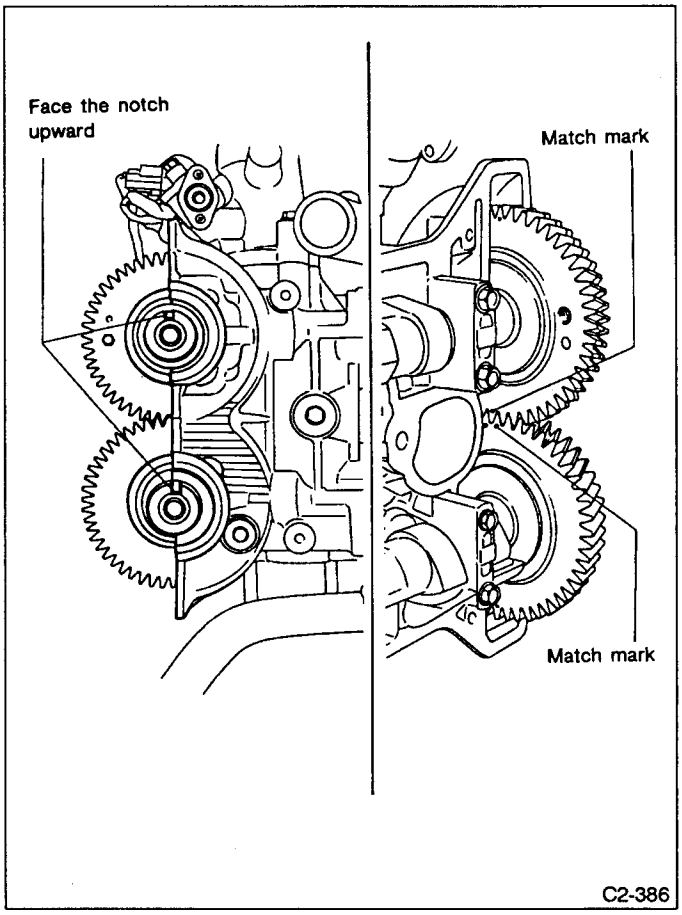

Fig. 78

(4) See the rear side of the camshaft gears, and make sure that the match marks of the camshaft gears are aligned. If not, re-assemble the camshaft using procedure (3) again.

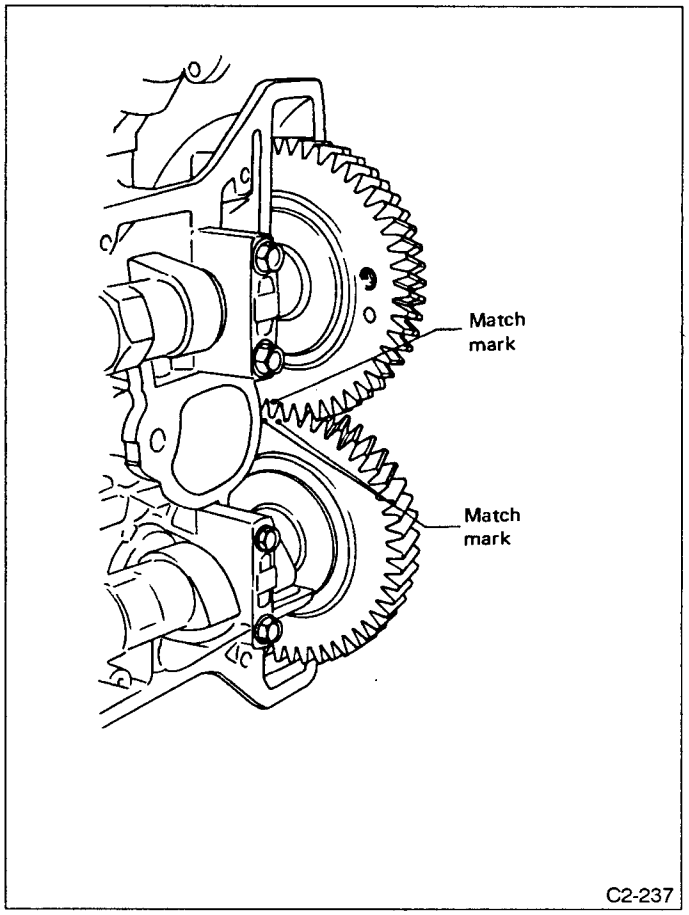

Fig. 79

(5) Tighten six bolts of three intake camshaft caps equally, a little at a time, in the numerical sequence as illustrated.

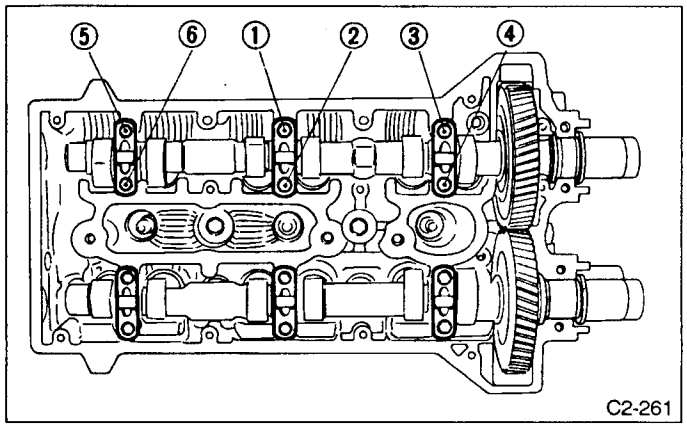

Fig. 80

Make sure that, as the bolts are tightened, the clearance between the camshaft journal and the cylinder head journal bearing decreases evenly at three places. If not, loosen the bolts by reversing the illustrated numerical sequence, and then repeat step (5) above.

(6) Tighten each bolt to the specified torque in the sequence explained in step (5).

(7) Remove the sub-gear securing service bolt from the intake camshaft gear.

3) Installation of front camshaft cap

(1) Apply fluid packing for mating surface of front camshaft cap.

Use only enough fluid packing to avoid its entrance into the camshaft oil hole.

(2) Install front camshaft cover.

4) Apply a coat of grease to oil seal lips and install oil seal.

Use a new oil seal.

5) Install camshaft plug.

6) Installation of cylinder head cover

(1) Completely remove excess fluid packing from location Ⓐ in the figure.

(2) apply soapy water over Ⓐ shown in the figure.

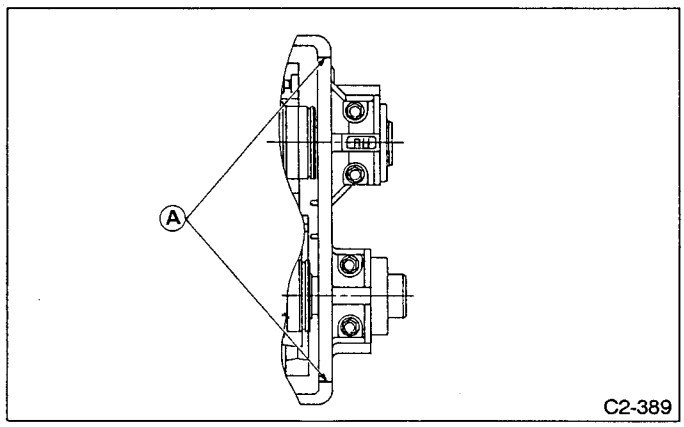

Fig. 81

(3) Install cylinder head cover and gasket.

(4) Connect blow-by hose.

7) Install ignition coils.

3. RELATED PARTS

1) Connect ignition coil connectors.

2) Connect cam angle sensor connector.

3) Install camshaft sprockets, timing belt and related parts.

⟨Refer to Timing Belt [W2C0].⟩

4. Cylinder Head

A: REMOVAL

1. INTAKE MANIFOLD

1) Remove timing belt, camshaft sprockets and related parts.

⟨Refer to 2 Timing Belt [W2A0].⟩

2) Remove EGR valve, EGR pipe and BPT.

3) Disconnect auxiliary air control valve connector.

4) Disconnect blow-by hoses.

5) Disconnect auxiliary air control valve hose.

6) Disconnect PCV hose from connector PCV.

7) Disconnect two water hoses from throttle body.

8) Remove collector and intake manifold ASSY and gaskets.

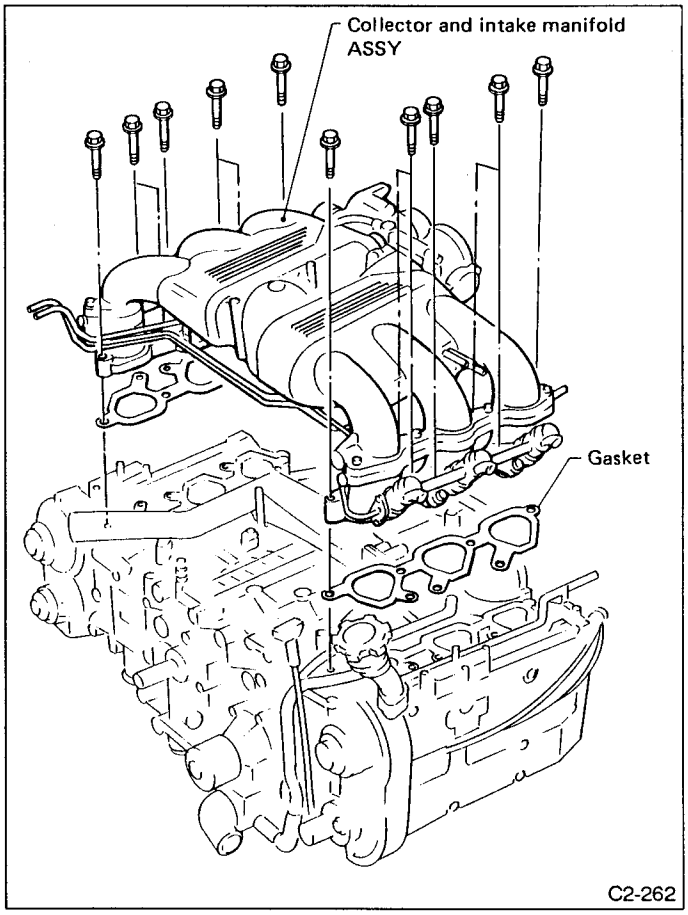

Fig. 82

9) Remove exhaust manifold and gasket.
10) Remove cylinder head covers, camshafts and related parts.
⟨Refer to 3 Camshafts [W3A0].⟩

2. CYLINDER HEAD

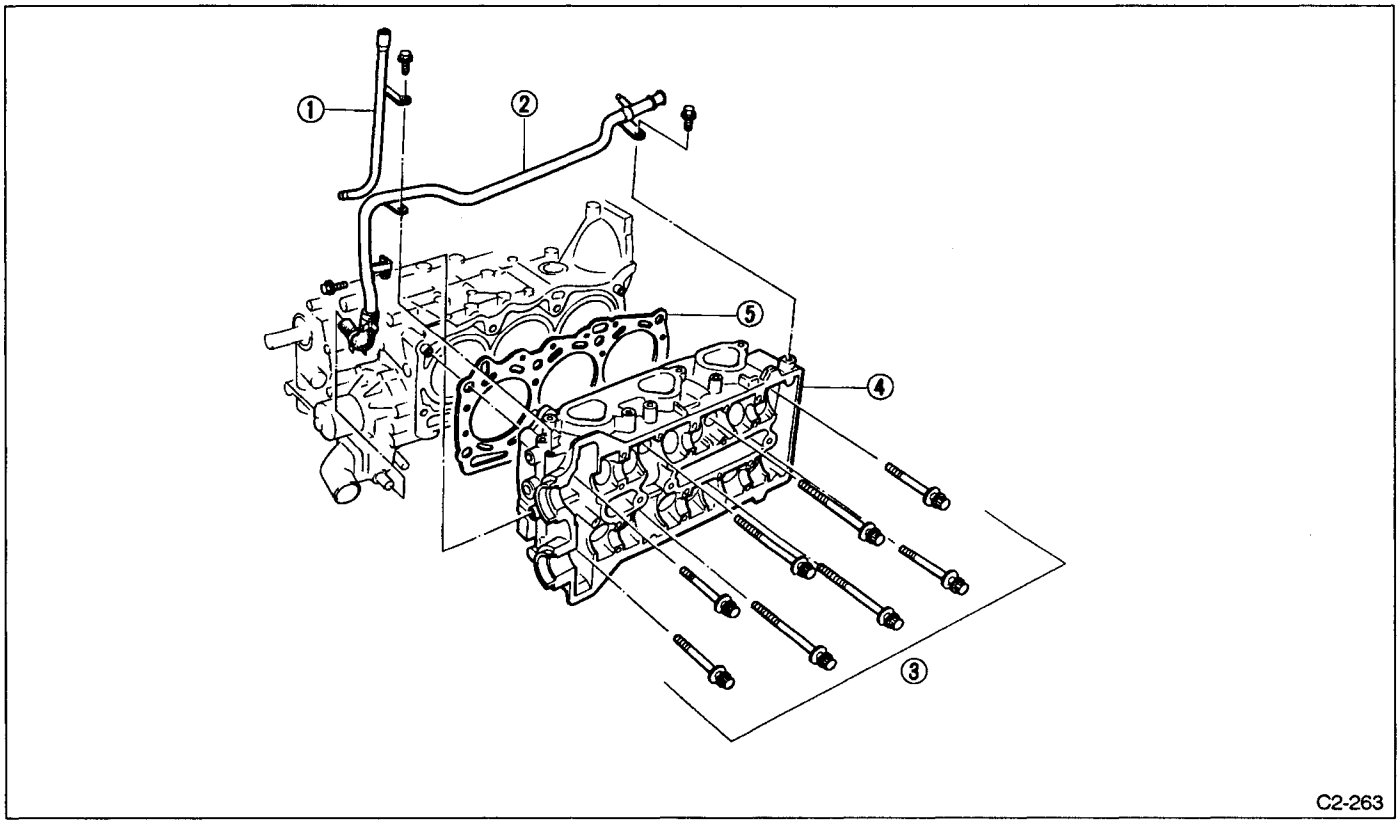

Fig. 83

1) Remove oil level gauge guide.
2) Remove heater pipe.
3) Remove cylinder head bolts in numerical sequence shown in Figure.
Leave bolts ⑤ or ⑧ engaged by three or four threads to prevent cylinder head from falling.

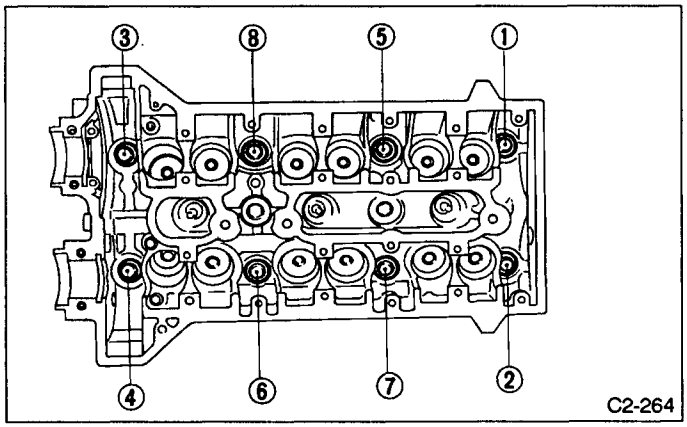

Fig. 84

4) While tapping cylinder head with a plastic hammer, separate it from cylinder block. Remove bolts ⑤ or ⑧ to remove cylinder head.
5) Remove cylinder head gasket.
6) Similarly, remove right-hand cylinder head.

B: DISASSEMBLY

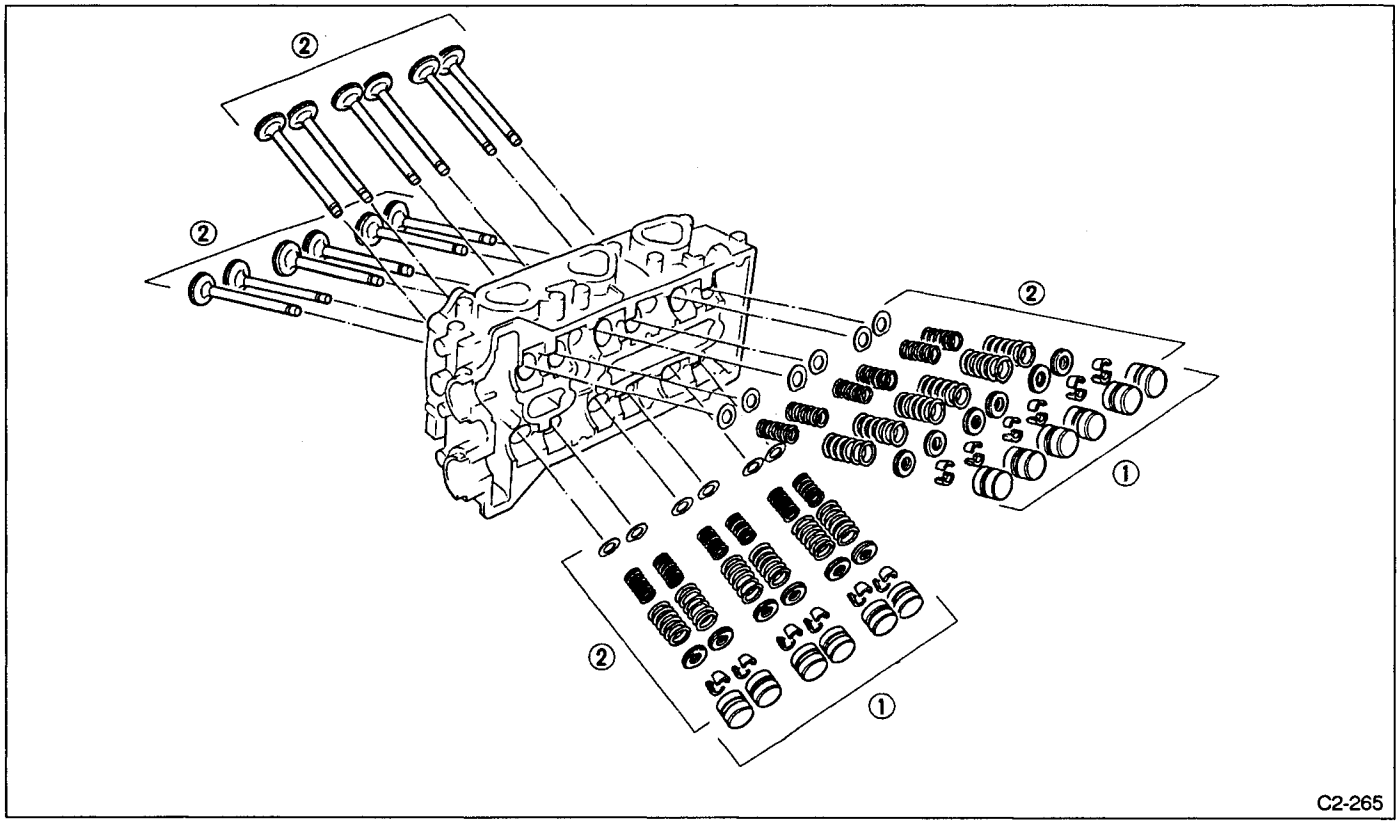

Fig. 85

1) Remove hydraulic lash adjusters.
Arrange the hydraulic lash adjusters in order so that they can be installed in their original positions.

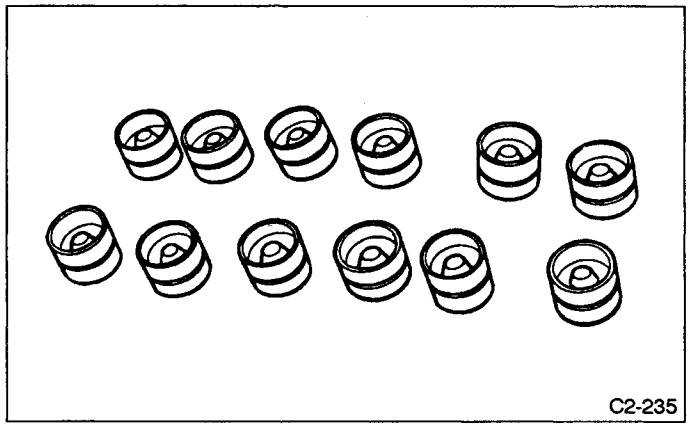

Fig. 86

2) Compress the valve spring and remove the valve spring retainer key. Remove each valve and valve spring.

a. Mark each valve to prevent confusion.
b. Use extreme care not to damage the lips of the intake valve oil seals and exhaust valve oil seals.

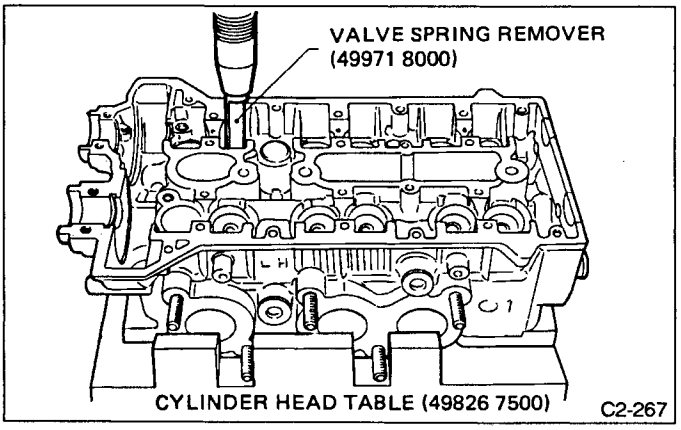

Fig. 87

C: INSPECTION

1. CYLINDER HEAD

1) Make sure that no crack or other damage exists. In addition to visual inspection, inspect important areas by means of red check.
2) Measure the warping of the cylinder head surface that mates with crankcase by using a straight edge and thickness gauge.
If the warping exceeds 0.05 mm (0.0020 in), regrind the surface with a surface grinder.

Warping limit:
0.05 mm (0.0020 in)
Grinding limit:
0.30 mm (0.0118 in)
Standard height of cylinder head:
127.5 mm (5.020 in)

Uneven torque for the cylinder head nuts can cause warping. When reassembling, pay special attention to the torque so as to tighten evenly.

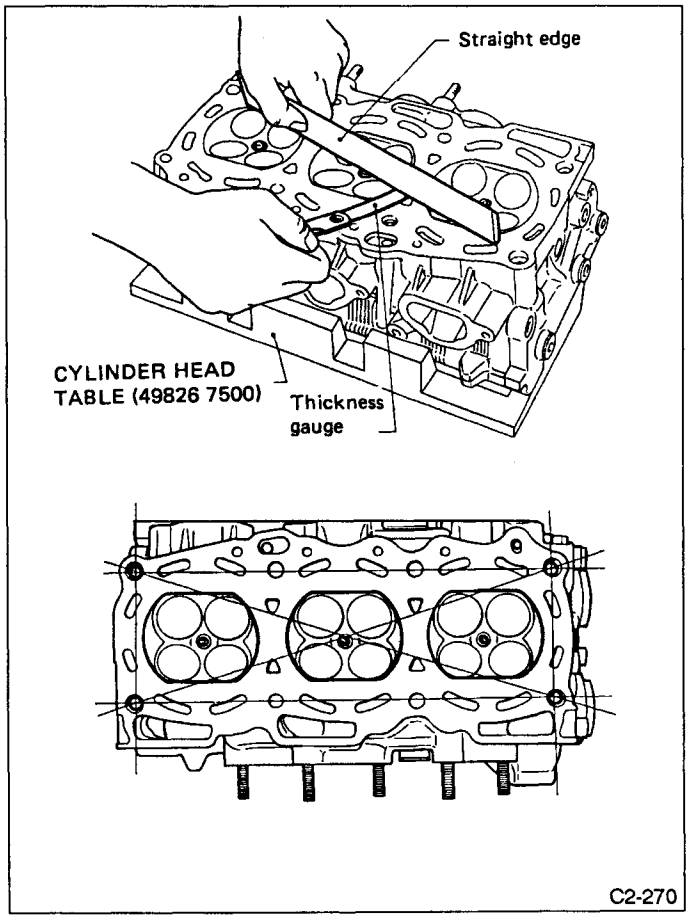

Fig. 88

2. VALVE SEAT

Inspect intake and exhaust valve seats, and correct the contact surfaces with valve seat cutter if they are defective or when valve guides are replaced.

W:
Intake
Standard
1.0 mm (0.039 in)
Limit
1.7 mm (0.067 in)
Exhaust
Standard
1.5 mm (0.059 in)
Limit
2.2 mm (0.087 in)

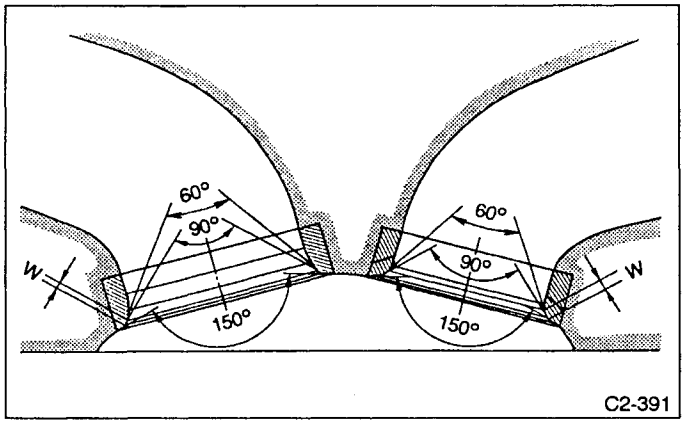

Fig. 89

3. VALVE GUIDE

1) Check the clearance between valve guide and stem. The clearance can be checked by measuring the outside diameter of valve stem and the inside diameter of valve guide with outside and inside micrometers respectively.

Clearance between the valve guide and valve stem:
Standard
Intake
0.030 — 0.057 mm (0.0012 — 0.0022 in)
Exhaust
0.040 — 0.067 mm (0.0016 — 0.0026 in)
Limit
0.10 mm (0.0039 in)
Valve guide inner diameters:
6.000 — 6.012 mm (0.2362 — 0.2367 in)
Valve stem outer diameter:
Intake
5.955 — 5.970 mm (0.2344 — 0.2350 in)
Exhaust
5.945 — 5.960 mm (0.2341 — 0.2346 in)

2) If the clearance between valve guide and stem exceeds the specification, replace guide as follows:
(1) Place cylinder head on CYLINDER HEAD TABLE with the combustion chamber upward so that valve guides enter the holes in CYLINDER HEAD TABLE.

(2) Insert VALVE GUIDE REMOVER into valve guide and press it down to remove valve guide.

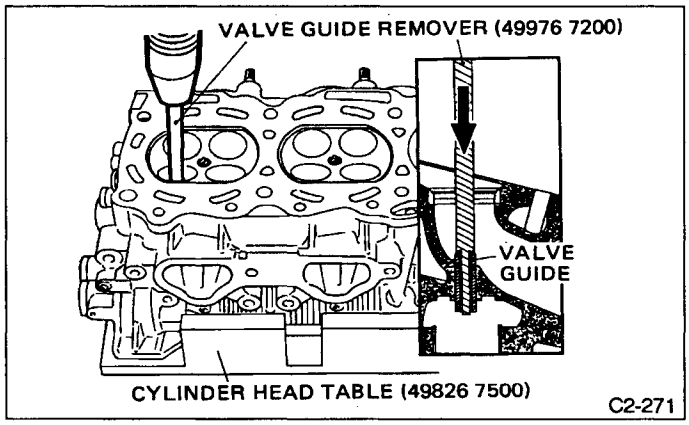

Fig. 90

(3) Turn cylinder head upside down and place VALVE GUIDE ADJUSTER as shown in the figure.

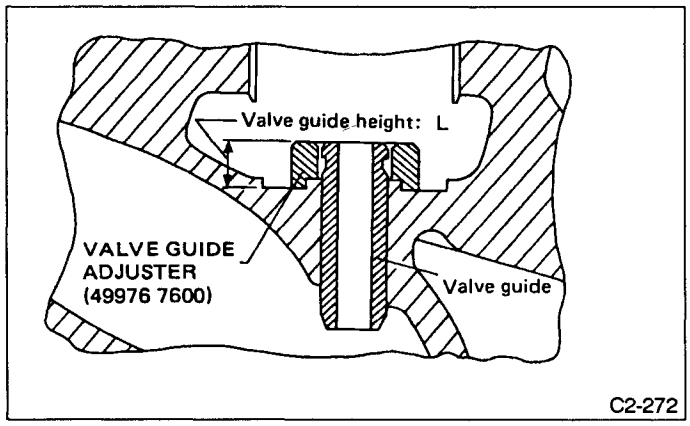

Fig. 91

(4) Before installing a new valve guide, be certain that the valve guide bore in the cylinder head is not scratched, pitted or damaged.

(5) Coat a new valve guide with oil and insert it into the bore. Place the VALVE GUIDE REMOVER into the valve guide, and press the guide into the cylinder head until the upper end of the guide is flush with the upper edge of the VALVE GUIDE ADJUSTER.

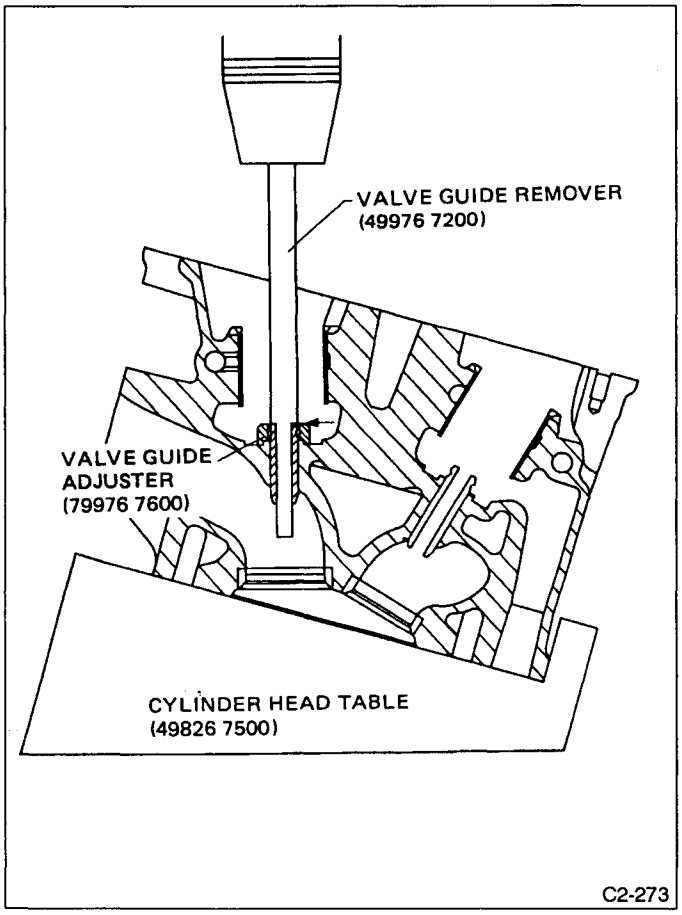

Fig. 92

(6) Check the valve guide height.

Valve guide height: L
8.5 mm (0.335 in)

(7) Ream the inside of the valve guide using VALVE GUIDE REAMER (499767400). Apply engine oil to the reamer, insert it into the guide and with light downward pressure, rotate the reamer clockwise. Continue rotating until the reamer is completely through the guide. Remove the reamer by rotating clockwise, while pulling upward. After reaming, clean the guide with engine oil to remove chips.

If the reamer is glazing the inside of the guide, sharpen or replace the reamer.

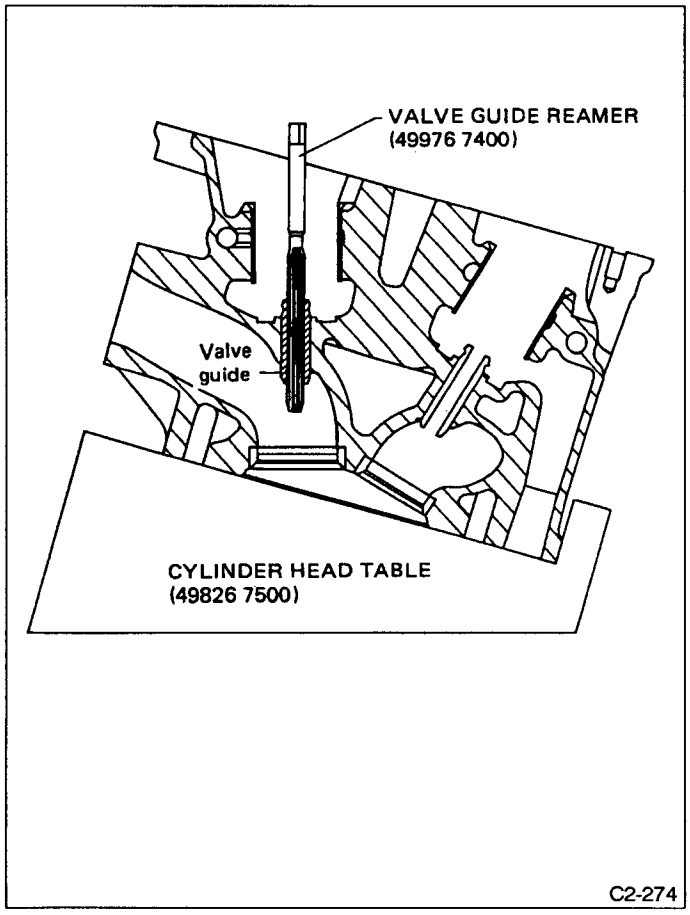

Fig. 93

(8) Coat the face of the valve with talcum powder, and lightly rotate the valve against the seat to inspect for proper valve seating.

4. INTAKE AND EXHAUST VALVE

1) Inspect the flange and stem of valve, and replace if damaged, worn, or deformed, or if "H" is less than the specified limit.

H:
- **Intake**
  - **Standard**
    - **0.8 mm (0.031 in)**
  - **Limit**
    - **0.6 mm (0.024 in)**
- **Exhaust**
  - **Standard**
    - **1.0 mm (0.039 in)**
  - **Limit**
    - **0.8 mm (0.031 in)**
- **Valve overall length:**
  - **Intake 90.00 mm (3.5433 in)**
  - **Exhaust 90.85 mm (3.5768 in)**

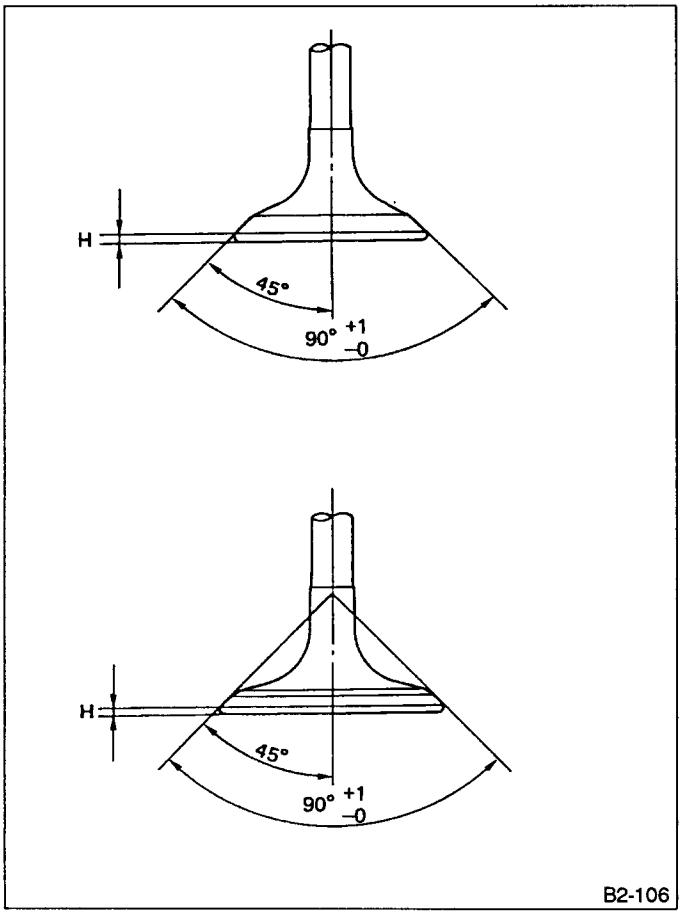

Fig. 94

2) Put a small amount of grinding compound on the seat surface and lap the valve and seat surface. Also refer to Cylinder Head 4) at this time. Install a new intake valve oil seal after lapping.

5. VALVE SPRINGS

1) Check valve springs for damage, free length, and tension. Replace valve spring if it is not to the specifications presented below.

2) To measure the squareness of the valve spring, stand the spring on a surface plate and measure its deflection at the top using a try square.

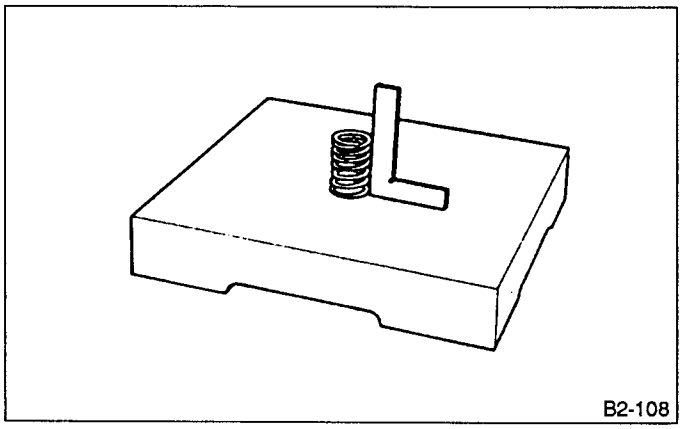

Fig. 95

	Outer spring	Inner spring
Free length	36.4 mm (1.433 in)	34.9 mm (1.374 in)
Tension/ spring height	124.5 — 142.2 N (12.7 — 14.5 kg, 28.0 — 32.0 lb)/29 mm (1.14 in)	58.8 — 66.7 N (6 — 6.8 kg, 13.2 — 15.6Normal Control lb)/ 27.5 mm (1.083 in)
	308.9 — 356.0 N (31.5 — 36.3 kg, 69.5 — 80.0 lb)/ 21.1 mm (0.831 in)	147.1 — 168.7 N (15 — 17.2 kg, 33.1 — 37.9 lb)/ 19.6 mm (0.772 in)
Squareness	2.5°, 1.6 mm (0.063 in)	2.5°, 1.5 mm (0.059 in)

6. INTAKE AND EXHAUST VALVE OIL SEAL

Replace oil seal with new one, if lip is damaged or spring out of place, or when the surfaces of intake valve and valve seat are reconditioned or intake valve guide is replaced.

Press in oil seal to the specified dimension indicated in the figure, using OIL SEAL INSTALLER.

a. Apply engine oil to oil seal before force-fitting.

b. Be sure to press by hand, never hammer on the special tool.

c. Differentiate between intake valve oil seal and exhaust valve oil seal by noting their difference in color.

Color of rubber part:
Intake [black]
Exhaust [brown]
Color of spring part:
Intake [white]
Exhaust [white]

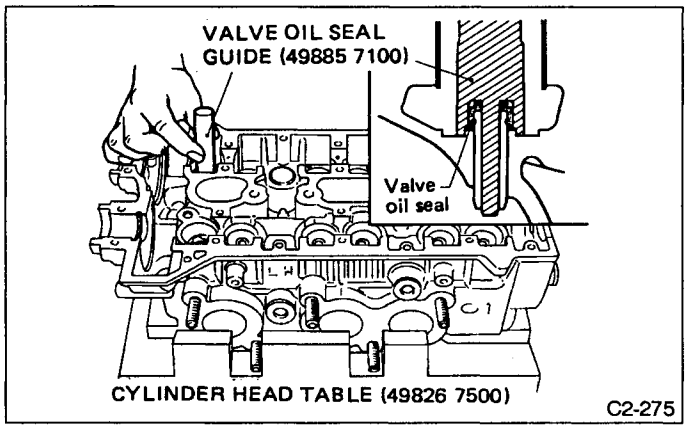

Fig. 96

7. HYDRAULIC LASH ADJUSTER

1) Visually, check the contact and sliding surface for wear or scratches.

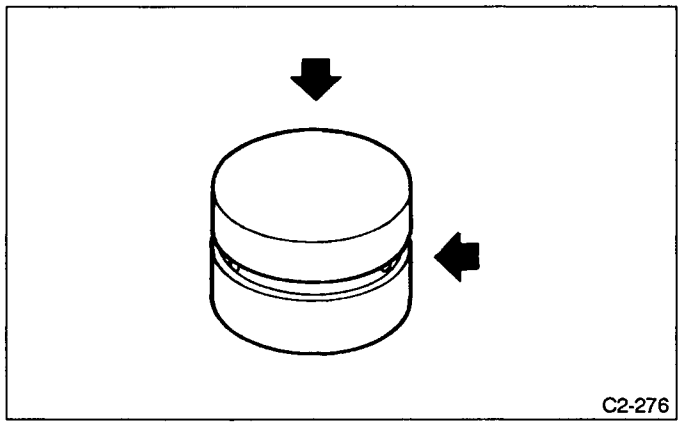

Fig. 97

2) Measure the hydraulic lash adjuster diameter.

Diameter D:
32.965 — 32.975 mm (1.2978 — 1.2982 in)

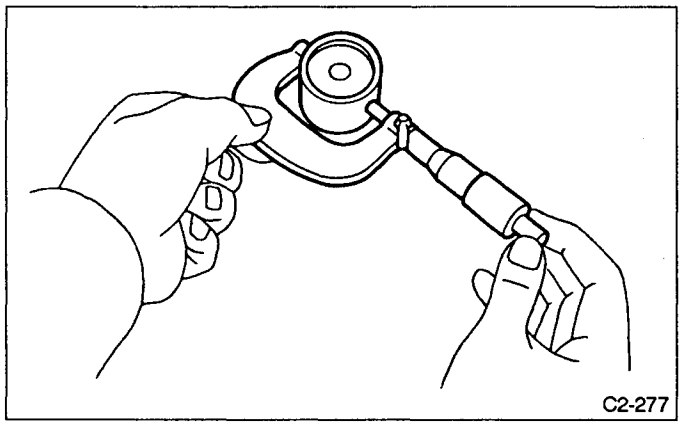

Fig. 98

3) Measure the hydraulic lash adjuster bush inner diameter.

Inner diameter:
33.009 — 33.031 mm (1.2996 — 1.3004 in)

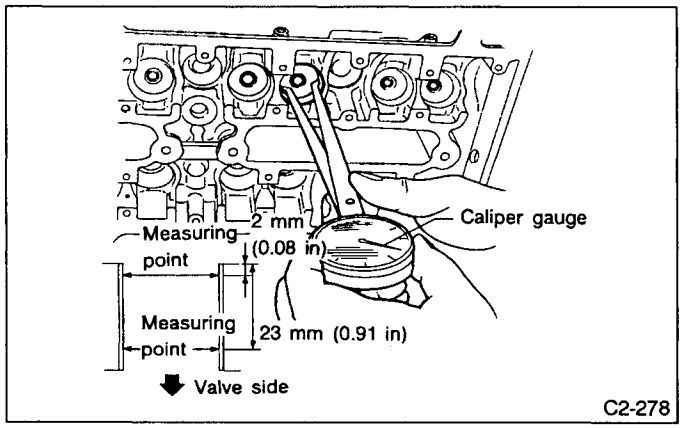

Fig. 99

4) Subtract the hydraulic lash adjuster diameter from the hydraulic lash adjuster bush inner diameter measurement. The oil clearance can be calculated. If the oil clearance exceeds the limit, replace cylinder head.

Standard oil clearance:
0.028 — 0.078 mm (0.0011 — 0.0031 in)
Limit:
0.110 mm (0.0043 in)

D: ASSEMBLY

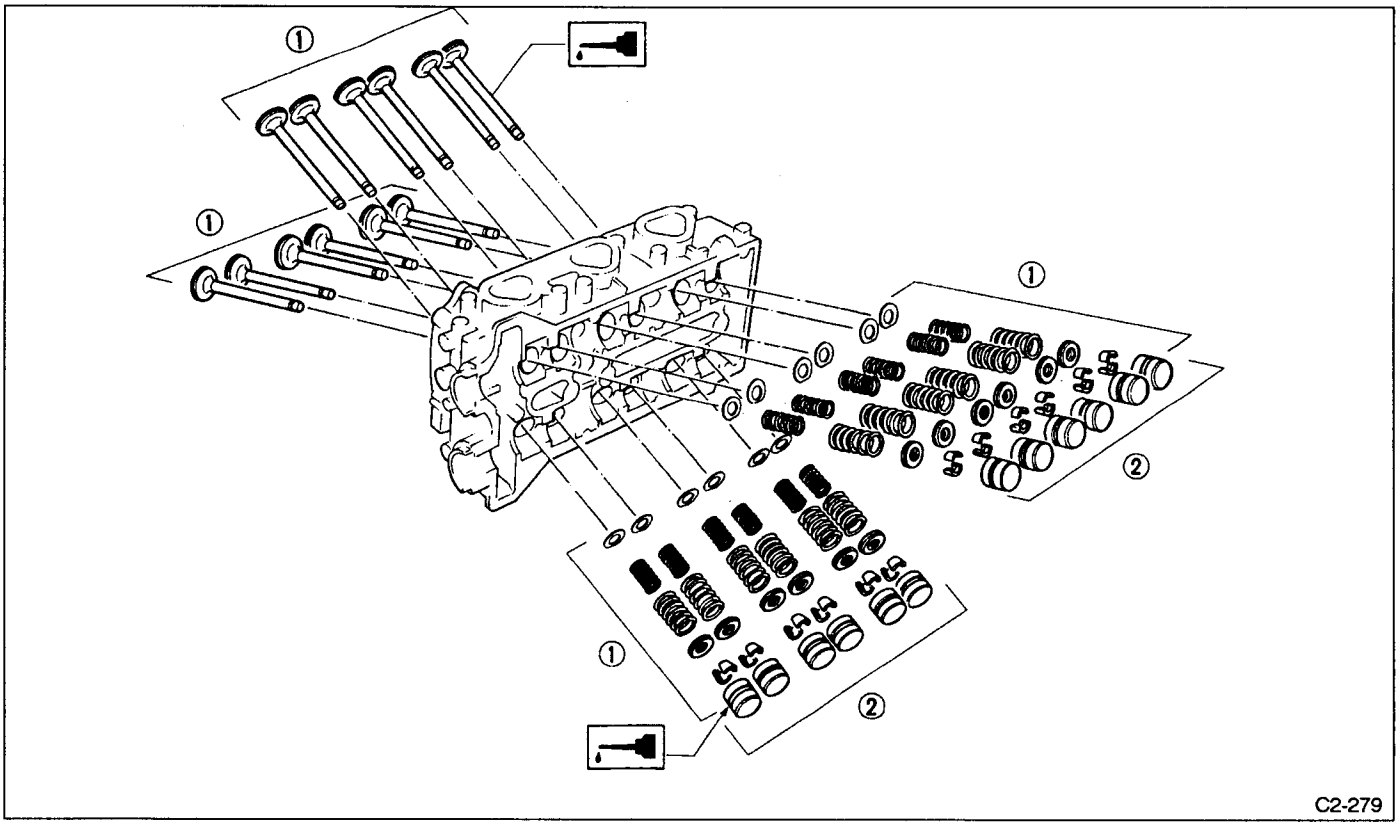

Fig. 100

1) Installation of valve spring and valve
(1) Coat stem of each valve with engine oil and insert valve into valve guide.

When inserting valve into valve guide, use special care not to damage the oil seal lip.

(2) Install valve spring and retainer.

Be sure to install the valve springs with their close coiled end facing the seat on the cylinder head.

(3) Compress valve spring and fit valve spring retainer key.

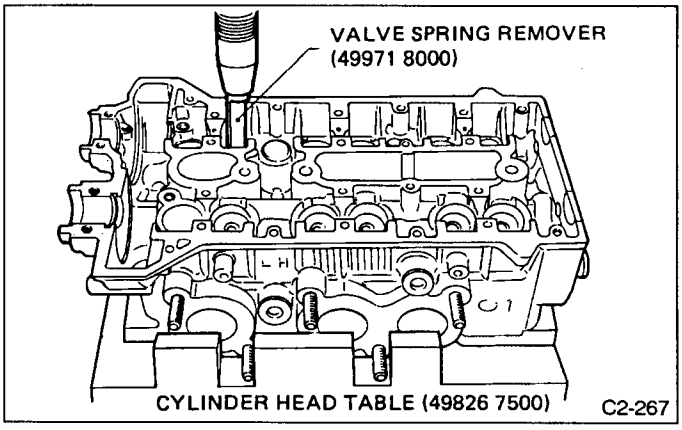

Fig. 101

(4) After installing tap valve spring retainers, lightly with wooden hammer for better seating.

2) Apply a coat of engine oil to hydraulic lash adjuster sliding surface and insert hydraulic lash adjusters.

E: INSTALLATION

1. CYLINDER HEAD

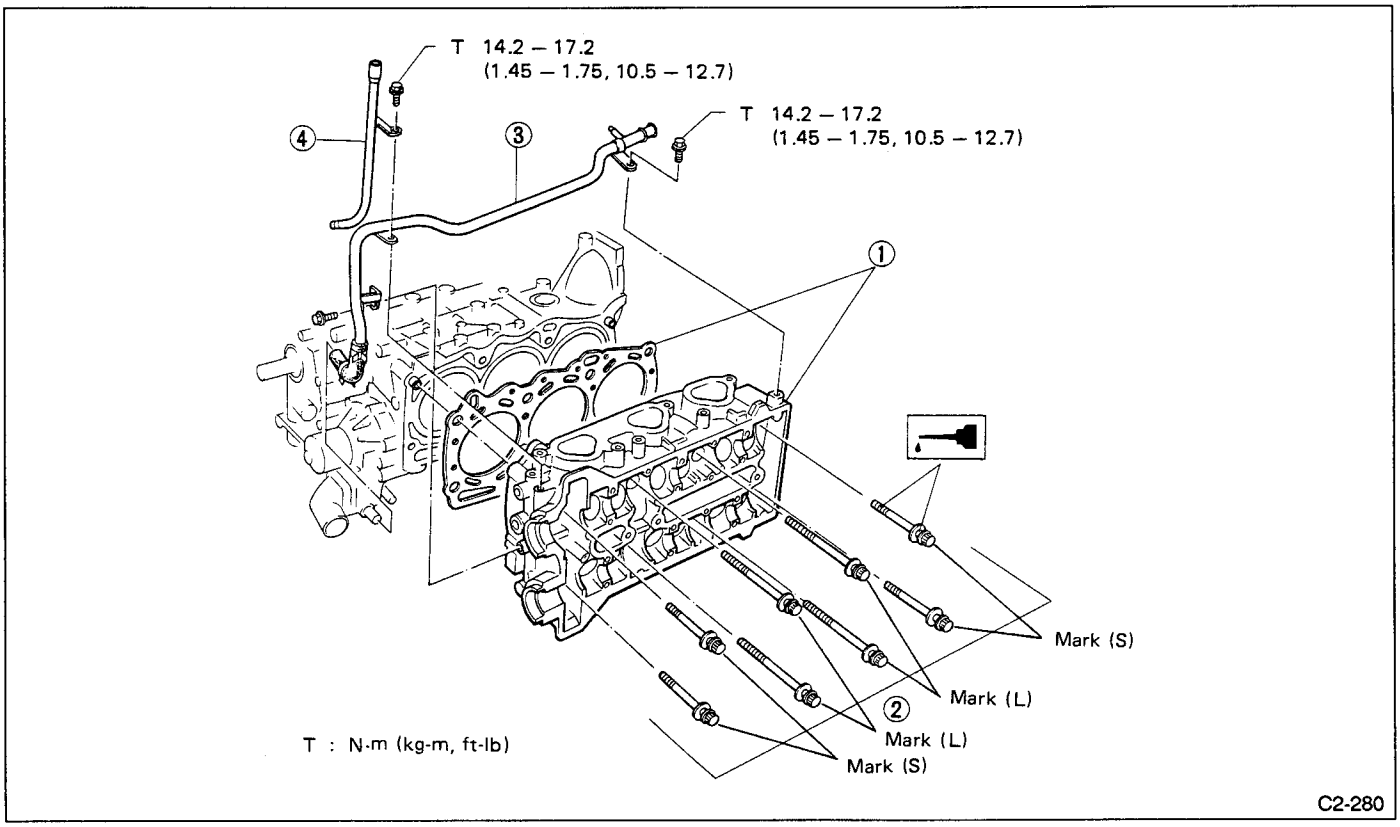

Fig. 102

1) Install cylinder head and gaskets on cylinder block.
Use new cylinder head gaskets.
2) Tighten cylinder head bolts.
   (1) Apply a coat of engine oil to washers and bolt threads.
   (2) Tighten all bolts to 29 N•m (3.0 kg-m, 22 ft-lb) in the numerical order shown in Figure.
   (3) Tighten all bolts to 69 N•m (7.0 kg-m, 51 ft-lb) in the numerical order shown in Figure.
   (4) Back off all bolts by 180°.
   (5) Further back off all bolts by 180°.
   (6) Tighten all bolts to 27 N•m (2.8 kg-m, 20 ft-lb), in the numerical order shown in Figure.
   (7) Re-tighten bolts ①, ②, ③ and ④ by 80° - 90° in the numerical order shown in Figure.
Do not tighten bolts more than 90°.
   (8) Re-tighten bolts ⑤, ⑥, ⑦ and ⑧ to 44 N•m (4.5 kg-m, 33 ft-lb) in the numerical order shown in Figure.
   (9) Further tighten all bolts by 80° - 90° in the numerical order shown in Figure.
Ensure that the total "re-tightening angle" (Steps (7) and (9) above) does not exceed 180°.

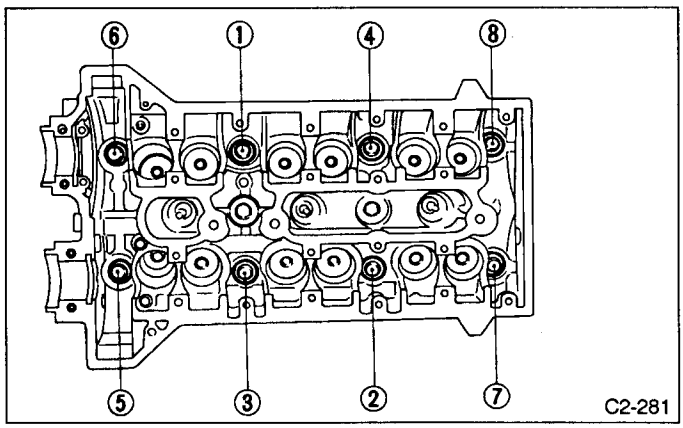

Fig. 103

3) Install heater pipe.
4) Install oil level gauge.

2. INTAKE MANIFOLD

Use dry compressed air to remove foreign particles before installing sensors.

1) Install camshafts, cylinder head covers and related parts.
⟨Refer to 3 Camshafts [W3E0].⟩
2) Install exhaust manifold and gasket.
3) Install collector and intake manifold ASSY and gaskets.

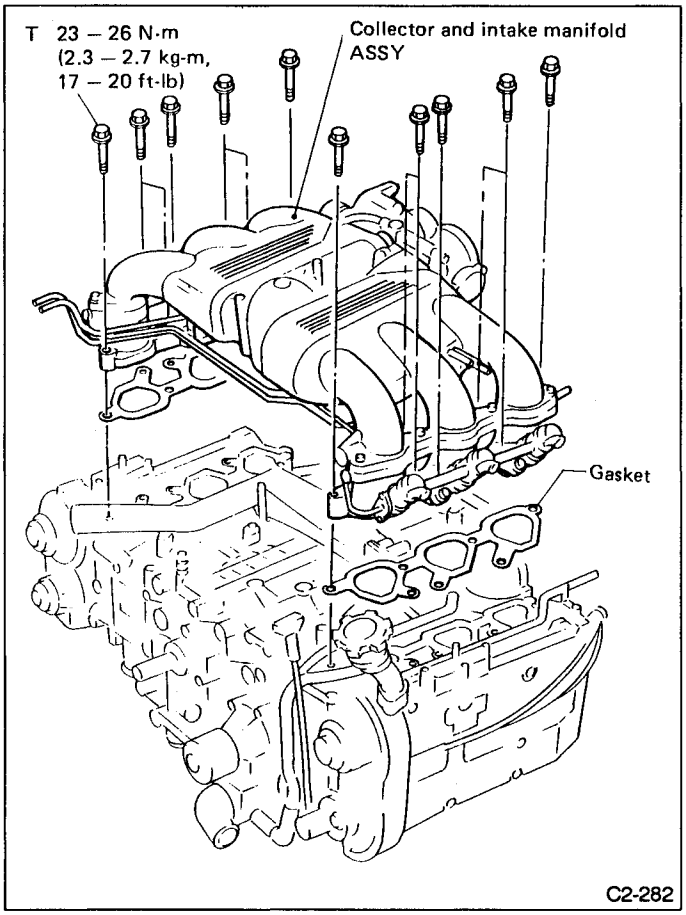

Fig. 104

4) Connect two water hoses to thotttle body.
5) Connect PCV hose to connector PCV.
6) Connect auxiliary air control valve hose.
7) Connect blow-by hoses.
8) Connect auxiliary air control valve connector.
9) Install EGR valve, EGR pipe and BPT.
10) Install camshaft sprockets, timing belt and related parts.
⟨Refer to 2 Timing belt [W2C0].⟩

5. Cylinder Block

A: REMOVAL

1. RELATED PARTS

1) Remove timing belt, camshaft sprockets and related parts.
(Refer to 2 Timing belt [W2A0].)
2) Remove cylinder head covers and camshafts and related parts.
(Refer to 3 Camshafts [W3A0].)
3) Remove intake manifold, cylinder head and related parts.
(Refer to 4 Cylinder head [W4A0].)
4) Remove crank angle sensor and knock sensors.

2. OIL PUMP AND WATER PUMP

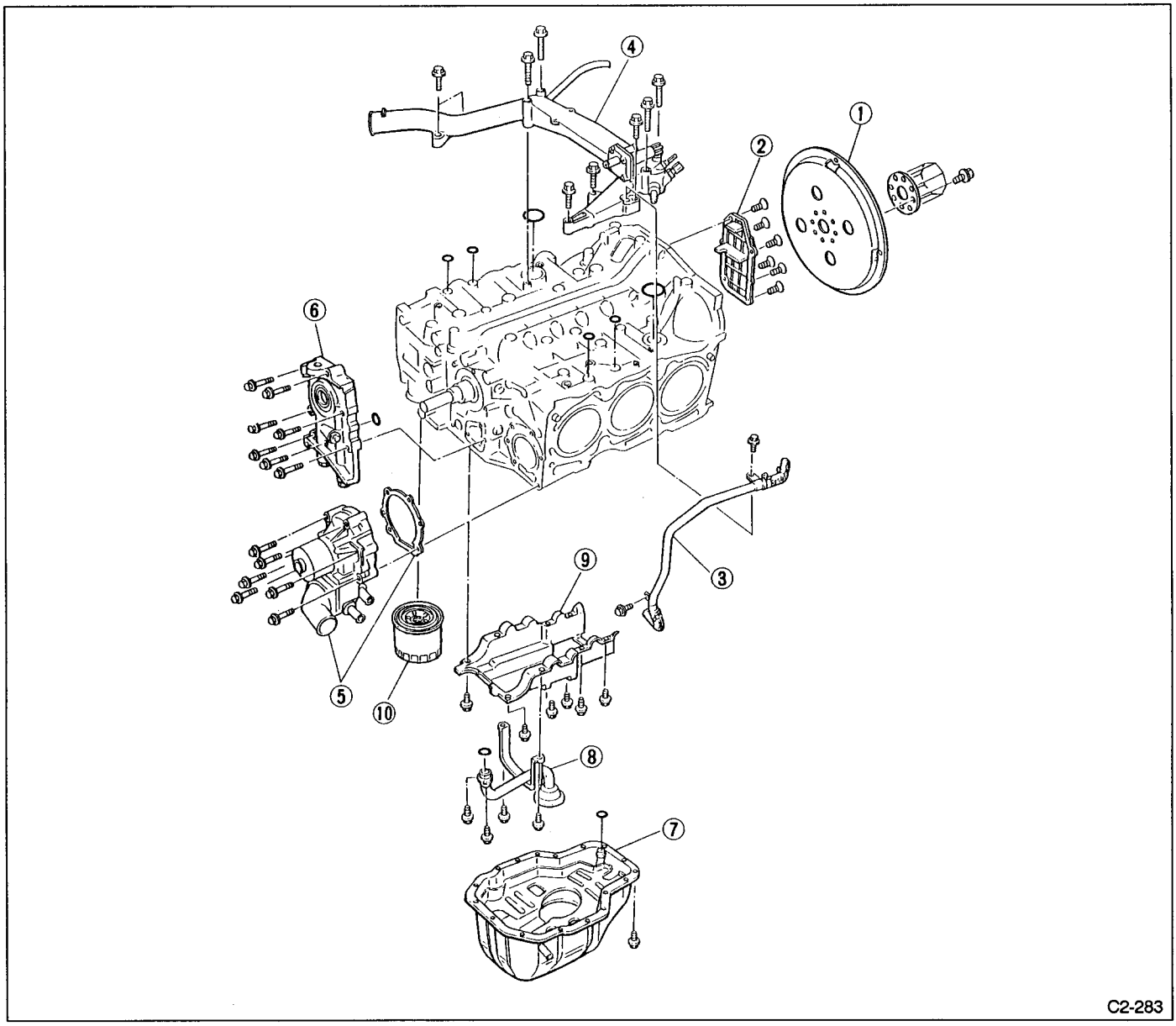

Fig. 105

1) Remove drive plate.
To lock crankshaft, use CRANKSHAFT STOPPER.

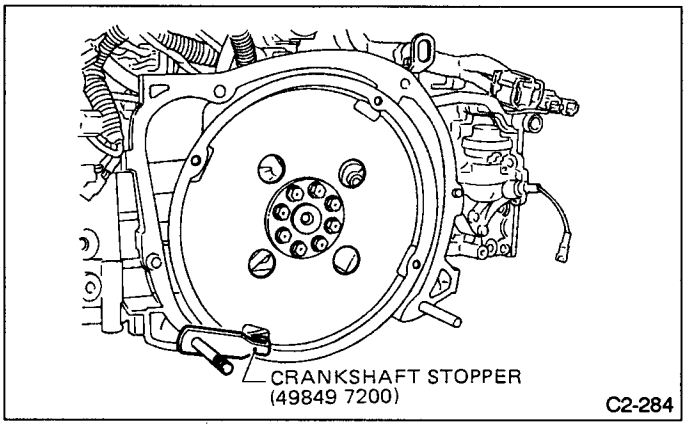

Fig. 106

2) Remove oil separator cover.
3) Remove water by-pass pipe.
4) Remove water pipe.
5) Remove water pump and gasket.
6) Remove oil pump from cylinder block. Use a standard screwdriver as shown in Figure when removing oil pump.
Be careful not to scratch the matching surface of cylinder block and oil pump.

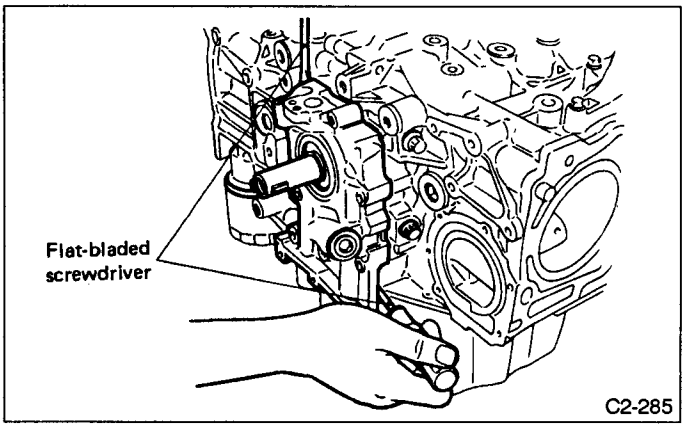

Fig. 107

7) Removal of oil pan.
(1) Turn cylinder block with #2, #4 and #6 piston sides facing upward.
(2) Remove bolts which secure oil pan to cylinder block.
(3) Insert a oil-pan cutter blade between cylinder block-to-oil pan clearance and remove oil pan.
Do not use a screwdriver or similar tool in place of oil-pan cutter blade.

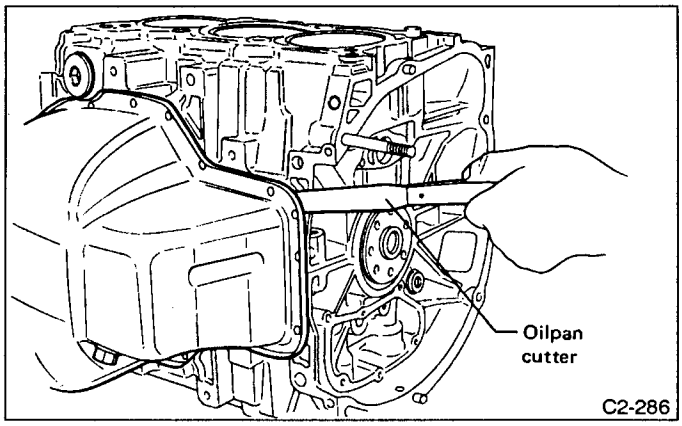

Fig. 108

8) Remove oil strainer.
9) Remove baffle plate.
10) Remove oil filter.

B: DISASSEMBLY

1. PISTON PIN AND CYLINDER BLOCK CONNECTING BOLT

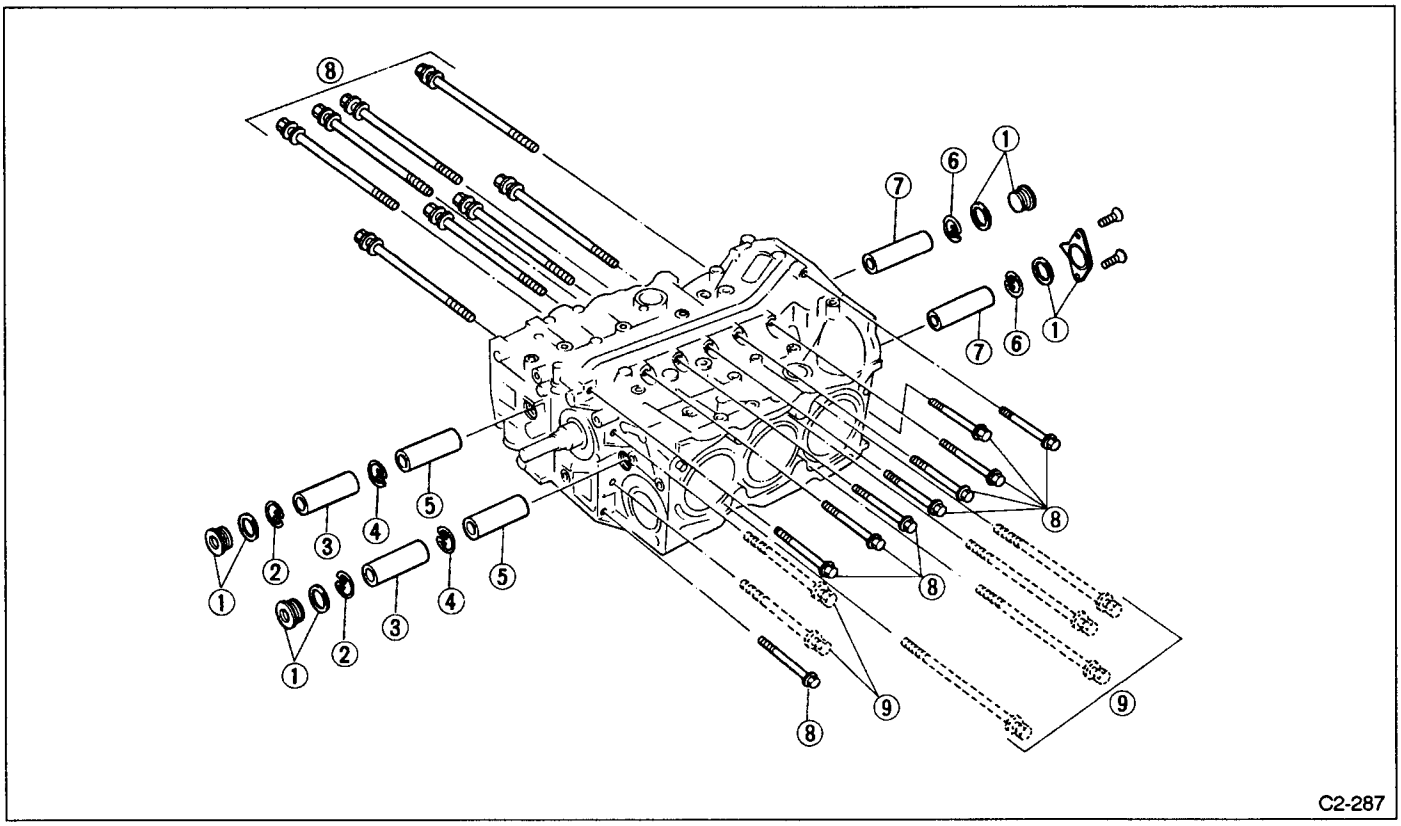

Fig. 109

1) Remove service hole cover and service hole plugs using hexagon wrench (14 mm).
2) Rotate crankshaft to bring #1 and #2 pistons to BDC position, then remove piston circlip through service hole of #1 and #2 cylinders.

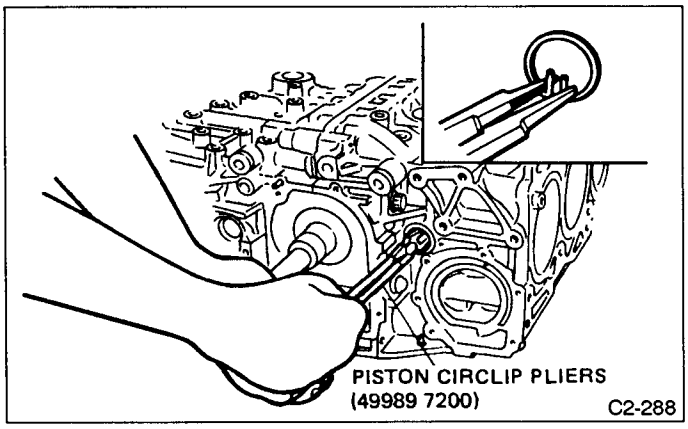

Fig. 110

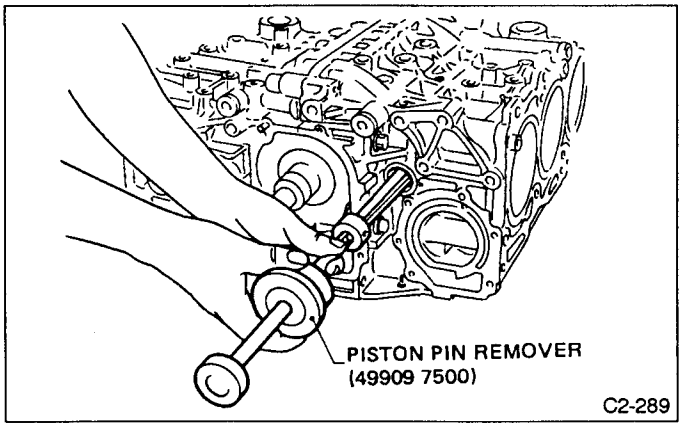

Fig. 111

3) Draw out piston pin from #1 and #2 pistons.
Be careful not to confuse original combination of piston, piston pin and cylinder.

4) Rotate crankshaft to bring #3 and #4 piston to BDC position, then remove piston circlip through service hole of #1 and #2 cylinders with PISTON CIRCLIP PLIERS.

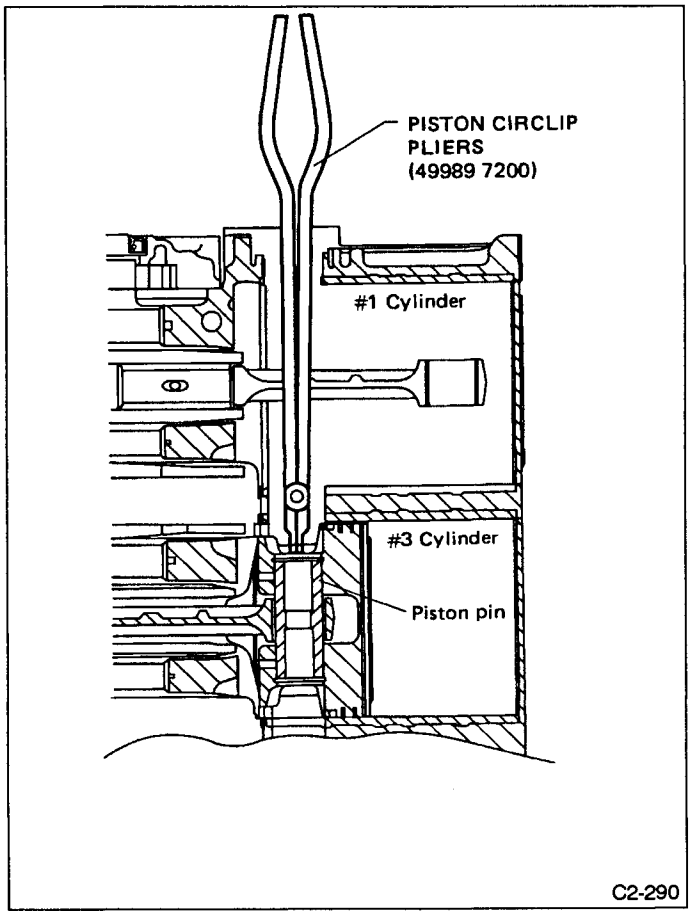

Fig. 112

5) Draw out piston pin from #3 and #4 pistons through service hole of #1 and #2 cylinders.

6) Rotate crankshaft to bring #5 and #6 pistons BDC position, then remove piston circlip through service hole of #5 and #6 cylinders.

7) Draw out piston pin from #5 and #6 pistons.

8) Remove bolts which connect cylinder block on the side of #1, #3 and #5 cylinders.

9) Back off bolts which connect cylinder block on the side of #2, #4 and #6 cylinders two or three turns.

2. CYLINDER BLOCK

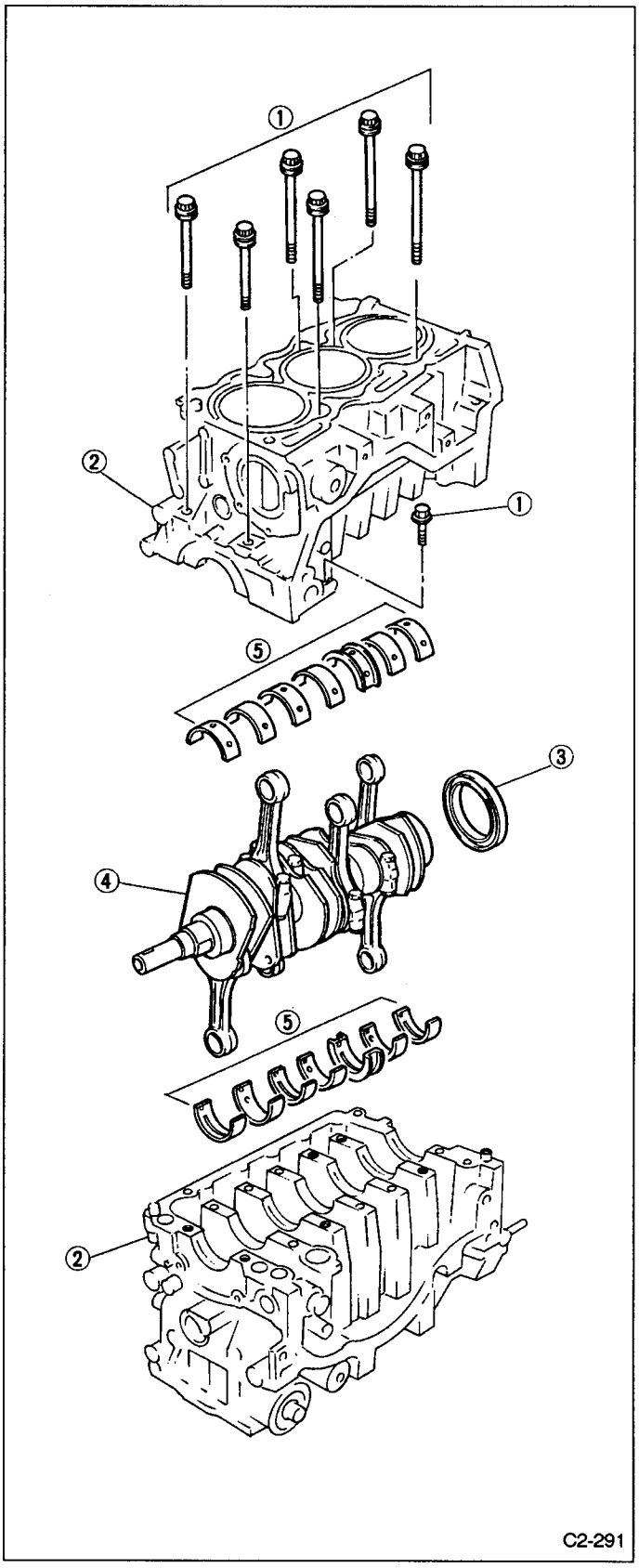

Fig. 113

1) Set up cylinder block so that #2, #4 and #6 cylinders are on the upper side, then remove cylinder block connecting bolts.
Be sure to remove small connecting bolt in the crankcase.

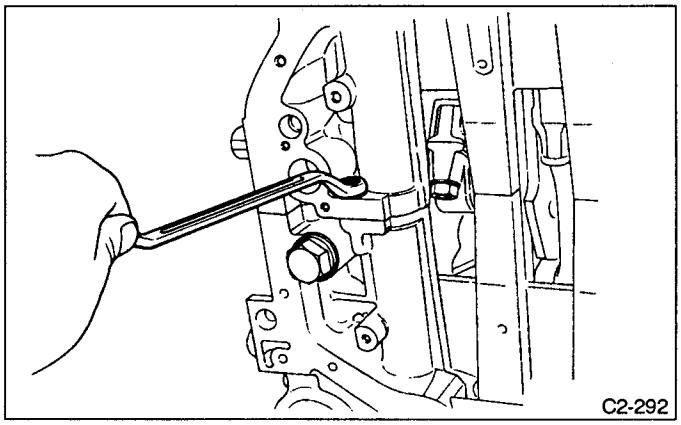

Fig. 114

2) Separate left-hand and right-hand cylinder blocks.
When separating cylinder block, do not allow the connecting rod to fall and damage the cylinder block.
3) Remove rear oil seal.
4) Remove crankshaft together with connecting rod.
5) Remove crankshaft bearings from cylinder block by hand.
Do not confuse combination of crankshaft bearings. Press bearing at the end opposite to locking lip.
6) Draw out each piston from cylinder block using wooden bar or hammer handle.
Do not confuse combination of piston and cylinder.

3. CRANKSHAFT AND PISTON

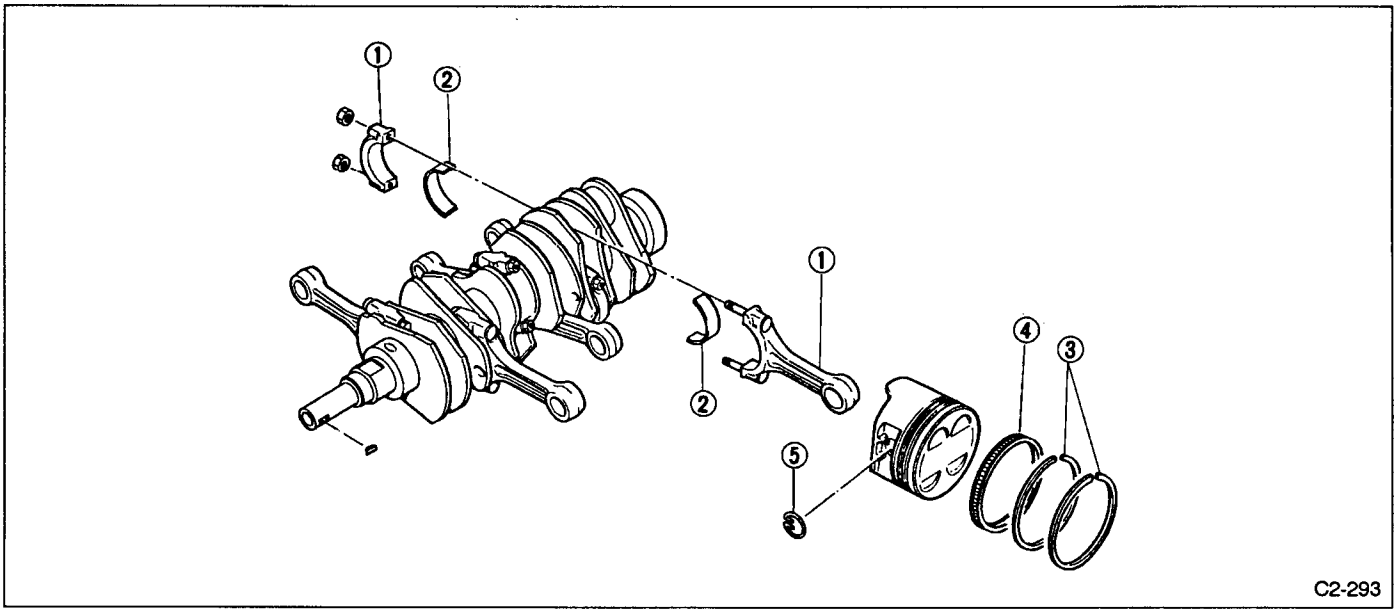

Fig. 115

1) Remove connecting rod cap.
2) Remove connecting rod bearing.

Arrange removed connecting rod, connecting rod cap and bearing in order to prevent confusion.

3) Remove the piston rings using the piston ring expander.
4) Remove the oil ring by hand.

Arrange the removed piston rings in good order to prevent confusion.

5) Remove circlip.

C: INSPECTION

1. CYLINDER BLOCK

1) Check for cracks and damage visually. Especially, inspect important parts by means of red check.
2) Check the oil passages for clogging.
3) Inspect the crankcase surface that mates with cylinder head for warping by using a straight edge, and correct by grinding if necessary.

Warping limit:
0.05 mm (0.0020 in)
Grinding limit:
0.4 mm (0.016 in)

2. CYLINDER AND PISTON

1) The cylinder bore size is stamped on the cylinder block's front upper surface.
   (1) Standard sized pistons are classified into three grades, "A", "B" and "C". These grades should be used as a guideline in selecting a standard piston.
   (2) When piston is to be replaced due to general or cylinder wear, determine a suitable sized piston by measuring the piston clearance.

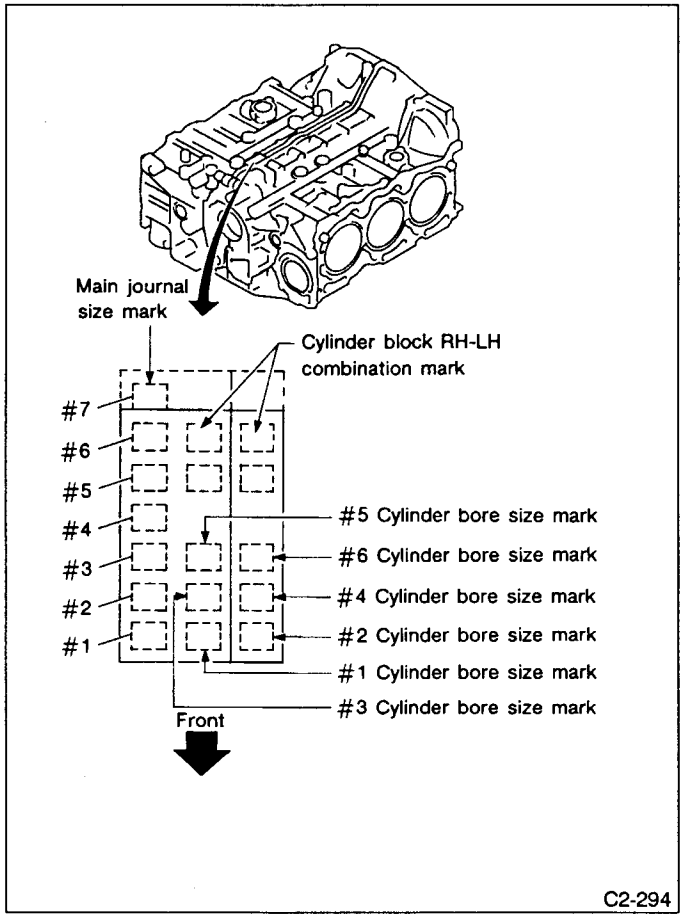

Fig. 116

(3) Proper combination of pistons and cylinders

Cylinder		Piston		Piston clearance 20°C (68° F)
Bore size symbol	Cylinder bore dia.	Piston grade symbol	Standard piston dia.	
A	96.905 — 96.915 mm (3.8151 — 3.8155 in)	A	96.885 — 96.895 mm (3.8144 — 3.8148 in)	0.01 — 0.03 mm (0.0004 — 0.0012 in)
B	96.895 —96.905 mm (3.8148 — 3.8151 in)	B	96.875 — 96.885 mm (3.8140 — 3.8144 in)	
C	96.885 — 96.895 mm (3.8144 — 3.8148 in)	C	96.865 — 96.875 mm (3.8136 — 3.8140 in)	

2) Measure the inner diameter of each cylinder in both the thrust and piston pin directions at the heights shown in the figure, using a cylinder bore gauge.
Measurement should be performed at a temperature 20°C (69°F).

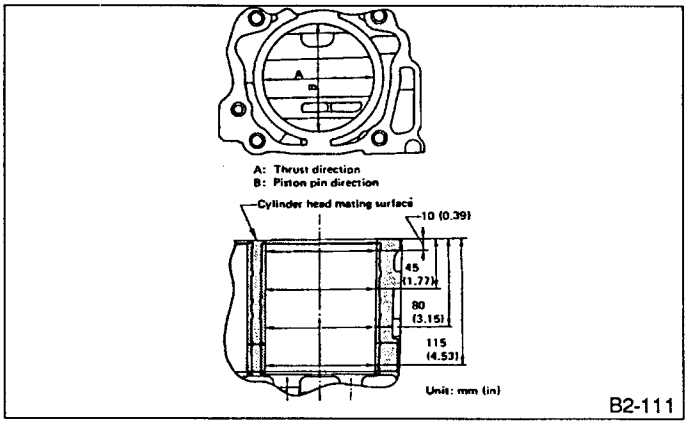

Fig. 117

Taper:
Standard
0.015 mm (0.0006 in)
Limit
0.050 mm (0.0020 in)
Out-of-roundness:
Standard
0.010 mm (0.0004 in)
Limit
0.050 mm (0.0020 in)
Cylinder to piston clearance at 20°C (68°F):
Standard
0.010 — 0.030 mm (0.0004 — 0.0012 in)
Limit
0.060 mm (0.0024 in)
Standard diameter:
A 96.905 — 96.915 mm (3.8151 — 3.8155 in)
B 96.895 — 96.905 mm (3.8148 — 3.8151 in)
C 96.885 — 96.895 mm (3.8144 — 3.8148 in)

3) Boring and honing
(1) If the value of taper, out-of-roundness, or cylinder-to-piston clearance measured exceeds the specified limit or if there is any damage on the cylinder wall, rebore it to use an oversize piston.
When any of the cylinders needs reboring, all other cylinders must be bored at the same time, and use oversize pistons. Do not perform boring on one cylinder only, nor use an oversize piston for one cylinder only.
(2) Get six of the oversize pistons and measure the outer diameter of each piston at the height shown in the figure. (Thrust direction)
Measurement should be performed at a temperature of 20°C (68°F).

Piston outer diameter:
Standard
A 96.885 — 96.895 mm (3.8144 — 3.8148 in)
B 96.875 — 96.885 mm (3.8140 — 3.8144 in)
C 96.865 — 96.875 mm (3.8136 — 3.8140 in)
0.25 mm (0.0098 in) oversize
97.125 — 97.135 mm (3.8238 — 3.8242 in)
0.50 mm (0.0197 in) oversize
97.375 — 97.385 mm (3.8337 — 3.8340 in)

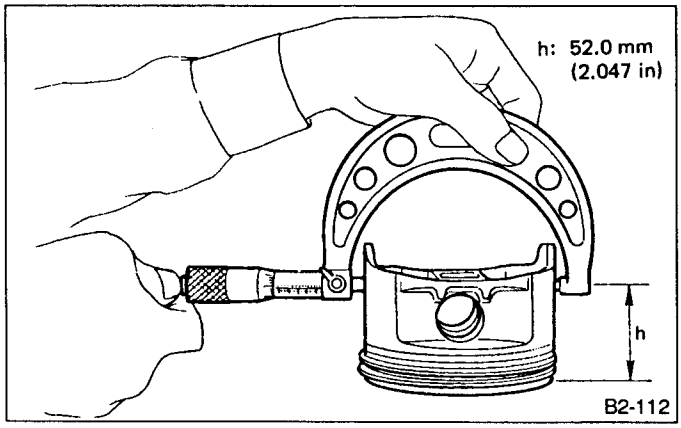

Fig. 118

(3) If the cylinder inner diameter exceeds the limit after boring and honing, replace the crankcase.

Immediately after reboring, the cylinder diameter may differ from its real diameter due to temperature rise. Thus, pay attention to this when measuring the cylinder diameter.

Limit of cylinder enlarging (boring):
0.3 mm (0.012 in)

3. PISTON AND PISTON PIN

1) Check pistons and piston pins for damage, cracks, and wear and the piston ring grooves for wear and damage. Replace if defective.
2) Measure the piston-to-cylinder clearance at each cylinder as instructed in CYLINDER AND PISTON. If any of the clearances is not to specification, replace the piston or bore the cylinder to use an oversize piston.
3) Make sure that piston pin can be inserted into the piston pin hole with a thumb at 20°C (68°F). Replace if defective.

Standard clearance between piston pin and hole in piston:
0.004 — 0.008 mm (0.0002 — 0.0003 in)
Standard clearance between piston pin and hole in connecting rod:
0 — 0.018 mm (0 — 0.0007 in)

4. PISTON RING

1) If piston ring is broken, damaged, or worn, or if its tension is insufficient, or when the piston is replaced, replace piston ring with a new one of the same size as the piston.
"R" is marked on the end of the top and second rings. When installing the rings to the piston, face this mark upward.

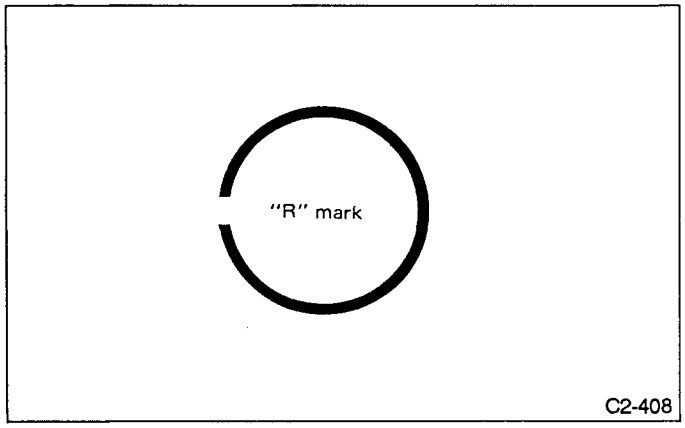

Fig. 119

The oil ring is a combined ring consisting of two rails and a spacer in between. When installing, be careful not to make misassembly.

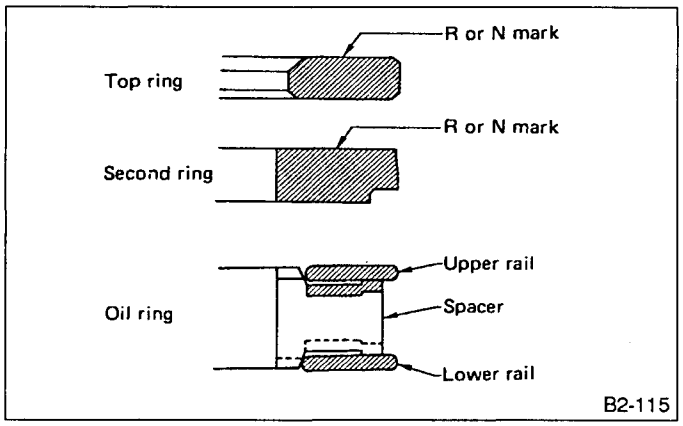

Fig. 120

2) Squarely place piston ring and oil ring in cylinder using piston, and measure the piston ring gap with a thickness gauge.

Unit: mm (in)

		Standard	Limit
Piston ring gap	Top ring	0.20 — 0.30 (0.0079 — 0.0118)	0.5 (0.020)
	Second ring	0.37 — 0.52 (0.0146 — 0.0205)	1.0 (0.039)
	Oil ring rail	0.20 — 0.60 (0.0079 — 0.0236)	1.5 (0.059)

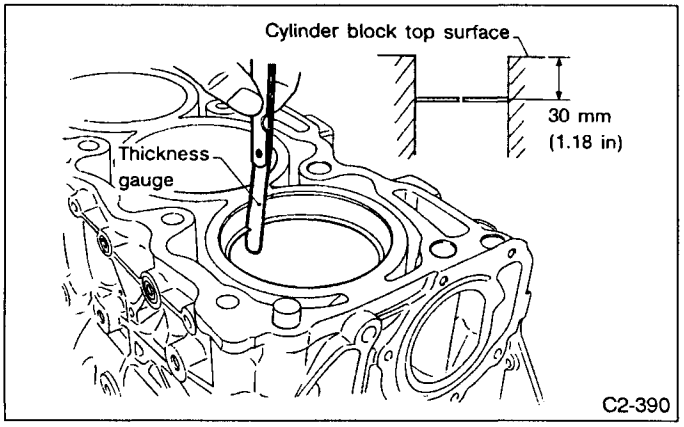

Fig. 121

3) Measure the clearance between piston ring and piston ring groove with a thickness gauge.
Before measuring the clearance, clean the piston ring groove and piston ring.

Unit:mm (in)

		Standard	Limit
Clearance between piston ring and piston ring groove	Top ring	0.04 — 0.09 (0.0016 — 0.0035)	0.15 (0.0059)
	Second ring	0.03 — 0.07 (0.0012 — 0.0028)	0.15 (0.0059)

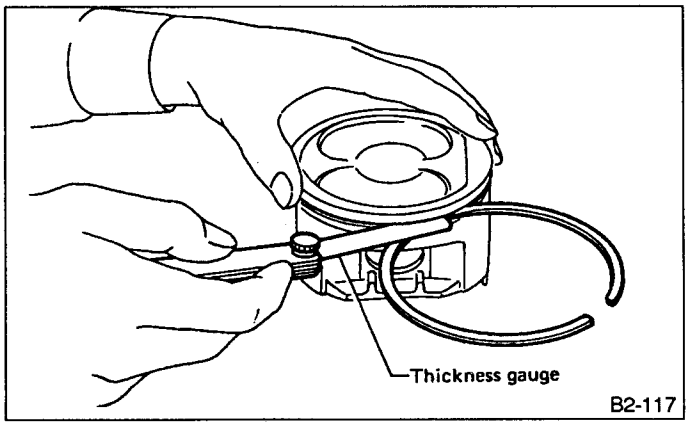

Fig. 122

5. CONNECTING ROD

1) Replace connecting rod, if the large or small end thrust surface is damaged.
2) Check for bend or twist using a connecting rod aligner. Replace connecting rod if the bend or twist exceeds the limit.

Limit of bend or twist per 100 mm (3.94 in) in length:
0.10 mm (0.0039 in)

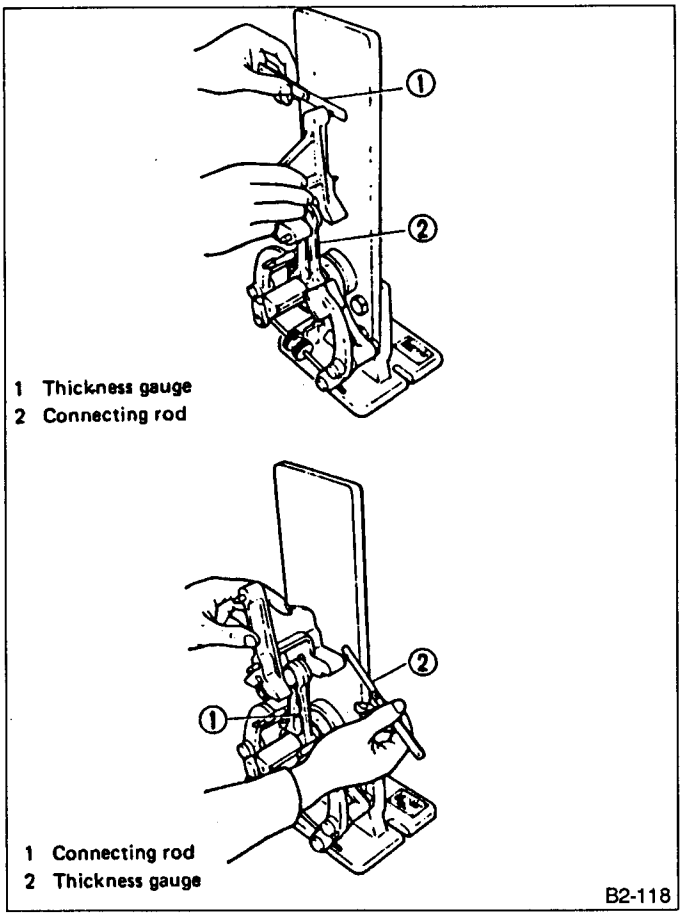

Fig. 123

3) Install connecting rod fitted with bearing to crankshaft and measure the side clearance (thrust clearance). Replace connecting rod if the side clearance exceeds the specified limit.

Connecting rod side clearance:
Standard
0.070 — 0.330 mm (0.0028 — 0.0130 in)
Limit
0.4 mm (0.016 in)

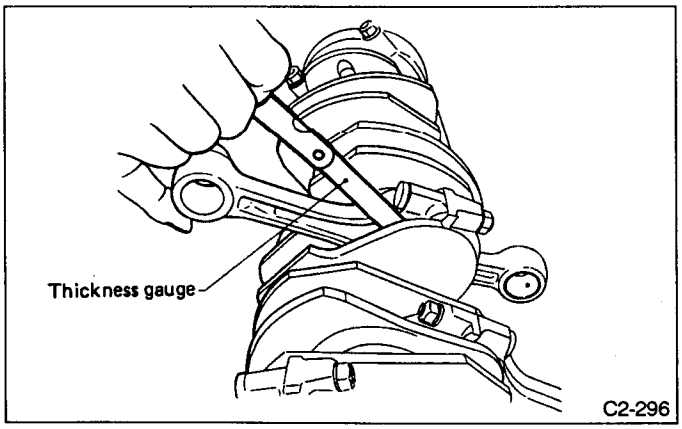

Fig. 124

4) Inspect connecting rod bearing for scar, peeling, seizure, melting, wear, etc.
5) Measure the oil clearance on individual connecting rod bearings by means of plastigauge. If any oil clearance is not within specification, replace the defective bearing with a new one of standard size or undersize as necessary, necessary. (See the table below.)

Connecting rod oil clearance:
Standard
0.020 — 0.046 mm (0.0008 — 0.0018 in)
Limit
0.05 mm (0.0020 in)

Unit: mm (in)

Bearing	Bearing size (Thickness at center)	Outer diameter of crank pin
Standard	1.486 — 1.498 (0.0585 — 0.0590)	51.984 — 52.000 (2.0466 — 2.0472)
0.03 undersize	1.520 — 1.524 (0.0598 — 0.0600)	51.954 — 51.970 (2.0454 — 2.0461)
0.05 undersize	1.540 — 1.544 (0.0606 — 0.0608)	51.934 — 51.950 (2.0446 — 2.0453)
0.25 Undersize	1.740 — 1.744 (0.0685 — 0.0687)	51.734 — 51.750 (2.0368 — 2.0374)

6) Inspect the bushing at connecting rod small end for wear or damage.
Also measure the piston pin clearance at the connecting rod small end.
If not within specifications, replace connecting rod and connecting rod cap as a set.

Clearance between piston pin and bushing:
Standard
0 — 0.018 mm (0 — 0.0007 in)
Limit
0.030 mm (0.0012 in)

6. CRANKSHAFT AND CRANKSHAFT BEARING

1) Clean crankshaft completely and check for cracks by means of red check etc., and replace if defective.
2) Measure the crankshaft bend, and correct or replace if it exceeds the limit.
If a suitable V-block is not available, install #1 and #5 crankshaft bearing on cylinder block, position crankshaft on these bearings and measure crankshaft bend using a dial gauge.

Crankshaft bend limit:
0.035 mm (0.0014 in)

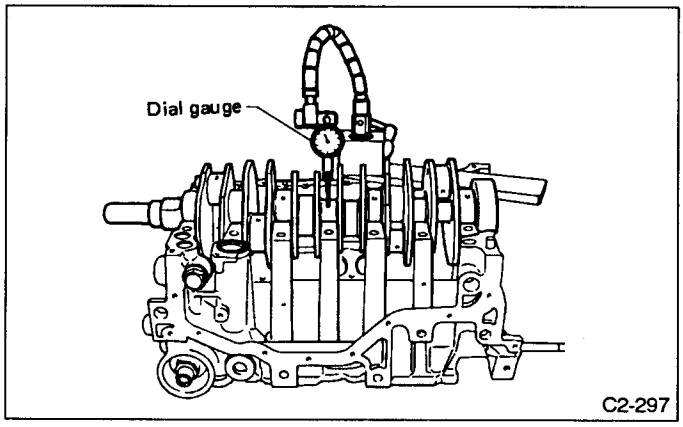

Fig. 125

3) Inspect the crank journal and crankpin for wear. If not to specifications, replace bearing with an undersize one, and replace or recondition crankshaft as necessary. When grinding crank journal or crankpin, finish them to the specified dimensions according to the undersize bearing to be used.

Crankpin and crank journal:
Out-of-roundness
0.03 mm (0.0012 in) or less
Taper limit
0.07 mm (0.0028 in)
Grinding limit
0.25 mm (0.0098 in)

Unit: mm (in)

		Crank journal			Crank pin O.D.
		#1, #3, #7	#2, #4, #6	#5	
Standard	Journal O.D.	59.992 — 60.008 (2.3619 — 2.3625)	←	←	51.984 — 52.000 (2.0466 — 2.0472)
	Bearing size (Thickness at center)	1.998 — 2.011 (0.0787 — 0.0792)	2.000 — 2.013 (0.0787 — 0.0793)	2.000 — 2.013 (0.0787 — 0.0793)	1.492 — 1.510 (0.0587 — 0.0594)
0.03 (0.0012) undersize	Journal O.D.	59.962 — 59.978 (2.3607 — 2.3613)	←	←	51.954 — 51.970 (2.0454 — 2.0461)
	Bearing size (Thickness at center)	2.017 — 2.020 (0.0794 — 0.0795)	2.019 — 2.022 (0.0795 — 0.0796)	2.019 — 2.022 (0.0795 — 0.0796)	1.510 — 1.513 (0.,0594 — 0.0596)
0.05 (0.0020) undersize	Journal O.D.	59.942 — 59.958 (2.3599 — 2.3605)	←	←	51.934 — 51.950 (2.0446 — 2.0453)
	Bearing size (Thickness at center)	2.027 — 2.030 (0.0798 — 0.0799)	2.029 — 2.032 (0.0799 — 0.0800)	2.029 — 2.032 (0.0799 — 0.0800)	1.520 — 1.523 (0.0598 — 0.0600)
0.25 (0.0098) undersize	Journal O.D.	59.742 — 59.758 (2.3520 — 2.3527)	←	←	51.734 — 51.750 (2.0368 — 2.0374)
	Bearing size (Thickness at center)	2.127 — 2.130 (0.0837 — 0.0839)	2.129 — 2.132 (0.0838m — 0.0839)	2.129 — 2.132 (0.0838 — 0.0839)	1.620 — 1.623 (0.0638 — 0.0639)

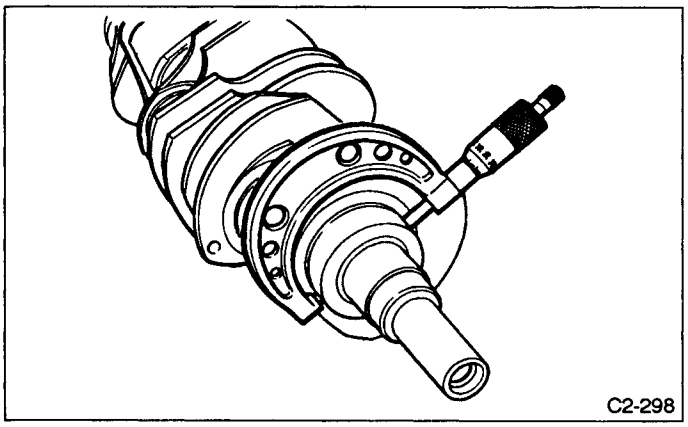

Fig. 126

4) Measure the thrust clearance of crankshaft at #5 bearing. If the clearance exceeds the limit, replace bearing.

Crankshaft thrust clearance:
Standard
0.030 — 0.115 mm (0.0012 — 0.0045 in)
Limit
0.25 mm (0.0098 in)

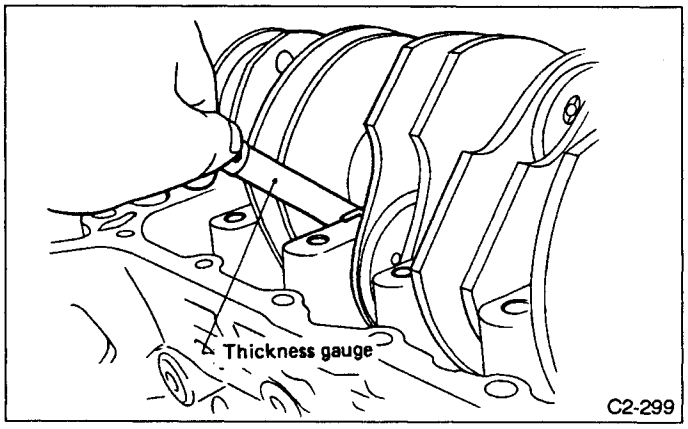

Fig. 127

5) Inspect individual crankshaft bearings for signs of flaking, seizure, melting, and wear.

6) Measure the oil clearance on each crankshaft bearing by means of plastigauge. If the measurement is not within the specification, replace defective bearing with an undersize one, and replace or recondition crankshaft as necessary.

Unit:mm (in)

Crankshaft oil clearance		
Standard	#1, #3, #7	0.005 — 0.035 (0.0002 — 0.0014)
	#2, #4, #6	0.013 — 0.038 (0.0005 — 0.0015)
	#5	0.013 — 0.034 (0.0005 — 0.0013)
Limit	#1, #2, #6, #7	0.045 (0.0018)
	#3, #4, #5	0.040 (0.0016)

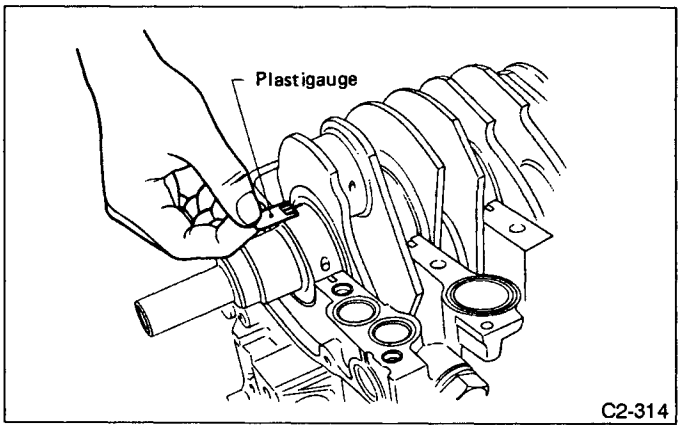

Fig. 128

D: ASSEMBLY

1. CRANKSHAFT AND PISTON

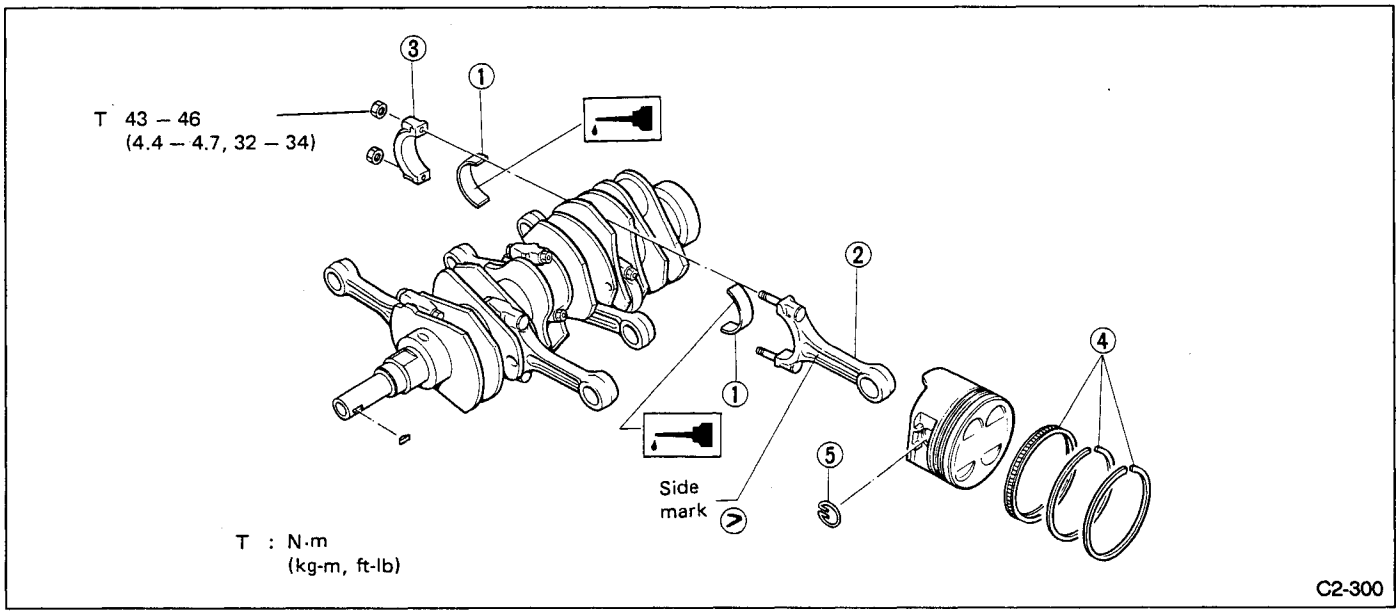

Fig. 129

1) Install connecting rod bearings on connecting rods and connecting rod caps.
2) Install connecting rod on crankshaft.
a. Apply oil to the surfaces of the connecting rod bearings.
b. Position each connecting rod with the side marked facing forward.
3) Install connecting rod cap with connecting rod nut.
Ensure the arrow on connecting rod cap faces the front during installation.
a. Each connecting rod has its own mating cap. Make sure that they are assembled correctly by checking their matching number.
b. When tightening the connecting rod nuts, apply oil on the threads.
4) Installation of piston rings and oil ring.
(1) Install oil ring spacer, upper rail and lower rail in this order by hand. Then install second ring and top ring with a piston ring expander.
(2) Position the gaps of the piston rings and oil ring as shown in the figure.

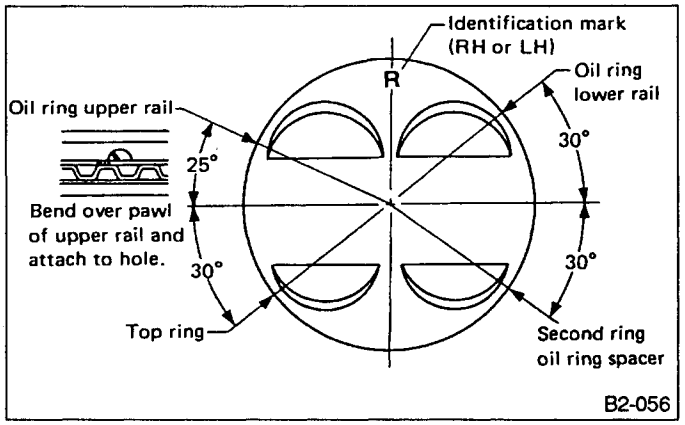

Fig. 130

5) Install circlip.
Install new circlips in piston holes located opposite service holes in cylinder block, when positioning all pistons in the corresponding cylinders.

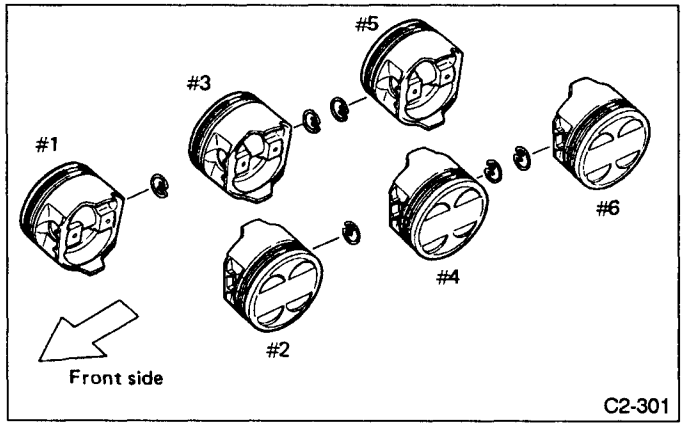

Fig. 131

2. CYLINDER BLOCK

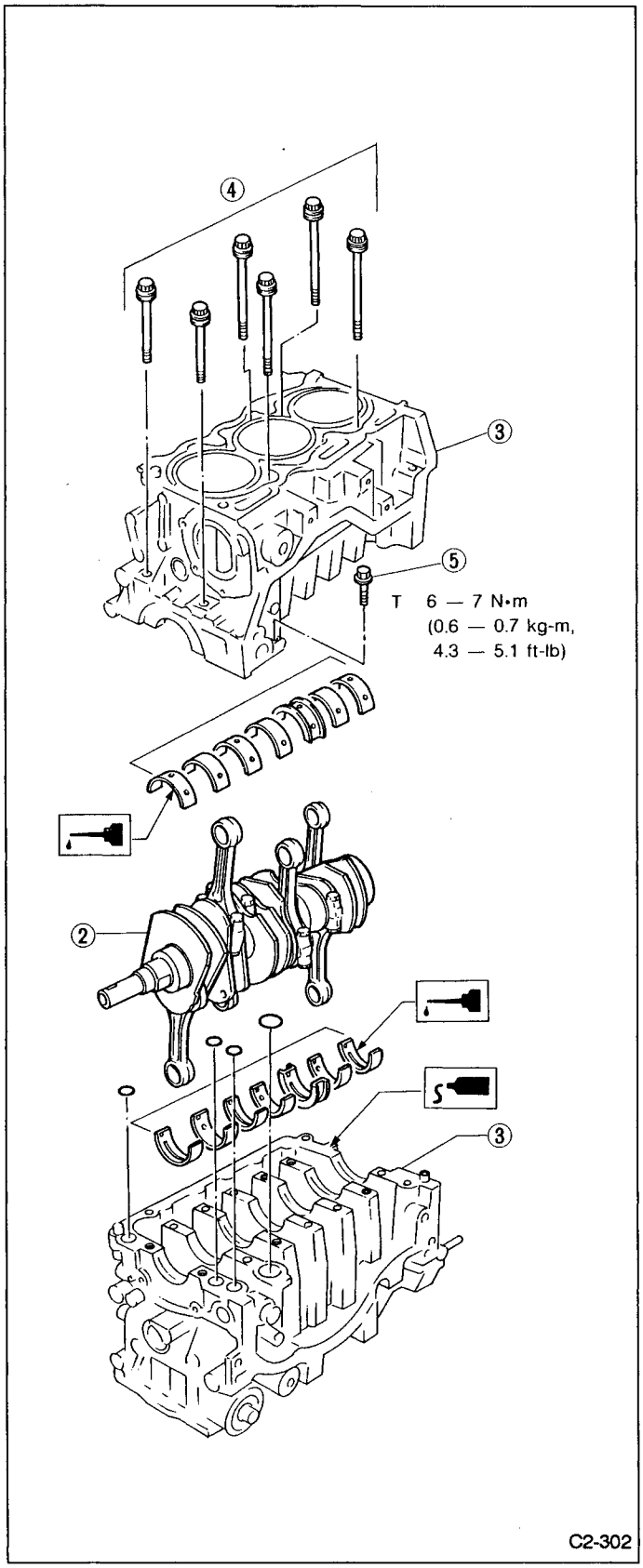

Fig. 132

1) Install ENGINE STAND to cylinder block, then install crankshaft bearings.
Remove oil the mating surface of bearing and cylinder block before installation. Also apply a coat of engine oil to crankshaft pins.
2) Position crankshaft on the #1, #3 & #5 cylinder block.
3) Apply fluid packing to the mating surface of #1, #3 & #5 cylinder block, and put O-rings on the grooves of #1, #3 & #5 cylinder block, and then position #2, #4 & #6 cylinder block on it.

Fluid packing:
Three-bond 1215B or equivalent

Do not allow fluid packing to jut into O-ring grooves, oil passages, bearing grooves, etc.

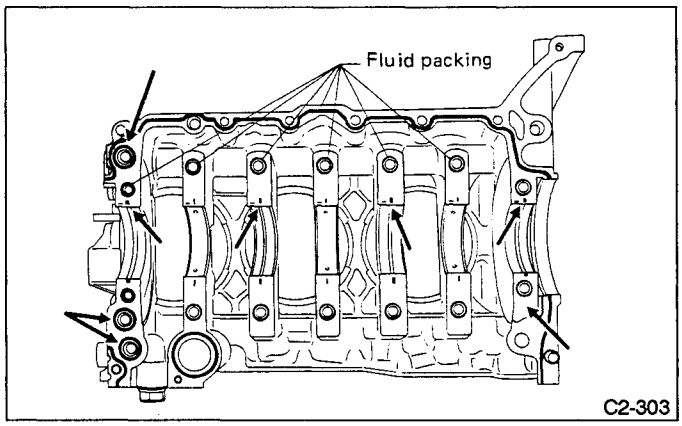

Fig. 133

4) Tighten #2, #4 & #6 cylinder block side connecting bolts to 15 N•m (1.5 kg-m, 11 ft-lb) in the numerical sequence shown in figure..

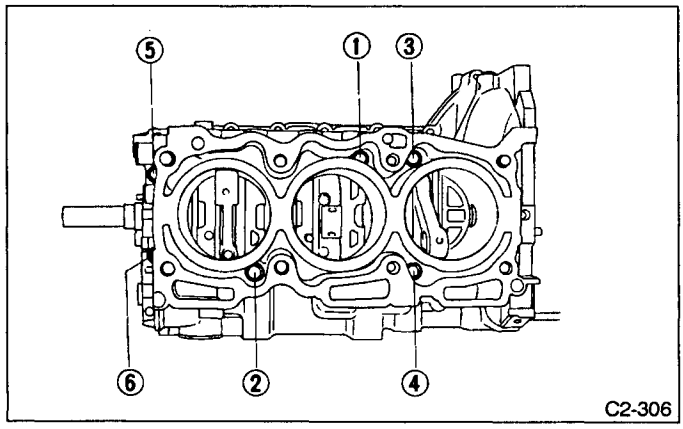

Fig. 134

5) Tighten small bolt in the crank case.

3. CYLINDER BLOCK CONNECTING BOLT

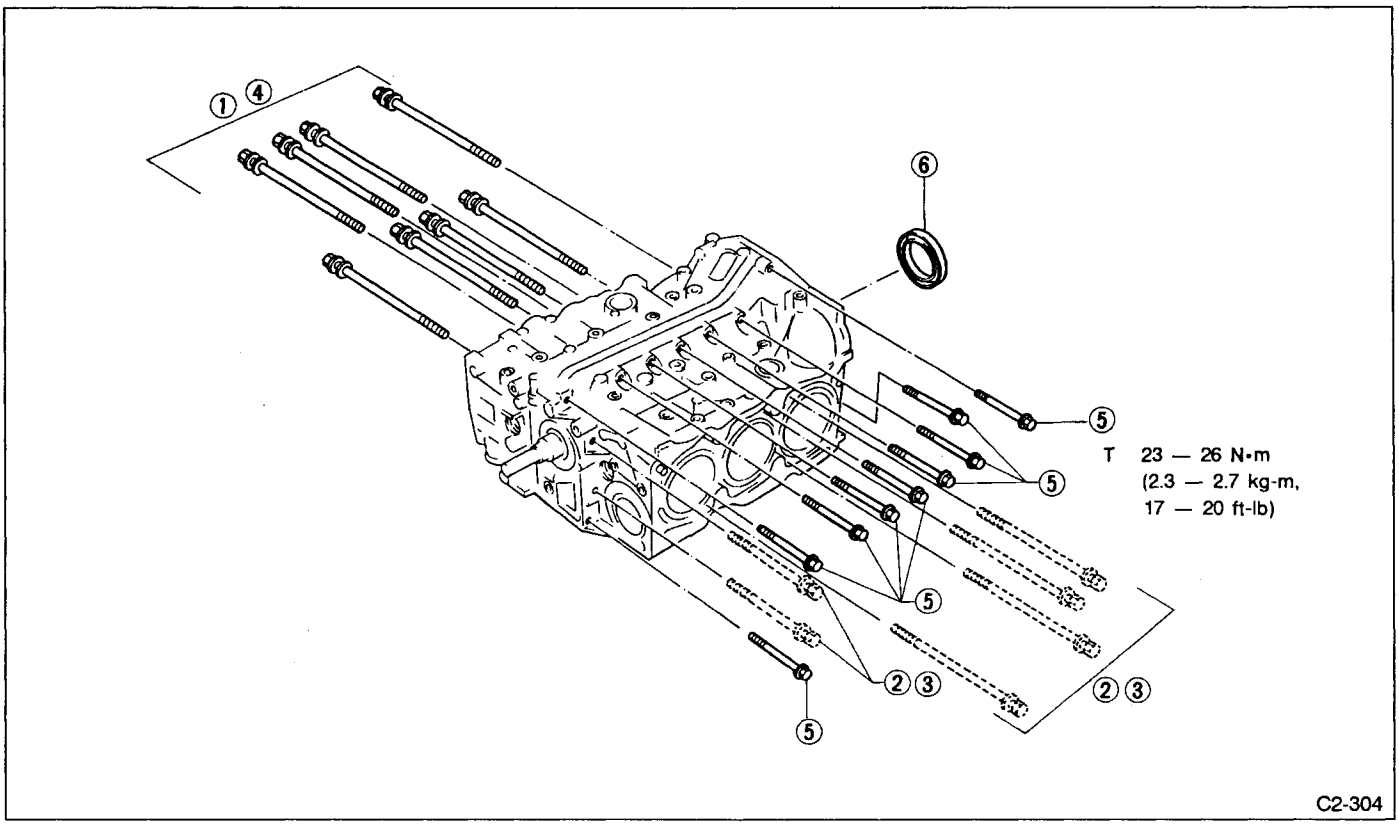

Fig. 135

1) Turn cylinder block so that it is horizontal.
Tighten cylinder block connecting bolts to 15 N•m (1.5 kg-m, 11 ft-lb) on the #1, #3 and #5 cylinder block side in the numerical sequence shown in Figure.

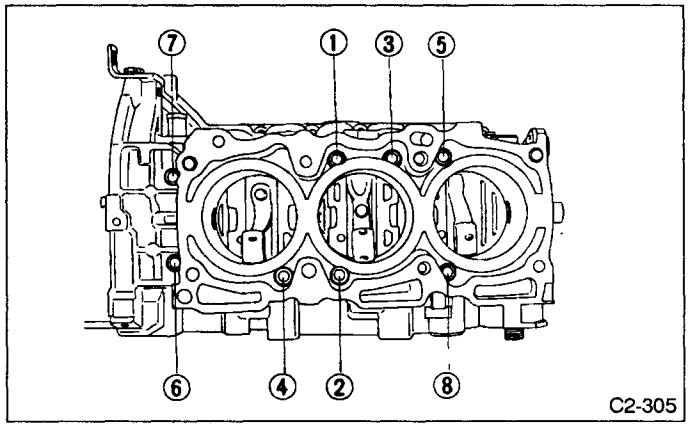

Fig. 136

2) To confirm tightening torque on the #2, #4 and #6 cylinder block side connecting bolts re-tighten connecting bolts to 15 N•m (1.5 kg-m, 11 ft-lb), in the numerical sequence shown in figure.

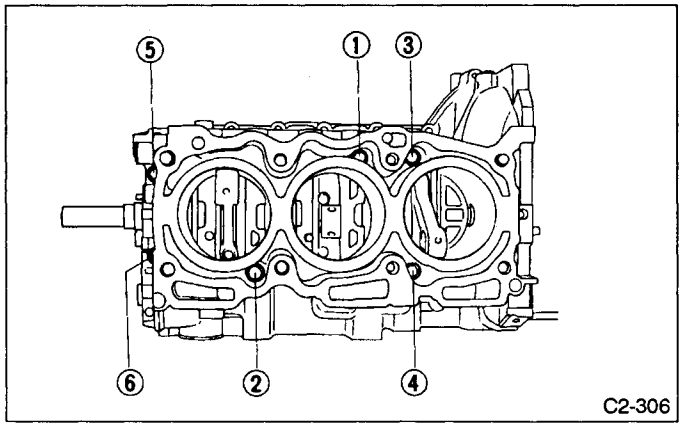

Fig. 137

3) Re-tighten connecting bolts by 90° — 110° on the #2, #4 and #6 cylinder block side in the numerical sequence shown in figure.

4) Re-tighten connecting bolts by 90° — 110° on the #1, #3 and #5 cylinder block side in the numerical sequence shown in figure.
5) Tighten other cylinder block connecting bolts to specified torque.
6) Install rear oil seal.

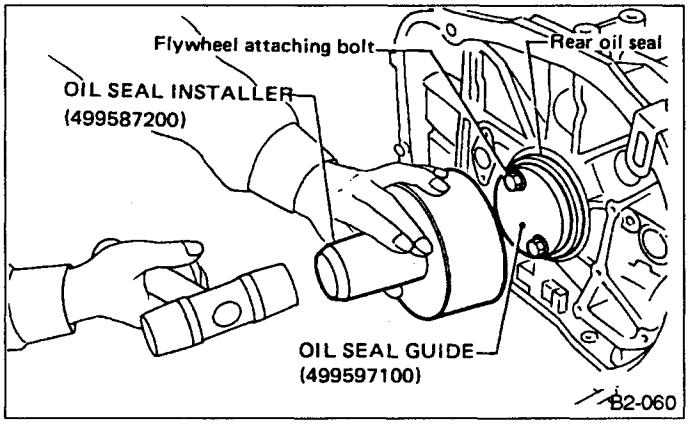

Fig. 138

4. PISTON AND PISTON PIN (#3 and #4)

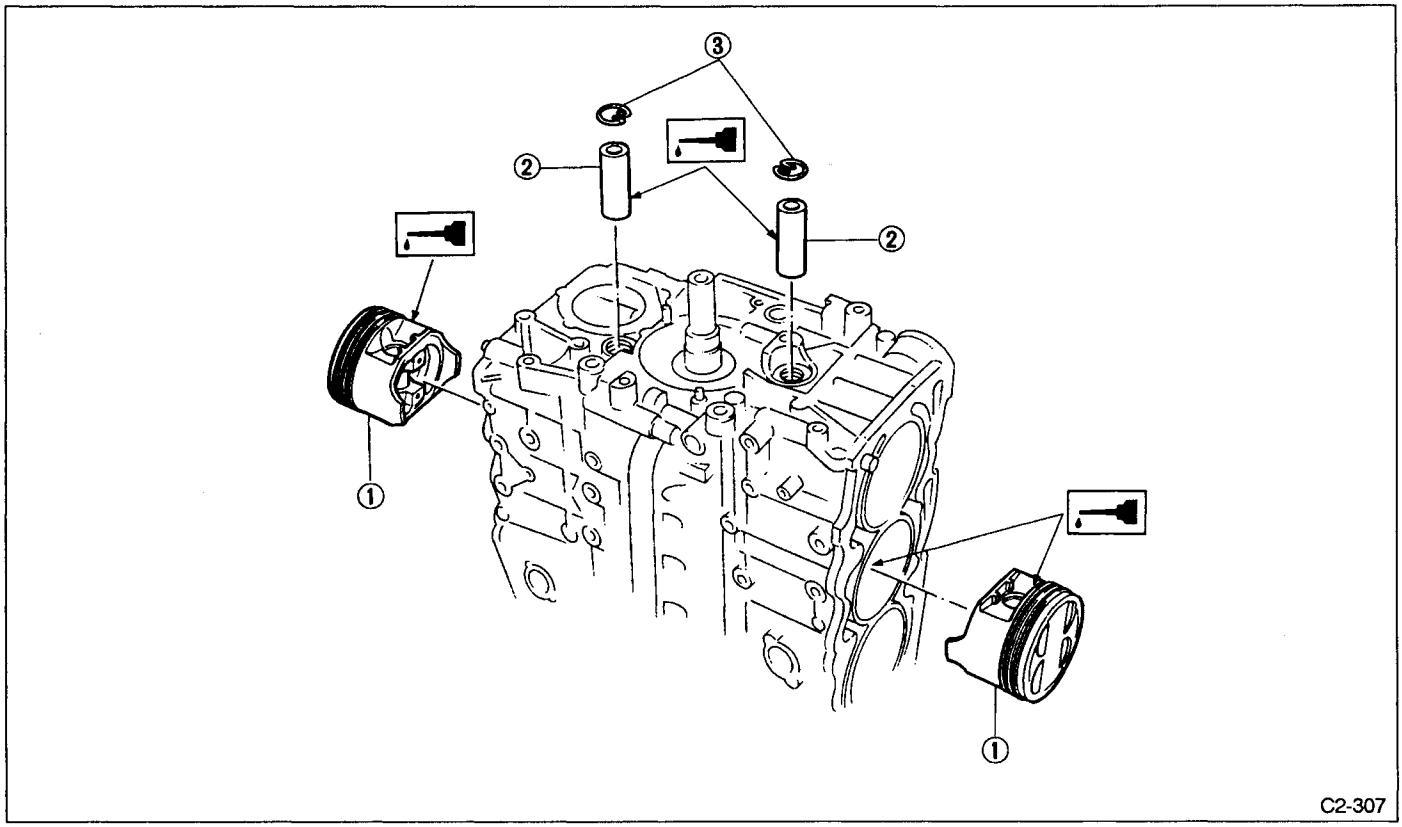

Fig. 139

1) Installing piston.
(1) Turn cylinder block so that #1 and #2 cylinders face upward.
(2) Turn crankshaft so that #3 and #4 connecting rods are set at bottom dead center.
(3) Apply a coat of engine oil to pistons and cylinders and insert #3 and #4 pistons in their cylinders.

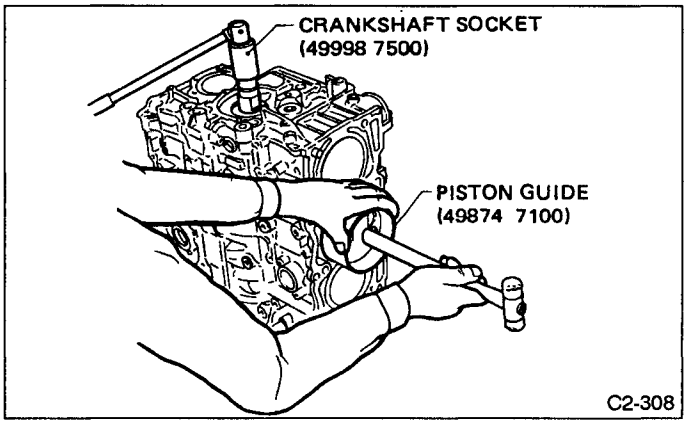

Fig. 140

2) Installing piston pin.
(1) Insert the PISTON PIN GUIDE into service hole to align piston pin hole with connecting rod small end.
Apply a coat of engine oil to PISTON PIN GUIDE before insertion.

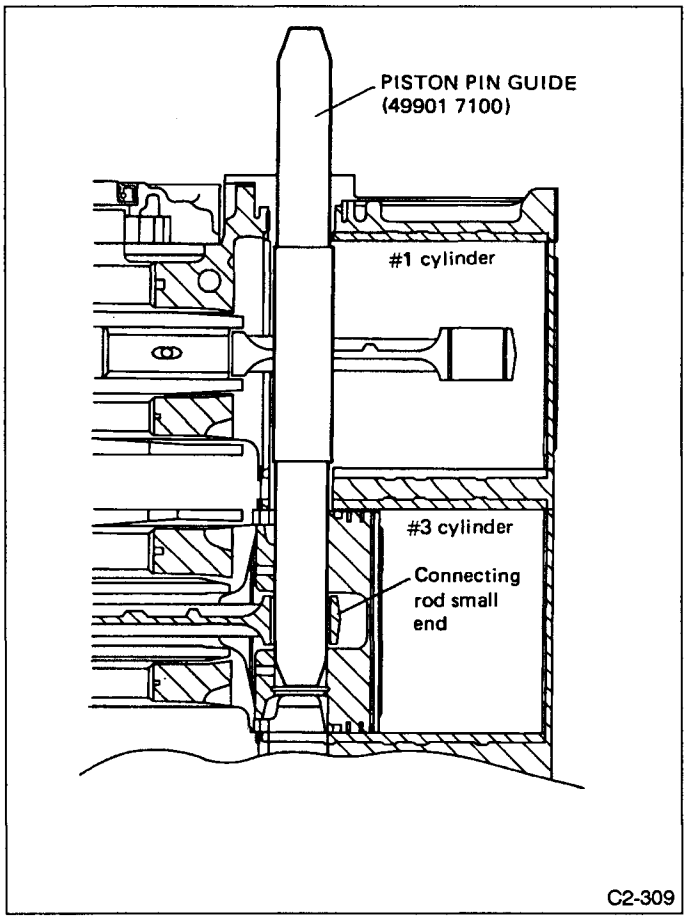

Fig. 141

(2) Apply a coat of engine oil to piston pin and insert piston pin into piston and connecting rod through service hole.
(3) Install new circlip with PISTON CIRCLIP PLIERS.

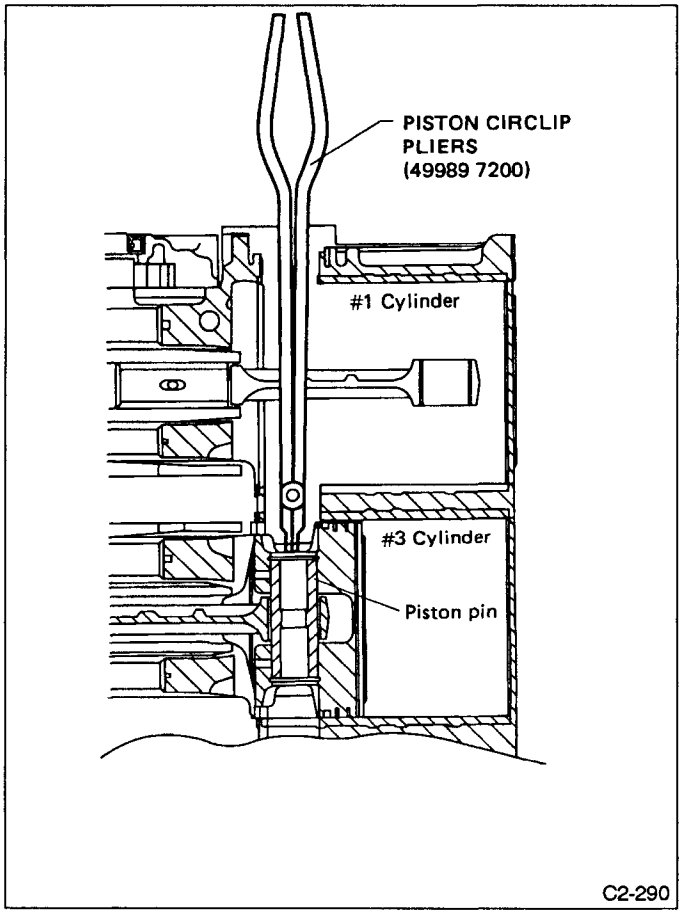

Fig. 142

5. PISTON AND PISTON PIN (#1 and #2)

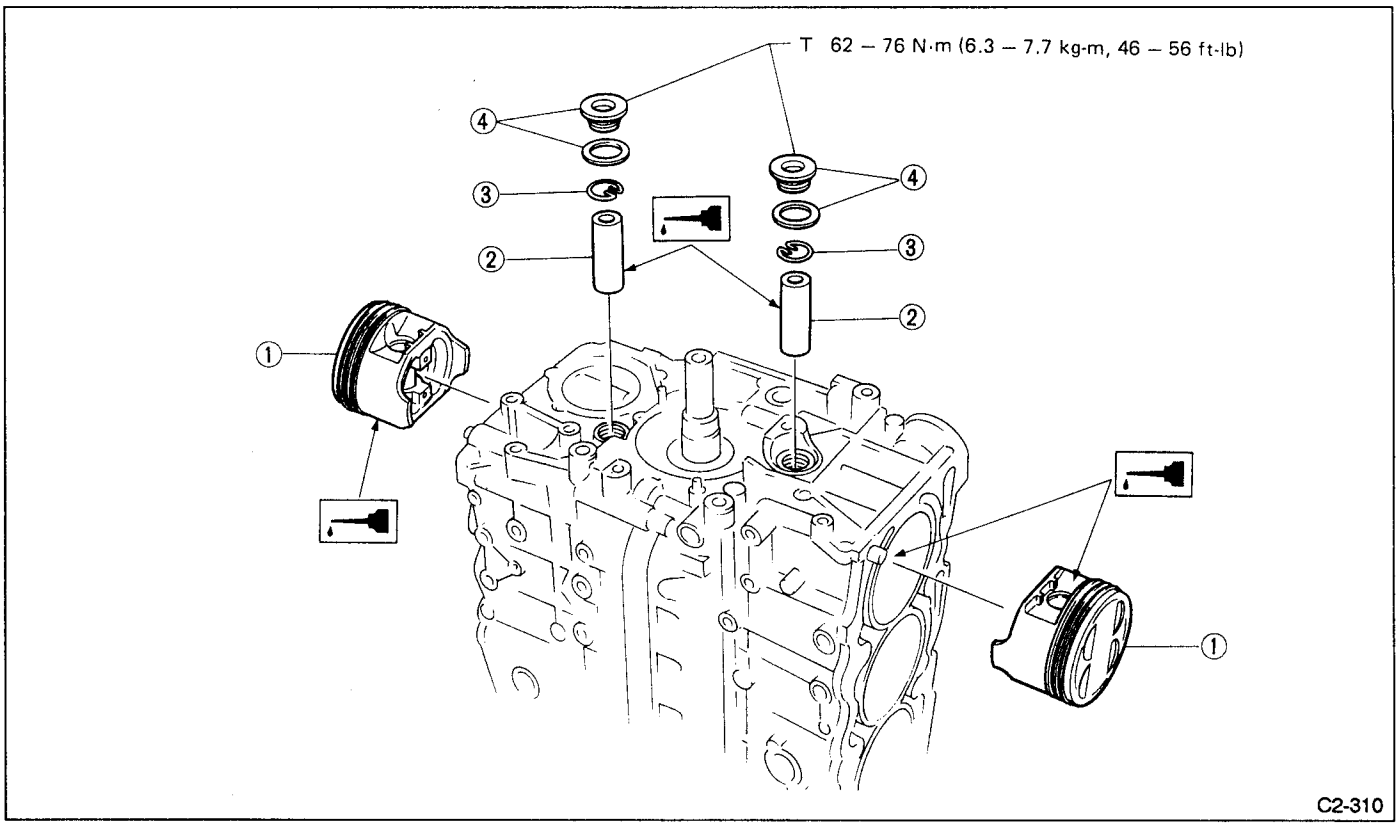

Fig. 143

1) Installing piston
   (1) Turn cylinder block so that #1 and #2 cylinders face upward.
   (2) Turn crankshaft so that #1 and #2 connecting rods are set at bottom dead center.
   (3) Apply a coat of engine oil to pistons and cylinders and insert pistons in their cylinders.
2) Installing piston pin
   (1) Insert the PISTON PIN GUIDE into service hole to align piston pin hole with connecting rod small end.

Apply a coat of engine oil to PISTON PIN GUIDE before insertion.

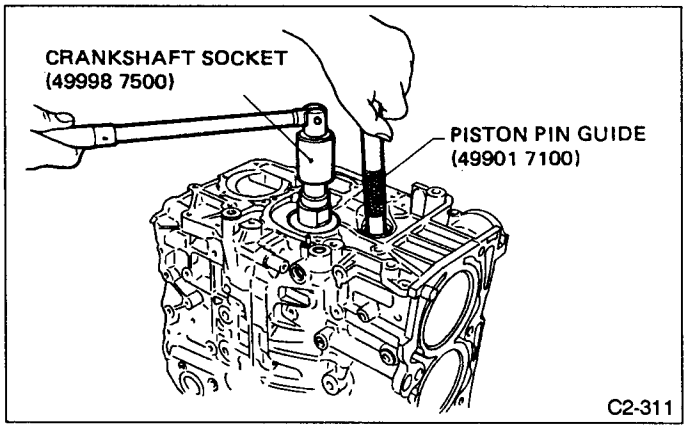

Fig. 144

   (2) Apply a coat of engine oil to piston pin and insert piston pin into piston and connecting rod through service hole.
   (3) Install new circlip.

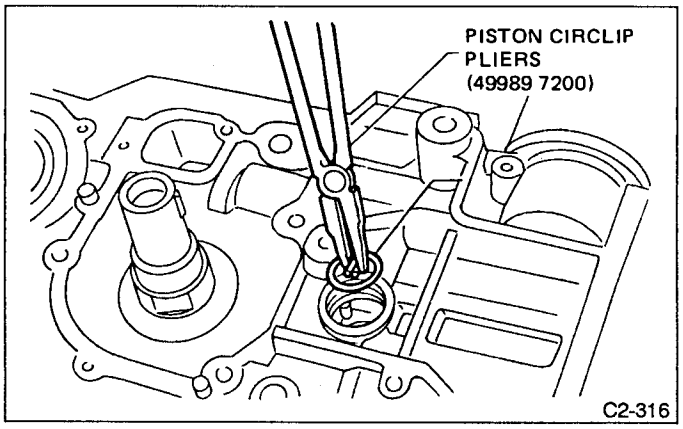

Fig. 145

   (4) Install service hole plug and gasket.

Use a new gasket.

6. PISTON AND PISTON PIN (#5 and #6)

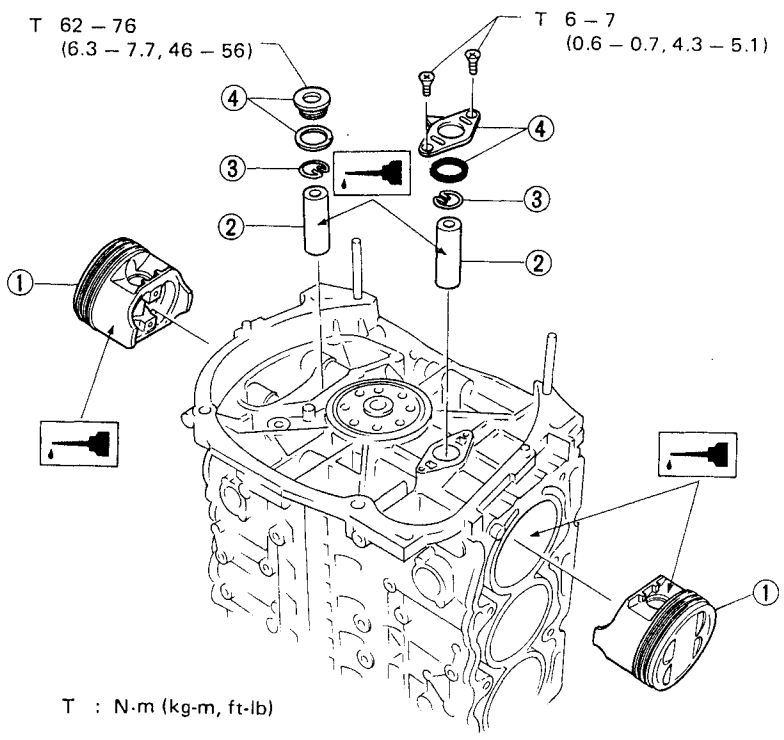

Fig. 146

Turn cylinder block so that #5 and #6 cylinders face upward. Using the same procedures as used for #1 and #2 cylinders, install pistons and piston pins.

E: INSTALLATION

1. OIL PUMP AND WATER PUMP

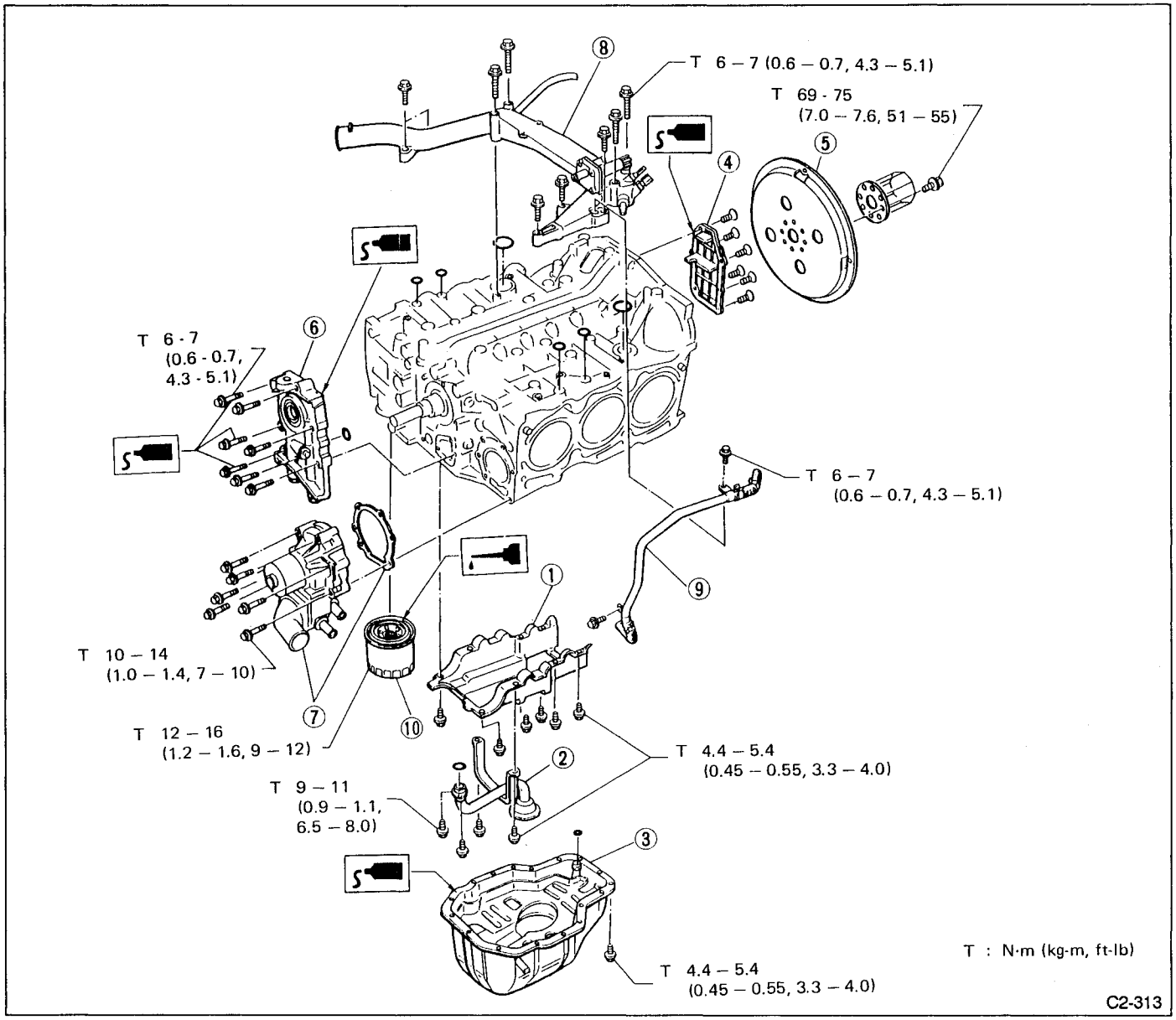

Fig. 147

1) Install baffle plate.
2) Install oil strainer and O-ring
3) Apply fluid packing to matching surface and install oil pan.

Fluid packing:
Three-bond 1207F or equivalent

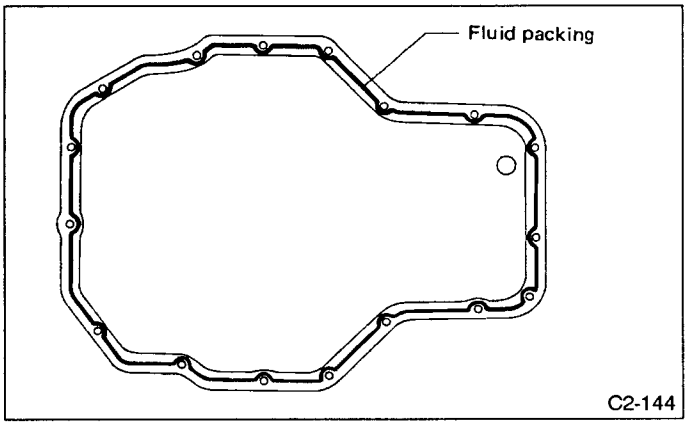

Fig. 148

4) Apply fluid packing to matching surfaces and install oil separator cover.

Fluid packing:
Three-bond 1215B or equivalent

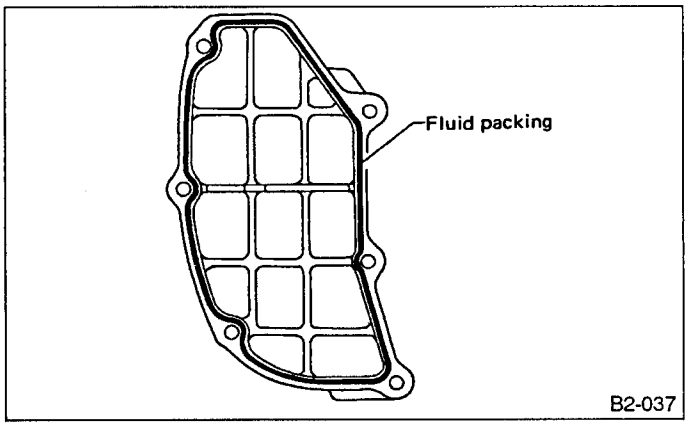

Fig. 149

5) Install drive plate.
6) Installation of oil pump.
(1) Discard front oil seal after removal. Replace with a new one.

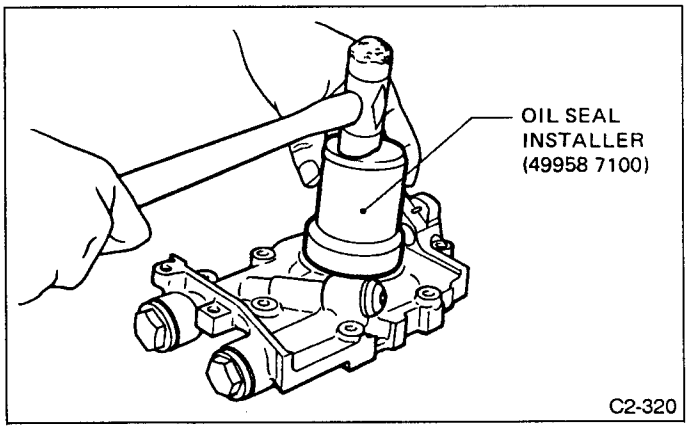

Fig. 150

(2) Apply fluid packing to matching surface of oil pump.

Fluid packing:
Three-bond 1215B or equivalent

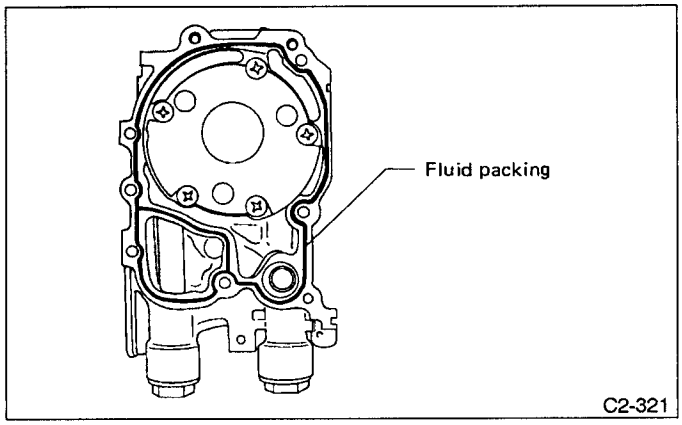

Fig. 151

(3) Install oil pump on cylinder block. Be careful not to damage oil seal during installation.
〈Refer to 2-4 ENGINE LUBRICATION SYSTEM [W1E0].〉
a. Do not forget to install O-ring and seal when installing oil pump.
b. Align flat surface of oil pump's inner rotor with crankshaft before installation.
7) Install water pump and gasket.
After tightening all bolts to the specified torque, tighten all bolts to specified torque again.
〈Refer to 2-5 ENGINE COOLING SYSTEM [W2C0].〉
Be sure to use a new gasket.
8) Install water pipe.
9) Install water by-pass pipe.
10) Install oil filter with OIL FILTER WRENCH.

2. RELATED PARTS

1) Install cylinder head and intake manifold.
〈Refer to Cylinder Head [W4A0].〉
2) Install camshaft and related parts.
〈Refer to Camshaft [W3A0].〉
3) Install camshaft sprocket, timing belt and related parts.
〈Refer to Timing Belt [W2A0].〉

T TROUBLESHOOTING

1. Engine Trouble in General

Symbols shown in the chart refer to the possibility of reason for the trouble in order ("Very often" to "Rarely")
⊙— Very often
○— Sometimes
△— Rarely

No.	TROUBLE	
1	Engine will not start.	Starter does not turn.
2		Initial combustion does not occur.
3		Initial combustion occurs.
4		Engine stalls after initial combustion.
5	Rough idle and engine stall.	
6	Low output, hesitation and poor acceleration.	
7	Surging.	
8	Engine does not return to idle.	
9	Dieseling (Run-on).	
10	After burning in exhaust system.	
11	Knocking.	
12	Excessive engine oil consumption.	
13	Excessive fuel consumption.	

TROUBLE No.													POSSIBLE CAUSE
1	2	3	4	5	6	7	8	9	10	11	12	13	
													STARTER
○													• Defective battery-to-starter harness.
△													• Defective starter switch.
△													• Defective inhibitor switch.
○	△												• Defective starter.
													BATTERY
⊙													• Poor terminal connection.
⊙													• Run-down battery.
○													• Defective charging system.
	⊙	⊙	⊙	⊙	⊙	⊙	⊙	⊙	⊙	⊙		⊙	MPFI SYSTEM (See Chap. 2-7.)
													IGNITION SYSTEM
	○	○	○	⊙	⊙	⊙	⊙	⊙	⊙	⊙		⊙	• Incorrect ignition timing.
	○	⊙		○	○	○			△			△	• Disconnection of ignition coil connector.
	○			△	○	○							• Defective ignition coil.
	○			△	△	△							• Defective cord or wiring.
		○		○	○	○			⊙				• Defective spark plug.
	○	○	○	⊙	○	⊙	△		○	○			• Incorrect cam timing.
1	2	3	4	5	6	7	8	9	10	11	12	13	

TROUBLE No.													POSSIBLE CAUSE
1	2	3	4	5	6	7	8	9	10	11	12	13	
													INTAKE SYSTEM
		○	○	⊙	○	○	⊙	○	○			⊙	• Improper idle adjustment.
			○	⊙	⊙	⊙			△	⊙			• Loosened or cracked intake boot.
			○	⊙	⊙	⊙			△	⊙			• Loosened or cracked intake duct.
			△	⊙	⊙	⊙			△	⊙	⊙		• Loosened or cracked blow-by hose.
			△	⊙	○	⊙	⊙		○	⊙			• Loosened or cracked vacuum hose.
			△	○	○	○				⊙			• Defective air cleaner gasket.
		○	○	○	○	○				⊙			• Defective intake manifold gasket.
		○	○	○	○	○				⊙			• Defective throttle body gasket.
				△	○	○			○	○	○		• Defective PCV valve.
				○	○	○			△	○	△		• Loosened oil filler cap.
			△	△	⊙	○				○		⊙	• Dirty air cleaner element.
													FUEL LINE
	⊙	△		△	○	○							• Defective fuel pump.
		△	△	△	○	○							• Clogged fuel line.
	○	○	○	○	△	△							• Lack of or insufficient fuel.
													BELT
	○	○	○										• Defective.
	○	○	○	△	○	○			○	○		○	• Defective timing.
													FRICTION
△													• Seizure of crankshaft and connecting-rod bearing.
△													• Seized camshaft.
△													• Seized or stuck piston and cylinder.
													COMPRESSION
	△	△	△	○	○	○			○	△		○	• Worn or broken lash adjuster.
	△	△	△	○	○	△			△			△	• Loosened spark plugs or defective gasket.
	△	△	△	○	○	△			△			△	• Loosened cylinder head nuts or defective gasket.
	△	△	△	○	○	△			○			○	• Improper valve seating.
	△	△	△	△	△	△			△		⊙	△	• Defective valve stem.
	○	○	○	○	○	△			△			△	• Worn or broken valve spring.
	△	△	△	○	△	△			△		⊙	○	• Worn or stuck piston rings, cylinder and piston.
	○	○	○	⊙	⊙	⊙			⊙	○		○	• Incorrect valve timing.
	○	○	○	○	○	○							• Improper engine oil (low viscosity).
1	2	3	4	5	6	7	8	9	10	11	12	13	

TROUBLE No.													POSSIBLE CAUSE
1	2	3	4	5	6	7	8	9	10	11	12	13	
													LUBRICATION SYSTEM
				○	○				△			△	• Incorrect oil pressure.
											○		• Loosened oil pump attaching bolts and defective gasket.
											○		• Defective oil filter seal.
											○		• Defective crankshaft oil seal.
				△							○		• Defective rocker cover gasket.
											○		• Loosened oil drain plug or defective gasket.
											○		• Loosened oil pan fitting bolts or defective oil pan.
													COOLING SYSTEM
				△	△	○		○		⊙			• Overheating.
					△				△			△	• Over cooling.
													OTHERS
				⊙	⊙	△			△				• Malfunction of Evaporative Emission Control System. (See Chap. 2-1.)
				○			⊙						• Stuck or damaged throttle valve.
				△			○	○				○	• Accelerator cable out of adjustment.
1	2	3	4	5	6	7	8	9	10	11	12	13	

2. Engine Noise

Valve lash adjusters may make clicking noise once engine starts. It is normal if clicking noise ceases after a few minutes.

If clicking noise continues after a few minutes, check engine oil level and add oil if necessary. Warm up engine for five minutes, then drive it at approximately 3,000 rpm for twenty minutes. If noise still exists, conduct troubleshooting procedures in accordance with the following table.

Type of sound	Condition	Possible cause
Regular clicking sound.	Sound increases as engine speed increases.	Valve mechanism is defective • Broken and worn lash adjuster. • Worn camshaft. • Broken valve spring. • Worn lash adjuster guide.
Heavy and dull metallic knock.	Oil pressure is low.	• Worn crankshaft main bearing. • Worn connecting rod bearing (big end).
	Oil pressure is normal	• Loose flywheel mounting bolts. • Damaged engine mounting.
High-pitched metallic knock. (Engine knocking)	Sound is noticeable when accelerating with an overload.	• Ignition timing advanced. • Accumulation of carbon inside combustion chamber. • Wrong spark plug. • Improper gasoline.
Metallic knock when engine speed is medium (1,000 to 2,000 rpm).	Sound is reduced when spark plug in noisy cylinder is shortened out.	• Worn crankshaft main bearing. • Worn bearing at crankshaft end of connecting rod.
Knocking sound when engine is operating under idling speed and engine is warm.	Sound is reduced when spark plug in noisy cylinder is shortened out.	• Worn cylinder liner and piston ring. • Broken or stuck piston ring. • Worn piston pin and hole at piston end of connecting rod.
	Sound is not reduced if each spark plug is shortened out in turn.	• Unusually worn valve lifter. • Worn cam gear. • Worn camshaft journal bore in crankcase.
Squeaky sound.	—	• Insufficient alternator lubrication.
Rubbing sound.	—	• Defective alternator brush and rotor contact.

Type of sound	Condition	Possible cause
Gear scream when starting engine.	—	• Defective ignition starter switch. • Worn gear and starter pinion.
Sound like polishing glass with a dry cloth.	—	• Loose drive belt. • Defective water pump shaft.
Hissing sound.	—	• Loss of compression. • Air leakage in air intake system, hoses, connections or manifolds.
Timing belt noise.	—	• Loose timing belt. • Belt contacting case/adjacent part.

SUBARU

SVX

1992

	Page
M MECHANISM AND FUNCTION	2
1. General	2
2. Lubrication Lines	3
3. Oil Pump	4
4. Oil Filter	5
5. Oil Pan & Oil Strainer	5
6. Oil Pressure Switch	5
S SPECIFICATIONS AND SERVICE DATA	6
C COMPONENT PARTS	7
1. Oil Pump	7
2. Oil Pan	8
W SERVICE PROCEDURE	9
1. Oil Pump	9
2. Oil Pan	12
T TROUBLESHOOTING	14

M MECHANISM AND FUNCTION

1. General

The lubrication system is a full-flow, filtering type. The oil pump utilizes a thin, large-diameter trochoid design to accommodate the high engine output. It is directly driven by the crankshaft.

Engine oil flow is regulated by the relief valve built into the oil pump. Then oil flows to the oil filter via the oil passage on the lower right side of cylinder block. After filtered the oil filter, engine oil delivered to the crank journal bearings via the oil gallery on the cylinder block and then delivered to the connecting rod bearing via the crank journal.

Engine oil is also fed under pressure to the cylinder head valve mechanism after the flow is regulated by the orifice provided in the oil gallery.

The oil pan is provided with baffle plates to eliminate the effect of oil suction caused by oil level variations during operation.

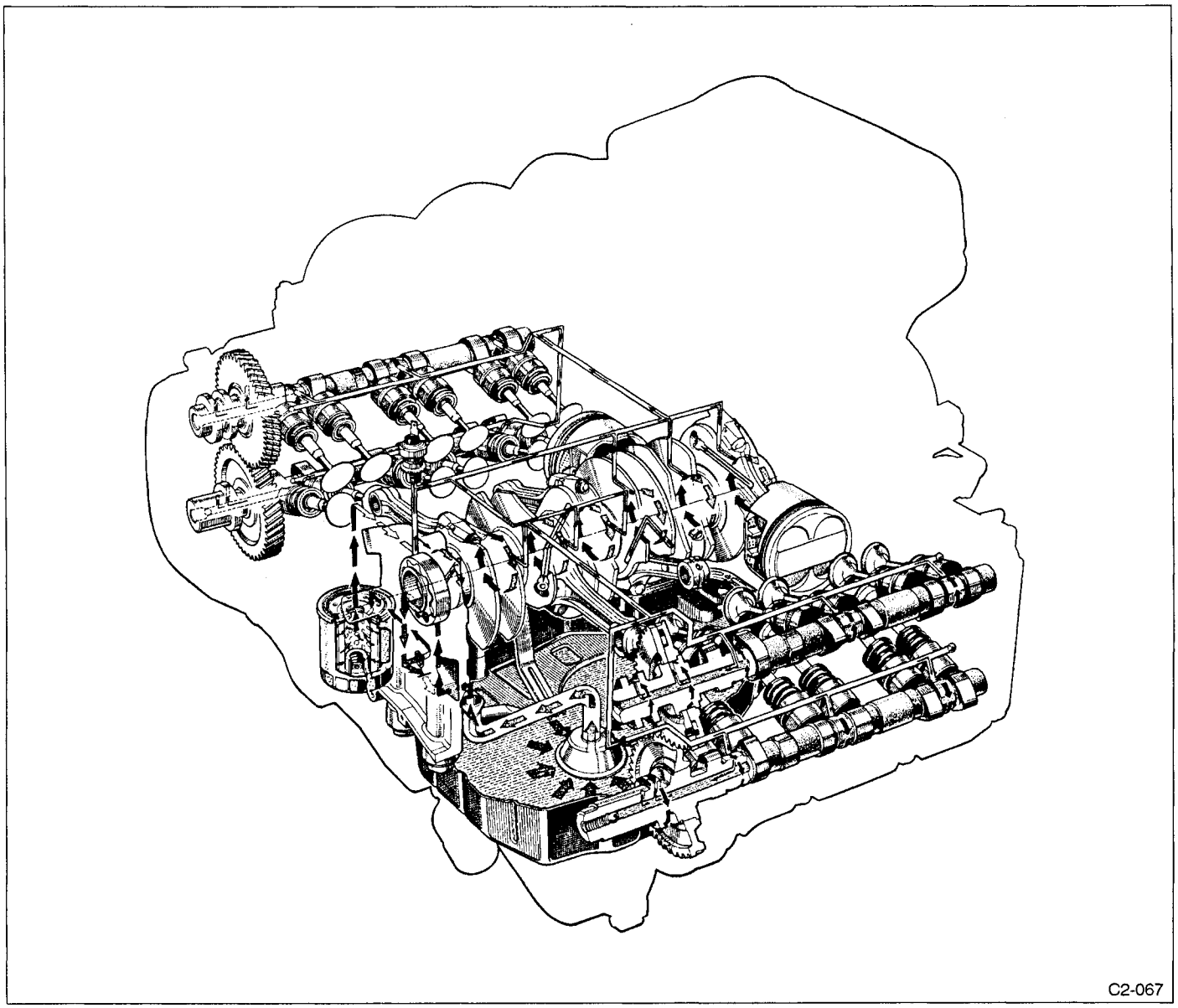

Fig. 1

2. Lubrication Lines

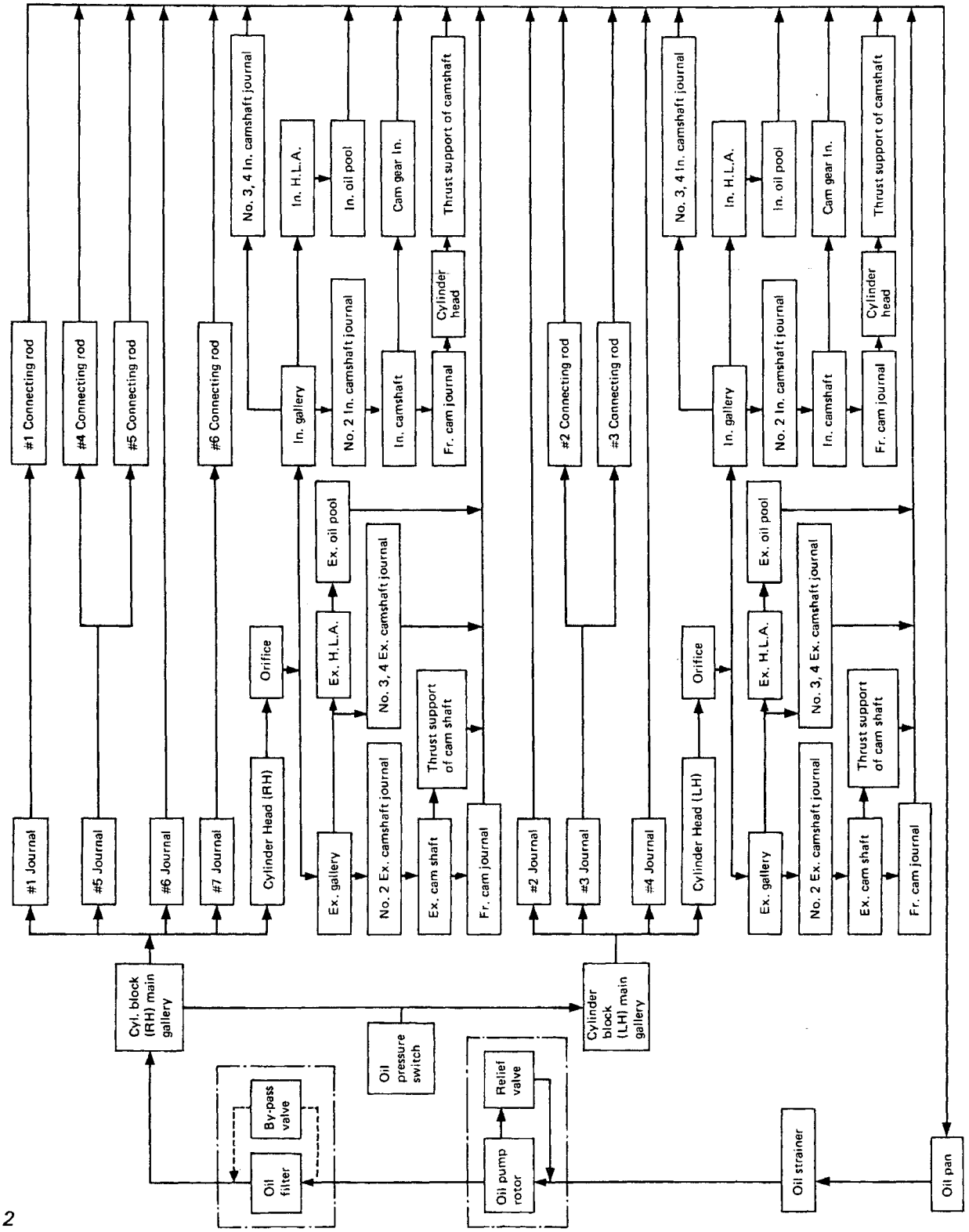

Fig. 2

3. Oil Pump

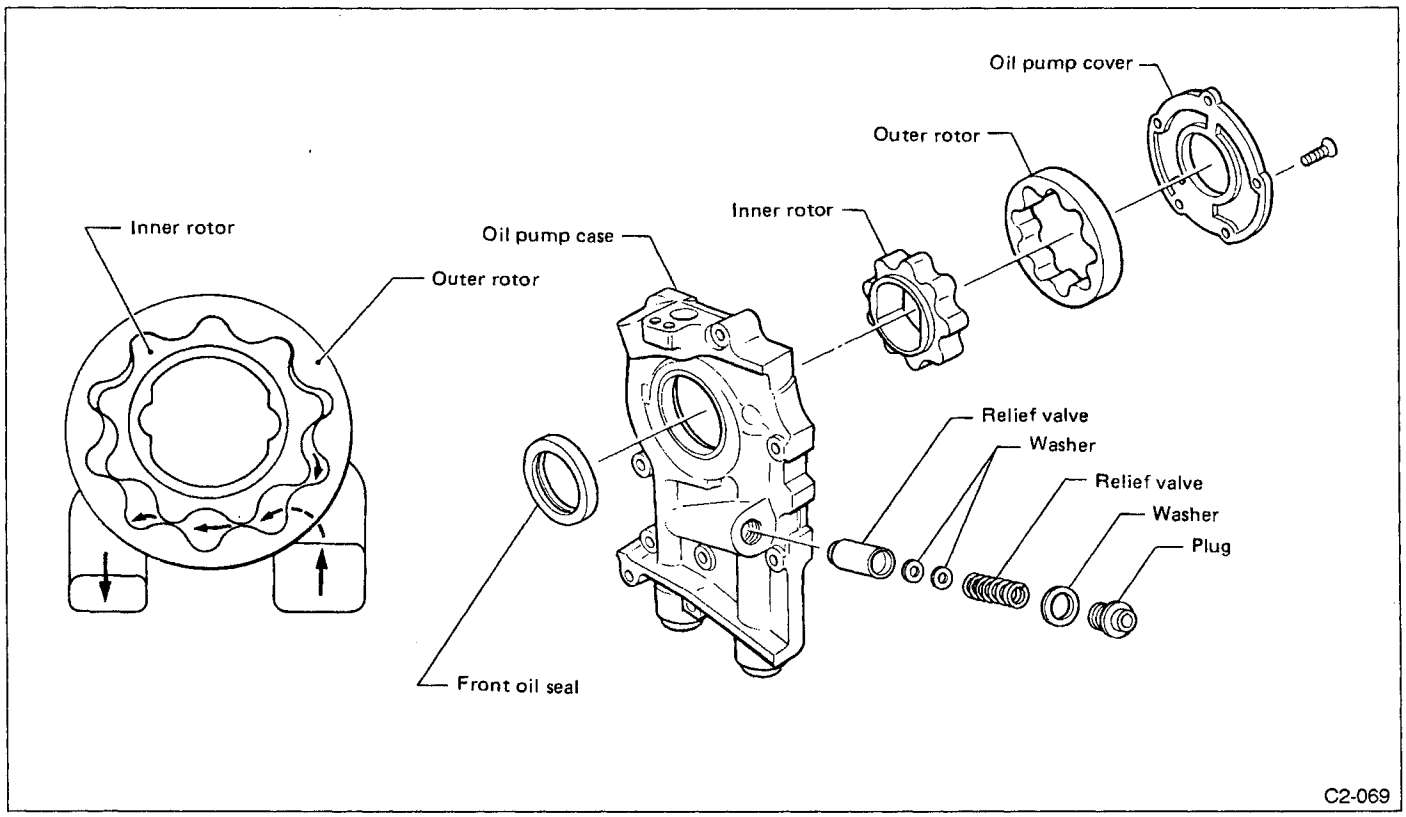

Fig. 3

The trochoid oil pump utilizes an internal oil circulation design which is accomplished by an inner rotor and outer rotor built into the pump body. When the inner rotor is driven by the crankshaft, the outer rotor is rotated, changing the size of the space between the two rotors (because of the different number of teeth used on the rotors).

Engine oil is sucked into the large space created near the inlet side. It is then carried over to the discharge port and discharged due to it being gradually pressurized as the space carrying it becomes smaller. Oil pressure is regulated by the relief valve located on the discharge side. Excess oil is directly returned to the suction port.

4. Oil Filter

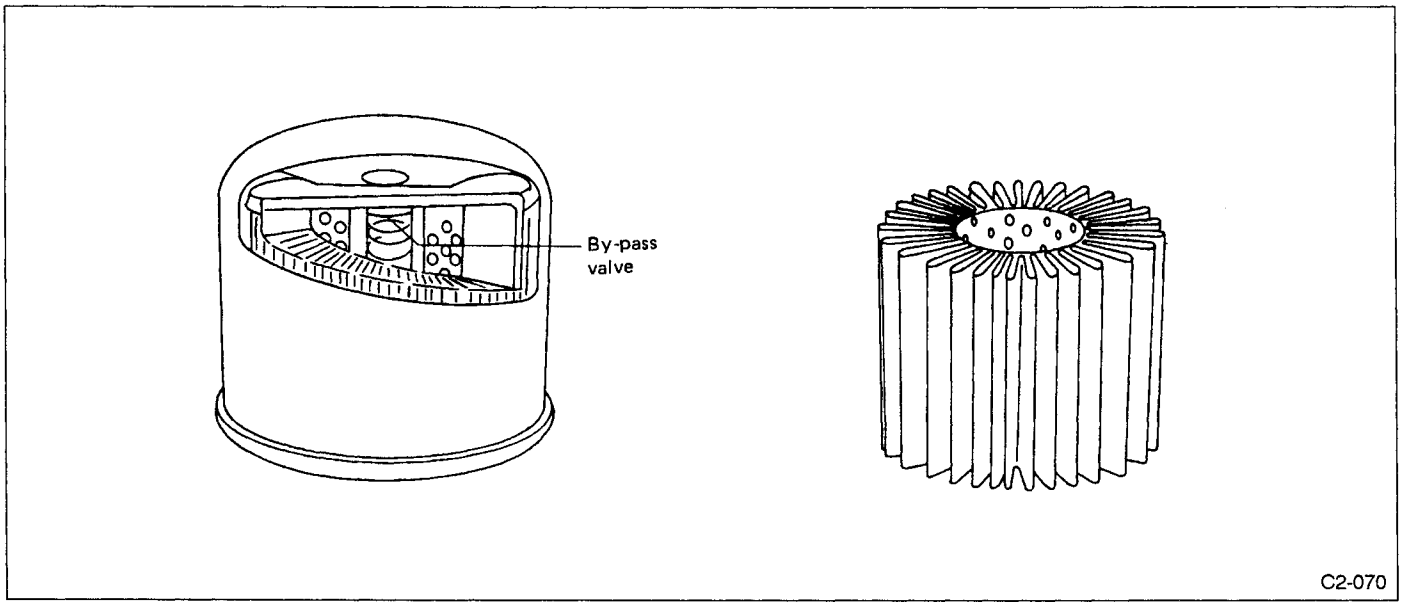

Fig. 4

The oil filter is a full-flow cartridge type that utilizes a paper element. It also has a built-in bypass valve. The filter element has a effective filtering area.

5. Oil Pan & Oil Strainer

The oil pan is joined to the cylinder block via liquid gasket. The oil strainer is a metal net type and removes large foreign particles from the engine oil. It is located in the middle of the oil pan. The pipe from the strainer is connected to the suction port on the left side of the cylinder block.
Baffle plates are placed in the oil pan and the lower side of the cylinder block to stabilize the oil level and strengthen the oil pan.

6. Oil Pressure Switch

A: CONSTRUCTION

The oil pressure switch is located on the front right upper portion of the cylinder block. The purpose of this switch is to monitor the operation of the oil pump as well as the lubricating oil pressure when the engine is running.

B: FUNCTION

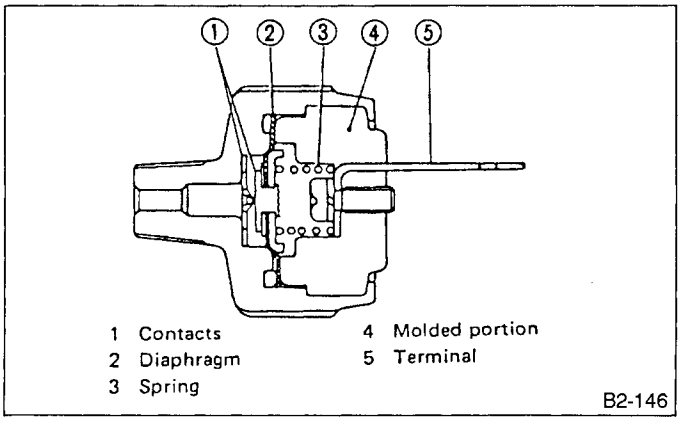

Fig. 5

1) When oil pressure does not build up (with ignition switch "ON"):
The diaphragm is pushed toward the cylinder block by spring force (equivalent to the specified oil pressure). This closes the contact point to illuminate the oil pilot lamp on the instrument panel.
2) When oil pressure reaches the specified value (after engine starts):
After oil pressure reaches the specified value of [14.7 kPa (0.15 kg/cm^2, 2.1 psi)], the diaphragm, pushed by oil pressure, overcomes the spring force. This opens the contact point to turn the oil pilot lamp off.

S SPECIFICATIONS AND SERVICE DATA

A: SPECIFICATIONS

Lubrication method					Forced lubrication
Oil pump	Pump type				Trochoid type
	Number of teeth		Inner rotor		9
			Outer rotor		10
	Outer rotor diameter x thickness mm (in)				78 x 12 (3.07 x 0.47)
	Tip clearance between inner and outer rotor mm (in)			STD	0.04 — 0.14 (0.0016 — 0.0055)
				LIM	0.18 (0.0071)
	Side clearance between inner rotor and pump case mm (in)			STD	0.02 — 0.07 (0.0008 — 0.0028)
				LIM	0.12 (0.0047)
	Case clearance between outer rotor and pump case mm (in)			STD	0.10 — 0.175 (0.0039 — 0.0069)
				LIM	0.20 (0.0079)
	Capacity 80°C (176°F)	600 rpm	Discharge	- pressure	98 kPa (1.0 kg/cm^2, 14 psi)
				- quantity	5.5 ℓ (5.8 US qt, 4.8 Imp qt)/min.
		5,000 rpm	Discharge	- pressure	294 kPa (3.0 kg/cm^2, 43 psi)
				- quantity	56 ℓ (14.8 US gal, 12.3 Imp gal)/min.
	Relief valve operation pressure				588 kPa (6 kg/cm^2, 85 psi)
Oil filter	Type				Full-flow filter type
	Filtration area				1,300 cm^2 (202 sq in)
	By-pass valve opening pressure				157 kPa (1.6 kg/cm^2, 23 psi)
	Outer diameter x width mm (in)				80 x 75 (3.15 x 2.95)
	Oil filter to engine thread size				M 20 x 1.5
Oil pressure switch	Type				Immersed contact point type
	Working voltage — wattage				12 V — 3.4 W or less
	Warning light activation pressure				14.7 kPa (0.15 kg/cm^2, 2.1 psi)
	Proof pressure				More than 981 kPa (10 kg/cm^2, 142 psi)
Oil capacity (at replacement)					6.5 ℓ (6.9 US qt, 5.7 Imp qt)

C COMPONENT PARTS

1. Oil Pump

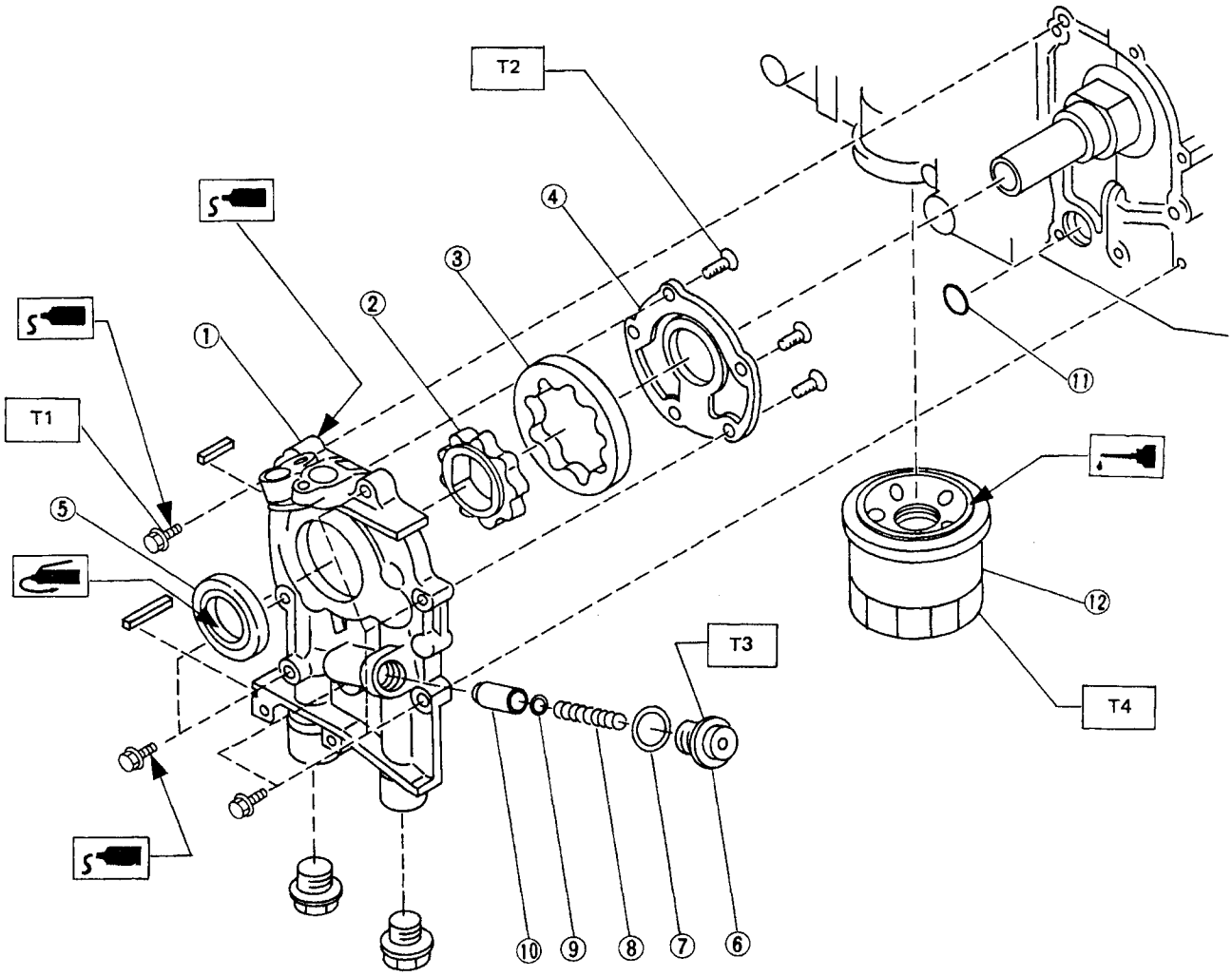

1	Oil pump case
2	Inner rotor
3	Outer rotor
4	Oil pump cover
5	Front oil seal
6	Plug
7	Washer
8	Relief spring
9	Washer
10	Relief valve
11	O-ring
12	Oil filter

Tightening torque: N·m (kg-m, ft-lb)
T1: 6 – 7 (0.6 – 0.7, 4.3 – 5.1)
T2: 4 – 7 (0.4 – 0.7, 2.9 – 5.1)
T3: 40 – 48 (4.1 – 4.9, 30 – 35)
T4: 12 – 16 (1.2 – 1.6, 9 – 12)

C2-071

Fig. 6

2. Oil Pan

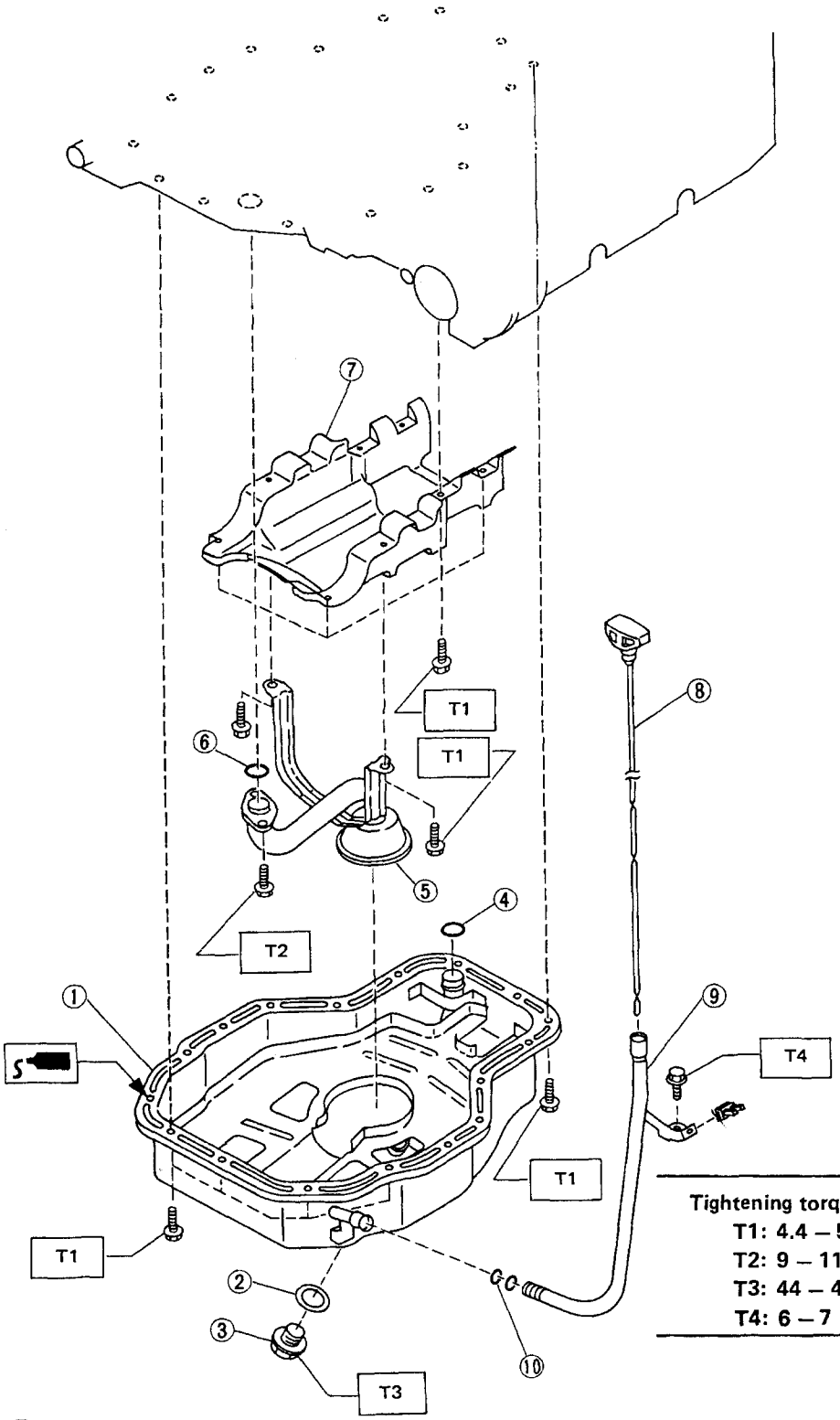

1 Oil pan
2 Gasket
3 Drain plug
4 Gasket
5 Oil strainer
6 O-ring
7 Baffle plate
8 Oil level gauge
9 Oil level gauge guide
10 O-ring

Tightening torque: N·m (kg-m, ft-lb)
T1: 4.4 – 5.4 (0.45 – 0.55, 3.3 – 4.0)
T2: 9 – 11 (0.9 – 1.1, 6.5 – 8.0)
T3: 44 – 49 (4.5 – 5, 33 – 36)
T4: 6 – 7 (0.6 – 0.7, 4.3 – 5.1)

C2-136

Fig. 7

W SERVICE PROCEDURE

1. Oil Pump

A: REMOVAL

1) Open the front hood.
2) Disconnect ground cable from the negative terminal of battery.
3) Drain engine oil.
4) Remove under cover.
5) Remove bolts which connect power steering oil cooler pipe ASSY to body.
(Do not remove power steering oil cooler pipe ASSY.)
6) Remove radiator fan motor ASSYs.
7) Remove drive belt cover and drive belts.
〈Refer to 1-5 "Drive Belts [01A0]".〉
8) Remove A/C belt idler pulley ASSY.
9) Remove power steering pump bracket.
(Do not remove power steering pump.)
10) Remove crank angle sensors.
11) Remove crank shaft pulley.
12) Remove timing belt covers, timing belt and related parts.
〈Refer to 2-3 "Timing Belt [W2A0]".〉
13) Remove crank shaft sprocket, belt idlers, belt tensioner and belt tensioner bracket.
〈Refer to 2-3 "Timing Belt [W2A4]".〉
14) Remove oil pump
Insert flat bladed screwdriver as shown in Figure.
Be careful not to scratch mating surfaces of cylinder block and oil pump.

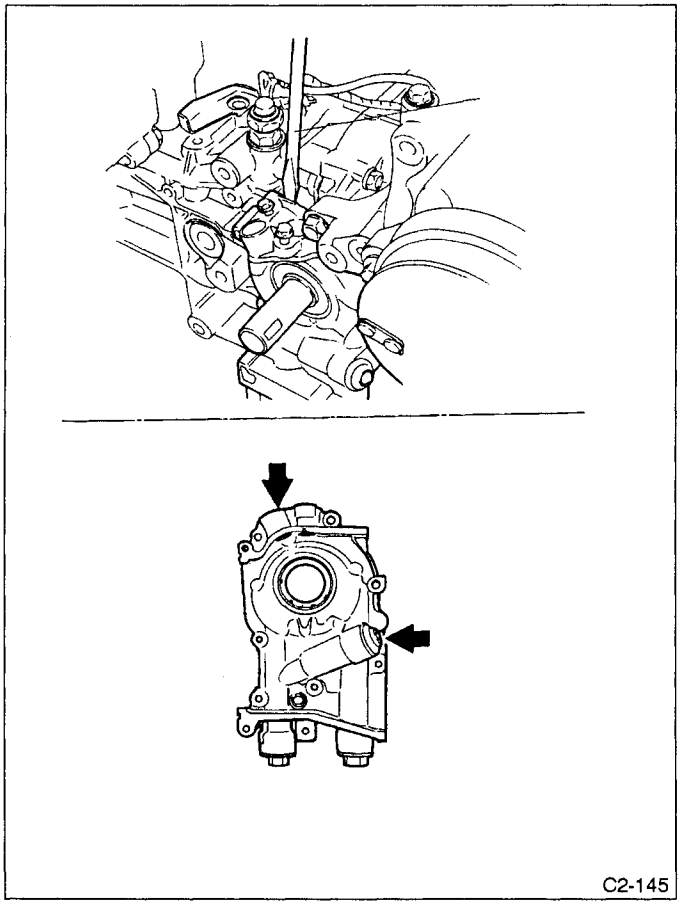

Fig. 8

B: DISASSEMBLY

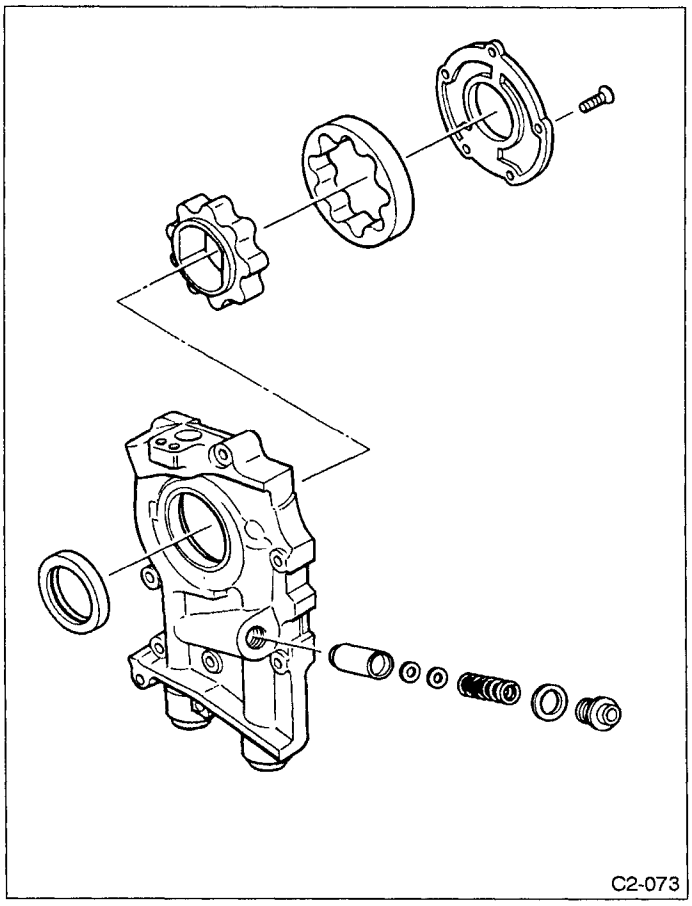

Fig. 9

Remove screws which secure oil pump cover and disassemble oil pump.

Inscribe alignment marks on inner and outer rotors so that they can be replaced in their original positions during reassembly.

a. Before removing relief valve, loosen plug when removing oil pump from cylinder block.

b. The washer(s), which are placed between the relief valve and spring, prevent the relief valve from undergoing pressure variations. Replace the original number of washers during reassembly.

C: INSPECTION

1. TIP CLEARANCE

Measure the tip clearance of rotors. If the clearance exceeds the limit, replace rotors as a matched set.

Tip clearance:
Standard
0.04 — 0.14 mm (0.0016 — 0.0055 in)
Limit
0.18 mm (0.0071 in)

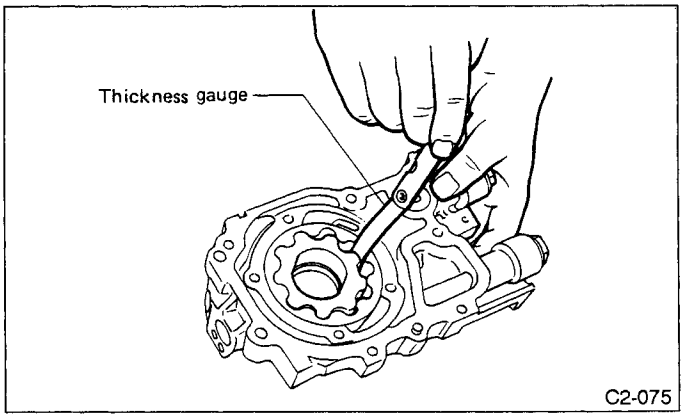

Fig. 10

2. CASE CLEARANCE

Measure the clearance between the outer rotor and the oil pump case rotor housing. If the clearance exceeds the limit, replace the rotor.

Case clearance:
Standard
0.10 — 0.175 mm (0.0039 — 0.0069 in)
Limit
0.20 mm (0.0079 in)

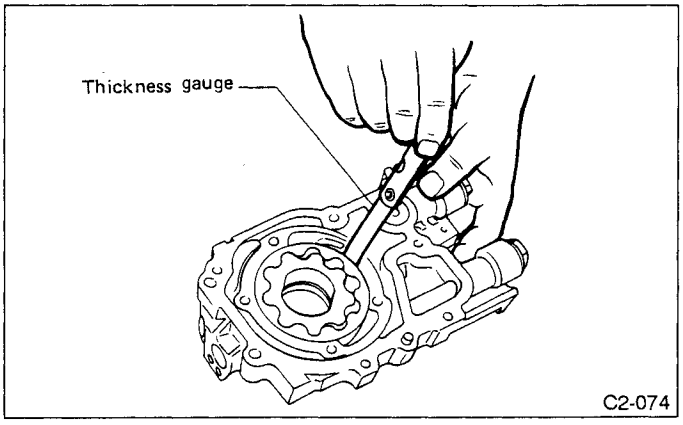

Fig. 11

3. SIDE CLEARANCE

Measure clearance between oil pump inner rotor and pump cover, between oil pump outer rotor and pump body. If the clearance exceeds the limit, replace rotor or pump body.

Side clearance:
Standard
0.02 — 0.07 mm (0.0008 — 0.0028 in)
Limit
0.12 mm (0.0047 in)

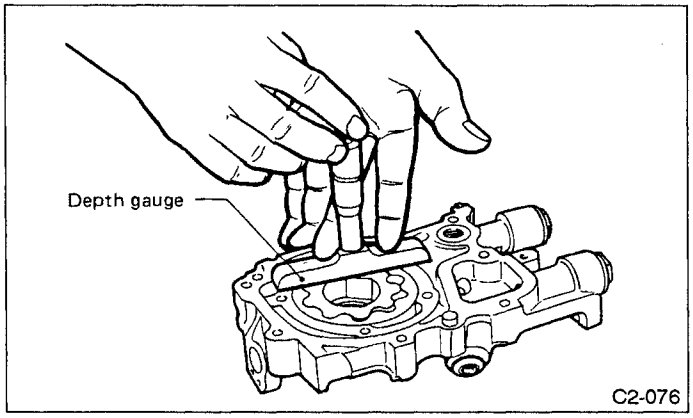

Fig. 12

4. OIL RELIEF VALVE

Check the valve for fitting condition and damage, and the relief valve spring for damage and deterioration. Replace the parts if defective.

Relief valve spring:
Free length
73.7 mm (2.902 in)
Installed length
54.7 mm (2.154 in)
Load when installed
93.2 N (9.5 kg, 20.9 lb)

5. OIL PUMP CASE

Check the oil pump case for worn shaft hole, clogged oil passage, worn rotor chamber, cracks, and other faults.

6. OIL SEAL

Check the oil seal lips for deformation, hardening, wear, etc. and replace if defective.

D: ASSEMBLY

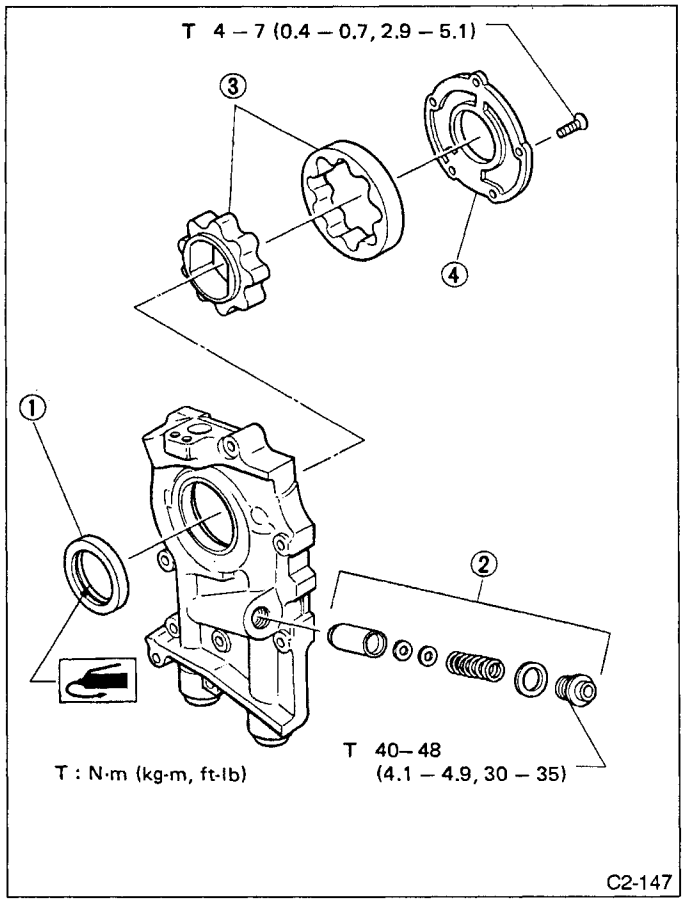

Fig. 13

1) Install front oil seal.
Use a new oil seal.

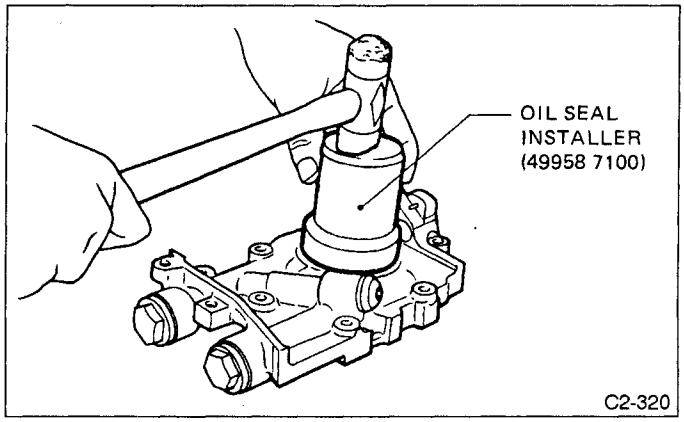

Fig. 14

2) Install oil relief valve and relief spring.
Always replace the original number of washers between the relief valve and spring during installation.
3) Install inner and outer rotors in their original positions.
4) Install oil pump cover.

E: INSTALLATION

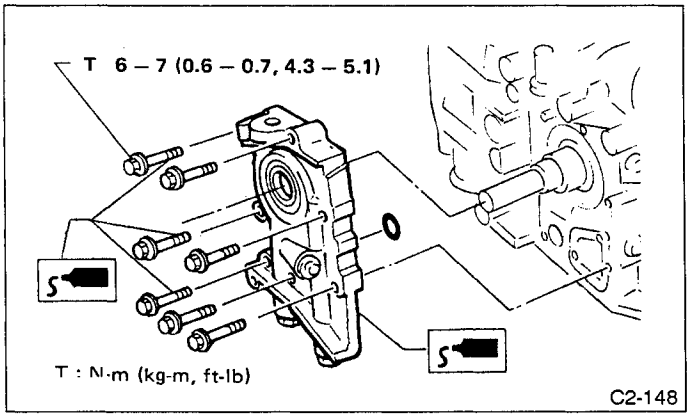

Fig. 15

Installation is in the reverse order of removal.
Observe the following:
1) Apply fluid packing to matching surfaces of oil pump.

Fluid packing:
Three bond 1215B or equivalent

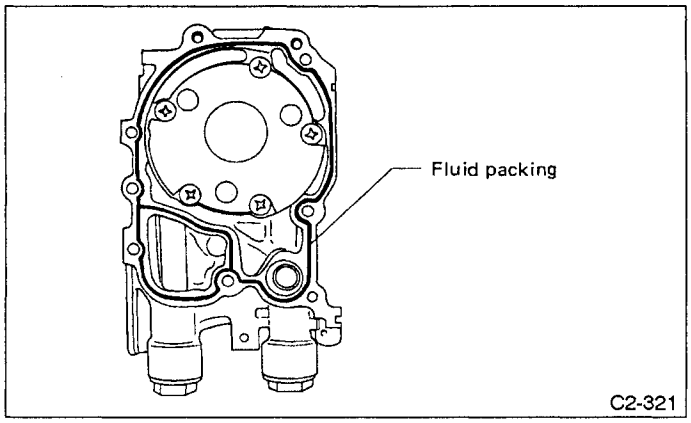

Fig. 16

2) Replace O-ring with a new one.
3) Be careful not to scratch oil seal when installing oil pump on cylinder block.
4) Apply fluid packing to thread portions of oil pump mounting bolts (3 places) shown in figure below.

Fluid packing:
Three bond 1344 or equivalent

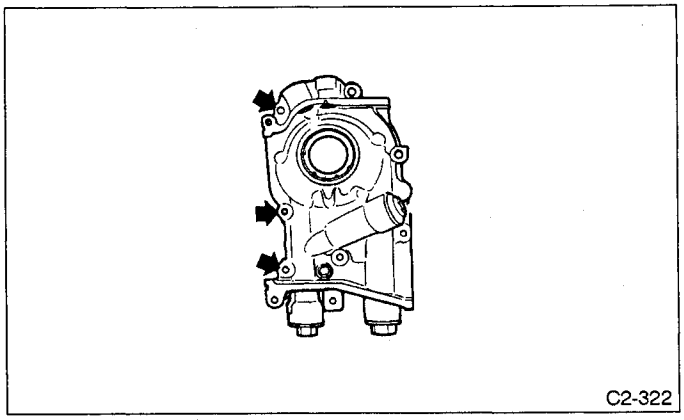

Fig. 17

Apply fluid packing to oil pressure switch threads before installation.

Fluid packing:
Three bond 1324 or equivalent

2. Oil Pan

A: REMOVAL

1) Open the front hood.
2) Disconnect ground cable from the negative terminal of battery.
3) Disconnect left hand O_2 sensor connector.
4) Remove bolts which connect oil level gauge to cylinder head.
5) Drain engine oil.
6) Lift up the body.
7) Remove under cover.
8) Remove left-hand exhaust manifold cover, front exhaust pipe and exhaust manifold.
(Refer to "2-9 Exhaust Manifolds [W2A0]".)
9) Remove steering gear box clamps.
(Do not disconnect tie rod end from knuckle arm.)
10) Disconnect oil level gauge guide from oil pan.
11) Remove the bolts securing the oil pan to the cylinder block. To facilitate removal of the two rear oil pan mounting bolts, use a socket wrench with a universal joint.

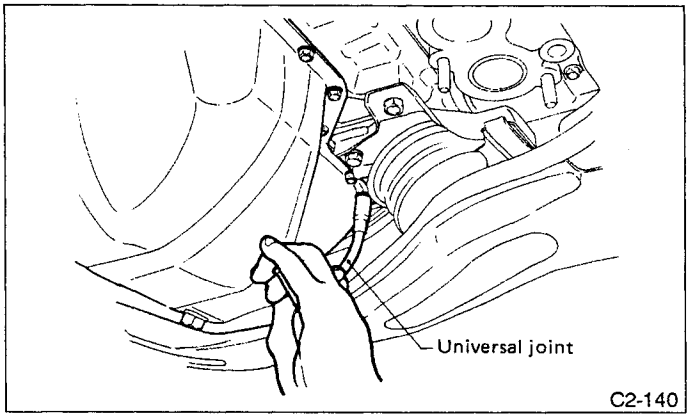

Fig. 18

12) Insert oil pan cutter blade between cylinder block-to-oil pan clearance, and remove oil pan.
Do not use a screwdriver or similar tool in place of oil pan cutter.

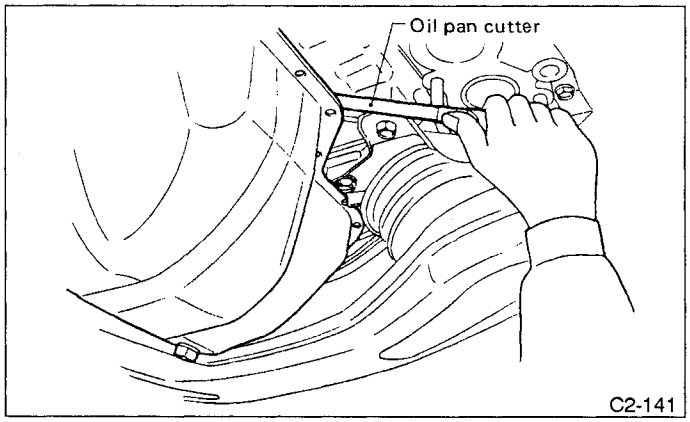

Fig. 19

13) Remove oil strainer.

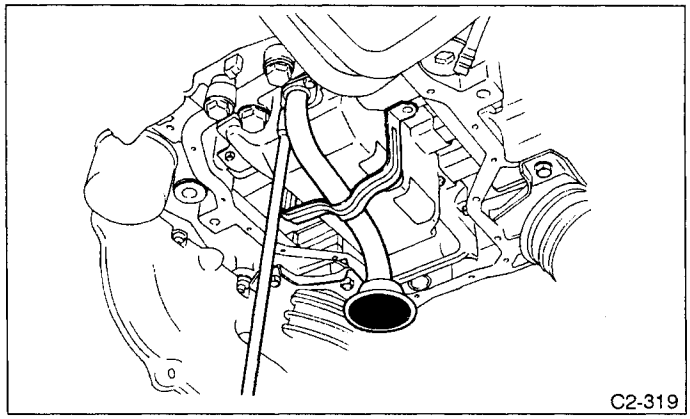

Fig. 20

14) Remove baffle plate.

B: INSTALLATION

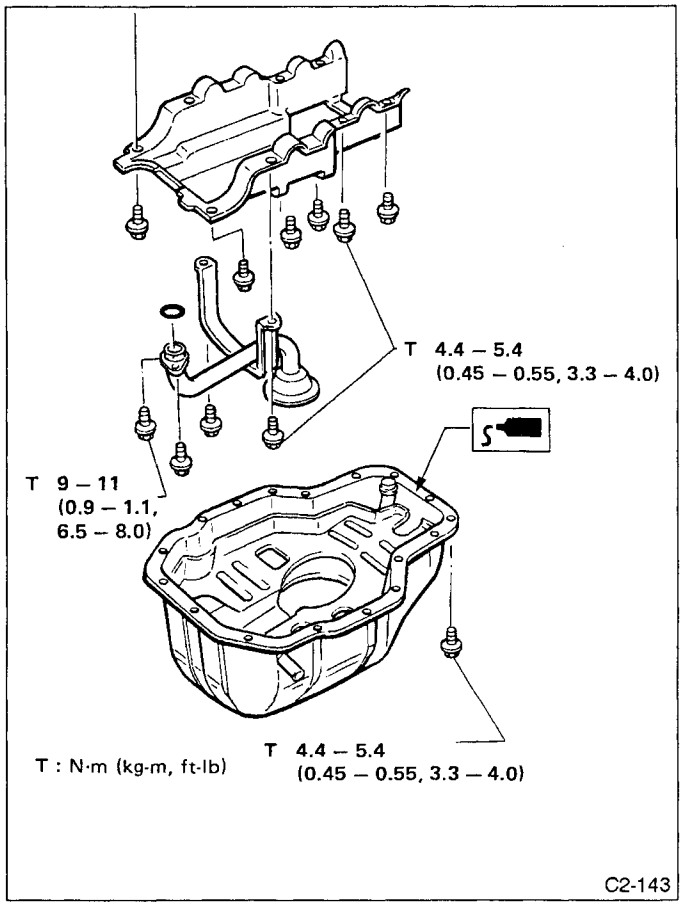

Fig. 21

Installation is in the reverse order of removal.
Observe the following:
1) Replace O-ring with a new one.
2) Apply fluid packing to mating surface of oil pan.

Fluid packing:
Three bond 1207F or equivalent

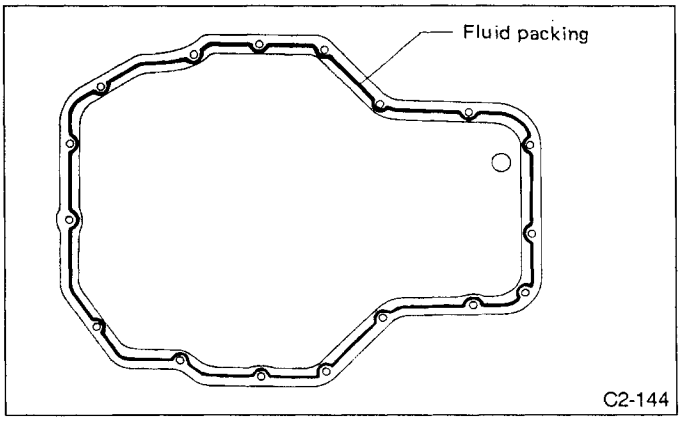

Fig. 22

T TROUBLESHOOTING

Before troubleshooting, make sure that the engine oil level is correct and no oil leakage exists.

Trouble	Possible cause		Corrective action
1. Warning light remains on.	1) Oil pressure switch failure	Cracked diaphragm or oil leakage within switch	Replace.
		Broken spring or seized contacts	Replace.
	2) Low oil pressure	Clogged oil filter	Replace.
		Malfunction of oil by-pass valve of oil filter	Clean or replace.
		Malfunction of oil relief valve of oil pump	Clean or replace.
		Clogged oil passage	Clean.
		Excessive tip clearance and side clearance of oil pump rotor and gear	Replace.
		Clogged oil strainer or broken pipe	Clean or replace.
	3) No oil pressure	Insufficient engine oil	Replenish.
		Broken pipe of oil strainer	Replace.
		Stuck oil pump rotor	Replace.
2. Warning light does not go on.	1) Burn-out bulb		Replace.
	2) Poor contact of switch contact points		Replace.
	3) Disconnection of wiring		Repair.
3. Warning light flickers momentarily.	1) Poor contact at terminals		Repair.
	2) Defective wiring harness		Repair.
	3) Low oil pressure		Check for the same possible causes as listed in 1.—2)

SUBARU

SVX

1992

Page

M MECHANISM AND FUNCTION 2
1. General 2
2. Cooling Lines 2
3. Water Pump 3
4. Mechanical Seal 3
5. Thermostat 4
S SPECIFICATIONS AND SERVICE DATA 5
A: SPECIFICATIONS 5
B: SERVICE DATA 5
C COMPONENT PARTS 6
1. Water Pump 6
2. Radiator and Radiator Fan 7
3. Water Pipe 8
W SERVICE PROCEDURE 9
1. Water Pump 9
2. Thermostat 11
3. Radiator 11
4. Radiator Cap 13
5. Radiator Fan and Fan Motor 14
T TROUBLESHOOTING 15

M MECHANISM AND FUNCTION

1. General

The engine cooling system consists of a down-flow radiator which features high heat-dissipation performance, an electric motor fan, a water pump, a thermostat, and a thermometer. The reserve tank is designed to eliminate the need for replenishing coolant.

ECU sends ON or OFF, and Lo (low) MID (medium) or Hi (high) switch signals to the radiator main fan and sub fan in response to signals from the water temperature sensor, vehicle speed sensor 2, A/C switch and A/C trinary switch.

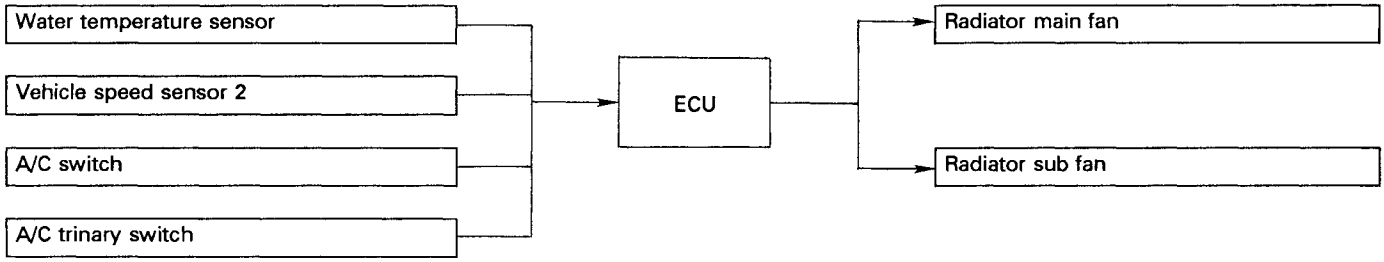

2. Cooling Lines

This cooling system operates in three steps depending on the temperature of the coolant flowing through the cooling circuit.

1) 1st step ... With thermostat closed

At coolant temperature of below 76°C (169°F), the thermostat remains closed and the coolant flows through the bypass and heater circuits.

This permits the engine to warm up quickly.

2) 2nd step ... With thermostat opened

When the coolant temperature is above 76 — 80°C (169 — 176°F), the thermostat opens and the coolant flows through the radiator where it is cooled.

3) 3rd step ... With electric cooling fan operating

When the coolant temperature rises above 95°C (203°F), the water temperature sensor is turned on and radiator fan rotates.

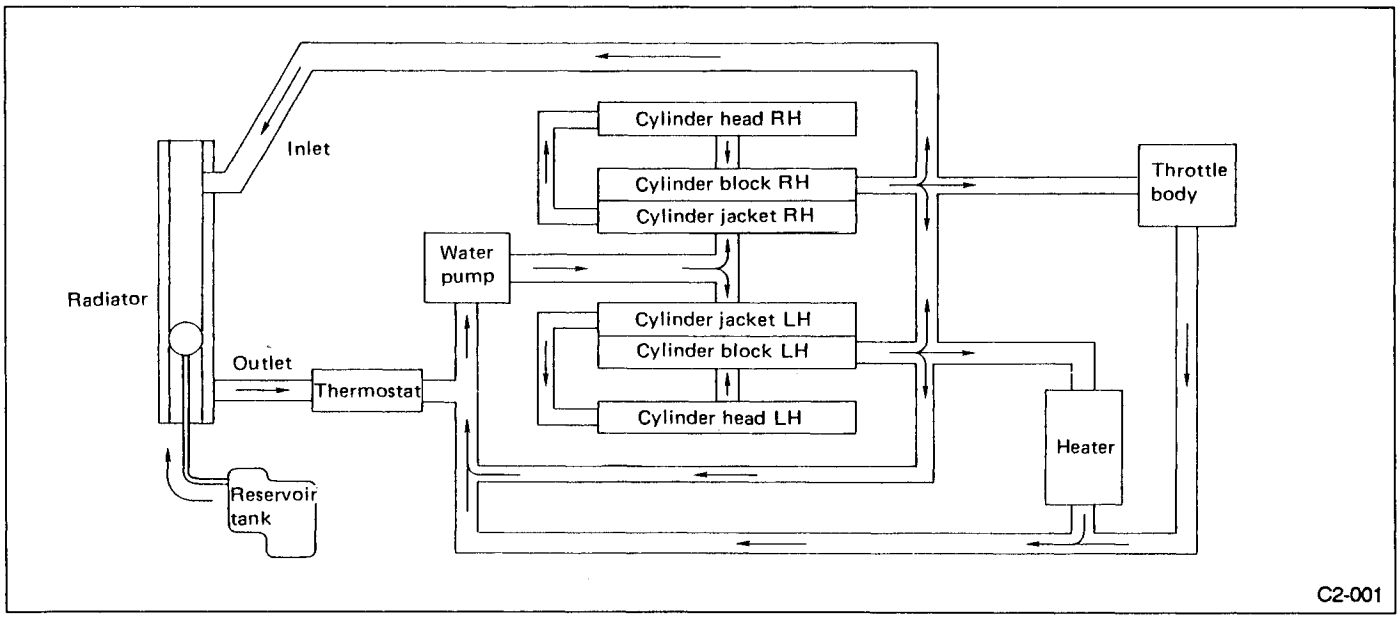

Fig. 1

3. Water Pump

The water pump is located on the left front portion of the cylinder block and is driven by the back of the timing belt. The thermostat is built into the water inlet located on the lower side of the water pump. When the impeller rotates, engine coolant is drawn into the water pump from the lower pipe (which is connected to the radiator hose) via the thermostat. It then flows along the perimeter of the impeller and is delivered to the engine's water passage.

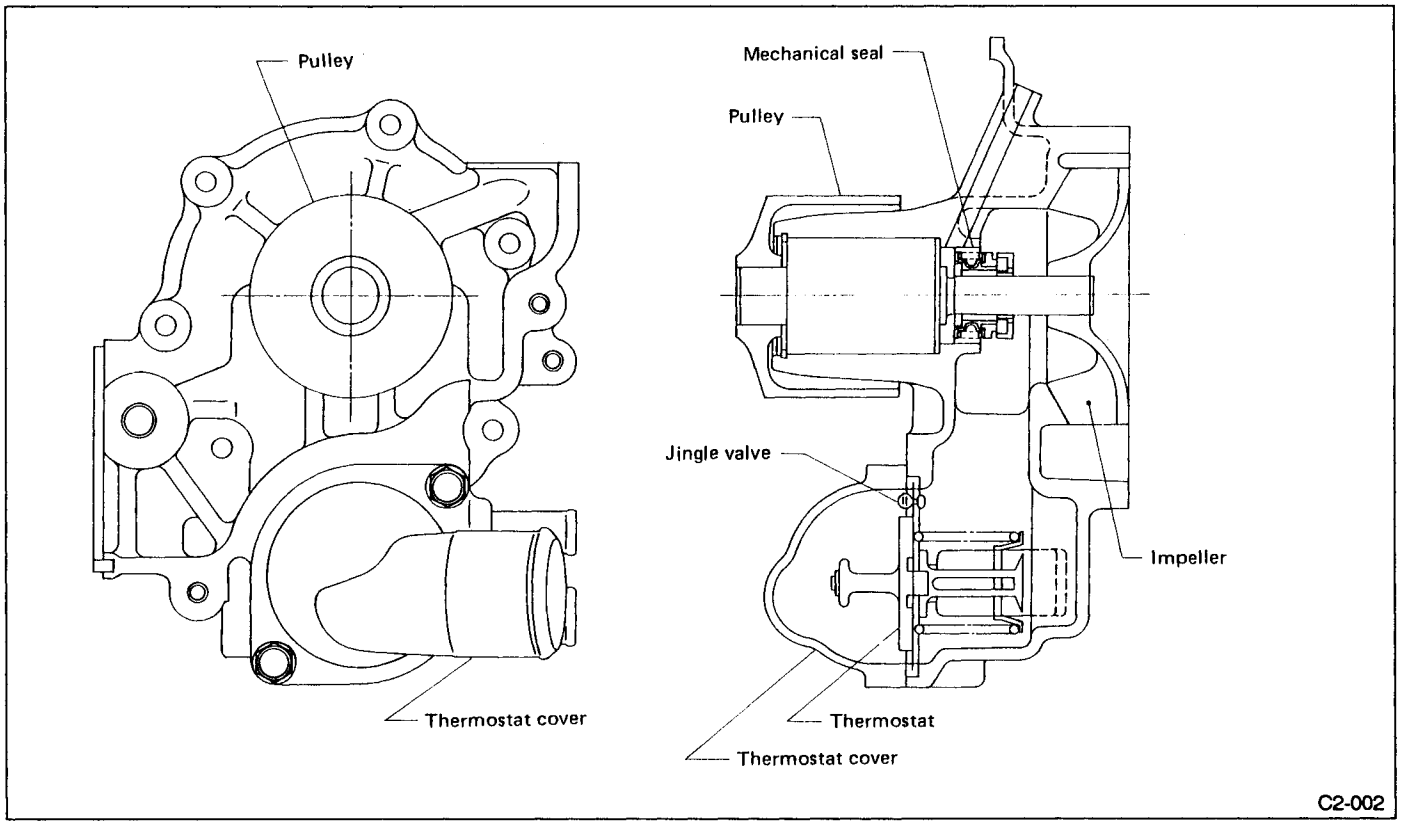

Fig. 2

4. Mechanical Seal

The mechanical seal has its seat pressed into the water pump shaft to form the seal and water pump as a single unit. With this design, the water pump cannot be disassembled.

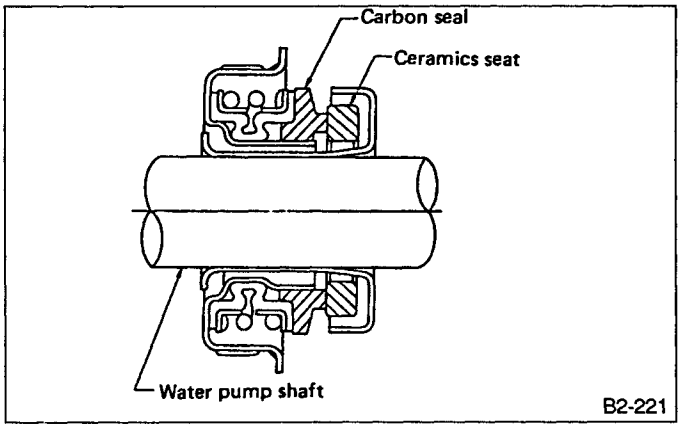

Fig. 3

5. Thermostat

The thermostat is powered to open the valve by a totally-enclosed wax pellet which expands with increased temperature. It provides the sure open-close operation of the valve and features high durability.

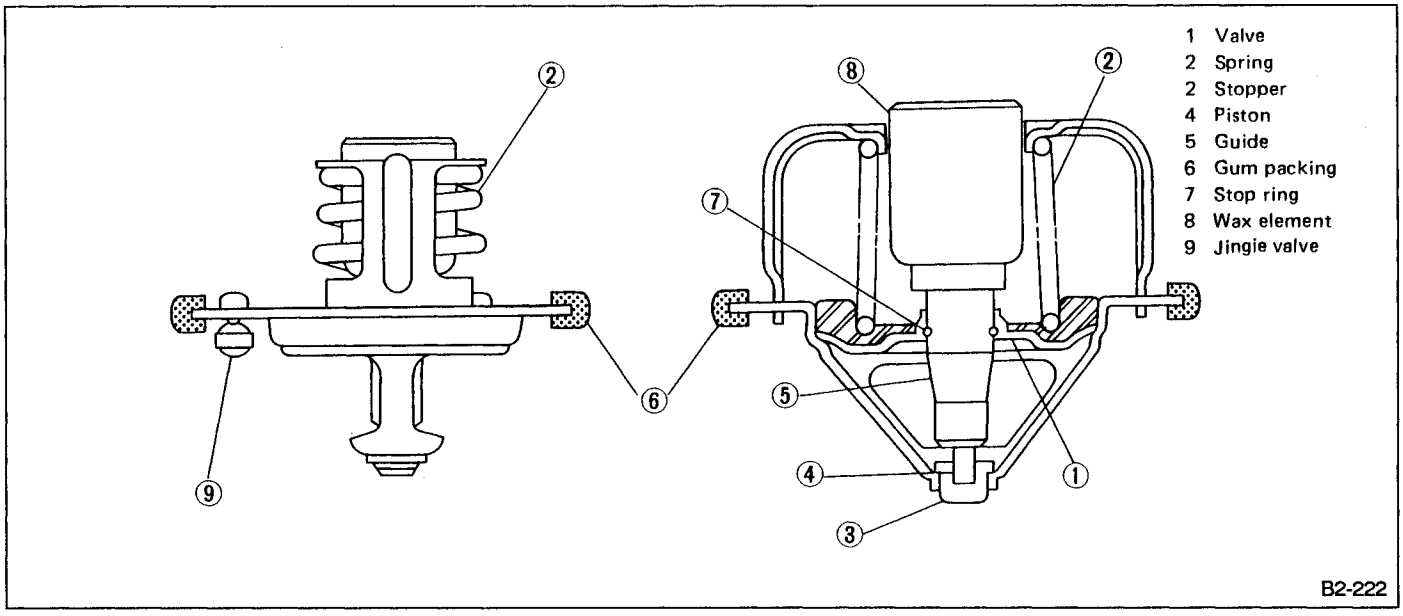

Fig. 4

S SPECIFICATIONS AND SERVICE DATA

A: SPECIFICATIONS

Cooling system			Electric fan + Forced engine coolant circulation system
Total coolant capacity			7.5 ℓ (7.9 US qt, 6.6 Imp qt)
Engine coolant pump	Type		Centrifugal impeller type
	Discharge performance I	Discharge	20 ℓ (5.3 US gal, 4.4 Imp gal)/min.
		Pump speed — total water head	760 rpm — 0.3 mAq (1.0 ft Aq)
		Engine coolant temperature	85°C (185°F)
	Discharge performance II	Discharge	100 ℓ (26.4 US gal, 22.0 Imp gal)/min.
		Pump speed — total water head	3,000 rpm — 5.0 mAq (16.4 ft Aq)
		Engine coolant temperature	85°C (185°F)
	Discharge performance III	Discharge	200 ℓ (52.8 US gal, 44.0 Imp gal)/min.
		Pump speed — total water head	6,000 rpm — 23.0 mAq (75.5 ft Aq)
		Engine coolant temperature	85°C (185°F)
	Impeller diameter		76 mm (2.99 in)
	Number of impeller vanes		8
	Pump pulley diameter		60 mm (2.36 in)
Thermostat	Type		Wax pellet type
	Starts to open		76 — 80°C (169 — 176°F)
	Fully opens		91°C (196°F)
	Valve lift		9.0 mm (0.354 in) or more
	Valve bore		35 mm (1.38 in)
Fan control (main)	Motor		175 W
	Fan dia. x blade		320 mm (12.60 in) x 4
Fan control (sub)	Motor		175 W
	Fan dia. x blade		320 mm (12.60 in) x 5
Radiator	Type		Down-flow, pressure type
	Core dimensions		691 x 345 x 25 mm (27.20 x 13.58 x 0.98 in)
	Pressure range in which cap valve is open		Above 88 ± 10 kPa (0.9 ± 0.1 kg/cm^2, 13 ± 1.4 psi) Below −4.9 to −10 kPa (−0.05 to −0.1 kg/cm^2, −0.7 to −1.4 psi)
	Fins		Corrugated fin type
Reservoir tank	Capacity		0.55 ℓ (0.6 US qt, 0.5 Imp qt)

C COMPONENT PARTS

1. Water Pump

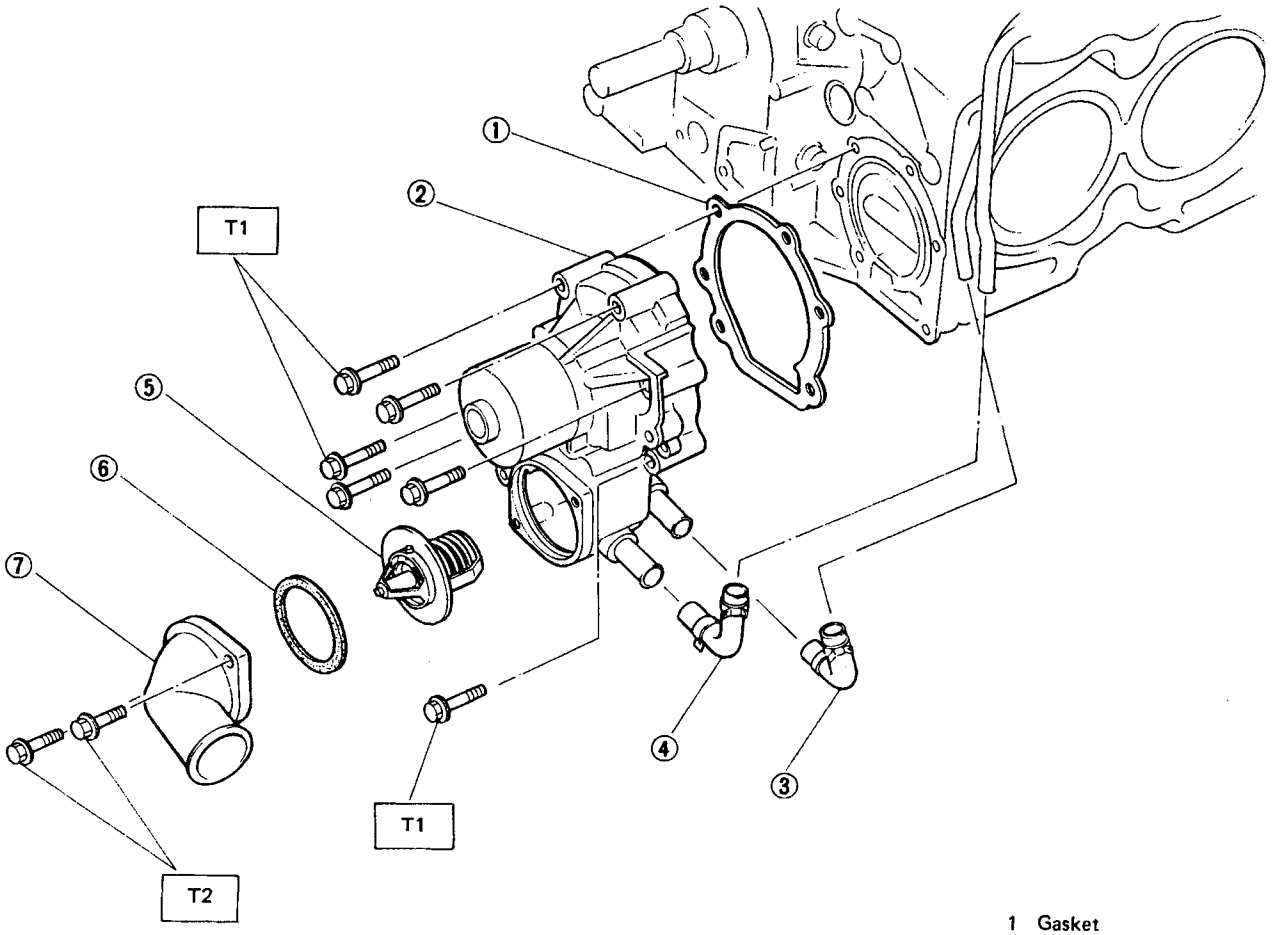

1 Gasket
2 Water pump CP
3 Heater hose (Inlet)
4 Heater hose (Outlet)
5 Thermostat
6 Gasket
7 Thermostat cover

Tightening torque: N.m (kg-m, ft-lb)
T1: First 10 – 14 (1.0 – 1.4, 7 – 10)
Second 10 – 14 (1.0 – 1.4, 7 – 10)
T2: 6 – 7 (0.6 – 0.7, 4.3 – 5.1)

C2-003

Fig. 5

C COMPONENT PARTS

2. Radiator and Fan Control

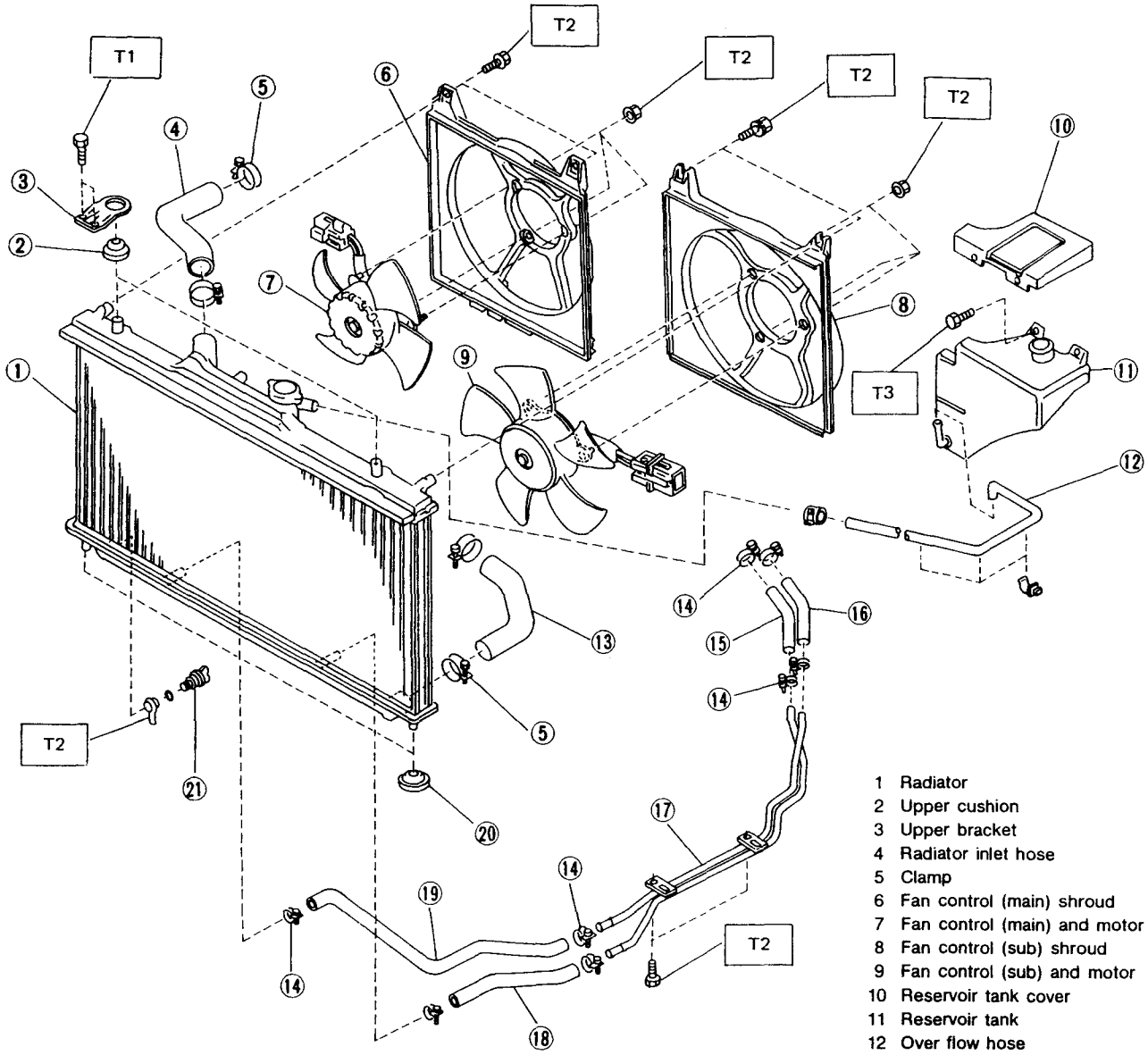

1 Radiator
2 Upper cushion
3 Upper bracket
4 Radiator inlet hose
5 Clamp
6 Fan control (main) shroud
7 Fan control (main) and motor
8 Fan control (sub) shroud
9 Fan control (sub) and motor
10 Reservoir tank cover
11 Reservoir tank
12 Over flow hose
13 Radiator outlet hose
14 Clamp
15 ATF cooler inlet hose A
16 ATF cooler outlet hose A
17 ATF cooler pipe
18 ATF cooler inlet hose B
19 ATF cooler outlet hose B
20 Lower cushion
21 Engine coolant drain cock
22 Drain pipe

Tightening torque: N·m (kg-m, ft-lb)
T1: 13 — 23 (1.3 — 2.3, 9 — 17)
T2: 5.5 — 9.5 (0.56 — 0.97, 4.06 — 7.01)
T3: 4.5 — 7.5 (0.46 — 0.77, 3.32 — 5.53)

C2-518

Fig. 1

3. Water Pipe

1 Water pipe CP
2 Water temperature gauge
3 Water temperature sensor
4 O-ring
5 O-ring
6 Auxiliary air control valve

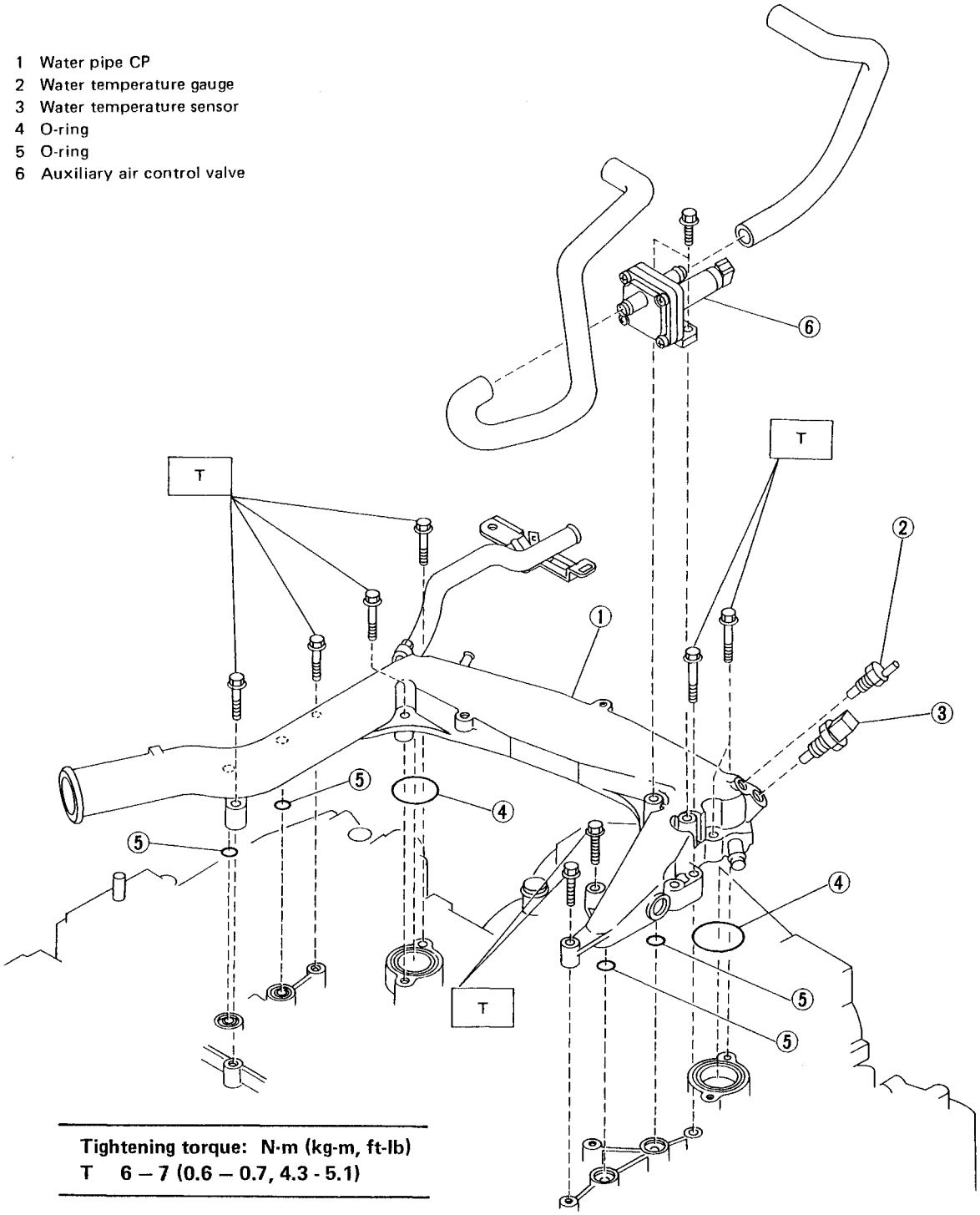

Tightening torque: N·m (kg-m, ft-lb)
T 6 – 7 (0.6 – 0.7, 4.3 - 5.1)

C2-005

Fig. 7

W SERVICE PROCEDURE

1. Water Pump

A: REMOVAL

1) Open the front hood.
2) Disconnect the ground cable from the battery.
3) Drain the coolant completely.
4) Disconnect the radiator outlet hose.
5) Disconnect radiator fan motor connector.

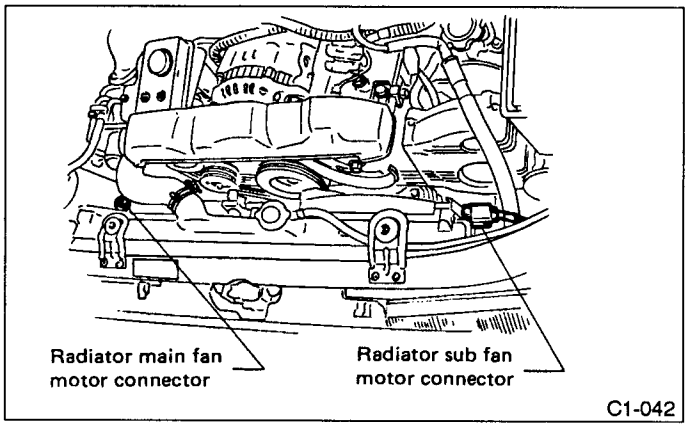

Fig. 8

6) Remove radiator bracket.
7) Remove radiator sub fan motor ASSY.

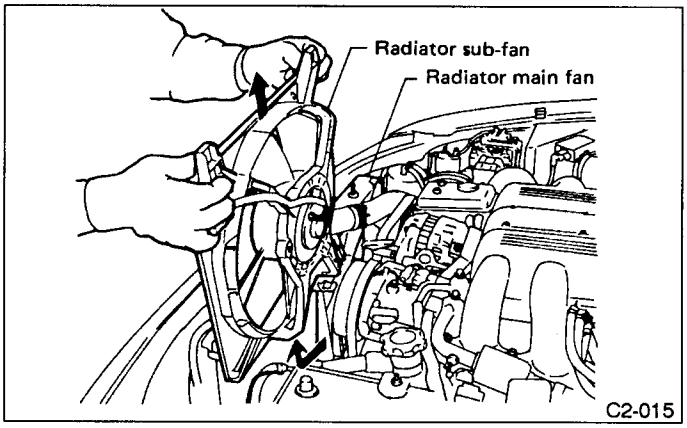

Fig. 9

8) Remove V-belt(s).
(Refer to "Chapter 1-5 section 1".)
9) Remove timing belt.
(Refer to "Chapter 1-5 section 2".)
10) Remove tensioner adjuster.
11) Remove cam angle sensor.
12) Remove left side camshaft pulley.

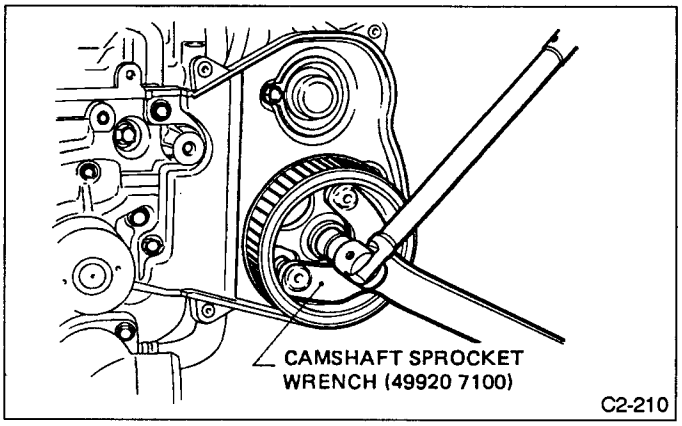

Fig. 10

13) Remove left side rear timing belt cover.

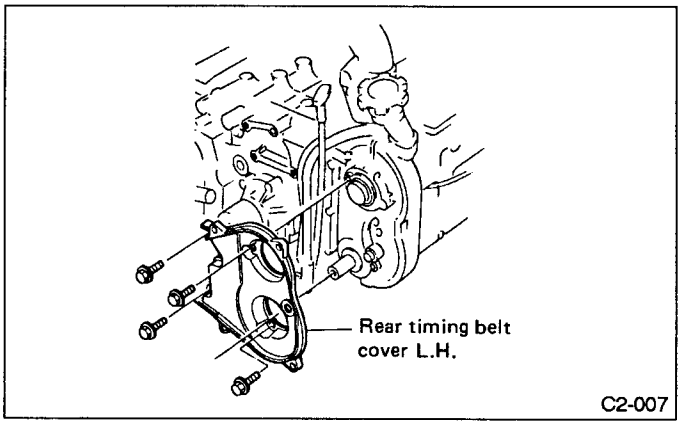

Fig. 11

14) Remove tensioner bracket.
15) Disconnect radiator hose and heater hose from water pump.
16) Remove water pump.

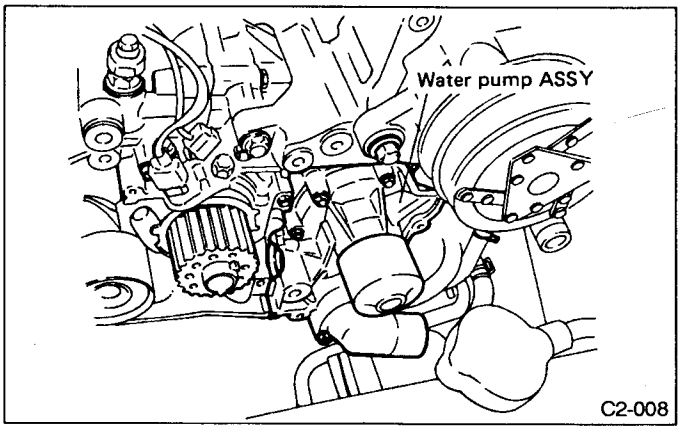

Fig. 12

B: INSPECTION

1) Check water pump bearing for smooth rotation.
2) Check water pump pulley for abnormalities.
3) Using a dial gauge, measure impeller runout in thrust direction while rotating the pulley.

"Thrust" runout limit:
0.5 mm (0.020 in)

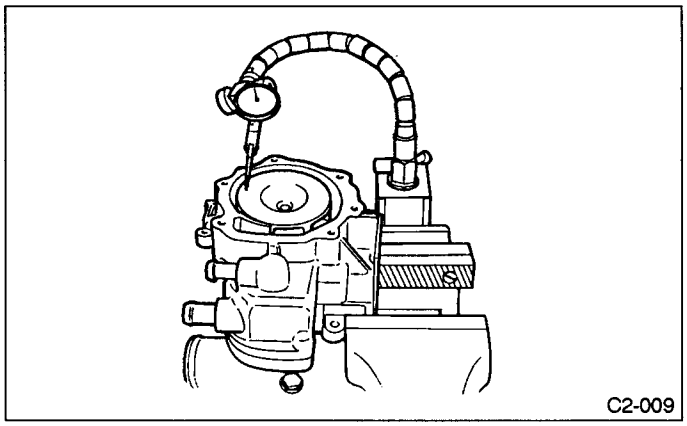

Fig. 13

4) Check clearance between impeller and pump case.

Clearance between impeller and pump case:
Standard
0.5 — 0.7 mm (0.020 — 0.028 in)
Limit
1.0 mm (0.039 in)

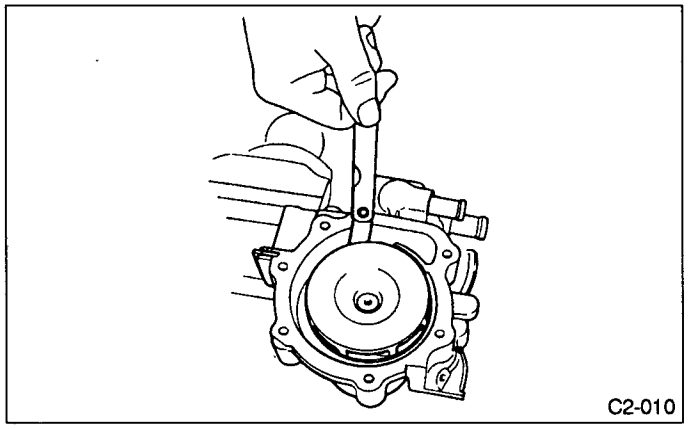

Fig. 14

5) After water pump installation, check pulley shaft for water leaks. If leaks are noted, replace water pump ASSY.

C: INSTALLATION

Installation is in the reverse order of removal.
a. Always use a new gasket.
b. When installing water pump, tighten all bolts in two steps in numerical sequence as shown in Figure.

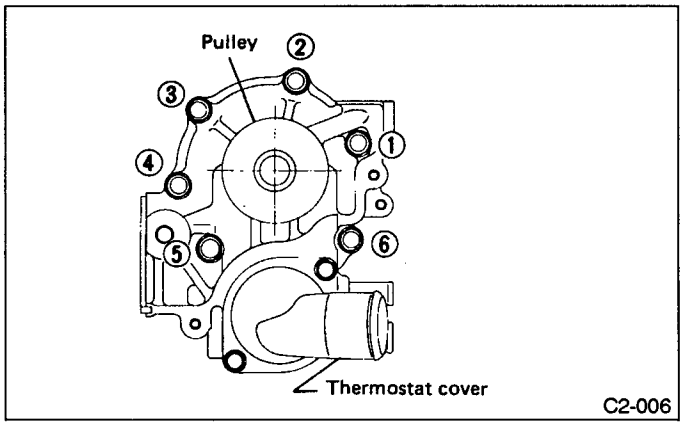

Fig. 15

Tightening torque: N•m (kg-m, ft-lb)
First: 10 — 14 (1.0 — 1.4, 7 — 10)
Second: 10 — 14 (1.0 — 1.4, 7 — 10)

c. After reinstalling the water pump, run the engine to make sure that neither water leakage nor abnormal noise exists.

2. Thermostat

A: REMOVAL AND INSTALLATION

1) Remove the thermostat case cover and gasket, and pull out the thermostat.
2) Install the thermostat in the intake manifold, and install the thermostat cover together with a gasket.
a. When reinstalling the thermostat, use a new gasket.
b. The thermostat must be installed with the jiggle pin upward.
c. In this time, set the jiggle pin of thermostat for front side.

B: INSPECTION

Replace the thermostat if the valve does not close completely at an ambient temperature or if the following test shows unsatisfactory results.
Immerse the thermostat and a thermometer in water. Raise water temperature gradually, and measure the temperature and valve lift when the valve begins to open and when the valve is fully opened. During the test, agitate the water for even temperature distribution. The measurement should be to the specification.

Starts to open:
76.0 — 80.0°C (169 — 176°F)
Fully opens:
91°C (196°F)

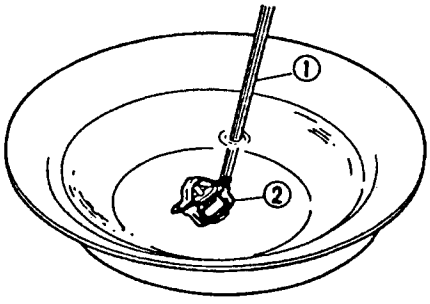

1 Thermometer
2 Thermostat

B2-230

Fig. 16

3. Radiator

A: ON CAR SERVICE

1) Remove radiator cap, top off radiator, and attach tester to radiator in place of cap.
2) Apply a pressure of 157 kPa (1.6 kg/cm^2, 23 psi) to radiator to check if:
(1) Water leaks at/around radiator.
(2) Water leaks at/around hoses or connections.

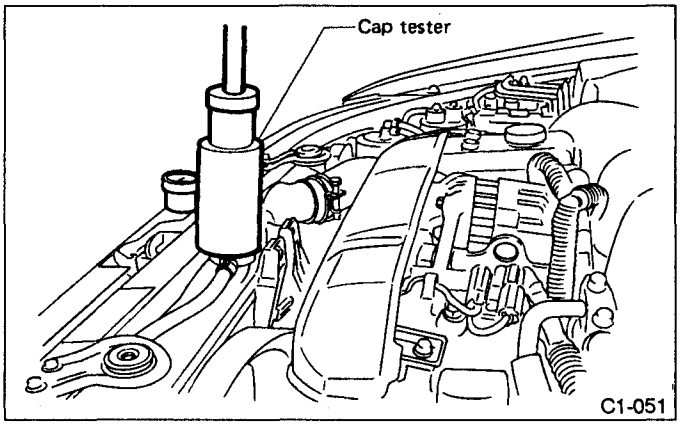

Fig. 17

a. Engine should be off.
b. Wipe water from check points in advance.
c. Be careful to prevent cooling water from spurting out when removing tester.
d. Be careful also not to deform filler neck of radiator when installing or removing tester.

B: REMOVAL

1) Disconnect battery cables and remove battery from body.
2) Lift up the vehicle, and remove lower cover.
3) Drain coolant from radiator.
(1) Fit end of vinyl tube into drain pipe.
(2) Loosen drain cock and drain coolant.
Refer to C.1-5.

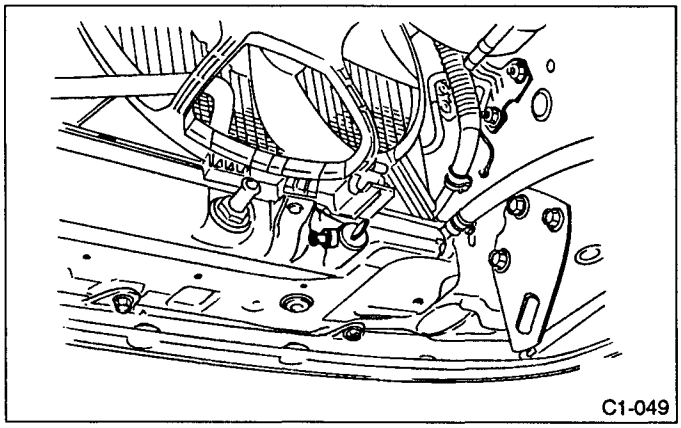

Fig. 18

4) Disconnect outlet hose from water pump.
Drain coolant into container.
5) Disconnect ATF cooler hose from pipe.
a. Drain ATF into container.
b. Clog the pipe holes so as not to spill ATF.

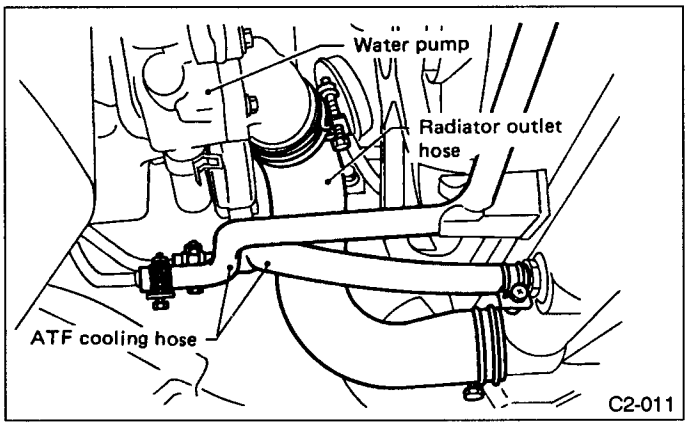

Fig. 19

6) Lower the vehicle.
7) Disconnect radiator fan motor connectors.

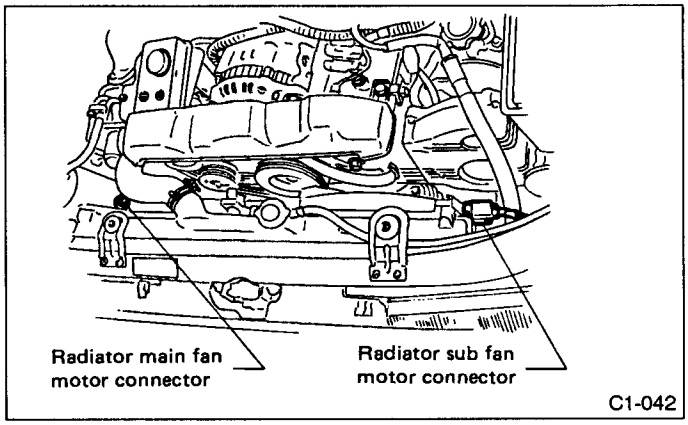

Fig. 20

8) Remove over-flow hose from radiator.
9) Remove V-belt cover.
10) Disconnect inlet hose from water pipe.

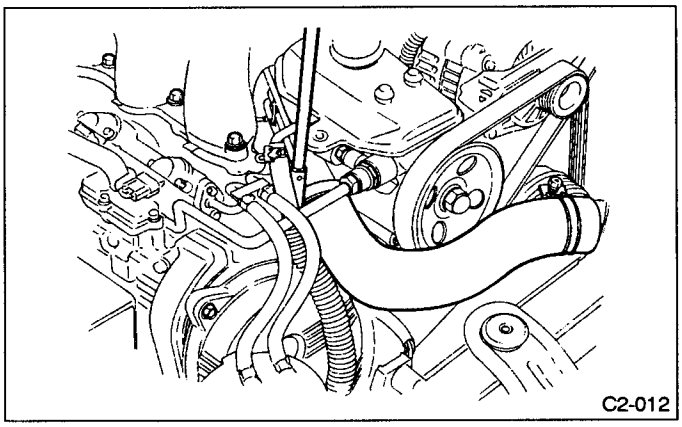

Fig. 21

11) Remove radiator upper bracket.

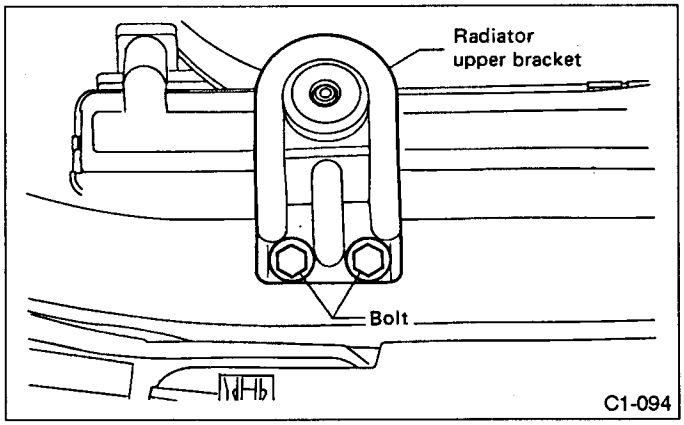

Fig. 22

12) Lift radiator up and away from vehicle.

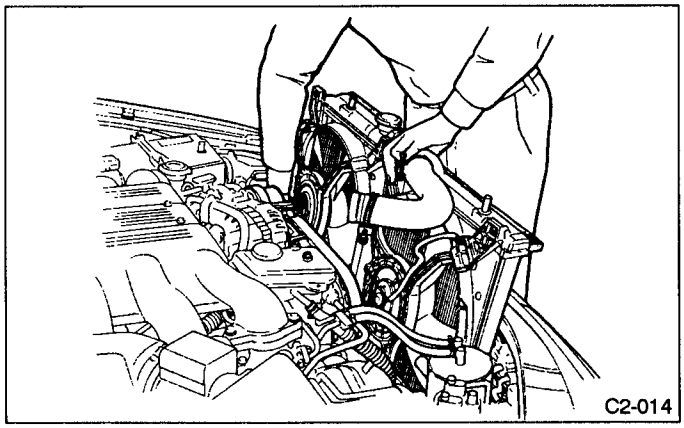

Fig. 23

C: INSTALLATION

1) Fit cushions on body and install radiator.

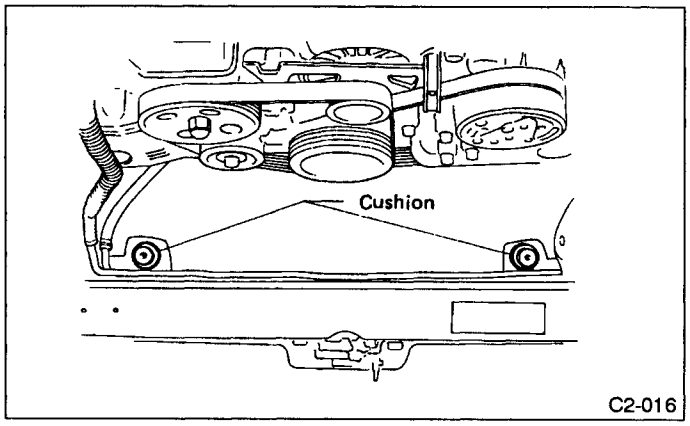

Fig. 24

2) Install radiator brackets and tighten bolts.
3) Connect radiator main fan and sub fan motor connectors.
4) Connect inlet hose and over-flow hose.
5) Install V-belt cover.
6) Lift up the vehicle, and connect outlet hose and ATF cooler hose.
7) Install lower cover.
8) Install battery and connect cables.
9) Pour coolant.
   (1) Pour coolant into radiator up to filler neck position.
   (2) Pour coolant into reservoir tank up to upper level.
   (3) Attach radiator cap and reservoir tank cap properly.
   (4) Warm up engine completely. (For more than 5 minutes at 2,000 to 3,000 rpm.)
   (5) Stop engine and wait until temperature drops to a safe level.
   (6) Remove radiator cap.
   (7) If coolant level drops in radiator, add coolant to filler neck position.
   (8) If coolant level drops from upper level of reservoir tank, add coolant to upper level.
   (9) Attach radiator cap and reservoir tank cap properly.
10) Check ATF level.

4. Radiator Cap

A: INSPECTION

1) Attach radiator cap to tester.
2) Increase pressure until tester gauge pointer stops. Radiator cap is functioning properly if it holds the service limit pressure for five to six seconds.

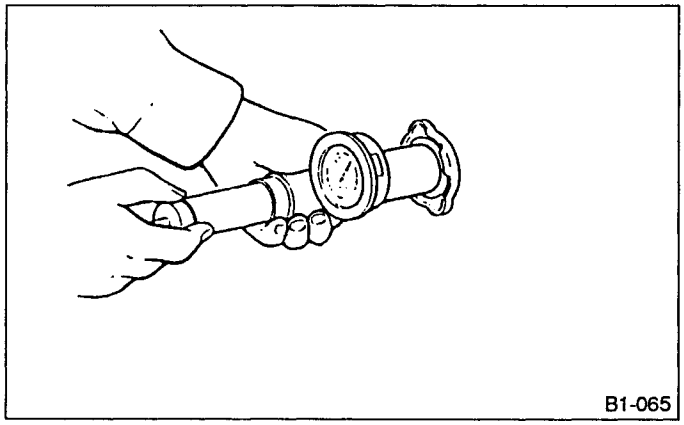

Fig. 25

Standard pressure:
78 — 98 kPa (0.8 — 1.0 kg/cm², 11 — 14 psi)
Service limit pressure:
69 kPa (0.7 kg/cm², 10 psi)

Be sure to remove foreign matter and rust from the cap in advance; otherwise, results of pressure test will be incorrect.

5. Radiator Fan and Fan Motor

A: REMOVAL

1) Disconnect ground cable from battery terminal.
2) Disconnect connector from fan motor.
3) Remove radiator bracket.
4) Remove two bolts holding shroud to radiator upper side.
5) Remove radiator fan ASSY.

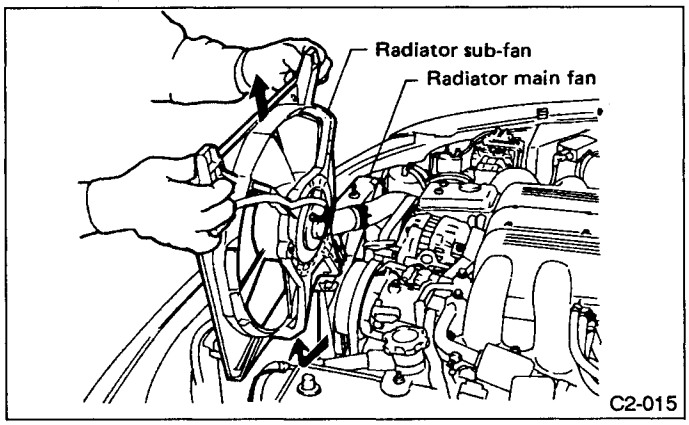

Fig. 26

6) Remove fan motor from shroud.

B: INSTALLATION

Installation is in the reverse order of removal procedures.
Observe the following:
1) Before installing radiator fan motor, apply a coat of sealant to threads and tighten nuts.

Tightening torque: N•m (kg-m, ft-lb)
2 — 3 (0.2 — 0.3, 1.4 — 2.2)

2) Make sure radiator fan does not come into contact with shroud when installed.
3) After installation, make sure there is no unusual noise or vibration when fan is rotated.

T TROUBLESHOOTING

Trouble	Possible cause	Corrective action
Over-heating	a. Insufficient coolant.	Replenish coolant, inspect for leakage, and repair.
	b. Loose drive belt.	Adjust drive belt tension.
	c. Oil on drive belt.	Replace.
	d. Malfunction of thermostat.	Replace.
	e. Malfunction of water pump.	Replace.
	f. Clogged coolant passage.	Clean.
	g. Improper ignition timing.	Adjust.
	h. Clogged or leaking radiator.	Clean or repair, or replace.
	i. Improper engine oil.	Replace.
	j. Air-fuel mixture too thin.	Inspect and repair fuel system.
	k. Excessive back pressure in exhaust system.	Clean or replace.
	l. Insufficient clearance between piston and cylinder.	Adjust or replace.
	m. Slipping clutch.	Repair or replace.
	n. Dragging brake.	Adjust.
	o. Improper transmission oil.	Replace.
	p. Defective thermostat.	Replace.
	q. Malfunction of radiator fan.	Inspect radiator fan relay, water temperature sensor or motor, and replace there.
Over-cooling	a. Atmospheric temperature extremely low.	Party cover radiator front area.
	b. Defective thermostat.	Replace.
Coolant leaks	a. Loosened or damaged connecting units on hoses.	Repair or replace.
	b. Leakage from water pump.	Replace.
	c. Leakage from intake manifold.	Repair or replace.
	d. Leakage around cylinder head gasket.	Retighten cylinder head nuts or replace gasket.
	e. Damaged or cracked cylinder head and crankcase.	Repair or replace.
	f. Damaged or cracked thermostat case.	Repair or replace.
	g. Leakage from radiator.	Repair or replace.
Noise	a. Defective drive belt.	Replace.
	b. Defective electric fan.	Replace.
	c. Defective water pump bearing.	Replace water pump.
	d. Defective water pump mechanical seal.	Replace water pump.

SUBARU

SVX

1992

Precaution for Supplemental Restraint System "Airbag"
The Supplemental Restraint System "Airbag" helps to reduce the risk or severity of injury to the driver in a frontal collision.
The Supplemental Restraint System consists of an airbag module (located in the center of the steering wheel), sensors, a control unit, warning light, wiring harness and spiral cable.
Information necessary to service the safety is included in the "5-5. SUPPLEMENTAL RESTRAINT SYSTEM" of this Service Manual.
WARNING:
- To avoid rendering the Airbag system inoperative, which could lead to personal injury or death in the event of a severe frontal collision, all maintenance must be performed by an authorized SVX dealer.
- Improper maintenance, including incorrect removal and installation of the Airbag system, can lead to personal injury caused by unintentional activation of the Airbag system.
- All Airbag system electrical wiring harnesses and connectors are covered with yellow outer insulation. Do not use electrical test equipment on any circuit related to the Supplemental Restraint System "Airbag".

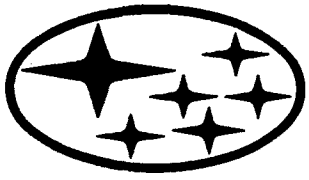

Page

M MECHANISM AND FUNCTION 2
1. General 2
2. Air Line 4
3. Fuel Line 6
4. Induction Control System 8
5. Sensor and Switch 10
6. Control System 13
7. Self-diagnosis System 23
C COMPONENT PARTS 26
1. Intake Manifold and Collector 26
2. Air Intake Boot and Throttle Body 27
3. Air Cleaner 28
T TROUBLESHOOTING AIRBAG 29
1. Supplemental Restraint System "Airbag" 29
2. Precautions 29
3. Pre-inspection 29
4. Electric Unit Location 30
5. Troubleshooting Chart for Self-diagnosis System 33
6. Output Modes of Select Monitor 39
7. Control Unit I/O Signal 41
8. Troubleshooting for Engine Starting Failure 43
9. Troubleshooting Chart with Trouble Code 54
10. Troubleshooting Chart with Select Monitor 103
11 General Troubleshooting Table 115

M MECHANISM AND FUNCTION

1. General

The Multi Point Fuel Injection (MPFI) system is a system that supplies the optimum air-fuel mixture to the engine for all the various operating conditions through the use of the latest electronic technology.
With this system fuel, which is pressurized at a constant pressure, is injected into the intake air passage of the cylinder head. The injection quantity of fuel is controlled by an intermittent injection system where the electromagnetic injection valve (fuel injector) opens only for a short period of time, depending on the quantity of air required for one cycle of operation. In actual operation, the injection quantity is determined by the duration of an electric pulse applied to the fuel injector and this permits simple, yet highly precise metering of the fuel. Further, all the operating conditions of the engine are converted into electric signals, and this results in additional features of the system, such as large improved adaptability, easier addition of compensating element, etc. The MPFI system also has the following features:

1) Reduced emission of harmful exhaust gases.
2) Reduced in fuel consumption.
3) Increased engine output.
4) Superior acceleration and deceleration.
5) Superior startability and warm-up performance in cold weather since compensation is made for coolant and intake air temperature.

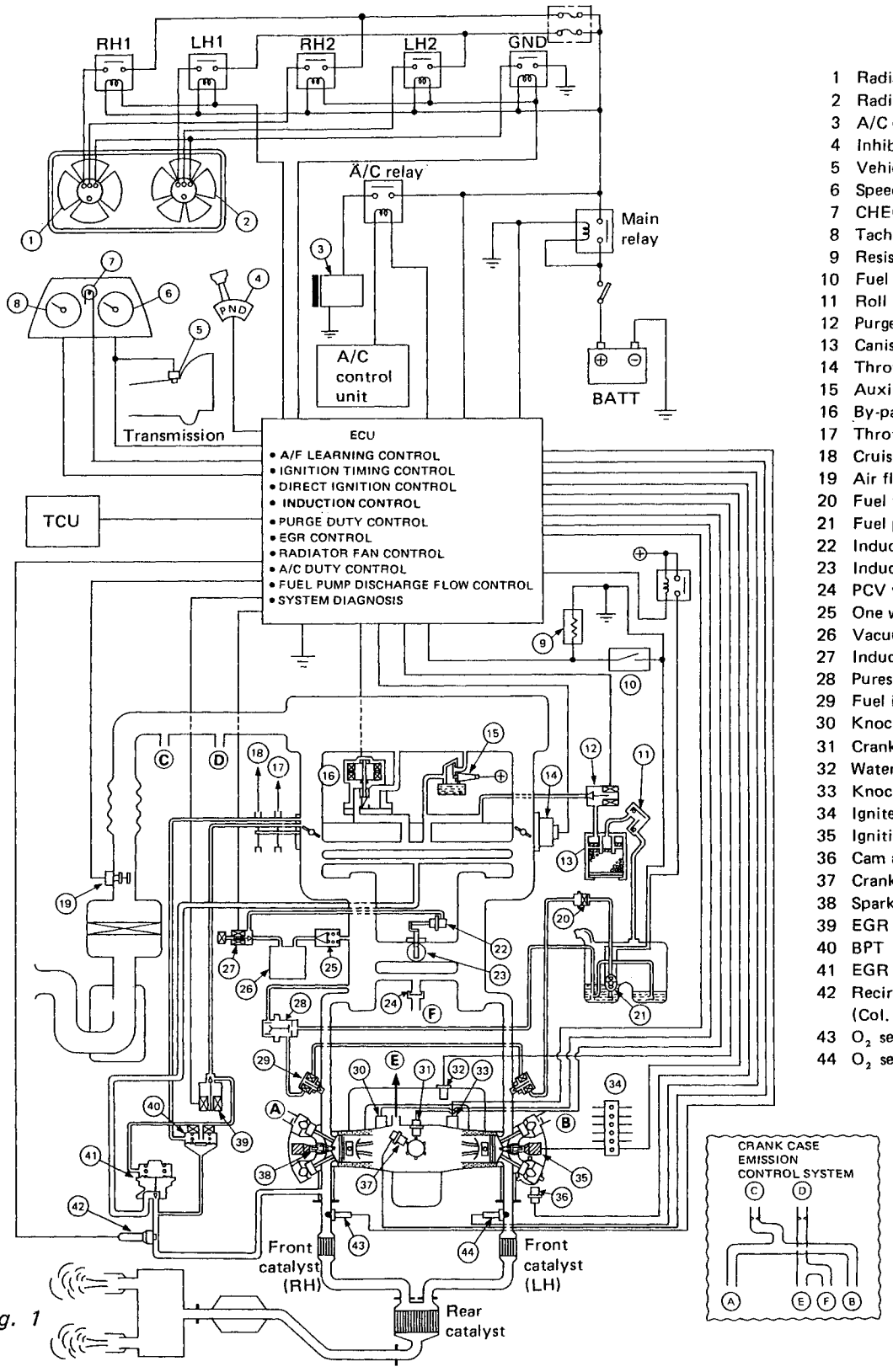

1 Radiator main fan
2 Radiator sub fan
3 A/C compressor
4 Inhibitor switch
5 Vehicle speed sensor 2
6 Speedometer
7 CHECK ENGINE - light
8 Tachometer
9 Resistor
10 Fuel pump modulator
11 Roll over valve
12 Purge control solenoid valve
13 Canister
14 Throttle sensor
15 Auxiliary air control valve
16 By-pass air control solenoid valve
17 Throttle cable
18 Cruise control cable
19 Air flow sensor
20 Fuel filter
21 Fuel pump
22 Induction valve diaphragm
23 Induction control valve
24 PCV valve
25 One way valve
26 Vacuum tank
27 Induction control solenoid valve
28 Puressure regulator
29 Fuel injector
30 Knock sensor 1 (RH)
31 Crank angle sensor 2
32 Water temperature sensor
33 Knock sensor 2 (LH)
34 Igniter
35 Ignition coil
36 Cam angle sensor
37 Crank angle sensor 1
38 Spark plug
39 EGR solenoid valve
40 BPT
41 EGR valve
42 Recirculation gas temperature sensor (Col. only)
43 O_2 sensor 1 (RH)
44 O_2 sensor 2 (LH)

C2-049

Fig. 1

2. Air Line

1. GENERAL

Air which is drawn in and filtered by the air cleaner is metered and sent to throttle body via the air intake boot. From the throttle body, the air is regulated by the open-close operation of the throttle valve and is delivered to the collector chamber and the intake manifold. It is then distributed to the respective cylinders to mix with fuel injected by the fuel injectors. Thus, the air-fuel mixture is delivered into the cylinder. Part of the air branched at the upstream of the throttle body is sent to the by-pass air control solenoid valve which regulates engine idle speed.

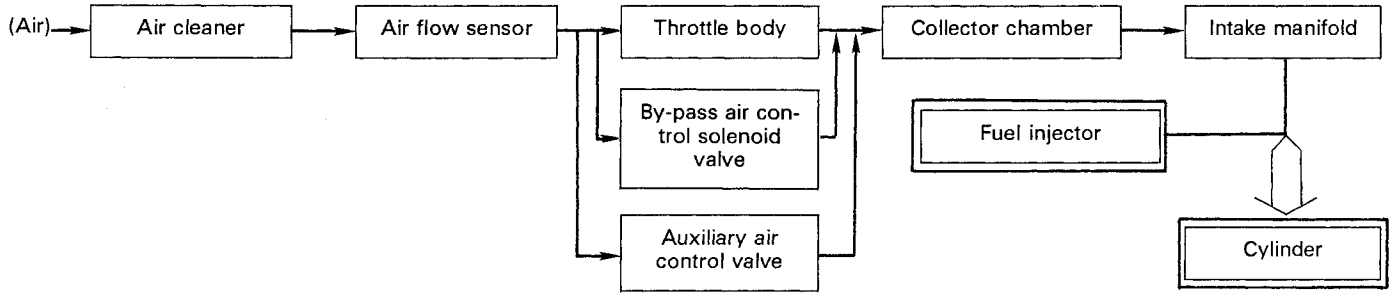

2. AIR FLOW SENSOR

The MPFI system employs a hot-film type air flow sensor.

This air flow sensor converts the amount of intake air into an electric signal by utilizing the heat transfer phenomenon between the incoming air and heating resistor located in the air intake.

The features of this air flow sensor type are as follows:

1) High-altitude compensation is automatically made.
2) Quick response.
3) There are no moving parts.
4) It is compact.

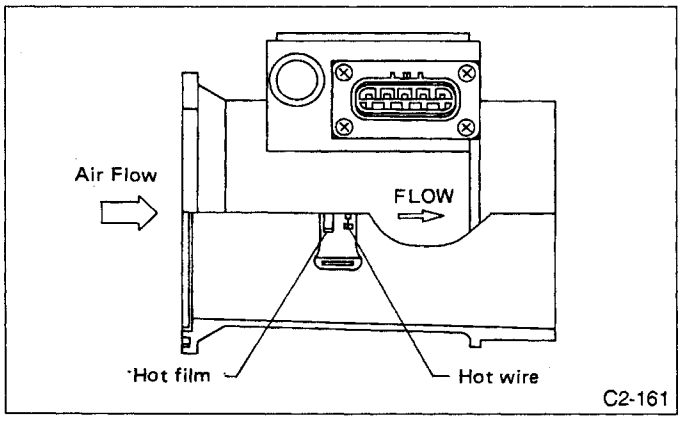

Fig. 2

3. THROTTLE BODY

In response to the depressing stroke of the throttle pedal, the throttle body opens/closes its valve to regulate the air volume to be taken in the combustion chamber.
During idling, the throttle valve is almost fully closed and the air flow through the throttle body is less than that passing through the carburetor.
More than half of the air necessary for idling is supplied to the intake manifold via the by-pass air control solenoid valve.
And the by-pass air control solenoid valve properly controls the number of revolutions in idling, so it does not need to be adjusted.

4. THROTTLE SENSOR

This throttle sensor is provided with a potentiometer.
The throttle sensor converts the opening of the throttle valve into an electric signal, and sends it to the ECU.
Using this signal, the ECU precisely controls the air-fuel ratio during acceleration and deceleration as well as idling.

5. BY-PASS AIR CONTROL SOLENOID VALVE

The ECU controls the duty control valve in the by-pass air control solenoid valve to bring the operating engine speed as close to preset idle speed as possible.

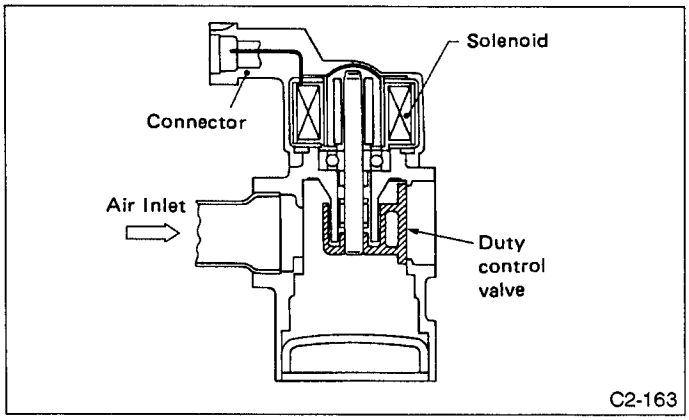

Fig. 3

6. AUXILIARY AIR CONTROL VALVE

Auxiliary air control valve consists of a bimetal, coil heater and rotary valve. This valve supplies by-pass air only when engine is cooled.

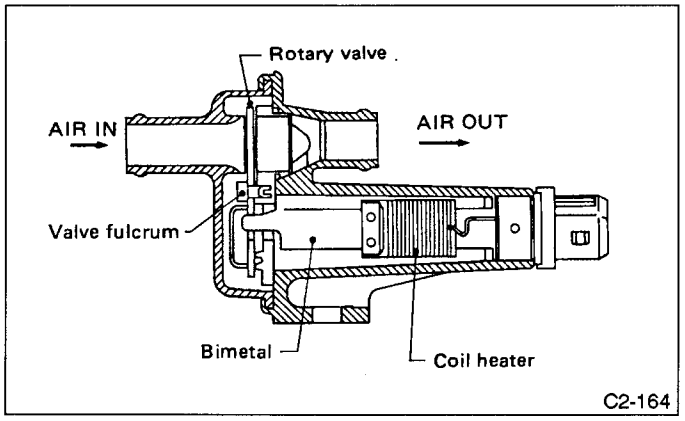

Fig. 4

7. COLLECTOR

The collector is the passage for distributing the intake air into each cylinder. It has the induction control valve built in, and the air-induction is controlled by its operation.

3. Fuel Line

1. GENERAL

Fuel pressurized by the fuel pump built into the fuel tank is delivered to fuel injectors by way of the fuel pipe and fuel filter. Fuel is regulated to the optimum pressure level by the pressure regulator on the way to the injectors.

From the injectors, fuel is injected into the intake manifold where it is mixed with intake air, and is then delivered to the respective cylinders.

Fuel injection timing and the amount of fuel injected is regulated by the ECU.

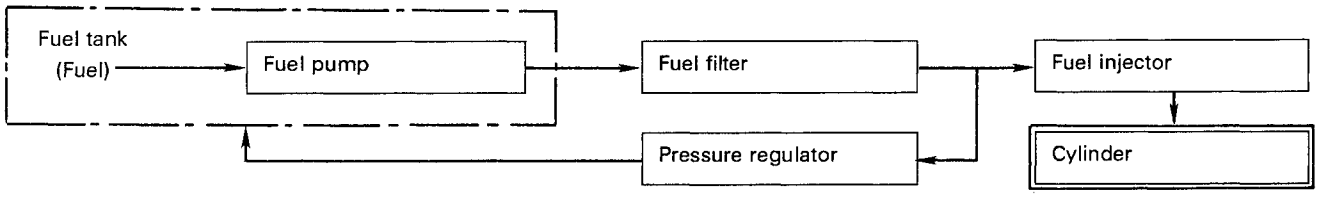

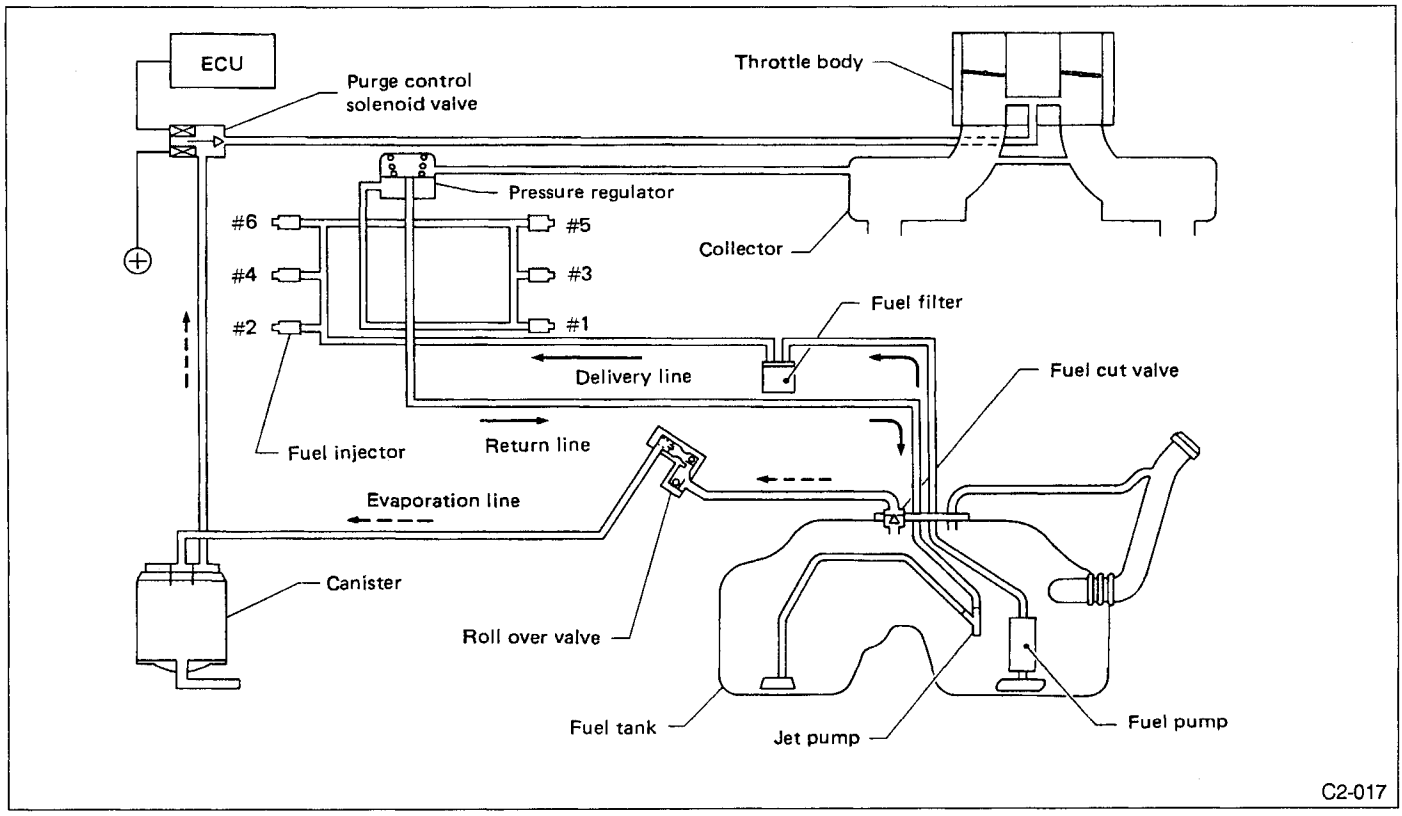

Fig. 5

2. PRESSURE REGULATOR

The pressure regulator is divided into the fuel chamber and the spring chamber by the diaphragm as illustrated below. Fuel is fed to the fuel chamber through the fuel inlet connected with the injector. A difference in pressure between the fuel chamber and the spring chamber connected with the intake manifold causes the diaphragm to be pushed down, and fuel is fed back to the fuel tank through the return line.

By returning fuel so as to balance the above pressure difference and the spring force, the fuel pressure is kept at a constant level 250.1 kPa (2.55 kg/cm^2, 36.3 psi) against the intake manifold pressure.

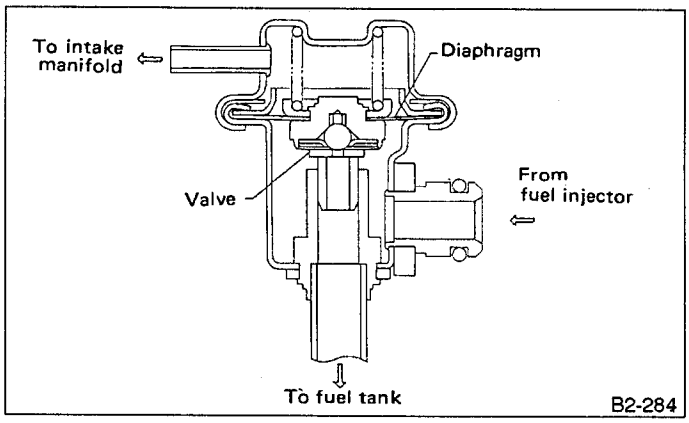

Fig. 6

3. FUEL INJECTOR

The MPFI system employs a gallery type (side-feed type) fuel injector.

The gallery type fuel injector is installed in the fuel pipe to allow cooling of the injector by the fuel.

The features of this type of fuel injector are as follows:

1) High heat resistance
2) Low driving noise
3) Easy to service
4) Small size

The fuel injector injects fuel according to the valve open signal received from the ECU.

The nozzle is attached on the top of the fuel injector. The needle valve is lifted by the solenoid coil through the plunger on arrival of the valve open signal.

Since the injector opening, the lifted level of valve and the regulator-controlled fuel pressure are kept constant, the amount of fuel to be injected can be controlled only by the valve open signal from the ECU.

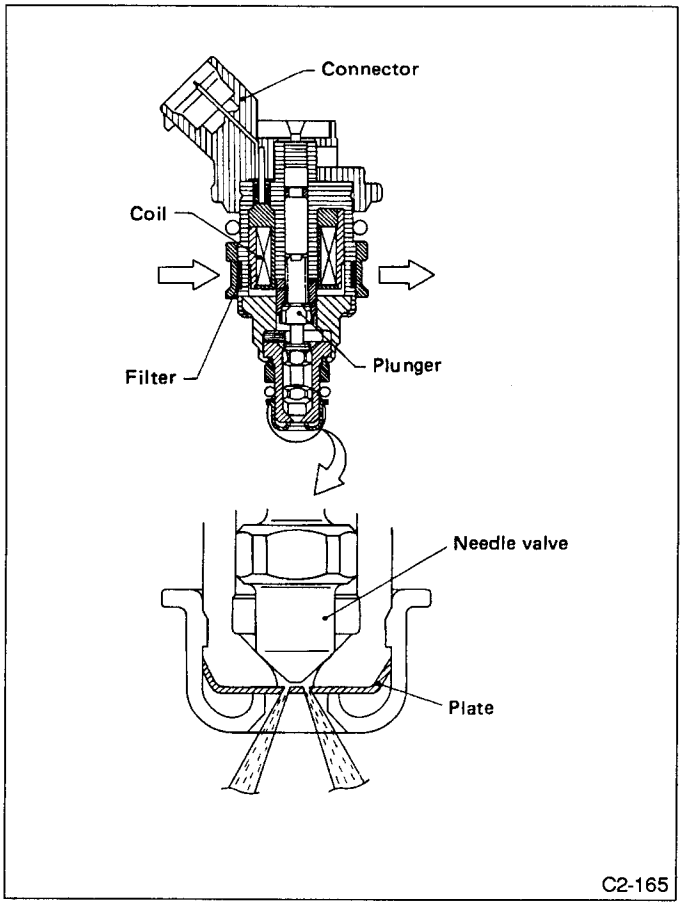

Fig. 7

4. Induction Control System

1. GENERAL

The induction control system opens and closes the induction control valve to change the intake air flowrate according to engine operation, thereby increasing the amount of air introduced in the cylinders.
This increase in the amount of air is generally referred to as the "high" charging efficiency.

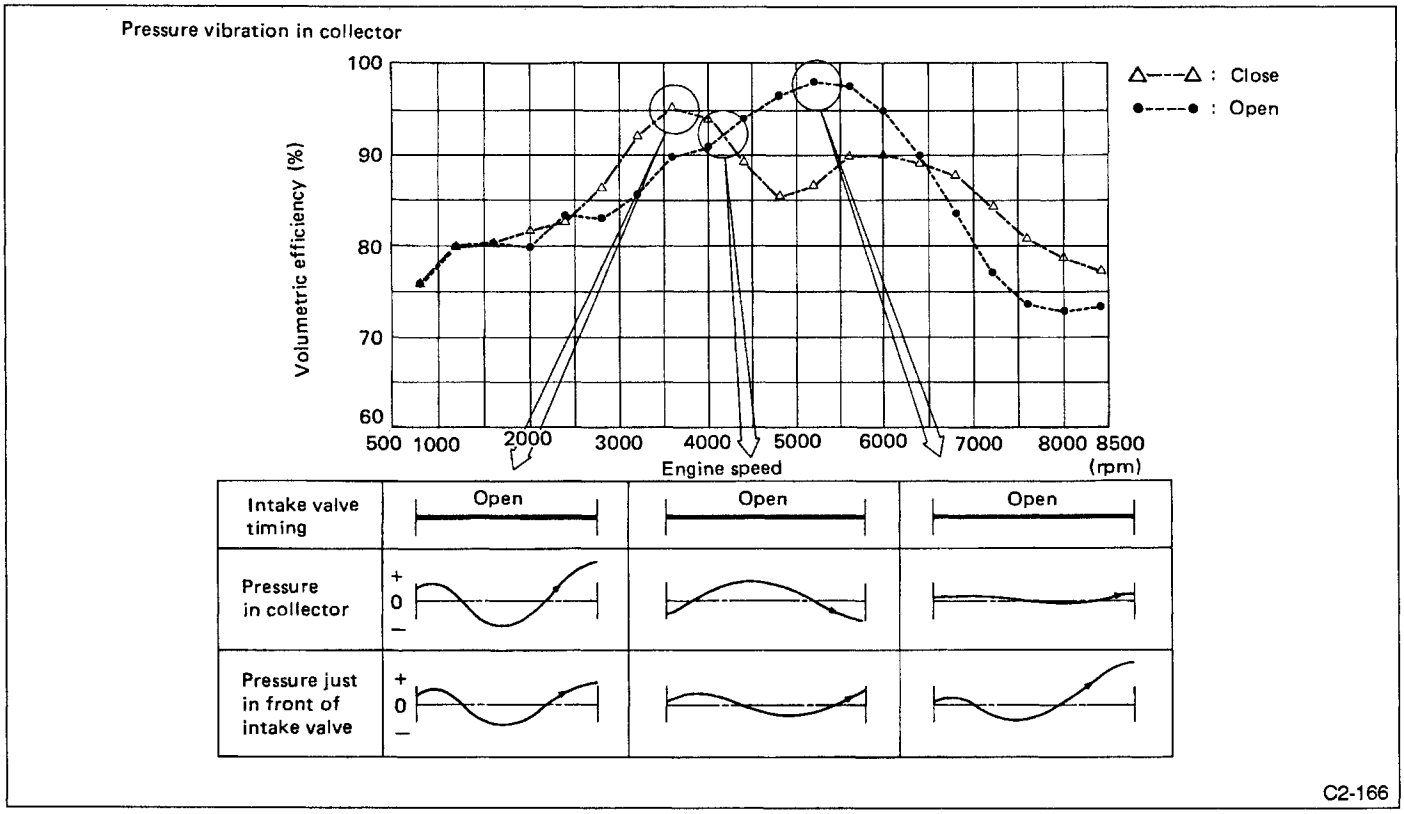

Fig. 8

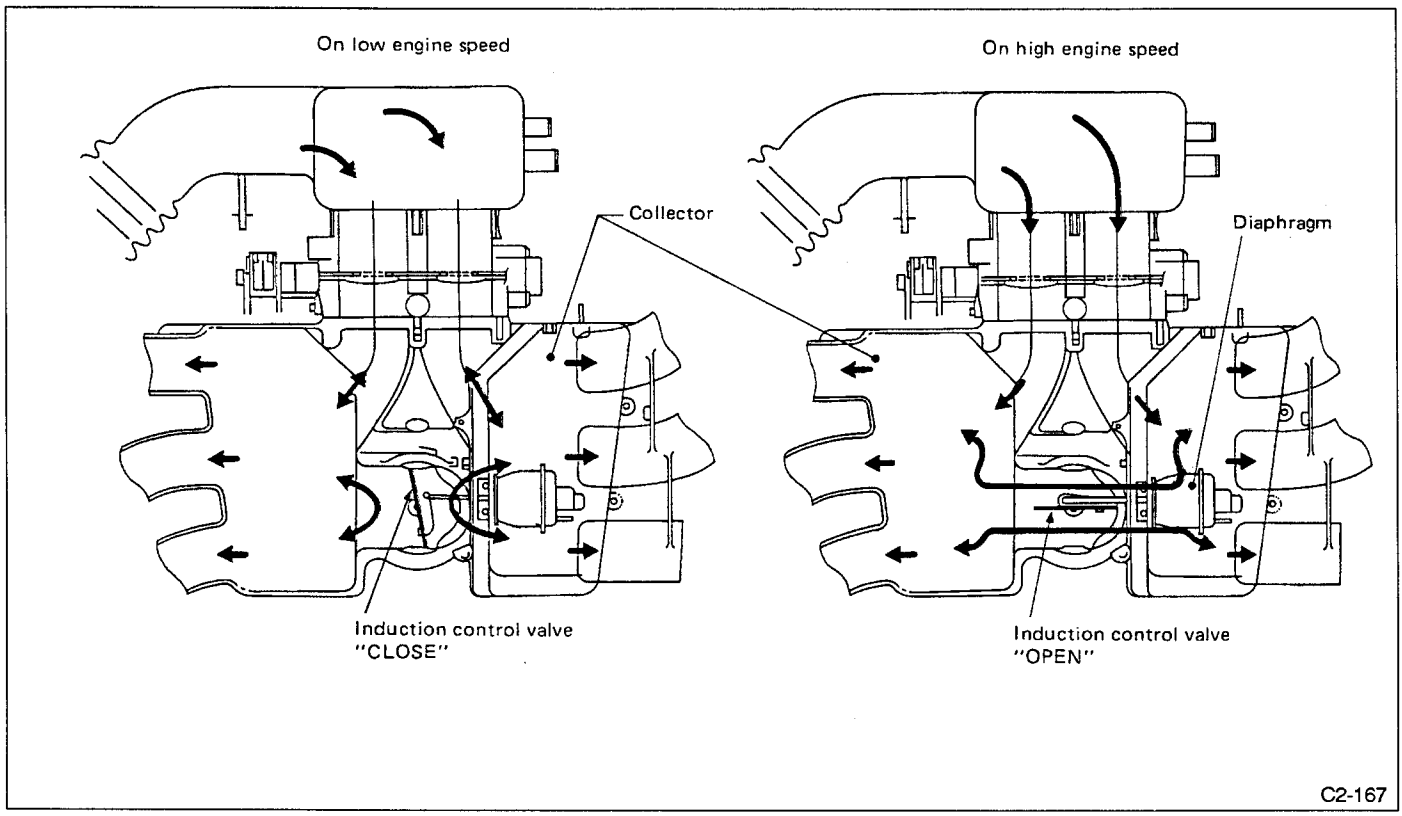

Fig. 9

2. CONTROL FUNCTION

The induction control valve operates on the intake manifold pressure transmitted to the diaphragm. The intake manifold pressure is controlled by opening/closing the induction solenoid valve which is determined by the ECU according to the engine speed and fuel injection quantity.

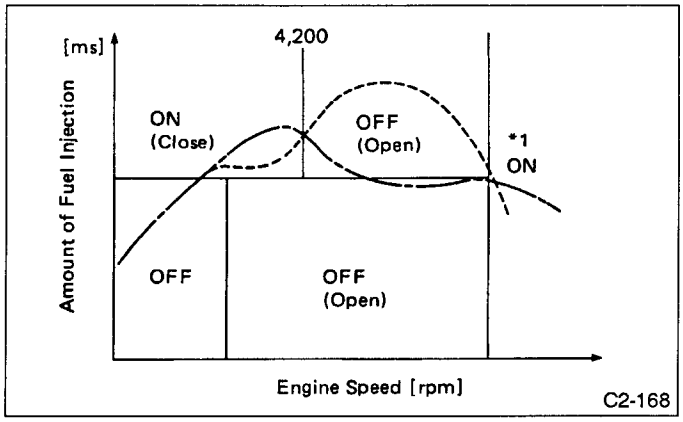

Fig. 10

5. Sensor and Switch

1. O_2 SENSOR

The O_2 sensor is used to sense oxygen concentration in the exhaust gas. If the fuel ratio is leaner than the stoichiometric ratio in the mixture (i.e. excessive amount of air), the exhaust gas contains more oxygen. To the contrary, if the fuel ratio is richer than the stoichiometric ratio, the exhaust gas contains hardly any oxygen.

Therefore, examination of the oxygen concentration in exhaust gas makes it possible to show whether the air/fuel ratio is leaner or richer than the stoichiometric ratio.

The O_2 sensor has a zirconia tube (ceramic) which generates voltage if there is a difference in oxygen concentration between the inside and outside of the tube. Platinum is coated on the inside and outside of the zirconia tube for the purpose of catalysis and electrode provision. The hexagon screw on the outside is grounded to the exhaust pipe, and the inside is connected to the ECU through the harness.

A ceramic heater is employed to improve performance at low temperature.

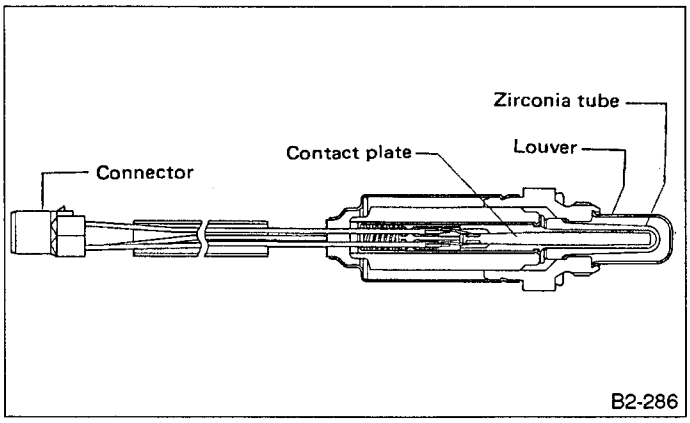

Fig. 11

When rich air-fuel mixture is burnt in the cylinder, the oxygen in the exhaust gases reacts almost completely through the catalytic action of the platinum coating on the surface of the zirconia tube. This results is a very large difference in the oxygen concentration between the inside and outside, and the electromotive force generated is large.

When a lean air-fuel mixture is burnt in the cylinder, oxygen remains in the exhaust gases even after the catalytic action, and this results in a small difference in the oxygen concentration. The electromotive force is very small.

The difference in oxygen concentration changes greatly in the vicinity of the optimum air-fuel ratio, and hence the change in the electromotive force is also large. By inputting this information into the MPFI control unit, the air-fuel ratio of the supplied mixture can be determined easily. The O_2 sensor does not generate much electromotive force when the temperature is low. The characteristics of the electromotive force stabilize at temperature of approximately 300 to 400°C (572 to 752°F).

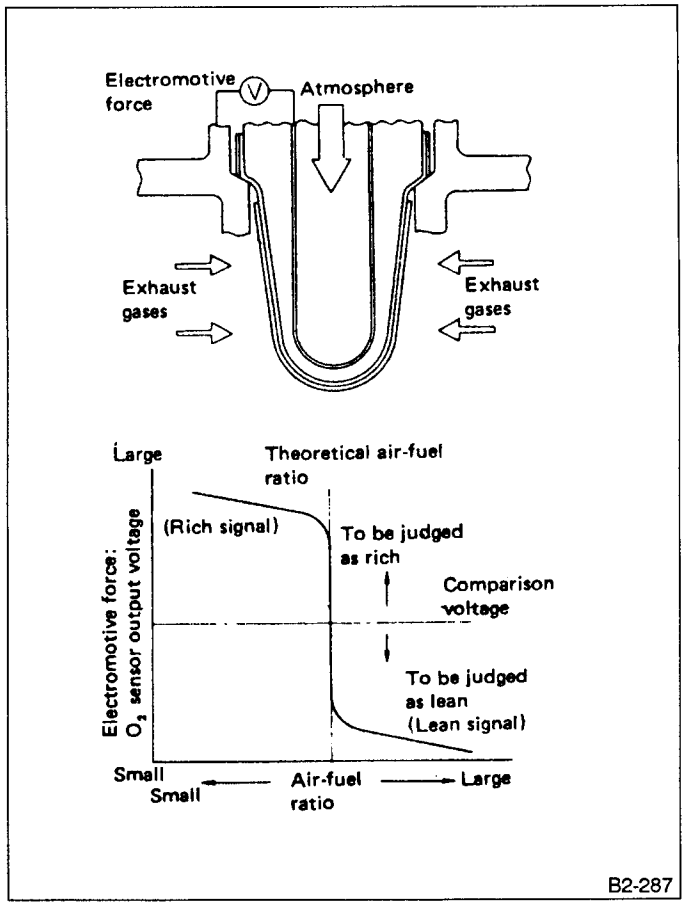

Fig. 12

2. WATER TEMPERATURE SENSOR

The water temperature sensor is located on the water pipe which is made of aluminum alloy. Its thermistor changes resistance with respect to temperature. A water temperature signal converted into resistance is transmitted to the ECU to control the amount of fuel injection, ignition timing, purge control solenoid valve, etc.

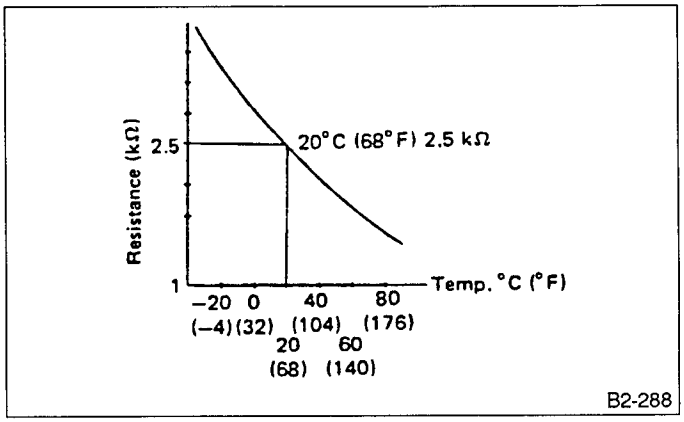

Fig. 13

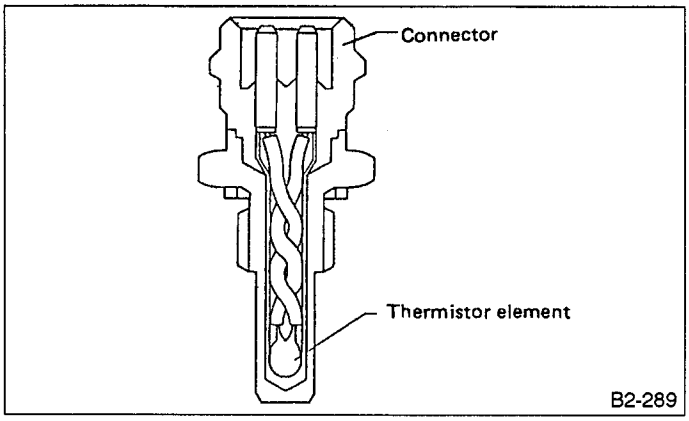

Fig. 14

3. KNOCK SENSOR

The knock sensor is installed on the cylinder block, and senses knocking signals from each cylinder.
This knock sensor is a piezo-electric type which converts knocking vibrations into electric signals.
It consists of a piezo-electric element, weight, and case. If knocking occurs in the engine, the weight in the case moves causing the piezo-electric element to generate a voltage.

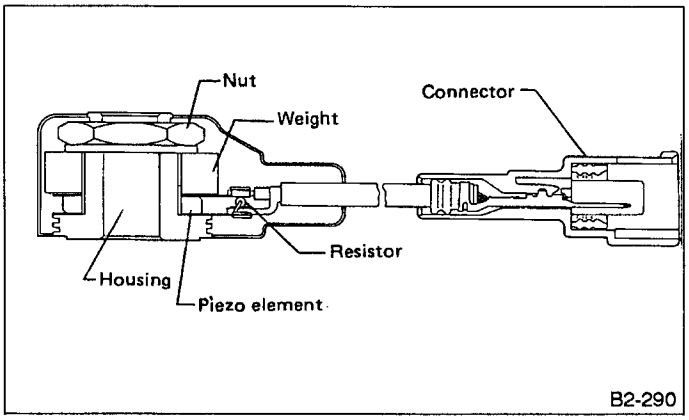

Fig. 15

4. CRANK ANGLE SENSOR 1

The crank angle sensor is installed on the oil pump, located in the front center portion of the cylinder block, to detect the crank angle position. It is designed so that the ECU accurately reads the number of pulses which occur when protrusions provided at the perimeter of the crank sprocket (rotating together with the crankshaft) cross the crank angle sensor.
The crank angle sensor is a molded type which consists of a magnet, pick-ups, coil, terminals, etc.

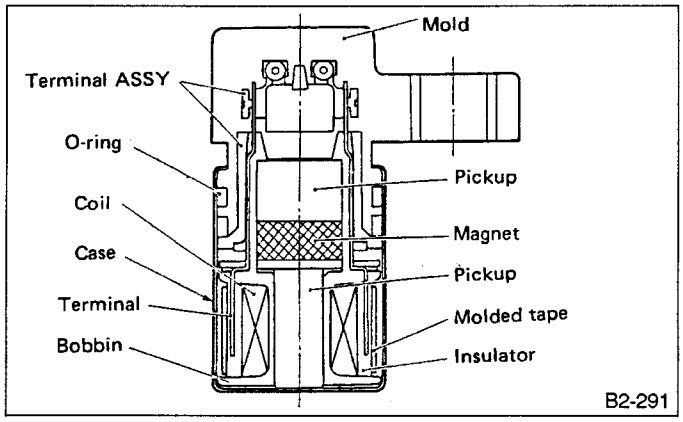

Fig. 16

Function

The crank sprocket which is used with crank angle sensor 1, is provided with twelve protrusions. Crank rotation causes these protrusions to cross crank angle sensor 1 so that magnetic fluxes in the coil change with the change in air gap between the sensor pickup and the sprocket. The change in air gap induces an electromotive force which is transmitted to ECU. ECU detects every 30° of the crank angle.

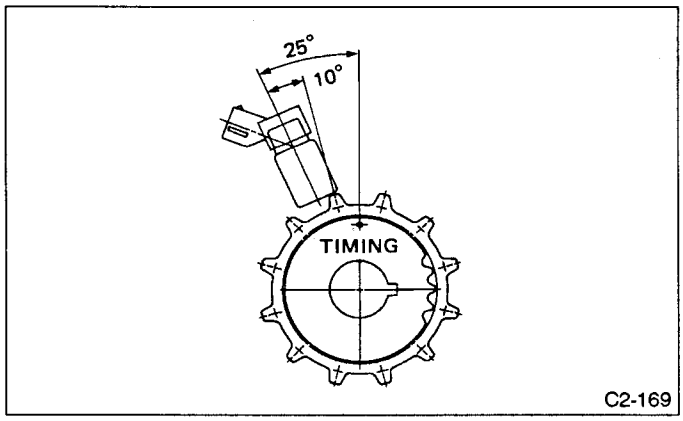

Fig. 17

5. CRANK ANGLE SENSOR 2

The crank sprocket which is used for crank angle sensor 2, is provided with six protrusions. As the crank sprocket rotates as crank shaft the ECU detects that each cylinder is divided into two grounds the #3-#2-#5, #4-#1-#6).

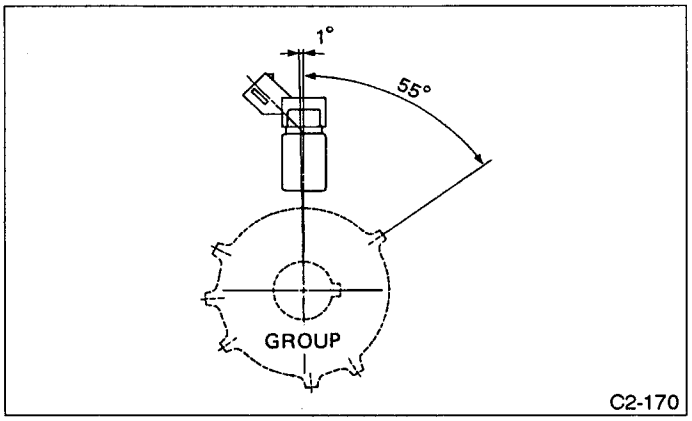

Fig. 18

6. CAM ANGLE SENSOR

Cam angle sensor is located on the left-hand camshaft support. The back of LH cam sprocket is provided with one protrusion. As the cam shaft sprocket rotates a half crank sprocket speed, cam angle sensor emits a signal to the ECU whenever engine rotates two revolutions. The ECU detects the compression top dead center of each cylinder with the crank angle sensor 2 signal which is accompanied with the cam angle sensor signal.

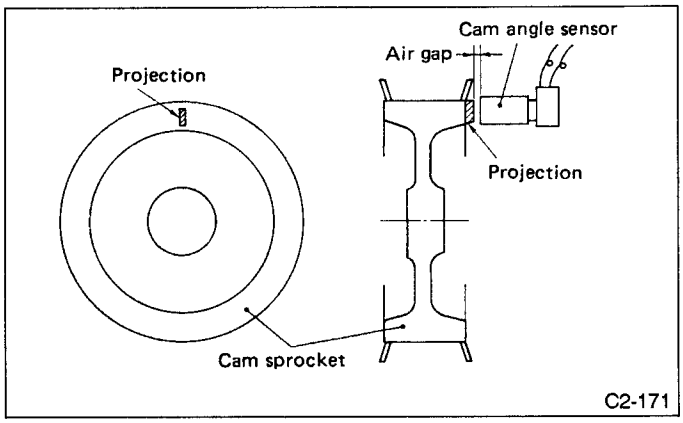

Fig. 19

7. HOW TO DETECT EACH CYLINDER

The crank angle sensor 2 issues signals in the order of 3-pitches, 2-pitches, and 1-pitch, and the cam angle sensor issues one signal for every two crankshaft rotations. Then, the ECU knows which cylinder will reach the compression top dead center next according to the combination of the signals issued from both sensors.

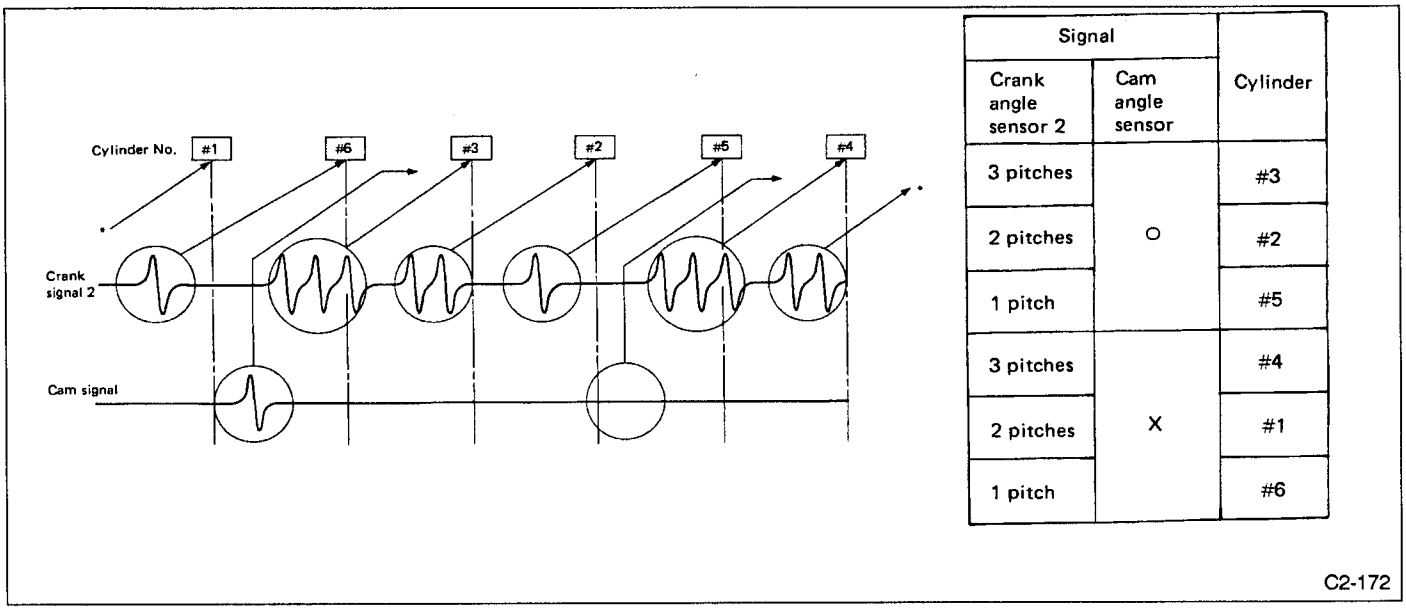

Signal		Cylinder
Crank angle sensor 2	Cam angle sensor	
3 pitches	O	#3
2 pitches		#2
1 pitch		#5
3 pitches	X	#4
2 pitches		#1
1 pitch		#6

Fig. 20

6. Control System

1. GENERAL

The ECU receives signals sent from various sensors and switches to judge the engine operating condition and emits output signals to provide the optimum control and/or functioning of various systems.
Major items governed by the ECU are as follow:

- Fuel injection control
- Ignition system control
- By-pass air control
- EGR control
- Canister purge control
- Radiator fan control
- Engine torque control
- Air conditioner cut control
- Self-diagnosis function

2. INPUT AND OUTPUT SIGNALS

	Unit	Function
Input signal	Air flow sensor	Detects amount of intake air.
	Throttle sensor	Detects throttle position.
	O_2 sensor 1	Detects the density of O_2 in exhaust gases.
	O_2 sensor 2	
	Crank angle sensor 1	Detects engine speed.
	Crank angle sensor 2	Detects the relative cylinder position.
	Cam angle sensor	
	Water temperature sensor	Detects coolant temperature.
	Knock sensor 1	Detects engine knocking for all cylinders.
	Knock sensor 2	
	Vehicle speed sensor	Detects vehicle speed.
	Atmospheric pressure sensor	Detects atmospheric pressure.
	Ignition switch	Detects ignition switch operation.
	Starter switch	Detects the condition of engine cranking.
	Inhibitor switch	Detects shift position.
	A/C switch	Detects ON-OFF operation of A/C switch.
Output signal	Fuel injector	Inject fuel.
	Ignition signal	Turn primary ignition current ON or OFF.
	Fuel pump relay	Turn fuel pump relay ON or OFF.
	A/C control relay	Turn A/C control relay ON or OFF.
	Radiator fan control relay	Turns radiator fan control relay ON or OFF.
	Induction control solenoid valve	Controls Induction control valve.
	By-pass air control solenoid valve	Adjusts amount of by-pass air through throttle valve.
	EGR solenoid valve	Controls EGR valve.
	Purge control solenoid valve	Controls canister purge control solenoid valve.
	CHECK ENGINE light	Indicates trouble.

3. FUEL INJECTION CONTROL

ECU receives signals emitted from various sensors to control the amount of fuel injected and the fuel injection timing. Sequential fuel injection control is utilized over the entire engine operating range except during standing starts.

As for injection timing, the ECU controls the starting of injection with leading to the signal emitted from crank angle sensor 1.

The starting of injection is changed between BTDC 50° (deg) and BTDC 10° (deg) under various conditions.

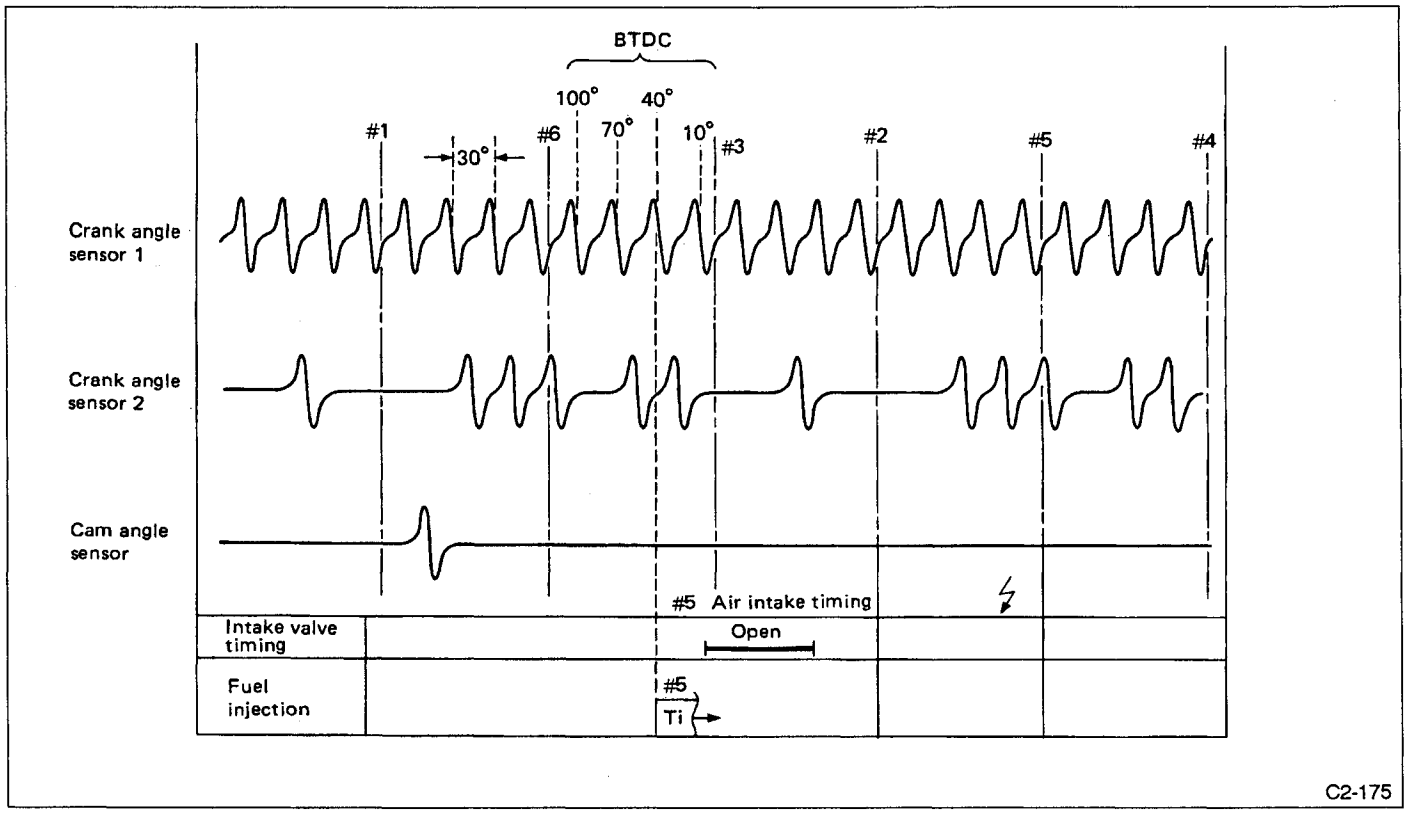

Fig. 21

The amount of fuel injected by the injector valve is dependent upon the length of time it remains open. The optimum fuel injection timing is determined by transmitting a signal to the injector from the ECU according to varying engine operations. Feedback control is also accomplished by means of a learning control. As a result, the fuel injection control system is highly responsive and accurate in design and structure.

The sequential fuel injection system is designed so that fuel is injected at a specific time to provide maximum air intake efficiency for each cylinder. In other words, fuel injection is completed just before the intake valve begins to open.

1) Fuel injection characteristics

Fuel injection timing is basically expressed as indicated below:

(1) During engine starts:
Duration of fuel injection
= Duration of fuel injection during engine starts

(2) During normal operation:
Basic duration of fuel injection x correction factor + voltage correction time

- Basic duration of fuel injection ..... The basic length of time fuel is injected. This is determined by two factors—-the amount of intake air detected by the air flow sensor and the engine speed (rpm) monitored by the crank angle sensor.
- Duration of fuel injection during engine starts ..... Determined according to the engine coolant temperature detected by a signal emitted from the water temperature sensor to improve starting ability.
- Voltage correction time ..... Compensates for the fuel injector's time lag affected by the battery voltage.

2) Correction coefficients

Correction coefficients are used to correct the basic duration of fuel injection so that the air-fuel ratio meets the requirements of varying engine operations.

These correction coefficients are classified as follows:

(1) Air-fuel ratio coefficient:
Allotted to provide the optimum air-fuel ratio in relation to engine speed and the basic amount of fuel injected.

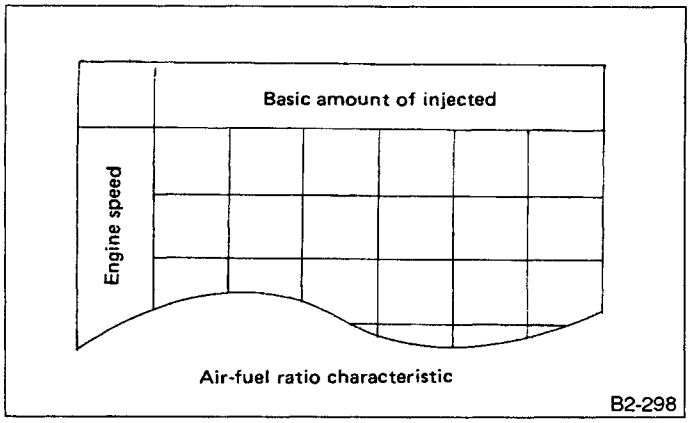

Fig. 22

(2) Start increment coefficient:
Increases the amount of fuel injected only when cranking the engine, which improves starting ability.

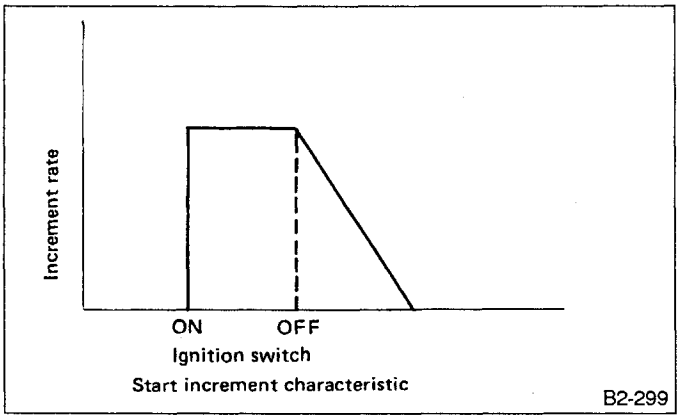

Fig. 23

(3) Water temperature increment coefficient:
Used to increase the amount of fuel injected in relation to a signal emitted from the water temperature sensor for easier starting of a cold engine. The lower the water temperature, the greater the increment rate.

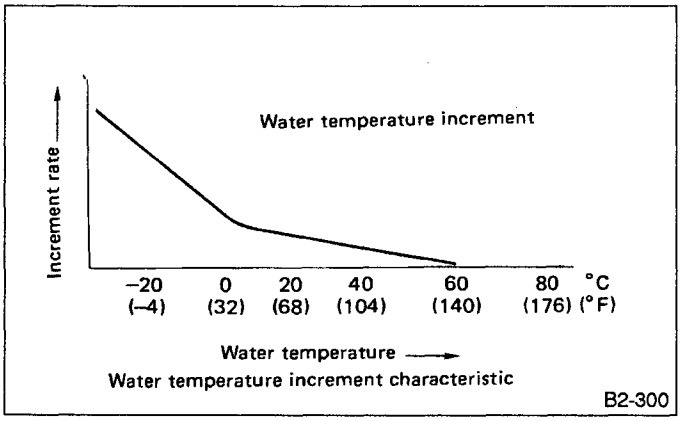

Fig. 24

(4) After-start increment coefficient:
Increases the amount of fuel injected for a certain period of time immediately after the engine starts to stabilize engine operation.

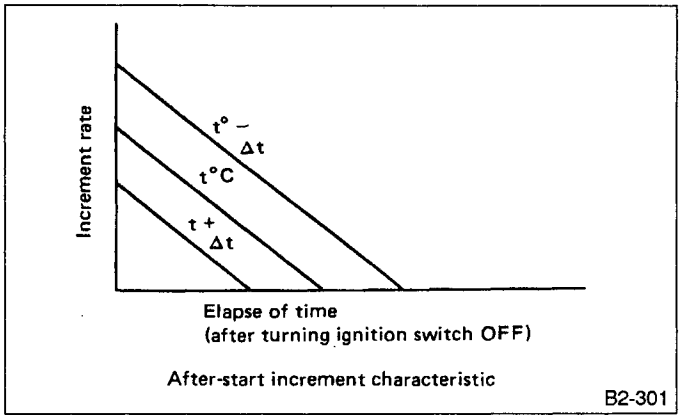

Fig. 25

(5) Full increment coefficient:
Increases the amount of fuel injected by a signal emitted from the throttle sensor in relation to a signal emitted from the air flow sensor.

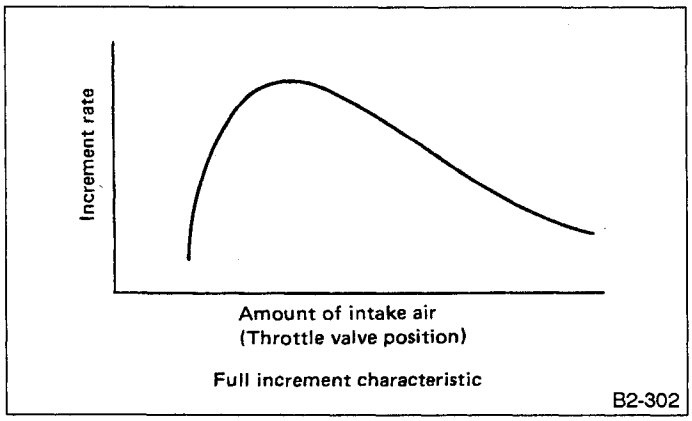

Fig. 26

(6) Acceleration increment coefficient:
Compensates for time lags of air flow measurement and/or fuel injection during acceleration to provide quick response.

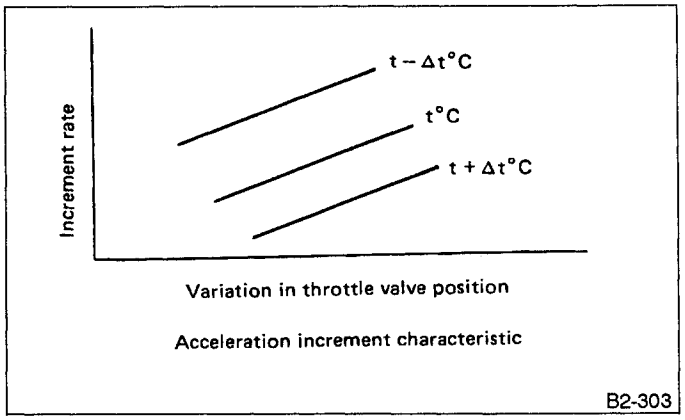

Fig. 27

3) Air-fuel ratio feedback coefficient "alpha"
This feedback coefficient utilizes the O_2 sensor's electromotive force (voltage) as a signal to be entered into the ECU. When low voltage is entered, the ECU judges it as a lean mixture, and when high voltage is entered, it is judged as a rich mixture. In other words, when the air-fuel ratio is richer than the theoretical air-fuel ratio, the amount of fuel injected is decreased. When it is leaner, the amount of fuel injected is increased. In this way, the air-fuel ratio is compensated so that it comes as close to the theoretical air-fuel ratio as possible on which the three-way catalyst acts most effectively. (CO, HC and NOx are also reduced when the air-fuel ratio is close to theoretical air-fuel ratio.)

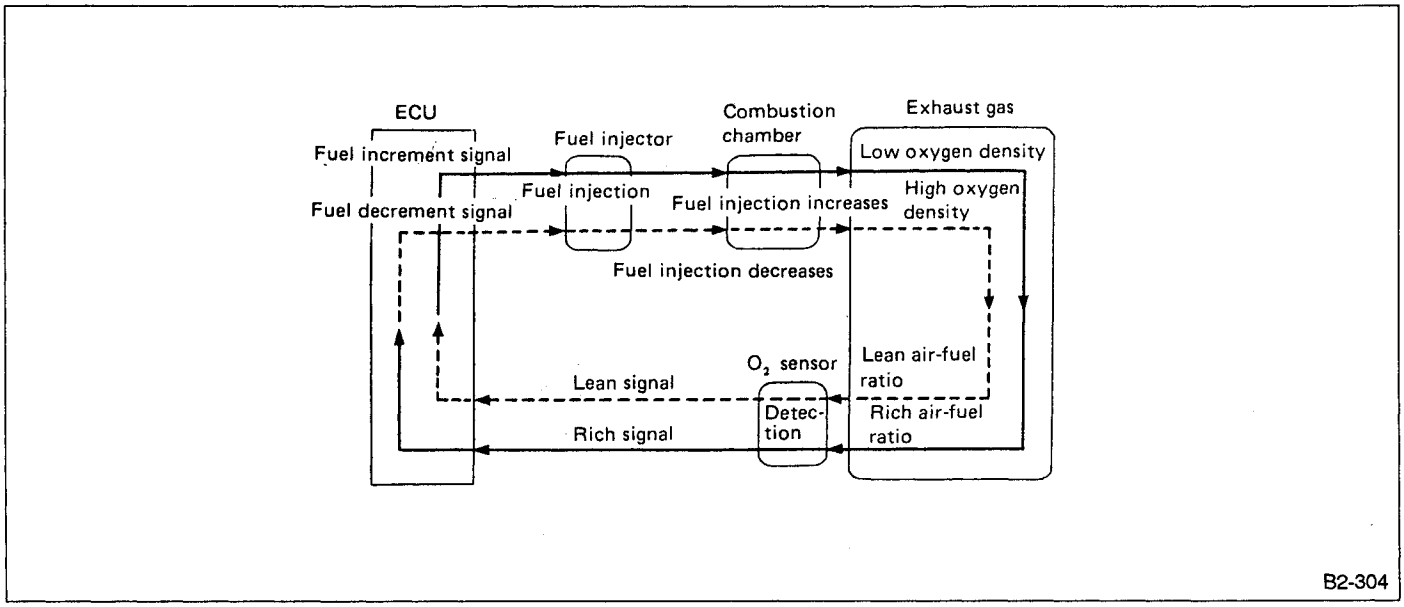

Fig. 28

4) Learning control system

In a conventional air-fuel feedback control system, the basic amount of fuel injected (according to engine speed and various loads) is stored in the memory. After the ECU receives a signal emitted from the O_2 sensor, the basic amount of fuel injected is corrected so that it is close to the theoretical air-fuel ratio. This means that the greater the air-fuel ratio is corrected, the lesser the control accuracy.

In Subaru engines, however, an air-fuel ratio learning control system constantly memorizes the amount of correction required in relation to the basic amount of fuel to be injected (the basic amount of fuel injected is determined after several cycles of fuel injection), so that the correction affected by feedback control is minimized. Thus, quick response and accurate control of variations in air-fuel ratio, sensors' and actuators' characteristics during operation, as well as in the air-fuel ratio with the time of engine operation, are achieved. In addition, accurate control contributes much to stability of exhaust gases and driving performance.

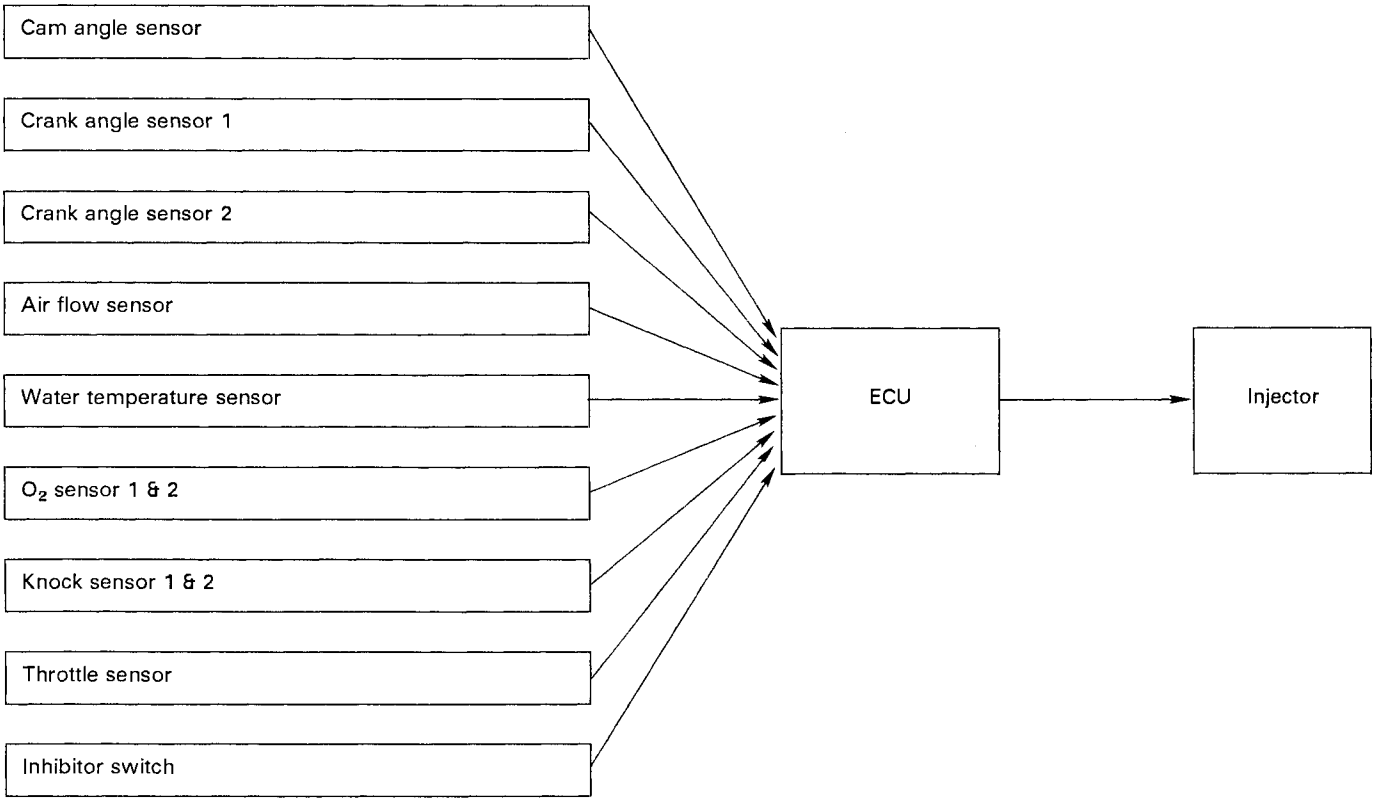

4. IGNITION SYSTEM CONTROL

This ignition system is a direct ignition system which is composed of an ECU, six ignition coils, two knock sensors and other sensors. Six ignition coils are directly mounted to the spark plugs of the respective cylinders. This results in a reduced energy loss because no high tension cords are needed.

One knock sensor is installed on the left cylinder block, and another on the right cylinder block, thus ensuring accurate digital engine knock control.

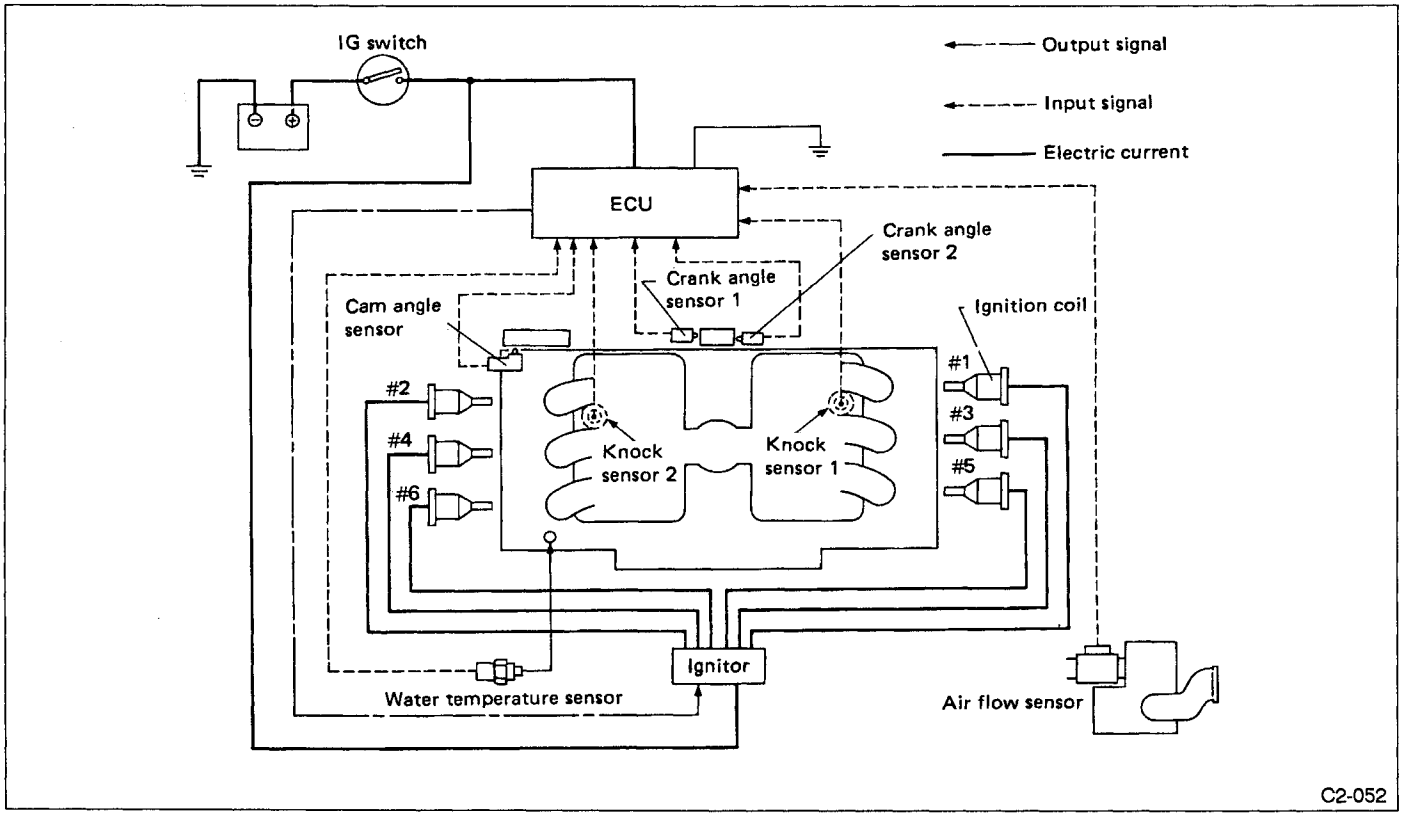

Fig. 29

ECU determines the ignition timing based on the signal from crank angle sensor 1, and sends the signal for igniter so as to spark the cylinder which is judged at compression top dead center based on the signal from crank angle sensor 2 and cam angle sensor.

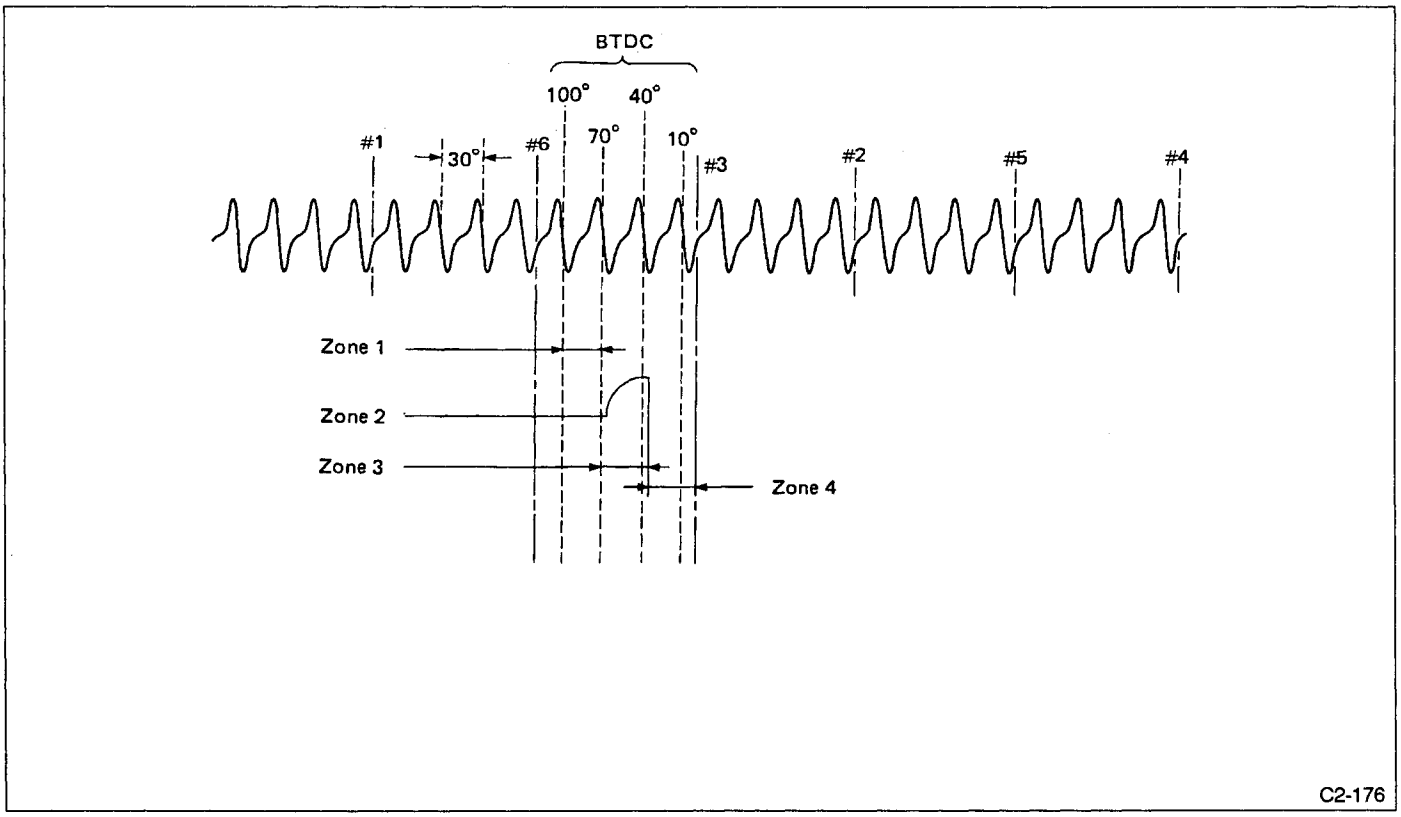

Fig. 30

When engine speed is low, the ECU sends out the ignition signal in synchronization with the 10 deg signal.

Zone. 1: Judge engine speed with angular velocity.
Zone. 2: Dowel-set with 70° signal.
Zone. 3: Ignition timing determined by ECU.
Zone. 4: Actual ignition timing.

5. BY-PASS AIR CONTROL (IDLE SPEED CONTROL)

The ECU controls the operation of by-pass air control solenoid valve and auxiliary air control valve based on the signal from crank angle sensor 1, throttle sensor, vehicle speed sensor 2, water temperature sensor, ignition switch, A/C switch and inhibitor switch, etc. When coolant temperature is cold, the amount of by-pass air is controlled by auxiliary air control valve and by-pass air control solenoid valve. When coolant temperature is hot, it is controlled by only by-pass air control solenoid valve.

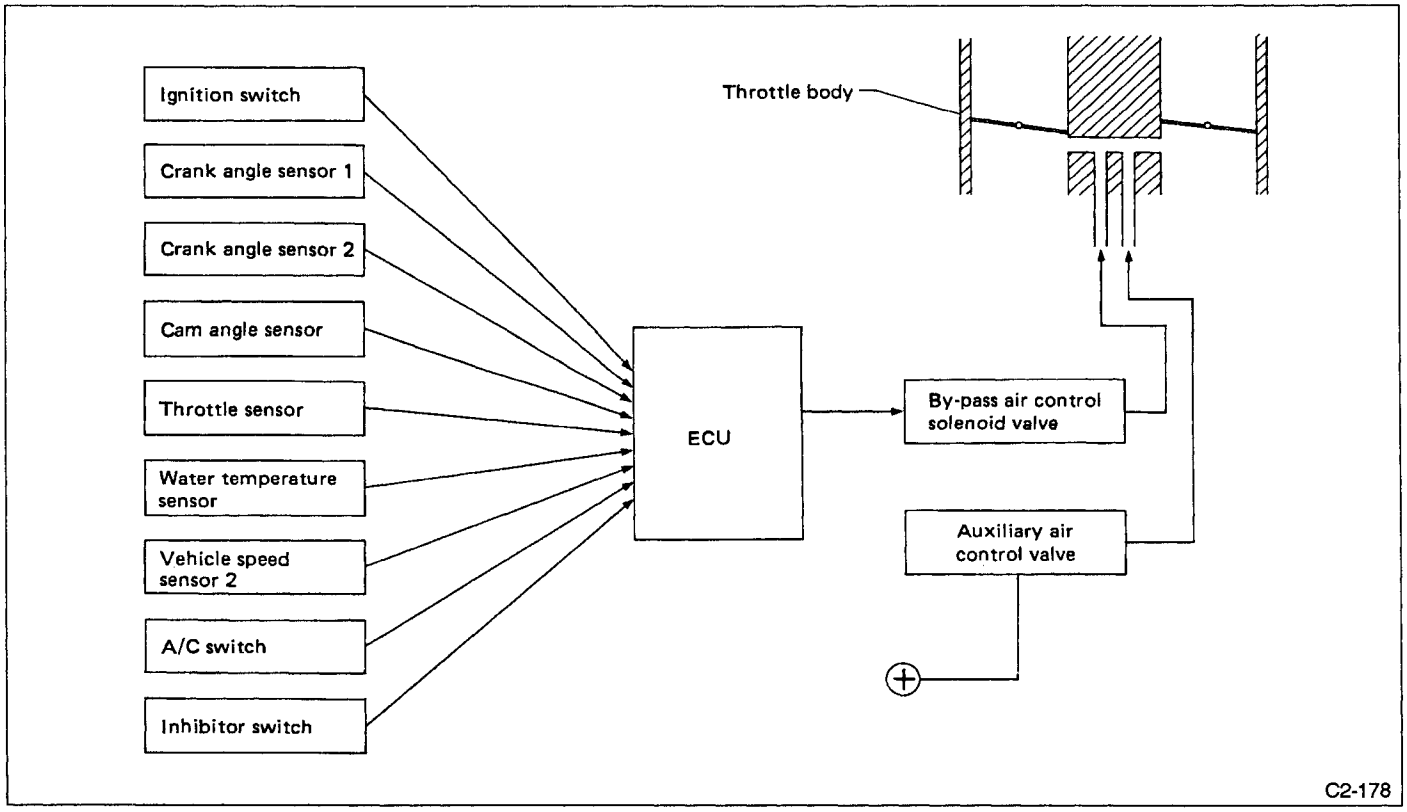

Fig. 31

6. EGR CONTROL

The EGR system is composed of an EGR valve, EGR solenoid valve, EGR vacuum controller, ECU, etc. The exhaust gas is recirculated when the EGR solenoid valve opens to allow the intake manifold pressure to be transmitted to the EGR valve.

ECU controls the EGR solenoid valve based on the signals sent from the water temperature sensor, O_2 sensors 1 and 2, crank angle sensor 1, etc.

Refer to C.2-1 Section 8.

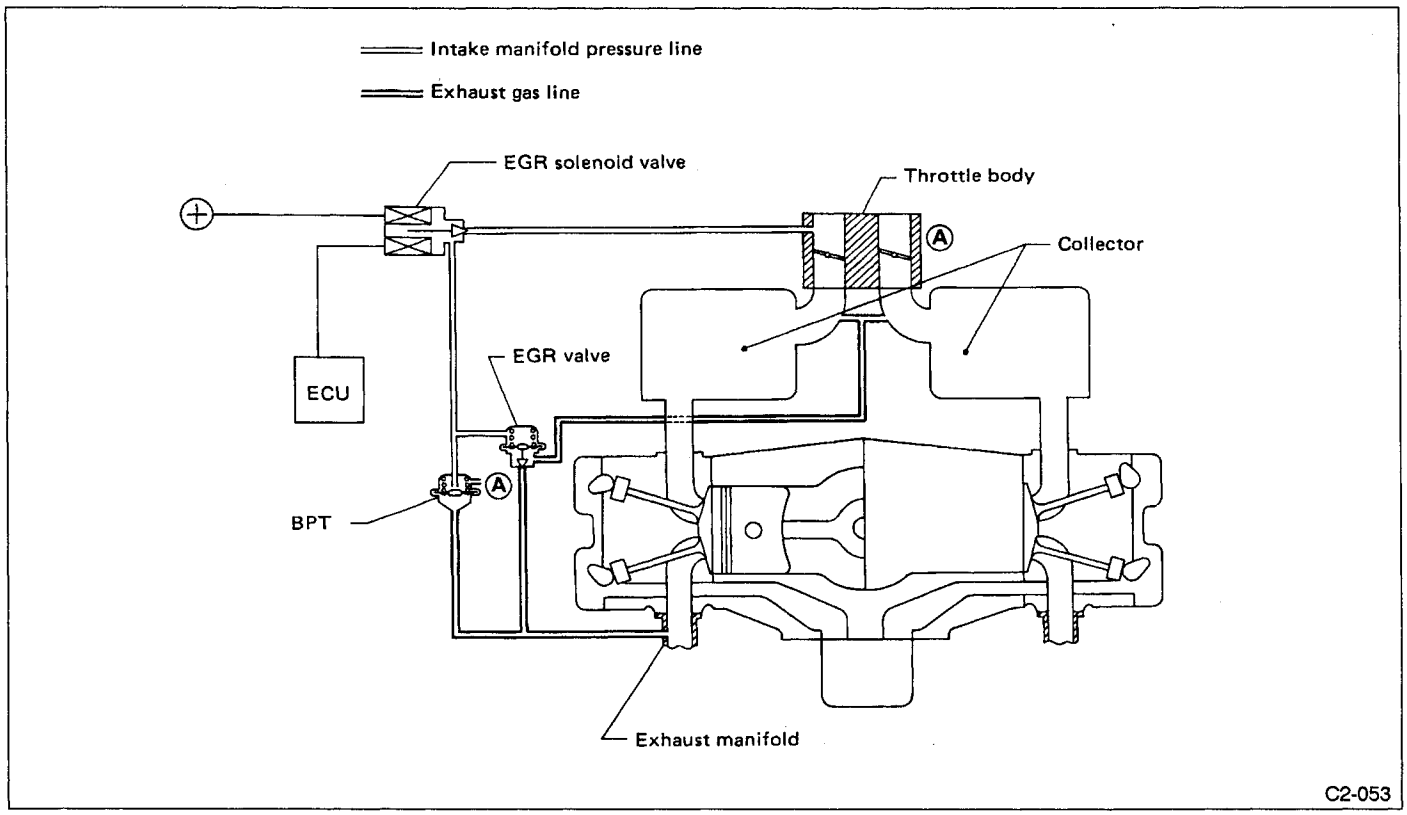

Fig. 32

7. CANISTER PURGE CONTROL

ECU receives signals emitted from water temperature sensor, vehicle speed sensor 2 and crank angle sensor 1 to control purge control solenoid valve.

Canister purge takes place during operation of the vehicle except under certain conditions (during idle, etc.).

Refer to C.2-1 Section 9.

8. RADIATOR FAN CONTROL

The radiator fan operation has four steps: off (OFF), low (Lo), medium (MD), and high (HI) to reduce noise and load.

The operating condition of the radiator fan is determined by the combination of signals sent from the A/C switch, A/C trinary switch, vehicle speed sensor 2 and water temperature sensor.

A/C switch	Vehicle speed X ⌐ O 10(6) 20(12) Unit: km/h (mph)	Water temperature X ⌐ O 89(192) 95(203) Unit: °C (°F)	A/C trinary switch X ⌐ O 13 16 Unit: kg/cm²	ECU output signal Fan relay NO.		Operation of radiator fan	
				No. 1	No. 2	Main fan (RH)	Sub fan (LH)
O	X	X	X	—	•	LO	LO
			O	•	—	MD	MD
		O	X	•	—	MD	MD
			O	•	•	HI	HI
	O	X	X	—	•	LO	LO
			O	•	•	HI	HI
		O	X	•	•	HI	HI
			O	•	•	HI	HI
X	X	X		—	—	OFF	OFF
		O		—	•	LO	LO
	O	X		—	—	OFF	OFF
		O		•	—	MD	MD

O: Signal ON X: signal OFF

9. ENGINE TORQUE CONTROL

In order to reduce gear shift shocks and protect transmission gears, engine torque is controlled shifting up under heavy loads or when the transmission is in the manual mode.

10. A/C SYSTEM CONTROL

The ECU controls ON/OFF of the air conditioning (A/C) system. In addition, it controls the amount of electric current sent to the NC compressor, thereby controlling the quantity of refrigerant sent out by the compressor. When the A/C switch is set to ON when the coolant temperature is high, the refrigerant delivery quantity is reduced to lower the coolant temperature, thereby protecting the engine itself. The same control system is adopted to smooth engine speed variations when the A/C switch is turned ON or OFF.

7. Self-diagnosis System

1. GENERAL

The self-diagnosis system detects and indicates a fault in various inputs and outputs of the complex electronic control. The warning light (CHECK ENGINE light) on the instrument panel indicates occurrence of a fault or trouble.

Further, against such a failure or sensors as may disable the drive, the fail-safe function is provided to ensure the minimal driveability.

2. FUNCTION OF SELF-DIAGNOSIS

The self-diagnosis function has four modes: U-check mode, Read memory mode, D-check mode and Clear memory mode. Two terminals (Read memory and Test mode) and light (CHECK ENGINE light) are used. The DIAG. terminals are for mode selection and the light monitors the type of problem.

- Relationship between modes and connectors

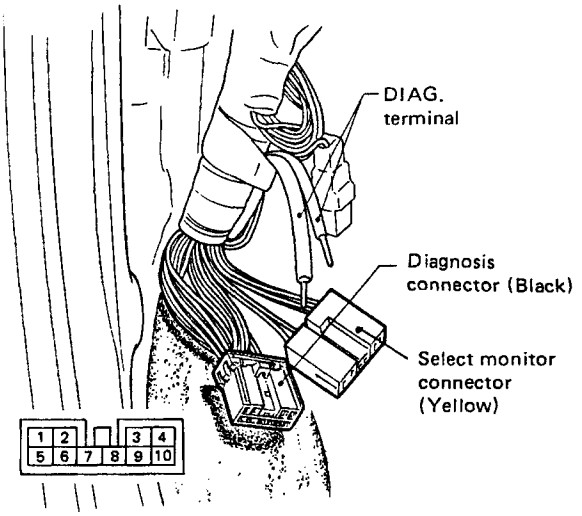

1 Test mode of MPFI
2 Read memory of MPFI
3 Clear memory of SRS
4 —
5 Test mode of power steering
6 Read memory of power steering
7 Diagnosis of power steering
8 Diagnosis of passive belt
9 Diagnosis of SRS
10 Ground

C2-180

Fig. 33

Mode	Engine	Read memory terminal	Test mode terminal
U-check	Ignition ON	DISCONNECT	DISCONNECT
Read memory	Ignition ON	CONNECT	DISCONNECT
D-check	Ignition ON (engine on)	DISCONNECT	CONNECT
Clear memory	Ignition ON (engine on)	CONNECT	CONNECT

- U-check mode

The U-check is a user-oriented mode in which only the MPFI components necessary for start-up and drive are diagnosed. On occurrence of a fault, the warning light (CHECK ENGINE light) is lighted to indicate to the user that the dealer's inspection is necessary. The diagnosis of other parts which do not give significant adverse effect to start-up and drive are excluded from this mode in order to avoid unnecessary uneasiness to be taken by the user.

- Read memory mode

This mode is used by the dealer to read past problems (even when the vehicle's monitor light are off). It is most effective in detecting poor contact or loose connections of connectors, harnesses, etc.

- D-check mode

This mode is used by the dealer to check the entire MPFI system and detect faulty parts.

- Clear memory mode

This mode is used by the dealer to clear the trouble code from the memory after the affected part is repaired.

After checking on each mode, reinstall DIAG. terminal to wire harness with tape.

3. BASIC OPERATION OF SELF-DIAGNOSIS SYSTEM

- **No TROUBLE '**

Mode	Read memory terminal	Test mode terminal	Condition	CHECK ENGINE light
U-check	X	X	Ignition switch ON (Engine OFF)	ON
			Engine ON	OFF
Read memory	O	X	Ignition switch ON (Engine OFF)	Blink
			Engine ON	
D-check	X	O	Ignition switch ON (Engine OFF)	ON
			Engine ON	Vehicle specification code → Blink*
Clear memory	O	O	Ignition switch ON (Engine OFF)	ON
			Engine ON	Vehicle specification code → Blink

- **TROUBLE**

Mode	Read memory terminal	Test mode terminal	Condition	CHECK ENGINE light
U-check	X	X	Ignition switch ON	ON
Read memory	O	X	Ignition switch ON (Engine OFF)	Trouble code (memory)
			Engine ON	ON
D-check	X	O	Engine ON	Trouble code**
Clear memory	O	O	Engine ON	Trouble code**

* When the engine operates at a speed greater than 2,000 rpm for more than 40 seconds, the check engine light blinks. However, when all check items check out "O.K.'," even before the 40 seconds is reached, the check engine light blinks.

** When the engine operates at a speed greater than 2,000 rpm for more than 40 seconds, a trouble code is emitted.

4. FAIL-SAFE FUNCTION

For the part which has been judged faulty in the self-diagnosis, the ECU generates the associated pseudo signal (only when convertible to electric signal) and carries out the computational processing. In this fashion, the fail-safe function is performed.

5. TROUBLE CODES AND FAIL-SAFE OPERATION

Trouble code	Item	Contents of diagnosis	Fail- safe operation
11	Crank angle sensor 1	No signal entered from crank angle sensor 1 more than 3 seconds on start switch ON.	—
12	Starter switch	Abnormal signal emitted from ignition switch.	Turns starter switch signal OFF.
13	Cam angle sensor	No signal entered from cam angle sensor, but signal entered from crank angle sensor 1.	—
14	Injector #1	Fuel injector inoperative. (Abnormal signal emitted from monitor circuit.)	—
15	Injector #2		
16	Injector #3		
17	Injector #4		
18	Injector #5		
19	Injector #6		
21	Water temperature sensor	Abnormal signal emitted from water temperature sensor.	Adjusts water to a specific temperature. Maintains radiator fan "ON" to prevent overheating.
22	Knock sensor 1 (RH)	Abnormal voltage produced in knock sensor monitor circuit.	Sets regular fuel map and retards ignition timing by 5°.
23	Air flow sensor	Abnormal voltage input entered from air flow sensor.	Controls the amount of fuel (injected) in relation to engine speed and throttle sensor or position.
24	By-pass air control solenoid valve	By-pass air control solenoid valve inoperated. (Abnormal signal produced in monitor circuit.)	Prevents abnormal engine speed using "fuel cut" in relation engine speed, vehicle speed and throttle sensor position.
28	Knock sensor 2 (LH)	Abnormal voltage produced in knock sensor monitor circuit.	Sets regular fuel map and retards ignition timing by 5°.
29	Crank angle sensor 2	No signal entered from crank angle sensor 1, but two signals entered from cam angle sensor.	—
31	Throttle sensor	Abnormal voltage input entered from throttle sensor.	Sets throttle sensor's voltage output to fixed value.
32	O_2 sensor 1 (RH)	O_2 sensor 1 inoperative.	—
33	Vehicle speed sensor 2	Abnormal voltage input entered from vehicle speed sensor 2.	Sets vehicle speed signal to a fixed value.
34	EGR solenoid valve	EGR solenoid valve inoperative.	—
35	Purge control solenoid valve	Purge control solenoid valve inoperative.	—
37	O_2 sensor 2 (LH)	O_2 sensor 2 inoperative.	—
38	Engine torque control	Wiring harness between ECU and TCU is in short circuit.	—
41	A/F learning control	Faulty learning control function.	—
45	Atmospheric pressure sensor	Faulty atmospheric pressure sensor build in ECU.	—
51	Neutral switch	Abnormal signal entered from inhibitor switch.	—
52	Parking switch	Abnormal signal entered from parking switch.	—
55	EGR gas temperature sensor (CAL.)	Abnormal signal emitted from EGR gas temperature sensor.	—
56	EGR system (CAL.)	EGR valve open/close stick, EGR hose disconnect or exhaust pressure control valve damaged.	—

C COMPONENT PARTS

1. Intake Manifold and Collector

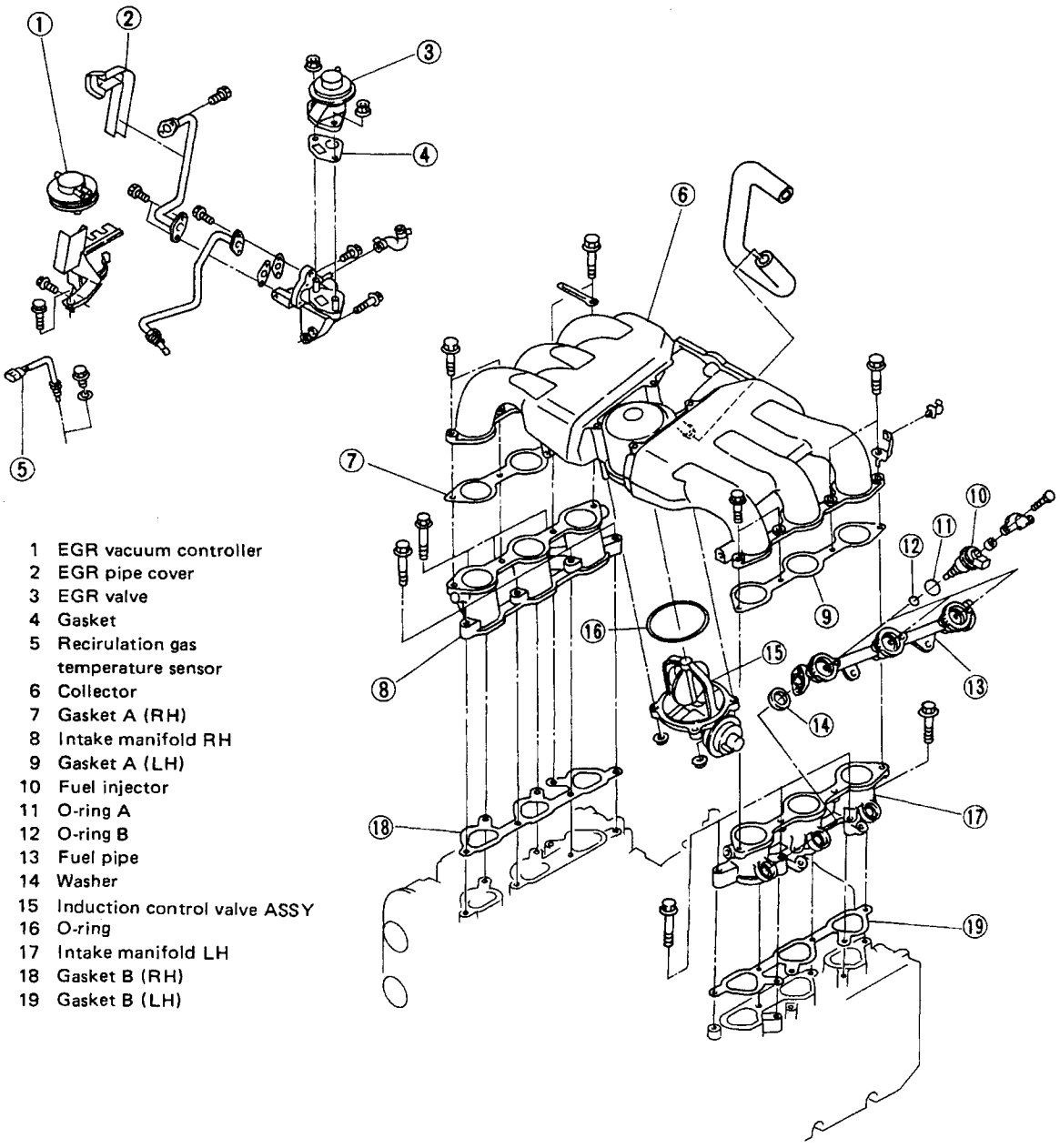

1 EGR vacuum controller
2 EGR pipe cover
3 EGR valve
4 Gasket
5 Recirulation gas temperature sensor
6 Collector
7 Gasket A (RH)
8 Intake manifold RH
9 Gasket A (LH)
10 Fuel injector
11 O-ring A
12 O-ring B
13 Fuel pipe
14 Washer
15 Induction control valve ASSY
16 O-ring
17 Intake manifold LH
18 Gasket B (RH)
19 Gasket B (LH)

C2-181

Fig. 34

2. Air Intake Boot and Throttle Body

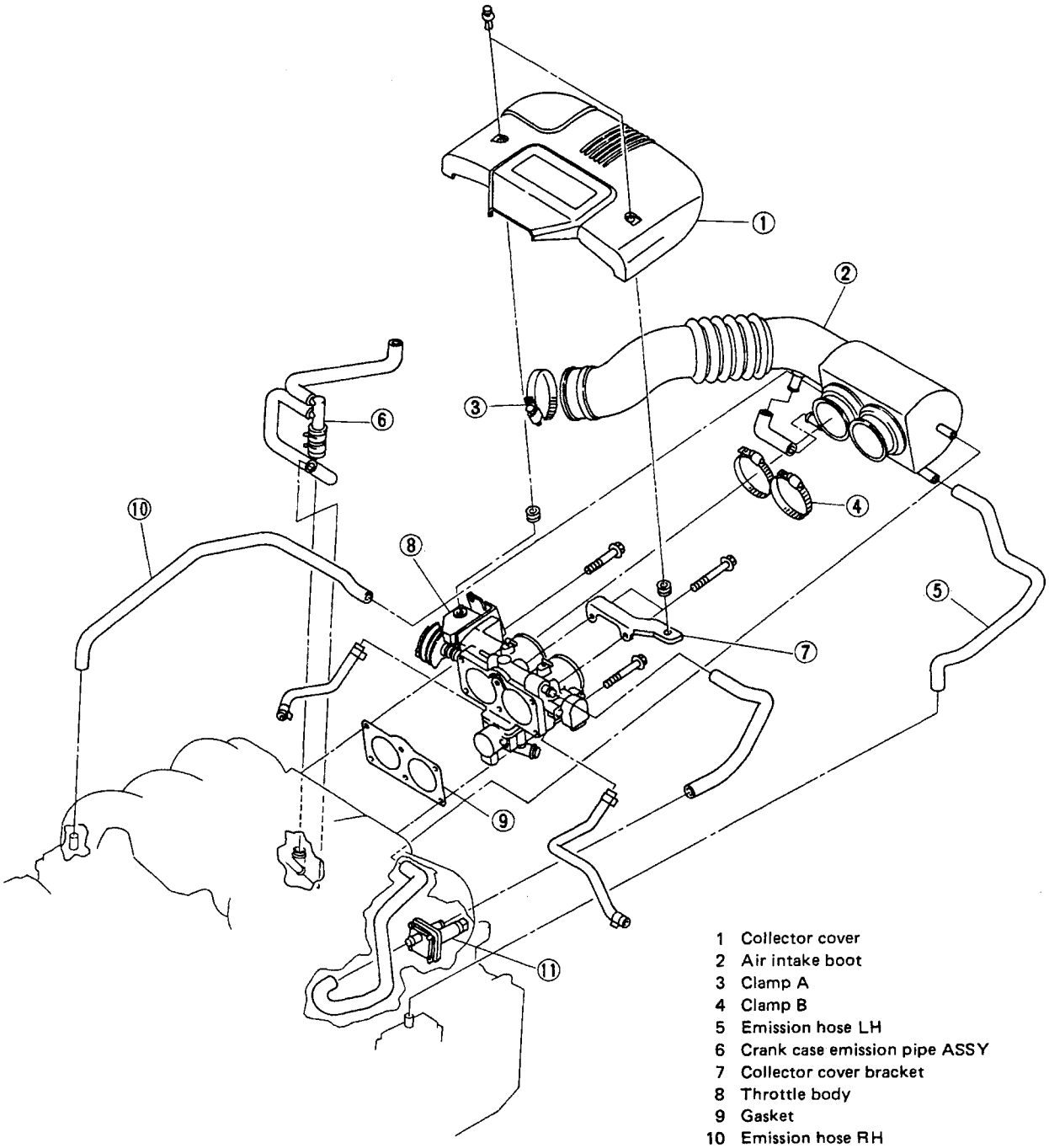

Fig. 35

3. Air Cleaner

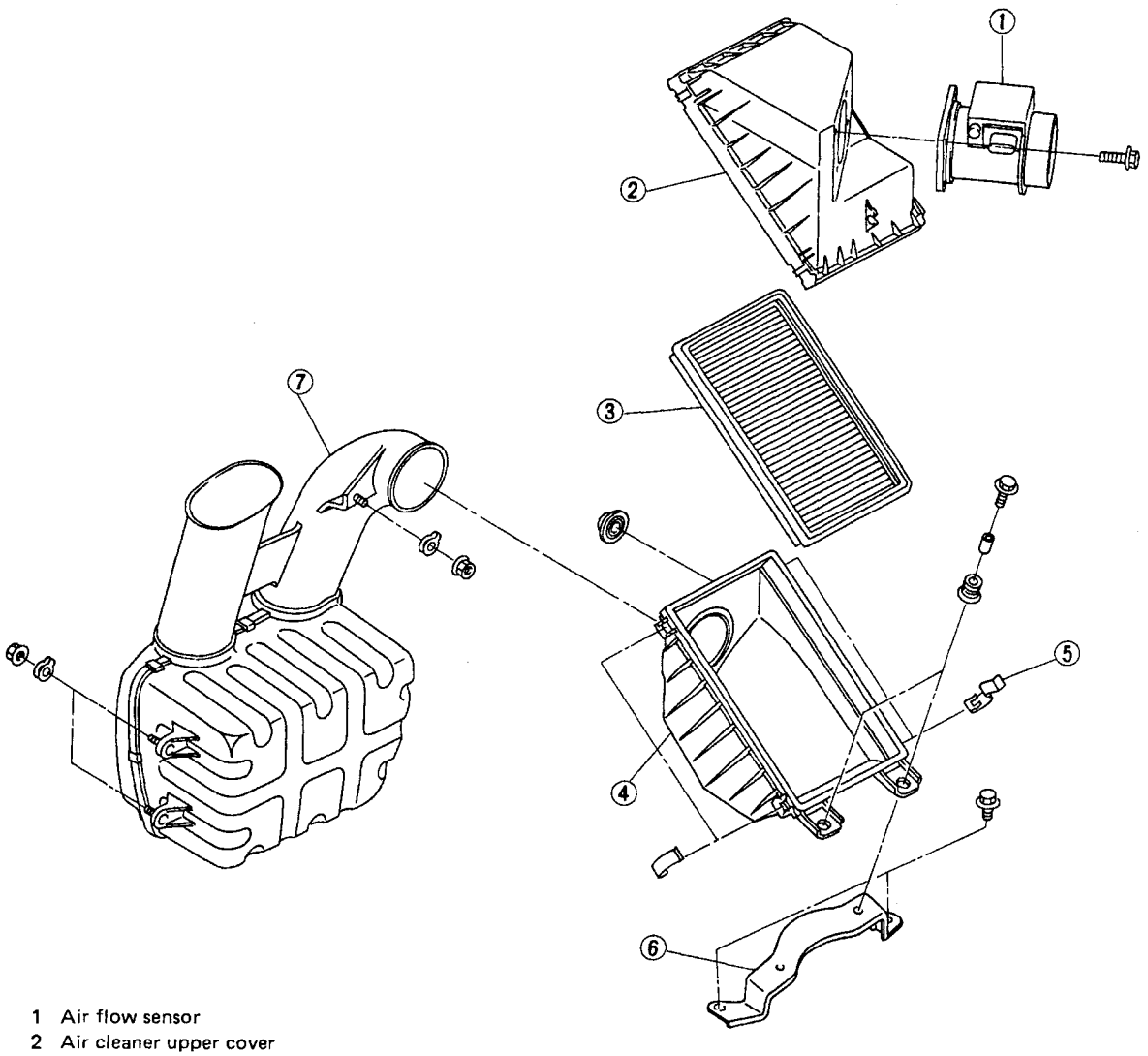

1 Air flow sensor
2 Air cleaner upper cover
3 Air cleaner element
4 Air cleaner under cover
5 Clip
6 Bracket
7 Resonator CP

C2-183

Fig. 36

T TROUBLESHOOTING AIRBAG

1. Supplemental Restraint System "Airbag"

Airbag system wiring harness is routed near the MPFI control unit (ECU), main relay and fuel pump relay.

a. All Airbag system wiring harness and connectors are colored yellow. Do not use electrical test equipment on these circuit.

b. Be careful not to damage Airbag system wiring harness when servicing the MPFI control unit (ECU), main relay and fuel pump relay.

2. Precautions

1) Never connect the battery in reverse polarity.
- The MPFI control unit will be destroyed instantly.
- The fuel injector and other part will be damaged in just a few minutes more.

2) Do not disconnect the battery terminals while the engine is running.
- A large counter electromotive force will be generated in the alternator, and this voltage may damage electronic parts such as ECU (MPFI control unit), etc.

3) Before disconnecting the connectors of each sensor and the ECU, be sure the turn off the ignition switch.
- Otherwise, the ECU may be damaged.

4) The connectors to each sensor in the engine compartment and the harness connectors on the engine side and body side are all designed to be waterproof. However, it is still necessary to take care not to allow water to get into the connectors when washing the vehicle, or when servicing the vehicle on a rainy day.

5) Every MPFI-related part is a precision part. Do not drop them.

6) Observe the following cautions when installing a radio in MPFI equipped models.
   a. The antenna must be kept as far apart as possible from the control unit.
   (The ECU is located under the steering column, inside of the instrument panel lower trim panel.)
   b. The antenna feeder must be placed as far apart as possible from the ECU and MPFI harness.
   c. Carefully adjust the antenna for correct matching.
   d. When mounting a large power type radio, pay special attention to items a. thru c. above.
- Incorrect installation of the radio may affect the operation of the ECU.

7) Before disconnecting the fuel hose, disconnect the fuel pump connector and crank the engine for more than five seconds to release pressure in the fuel system. If engine starts during this operation, run it until it stops.

3. Pre-inspection

Before troubleshooting, check the following items which might affect engine problems:

1. Power supply

1) Measure battery voltage and specific gravity of electrolyte.

Standard voltage: 12 V
Specific gravity: Above 1.260

2) Check the condition of the main and other fuses, and harnesses and connectors. Also check for proper grounding.

2. Caps and plugs

1) Check that the fuel cap is properly closed.
2) Check that the oil filler cap is properly closed.
3) Check that the oil level gauge is properly inserted.

3. Intake manifold vacuum pressure

1) After warming up the engine, measure intake manifold vacuum pressure while at idle.

Standard vacuum pressure:
Approx. – 66.7 kPa (– 500 mmHg, – 19.69 in Hg).

Refer to C.2-2 [W5A0].

2) Unusual vacuum pressure occurs because of air leaks, fuel or engine problems. In such a case, engine idles roughly.

4. Fuel pressure

1) Release fuel pressure
Refer to C.2-8 [W1A0].
2) Connect fuel pressure gauge between fuel filter and hose, and measure fuel pressure at idling.
Refer to C.2-8 [W2A0].

Fuel pressure:
177 — 206 kPa (1.8 — 2.1 kg/cm², 26 — 30 psi)

5. Engine grounding

Make sure the engine grounding terminal is properly connected to the engine.

4. Electric Unit Location

1. SENSOR AND SOLENOID VALVE

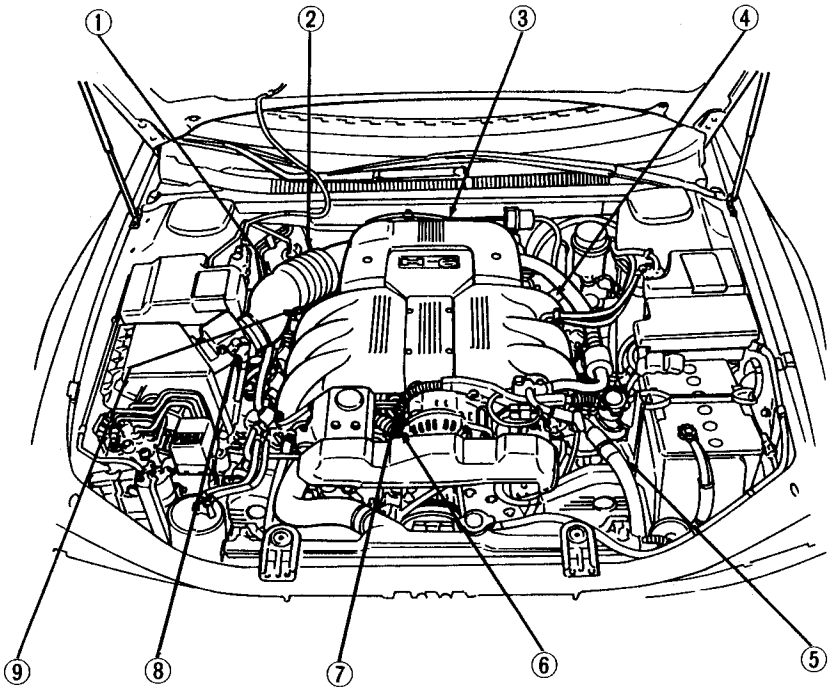

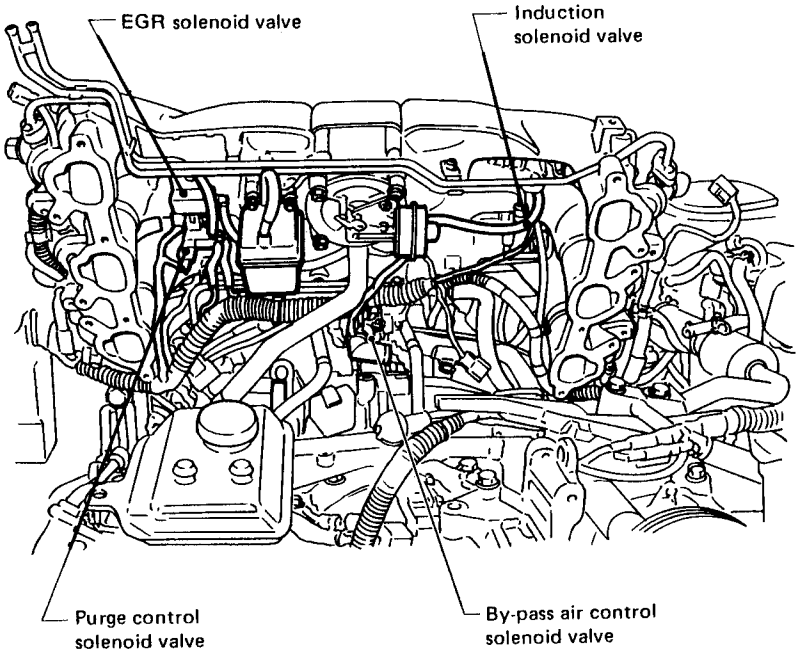

Fig. 37

C2-392

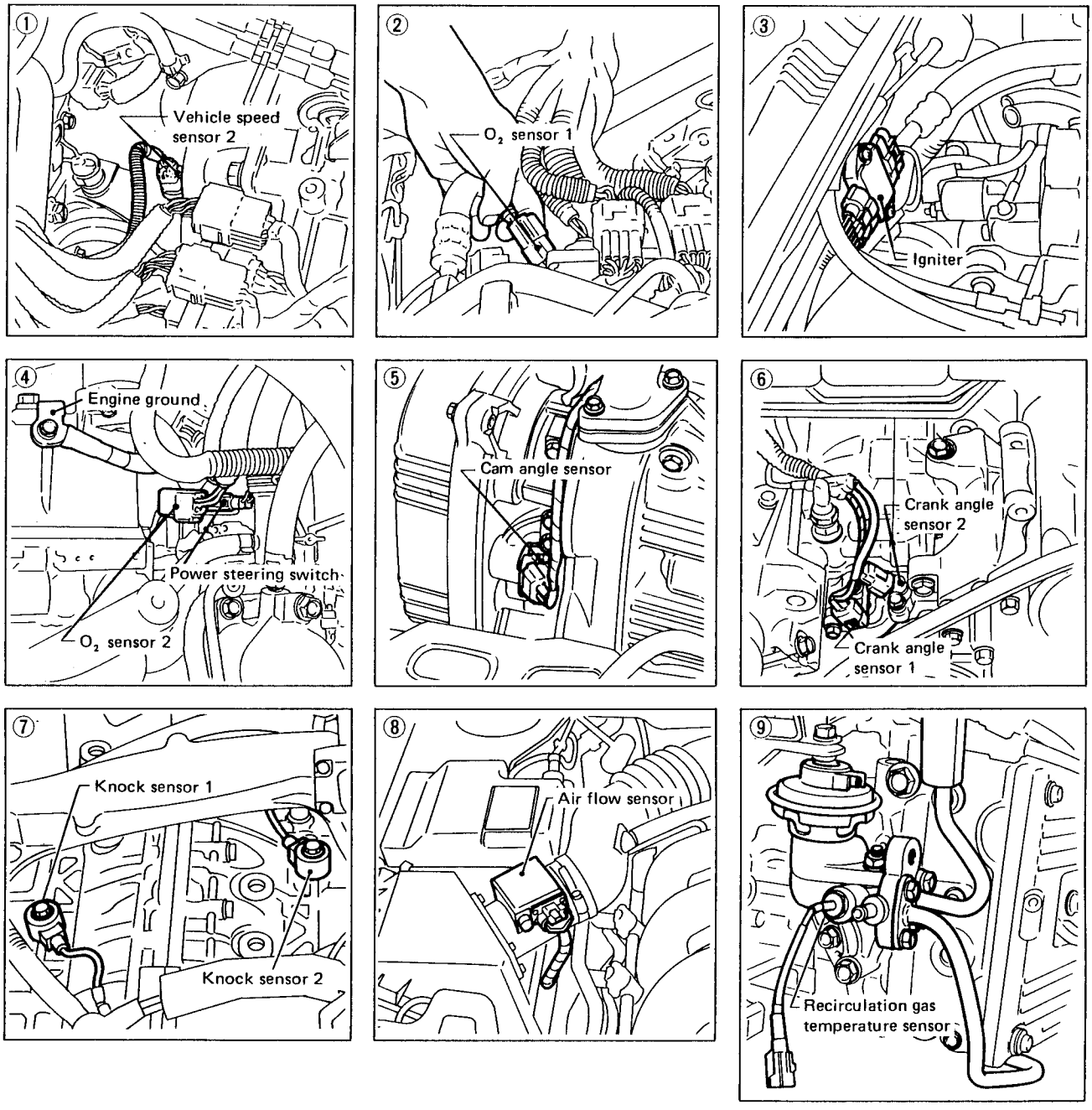
①
Vehicle speed sensor 2
②
O_2 sensor 1
③
Igniter
④
Engine ground
Power steering switch
O_2 sensor 2
⑤
Cam angle sensor
⑥
Crank angle sensor 2
Crank angle sensor 1
⑦
Knock sensor 1
Knock sensor 2
⑧
Air flow sensor
⑨
Recirculation gas temperature sensor

C2-407

2. CONTROL UNIT AND RELAY

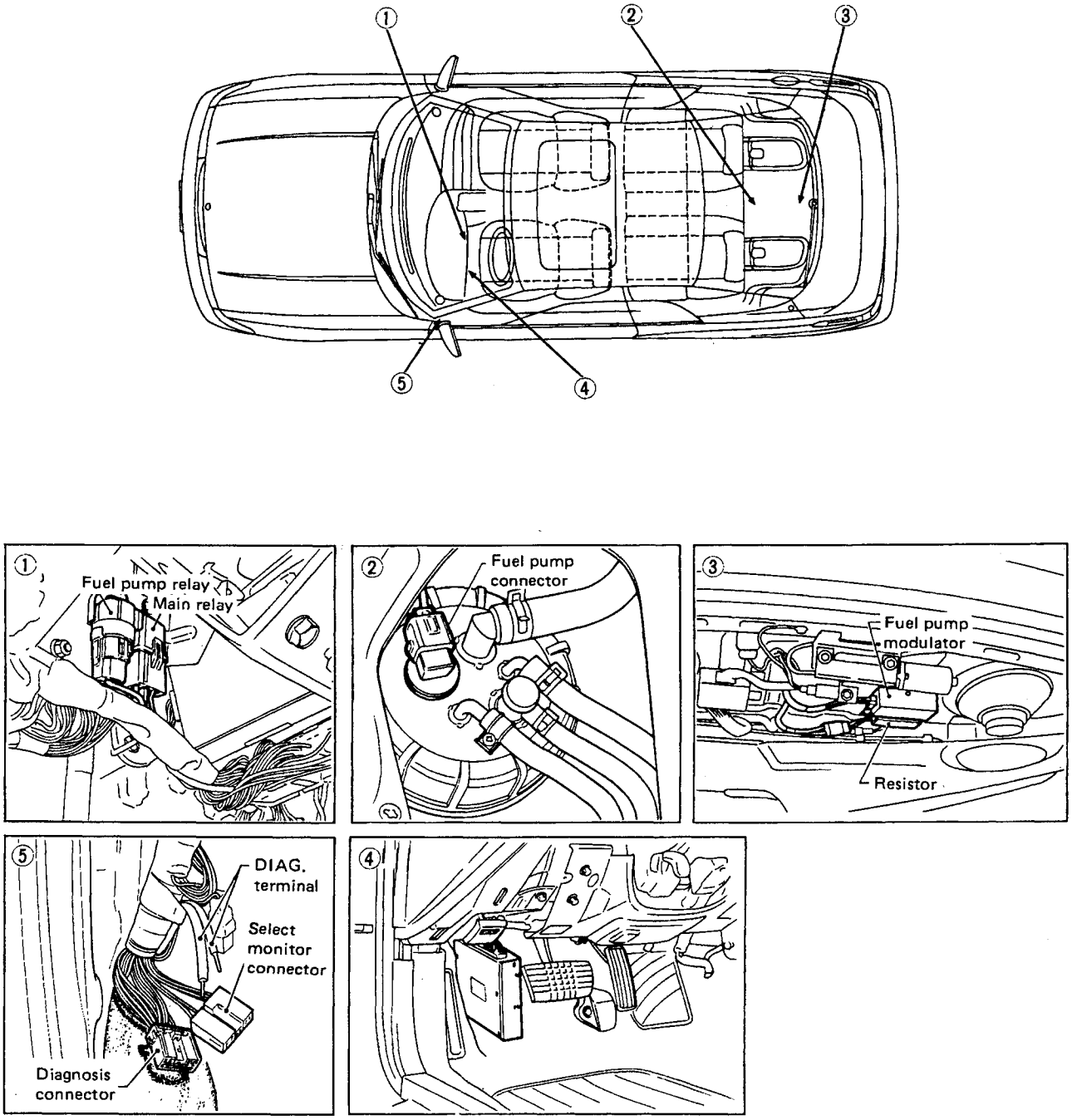

Fig. 38

Supplemental Restraint System "Airbag"
Airbag system wiring harness is routed near the MPFI control unit (ECU), main relay and fuel pump relay.

a. All Airbag system wiring harness and connectors are colored yellow. Do not use electrical test equipment on these circuit.
b. Be careful not to damage Airbag system wiring harness when servicing the MPFI control unit (ECU), main relay and fuel pump relay.

5. Troubleshooting Chart for Self-diagnosis System

A: BASIC TROUBLESHOOTING PROCEDURE

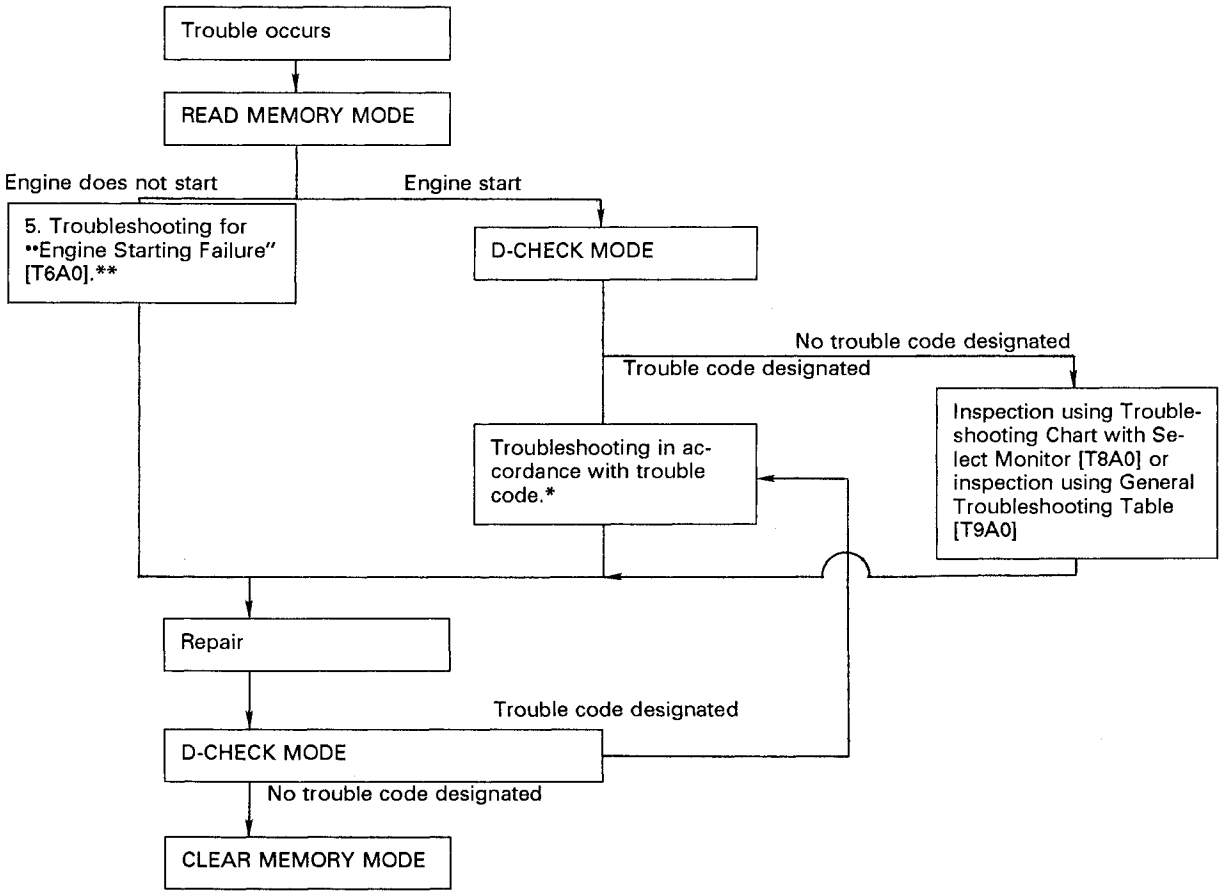

***: When more than one trouble code is outputted, begin troubleshooting with the smallest trouble code number and proceed to the next higher code.**
After correcting each problem, conduct the D-check and ensure that the corresponding trouble code no longer appears.

****: When a trouble code is displayed in the read-memory mode, conduct troubleshooting measures which correspond with the code.**

a. Check the connector while it is connected unless specified otherwise.

b. Be sure to check again from the beginning in order to prevent secondary trouble caused by repair work.

c. When checking with the vacuum hose disconnected from the vacuum switch at E/G on, be sure to plug the hose.

B: LIST OF TROUBLE CODES

1. TROUBLE CODES

Trouble code	Item	Diagnosis
11	Crank angle sensor 1	No signal from crank angle sensor 1 for more than 3 seconds after start switch ON.
12	Starter switch	Abnormal signal from ignition switch.
13	Cam angle sensor	No signal from cam angle sensor, but signal from crank angle sensor 1.
14	Injector #1	Fuel injector inoperative. (Abnormal signal from monitor circuit.)
15	Injector #2	
16	Injector #3	
17	Injector #4	
18	Injector #5	
19	Injector #6	
21	Water temperature sensor	Abnormal signal from water temperature sensor.
22	Knock sensor 1 (RH)	Abnormal voltage in knock sensor monitor circuit.
23	Air flow sensor	Abnormal voltage from air flow sensor.
24	By-pass air control solenoid valve	By-pass air control solenoid valve inoperated. (Abnormal signal in monitor circuit.)
28	Knock sensor 2 (LH)	Abnormal voltage in knock sensor monitor circuit.
29	Crank angle sensor 2	No signal from crank angle sensor 2, but two signals from crank angle sensor 1.
31	Throttle sensor	Abnormal voltage from throttle sensor.
32	O_2 sensor 1 (RH)	O_2 sensor 1 inoperative.
33	Vehicle speed sensor 2	No signal from vehicle speed sensor 2.
34	EGR solenoid valve	EGR solenoid valve inoperative.
35	Purge control solenoid valve	Purge control solenoid valve inoperative.
37	O_2 sensor 2 (LH)	O_2 sensor 2 inoperative.
38	Engine torque control	Wiring harness between ECU and TCU is in short circuit.
41	A/F learning control	Faulty learning control function.
45	Atmospheric pressure sensor	Faulty atmospheric pressure sensor inside ECU.
51	Neutral switch	Abnormal signal from inhibitor switch.
52	Parking switch	Abnormal signal from parking switch.
55	EGR gas temperature sensor (CAL.)	Abnormal signal from EGR gas temperature sensor.
56	EGR system (CAL.)	EGR valve open/close stick, EGR hose disconnect or exhaust pressure control valve damaged.

2. HOW TO READ TROUBLE CODE (FLASHING)

The CHECK ENGINE light flashes the code corresponding to the faulty part.
The long segment (1.2 sec on) indicates a ••ten", and the short segment (0.2 sec on) signifies ••one".

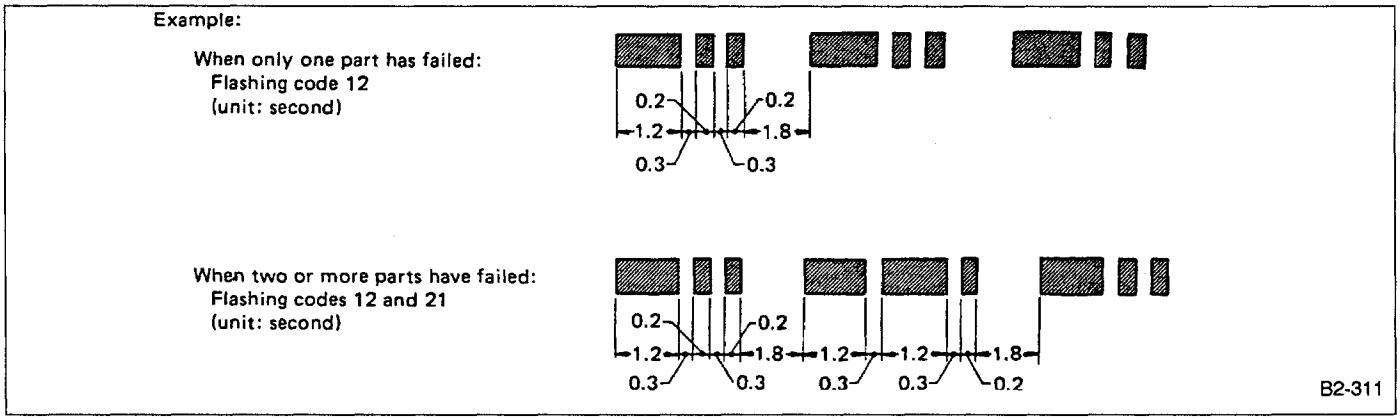

Fig. 39

C: READ MEMORY MODE

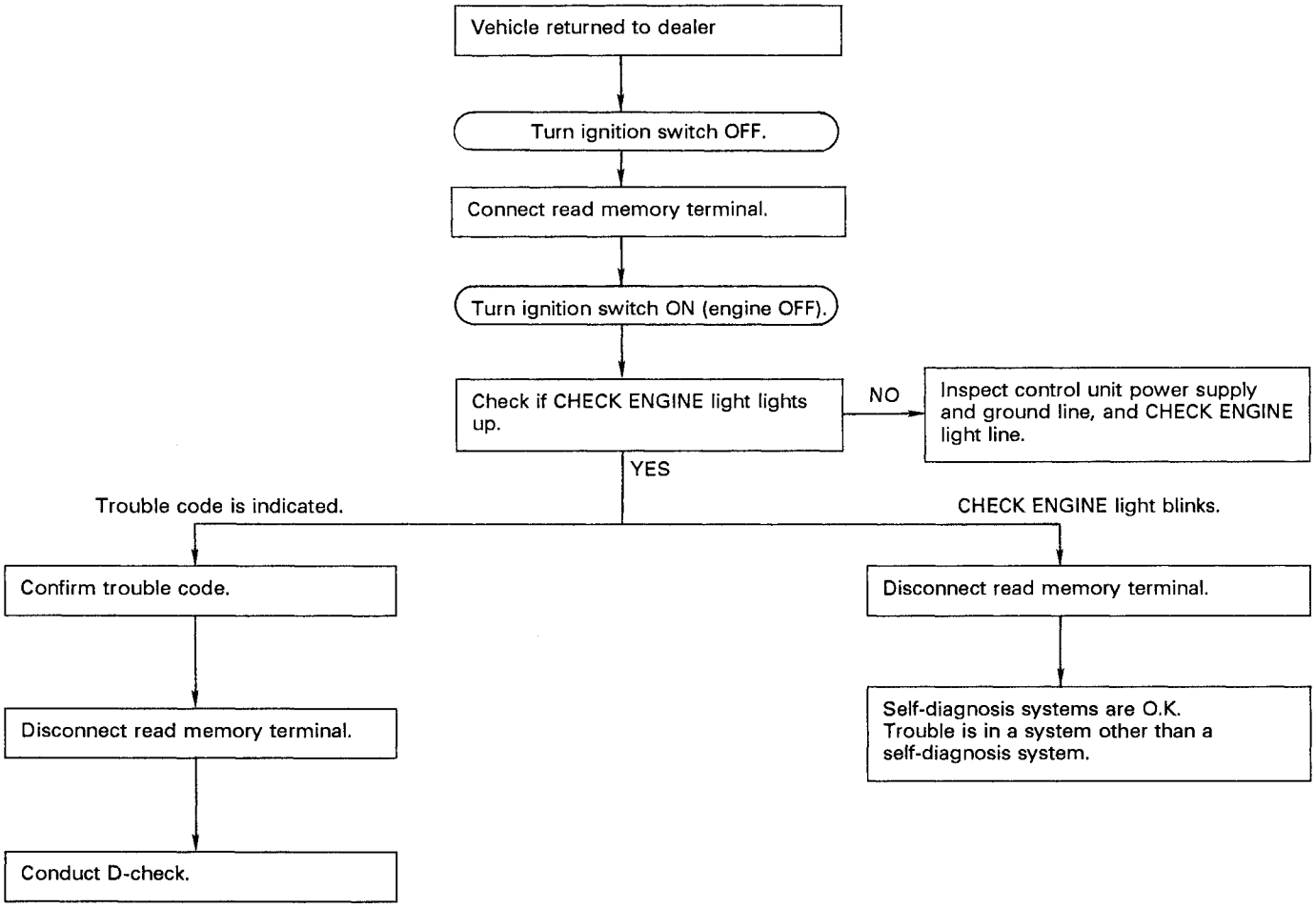

D: D-CHECK MODE

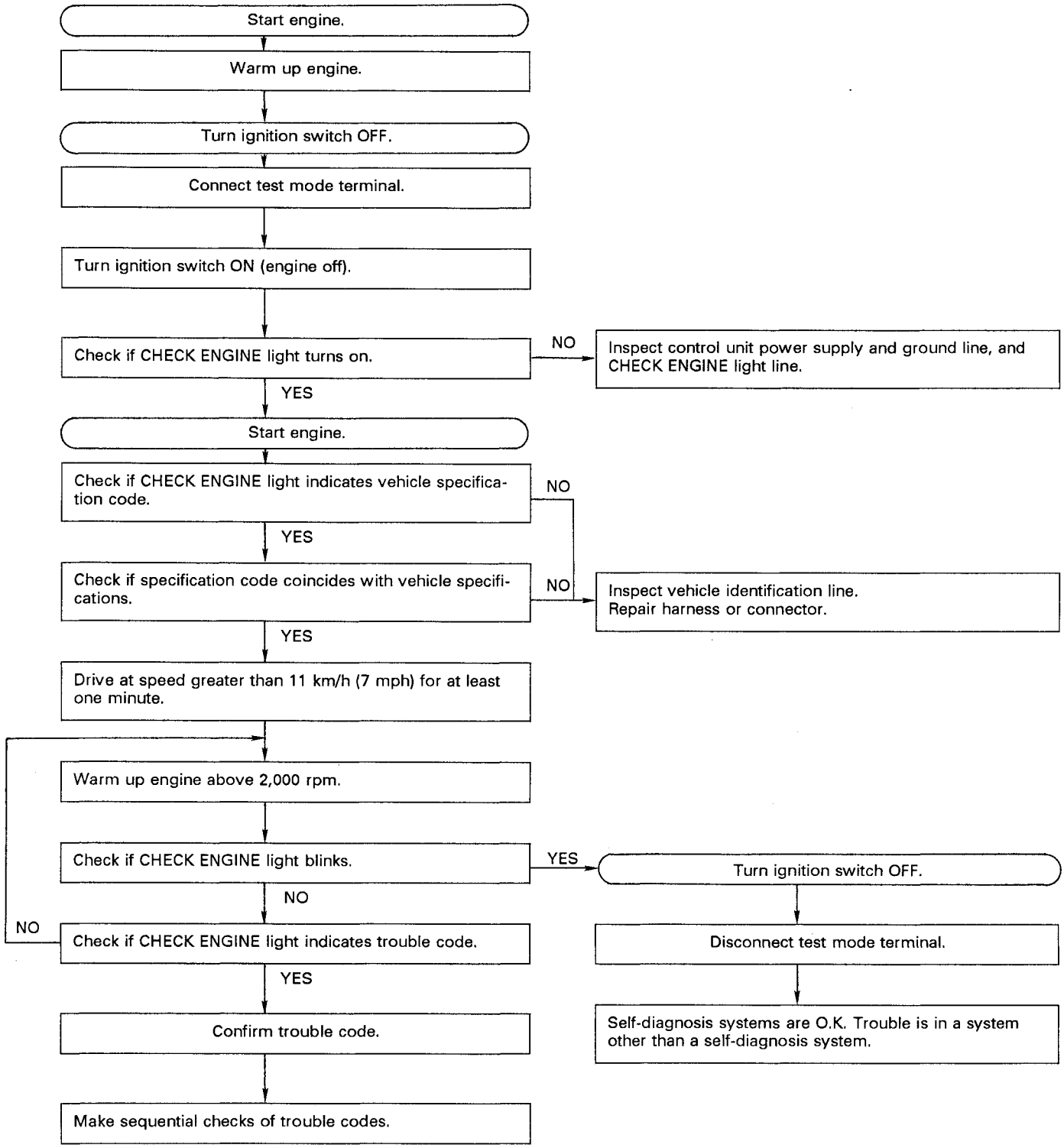

E: CLEAR MEMORY MODE

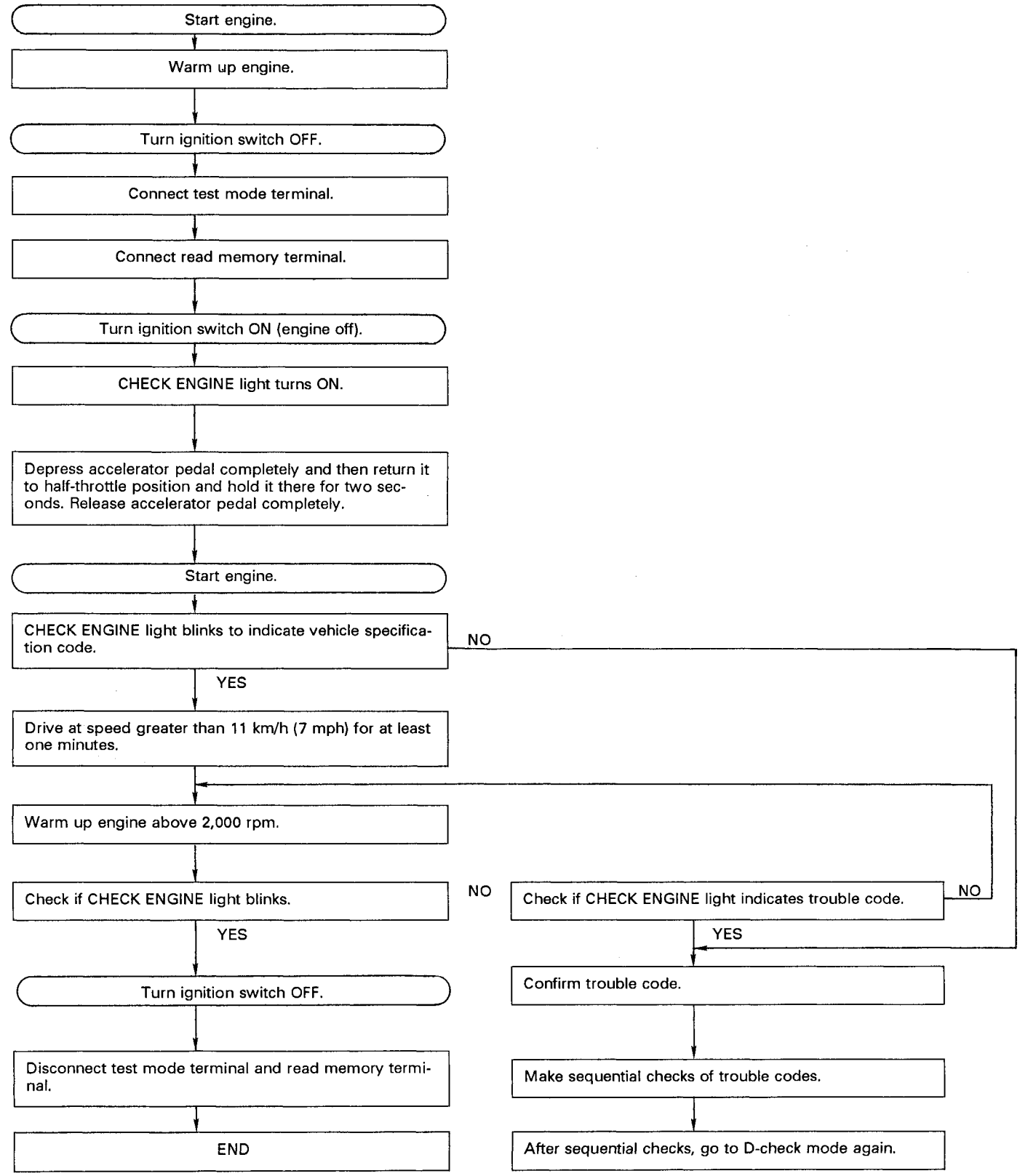

6. Output Modes of Select Monitor

1. FUNCTION MODE

MODE	Contents	Abbre-viation	Unit of measure	Contents of display
F00	ROM-ID number	YEAR	—	Model year of vehicle
F01	Battery voltage	VB	V	Battery voltage supplied to ECU.
F02	Vehicle speed signal	VSP	m/h	Vehicle speed from vehicle speed sensor 2.
F03	Vehicle speed signal	VSP	km/h	
F04	Engine speed signal	EREV	rpm	Engine speed from crank angle sensor 1.
F05	Water temperature signal	TW	degF	Coolant temperature from water temperature sensor.
F06	Water temperature signal	TW	degC	
F07	Ignition timing	ADVS	deg	Ignition timing calculated by ECU.
F08	Air flow signal	QA	V	Intake air flow converted to volts
F09	Load data	LDATA	—	Engine load.
F10	Throttle position signal	THV	V	Throttle position converted to volts
F11	Injector pulse width	TIM	mS	Ignition timing calculated by ECU.
F12	By-pass air control	ISC	%	"Duty" ratio on by-pass air control system.
F13	O_2 sensor 1 (RH) signal	O2R	V	Voltage from O_2 sensor 1 (RH)
F14	O_2 sensor 2 (LH) signal	O2L	V	Voltage from O_2 sensor 2 (LH).
F15	O_2 Max. (RH)	O2Rmax	V	Maximum voltage from O_2 sensor 1 (RH).
F16	O_2 Min. (RH)	O2Rmin	V	Minimum voltage from O_2 sensor 1 (RH).
F17	O_2 Max. (LH)	O2Lmax	V	Maximum voltage from O_2 sensor 2 (LH).
F18	O_2 Min. (LH)	O2Lmin	V	Minimum voltage from O_2 sensor 2 (LH).
F19	A/F correction coefficient 1	ALPHA1	%	A/F ratio correction determined by ECU from O_2 sensor 1 and/or O_2 sensor 2 signal(s).
F20	A/F correction coefficient 2	ALPHA2	%	
F21	Knock sensor signal	RTRD	deg	Correction determined by ECU from knock sensor 1 and/or 2 signal(s).
F22	Canister purge control	CPCD	%	"Duty" ratio on purge control system.
F23	Atmospheric pressure	BARO.P	mmHg	—
FA0	ON ↔ OFF signal	—	—	—
FA1	ON ↔ OFF signal	—	—	—
FA2	ON ↔ OFF signal	—	—	—
FA3	ON ↔ OFF signal	—	—	—
FA4	ON ↔ OFF signal	—	—	—
FA5	ON ↔ OFF signal	—	—	—
FB0	Trouble code	DIAG	—	Trouble code in U- or D-check mode.
FB1	Trouble code	DIAG	—	Trouble code in read memory mode.
FC0	Clear memory	—	—	Used to clear memory.

2. ON ↔ OFF SIGNAL

Mode	LED No.	Contents	Display
FA0	1	Ignition switch	IG
	2	A/C switch	AC
	3	Idle switch	ID
	4	A/C pressure switch	AP
	5	—	—
	6	—	—
	7	Neutral position switch	NT
	8	—	—
	9	Power steering switch	PS
	10	—	—
FA1	1	—	—
	2	—	—
	3	Test mode position	UD
	4	Read memory position	RM
	5	—	—
	6	—	—
	7	Engine torque control	TR
	8	Parking position switch	PK
	9	49-states and Canada/California discrimination	FC
	10	—	—
FA2	1	—	—
	2	—	—
	3	Radiator sub fan	R2
	4	Radiator main fan	R1
	5	—	—
	6	Fuel pump modulator	FP
	7	EGR solenoid valve	ER
	8	—	—
	9	Induction solenoid valve	IH
	10	—	—
FA3	1	—	—
	2	—	—
	3	—	—
	4	—	—
	5	—	—
	6	—	—
	7	—	—
	8	Knock sensor 1 and/or 2	KS
	9	—	—
	10	—	—
FA4	1	—	—
	2	—	—
	3	—	—
	4	Fuel pump relay	FP
	5	—	—
	6	—	—
	7	—	—
	8	—	—
	9	—	—
	10	—	—
FA5	1	—	—
	2	—	—
	3	—	—
	4	—	—
	5	O_2 monitor RH	OR
	6	—	—
	7	—	—
	8	—	—
	9	—	—
	10	O_2 monitor LH	OL

7. Control Unit I/O Signal

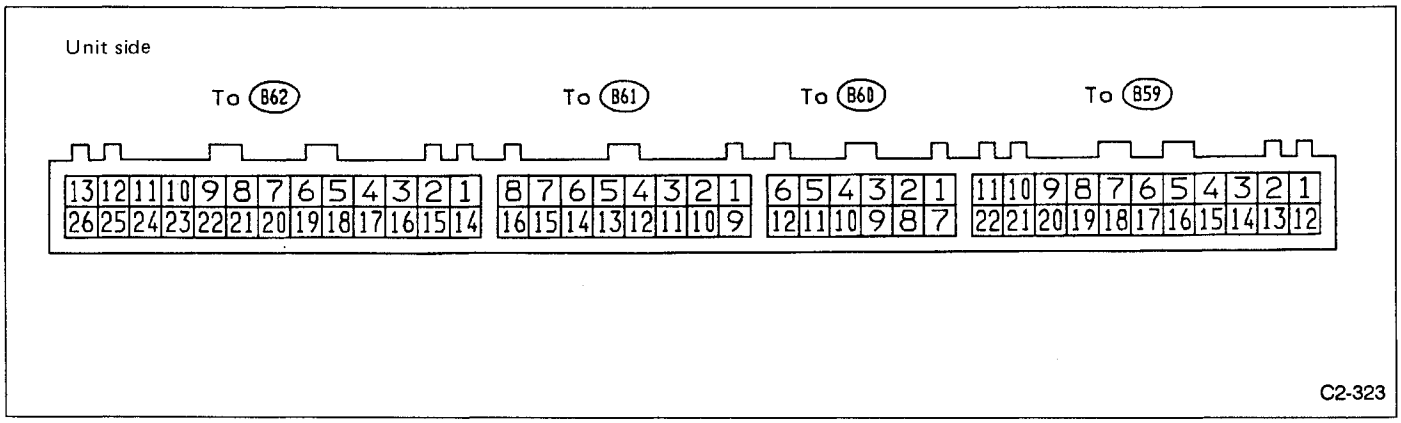

Fig. 40

Content		Connector No.	Terminal No.	Signal			Note
				IG switch		Engine ON (Idling)	
				OFF	ON (Engine OFF)		
Crank angle sensor 1	Signal (+)	B61	1	—	0	*	*: Sensor output waveform
	Signal (−)	B61	2	—	0	0	
	Sealed	B61	3	—	0	0	
Cam angle sensor	Signal (+)	B59	7	—	0	*	*: Sensor output waveform
	Signal (−)	B59	9	—	0	0	
	Sealed	B59	10	—	0	0	
Crank angle sensor 2	Signal (+)	B59	8	—	0	*	*: Sensor output waveform
	Signal (−)	B59	9	—	0	0	
	Sealed	B59	10	—	0	0	
Air flow sensor	V_B	B60	11	—	10 — 13	13 — 14	
	Signal	B60	5	—	0 — 0.3	0.8 — 1.2	
	GND	B60	6	—	0	0	
Throttle sensor	V_{CC}	B60	3	—	5	5	
	Signal	B60	2	—			
	GND	B60	1	—	0	0	
O_2 sensor 1	Signal	B59	6	—	0.6	1	
	Sealed	B59	17	—	0	0	
O_2 sensor 2	Signal	B59	5	—	0.6	1	
	Sealed	B59	17	—	0	0	
Knock sensor 1	Signal	B61	5	—	2 — 4	2 — 4	
	Sealed	B61	4	—	0	0	
Knock sensor 2	Signal	B61	6	—	2 — 4	2 — 4	
	Sealed	B61	4	—	0	0	
Water temperature sensor		B59	3	0	0.7 — 1.0	0.7 — 1.0	After warm-up
Vehicle speed sensor 2		B60	11	—	0 or 5	0 or 5	
49-state and Canada/ California identification		B62	4	—			
Starter switch		B61	10	—	0	0	On cranking: 10 — 14
A/C switch		B61	9	—	ON: 10 — 13, OFF: 0	ON: 10 — 13, OFF: 0	
Ignition switch		B60	12	0	10 — 13	13 — 14	
Neutral switch		B60	10	—	N range: 0, Other: 8	N range: 0, Other: 8	
Parking switch		B60	9	—	P range: 0, Other: 8	P range: 0, Other: 8	
Power steering switch		B60	7	—	5	5	

Content		Connector No.	Terminal No.	Signal			Note
				IG switch		Engine ON (Idling)	
				OFF	ON (Engine OFF)		
Test mode		B61	13	—	5	5	When connected: 0
Read memory		B61	12	—	5	5	When connected: 0
Back-up power supply		B59	15	10 - 13	10 — 13	13 — 14	
Control unit power supply		B59	2	0	10 — 13	13 — 14	
		B59	13	0	10 — 13	13 — 14	
Ignition coil	#1	B62	7	—	0.01	—	
	#2	B62	8	—	0.01	—	
	#3	B62	9	—	0.01	—	
	#4	B62	10	—	0.01	—	
	#5	B62	21	—	0.01	—	
	#6	B62	16	—	0.01	—	
Fuel injector	#1	B62	13	⌀	10 — 13	0 - 12	Waveform
	#2	B62	12	⌀	10 — 13	0 - 12	Waveform
	#3	B62	11	⌀	10 — 13	0 - 12	Waveform
	#4	B62	26	⌀	10 — 13	0 - 12	Waveform
	#5	B59	1	⌀	10 — 13	0 - 12	Waveform
	#6	B59	12	⌀	10 — 13	0 - 12	Waveform
By-pass air control solenoid valve	OPEN end	B62	2	—	7		
	CLOSE end	B62	1	—	6		
Auxiliary air control valve		B62	18	—			
Canister purge control		B62	6	—	ON: 0, OFF: 10 — 13	ON: 0, OFF: 10 — 13	
EGR control		B62	22	—	ON: 0, OFF: 10 — 13	ON: 0, OFF: 10 — 13	
Recirculation gas temperature sensor		B59	4	—	—		
Engine torque control		B59	20	—	—	ON: 0, OFF:5	
Inertia-Resonance supercharging control		B62	20	—	—	ON: 0, OFF: 13 — 14	
Fuel pump relay control		B62	23	—	ON: 0, OFF: 10 — 13		
Fuel pump discharge flow control		B61	14	—	—	High flow: 0 Low flow: 4 — 7	
A/C clutch control		B60	8	—	—	ON: 0, OFF: 13 — 14	
A/C compressor control		B59	19	—	—		
Radiator fan relay 1 control		B62	17	—	ON: 0, OFF: 10 — 13	ON: 0, OFF: 13 — 14	
Radiator fan relay 2 control		B62	3	—	ON: 0, OFF: 10 — 13	ON: 0, OFF: 13 — 14	
Self-shutoff control		B62	5	—	10 — 13	13 — 14	
Engine revolution output		B61	16	—	—	—	
CHECK ENGINE light		B62	19	—	—	—	Light ON: 1, max., OFF: 10 — 14
Atmospheric pressure sensor		B59	16	—	—	—	
GND (sensors)		B59	21	—	0	0	
GND (injectors)		B62	24	—	0	0	
		B62	25	—	0	0	
GND (power supply)		B62	14	—	0	0	
GND (ignition system)		B62	15	—	0	0	
GND (control systems)		B59	11	—	0	0	
		B59	22	—	0	0	
Select monitor signal		B61	7	—	—	—	
		B61	8	—	—	—	
GND (body)		B59	14	—	—	—	

8. Troubleshooting for Engine Starting Failure

A: BASIC TROUBLESHOOTING CHART

When engine cranks but does not start, troubleshoot in accordance with the following chart.

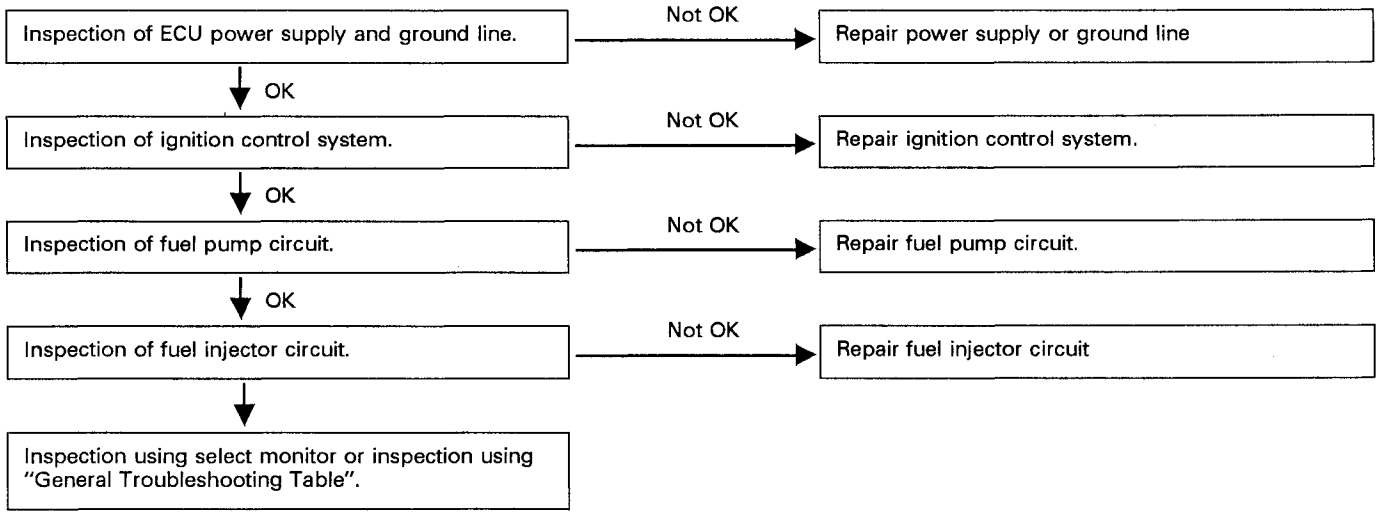

B: CONTROL POWER SUPPLY AND GROUND LINE

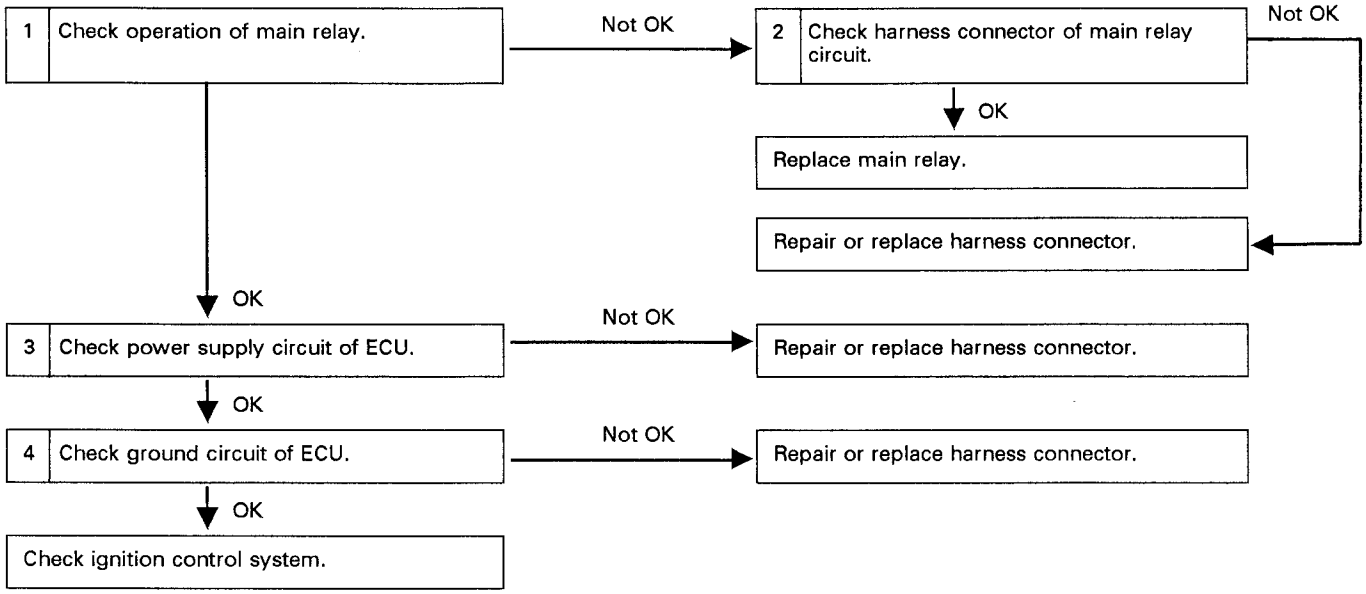

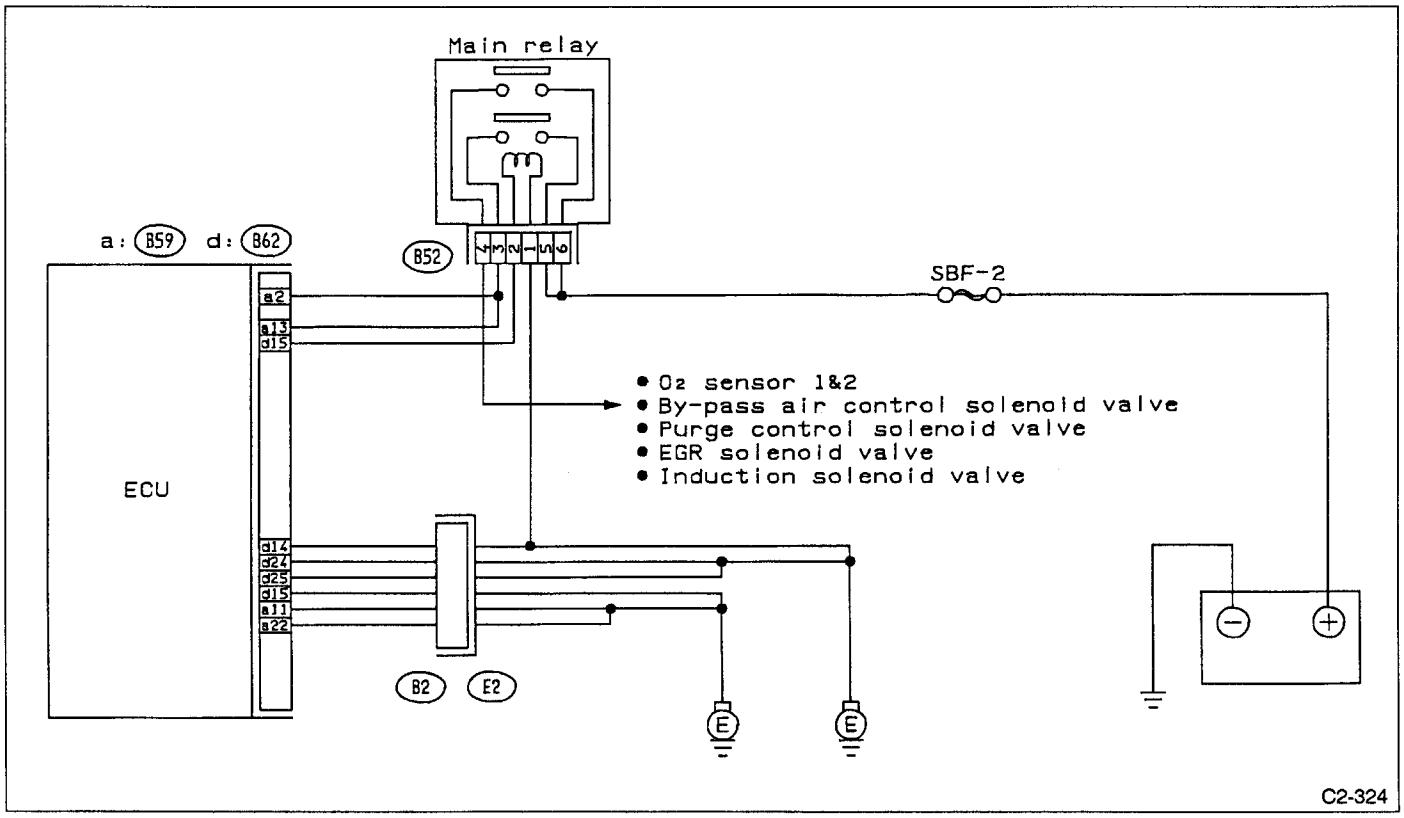

Fig. 41

1. CHECK OPERATION OF MAIN RELAY.

Turn ignition switch "ON" or "OFF" and check for main relay operating sound.

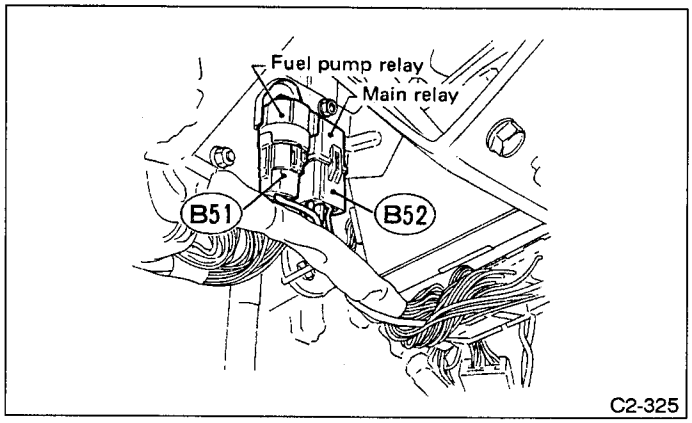

Fig. 42

2. CHECK HARNESS CONNECTOR OF MAIN RELAY CIRCUIT.

1) Disconnect (B52) connector from main relay.
2) Turn ignition switch to "ON".
3) Measure voltage between (B52) connector terminals and body.

Connector & Terminal/Specified voltage
(B52) No. 2 — Body/10 V, min.
(B52) No. 4 — Body/10 V, min.
(B52) No. 5 — Body/10 V, min.

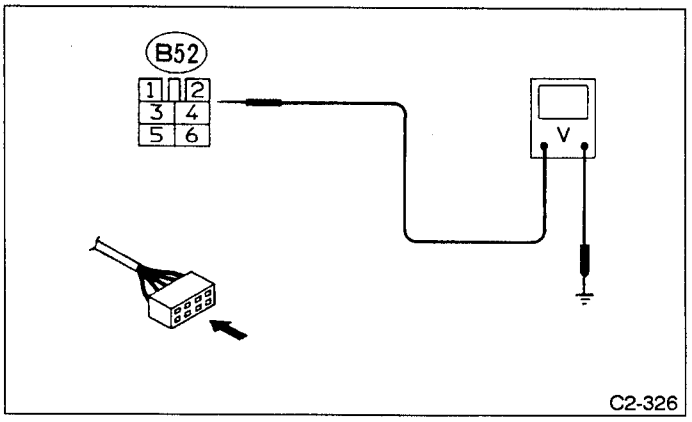

Fig. 43

4) Turn ignition switch to "OFF", and connect connector (B33).

3. CHECK POWER SUPPLY CIRCUIT OF ECU.

1) Disconnect ECU connector.
2) Turn ignition switch to "ON".
3) Measure voltage between ECU connector (B59) terminals and body.

Connector & Terminal/Specified voltage
(B59) No. 2 — Body/10 V, min.
(B59) No. 2 — Body/10 V, min.

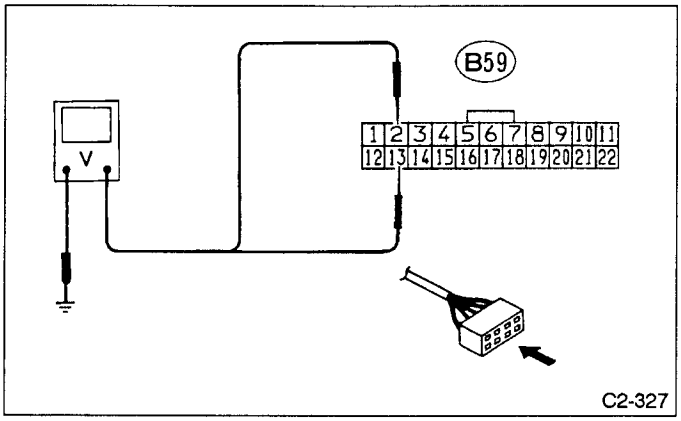

Fig. 44

4. CHECK GROUND CIRCUIT OF ECU.

Measure resistance between ECU connector and body.

Connector & Terminal/Specified resistance
(B59) No. 11 — Body/0 Ω
(B59) No. 22 — Body/0 Ω
(B62) No. 5 — Body/0 Ω
(B62) No. 14 — Body/0 Ω
(B62) No. 24 — Body/0 Ω
(B62) No. 25 — Body/0 Ω

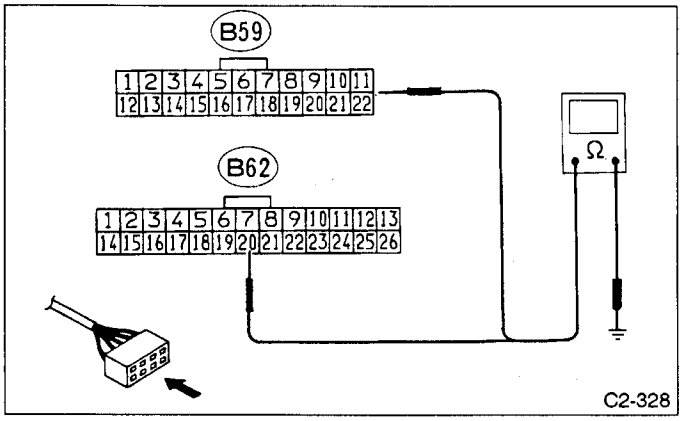

Fig. 45

C: IGNITION CONTROL SYSTEM

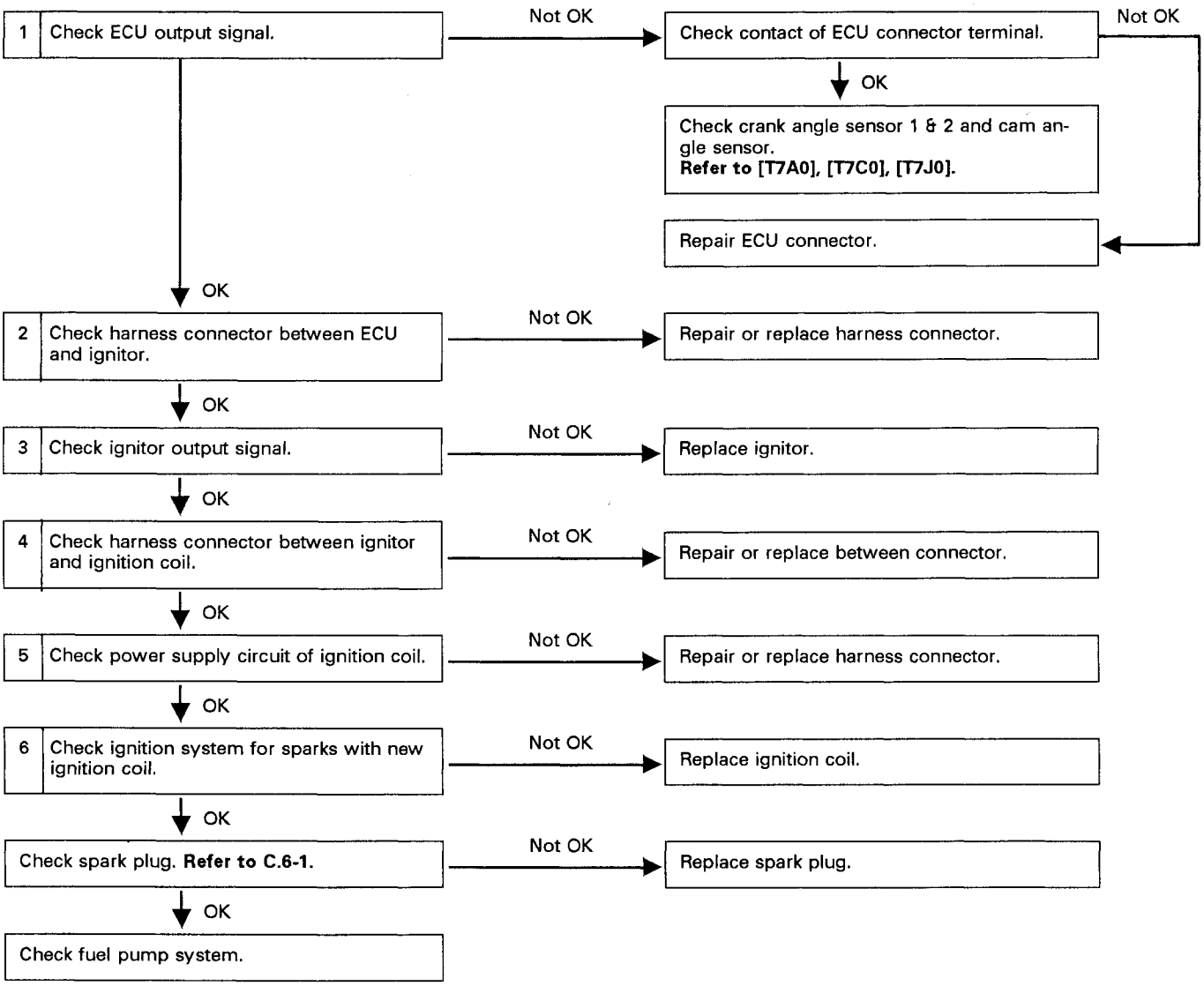

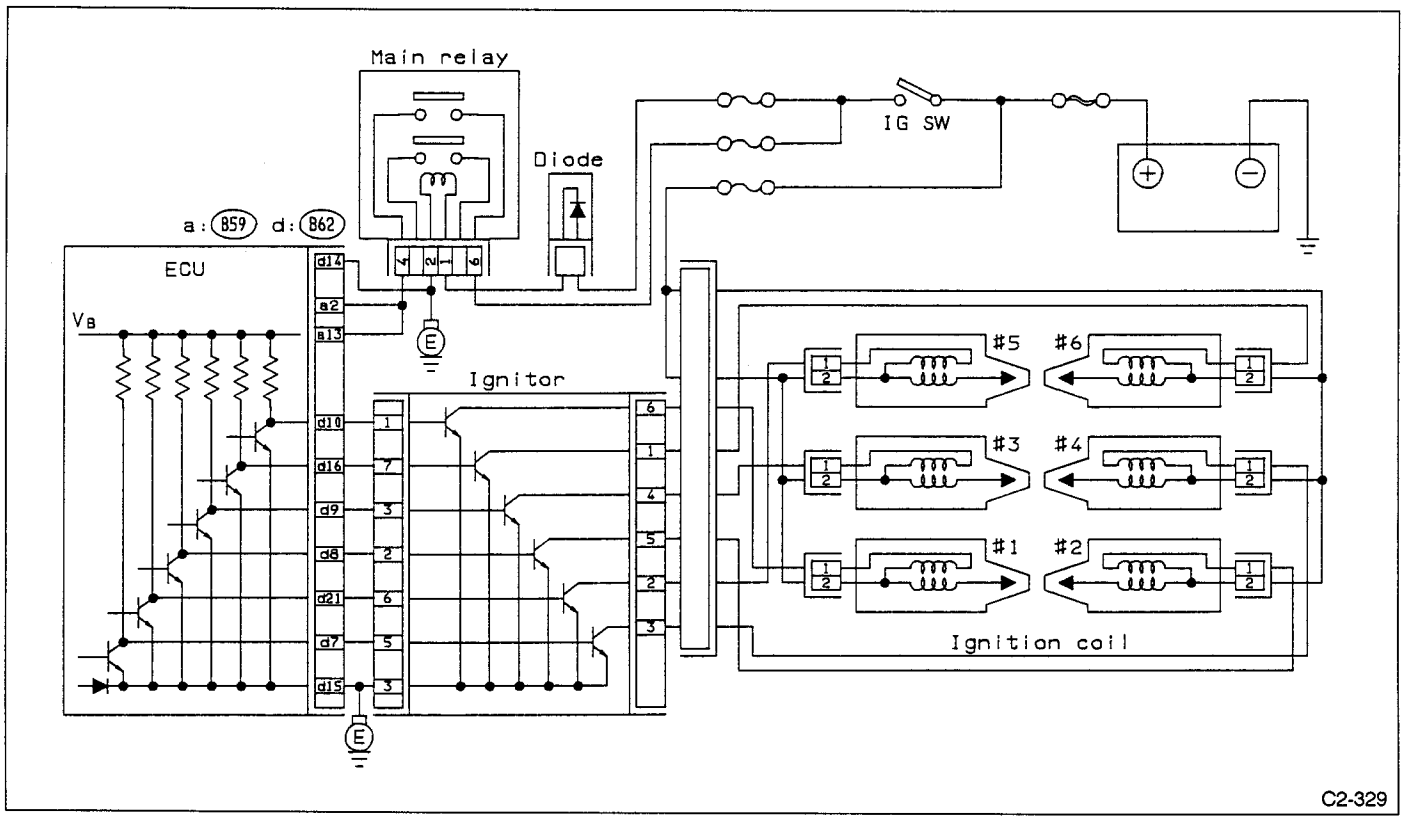
Main relay
Diode
IG SW
a: B59 d: B62
ECU
VB
d14
a2
a13
d10
d16
d9
d8
d21
d7
d15
Ignitor
#5
#6
#3
#4
#1
#2
Ignition coil
C2-329

Fig. 46

1. CHECK OUTPUT SIGNAL FOR ECU.

Measure voltage between ECU connector terminal and body while cranking the engine.

Connector & Terminal/Specified voltage
- **#1: (B62) No. 10 — Body/5 V, min.**
- **#2: (B62) No. 8 — Body/5 V, min.**
- **#3: (B62) No. 9 — Body/5 V, min.**
- **#4: (B62) No. 7 — Body/5 V, min.**
- **#5: (B62) No. 21 — Body/5 V, min.**
- **#6: (B62) No. 16 — Body/5 V, min.**

2. CHECK HARNESS CONNECTOR BETWEEN ECU AND IGNITOR.

1) Turn ignition switch to "OFF".
2) Disconnect connectors from ECU and ignitor.
3) Measure resistance of harness between ECU and ignitor.

Connector & Terminal/Specified resistance
- **#1: (B62) No. 10 — (B12) No. 1/0 Ω**
- **#2: (B62) No. 8 — (B12) No. 2/0 Ω**
- **#3: (B62) No. 9 — (B12) No. 3/0 Ω**
- **#4: (B62) No. 7 — (B12) No. 5/0 Ω**
- **#5: (B62) No. 21 — (B12) No. 6/0 Ω**
- **#6: (B62) No. 16 — (B12) No. 7/0 Ω**
- **Body — (E12) No. 4/0 Ω**

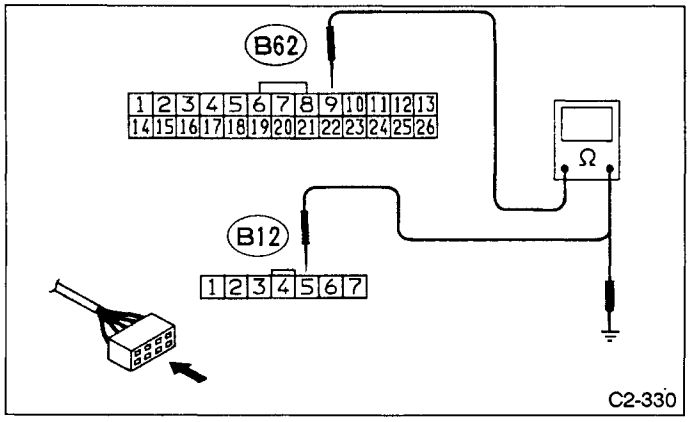

Fig. 47

3. CHECK IGNITOR OUTPUT SIGNAL.

1) Connect all connectors.
2) Measure voltage between ignitor output connector and body while cranking the engine.

Connector & Terminal/Specified voltage
- **#1: (B11) No. 1 — Body/5 V, min.**
- **#2: (B11) No. 2 — Body/5 V, min.**
- **#3: (B11) No. 3 — Body/5 V, min.**
- **#4: (B11) No. 4 — Body/5 V, min.**
- **#5: (B11) No. 5 — Body/5 V, min.**
- **#6: (B11) No. 6 — Body/5 V, min.**

4. CHECK HARNESS CONNECTOR BETWEEN IGNITOR AND EACH IGNITION COIL.

1) Turn ignition switch to "OFF".
2) Disconnect ignitor connector (B31) and each ignition coil connector from engine harness.
3) Measure resistance of harness connector between ignitor and each ignition coil.

Connector & Terminal/Specified resistance
- **#1: (B11) No. 1 — (B27) No. 2/0 Ω**
- **#2: (B11) No. 2 — (B30) No. 2/0 Ω**
- **#3: (B11) No. 3 — (B28) No. 2/0 Ω**
- **#4: (B11) No. 4 — (B31) No. 2/0 Ω**
- **#5: (B11) No. 5 — (B29) No. 2/0 Ω**
- **#6: (B11) No. 6 — (B32) No. 2/0 Ω**

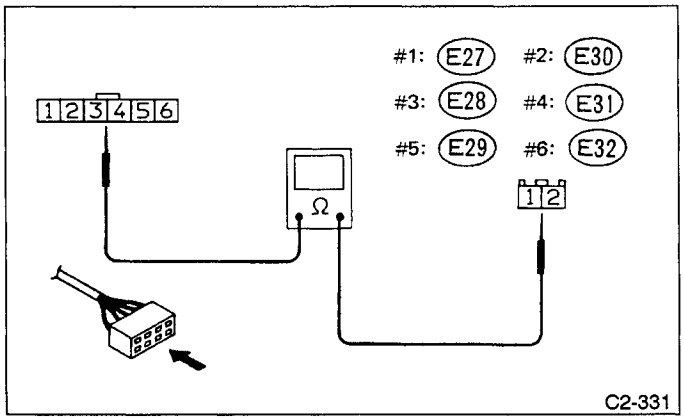

Fig. 48

5. CHECK POWER SUPPLY CIRCUIT OF IGNITION COIL.

1) Connect all connectors.
2) Turn ignition switch to "ON".
3) Measure voltage between ignition coil terminal and body.

Connector & Terminal/Specified voltage
- **#1: (E27) No. 1 — Body/12 V, min.**
- **#2: (E30) No. 1 — Body/12 V, min.**
- **#3: (E28) No. 1 — Body/12 V, min.**
- **#4: (E31) No. 1 — Body/12 V, min.**
- **#5: (E29) No. 1 — Body/12 V, min.**
- **#6: (E30) No. 1 — Body/12 V, min.**

6. CHECK IGNITION SYSTEM FOR SPARK WITH NEW IGNITION COIL.

1) Turn ignition switch to "OFF".
2) Remove each ignition coil from cylinder head.
3) Replace ignition coil with new one.
4) Crank engine to check that spark occurs at each cylinder.

D: FUEL PUMP SYSTEM

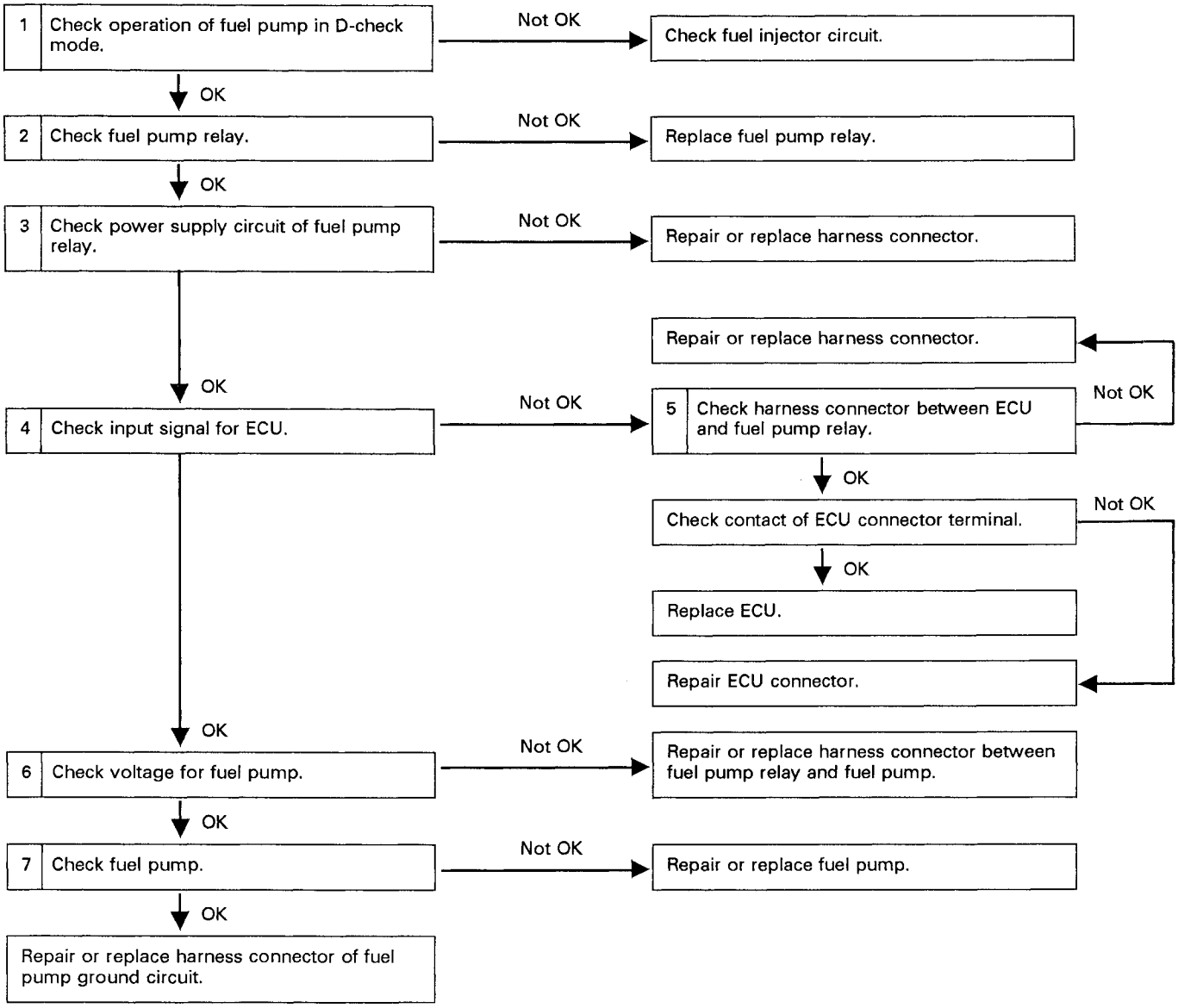

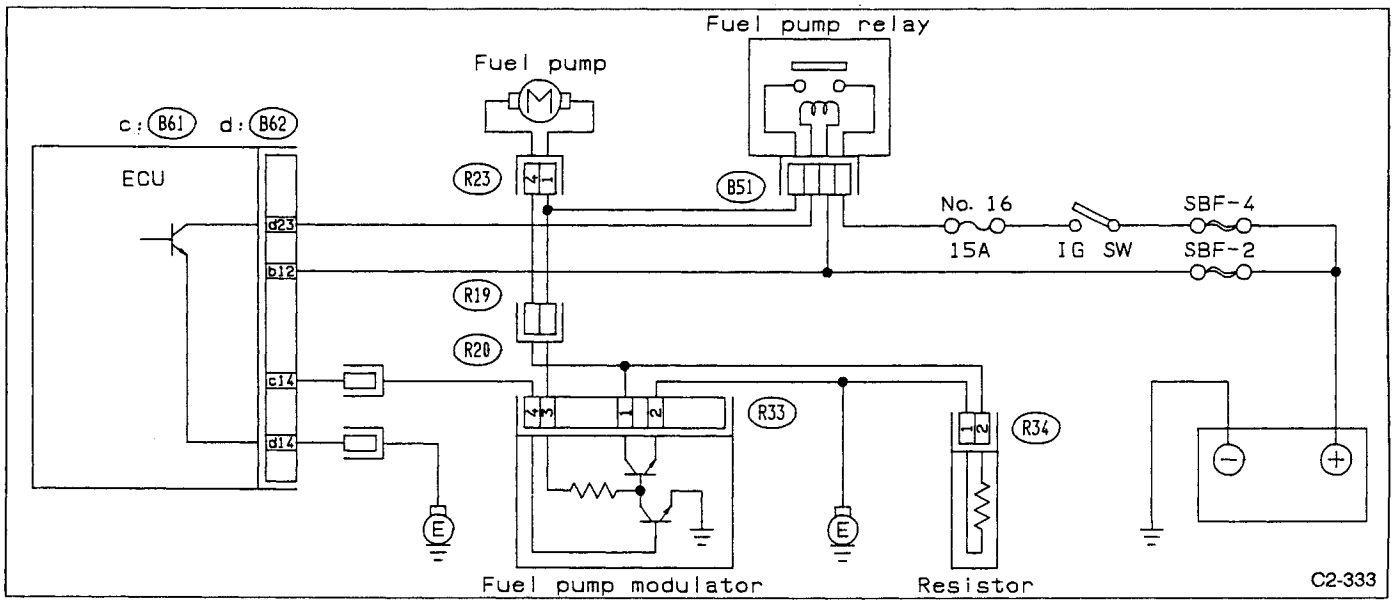
Fuel pump relay
Fuel pump
c : B61
d : B62
ECU
R23
B51
No. 16
15A
IG SW
SBF-4
SBF-2
d23
b12
R19
R20
c14
d14
R33
R34
Fuel pump modulator
Resistor
C2-333

Fig. 49

1. CHECK OPERATION OF FUEL PUMP IN D-CHECK MODE.

1) Connect test mode terminal.
2) Turn ignition switch to "ON".
3) Check fuel pump for proper operation.

2. CHECK FUEL PUMP RELAY.

1) Disconnect fuel pump relay connector, and remove fuel pump relay from bracket.
2) Measure resistance relay coil.

Connector & Terminal/Specified resistance
Fuel pump relay connector terminal:
No. 1 — No. 3/70 Ω

3) Connect battery (12 V) to fuel pump relay coil terminals, and check continuity between switching terminals. **Relay must issue clicks.**

Connector & Terminal/Specified resistance
Fuel pump relay connector terminal:
No. 2 — No. 4/0 Ω
(No. 1: Battery ⊕)
(No. 1: Battery ⊖)

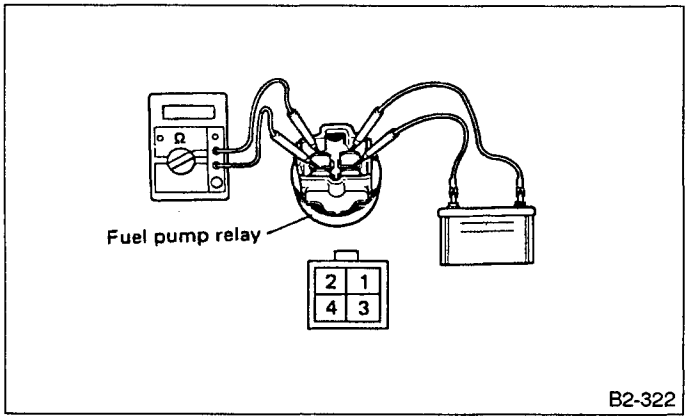

Fig. 50

3. CHECK POWER SUPPLY CIRCUIT OF FUEL PUMP RELAY.

1) Turn ignition switch to "OFF", and connect connector (B51) to fuel pump relay.
2) Turn ignition switch to "ON", and measure voltage between fuel pump relay and body.

Connector & Terminal/Specified voltage
(B51) No. 1 — Body/10 V, min.

4. CHECK INPUT SIGNAL FOR ECU.

1) Turn ignition switch to "ON".
2) Measure voltage between ECU connector (B47) and body.

Connector & Terminal/Specified voltage
(B62) No. 23 — Body/10 V, min.

3) Measure voltage at same terminal while cranking the engine.

Connector & Terminal/Specified voltage
(B62) No. 23 — Body/0 V

5. CHECK HARNESS CONNECTOR BETWEEN ECU AND FUEL PUMP RELAY.

1) Turn ignition switch to "OFF".
2) Disconnect ECU connector (B62) and fuel pump relay connector (B51).
3) Measure resistance of connector terminals between ECU and fuel pump relay.

Connector & Terminal/Specified resistance
(B62) No. 23 — (B51) No. 3/0 Ω

4) Measure resistance between fuel pump connector terminal and body to check short circuit.

Connector & Terminal/Specified resistance
(R23) No. 3 — Body / 1 Ω min.

6. CHECK VOLTAGE FOR FUEL PUMP.

1) Fold down the rear seat back, and turn up the floor mat.
2) Remove access hole lid.
3) Disconnect fuel pump connector (R23).
4) Measure voltage between connector (R23) and body while cranking the engine.

Connector & Terminal/Specified voltage
(R23) No. 1 — Body/10 V, min.

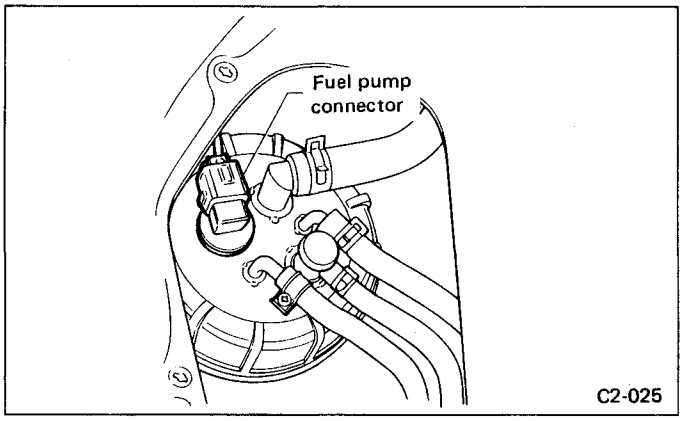

Fig. 51

7. CHECK FUEL PUMP.

1) Connect battery (12 V) to proper fuel pump connector terminals to check fuel pump operation.

Terminal
No. 1 → Battery ⊕
No. 4 → Battery ⊖

E: FUEL INJECTOR CIRCUIT

1	Check operation of each fuel injector.	OK	Check fuel pressure ratio.
	↓ Not OK		
2	Check voltage of power supply for fuel injector.	Not OK	Repair or replace harness connector.
	↓ OK		
3	Check fuel injector.	Not OK	Replace fuel injector.
	↓ OK		
4	Check signal on ECU.	Not OK	Repair or replace harness connector between ECU and fuel injector.
	↓ OK		
5	Check ground circuit of ECU.	Not OK	Repair or replace harness connector.
	↓ OK		
	Check contact of ECU connector terminal.	Not OK	Repair ECU connector and terminal.
	↓ OK		
	Replace ECU.		

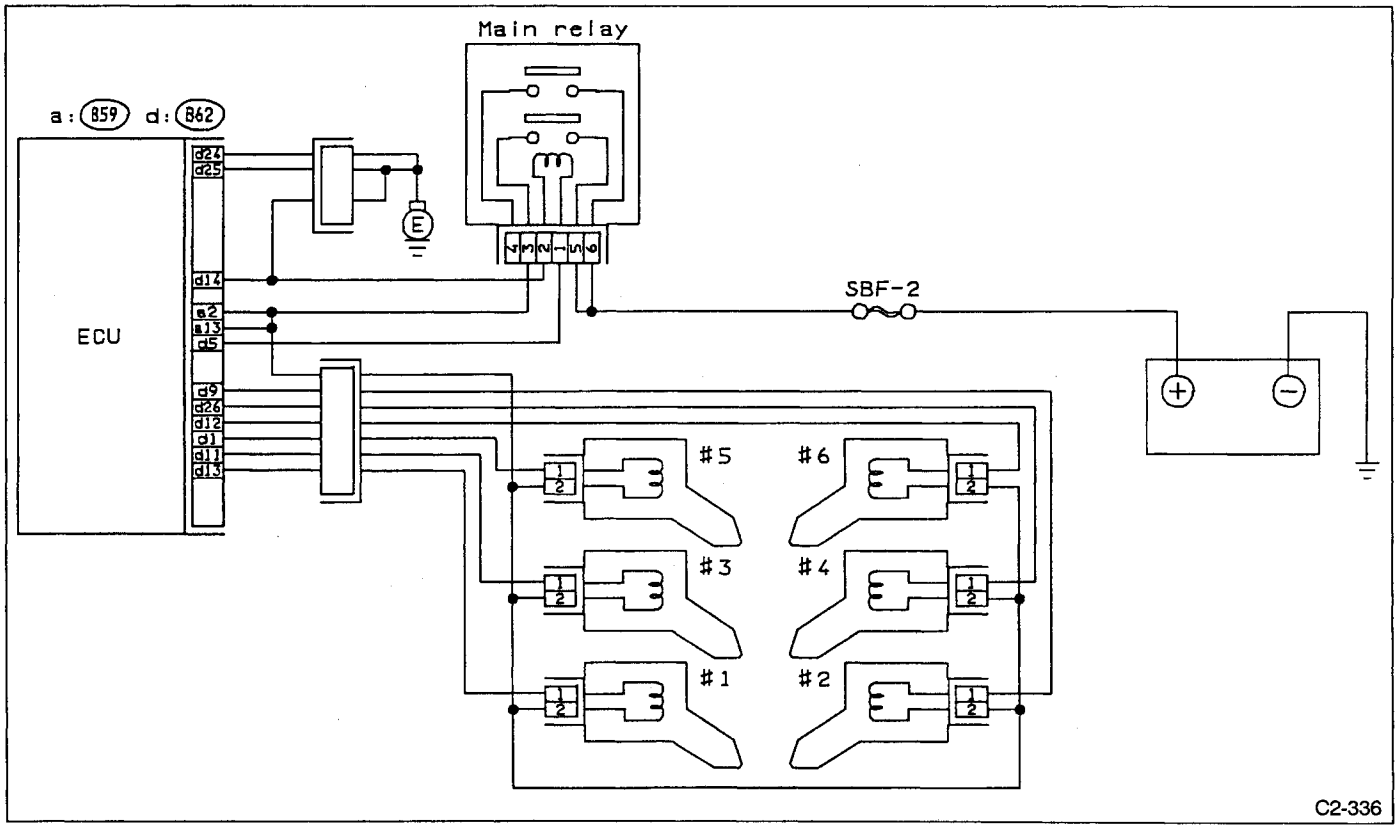

Fig. 52

1. CHECK OPERATION OF EACH FUEL INJECTOR.

While cranking the engine, check that each fuel injector emits 'operating' sound.

Use a sound scope or attach a screwdriver to injector for this check.

2. CHECK VOLTAGE OF POWER SUPPLY FOR FUEL INJECTOR.

1) Turn ignition switch to "OFF".
2) Disconnect connector from each fuel injector.
3) Measure voltage between each injector connector terminal and body.

Connector & Terminal/Specified voltage
#1: (E5) No. 2 — Body/10 V, min.
#2: (E8) No. 2 — Body/10 V, min.
#3: (E6) No. 2 — Body/10 V, min.
#4: (E9) No. 2 — Body/10 V, min.
#5: (E7) No. 2 — Body/10 V, min.
#6: (E10) No. 2 — Body/10 V, min.

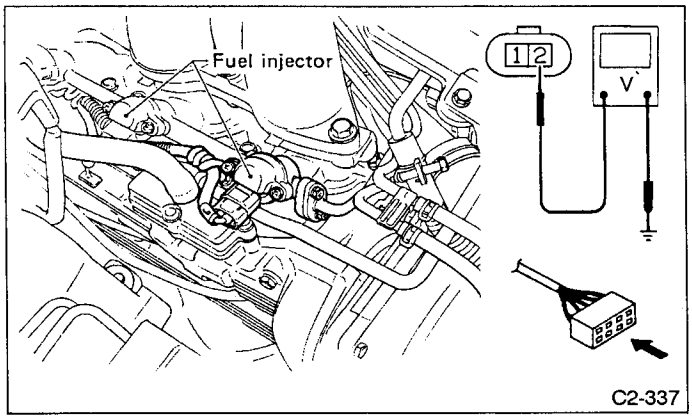

Fig. 53

3. CHECK FUEL INJECTOR.

Measure resistance between connector terminals of each fuel injector.

Specified resistance
11 — 12 Ω

4. CHECK SIGNAL ON ECU.

1) Connect connectors onto each fuel injector.
2) Turn ignition switch to "ON".
3) Measure voltage between ECU connector terminals and body.

Connector & Terminal/Specified voltage
#1: (E62) No. 13 — Body/5 V, min.
#2: (E62) No. 12 — Body/5 V, min.
#3: (E62) No. 11 — Body/5 V, min.
#4: (E62) No. 26 — Body/5 V, min.
#5: (E59) No. 1 — Body/5 V, min.
#6: (E59) No. 12 — Body/5 V, min.

5. CHECK GROUND CIRCUIT OF ECU.

1) Disconnect ECU connector.
2) Measure resistance between ECU connector terminal and body.

Connector & Terminal/Specified resistance
(B59) No. 24 — Body/0 Ω
(B59) No. 25 — Body/0 Ω

9. Troubleshooting Chart with Trouble Code

A: TROUBLE CODE (11) — CRANK ANGLE SENSOR 1 —

DIAGNOSIS:
No signal entered into ECU from crank angle sensor 1 for more than 3 seconds, after ignition switch is turned ON.

TROUBLE SYMPTOM:
- Engine stall restarting impossible.
- Failure of engine start.

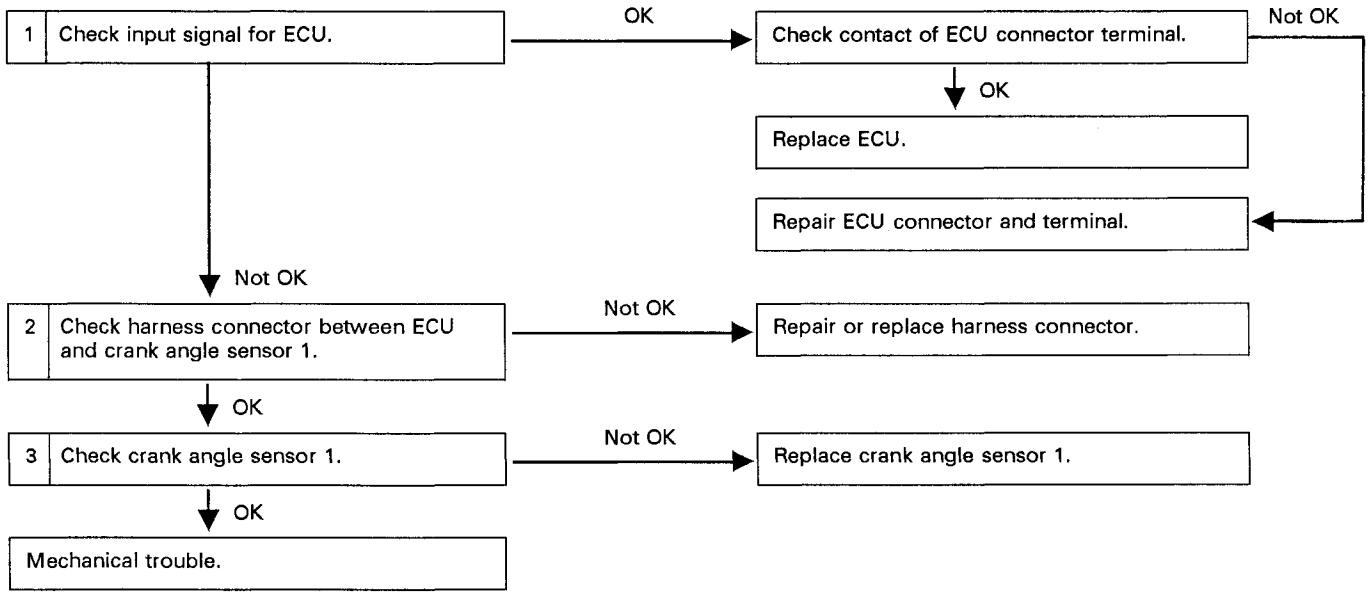

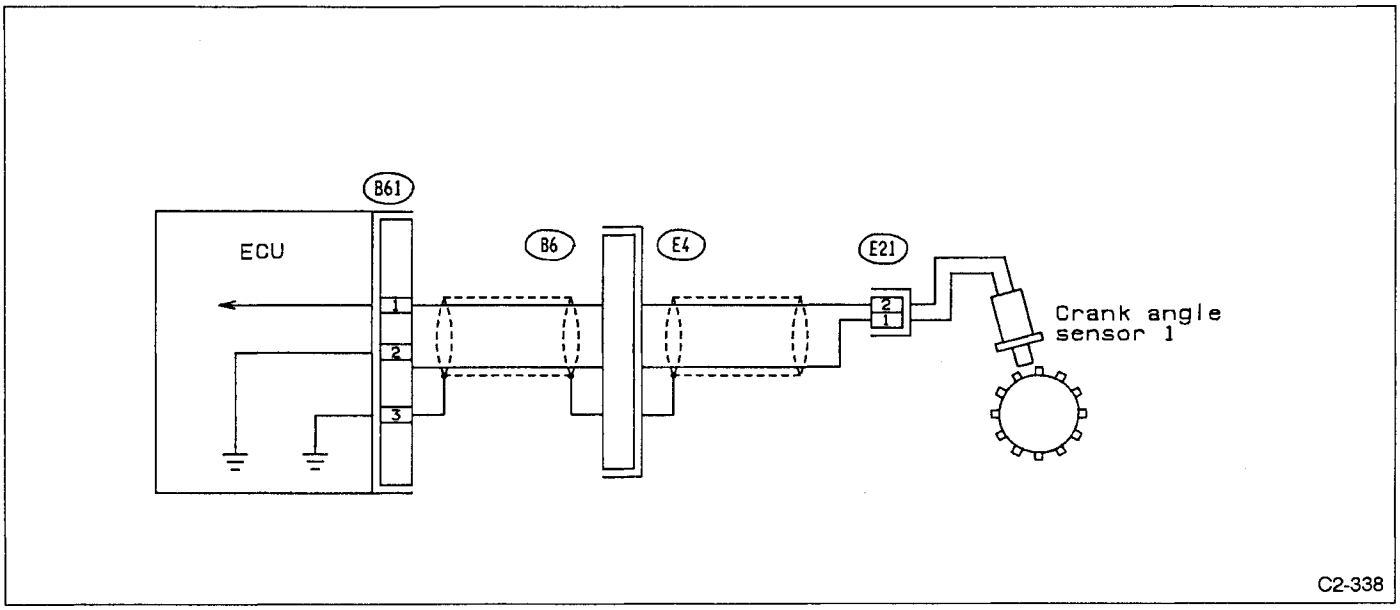

Fig. 54

1. CHECK INPUT SIGNAL FOR ECU.

1) Turn ignition switch to "OFF".
2) Disconnect ECU connectors.
3) Check input signal for ECU from crank angle sensor 1.

- **Using oscilloscope**

(1) Set the positive (+) probe at (B61) terminal No. 1, and set earth lead at (B61) terminal No. 2.
(2) Cranking the engine, and check wave profile.

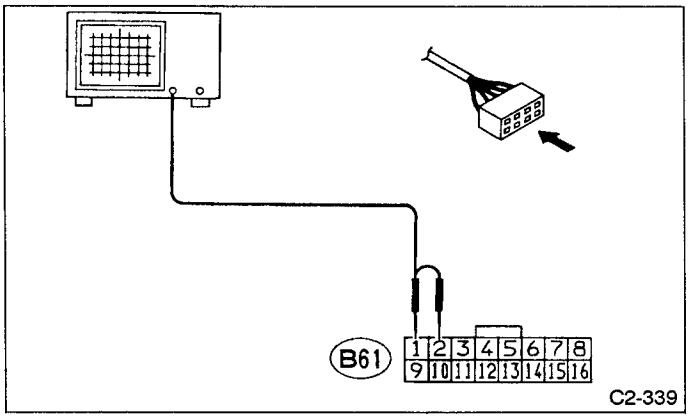

Fig. 55

- **Using voltage meter**

Check if voltage varies synchronously with engine revolution when cranking, while monitoring voltage between ECU connector terminal.

Connector & Terminal/Specified voltage
(B61) No. 1 — No. 2/AC 0.1 V, min.

2. CHECK HARNESS CONNECTOR BETWEEN ECU AND CRANK ANGLE SENSOR 1.

1) Turn ignition switch to "OFF".
2) Remove alternator.
3) Disconnect connector from ECU and crank angle sensor 1.
4) Measure resistance of harness connector between ECU and crank angle sensor 1.

Connector & Terminal/Specified resistance
(B61) No. 1 — (E21) No. 2/0 Ω
(B61) No. 2 — (E21) No. 1/0 Ω

5) Measure resistance between ECU connector and body to check short circuit.

Connector & Terminal/Specified resistance
(B61) No. 1 — Body/1 MΩ min.
(B61) No. 2 — Body/1 MΩ min.
(B61) No. 3 — Body/1 MΩ min.

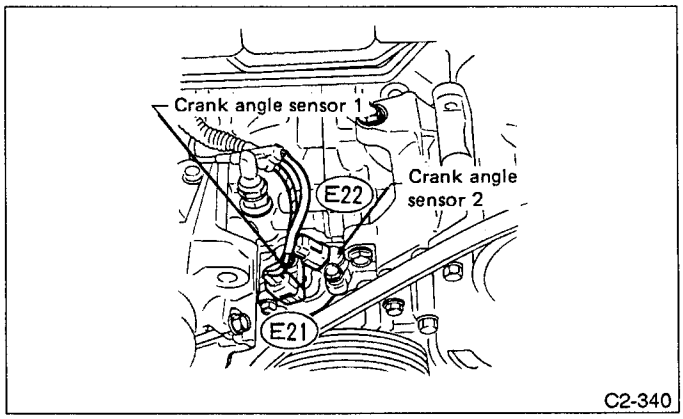

Fig. 56

3. CHECK CRANK ANGLE SENSOR 1.

1) Remove crank angle sensor 1.
2) Set the positive (+) probe at sensor connector terminal No. 1, and set earth lead at terminal No. 2.
3) Check a wave profile appears crossing a magnet near the pick-up coil of crank angle sensor 1.

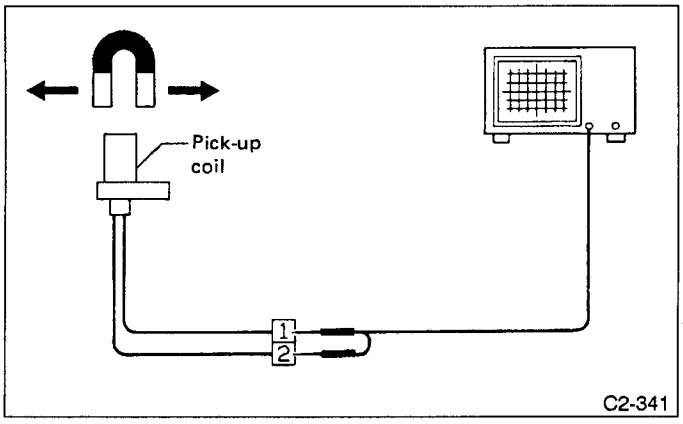

Fig. 57

B: TROUBLE CODE (12) — STARTER SWITCH —

DIAGNOSIS:
Abnormal signal from starter switch

TROUBLE SYMPTOM:
- Failure of engine start

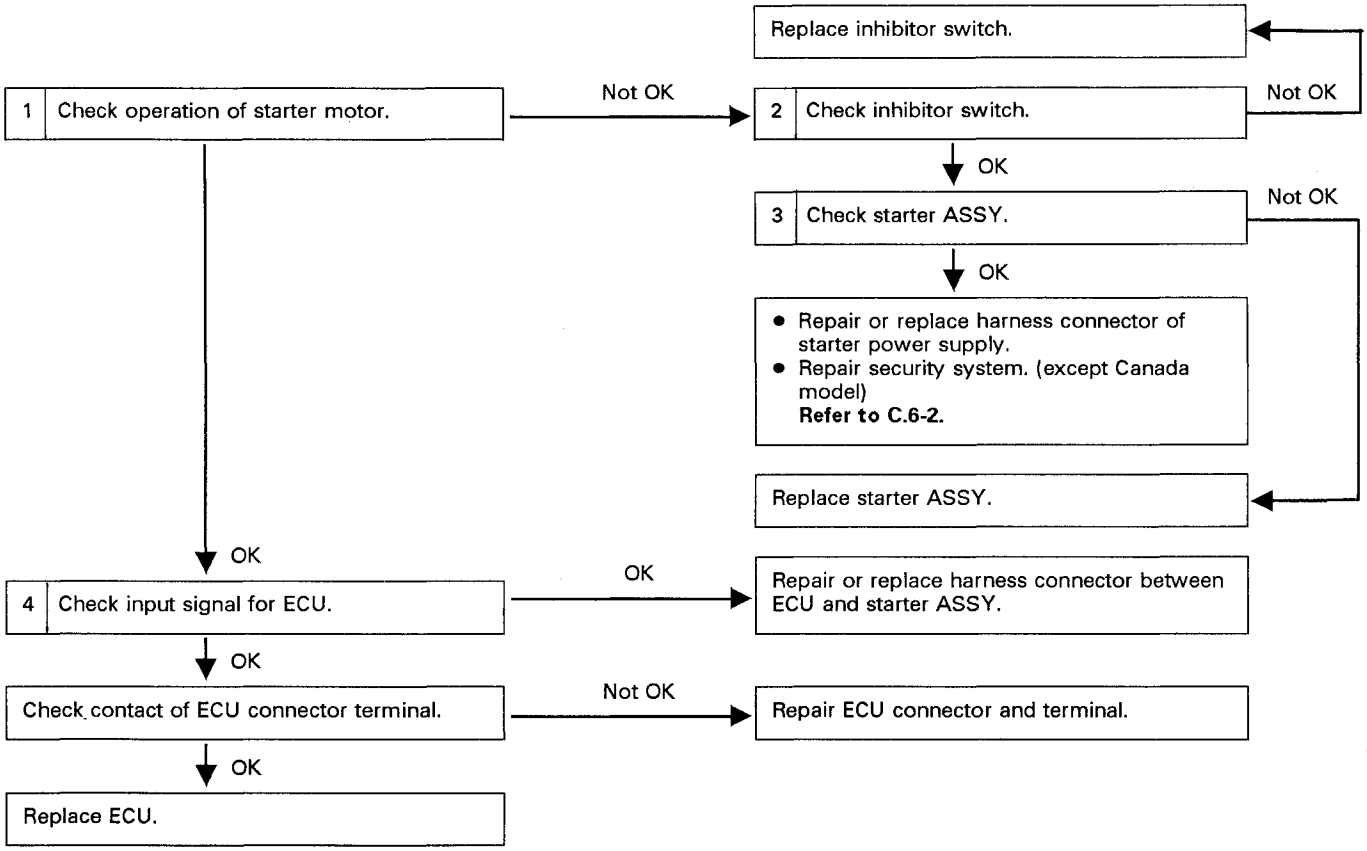

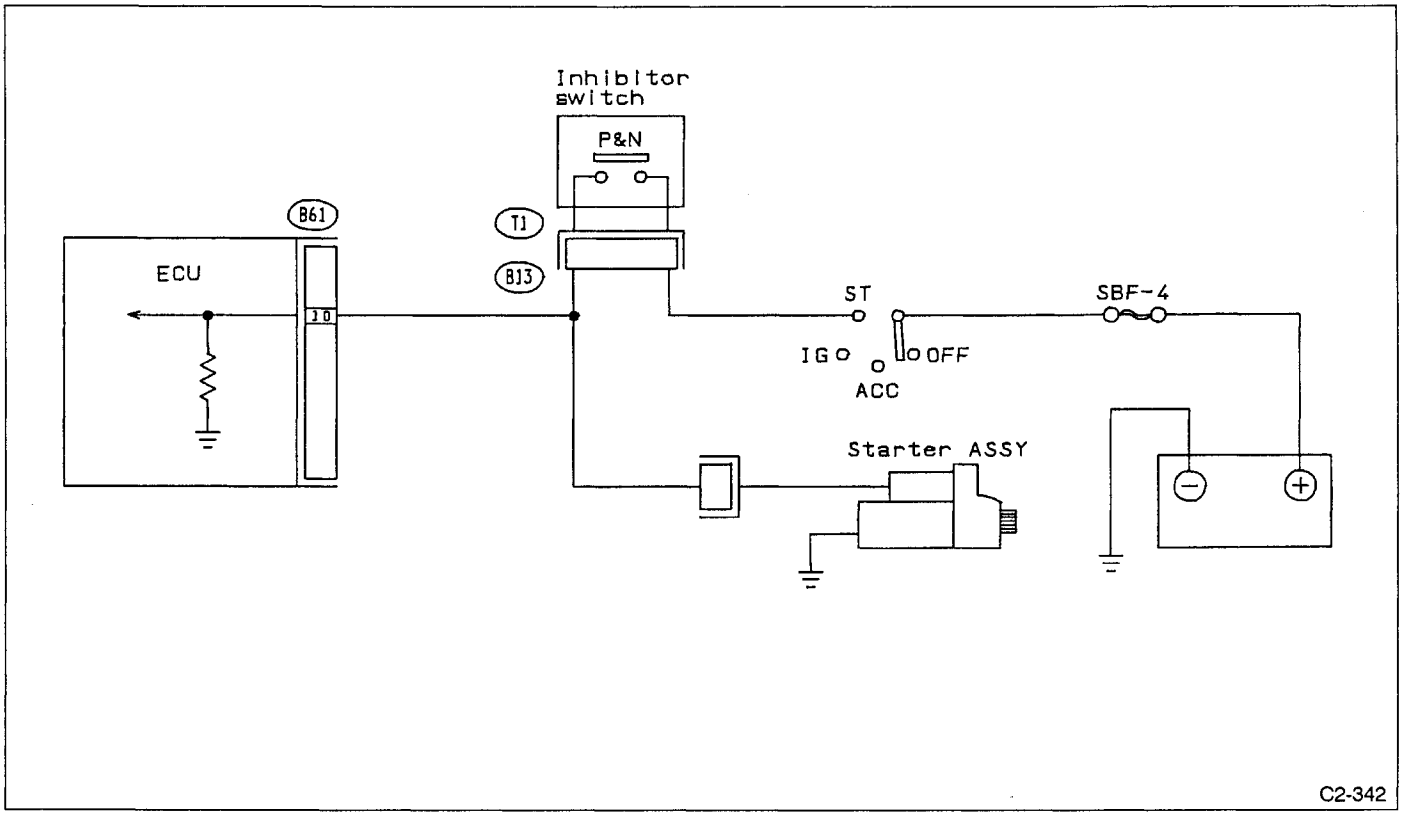
Inhibitor switch
P&N
B61
T1
B13
ECU
10
ST
SBF-4
IG
OFF
ACC
Starter ASSY
C2-342

Fig. 58

1. CHECK OPERATION OF STARTER MOTOR.
Turn ignition switch to "ST" to ensure that starter motor functions.

2. CHECK INHIBITOR SWITCH.
1) Turn ignition switch to "OFF".
2) Disconnect transmission connector (B13).
3) Measure resistance between transmission connector terminals.

Connector & Terminal/Specified resistance
(T1) No. 11 — No. 12/0 Ω (P or N range)
(T1) No. 11 — No. 12/1kΩ min. (other range)

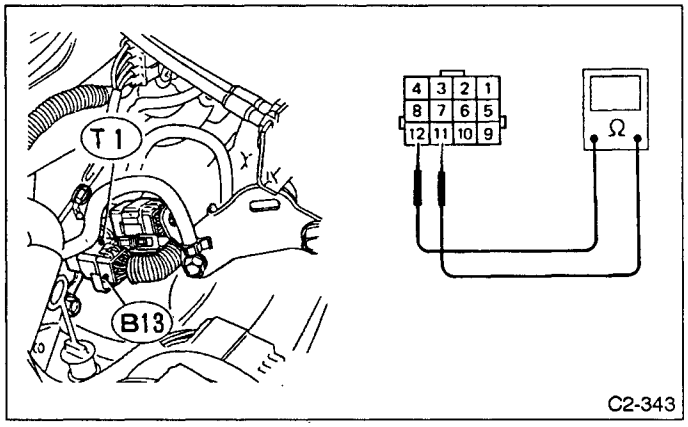

Fig. 59

3. CHECK STARTER ASSY.
1) Remove starter ASSY.
   (1) Turn ignition switch to "OFF".
   (2) Remove battery ground terminal.
   (3) Lift up the vehicle, and remove nut which installs lower side of starter.
   (4) Lower the vehicle, and disconnect power supply terminal and magnet switch terminal from starter.
   (5) Remove bolt which installs upper side of starter.
2) Check starter motor performance.

Refer to C.6-1 [W1A1] and [W1A2].

4. CHECK INPUT SIGNAL FOR ECU.
1) Turn ignition switch to "ON".
2) Measure voltage between ECU connector terminal and body while cranking the engine.

Connector & Terminal/Specified voltage
(61) No. 10 — Body/9 — 12 V

C: TROUBLE CODE (13) — CAM ANGLE SENSOR —

DIAGNOSIS:
No signal entered into ECU from cam angle sensor while the signal of crank angle sensor 1 inputs more than 140 times.

TROUBLE SYMPTOM:
- Failure of engine start.
- Engine stall.

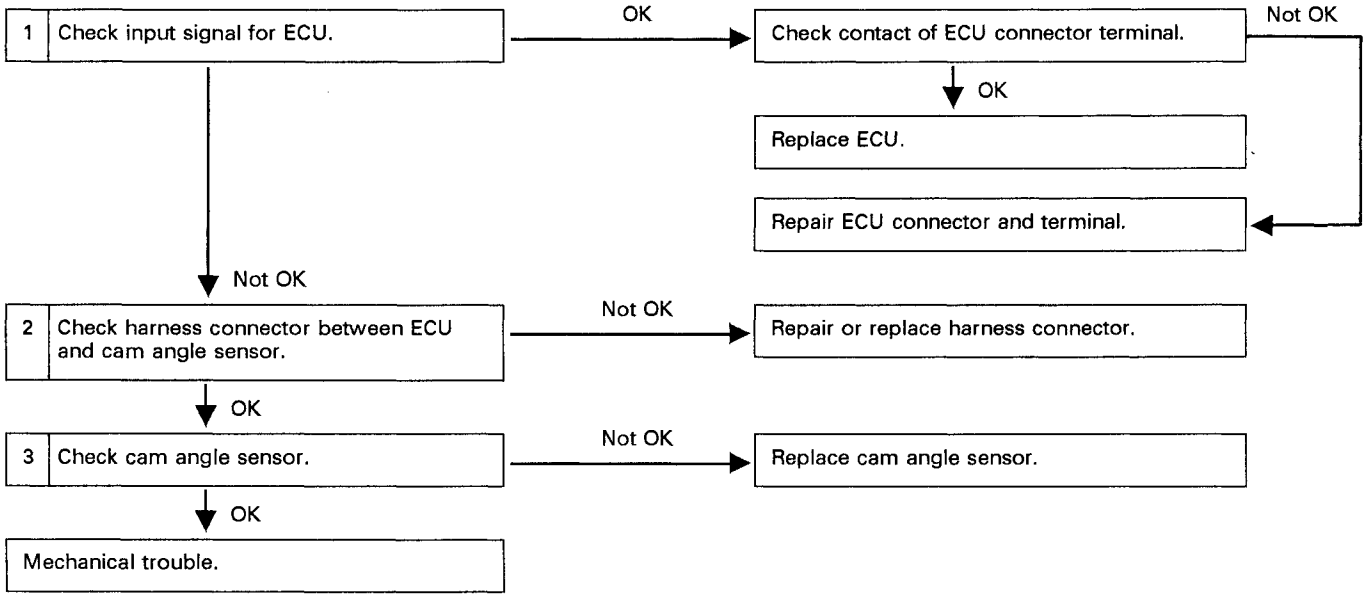

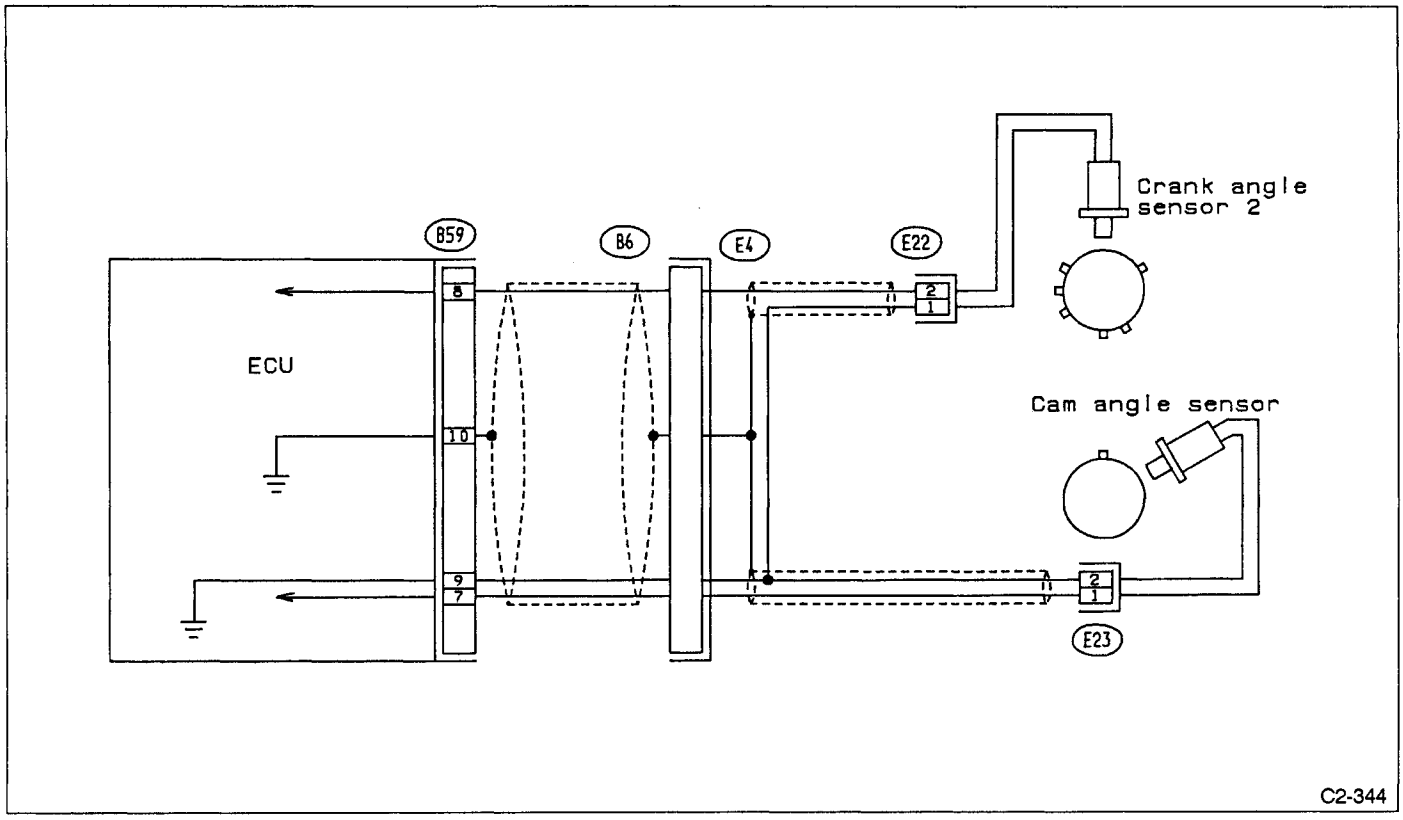

Fig. 60

1. CHECK INPUT SIGNAL FOR ECU.

1) Turn ignition switch to "OFF".
2) Disconnect ECU connectors.
3) Check input signal for ECU from cam angle sensor.
   • **Using oscilloscope**
   (1) Set the positive (+) probe at (B59) terminal No. 7, and set earth lead at (B62) terminal No. 9.
   (2) Cranking the engine, and check wave profile.

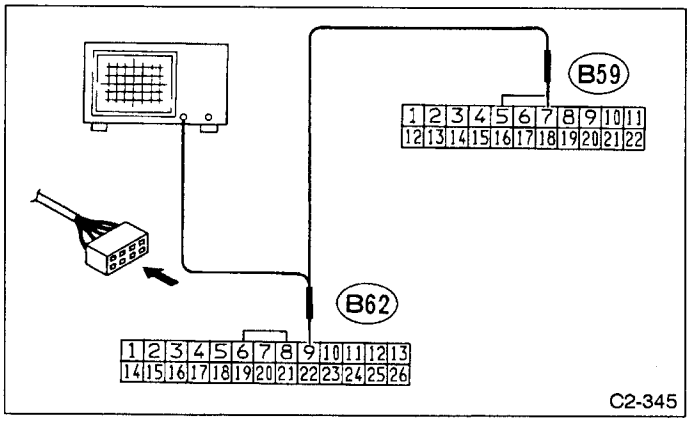

Fig. 61

When following waveform pattern is shown on screen, cam angle sensor ground circuit is open.

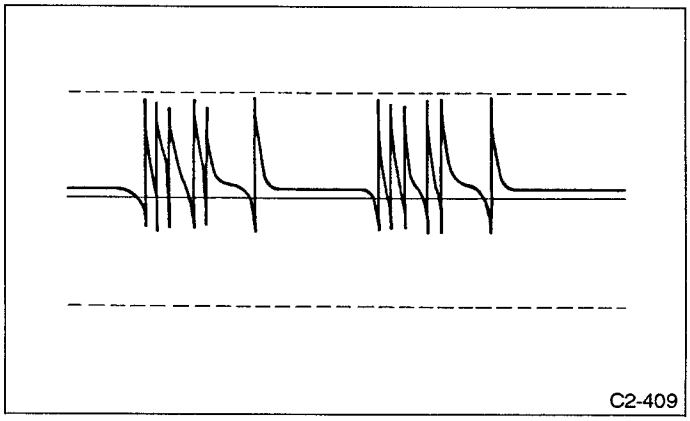

Fig. 62

• **Using voltage meter**
Check if voltage varies synchronously with engine revolution when cranking, while monitoring voltage between ECU connector terminal.

Connector & Terminal/Specified voltage
(B48) No. 7 — No. 9/AC 0.1 V, min.

2. CHECK HARNESS CONNECTOR BETWEEN ECU AND CAM ANGLE SENSOR.

1) Turn ignition switch to "OFF".
2) Disconnect connector from ECU and cam angle sensor.
3) Measure resistance of harness connector between ECU and cam angle sensor.

Connector & Terminal/Specified resistance
(B59) No. 7 — (E23) No. 1/0 Ω
(B59) No. 9 — (E23) No. 2/0 Ω

5) Measure resistance between ECU connector and body to check short circuit.

Connector & Terminal/Specified resistance
(B59) No. 7 — Body/1 MΩ min.
(B59) No. 9 — Body/1 MΩ min.

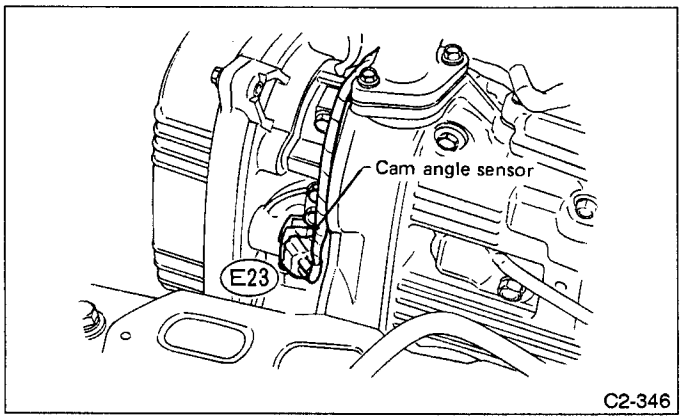

Fig. 63

3. CHECK CAM ANGLE SENSOR.

1) Remove cam angle sensor.
2) Set the positive (+) probe of oscilloscope at sensor connector terminal No. 1, and set earth lead at terminal No. 2.
3) Check a wave profile appears when making crossing a magnet near the pick-up coil of cam angle sensor.

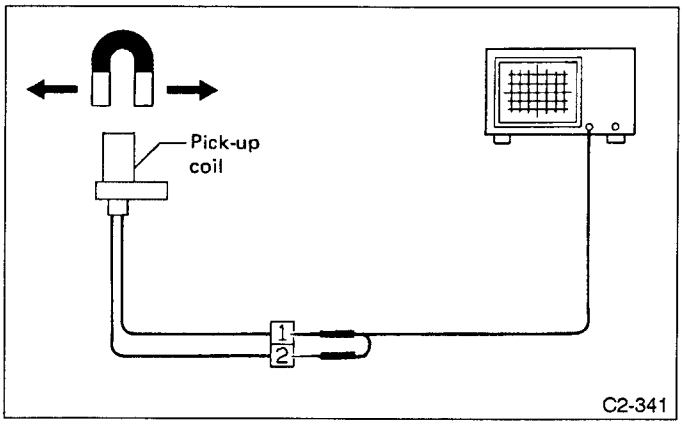

Fig. 64

D: TROUBLE CODE (14, 15, 16, 17, 18, 19) — FUEL INJECTOR —

DIAGNOSIS:
- Fuel injector inoperative.
- Abnormal signal emitted from ECU to fuel injector.

TROUBLE SYMPTOM:
- Engine stall
- Erroneous idling
- Rough driving

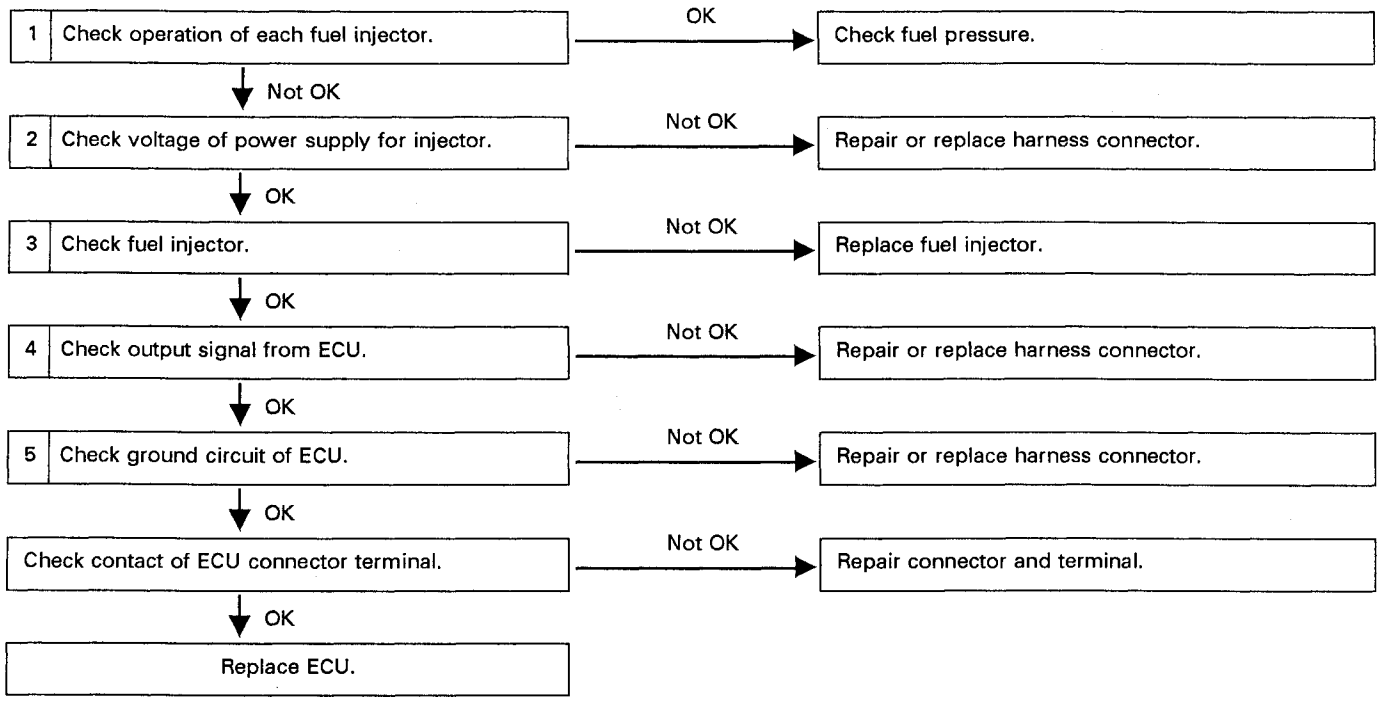

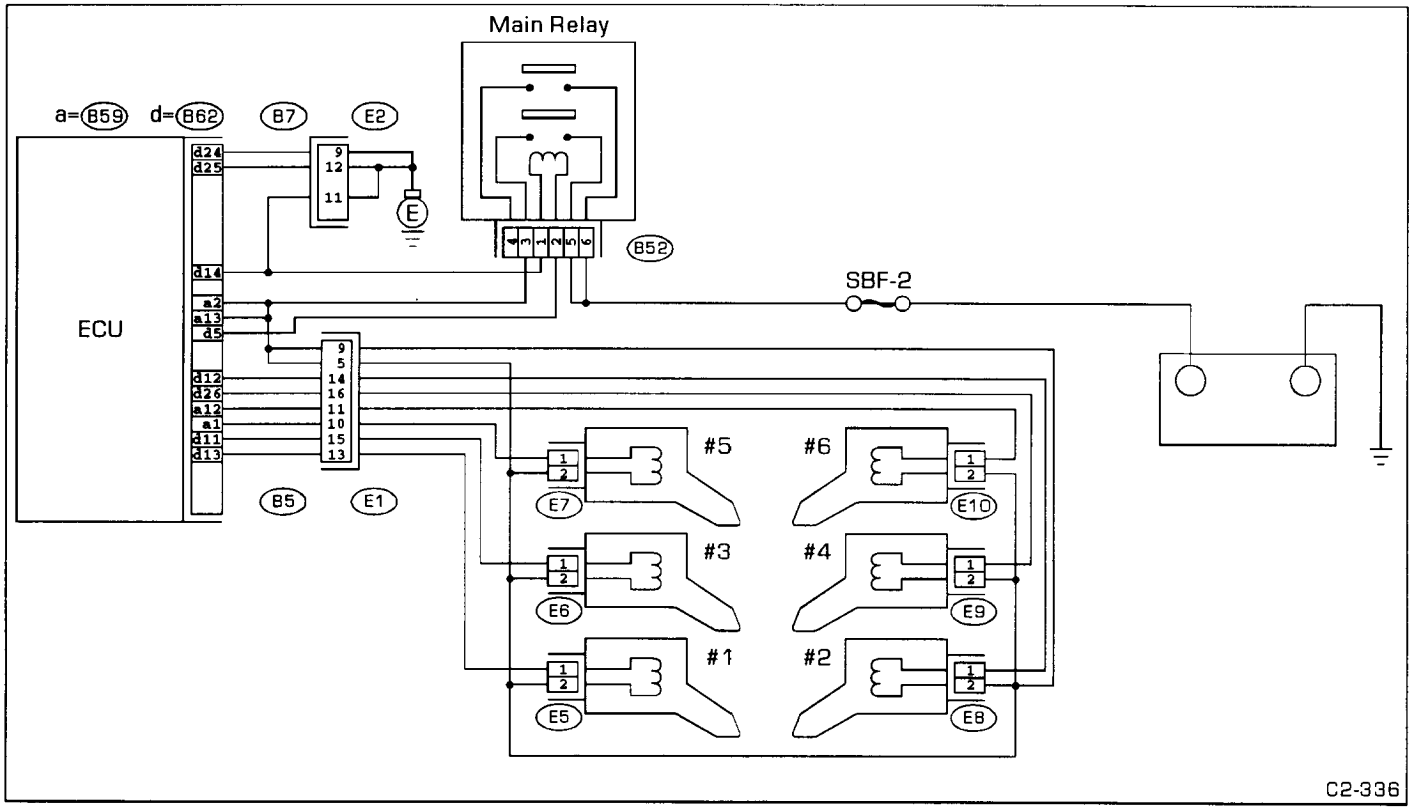
Main Relay
a=B59
d=B62
B7
E2
ECU
d24
d25
d14
a2
a13
d5
d12
d26
a12
a1
d11
d13
9
12
11
E
B52
SBF-2
9
5
14
16
11
10
15
13
B5
E1
#5
#6
#3
#4
#1
#2
E7
E10
E6
E9
E5
E8
C2-336

Fig. 65

1. CHECK OPERATION OF EACH FUEL INJECTOR.

While cranking the engine, check that each fuel injector emits "operating" sound.

Use a sound scope or attach a screwdriver to injector for this check.

2. CHECK VOLTAGE OF POWER SUPPLY FOR FUEL INJECTOR.

1) Turn ignition switch to "OFF".
2) Disconnect connector from each fuel injector.
3) Measure voltage between injector connector power terminal and body.

Connector & Terminal/Specified voltage
#1: (E5) No. 2 — Body/10 V, min.
#2: (E8) No. 2 — Body/10 V, min.
#3: (E6) No. 2 — Body/10 V, min.
#4: (E9) No. 2 — Body/10 V, min.
#5: (E7) No. 2 — Body/10 V, min.
#6: (E10) No. 2 — Body/10 V, min.

3. CHECK FUEL INJECTOR

Measure resistance between connector terminals of each fuel injector.

Connector & Terminal/Specified resistance
#1: (E5) No. 1 — No. 2/11 — 12 Ω
#2: (E8) No. 1 — No. 2/11 — 12 Ω
#3: (E6) No. 1 — No. 2/11 — 12 Ω
#4: (E9) No. 1 — No. 2/11 — 12 Ω
#5: (E7) No. 1 — No. 2/11 — 12 Ω
#6: (E10) No. 1 — No. 2/11 — 12 Ω

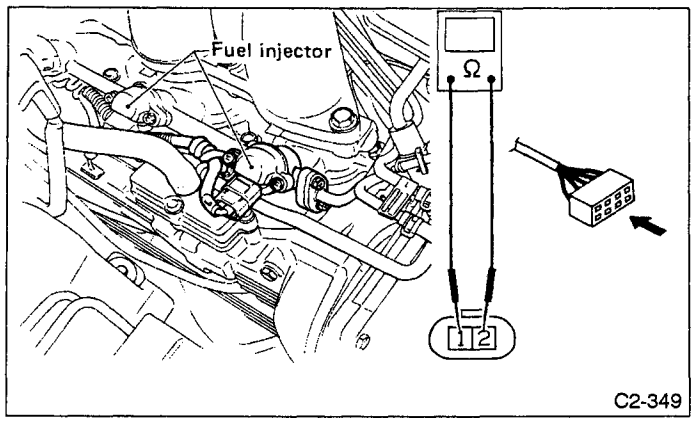

Fig. 66

4. CHECK OUTPUT SIGNAL FROM ECU.

1) Connect fuel injector connector of all.
2) Measure voltage between ECU connector terminals and body.

Connector & Terminal/Specified voltage
#1: (E62) No. 13 — Body/10 V, min.
#2: (E62) No. 12 — Body/10 V, min.
#3: (E62) No. 11 — Body/10 V, min.
#4: (E62) No. 26 — Body/10 V, min.
#5: (E59) No. 1 — Body/10 V, min.
#6: (E59) No. 12 — Body/10 V, min.

5. CHECK GROUND CIRCUIT OF ECU.

1) Disconnect ECU connector.
2) Measure resistance between ECU connector and body.

Connector & Terminal/Specified resistance
(B62) No. 24 — Body/0 Ω
(B62) No. 25 — Body/0 Ω

E: TROUBLE CODE (21) — WATER TEMPERATURE SENSOR —

DIAGNOSIS:
Abnormal signal is from water temperature sensor.

TROUBLE SYMPTOM:
- Failure of engine to start
- Erroneous idling
- Poor driving performance

1	Check water temperature sensor.	Not OK	Replace water temperature sensor.
	OK ↓		
2	Check harness connector between ECU and water temperature sensor.	Not OK	Repair or replace harness connector.
	OK ↓		
	Check contact of ECU connector terminal.	Not OK	Repair ECU connector.
	OK ↓		
	Replace ECU.		

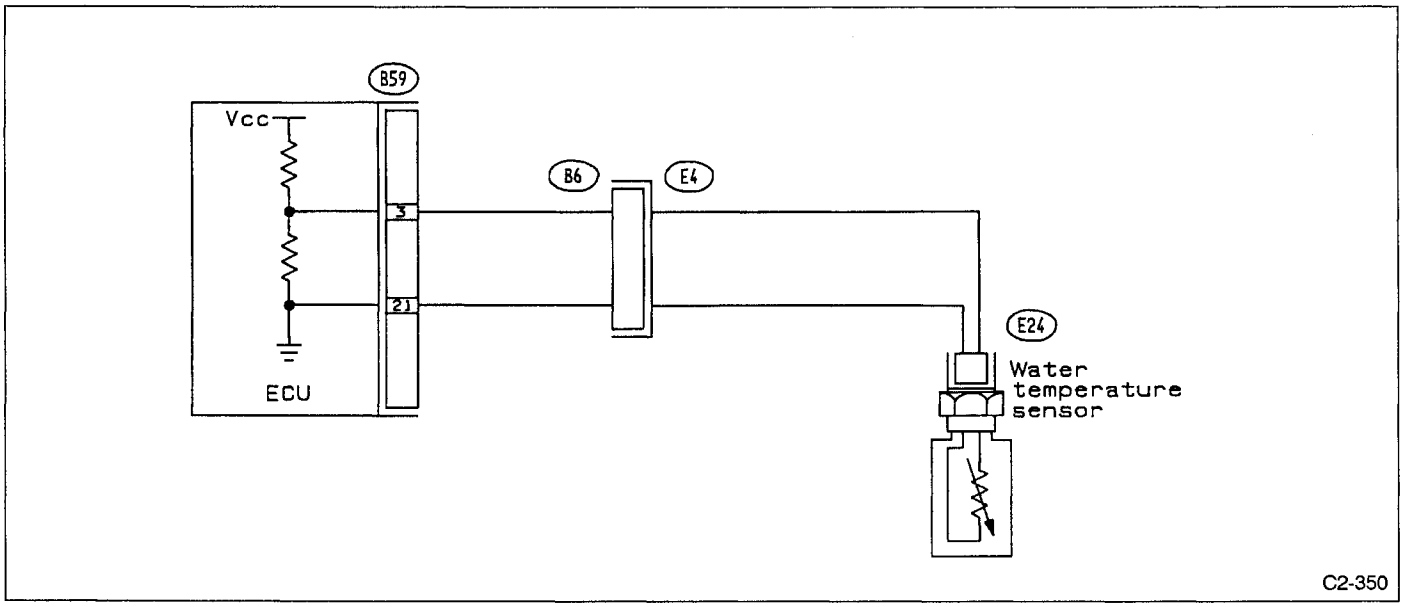

Fig. 67

1. CHECK WATER TEMPERATURE SENSOR.

1) Remove collector cover and air intake boot.
2) Disconnect connector from water temperature sensor.
3) Measure resistance between water temperature sensor connector terminals.

Terminal/Specified resistance
No. 1 — No. 2/20 — 30 kΩ [20°C (68°F)]
No. 1 — No. 2/0.3 — 0.4 kΩ [80°C (176°F)]

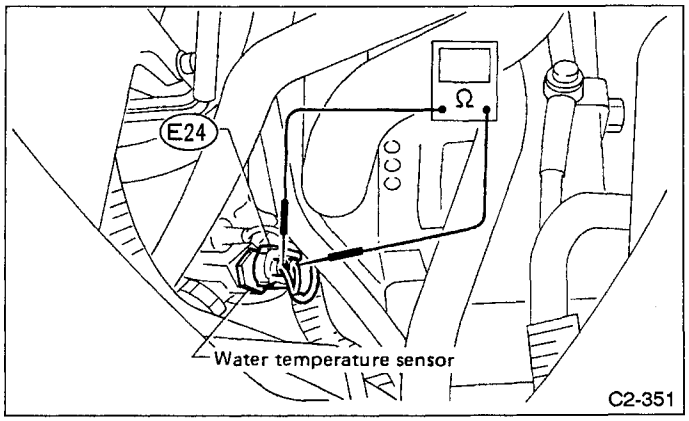

Fig. 68

2. CHECK HARNESS CONNECTOR BETWEEN ECU AND WATER TEMPERATURE SENSOR.

1) Disconnect ECU connectors.
2) Measure resistance between ECU connector and water temperature sensor.

Connector & Terminal/Specified resistance
(B59) No. 3 — (E24) No. 1/0 Ω
(B59) No. 21 — (E24) No. 2/0 Ω

F: TROUBLE CODE (22) — KNOCK SENSOR 1 (RH) —

DIAGNOSIS:
Abnormal signal from knock sensor 1.

TROUBLE SYMPTOM:
- Poor driving performance.

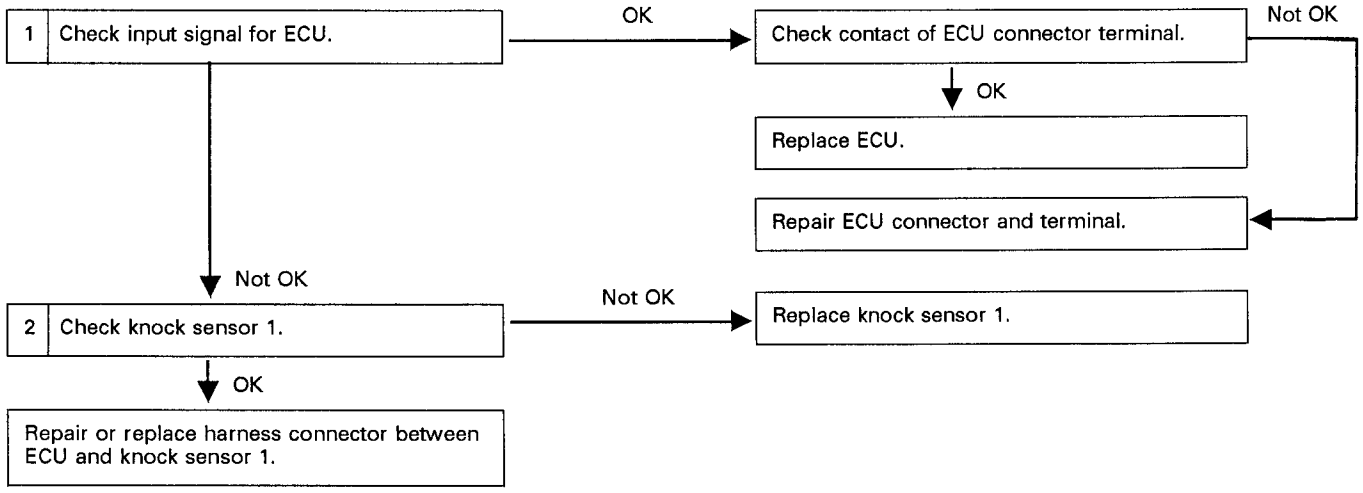

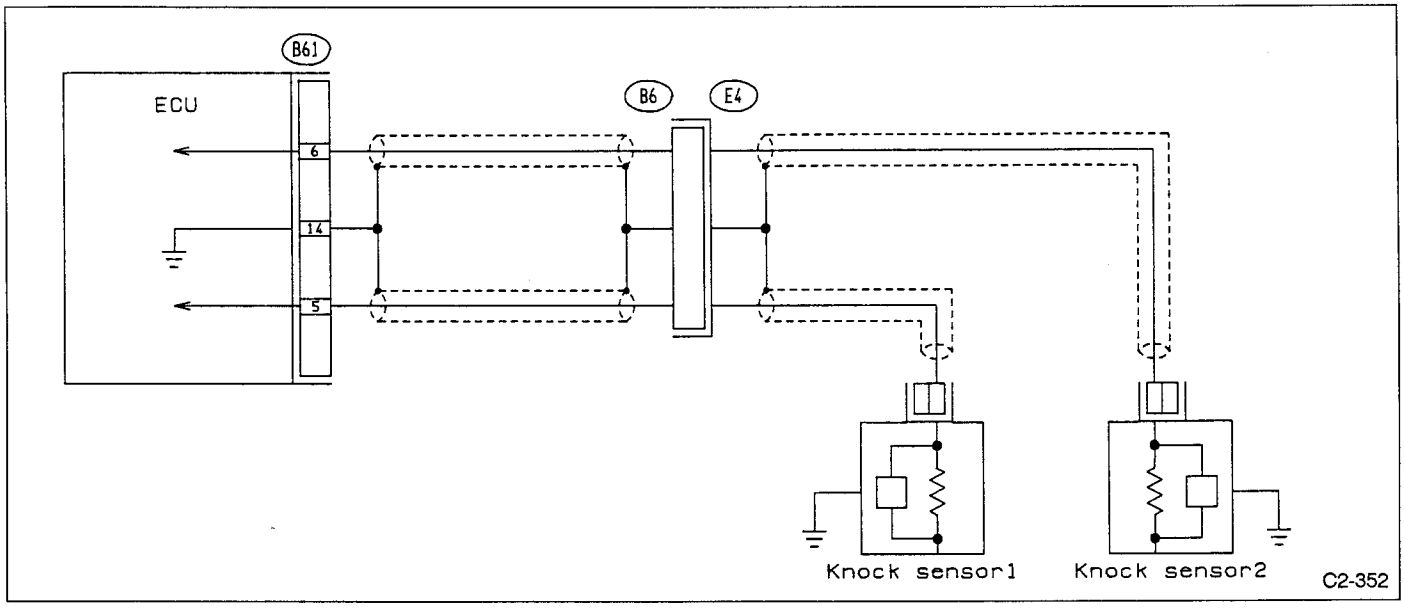

Fig. 69

1. CHECK INPUT SIGNAL FOR ECU.

1) Turn ignition switch to "ON".
2) Measure voltage between ECU connector terminal and body.

Connector & Terminal/Specified voltage
(B56) No. 5 — Body/2 — 3 V

2. CHECK KNOCK SENSOR 1.

1) Remove collector.
2) Disconnect connector from knock sensor 1.
3) Measure resistance between knock sensor 1 connector terminal and body.

Connector & Terminal/Specified resistance
No. 1 — Body/Approx. 560 kΩ

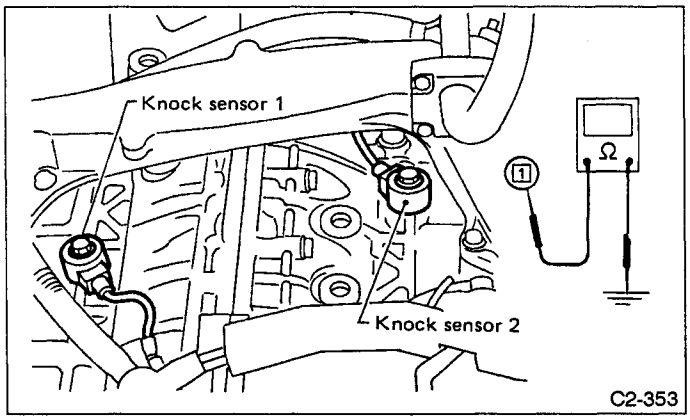

Fig. 70

G: TROUBLE CODE (23) — AIR FLOW SENSOR —

DIAGNOSIS:
Abnormal signal from air flow sensor.

TROUBLE SYMPTOM:
- Engine stall
- Erroneous idling
- Poor driving performance

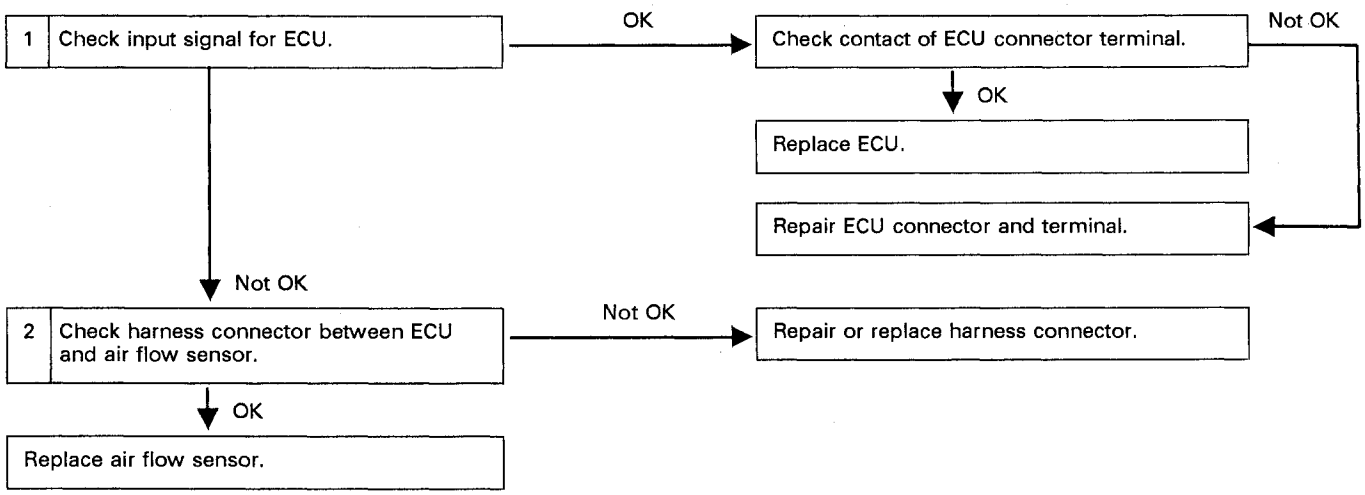

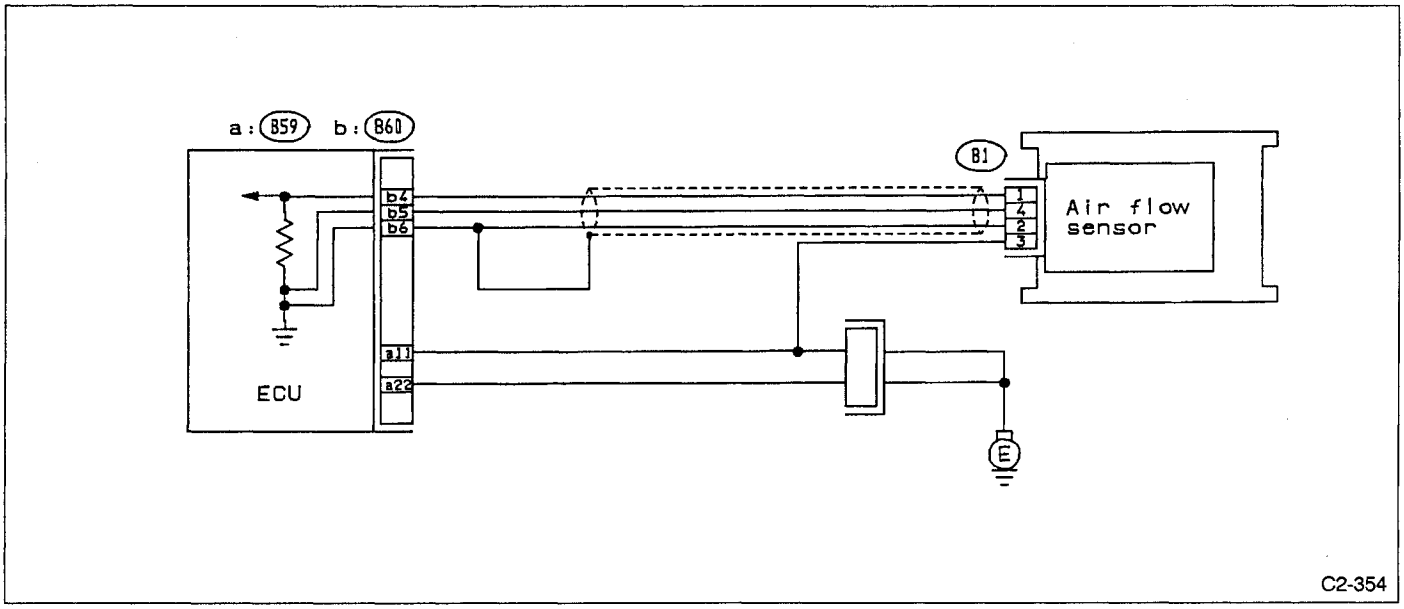

Fig. 71

1. CHECK INPUT SIGNAL FOR ECU.

1) Turn ignition switch to "ON".
2) Measure voltage between ECU connector terminals and body.

Connector & Terminal/Specified voltage
(B60) No. 11 — Body/10 — 13 V
(B60) No. 5 — Body/0 — 0.3 V
(B60) No. 6 — Body/0 — 0 V

3) Measure voltage between ECU connector terminals and body on engine idling.

Connector & Terminal/Specified voltage
(B60) No. 11 — Body/13 — 14 V
(B60) No. 5 — Body/0.8 — 1.2 V
(B60) No. 6 — Body/0 — 0 V

2. CHECK HARNESS CONNECTOR BETWEEN ECU AND AIR FLOW SENSOR.

1) Turn ignition switch to "OFF".
2) Disconnect connector from ECU and air flow sensor.
3) Measure resistance of harness connector between ECU and air flow sensor.

Connector & Terminal/Specified resistance
(B60) No. 11 — (B1) No. 5/0 Ω
(B60) No. 4 — (B1) No. 3/0 Ω
(B60) No. 5 — (B1) No. 2/0 Ω
(B60) No. 6 — (B1) No. 1/0 Ω

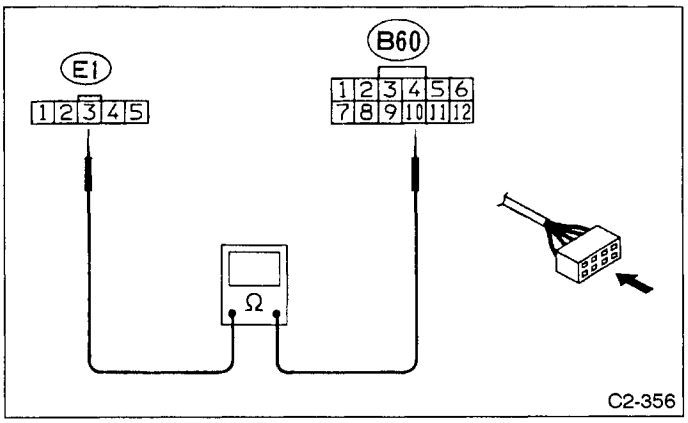

Fig. 72

H: TROUBLE CODE (24) — BY-PASS AIR CONTROL SOLENOID VALVE —

DIAGNOSIS:
- Air by-pass control solenoid valve inoperative.
- Abnormal signal emitted from ECU to by-pass air control solenoid valve.

TROUBLE SYMPTOM:
- Engine stall
- Erroneous idling
- Engine breathing

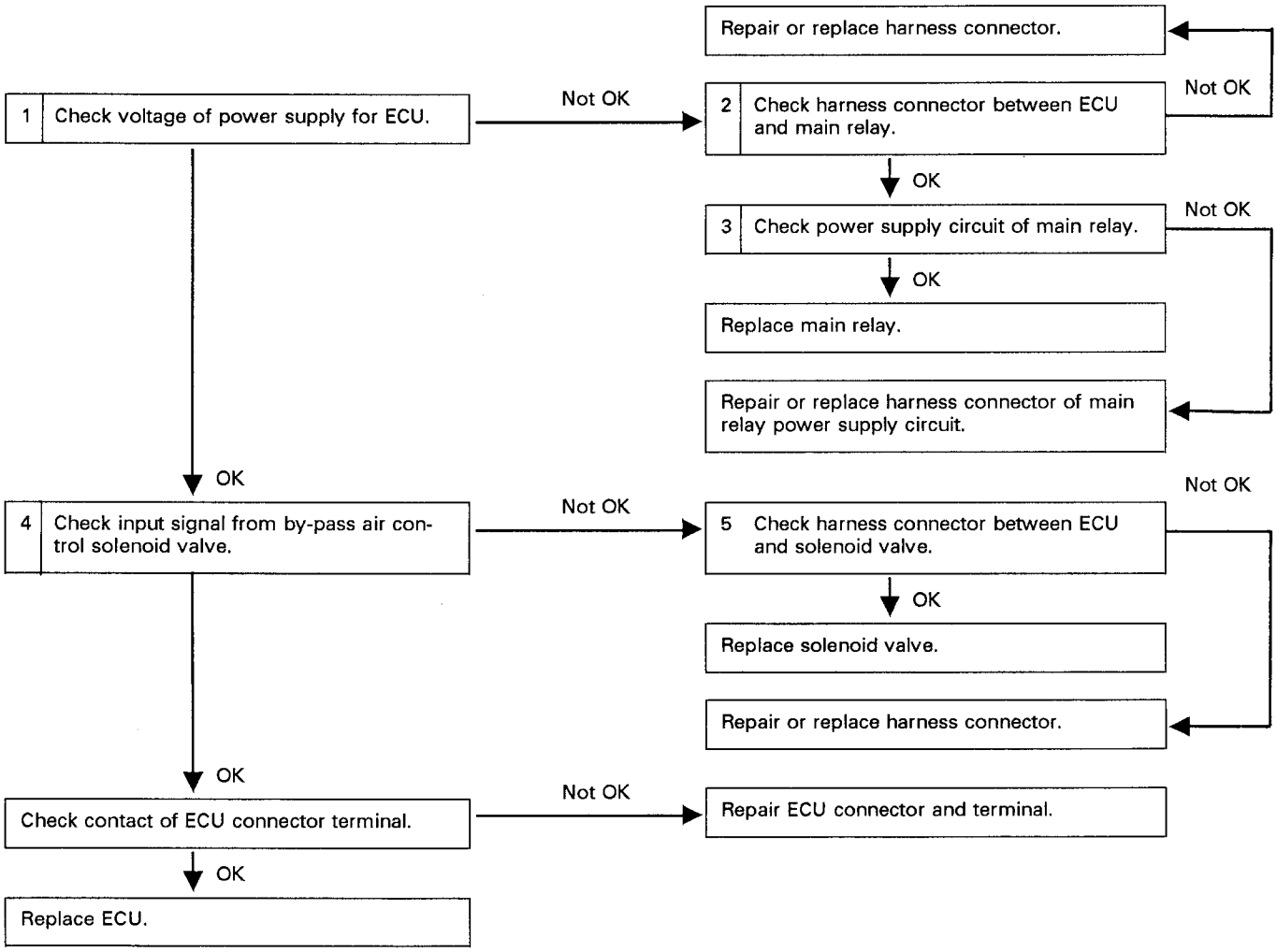

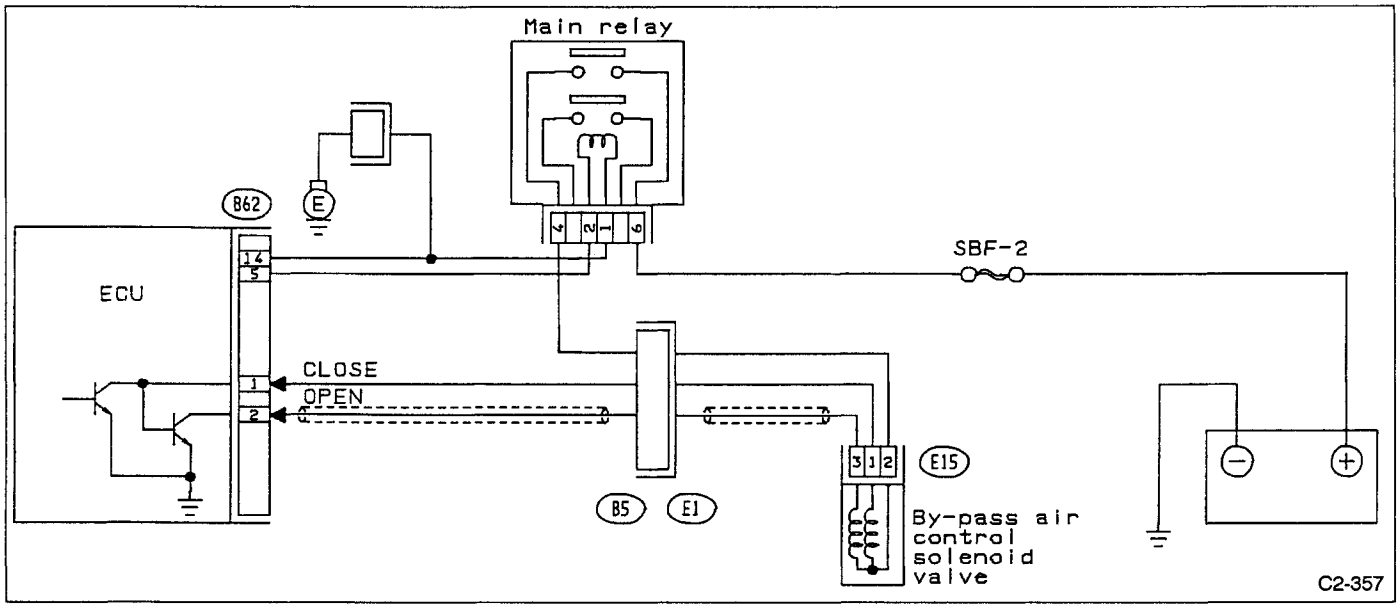
Main relay
B62
E
ECU
14
5
1
2
CLOSE
OPEN
SBF-2
4
2
1
6
3
1
2
E15
B5
E1
By-pass air control solenoid valve
C2-357

Fig. 73

1. CHECK POWER SUPPLY VOLTAGE FOR ECU.

1) Turn ignition switch to "ON".
2) Measure voltage between ECU connector and body.

Connector & Terminal/Specified voltage
(B62) No. 14 — Body/10 V, min.

2. CHECK HARNESS CONNECTOR BETWEEN ECU AND MAIN RELAY.

1) Turn ignition switch to "OFF".
2) Disconnect connector from ECU and main relay.
3) Measure resistance of harness connector between ECU and main relay.

Connector & Terminal/Specified resistance
(B62) No. 14 — (B52) No. 4/0 Ω

3. CHECK POWER SUPPLY CIRCUIT OF MAIN RELAY.

1) Turn ignition switch to "ON".
2) Measure voltage between main relay connector and body.

Connector & Terminal/Specified voltage
(B52) No. 1 — Body/10 V, min.
(B52) No. 2 — Body/10 V, min.

4. CHECK INPUT SIGNAL FROM BY-PASS AIR CONTROL SOLENOID VALVE.

1) Turn ignition switch to "ON".
2) Measure voltage between ECU connector and body.

Connector & Terminal/Specified voltage
(B62) No. 2 — Body/7 V, min.
(B62) No. 1 — Body/6 V, min.

5. CHECK HARNESS CONNECTOR BETWEEN ECU AND SOLENOID VALVE.

1) Turn ignition switch to "OFF".
2) Disconnect ECU connectors.
3) Separate throttle body from collector, and disconnect connector from by-pass air control solenoid valve.
4) Measure resistance of harness connector between ECU and solenoid valve.

Connector & Terminal/Specified resistance
(B62) No. 2 — (E15) No. 3/0 Ω
(B62) No. 1 — (E15) No. 1/0 Ω

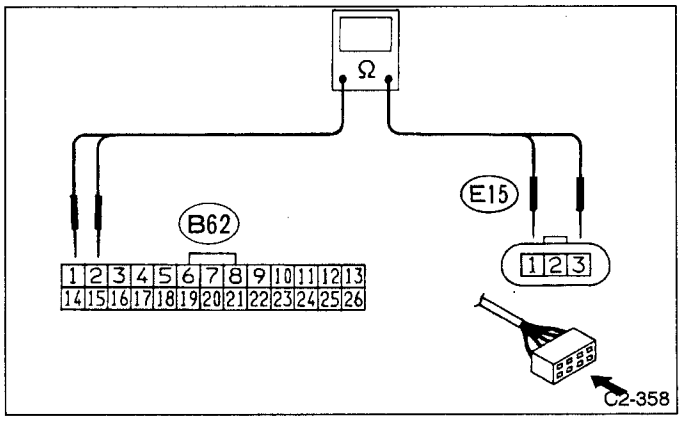

Fig. 74

I: TROUBLE CODE (28) — KNOCK SENSOR 2 (LH) —

DIAGNOSIS:
Abnormal signal is entered from knock sensor 2.

TROUBLE SYMPTOM:
- Poor driving performance.

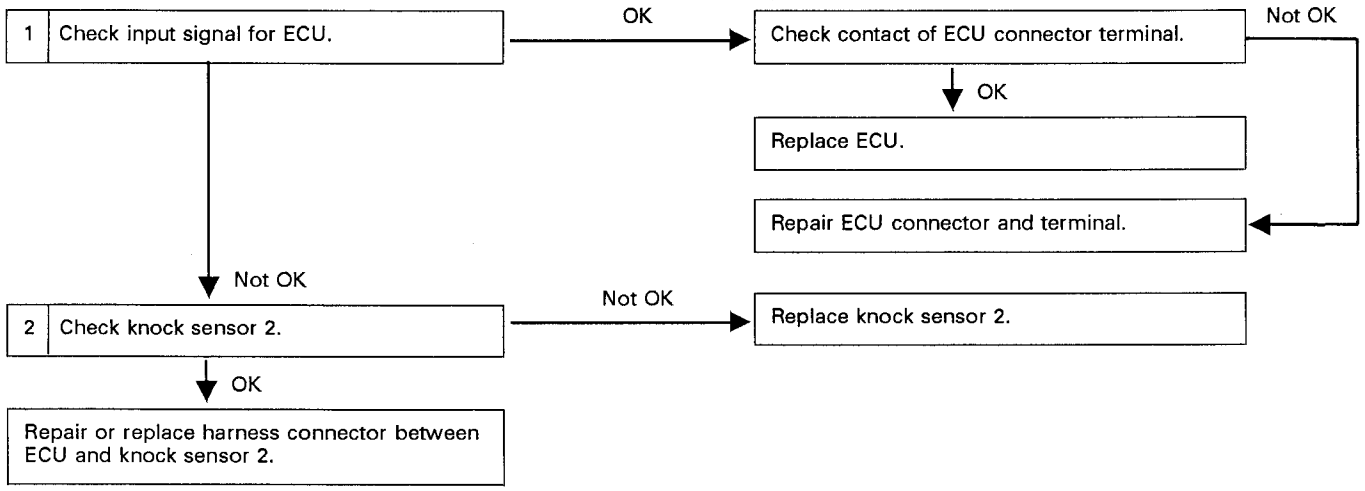

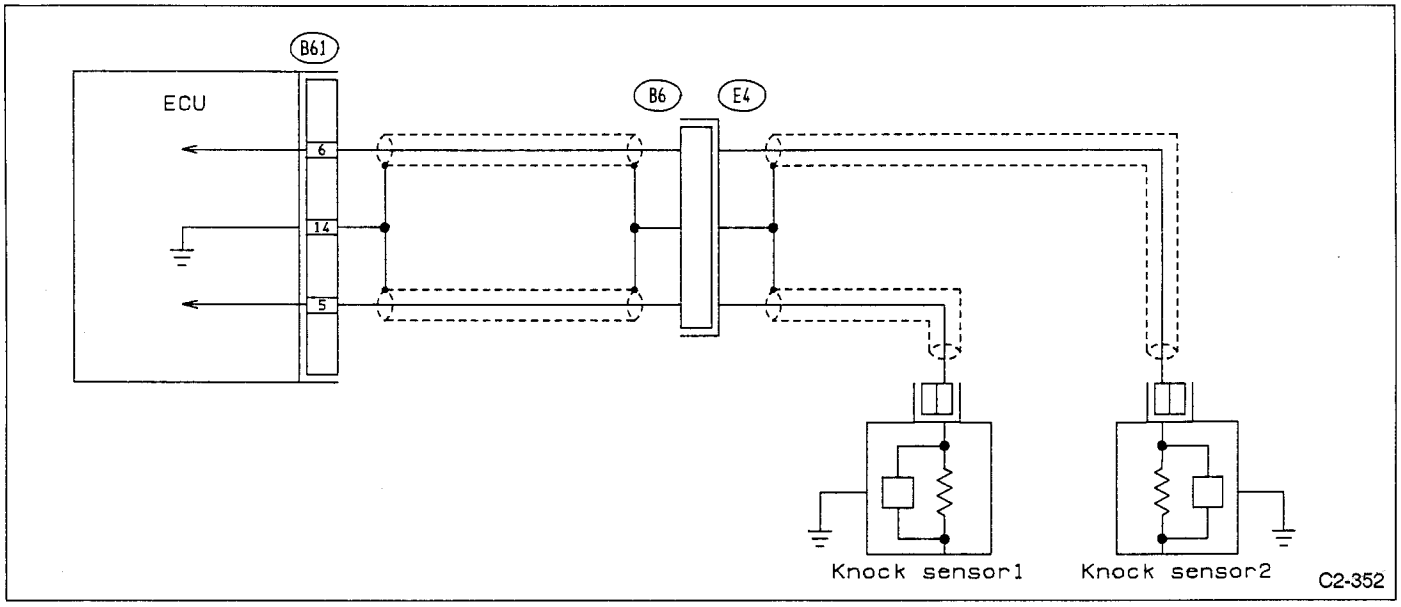

Fig. 75

1. CHECK INPUT SIGNAL FOR ECU.

1) Turn ignition switch to "ON".
2) Measure voltage between ECU connector terminal and body.

Connector & Terminal/Specified voltage
(B61) No. 6 — Body/3 — 4 V

2. CHECK KNOCK SENSOR 2

1) Remove collector.
2) Disconnect connector from knock sensor 2.
3) Measure resistance between knock sensor 2 connector terminal and body.

Connector & Terminal/Specified resistance
(E19) No. 1 — Body/Approx. 560 kΩ

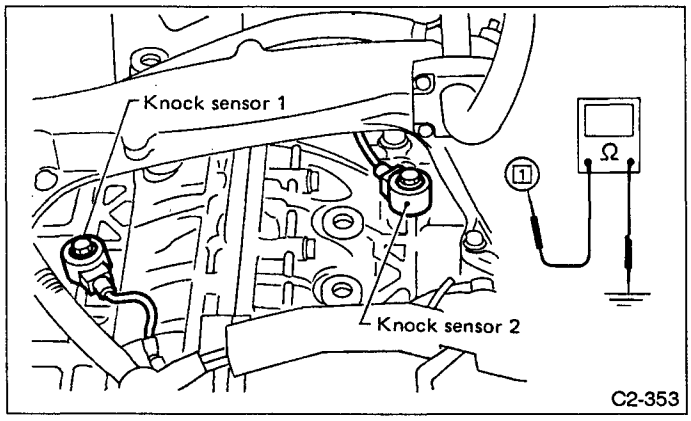

Fig. 76

J: TROUBLE CODE (29) — CRANK ANGLE SENSOR 2 —

DIAGNOSIS:
No signal inputs from crank angle sensor 2, while the signal from crank angle sensor 1 inputs to ECU more than 12 times.

TROUBLE SYMPTOM:
- Failure engine to start.

1 Check input signal for ECU.
- OK → Check connector of ECU connector.
  - Not OK → Repair ECU connector.
  - OK → Replace ECU.
- OK ↓

2 Check harness connector between ECU and crank angle sensor 2.
- Not OK → Repair or replace harness connector.
- OK ↓

3 Check crank angle sensor 2.
- Not OK → Replace crank angle sensor 2.
- OK ↓

Mechanical trouble.

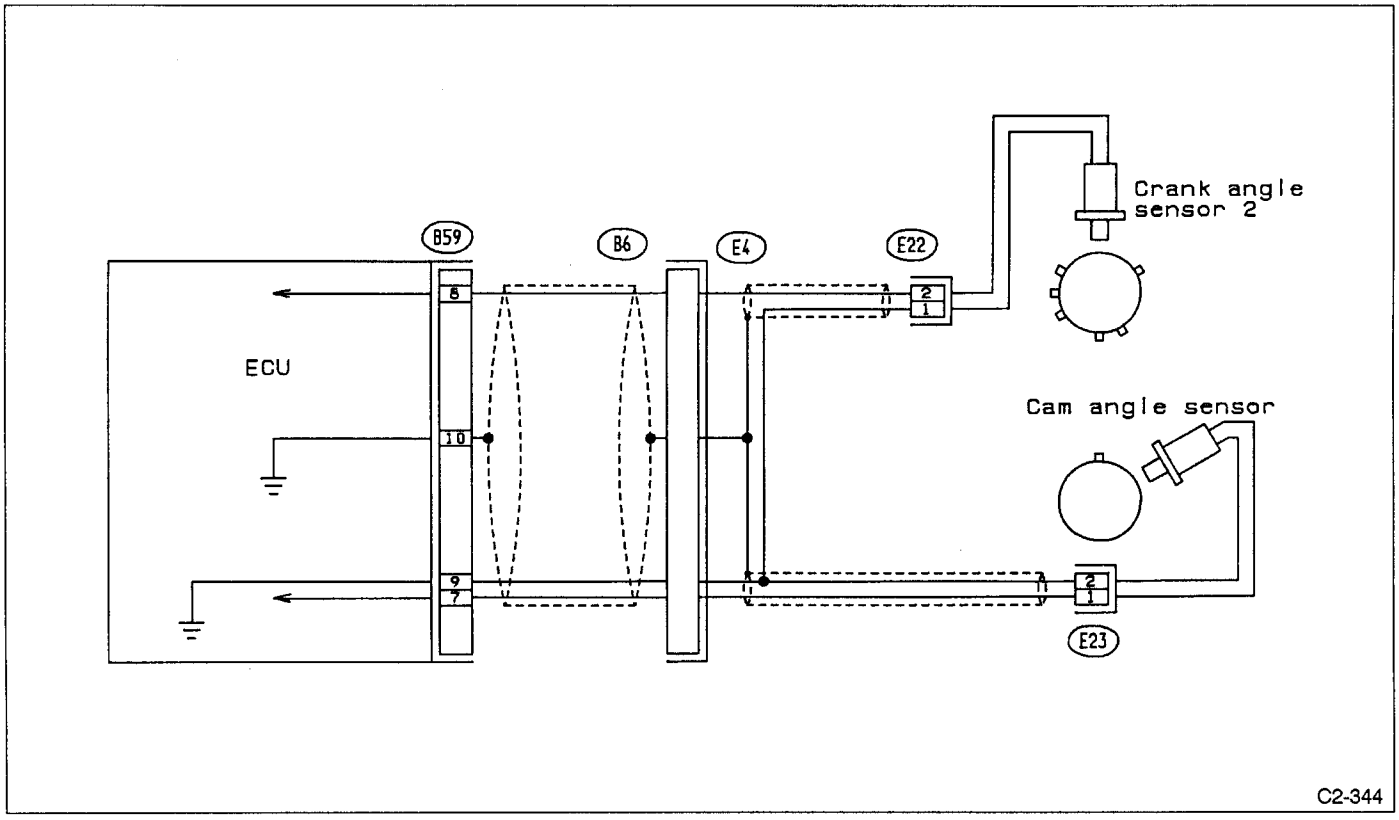

Fig. 77

1. CHECK INPUT SIGNAL FOR ECU.

1) Turn ignition switch to "OFF".
2) Disconnect ECU connectors.
3) Check input signal for ECU from crank angle sensor 2.

- **Using oscilloscope**

(1) Set the positive (+) probe at (B48) terminal No. 8, and set earth lead at (B48) terminal No. 9.
(2) Cranking the engine, and check wave profile.

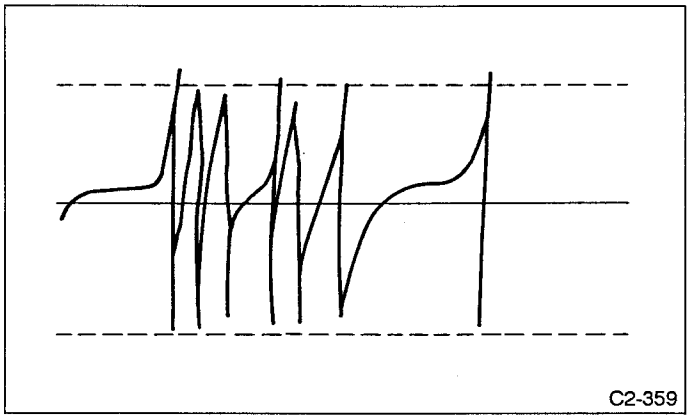

Fig. 78

When following waveform pattern is shown on screw, crank angle sensor-2 circuit is open.

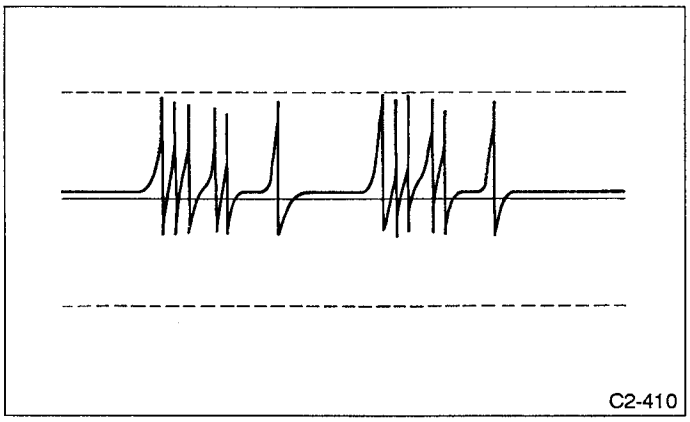

Fig. 79

- **Using voltage meter**

Check if voltage varies synchronously with engine revolution when cranking, while monitoring voltage between ECU connector terminal.

Connector & Terminal/Specified voltage
(B59) No. 8 — No. 9/AC 0.1 V, min.

2. CHECK HARNESS CONNECTOR BETWEEN ECU AND CRANK ANGLE SENSOR 2.

1) Turn ignition switch to "OFF".
2) Remove alternator.
3) Disconnect connector from ECU and crank angle sensor 2.
4) Measure resistance of harness connector between ECU and crank angle sensor 2.

Connector & Terminal/Specified resistance
(B59) No. 8 — (E22) No. 2/0 Ω
(B59) No. 9 — (E22) No. 1/0 Ω

5) Measure resistance between ECU connector and body to check short circuit.

Connector & Terminal/Specified resistance
(B59) No. 8 — Body/1 MΩ, min.
(B59) No. 9 — Body/1 MΩ, min.
(B59) No. 10 — Body/1 MΩ, min.

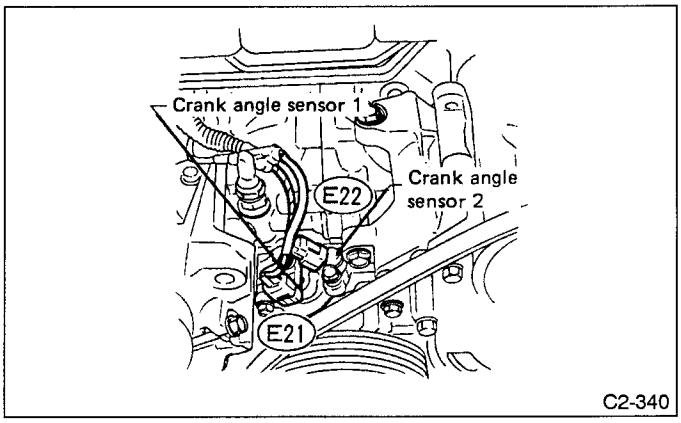

Fig. 80

3. CHECK CRANK ANGLE SENSOR 2.

1) Remove crank angle sensor 2.
2) Set the positive (+) probe at sensor connector terminal No. 1, and set earth lead at terminal No. 2.
3) Check a wave profile appears when crossing a magnet near the pick-up coil of crank angle sensor 2.

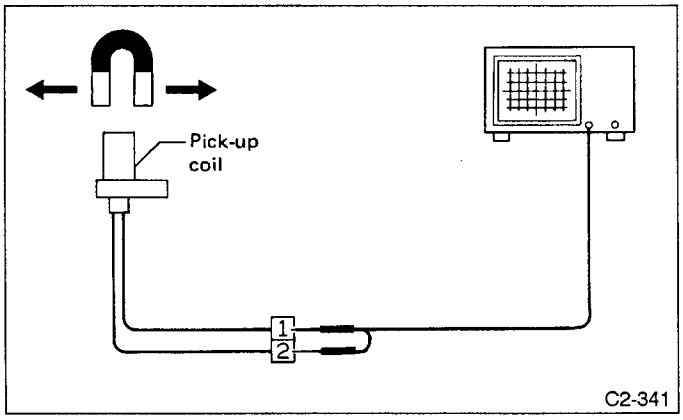

Fig. 81

K: TROUBLE CODE (31) — THROTTLE SENSOR —

DIAGNOSIS:
Abnormal signal from throttle sensor.

TROUBLE SYMPTOM:
- Erroneous idling
- Engine stall
- Poor driving performance

1	Check throttle sensor.	Not OK →	Replace throttle body.
	↓ OK		
2	Check harness connector between ECU and throttle sensor.	Not OK →	Repair or replace harness connector.
	↓ OK		
	Check contact of ECU connector terminal.	Not OK →	Repair ECU connector and terminal.
	↓ OK		
	Replace ECU.		

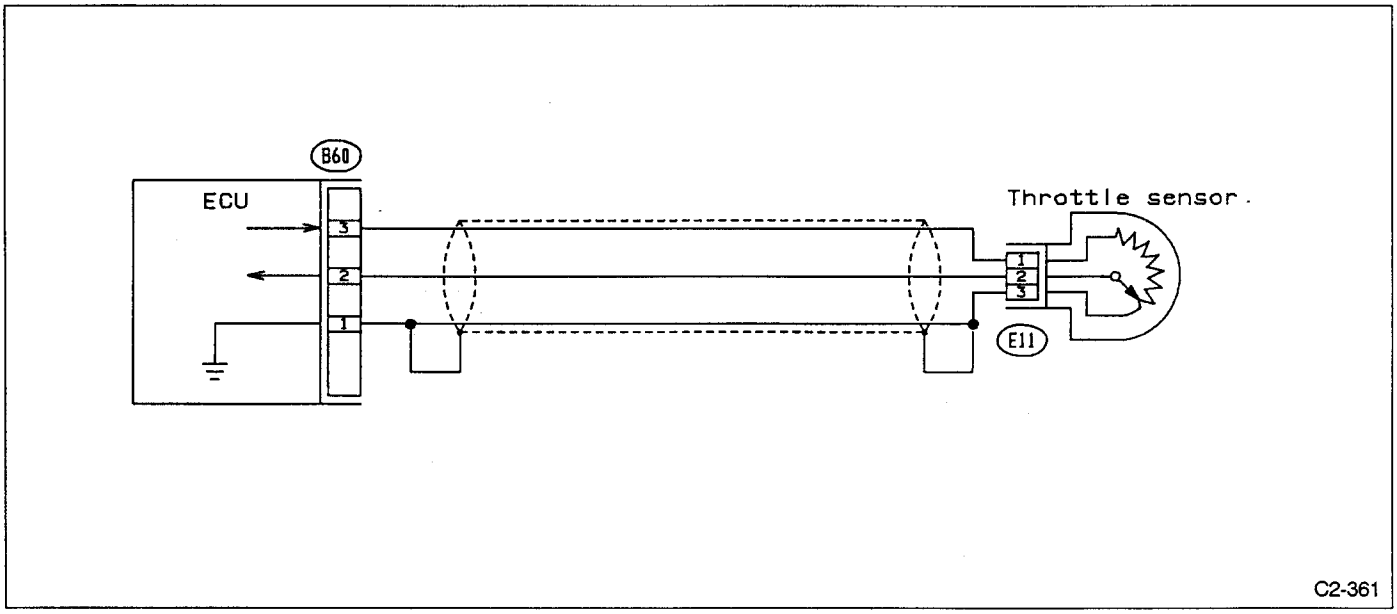

Fig. 82

1. CHECK THROTTLE SENSOR.

1) Turn ignition switch to "OFF".
2) Disconnect throttle sensor connector.
3) Measure resistance between throttle sensor connector terminals.

Terminal/Specified resistance
No. 1 — No.3/5 kΩ

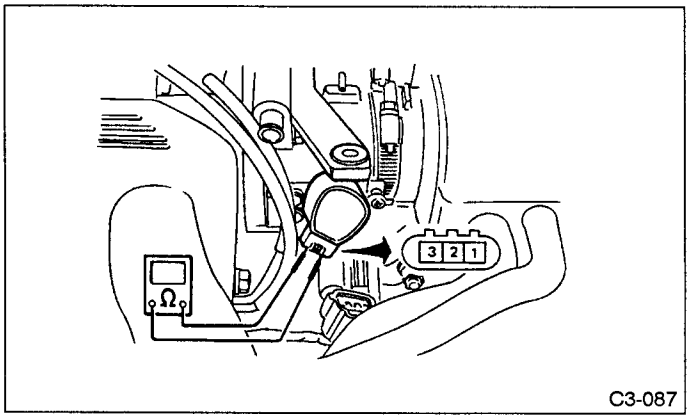

Fig. 83

4) Measure resistance between terminals while slowly opening throttle valve from the "close" position.

Terminal/Specified resistance
No. 2 — No. 3/10 — 12 kΩ [Fully close]
/3 — 5 kΩ [Fully open]
Ensure resistance increases in response to throttle valve opening.

2. CHECK HARNESS CONNECTOR BETWEEN ECU AND THROTTLE SENSOR.

1) Disconnect ECU connectors.
2) Measure resistance of harness connector between ECU and throttle sensor.

Connector & Terminal/Specified resistance
(B60) No. 3 — (E11) No. 2/0 Ω
(B60) No. 2 — (E11) No. 1/0 Ω
(B60) No. 1 — (E11) No. 3/0 Ω

2) Measure resistance of harness connector between throttle sensor connector and body to check short circuit.

Connector & Terminal/Specified resistance
(B11) No. 2 — Body/1 MΩ min.
(B11) No. 1 — Body/1 MΩ min.
(B11) No. 3 — Body/1 MΩ min.

L: TROUBLE CODE (32) — O_2 SENSOR 1 (RH) —

DIAGNOSIS:
- O_2 1 inoperative
- Faulty feed back control system

TROUBLE SYMPTOM:
- Erroneous idling
- Rough driving

1 Check input signal for ECU.
- OK → Check contact of ECU connector terminal.
  - OK → Replace ECU.
  - Not OK → Repair ECU connector.
- Not OK ↓

2 Check O_2 sensor 1.
- Not OK → Replace O_2 sensor 1.
- OK ↓

3 Check harness connector between ECU and O_2 sensor 1.
- Not OK → Repair or replace harness connector.
- OK ↓

4 Check harness connector between main relay and O_2 sensor 1.
- Not OK → Repair or replace harness connector.
- OK ↓

5 Check power supply circuit of main relay.
- Not OK → Repair or replace harness connector.
- OK ↓

Replace main relay.

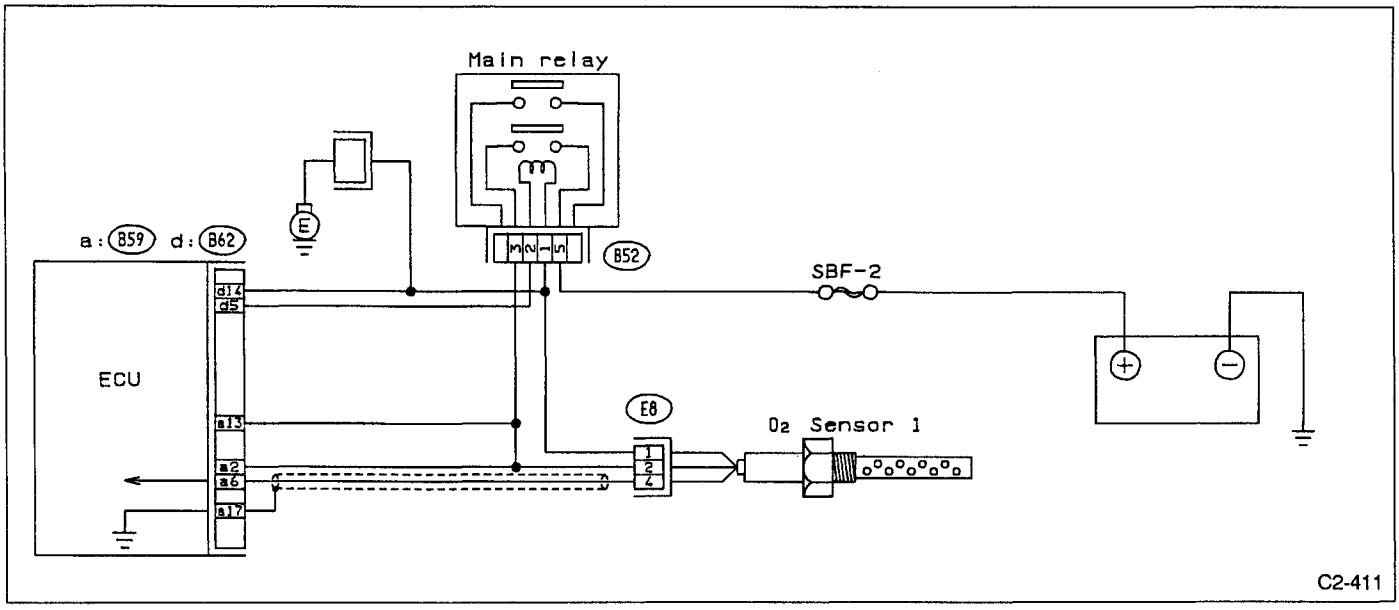

Fig. 84

1. CHECK INPUT SIGNAL FOR ECU.

Measure voltage between ECU connector terminal and body while idling engine.

Connector & Terminal/Specified voltage
(B59) No. 6 — Body/0.1 — 1.0 V

Problems in heater circuit causes O_2 sensor to deactivate.

2. CHECK O_2 SENSOR 1.

1) Idle engine.
2) Disconnect O_2 sensor 1 connector.
3) Measure voltage between O_2 sensor 1 connector terminal and body.

Terminal/Specified voltage
No. 6 — Body/0.1 — 1.0 V

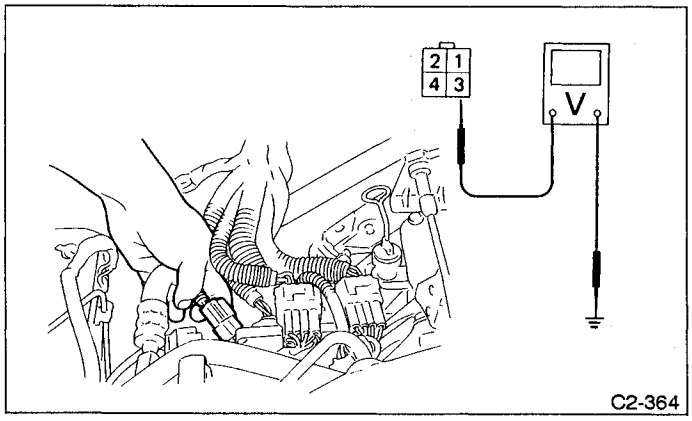

Fig. 85

3. CHECK HARNESS CONNECTOR BETWEEN ECU AND O_2 SENSOR 1.

1) Turn ignition switch to "OFF".
2) Disconnect ECU connectors.
3) Measure resistance of harness connector between ECU and O_2 sensor 1.

Connector & Terminal/Specified resistance
(B59) No. 6 — (E8) No. 4/0 Ω

3) Measure resistance between O_2 sensor 1 connector and body.

Connector & Terminal/Specified resistance
(E8) No. 4 — Body/1 MΩ min.

4. CHECK HARNESS CONNECTOR BETWEEN O_2 SENSOR 1 AND MAIN RELAY.

1) Disconnect main relay connector.
2) Measure resistance of harness connector between O_2 sensor 1 and main relay.

Connector & Terminal/Specified resistance
(E8) No. 1 — (B52) No. 1/0 Ω
(E8) No. 2 — (B52) No. 3/0 Ω

5. CHECK POWER SUPPLY CIRCUIT OF MAIN RELAY.

1) Turn ignition switch to "ON".
2) Measure voltage between main relay connector terminal and body.

Connector & Terminal/Specified voltage
(B52) No. 2 — Body/10 V, min.
(B52) No. 4 — Body/10 V, min.

M: TROUBLE CODE (33) — VEHICLE SPEED SENSOR 2 —

DIAGNOSIS:
Abnormal signal from vehicle speed sensor 2.

TROUBLE SYMPTOM:
- Poor driving performance.

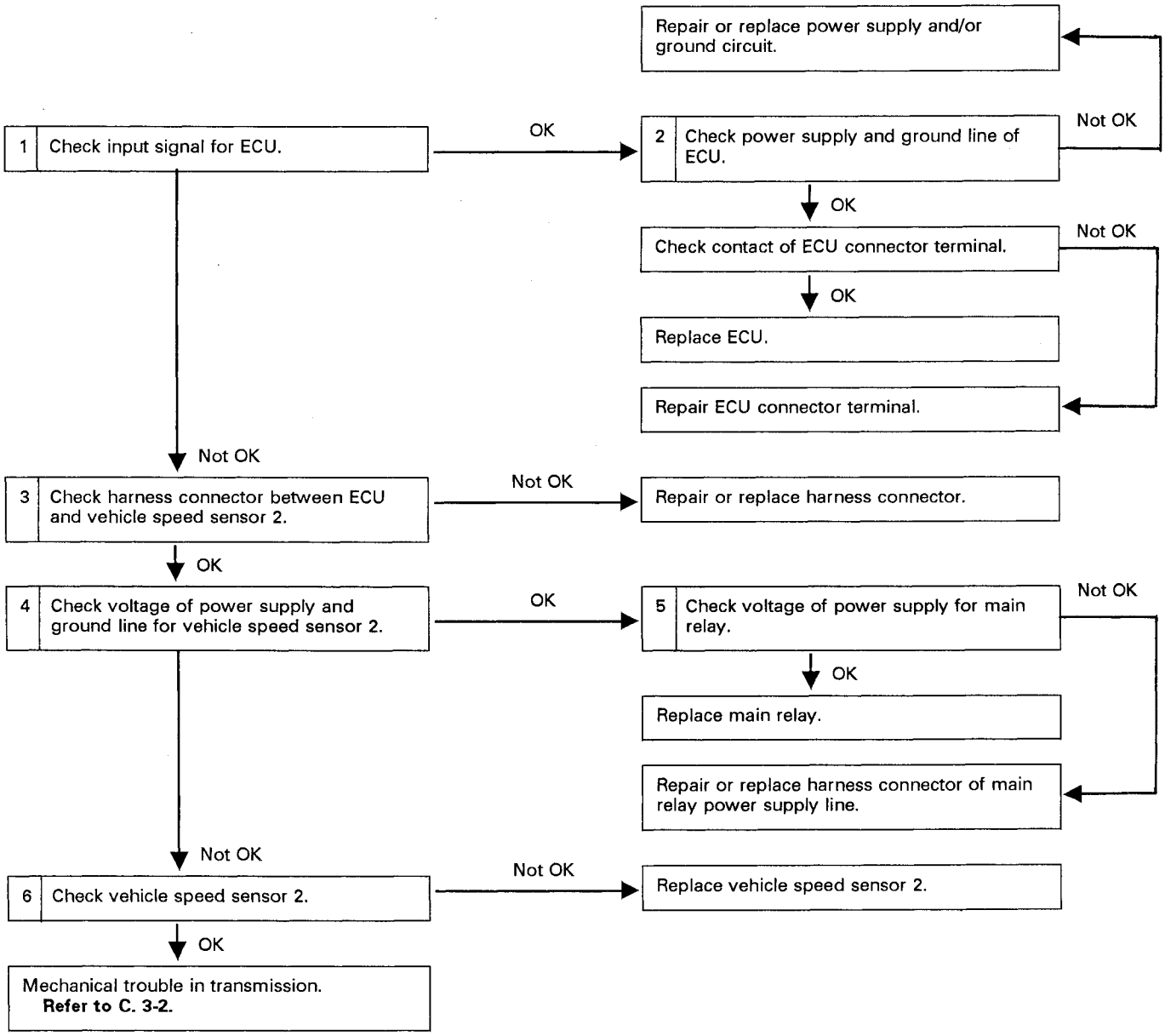

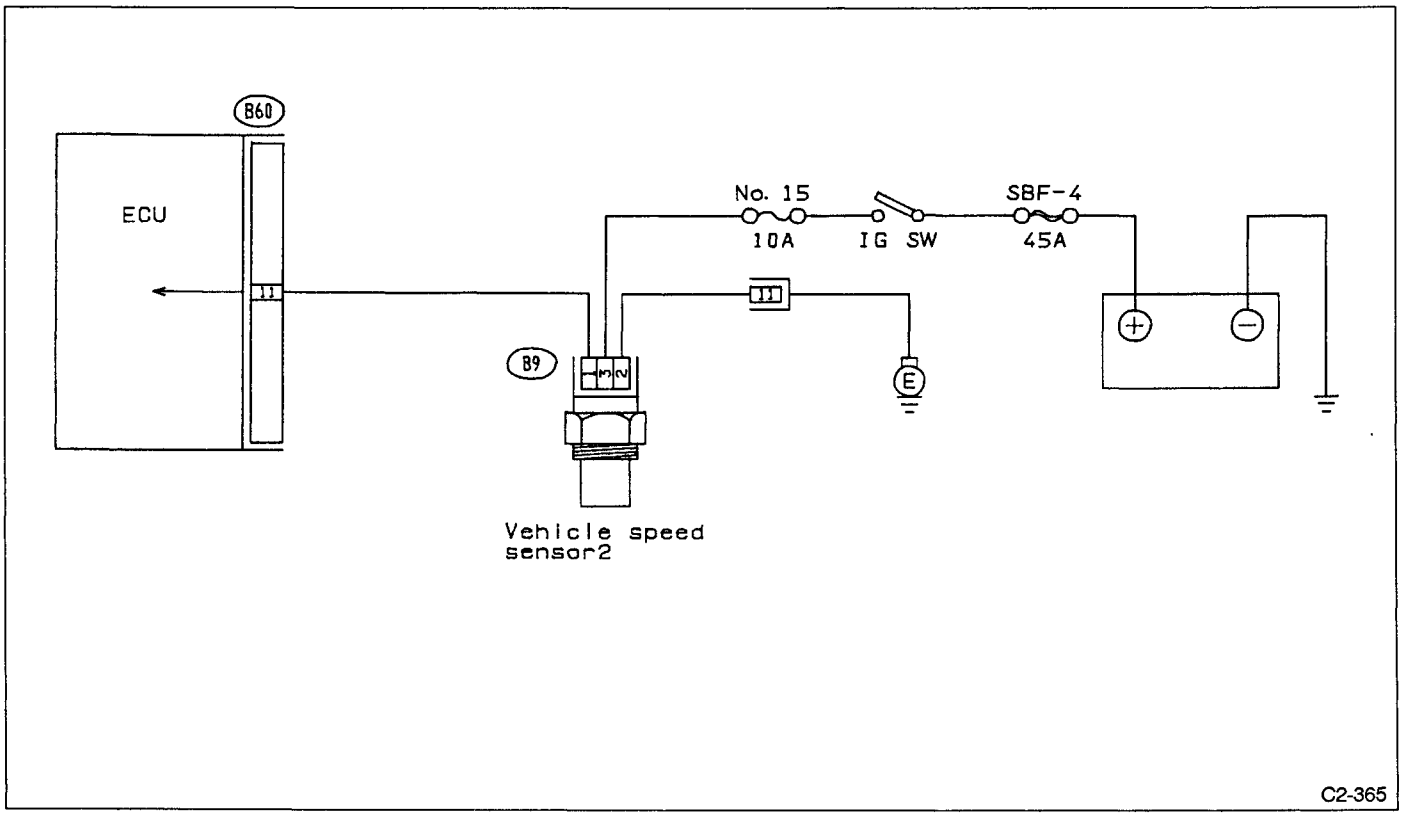
B60
ECU
11
No. 15
10A
IG SW
SBF-4
45A
111
B9
E
Vehicle speed
sensor2
C2-365

Fig. 86

1. CHECK INPUT SIGNAL FOR ECU.

1) Lift up the vehicle.
2) Start the engine, and drive the wheels.

At this time, if speedometer does not operate, go to CHECK 2.

3) Measure voltage between ECU connector terminal and body.

Connector & Terminal/Specified voltage
(B59) No. 3 — Body/0 ↔ 5 V

2. CHECK POWER SUPPLY AND GROUND LINE OF ECU.

1) Turn ignition switch to "OFF".
2) Disconnect ECU connector.
3) Turn ignition switch to "ON".
4) Measure voltage between ECU connector terminal and body to check power supply line.

Connector & Terminal/Specified voltage
(B59) No. 2 — Body/10 V,min.
(B59) No. 13 — Body/10 V,min.

5) Measure resistance between ECU connector terminal and body to check ground line.

Connector & Terminal/Specified resistance
(B59) No. 11 — Body/0 Ω
(B59) No. 22 — Body/0 Ω

3. CHECK HARNESS CONNECTOR BETWEEN ECU AND VEHICLE SPEED SENSOR 2.

1) Turn ignition switch to "OFF".
2) Disconnect (B9) connector from vehicle speed sensor 2.
3) Measure resistance of harness connector between ECU and vehicle speed sensor 2.

Connector & Terminal/Specified resistance
(B60) No. 11 — (B9) No. 1/0Ω

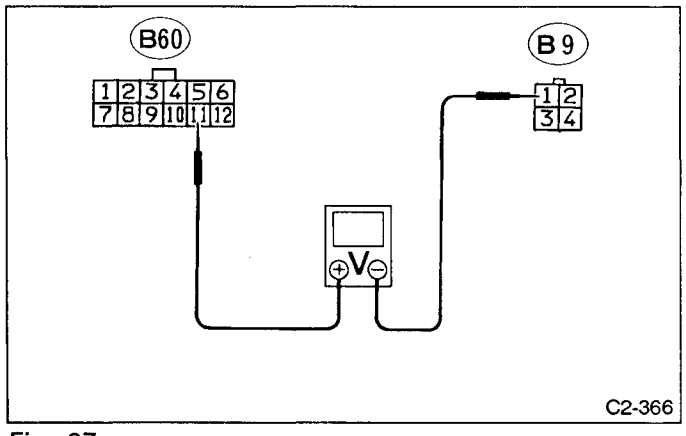

Fig. 87

4. CHECK VOLTAGE OF POWER SUPPLY FOR VEHICLE SPEED SENSOR 2.

1) Disconnect connector from vehicle speed sensor 2.
2) Turn ignition switch to "ON".
3) Measure voltage between (B9) connector terminal and body.

Connector & Terminal/Specified resistance
(B9) No. 1 — Body/10 V, min.

5. CHECK VOLTAGE OF POWER SUPPLY FOR MAIN RELAY.

Measure voltage between main relay connector terminal and body.

Connector & Terminal/Specified voltage
(B50) No. 3 — Body/10 V, min.

6. CHECK VEHICLE SPEED SENSOR 2.

1) Remote vehicle speed sensor 2.
2) connect (B9) connector to vehicle speed sensor 2.
3) While rotating shaft of vehicle speed sensor 2, check voltage that changing from 0 to 5 volts four times per rotation between (B9) connector terminals.

Connector & Terminal/Specified resistance
(B9) No. 1 — No. 3/0←→5 V (4 times/rotation)

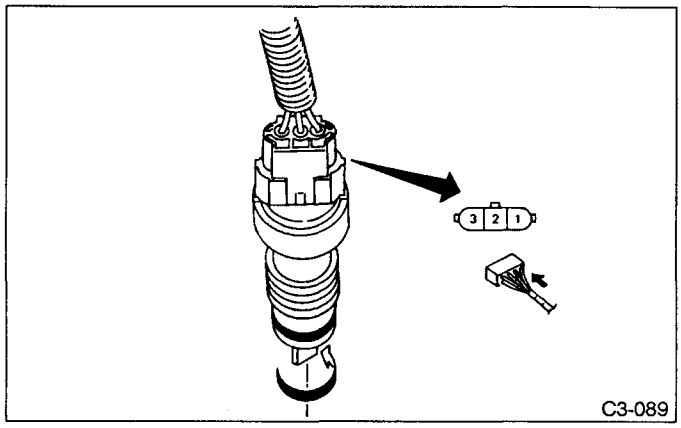

Fig. 88

N: TROUBLE CODE (34) — EGR SOLENOID VALVE —

DIAGNOSIS:
- Abnormal signal is emitted from ECU.
- EGR solenoid valve inoperative.

TROUBLE SYMPTOM:
Poor driving performance on low engine speed.

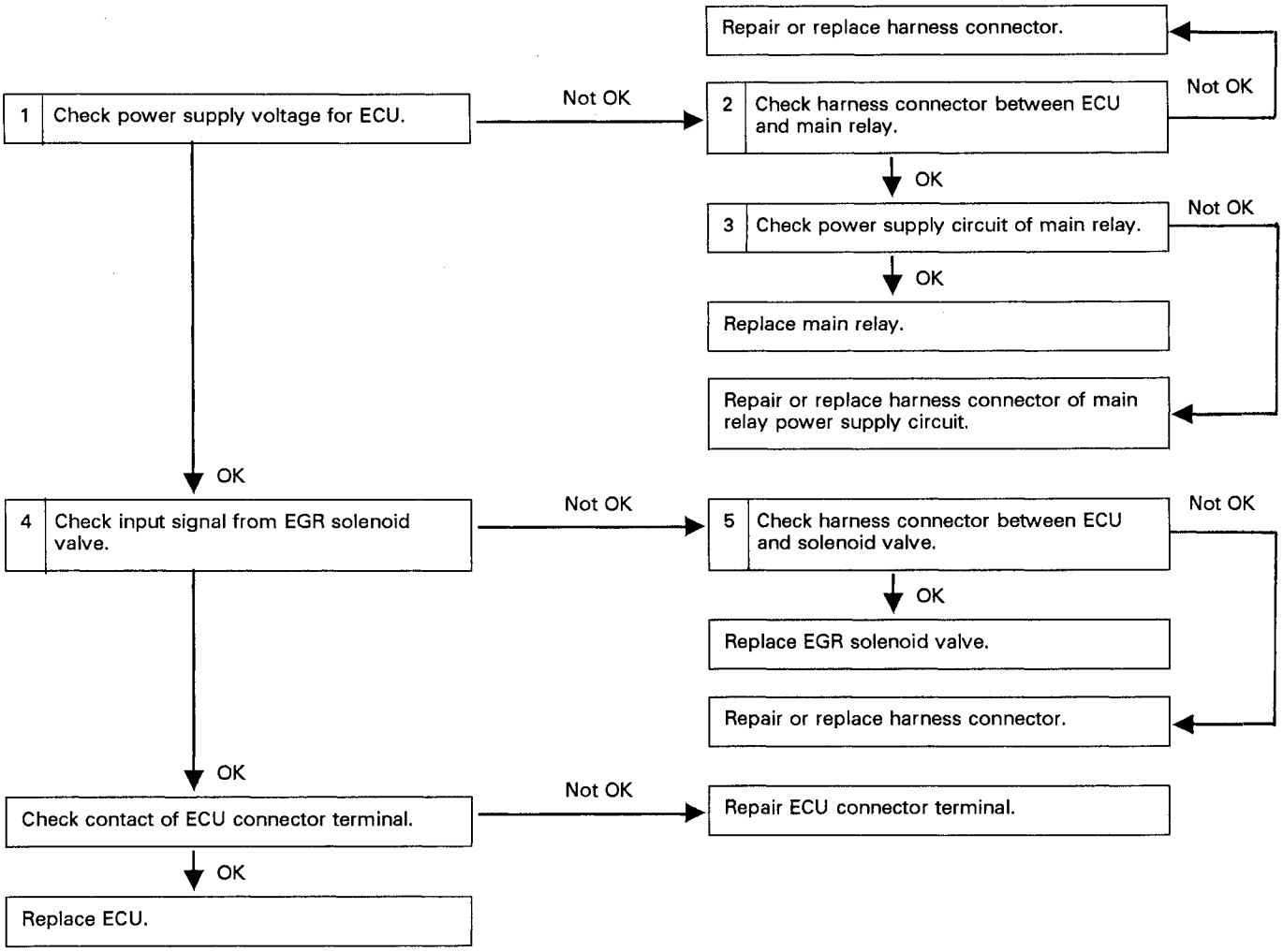

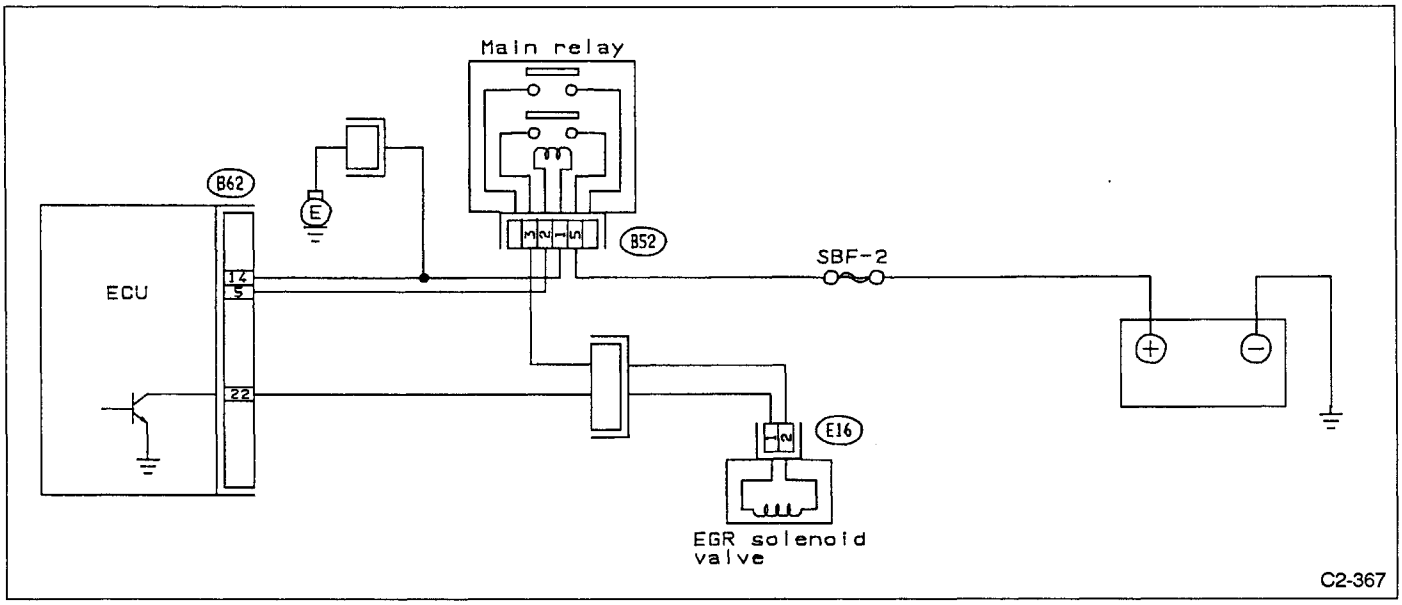
Main relay
B62
E
B52
SBF-2
ECU
17
5
22
E16
EGR solenoid valve
C2-367

Fig. 89

1. CHECK POWER SUPPLY VOLTAGE FOR ECU.

1) Turn ignition switch to "ON".
2) Measure voltage between ECU connector terminal and body.

Connector & Terminal/Specified voltage
(B62) No. 14 — Body/10 V, min.

2. CHECK HARNESS CONNECTOR BETWEEN ECU AND MAIN RELAY.

1) Turn ignition switch to "OFF".
2) Disconnect connector from ECU and main relay.
3) Measure resistance of harness connector between ECU and main relay.

Connector & Terminal/Specified resistance
(B62) No. 14 — (B52) No. 4/0 Ω

3. CHECK POWER SUPPLY CIRCUIT OF MAIN RELAY.

1) Turn ignition switch to "ON".
2) Measure voltage between main relay connector and body.

Connector & Terminal/Specified voltage
(B52) No. 1 — Body/10 V, min.
(B52) No. 2 — Body/10 V, min.

4. CHECK INPUT SIGNAL FROM EGR SOLENOID VALVE.

1) Turn ignition switch to "ON".
2) Measure voltage between ECU connector and body.

Connector & Terminal/Specified voltage
(B62) No. 22 — Body/7 V, min.

5. CHECK HARNESS CONNECTOR BETWEEN ECU AND SOLENOID VALVE.

1) Turn ignition switch to "OFF".
2) Disconnect ECU connectors.
3) Separate collector, and disconnect connector from EGR solenoid valve.
4) Measure resistance of harness connector between ECU and solenoid valve.

Connector & Terminal/Specified resistance
(B62) No. 22 — (E16) No. 2/0 Ω

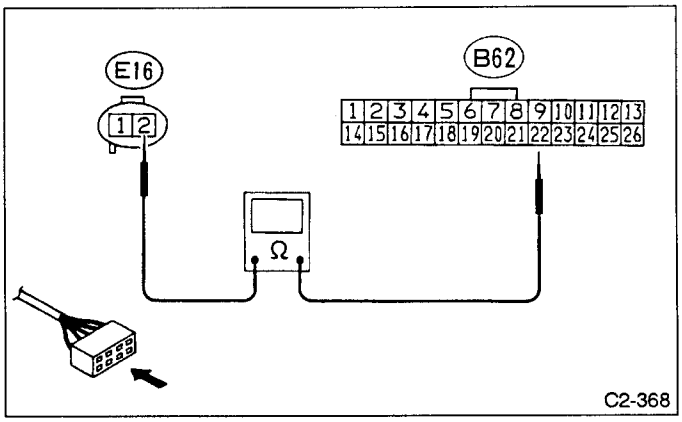

Fig. 90

N: TROUBLE CODE (35) — PURGE CONTROL SOLENOID VALVE —

DIAGNOSIS:
- Abnormal signal is emitted from ECU.
- Purge control solenoid valve inoperative.

TROUBLE SYMPTOM:
- Poor driving performance

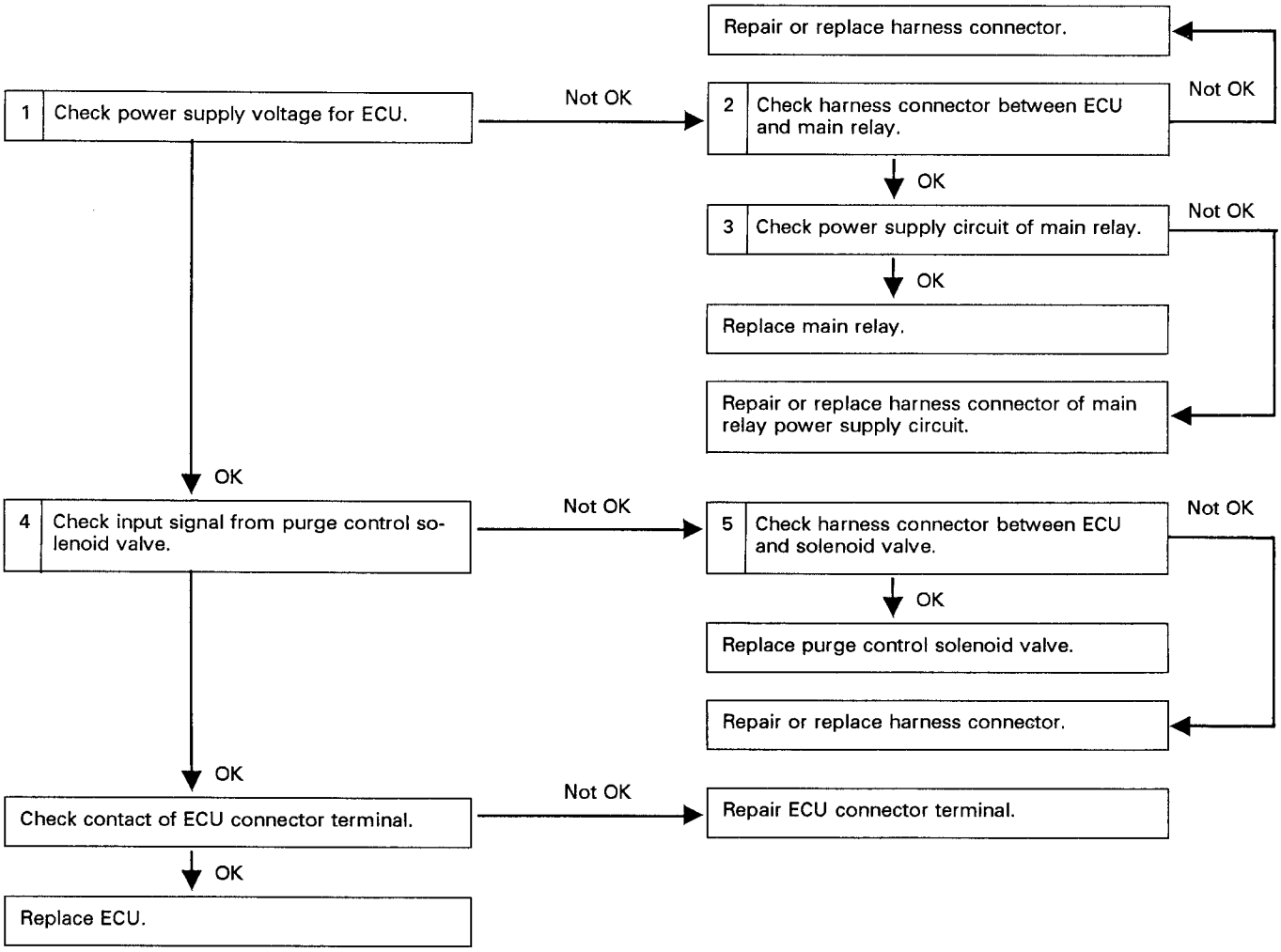

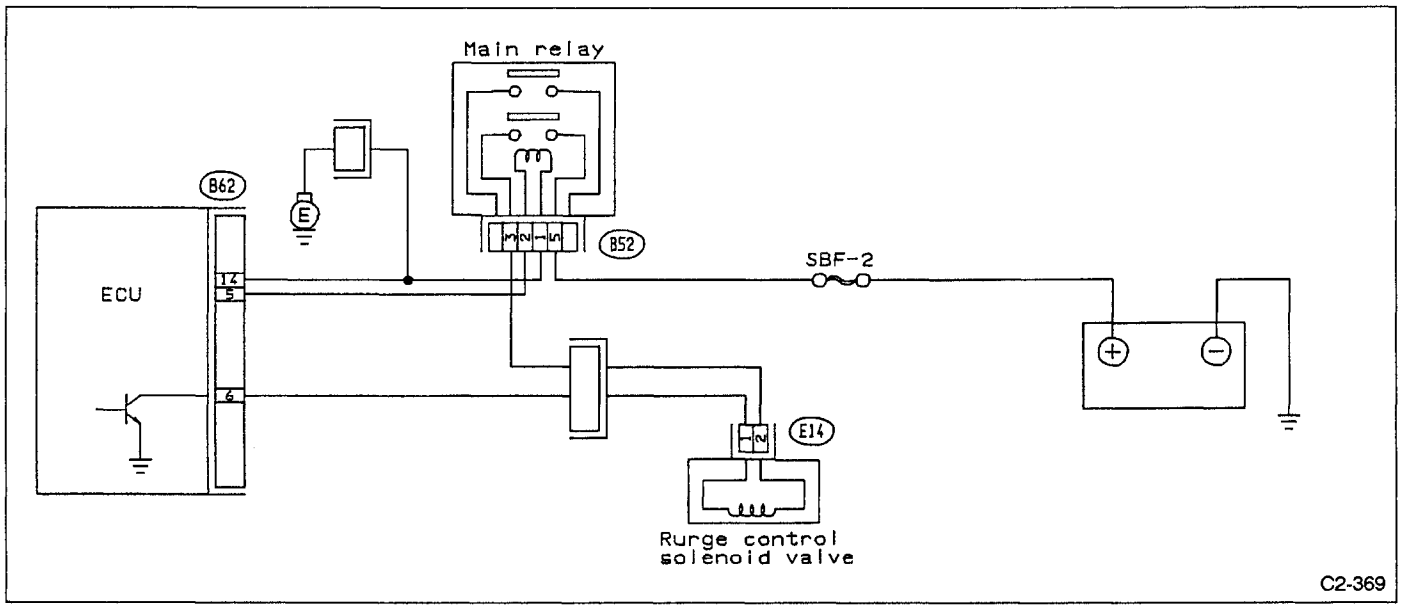
Main relay
B62
ECU
12
5
4
E
B52
SBF-2
E14
Rurge control
solenoid valve
C2-369

Fig. 91

1. CHECK POWER SUPPLY VOLTAGE FOR ECU.

1) Turn ignition switch to "ON".
2) Measure voltage between ECU connector terminal and body.

Connector & Terminal/Specified voltage
(B62) No. 14 — Body/10 V, min.

2. CHECK HARNESS CONNECTOR BETWEEN ECU AND MAIN RELAY.

1) Turn ignition switch to "OFF".
2) Disconnect connector from ECU and main relay.
3) Measure resistance of harness connector between ECU and main relay.

Connector & Terminal/Specified resistance
(B62) No. 14 — (B52) No. 4/0 Ω

3. CHECK POWER SUPPLY CIRCUIT OF MAIN RELAY.

1) Turn ignition switch to "ON".
2) Measure voltage between main relay connector and body.

Connector & Terminal/Specified voltage
(B52) No. 1 — Body/10 V, min.
(B52) No. 2 — Body/10 V, min.

4. CHECK INPUT SIGNAL FROM PURGE CONTROL SOLENOID VALVE.

1) Turn ignition switch to "ON".
2) Measure voltage between ECU connector and body.

Connector & Terminal/Specified voltage
(B62) No. 6 — Body/7 V, min.

5. CHECK HARNESS CONNECTOR BETWEEN ECU AND SOLENOID VALVE.

1) Turn ignition switch to "OFF".
2) Disconnect ECU connectors.
3) Remove collector, and disconnect connector from purge control solenoid valve.
4) Measure resistance of harness connector between ECU and solenoid valve.

Connector & Terminal/Specified resistance
(B62) No. 6 — (E14) No. 2/0 Ω

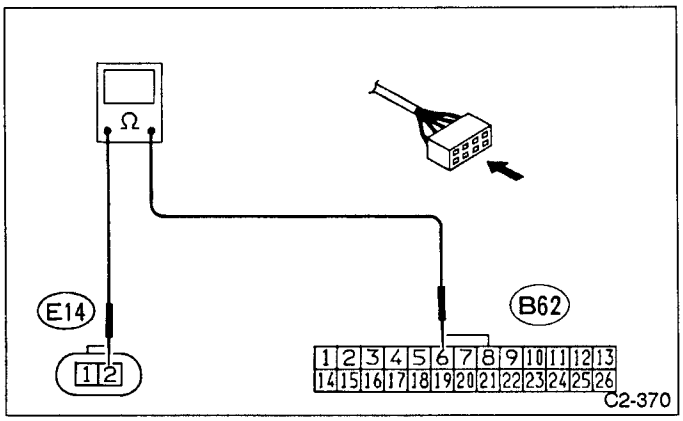

Fig. 92

P: TROUBLE CODE (37) — O_2 SENSOR 2 (LH) —

DIAGNOSIS:
- O_2 sensor 2 inoperative
- Faulty feed back control system

TROUBLE SYMPTOM:
- Erroneous idling
- Rough driving

1 Check input signal for ECU.
- OK → Check contact of ECU connector terminal.
  - Not OK → Repair ECU connector terminal.
  - OK → Replace ECU.
- Not OK ↓

2 Check O_2 sensor 2.
- Not OK → Replace O_2 sensor 2.
- OK ↓

3 Check harness connector between ECU and O_2 sensor 2.
- Not OK → Repair or replace harness connector.
- OK ↓

4 Check harness connector between main relay and O_2 sensor 2.
- Not OK → Repair or replace harness connector.
- OK ↓

5 Check power supply circuit of main relay.
- Not OK → Repair or replace harness connector.
- OK ↓

Replace main relay.

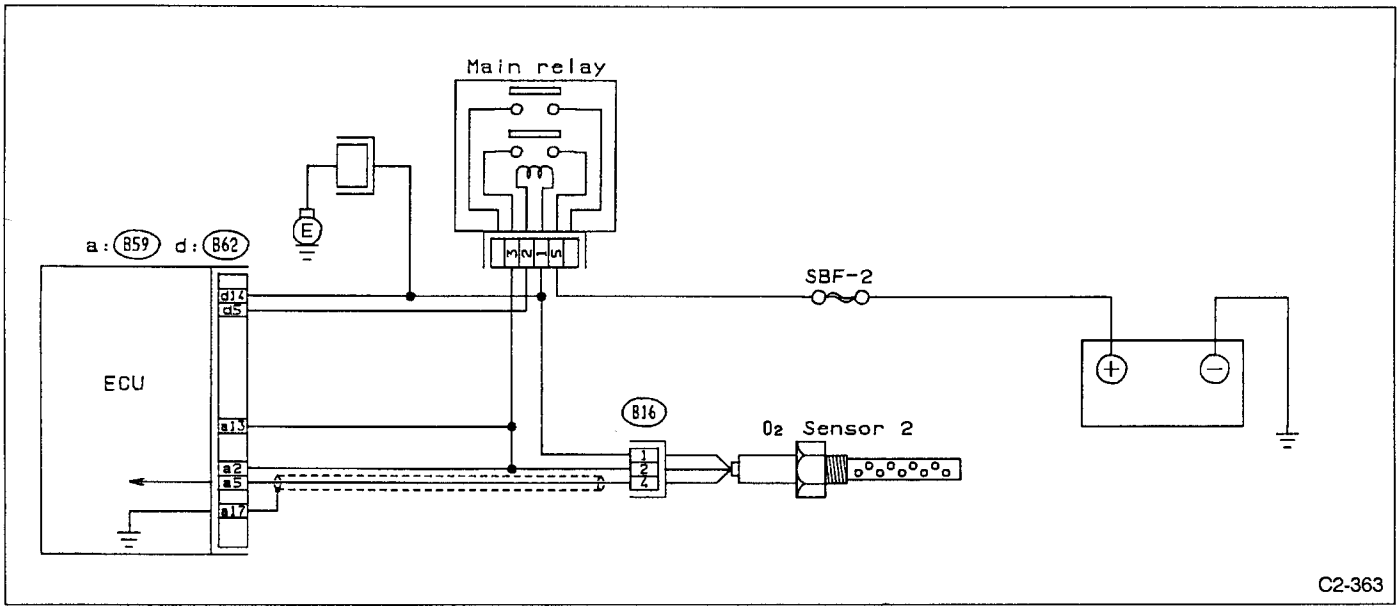

Fig. 93

1. CHECK INPUT SIGNAL FOR ECU.

Measure voltage between ECU connector terminal and body while idling engine.

Connector & Terminal/Specified voltage
(B61) No. 5 — Body/0.1 — 1.0 V

Problems in heater circuit causes O_2 sensor to deactivate.

2. CHECK O_2 SENSOR 2.

1) Idle engine.
2) Disconnect O_2 sensor 2 connector.
3) Measure voltage between O_2 sensor 2 connector terminal and body.

Terminal/Specified voltage
No. 4 — Body/0.1 — 1.0 V

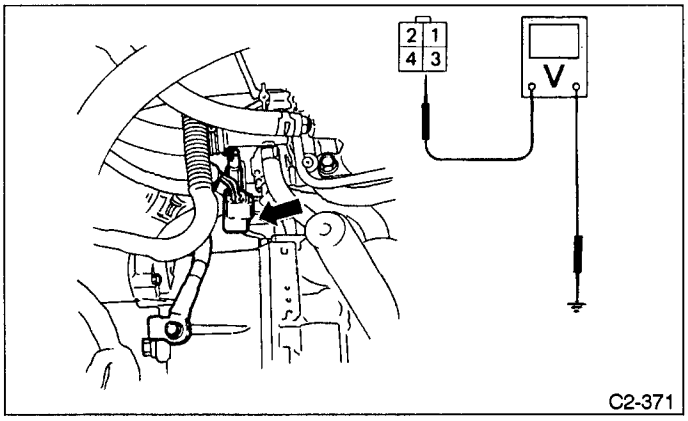

Fig. 94

3. CHECK HARNESS CONNECTOR BETWEEN ECU AND O_2 SENSOR 2.

1) Turn ignition switch to "OFF".
2) Disconnect ECU connectors.
3) Measure resistance of harness connector between ECU and O_2 sensor 2.

Connector & Terminal/Specified resistance
(B61) No. 5 — (B16) No. 4/0 Ω

3) Measure resistance between O_2 sensor 2 connector and body.

Connector & Terminal/Specified resistance
(B16) No. 4 — Body/1 MΩ min.

4. CHECK HARNESS CONNECTOR BETWEEN O_2 SENSOR 2 AND MAIN RELAY.

1) Disconnect main relay connector.
2) Measure resistance of harness connector between O_2 sensor 2 and main relay.

Connector & Terminal/Specified resistance
(B16) No. 1 — (B52) No. 2/0 Ω
(B16) No. 2 — (B52) No. 4/0 Ω

5. CHECK POWER SUPPLY CIRCUIT OF MAIN RELAY.

1) Turn ignition switch to "ON".
2) Measure voltage between main relay connector terminal and body.

Connector & Terminal/Specified voltage
(B52) No. 2 — Body/10 V, min.
(B52) No. 4 — Body/10 V, min.

Q: TROUBLE CODE (38) — ENGINE TORQUE CONTROL —

DIAGNOSIS:
- Signal from TCU is not transmitted to ECU.

TROUBLE SYMPTOM:
Excessive shift shock

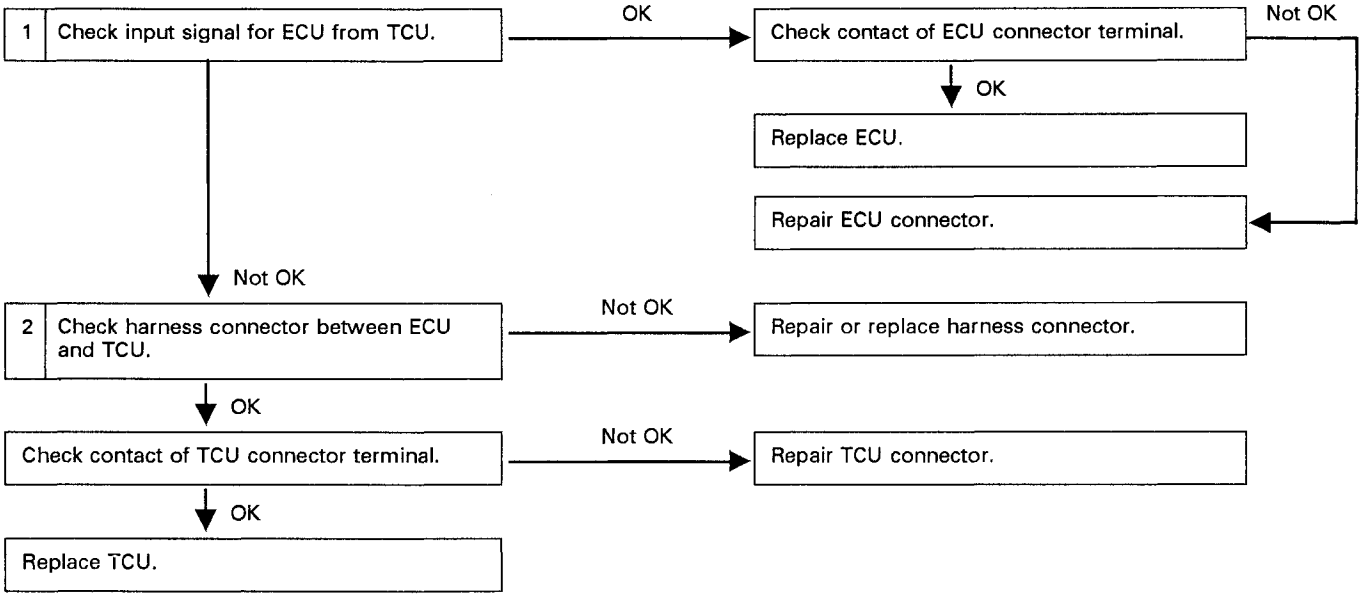

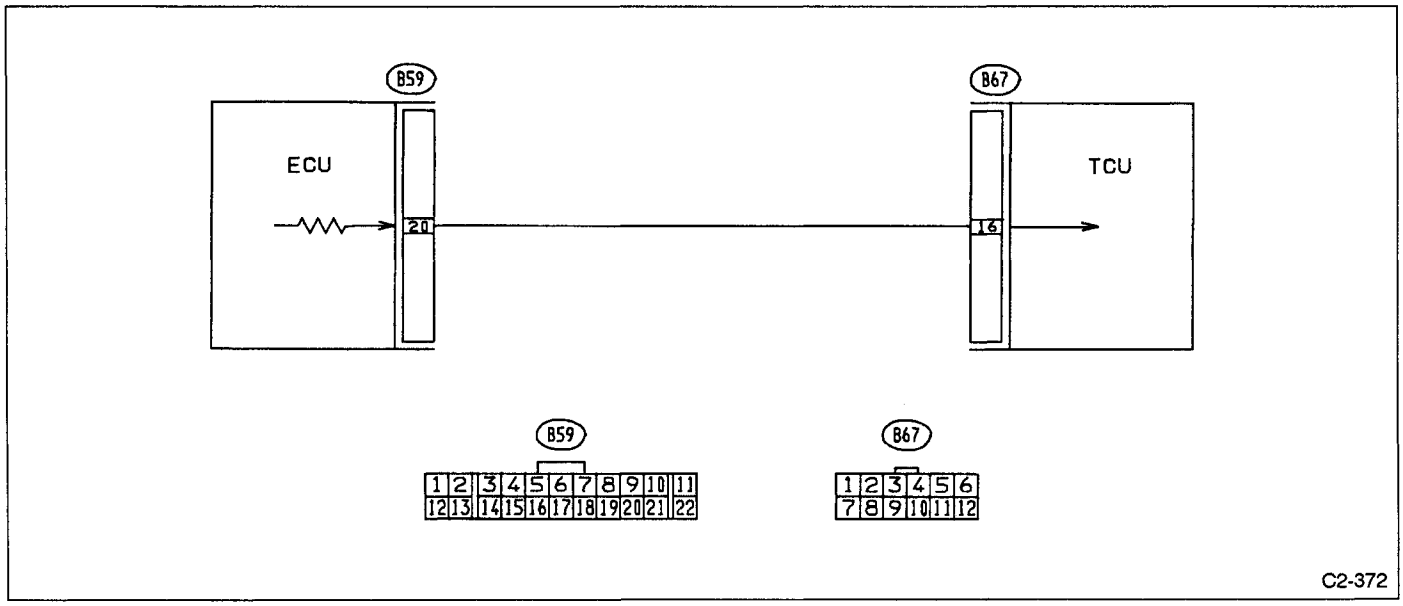

Fig. 95

1. CHECK OUTPUT SIGNAL ON ECU.

1) Turn ignition switch to "ON".
2) Measure voltage between ECU connector terminal and body.

Connector & Terminal/Specified voltage
(B59) No. 50 — Body/5 V, min.

2. CHECK HARNESS CONNECTOR BETWEEN ECU AND TCU.

1) Turn ignition switch to "OFF".
2) Disconnect connectors from ECU and TCU.
3) Measure resistance of harness connector between ECU and TCU.

Connector & Terminal/Specified resistance
(B59) No. 20 — (B67) No. 16/0 Ω

R: TROUBLE CODE (41) — AIR-FUEL RATIO CONTROL SYSTEM —

DIAGNOSIS:
Faulty learning control system

TROUBLE SYMPTOM:
- Erroneous idling
- Engine stall

1	Check operation of injectors.	Not OK →	• Check harness connector. • Replace fuel injector.
↓ OK			
2	Check air flow sensor.	Not OK →	• Check harness connector. • Replace air flow sensor.
↓ OK			
3	Check water temperature sensor.	Not OK →	Replace water temperature sensor.
↓ OK			
4	Check throttle sensor.	Not OK →	Replace throttle body ASSY.
↓ OK			
5	Check O_2 1 & 2.	Not OK →	Replace O_2 1 or 2.
↓ OK			
6	Check fuel pressure.	Not OK →	Check fuel pump and/or pressure regulator.
↓ OK			
7	Check injectors.	Not OK →	Replace fuel injector.
↓ OK			
Check contact of ECU connector terminal.		Not OK →	Repair ECU connector.
↓ OK			
Replace ECU.			

S: TROUBLE CODE (45) — ATMOSPHERIC PRESSURE SENSOR —

DIAGNOSIS:
Faulty atmospheric pressure sensor inside ECU.

TROUBLE SYMPTOM:
- Erroneous idling
- Failure of engine to start

When trouble code 45 appears on display, replace ECU.

T: TROUBLE CODE (51) — NEUTRAL POSITION SIGNAL —

DIAGNOSIS:
Abnormal signal entered from inhibitor switch.

TROUBLE SYMPTOM:
Erroneous idling.

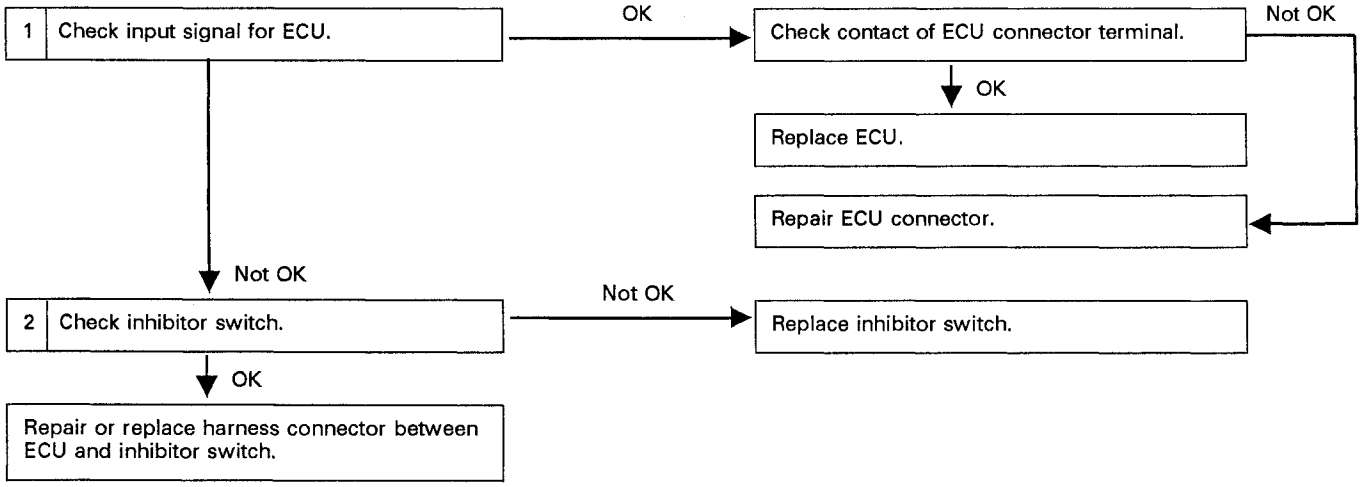

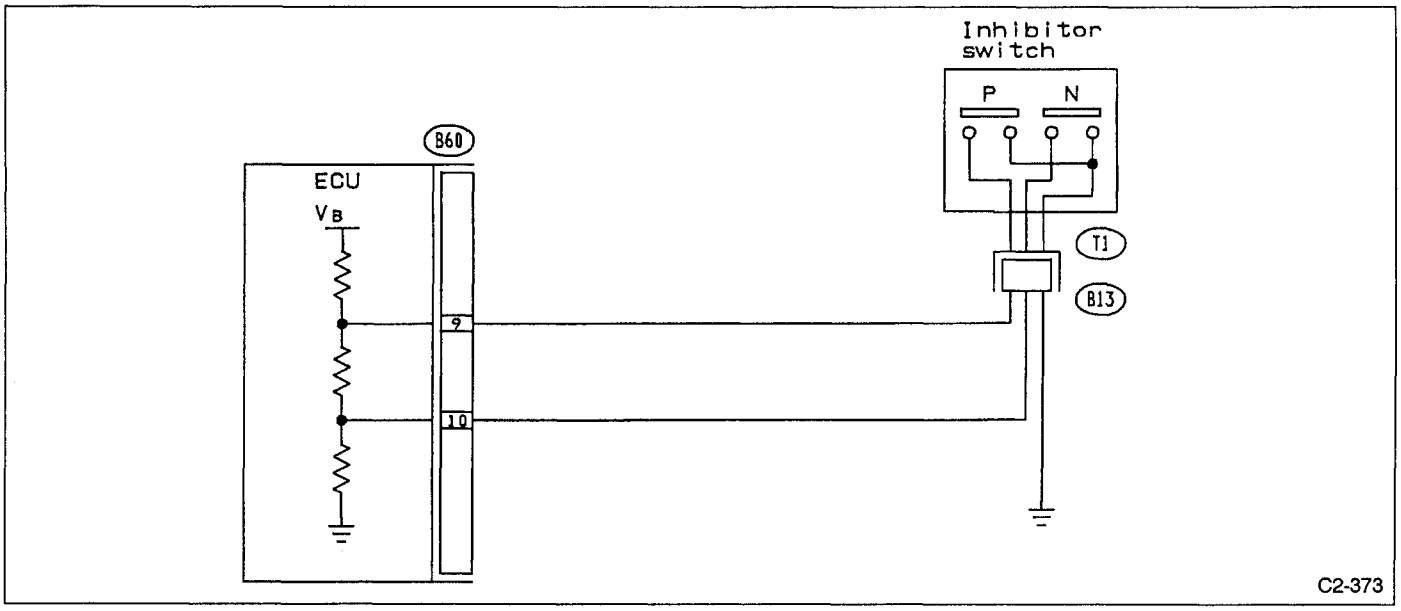

Fig. 96

1. CHECK INPUT SIGNAL FOR ECU.

1) Turn ignition switch to "ON".
2) Measure voltage between ECU connector terminal and body when selector lever is on N position or others.

Connector & Terminal/Specified voltage
(B60) No. 10 — Body/0 V (N Range)
(B60) No. 10 — Body/8 V, min. (Other range)

2. CHECK INHIBITOR SWITCH.

1) Turn ignition switch to "OFF".
2) Disconnect bulkhead harness connector (B13).
3) Measure resistance between inhibitor switch terminal in connector (T1).

Connector & Terminal/Specified resistance
(T1) No. 1 — Body/0 Ω (N Range)
(T1) No. 1 — Body/1 MΩ min. (Other range)

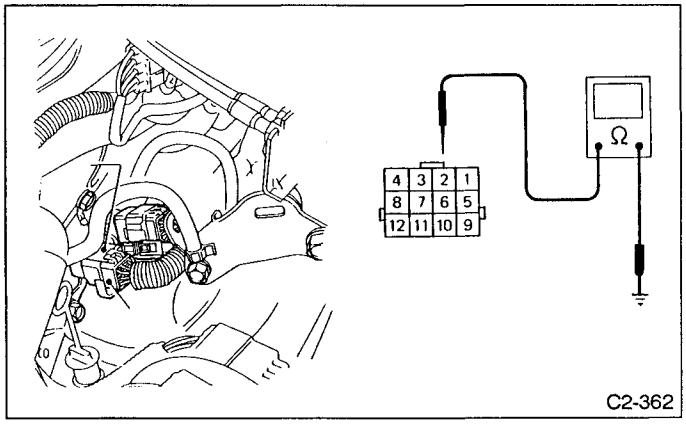

Fig. 97

Refer to C.3-2.

U: TROUBLE CODE (52) — PARKING POSITION SIGNAL —

DIAGNOSIS:
Abnormal signal entered from inhibitor switch.

TROUBLE SYMPTOM:
- Erroneous idling.
- Poor warm-up performance with select lever in "P" position.

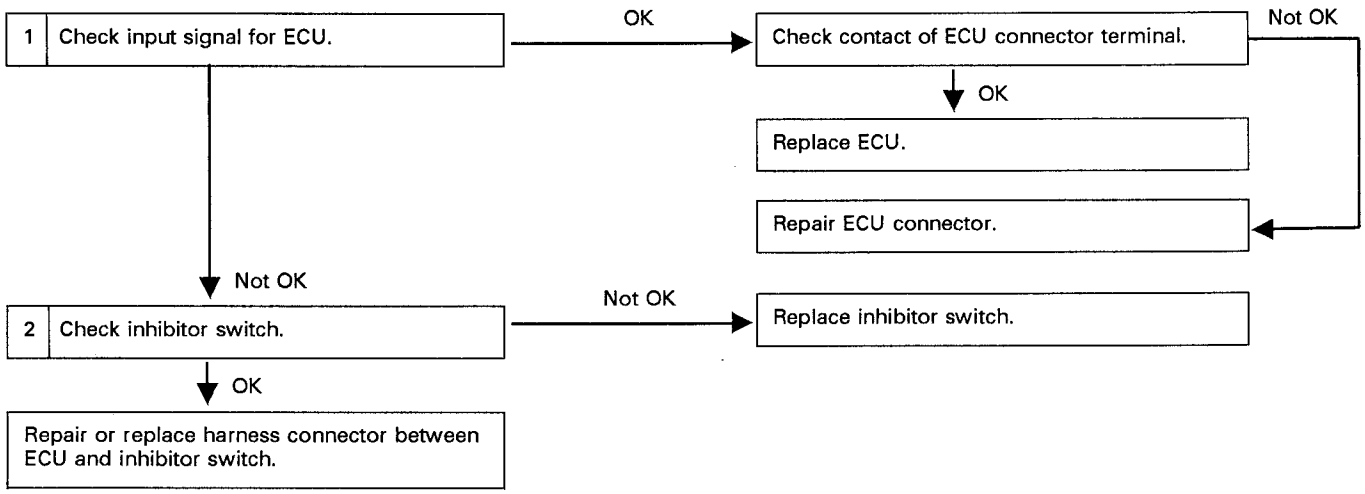

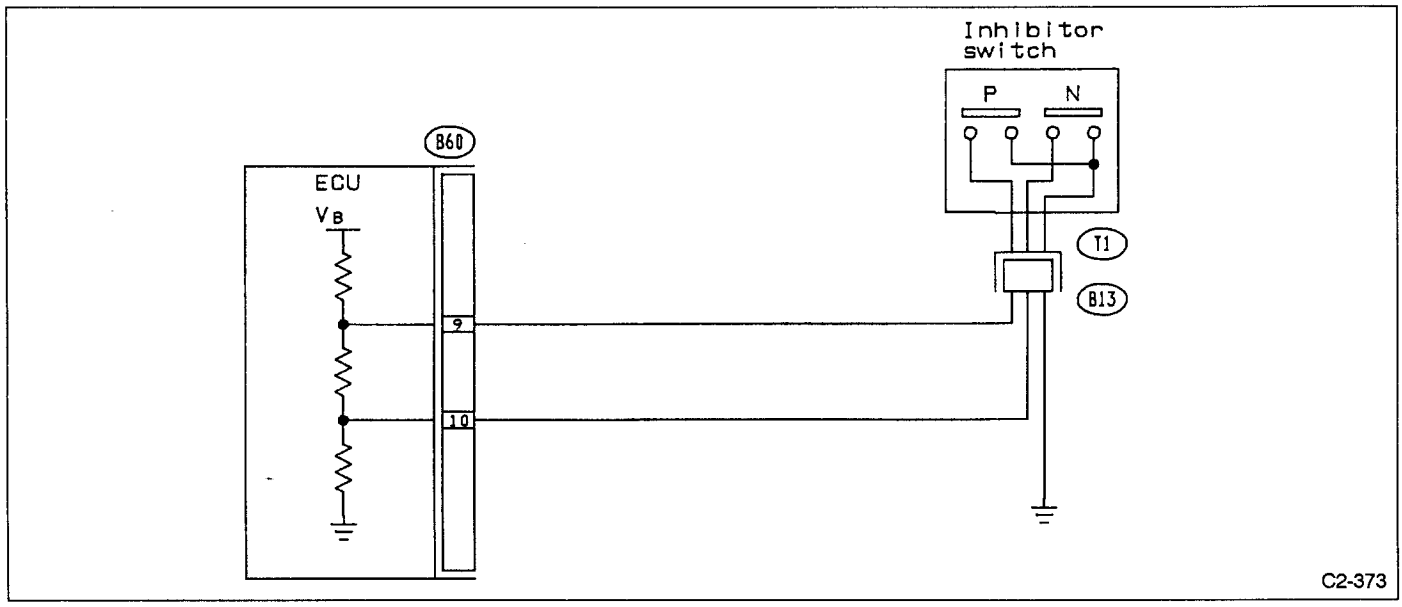

Fig. 98

1. CHECK INPUT SIGNAL FOR ECU.

1) Turn ignition switch to "ON".
2) Measure voltage between ECU connector terminal and body when selector lever is on P position or others.

Connector & Terminal/Specified voltage
(B59) No. 9 — Body/0 V (P Range)
(B59) No. 9 — Body/8 V, min. (Other range)

2. CHECK INHIBITOR SWITCH.

1) Turn ignition switch to "OFF".
2) Disconnect bulkhead harness connector (B13).
3) Measure resistance between inhibitor switch terminal in connector (T1).

Connector & Terminal/Specified resistance
(T1) No. 2 — Body/0 Ω(P Range)
(T1) No. 2 — Body/1 MΩ min. (Other range)

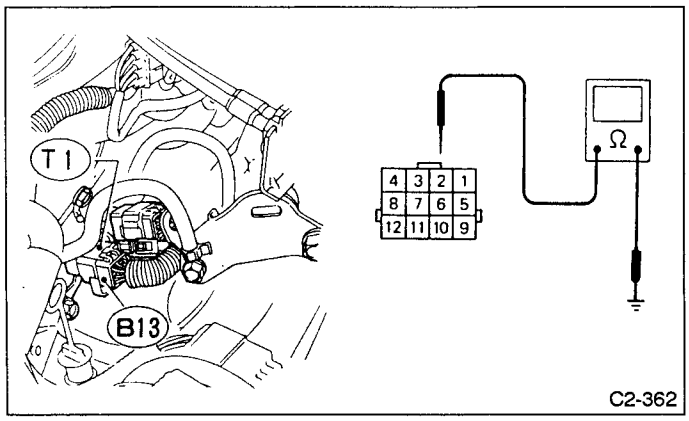

Fig. 99

Refer to C.3-2.

V: TROUBLE CODE (55) — RECIRCULATION GAS TEMPERATURE SENSOR —

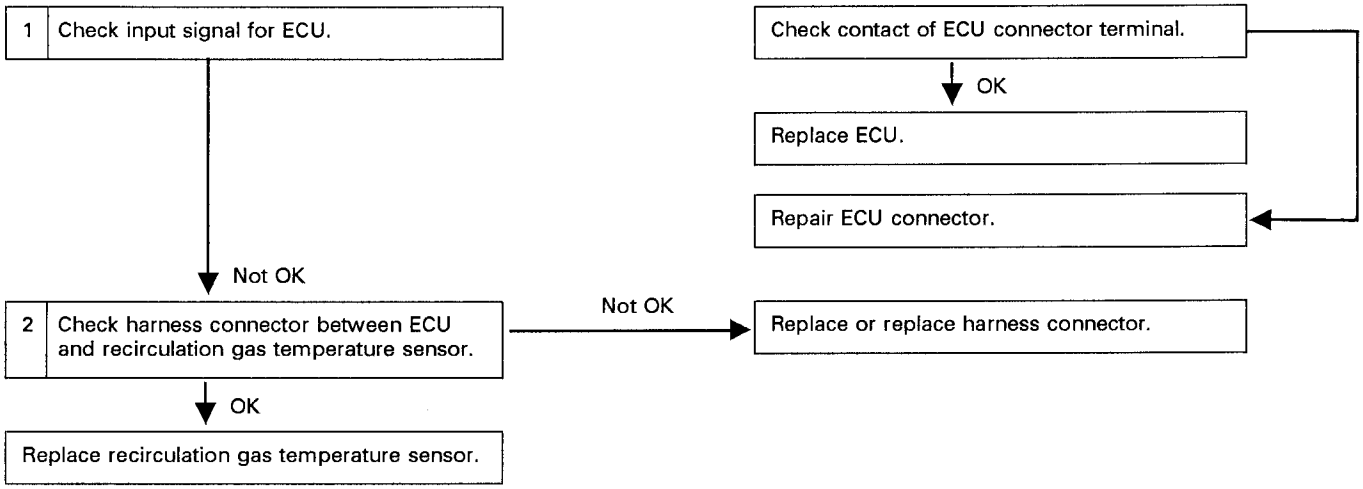

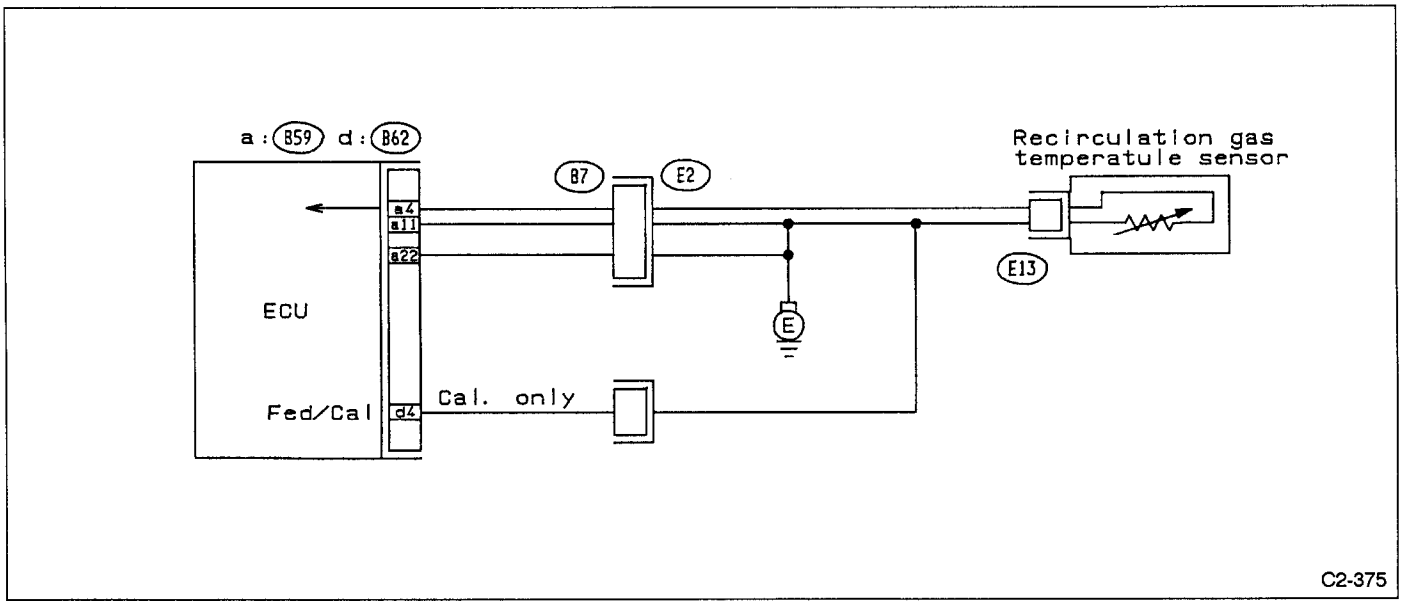

Fig. 100

1. CHECK INPUT SIGNAL FOR ECU.

1) Turn ignition switch to "ON".
2) Measure voltage between ECU connector terminal and body.

Connector & Terminal/Specified voltage
(B59) No. 4 — Body/ 4 — 4.8 V [20°C (68°F)]
0.4 — 1.2 V [100°C (212°F)]

2. CHECK HARNESS CONNECTOR BETWEEN ECU AND RECIRCULATION GAS TEMPERATURE SENSOR.

1) Turn ignition switch to "OFF".
2) Disconnect recirculation gas temperature sensor connector.
3) Measure resistance of harness connector between gas temperature sensor and ECU.

Connector & Terminal/Specified resistance
(E59) No. 4 — (E13) No. 2/0 Ω
(E59) No. 11 — (E13) No. 1/0 Ω

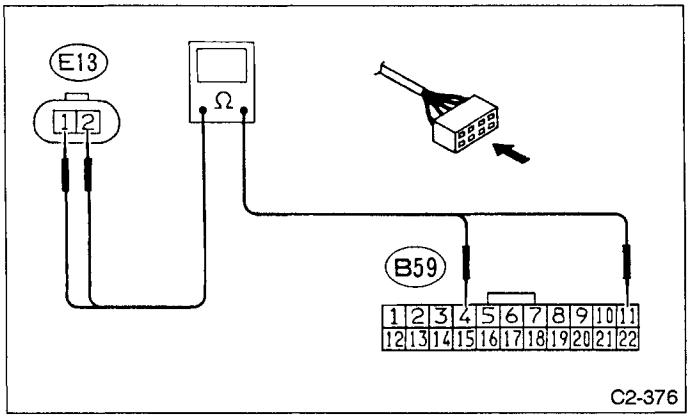

Fig. 101

4) Measure resistance between sensor connector terminal and body to check short circuit.

Connector & Terminal/Specified resistance
(E13) No. 2 — Body/1 MΩ min.

W: TROUBLE CODE (56) — EGR SYSTEM —

DIAGNOSIS:
Mechanical trouble for EGR valve, EGR vacuum controller and/or EGR line

TROUBLE SYMPTOM:
- Poor driving performance on low engine speed

EGR valve may be stuck "OPEN" or "CLOSE".
Refer to C.2-1 "EGR system".

10. Troubleshooting Chart with Select Monitor

A: BASIC TROUBLESHOOTING CHART

If no trouble codes appear in the Read Memory, U-Check or D-check mode (although problems have occurred or are occurring), measure performance characteristics of sensors, actuators, etc., in the "F" mode (select-monitor function), and compare with the "basic data" to determine the cause of problems.
Applicable cartridge of select monitor: No. 498347500

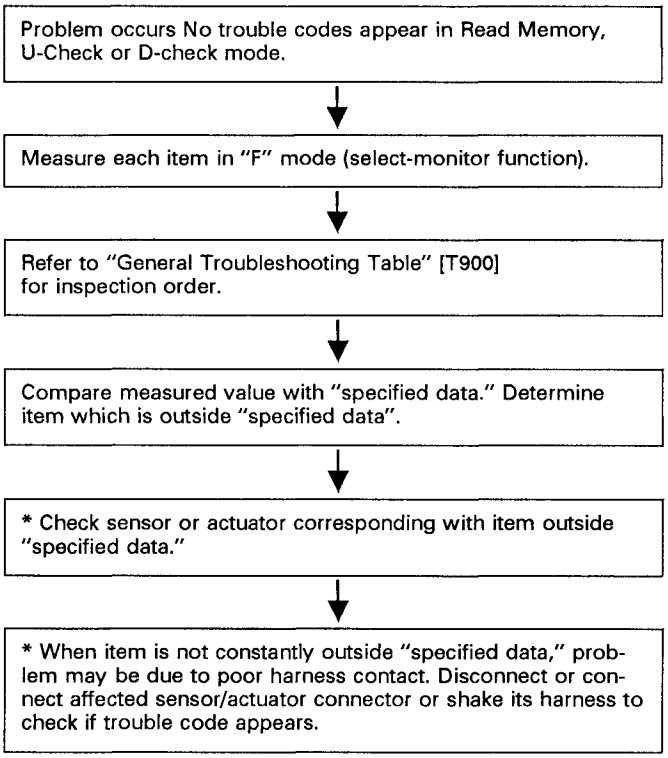

B: MODE F00 — ROM ID number (YEAR) —

CONDITION:
Ignition switch "ON"

SPECIFIED DATA:
Presentation display; 1992 (F00) EGI

- **Probable cause (Item outside "specified data")**

Error 1	Check for loose or disconnected connector, and discontinued circuit, etc.
Error 2	Check for poor contact of cartridge, or different type cartridge.

C: MODE 01 — Battery voltage (VB) —

CONDITION:
(1) Ignition switch "ON"
(2) Idling after warm-up

SPECIFIED DATA:
(1) 10 to 12V
(2) 12 to 14V

- **Probable cause (Item outside "specified data")**

1.	Battery	Check battery voltage and electrolyte's specific gravity.
2.	Charging system	• Check regulating voltage. (On no-load) • Check alternator.

D: MODE F02, F03 — Vehicle speed signal (VSP) —

CONDITION:
Driving at constant speed.

SPECIFIED DATA:
Compare speedometer with monitor indications.

- **Probable cause (Item outside "specified data")**

1.	Harness connector between ECU and vehicle speed sensor 2	• Harness connector damaged. • Poor contact of connector terminal.
		NO
2.	Vehicle speed sensor 2.	Check vehicle speed sensor 2. **(Refer to [T7M0])**

a. F02: Vehicle speed is indicated in mile per hour.
b. F03: Vehicle speed is indicated in kilometer per hour.

E: MODE F04 — Engine speed signal (EREV) —

CONDITION:
Operate engine at constant speed.

SPECIFIED DATA:
Compare engine speed indicated on tachometer.

- **Probable cause (Item outside "specified data")**

1.	Crank angle sensor 1.	Check output signal from crank angle sensor 1. **(Refer to [T7B0])**

F: MODE F05, F06 — Water temperature signal (TW) —

CONDITION:
Idling after warm-up.

SPECIFIED DATA:
F05: 176 to 194 degF
F06: 80 to 90 degC

- **Probable cause (Item outside "specified data")**

1.	Water temperature sensor	Check water temperature sensor. **(Refer to [T7F0])**

a. F05: Water temperature is indicated in "degF".
b. F06: Water temperature is indicated in "degC".

G: MODE F06 — Ignition timing (ADVS) —

CONDITION:
- Idling after warm-up
- Shift in "N" position

SPECIFIED DATA:
12 deg to 28 deg

- **Probable cause (Item outside "specified data")**

1.	Load data	Check "MODE F09".
		OK
2.	Air flow sensor	Check "MODE F08". (Air flow signal)
		OK
3.	Throttle sensor	Check "MODE F10". (Throttle position signal)
		OK
4.	Knock sensor	Check "MODE F21". (Knock sensor signal)

H: MODE F08 — Air flow signal (QA) —

CONDITION:
Idling after warm-up

SPECIFIED DATA:
0.8 to 1.2 V

- **Probable cause (Item outside "specified data")**

1.	Air flow sensor	Check air flow sensor output signal. **(Refer to [T7G0])**

I: MODE F09 — Load data (LDATA) —

CONDITION:
Idling after warm-up

SPECIFIED DATA:
15 to 25

- **Probable cause (Item outside "specified data")**

1.	Air flow sensor	Check "MODE: F08".
2.	Engine speed	Check "MODE: F04".
3.	Crank angle sensor 1	Check crank angle sensor 1. **(Refer to [T7A0])**

J: MODE F10 — Throttle position signal (THV) —

CONDITION:
Check while changing throttle valve from "full-close" to "full-open".

SPECIFIED DATA:
0.5 → 4.5 V
(Voltage change must be smooth.)

- **Probable cause (Item outside "specified data")**

1.	Throttle sensor	Check throttle sensor. **(Refer to [T7K0])**

K: MODE F11 — Injector pulse width (TIM) —

CONDITION:
Idling after warm-up

SPECIFIED DATA:
3.0 to 3.7 mS

1.	Engine under load (Load data)	→	Check "MODE: F09".
		OK	
2.	A/F correction coefficient	→	Check "MODE: F19" and "MODE: F20".
		OK	
3.	Water temperature signal	→	Check "MODE: F05" or "MODE: F06"
		OK	
4.	O_2 sensor signal	→	Check "MODE: F13" and "MODE: F14"
		OK	
5.	Vehicle speed signal	→	Check "MODE: F02" or "MODE: F03"
		OK	
6.	Air flow signal	→	Check "MODE: F08"
		OK	
7.	By-pass air control	→	Check "MODE: F12"
		OK	
8.	Battery voltage	→	Check "MODE: F01"

L: MODE F12 — By-pass air control (ISC) —

CONDITION:
- Idling after warm-up
- A/C "OFF"
- Radiator fan "OFF"
- Battery voltage: Greater than 13 V
- Sea level (Not high altitudes)

SPECIFIED DATA:

30 to 40%

- **Probable cause (Item outside "specified data")**

1.	Water temperature signal	→	Check "MODE: F05" or "MODE: F06"
		OK	
2.	Neutral switch	→	Check neutral switch. **(Refer to [T7T0])**
		OK	
3.	Parking switch	→	Check parking switch. **(Refer to [T7U0])**

M: MODE F13, F14 — O_2 sensor signal 1, 2 (01R, 02L) —

CONDITION:
Idling after warm-up

SPECIFIED DATA:
0 to 1.0 V

- **Probable cause (Item outside "specified data")**

1. Injector pulse width → Check "MODE: F11"
   - OK
2. O_2 sensor 1 or 2 → Check O_2 sensor 1 or 2 **(Refer to [T7I0] or [T7L0])**

N: MODE F15, F17 — O_2 Max. (O_2 Rmax, O_2 Lmax) —

CONDITION:
Idling after warm-up

SPECIFIED DATA:
0.8 to 0.9 V

- **Probable cause (Item outside "specified data")**

1. Injector pulse width → Check "MODE: F11"
   - OK
2. O_2 sensor 1 or 2 → Check O_2 sensor 1 or 2 **(Refer to [T7I0] or [T7L0])**

O: MODE F16, F18 — O_2 Min. (O_2 Rmin, O_2 Lmin) —

CONDITION:
Idling after warm-up

SPECIFIED DATA:
0.05 to 0.12 V

- **Probable cause (Item outside "specified data")**

1. Injector pulse width → Check "MODE: F11"
   - OK
2. O_2 sensor 1 or 2 → Check O_2 sensor 1 or 2 **(Refer to [T7I0] or [T7L0])**

P: MODE F19, F20 — A/F correction coefficient 1, 2 (ALPHA1, ALPHA 2) —

CONDITION:
Idling after warm-up

SPECIFIED DATA:
– 1.6 to + 1.6

• Probable cause (Item outside "specified data")

1.	O_2 sensor signal	→	Check "MODE: F13" and "MODE: F14"
			OK
2.	Air flow signal	→	Check "MODE: F08"
			OK
3.	Injector pulse width	→	Check "MODE: F11"

Q: MODE F21 — Knock sensor signal (RTRD) —

CONDITION:
• Engine warm-up
• Engine speed low to high

SPECIFIED DATA:
– 10 to + 10 deg

• Probable cause (Item outside "specified data")

1.	Knock sensor 1 and/or 2	→	Check knock sensor 1 and/or 2 **(Refer to [T7F0], [T7I0])**

R: MODE F22 — Canister purge control (CPCD) —

CONDITION:
Idling after warm-up

SPECIFIED DATA:

• Probable cause (Item outside "specified data")

1.	Purge control solenoid valve	→	Check purge control solenoid valve **(Refer to [T700])**

S: MODE F23 — Atmospheric pressure (BARO. P) —

CONDITION:
• Ground surface (Not high altitude)
• Engine at idle

SPECIFIED DATA:
760 mmHg*

*: "– 9 to + 10 mmHg" changes at an altitude of 100 meters.

• Probable cause (Item outside "specified data")

1.	Atmospheric pressure sensor	→	Replace ECU.

T: MODE FA0 — ON ↔ OFF SIGNAL —

Description		
LED No.	Signal name	Presentation
1	Ignition switch	IG
2	A/C switch	AC
3	Idle switch	ID
4	A/C pressure switch	AP
5	—	—
6	—	—
7	Neutral position switch	NT
8	—	—
9	Power steering switch	PS
10	—	—

IG AC ID AP - -

- - NT - - PS - -

C2-377

Requirement for LED "ON"
1. Ignition switch is turned to "ON".
2. A/C relay is in operation.
3. Throttle valve is fully closed.
4. A/C system is in economy mode.
7. Selector lever is in "N" position.
9. Power steering switch is turned to "ON".

Fig. 102

U: MODE FA1 — ON ↔ OFF SIGNAL —

Description		
LED No.	Signal name	Presentation
1	—	—
2	—	—
3	Test mode position	UD
4	Read memory mode position	RM
5	—	—
6	—	—
7	Engine torque control	TR
8	Parking position switch	PK
9	Fed./Cal. discrimination	FC
10	—	—

- - - - UD RM - -

- - TR PK FC - -

C2-378

Requirement for LED "ON"
3. DIAG. terminal is connected into the test mode terminal in diagnosis connector.
4. DIAG. terminal is connected into the read memory terminal in diagnosis connector.
7. The torque that the engine transmits to the transmission is controlled.
8. Selector lever is in "P" position.
9. 49-states and Canada model.

Fig. 103

V: MODE FA2 — ON ↔ OFF SIGNAL —

Description			Requirement for LED "ON"
LED No.	Signal name	Presentation	
1	—	—	3. Radiator sub fan is in operation.
2	—	—	4. Radiator main fan is in operation.
3	Radiator sub fan	R2	6. Fuel pump is in normal operation.
4	Radiator main fan	R1	7. EGR solenoid valve is in operation.
5	—	—	9. Induction solenoid valve is in operation.
6	Fuel pump modulator	FP	
7	EGR solenoid valve	ER	
8	—	—	
9	Induction solenoid valve	IH	
10	—	—	

-- -- R2 R1 --

FP ER -- IH --

C2-379

Fig. 104

W: MODE FA3 — ON ↔ OFF SIGNAL —

Description			Requirement for LED "ON"
LED No.	Signal name	Presentation	
1	—	—	8. Engine is knocking.
2	—	—	
3	—	—	
4	—	—	
5	—	—	
6	—	—	
7	—	—	
8	Knock sensor 1 and/or 2	KS	
9	—	—	
10	—	—	

-- -- -- -- --

-- -- KS -- --

C2-380

Fig. 105

X: MODE FA4 — ON ↔ OFF SIGNAL —

Description			Requirement for LED "ON"
LED No.	Signal name	Presentation	4. Fuel pump relay is in operation.
1	—	—	
2	—	—	
3	—	—	
4	Fuel pump	FP	
5	—	—	
6	—	—	
7	—	—	
8	—	—	
9	—	—	
10	—	—	
-- -- -- FP --			
-- -- -- -- --			
C2-381			

Y: MODE FA5 — ON ↔ OFF SIGNAL —

Description			Requirement for LED "ON"
LED No.	Signal name	Presentation	5. A/F ratio of right side cylinder is rich. 6. A/F ratio of left side cylinder is rich.
1	—	—	
2	—	—	
3	—	—	
4	—	—	
5	O_2 monitor RH	OR	
6	—	—	
7	—	—	
8	—	—	
9	—	—	
10	O_2 monitor LH	OL	
-- -- -- -- OR			
-- -- -- -- OL			
C2-415			

SUBARU

SVX

1992

		Page
M	MECHANISM AND FUNCTION	2
	1. Fuel Lines	2
	2. Fuel Tank	3
	3. Fuel Pump	4
	4. Jet Pump	5
	5. Fuel Filter	6
	6. Roll Over Valve	7
S	SPECIFICATIONS AND SERVICE DATA	8
C	COMPONENT PARTS	9
	1. Fuel Tank	9
	2. Fuel Lines	10
W	SERVICE PROCEDURE	11
	1. Precautions	11
	2. On Car Service	11
	3. Fuel Tank	12
	4. Fuel Filler Pipe	14
	5. Fuel Filter	15
	6. Fuel Pump	16
	7. Fuel Meter Unit	17
	8. Fuel Delivery, Return and Evaporation Lines	18
	9. Roll Over Valve with Two-way Valve	19
	10. Canister	20
T	TROUBLESHOOTING	21

M MECHANISM AND FUNCTION

1. Fuel Lines

The fuel lines consist of a delivery line, return line, and an evaporation line. The delivery line supplies fuel from the fuel tank to the intake manifold and consists of a pump filter, fuel pump and fuel filter. And the jet pump is used to prevent fuel from remaining in one of the two tank chambers.

The return line returns excess fuel to the fuel tank via the pressure regulator to maintain a constant level of fuel pressure.

The evaporation line consists of a fuel cut valve, roll over valve which is equipped with a two-way valve, canister and purge control solenoid valve.

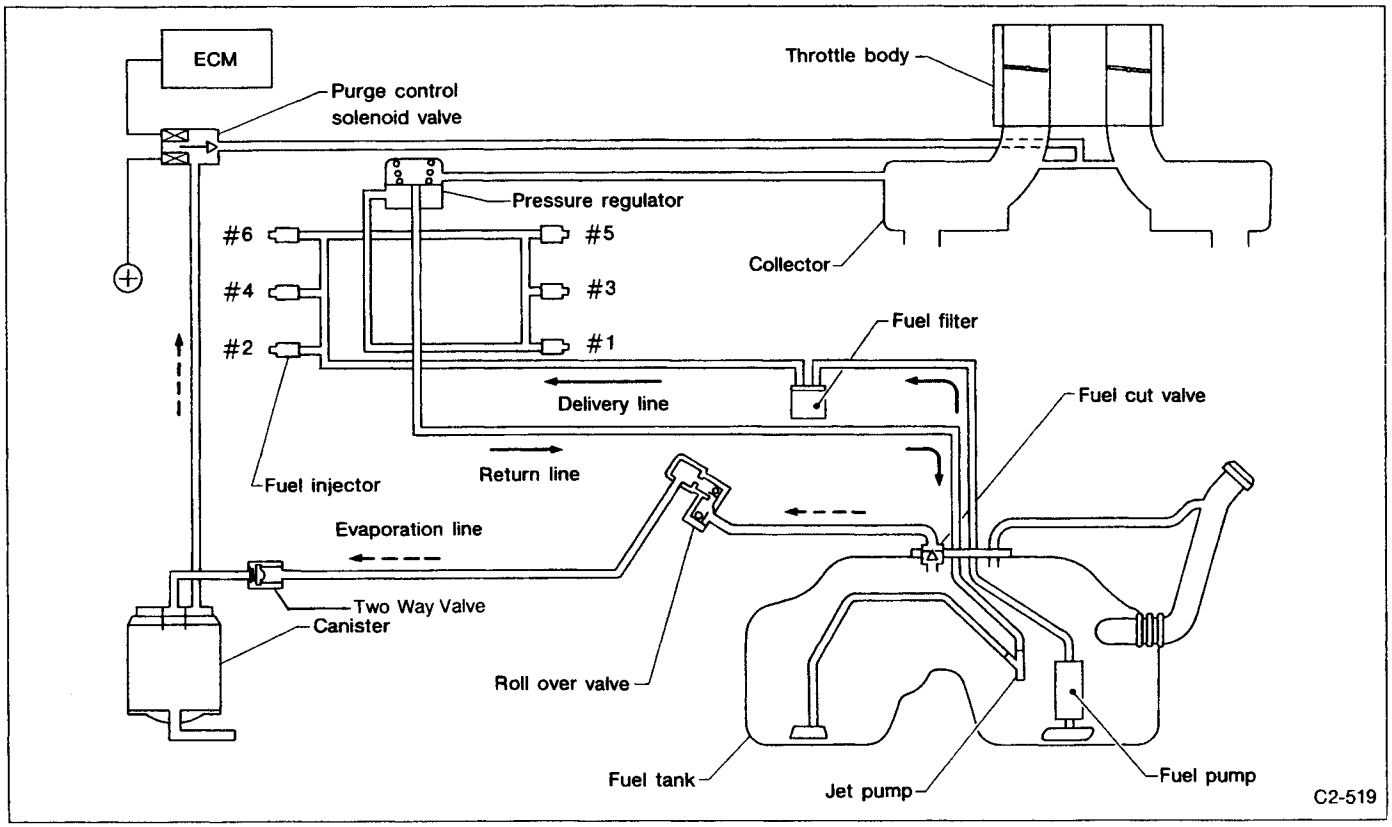

Fig. 1

2. Fuel Tank

The fuel tank is made of plastic, so that it is lighter than one made of metal, and in addition will never become rusty.
The fuel tank has two chambers, and is provided with a suction jet pump which transfers fuel from one chamber to another.

The fuel tank is located under the rear seat and secured with holddown bands.

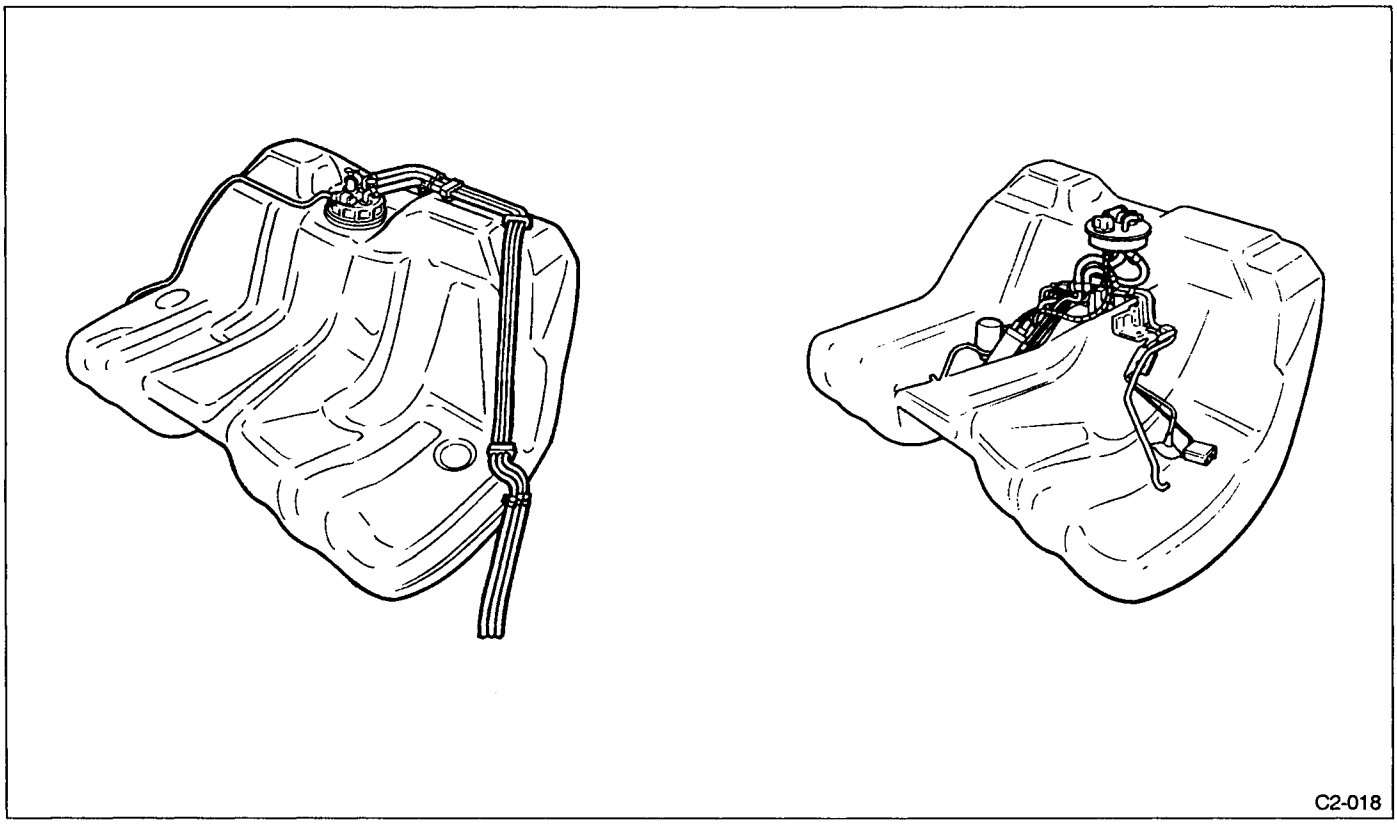

Fig. 2

3. Fuel Pump

A: CONSTRUCTION

The fuel pump is an impeller type. It is built into the fuel tank together with the fuel meter unit to provide quiet operation. The fuel pump consists of a motor, impeller, pump casing, pump cover, relief valve, check valve and pump filter.

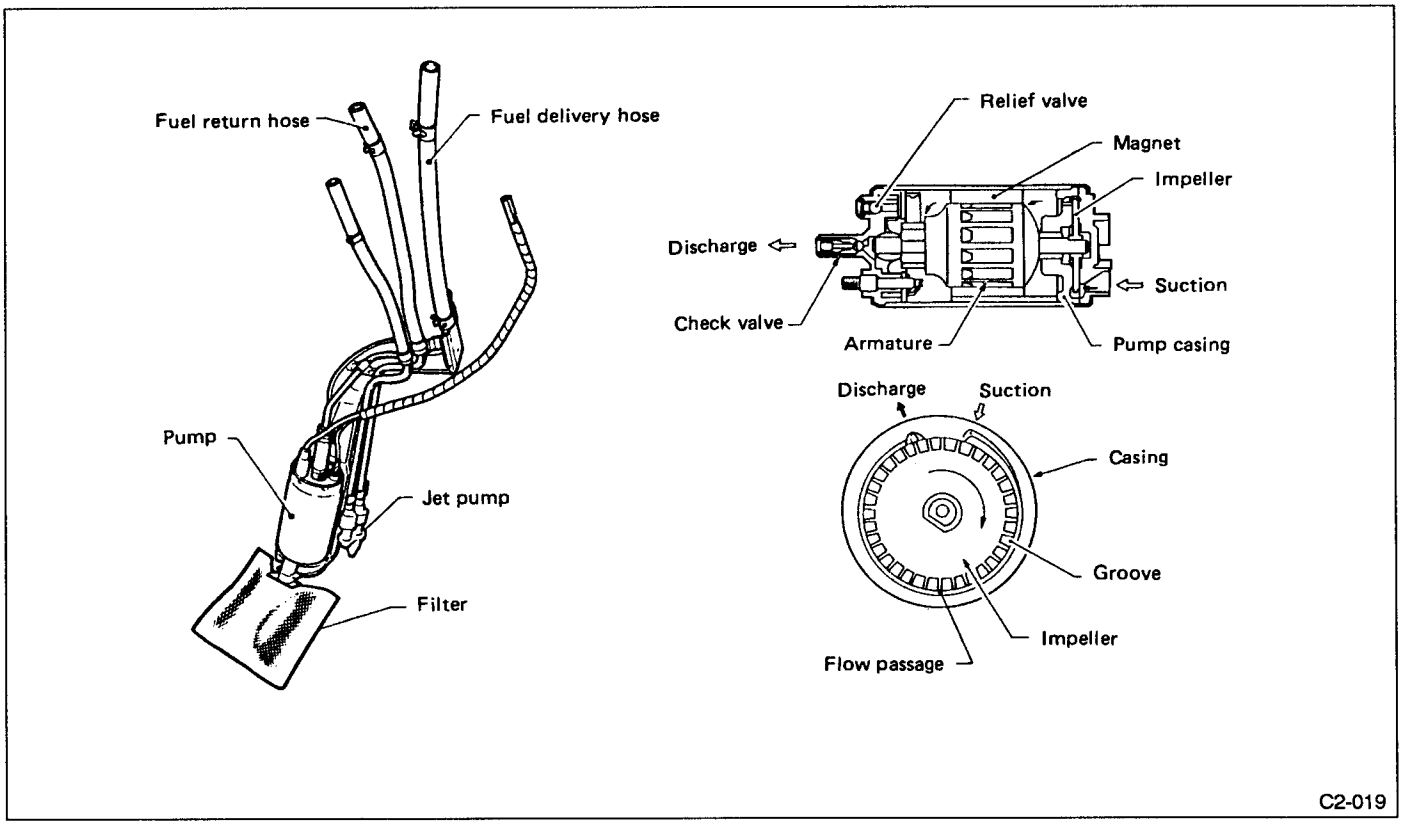

Fig. 3

B: OPERATION

1) When the engine starts, fuel pump relay activates. This operates the motor to rotate the impeller.
2) Fuel entering a vane groove of the impeller flows along the fuel passage and into the next vane groove by centrifugal force. During the time fuel flows from one groove to the next, a pressure differential is produced by friction of the flow.
3) Thus, fuel pressure increases while the action is described in step 2) above is repeated, and fuel is discharged from the pump casing. Fuel under pressure then passes through the clearance between the armature and the magnet and is discharged from the fuel pump.
4) As fuel discharge pressure reaches the specified value, the relief valve opens. This discharges fuel under pressure into the fuel tank. Fuel from the fuel tank then returns to the suction port and passes through the fuel pump. This action of fuel flow is repeated. In this manner, the relief valve prevents an abnormal increase in fuel pressure.
5) When the engine and fuel pump stop, spring force acts on the check valve to close the discharge port so that fuel pressure remains in the fuel delivery line.

4. Jet Pump

The jet pump utilizes the velocity of fuel returning from the engine to produce negative pressure inside the jet pump. This negative pressure allows fuel to be sucked up.

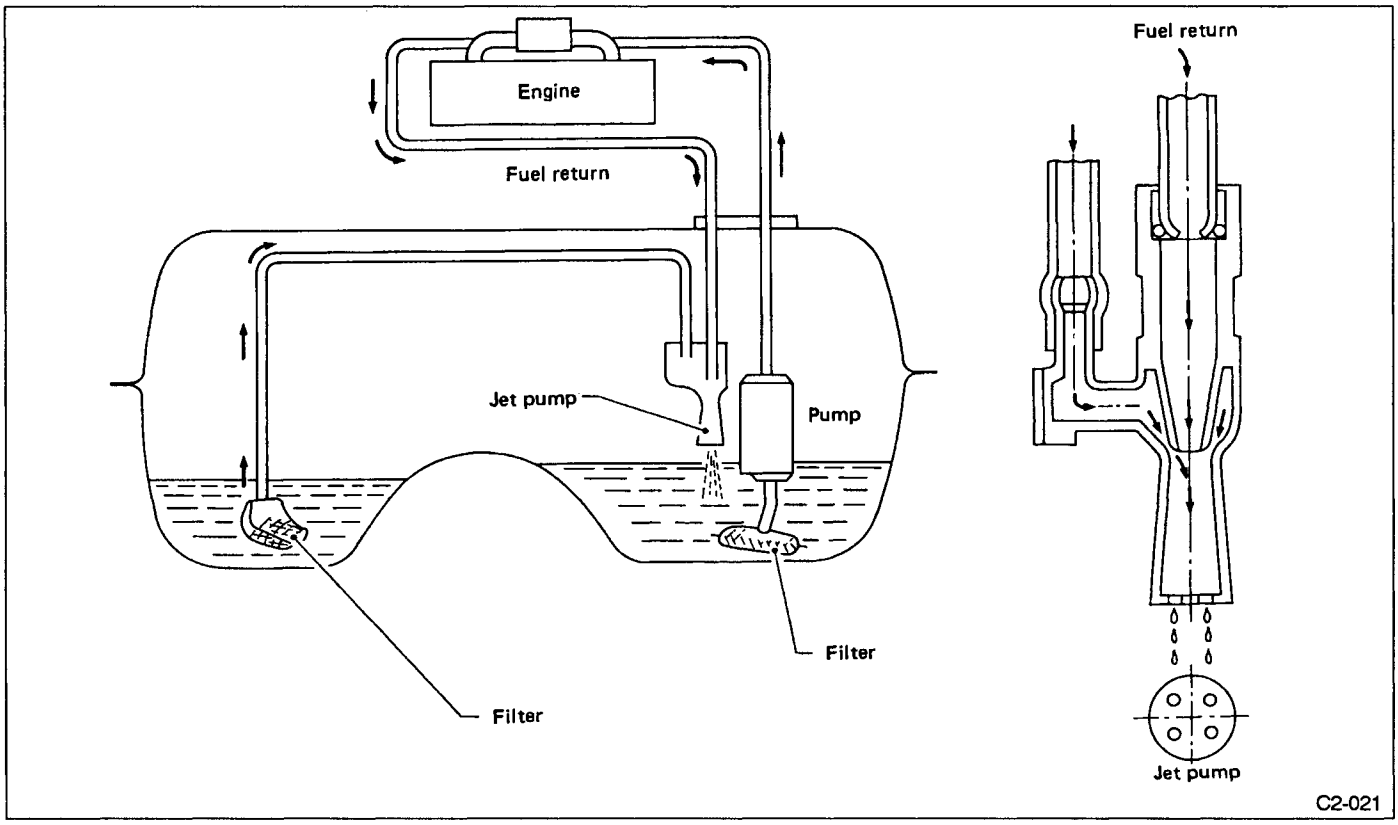

Fig. 4

5. Fuel Filter

The fuel filter utilizes a pressure-withstanding, cartridge design. It has a filter element built into the metal case. With this design, fuel flows from the perimeter of the element to the interior of the filter.

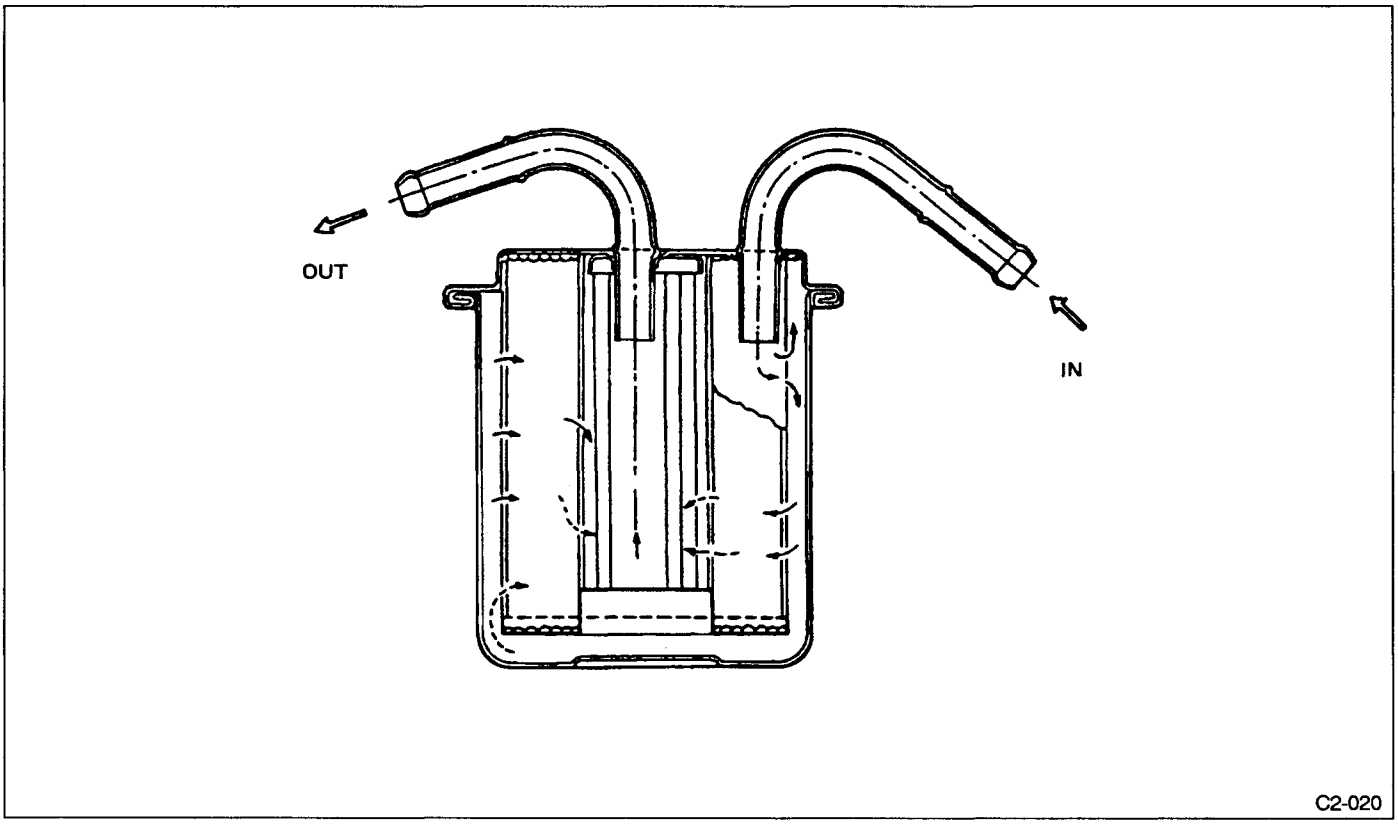

Fig. 5

6. Roll Over Valve

The roll over valve is for prevention of fuel leakage in the event of the vehicle rolling over.

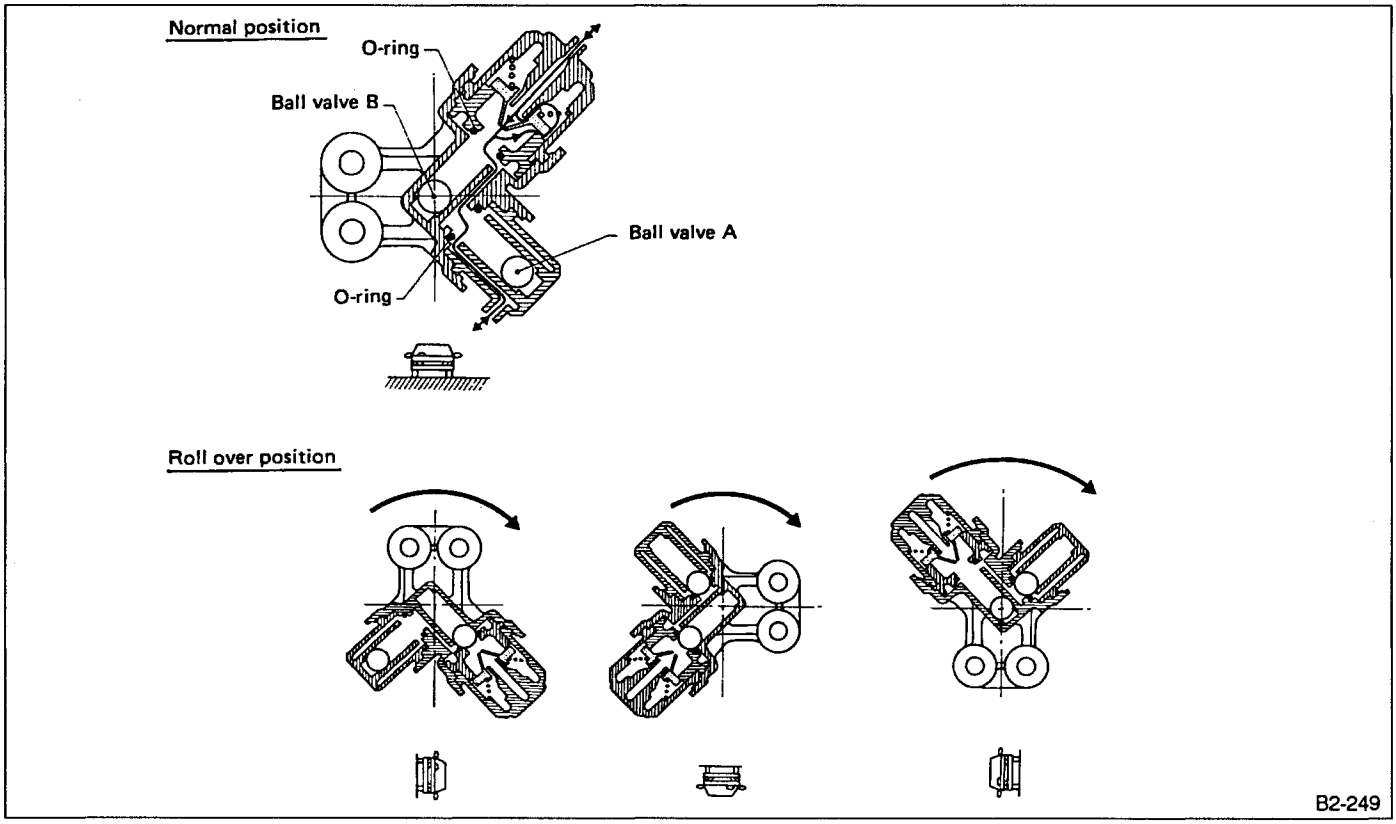

Fig. 6

S SPECIFICATIONS AND SERVICE DATA

A: SPECIFICATIONS

Fuel tank	Capacity	70 ℓ (18.5 US gal, 15.4 Imp gal)
	Location	Under rear seat
Fuel pump	Type	Impeller
	Discharge pressure	250.1 kPa (2.55 kg/cm^2, 36.3 psi)
	Discharge flow	More than 140 ℓ (37.0 US gal, 30.8 Imp gal)/H min. [12V at 250.1 kPa (2.55 kg/cm^2, 36.3 psi)]
Fuel filter		Cartridge type

C COMPONENT PARTS

1. Fuel Tank

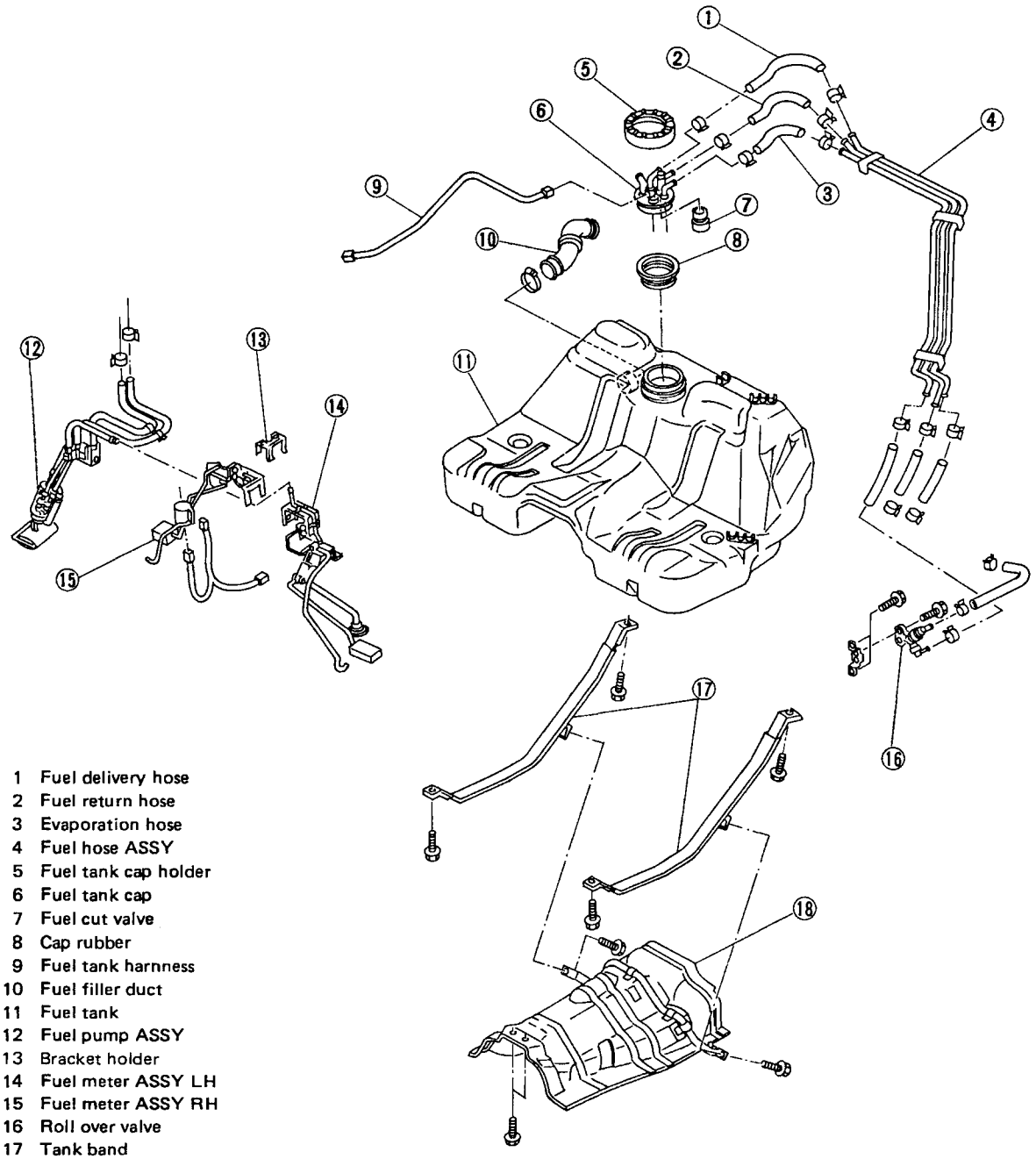

1 Fuel delivery hose
2 Fuel return hose
3 Evaporation hose
4 Fuel hose ASSY
5 Fuel tank cap holder
6 Fuel tank cap
7 Fuel cut valve
8 Cap rubber
9 Fuel tank harnness
10 Fuel filler duct
11 Fuel tank
12 Fuel pump ASSY
13 Bracket holder
14 Fuel meter ASSY LH
15 Fuel meter ASSY RH
16 Roll over valve
17 Tank band
18 Heat seled cover

C2-022

Fig. 7

C COMPONENT PARTS

2. Fuel Lines

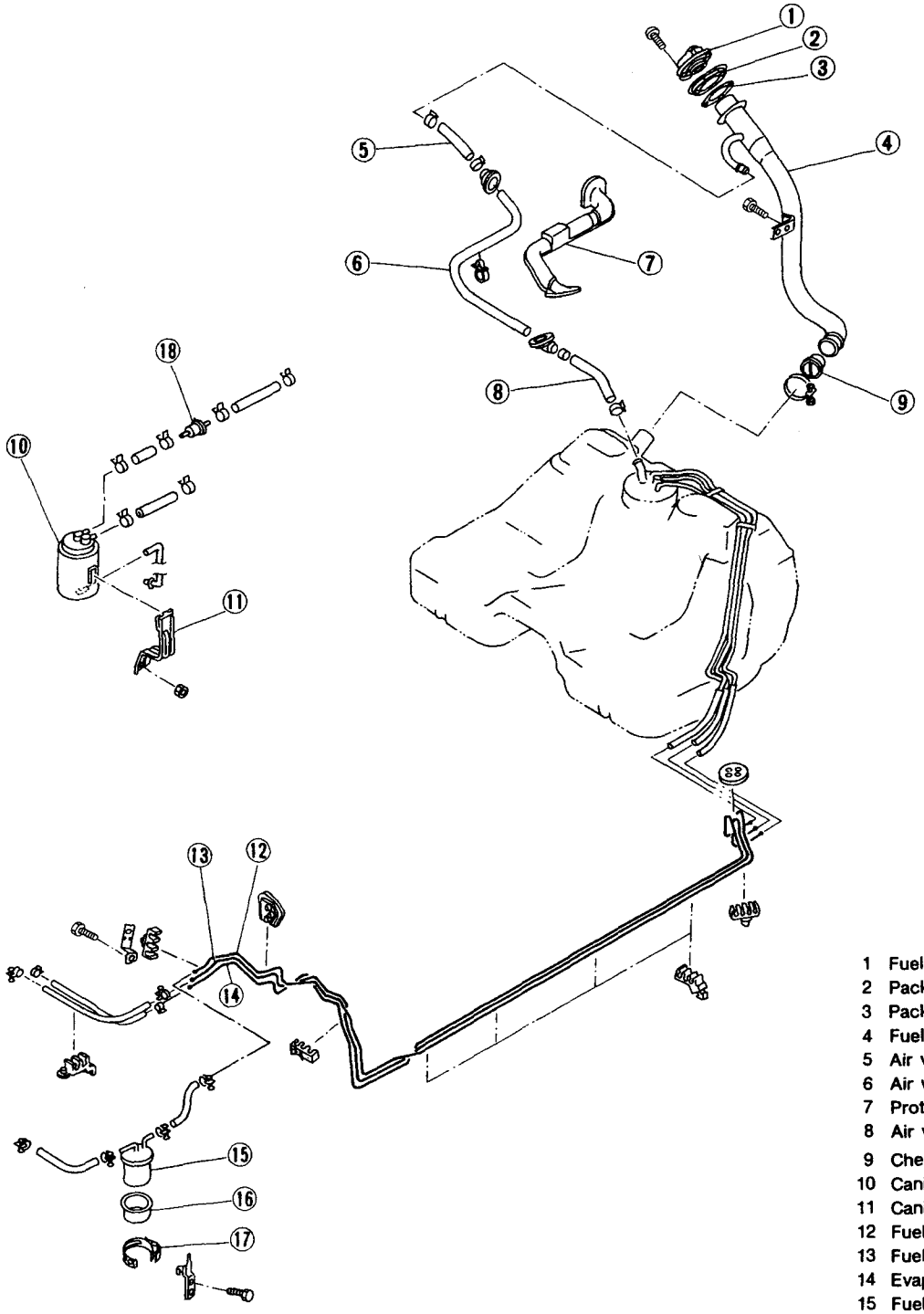

1 Fuel filler cap
2 Packing
3 Packing
4 Fuel filler pipe
5 Air vent hose A
6 Air vent pipe
7 Protector
8 Air vent hose B
9 Check valve
10 Canister
11 Canister bracket
12 Fuel delivery pipe
13 Fuel return pipe
14 Evaporation pipe
15 Fuel filter
16 Filter cap
17 Filter holder
18 Two-way valve

C2-521

Fig. 3

W SERVICE PROCEDURE

1. Precautions

a. Before starting the job, be sure to carry out the following.
1) Place "No fire" signs near the working area.
2) Disconnect ground cable from battery.
b. Be careful not to spill fuel on the floor.

A: RELEASING OF FUEL PRESSURE

1) Fold down the rear seat back, and turn up the floor mat.
2) Remove access hole lid.
3) Disconnect fuel pump connector.

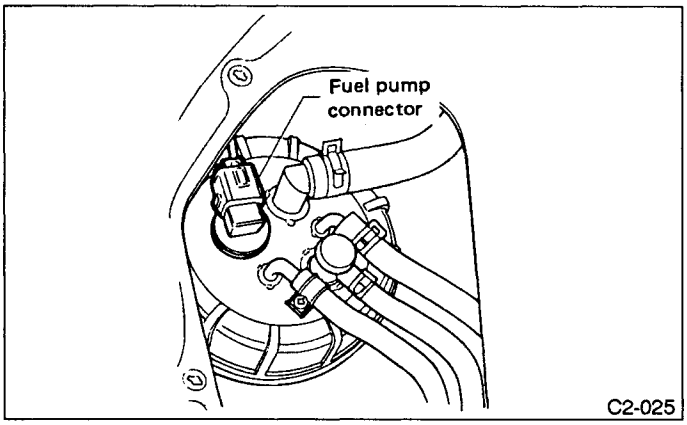

Fig. 9

4) Start the engine, and run it until it stalls.
5) After the engine has stalled, crank it for five more seconds.
6) Turn ignition switch "OFF".

2. On Car Service

A: MEASUREMENT OF FUEL PRESSURE

1) Release fuel pressure.
Refer to Section 1. [W1A0].
2) Connect fuel pump connector.
3) Install fuel pressure gauge.
(1) Disconnect fuel hose from fuel filter.
(2) Connect fuel pressure gauge between fuel filter and fuel hose.

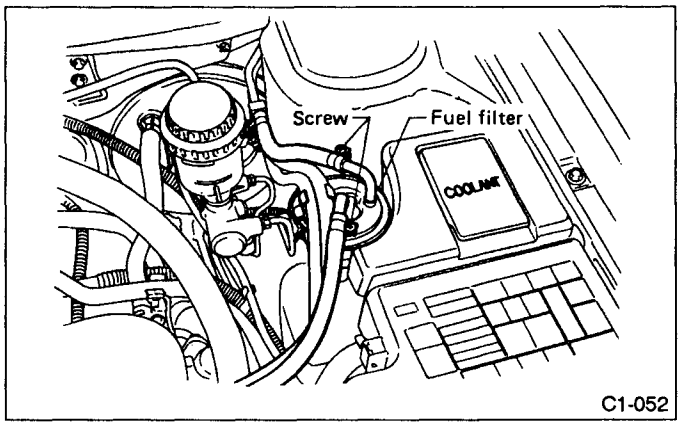

Fig. 10

4) Start the engine.
5) Measure fuel pressure while disconnecting pressure regulator vacuum hose from right side collector chamber.

Fuel pressure:
235 — 265 kPa (2.4 — 2.7 kg/cm², 34 — 38 psi)

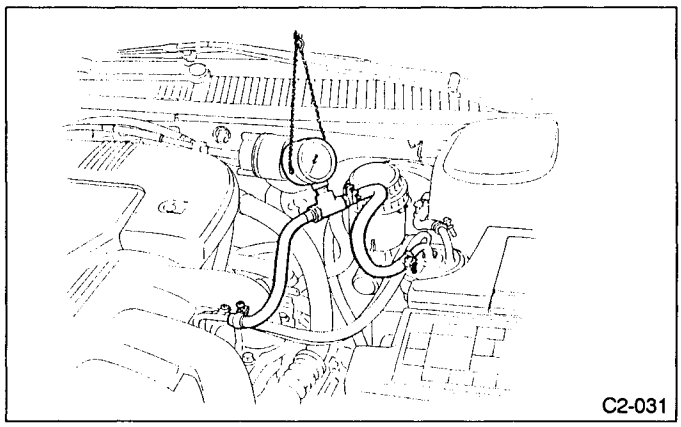

Fig. 11

6) After connecting pressure regulator vacuum hose, measure fuel pressure.

Fuel pressure:
177 — 206 kPa (1.8 — 2.1 kg/cm², 26 — 30 psi)

a. If out of specification as measured at step 6), replace pressure regulator.
b. Before removing fuel pressure gauge, release fuel pressure.

3. Fuel Tank

A: REMOVAL

1) Release the fuel pressure.
Refer to section 1. Precautions [W1A0].
2) Disconnect fuel hose and air vent hose, and remove fuel tank cap with special tool.

Special tool:
REPLACER (42911PA000)

3) Drain fuel from tank.
4) Install fuel tank cap.
5) Disconnect fuel tank connector.

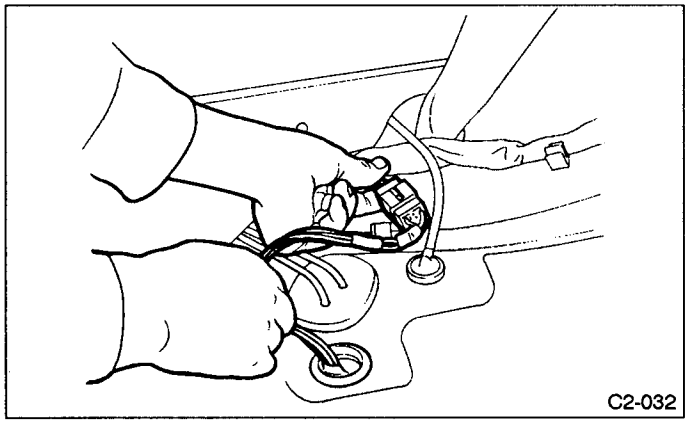

Fig. 12

6) Lift up the vehicle.
7) Remove rear exhaust pipe and muffler ASSY.
Refer to C.2-9.
8) Separate rear axle shaft from rear differential ASSY.
Refer to C.4-2.

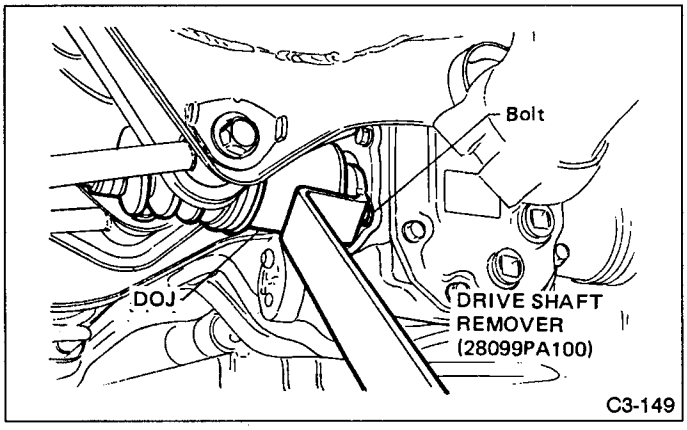

Fig. 13

9) Remove propeller shaft and rear differential ASSY.
Refer to C.3-4.
10) Remove rear sub-frame.
Refer to C.4-1.

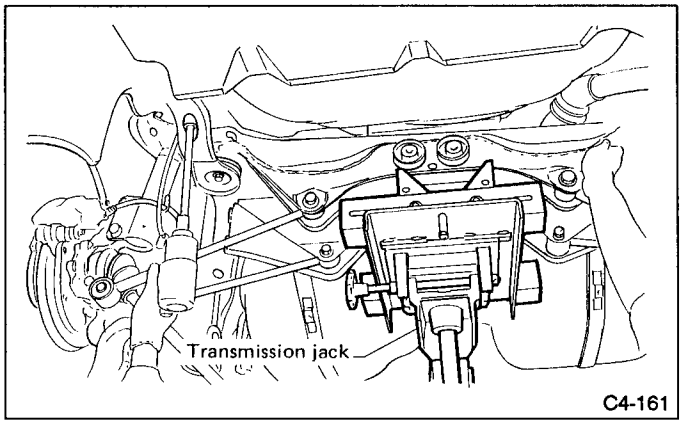

Fig. 14

11) Separate fuel filler duct from pipe.

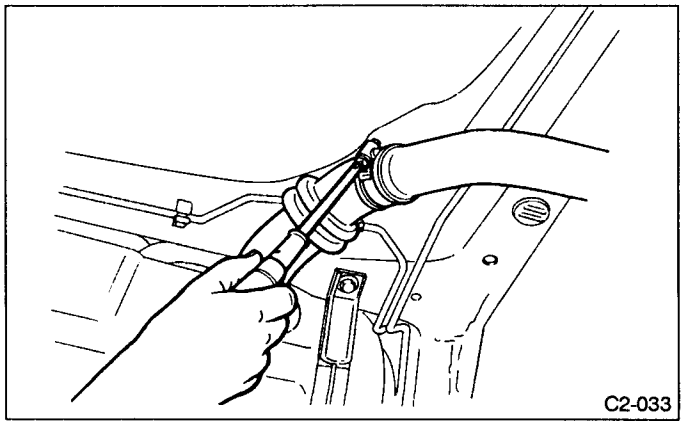

Fig. 15

12) Disconnect fuel delivery hose, return hose and evaporative hose from each pipe.

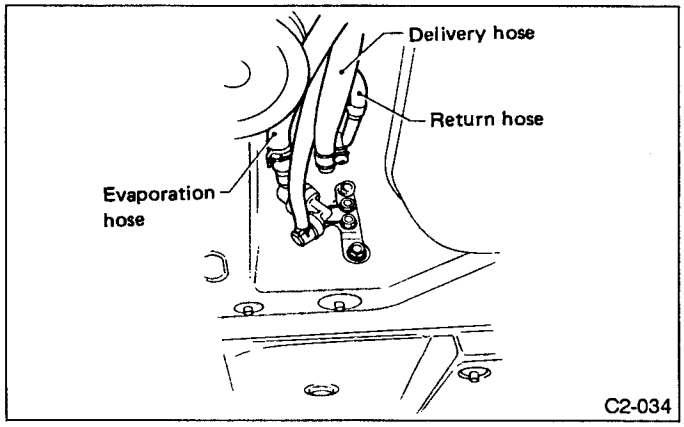

Fig. 16

13) While holding fuel tank, remove bolts from bands and dismount fuel tank.

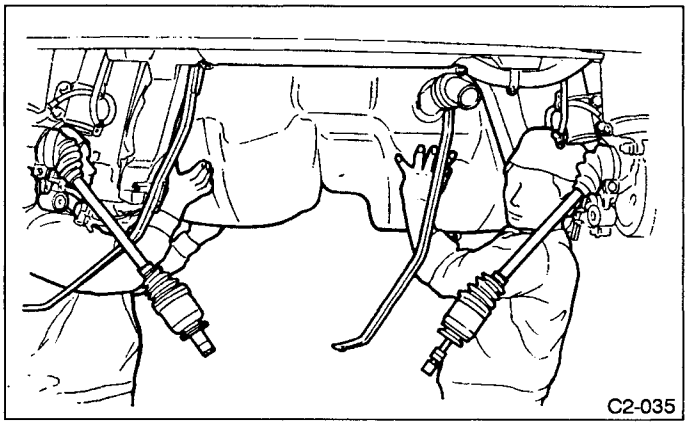

Fig. 17

Two man are required to perform step 13) above.

B: INSTALLATION

Installation is in the reverse order of removal procedures.
Observe the following:
1) When installing fuel tank, have a helper hold fuel tank while installing bands.
Be careful not to damage fuel tank.
2) Before tightening band mounting bolts, connect fuel system hoses.
3) Install hose and tube holddown clips at positions indicated in the figure.

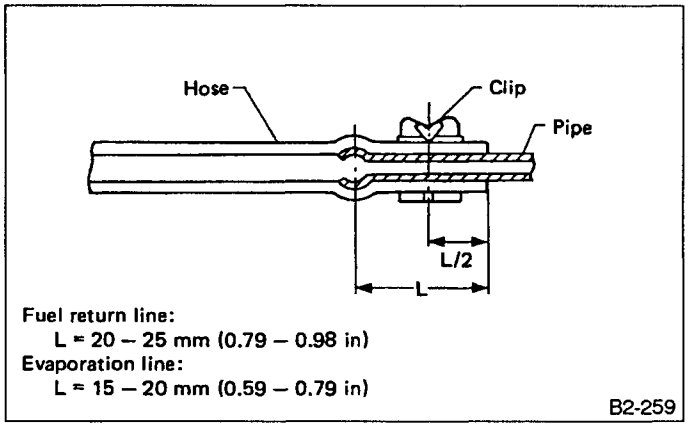

Fig. 18

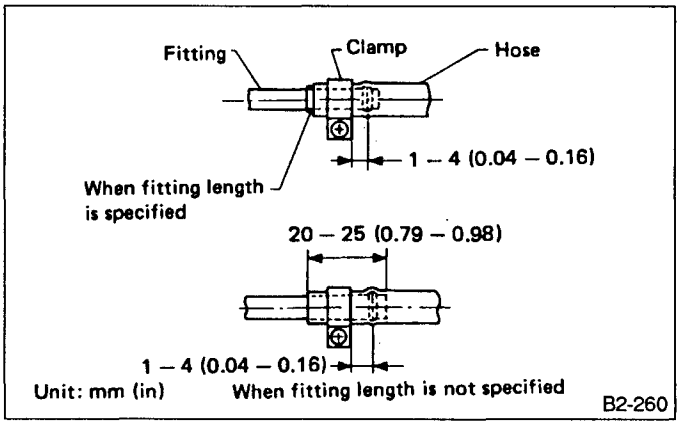

Fig. 19

Tightening torque:
1.0 — 1.5 N•m (0.1 — 0.15 kg-m, 0.7 — 1.1 ft-lb)

4) Tighten band mounting bolts.

Tightening torque:
23 — 42 N•m (2.3 — 4.3 kg-m, 17 — 31 ft-lb)

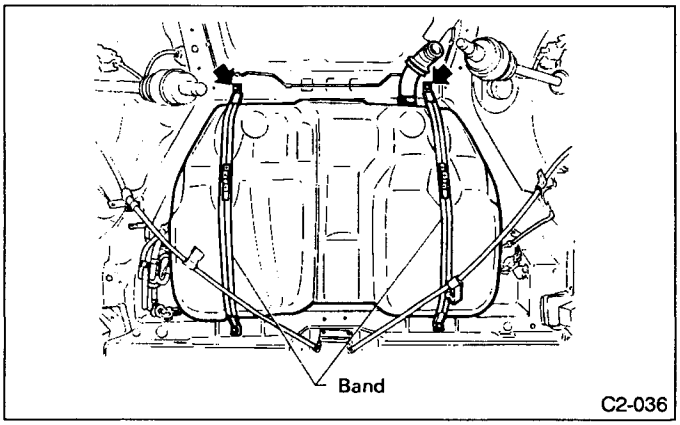

Fig. 20

5) Install rear sub-frame.
Refer to C.4-3.
6) Install rear differential ASSY and propeller shaft.
Refer to C.3-4.
7) Connect rear axle shaft for rear differential ASSY.
Refer to C.4-2.
8) Install muffler and rear exhaust pipe.
Refer to C.2-9.
9) Lower the vehicle.
10) Connect fuel tank connector.

4. Fuel Filler Pipe

A: REMOVAL

1) Completely drain fuel from fuel tank.
2) Install fuel tank cap.
3) Open fuel filler flap and remove filler cap.
4) Remove right rear wheel.
5) Remove screws holding packing in place.

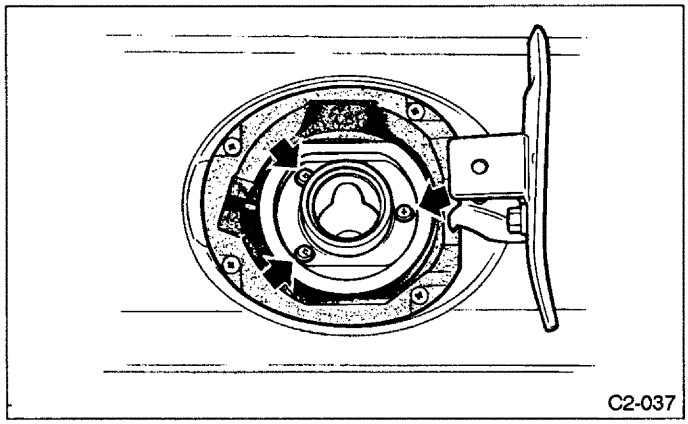

Fig. 21

6) Lift up the vehicle.
7) Separate fuel filler pipe from duct.

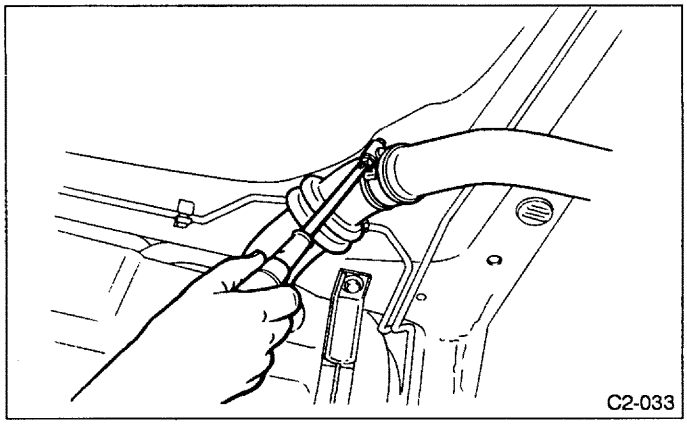

Fig. 22

8) Remove right side rear fender cover.
9) Remove fuel filler pipe from the vehicle.
10) Separate air vent hose from tube.

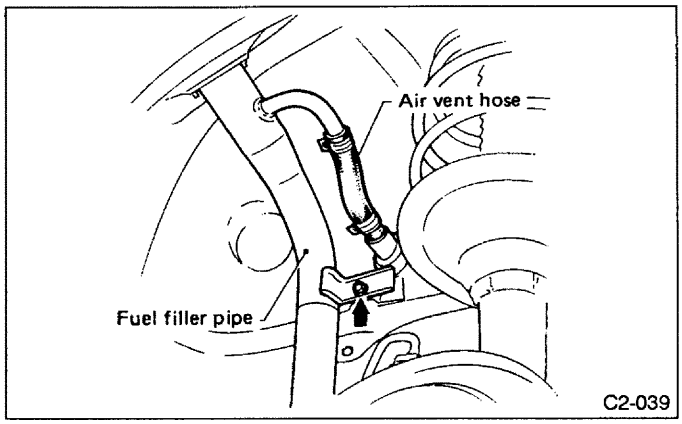

Fig. 23

Place a container under pipe connection to catch fuel which way remain in filler pipe.

B: INSTALLATION

1) Hold fuel filler flap open.
When installing check valve on filler pipe, ensure it faces in correct direction.
2) Insert fuel filler pipe into hole in fuel saucer from the inner side of apron. Align holes in fuel filler pipe neck and packing and tighten screws.

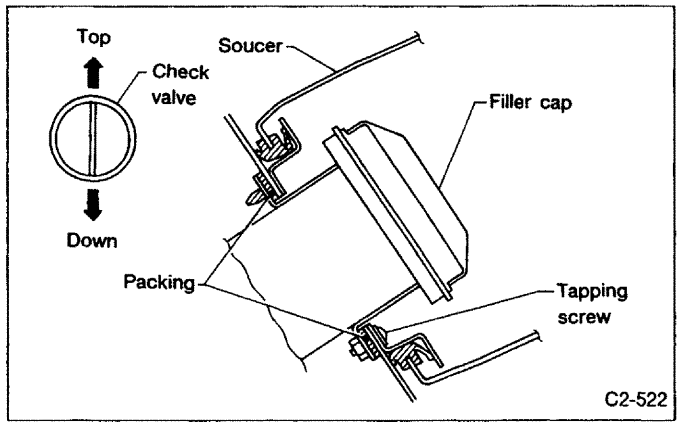

Fig. 4

3) If edges of rubber packing are folded toward the inside, straighten it with a standard screwdriver.
4) Insert fuel filler hose approximately 25 to 30 mm (0.98 to 1.18 in) over the lower end of fuel filler pipe and tighten clamps. Do not allow clips to touch air vent hose, air breather hoses and rear suspension crossmember.
5) Insert air vent hose approximately 25 to 30 mm (0.98 to 1.18 in) into the lower end of air vent pipe and tighten with clips.

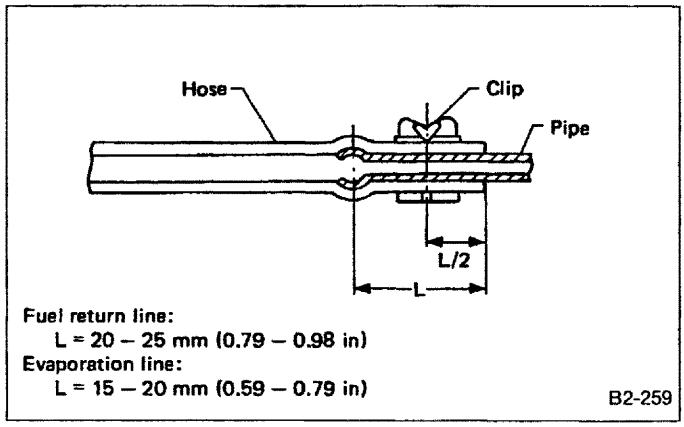

Fig. 5

6) Install protector together with fuel filler pipe. Check to be sure clamp for filler hose and clip for air vent hose do not touch body.

5. Fuel Filter

A: REMOVAL

1) Release the fuel pressure.
Refer to Section 1. [W1A0].
2) Loosen the screw of the hose clamp and pull off the hose from the filter.
3) Remove the filter from the holder.

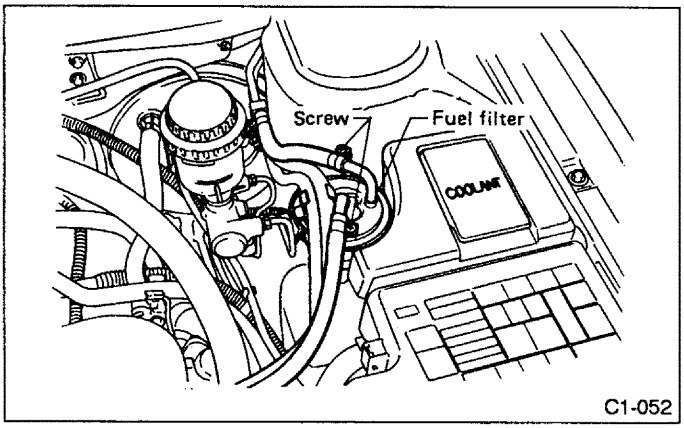

Fig. 26

B: INSPECTION

1) Check the inside of the filter for dirt and water sediment.
2) If the filter is clogged or cracked, or if the replacement interval has been reached, replace the filter.
3) If water is found in the filter, shake the filter with its inlet port facing down, to expel the water.

C: INSTALLATION

1) Connect the hose as illustrated below:

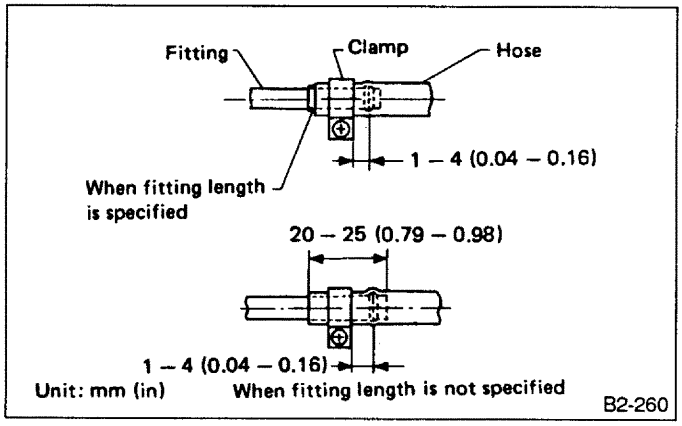

Fig. 27

2) Tighten the hose clamp screw to the specified torque.

Tightening torque:
1.0 — 1.5 N•m (0.1 — 0.15 kg-m, 0.7 — 1.1 ft-lb)

3) If the hose is damaged at the clamping portion, replace the hose with a new one.
4) If the hose clamp is too deformed, replace with a new one.
5) Fit the hose to the filter, then install the filter to the holder. Correct the hose position by removing any twist so that it will not interfere with the filter body or washer tank, before tightening the screw of the hose clamp.

6. Fuel Pump

A: REMOVAL

1) Release fuel pressure.

Refer to section 1 Precaution [W1A0].

2) Keep connector disconnected.
3) Disconnect hoses.

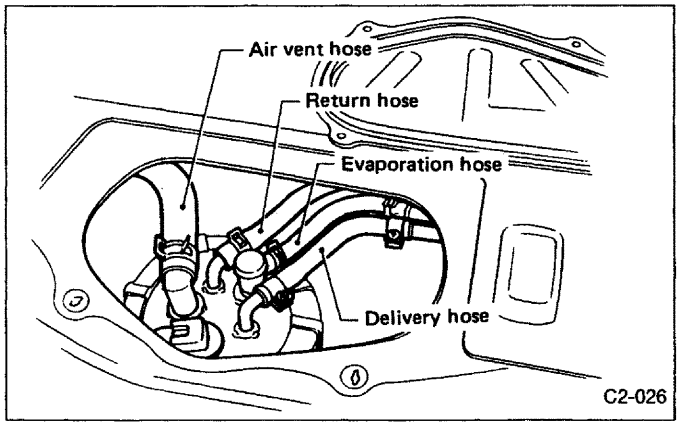

Fig. 6

4) Remove fuel tank cap using special tool.

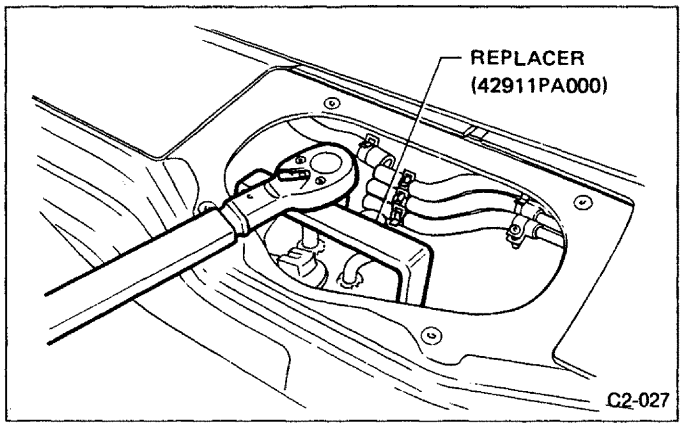

Fig. 7

5) Remove fuel pump from tank.
Remove in the numerical sequence in Fig. 8.

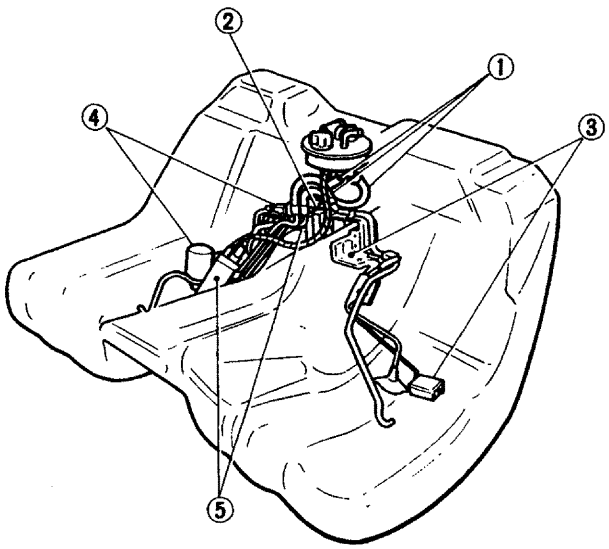

(1) Disconnect hoses and harness connector, and remove fuel tank cap.
(2) Remove bracket cover for installing each assembly bracket onto tank inner.
(3) Take out fuel meter unit LH.
(4) Take out fuel meter unit RH.
(5) Take out fuel pump ASSY.

C2-042

Fig. 8

B: INSPECTION

1) Connect the leads to the harness connector, and apply a 12-volt power supply to check whether the pump operates.

a. Keep the battery apart from the pump as far as possible.

b. Be sure to turn the 12V supply ON and OFF on the battery side.

c. Do not run the pump for a long time under non-loaded condition.

C: INSTALLATION

Installation is in the reverse order of removal procedures. Observe the following.

(1) Always use a new gasket.

(2) Ensure sealing portion is free from fuel or foreign particles before installation. (Wipe mounting holes, packing, etc. with a cloth.)

(3) When installing fuel tank cap, use special tool.

Special tool:
REPLACER (42911 PA000)

(4) Connect fuel delivery hose, return hose and evaporation hose.

(5) Connect fuel pump connector.

7. Fuel Meter Unit

A: REMOVAL

Fuel meter unit is built into fuel pump ASSY, so that removal of fuel meter unit is in the same order for fuel pump.

1) Release fuel pressure.
Refer to section 1. [W1A0].
2) Disconnect fuel delivery hose, return hose, evaporation hose and air vent hose.
3) Remove fuel tank cap using special tool.
4) Take out fuel meter unit.
Refer to Fig. 31.

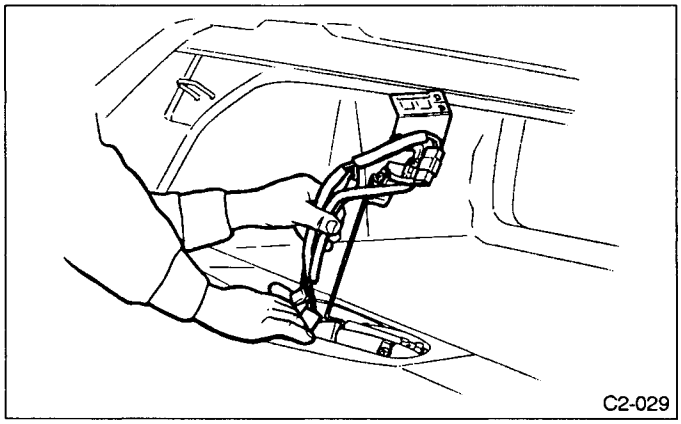

Fig. 31

B: INSTALLATION

Refer to "INSTALLATION" of fuel pump.

8. Fuel Delivery, Return and Evaporation Lines

A: REMOVAL

Remove fuel delivery pipes and hoses, fuel return pipes and hoses, and evaporation pipes and hoses.

1) Remove inner trim, insulator, rear seat and fuel tank.

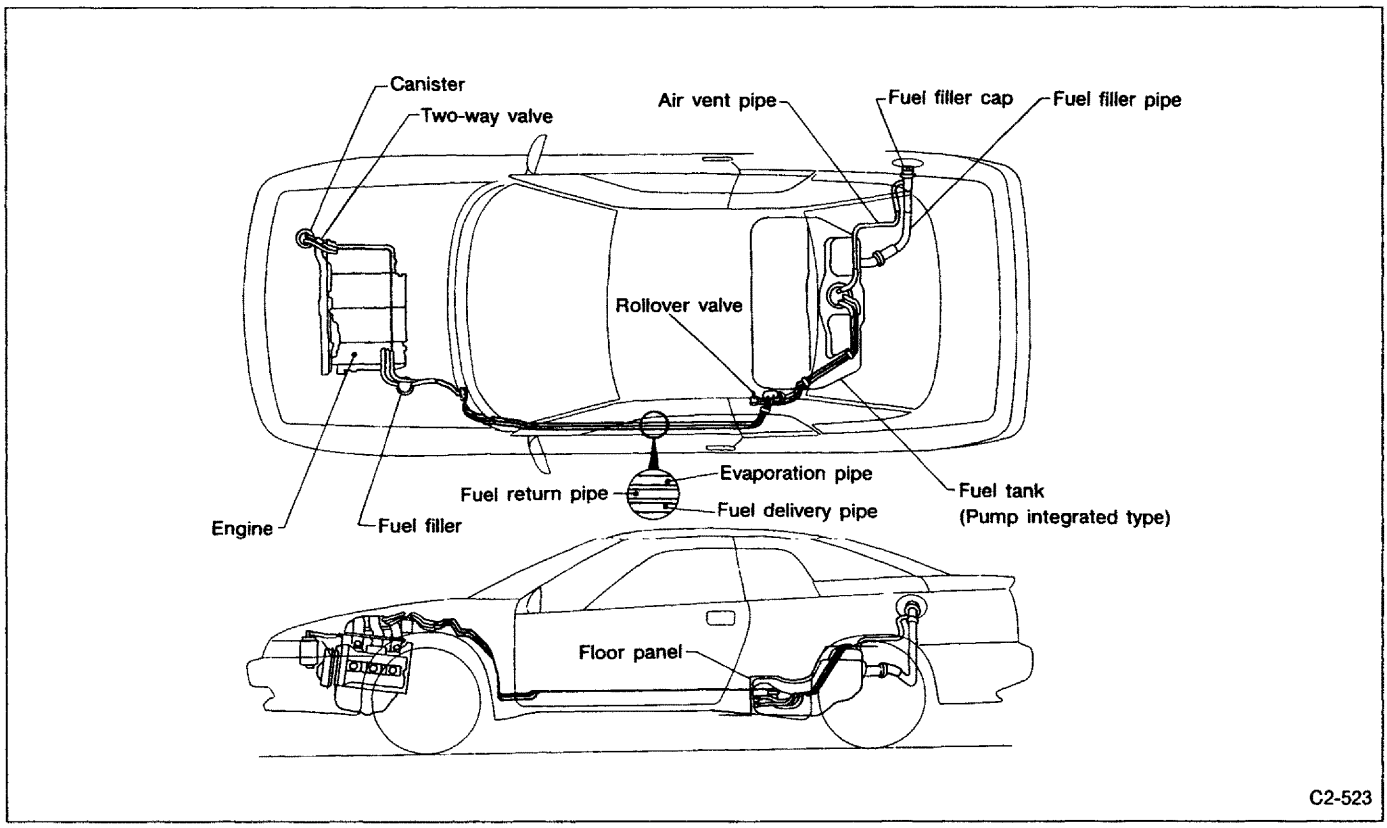

Fig. 9

2) In engine compartment, detach fuel delivery hoses, return hoses, evaporation tubes and canister.

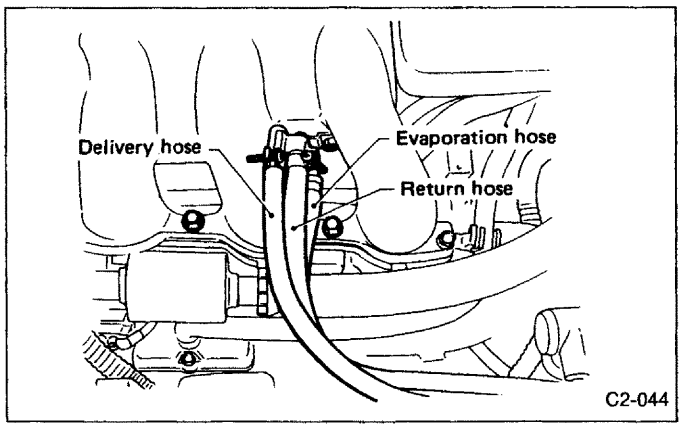

Fig. 10

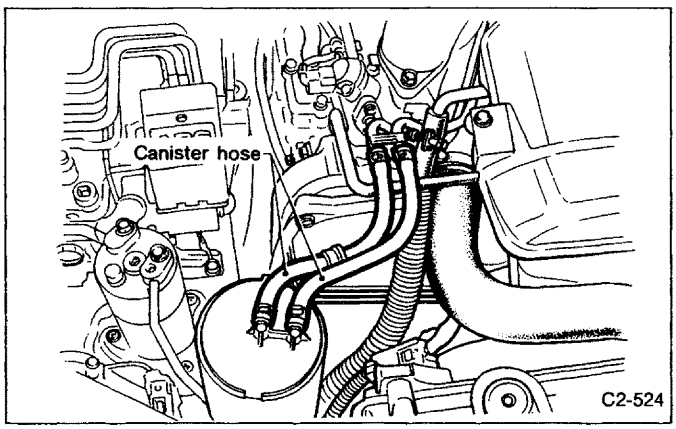

Fig. 11

B: INSTALLATION

Install in the reverse order of removal.
1) Connect delivery hose to delivery pipe with an overlap of 20 to 25 mm (0.79 to 0.98 in).
2) Connect delivery hoses and fuel return hose to fuel tank until they reach the base of each pipe.
3) Insert evaporation tube into evaporation pipe by approx. 15 mm (0.59 in) and position a clip with approx. 8 mm (0.31 in) from hose end.
4) Be sure to inspect hoses and their connections for any leakage of fuel.

9. Roll Over Valve with Two-way Valve

A: REMOVAL

1) Remove bracket, and remove roll over valve.

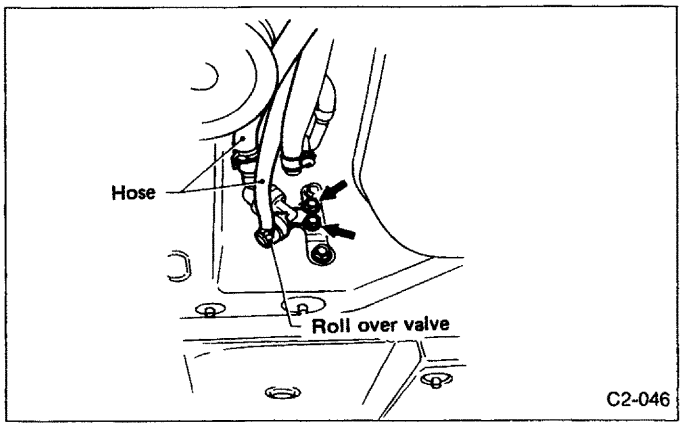

Fig. 12

2) Remove hose from roll over valve.
3) Remove valve from bracket.

B: INSPECTION

1) Connect hose to valve as shown.
2) While blowing through open end of tube, tilt valve at least 90° left and right from normal position.
3) Ensure that there is no air flow when tube is tilted greater than 90°.

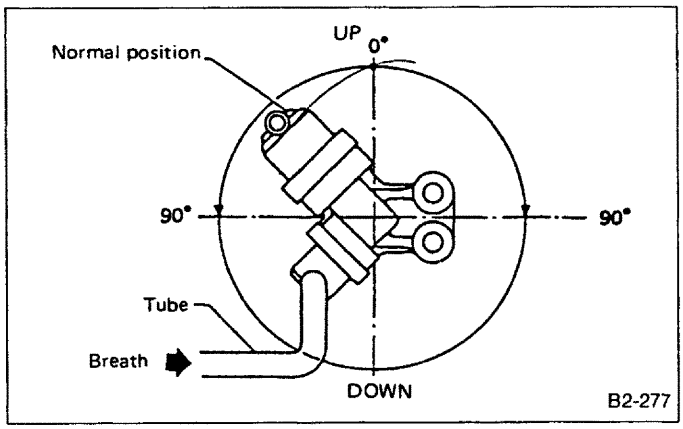

Fig. 13

C: INSTALLATION

Installation is in the reverse order of removal.
Observe the following:
1) Do not install top side of valve down.
2) Before installing bracket on body, securely fit concave part of bracket to hole in body.

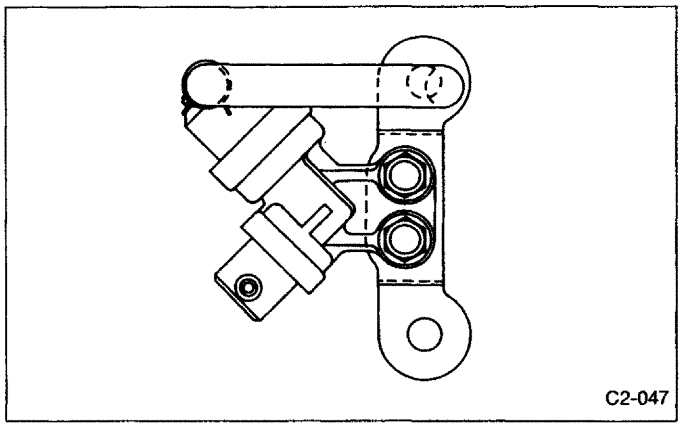

Fig. 14

10. Canister

A: REMOVAL

1) Disconnect canister hose on engine side as shown by an arrow.
2) Remove canister drain hose from frame.
3) Slide canister upward and remove from bracket.

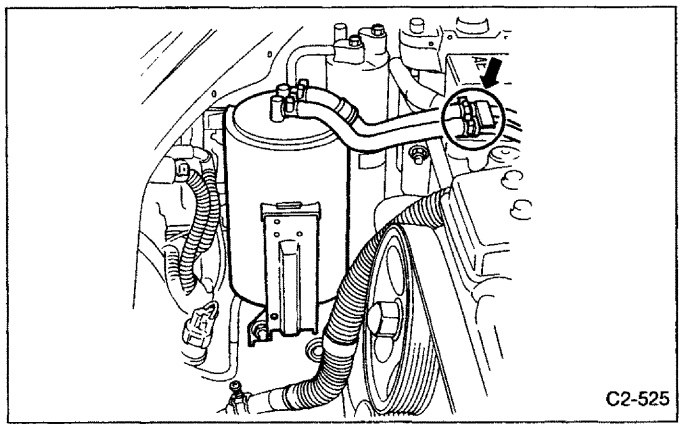

Fig. 15

B: INSTALLATION

Installation is in the reverse order of removal procedure.

Ensure drain hose is inserted into frame.

T TROUBLESHOOTING

Trouble and possible cause		Corrective action
1. Insufficient fuel supply to the injector		
1)	Fuel pump will not operate.	
	○ Defective terminal contact.	Inspect connections, especially ground, and tighten securely.
	○ Trouble in electromagnetic or electronic circuit parts.	Replace fuel pump.
2)	Lowering of fuel pump function.	Replace fuel pump.
3)	Clogged dust or water in the fuel filter.	Replace fuel filter, clean or replace fuel tank.
4)	Clogged or bent fuel pipe or hose.	Clean, correct or replace fuel pipe or hose.
5)	Air is mixed in the fuel system.	Inspect or retighten each connection part.
6)	Clogged or bent breather tube or pipe.	Clean, correct or replace air breather tube or pipe.
7)	Damaged diaphragm of pressure regulator.	Replace.
2. Leakage or blow out fuel		
1)	Loosened joints of the fuel pipe.	Retightening.
2)	Cracked fuel pipe, hose and fuel tank.	Replace.
3)	Defective welding part on the fuel tank.	Replace.
4)	Defective drain packing of the fuel tank.	Replace.
5)	Clogged or bent air breather tube or air vent tube.	Clean, correct or replace air breather tube or air vent tube.
3. Gasoline is smelling inside of compartment		
1)	Loosened joints at air breather tube, air bent tube and fuel filler pipe.	Retightening.
2)	Defective packing air tightness on the fuel saucer.	Correct or replace packing.
3)	Cracked fuel separator.	Replace separator.
4)	Inoperated fuel pump modulator, or this circuit.	Replace. **Refer to C. 2-1 [M10C0].**
4. Defective fuel meter indicator		
1)	Defective operation of fuel meter unit.	Replace.
2)	Defective operation of fuel meter.	Replace.
5. Noise		
1)	Large operation noise or vibration of fuel pump.	Replace.

a. When the vehicle is left unattended for an extended period of time:

1) Water may accumulate in the fuel tank. To prevent water condensation, top off the fuel tank or drain the fuel completely.

2) Drain water condensation from the fuel filter.

b. Refilling the fuel tank.

1) Refill the fuel tank while there is still some fuel left in the tank.

c. Protecting the fuel system against freezing and water condensation.

1) Cold areas

In snow-covered areas, mountainous areas, skiing areas, etc. where ambient temperatures drop below 0°C (32°F) throughout the winter season, use an anti-freeze solution in the cooling system.

Refueling will also complement the effect of anti-freeze solution each time the fuel level drops to about one-half.

After the winter season, drain water which may have accumulated in the fuel filter and fuel tank in the manner same as that described under the Moderate Areas.

2) Moderate areas

When water condensation is notched in the fuel filter, drain water from both the fuel filter and fuel tank or use a water removing agent (or anti-freeze solution) in the fuel tank.

- **Observe the instructions, notes, etc., indicated on the label affixed to the anti-freeze solution (water removing agent) container before use.**

SUBARU

SVX

1992

Page

C COMPONENT PARTS 2
1. Exhaust System 2
W SERVICE PROCEDURE 3
1. Exhaust System 3
2. Exhaust Manifold 4
3. Front Exhaust Pipe 5
4. Rear Catalytic Converter 7
5. Rear Exhaust Pipe 8
6. Muffler ASSY 10

C COMPONENT PARTS

1. Exhaust System

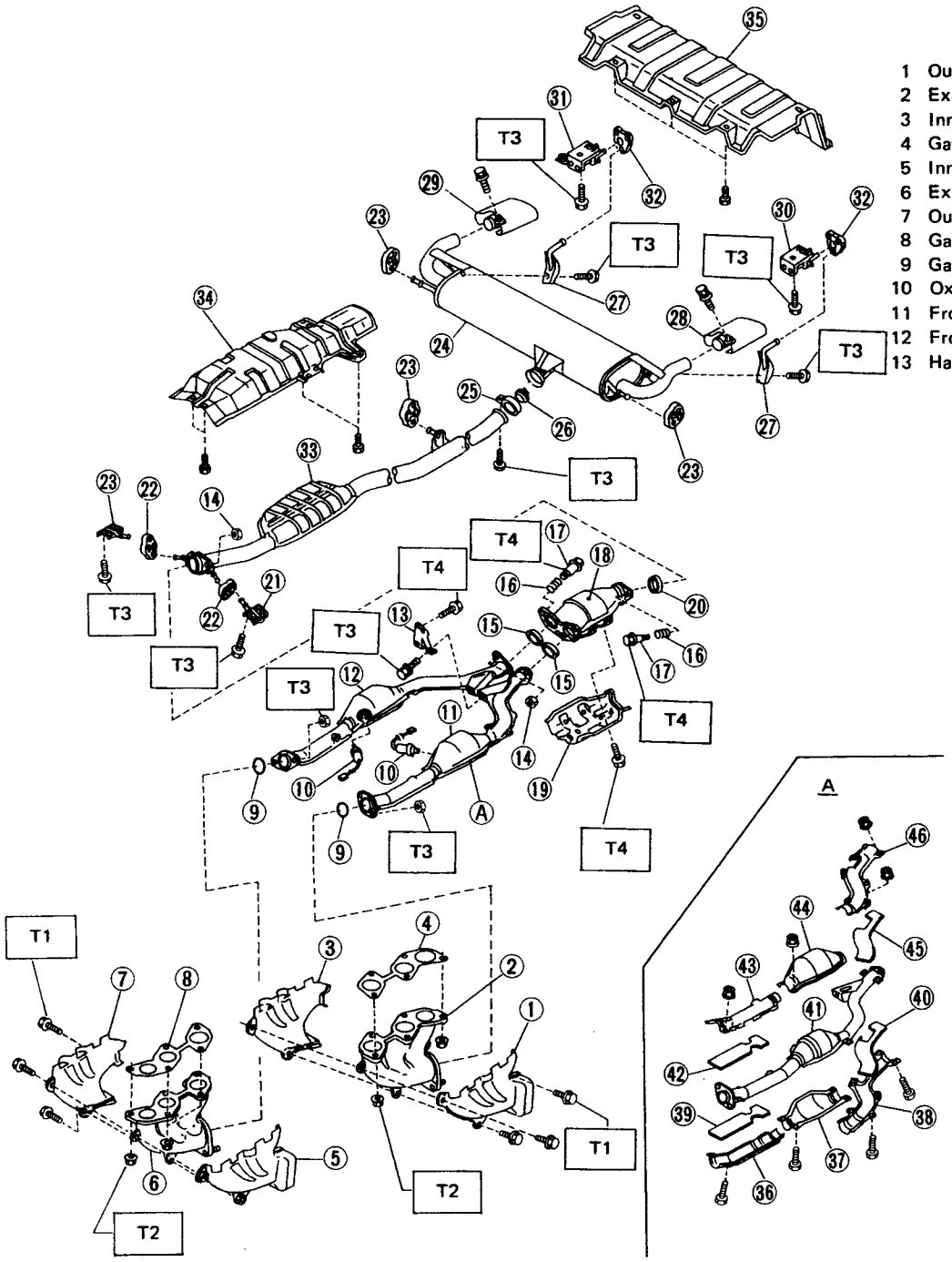

1 Outer exhaust manifold cover (LH)
2 Exhaust manifold (LH)
3 Inner exhaust manifold cover (LH)
4 Gasket
5 Inner exhaust manifold cover (RH)
6 Exhaust manifold (RH)
7 Outer exhaust manifold cover (RH)
8 Gasket
9 Gasket
10 Oxygen sensor
11 Front exhaust pipe ASSY (LH)
12 Front exhaust pipe ASSY (RH)
13 Hanger bracket
14 Nut
15 Gasket
16 Spring
17 Bolt
18 Rear catalytic converter
19 Protector
20 Gasket
21 Rear exhaust pipe hanger
22 Cushion
23 Rear exhaust pipe hanger
24 Muffler
25 Band
26 Seal bearing
27 Rear muffler bracket
28 Tail pipe cutter (LH)
29 Tail pipe cutter (RH)
30 Muffler hanger (LH)
31 Muffler hanger (RH)
32 Cushion rubber
33 Rear exhaust pipe
34 Exhaust cover
35 Muffler cover
36 Lower front pipe cover
37 Lower converter cover
38 Lower rear pipe cover
39 Front insulator
40 Rear insulator
41 Front exhaust pipe
42 Front insulator
43 Upper front pipe cover
44 Upper converter cover
45 Rear insulator
46 Upper pipe cover

Tightening torque: N·m (kg-m, ft-lb)
T1: 17.2 – 20.1 (1.75 – 2.05, 12.7 – 14.8)
T2: 34 – 44 (3.5 – 4.5, 25 – 33)
T3: 29 – 39 (3 – 4, 22 – 29)
T4: 13 – 23 (1.3 – 2.3, 9 – 17)

C2-403

Fig. 1

W SERVICE PROCEDURE

1. Exhaust System

A: ADJUSTMENT

1) Check to make sure clearances between parts and car body are larger than specified values.
2) If any clearance is not, loosen all connections.
3) Adjust where necessary to obtain proper clearance.
4) Tighten all connections to specified torque.

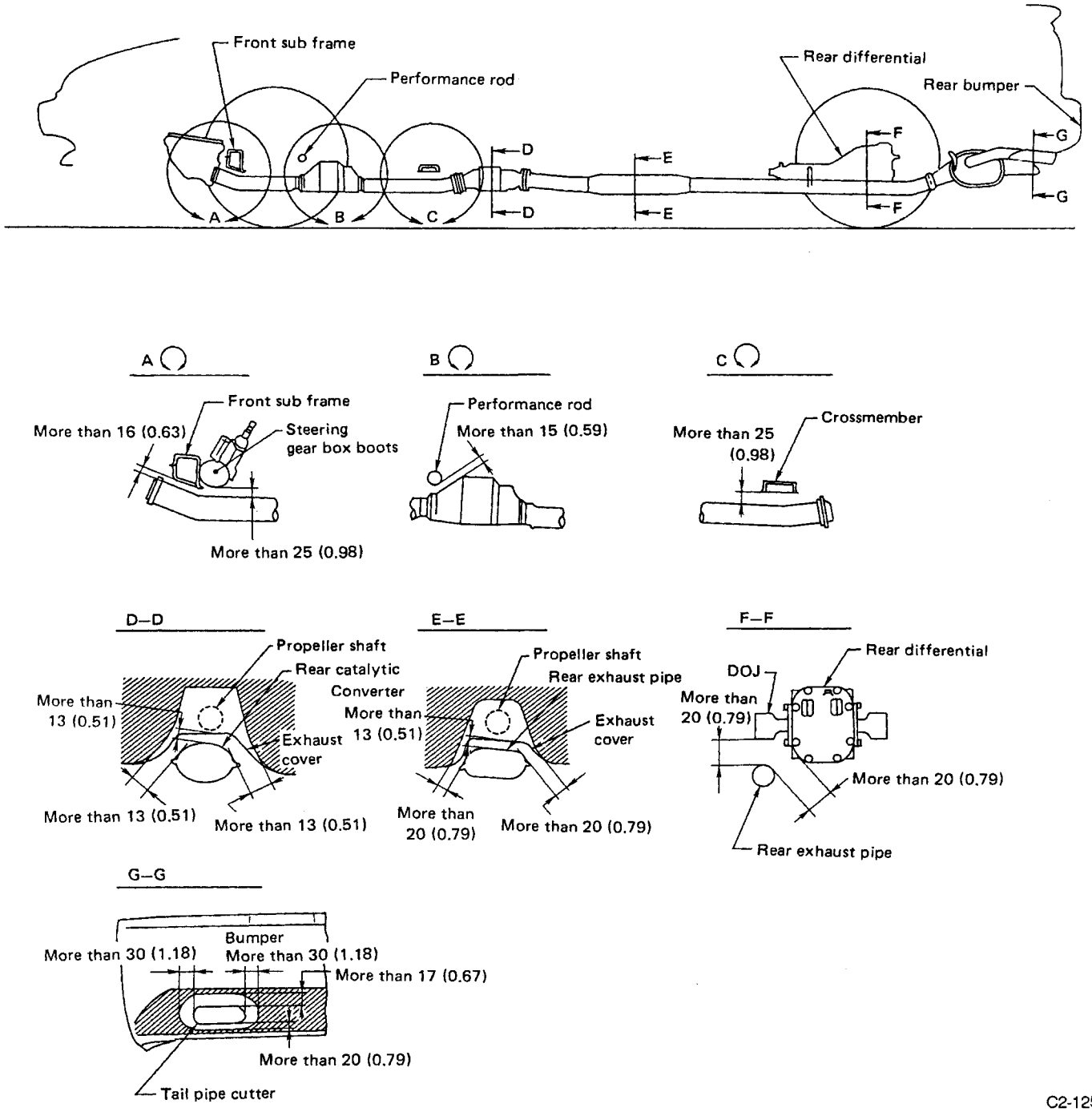

C2-125

Fig. 2

2. Exhaust Manifold

A: REMOVAL

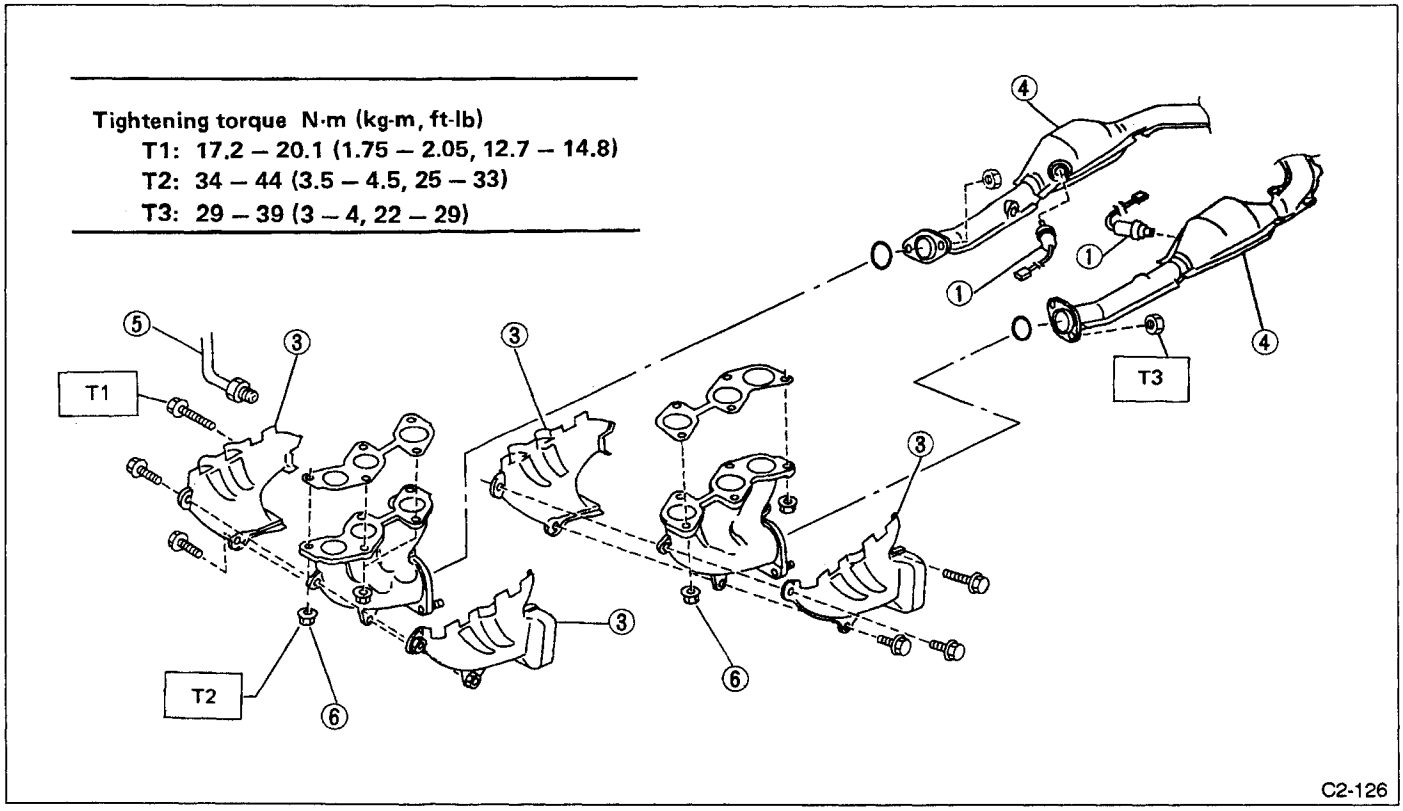

Fig. 3

1) Disconnect O_2 sensor harness.
2) Remove front under cover.
3) Remove exhaust manifold covers.
4) Remove front exhaust pipes. <Ref. to 3 Front Exhaust Pipe [W3A0].>
5) Disconnect EGR pipe from exhaust manifold RH.

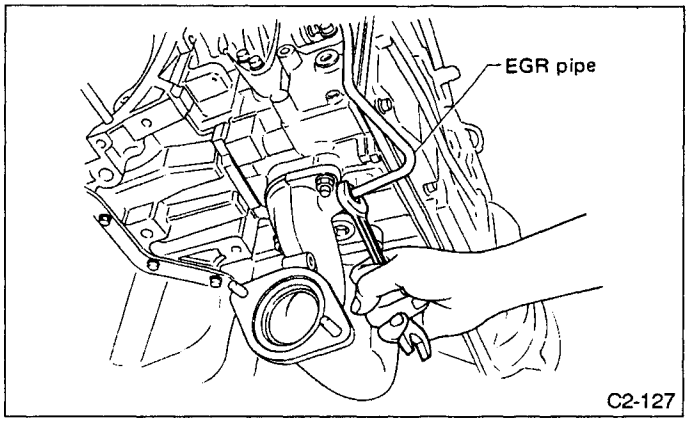

Fig. 4

6) Remove exhaust manifolds.

B: INSTALLATION

Installation is in the reverse order of removal procedures.
Observe the following:
1) Be sure to install a new gasket.
2) Use only nuts specified by the manufacturer.

W SERVICE PROCEDURE

3. Front Exhaust Pipe

A: REMOVAL

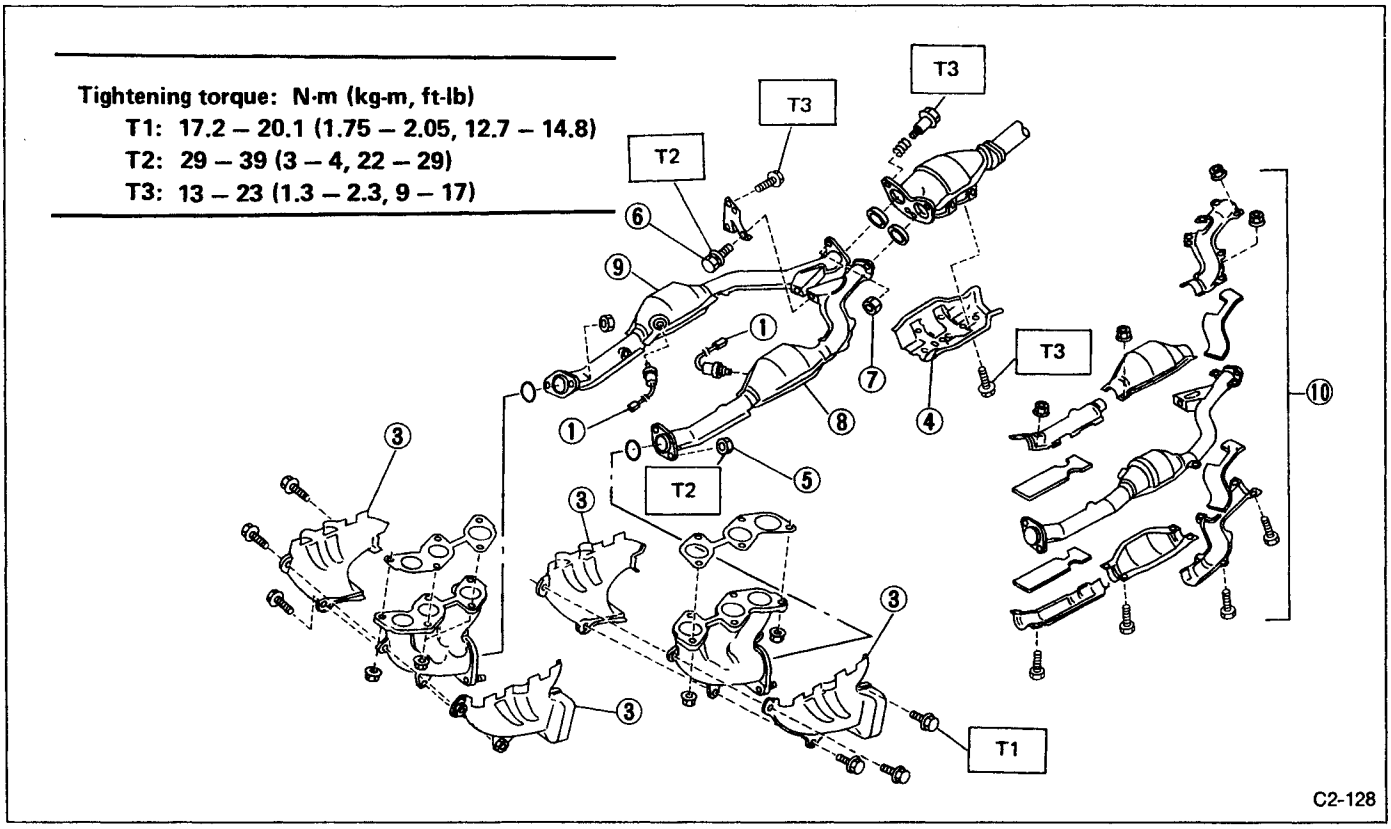

Fig. 2

To prevent exhaust pipes from dropping, do not remove the left and right exhaust pipes at the same time; always remove one at a time.

1) Disconnect oxygen sensor harness.
2) Remove front under cover.
3) Remove exhaust manifold covers.
4) Remove rear catalytic converter protector.
5) Remove nuts which connect front exhaust pipe to exhaust manifold.
6) Loosen nuts which hold front exhaust pipe to hanger bracket.

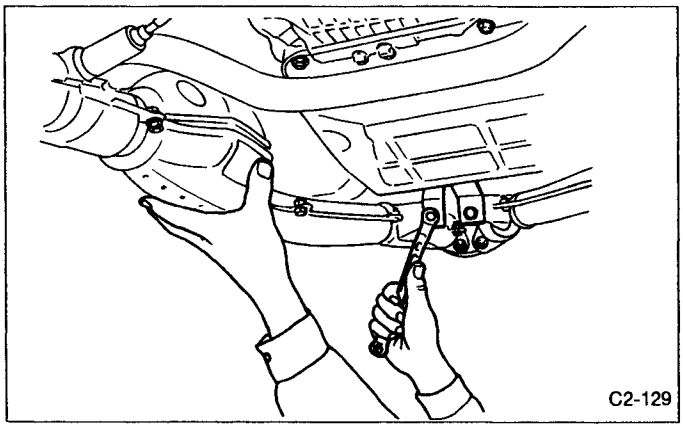

Fig. 3

7) Disconnect front exhaust pipe from rear catalytic converter.
8) Remove nuts which hold front exhaust pipe to hanger bracket and remove front exhaust pipe.
9) Similarly, remove the other front exhaust pipe.
10) If necessary, remove heat sealed covers.

B: INSTALLATION

Installation is in the reverse order of removal procedures.
Observe the following:
1) Be sure to install a new gasket.
2) Use only nuts specified by the manufacturer.

Be sure to install bolts, springs and nuts in the order indicated in the figure.

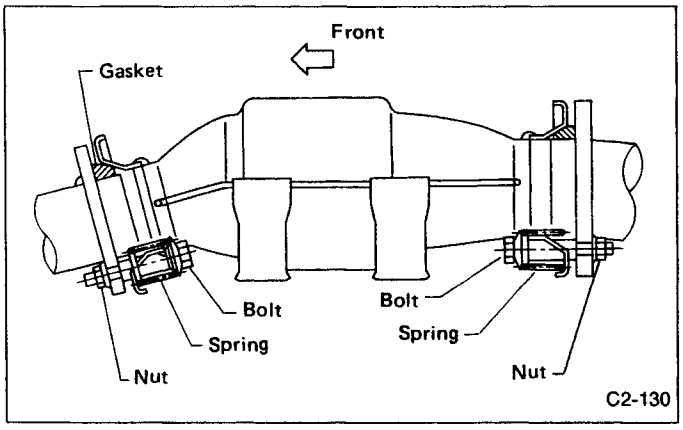

Fig. 4

4. Rear Catalytic Converter

B: INSTALLATION

Installation is in the reverse order of removal procedures.
Observe the following:
1) Be sure to install a new gasket.
2) Use only nuts specified by the manufacturer.

Be sure to install bolts, springs and nuts in the order indicated in the figure.

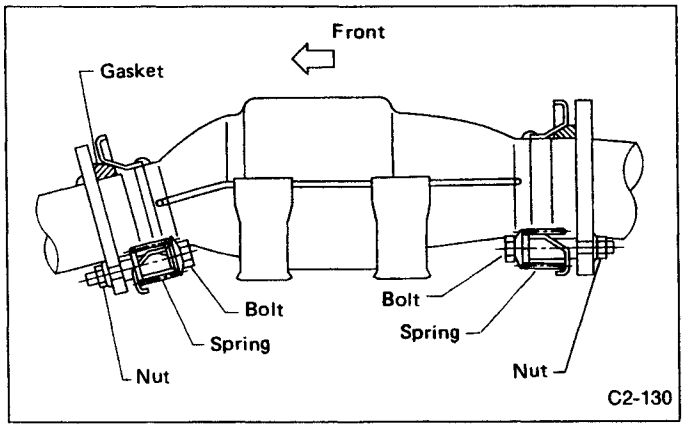

Fig. 5

5. Rear Exhaust Pipe

B: INSTALLATION

1) Insert rear exhaust pipe bracket into rubber cushion. To facilitate insertion, apply a coat of SUBARU CRC5-56 (004301003) to the mating area of rubber cushion in advance.
2) Loosen the seal bearing band and install it over the rear exhaust pipe in advance.
3) Place the seal bearing between the rear exhaust pipe and muffler ASSY, and tighten the seal bearing band. Do not allow clearances to exist between the seal bearing and rear exhaust pipe, or muffler ASSY while tightening the band.

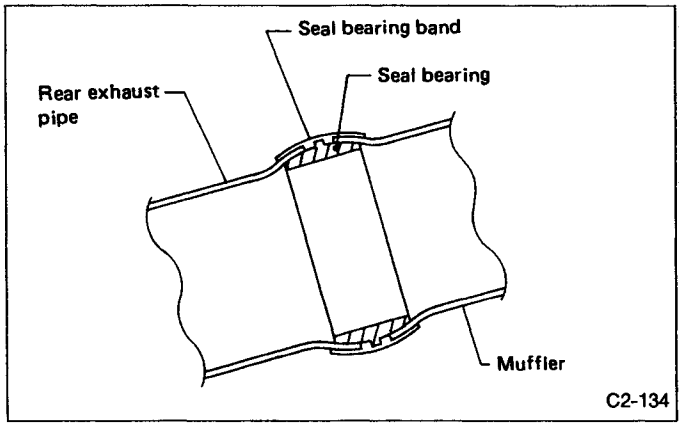

Fig. 6

4) Connect rear exhaust pipe to rear catalytic converter.

Be sure to install bolts, springs and nuts in the order. <Ref. to 4 Rear Catalytic Converter [W4B0].>

5) Install rear catalytic converter protector.

4. Rear Catalytic Converter

A: REMOVAL

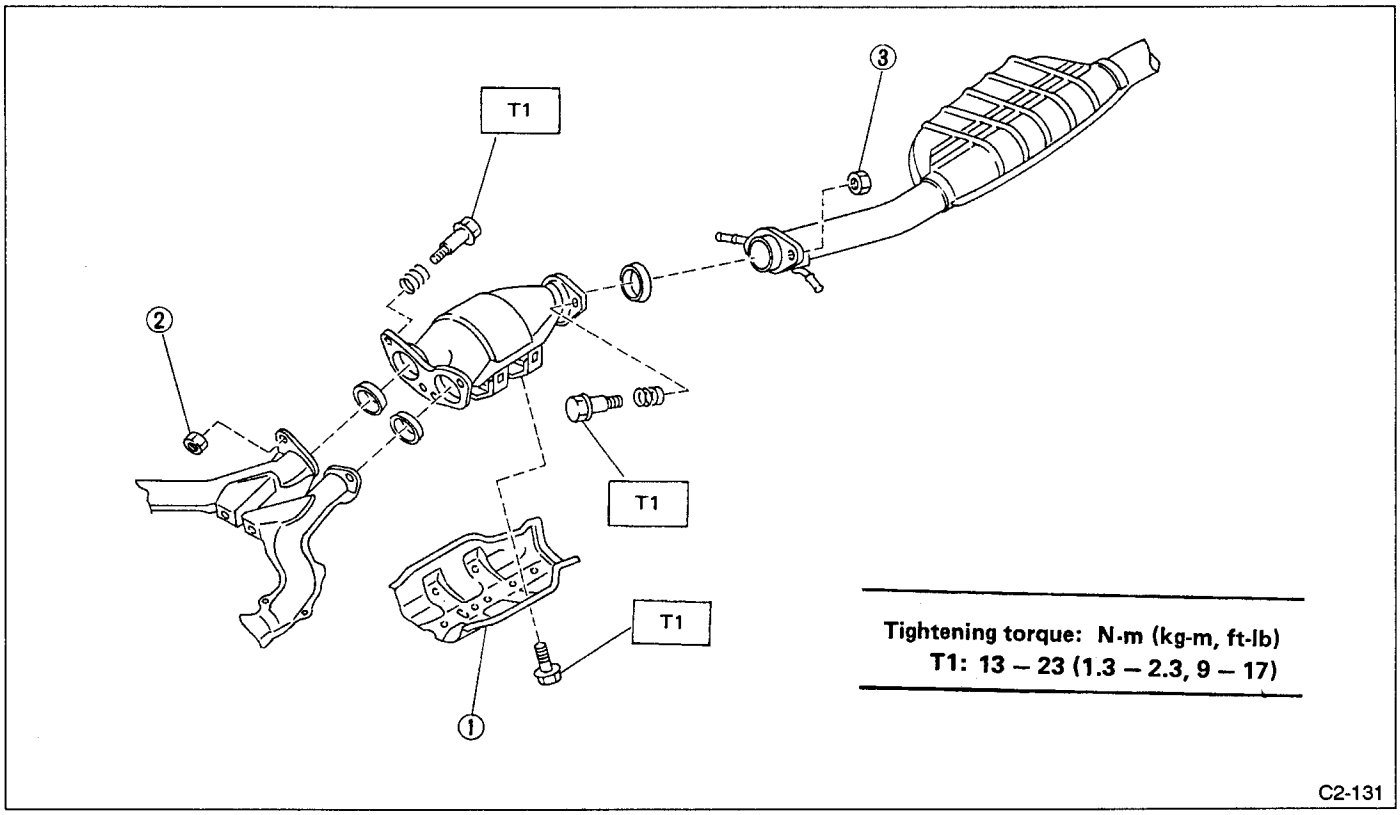

Fig. 8

1) Remove rear catalytic converter protector.
2) Disconnect rear catalytic converter from front exhaust pipes.
3) Disconnect rear catalytic converter from rear exhaust pipe.
4) Remove rear catalytic converter.

B: INSTALLATION

Installation is in the reverse order of removal procedures.
Observe the following:
1) Be sure to install a new gasket.
2) Use only nuts specified by the manufacturer.

Be sure to install bolts, springs and self-locking nuts in the order indicated in the figure.
Always install new self-locking nuts.

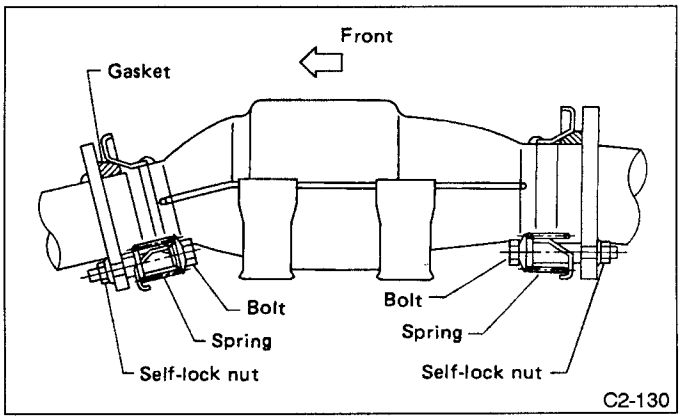

Fig. 9

5. Rear Exhaust Pipe

A: REMOVAL

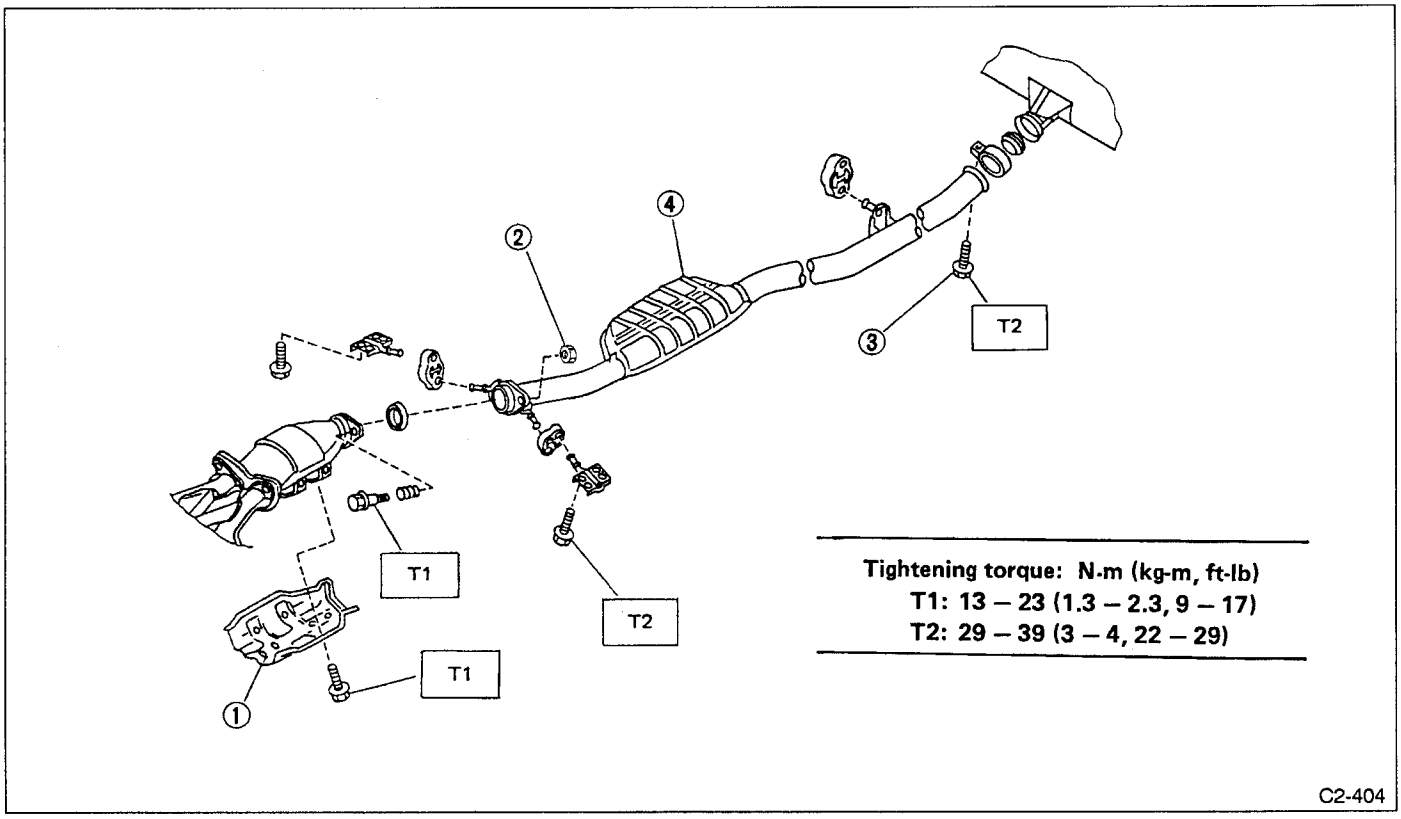

Fig. 10

1) Remove rear catalytic converter protecter.
2) Disconnect rear exhaust pipe from rear catalytic converter.
3) Loosen seal bearing band and disconnect rear exhaust pipe from muffer ASSY.
When disconnecting rear exhaust pipe from muffer ASSY, be careful not to drop seal bearing.

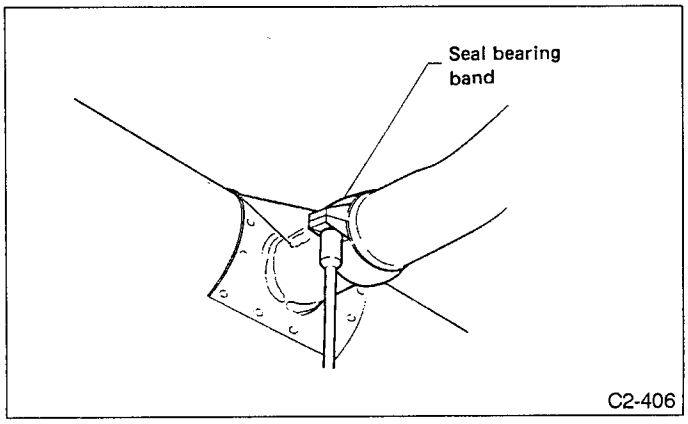

Fig. 11

4) Remove rear exhaust pipe from rubber cushion. To facilitate its removal, apply a coat of SUBARU CRC5-56 (004301003) in advance.

B: INSTALLATION

1) Insert rear exhaust pipe bracket into rubber cushion. To facilitate insertion, apply a coat of SUBARU CRC5-56 (004301003) to the mating area of rubber cushion in advance.
2) Loosen the seal bearing band and install it over the rear exhaust pipe in advance.
3) Place the seal bearing between the rear exhaust pipe and muffler ASSY, and tighten the seal bearing band. Do not allow clearances to exist between the seal bearing and rear exhaust pipe, or muffler ASSY while tightening the band.

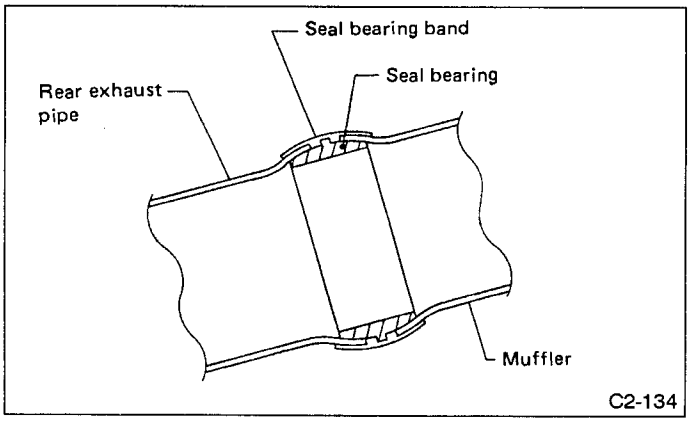

Fig. 12

4) Connect rear exhaust pipe to rear catalytic converter. **Be sure to install bolts, springs and self-locking nuts in the order. ⟨Ref. to 4 Rear Catalytic Converter [W4B0].⟩ Always install new self-locking nuts.**
5) Install rear catalytic converter protector.

6. Muffler ASSY

A: REMOVAL

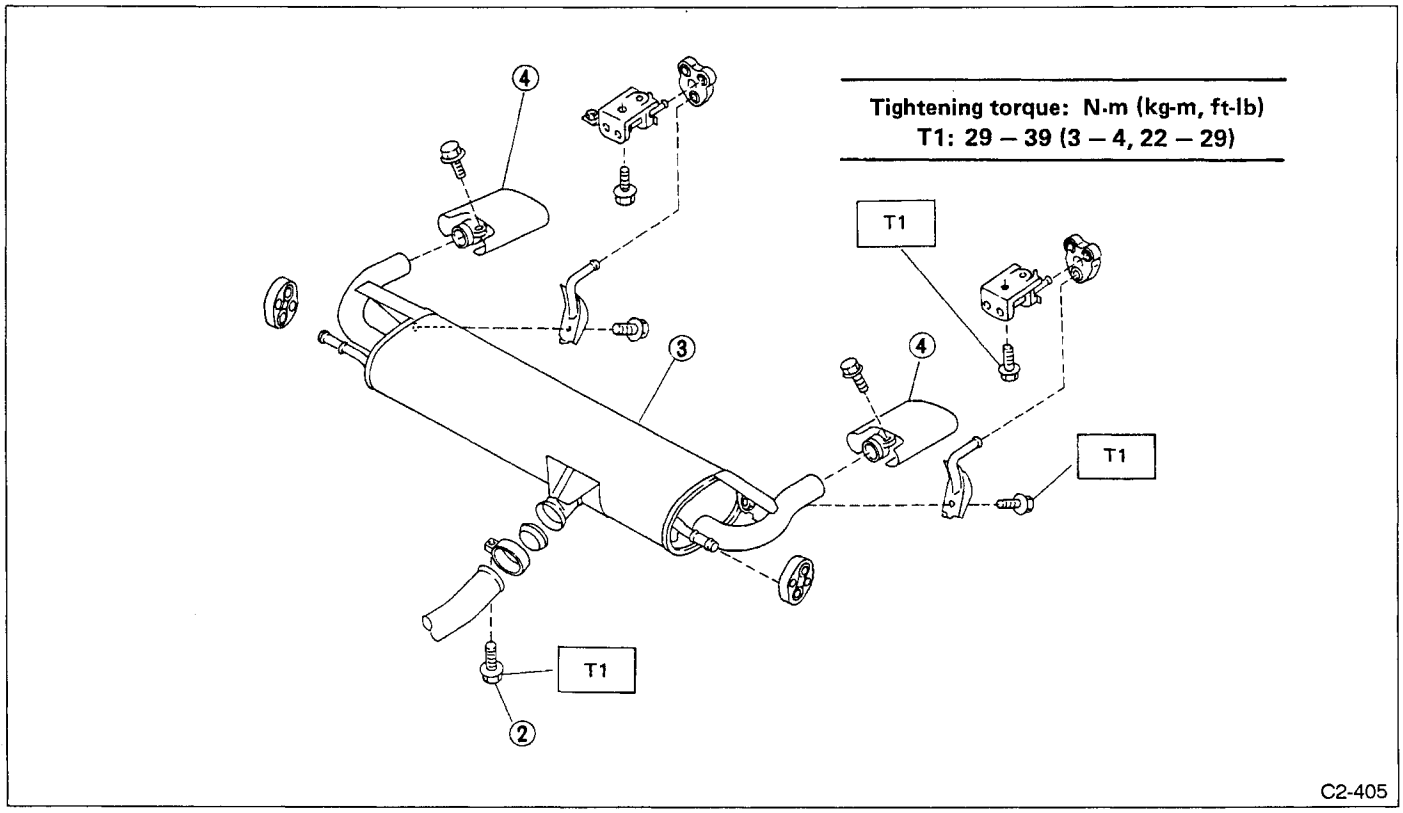

Fig. 13

Always work with a helper when removing or installing the muffler ASSY.

1) To prevent damage to bumper near muffler, wrap a cloth around tail pipe cutters.
2) Loosen seal bearing band and disconnect muffler ASSY from rear exhaust pipe.

When disconnecting muffer ASSY from rear exhaust pipe, be careful not to drop seal bearing.

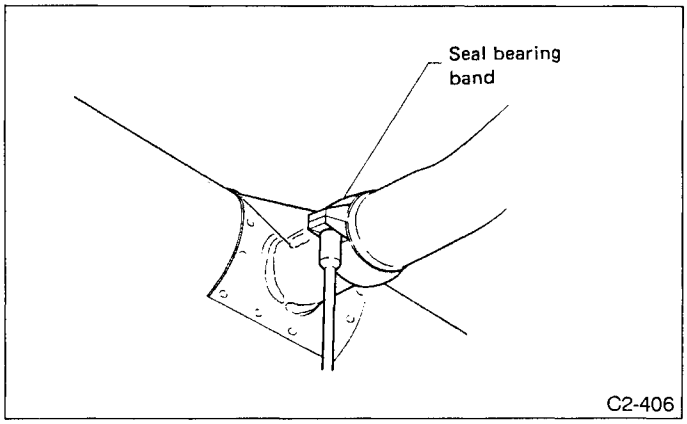

Fig. 14

3) Remove muffler ASSY from rubber cushions. To facilitate their removal, apply a coat of SUBARU CRC5-56 (004301003) to them in advance.
4) Remove tail pipe cutters from muffler ASSY.

B: INSTALLATION

1) Instsll tail pipe cutters.
2) Insert muffler ASSY brackets into rubber cushions. To facilitate insertion, apply a coat of SUBARU CRC5-56 (004301003) to the mating area of rubber cushions in advance.
3) Loosen the seal bearing band and install it over the rear exhaust pipe in advance.
4) Place the seal bearing between the rear exhaust pipe and muffler ASSY, and tighten the seal bearing band. Do not allow clearances to exist between the seal bearing and rear exhaust pipe, or muffler ASSY while tightening the band.

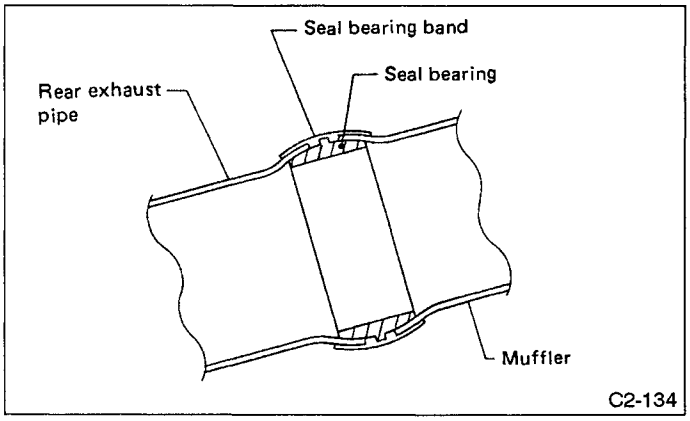
Seal bearing band
Seal bearing
Rear exhaust pipe
Muffler
C2-134

Fig. 15

SUBARU

SVX

1992

Precaution for Supplemental Restraint System "Airbag"
The Supplemental Restraint System "Airbag" helps to reduce the risk or severity of injury to the driver in a frontal collision.
The Supplemental Restraint System consists of an airbag module (located in the center of the steering wheel), sensors, a control unit, warning light, wiring harness and spiral cable.
Information necessary to service the safety is included in the "5-5. SUPPLEMENTAL RESTRAINT SYSTEM" of this Service Manual.
WARNING:
- To avoid rendering the Airbag system inoperative, which could lead to personal injury or death in the event of a severe frontal collision, all maintenance must be performed by an authorized SVX dealer.
- Improper maintenance, including incorrect removal and installation of the Airbag system, can lead to personal injury caused by unintentional activation of the Airbag system.
- All Airbag system electrical wiring harnesses and connectors are covered with yellow outer insulation. Do not use electrical test equipment on any circuit related to the Supplemental Restraint System "Airbag".

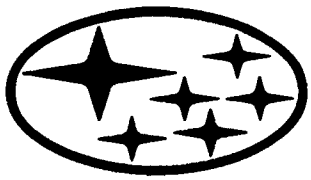

	Page
M MECHANISM AND FUNCTION	2
1. General	2
2. Torque Converter	4
3. Lock-up Control System	5
4. Oil Pump	7
5. Planetary Gear	9
6. Reverse Clutch	10
7. High Clutch	11
8. Band Brake	12
9. One-way Clutch	13
10. Low & Reverse Brake	14
11. Forward Clutch & Overrunning Clutch	15
12. Input Shaft	16
13. Reduction Gear	16
14. Final Reduction Gears	17
15. Range Select Mechanism	19
16. Parking Mechanism	20
17. AWD Transfer System	21
18. Hydraulic Control Valve	24
19. Gearshifting Mechanism	30
20. Power Train	37
21. Electronic-Hydraulic Control System	71
22. Transmission Control Unit (TCU)	77
23. Self-diagnosis System	90
24. Fail-safe Function	91
S SPECIFICATIONS AND SERVICE DATA	92
C COMPONENT PARTS	99
W SERVICE PROCEDURE	109
1. Precaution	109
2. On-Car Service	110
3. Performance Test	119
4. Overall Transmission	124
5. Reduction Drive Gear Assembly	150
6. Control Valve Body	151
7. Oil Pump Assembly	153
8. Drive Pinion Shaft	156
9. Reverse Clutch	158
10. High Clutch	159
11. Forward Clutch Drum	160
12. One-way Clutch Outer Race	163
13. Servo Piston	164
14. Differential Case Assembly	165
15. Transfer Clutch	167
16. Transfer Valve Body	169
T TROUBLESHOOTING AIRBAG	171
1. Supplemental Restraint System "Airbag"	171
2. Precaution	171
3. Troubleshooting Chart for Self-diagnosis System	171
4. Transmission Control Unit (TCU) I/O Signal	176
5. Troubleshooting Chart with Trouble Code	178
6. Troubleshooting Chart with Select Monitor	202
7. General Troubleshooting Table	217

M MECHANISM AND FUNCTION

1. General

This system utilizes a microcomputer for accurate control of the vehicle speed, engine brake operation, lock-up operation, gear shift timing and others. It corresponds to the throttle opening, actual vehicle speed, engine rpm and range position signal. Further, this system adopted an electronically controlled full-time AWD system designed uniquely for SUBARU.

The AWD system has a transfer hydraulic pressure control unit incorporating duty solenoid and a multi-plate transfer (MPT) consisting of a wet type multi-plate clutch on the rear of the automatic transmission section. The control unit stores optimum transfer clutch torque (duty ratio) data for various driving conditions. When actual driving conditions (vehicle speed, throttle opening, gear range, wheel slip, etc.) are detected by various sensors, the control unit selects the most suitable duty ratio from memory, and controls the transmitting torque of the transfer clutch by means of the hydraulic pressure controlling duty solenoid.

〈Features〉

1) Two one-way clutches and four accumulators are used to reduce gear shift shock and gear select shock, and a fully electronic control from 1st to 4th speeds, hydraulic oil pressure (line pressure), lock-up operation, etc.
2) A hydraulic lock-up type torque converter, variable delivery oil pump, gear train with two sets of simple planetary gears (permitting four forward and one reverse stage) are used to improve driving dynamics and fuel consumption.
3) A push-pull cable featuring less vibration to the high rigid transmission case and control unit is used for improved quietness during driving.
4) The transfer clutch capacity can be accurately controlled by means of the electronic control system. This is especially effective for eliminating tight corner braking phenomenon which occurs at low speeds, thereby achieving smooth driving.
5) An optimum rear wheel drive distribution is achieved which corresponds to engine output and gear shift position and improves fuel consumption and steering stability.
6) For the car equipped with ABS, the braking performance is improved by the control of the clutch and gear locking at a particular shift position through ABS operation-time control.

CROSS SECTIONAL VIEW

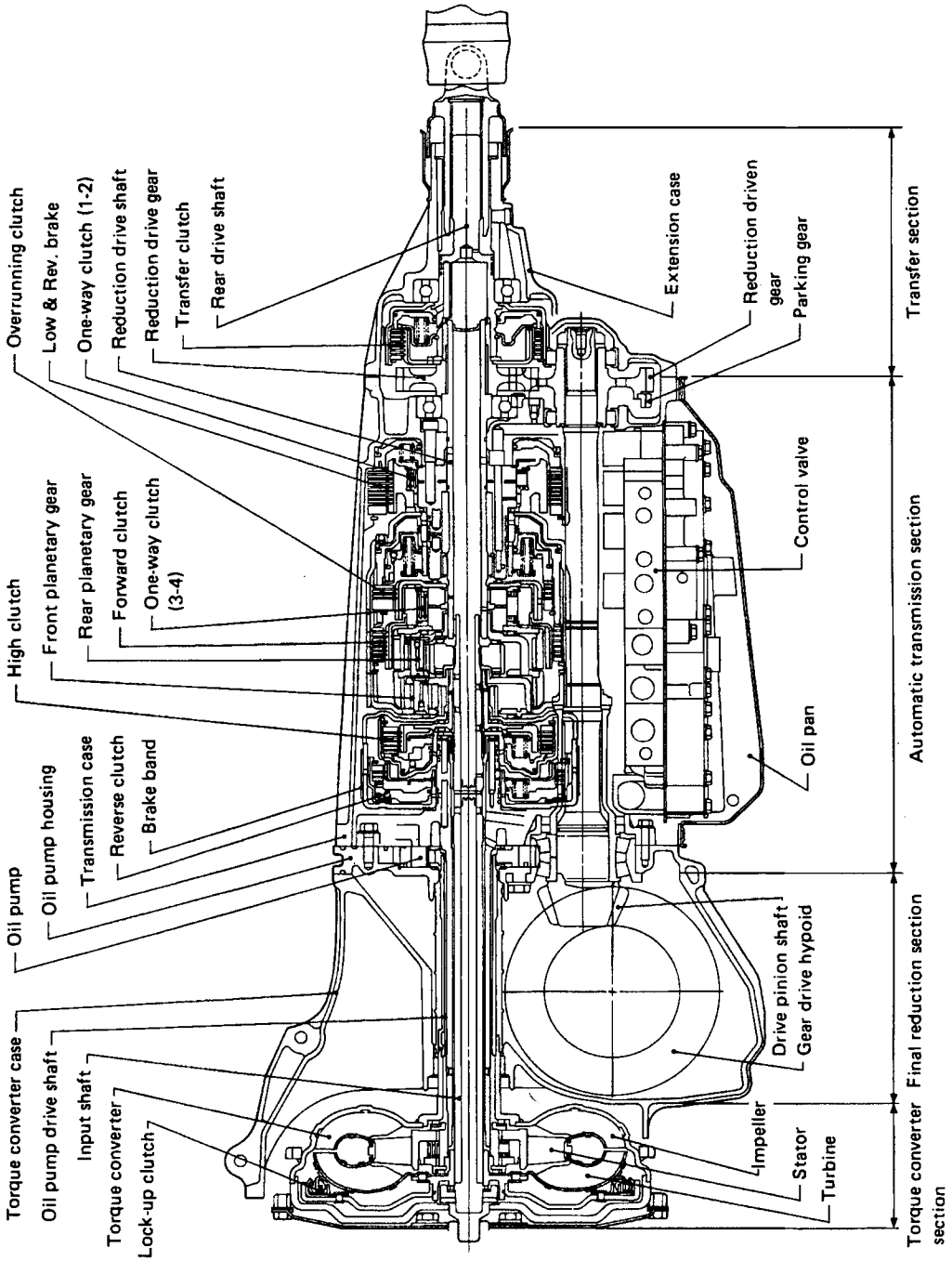

C3-001

Fig. 1

2. Torque Converter

A: CONSTRUCTION

- The torque converter is composed of impeller, turbine, stator, and lock-up clutch. It is filled with oil; therefore it must not be disassembled.
- The impeller is directly coupled to the crankshaft via a drive plate. A sleeve for driving the oil pump, which is the source of the hydraulic pressure for the automatic transmission, is welded to the rear of the impeller.
- The turbine transmits multiplied engine torque in the torque converter range, unmultiplied engine torque in the coupling range, or engine torque itself directly through the lock-up clutch to the automatic transmission via the input shaft spline fitted to the internal spline of the turbine hub.
- The stator incorporates a Sprague type one-way clutch. The stator is spline-fitted to the oil pump cover via the inner race of the one-way clutch, and secured to the torque converter case.

B: FUNCTION

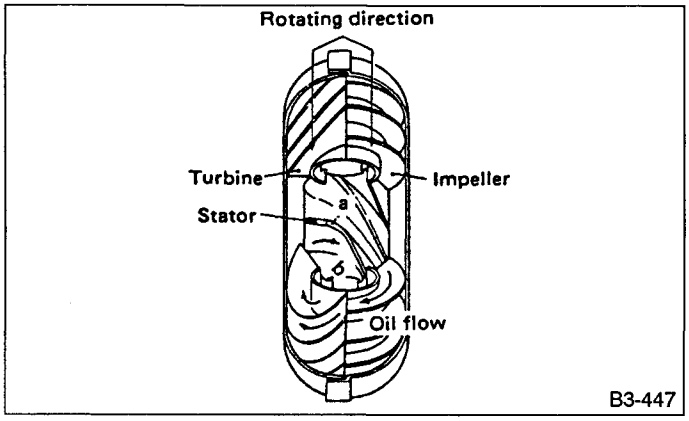

Fig. 2 Function of torque converter

When the impeller rotates, centrifugal force pushes out oil which then enters the turbine. The oil flows along the turbine blade and exerts force on the blade. This causes the turbine to rotate and power is transmitted to the input shaft.
If turbine speed is below impeller speed, the oil leaving the turbine flows in the direction impeding impeller rotation (a in Fig. 2). This direction is then changed by the stator so that the oil will assist impeller rotation (b in Fig. 2). With this action, the torque is multiplied.
The stator is subject to reverse torque when it changes the direction of oil flow, hence it must be secured to the casing. As turbine speed increases and approaches impeller speed, the oil from the turbine begins to push directly on the back of the stator blade. (This change-over point is called the "coupling point".) If the stator is still fixed under this condition, the oil flow will be impeded by the stator. To avoid this, the stator is mounted to the case via a one-way clutch so that it can rotate freely in the same direction as the impeller and turbine.

C: PERFORMANCE

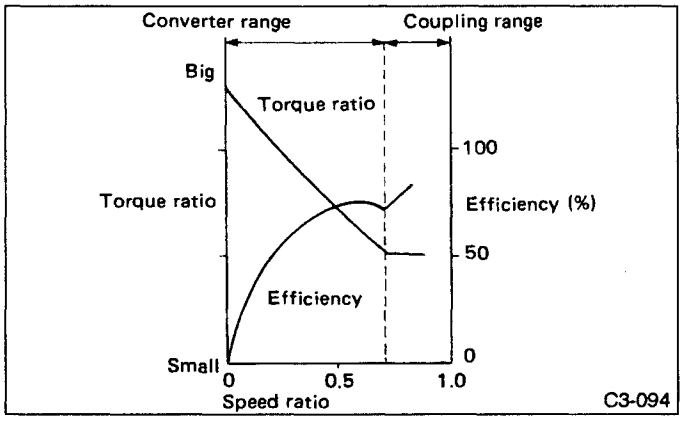

Fig. 3

The torque converter characteristics are shown in the above graph. The torque converter range refers to a range where the impeller and turbine rotate at different speeds and the torque is multiplied by a fixed stator. In the coupling range, on the other hand, the turbine rotates at high speed, and the stator is also rotating. The coupling range provides no torque multiplication because the torque converter functions as a fluid coupling in this range.
If the impeller (engine side) alone is rotating with stationary turbine (vehicle standstill) when the speed ratio is zero (0), this state is called the stall point. In this state, the torque ratio of impeller and turbine is the largest. The torque ratio in this state is called the stall torque ratio, and the engine rpm is called the stall rpm.

3. Lock-up Control System

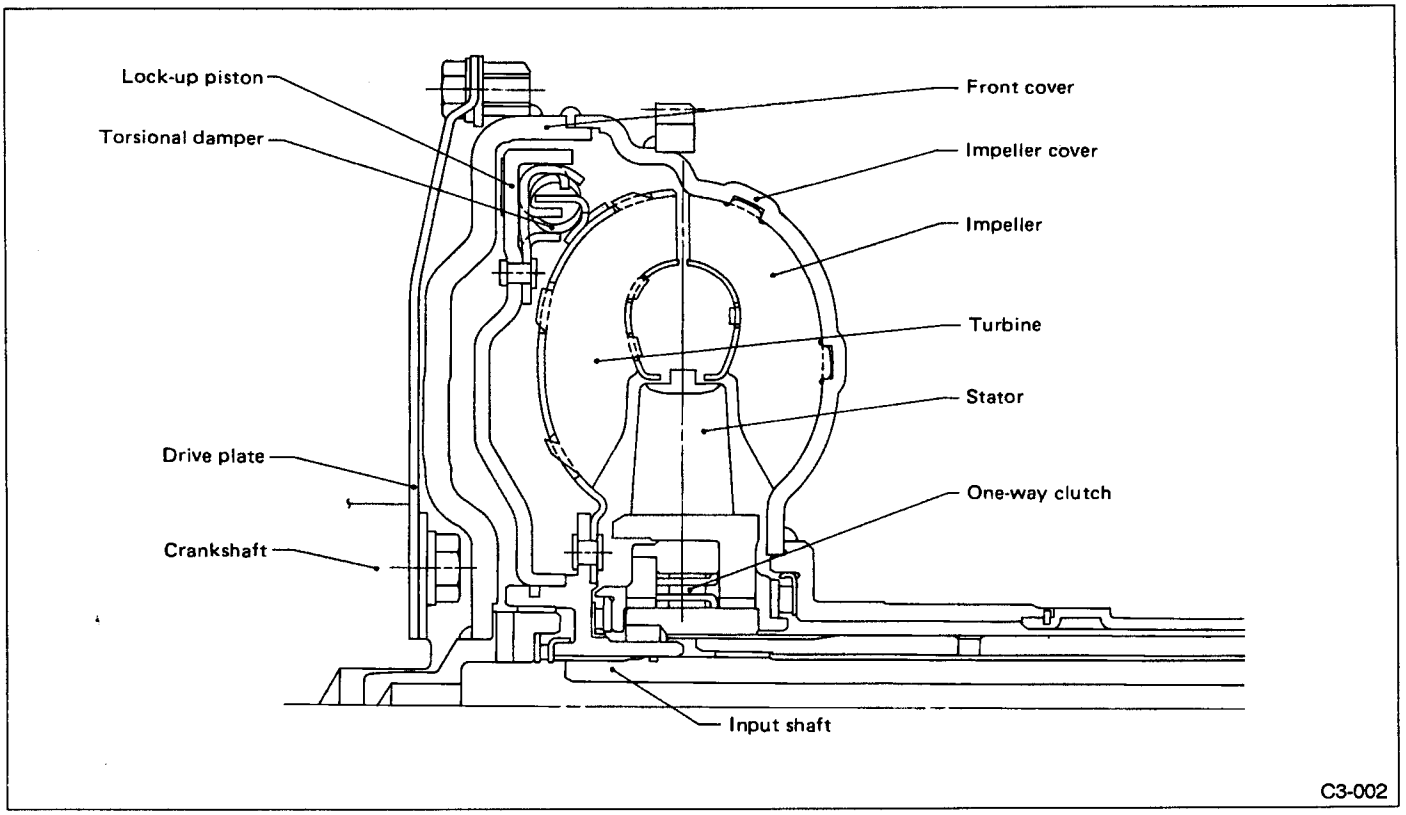

Fig. 4

A: CONSTRUCTION

This system causes the impeller and turbine to be coupled directly without the aid of oil when the engine rpm reaches a certain level. This direct coupling eliminates torque converter slip and thus leads to a reduction in engine rpm, which in turn results in less fuel consumption and less noise.

The single plate type lock-up clutch is used, and the transition hydraulic oil pressure is controlled for reducing the lock-up shock of the clutch thereby achieving smooth lock-up operation.

The lock-up clutch is fitted with torsional dampers and the diaphragm spring friction washers are adopted for reducing the vibration and noise in the driving system.

B: FUNCTION

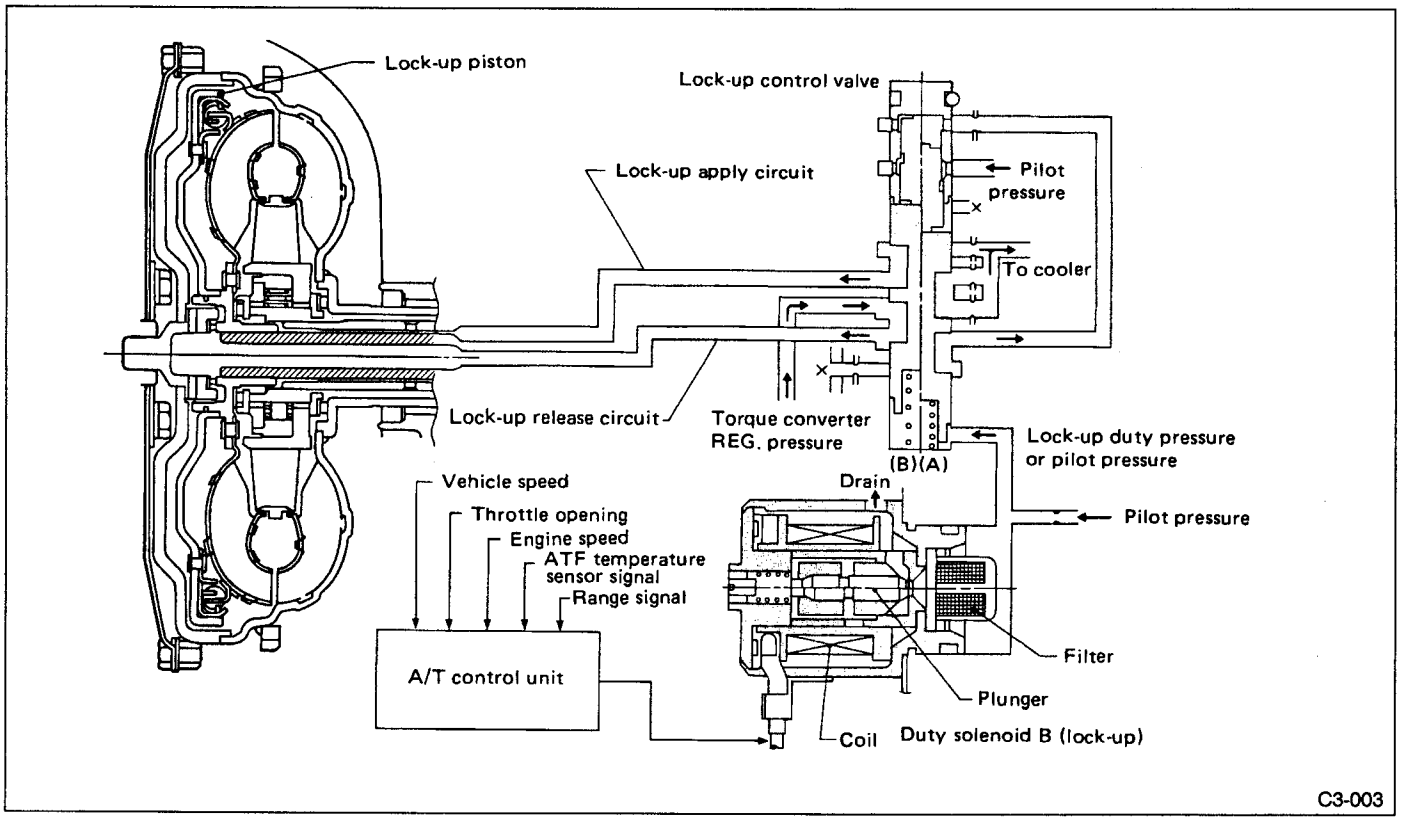

Fig. 5

The lock-up control valve is pushed downward by torque converter REG pressure and pilot pressure. It is pushed upward by lock-up duty pressure and spring force.

1. LOCK-UP OPERATION

Oil pressure at the lock-up control duty solenoid valve is drained (duty ratio 95%) by a signal from the automatic transmission control unit so that no lock-up duty pressure is developed and the lock-up control valve remains in condition (A). As a result, hydraulic oil flows into the lock-up apply circuit. On the other hand, the lock-up release circuit drains. This causes a pressure differential across the lock-up piston. The piston is then forced against the impeller cover and turned as an integral unit with the cover. Thus, power from the engine is directly transmitted to the transmission input shaft. That is, the transmission is directly coupled to the engine.

2. NON-LOCK-UP OPERATION

In this mode, the lock-up control duty solenoid is driven at a 5% duty ratio. This causes the lock-up duty pressure (pilot pressure) to be generated. With this pressure, the lock-up control valve is set to condition (B), and hydraulic oil flows into the lock-up release circuit. On the other hand, the lock-up apply circuit is connected to the oil cooler in the radiator. Accordingly, the relationship between "lock-up release pressure lock-up apply pressure" is established. As a result, the lock-up piston is forced to separate from the impeller cover, and power is transmitted from impeller to turbine to input shaft, as with an ordinary torque converter coupling.

3. SMOOTH CONTROL

When the lock-up clutch activates, the clutch partially engages. Lock-up apply pressure increases smoothly to engage the lock-up clutch.

4. NON-LOCK-UP OPERATION DURING "1ST SPEED", "N", "R" AND "P" POSITION

In this mode of operation, pilot pressure is generated, and the lock-up control valve is set to condition (B) where lock-up is inoperative.

4. Oil Pump

A: CONSTRUCTION

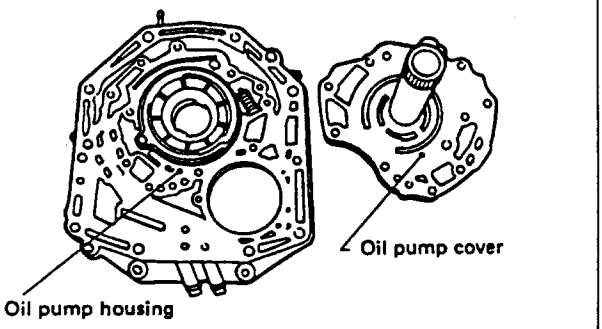

Fig. 6

The vane pump is housed in the oil pump housing. It consists of a rotor, vanes, vane rings, cam ring, control piston, return spring, seal ring and oil pump cover.
Hydraulic pressure (feedback pressure) from the oil passage ② of the pressure regulator valve is applied to the back of the control piston.

B: FUNCTION

1) The automatic transmission fluid (ATF) is drawn through the oil strainer mounted under the control valve ASSY, and is routed to the transmission case, to the oil pump housing, and to the oil pump cover. It then goes to the suction port of section A shown in the Figure.
2) The ATF sucked into section A rotates in the direction of the arrow (driven directly by engine), and is compressed at the delivery side of section B. It is then discharged.
3) The discharged ATF flows from the oil pump cover to the oil pump housing. It then goes to the transmission case, the control valve and to the regulator valve, thus serving as hydraulic oil and lubricating oil for the torque converter, valves, clutch and brake.
4) As engine speed increases, the delivery rate of the vane pump also increases.
5) Feedback pressure from the regulator valve is applied to section C in the Figure. The cam ring position (the amount of eccentricity) is controlled by this pressure so that the pump delivery rate remains constant at speeds exceeding the preset pump speed.
6) As the cam ring position changes, the suction volume at section A varies. In this manner, the pump delivery volume is controlled.

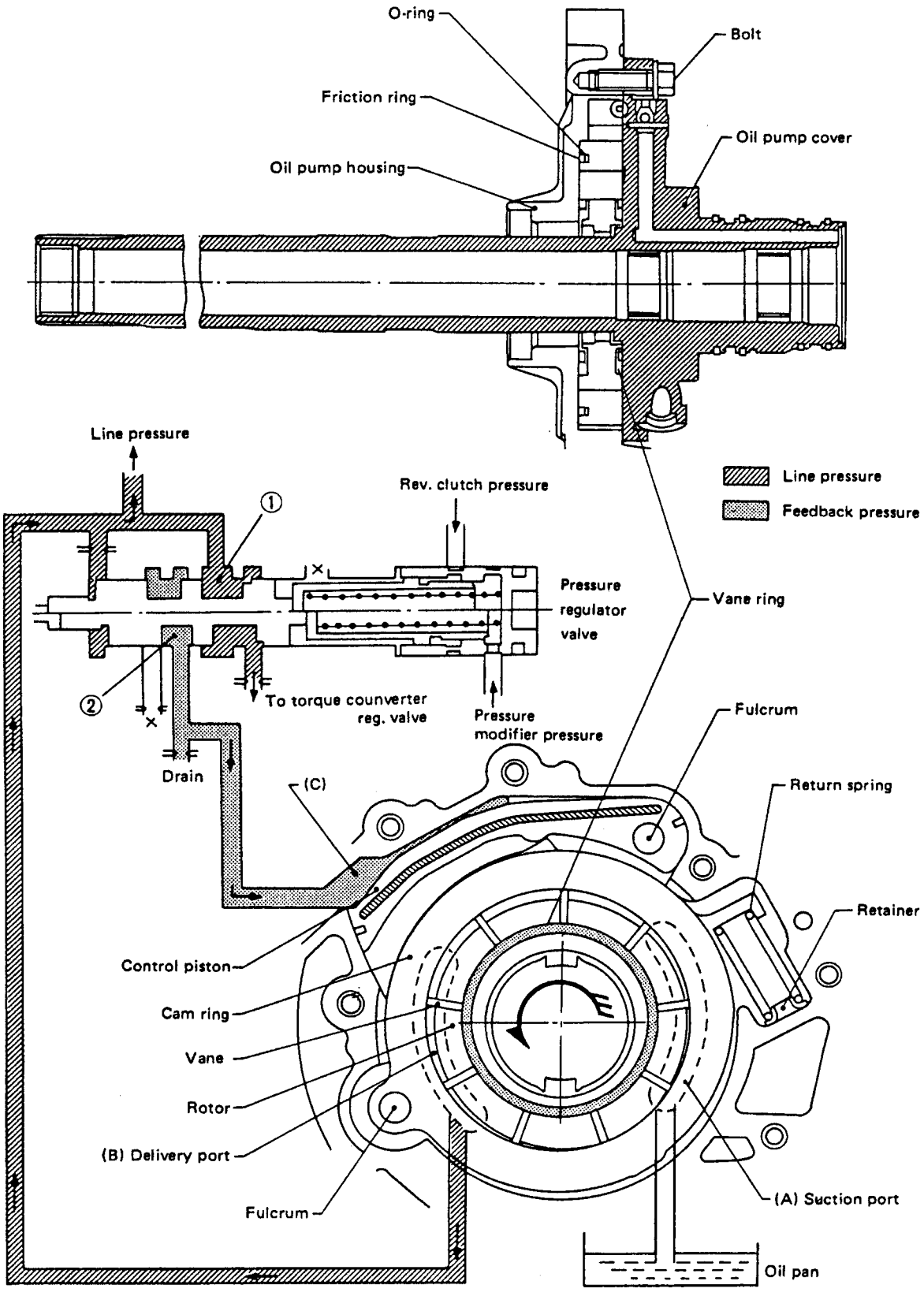
O-ring
Bolt
Friction ring
Oil pump cover
Oil pump housing
Line pressure
Rev. clutch pressure
Line pressure
Feedback pressure
①
Pressure
regulator
valve
Vane ring
②
To torque counverter
reg. valve
Pressure
modifier pressure
Fulcrum
Drain
(C)
Return spring
Retainer
Control piston
Cam ring
Vane
Rotor
(B) Delivery port
Fulcrum
(A) Suction port
Oil pan
B3-452

Fig. 7

5. Planetary Gear

A: CONSTRUCTION

The planetary gear train uses two sets of simple planetary gears (front planetary gear and rear planetary gear), four sets of multi-plate clutches (reverse clutch, high clutch, forward clutch, and overrunning clutch), one brake band, one set of multi-plate brake, and two sets of one-way clutches (one-way clutch 1-2 and one-way clutch 3-4) in order to allow shifting of four forward speeds and one reverse speed.

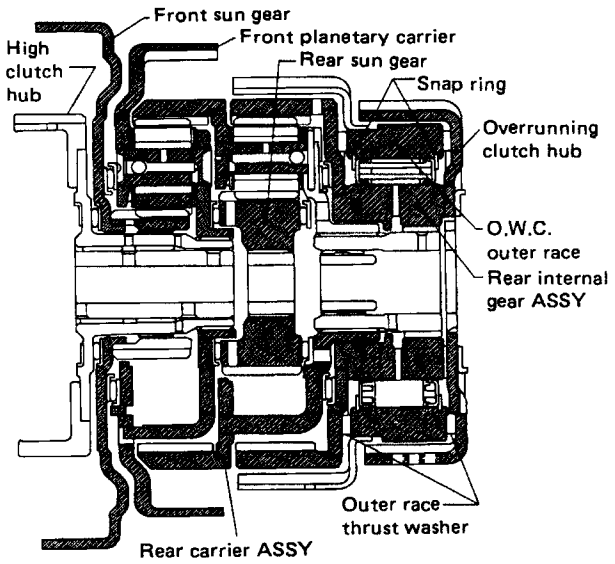

Fig. 8

Two sets of simple planetary gears are used to allow gear shifting from 1st speed to 4th speed or to reverse. Both the front and rear planetary gear carriers are made from pressed steel which is electron-beam welded to other structural members. The front planetary gear has three pinions while the rear planetary gear has four pinions. Both are part of an integral unit, and disassembling is not allowed.

B: FUNCTION

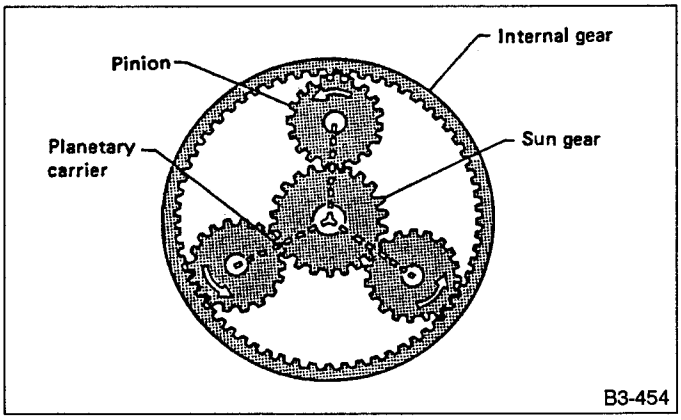

Fig. 9

The automatic transmission uses a planetary gear system instead of the parallel shaft (two shafts) gear system adopted in the manual transmission.

The advantage of the planetary gear system is that it is compact because it has only one center shaft. The gear ratio can be changed by simply locking or releasing or rotating certain portions, unlike the manual transmission that requires changing gear engagement.

The construction of the planetary gear is shown above. The sun gear is located at the center, and each of the pinion gears revolves around the sun gear while rotating on its axis. These gears are all enclosed in a large ring, called the internal gear. Each pinion gear is supported by a planetary carrier, so that the pinion gears revolve an equal amount in the same direction. As mentioned above, the planetary gear consists of four elements: the sun gear, pinion gears, internal gear, and planetary carrier. The gears are shifted by imposing certain conditions on two of the following three elements: sun gear, internal gear, and planetary carrier. The clutches and brakes are used to impose the conditions on the planetary gear set.

6. Reverse Clutch

A: CONSTRUCTION

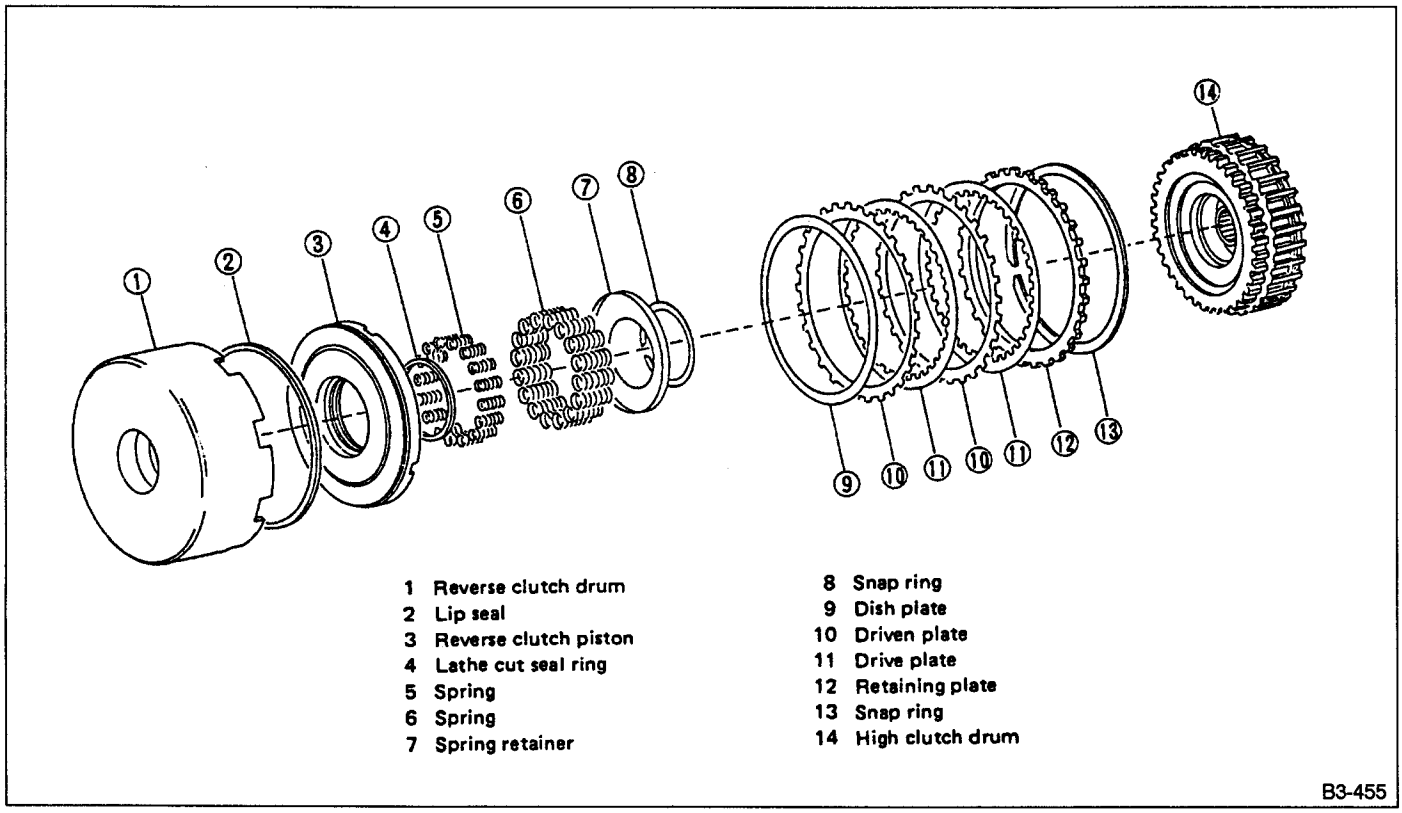

Fig. 10

B: FUNCTION

DURING OPERATION

Hydraulic pressure is applied to the reverse clutch piston ① from the control valve when shifting in reverse. The drive plate ② and driven plate ③ are connected by this pressure, and engine power from the high clutch drum ④ is transmitted to the front sun gear.

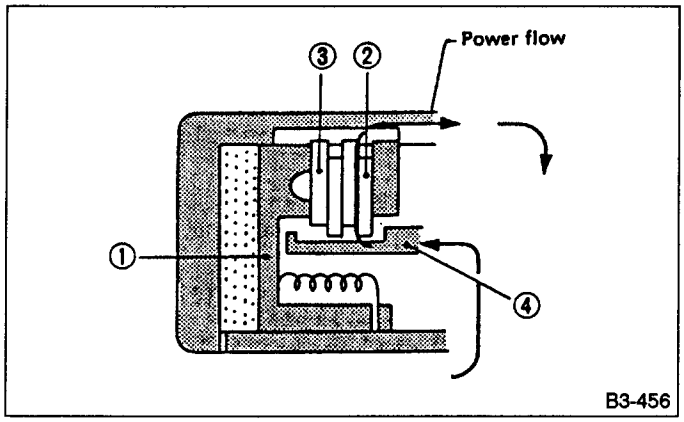

Fig. 11

DURING NON-OPERATION

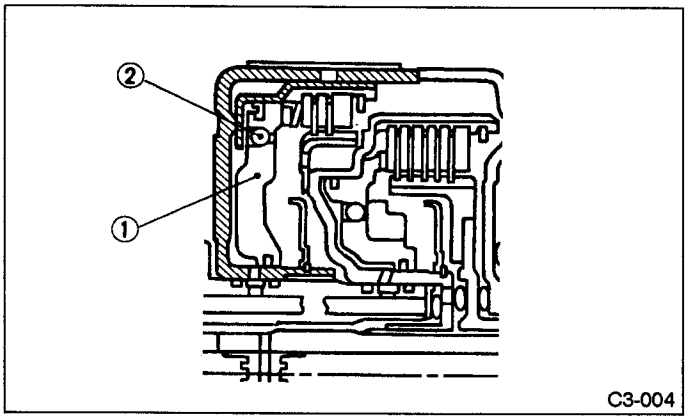

Fig. 12

When the shift lever is in any position other than reverse, no hydraulic pressure is applied to the reverse clutch piston ① . Hence the drive plate and driven plate are separated, and no power is transmitted.
The check ball ② is built into the clutch piston. This check ball releases oil pressure from the clutch piston while the drum rotates idle. It thus avoids build-up of residual pressure in the clutch drum and a resultant half-engaged clutch, which may otherwise be caused by centrifugal oil pressure.

7. High Clutch

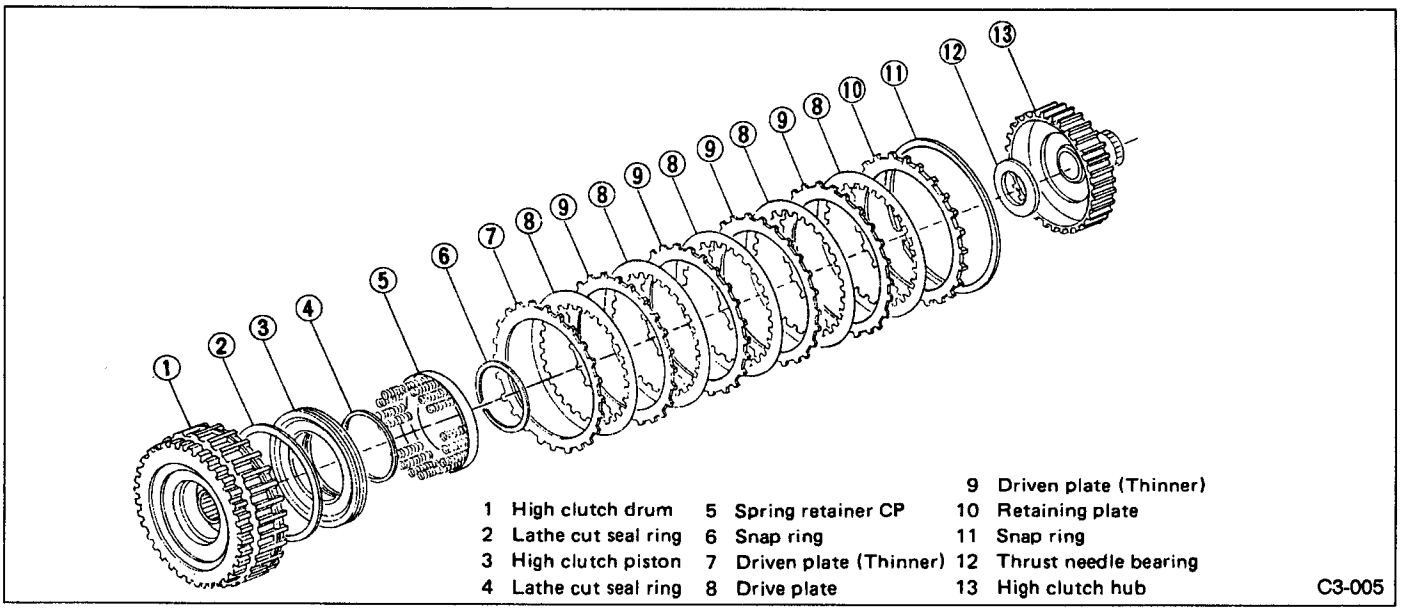

Fig. 13

In 3rd and 4th speed operation, hydraulic pressure is applied to the high clutch from the control valve and another hydraulic pressure controller. The clutch plates (drive and driven plates) are connected by this hydraulic pressure, and engine power from the input shaft is transmitted to the front planetary carrier through the high clutch hub.

8. Band Brake

A: CONSTRUCTION

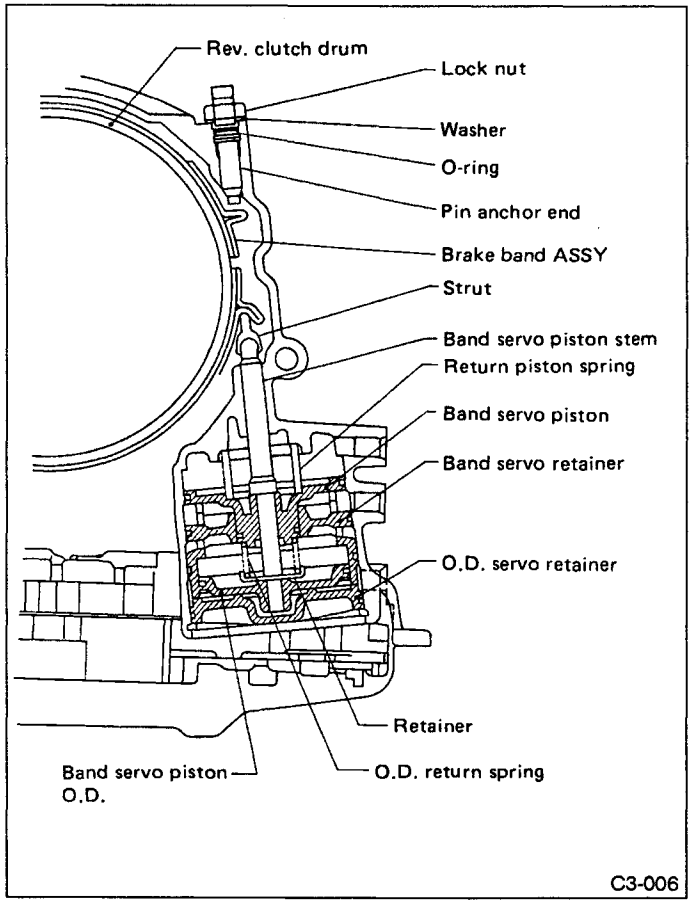

Fig. 14

The band brake consists of a flex type brake band, a band brake adjusting mechanism, two servo pistons, two retainers, two return springs, a stem, a strut, and others. The band brake can be adjusted as installed on the vehicle.

B: FUNCTION

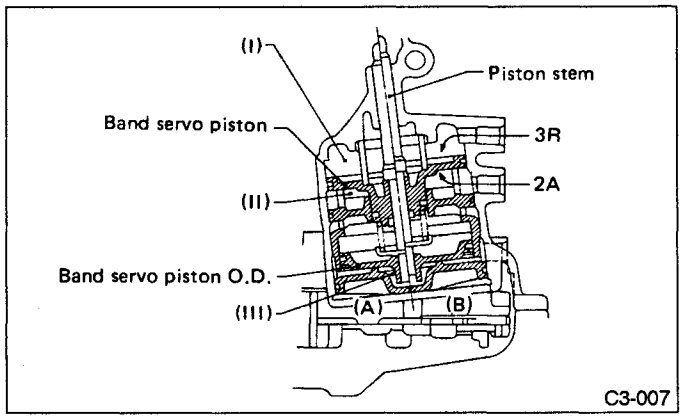

Fig. 15

One end of the brake band is secured to the transmission case via the brake band adjusting screw.

When no hydraulic pressure is applied to the servo piston from the hydraulic pressure controller, the servo piston and band servo piston O.D. are forced downward by the return spring, as shown in (A) of the Figure.

When hydraulic pressure 2A is applied to the servo chamber (II), it causes the band servo piston to come into contact with the stepped portion of the band servo piston stem, thereby pushing the band servo piston stem upward to state (B). Under this condition, the brake band slowly tightens the reverse clutch drum and fixes the front sun gear of the front planetary gear. (2nd speed state)

Next, when the release pressure 3R to the servo chamber (I) and the hydraulic operating pressure 2A to the servo chamber (II) are applied simultaneously, the band servo piston is pushed downward by the force of the return spring and the pressure difference between chamber (I) and chamber (II), caused by the difference in operating areas of the band servo pistons. Under this condition, state (A) is resumed, and the brake band loosens and releases the reverse clutch drum. (3rd speed state)

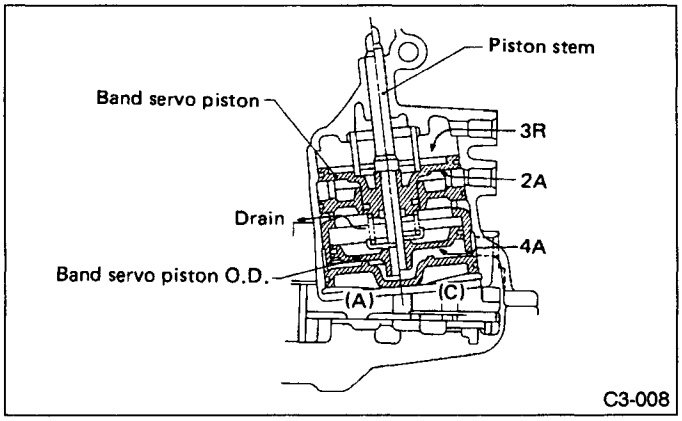

Fig. 16

When hydraulic pressure 4A is applied to the servo chamber (III) under the 3rd speed condition, the band servo piston O.D. is brought into contact with the retainer installed at the lower end of the band servo piston stem. Hence, the stem is pushed upward. As a result, state (C) is achieved where the brake band slowly tightens the reverse clutch drum and fixes the front sun gear of the front planetary gear. (4th speed state) The accumulator is built into the transmission case as shown in the Figure. When hydraulic pressures 2A, 3R, and 4A are applied from the hydraulic control unit to the respective servo chambers, the hydraulic shock loads are absorbed by the accumulator. This is because the accumulator piston moves slowly, and the brake band is tightened or released slowly. This results in smooth gearshift operation.

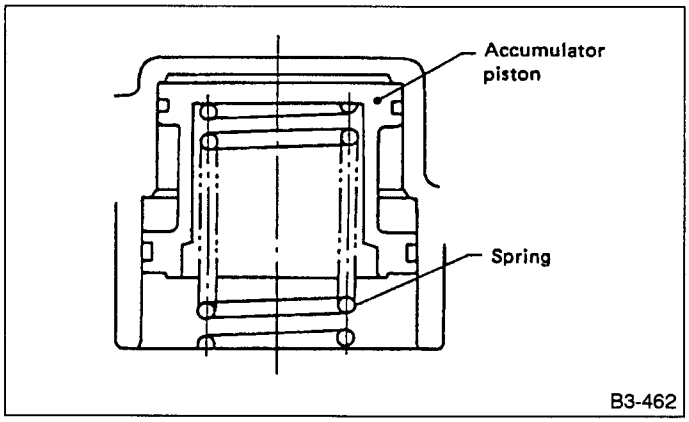

Fig. 17

9. One-way Clutch

A: CONSTRUCTION

The one-way clutch (O.W.C.) is a Sprague type. Two clutches are used. One is mounted between the one-way clutch outer race and the rear internal gear ASSY. The other is located between the forward clutch drum and the one-way clutch inner race.

B: FUNCTION

The former O.W.C. (3-4) is provided to prevent counterclockwise rotation (as viewed from the front) of the rear internal gear ASSY of the rear planetary gear during 1st, 2nd and 3rd speeds of the "D" range, "3" range, "2" range and "1st range". At the 4th speed of the "D" range, therefore, the rear internal gear ASSY rotates clockwise so that the O.W.C. rotates freely to ensure smooth transition between 3rd and 4th speeds.
On the other hand, the latter O.W.C. (1-2) is provided to prevent counterclockwise rotation (as viewed from the front) of the forward clutch ASSY during 1st speed of the "D" range and 1st speed of the "3" range. Therefore, when shifting from 1st speed of the "D" range or "3" range to 2nd speed, the forward clutch ASSY rotates clockwise. As a result, the O.W.C. now rotates freely ensuring smooth transition between 1st and 2nd speeds.

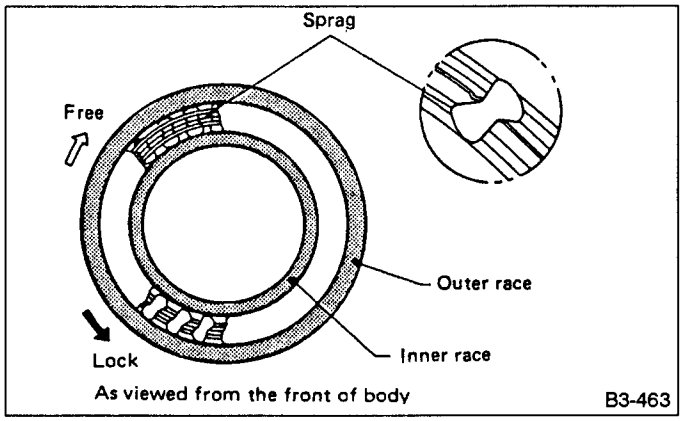

Fig. 18

10. Low & Reverse Brake

A: CONSTRUCTION

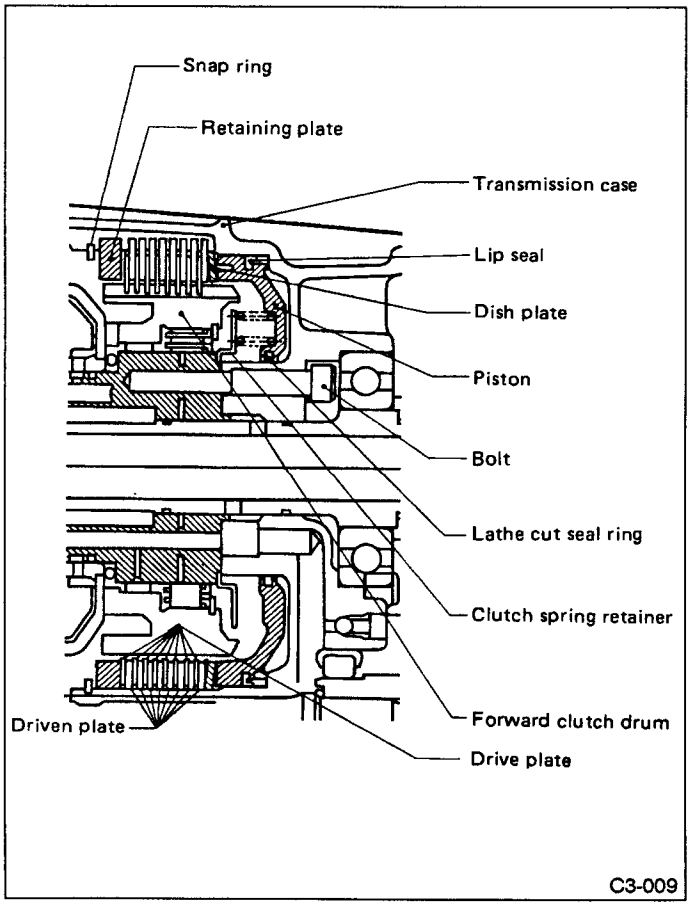

Fig. 19

The piston, dish plate, drive plate, driven plate, retaining plate and snap ring are mounted directly to the transmission case. The spring retainer which is integral with the spring is secured to the inner race of the transmission case engagement surface.

B: FUNCTION

During 1st speed of the "1st range", and reverse, hydraulic pressure from the hydraulic pressure controller is applied to the low & reverse piston. This pressure causes the drive plate and driven plate to engage, and the forward clutch to be fixed.

11. Forward Clutch & Overrunning Clutch

A: CONSTRUCTION

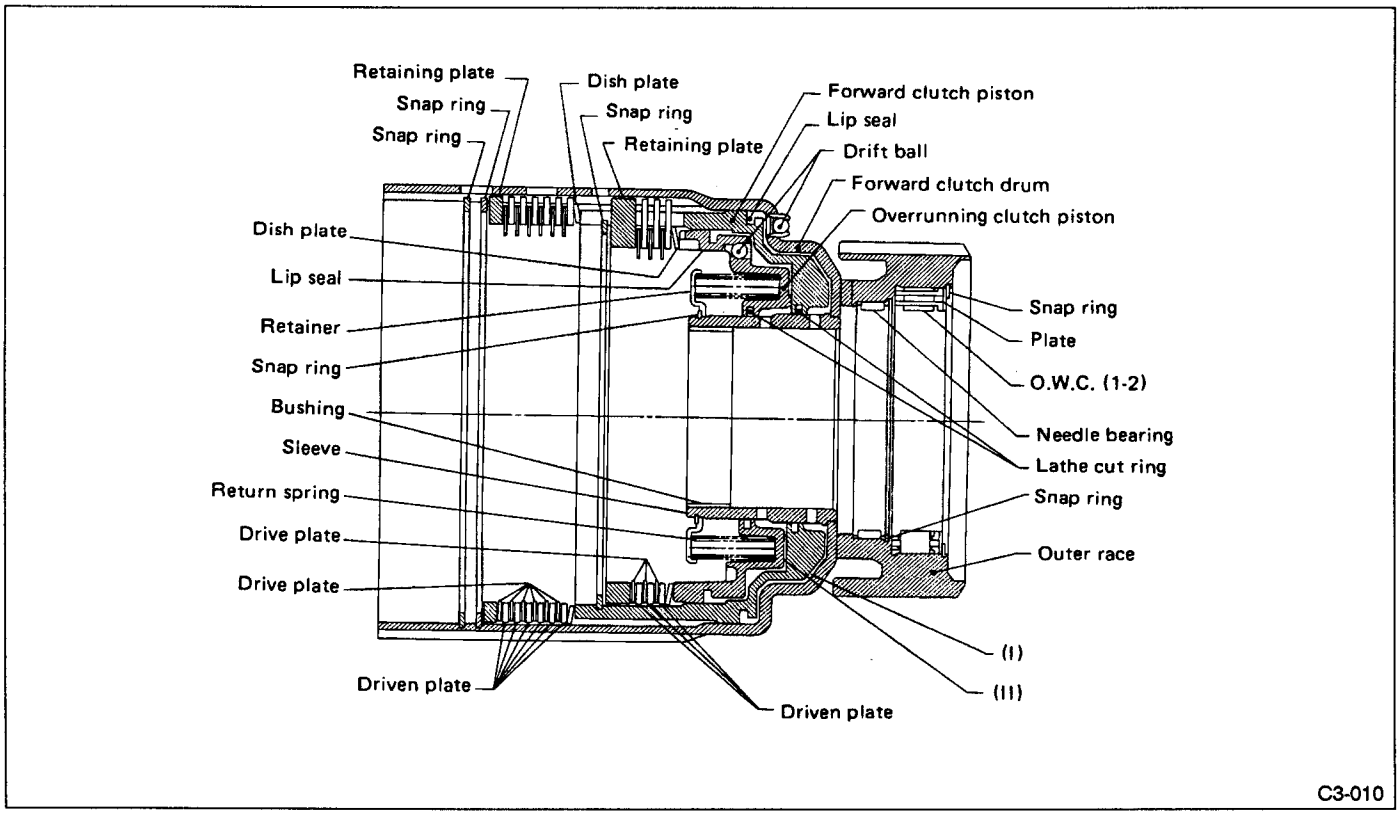

Fig. 20

The forward clutch drum is manufactured by pressing sheet metal. The clutch drum, outer race and sleeve are welded together by the electron beam welding technique. This clutch drum accommodates two multi-plate clutches (forward clutch and overrunning clutch). The overrunning clutch piston is mounted on the internal periphery of the forward clutch piston for common use of the return spring and reduction in size.

B: FUNCTION

When hydraulic pressure is applied to the pressure chamber (I) from the hydraulic pressure controller during forward operation in the "D", "3", "2" range and "1st range", the forward clutch piston forces the overrunning clutch piston. This causes the drive and driven plates of the forward clutch to engage while causing the drive and driven plates of the overrunning clutch to slide forward.

A groove is provided on the outside of the retaining plate and driven plate of the overrunning clutch in which the forward clutch piston slides.

When hydraulic pressure is applied to the pressure chamber (II) from the hydraulic pressure controller during "3" range, "2" range or "1st range" operation, the forward clutch piston is forced onto the side of the forward clutch drum. The overrunning clutch piston, however, is moved to the left by the hydraulic pressure. This causes the drive and driven plates of the overrunning clutch to engage. When this occurs, the outside splines of the overrunning clutch retaining plate and driven plate fit into the internal spline grooves of the forward clutch. This allows power to be transmitted between the overrunning clutch hub and the forward clutch drum.

12. Input Shaft

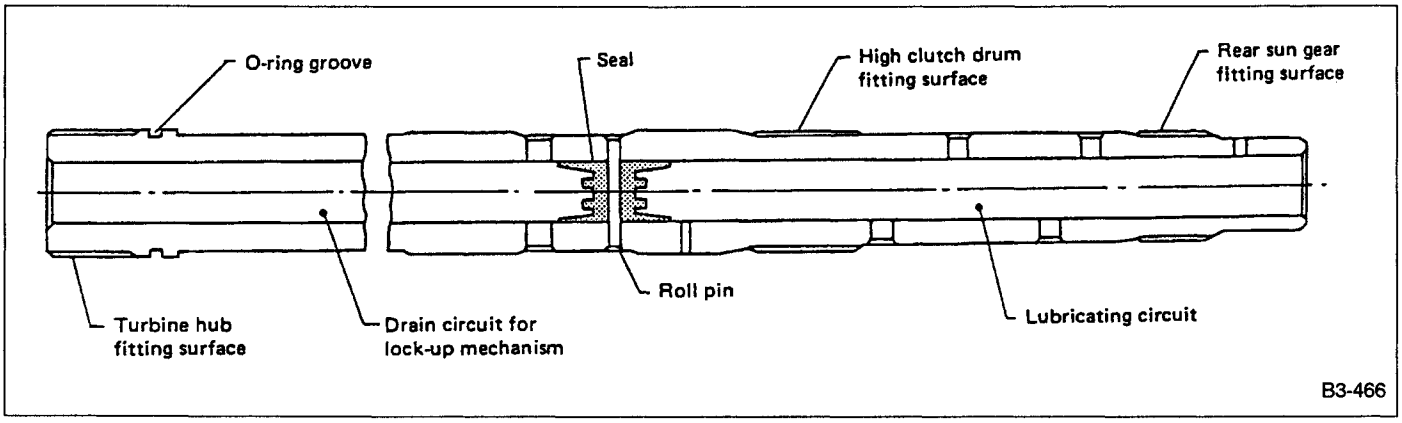

Fig. 21

The input shaft front end is spline-fitted to the torque converter turbine hub. The rear end is spline-fitted to the high clutch drum and rear sun gear. Power from the torque converter is transmitted to the high clutch drum and rear sun gear. The input shaft is hollow. A seal is fitted inside the shaft by a roll pin. The torque converter side of the shaft becomes the drain circuit for the lock-up mechanism. The other side becomes the lubricating circuit for the planetary gears and high clutch.

13. Reduction Gear

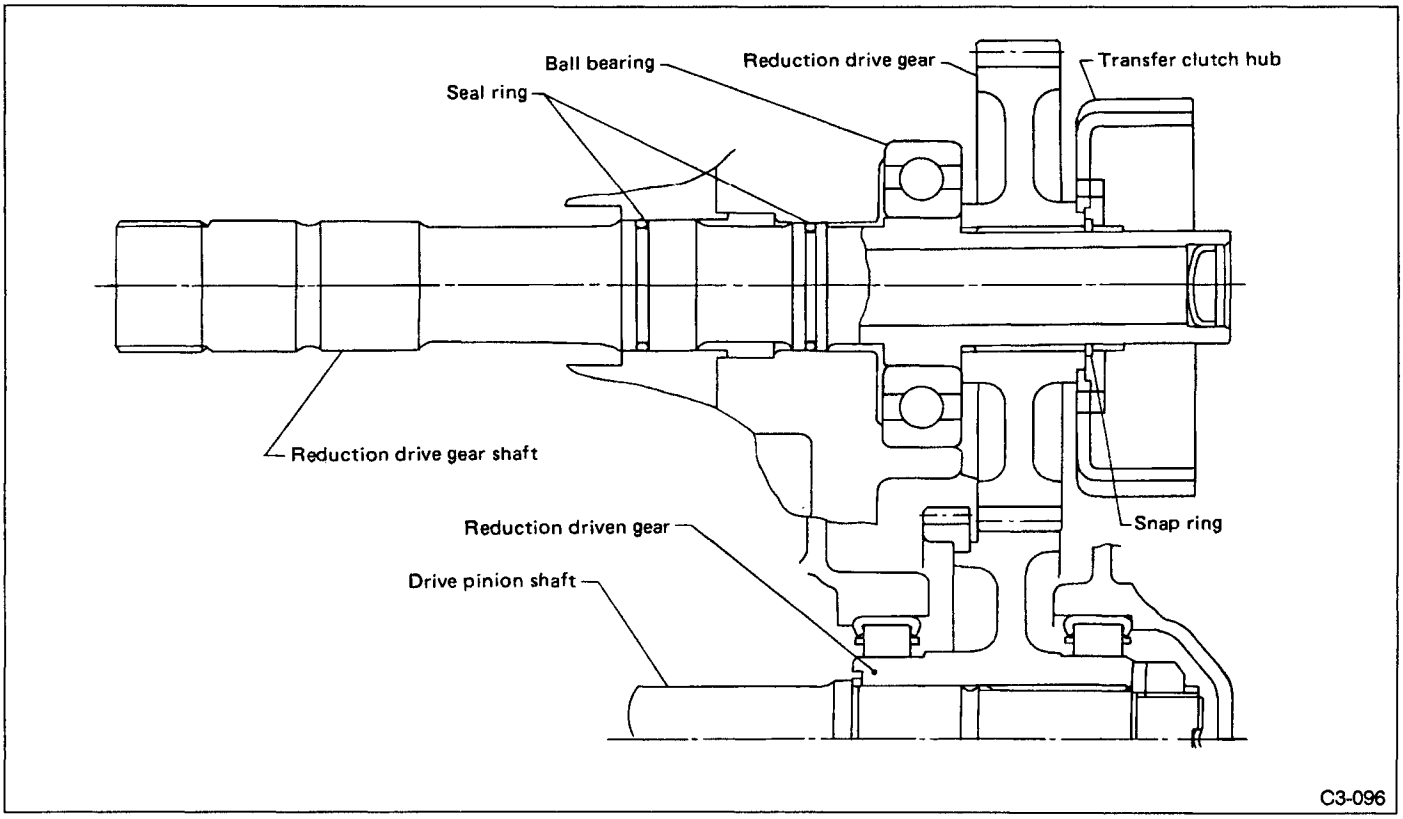

Fig. 22

Engine power is transmitted from the rear planetary carrier to the reduction drive shaft and the reduction drive gear. Power transmission to the front wheels is then transmitted to the final gear through the reduction driven gear and drive pinion. Power to the rear wheels is transmitted from the transfer clutch hub, welded to the side of the reduction drive gear, and passes through the transfer clutch (multi-plate clutch), to the rear drive shaft → propeller shaft → rear differential → rear wheel.

14. Final Reduction Gears

1. GENERAL

The hypoid drive gear is mounted to the cast iron oil pump housing by double taper roller bearings. The hypoid driven gear and the differential are mounted to the differential case. Both ends rotate and are supported by taper roller bearings in the converter case.

2. HYPOID GEAR

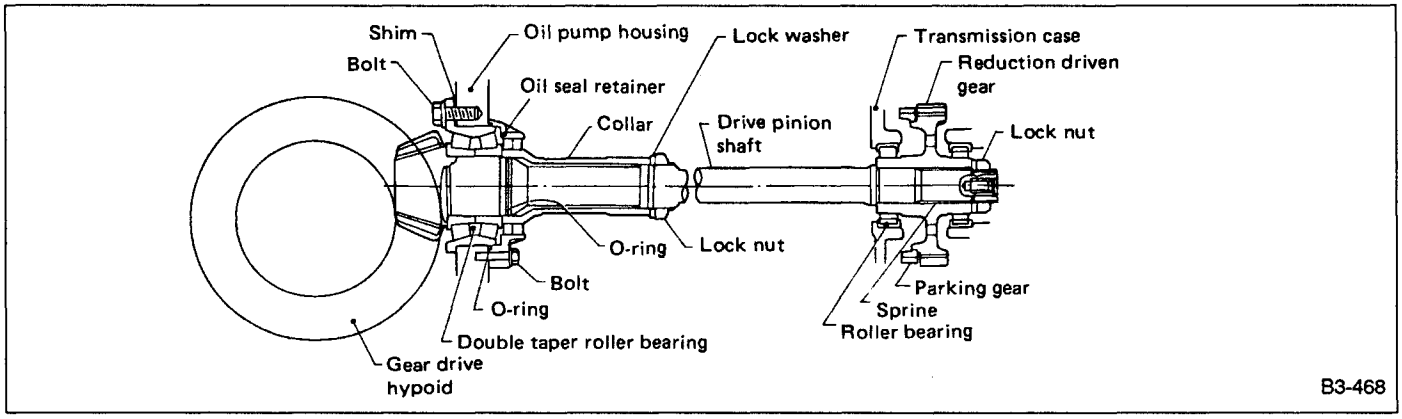

Fig. 23

The front end of the drive pinion shaft is supported by the double-taper roller bearing on the oil pump housing. The rear end is supported by two roller bearings on the transmission case and extension case. The double-taper roller bearing is preloaded by tightening the lock nut to a specified torque via the collar. The tooth contact of the hypoid gear is adjusted by changing the shim thickness between the double-taper roller bearing flange and oil pump housing.

The rear end of the drive pinion shaft is spline-fitted to the reduction driven gear, which is secured with a lock nut. The external helical spline has some lead, and the reduction driven gear is force-fitted to this shaft end.

3. DIFFERENTIAL GEAR

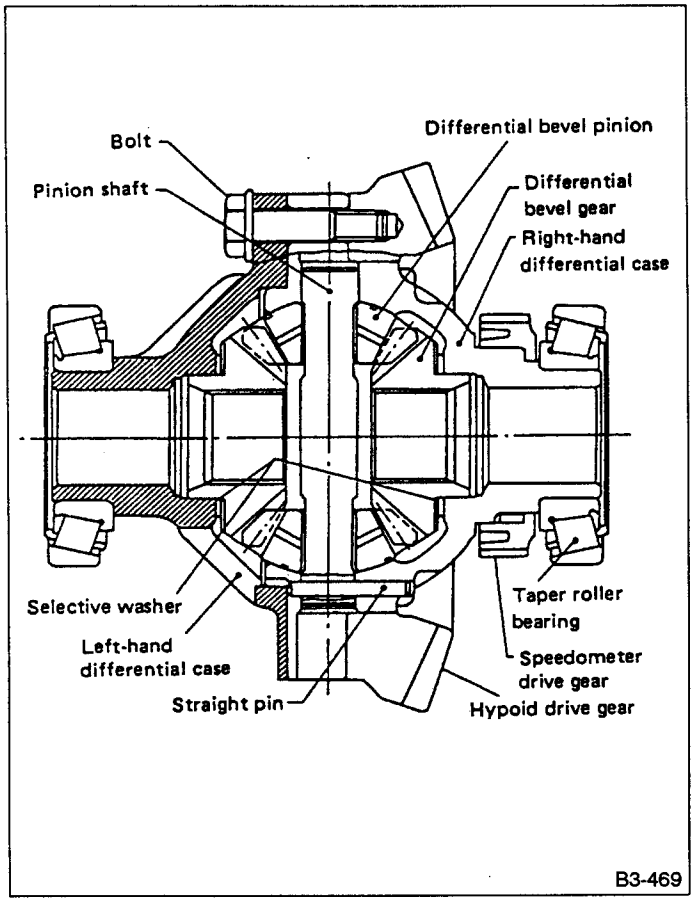

Fig. 24
The differential bevel gear is locked to the axle shaft by a clip.

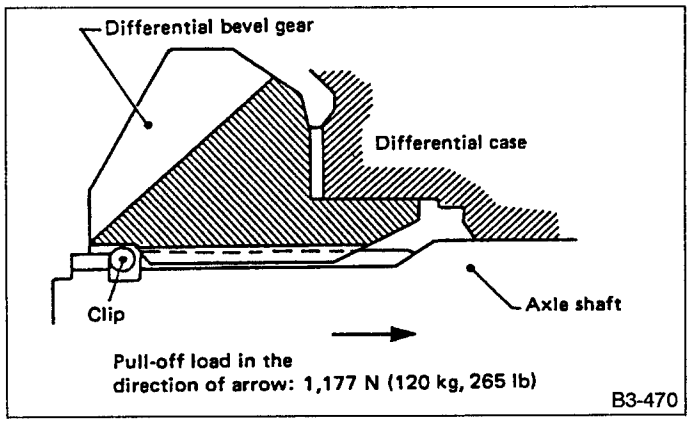

Fig. 25

4. SPEEDOMETER GEAR

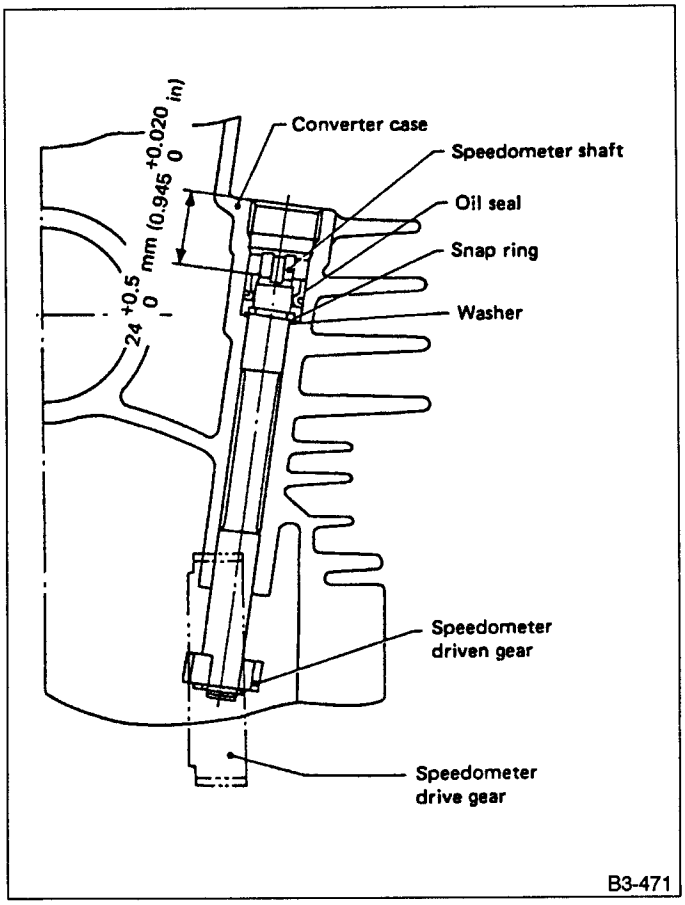

Fig. 26
The speedometer drive gear is mounted directly on the differential case, and the flexible cable is led from the right side of the converter case. With this arrangement, the speedometer drive and driven gears are properly lubricated.

15. Range Select Mechanism

The range select mechanism consists of a selector lever (on the floor/center console in the driver's compartment), push-pull cable, linkages, manual valve, parking pawl, etc.

When the selector lever is moved either forward or backward, the push-pull cable moves in the corresponding direction. This turns the manual shaft by way of the range selector lever. At this point, the pin at the end of the range selector lever turns the inhibitor switch arm to transmit a range signal to the control unit.

A manual plate and manual lever are attached to the manual shaft. The manual plate is fan-shaped and is provided with seven grooves on its edge corresponding to shift ranges (from "P" to "1"). A detent spring roller fits into the groove corresponding to the range selected. This regulates effort required to operate the selector lever.

A hydraulically controlled manual valve is installed on the lower pin of the manual lever. It slides in response to rotation of the manual shaft, thereby selecting an oil passage inside the lower valve body in response to the position (P, R, N, D, 3, 2 or 1) of the selector lever.

A parking rod located on the upper portion of the lever mechanically holds the output shaft when the selector lever is shifted to "P".

A shift lock mechanism is incorporated in the selector lever mount. For the shift lock mechanism, see "3-3 Transmission Control System".

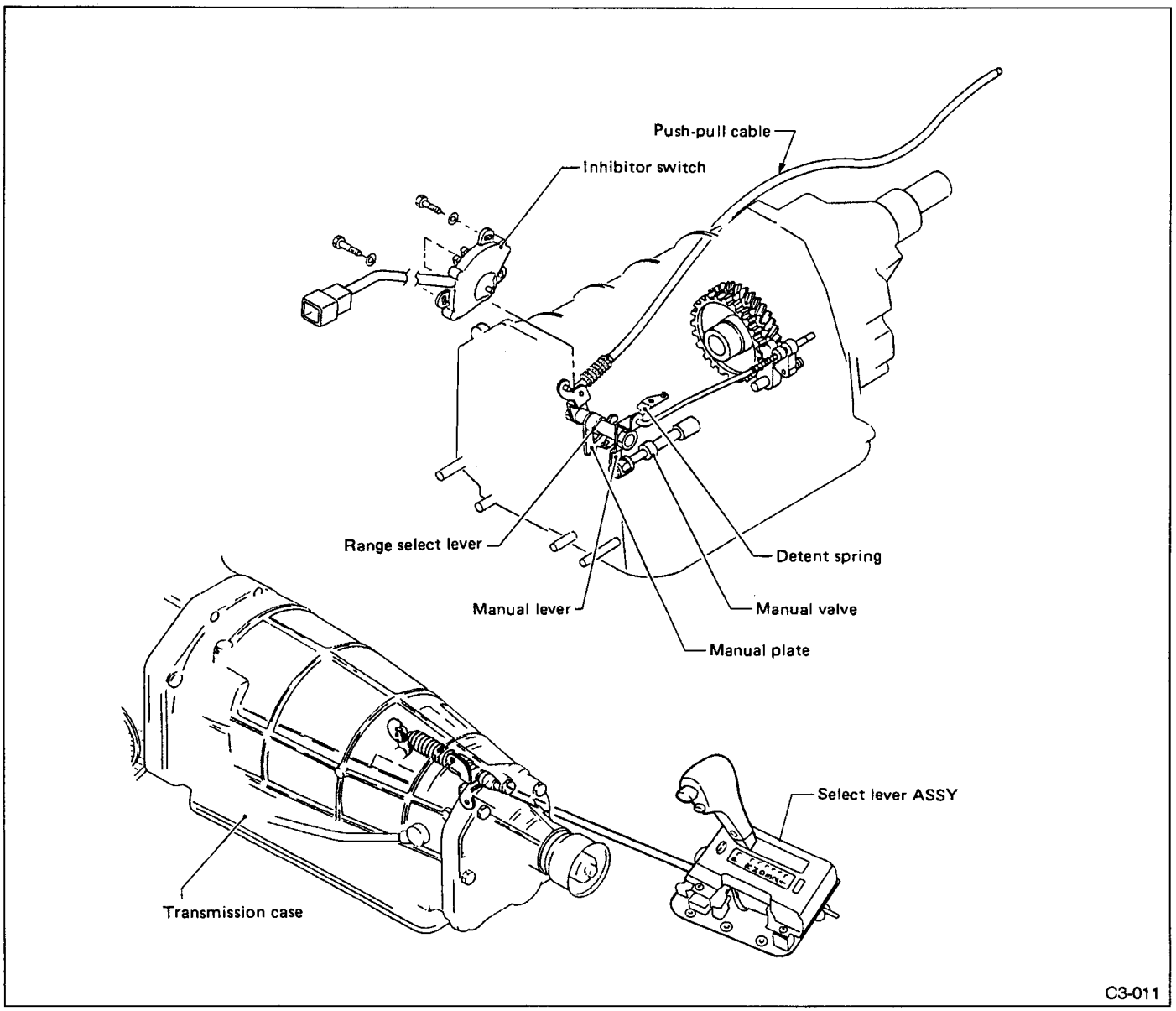

Fig. 27

16. Parking Mechanism

The end of the parking pawl engages mechanically with the gear groove of the parking gear. This gear is spline-fitted to the drive pinion shaft.

When the selector lever is set to "P", the manual lever connected to the manual shaft turns, moving the parking rod backward. A cam and spring are installed on the rear of the parking rod. The parking cam slides freely on the parking rod. The parking rod and cam contact the "V" groove of the actuator (secured to the transmission case) and the back of the parking pawl. With this arrangement, when the parking rod moves backward, the cam moves to the back of the parking pawl and the "V" groove of the actuator. The parking pawl turns in the direction of the parking gear using the parking pawl shaft as a pivot. It then engages with the parking gear groove.

If the end of the parking pawl rides over the tooth of the parking gear so that the parking cam does not move midway between the pawl and actuator, the parking rod will move to "P". This compresses the parking spring so that the parking cam is ready to move to "P". Under this condition, if the vehicle moves slightly, the parking gear will rotate to engage the pawl completely.

Except for the P range, the parking pawl is tensed by the parking pawl return spring in the direction that moves away from the parking gear.

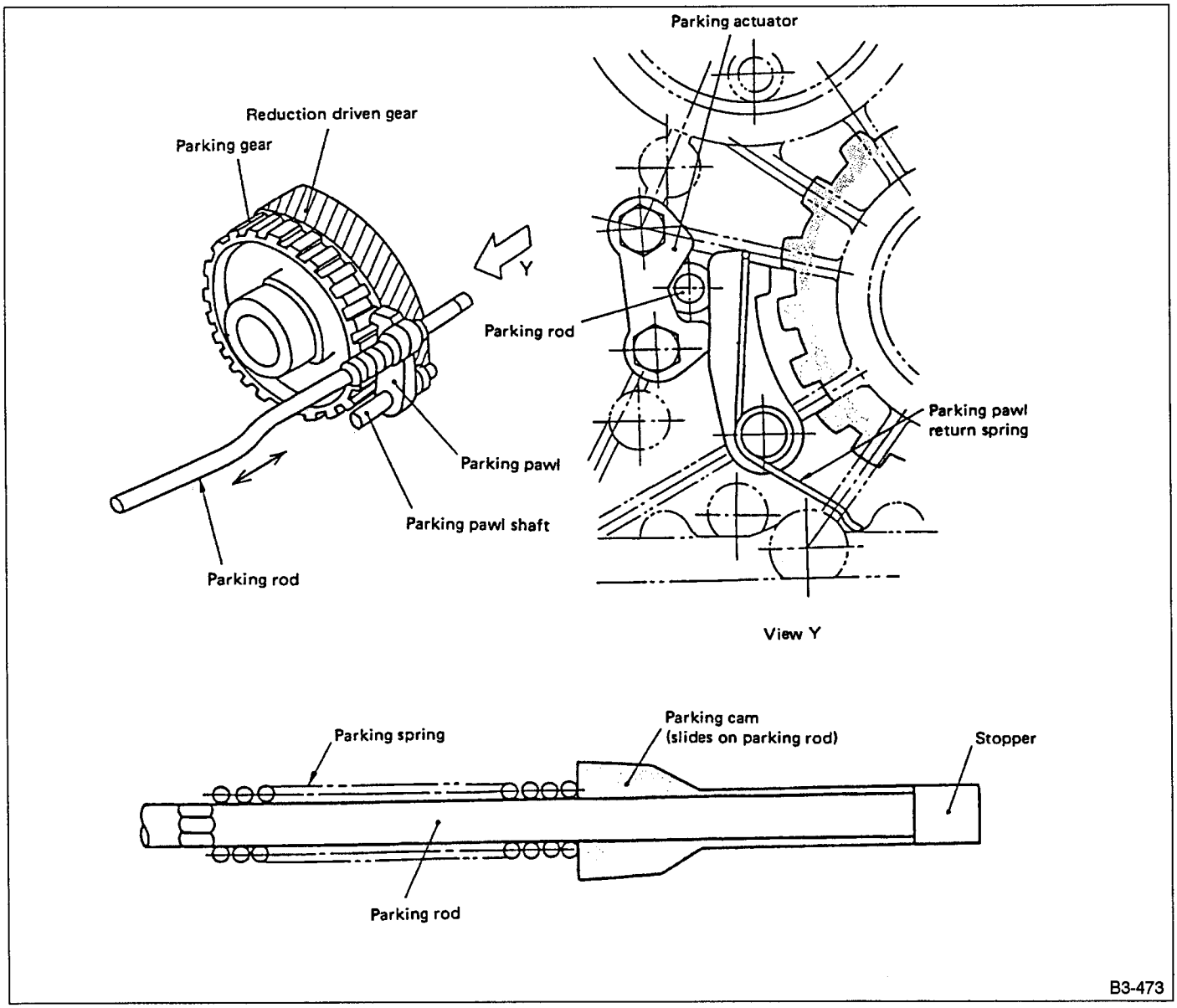

Fig. 28

17. AWD Transfer System

1. OUTLINE

This is the electronically controlled MP-T (multi-plate transfer) type AWD transfer system, originally designed for SUBARU, consisting of a transfer hydraulic pressure control unit incorporating a vehicle speed sensor, control unit, and duty solenoid and a transfer clutch (hydraulic multi-plate clutch).

The control unit stores optimum transfer clutch torque data for a variety of driving conditions. When actual driving conditions (vehicle speed, throttle opening, gear range, wheel slip, etc.) are detected by various sensors, the control unit selects a duty ratio most suitable to the given condition from the memory. It then controls the operation of the transfer clutch by means of the hydraulic pressure which controls the duty solenoid and provides optimum rear torque distribution.

Various sensors and the control unit also serve as gear shift control, lock-up control and hydraulic pressure control.

The AWD transfer unit is housed in the extension case together with the bearing, rear drive shaft, etc.

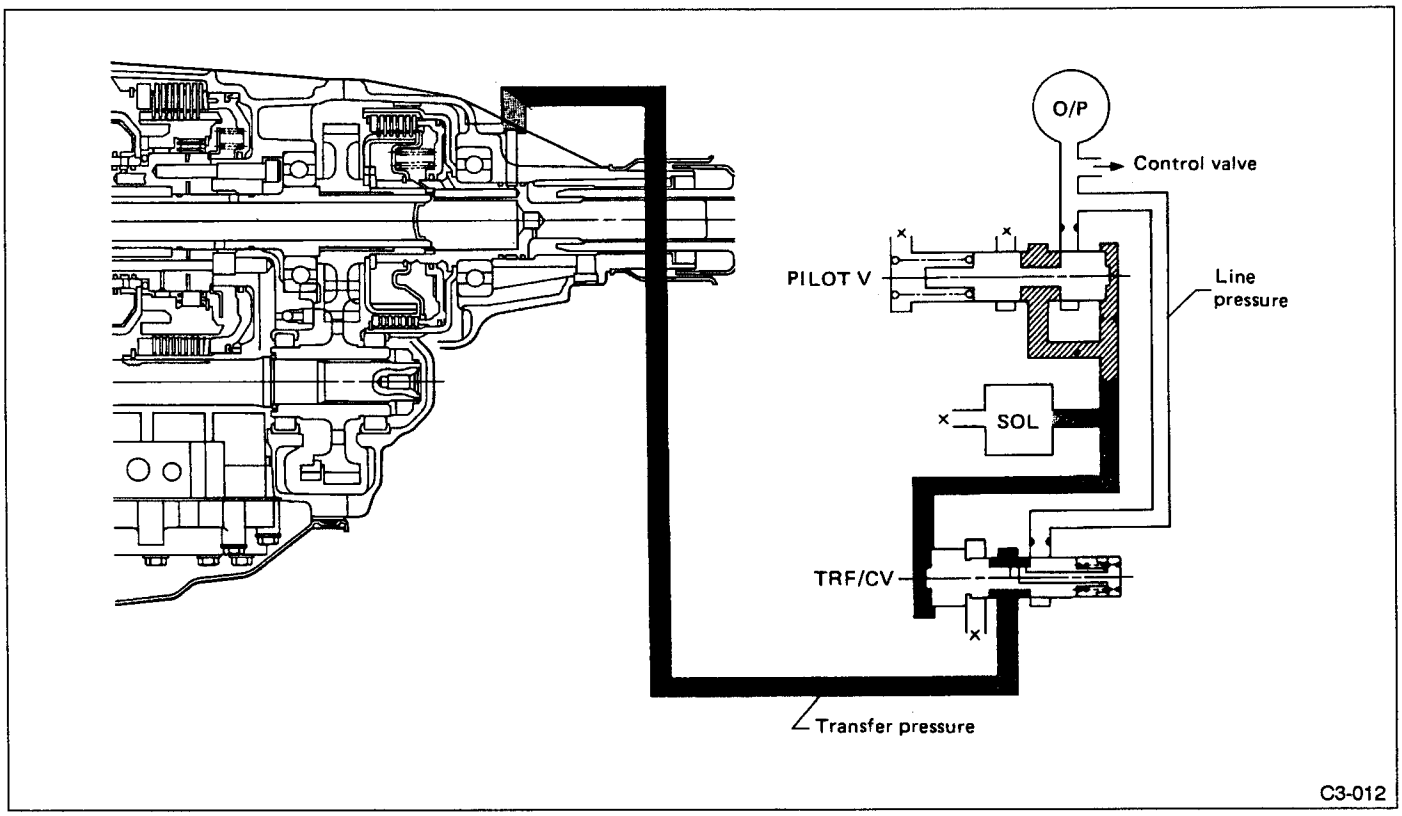

Fig. 29

2. TRANSFER CLUTCH (MULTI-PLATE CLUTCH)

The transfer unit consists of a hydraulic multi-plate clutch and a transfer hydraulic control system incorporating a duty solenoid valve. It is housed in the extension case together with the bearings, rear drive shaft, etc.

The transmission control unit has duty ratios memorized in advance according to running conditions. In order to obtain the optimum transfer torque for the running condition, the oil pressure that is applied to the drive plates and driven plates is controlled by applying oil pressure to the transfer piston from the transfer oil pressure control device including the duty solenoid.

Also, the transfer clutch drum and rear drive shaft are joined to each other by welding. The rear drive shaft has drilled oil passages for transfer clutch control and also for lubrication of extension bushing and ball bearing in it.

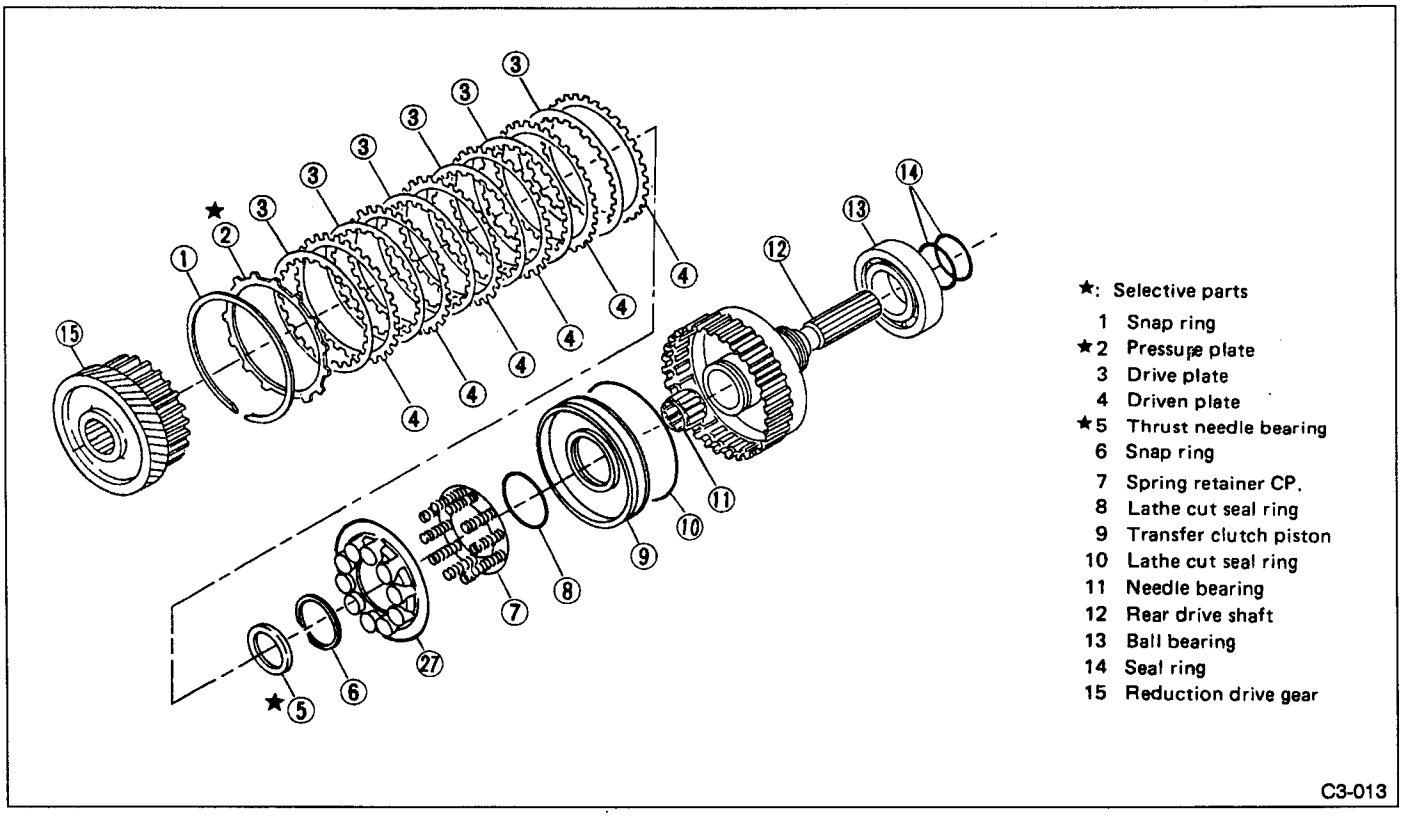

Fig. 30

3. TRANSFER OIL PRESSURE CONTROL DEVICE

The transfer valve body is bolted to the side of the extension case through two gaskets and one separate plate.

Operating oil for the transfer valve body is routed to the extension case through a pipe connecting the discharge circuit of the oil pump on the front of the transmission case to the rear of the case. It is then delivered to the oil pressure circuit provided in the plane on which the transfer valve body is mounted.

This line pressure is reduced to a fixed level by the pilot valve, and becomes the initial pressure of the duty solenoid C. Line pressure is also delivered to the transfer control valve where it is regulated by duty pressure variations to control the oil pressure so that optimum rear torque distribution is obtained according to running conditions.

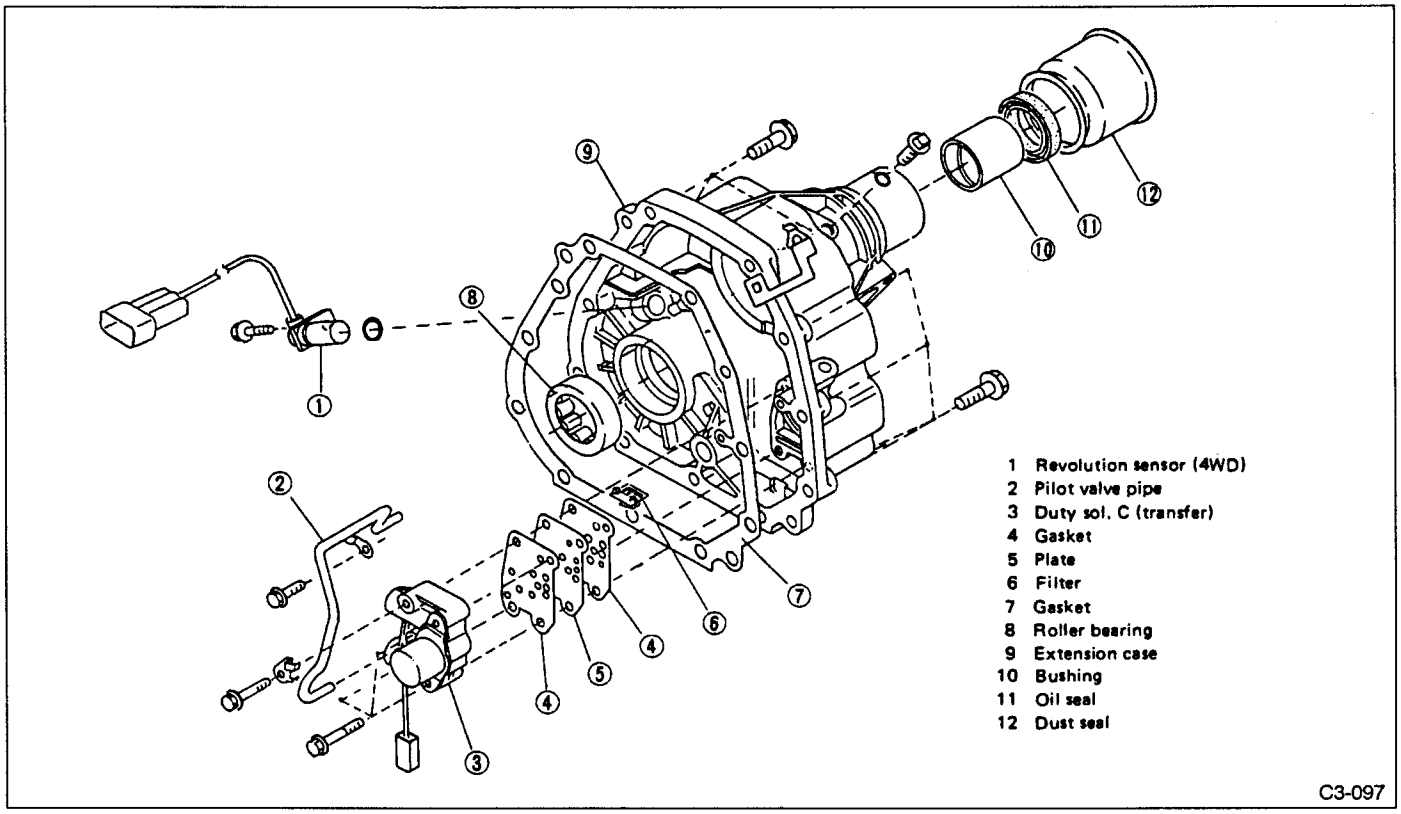

Fig. 31

18. Hydraulic Control Valve

A: GENERAL

The hydraulic control system consists of an oil pump, control valve bodies, clutches, brakes and connecting passages and pipes. When it is activated manually, or automatically by the electronic control system, it hydraulically controls the gearshifting mechanism.

B: CONSTRUCTION

1. OVERALL

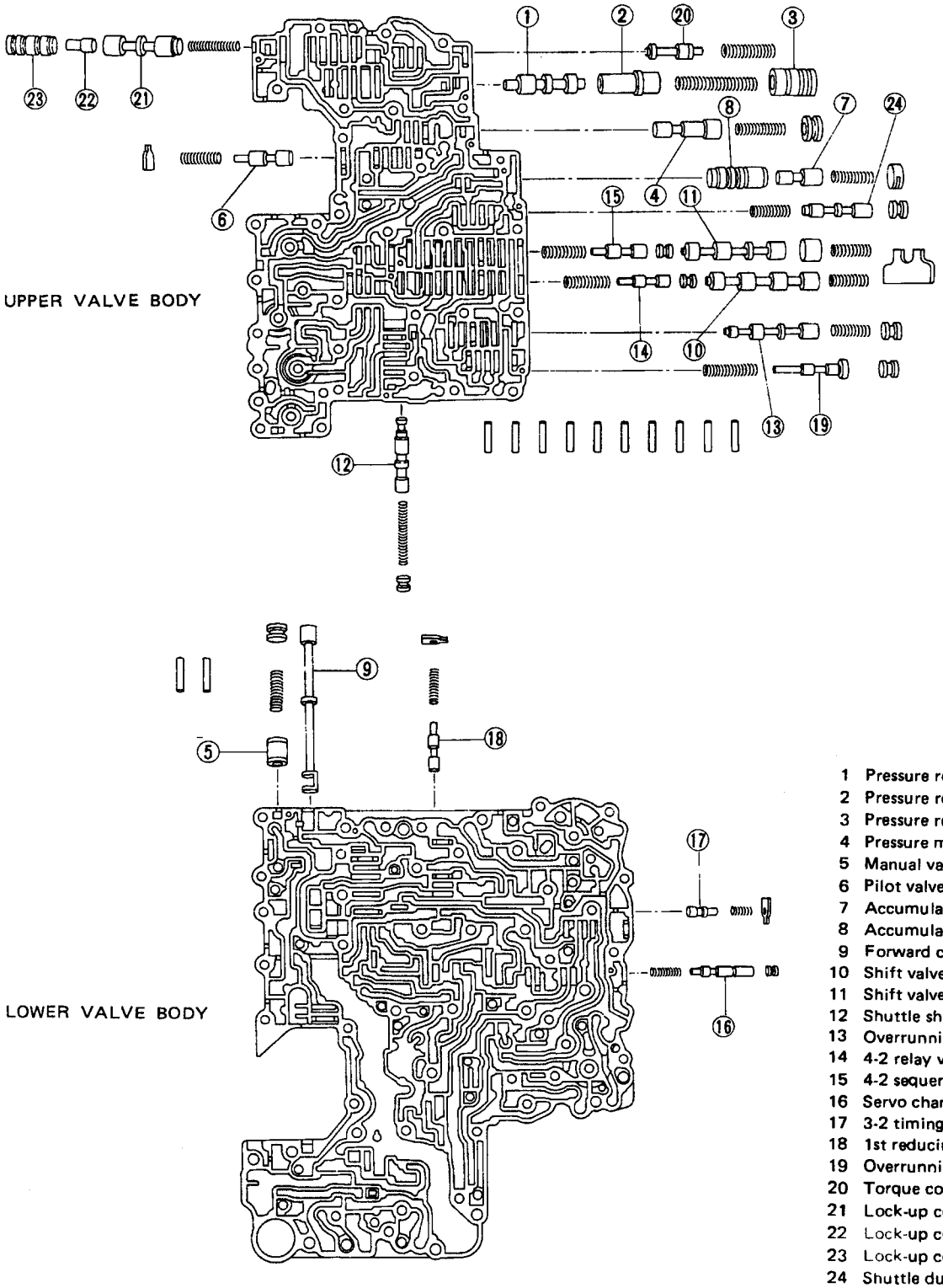

1 Pressure regulator valve
2 Pressure regulator plug
3 Pressure regulator sleeve plug
4 Pressure modifier valve
5 Manual valve
6 Pilot valve
7 Accumulator control plug
8 Accumulator control sleeve
9 Forward clutch control valve
10 Shift valve A
11 Shift valve B
12 Shuttle shift valve
13 Overrunning clutch control valve
14 4-2 relay valve
15 4-2 sequence valve
16 Servo charger valve
17 3-2 timing valve
18 1st reducing valve
19 Overrunning clutch reducing valve
20 Torque converter regulator
21 Lock-up control valve
22 Lock-up control plug
23 Lock-up control sleeve
24 Shuttle duty shift valve

C3-165

Fig. 32

2. VALVE BODY CONFIGURATION

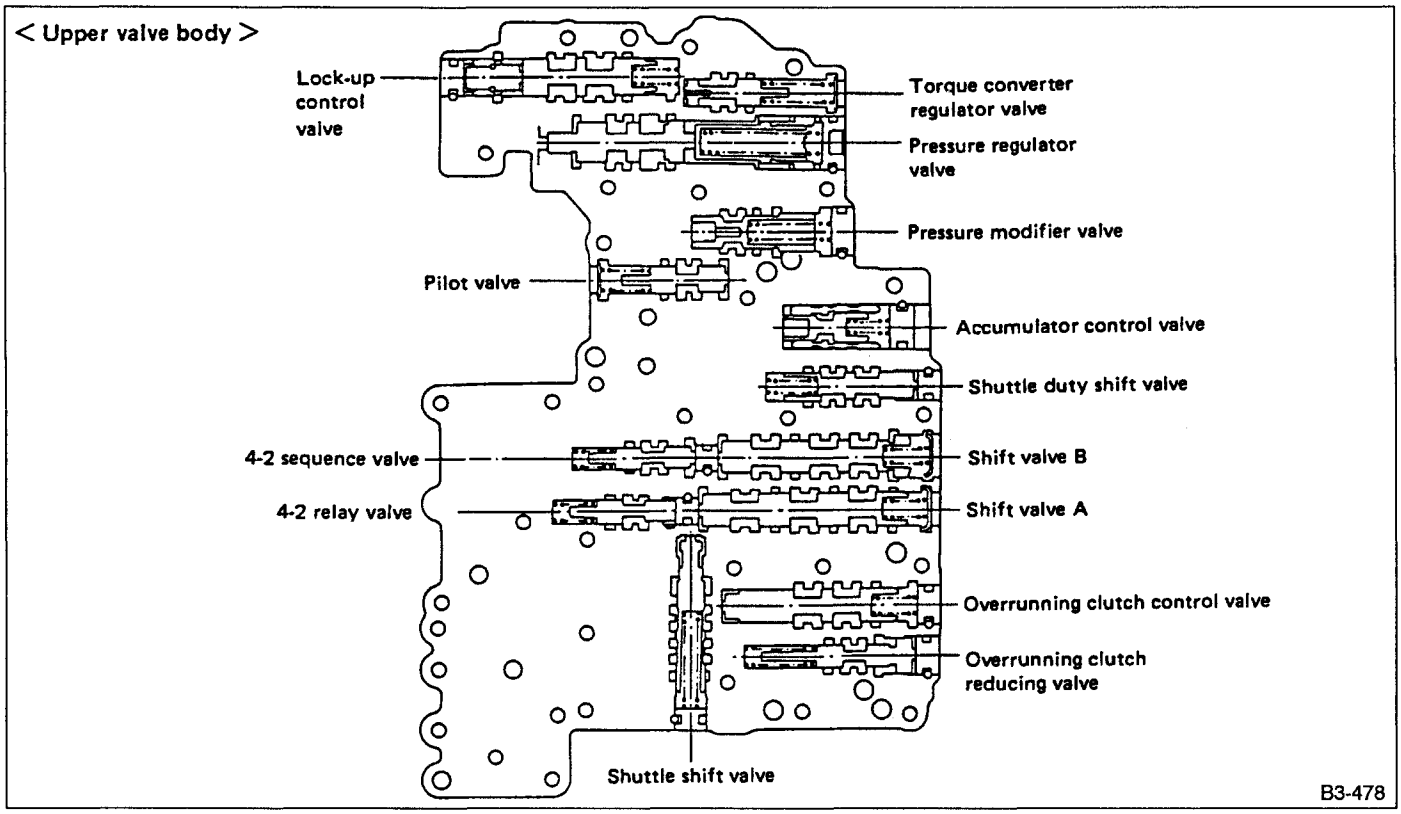

Fig. 33

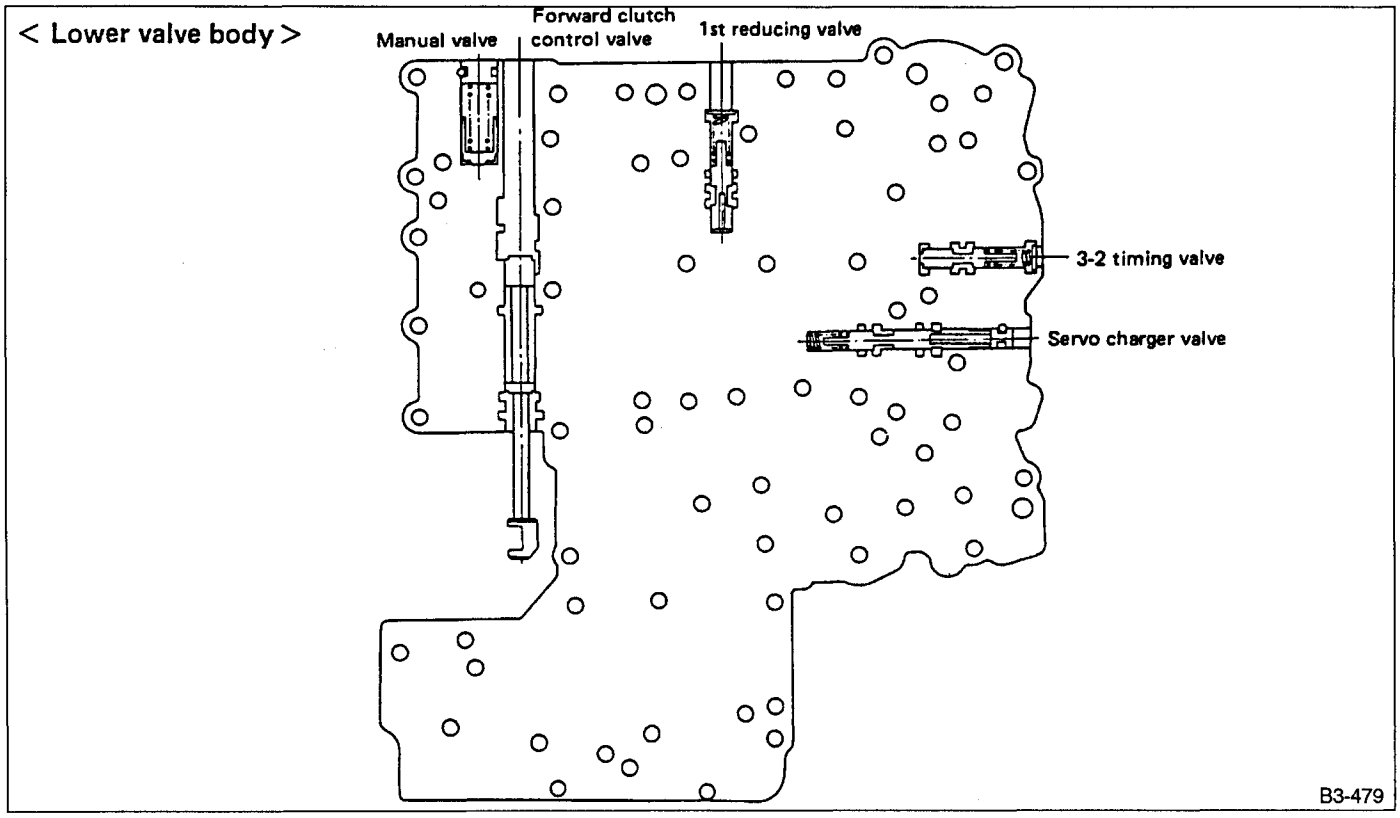

Fig. 34

3. RELATED PARTS (1)

The control valve body is fitted with Solenoid 1 (shift), Solenoid 2 (shift), Solenoid 3 (overrunning clutch), Duty solenoid A (line pressure), Duty solenoid B (lock-up) and an ATF temperature sensor.

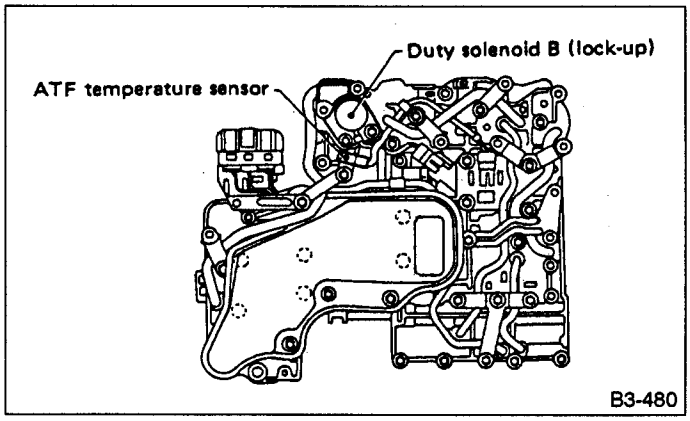

Fig. 35

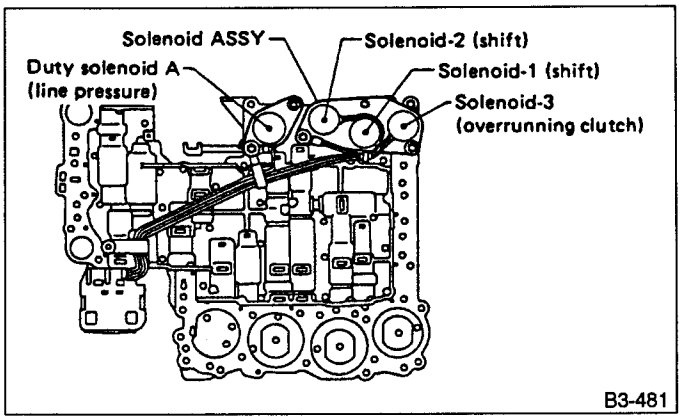

Fig. 36

4. RELATED PARTS (2)

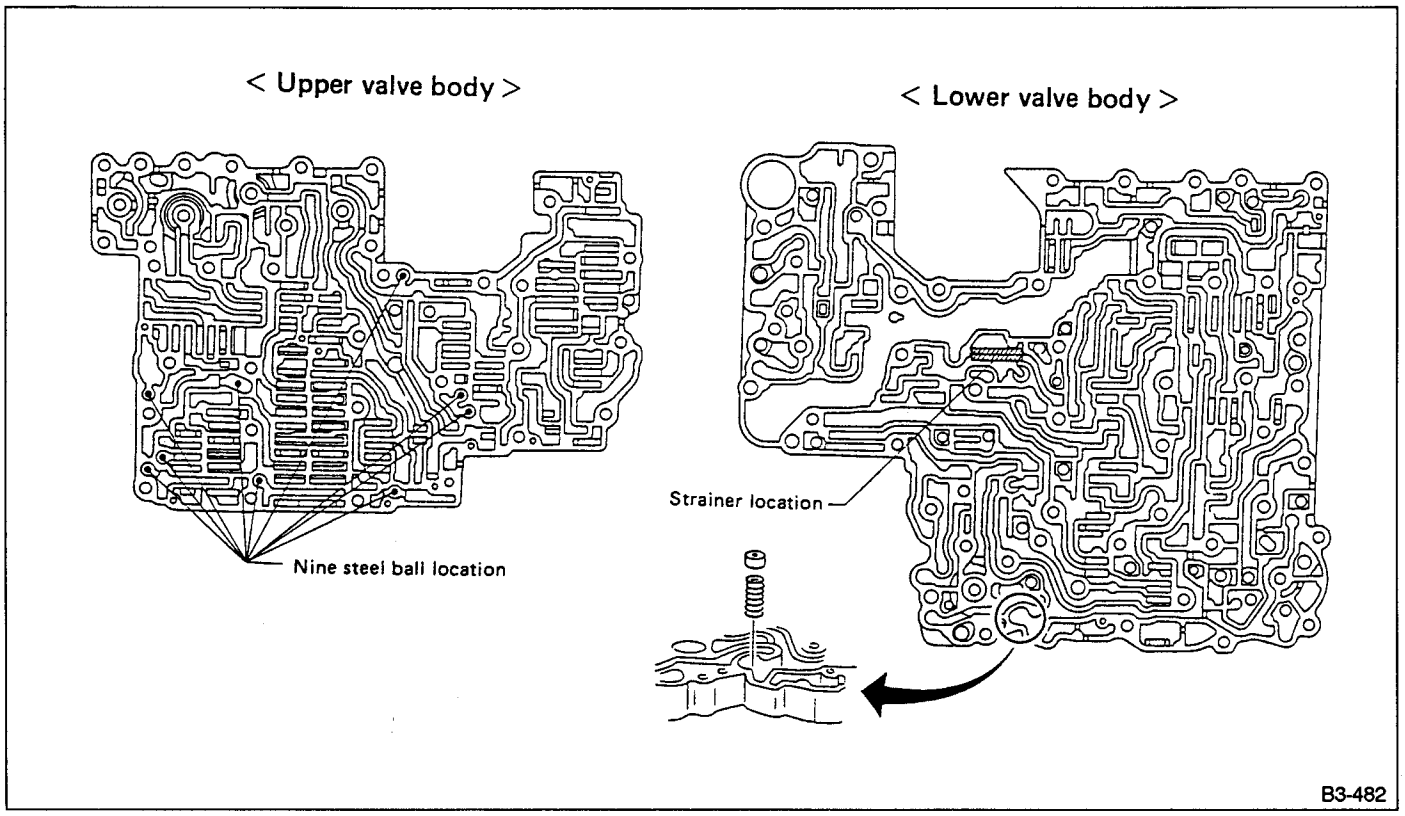

Fig. 37

5. RELATED PARTS (3)

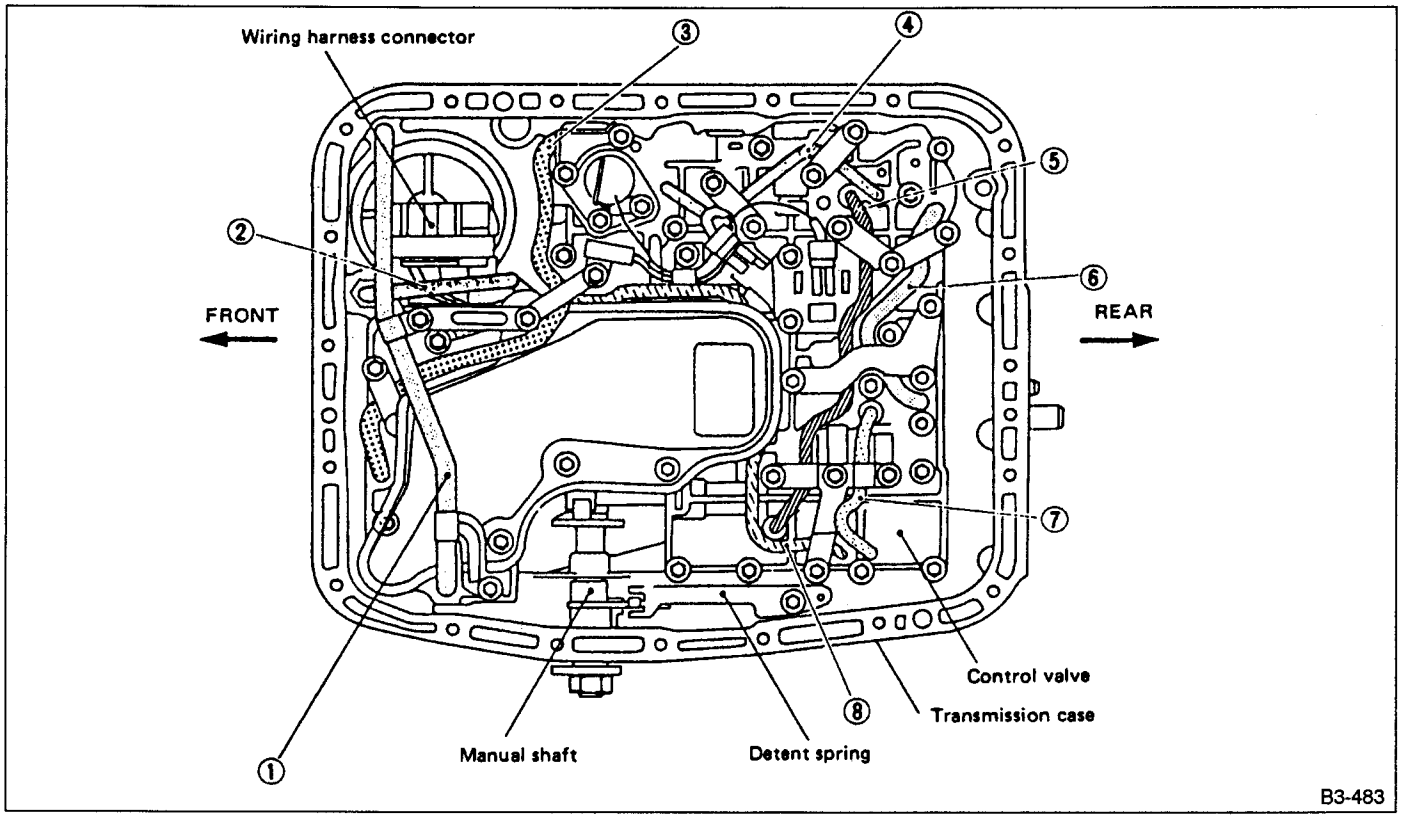

Fig. 38

〈Pipe names〉

No.	Description	Hydraulic circuit
1	Oil cooler outlet pipe	Cooling line from control valve to oil cooler inside radiator
2	Transfer control pipe	Line-pressure supply line to transfer control valve
3	Reverse clutch pressure pipe	Accumulator circuit of reverse clutch pressure
4	4A pressure pipe	4A pressure circuit
5	3R pressure pipe	3R pressure circuit
6	Forward clutch pressure pipe	Supply line to N → D accumulator
7	Pilot pressure pipe	Pilot pressure supply line to shuttle shift valve
8	Pressure-modifier pressure pipe	Supply line to pressure modifier accumulator

C: FUNCTION

<table>
<tr><th>Name</th><th>Function</th></tr>
<tr><td>• Pressure regulator valve
• Pressure regulator plug
• Pressure regulator sleeve plug</td><td>Regulates the pressure of oil delivered from the oil pump to an optimum level (line pressure) corresponding to vehicle running conditions.</td></tr>
<tr><td>Pressure modifier valve</td><td>An auxiliary valve for the pressure regulator valve. This valve adjusts pressure used to regulate line pressure to an optimum level corresponding to running conditions.</td></tr>
<tr><td>Pressure modifier accumulator piston</td><td>Smoothes the pressure regulated by the pressure modifier valve to prevent pulsation in line pressure.</td></tr>
<tr><td>Pilot valve</td><td>Creates the constant pressure (pilot pressure) necessary to control line pressure, lock-up, overrunning clutch, 3- 2 timing, and gearshift operations from line pressure.</td></tr>
<tr><td>• Accumulator control plug
• Accumulator control sleeve</td><td>Adjusts accumulator back pressure to correspond to running conditions.</td></tr>
<tr><td>Manual valve</td><td>Delivers line pressure to each circuit corresponding to the selected position.
<table><tr><th>Circuit</th><th>①</th><th>②</th><th>③</th><th>④</th></tr><tr><td>Range</td><td></td><td></td><td></td><td></td></tr><tr><td>P</td><td></td><td></td><td></td><td></td></tr><tr><td>R</td><td></td><td></td><td></td><td>○</td></tr><tr><td>N</td><td></td><td></td><td></td><td></td></tr><tr><td>D</td><td>○</td><td></td><td></td><td></td></tr><tr><td>3</td><td>○</td><td></td><td></td><td></td></tr><tr><td>2</td><td>○</td><td>○</td><td></td><td></td></tr><tr><td>1</td><td>○</td><td>○</td><td>○</td><td></td></tr></table> 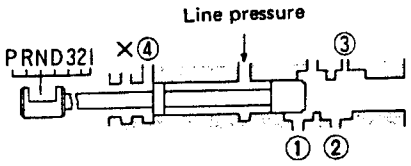

B3-484
Fig. 39
When the valve is set in the "line pressure no delivery" position, the pressure is relieved.</td></tr>
<tr><td>Shift valve A</td><td>Simultaneously changes three different oil passages using shift solenoid 1 output pressure corresponding to such operating conditions as vehicle speed and throttle opening. Combined with shift valve B, this valve permits automatic shifting of 1st ⇄ 2nd ⇄ 3rd ⇉ 4th speeds.</td></tr>
<tr><td>Shift valve B</td><td>Simultaneously changes three different oil passages using shift solenoid 2 output pressure corresponding to such operating conditions as vehicle speed and throttle opening. Combined with shift valve A, this valve permits automatic shifting of 1st ⇄ 2nd ⇄ 3rd ⇇ 4th speeds.</td></tr>
<tr><td>Shuttle shift valve</td><td>Changes the 3-2 timing control and overrunning clutch control oil passages corresponding to the throttle opening. When the throttle is wide open, the overrunning clutch becomes inoperative to prevent interlocking at 4th speed.</td></tr>
<tr><td>Overrunning clutch control valve</td><td>Changes oil passages so as to prevent simultaneous operation of the overrunning clutch when the brake band is actuated at 4th speed. (Operation of overrunning clutch at "D" range 4th speed results in interlocking.)</td></tr>
</table>

Name	Function
4-2 relay valve	Memorizes the 4th speed position, and prevents gear shifting from 4th to 3rd to 2nd speeds due to combined operation of the 4-2 sequence valve, shift valve A and shift valve B when shifting down from 4th to 2nd speeds.
4-2 sequence valve	Inhibits release of band servo operating pressure acting at 4th speed until the high clutch operating pressure and band servo release pressure (same hydraulic circuit) are drained when shifting down from 4th speed to 2nd speed.
Servo charger valve	The 2nd speed band servo actuating hydraulic circuit has an accumulator and one-way orifice for relieving shift shock when shifting from 1st speed to 2nd speed. The servo charger valve is installed to ensure sufficient oil flow when shifting down from 4th to 2nd speed, or from 3rd to 2nd speed. It operates at 3rd or higher speeds and supplies the 2nd speed band servo actuating pressure by bypassing the one-way orifice.
3-2 timing valve	When shifting down from "D" range 3rd to "D" range 2nd speed, the timing valve retards the release of band-servo pressure and creates a temporary neutral condition so that vehicle speed can be changed smoothly.
"1st" Reducing valve	Reduces the low & reverse brake operating pressure so as to relieve engine braking shock when changing from "2" range 2nd speed to 1st speed.
Overrunning clutch reducing valve	Reduces the operating pressure applied to the overrunning clutch so as to relieve engine braking shock. In the "2" and "3" ranges, line pressure is applied to the valve to raise the pressure adjusting point, thereby increasing engine braking capacity.
Torque converter regulator valve	Prevents excessive rise of torque converter pressure.
• Lock-up control valve • Lock-up control plug • Lock-up control sleeve	Controls the operation of the lock-up function. Smoothes the transition between the lock-up state and release state.
Shuttle duty shift valve	Changes the oil passage so that output pressure to the duty solenoid B (lock-up) will be applied to the lock-up valve in the "D" range 2nd, 3rd, or 4th speed. (Lock-up at 1st speed is inhibited.) * Lock-up control is not actuated if the lock-up solenoid does not generate output pressure when signaled from the control unit, even if the vehicle is in the "D" range 2nd, 3rd, or 4th speeds.

19. Gearshifting Mechanism

A: OPERATION TABLE

Selector lever operation		Rev./C	B/B	High/C	FWD/C	OWC (3-4)	OVR/C	Lo / Rev./B	OWC (1-2)
P									
R		○						○	
N									
D	1ST				○	○			○
	2ND		○		○	○			
	3RD			○	○	○			
	4TH		○	○	○				
3	1ST				○	○			○
	2ND		○		○	○			
	3RD			○	○	○	○		
	4TH	*1	○	○	○				
2	1ST				○	○	○		○
	2ND		○		○	○	○		
	3RD	*1		○	○	○	○		
	4TH	*1	○	○	○				
1	1ST				○	○	○	○	
	2ND	*1	○		○	○	○		
	3RD	*1		○	○	○	○		
	4TH	*1	○	○	○				

*1: For prevention of engine over-revolution

B3-485

Fig. 40

	1st	2nd	3rd	4th	Rev.
Input member	R_S	R_S	R_S — F_C — R_I	R_S — F_C	R_S — F_S
Output member	F_I — R_C	F_I — R_C	F_I — R_C	F_I — R_C	F_I — R_C
Fixed member	F_C — R_I	F_S		F_S	F_C
Free member	F_S	F_C — R_I	F_S	R_I	R_I
Gear ratio	2.785	1.545	1.000	0.694	2.272

Abbr.

F_S	: Front sun gear
R_S	: Rear sun gear
F_C	: Front planetary carrier
R_C	: Rear planetary carrier
F_I	: Front internal gear
R_I	: Rear internal gear

B3-486

Fig. 41

2nd ("D", "3" and "2")

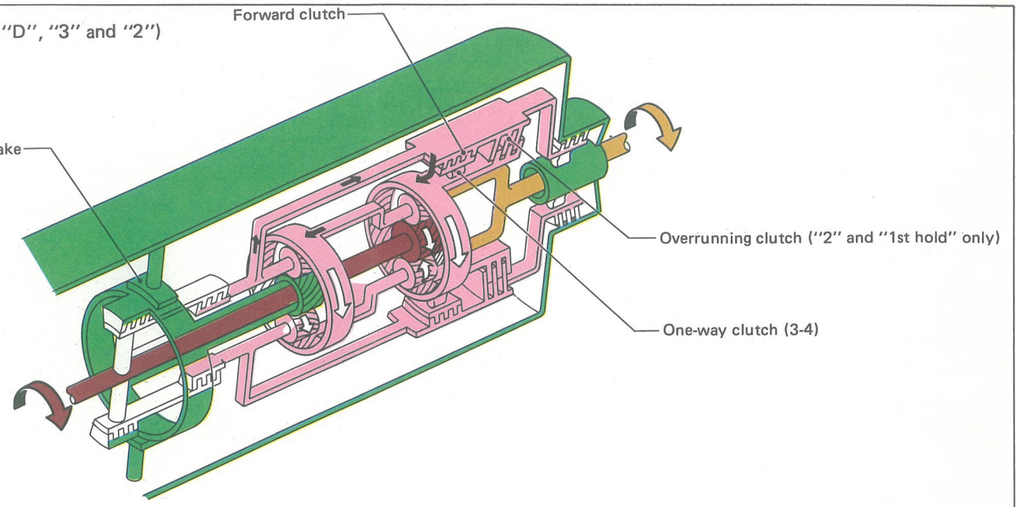

B3-491

3rd ("D" and "3")

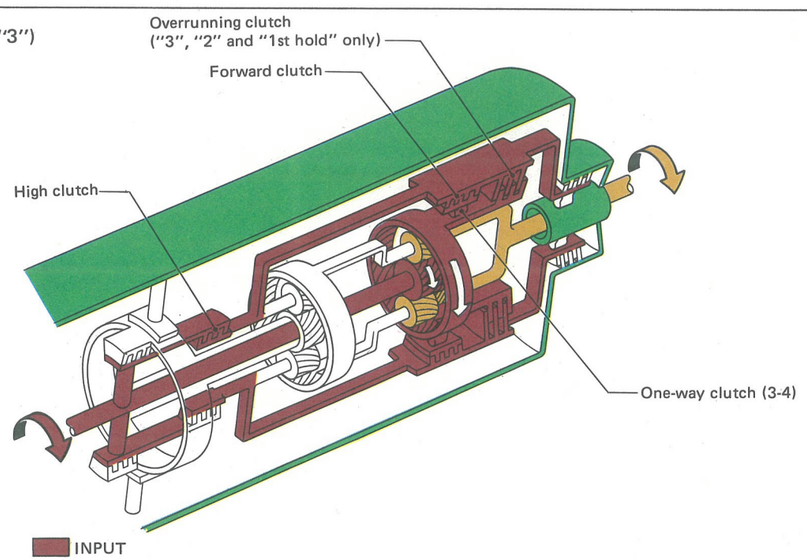

B3-492

4th

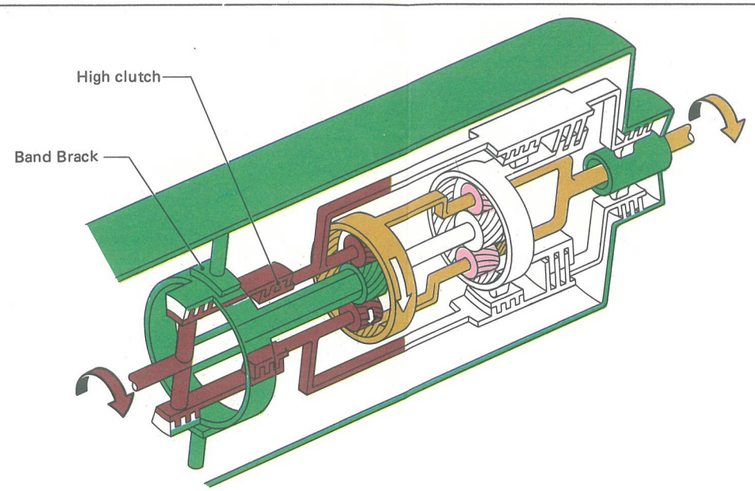

B3-493

Rev.

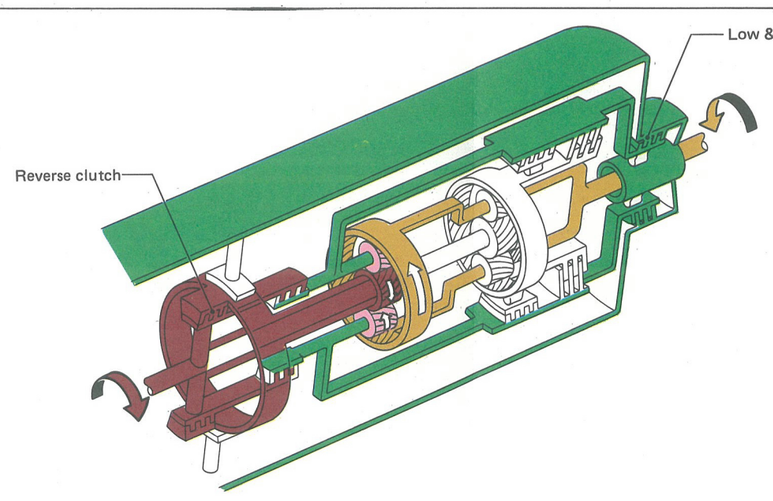

B3-494

B: SCHEMATIC DRAWING

Gearshift Member

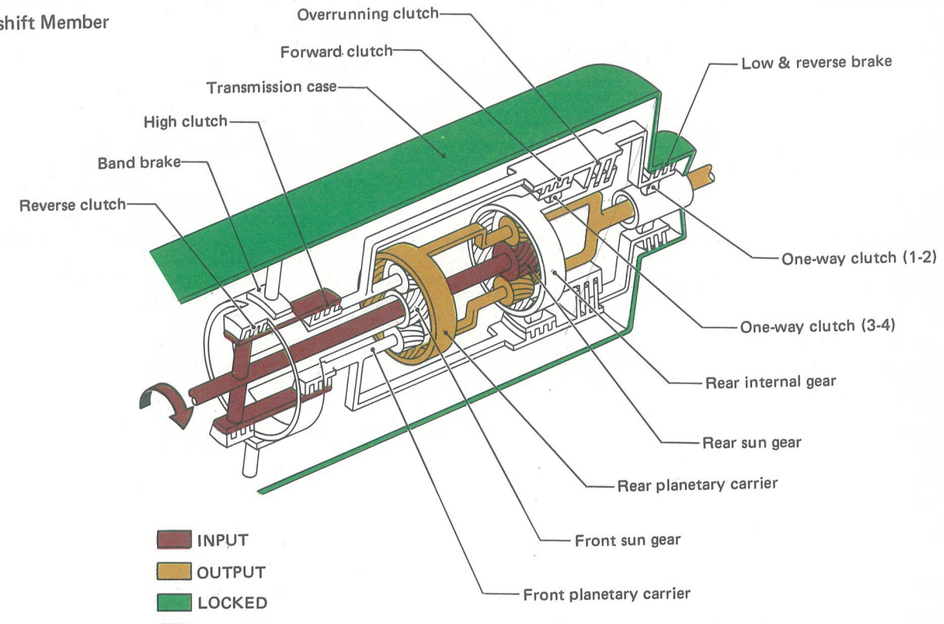

B3-487

"N" and "P"

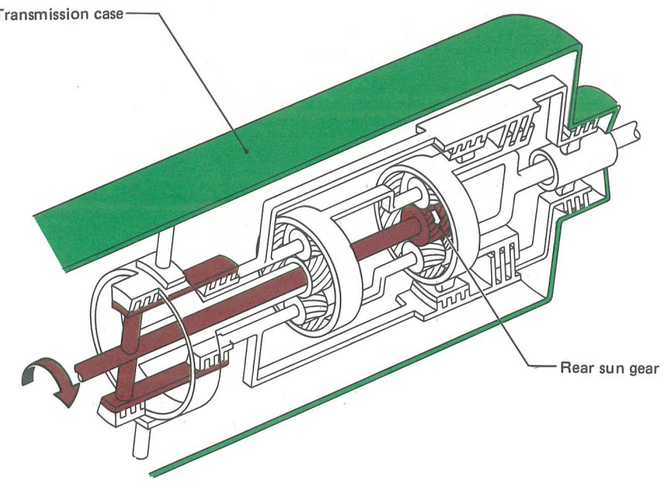

B3-488

1st ("1")

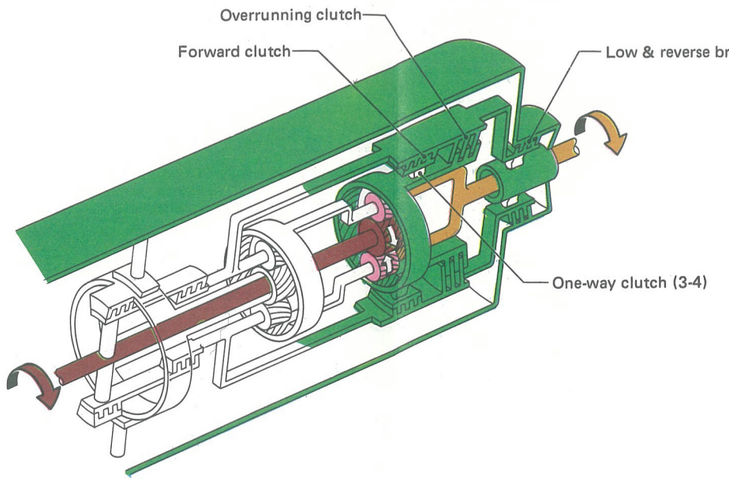

B3-489

1st ("D", "3" and "2")

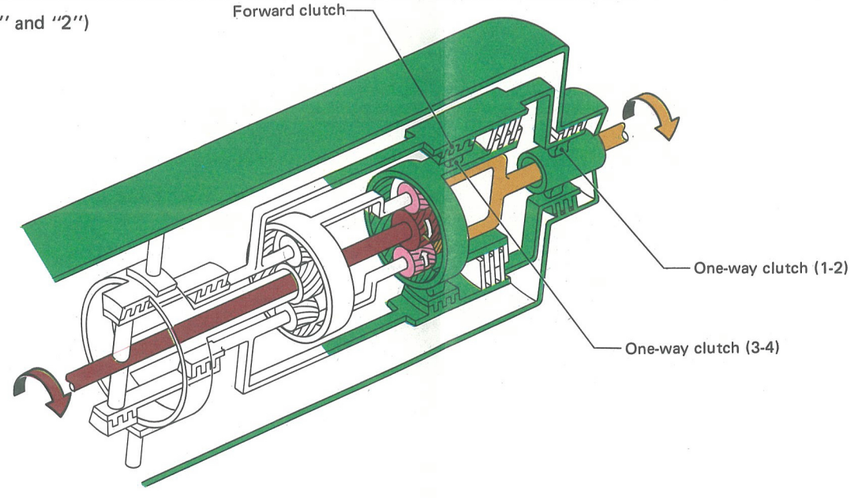

B3-490

20. Power Train

A: OPERATION

1. GENERAL

The gear train consists of two sets of planetary gears, four sets of multi-plate clutches, one brake band, one set of multi-plate brake and two sets of one-way clutches.

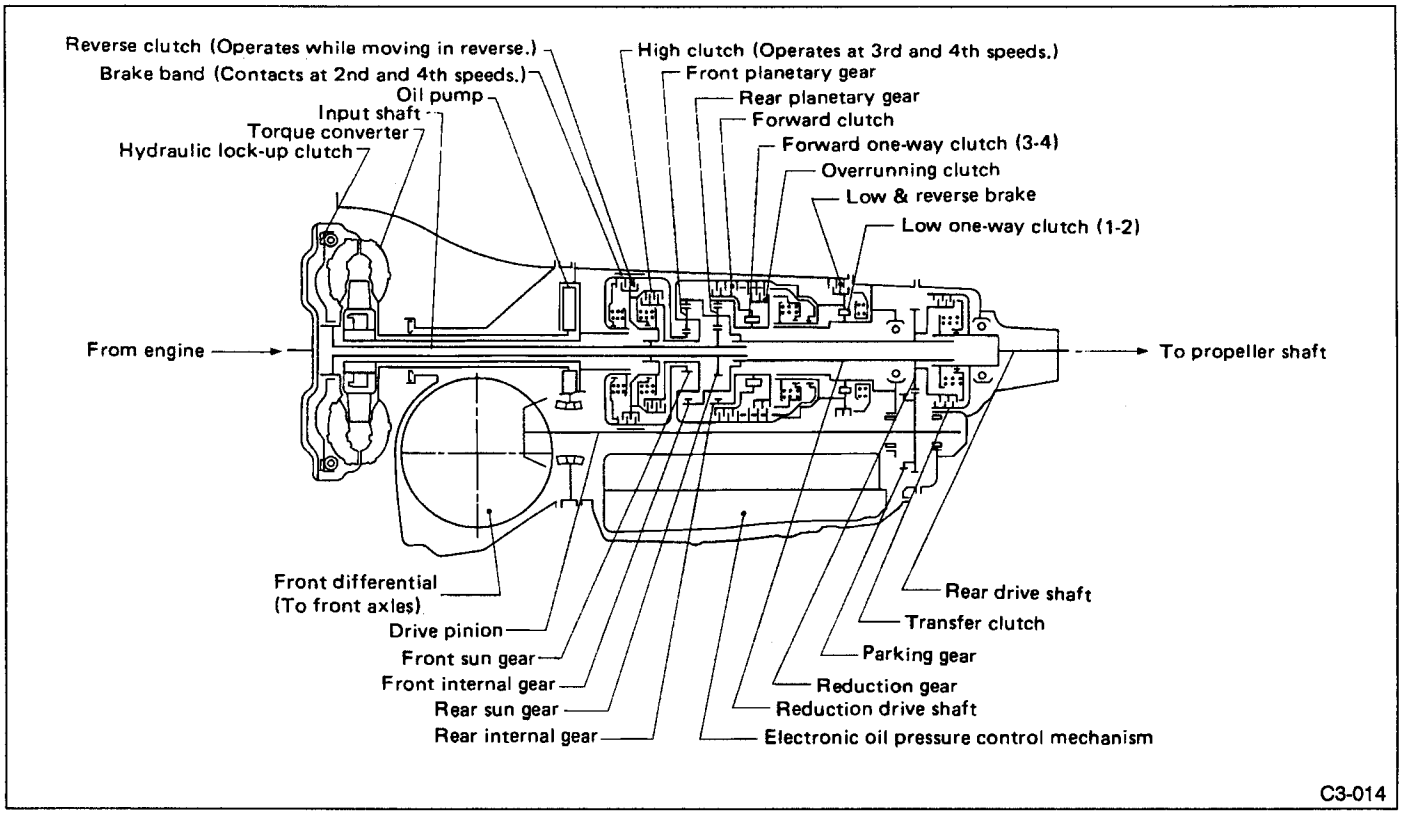

Fig. 42

2. N RANGE AND P RANGE

1) N range

Because both the forward clutch and reverse clutch are in the release positions, the power of the input shaft is not transmitted to the drive pinion or the rear drive shaft.

2) P range

All controls do not operate, just as in the N range. The parking pawl interlocked with the selector lever meshes with the parking gear to mechanically hold the output shaft stationary, thus locking the power train.

3. FIRST SPEED OF D, 3 OR 2 RANGE (D_1, 3_1, 2_1)

- When the throttle is open wide, as during acceleration in the low-speed range, the forward clutch, one-way clutch (3-4) and one-way clutch (1-2) operate to prevent the rear internal gear from turning in the reverse direction.
- While coasting, the rear internal gear turns normally and the one-way clutch (3-4) is released and idles. Therefore, no power is transmitted and the engine does not provide braking action.
- During deceleration, the overrunning clutch is applied and the one-way clutch (3-4) is prevented from idling; however, since the one-way clutch (1-2) is released and is idling, reverse power is not transmitted and engine braking is not performed.

Operating condition of parts		Power flow (in acceleration)
• Forward clutch	: Applied	• Input shaft → • Rear sun gear → • Rear pinion gear → • Rear planetary carrier → • Reduction gear → • Drive pinion → • Front differential; • Transfer clutch → • Rear differential
• One-way clutch (3-4)	: Operating	
• One-way clutch (1-2)	: Operating	
• Overrunning clutch	: Applied	

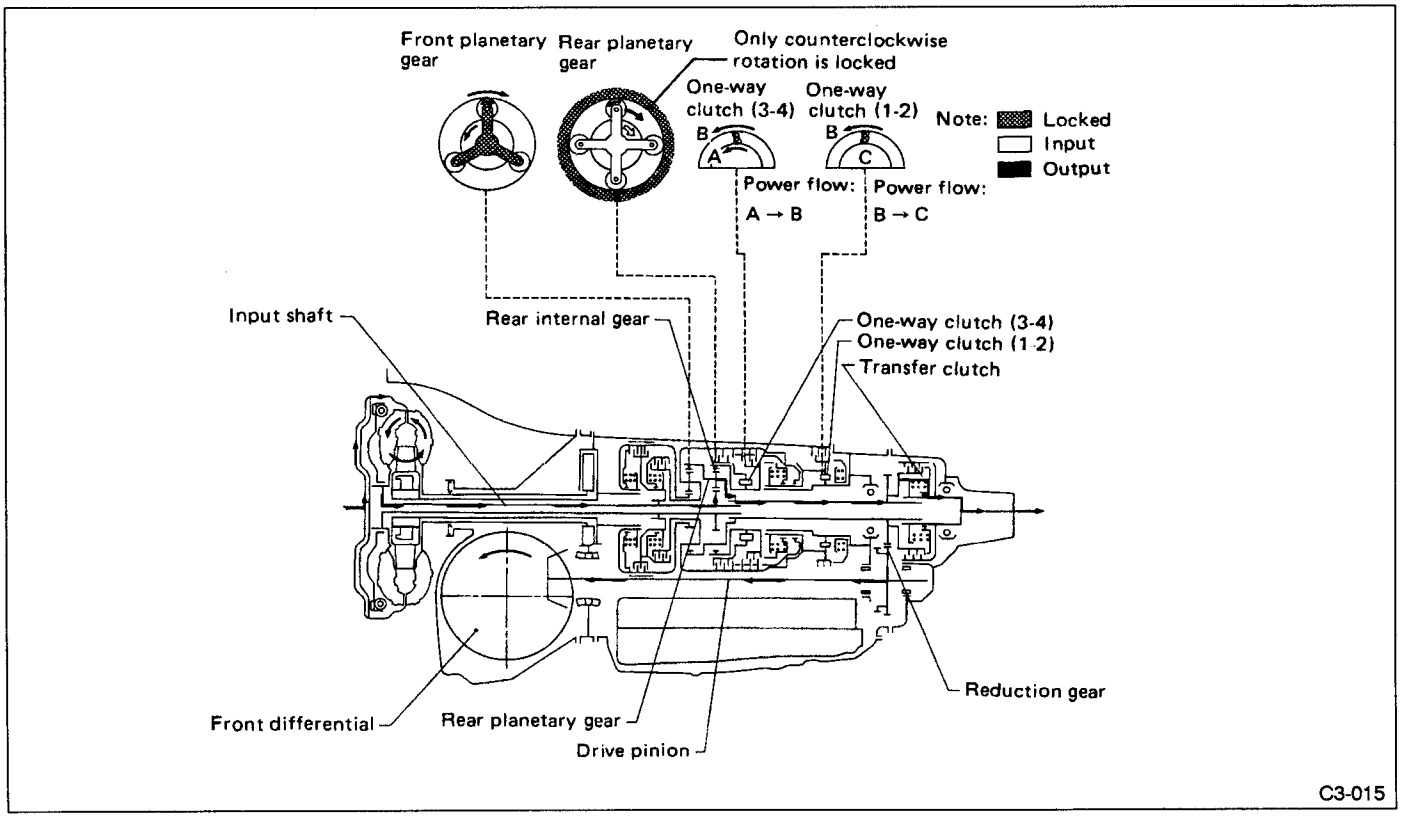

Fig. 43

4. SECOND SPEED OF D, 3 OR 2 RANGE (D_2, 3_2, 2_2)

- During acceleration, the forward clutch is applied and connects the front planetary gear to the internal gear through the one-way clutch (3-4). Power is transmitted from the input shaft to the rear sun gear, turning the rear planetary carrier (i.e. front internal gear). Also, since the band brake is applied and the front sun gear is locked, the rear internal gear turns normally through the front planetary carrier and the forward clutch and one-way clutch (3-4) that are connected to that carrier. Thus, speed increases in proportion to the rotation of the rear internal gear compared with the first speed.
- Since the rear internal gear turns normally while coasting, the one-way clutch (3-4) is released and idles. Accordingly, reverse power is not transmitted to the engine and engine braking is not provided.
- During deceleration at "2" range, the overrunning clutch operates to check idling of the one-way clutch (3-4). Reverse power is transmitted to the engine, providing engine braking action.

Operating condition of parts		Power flow (in acceleration)
• Brake band	: Applied	Input shaft → Rear sun gear → Rear pinion gear → Rear planetary carrier → Reduction drive shaft → Reduction gear → Drive pinion → Front differential; Reduction gear → Transfer clutch → Rear differential; Front internal gear → Front pinion gear → Front planetary carrier → Forward clutch → One-way clutch (3-4) → Rear internal gear
• Forward clutch	: Applied	
• One-way clutch (3-4)	: Operating	
• Overrunning clutch	: Applied	

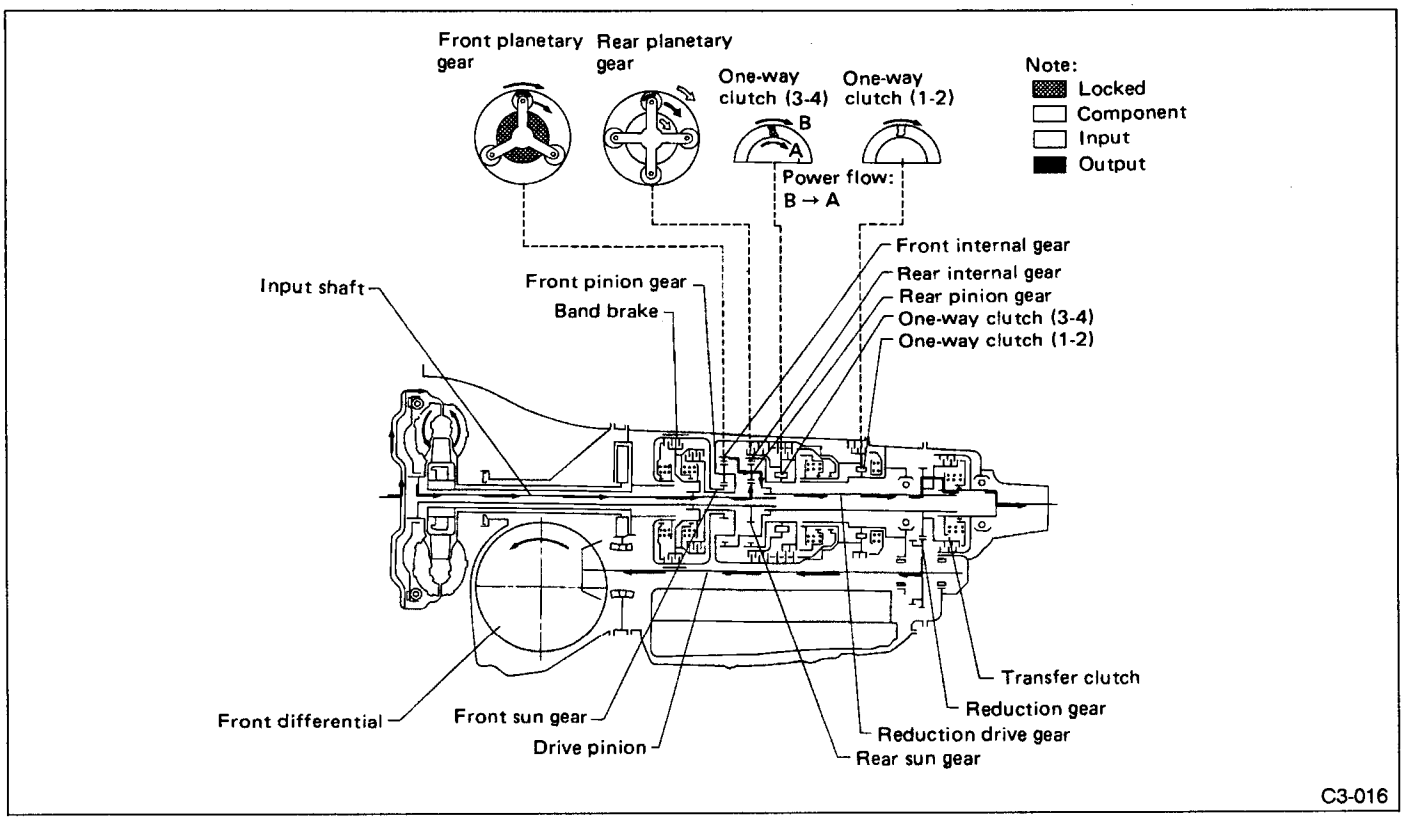

Fig. 44

5. THIRD SPEED OF D OR 3 RANGE (D_3, 3_3)

- During acceleration, the high clutch is applied and the input shaft and front planetary carrier are connected. Further, the forward clutch and one-way clutch (3-4) operate to connect the front planetary carrier to the rear internal gear. Power is transmitted from the input shaft to the rear sun gear and rear internal gear. The rear sun gear and rear internal gear turn normally at the same speed. Therefore, the rear planetary carrier, rear sun gear and rear internal gear rotate normally as a unit.
- While coasting at "D", because the rear internal gear turns normally, the one-way clutch (3-4) idles in a released state. Thus, reverse power is not transmitted to the engine and engine braking action is not provided.
- During deceleration at "3", "2" or "1st" range, the overrunning clutch is applied and checks the reverse rotation of the one-way clutch (3-4). Thus, reverse power is transmitted to the engine and engine braking is performed.

Operating condition of parts		Power flow (in acceleration)
• High clutch	: Applied	Input shaft → High clutch / Rear sun gear → Front planetary carrier → Forward clutch → One-way clutch (3-4) → Rear internal gear / Rear pinion gear → Rear planetary carrier → Reduction gear → Drive pinion / Transfer clutch → Front differential / Rear differential
• Forward clutch	: Applied	
• One-way clutch (3-4)	: Operating	
• Overrunning clutch ("3", "2" and "1st" ranges only)	: Applied	

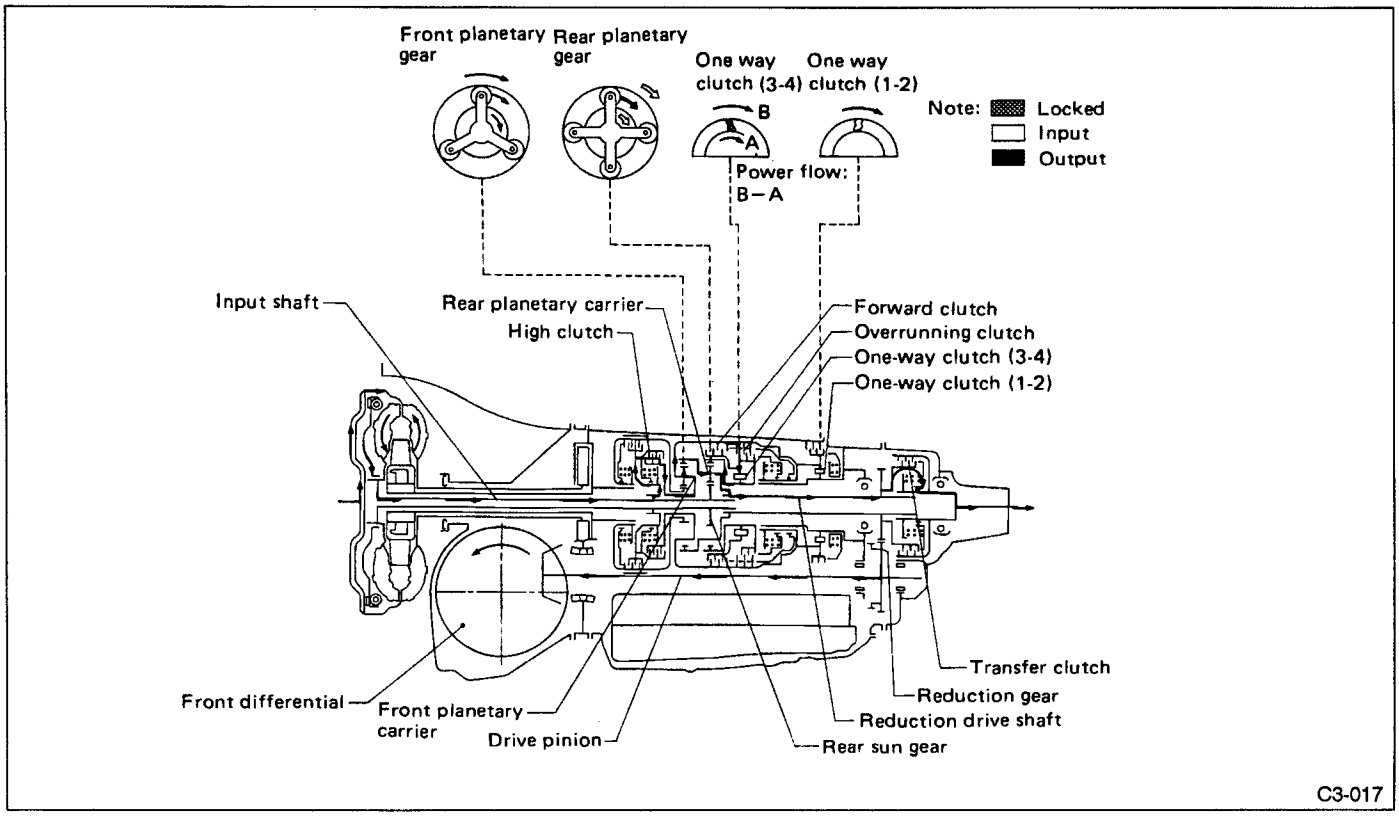

Fig. 45

6. FOURTH SPEED (D_4) OF D RANGE

- During acceleration, the high clutch is applied and connects the input shaft to the front planetary carrier. Also, the forward clutch is applied, but it runs idle due to the one-way clutch (3-4) and takes no part in power transmission. Power is transmitted from the input shaft to the front planetary carrier by the function of the high clutch.

When the front planetary carrier turns normally, because the front sun gear is held-stationary by the brake band, the speed of the front internal gear increases and is delivered to the meshing reduction drive shaft in normal rotation.

- While coasting, because power transmission does not go through the one-way clutch, reverse power is transmitted to the engine and engine braking is performed.

Operating condition of parts		Power flow (in acceleration)
• High clutch	: Applied	• Input shaft → • High clutch → • Front planetary carrier → • Front pinion gear → • Front internal gear → • Rear planetary carrier → • Reduction drive shaft → • Reduction gear → • Drive pinion → • Front differential; • Transfer clutch → • Rear differential
• Brake band	: Contracted	
• Forward clutch (Takes no part in power transmission.)	: Applied	

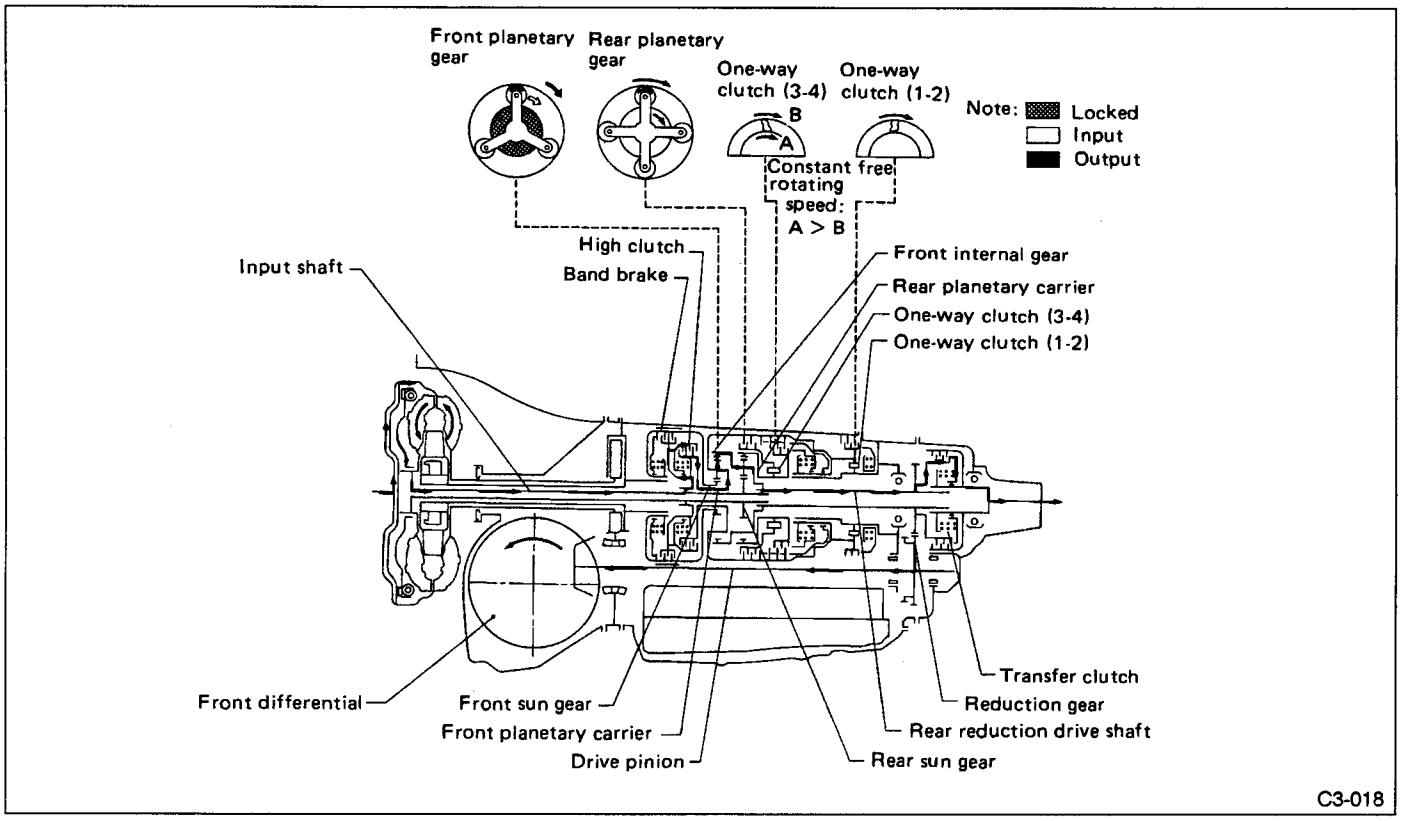

Fig. 46

7. FIRST SPEED OF 1 RANGE

- During acceleration, the forward clutch and overrunning clutch are applied and the front planetary carrier and rear internal gear are connected. Also, the low & reverse brake is applied so that the front planetary carrier and internal gear remain stationary.
  The power flow is the same as in the first speed of "D", "3" and "2" range (except for the following points) and engine braking is performed.
- The low & reverse brake operates in place of the one-way clutch (1-2) and locks the rear internal gear.
- In coasting and deceleration, low & reverse brake and overrunning clutch are operating, so that reverse power is transmitted to the engine and engine braking action is provided.

Operating condition of parts		Power flow (in acceleration)
• Forward clutch	: Applied	• Input shaft → • Rear sun gear → • Rear pinion gear → • Rear planetary carrier → • Reduction gear → • Drive pinion → • Front differential; • Transfer clutch → • Rear differential
• One-way clutch (3-4)	: Applied (in acceleration)	
• Overrunning clutch	: Applied	
• Low & reverse brake	: Operating	

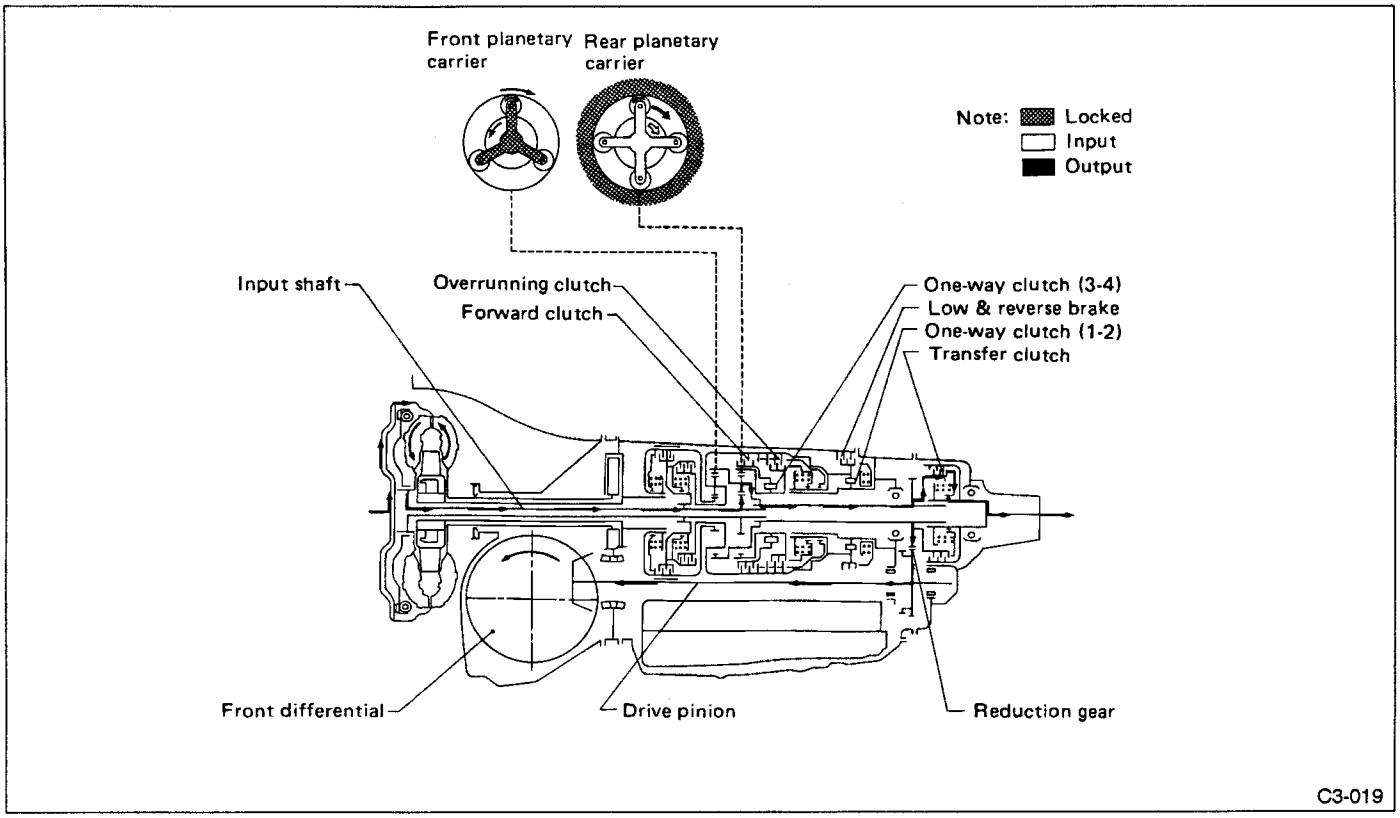

Fig. 47

8. R RANGE

The reverse clutch is applied and power is transmitted from the input shaft through the reverse clutch to the front sun gear. Also, the low & reverse brake operates to lock the front planetary carrier. Therefore, when the front sun gear turns normally, the front internal gear slows and reverses.

Operating condition of parts		Power flow
• Reverse clutch	: Applied	• Input shaft → • Reverse clutch → • Front sun gear → • Front pinion gear → • Front internal gear → • Reduction drive shaft → • Reduction gear → • Drive pinion → • Front differential; • Transfer clutch → • Rear differential
• Low & reverse brake	: Operating	

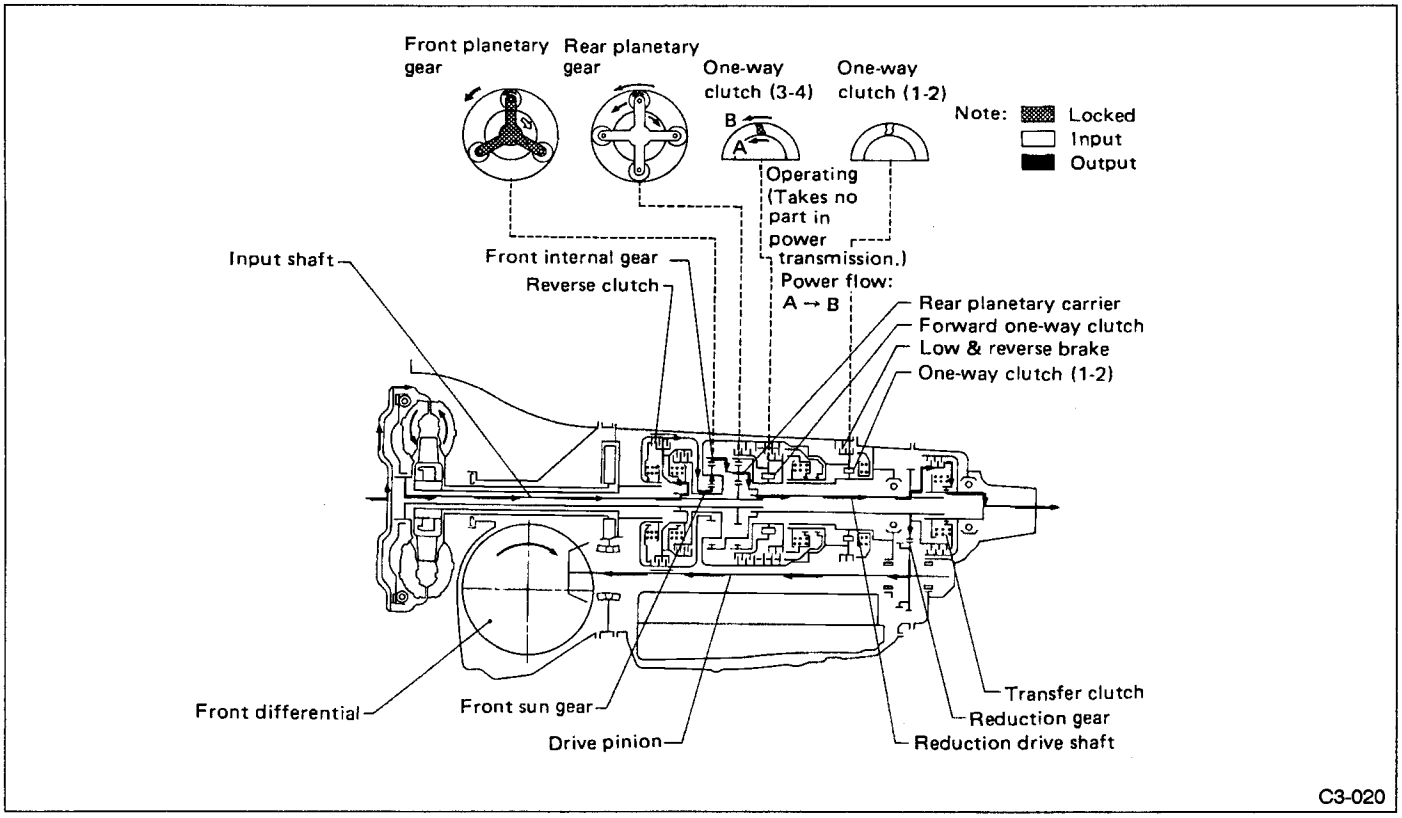

Fig. 48

B: SCHMATIC DRAWING

1. N RANGE AND P RANGE

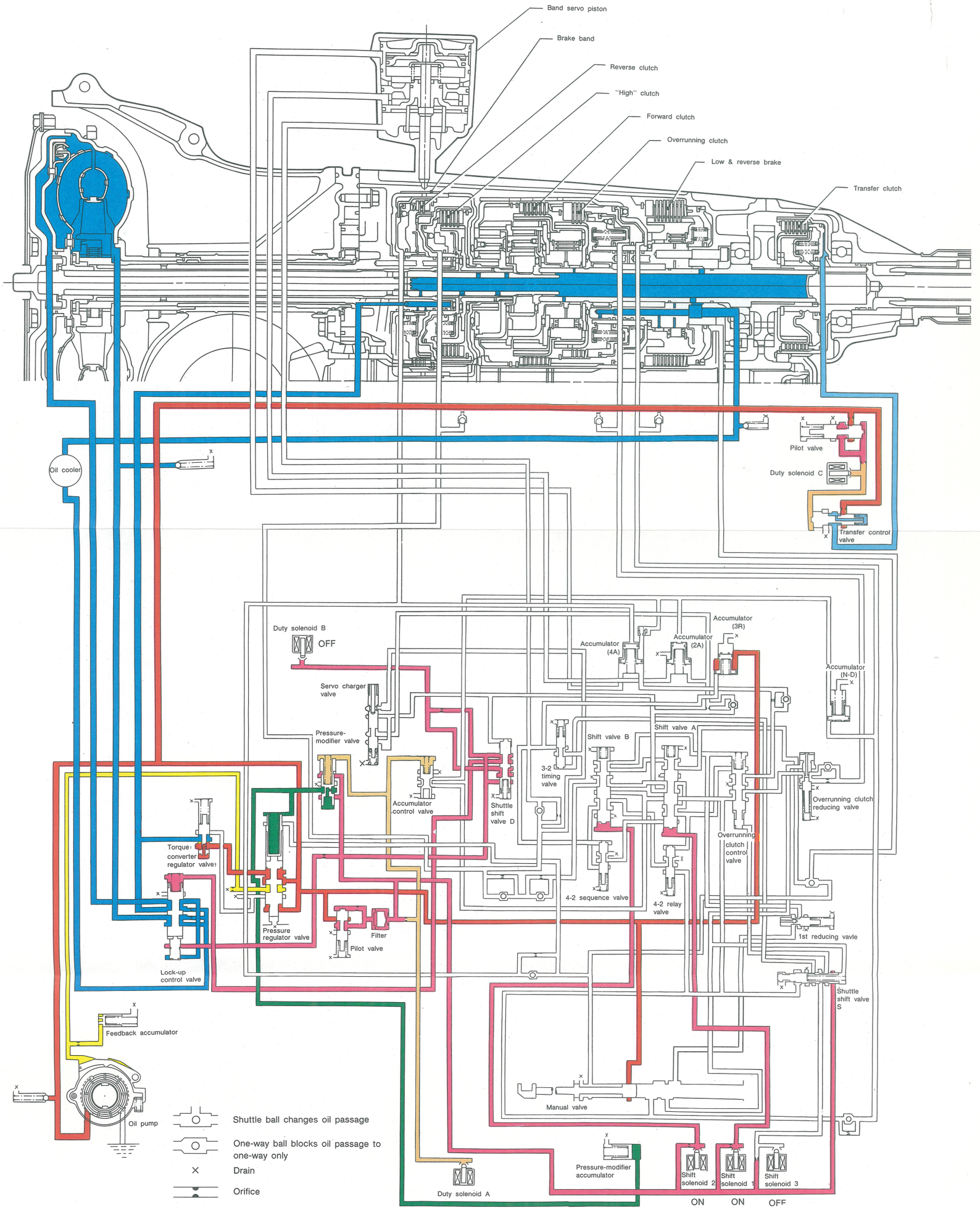

2. R RANGE

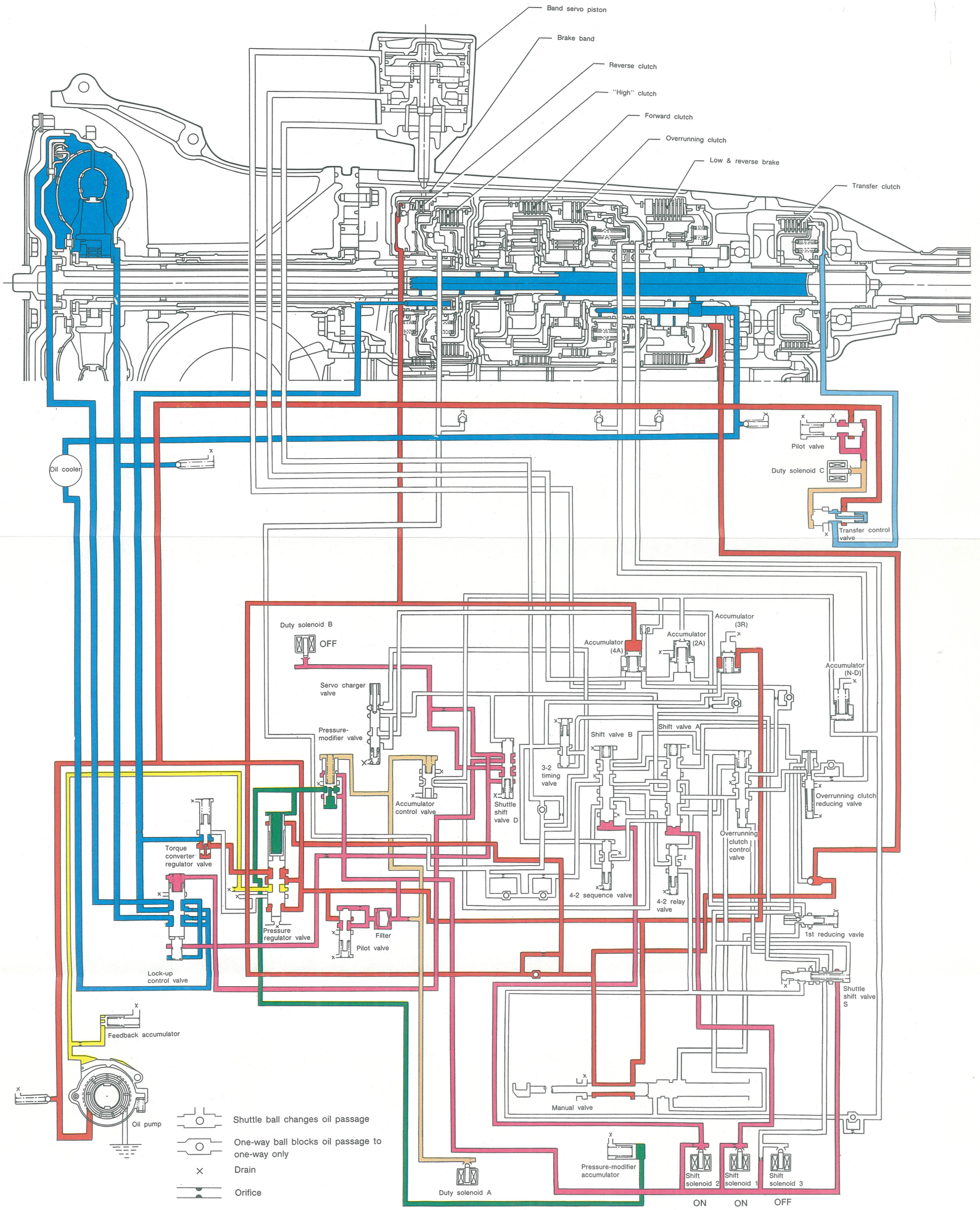

- Line pressure
- Pressure-modifier pressure
- Pilot pressure
- Duty-A pressure
- Duty-C pressure
- Oil pump control pressure
- Accumulator control pressure
- Overrunning clutch pressure
- "1" reducing pressure
- Transfer clutch pressure
- Torque converter pressure
- Cooler pressure
- Lubricant pressure

3. FOURTH SPEED OF D RANGE

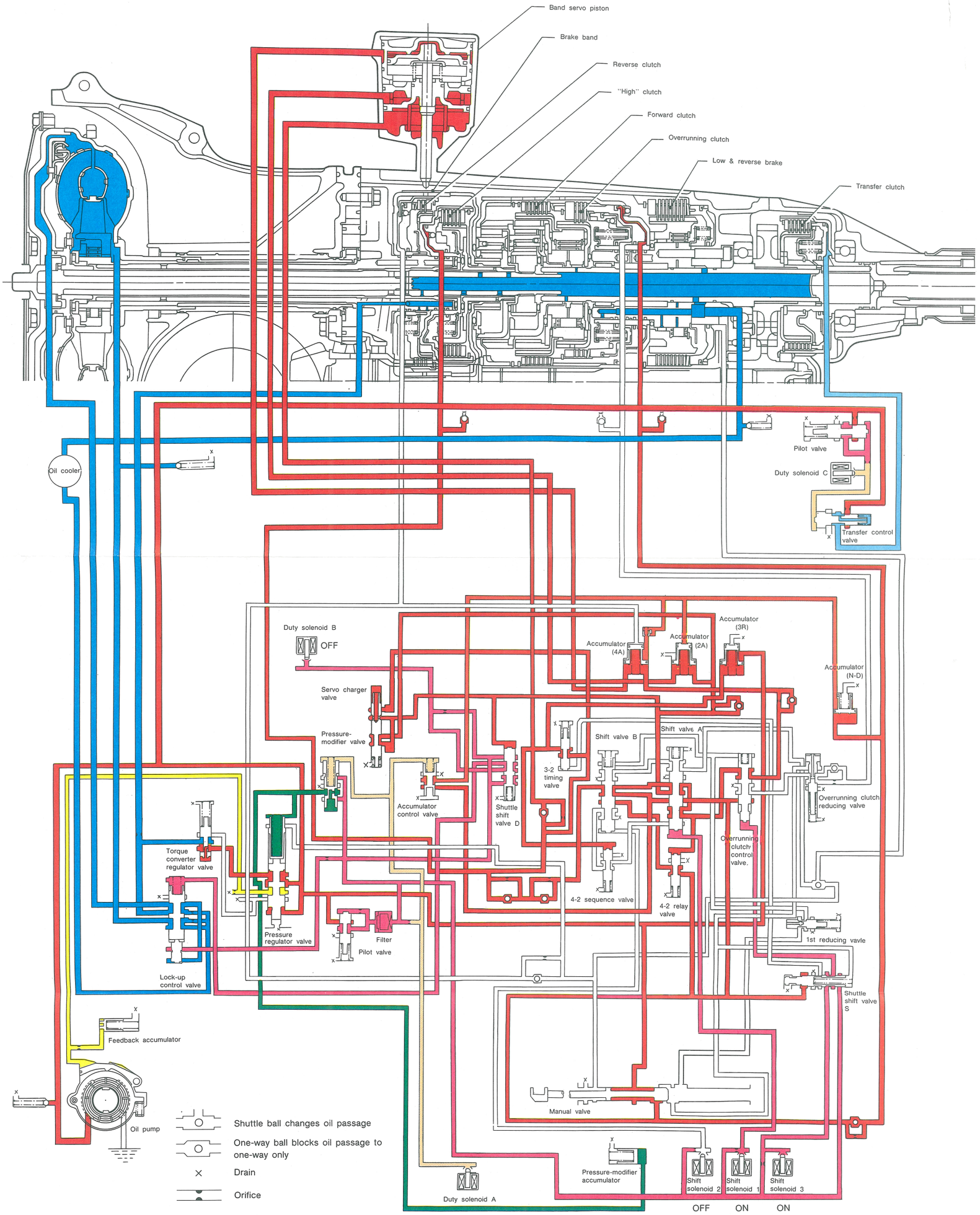

4. FOURTH SPEED OF D RANGE (LOCK-UP)

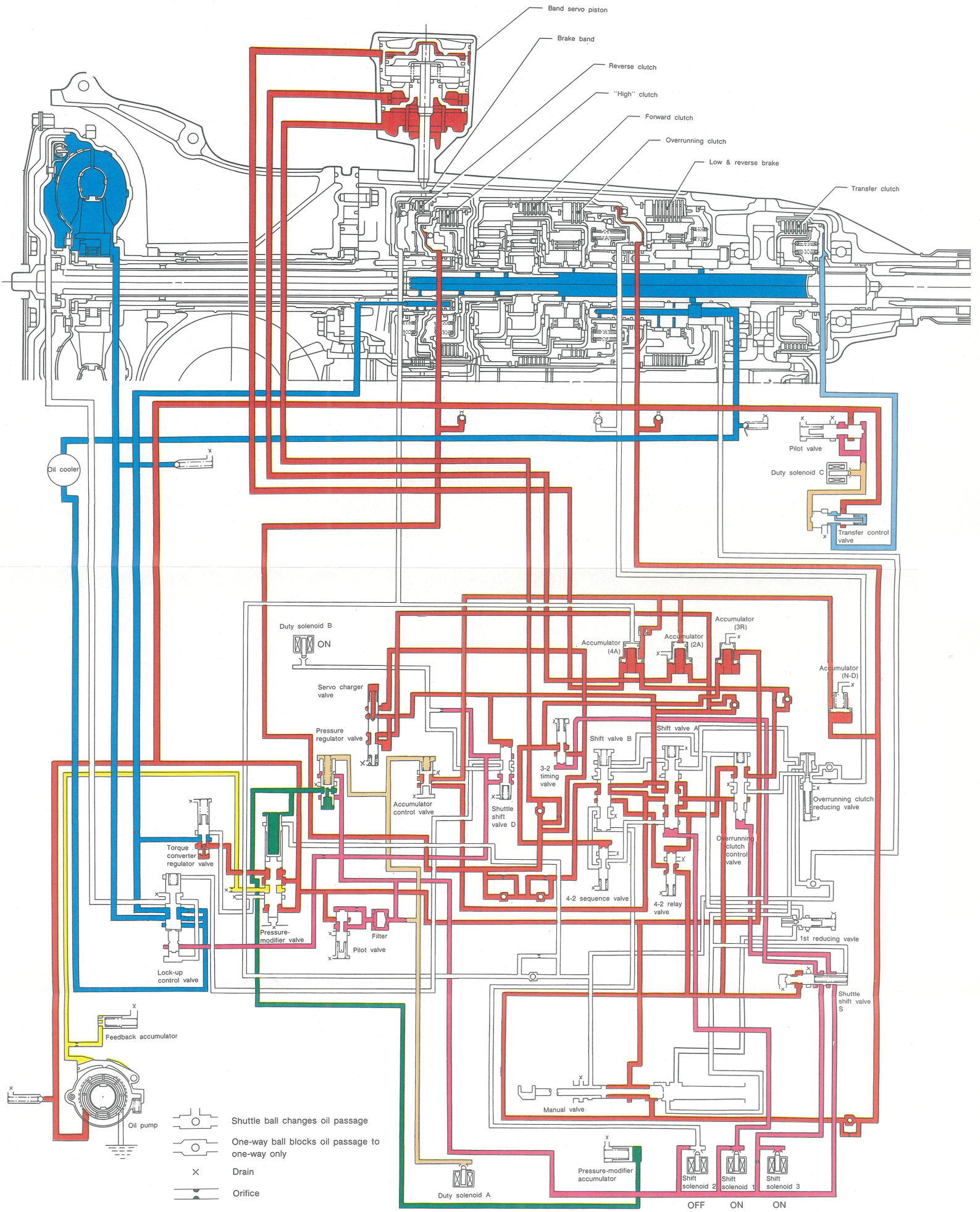

Line pressure
Pressure-modifier pressure
Pilot pressure
Duty-A pressure
Duty-C pressure
Oil pump control pressure
Accumulator control pressure
Overrunning clutch pressure
"1" reducing pressure
Transfer clutch pressure
Torque converter pressure
Cooler pressure
Lubricant pressure

5. THIRD SPEED OF D OR 3 RANGE

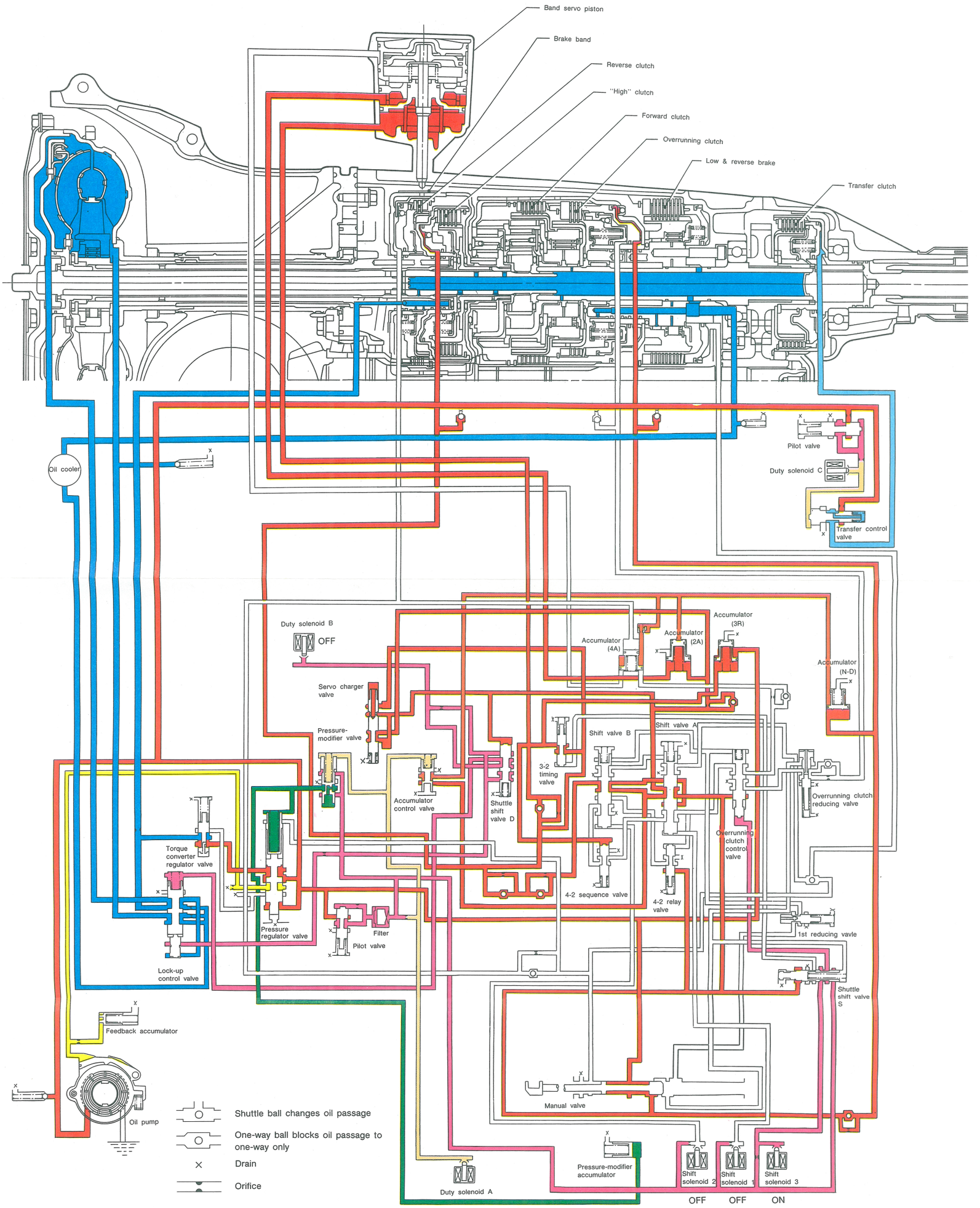

6. THIRD SPEED OF D OR 3 RANGE (LOCK-UP)

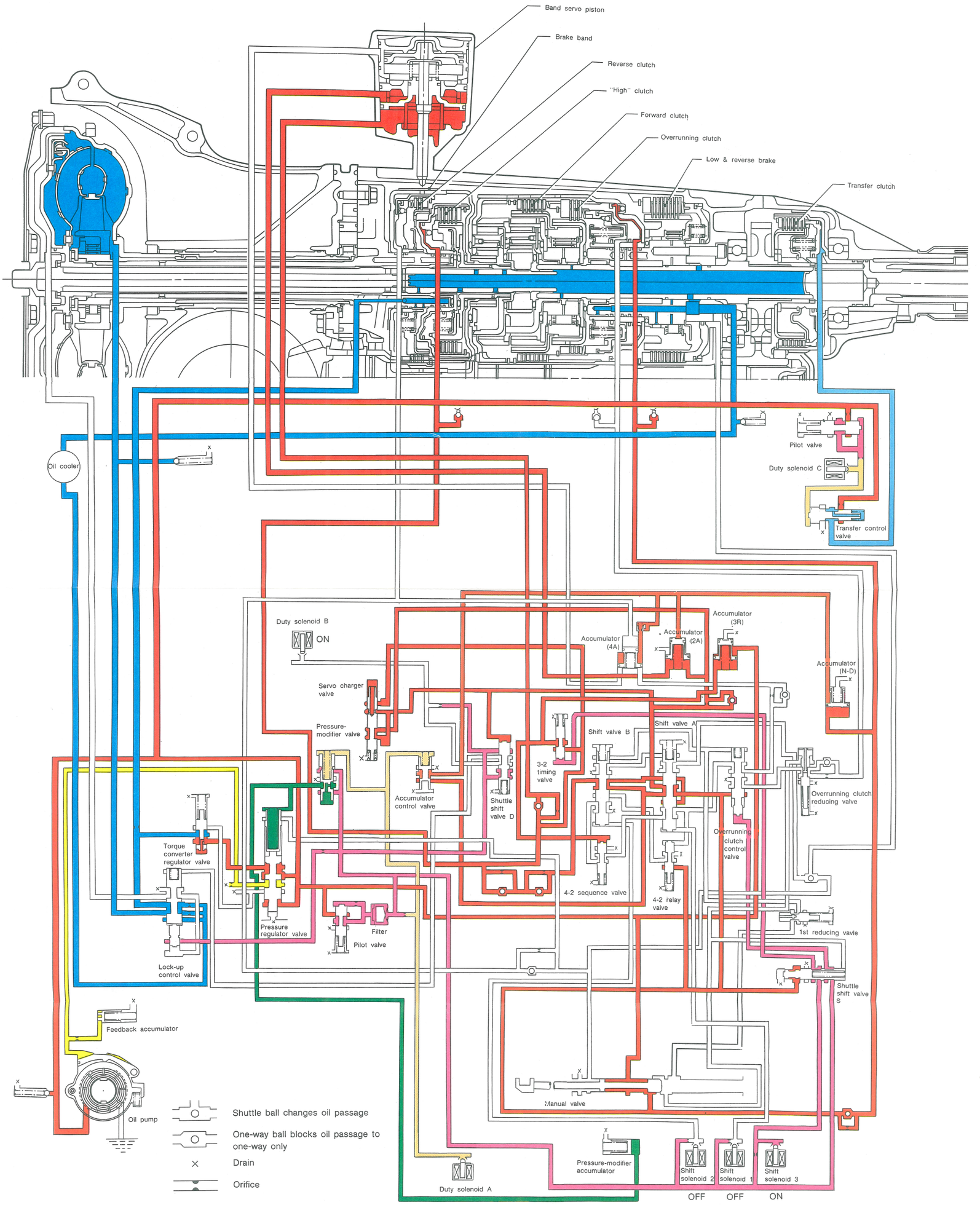

7. SECOND SPEED OF D OR 3 RANGE

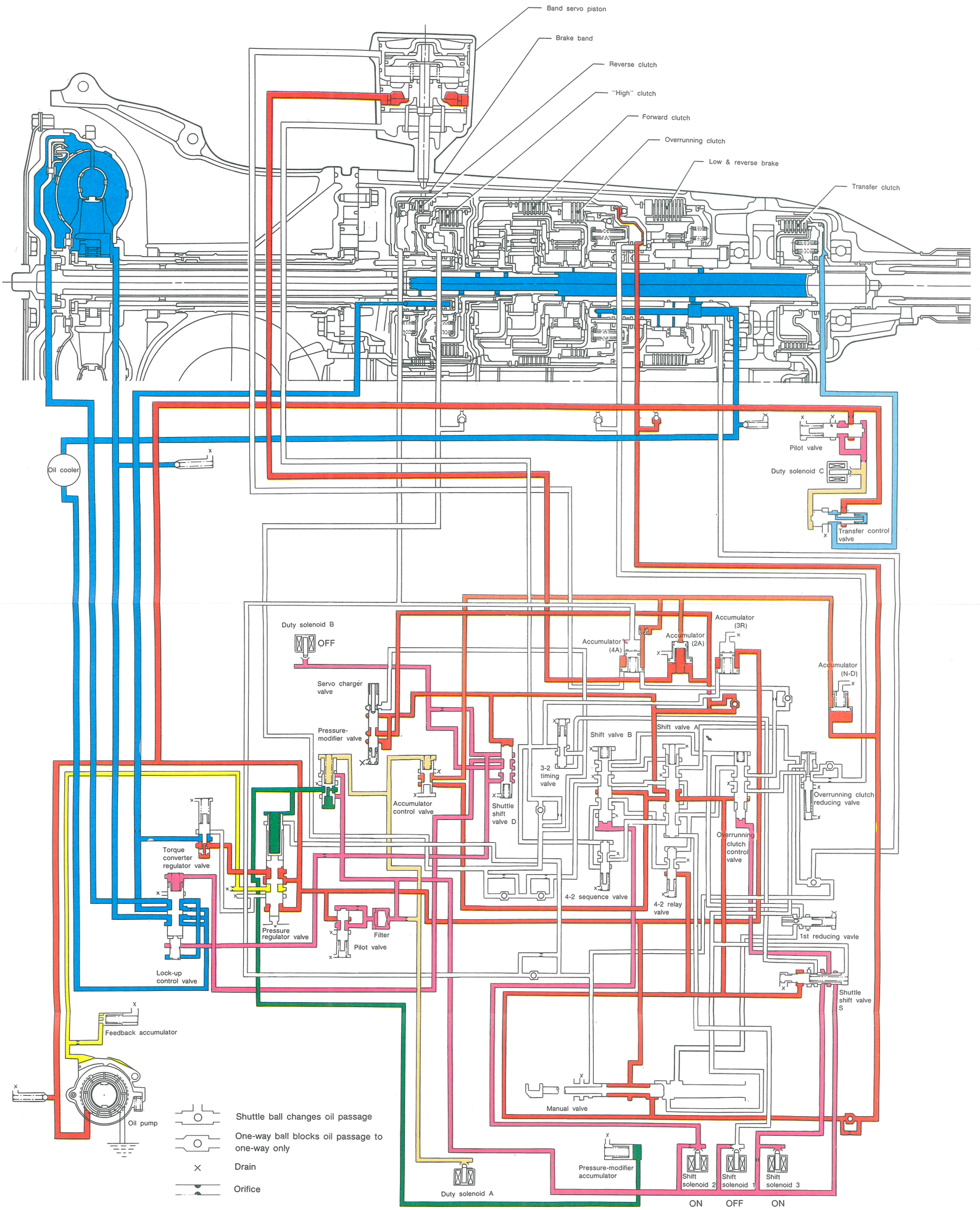

8. SECOND SPEED OF D OR 3 RANGE (LOCK-UP)

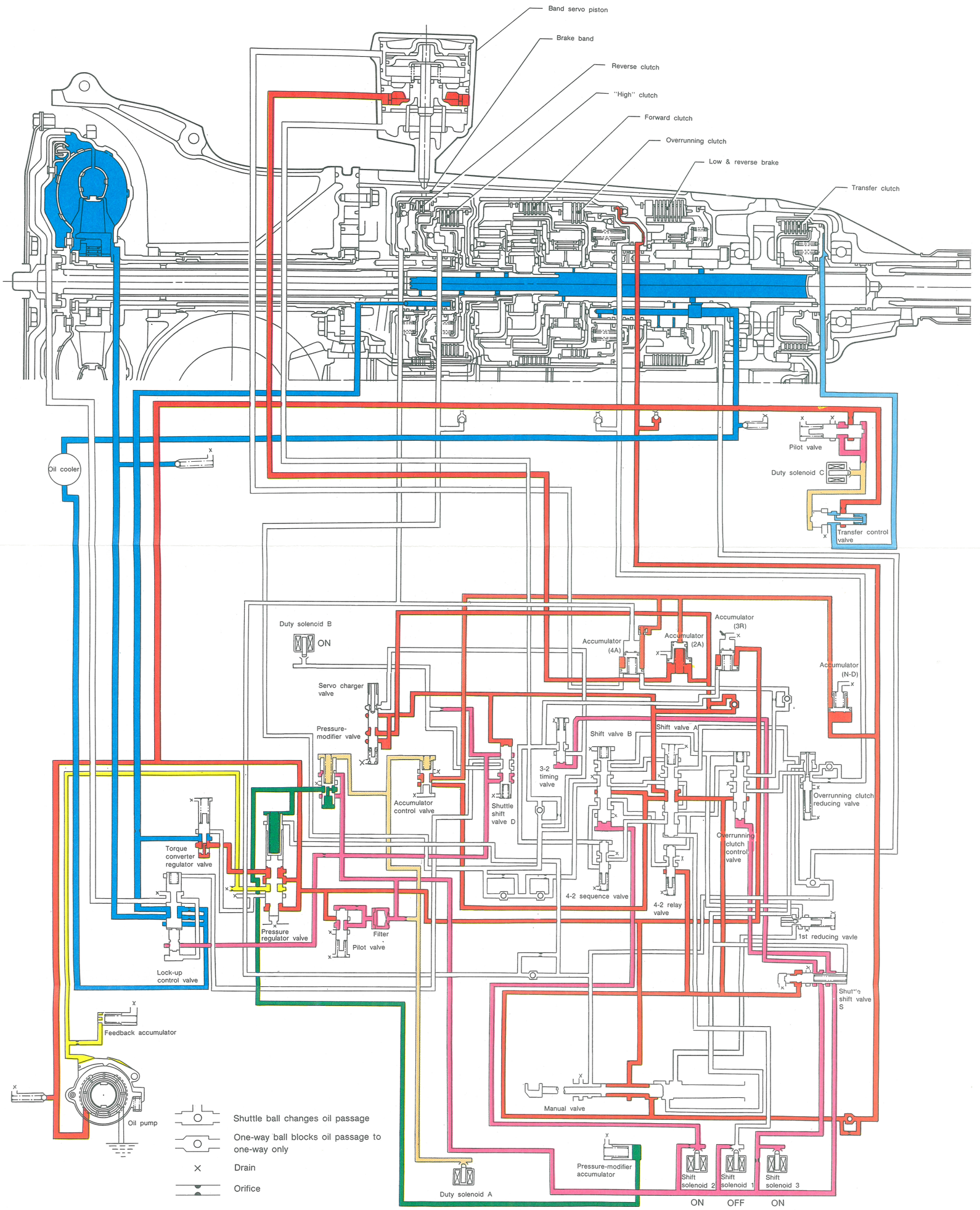

9. SECOND SPEED OF 2 RANGE

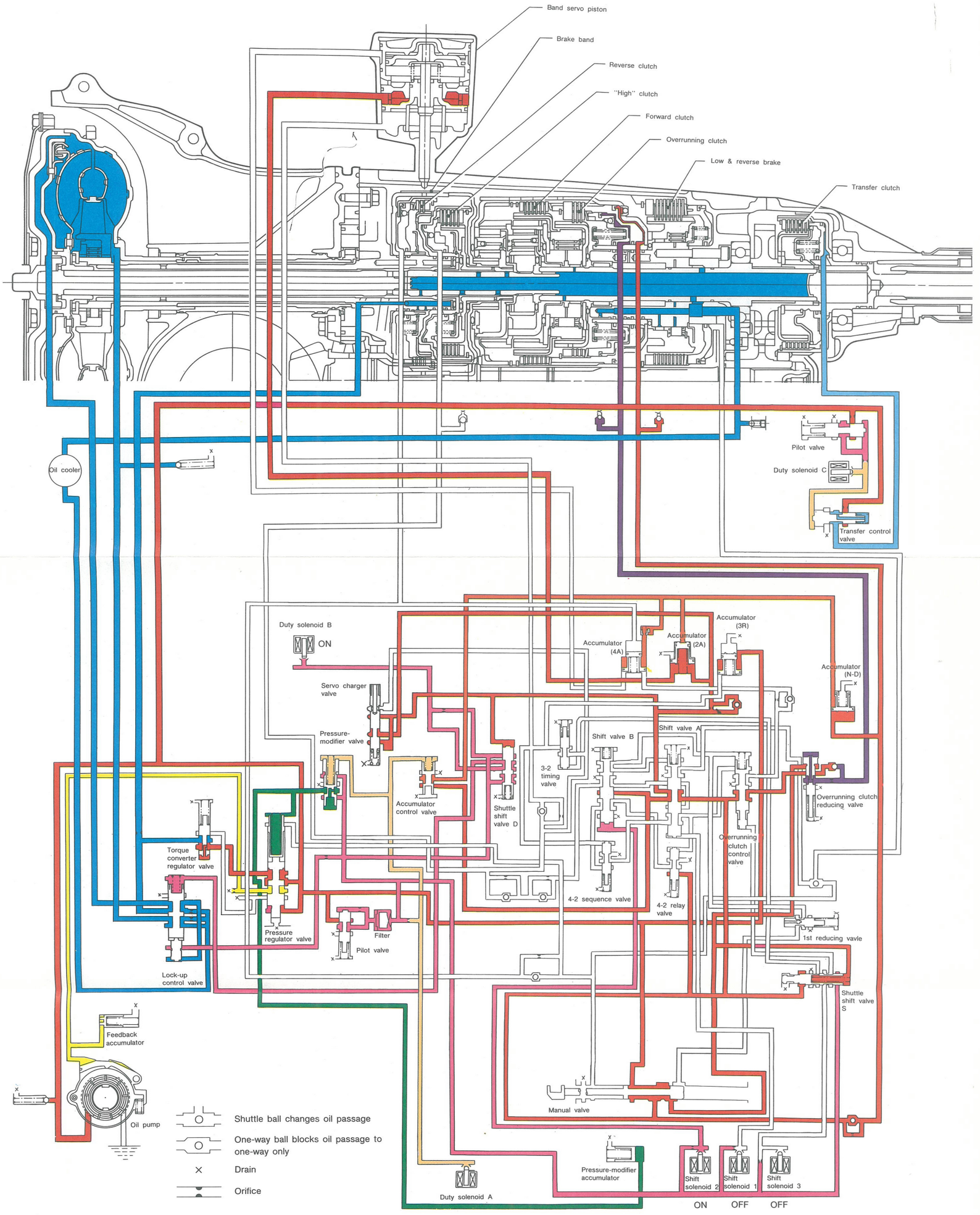

- Line pressure
- Pressure-modifier pressure
- Pilot pressure
- Duty-A pressure
  Duty-C pressure
- Oil pump control pressure
- Accumulator control pressure
- Overrunning clutch pressure
- "1" reducing pressure
- Transfer clutch pressure
- Torque converter pressure
  Cooler pressure
  Lubricant pressure

10. SECOND SPEED OF 2 RANGE (LOCK-UP)

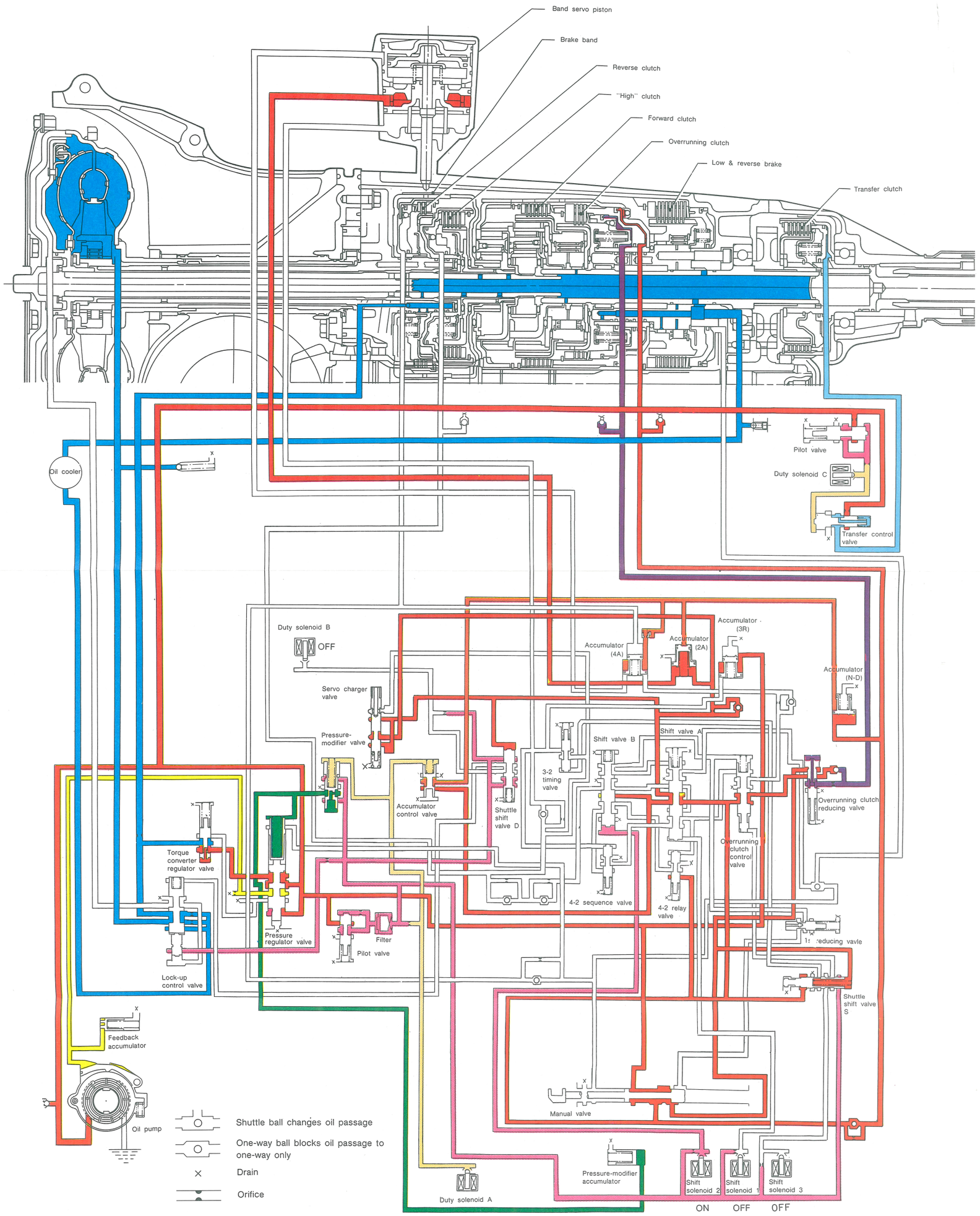

11. FIRST SPEED OF D OR 3 RANGE

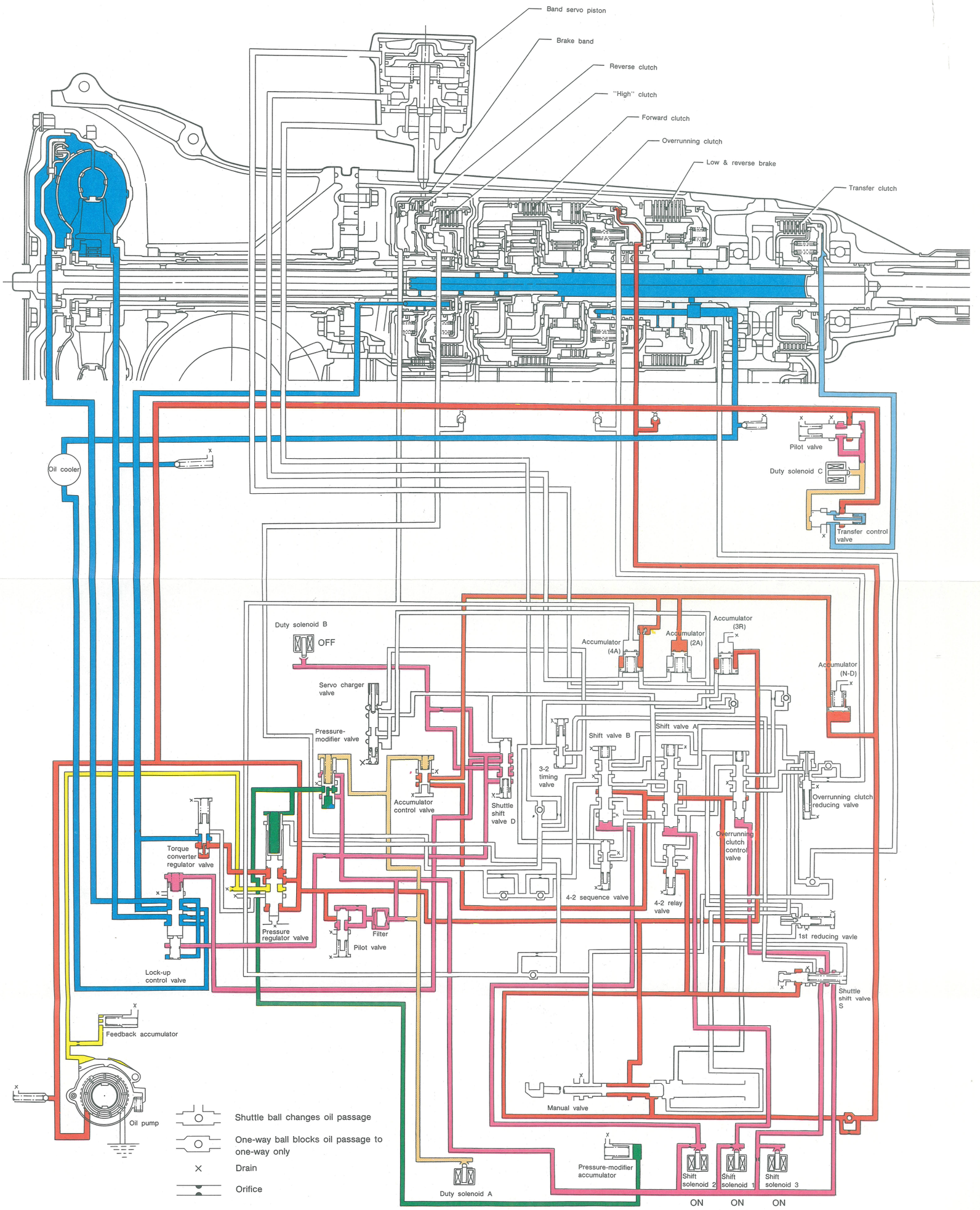

12. FIRST SPEED OF 2 RANGE

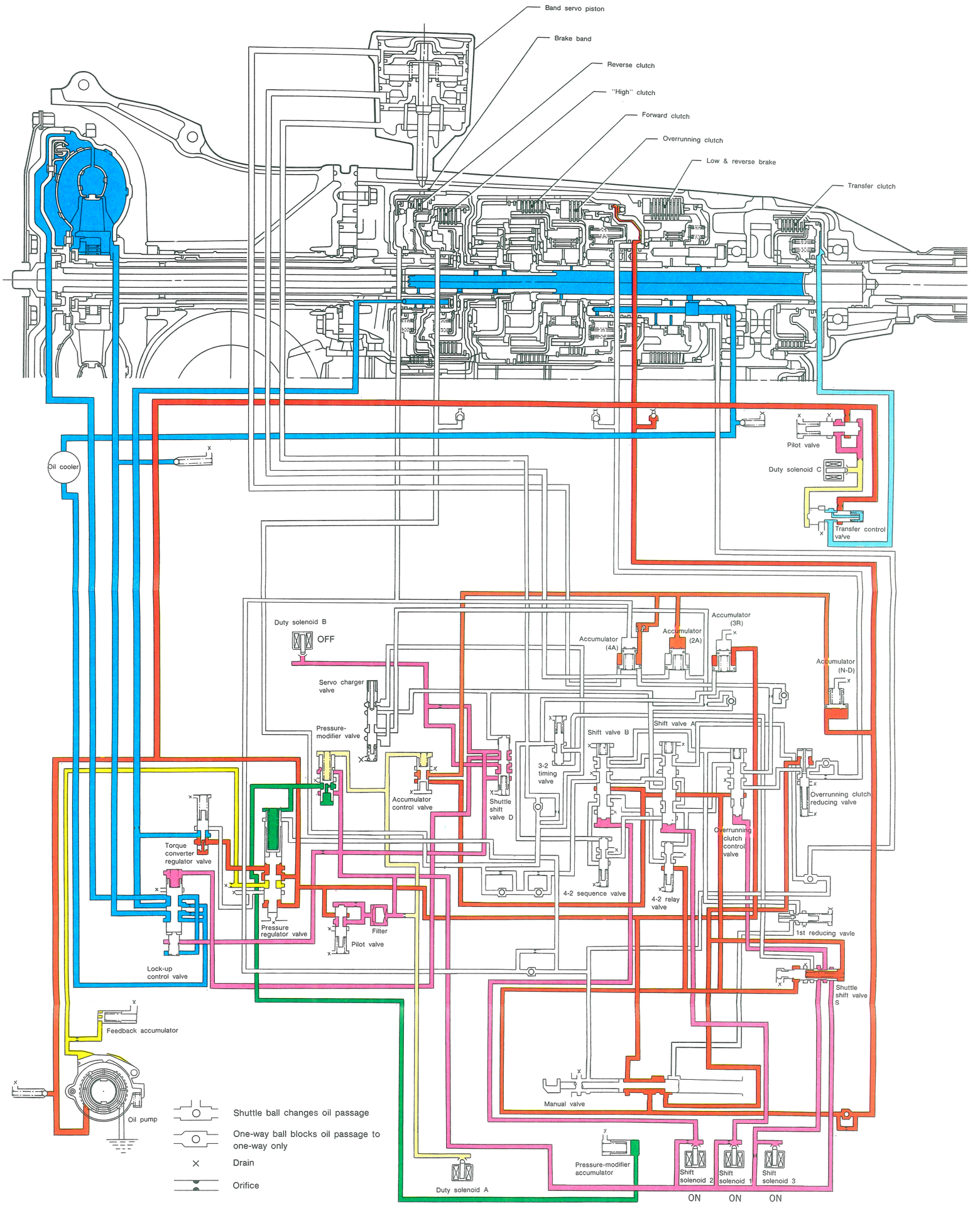

13. FIRST SPEED OF 1 RANGE

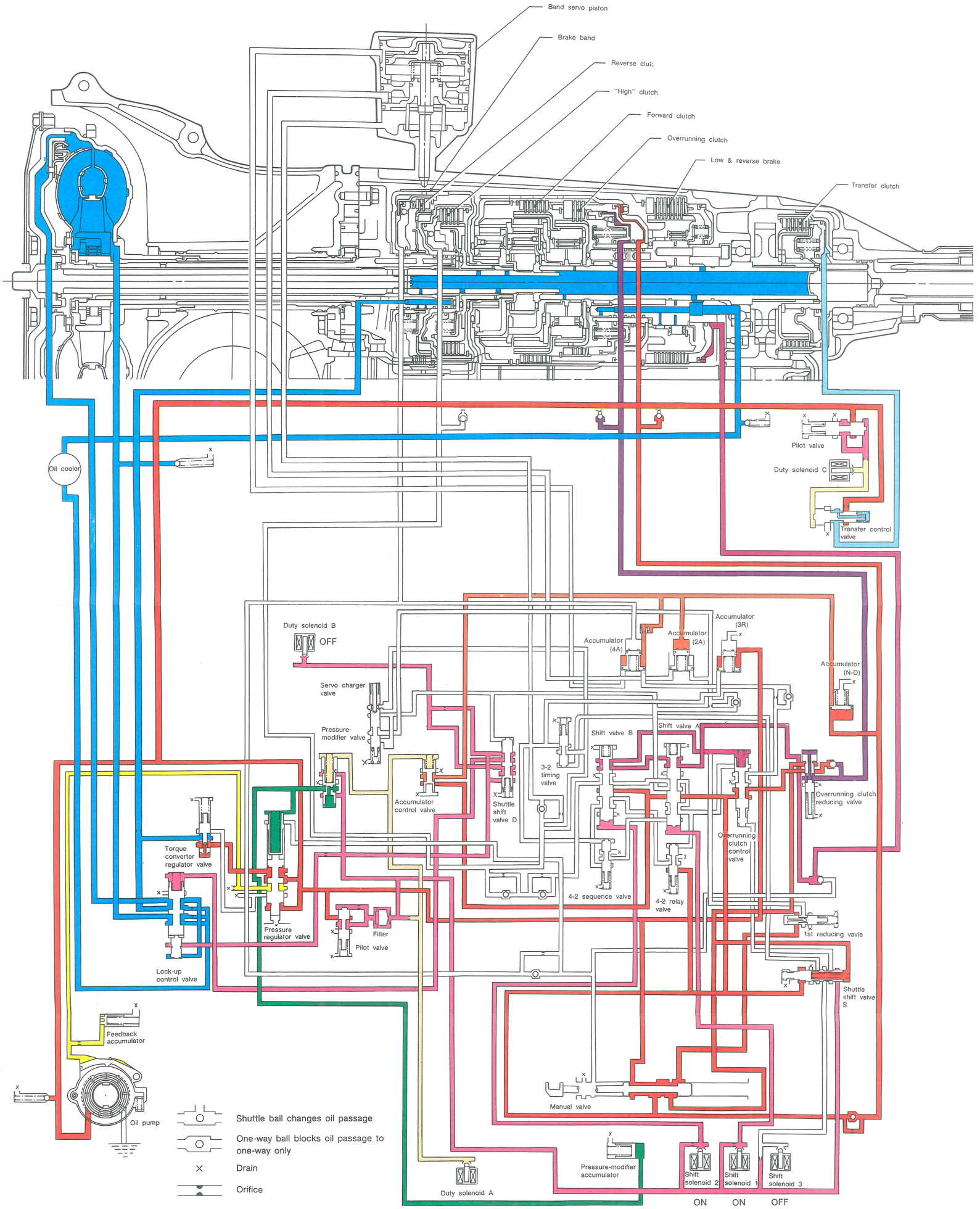

21. Electronic-Hydraulic Control System

A: GENERAL

The electronic-hydraulic control system consists of various sensors and switches, a transmission control unit (TCU) and the hydraulic controller including solenoid valves. The system controls the transmission proper including shift control, lock-up control, overrunning clutch control, line pressure control, auto pattern select control and shift timing control. It also controls the AWD transfer clutch. In other words, the system detects various operating conditions from various input signals and sends output signals to shift solenoids 1, 2 and 3 and duty solenoids A, B and C (a total of six solenoids).

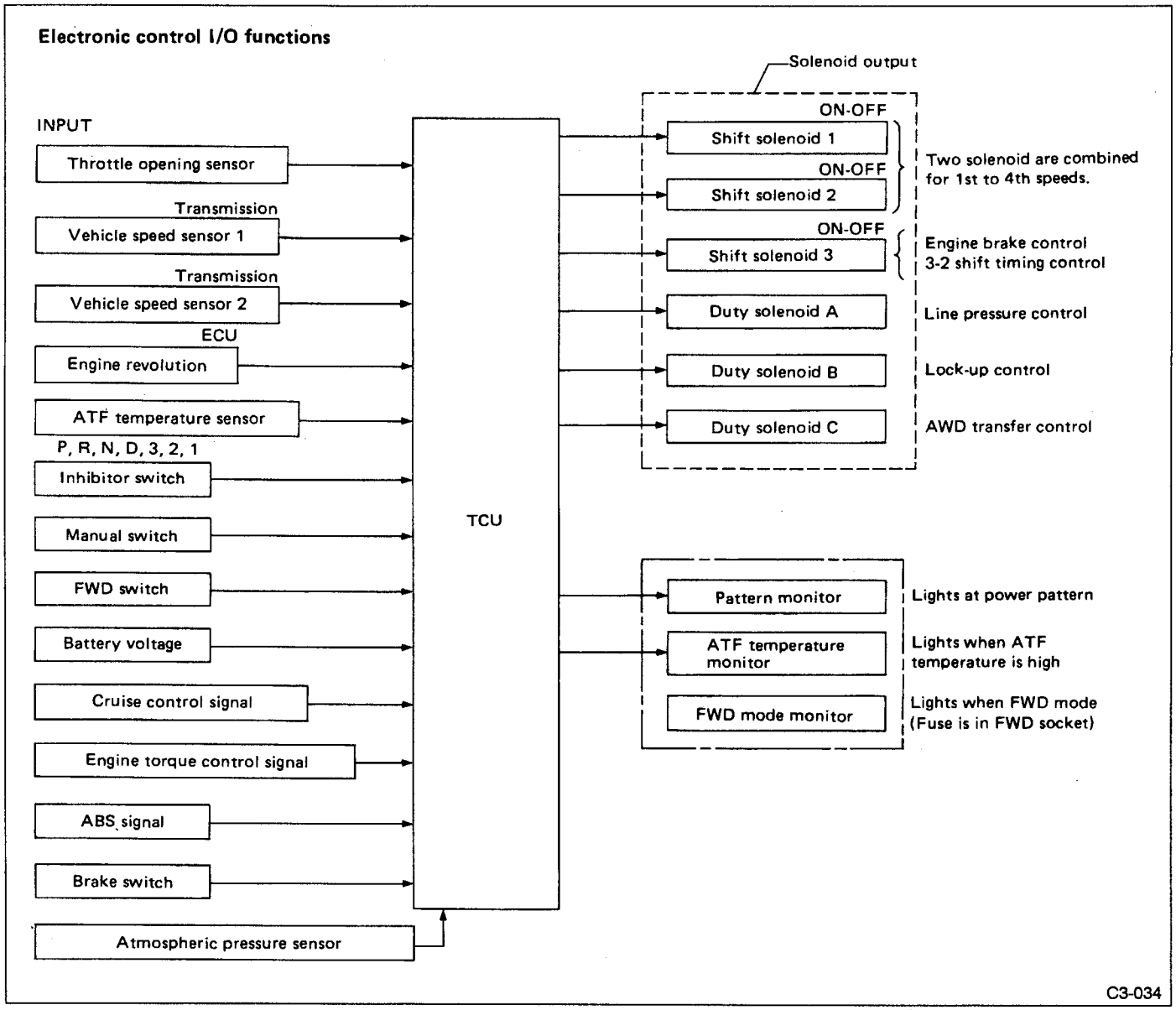

Fig. 49

B: FUNCTION

1. INPUT SIGNAL

Signal name	Major function
Throttle sensor	Detects throttle opening and determines shift point, line pressure and lock-up vehicle speed according to engine load.
Vehicle speed sensor 1 (mounted to transmission)	Detects vehicle speed. This signal is used to control shifting, lock-up, line pressure, and transfer clutch.
Vehicle speed sensor 2 (mounted to transmission)	Used to control transfer clutch and as backup in case of failure of vehicle speed sensor 1.
Engine revolution	Detects engine speed. This signal is used for lock-up clutch smooth, control at lock-up and to prevent engine overrunning at "2" and "1" range.
Inhibitor switch	Used to determine shifting and line pressure for respective ranges "P", "R", "N", "D", "3", "2" and "1".
Cruise switch (cruise control)	Detects operation of cruise control, and expands "4th" operating range.
ATF temperature sensor	Detects ATF temperature. This signal is used for inhibition of lock-up, release of OD and detection of ATF temperature.
Manual switch	Used to maintain the transmission in select range 2nd, 3rd when going up or down steep hills, running on sand, mud, or slippery surfaces.
FWD switch	Used to change the mode from AWD to FWD. Also used to adapt the vehicle to FWD tester roller. Changeover from AWD to FWD can be accomplished by inserting a fuse into the fuse holder.
ABS signal	When ABS is operating, to optimize ABS control, transfer clutch torque is controlled to eliminate the influence of engine braking and reduce the degree of coupling between front and rear wheels.
Atmospheric pressure sensor	Detects atmospheric pressure. This signal is used for decrease the shift shock at the high ground.

2. OUTPUT SIGNAL

Signal name	Function
Shift solenoids 1, 2	Controls shift stage by turning solenoid ON/OFF. Relationship between solenoid operation and shifting stage is shown in Table below. When shifting, timing is controlled for each solenoid to reduce shock.
Shift solenoid 3 (Overrunning clutch)	Controls 3-2 shift timing and overrunning clutch operation. Shift timing is controlled by controlling release speed of oil pressure to reduce shock while downshifting. The overrunning clutch is controlled so that it will operate during coasting to apply engine brake.
Duty solenoid A (line pressure)	Regulates the line pressure according to driving conditions.
Duty solenoid B (lock-up)	Regulates the hydraulic pressure of the lock-up clutch and operates in three modes (open, smooth and lock-up).
Duty solenoid C (transfer pressure)	Regulates the hydraulic pressure of the transfer clutch and controls the driving force to the rear drive shaft.
"Power" indicator light	Indicates whether the shift pattern is "Normal" or "Power". The indicator lights in power mode. This light is also used for "self-diagnosis".
FWD pilot light	Lights when the "FWD switch" turned ON.
ATF temperature warning light	Lights when ATF becomes hot (exceeds a set temperature level).
Engine torque control signal	Reduces engine torque at racing select and gear change.

3. CONTROL ITEM

Control item			Description of control
Transmission control	Gear shift control	Normal shift control • Normal pattern • Power pattern	Upshifting and downshifting are set for each range, gear position and pattern according to throttle opening and vehicle speed.
		Control with ABS	Gear is locked in 3rd position when ABS signal enters.
		Control with cruise control	When cruise control is set, 4th gear operating range is expanded.
		ATF low temperature control	Shifting into 4th gear is prevented when ATF temperature is below the preset value.
		Manual control	Gear is held in selected range when manual switch is ON. (2 and 3 ranges only)
	Lock-up control	Normal lock-up control • "Normal" : "D" range only • "Power" : R, 3, 2 ranges	Lock-up ON/OFF is set for each range, gear position, and pattern according to throttle opening and vehicle speed. (Basically lock-up is OFF during gear shifting.)
		Smooth control	Smooth lock-up is performed when lock-up is switched on.
	Overrunning clutch control	Engine brake control	Overrunning clutch is operated according to range, vehicle speed, and cruise control signals in order to apply engine brake properly.
		3-2 timing control	This control speeds the release of servo piston pressure 3R when shifting down from 3rd to 2nd, thereby preventing engine racing.
	Line pressure control	Ordinary control	Line pressure is regulated according to throttle opening, vehicle speed and range signals.
		Shifting control	Line pressure is reduced when shifting to lessen shifting shock.
		Starting control	Line pressure is at a minimum so as to reduce engine cranking load.
	Automatic pattern select control	Power pattern control (POWER light ON)	Power pattern is selected when throttle opening change speed exceeds the preset value.
		Normal pattern control	When throttle opening is less than the preset value, normal pattern is resumed.
	Shift timing control	Shift step control	ON/OFF timing for shift solenoid is controlled.
		Lock-up control	When shifting, the lock-up clutch is temporarily released.
		Overrunning clutch control (3rd to 2nd: small throttle opening in coasting, 2nd to 1st: in coasting)	When shifting down, the overrunning clutch is temporarily disconnected to reduce shifting shock.
		Line pressure control	When shifting, line pressure is controlled to the optimum level so as to reduce shifting shock.
AWD transfer clutch control	Ordinary transfer control		Transfer oil pressure is regulated according to the throttle opening angle and vehicle speed.
	1st range control		Transfer oil pressure is increased.
	Slip control		Immediately after detecting a slip, transfer oil pressure is controlled to the same pressure as 1st range. (This control is canceled if V ≧ 60 km/h (37 MPH), or when throttle is closed fully.)
	Control it turns		Transfer oil pressure is reduced after detecting the turn.
	ABS control		Transfer oil pressure is adjusted to set level immediately after reception of ABS signal.

4. POWER INDICATOR LIGHT

The automatic transmission equipped vehicle is capable of automatically selecting two driving patterns; a normal pattern suitable for ordinary driving and a power pattern suitable for driving uphill or rapid acceleration. The power indicator light lights when the power pattern is selected. See the table below:

Selector lever position	Changeover from normal pattern to power pattern	Power indicator light ON/OFF
"D" range	Pattern is changed automatically according to depression of accelerator pedal.	• "Normal" pattern: OFF • "Power" pattern: ON

C: COMPONENTS

1. THROTTLE SENSOR

The throttle sensor provides electrical signals corresponding to the throttle opening. The throttle opening and accelerator depression speed are detected by this throttle sensor output.

2. VEHICLE SPEED SENSOR 1 (MOUNTED INSIDE THE TRANSMISSION)

[AWD]

The vehicle speed sensor (output shaft rotation sensor) is mounted to the extension case (from the outside of the case). The sensor outputs a pulse signal which is transmitted to the TCU where it is converted to vehicle speed.

The transfer clutch drum is connected directly to the rear wheel driving propeller shaft. Vehicle speed sensor 1 on the AWD model defects rear-wheel speed.

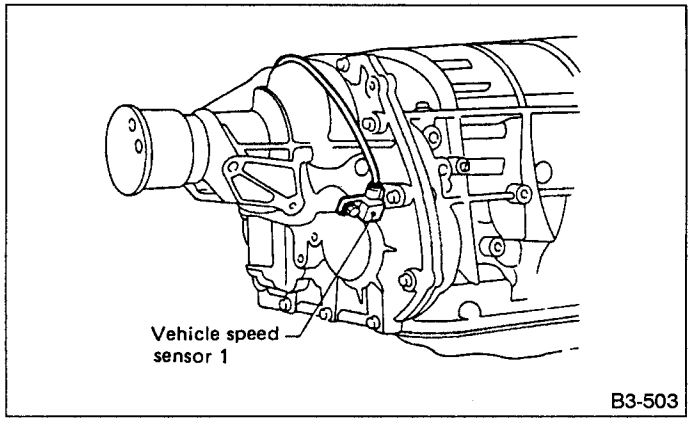

Fig. 50

3. VEHICLE SPEED SENSOR 2 (MOUNTED INSIDE THE TRANSMISSION)

[AWD]

The vehicle speed sensor (output shaft rotation sensor) is mounted to the torque converter case (from the outside of the case). The sensor outputs a pulse signal which is transmitted to the TCU where it is converted to vehicle speed.

The speedometer driven gear is connected directly to the front wheel driving differential case by speedometer drive gear. Vehicle speed sensor 2 on the AWD model detects front-wheel speed.

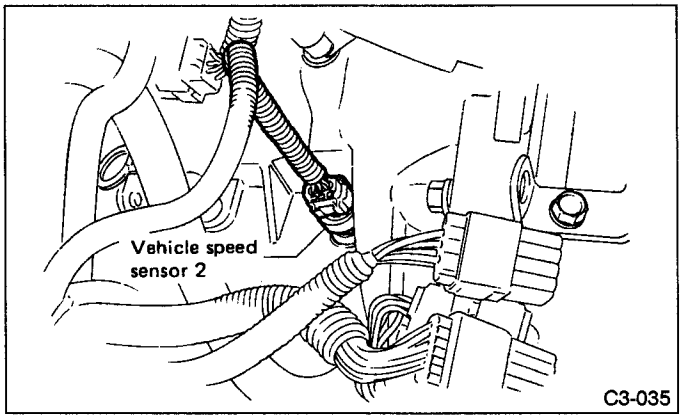

Fig. 51

4. ATF TEMPERATURE SENSOR

This sensor is mounted to the control valve in the transmission. It detects temperature change as an analog electrical signal. The output characteristics of the sensor are shown below.

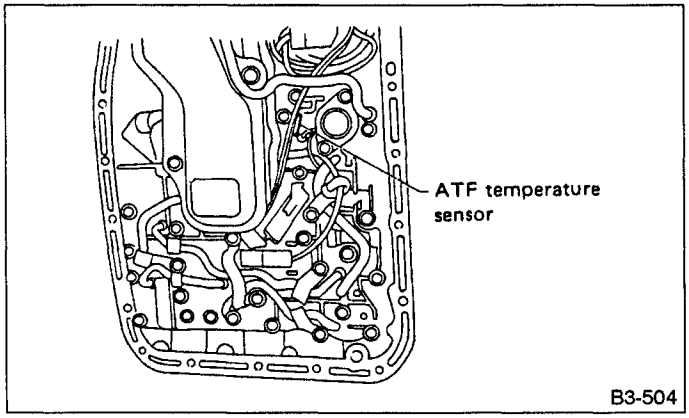

Fig. 52

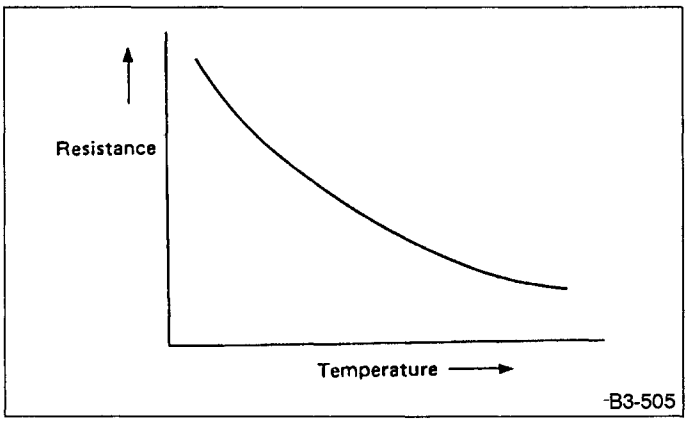

Fig. 53

5. INHIBITOR SWITCH

The inhibitor switch assures safety when starting the engine. This switch is mounted on the right side of the transmission case, and is operated by the range selector lever.

When the selector lever is set to "P" or "N", the electrical circuit is connected in the inhibitor switch and the starter circuit is energized for cracking the engine.

When the selector lever is set to "R", "D", "3", "2", or "1" range, the electrical circuit is disconnected in the inhibitor switch. Hence engine cranking is disabled. In the "R" range, the backup light circuit is completed in the switch, and the backup lights come on.

In addition to the above function, the inhibitor switch incorporates a circuit for detecting the selected range position and sending the range signal to the TCU.

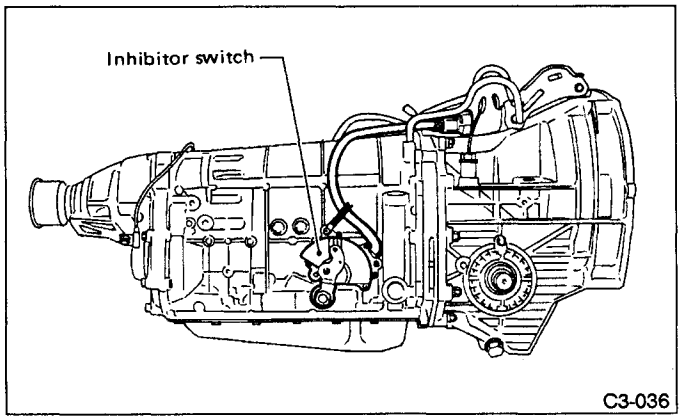

Fig. 54

*PIN NO.	4	3	2	1	8	7	6	5	12	11	10	9
CODE POSITION	B	Lg	Br	LgY	YW	YB	LgR	WL	BW	BY	G	GW
P	○	○							○	○		
R	○		○								○	○
N	○			○					○	○		
D	○				○							
3	○					○						
2	○						○					
1	○							○				

*: Connector T1

6. SOL. 1 (SHIFT) and SOL. 2 (SHIFT)

These solenoids are mounted to the control valve. They are turned ON or OFF according to signals sent from the TCU. The gear positions are changed according to the ON and OFF condition of these solenoids.

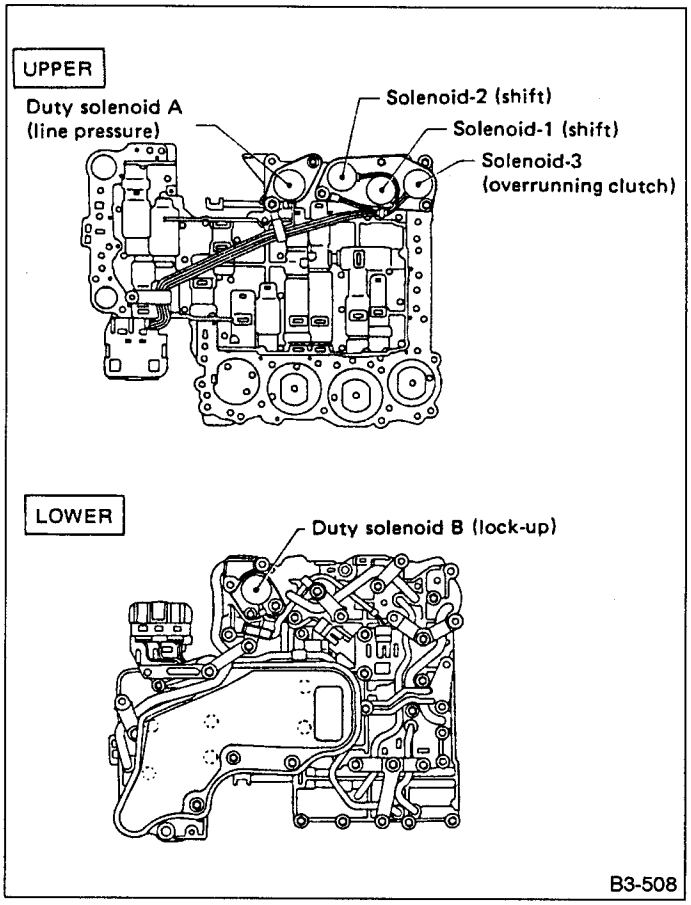

Fig. 55

7. SOL. 3 (OVERRUNNING CLUTCH)

This solenoid is also mounted to the control valve. It is turned ON or OFF according to the signal sent from the TCU. This operation controls the engagement and disengagement of the overrunning clutch.

8. DUTY SOL. A (LINE PRESSURE)

This solenoid is mounted to the control valve, and its duty ratio is controlled by the signal sent from TCU. This solenoid then controls the pressure modifier valve and pressure regulator valve to adjust the line pressure to an optimum pressure level suitable for operating conditions.

9. DUTY SOL. B (LOCK-UP)

This solenoid is mounted to the control valve, and its duty ratio is controlled by the signal sent from TCU. It then controls the lock-up control valve to provide smooth engagement and disengagement of the lock-up clutch.

10. DUTY SOL. C (TRANSFER)

This solenoid is mounted to the transfer control valve on the side of extension case, and its duty ratio is controlled by the signal sent from TCU. It then controls the transfer control valve for controlling the transfer clutch hydraulic oil pressure.

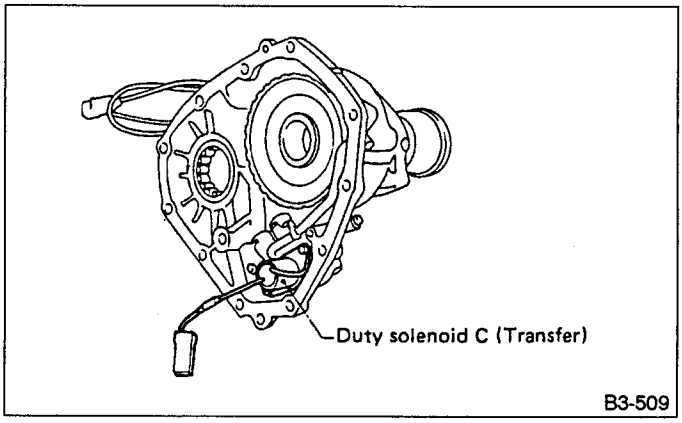

Fig. 56

22. Transmission Control Unit (TCU)

A: GENERAL

TCU receives various sensor signals and determines the running conditions of the vehicle. It then sends control signals to each solenoid according to the preset gear-shift characteristic data, lock-up operation data, and transfer clutch torque data (duty ratio).

1. CONTROL SYSTEM

Input signal / Control item	Throttle sensor idle switch	Vehicle speed sensor 1	Vehicle speed sensor 2	Engine revolutions (rpm)	ATF temperature sensor	Inhibitor switch	Manual switch	FWD switch	Cruise control signal	ABS signal	Atmospheric pressure signal
1. Shift control (1) Ordinary shift control	○	○	○	○		○					
(2) ABS operation control										○	
(3) Cruise control operation									○		
(4) Hydraulic oil temperature control					○						
(5) Manual control						○	○				
2. Lock-up control (1) Ordinary lock-up control	○	○	○	○		○			○		
(2) Smooth control		○	○	○							
(3) Low oil temperature control					○						
3. Overrunning clutch control (1) Engine brake control	○	○	○			○	○		○		
(2) 3-2 timing control	○	○	○								
4. Line-pressure control (1) Ordinary line pressure control	○	○	○	○	○	○	○				
(2) Shifting control	○	○	○			○	○				○
(3) Starting control				○	○						
5. Shift pattern select control (1) Power drive pattern control	○	○	○		○	○					
(2) Return to normal drive pattern	○	○	○			○					

Input signal / Control item	Throttle sensor idle switch	Vehicle speed sensor 1	Vehicle speed sensor 2	Engine revolutions (rpm)	ATF temperature sensor	Inhibitor switch	Manual switch	FWD switch	Cruise control signal	ABS signal	Atmospheric pressure signal
6. Shift timing control (1) Shift range control	○					○	○				
(2) Lock-up control	○					○	○				
(3) Overrunning clutch control	○					○	○				
(4) Line pressure control	○	○	○			○	○				
7. AWD transfer clutch control (1) Ordinary transfer control	○	○	○		○	○		○			
(2) Manual mode control	○	○	○			○	○				
(3) Slip detection control	○	○	○								
(4) Steering control	○	○	○								
(5) ABS operating control	○									○	

2. SYSTEM DIAGRAM

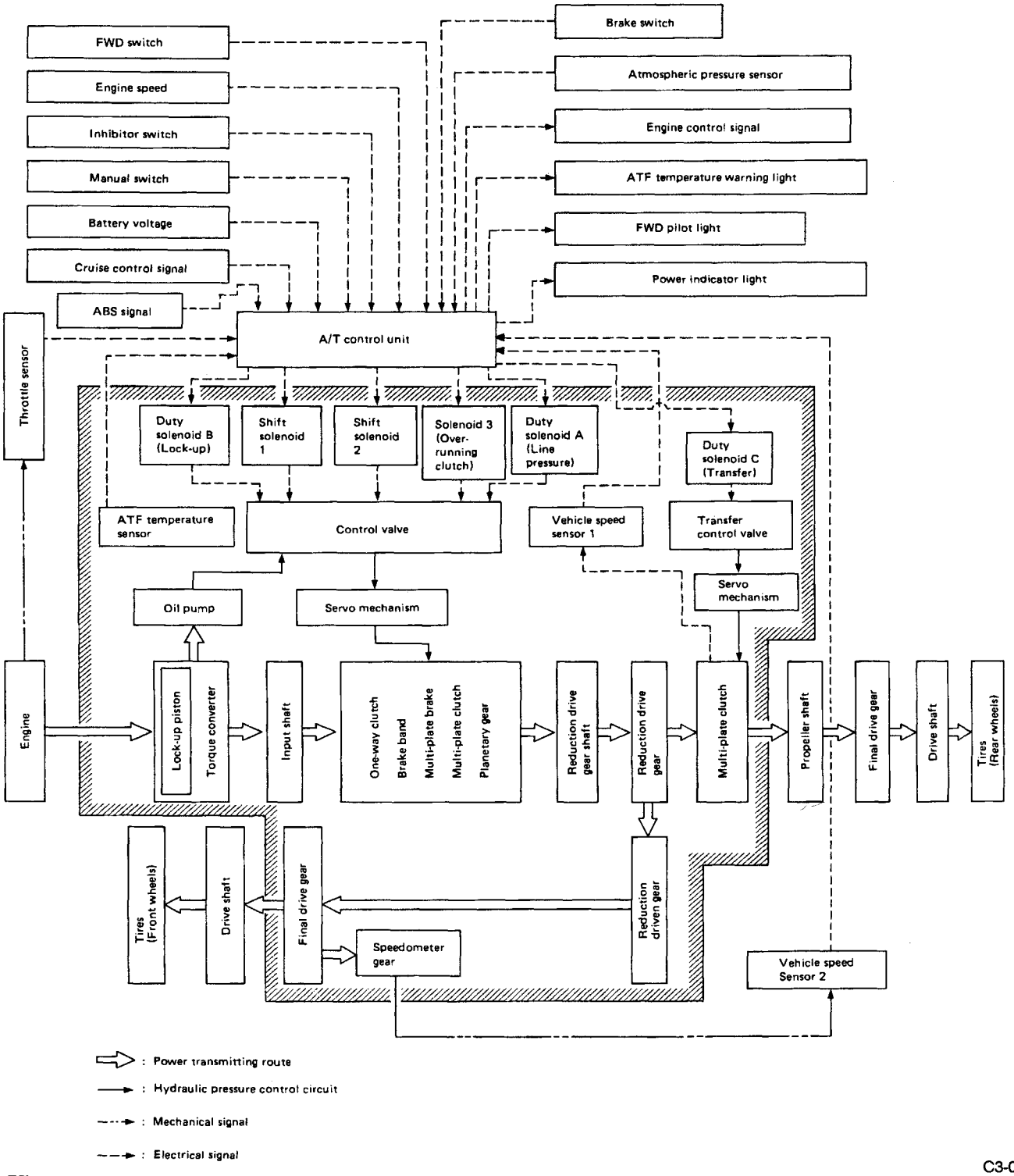

C3-037

Fig. 57

B: FUNCTION

1. SHIFT CONTROL

Gearshifting is controlled in response to driving conditions, according to the shift point characteristic data, as shown in the following diagram, stored in the TCU. Solenoids are operated at the proper time corresponding to the shift pattern, throttle opening, and vehicle speed for smooth shifting.

	Solenoid 1	Solenoid 2
1st	O	O
2nd	X	O
3rd	X	X
4th	O	X

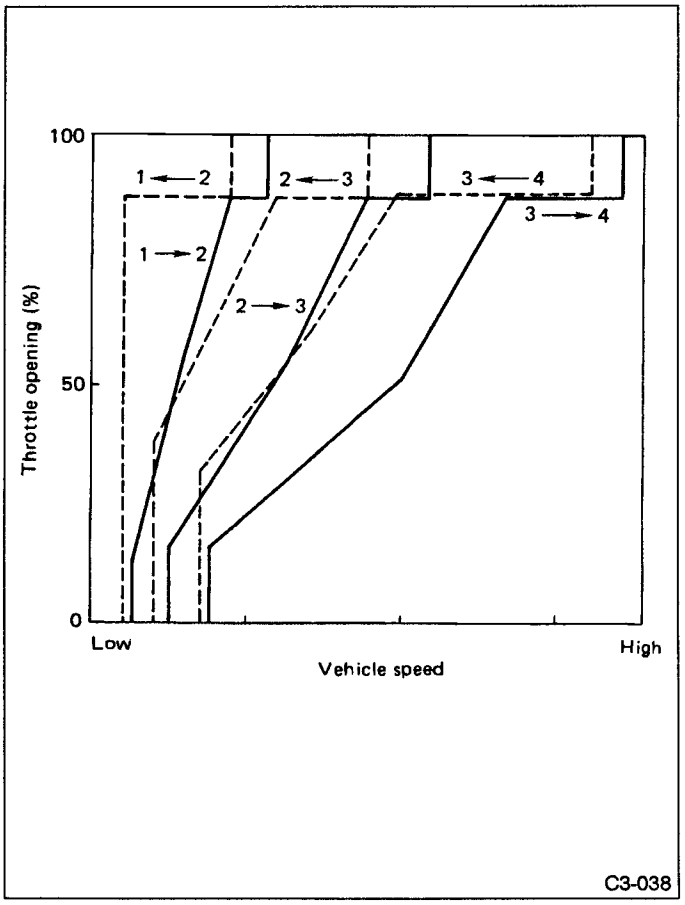

Fig. 58

When oil temperature is below approximately 10°C (50°F), the vehicle cannot be shifted to the 4th range.

① Control unit activates both solenoids 1 and 2 in response to throttle and vehicle speed signals.

② Shift valve moves in response to solenoid operation, supplying/interrupting clutch pressure to the line.

③ Gears are shifted by ON-OFF operation of both solenoids as indicated in Table.

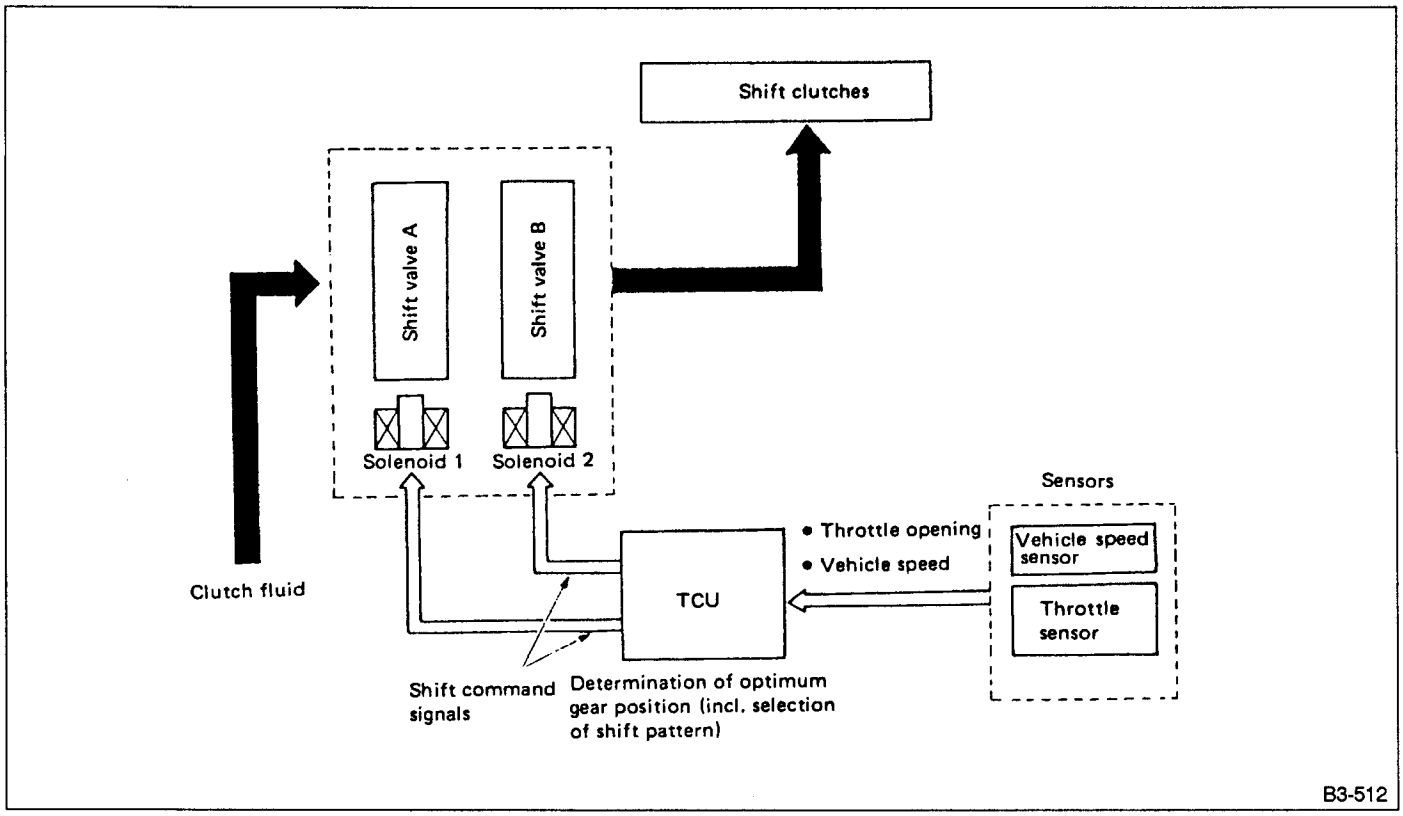
Shift clutches
Shift valve A
Shift valve B
Solenoid 1
Solenoid 2
Clutch fluid
Sensors
• Throttle opening
• Vehicle speed
Vehicle speed sensor
Throttle sensor
TCU
Shift command signals
Determination of optimum gear position (incl. selection of shift pattern)
B3-512

Fig. 59

2. 3-2 TIMING CONTROL

When shifting from 3rd to 2nd, the high clutch is disengaged. At the same time, oil pressure (which releases the brake band) is also released from the servo piston 3rd release chamber (3R).

At this point, the servo piston moves to release oil pressure from the 3rd release chamber (3R) and apply oil pressure to the 2nd apply chamber. This causes the brake band to be applied. In other words, high clutch "release" and brake band "application" are properly timed by electronic control. This eliminates engine rev-up under no load or hesitation.

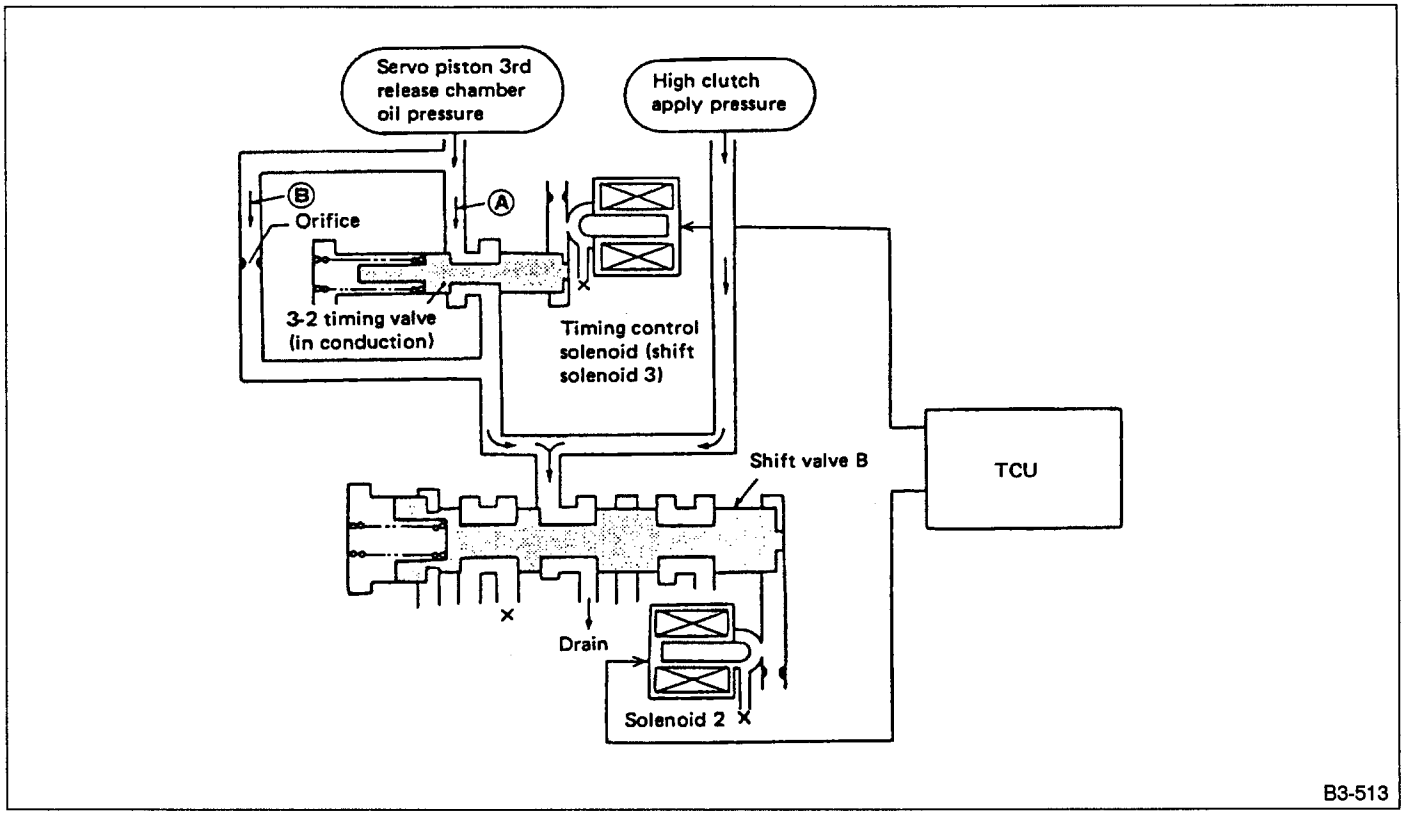

Fig. 60

- When the 3-2 timing valve conducts, oil pressure applied to the 3rd release chamber is quickly released through passage Ⓐ.
- When the 3-2 timing valve does not conduct, oil pressure applied to the 3rd release chamber is slowly released through passage Ⓑ (provided with an orifice).

3. LOCK-UP CONTROL

The lock-up engaging and disengaging conditions are set for each gear shift range, gear position and shift pattern and correspond to the throttle opening and vehicle speed, and the duty solenoid is electronically controlled by TCU controls the lock-up clutch. The lock-up clutch engagement and disengagement are controlled by the lock-up control valve.

〈When engaging and disengaging〉

The shuttle duty shift valve is actuated by the hydraulic pressure from the shift valve A. It controls the position of the lock-up control valve for engaging or disengaging the lock-up clutch.

(1) 1st gear, N, R, and P ranges

Since no operating pressure is generated from the shift valve A, the shuttle duty shift valve sets the lock-up control valve in the "disengaging" position.

The lock-up operating pressure (torque converter regulator pressure) acts on the lock-up clutch disengaging circuit, while the engaging circuit communicates with the oil cooler circuit. Accordingly, the lock-up clutch is disengaged by the pressure difference.

(2) 2nd, 3rd, and 4th gear

The operating pressure generated by the shift valve A is applied to the shuttle duty shift valve, which pushes the lock-up control valve to the "engaging" position. Since the lock-up operating pressure is applied to the engaging side circuit while the disengaging circuit is drained, the lock-up clutch is engaged by the pressure difference.

〈Smooth control〉

The duty solenoid B is controlled by the TCU and controls the operation of the lock-up control valve. Because the lock-up operating pressure is controlled by the lock-up control valve, the force applied to the lock-up clutch is controlled for smooth clutch operation. When locking up, the clutch is set in the half-engaged state beforehand. After this, the lock-up operating pressure is gradually increased to achieve smooth locking up.

4. LINE-PRESSURE CONTROL

1) The oil pump delivery pressure (line pressure) is regulated to the constant pilot pressure by the pilot valve.
2) The pilot pressure applied to the pressure modifier valve is regulated by the line pressure controlling duty solenoid A and changed into the pressure modifier pressure.
3) The pressure modifier valve is an auxiliary valve for the pressure regulator valve, and it creates a signal pressure (pressure modifier pressure) for regulating the line pressure to an optimum pressure corresponding to the driving conditions.
4) This pressure modifier pressure is applied to the pressure regulator valve to control the oil pump delivery pressure.
5) The delivery pressure of the oil pump is regulated to an appropriate pressure (line pressure) corresponding to the driving condition to reduce the loss in the oil pump driving time and acceleration shock.
6) The pressure modifier pressure regulated by the pressure modifier valve is smoothed by the pressure modifier accumulator and pulsation in the line pressure is eliminated.

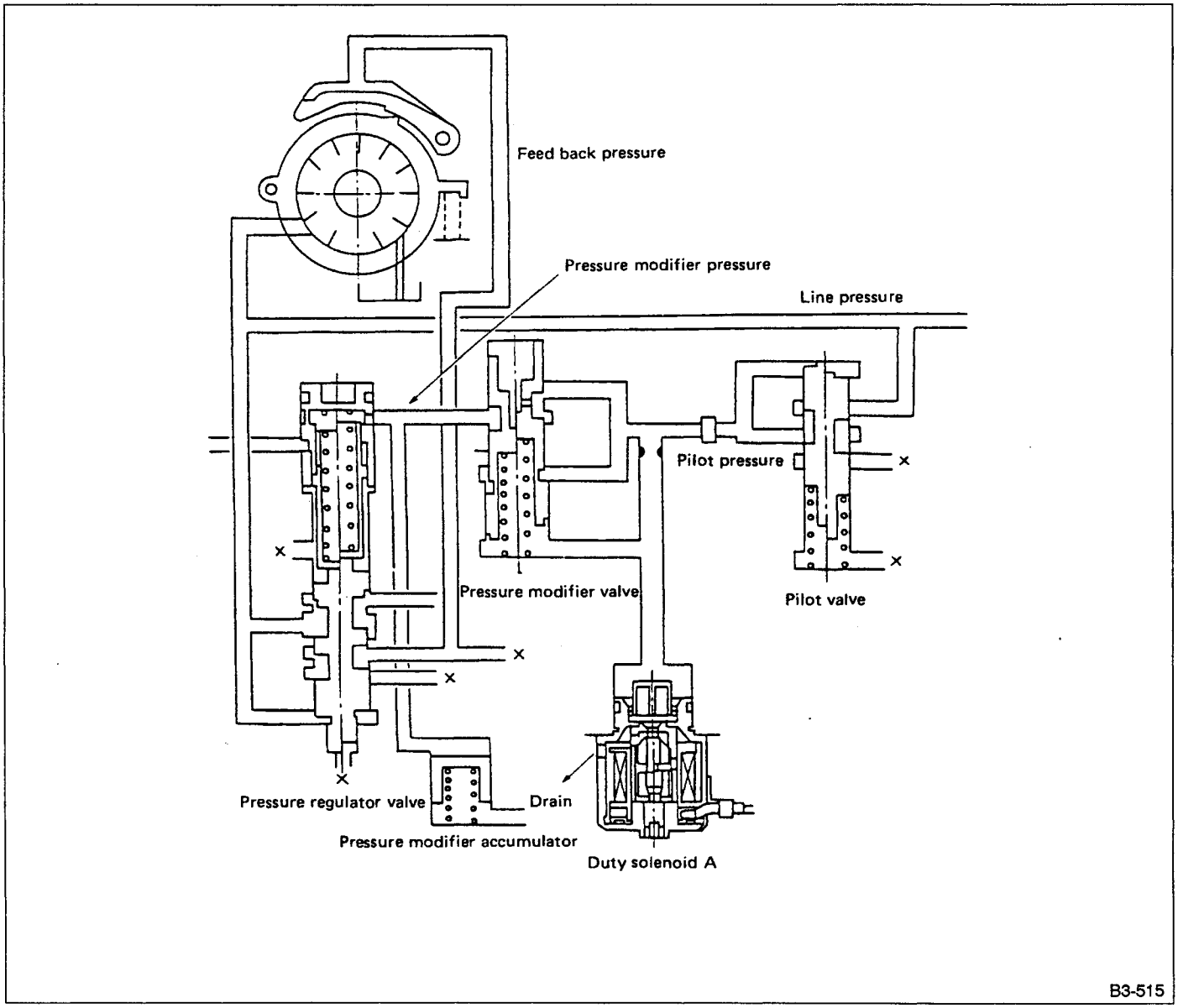

Fig. 61

5. LINE-PRESSURE SHIFTING CONTROL

Oil pressure which engages shift clutches (to provide 1st through 4th speeds) is electronically controlled to meet varying operating conditions.
In other words, line pressure decreases to match the selected shift position, minimizing shifting shock.

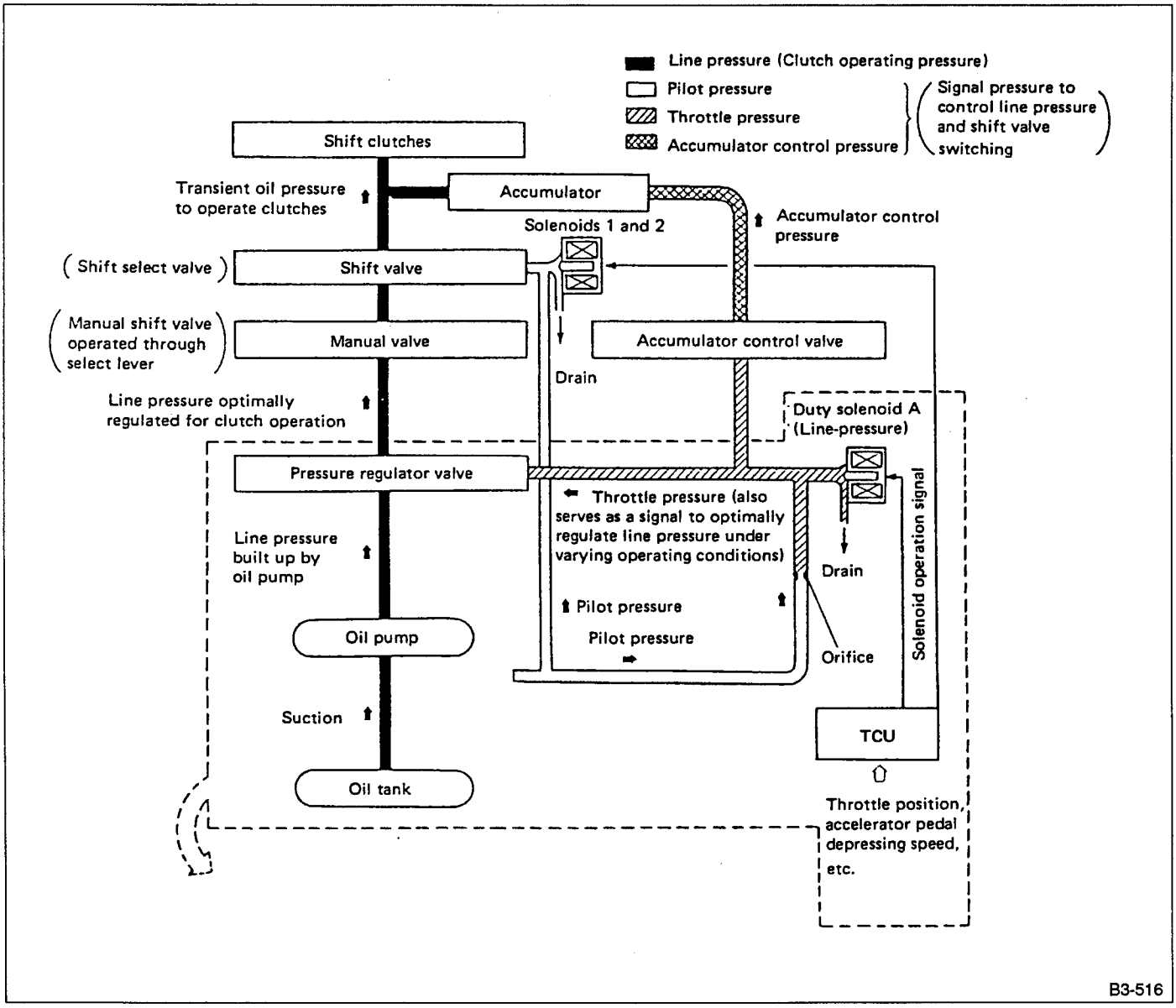

Fig. 62

- Electronic control of clutch oil pressure in summary

a. Solenoids activate through the TCU which receives various control signals (throttle signal, etc.)
b. Control signals are converted into throttle pressure, which is transmitted to the pressure regulator valve.
c. The pressure regulator valve optimally regulates line pressure (built-up by oil pump) in response to throttle pressure, matching varying operating conditions.

6. SHIFT PATTERN SELECT CONTROL

Shift pattern is selectable automatically between a normal pattern suitable for ordinary economy running and a power pattern suitable for climbing uphill or rapid acceleration.
In the power pattern, the shift down point and shift up point are set higher than those of the normal pattern.
When the power pattern is selected, the POWER indicator light in the meter lights up.

Selector position	Changeover from normal to power pattern	Meter indication
D, 3, 2 range	Performed automatically corresponding to accelerator pedal depression.	• Normal pattern: OFF • Power pattern: ON

* This happens for the 3 or 2 range, only when the manual switch is OFF.

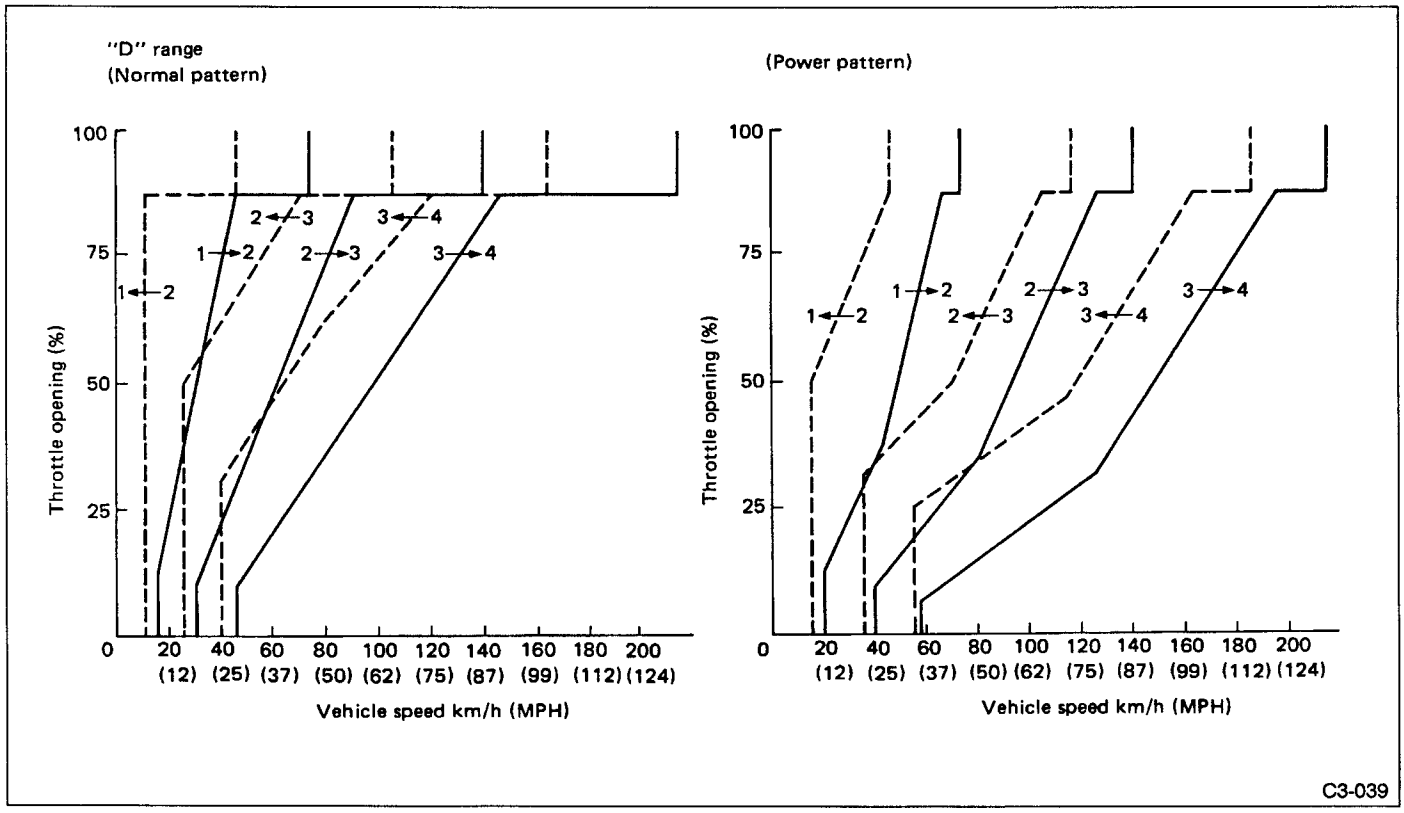

Fig. 63

① Normal pattern to power pattern

Selector lever	D, 3, 2 range
Accelerator depression speed	Greater than set value

Depending on throttle opening and vehicle speed, 16 areas as shown in the figure are set. Accelerator depression speed for pattern changeover is set for each area. When the accelerator depression speed exceeds this set value, the pattern changes from normal to power. This happens for the 3 or 2 range, only when the manual switch is OFF.

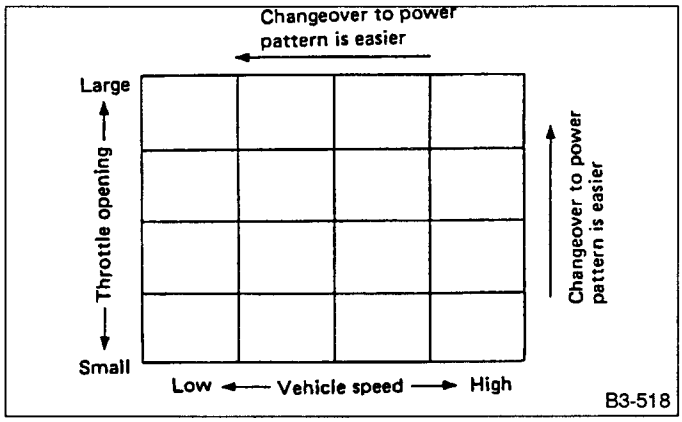

Fig. 64

② Power pattern to normal pattern
The power pattern is shifted to the normal pattern, depending on car speed. Shifting to the normal pattern is determined by the throttle position as shown in Figure below. Time lag in shifting is also determined by car speed. The maximum time lag is 3 seconds.

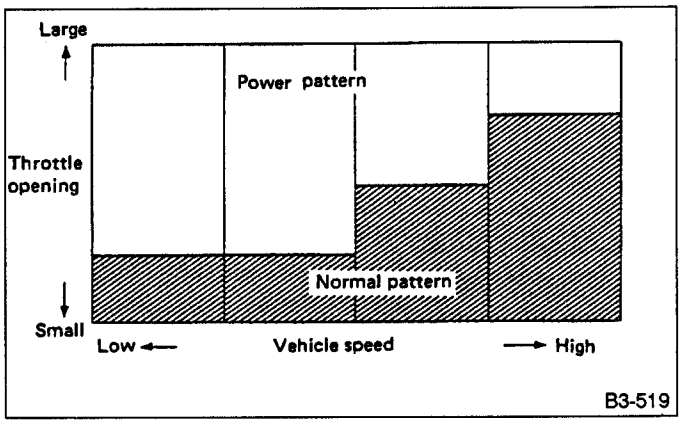

Fig. 65

7. ENGINE BRAKE CONTROL

The TCU controls the shift solenoid corresponding to such input signals as throttle opening, vehicle speed, shift range, and cruise control signals to automatically control the operation of the overrunning clutch and for positive application of engine brake.
1) In range D or 3, the overrunning clutch is kept inoperative by the action of the shuttle shift valve when the throttle opening is large. With small throttle valve opening, the overrunning clutch is engaged by the action of shift solenoid 3.
2) In range 2, the overrunning clutch is engaged by the operation of shift solenoid 3.
3) In range 1, the overrunning clutch is engaged irrespective of the operation of shift solenoid 3.

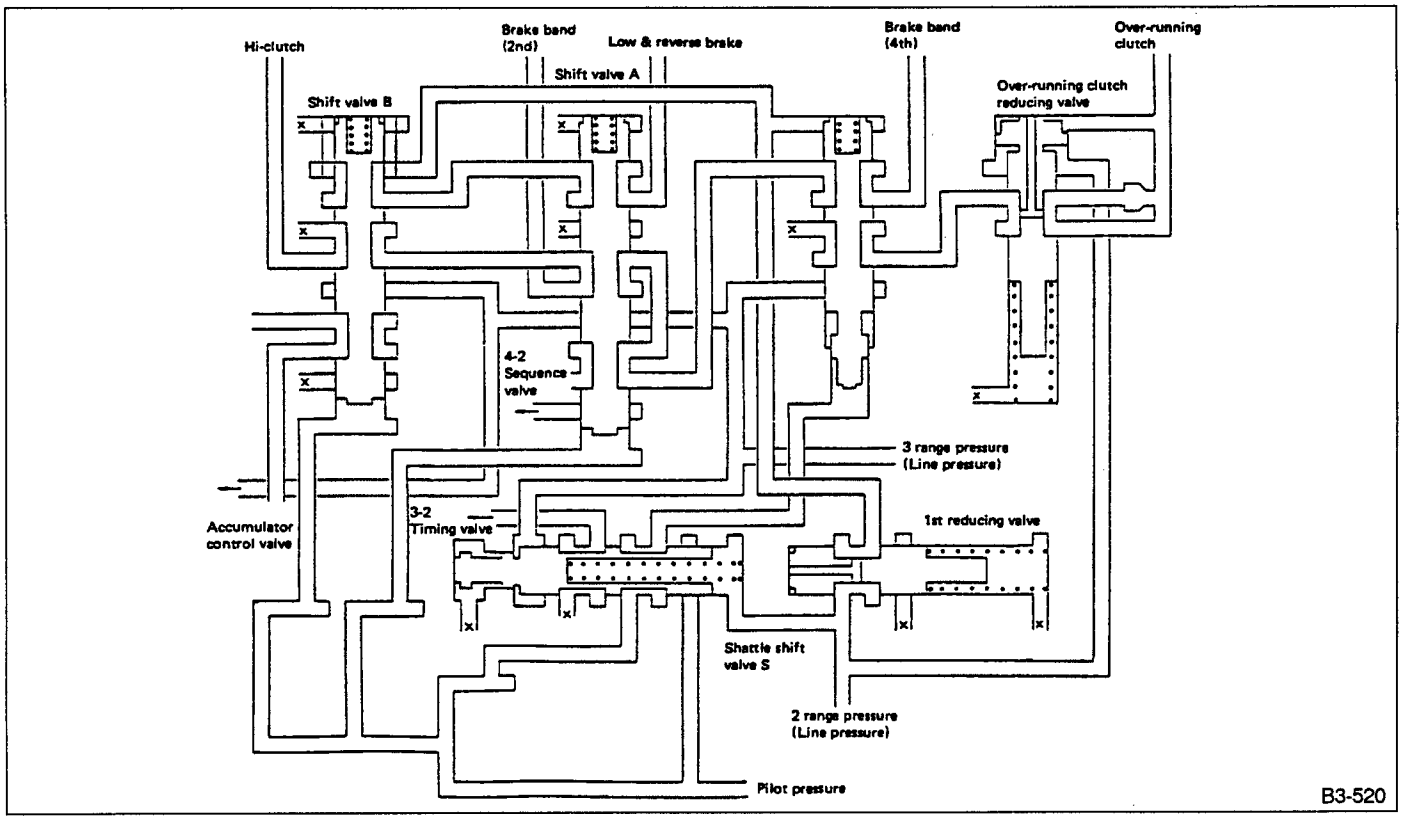

Fig. 66

8. 4WD TRANSFER CLUTCH CONTROL

		Type of control	Gear position	Remarks
1	Basic control	Regulates transfer oil pressure in response to throttle position and vehicle speed.	1st thru 4th and reverse	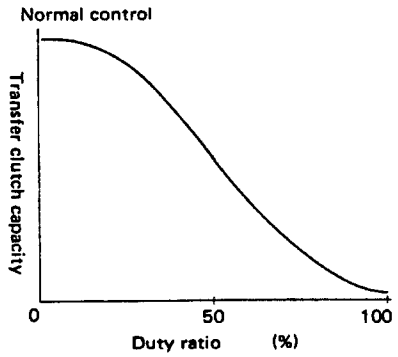 B3-521 *Fig. 67*
2	Control in 1st range	Increases transfer oil pressure (as compared with basic control 1 .)	1st	
3	Control during "slip" detection	Returns transfer oil pressure to the same as in 1st range immediately after "slip" detection.	1st thru 4th and reverse	Release: At more than set vehicle speed and fully closed throttle
4	Control in turns	Decreases transfer oil pressure upon detection of vehicle turns.	1st thru 4th and reverse	—

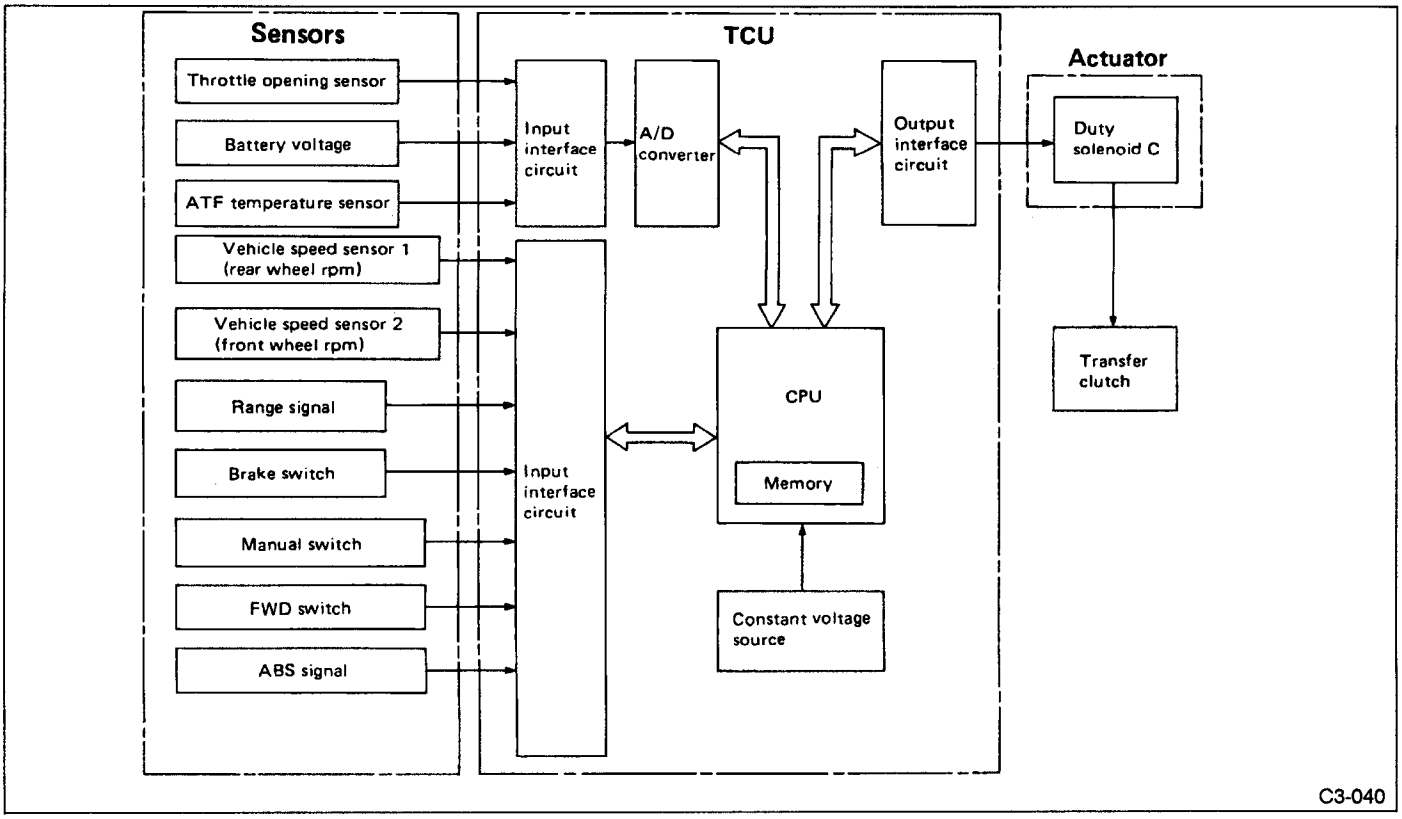

Fig. 68

• Transfer control

The transfer hydraulic pressure control unit is fitted with the transfer valve body attached to the side face of the extension case via gasket and separate plate.

The hydraulic oil of the transfer hydraulic pressure control unit is led from the oil pump delivery pressure circuit on the transmission case front to the transmission case rear. From there it is further led to the extension case where it is fed to the hydraulic circuit of the transfer valve body.

The hydraulic oil pressure (line pressure) is regulated by the transfer pilot valve, duty solenoid C and transfer control valve for obtaining optimum rear torque distribution corresponding to the driving conditions.

(1) The line pressure regulated to a proper pressure corresponding to the driving condition is further regulated to a constant pilot pressure by the transfer pilot valve.

(2) The pilot pressure is regulated to the transfer duty pressure by the duty solenoid C whose duty ratio is controlled by the TCU corresponding to the driving condition. (The transfer duty pressure varies with the degree of duty control.)

(3) The transfer duty pressure is applied to the transfer control valve.

(4) The line pressure is led also to the transfer control valve where the pressure is regulated to the transfer clutch pressure by the transfer duty pressure. (The transfer clutch pressure varies with the transfer duty pressure.)

(5) The transfer clutch pressure is applied to the transfer clutch and causes the clutch to be engaged. In this way, the transfer clutch pressure is varied so that optimum rear torque distribution can be achieved which corresponds to the vehicle driving conditions.

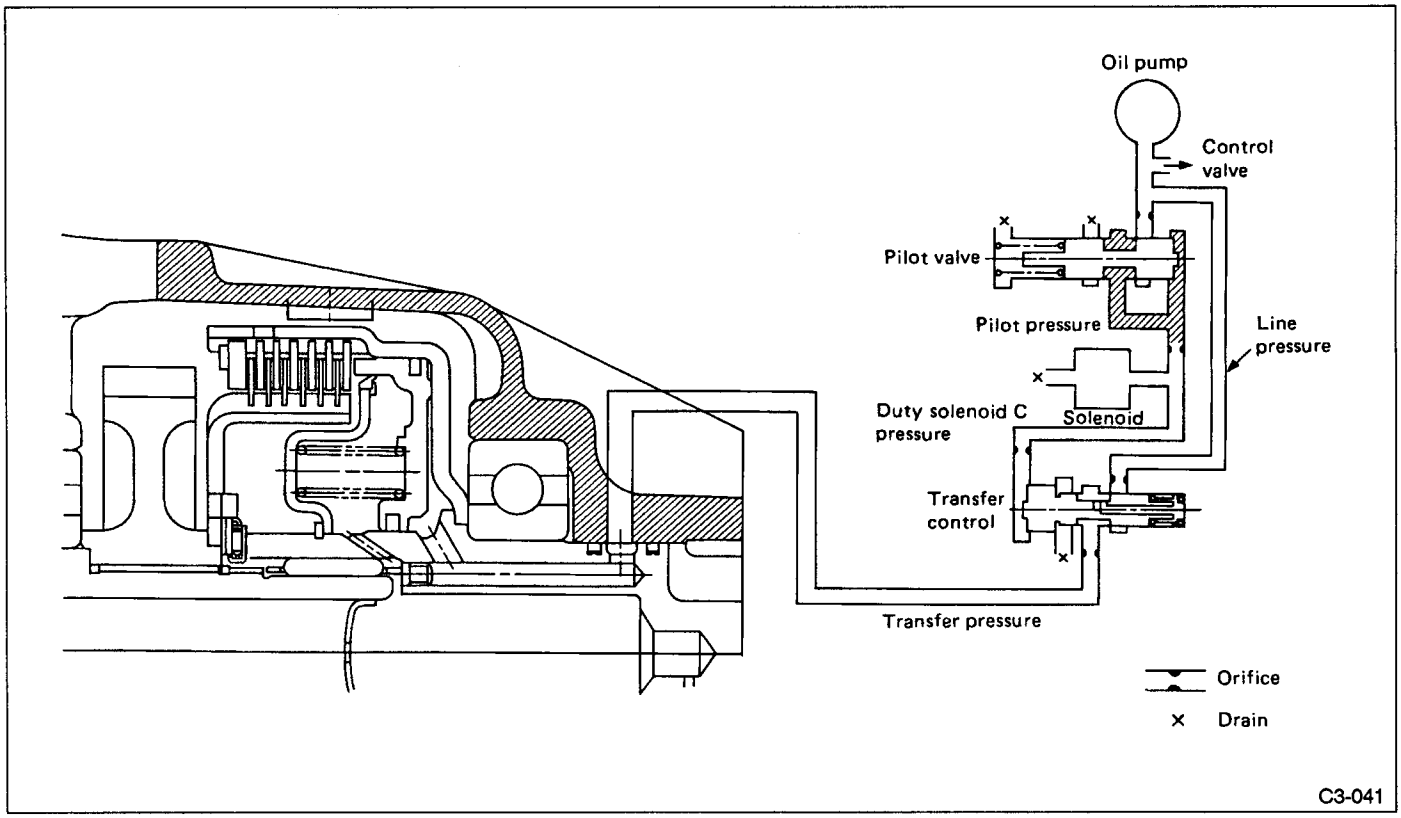

Fig. 69

23. Self-diagnosis System

1. FUNCTION

The self-diagnosis system is capable of detecting any trouble which has occurred in any of the following input and output signal systems.

① Vehicle speed sensor 1
② Vehicle speed sensor 2
③ Throttle sensor
④ Shift solenoid 1
⑤ Shift solenoid 2
⑥ Shift solenoid 3
⑦ Duty solenoid B
⑧ Duty solenoid C
⑨ ATF temperature sensor
⑩ Ignition pulse
⑪ Duty solenoid A
⑫ Atmospheric pressure sensor

The results of self-diagnosis are displayed by flashing power indicator lamp.

(1) Repeated flashing at 4 Hz ...Error such as battery trouble
(2) Repeated flashing at 2 Hz ...Normal
(3) Output of trouble code ...Check faulty portion
(4) Continued lighting of lamp ...Error in inhibitor switch, manual switch, idle switch, or wiring

2. OPERATION OF INDICATOR LAMP

If trouble occurs in any of the self-diagnosis items, the following display appears on the power indicator only once directly after starting the engine.

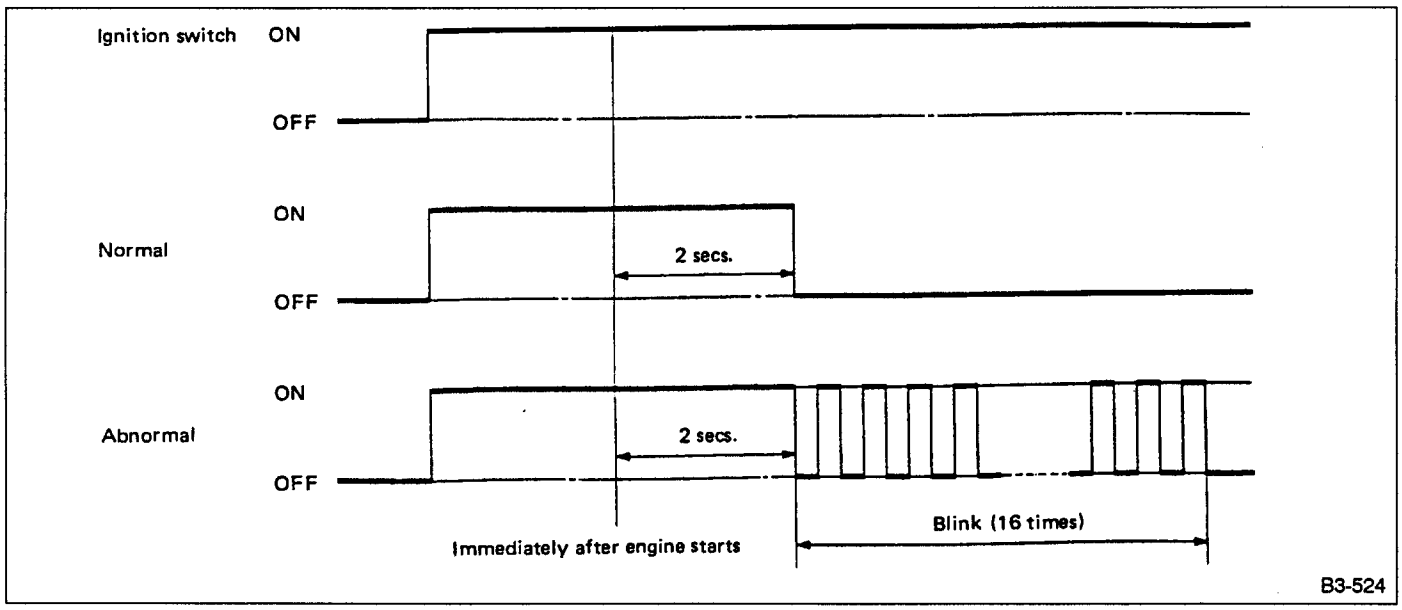

Fig. 70

3. TROUBLE CODE

TROUBLE CODE	ITEM
11	Duty solenoid A
12	Duty solenoid B
13	Shift solenoid 3
14	Shift solenoid 2
15	Shift solenoid 1
21	ATF temperature sensor
22	Atmospheric sensor
23	Engine revolution signal
24	Duty solenoid C
25	Engine torque control signal
31	Throttle sensor
32	Vehicle speed sensor 1
33	Vehicle speed sensor 2

4. SELECT MONITOR

Various data and ON/OFF signals being processed in the TCU can be monitored by connecting the select monitor to the select monitor terminal located under the instrument panel. The trouble codes of the present and past problems can be indicated using a particular code.
Function Mode

Function mode	Description	Abbrev.	Unit
01	Source voltage	VB	V
02	Rear wheel speed	VSP 1	m/h
03	Rear wheel speed	VSP 1	km/h
04	Front wheel speed	VSP 2	m/h
05	Front wheel speed	VSP 2	km/h
06	Engine rpm	EREV	rpm
07	ATF temperature	ATFT	°F
08	ATF temperature	ATFT	°C
09	Throttle opening	THSEN	V
10	Gear position	GEAR	GEAR
11	Line pressure duty	PLDTY	%
12	Lock-up duty	LUDTY	%
13	AWD duty	4WDTY	%
14	Atmospheric pressure sensor	BARO.P	mmHg

24. Fail-safe Function

A fail-safe function is provided to maintain driveability even if trouble should occur in the vehicle speed sensor, throttle sensor, inhibitor switch, or any of the solenoids.

1) Vehicle speed sensor

A dual speed-sensing system is used. The speed signal is taken from the transmission (output shaft revolution sensor) and also from a sensor built into the speedometer. Even if one sensor system fails, the vehicle can be controlled normally with the other sensor system.

2) Throttle sensor

If throttle sensor becomes faulty, throttle will be set to the predetermined position.

3) Inhibitor switch

If two signals are inputted due to inhibitor switch failure, the vehicle can be driven under the following priority.

D ⟩ N (P) R 3 2 1

4) Shift sol. 1 and 2

If trouble occurs in either of solenoids 1 and 2, both solenoids are turned OFF, and the vehicle is made driveable in the 3rd range.
If both solenoids should fail, the mechanical hydraulic circuit is used.

5) Shift sol. 3 (Overrunning clutch)

If the overrunning clutch solenoid fails, the solenoid is turned OFF. The overrunning clutch will engage so that the engine brake will be applied when reducing vehicle speed.

6) Duty sol. A (Line pressure)

If duty solenoid A fails, the solenoid is turned OFF and line pressure is raised to maximum to enable vehicle operation.

7) Duty sol. B (Lock-up)

If duty solenoid B fails, the solenoid is turned OFF and lock- up is released.

8) Duty sol. C (Transfer)

When the duty solenoid C becomes inoperative, it turns OFF. This causes maximum oil pressure to be applied to the transfer clutch so that the power is always transmitted to rear axles. (Direct-coupling AWD)

S SPECIFICATIONS AND SERVICE DATA

A: SPECIFICATIONS

Torque converter	Type		Symmetric, 3-element, single stage, 2 phase torque converter coupling	
	Stall torque ratio		1.85 — 1.95	
	Nominal diameter		246 mm (9.69 in)	
	Stall speed (at sea level)		2,350 — 2,750 rpm	
	One-way clutch		Sprague type one-way clutch	
Automatic transmission	Transmission	Type	4-forward, 1-reverse, double-row planetary gears	
		Control element	Multi-plate clutch	4 sets
			Multi-plate brake	1 set
			Band brake	1 set
			One-way clutch (sprag type)	2 sets
		Gear ratio	1st	2.785
			2nd	1.545
			3rd	1.000
			4th	0.694
			Reverse	2.272
		Tooth number of planetary gear	Front sun gear	33
			Front pinion	21
			Front internal gear	75
			Rear sun gear	42
			Rear pinion	17
			Rear internal gear	75

Automatic transmission	Transmission	Selector position	P (Park)	Transmission in neutral, output member immovable, and engine start possible
			R (Reverse)	Transmission in reverse for backing
			N (Neutral)	Transmission in neutral, and engine start possible
			D (Drive)	Automatic gear change 1st ⇄ 2nd ⇄ 3rd ⇄ 4th
			3 (3rd)	Automatic gear change 1st ⇄ 2nd ⇄ 3rd ← 4th
			2 (2nd)	Automatic gear change 1st ⇄ 2nd ← 3rd ← 4th
			1 (1st)	1st gear locked (Deceleration 4th → 3rd → 2nd → 1st possible)
		Control method	Hydraulic remote control	
	Oil pump	Type	Variable-capacity type vane pump	
		Driving method	Driven by engine	
		Number of vanes	9 pieces	
	Hydraulic control	Type	Electronic/hydraulic control [Four forward speed changes by electrical signals of car speed and accelerator (throttle) opening]	
		Fluid	Automatic transmission fluid (ATF) DEXRON II	
		Fluid capacity	AWD: 9.5 ℓ (10.0 US qt, 8.4 Imp qt)	
	Lubrication	Lubrication system	Forced feed lubrication with oil pump	
		Oil	Automatic transmission fluid (above-mentioned)	
	Cooling	Cooling system	Liquid-cooled cooler incorporated in radiator	
	Harness	Inhibitor switch	12 poles	
		Transmission harness	poles	AWD ... 13
	Transfer	Transfer clutch	Hydraulic multi-plate clutch	
		Control method	Electronic, hydraulic type	
		Lubricant	The same Automatic transmission fluid used in Automatic transmission	
		1st reduction gear ratio	1.000 (47/47)	
Final reduction	Final gear ratio	Front drive	AWD: 3.545 (39/11)	
		Rear drive	AWD: 3.545 (39/11)	
	Speedometer gear ratio		AWD: 0.8 (20/25)	
	Lubrication oil		API, GL-5	
	Oil capacity	Front drive	1.2 ℓ (1.3 US qt, 1.1 Imp qt)	
		Rear drive	0.8 ℓ (0.8 US qt, 0.7 Imp qt)	
ATF cooling system	Radiation capacity		2.163 kW (1,860 kcal/h, 7,380 BTU/h)	

B: ADJUSTING PARTS

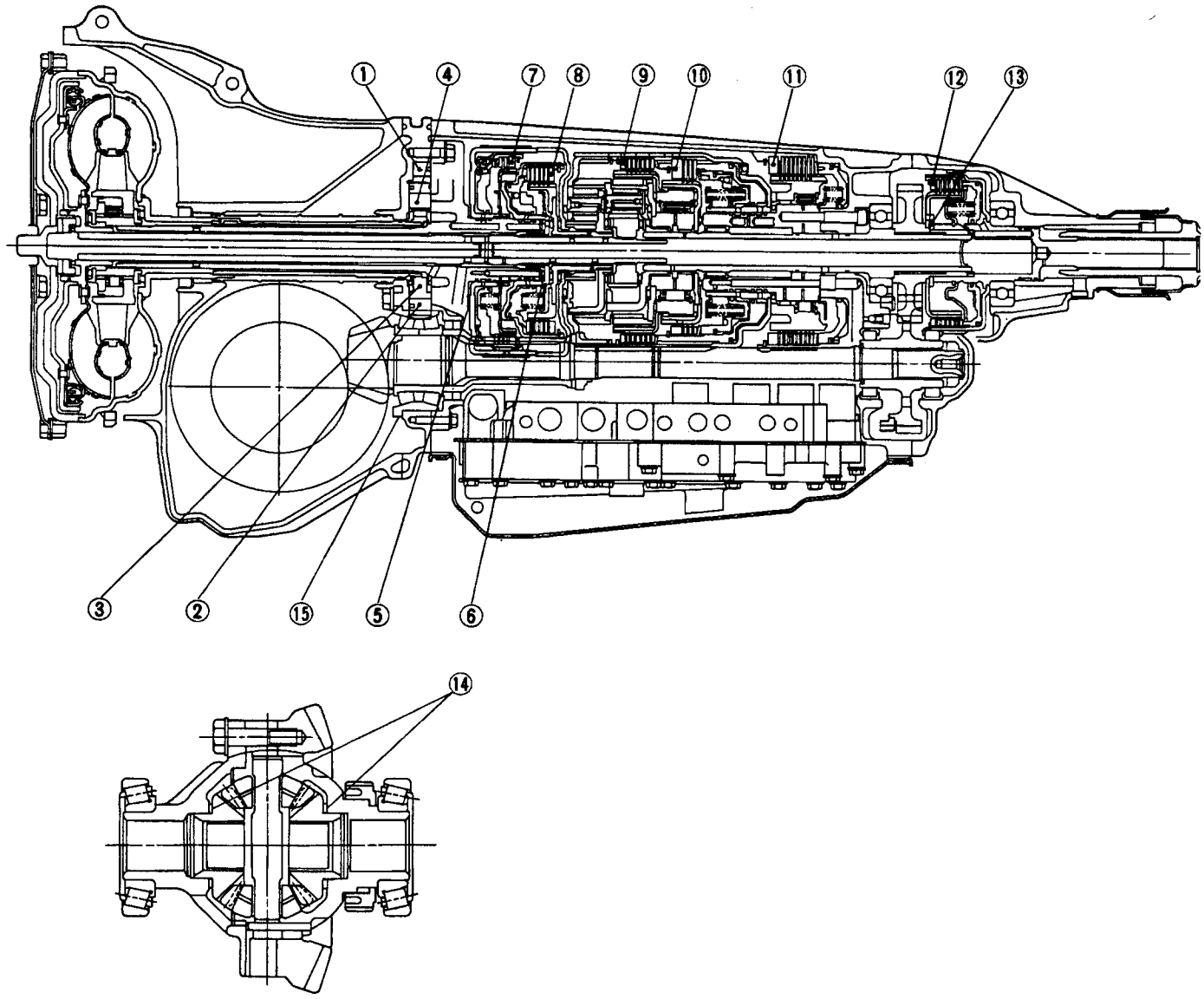

C3-042

Fig. 71

No.	Part Name	Part Number	Dimension mm (in)	Application
1	CONTROL PISTON	31235AA000 — 030	$13.5^{-0.030}_{-0.037}$ (0.5315 $^{-0.0012}_{-0.0015}$), $13.5^{-0.023}_{-0.030}$ (0.5315 $^{-0.0009}_{-0.0012}$), $13.5^{-0.016}_{-0.023}$ (0.5315 $^{-0.0006}_{-0.0009}$), $13.5^{-0.009}_{-0.016}$ (0.5315 $^{-0.0004}_{-0.0006}$)	Adjusting side clearance of oil pump
2	CAM RING	31241AA000 — 030	$17^{-0.010}_{-0.017}$ (0.6693 $^{-0.0004}_{-0.0007}$), $17^{-0.003}_{-0.010}$ (0.6693 $^{-0.0001}_{-0.0004}$), $17^{+0.004}_{-0.003}$ (0.6693 $^{+0.0002}_{-0.0001}$), $17^{+0.011}_{+0.004}$ (0.6693 $^{+0.0004}_{+0.0002}$)	Adjusting side clearance of oil pump
3	VANE (Oil pump)	31243AA000 — 030	$17^{-0.030}_{-0.037}$ (0.6693 $^{-0.0012}_{-0.0015}$), $17^{-0.023}_{-0.030}$ (0.6693 $^{-0.0009}_{-0.0012}$), $17^{-0.016}_{-0.023}$ (0.6693 $^{-0.0006}_{-0.0009}$), $17^{+0.018}_{+0.009}$ (0.6693 $^{+0.0006}_{+0.0004}$)	Adjusting side clearance of oil pump
4	ROTOR (Oil pump)	31240AA000 — 030	$17^{-0.030}_{-0.037}$ (0.6693 $^{-0.0012}_{-0.0015}$), $17^{-0.023}_{-0.030}$ (0.6693 $^{-0.0009}_{-0.0012}$), $17^{-0.016}_{-0.023}$ (0.6693 $^{-0.0006}_{-0.0009}$), $17^{+0.018}_{+0.009}$ (0.6693 $^{+0.0006}_{+0.0004}$)	Adjusting side clearance of oil pump
5	THRUST WASHER (Reverse clutch)	31299AA000 — 060	0.7, 0.9, 1.1, 1.3, 1.5, 1.7, 1.9 (0.028, 0.035, 0.043, 0.051, 0.059, 0.067, 0.075)	Adjusting end play of reverse clutch drum
6	BEARING RANGE	803031021 — 27	0.8, 1.0, 1.2, 1.4, 1.6, 1.8, 2.0 (0.031, 0.039, 0.047, 0.055, 0.063, 0.071, 0.079)	Adjusting total end play
7	RETAINING PLATE	31567AA000, 020 — 050	4.6, 4.8, 5.0, 5.2, 5.4 (0.181, 0.189, 0.197, 0.205, 0.213)	Adjusting clearance of reverse clutch
8	RETAINING PLATE	31567AA190 — 260	3.6, 3.8, 4.0, 4.2, 4.4, 4.6, 4.8, 5.0 (0.142, 0.150, 0.157, 0.165, 0.173, 0.181, 0.189, 0.197)	Adjusting clearance of high clutch
9	RETAINING PLATE	31567AA010, 060 — 110	8.0, 8.2, 8.4, 8.6, 8.8, 9.0, 9.2 (0.315, 0.323, 0.331, 0.339, 0.346, 0.354, 0.362)	Adjusting clearance of forward clutch
10	RETAINING PLATE	31567AA120 — 180	8.0, 8.2, 8.4, 8.6, 8.8, 9.0, 9.2 (0.315, 0.323, 0.331, 0.339, 0.346, 0.354, 0.362)	Adjusting clearance of overrunning clutch
11	RETAINING PLATE No. 2	31667AA180 — 250	6.5, 6.8, 7.1, 7.4, 7.7, 8.0, 8.2, 8.4 (0.256, 0.268, 0.280, 0.291, 0.303, 0.315, 0.323, 0.331)	Adjusting clearance of low & reverse clutch
12	PRESSURE PLATE (Front)	31593AA150 — 180	3.3, 3.7, 4.1, 4.5 (0.130, 0.146, 0.161, 0.177)	Adjusting clearance of transfer clutch
13	THRUST BEARING (35 x 53 x T)	806535020 — 090	3.8, 4.0, 4.2, 4.4, 4.6, 4.8, 5.0 (0.150, 0.157, 0.165, 0.173, 0.181, 0.189, 0.197)	Adjusting end play of transfer clutch
14	WASHER (38.1 x 50 x T)	803038021 — 023	0.95, 1.00, 1.05 (0.0374, 0.0394, 0.0413)	Adjusting backlash of differential bevel gear
15	DRIVE PINION SHIM	31451AA050 — 100	0.15, 0.175, 0.2, 0.225, 0.275, 1.25 (0.0059, 0.0069, 0.008, 0.0089, 0.0108, 0.0492)	Adjusting drive pinion height

C: LOCATION AND INSTALLING DIRECTION OF THRUST NEEDLE BEARING AND WASHER

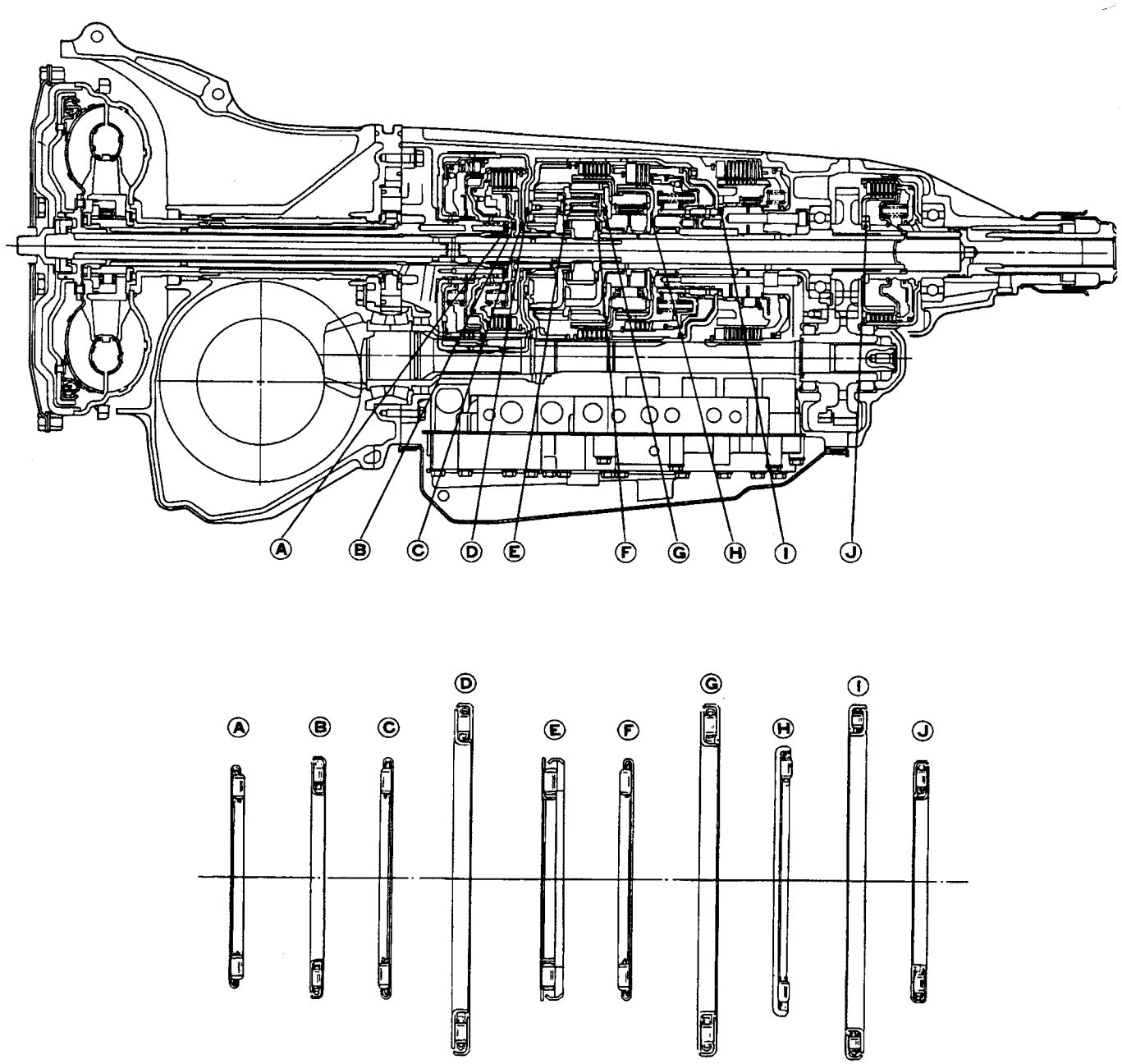

Fig. 72

D: FLUID PASSAGES

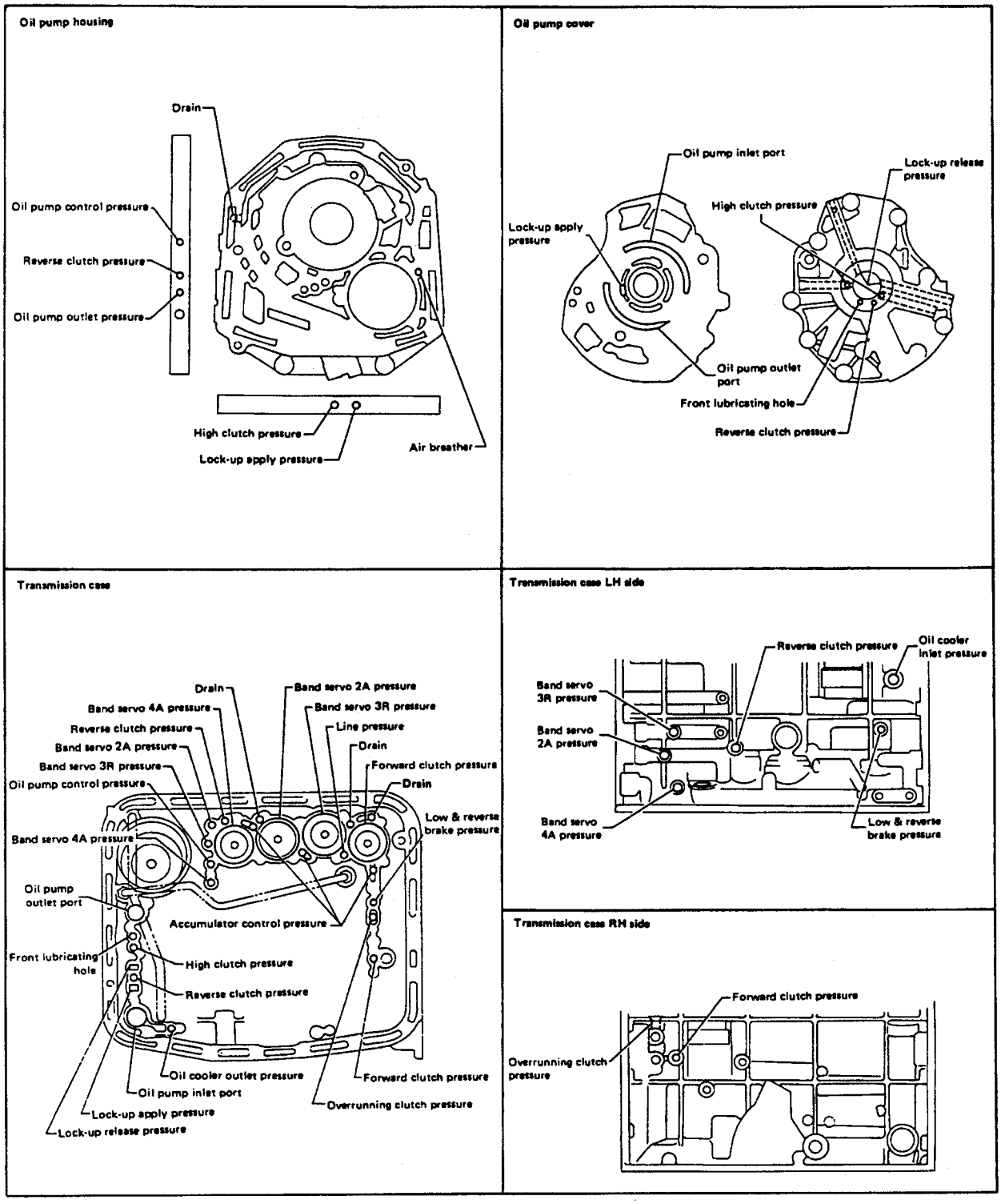

B3-527

Fig. 73

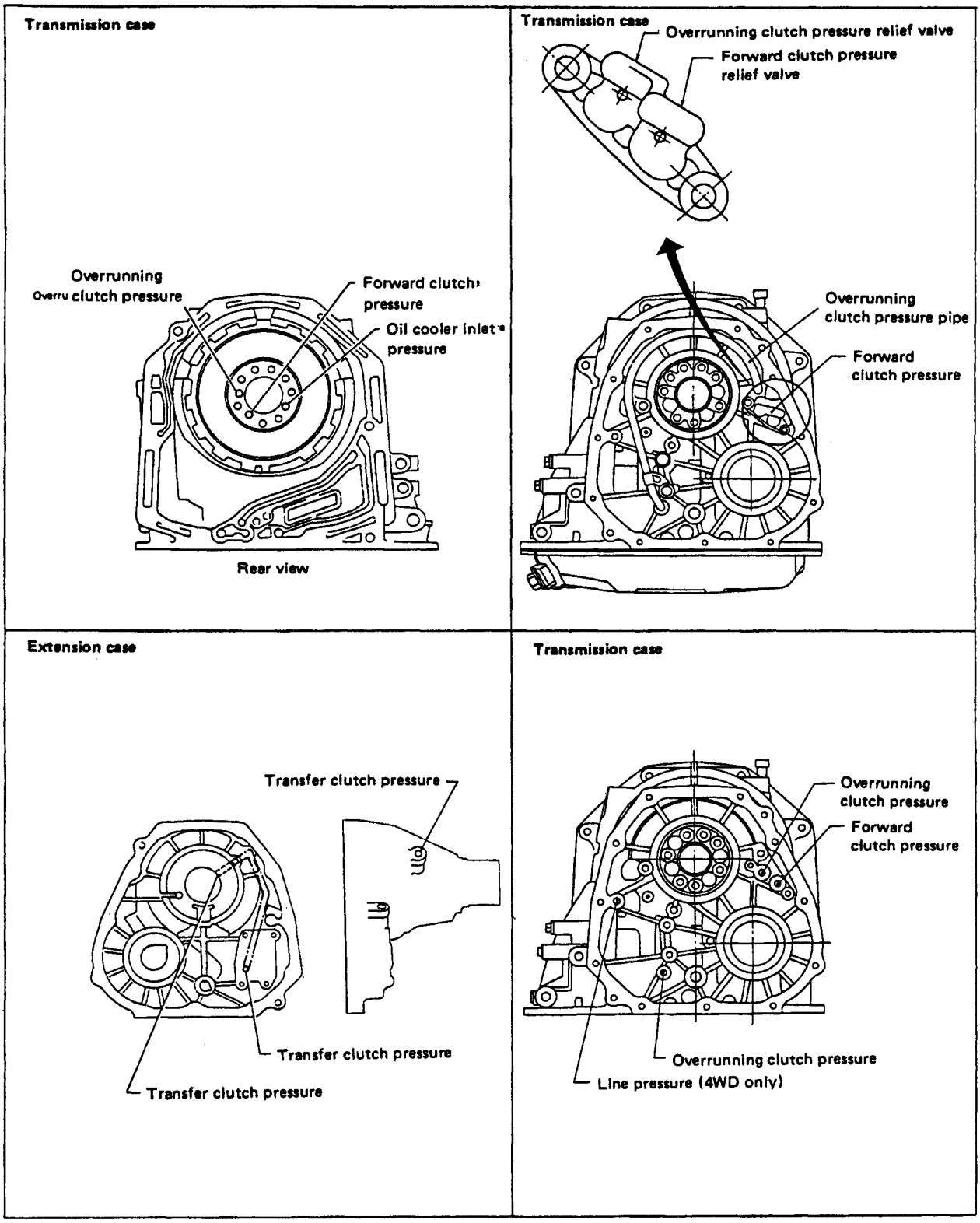
Transmission case
Overrunning
Overru clutch pressure
Forward clutch
pressure
Oil cooler inlet
pressure
Rear view
Transmission case
Overrunning clutch pressure relief valve
Forward clutch pressure
relief valve
Overrunning
clutch pressure pipe
Forward
clutch pressure
Extension case
Transfer clutch pressure
Transfer clutch pressure
Transfer clutch pressure
Transmission case
Overrunning
clutch pressure
Forward
clutch pressure
Overrunning clutch pressure
Line pressure (4WD only)

B3-528

Fig. 74

C COMPONENT PARTS

1. Torque Converter and Converter Case

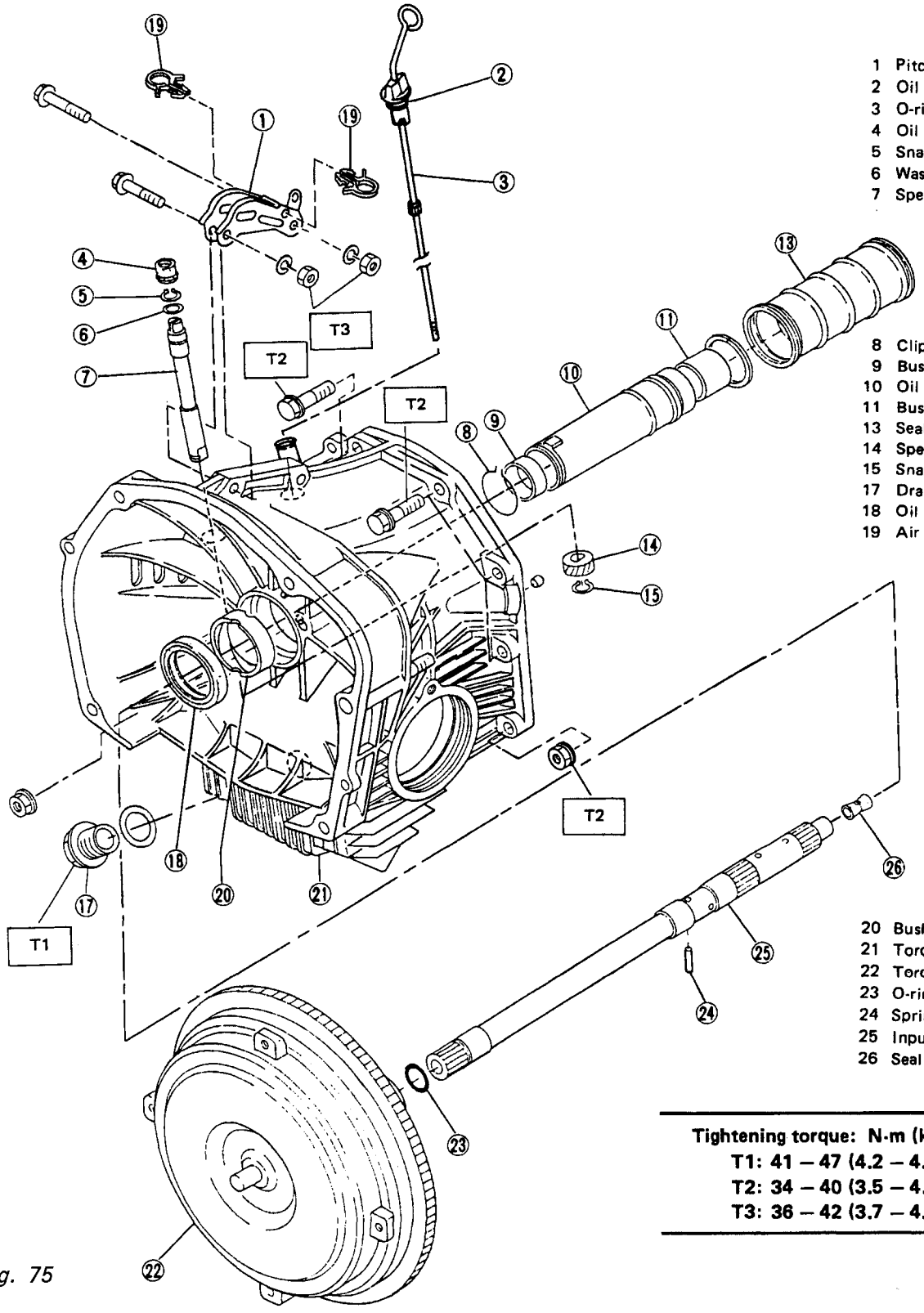

1 Pitching stopper bracket
2 Oil level gauge
3 O-ring
4 Oil seal
5 Snap ring
6 Washer
7 Speedometer shaft
8 Clip
9 Bushing
10 Oil pump shaft
11 Bushing
13 Seal pipe
14 Speedometer driven gear
15 Snap ring
17 Drain plug
18 Oil seal
19 Air breather hose clip
20 Bushing
21 Torque converter case
22 Torque converter
23 O-ring
24 Spring pin
25 Input shaft
26 Seal

Tightening torque: N·m (kg-m, ft-lb)
T1: 41 – 47 (4.2 – 4.8, 30 – 35)
T2: 34 – 40 (3.5 – 4.1, 25 – 30)
T3: 36 – 42 (3.7 – 4.3, 27 – 31)

C3-044

Fig. 75

2. Differential Case

Tightening torque: N·m (kg-m, ft-lb)
T1: 59 – 65 (6.0 – 6.6, 43 – 48)
T2: 23 – 26 (2.3 – 2.7, 17 – 20)

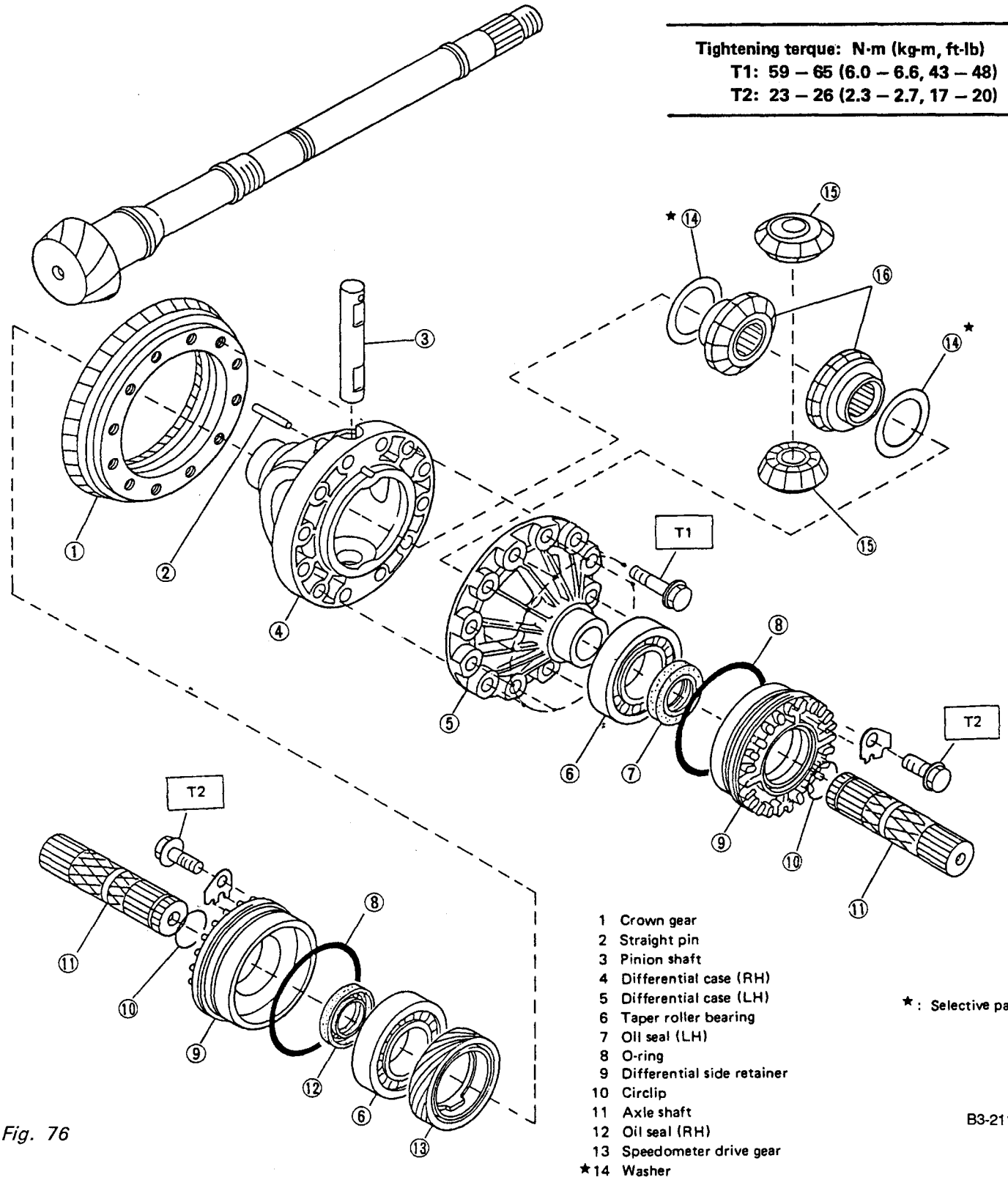

1 Crown gear
2 Straight pin
3 Pinion shaft
4 Differential case (RH)
5 Differential case (LH)
6 Taper roller bearing
7 Oil seal (LH)
8 O-ring
9 Differential side retainer
10 Circlip
11 Axle shaft
12 Oil seal (RH)
13 Speedometer drive gear
★14 Washer
15 Differential bevel pinion
16 Differential bevel gear

★: Selective parts

B3-211

Fig. 76

3. Oil Pump

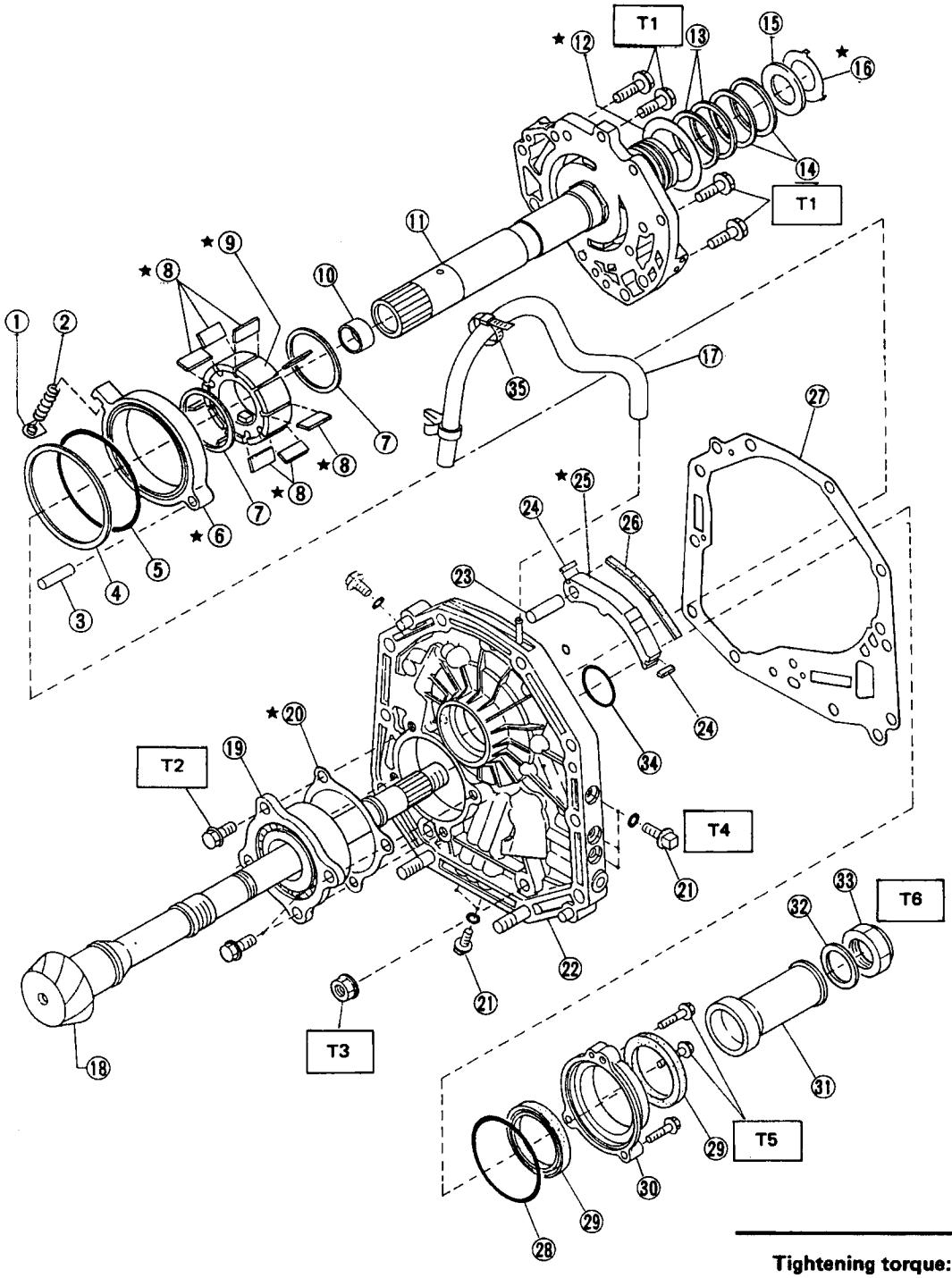

★: Selective parts

1 Retainer
2 Return spring
3 Pin
4 Friction ring
5 O-ring
★6 Cam ring
7 Vane ring
★8 Vane
★9 Rotor
10 Bushing
11 Oil pump cover
★12 Thrust washer
13 Seal ring (R)
14 Seal ring (H)
15 Thrust needle bearing
★16 Thrust washer
17 Air breather hose
18 Drive pinion shaft
19 Roller bearing
★20 Shim
21 Test plug
22 Oil pump housing
23 Pin
24 Side seal
★25 Control piston
26 Plane seal
27 Gasket
28 O-ring
29 Oil seal
30 Oil seal retainer
31 Drive pinion collar
32 Lock washer
33 Lock nut
34 O-ring
35 Band clip

Tightening torque: N·m (kg-m, ft-lb)
T1: 23 – 26 (2.3 – 2.7, 17 – 20)
T2: 36 – 42 (3.7 – 4.3, 27 – 31)
T3: 38 – 44 (3.9 – 4.5, 28 – 33)
T4: 12 – 14 (1.2 – 1.4, 9 – 10)
T5: 6 – 8 (0.6 – 0.8, 4.3 – 5.8)
T6: 108 – 118 (11.0 – 12.0, 80 – 87)

C3-098

Fig. 77

4. Transmission Case, Transmission Cover and Control Device

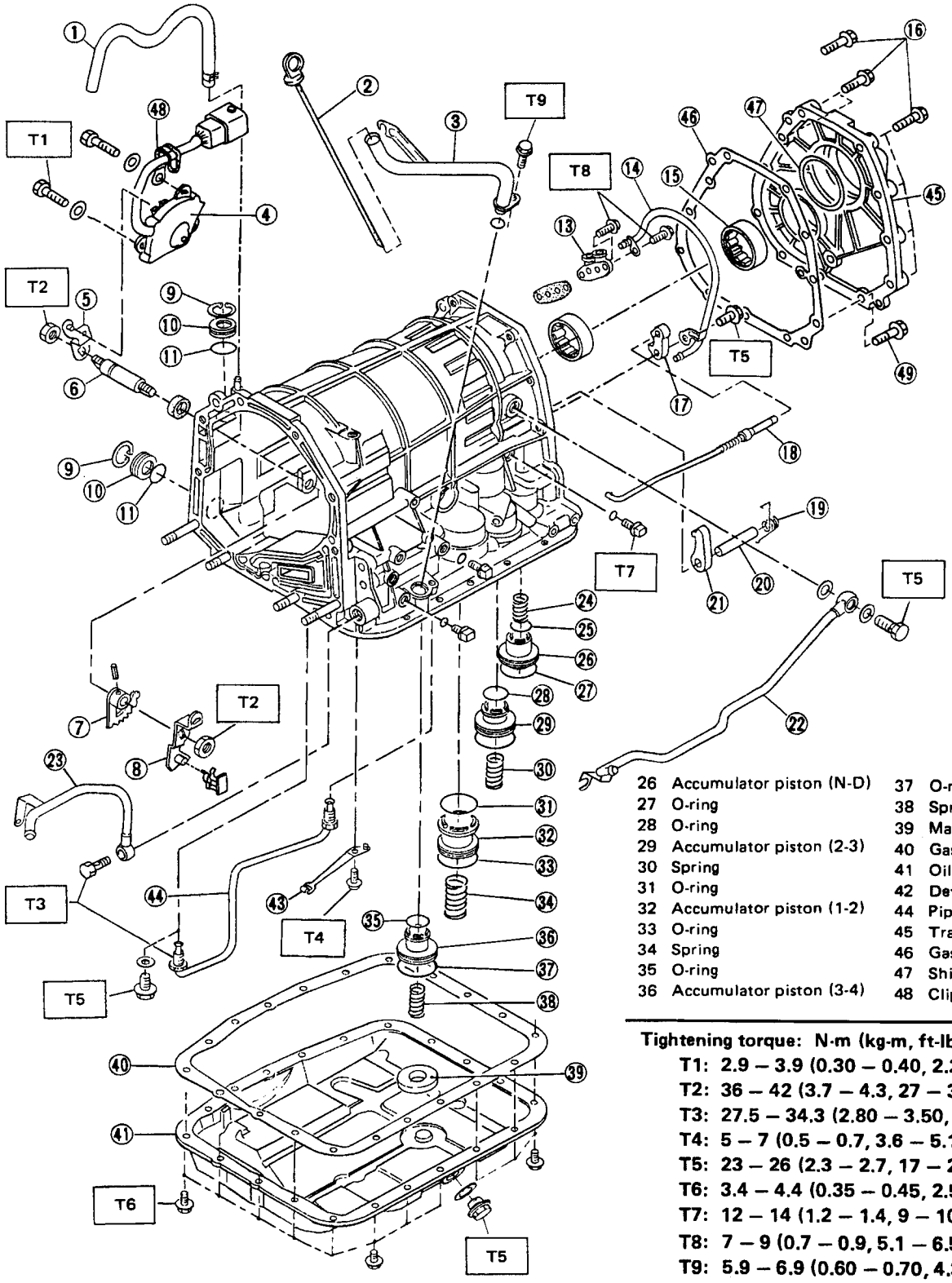

1 Air breather hose
2 Oil level gauge
3 Oil charge pipe
4 Inhibitor switch
5 Range select lever
6 Manual shaft
7 Manual plate
8 Manual lever
9 Snap ring
10 Plug
11 O-ring
12 Oil seal
13 Releaf valve
14 Pipe
15 Roller bearing
16 Flange bolt
17 Parking support
18 Parking rod
19 Return spring
20 Shaft
21 Parking pawl
22 Inlet pipe
23 Outlet pipe
24 Spring
25 O-ring
26 Accumulator piston (N-D)
27 O-ring
28 O-ring
29 Accumulator piston (2-3)
30 Spring
31 O-ring
32 Accumulator piston (1-2)
33 O-ring
34 Spring
35 O-ring
36 Accumulator piston (3-4)
37 O-ring
38 Spring
39 Magnet
40 Gasket
41 Oil pan
42 Detent spring
44 Pipe
45 Transmission cover
46 Gasket
47 Shim
48 Clip

Tightening torque: N·m (kg-m, ft-lb)

T1: 2.9 – 3.9 (0.30 – 0.40, 2.2 – 2.9)
T2: 36 – 42 (3.7 – 4.3, 27 – 31)
T3: 27.5 – 34.3 (2.80 – 3.50, 20.3 – 25.3)
T4: 5 – 7 (0.5 – 0.7, 3.6 – 5.1)
T5: 23 – 26 (2.3 – 2.7, 17 – 20)
T6: 3.4 – 4.4 (0.35 – 0.45, 2.5 – 3.3)
T7: 12 – 14 (1.2 – 1.4, 9 – 10)
T8: 7 – 9 (0.7 – 0.9, 5.1 – 6.5)
T9: 5.9 – 6.9 (0.60 – 0.70, 4.3 – 5.1)

C3-045

Fig. 78

5. Control Valve and Harness Routing

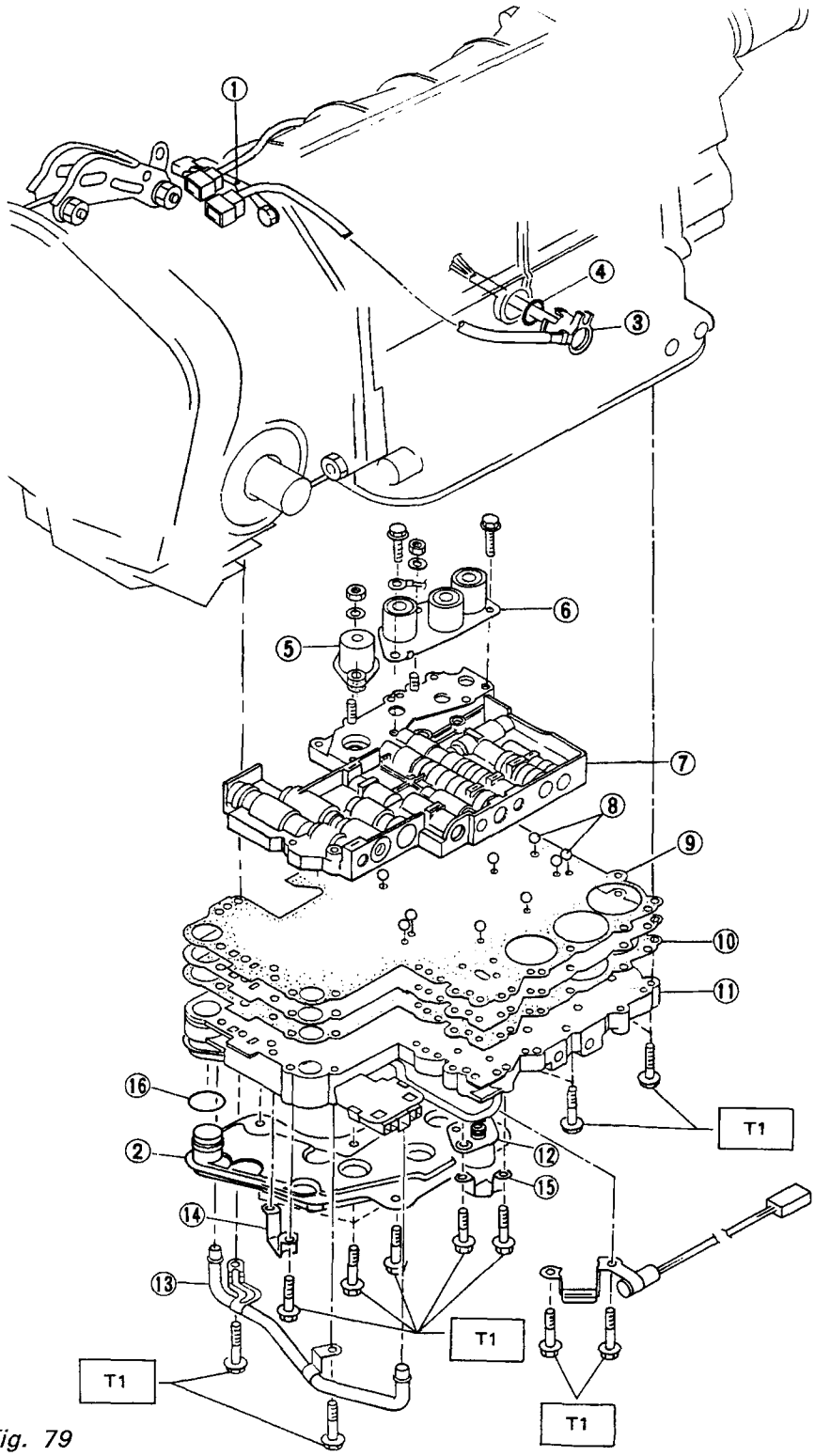

1 Stay
2 Oil strainer
3 Transmission harness
4 O-ring
5 Duty sol. A (Line-pressure)
6 Sol. ASSY
7 Upper valve body
8 Ball
9 Upper separator plate
10 Lower separator plate
11 Lower valve body
12 Duty sol. B (Lock-up)
13 Pipe
14 Bracket
15 Bracket
16 O-ring

Tightening torque: N·m (kg-m, ft-lb)
T1: 7 – 9 (0.7 – 0.9, 5.1 – 6.5)

C3-046

Fig. 79

6. Reverse Clutch and Band Brake

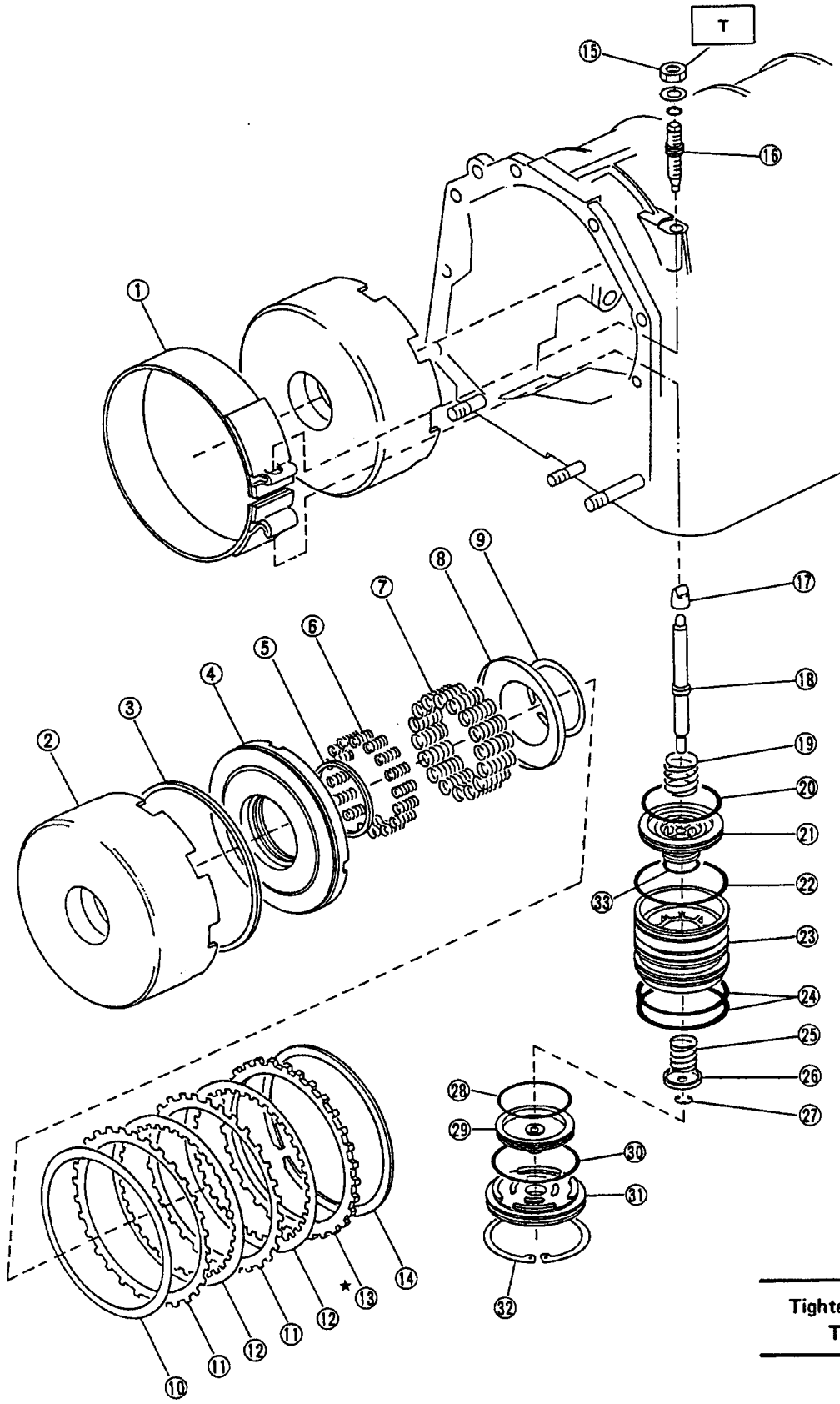

★: Selective parts

1 Brake band
2 Reverse clutch drum
3 Lip seal
4 Piston
5 Lathe cut seal ring
6 Spring
7 Spring
8 Spring retainer
9 Snap ring
10 Dish plate
11 Driven plate
12 Drive plate
★13 Retaining plate
14 Snap ring
15 Lock nut
16 Brake band adjusting screw
17 Strut
18 Band servo piston stem
19 Spring
20 Lathe cut seal ring
21 Band servo piston (1-2)
22 O-ring
23 Retainer
24 O-ring
25 Spring
26 Retainer
27 Circlip
28 Lathe cut seal ring
29 Band servo piston (3-4)
30 O-ring
31 O.D. servo retainer
32 Snap ring
33 Lathe cut seal ring

Tightening torque: N·m (kg-m, ft-lb)
T: 25 – 28 (2.5 – 2.9, 18 – 21)

B3-215

Fig. 80

7. High Clutch and Planetary Gear

★: Selective parts

1 High clutch drum
2 Lathe cut seal ring
3 Piston
4 Lathe cut seal ring
5 Spring retainer CP
6 Snap ring
7 Driven plate (Thinner)
8 Drive plate
9 Driven plate (Thicker)
★10 Retaining plate
11 Snap ring
12 Thrust needle bearing
13 High clutch hub
14 Thrust needle bearing
15 Front sun gear
16 Thrust needle bearing
17 Front planetary carrier
18 Thrust needle bearing
19 Rear sun gear
20 Thrust needle bearing
21 Rear planetary carrier
22 Thrust needle bearing
23 Rear internal gear
24 Thrust washer
25 Snap ring
26 One-way clutch (3-4)
27 One-way clutch outer race (3-4)
28 Overrunning clutch hub

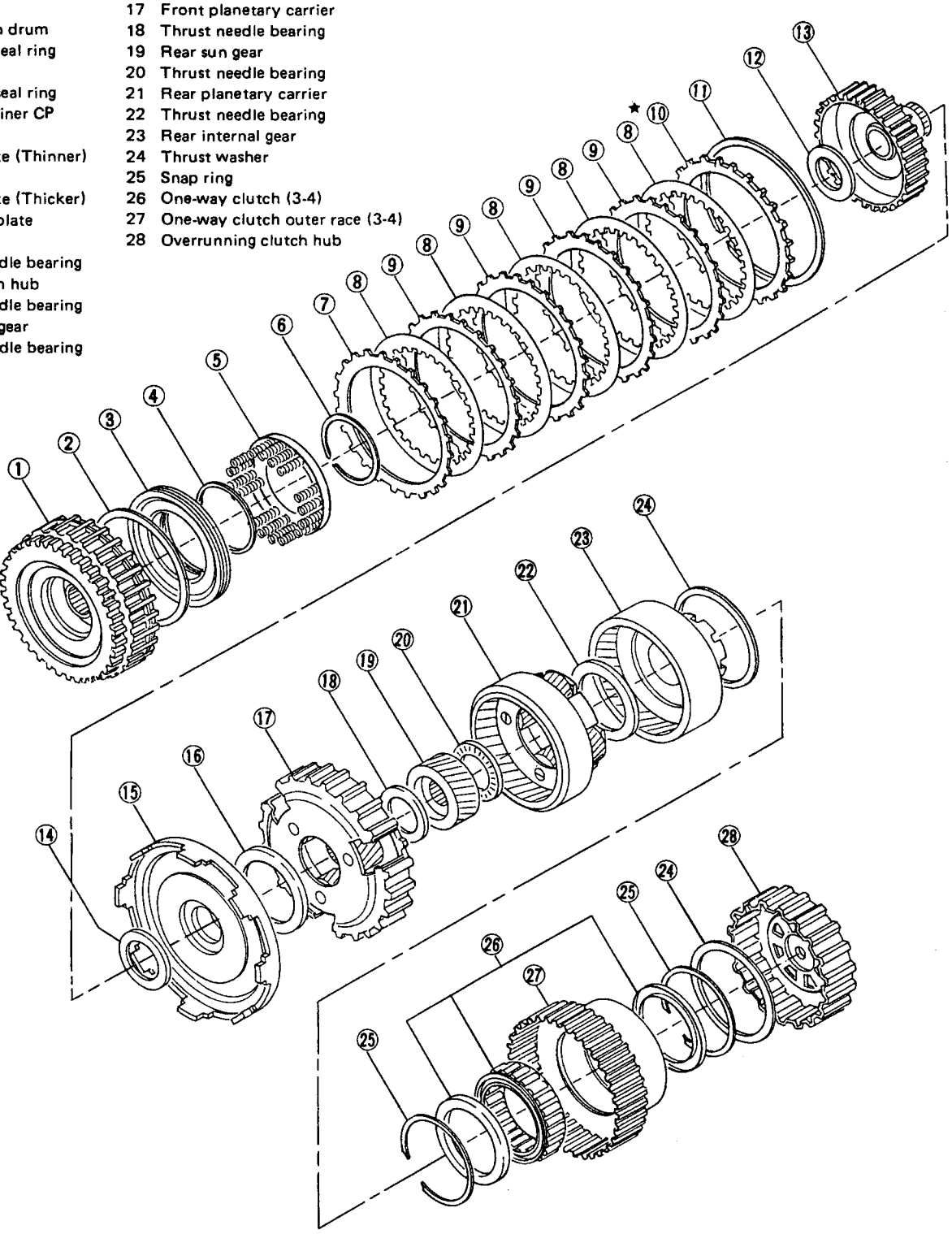

C3-047

Fig. 81

8. Forward Clutch and Low & Reverse Brake

★: Selective parts

1 Snap ring
★2 Retaining plate
3 Drive plate
4 Driven plate
5 Dish plate
6 Snap ring
★7 Retaining plate
8 Drive plate
9 Driven plate
10 Dish plate
11 Snap ring
12 Spring retainer
13 Spring
14 Lathe cut seal ring
15 Overrunning piston
16 Lip seal
17 Forward piston
18 Lip seal
19 Lathe cut seal ring
20 Forward clutch drum

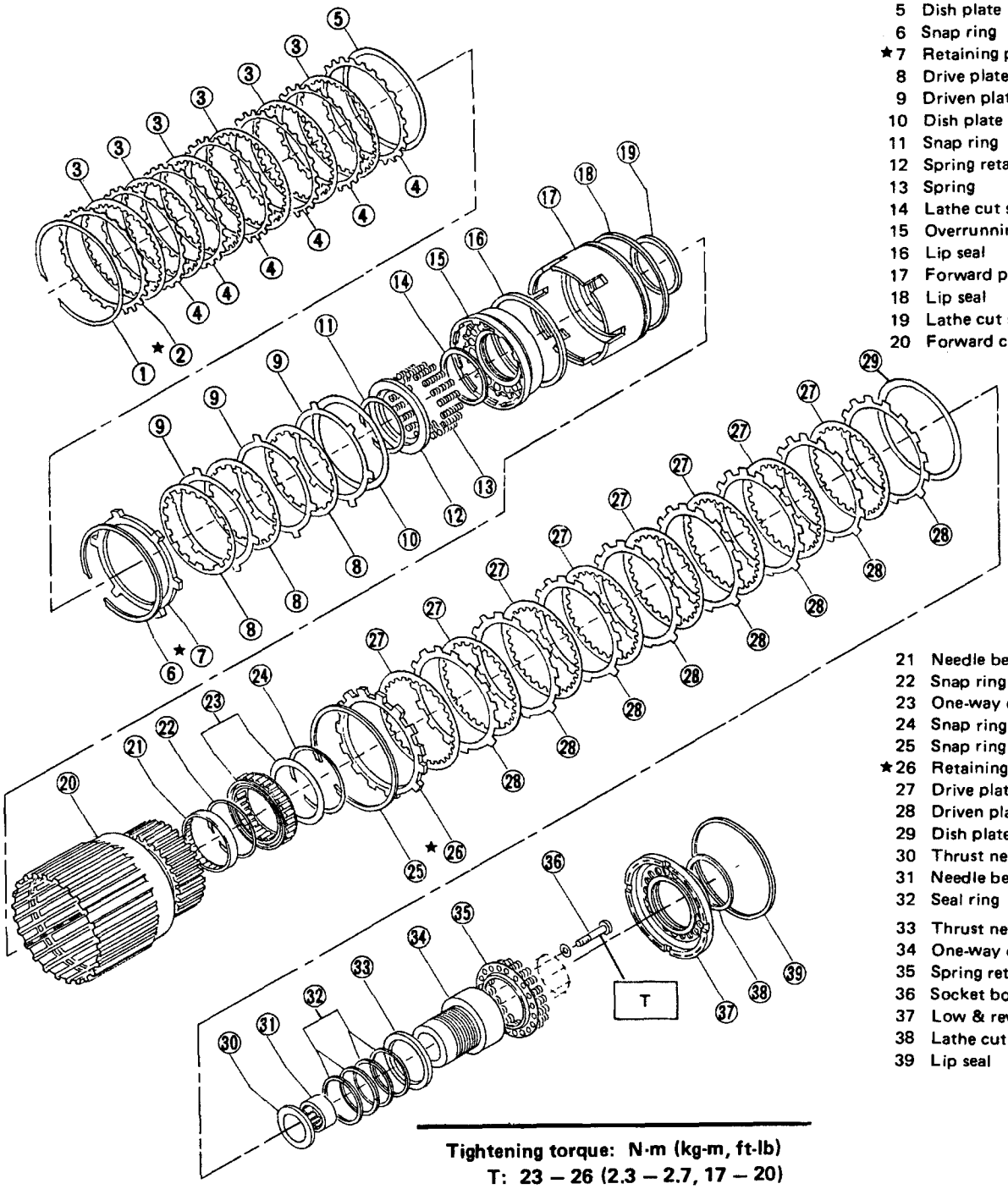

21 Needle bearing
22 Snap ring
23 One-way clutch (1-2)
24 Snap ring
25 Snap ring
★26 Retaining plate
27 Drive plate
28 Driven plate
29 Dish plate
30 Thrust needle bearing
31 Needle bearing
32 Seal ring
33 Thrust needle bearing
34 One-way clutch inner race (1-2)
35 Spring retainer CP
36 Socket bolt
37 Low & reverse piston
38 Lathe cut seal ring
39 Lip seal

Tightening torque: N·m (kg-m, ft-lb)
T: 23 – 26 (2.3 – 2.7, 17 – 20)

C3-048

Fig. 82

9. Reduction Gear

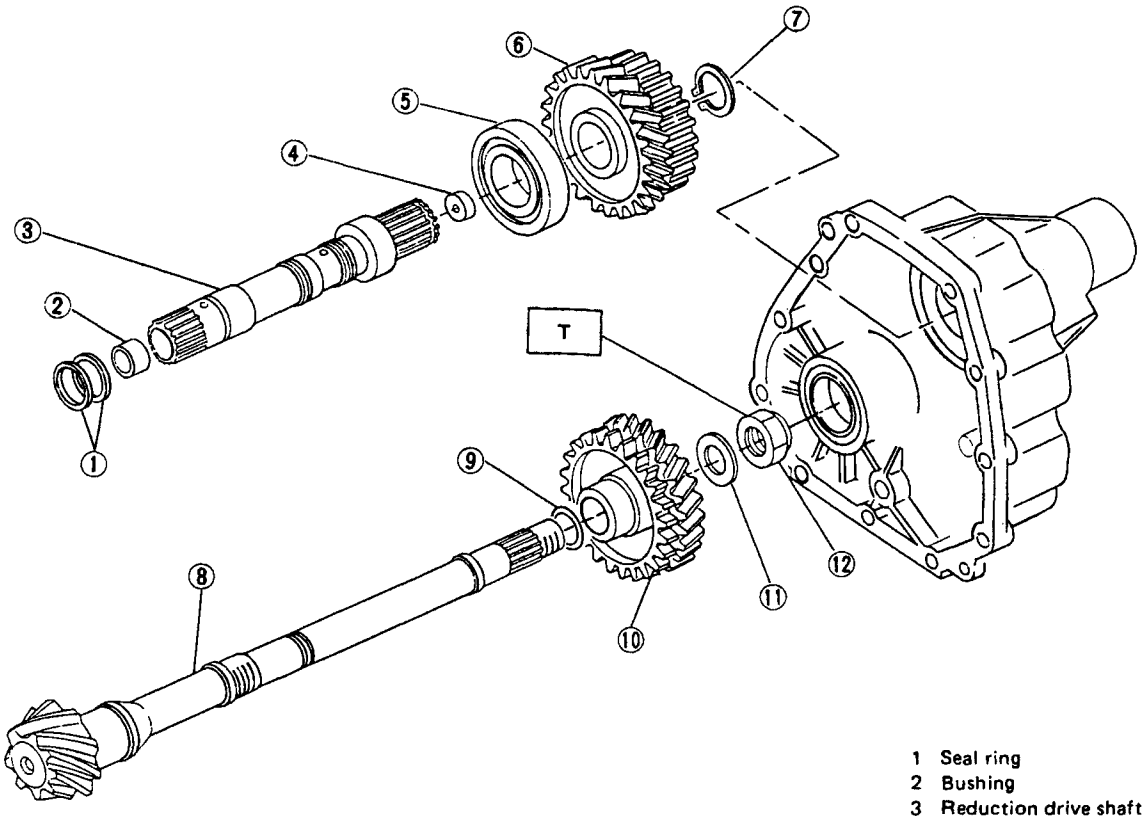

1 Seal ring
2 Bushing
3 Reduction drive shaft
4 Plug
5 Ball bearing
6 Reduction drive gear
7 Snap ring
8 Drive pinion shaft
9 Washer
10 Reduction driven gear
11 Lock washer
12 Lock nut

Tightening torque: N·m (kg-m, ft-lb)
T: 98±5 (10±0.5, 72.3±3.6)

C3-049

Fig. 83

10. Transfer and Extension

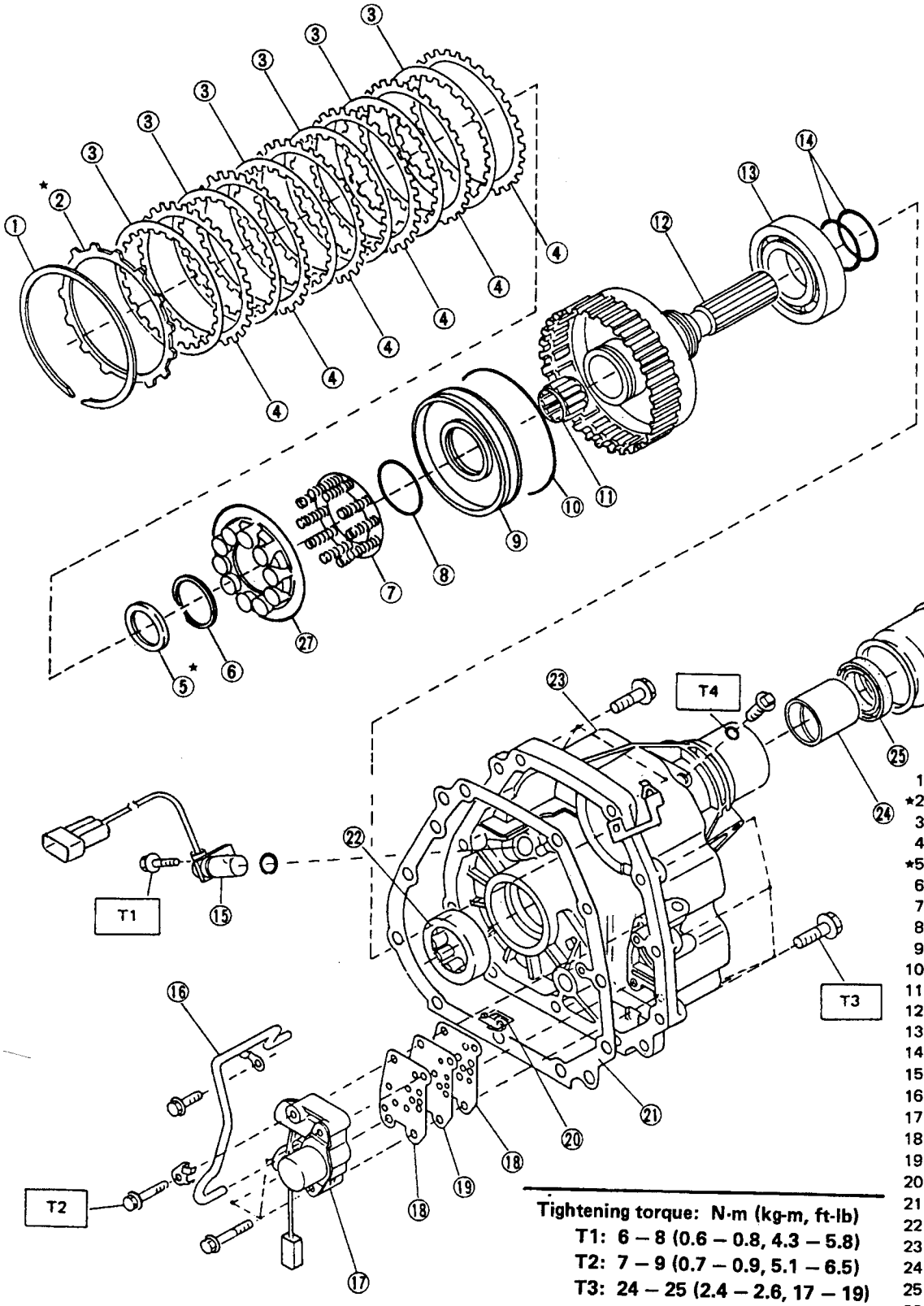

Tightening torque: N·m (kg-m, ft-lb)
T1: 6 – 8 (0.6 – 0.8, 4.3 – 5.8)
T2: 7 – 9 (0.7 – 0.9, 5.1 – 6.5)
T3: 24 – 25 (2.4 – 2.6, 17 – 19)
T4: 12 – 14 (1.2 – 1.4, 9 – 10)

★: Selective parts
1 Snap ring
★2 Pressure plate
3 Drive plate
4 Driven plate
★5 Thrust needle bearing
6 Snap ring
7 Spring retainer CP
8 Lathe cut seal ring
9 Transfer clutch piston
10 Lathe cut seal ring
11 Needle bearing
12 Rear drive shaft
13 Ball bearing
14 Seal ring
15 Revolution sensor (4WD)
16 Pilot valve pipe
17 Duty sol. C (transfer clutch)
18 Gasket
19 Plate
20 Filter
21 Gasket
22 Roller bearing
23 Extension case
24 Bushing
25 Oil seal
26 Dust seal
27 Seal transfer piston

C3-099

Fig. 84

W SERVICE PROCEDURE

1. Precaution

When disassembling or assembling the automatic transmission, observe the following instructions.

1) Workshop

Provide a place that is clean and free from dust. Principally the conventional workshop is suitable except for a dusty place. In a workshop where grinding work, etc. which produces fine particles is done, make independent place divided by the vinyl curtain or the equivalent.

2) Worktable

The size of 1 x 1.5 m (40 x 60 in) is large enough to work, and it is more desirable that its surface be covered with flat plate like iron plate which is not rusted too much.

3) Cleaning of exterior

(1) Clean the exterior surface of transmission with steam and/or kerosene prior to disassembly, however it should be noted that vinyl tape be placed on the airbreather or oil level gauge to prevent infiltration of the steam into the transmission and also the cleaning job be done away from the place of disassembly and assembly.

(2) Partial cleaning will do, depending on the extent of disassembly (such as when disassembly is limited to some certain parts).

4) Disassembly, assembly and cleaning

(1) Disassemble and assemble the transmission while inspecting the parts in accordance with the Troubleshooting.

(2) During job, don't use gloves. Don't clean the parts with rags: Use chamois or nylon cloth.

(3) Pay special attention to the air to be used for cleaning. Get the moisture and the dust rid of the air as much as possible. Be careful not to scratch or dent any part while checking for proper operation with an air gun.

(4) Complete the job from cleaning to completion of assembly as continuously and speedily as possible in order to avoid occurrence of secondary troubles caused by dust. When stopping the job unavoidably cover the parts with clean chamois or nylon cloth to keep them away from any dust.

(5) Use kerosene, white gasoline or the equivalent as washing fluid. Use always new fluid for cleaning the automatic transmission parts and never reuse. The used fluid is usable in disassemble and assemble work of engine and manual transmission.

(6) Although the cleaning should be done by dipping into the washing fluid or blowing of the pressurized washing fluid, the dipping is more desirable. (Do not rub with a brush.) Assemble the parts immediately after the cleaning without exposure to the air for a while. Besides in case of washing rubber parts, perform the job quickly not to dip them into the washing fluid for long time.

(7) Apply the automatic transmission fluid (ATF) onto the parts immediately prior to assembly, and the specified tightening torque should be observed carefully.

(8) Use vaseline if it is necessary to hold parts in the position when assembling.

(9) Drain ATF and differential gear oil into a saucer so that the conditions of fluid and oil can be inspected.

(10) Do not support axle drive shaft, stator shaft, input shaft or various pipes when moving transmission from one place to another.

(11) Always discard old oil seals and bushings, and install new ones.

(12) Do not reuse old pipes, gaskets, plugs (1/8'), spring pins, etc. Install new ones.

(13) Be sure to replace parts which are damaged, worn, scratched, discolored, etc.

2. On-Car Service

A: INSPECTION

1. ATF LEVEL

1) Raise ATF temperature to 60 to 80°C (140 to 176°F) from 40 to 60°C (104 to 140°F) (when cold) by driving a distance of 5 to 10 km (3 to 6 miles).

The level of ATF varies with fluid temperature. Pay attention to the fluid temperature when checking oil level.

2) Ensure the vehicle is level. After selecting all positions (P, R, N, D, 3, 2, 1), set the selector leveler in "P" range. Measure fluid level with the engine idling.

After running, idle the engine for one or two minutes before measurement.

3) If the fluid level is below the center between upper and lower marks, add the recommended ATF until the fluid level is found within the specified range (above the center between upper and lower marks). When the transmission is hot, the level should be above the center of upper and lower marks, and when it is cold, the level should be found below the center of these two marks.

a. Use care not to exceed the upper limit level.

b. ATF level varies with temperature. Remember that the addition of fluid to the upper limit mark when the transmission is cold will result in the overfilling of fluid.

4) Fluid temperature rising speed

- By idling the engine
  Time for rising temperature to 60°C (140°F) with atmospheric temperature of 0°C (32°F): More than 25 minutes

(Reference)
Time for temperature rise to 30°C (86°F) with atmospheric temperature of 0°C (32°F): Approx. 8 minutes

- By running the vehicle
  Time for temperature rise to 60°C (140°F) with atmospheric temperature of 0°C (32°F): More than 10 minutes

5) Method for checking fluid level upon delivery or at periodic inspection.
Check fluid level after a warm-up run of approx. 10 minutes. During the warm-up period, the automatic transmission functions can also be checked.

2. DIFFERENTIAL GEAR OIL LEVEL

1) Ensure the vehicle

Do not check the oil level nor add oil to the case with the front end of the vehicle jacked up; this will result in an incorrect reading of the oil level.

2) Check whether the oil level is between the upper (F) and lower (L) marks. If it is below the lower limit mark, add oil until the level reaches the upper mark.

3. OIL LEAKAGE

It is difficult to accurately determine the precise position of a oil leak, since the surrounding area also becomes wet with oil. The places where oil seals and gaskets are used are as follows:

〈Jointing portion of the case〉
- Transmission case and oil pump housing jointing portion
- Converter case and oil pump housing jointing portion
- Transmission case and extension case jointing portion

Converter housing
- Engine crankshaft oil seal
- Torque converter impeller sleeve oil seal
- ATF cooler pipe connector
- Torque converter

Converter case
- Converter case
- Axle shaft oil seal
- O-ring on the outside diameter of axle shaft oil seal holder
- O-ring on the differential oil gauge
- Differential oil drain plug
- Speedometer cable mounting portion
- Location of steel balls

Oil pump housing
- Oil pump housing (Defective casting)
- O-ring on the test plugs
- Checking blind plugs
- Differential gear breather

Automatic transmission case
- Transmission case (Defective casting)
- Mating surface of oil pan
- O-ring on the test plugs
- Checking blind plugs (steel balls)
- Oil supply pipe connector
- ATF cooler pipe connector and gasket
- Oil pan drain plug
- O-ring on the transmission harness holder
- O-ring on the oil pump plugs
- ATF breather
- Shift lever oil seal

Extension case
- Extension case (Defective casting)
- O-ring on the revolution sensor
- Rear drive shaft oil seal
- Checking blind plugs (steel ball)
- O-ring on the testing

Transmission cover
- Transmission cover (Defective casting)

The point listed above should be checked for fluid leak. Checking method is as follows:

(1) Place the vehicle in the pit, and check whether the leaking oil is ATF or not. The ATF is wine red in color, and can be discriminated easily from engine oil and gear oil.

(2) Wipe clean the leaking oil and dust from a suspectable area, using a noninflammable organic solvent such as carbon tetrachloride.

(3) Run the engine to raise the fluid temperature, and set the selector lever to "D" in order to increase the

fluid pressure and quickly detect a leaking point. Also check for fluid leaks while shifting selector lever to "R", "2", and "1".

B: ADJUSTMENT

1. BRAKE BAND

If the following abnormal shifting conditions are noted in a road test, the brake band must be adjusted.

Improper brake band clearances and their symptoms	
Clearance	Problem
1. Too wide	Upshift from 1st directly to 3rd gear occurs.
2. Wide	• Engine rpm increases abruptly while upshifting from 1st to 2nd gear or 3rd to 4th gear. • Time lag of at least one second occurs during kickdown operation from 3rd to 2nd gear.
3. Small	"Braking" symptom occurs while upshift- ing from 2nd to 3rd gear.
4. Too small	Upshifts from 2nd to 4th gear and downshifts from 4th to 2nd gear occur repeatedly.

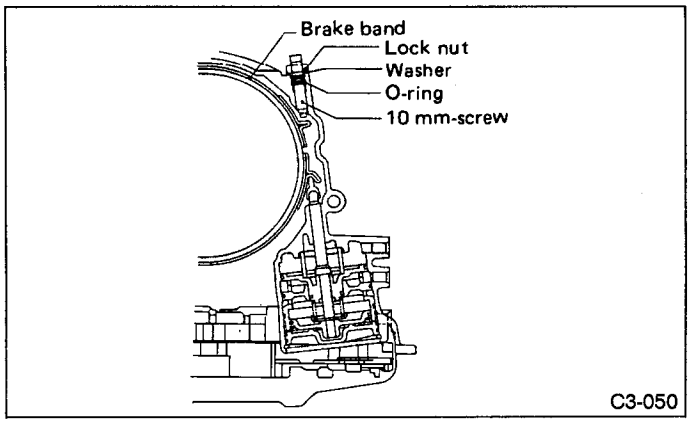

Fig. 85

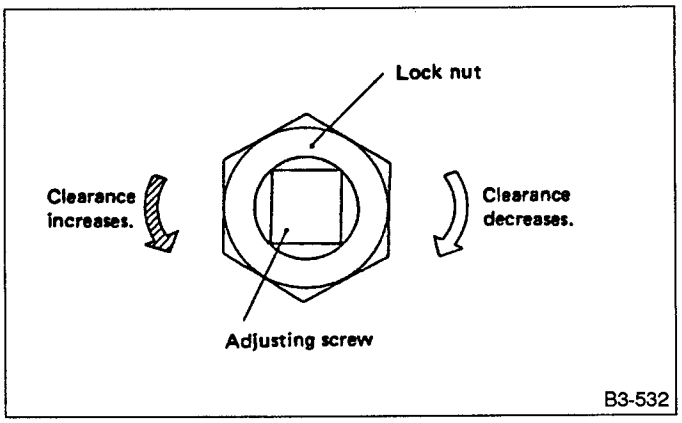

Fig. 86

• Adjustment of the adjusting screw

1) Using a socket wrench, immobilize the end of the 10 mm screw projecting on the left side of the transmission case, and loosen the nut with a double-end wrench.

In the case of occurrence of problems 1) and 2) mentioned previously, perform the adjustment by loosening or tightening the nut within a range of 3/4 turn from this state.

Tool No.	Tool Name
398603610	SOCKET WRENCH

Do not loosen excessively; otherwise, the band strut on the servo piston will drop off.

2) In case of the occurrence of problems 1 and 4 mentioned previously, perform the adjustment as follows:

Adjusting procedure: Tighten adjust screw to 9 N•m (0.9 kg- m, 6.5 ft-lb) torque, then back off three turns.

Do not tighten the adjusting screw with an excessively large torque.

3) With the adjusting screw immobilized, tighten the lock nut to 25 — 28 N•m (2.5 — 2.9 kg-m, 18 — 21 ft-lb) torque.

2. INHIBITOR SWITCH

The inhibitor switch allows the back-up lights to turn on when the selector lever is in the R range and the starter motor to start when the lever is in the N or P range. It

also monitors the input signal electronically controlled for each range and turns on the corresponding range light on the instrument panel.
When light operation, driving condition or starter motor operation is erroneous, first check the shift linkage for improper operation. If the shift linkage is functioning properly, check the inhibitor switch.
〈Inspection〉
(1) Disconnect cable end from selector lever.
(2) Disconnect inhibitor switch connector.
(3) Check continuity in inhibitor switch circuits with selector lever moved to each position.

Pin No.	4	3	2	1	8	7	6	5	12	11	10	9
Lead color / Position	B	Lg	Br	LgY	YW	YB	LgR	WL	BW	BY	G	GW
P	○	○							○	○		
R	○		○								○	○
N	○			○					○	○		
D	○				○							
3	○					○						
2	○						○					
1	○							○				
	Signal sent to AT control unit								Ignition circuit		Back-up light circuit	

Also check that continuity in ignition circuit does not exist when selector lever is in R, 3, 2 and 1 ranges.

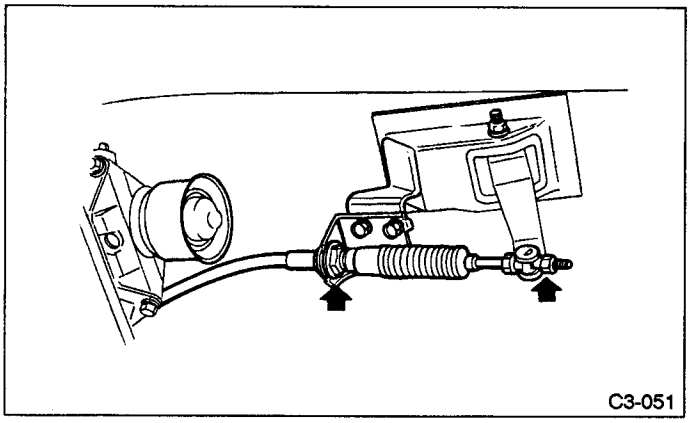

Fig. 87

(4) Check if there is continuity at equal points when the selector lever is turned 1.5° in both directions from the N range.
If there is continuity in one direction and the continuity in the other or if there is continuity at unequal points, adjust the inhibitor switch.

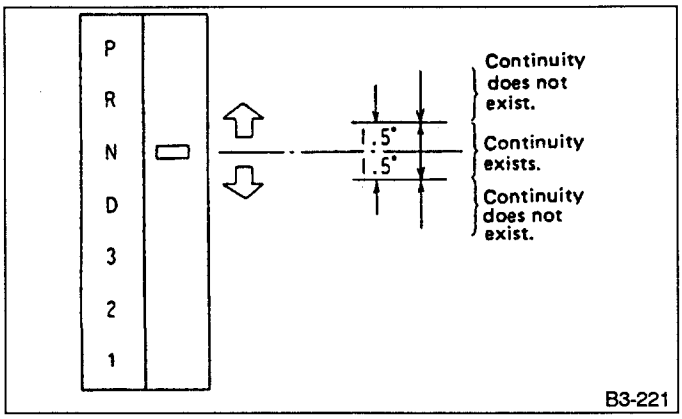

Fig. 88

〈Adjustment〉
(1) Loosen the three inhibitor switch securing bolts.
(2) Shift the selector lever to the N range.
(3) Insert STOPPER PIN (499267300) as vertical as possible into the holes in the inhibitor switch lever and switch body.
(4) Tighten the three inhibitor switch bolts.

Tightening torque:
3 — 4 N·m
(0.3 — 0.4 kg-m, 2.2 — 2.9 ft-lb)

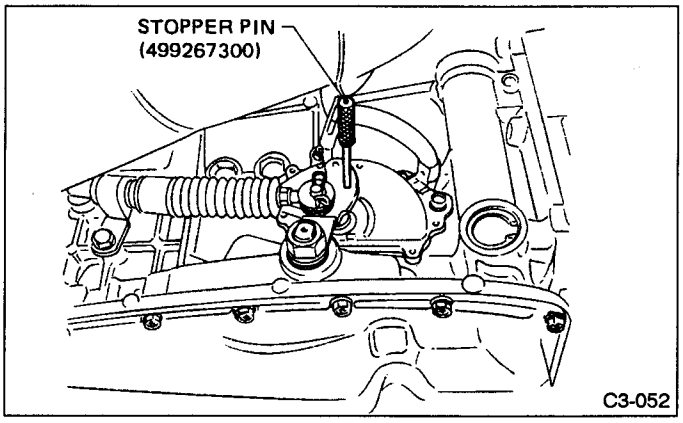

Fig. 89

(5) Repeat the above checks. If the inhibitor switch is determined to be "faulty", replace it.

3. SENSOR (in transmission)

1) Check each sensor, solenoid and ground system for short circuits.

- **Standard values**

Part name	Terminal	Resistance (Ω)
Vehicle speed sensor 1	⑨— ⑯	Approx. 600
ATF temperature sensor	⑤— ⑫	100 — 6 k, 2.5 k/20°C (68°F)
Duty solenoid A (Line-pressure solenoid)	⑦— ④ ⑧	Approx. 3
Duty solenoid B (Lock-up solenoid)	⑥— ④ ⑧	Approx. 12
Shift solenoid 1	③— ④ ⑧	Approx. 25
Shift solenoid 2	②— ④ ⑧	Approx. 25
Shift solenoid 3	①— ④ ⑧	Approx. 25
Duty solenoid C (Transfer clutch solenoid)	⑪— ④ ⑧	Approx. 12

If part is faulty, its resistance valve will be different from the standard value indicated above.

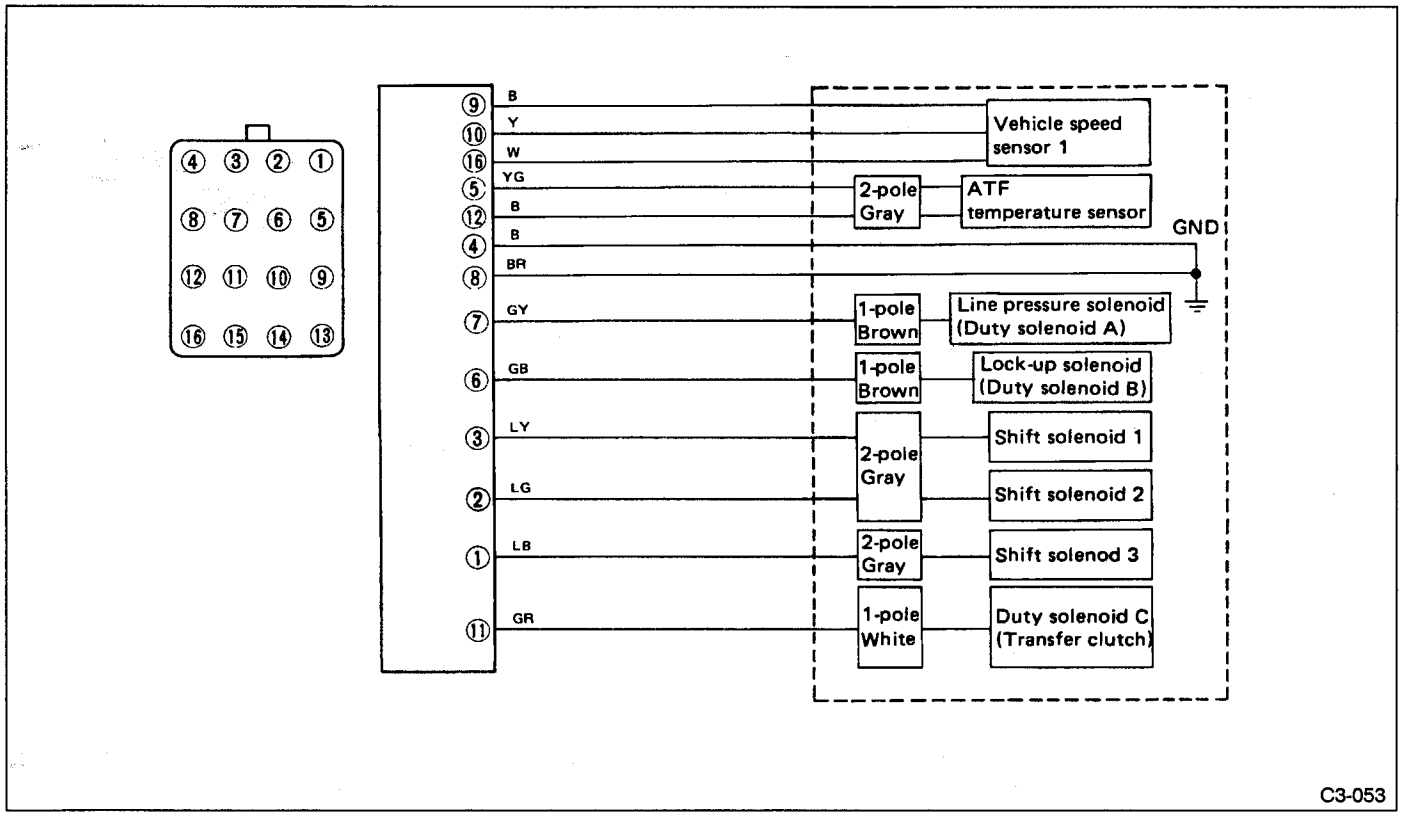

Fig. 90

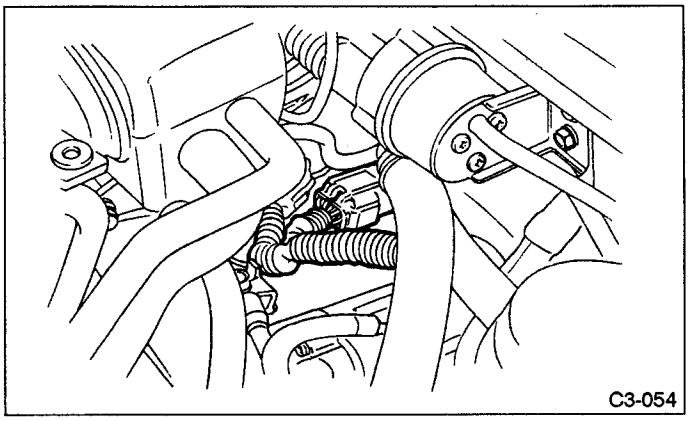

Fig. 91

C: REMOVAL AND INSTALLATION

1. SHIFT SOLENOID, DUTY SOLENOID AND VALVE BODY

1) Removal
   (1) Clean transmission exterior.
   (2) Drain ATF completely.

Tighten ATF drain plug after draining ATF.

Tightening torque:
23 — 26 N•m (2.3 — 2.7 kg-m, 17 — 20 ft-lb)

   (3) Remove oil pan and gasket.

Drain oil into a container.

   (4) Disconnect solenoid valve connectors.
   Remove connectors from clips and disconnect connectors at 5 places.

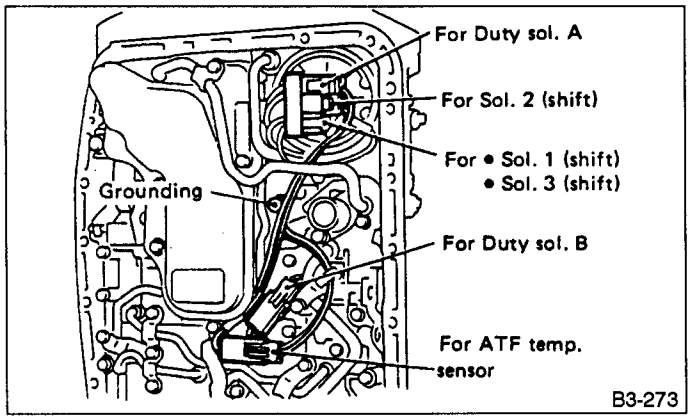

Fig. 92

   (5) Remove oil strainer.
   Disconnect oil pipe by removing the two bolts, and remove four bolts and oil strainer.

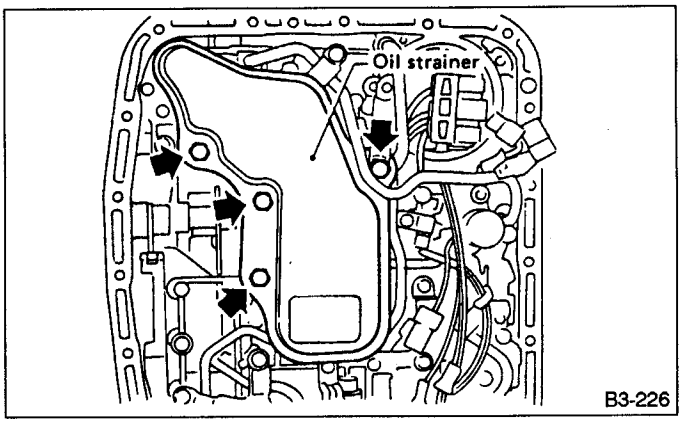

Fig. 93

Be careful because oil flows from oil strainer.

   (6) Remove control valve body.
   Remove 8 long bolts (Black) and 11 short bolts (Yellow).

Be careful because oil flows from valve body.

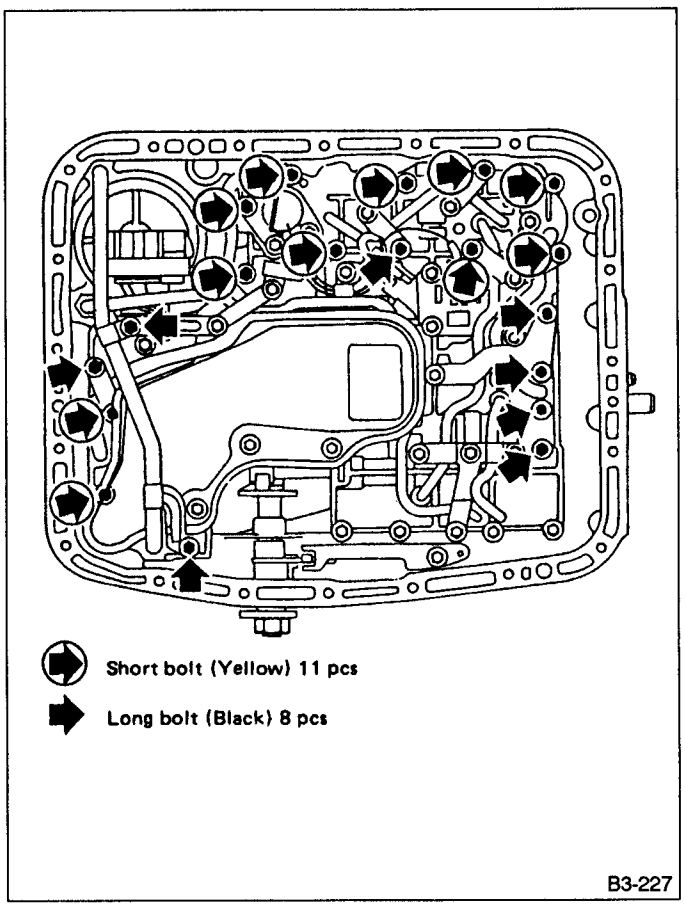

Fig. 94

(7) Remove shift solenoids 1, 2, and 3, and duty solenoid A.

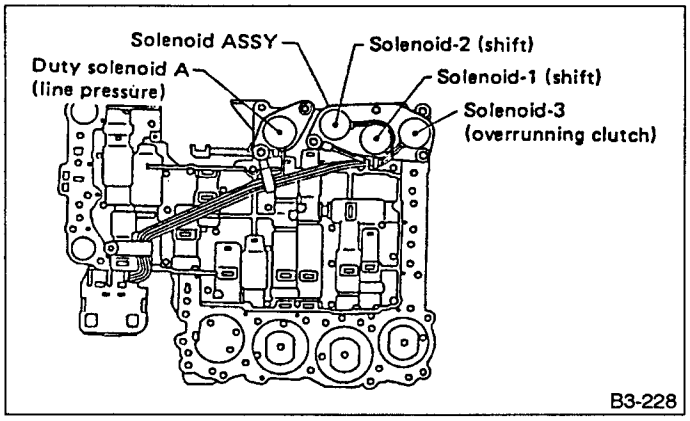

Fig. 95

2) Installation

(1) Install duty solenoid B (lock-up).

Tighten bolts shown by solid arrows. The two bolts and brackets shown by arrows " XX " must be tightened later.

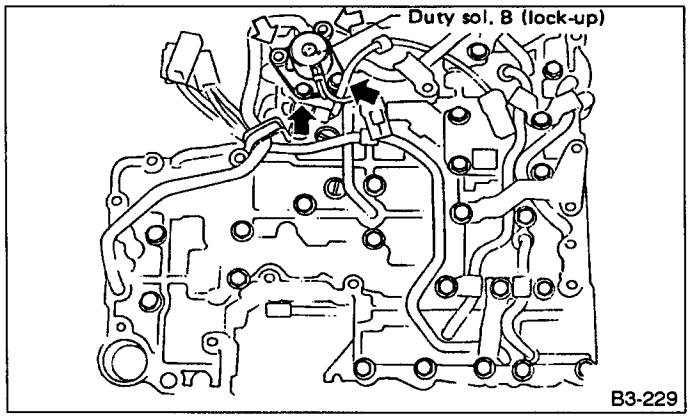

Fig. 96

(2) Install solenoid valves.

Shift solenoids, 1, 2 and 3, and duty solenoid A (line pressure).

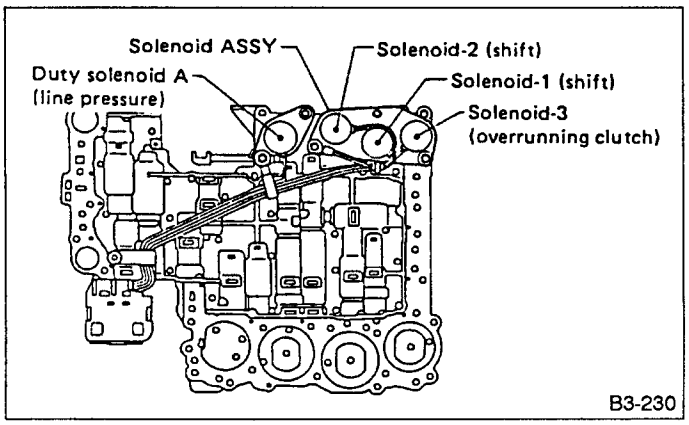

Fig. 97

(3) Install valve body.

Tightening torque:
8 N•m (0.8 kg-m, 5.8 ft-lb)

a. Secure accumulator springs using vaseline.
b. Align manual valve connections.
c. Tighten duty solenoid B (lock-up) bracket and two bolts (also used to tighten valve body).

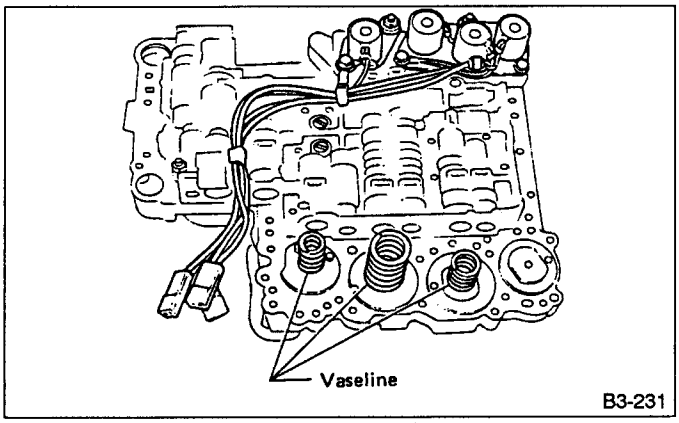

Fig. 98

(4) Install oil strainer.

Also install oil pipe and harness connector bracket.

Tightening torque:
7 — 9 N•m (0.7 — 0.9 kg-m, 5.1 — 6.5 ft-lb)

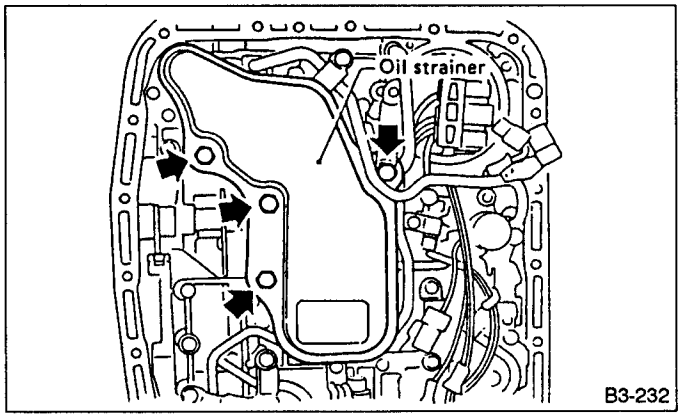

Fig. 99

(5) Connect harness connectors at 5 places.

Connect connectors of same color, and secure connectors to valve body using clips.

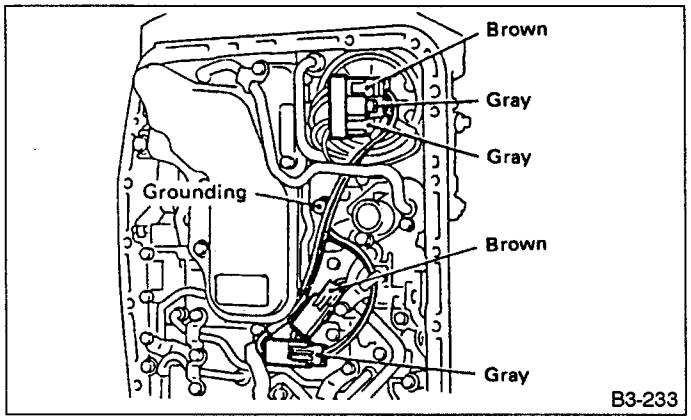

Fig. 100

(6) Install oil pan & gasket.

Tightening torque:
3.4 — 4.4 N•m (0.35 — 0.45 kg-m, 2.5 — 3.3 ft-lb)

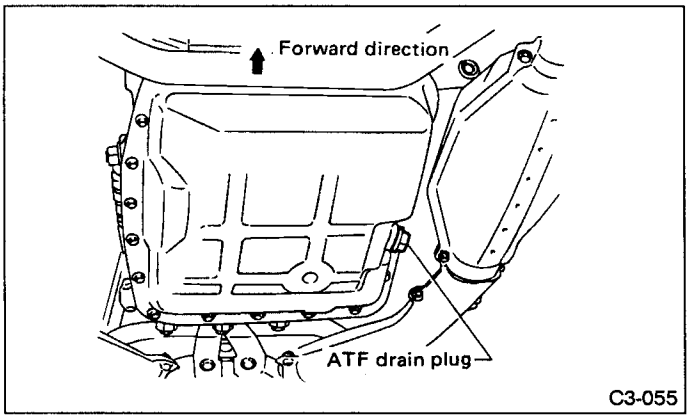

Fig. 101

(7) Add and check ATF.

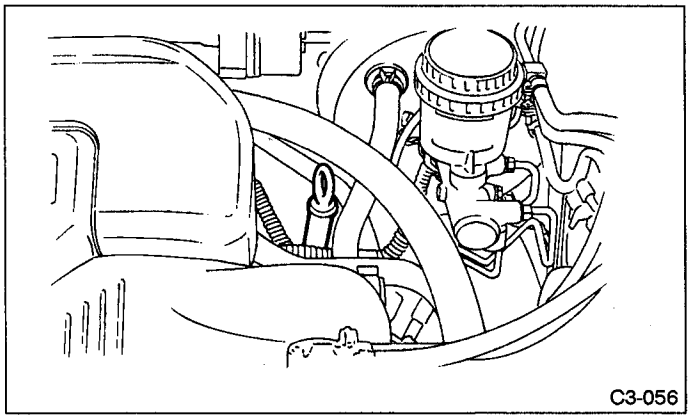

Fig. 102

2. DUTY SOLENOID C AND TRANSFER VALVE BODY

1) Removal
(1) Remove pitching stopper.
(2) Remove O_2 sensor connector from bracket, and disconnect O_2 sensor connector.

a. Be sure not to damage O_2 sensor connector and harness.

(3) Raise car and drain ATF.
(4) Remove front exhaust pipe and rear exhaust pipe with center catalyst.

For removal of exhaust system, refer to "2-9 EXHAUST SYSTEM" [W3A0] [W4A0].

a. Be sure not to damage O_2 sensor harness when removing front exhaust pipe.

(5) Remove front exhaust cover.
(6) Remove propeller shaft.

For removal of propeller shaft, refer to "3-4 AWD SYSTEM" [W1B0].

Before removing propeller shaft, scribe alignment marks on propeller shaft and rear differential coupling.

a. Be sure not to bend propeller shaft when removing. Before removing propeller shaft, wrap metal parts (installed at the rubber boot of center DOJ) with a cloth or rubbered material. Rubber boot may be damaged due to interference with adjacent metal parts while bending the DOJ during removal.

b. Be sure to use an empty oil can to catch oil flowing out when removing propeller shaft.

c. Be sure not to damage oil seals and the frictional surface of sleeve yoke.

d. Be sure to plug the opening in transmission after removal of propeller shaft.

(7) Remove rear crossmember.
- Support transmission using a transmission jack and raise slightly.
- Remove bolts and nuts as shown in Figure 103.

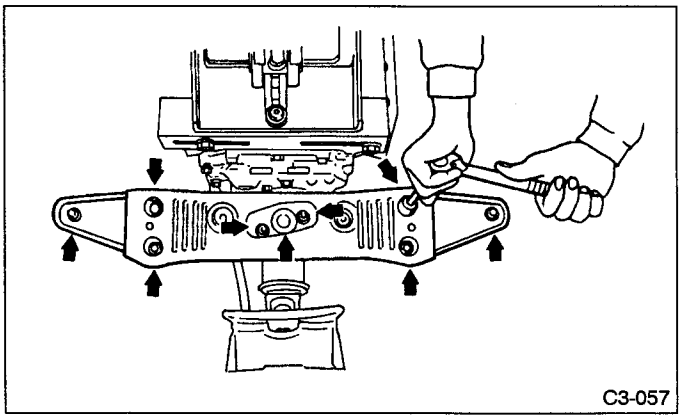

Fig. 103

(8) Remove vehicle speed sensor 1.

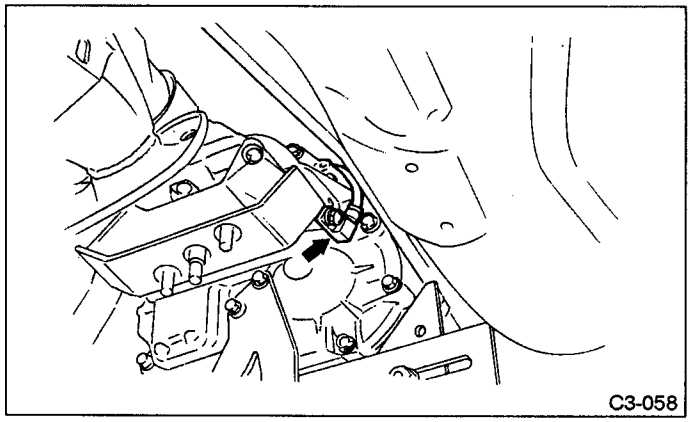

Fig. 104

(9) Remove extension & gasket.
- Remove gear select cable nut.
- Move gear select cable so that extension bolts can be removed.

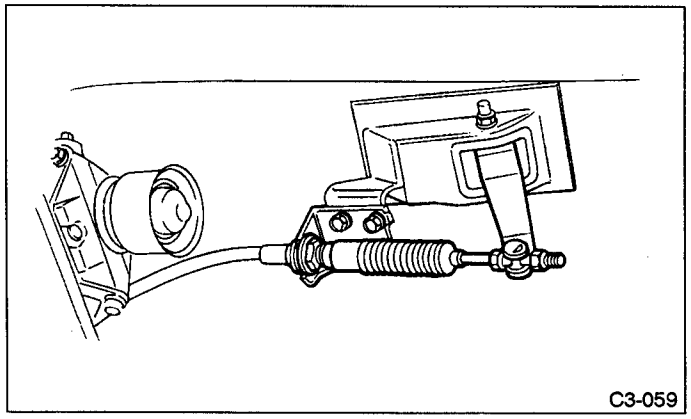

Fig. 105

- Remove bolts.
- Remove extension and disconnect duty solenoid C connector.

a. Use a container to catch oil flowing from extension.
b. Do not force extension back before disconnecting solenoid connector. Otherwise, harness may be damaged.

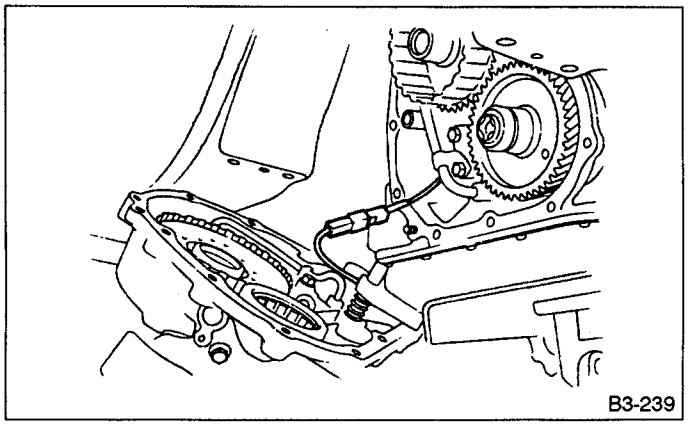

Fig. 106

(10) Remove duty solenoid C & transfer valve body from extension.
- Remove transfer clutch drum.

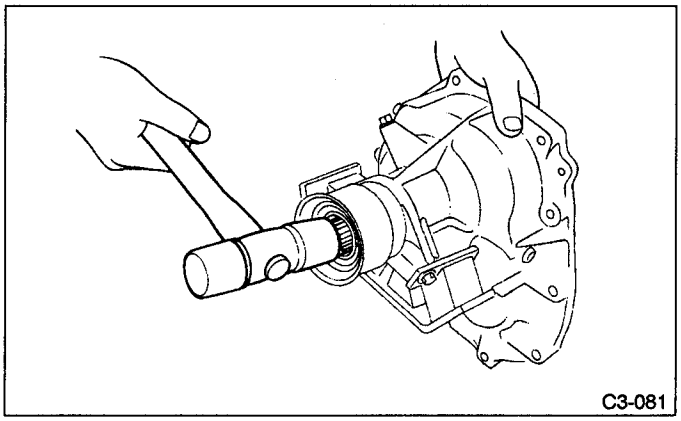

Fig. 107

- Remove clamp which secures pipe.
- Remove bolts.

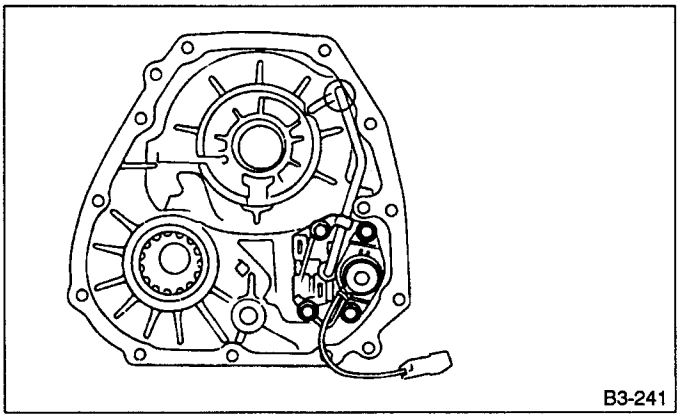

Fig. 108

2) Installation

(1) Install duty solenoid C & transfer valve body.
- Install duty solenoid C & transfer valve body.
- Install pipe and clamp.

Tightening torque:
7 — 9 N•m (0.7 — 0.9 kg-m, 5.1 — 6.5 ft-lb)

- Install clutch drum.

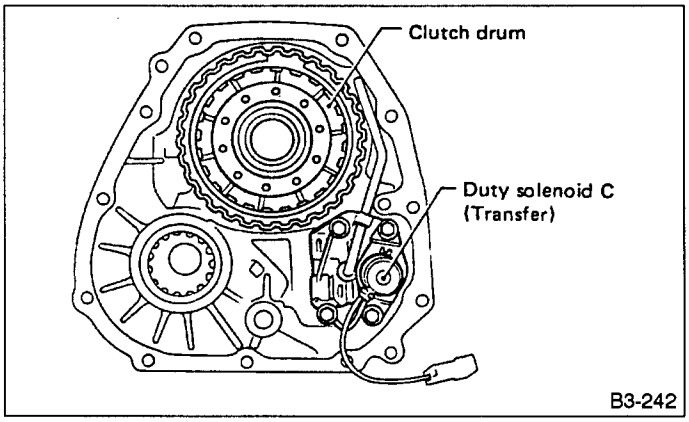

Fig. 109

(2) Install extension.
- Connect connector.
- Tighten 11 bolts.

Tightening torque:
23 — 26 N•m (2.3 — 2.7 kg-m, 17 — 20 ft-lb)

- Install gear select cable.

Tightening torque:
10 — 18 N•m (1.0 — 1.8 kg-m, 7 — 13 ft-lb)

(3) Install vehicle speed sensor 1.

Tightening torque:
6 — 8 N•m (0.6 — 0.8 kg-m, 4.3 — 5.8 ft-lb)

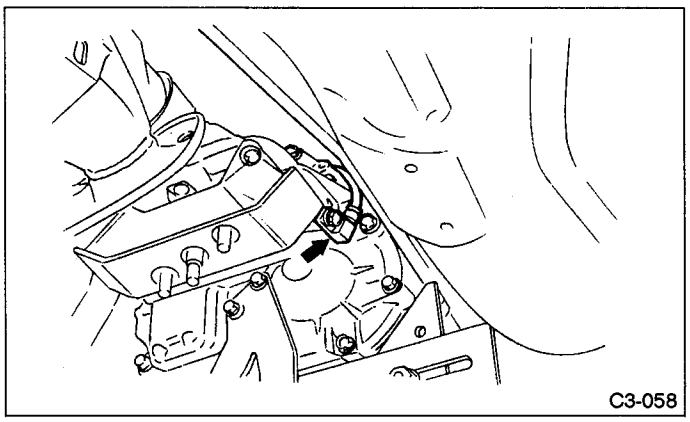

Fig. 110

(4) Install rear crossmember.
- Tighten bolts.

Tightening torque:
Crossmember to body
54 — 83 N•m (5.5 — 8.5 kg-m, 40 — 61 ft-lb)
Crossmember to cushion
13 — 23 N•m (1.3 — 2.3 kg-m, 9 — 17 ft-lb)

- Low and remove transmission jack.

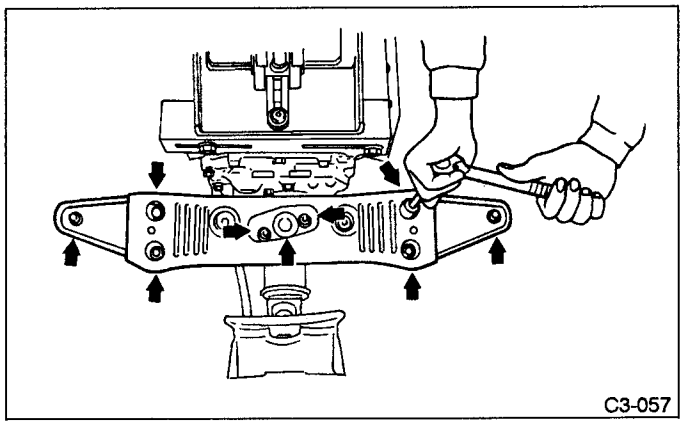

Fig. 111

(5) Install propeller shaft.

Tightening torque:
N•m (kg-m, ft-lb)
At rear differential:
18 — 27 (1.8 — 2.8, 13 — 20)
At center bearing:
34 — 44 (3.5 — 4.5, 25 — 33)

Align marks on propeller shaft and rear differential coupling.

(6) Install front exhaust pipe

Tightening torque:
N•m (kg-m, ft-lb)
At engine:
25 — 34 (2.5 — 3.5, 18 — 25)
At hanger:
25 — 34 (2.5 — 3.5, 18 — 25)
At front and rear connections:
13 — 23 (1.3 — 2.3, 9 — 17)

(7) Lower and remove jack.
(8) Connect the following parts:
- O_2 sensor connector
- Vehicle speed sensor1 connector
- Multi-connector

(9) Install pitching stopper.

Tightening torque:
N•m (kg-m, ft-lb)
47 — 67 (4.8 — 6.8, 35 — 49) (Body side)
44 — 54 (4.5 — 5.5, 33 — 40) (Engine side)

(10) Replenish ATF and check oil level. Check for leaks.

3. Performance Test

A: NECESSARY TEST GAUGES

1) Tachometer (It is desirable to be able to read to 50 rpm.).
2) Vacuum gauge (It is used for measuring intake manifold vacuum.).
3) OIL PRESSURE GAUGE (498575400).
4) OIL PRESSURE ADAPTER (498897200).
5) Stop watch.

B: STALL TEST

1. GENERAL

The stall test is of extreme importance in diagnosing the condition of the automatic transmission and the engine. It should be conducted to measure the engine stall speeds in all shift ranges except the P and N ranges.
Purposes of the stall test
1) To check the operation of the automatic transmission clutch.
2) To check the operation of the torque converter.
3) To check engine performance.

2. TEST METHODS

Preparations before test
① Check that throttle valve opens fully.
② Check that engine oil level is correct.
③ Check that coolant level is correct.
④ Check that ATF level is correct.
⑤ Check that differential gear oil level is correct.
⑥ Increase ATF temperature to 60 — 80°C (140 — 176°F) by idling the engine for approximately 30 minutes (with selector lever set to "N" or "P").

1) Install an engine tachometer at a location visible from the driver's compartment and mark the stall speed range on the tachometer scale.
2) Place the wheel chocks at the front and rear of all wheels and engage the parking brake.
P.108
3) Move the manual linkage to ensure it operates properly, and shift the selector lever to the D range.
4) While forcibly depressing the foot brake pedal, gradually depress the accelerator pedal until the engine operates at full throttle.

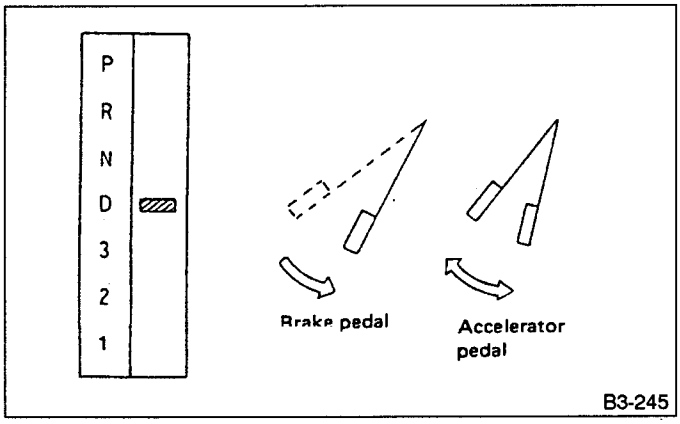

Fig. 112

5) When the engine speed is stabilized, read that speed quickly and release the accelerator pedal.
6) Shift the selector lever to Neutral, and cool down the engine by idling it for more than one minute.
7) Record the stall speed.
8) Perform the stall tests with the selector lever in the 3, 2 and R ranges.

a. Do not continue the stall test for MORE THAN FIVE SECONDS at a time (from closed throttle, fully open throttle to stall speed reading). Failure to follow this instruction causes the engine oil and ATF to deteriorate and the clutch and brake band to be adversely affected.
Be sure to cool down the engine for at least one minute after each stall test with the selector lever set in the P or N range and with the idle speed lower than 1,200 rpm.
b. If the stall speed is higher than the specified range, attempt to finish the stall test in as short a time as possible, in order to prevent the automatic transmission from sustaining damage.
Specifications

Stall speed (at sea level):
2,350 — 2,750 rpm

3. EVALUATION

Stall speed (at sea level)	Position	Cause
Less than specifications	D, R, 2	• Throttle valve not fully open • Erroneous engine operation • Torque converter's one-way clutch slipping
Greater than specifications	D only	• Line pressure too low • Forward clutch slipping • One-way clutch (1 - 2) malfunctioning • One-way clutch (3-4) malfunctioning
	R only	• Line pressure too low • Reverse clutch slipping • Low & reverse brake slipping
	2 only	• Line pressure too low • Forward clutch slipping • Brake band slipping
	R, D, 2	• Line pressure too low • ATF insufficient

C: TIME LAG TEST

1. GENERAL

If the selector lever is shifted while the engine is idling, there will be a certain time elapse or lag before the shock can be felt. This is used for checking the condition of the forward clutch, reverse clutch, low & reverse brake, forward one-way clutch and low one-way clutch.

CAUTION:

(a) Perform the test at normal operation fluid temperature (60 to 80°C or 140 to 176°F).

(b) Be sure to allow a one minute interval between tests.

(c) Make three measurements and take the average value.

2. TEST METHODS

1) Fully apply the parking brake.
2) Start the engine.

Check idling speed (A/C OFF)

"N" range: 610± 100 rpm

3) Shift the selector lever from "N" to "D" range.

Using a stop watch, measure the time it takes from shifting the lever until the shock is felt.

Time lag: Less than 1.2 seconds

4) In same manner, measure the time lag for "N" → "R".

Time lag: Less than 1.5 seconds

3. EVALUATION

1) If "N" → "D" time lag is longer than specified:
- Line pressure too low
- Forward clutch worn
- Low one-way clutch not operating properly

2) If "N" → "R" time lag is longer than specified:
- Line pressure too low
- Reverse clutch worn
- Low & Rev. brake worn
- Forward one-way clutch not operating properly

D: LINE PRESSURE TEST

1. GENERAL

If the clutch or the brake band shows a sign of slippage or shifting sensation is not correct, the line pressure should be checked.

- Excessive shocks during upshifting or shifting takes place at a higher point than under normal circumstances, may be due to the line pressure being too high.
- Slippage or inability to operate the car may, in most cases, be due to loss of oil pressure for the operation of the clutch, brake band or control valve.

1) Line pressure measurement (under no load)

a. Before measuring line pressure, jack-up front wheels (front-wheel-drive model) or all wheels (4-wheel drive model).

b. Maintain temperature of ATF at approximately 60 to 80°C (140 to 176°F) during measurement.

(ATF will reach the above temperature after idling the engine for approximately 30 minutes with shift lever in "N" or "P".)

2) Line pressure measurement (under heavy load)

a. Before measuring line pressure, apply both foot and parking brakes with all wheels chocked (Same as for "stall" test conditions).

b. Measure line pressure when selector lever is in "R", "D", "2" and "1" with engine under stall conditions.

c. Measure line pressure within 5 seconds after shifting the selector lever to each position. (If line pressure needs to be measured again, allow the engine to idle and then stop. Wait for at least one minute before measurement.)

d. Maintain the temperature of ATF at approximately 60 to 80°C (140 to 176°F) during measurement. (ATF will reach the above temperature after idling the engine for approximately 30 minutes with the selector lever in "N" or "P".)

2. TEST METHODS

1) Temporarily attach the OIL PRESSURE GAUGE ASSY (498575400) to a suitable place in the driver's compartment.

2) Remove the test plug and install OIL PRESSURE GAUGE ADAPTER (498897200) instead.

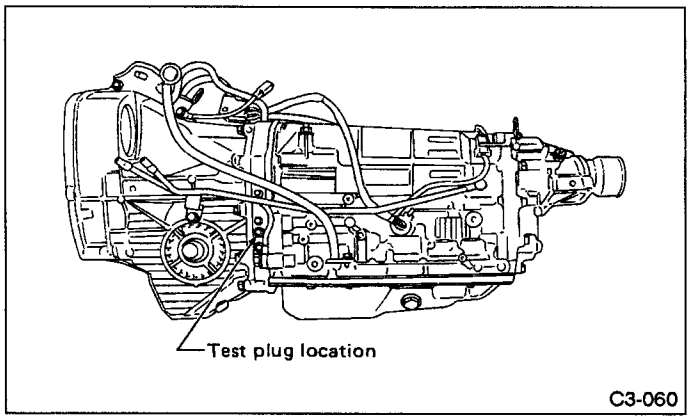

Fig. 113

3) Connect OIL PRESSURE GAUGE ADAPTER (498897200) with OIL PRESSURE GAUGE ASSY (498575400).
4) Start the engine and warm it up.
5) Check line pressure in accordance with the following chart.

3. EVALUATION

Under no load: "P", "R", "D", "3", "2" and "1"
Under full load: "R", "D", "3", "2" and "1"
(With engine running at stall speed)
〈Standard line pressure〉

Unit: kPa (kg/cm², psi)

	Min. line pressure	Max. line pressure
Range	510 — 710 rpm	Stall rpm
P	441 — 569 (4.5 — 5.8, 64 — 82)	—
R	588 — 686 (6.0 — 7.0, 85 — 100)	1,422 — 1,589 (14.5 — 16.2, 206 — 230)
N	441 — 569 (4.5 — 5.8, 64 — 82)	—
D	441 — 569 (4.5 — 5.8, 64 — 82)	1,128 — 1,255 (11.5 — 12.8, 164 — 182)
3	441 — 569 (4.5 — 5.8, 64 — 82)	1,128 — 1,255 (11.5 — 12.8, 164 — 182)
2	441 — 569 (4.5 — 5.8, 64 — 82)	1,128 — 1,255 (11.5 — 12.8, 164 — 182)
1	441 — 569 (4.5 — 5.8, 64 — 82)	1,128 — 1,255 (11.5 — 12.8, 164 — 182)
Accelerator pedal	Full-closed	Fully-open

E: TRANSFER CLUTCH PRESSURE TEST

Check transfer clutch pressure in accordance with the following chart in the same manner as with line pressure.
Under no load: "R" and "D" ranges
Under heavy load:
"R" and "D" ranges in AWD mode
"R" and "D" ranges in FWD mode

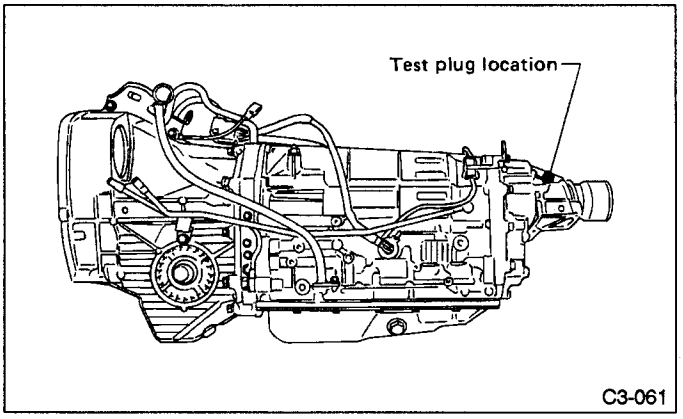

Fig. 114

Unit: kPa (kg/cm², psi)

	AWD mode		FWD mode
	Low pressure side	High pressure side	High pressure side
Range	510 — 710 rpm	Stall rpm	Stall rpm
R	49 — 78 (0.5 — 0.8, 7 — 11)	716 — 785 (7.3 — 8.0, 104 — 114)	0 (0, 0)
D	49 — 78 (0.5 — 0.8, 7 — 11)	716 — 785 (7.3 — 8.0, 104 — 114)	0 (0, 0)
Accelerator pedal	Fully-closed	Fully-open	Fully-open

If oil pressure is not produced or if it does not change in the AWD mode, the duty solenoid C or transfer valve assembly may be malfunctioning. If oil pressure is produced in the FWD mode, the problem is similar to that in the AWD mode.

F: ROAD TEST

1. GENERAL

Road tests should be conducted to properly diagnose the condition of the automatic transmission.

When performing test, do not exceed posted speed limit.

2. CHECKING FOR SHIFT PATTERNS

Check "kick-down" and engine brake operation.

D-range: 1st ⇆ 2nd ⇆ 3rd ⇆ 4th
3-range: 1st ⇆ 2nd ⇆ 3rd ⇆ 4th (Manual switch OFF)
2nd ⇆ 3rd ⇆ 4th (Manual switch ON)
2-range: 1st ⇆ 2nd ⇆3rd ⇆ 4th (Manual switch OFF)
2nd ⇆ 3rd ⇆ 4th (Manual switch ON)
1-range: 1st ⇆ 2nd ⇆ 3rd ⇆ 4th

3. CHECK FOR THE 4WD FUNCTION

If "tight-corner braking" occurs when the steering wheel is fully turned at low speed:

1) Determine the applicable trouble code and check the corresponding duty solenoid C (transfer) for improper operation.
2) If the solenoid is operating properly, check transfer clutch pressure.
3) If oil pressure is normal but "tight-corner braking" occurs:

Check the transfer control valve for sticking, and the transfer clutch facing for wear.
(Refer to Disassembly and Inspection of the Transmission.)

4. AUTOMATIC SHIFT CHARACTERISTICS

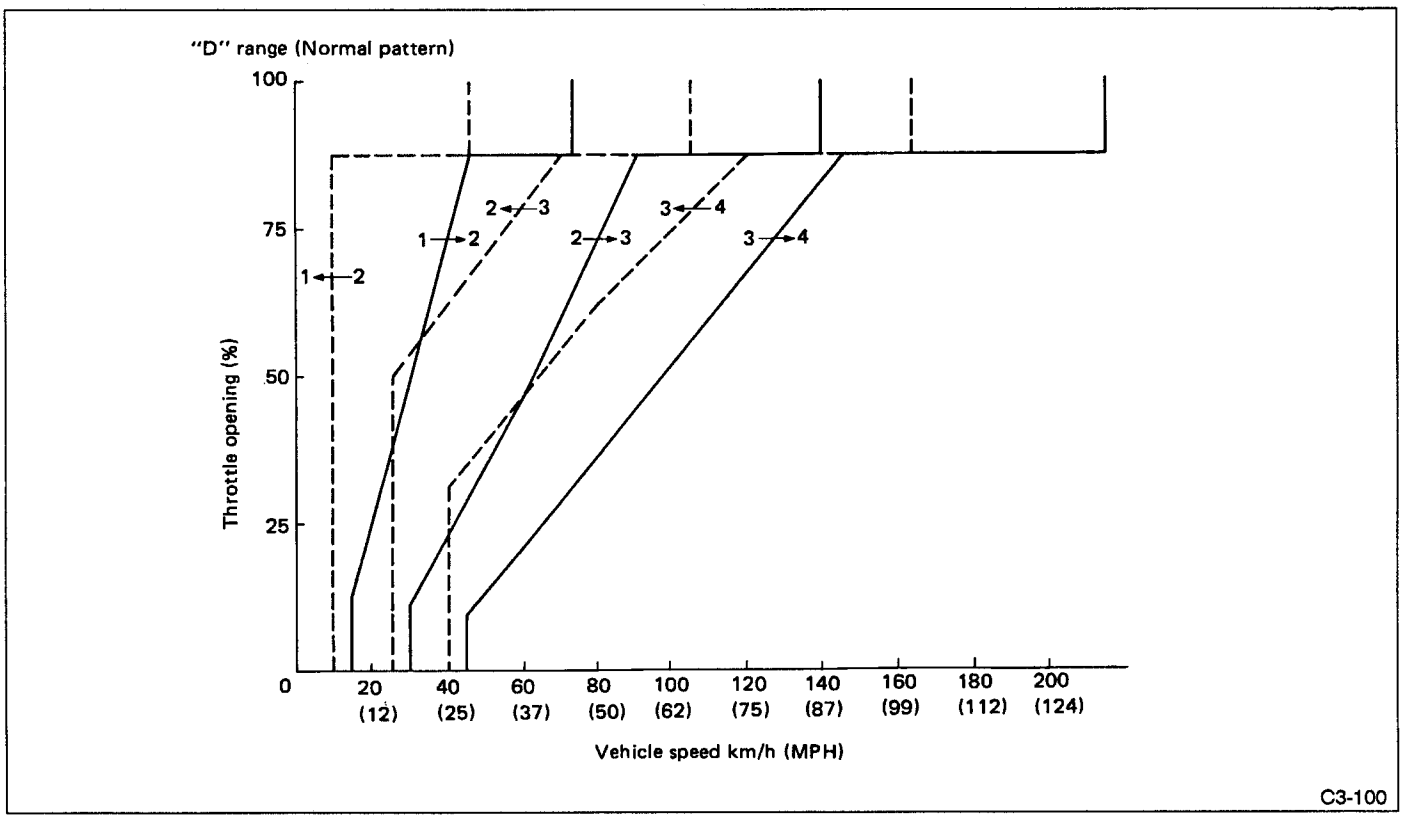

Fig. 115

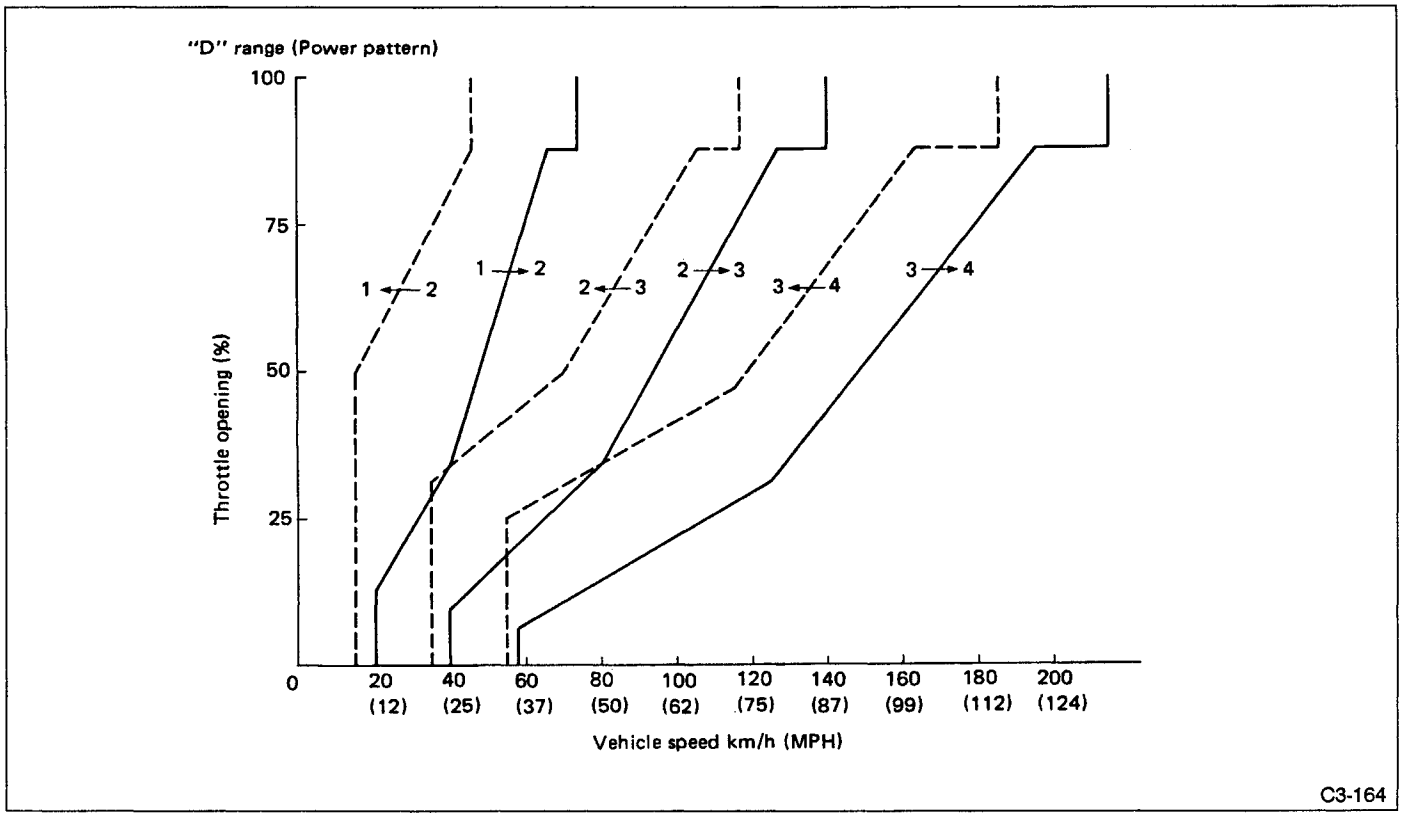
"D" range (Power pattern)
100
75
50
25
0
Throttle opening (%)
1 ← 2
1 → 2
2 ← 3
2 → 3
3 ← 4
3 → 4
20 (12)
40 (25)
60 (37)
80 (50)
100 (62)
120 (75)
140 (87)
160 (99)
180 (112)
200 (124)
Vehicle speed km/h (MPH)
C3-164

Fig. 116

4. Overall Transmission

SECTIONS THAT CAN BE DETACHED/ASSEMBLED

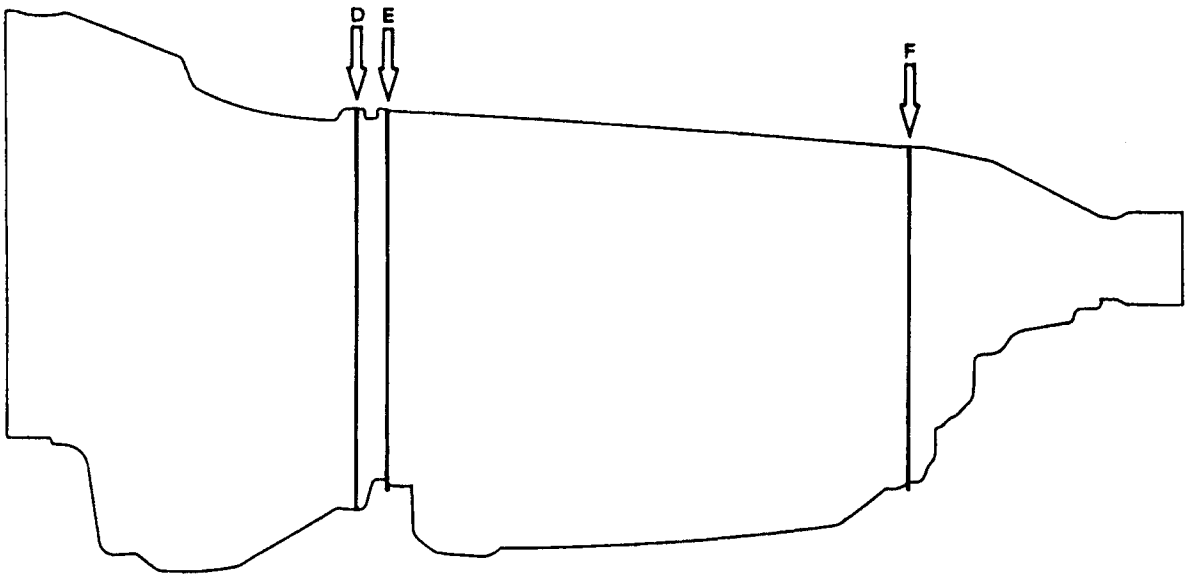

Section D ... YES
Section E ... YES
Section F ... YES

C3-062

Fig. 117

A: DISASSEMBLY

1. EXTERNAL PARTS

1) Place the transmission unit on a workbench, with the oil pan facing down.

Be careful not to bend or damage external parts.

2) Remove the drain plug, and drain differential oil. Tighten the plug temporarily after draining.

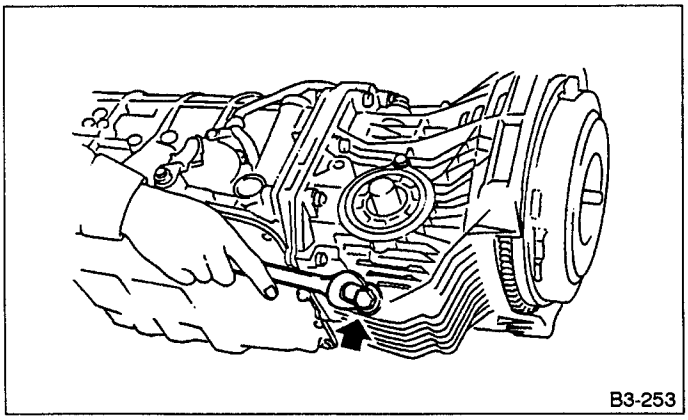

Fig. 118

3) Remove the drain plug, and drain automatic transmission fluid (ATF). Tighten the plug temporarily after draining.

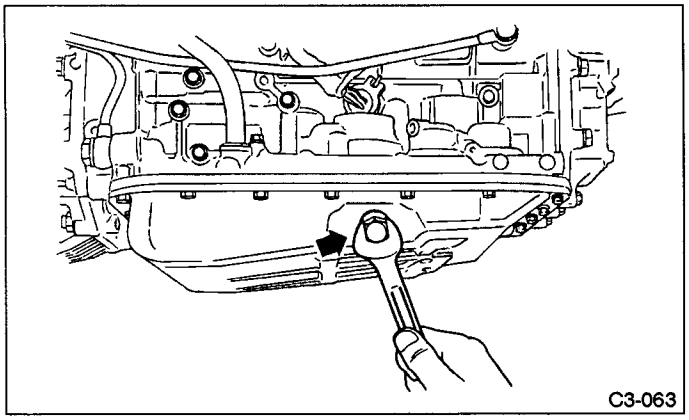

Fig. 119

4) Extract the torque converter.

a. Extract the torque converter horizontally. Be careful not to scratch the bushing inside the oil pump shaft.

b. Note that oil pump shaft also comes out.

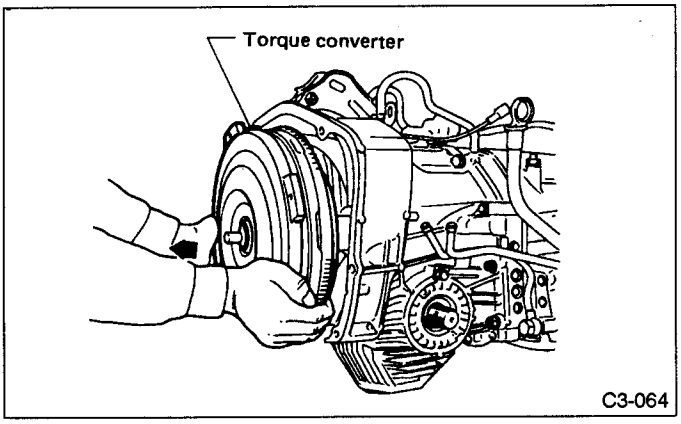

Fig. 120

5) Remove the input shaft.

Be careful not to scratch the bushing.

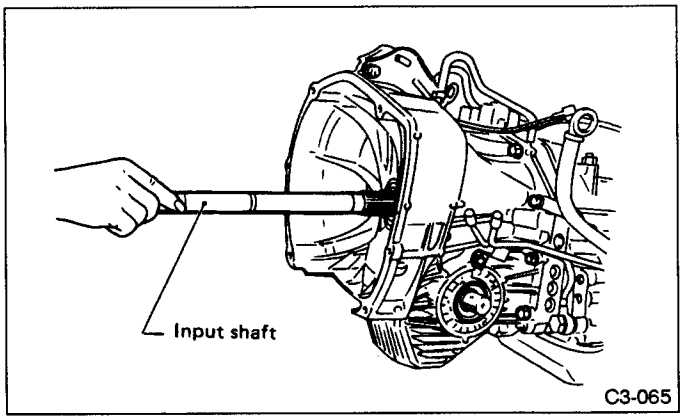

Fig. 121

6) Disconnect the air breather hose from the pitching stopper bracket.

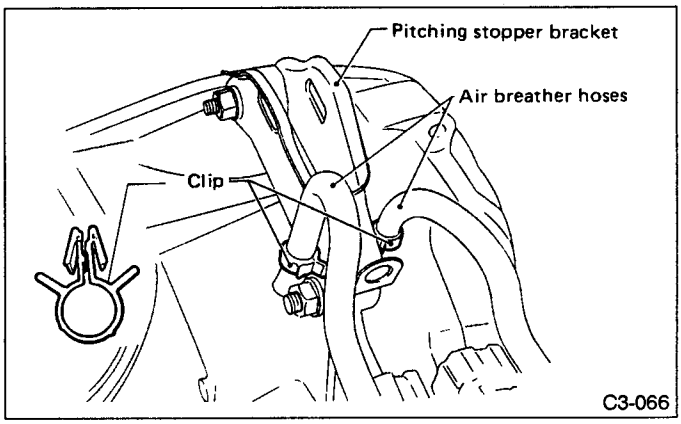

Fig. 122

7) Remove the pitching stopper bracket.

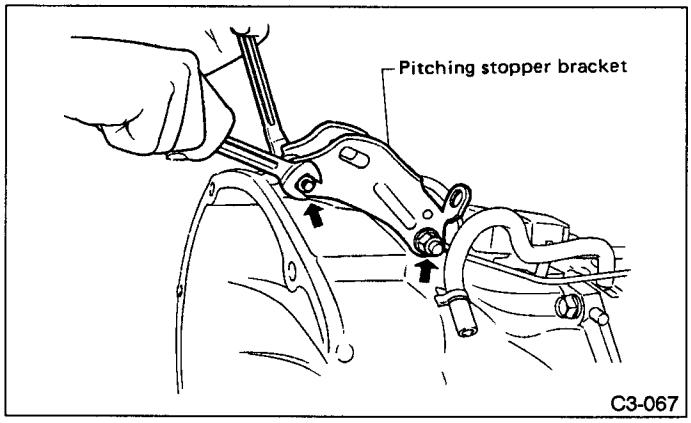

Fig. 123

8) Disconnect the air breather hose.

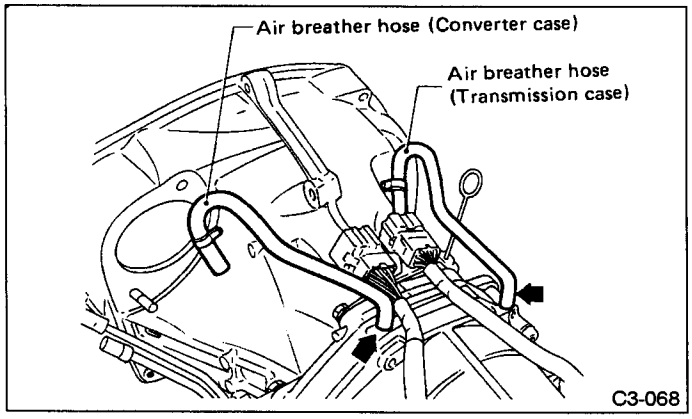

Fig. 124

9) Remove the oil charger pipe, and remove the O-ring from the flange face. Attach the O-ring to the pipe.

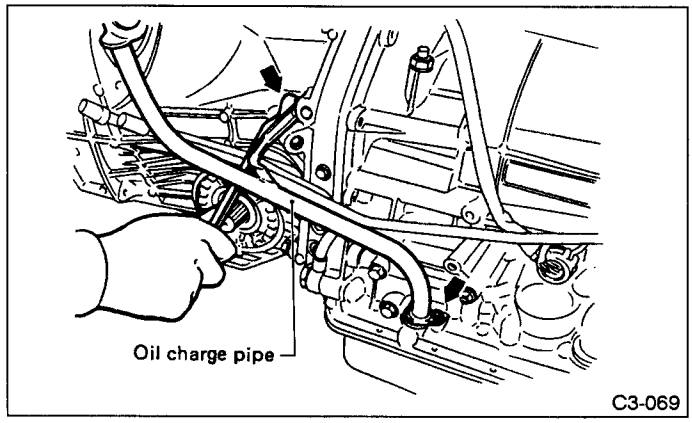

Fig. 125

10) Remove the oil cooler inlet and outlet pipes.

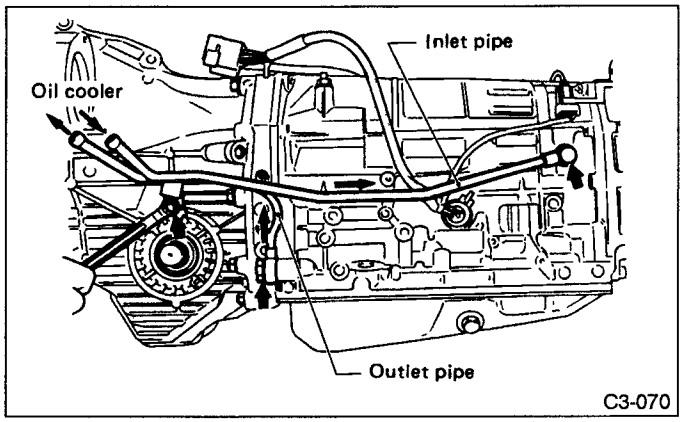

Fig. 126

11) Remove the harnesses from the bracket.

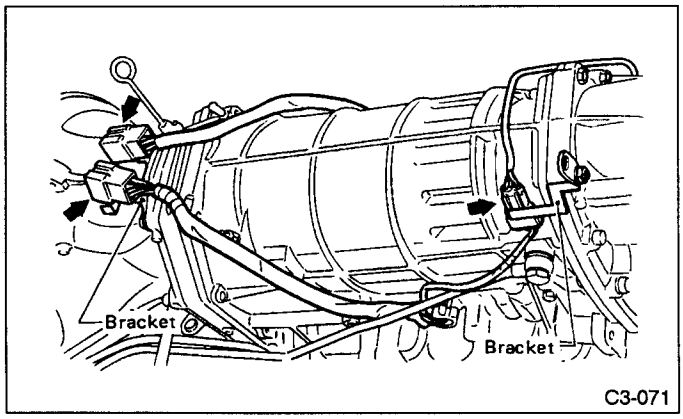

Fig. 127

2. SEPARATION OF EACH SECTION

1) Separation of converter case and transmission case sections

a. Separate these cases while tapping lightly on the housing.

b. Be careful not to damage the oil seal and bushing inside the converter case by the oil pump cover.

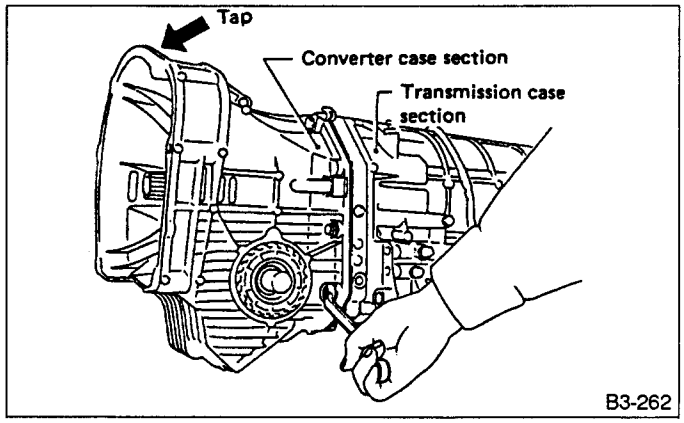

Fig. 128

2) Separation of transmission case and extension sections.

(1) Remove the vehicle speed sensor 1.

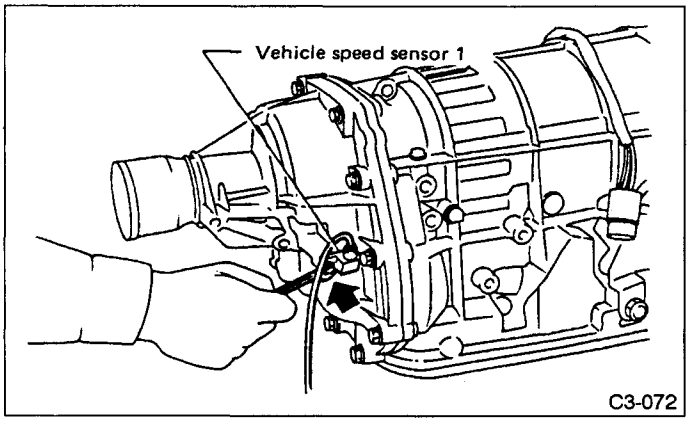

Fig. 129

(2) While pulling the extension slightly, disconnect the connector for the duty solenoid C (transfer).

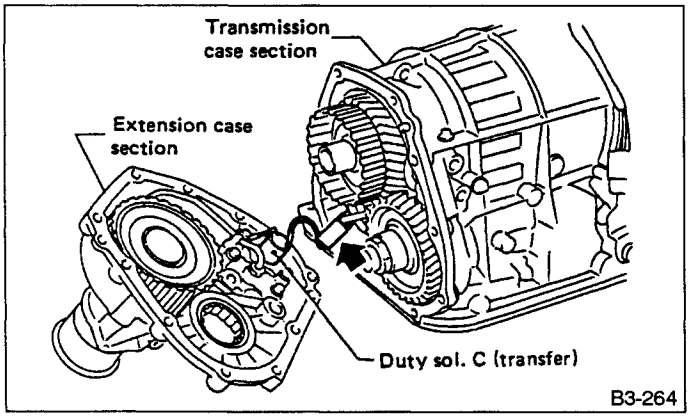

Fig. 130

3) Separate both sections.

3. TRANSMISSION CASE SECTION

1) Remove the reduction drive gear ASSY.

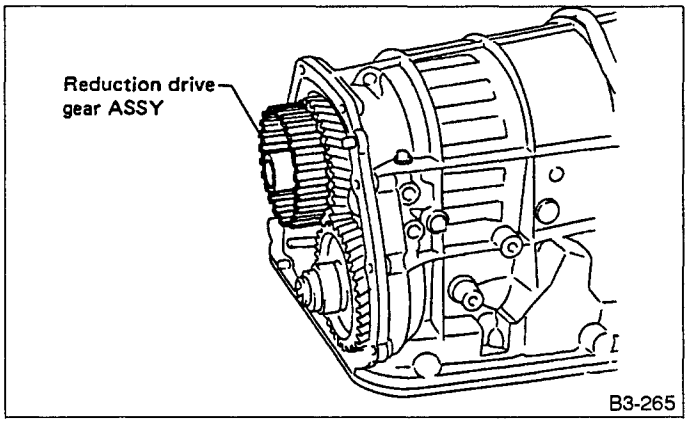

Fig. 131

2) Remove the reduction driven gear:

- Straighten the staked portion, and remove the lock nut.

Set the range selector lever to "P".

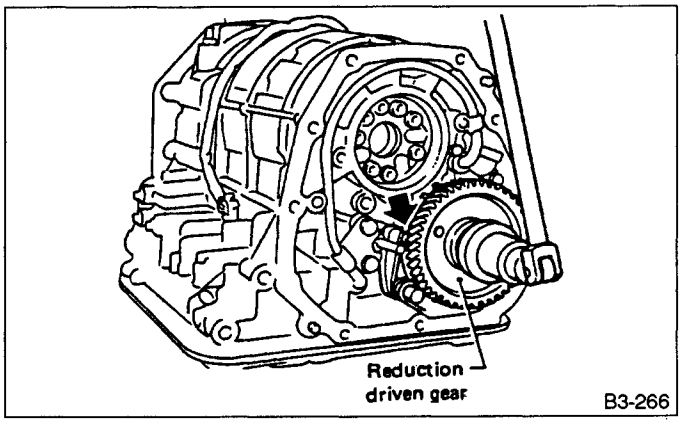

Fig. 132

- Using the PULLER SET (899524100), extract the reduction driven gear.

Drill two holes in the puller.

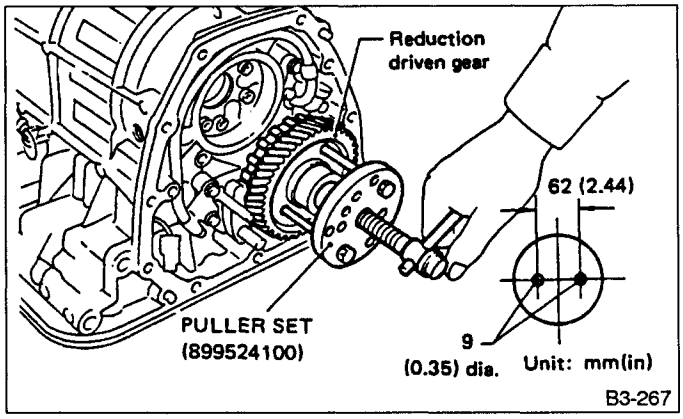

Fig. 133

3) Remove the parking pawl, return spring and shaft.

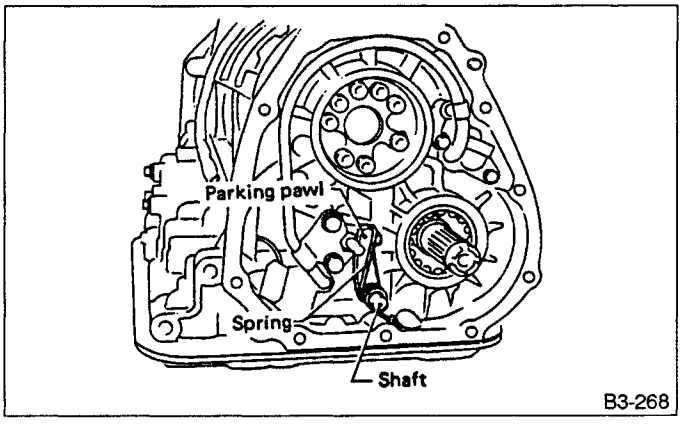

Fig. 134

4) Loosen the taper roller bearing mounting bolts.

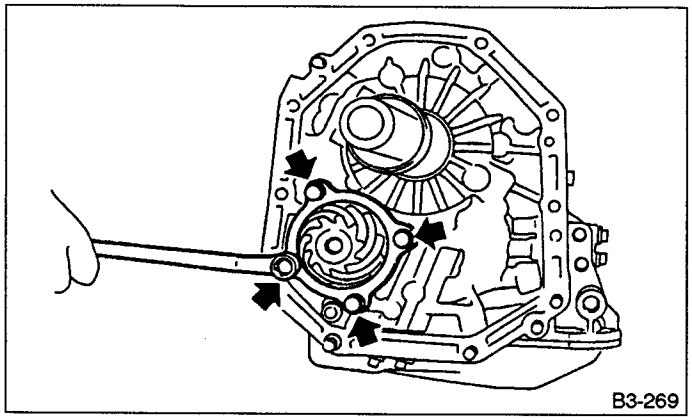

Fig. 135

5) Place two wooden blocks on the workbench, and stand the transmission case with its rear end facing down.

a. Be careful not to scratch the rear mating surface of the transmission case.

b. Note that the parking rod and drive pinion protrude from the mating surface.

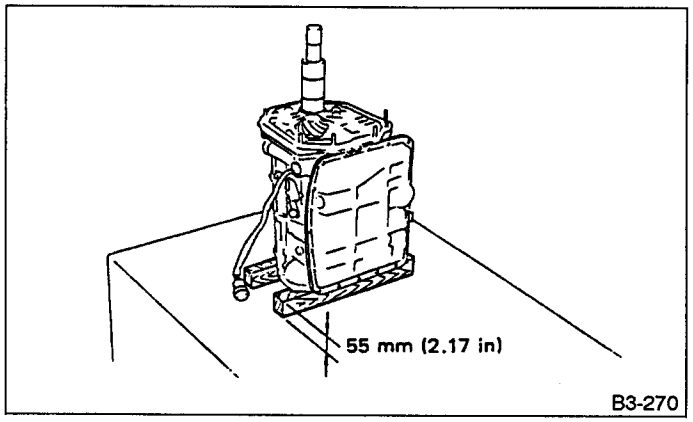

Fig. 136

6) Remove the oil pan and gasket.

Tap the corners of the oil pan when removing.

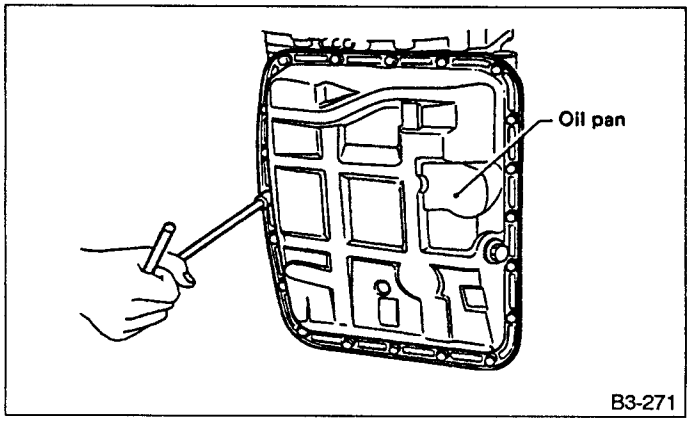

Fig. 137

7) Remove the oil cooler outlet pipe.

Be careful not to twist the pipe.

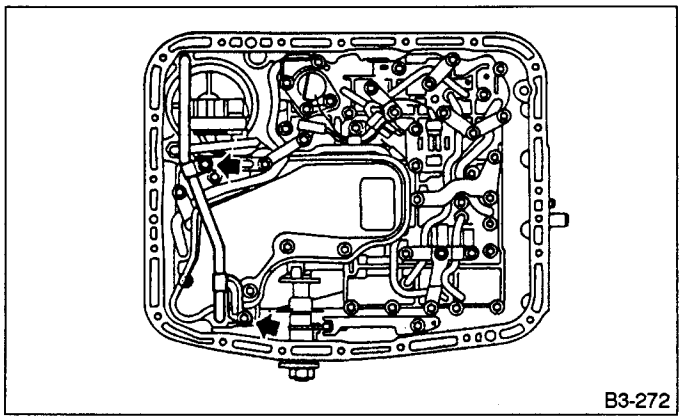

Fig. 138

8) Disconnect the harness connectors for the solenoids and duty solenoids and the ground cord.

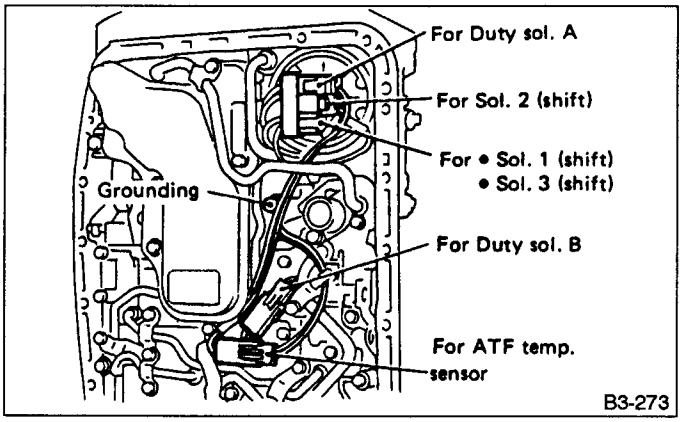

Fig. 139

9) Remove the oil strainer.

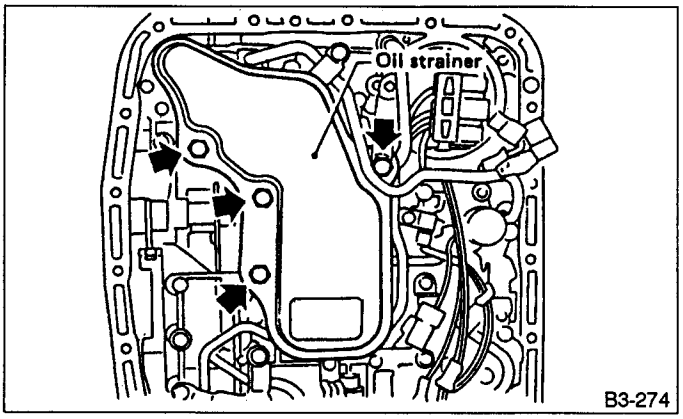

Fig. 140

Be careful not to damage O-ring on oil strainer.

10) Remove the control valve body.

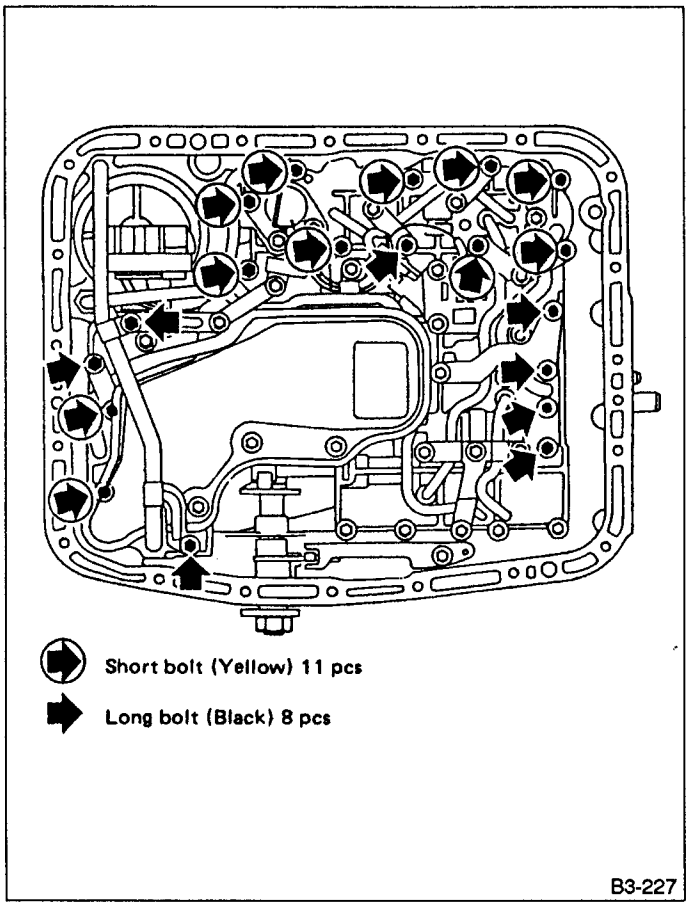

Fig. 141

11) Remove three accumulator springs.

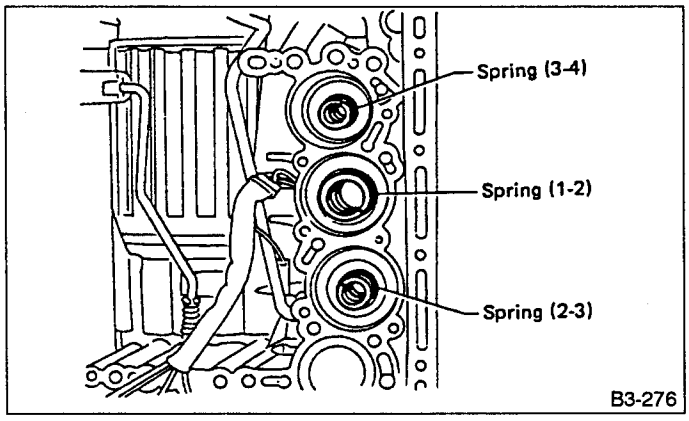

Fig. 142

12) Loosen the reverse clutch drum lightly by turning the adjusting screw. Then remove the oil pump housing.

Be careful not to lose the total end play adjusting thrust washer.

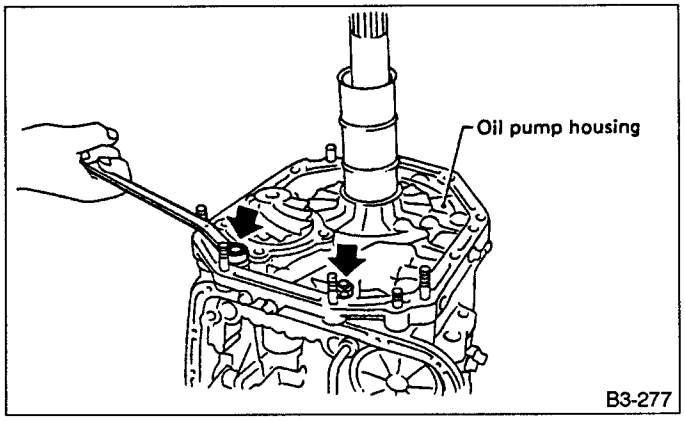

Fig. 143

13) Loosen the brake band adjusting screw, and take out the strut.

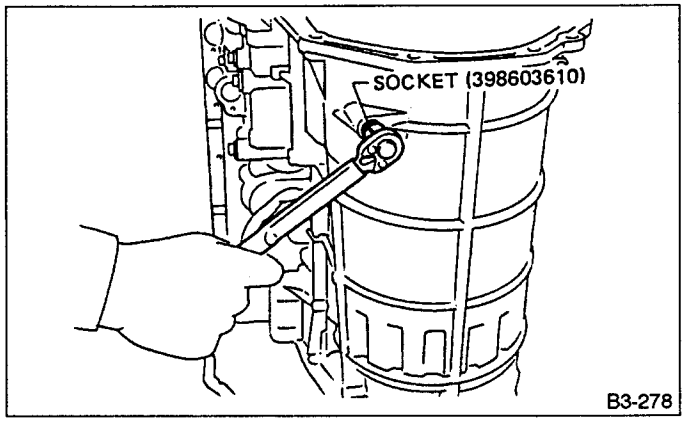

Fig. 144

14) Remove the brake band and reverse clutch.

Contract the brake band with a clip.

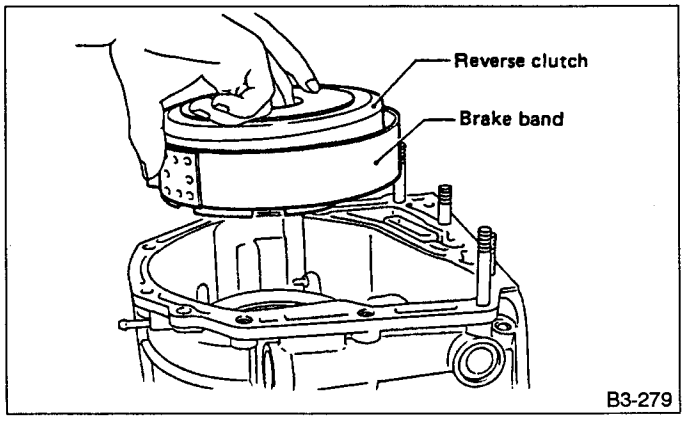

Fig. 145

15) Take out the high clutch.

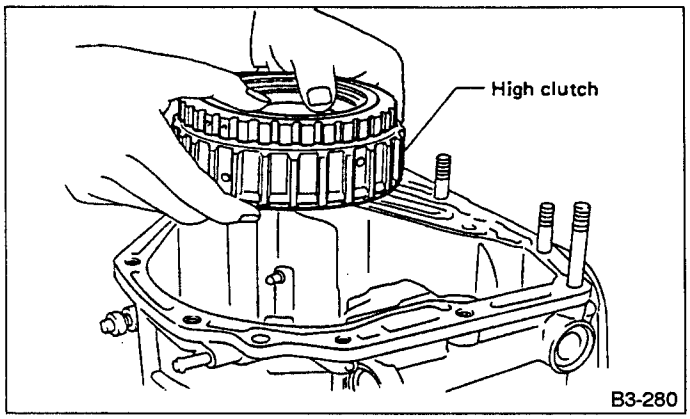

Fig. 146

Needle bearing is removed together with high clutch. Be careful not to lose it.

16) Take out the high clutch hub.

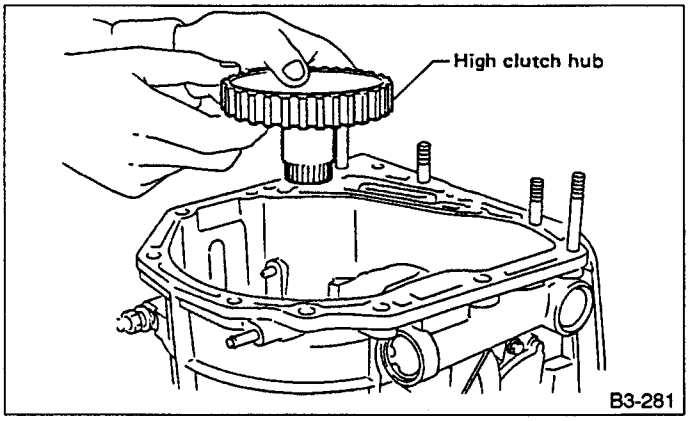

Fig. 147

17) Take out the front sun gear.

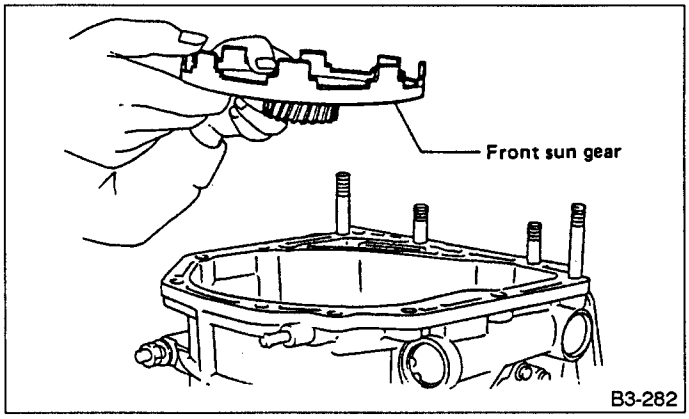

Fig. 148

18) Take out the front planetary carrier.

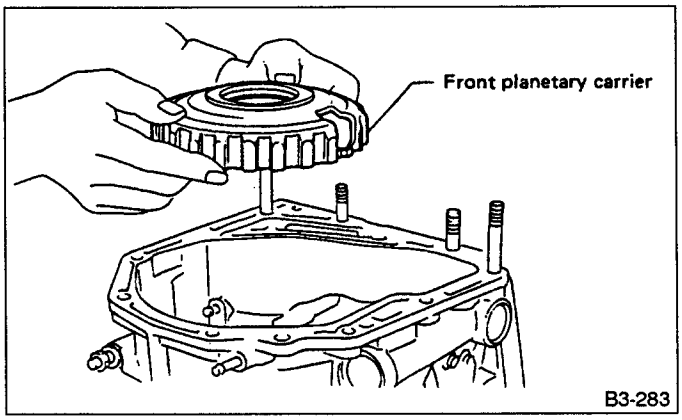

Fig. 149

19) Take out the rear planetary carrier and rear sun gear.

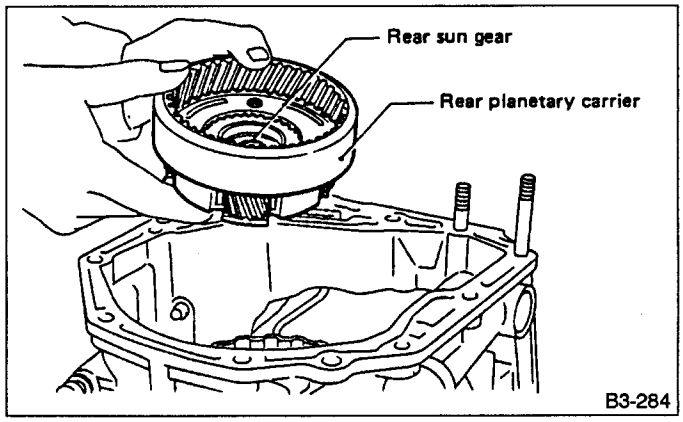

Fig. 150

20) Take out the rear internal gear.

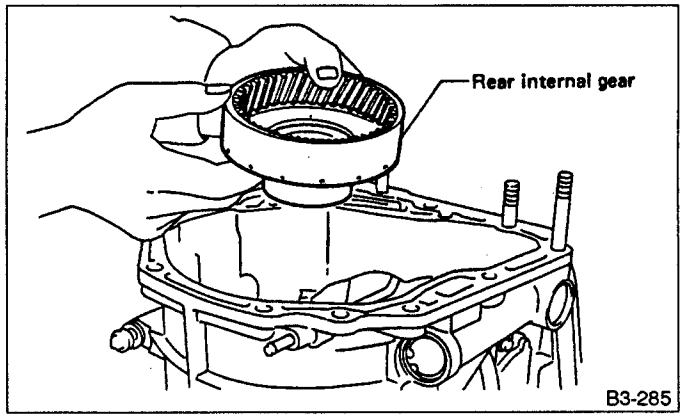

Fig. 151

21) Take out the one-way clutch outer race.

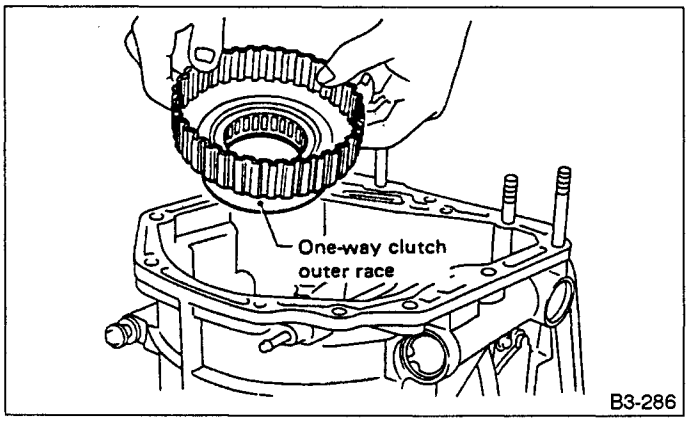

Fig. 152

22) Take out the overrunning clutch hub.

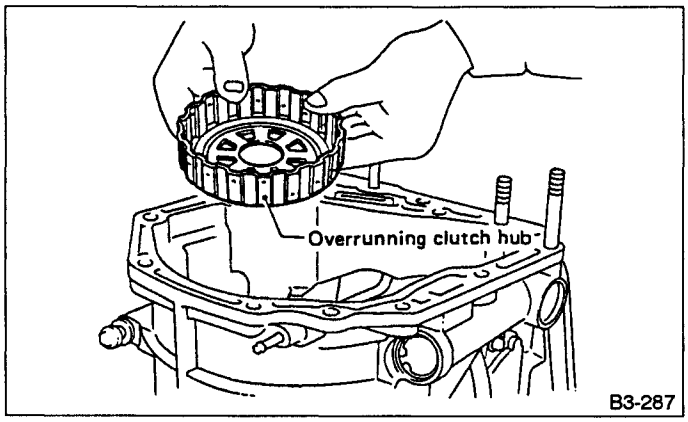

Fig. 153

23) Take out the forward clutch drum.

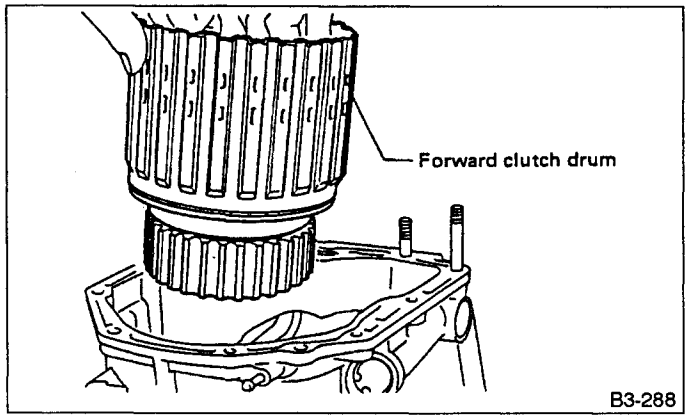

Fig. 154

24) Take out the low & reverse brake section.

- Remove the snap ring. Then remove the retaining plate, drive plates, driven plates, and dish plates as a unit.

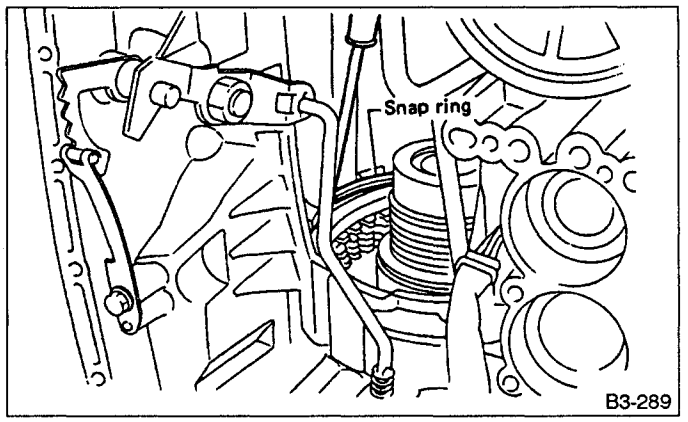

Fig. 155

- Turning the case upside down, take out the one-way clutch inner race and spring retainer CP.

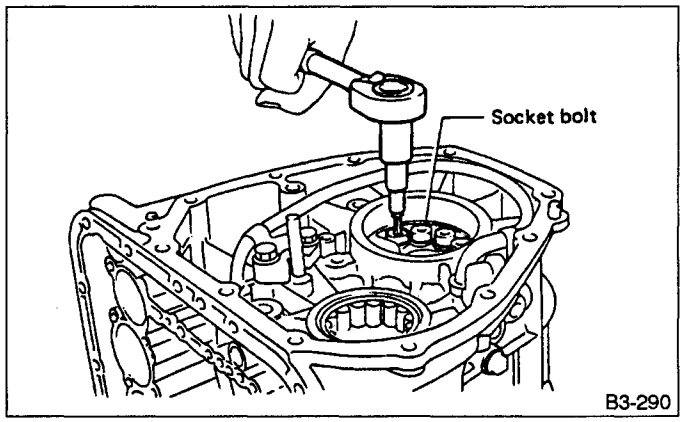

Fig. 156

- Take out the low & reverse piston by applying compressed air.

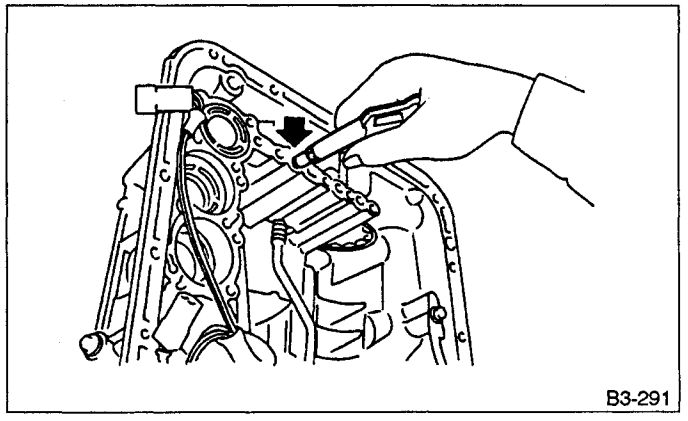

Fig. 157

25) After removing the snap ring (inner), take out the servo piston by applying compressed air from the release pressure side.

Hold the servo piston with a rag so that it will not be ejected with the air pressure. In this case, do not allow your finger to be pinched between the pipe and retainer.

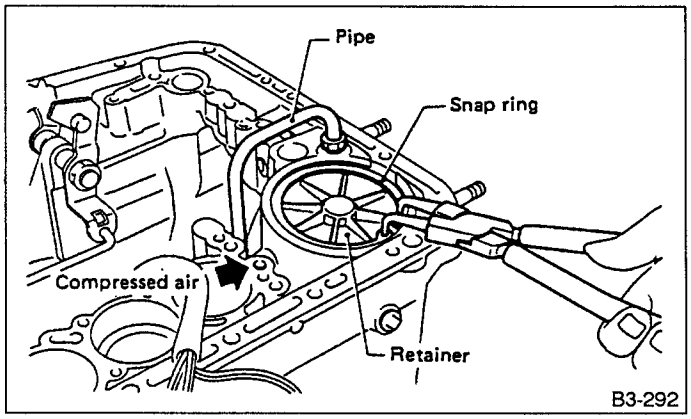

Fig. 158

26) Apply compressed air from the operating pressure side, and take out accumulator (3-4), accumulator (1-2), accumulator (2- 3), and accumulator (N-D).

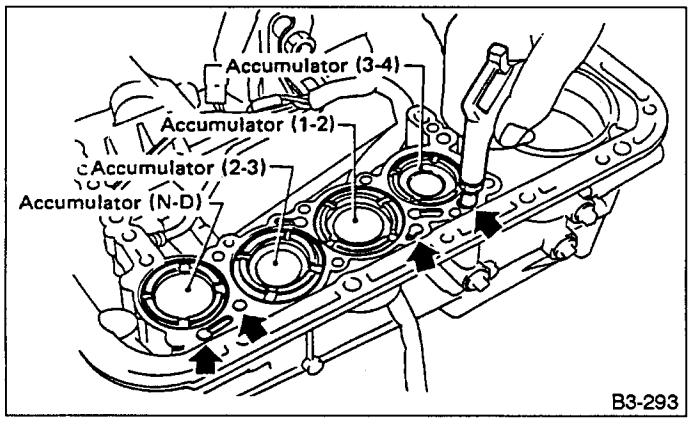

Fig. 159

27) Remove the range selector lever.
28) Remove the detent spring.

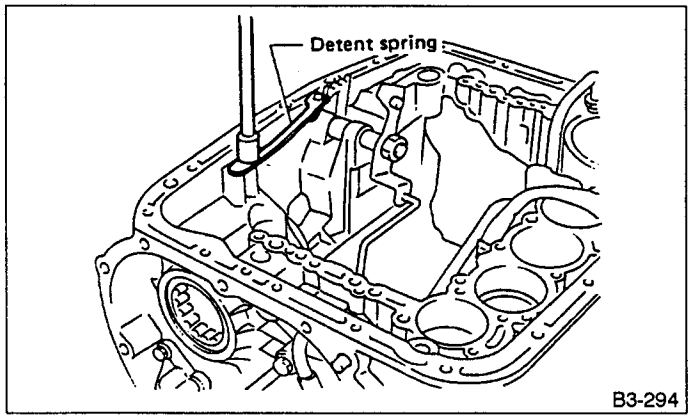

Fig. 160

29) Remove the parking rod together with the manual lever. Then remove the manual shaft by pulling off the straight pin.
Be careful not to damage the lips of the press-fited oil seal in the case.

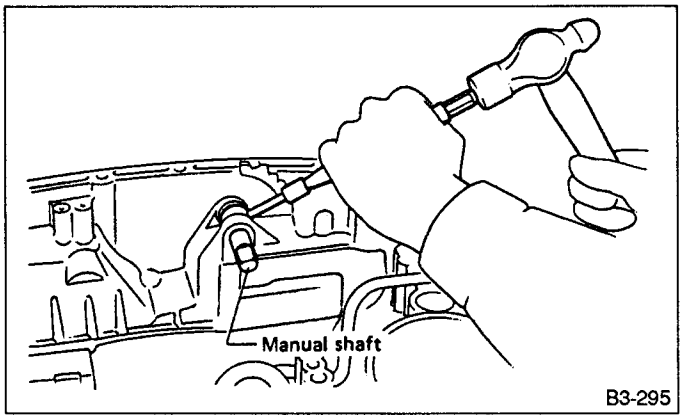

Fig. 161

30) Remove the inhibitor switch.

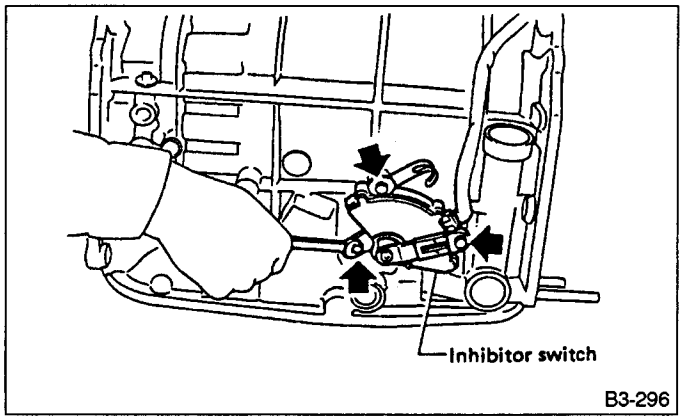

Fig. 162

31) Remove the transmission harness.
Be careful not to damage the cord insulation.

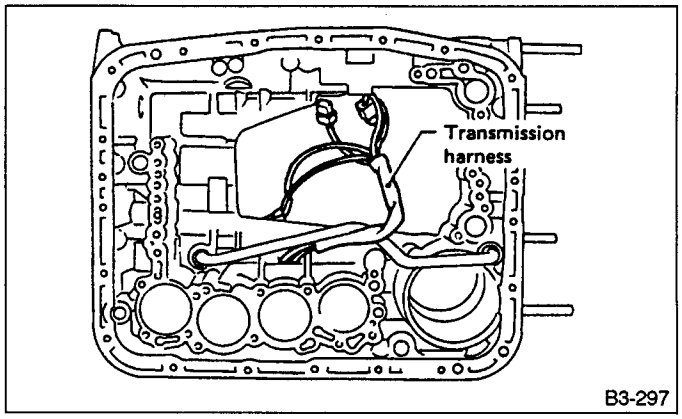

Fig. 163

4. CONVERTER CASE SECTION

1) Wrap the axle-shaft serration with vinyl tape.

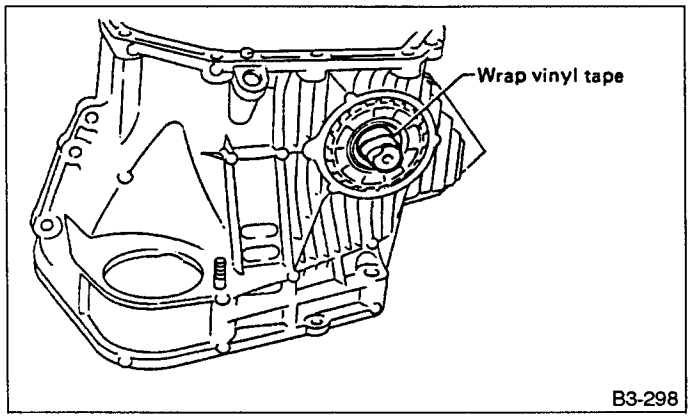

Fig. 164

2) Remove the differential side retainer.

Hold the differential case ASSY by hand to avoid damaging retainer mounting hole of the converter case and speedometer gears.

3) Extract the axle shaft.

Do not reuse the circlip.

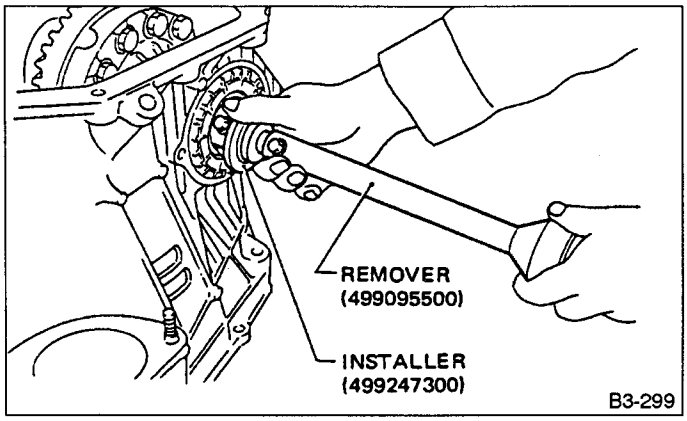

Fig. 165

4) Remove the differential case ASSY.

a. Remove the seal pipe if it is attached. (Reusing is not allowed.)

b. Be careful not to damage the retainer mounting hole of the converter case and the speedometer gears.

5) Remove the vehicle speed sensor 2.

a. Pay attention so as not to forget to remove the sensor key and packing from the converter case.

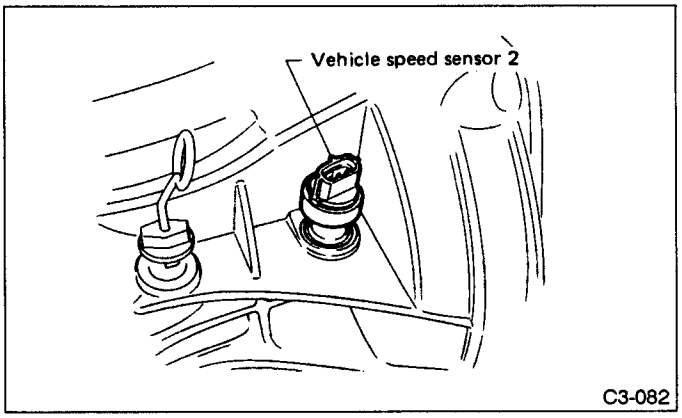

Fig. 166

6) Remove the snap ring. Then remove the speedometer driven gear.

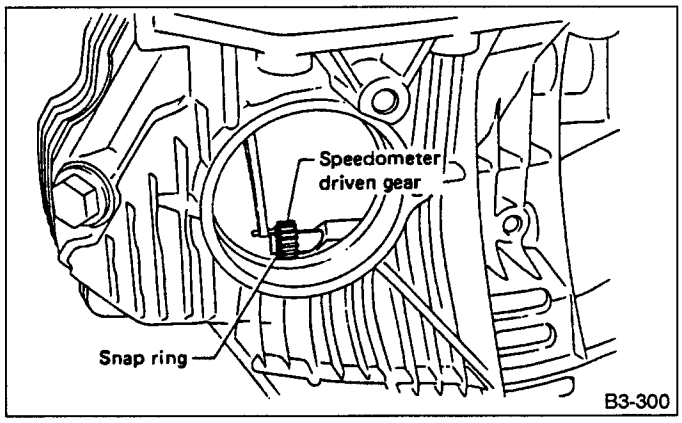

Fig. 167

7) Tap out the speedometer shaft to the outside of the case, and remove the oil seal.

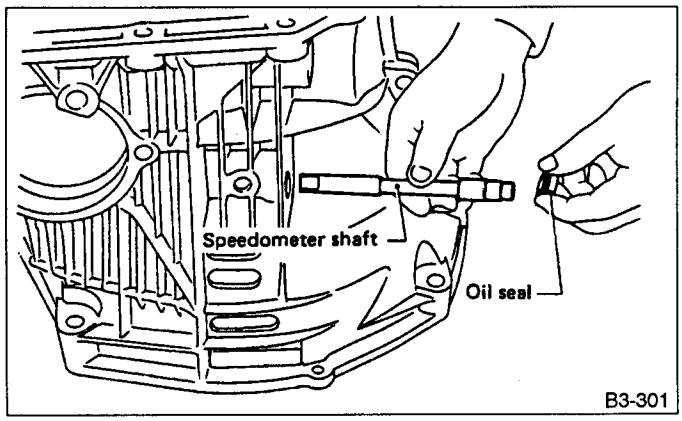

Fig. 168

5. EXTENSION SECTION

1) Take out the transfer clutch by lightly tapping the end of the rear drive shaft.

Be careful not to damage the oil seal in the extension.

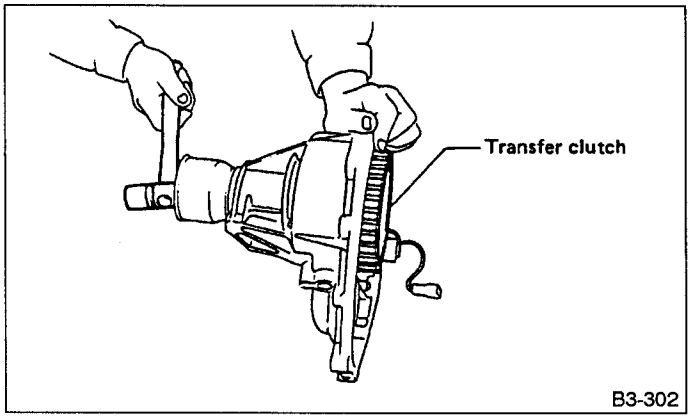

Fig. 169

2) Remove the transfer pipe.
Be careful not to bend the pipe.

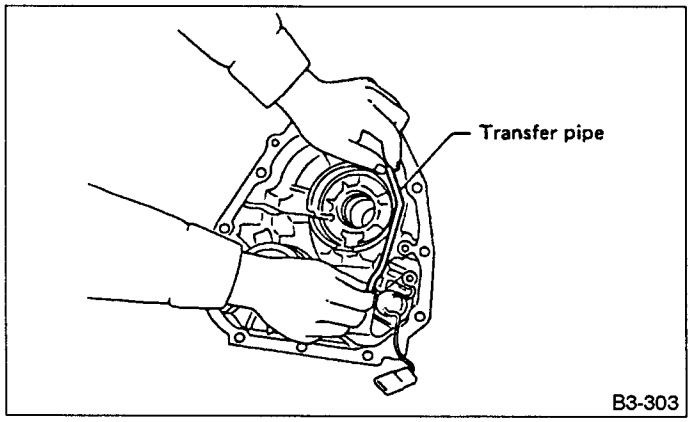

Fig. 170

3) Remove duty solenoid C and the transfer valve body.
a. Take out the inlet filter.
b. Do not damage the O-ring.

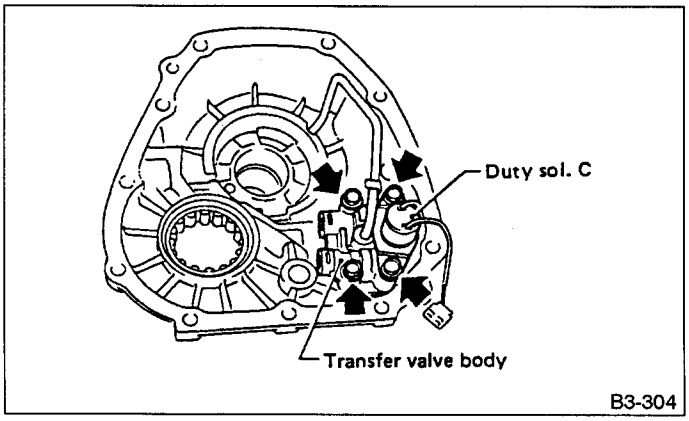

Fig. 171

4) Take out the roller bearing.

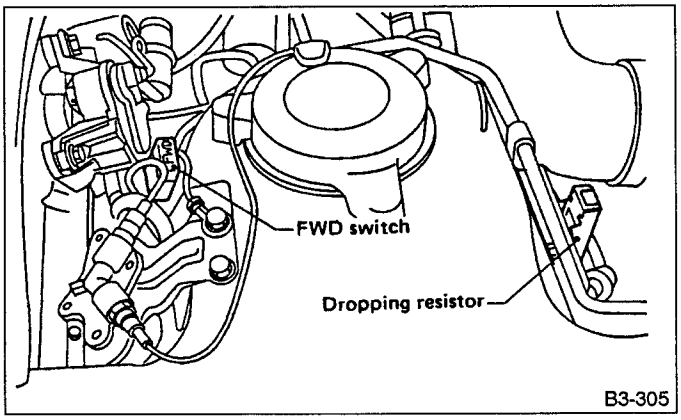

Fig. 172

B: ASSEMBLY OF OVERALL TRANSMISSION

1. CONVERTER CASE SECTION

1) Check the appearance of each component and clean.
Make sure each part is free of harmful cuts, damage and other faults.
2) Install the washer and snap ring to the speedometer shaft, and set the oil seal. Then force-fit the shaft to the converter case.

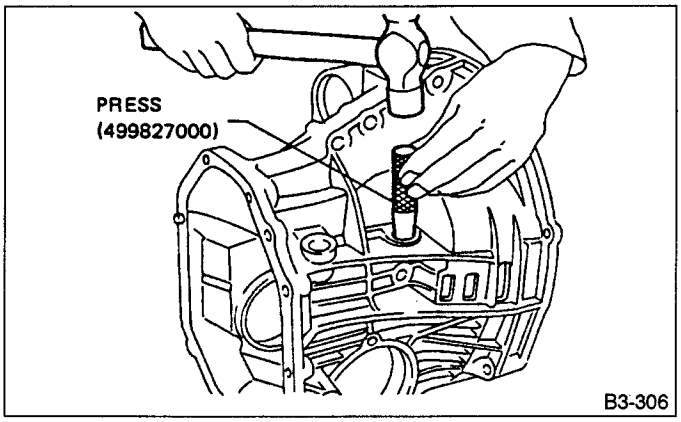

Fig. 173

3) Install the speedometer driven gear to the speedometer shaft, and secure with a snap ring.

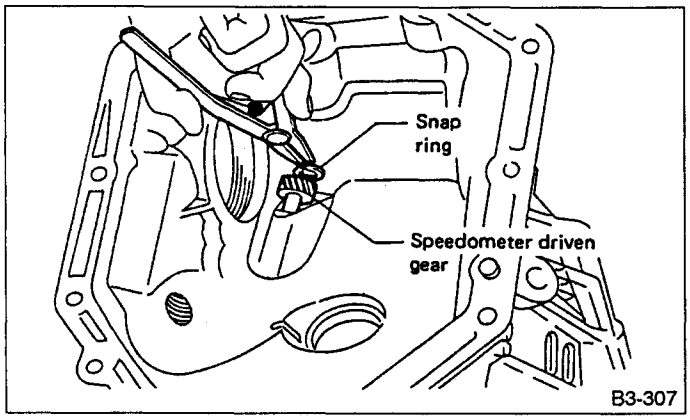

Fig. 174

4) Install the vehicle speed sensor 2.
a. Apply grease to the tip of the sensor key on its sensor side so that the key will not drop when assembling.
b. Fit the sensor key tip correctly in the key groove at the tip of the speedometer shaft in the converter case.
5) Force-fit the oil seal to the converter case.

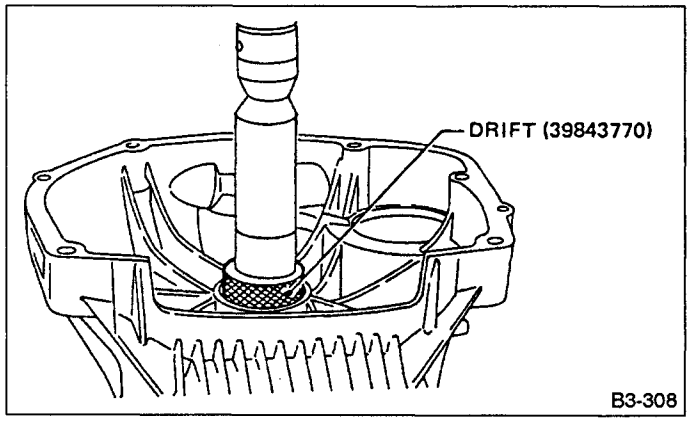

Fig. 175

6) Install the differential ASSY to the case, paying special attention not to damage the speedometer gears (drive and driven) and the inside of the case (particularly, the differential side retainer contact surface).
7) Install the circlip to the axle shaft, insert the shaft into the differential assembly, and tap it into position with a plastic hammer.

Thrust play:
Approx. 0.3 — 0.5 mm (0.012 — 0.020 in)

a. If no play is felt, check whether the shaft is fully inserted. If shaft insertion is correct, replace the axle shaft.
b. Be sure to use a new circlip.
8) Wrap vinyl tape around the splined portion of the axle shaft.
9) Install the oil seal and outer race (taper roller bearing) to the differential side retainer. Then screw in the retainer after coating the threads with oil.
a. Pay attention not to damage the oil seal lips.
b. Do not confuse the RH and LH oil seals.
c. Keep the O-ring removed from the retainer.
10) Using the HANDLE (499787000), screw in the retainer until light contact is felt.
Screw in the RH side slightly deeper than the LH side.
11) Hypoid gear backlash adjustment and tooth contact check
(1) Assemble the drive pinion assembly to the oil pump housing.
a. Be careful not to bend the shims.
b. Be careful not to force the pinion against the housing bore.

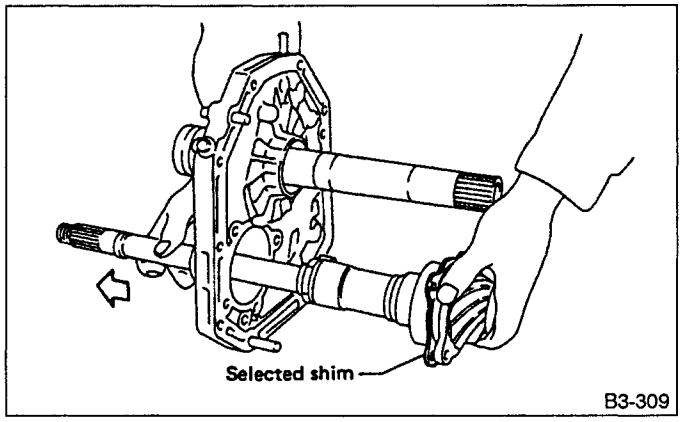

Fig. 176

(2) Tighten four bolts to secure the roller bearing.

Tightening torque:
36 — 42 N•m (3.7 — 4.3 kg-m, 27 — 31 ft-lb)

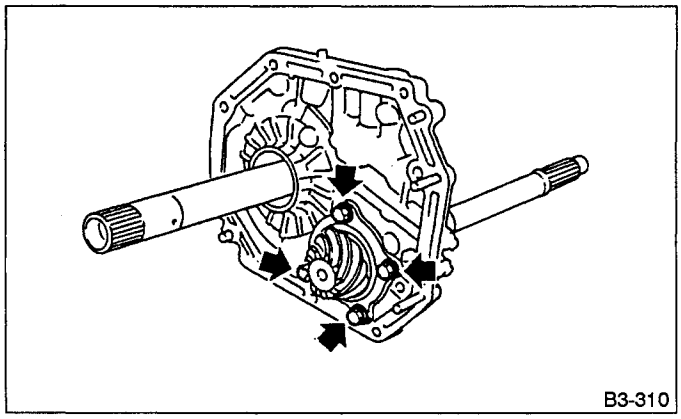

Fig. 177

(3) Install the oil pump housing assembly to the converter case, and secure evenly by tightening four bolts.

Tightening torque:
30 — 36 N•m (3.1 — 3.7 kg-m, 22 — 27 ft-lb)

a. Thoroughly remove the liquid gasket from the case mating surface beforehand.
b. Use an old gasket or an aluminium washer so as not to damage the mating surface of the housing.
(4) Rotate the drive pinion several times.

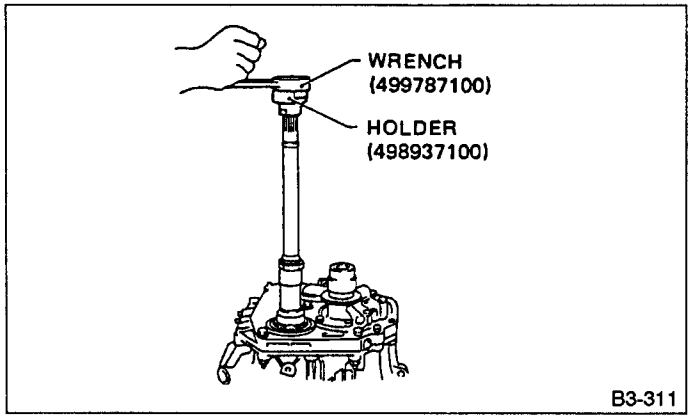

Fig. 178

(5) Tighten the LH retainer until contact is felt while rotating the shaft. Then loosen the RH retainer. Keep tightening the LH retainer and loosening the RH retainer until the pinion shaft can no longer be turned. This is the "zero" state.
(6) After the "zero" state is established, back off the LH retainer 3 notches and secure it with the locking tab. Then back off the RH retainer and retighten until it stops. Repeat this procedure several times. Tighten the RH retainer 1-3/4 notches further. This sets the preload. Finally, secure the retainer with its locking tab.

Turning the retainer by one tooth changes the backlash about 0.05 mm (0.0020 in).
(7) Turn the drive pinion several rotations and check to see if the backlash is within the standard value.

Backlash:
0.13 — 0.18 mm (0.0051 — 0.0071 in)

After confirming that the backlash is correct, check the tooth contact.

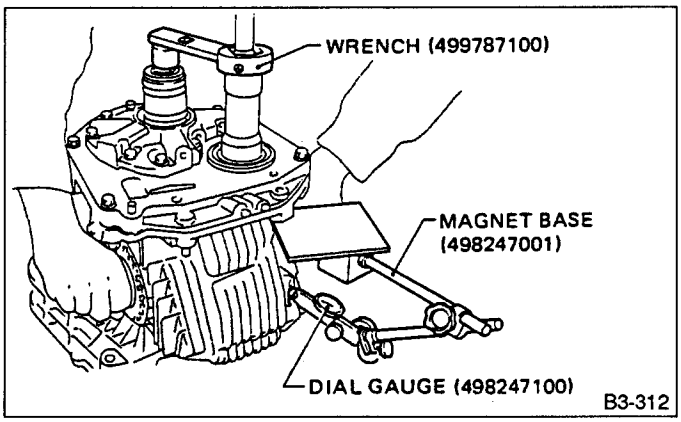

Fig. 179

(8) Apply red lead evenly to the surfaces of three or four teeth of the crown gear. Rotate the drive pinion in the forward and reverse directions several times. Then remove the oil pump housing, and check the tooth contact pattern.
If tooth contact is improper, readjust the backlash or shim thickness.

➡ : Adjusting direction of drive pinion ⇨ : Adjusting direction of crown gear

Checking item	Contact pattern	Corrective action
Correct tooth contact Tooth contact pattern slightly shifted toward toe under no-load rotation. (When loaded, contact pattern moves toward heel.)	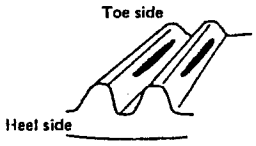	
Face contact Backlash is too large.	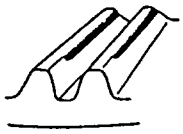 This may cause noise and chipping at tooth ends.	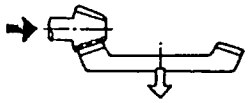 Increase thickness of drive pinion height adjusting shim in order to bring drive pinion close to crown gear.
Flank contact Backlash is too small.	 This may cause noise and stepped wear on surfaces.	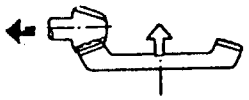 Reduce thickness of drive pinion height adjusting shim in order to move drive pinion away from crown gear.
Toe contact (Inside end contact)	 Contact area is small. This may cause chipping at toe ends.	Adjust as for flank contact. 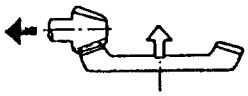
Heel contact (Outside end contact)	Contact area is small. This may cause chipping at heel ends. 	Adjust as for face contact. 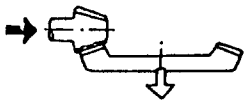

B3-313

Fig. 180

(9) If tooth contact is correct, mark the retainer position and loosen it. After fitting the O-ring, screw in the retainer to the marked position. Then tighten the lock plate to the specified torque.

Tightening torque:
23 — 26 N•m (2.3 — 2.7 kg-m, 17 — 20 ft-lb)

12) Install the seal pipe to the converter case.
Be sure to use a new seal pipe.

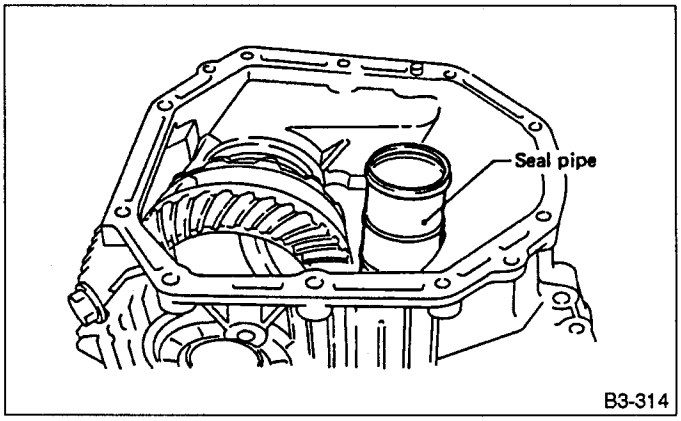

B3-314

Fig. 181

13) Install two oil seals to the oil seal retainer with INSTALLER (499247300).

a. Pay attention to the orientation of the oil seals.
b. Be careful not to damage the seal lips. If any damage is found, replace with a new one.
14) Attach the O-ring to the oil seal retainer with vaseline. Install the seal to the oil pump housing bore.

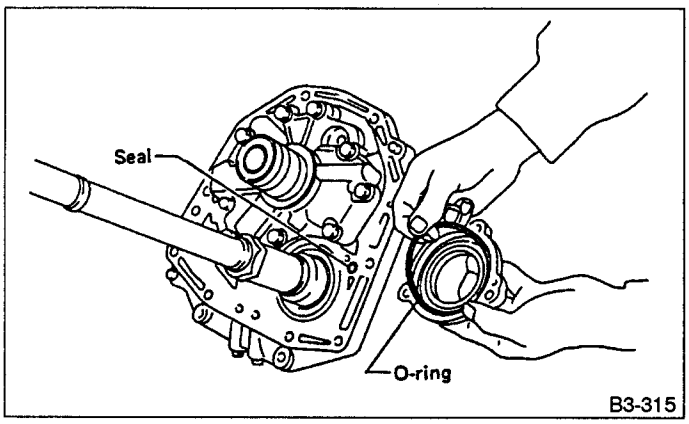

Fig. 182

15) Install the oil seal retainer taking care not to damage the oil seal lips. Then secure with three bolts.
Make sure the O-ring is fitted correctly in position.

Tightening torque:
6 — 8 N•m (0.6 — 0.8 kg-m, 4.3 — 5.8 ft-lb)

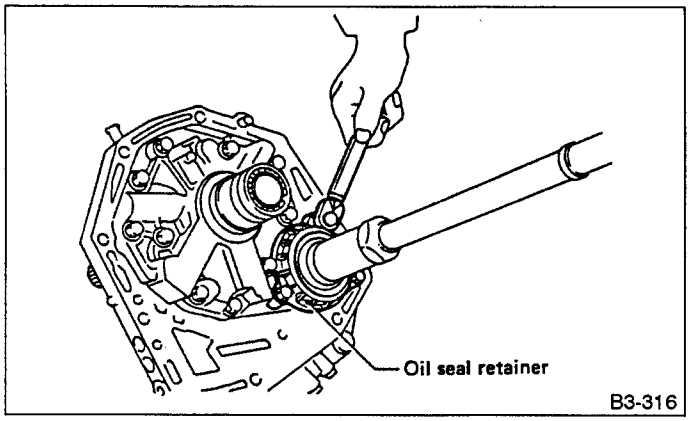

Fig. 183

16) Apply vaseline to the groove on the oil pump cover, and install two (R) seal rings and two (H) seal rings.
a. Fit the seal ring after compressing, and rub vaseline into the seal ring to avoid expansion.
b. The "R" seal ring has a large diameter, while "H" has small diameter.

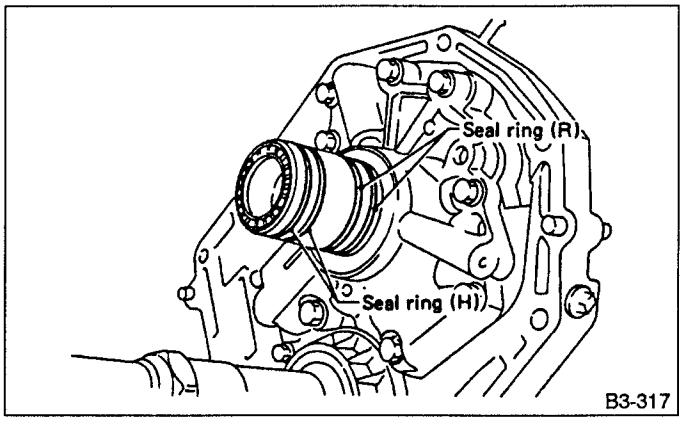

Fig. 184

17) Install the rubber seal to the converter case.
Be careful not to lose the rubber seal.

2. TRANSMISSION CASE SECTION

1) Press-fit the roller bearing to the transmission case.

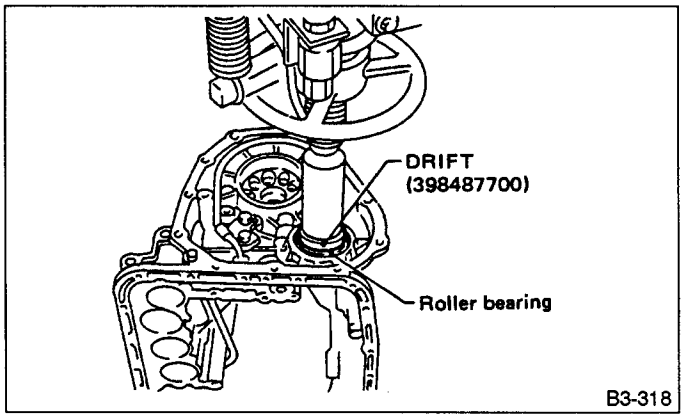

Fig. 185

2) Using a plastic hammer, force-fit the oil seal.

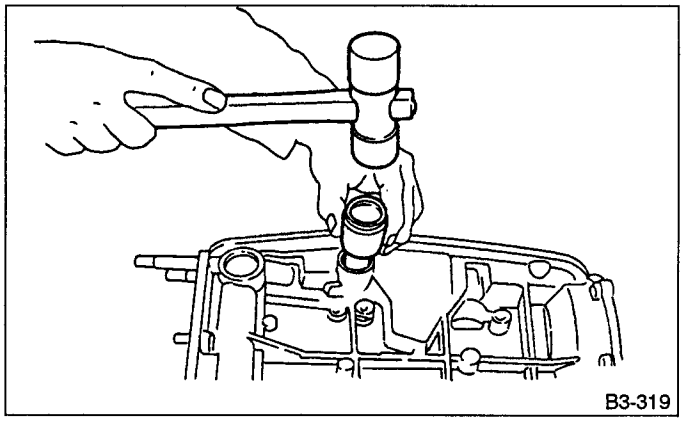

Fig. 186

3) Install the manual plate and shaft, and secure with a spring pin.
a. Be careful not to damage the oil seal lip.
b. After installation, make sure of smooth movement.

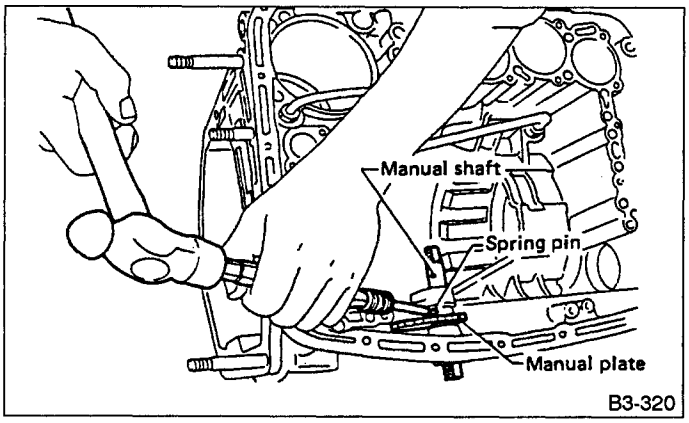

Fig. 187

4) Assemble the manual lever and parking rod to the inside shaft, and secure with a nut.

Tightening torque:
36 — 42 N•m (3.7 — 4.3 kg-m, 27 — 31 ft-lb)

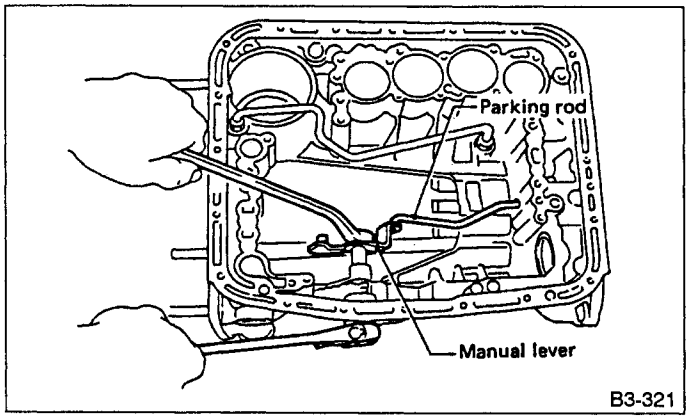

Fig. 188

5) Install the detent manual spring.
Position the spring so that its center is aligned with the center of the manual plate.

Tightening torque:
5 — 7 N•m (0.5 — 0.7 kg-m, 3.6 — 5.1 ft-lb)

6) Install the lathe cut seal ring and lip seal to the I.D./O.D. of the low & reverse piston. Then install the piston into the case with a press.
a. Be careful not to tilt the piston when installing.
b. Be careful not to damage the lip seal.

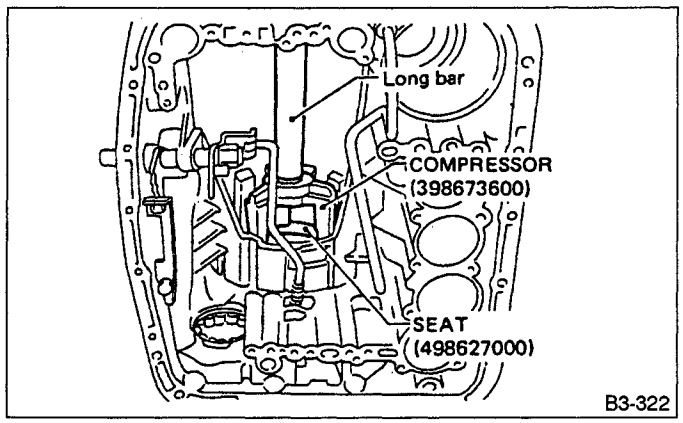

Fig. 189

7) Install the one-way clutch inner race.
(1) Using a press, install the thrust needle bearing to the inner race.

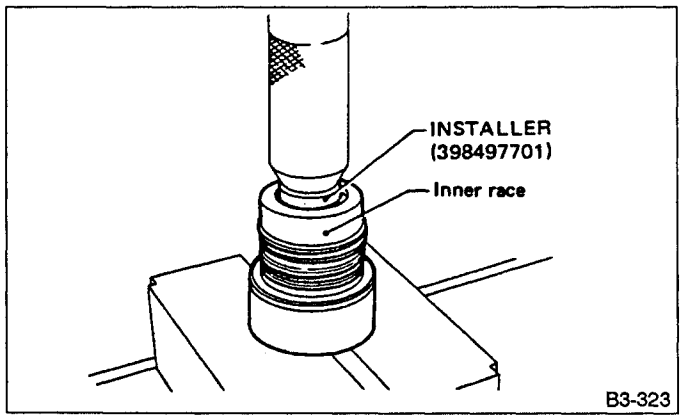

Fig. 190

Use the PULLER ASSY (398527700) when removing.
(2) Install four seal rings.
Apply vaseline to the groove of the inner race and to the seal ring after installation, so that the seal ring will not expand.
(3) Place the spring retainer CP on the inner race. Install the spring to the recessed portion of the piston. Then tighten eight socket head bolts from the rear side of the transmission case.

Tightening torque:
23 — 26 N•m (2.3 — 2.7 kg-m, 17 — 20 ft-lb)

Be sure to tighten evenly.

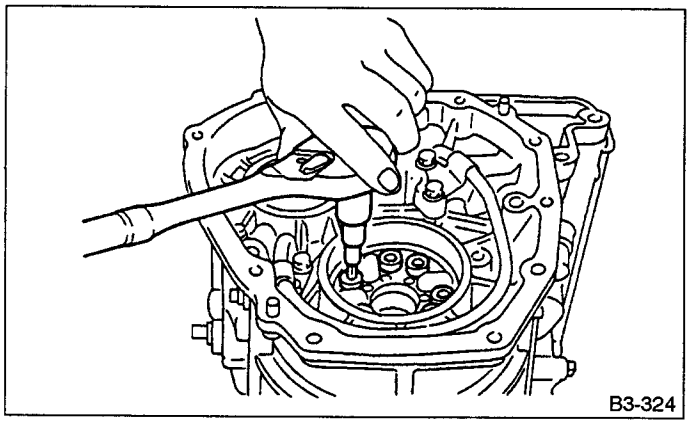

Fig. 191

8) Install the band servo sub ASSY.
9) Press the O.D. servo retainer into position, and secure with a snap ring.

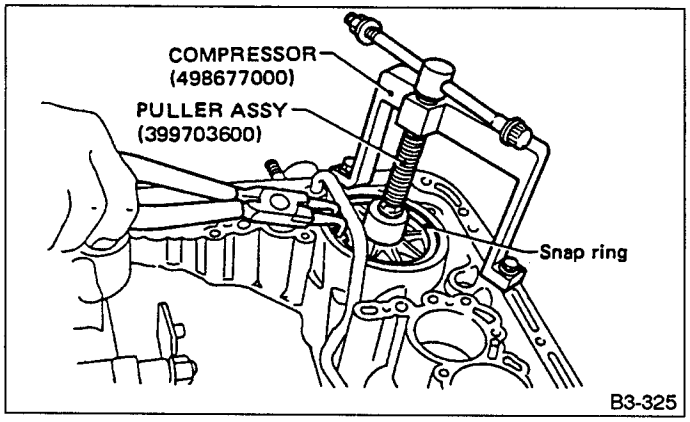

Fig. 192

- **Perform the following operations with the transmission case set vertically on wooden blocks.**

10) Installation of the low & reverse brake:

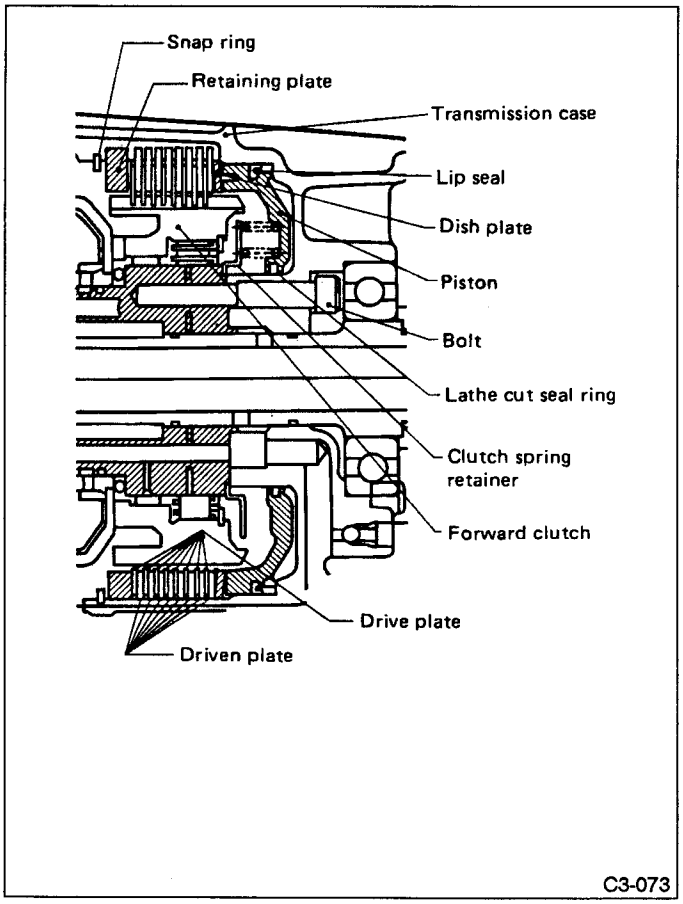

Fig. 193

(1) Install two dish plates, driven plates, drive plates, and a retaining plate, and secure with a snap ring.

a. Pay attention to the orientation of the dish plate.
b. Driven plate : 8
Drive plate : 8
c. Dish plate : 1

(2) Apply compressed air intermittently to check for operation.

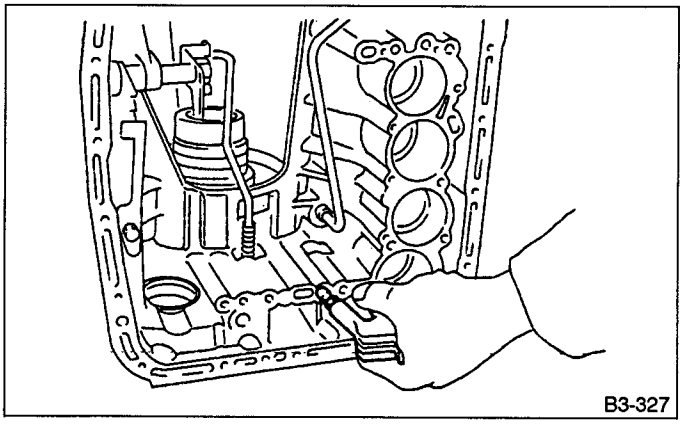

Fig. 194

(3) Check the clearance (Selection of retaining plate)

Standard value:
1.1 — 1.7 mm (0.043 — 0.067 in)
Allowable limit: 2.7 mm (0.106 in)

Before measuring clearance, place the same thickness of shim on both sides to prevent retaining plate from tilting.

- **Available retaining plates**

Part No.	Thickness mm (in)
31667AA180	6.5 (0.256)
31667AA190	6.8 (0.268)
31667AA200	7.1 (0.280)
31667AA210	7.4 (0.291)
31667AA220	7.7 (0.303)
31667AA230	8.0 (0.315)
31667AA240	8.2 (0.323)
31667AA250	8.4 (0.331)

11) Install the thrust needle bearing to the inner race.
12) Install the forward clutch drum ASSY.
(1) Install carefully while rotating the drum slowly paying special attention not to damage the seal ring.
(2) Installation is complete when the drum recedes 2.5 mm (0.098 in) from the inner race surface.

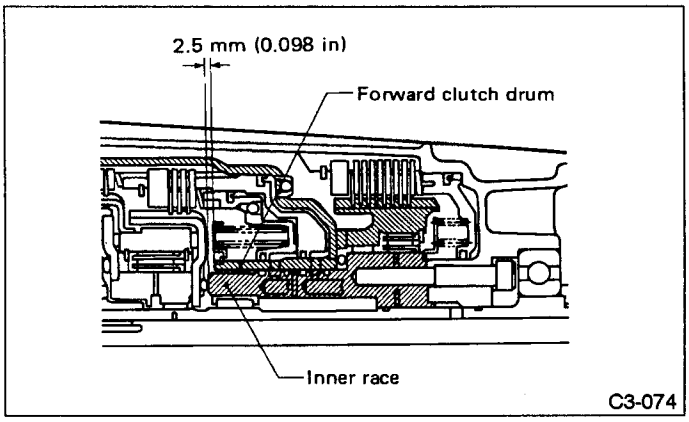

Fig. 195

13) Assemble the overrunning clutch hub.
a. Join the thrust needle bearing and thrust washer with vaseline, and then install them together.
b. Make sure that the splines are engaged correctly.

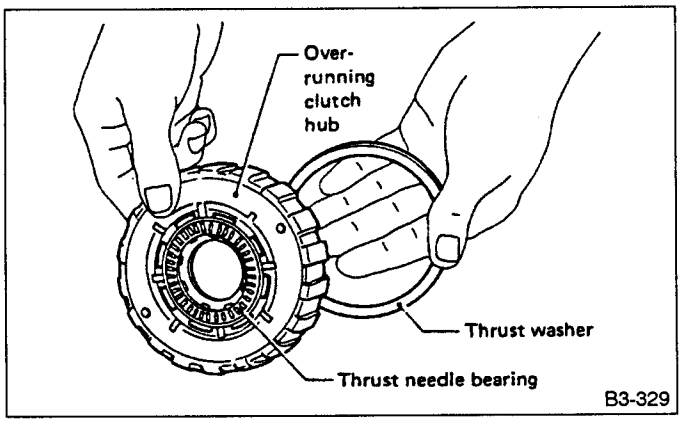

Fig. 196

14) Install the one-way clutch outer race ASSY.
Make sure the forward clutch splines are engaged correctly.

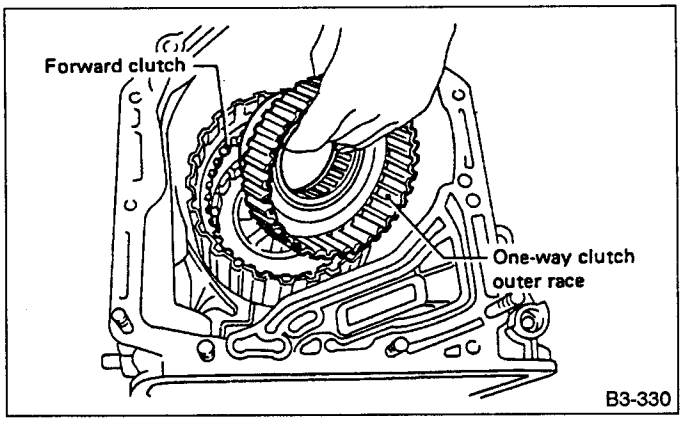

Fig. 197

15) Assemble the rear internal gear.
(1) Join the thrust needle bearing and thrust washer to the gear with vaseline, and install the gear while rotating it.
(2) Securely engage the bearing with the dog of the overrunning clutch hub.
Installation is complete when the snap ring top surface of the forward clutch drum recedes approximately 3.5 mm (0.138 in).

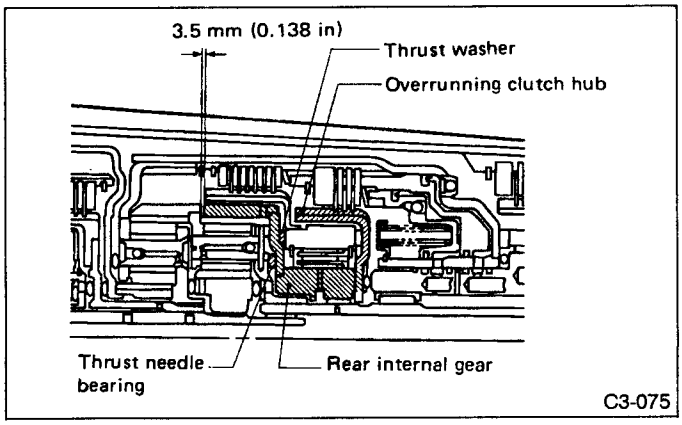

Fig. 198

16) Install the rear planetary carrier.
Attach the thrust needle bearing to the inside of the carrier with vaseline. Then install the carrier while rotating slowly.

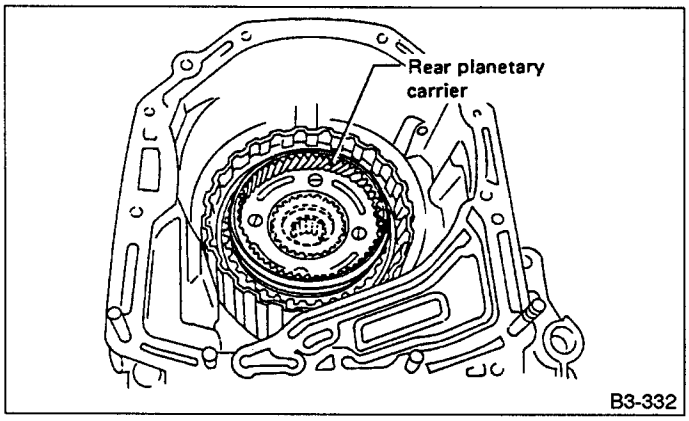

Fig. 199

17) Install the rear sun gear.
Install the gear with the oil hole facing up.

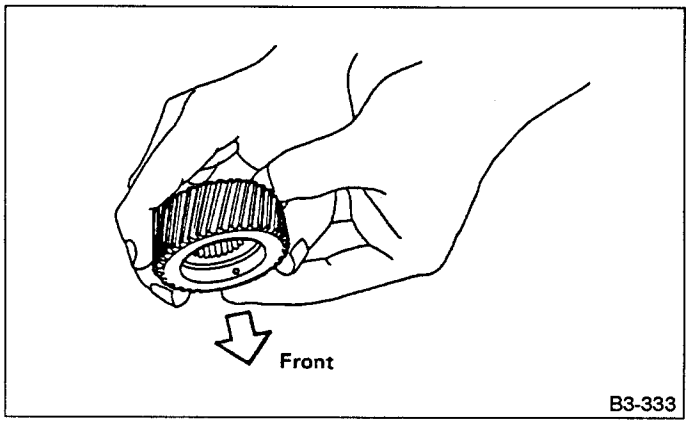

Fig. 200

18) Install the front planetary carrier.
Attach the thrust needle bearings to both sides of the carrier with vaseline. Install the carrier carefully, while aligning with the splines of the forward clutch drum, and while rotating the pinion.

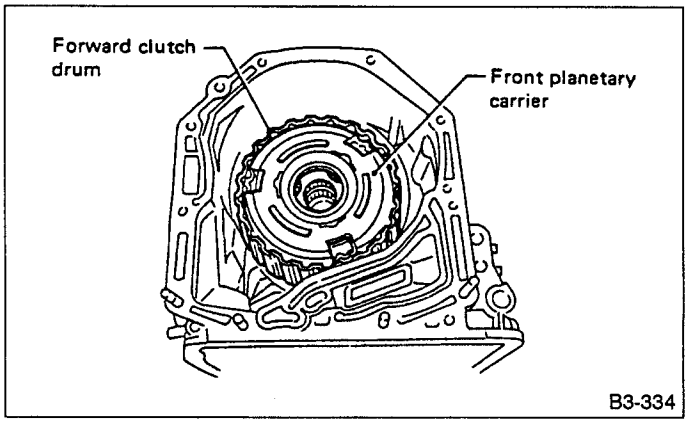

Fig. 201

19) Install the front sun gear.
Attach the thrust needle bearing to the gear, and install the gear while turning slowly.

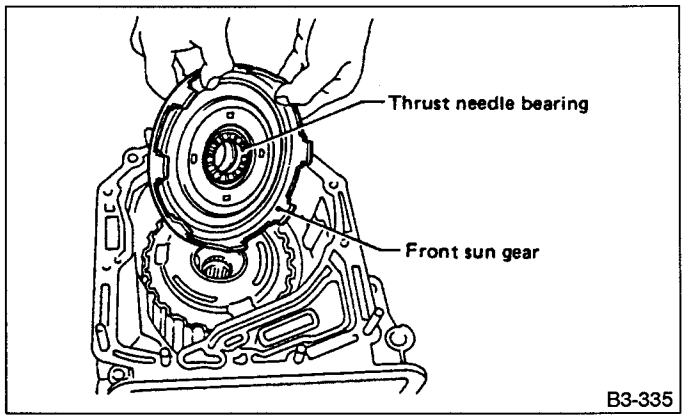

Fig. 202

20) Install the high clutch hub.
Attach the thrust needle bearing to the hub with vaseline and install the hub by correctly engaging the splines of the front planetary carrier.

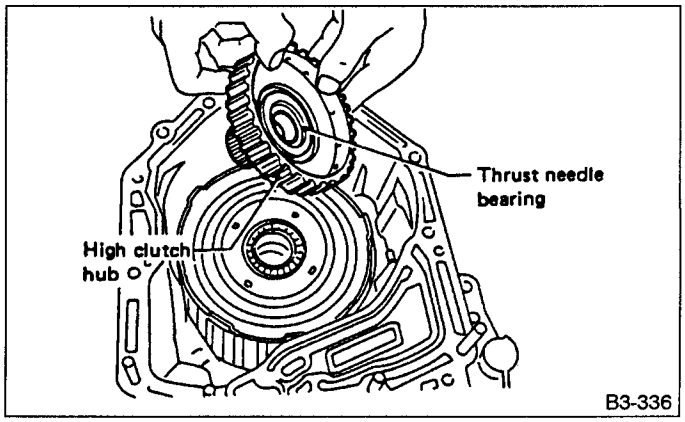

Fig. 203

21) Install the high clutch ASSY.
Correctly engage the high clutch hub and clutch splines.

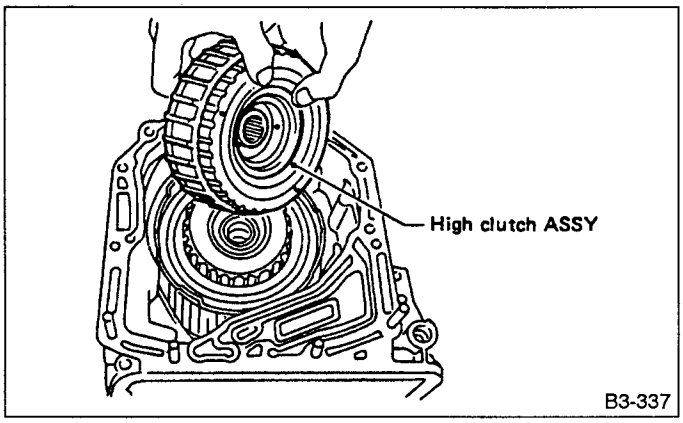

Fig. 204

22) Install the reverse clutch ASSY.

Engage the high clutch outer spline with the reverse clutch spline and the front sun gear with the cut-out portion of the reverse clutch drum correctly when installing.

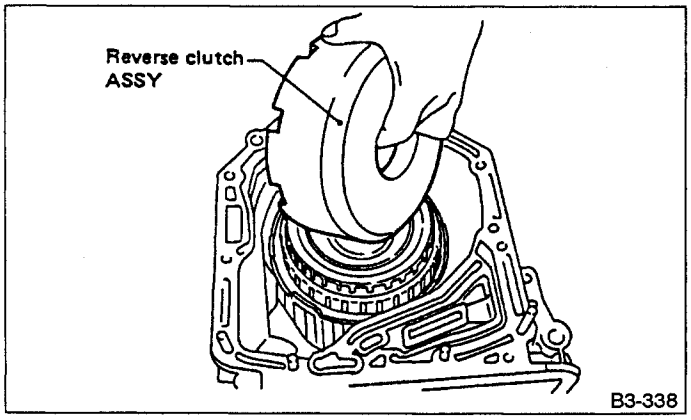

Fig. 205

23) Install the brake band ASSY.

a. Be careful not to damage the brake band when installing.

b. Install the strut to the band servo piston stem. Then tighten it temporarily to avoid tilting the band.

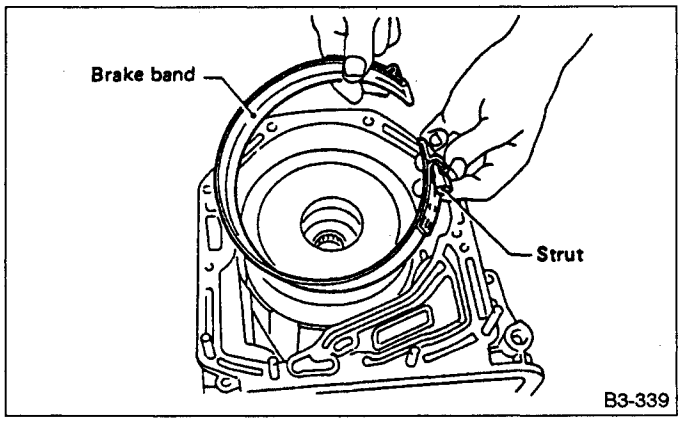

Fig. 206

24) Adjustment of total end play and reverse clutch end play

(1) Measure the distance from the transmission case mating surface to the recessed portion of the high clutch drum "L", and the distance to the top surface of the reverse clutch drum "M".

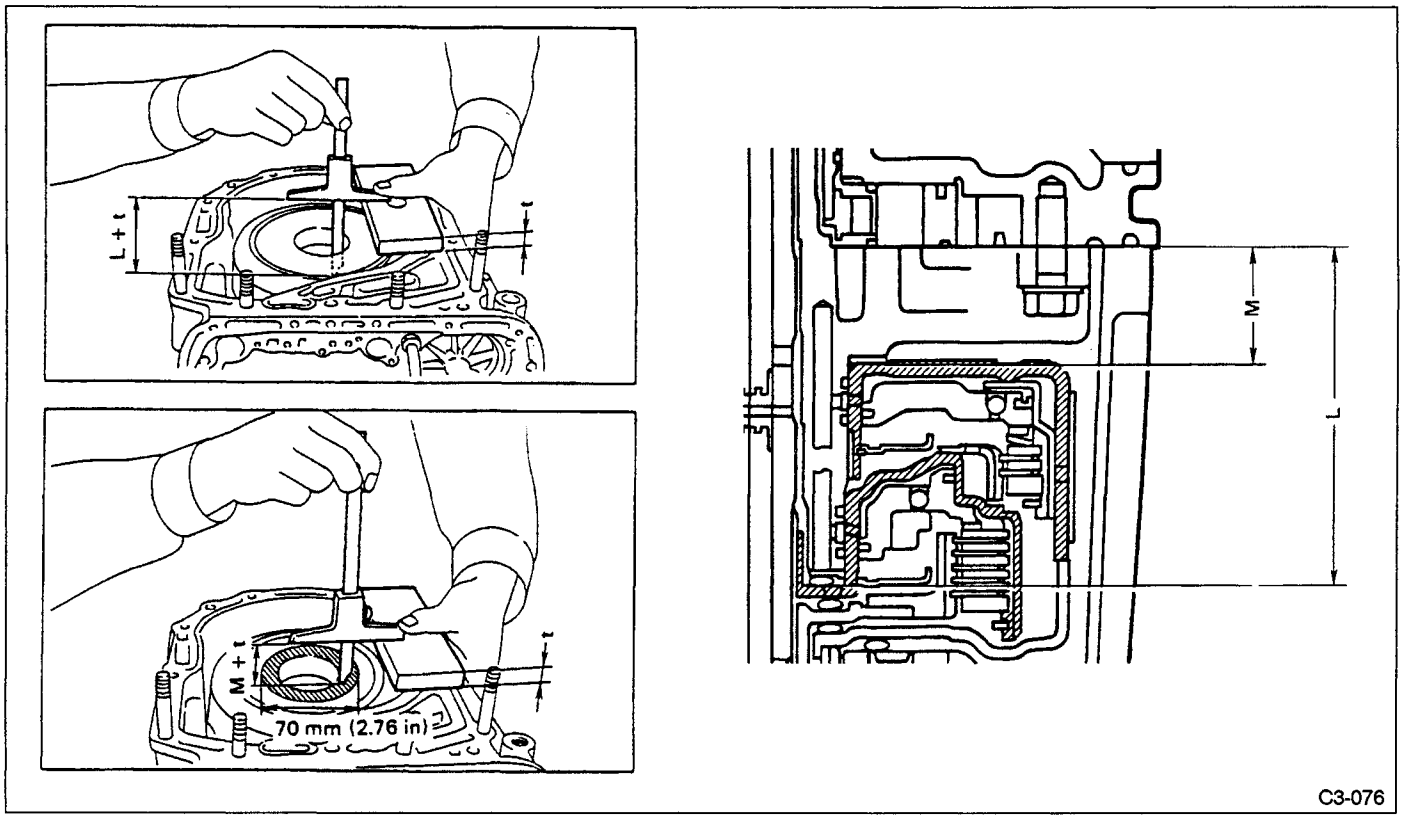

Fig. 207

(2) Measure the distance from the oil pump housing mating surface to the top surface of the oil pump cover with needle bearing, and to the thrust surface of the reverse clutch.

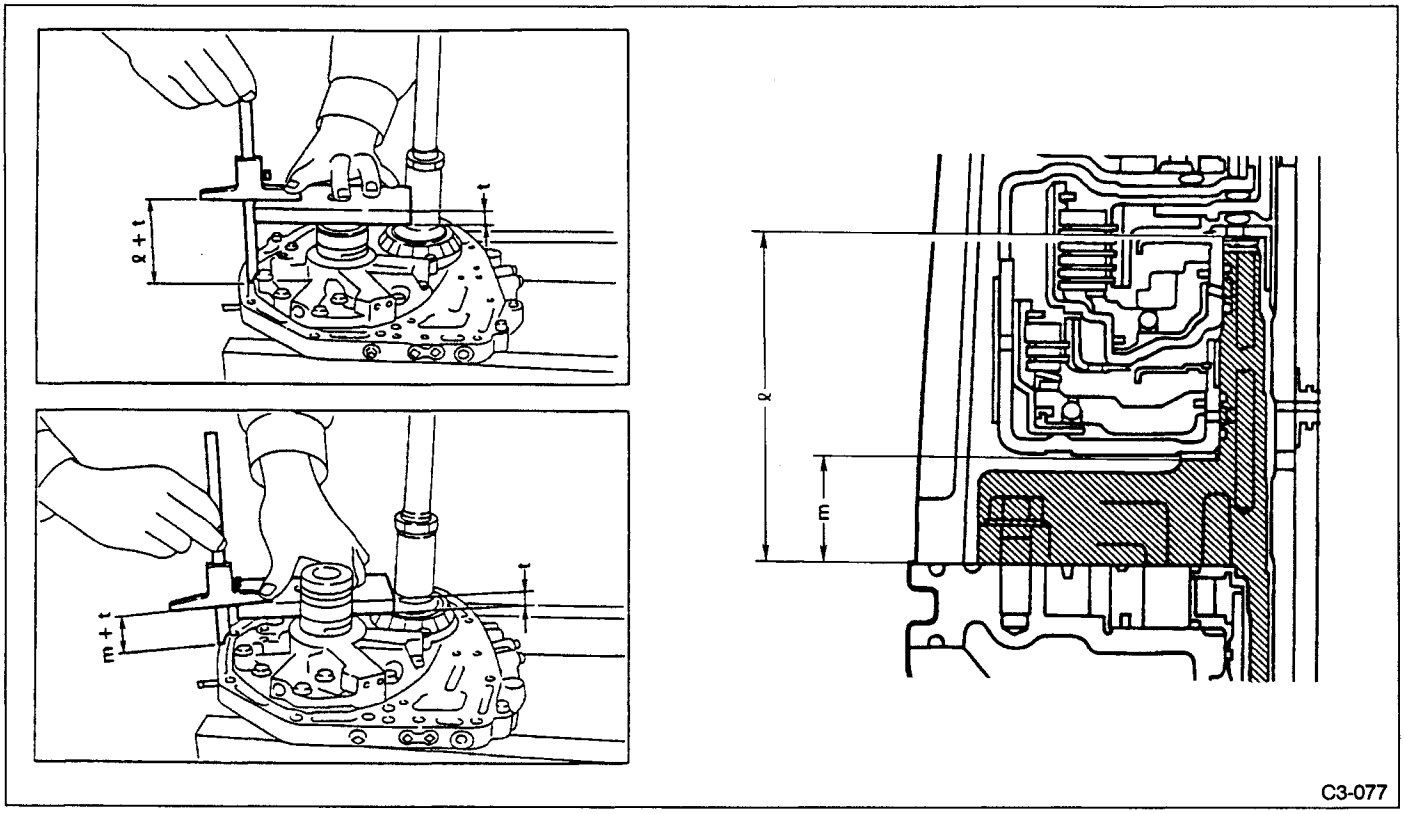

Fig. 208

(3) Equation for calculation

- Total end play — Unit: mm

$$C = (L + 0.4) - \ell$$

C : Clearance between concave portion of high clutch and end of clutch drum support
L : Length from case mating surface to concave portion of high clutch
0.4 : Gasket thickness
ℓ : Height from housing mating surface to upper surface of clutch drum support

Select suitable bearing race from among those listed in the following table so that clearance C is in the 0.25 — 0.55 mm (0.0098 — 0.0217 in) range.

Part No.	Thickness mm (in)
803031021	0.8 (0.031)
803031022	1.0 (0.039)
803031023	1.2 (0.047)
803031024	1.4 (0.055)
803031025	1.6 (0.063)
803031026	1.8 (0.071)
803031027	2.0 (0.079)

- Reverse clutch end play — Unit: mm

$$C = (M + 0.4) - m$$

C : Clearance between oil pump housing hose and end of reverse clutch
M : Distance from case mating surface to upper surface of reverse clutch
0.4 : Gasket thickness
m : Height from housing mating surface to thrust-receiving area of reverse clutch

Select suitable thrust washer from among those listed in the following table so that clearance C is in the 0.55 — 0.9 mm (0.0217 — 0.0354 in) range.

Part No.	Thickness mm (in)
31299AA000	0.7 (0.028)
31299AA010	0.9 (0.035)
31299AA020	1.1 (0.043)
31299AA030	1.3 (0.051)
31299AA040	1.5 (0.059)
31299AA050	1.7 (0.067)
31299AA060	1.9 (0.075)

25) Install the oil pump housing ASSY.
(1) After completing end play adjustment, insert the bearing race* in the recess of the high clutch. Attach the thrust washer and thrust needle bearing to the oil pump cover with vaseline.

(2) After correctly installing the gasket to the case mating surface, carefully install the oil pump housing ASSY. Be careful to avoid hitting the drive pinion against the inside of the case.

a. Be careful not to damage the seal ring.

b. Be sure to use a new gasket.

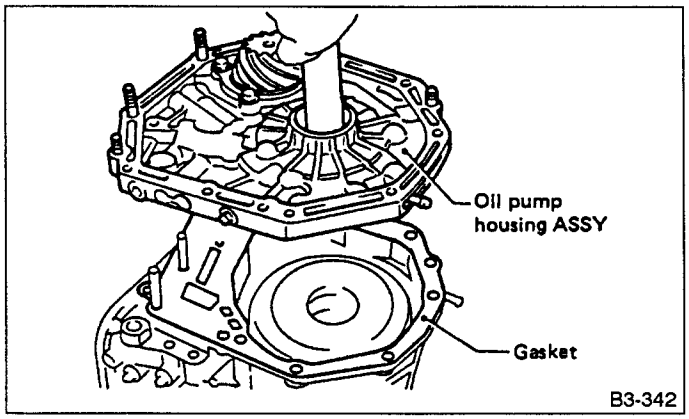

Fig. 209

(3) Install both parts with dowel pins aligned. Make sure no clearance exists at the mating surface.

Any clearance suggests a damaged seal ring.

(4) Secure the housing with two nuts.

Tightening torque:
38 — 44 N•m (3.9 — 4.5 kg-m, 28 — 33 ft-lb)

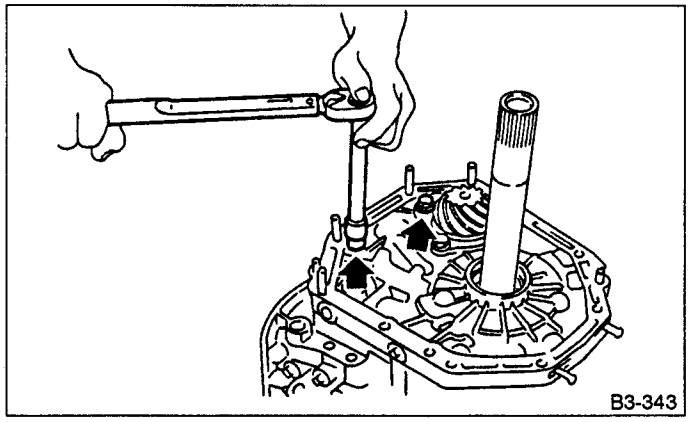

Fig. 210

3. CONVERTER CASE AND TRANSMISSION CASE

1) Apply proper amount of liquid gasket (Three-bond #1215) to the entire converter case mating surface.

Make sure that the rubber seal and seal pipe are fitted in position.

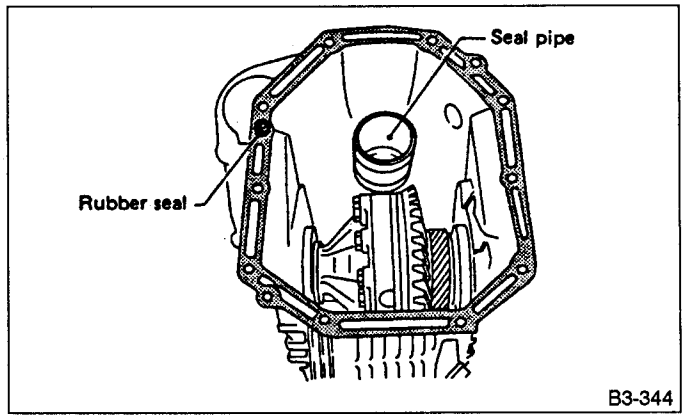

Fig. 211

2) Install the converter case ASSY to the transmission case ASSY, and secure with six bolts and four nuts.

Tightening torque:
34 — 40 N•m (3.5 — 4.1 kg-m, 25 — 30 ft-lb)

When installing, be careful not to damage the converter case bushing and oil seal.

4. CONTROL VALVE AND OIL PAN

1) Install four accumulators with oil pans facing upward.

Be careful not to confuse the springs and installation positions.

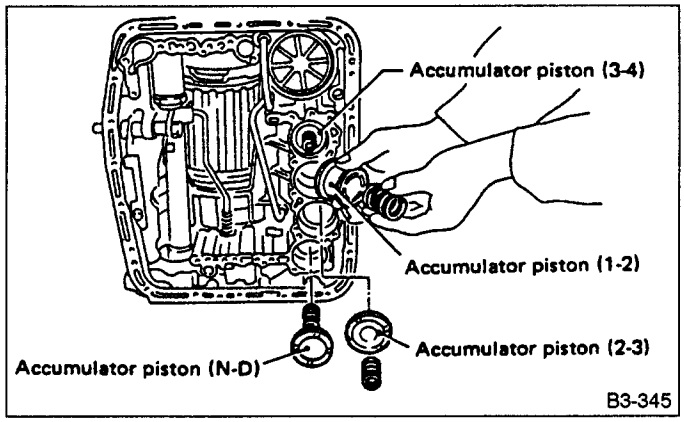

Fig. 212

- Spring spec.

Unit: mm (in)

Accumulator spring	Outer diameter	Free length
1 — 2	28.5 (1.122)	44.5 (1.752)
2 — 3	20.5 (0.807)	31.0 (1.220)
3 — 4	17.3 (0.681)	43.7 (1.720)
N — D	17.8 (0.701)	36.5 (1.437)

2) Install and route the transmission harness.

Be careful not to damage the harness.

3) Install the control valve ASSY.

(1) Set the selector lever in range "2".

(2) Install the control valve by engaging the manual valve and manual lever, then tighten the 19 bolts.

Tightening torque:
7 — 9 N•m (0.7 — 0.9 kg-m, 5.1 — 6.5 ft-lb)

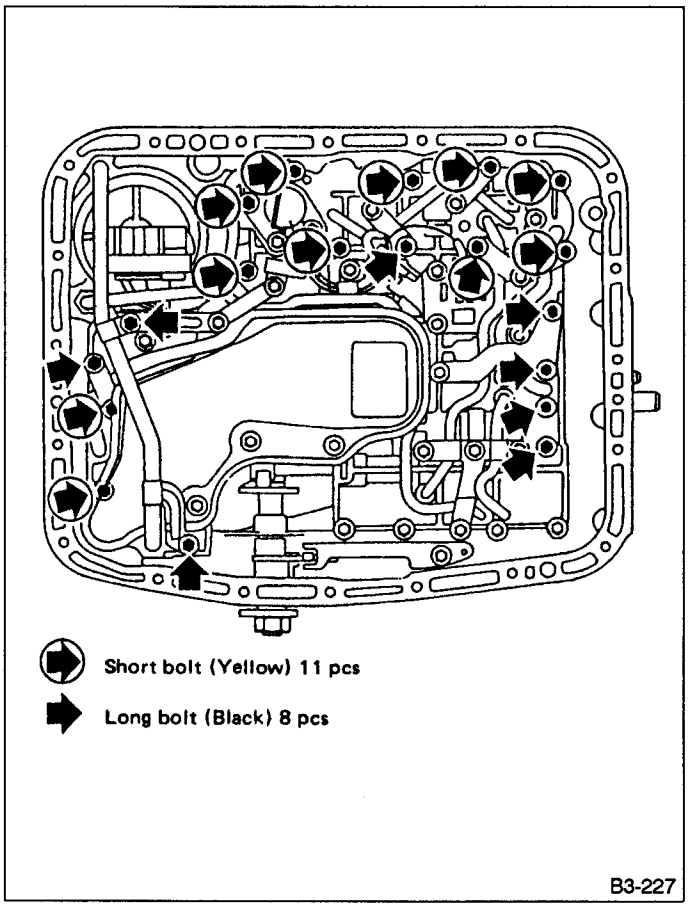

Fig. 213

a. Be careful not to pinch the harness roll the gasket.
b. Tighten the control valve mounting bolts evenly.
4) Install the oil strainer to the control valve. Be careful not to cut or break the O-ring. Then tighten bolts.

Tightening torque:
7 — 9 N•m (0.7 — 0.9 kg-m, 5.1 — 6.5 ft-lb)

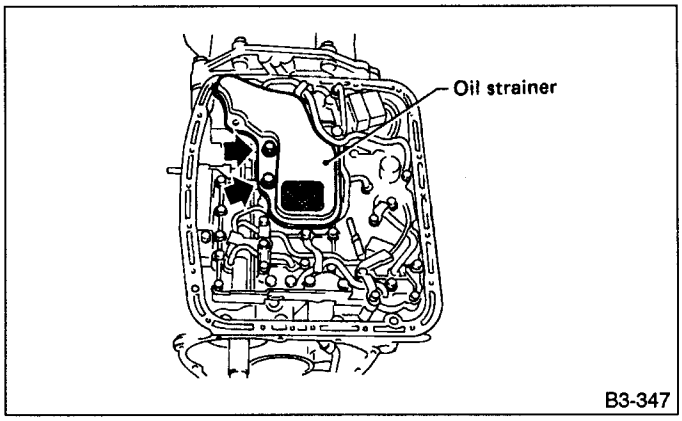

Fig. 214

5) Secure five connectors.

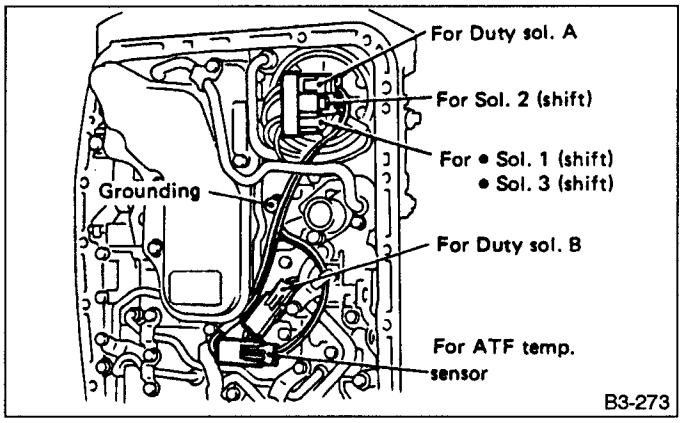

Fig. 215

6) Install the oil cooler outlet pipe, and secure with two bolts.

Tightening torque:
7 — 9 N•m (0.7 — 0.9 kg-m, 5.1 — 6.5 ft-lb)

Fit the pipe into position. Be careful to avoid twisting.
7) Install the oil pan.
(1) Attach the magnet at the specified position.

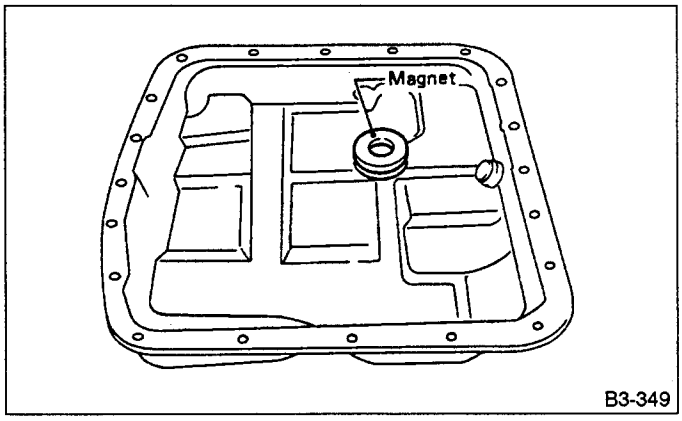

Fig. 216

Tightening torque:
3.4 — 4.4 N•m (0.35 — 0.45 kg-m, 2.5 — 3.3 ft-lb)

Tighten the bolts evenly.

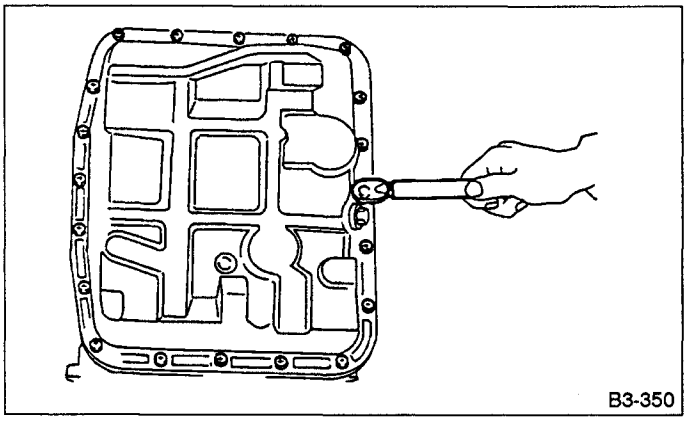

Fig. 217

5. EXTENSION SECTION

When installing new oil seal into extension case, press it with INSTALLER (498057300).

1) Install the filter in the extension case.
Pay attention to the orientation of the filter.
2) Install the transfer clutch valve ASSY, and secure with four bolts.

Tightening torque:
7 — 9 N•m (0.7 — 0.9 kg-m, 5.1 — 6.5 ft-lb)

a. Be sure to tighten the going lead with one of these bolts.
b. Be sure to use a new gasket.
3) Install the pipe, and clamp securely.
4) Install the transfer clutch assembly to the case.
a. Be careful not to damage the seal rings.
b. Insert the clutch assembly fully into position until the bearing shoulder bottoms.

6. CONNECTION OF EACH SECTION

1) Install the reduction driven gear.
2) Install the parking pawl and shaft, set the selector lever in the "P" range and tighten the drive pinion lock nut.

Tightening torque:
93 — 103 N•m (9.5 — 10.5 kg-m, 69 — 76 ft-lb)

After tightening, stake the lock nut securely.
3) Install the reduction drive gear ASSY.

Insert it fully into position until the bearing shoulder bottoms.
4) Measurement and adjustment of extension end play
(1) Measure distance L from end of extension case and rear drive shaft.

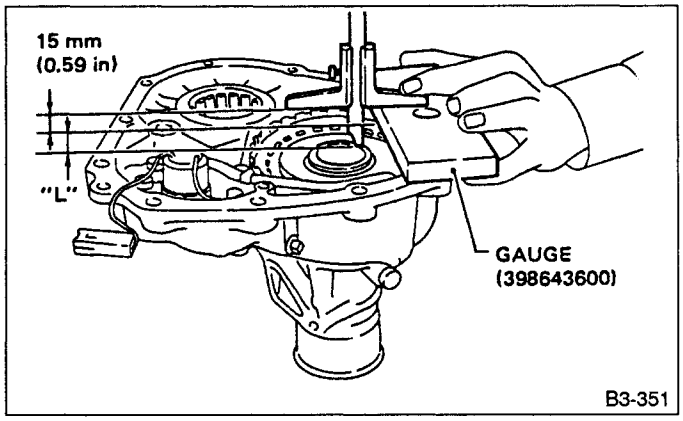

Fig. 218

L = Measured value — 15

(2) Measure the distance "ℓ" from the transmission case mating surface to the reduction drive gear end surface.

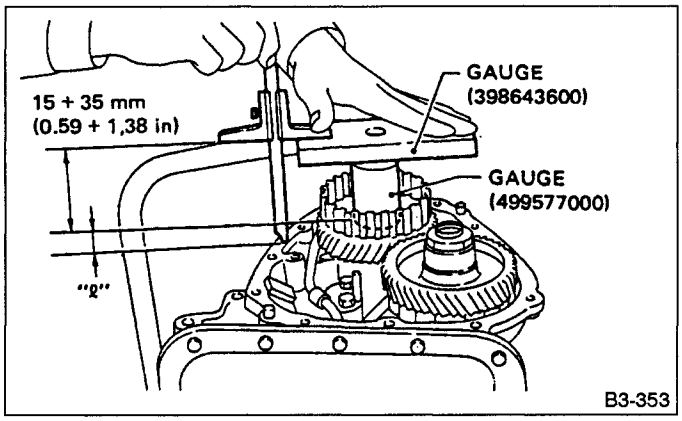

Fig. 219

ℓ = Measured value — 50

(3) Calculation equation: Unit: mm

T = (L + 0.4) — ℓ

T : Clearance between end of reduction drive gear and end of rear drive shaft.

L : Distance from end of extension case to end of rear drive shaft.
0.4 : Gasket thickness
ℓ : Height from end of transmission case to end of reduction drive gear.

Select suitable thrust needle bearing from among those listed in the following table to adjust clearance in the 0.50 — 0.2 mm (0.0197 — 0.0079 in) range.

- AWD: Thrust needle bearing

Part No.	Thickness mm (in)
806535020	3.8 (0.150)
806535030	4.0 (0.157)
806535040	4.2 (0.165)
806535050	4.4 (0.173)
806535060	4.6 (0.181)
806535070	4.8 (0.189)
806535090	5.0 (0.197)

Select from one to five shims so that clearance is within specifications.

5) Installation of extension case and transmission case.

AWD model:

(1) Attach the selected thrust needle bearing to the end- surface of reduction drive gear with vaseline.

(2) Set the parking return spring.

(3) Remove the transfer clutch from the extension case.

Set the needle bearing on the reduction drive shaft and then install transfer clutch to the transfer clutch hub. **Be sure to engage the spline teeth correctly.**

(4) With gasket inserted between them, install the extension case to the transmission case. (Be sure to use a new gasket.)

a. After inserting the extension case halfway, connect the connector for duty sol. C. Be careful not to jam the cord in the case.

b. Be careful not to damage the rear drive shaft seal ring.

(5) Tighten bolts to secure the case.

Tightening torque:
23 — 26 N•m (2.3 — 2.7 kg-m, 17 — 20 ft-lb)

7. EXTERNAL PARTS

1) Install the vehicle speed sensor 1.

Tightening torque:
6 — 8 N•m (0.6 — 0.8 kg-m, 4.3 — 5.8 ft-lb)

2) Installation and adjustment of inhibitor switch:

(1) Install the inhibitor switch to the transmission case. Fit the projecting portion of the switch in the recessed portion of the case, and tighten three bolts temporarily.

(2) Insert the range selector lever into the shaft, and tighten the nut.

Tightening torque:
36 — 42 N•m (3.7 — 4.3 kg-m, 27 — 31 ft-lb)

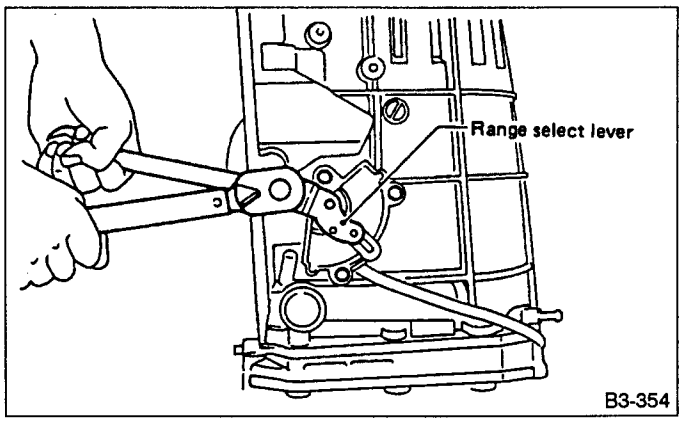

Fig. 220

(3) With the selector lever set to "N" adjust the inhibitor switch so that the hole of range selector lever is aligned with the inhibitor switch hole.

Ensure that gauge moves properly.

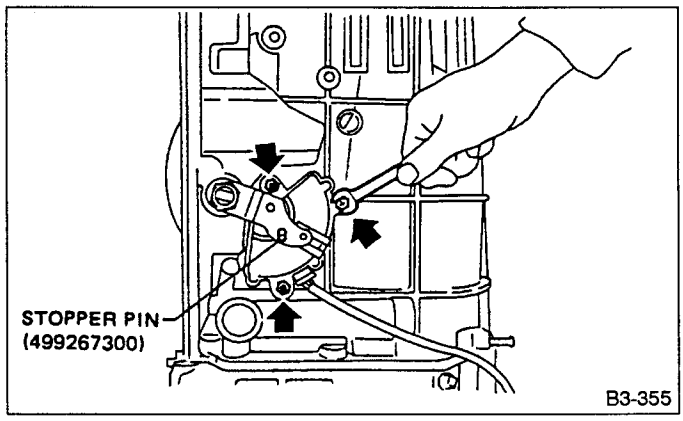

Fig. 221

(4) With hole aligned, tighten three bolts to secure the inhibitor switch.

Tightening torque:
2.9 — 3.9 N•m (0.30 — 0.40 kg-m, 2.2 — 2.9 ft-lb)

3) Connect the following cords and harness to bracket.
(1) Transmission harness
(2) Inhibitor switch cord
(3) Vehicle speed sensor 1 cord
4) Install the oil cooler outlet pipe.

Tightening torque:
27.5 — 34.3 N•m (2.80 — 3.50 kg-m, 20.3 — 25.3 ft-lb)

5) Install the oil cooler inlet pipe.

Tightening torque:
23 — 26 N•m (2.3 — 2.7 kg-m, 17 — 20 ft-lb)

Be sure to use a new aluminum washer.
6) Install the oil charge pipe.

Tightening torque: N•m (kg-m, ft-lb)
UPPER
34 — 40 (3.5 — 4.1, 25 — 30)
LOWER
5.9 — 6.9 (0.60 — 0.70, 4.3 — 5.1)

Be careful not to damage the O-ring.
7) Adjustment of brake band:
(1) After tightening the brake band adjusting screw to 9 N•m (0.9 kg-m, 6.5 ft-lb) torque, back it off three turns. Then secure with a lock nut.

Tightening torque:
25 — 28 N•m (2.5 — 2.9 kg-m, 18 — 21 ft-lb)

When tightening the lock nut, be careful not to turn the adjusting screw.
8) Install the pitching stopper bracket.

Tightening torque:
36 — 42 N•m (3.7 — 4.3 kg-m, 27 — 31 ft-lb)

9) Tighten the drain plugs.

Tightening torque: N•m (kg-m, ft-lb)
Diff.
41 — 47 (4.2 — 4.8, 30 — 35)
ATF
23 — 26 (2.3 — 2.7, 17 — 20)

10) Install the air breather hose.
11) Insert the input shaft while turning lightly by hand.
Be careful not to damage the bushing.

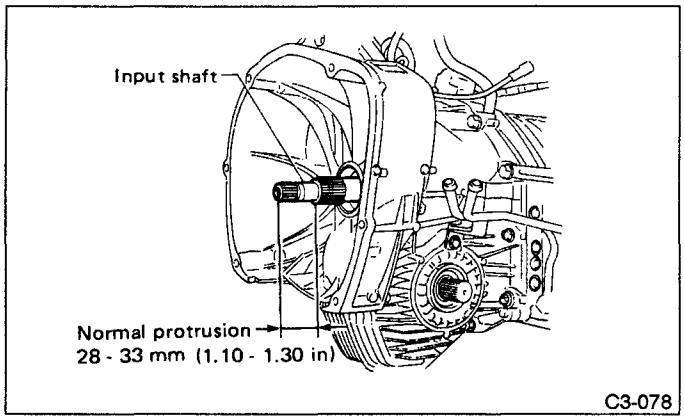

Fig. 222

12) Install the torque converter assembly.
(1) Install the oil pump shaft to the torque converter.
Make sure the clip fits securely in its groove.
(2) Holding the torque converter assembly by hand, carefully install it to the converter case. Be careful not to damage the bushing. Also, to avoid undue contact between the oil pump shaft bushing and stator shaft portion of the oil pump cover.
(3) Rotate the shaft lightly by hand to engage the splines securely.
13) Add oil:

Specified quantity ℓ (US qt, Imp qt)
Diff.
1.3 — 1.5 (1.4 — 1.6, 1.1 — 1.3)
ATF
9.5 — 9.8 (10.0 — 10.4, 8.4 — 8.6)

After adding oil, insert the oil level gauge into the oil inlet.

5. Reduction Drive Gear Assembly

A: DISASSEMBLY

1) Take out the seal rings.
Be careful not to damage the seal rings.

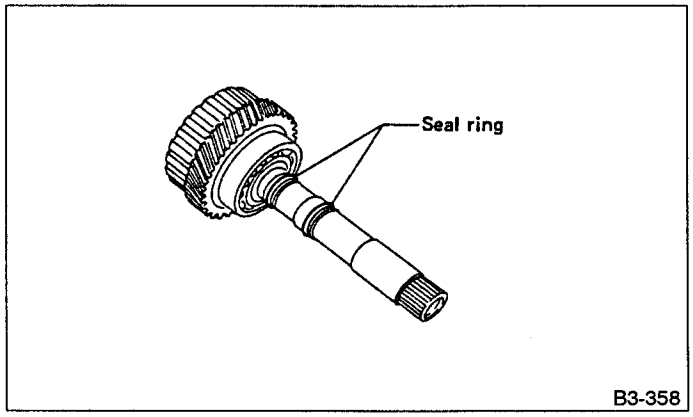

Fig. 223

2) Take out the snap ring (out).
Be careful not to damage the splines.
3) Using a press, remove the reduction drive gear.

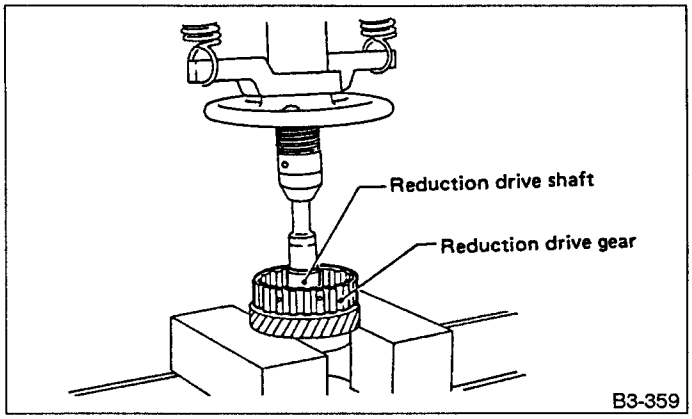

Fig. 224

4) Using a press, remove the ball bearing.

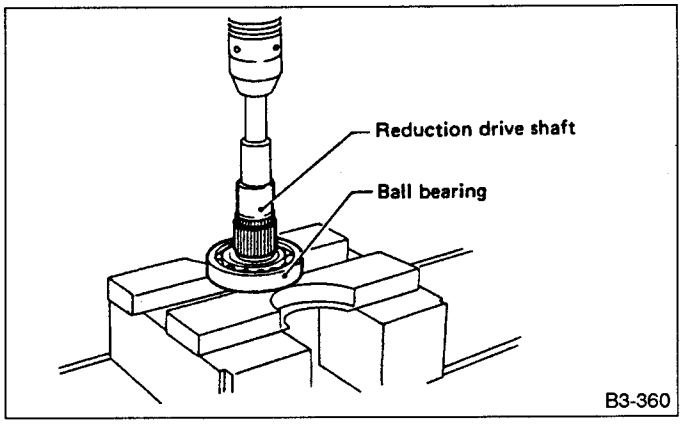

Fig. 225

B: INSPECTION

Make sure that each component is free of harmful gouges, cuts, or dust.

C: ASSEMBLY

1) Press-fit the ball bearing and reduction drive gear to the shaft.

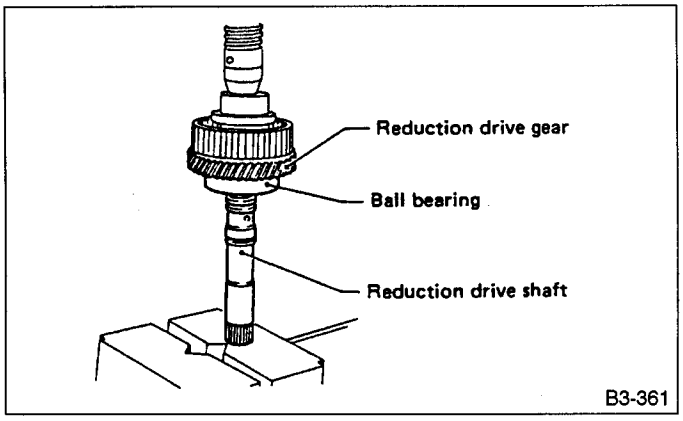

Fig. 226

2) Fit the snap ring securely in the snap ring grove on the shaft.
3) Attach two seal rings.
To make subsequent assembly easier, apply vaseline to the grooves of the shaft and to the exterior of the seal ring.

6. Control Valve Body

A: DISASSEMBLY

1) Remove the following parts from the upper valve body.
(1) Solenoid ASSY (shift 1-2-3)
(2) Duty solenoid A (line pressure)

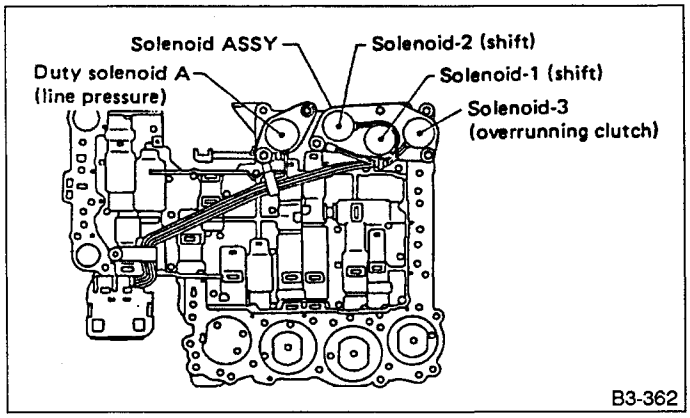

Fig. 227

2) Remove the following parts from the lower valve body.
(1) Duty solenoid B (lock-up)
(2) ATF temperature sensor

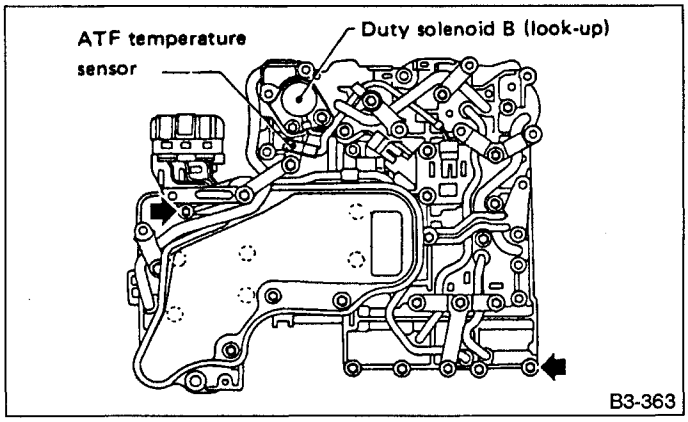

Fig. 228

3) Separate the upper valve body and lower valve body.
a. Do not lose the nine (9) steel balls contained in the upper valve body.
b. Do not lose an orifice and a strainer contained in the lower valve body.
c. Remove the upper-lower valve body tightening bolts. Then remove two locating bolts. (XX)
During ordinary servicing, clean the control valve bodies in this condition, without further disassembly.
In the event of a seized clutch or other problem, disassemble the control valve bodies further, and clean the component parts.

B: INSPECTION

Make sure that each component is free of harmful gouges, cuts, or dust.

C: ASSEMBLY

Reverse the disassembly sequence, paying attention to the following points:
a. Be sure to properly position the steel balls, orifice and strainer.

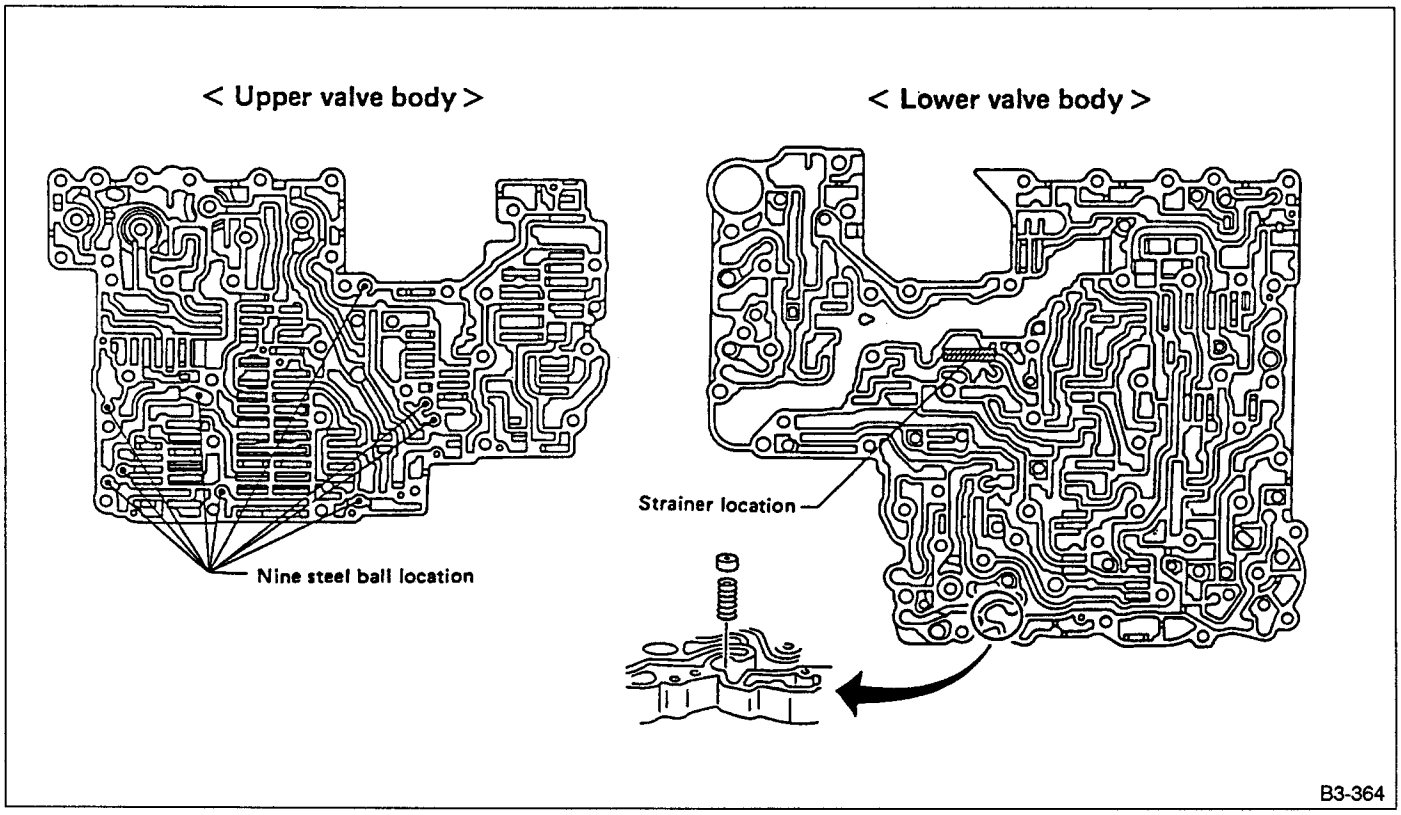

Fig. 229

b. Tighten two locating bolts. Then tighten the upper-lower valve body tightening bolts.

Tightening torque:
7 — 9 N•m (0.7 — 0.9 kg-m, 5.1 — 6.5 ft-lb)

7. Oil Pump Assembly

A: DISASSEMBLY

1) Remove the oil seal retainer.
Also remove the O-ring and oil seal (air breather).

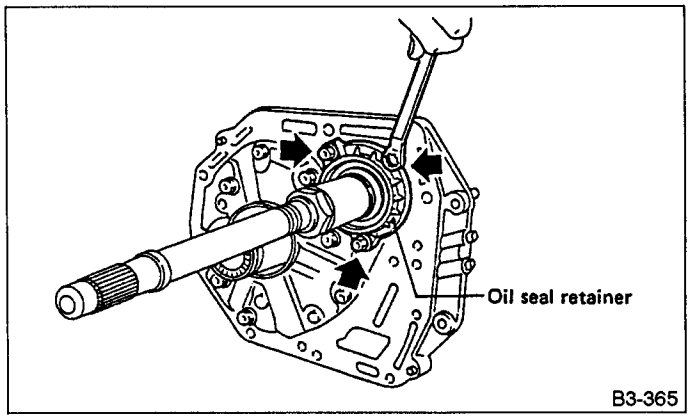

Fig. 230

2) Remove the oil pump cover.
Lightly tap the end of the stator shaft to remove the cover.

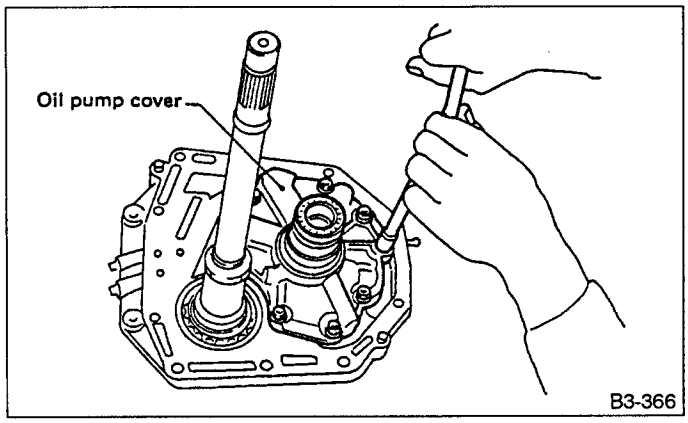

Fig. 231

3) Remove the retainer and return spring. Then remove the rotor, two vane rings and nine vanes.

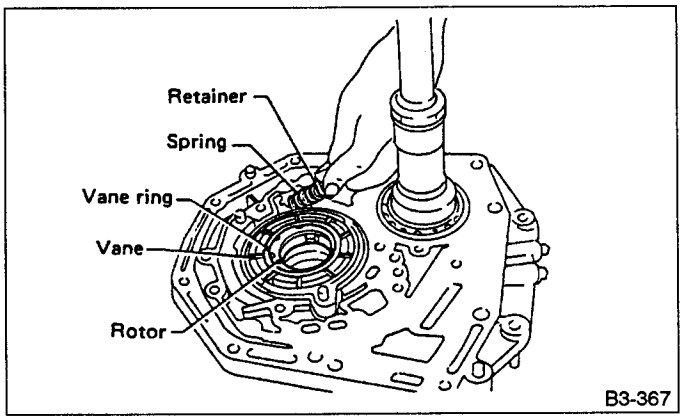

Fig. 232

4) Remove the cam ring and control piston.
Also remove the O-ring, friction ring, two side seals, and plain seal.

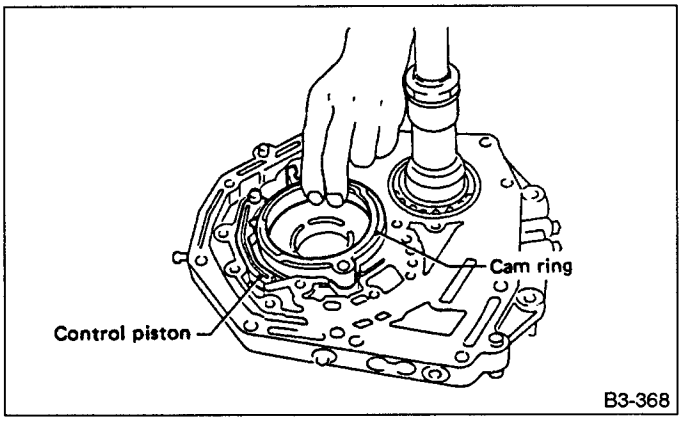

Fig. 233

5) Remove two seal rings (R) and two seal rings (H).

B: INSPECTION

1) Make sure that each component is free of harmful gouges, cuts, and dust.
2) Selection of oil pump components (rotor, vanes, control piston and cam ring):
   (1) Using a micrometer, measure the height of the rotor, vanes, control piston and cam ring in at least four positions. (Measure the height at one place for each of the nine vanes.)
a. Remove the control piston seals when measuring.
b. Remove the friction ring from the cam ring when measuring.

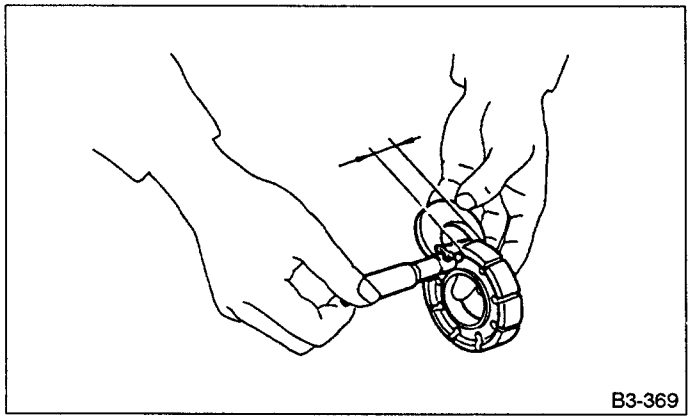

Fig. 234

(2) Using a depth gauge, measure the depth of the oil pump housing from the contact/sliding surface of the above-mentioned component parts in the same manner as above.

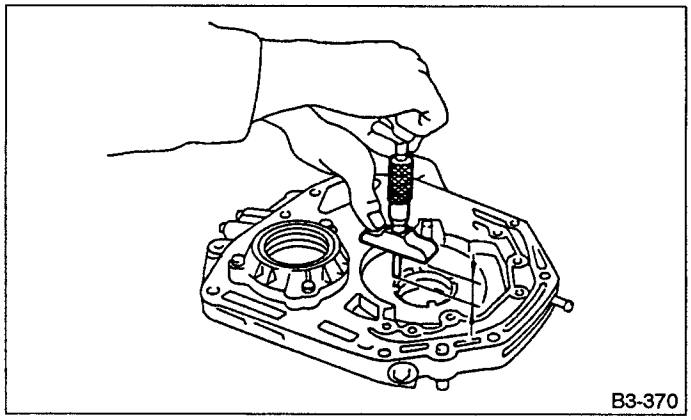

Fig. 235

(3) Make sure that the clearances are within the specified wear limits. If the wear limit is exceeded, select pump components so that the standard clearance can be obtained.

Part name	Wear limit	Standard value
Rotor, control piston, vanes	0.054 mm (0.0021 in)	0.030 — 0.044 mm (0.0012 — 0.0017 in)
Cam ring	0.034 mm (0.0013 in)	0.010 — 0.024 mm (0.0004 — 0.0009 in)

Select vanes which are the same height as the rotor.

C: ASSEMBLY

1) Coat both the O-ring and friction ring with vaseline and attach to the cam ring. Then fit them into the oil pump housing.

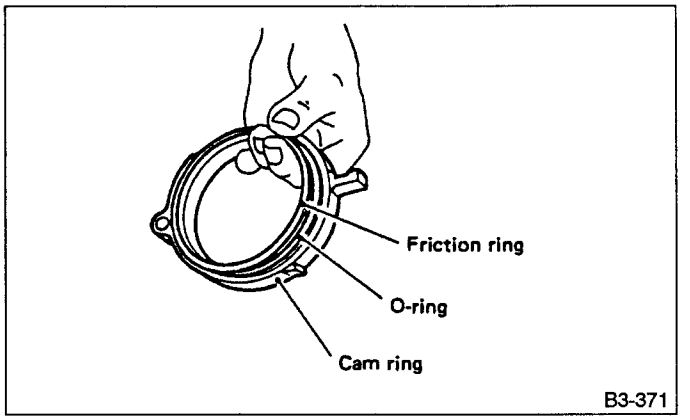

Fig. 236

2) Install the vane ring, rotor, vanes, and vane ring into the housing in this sequence.

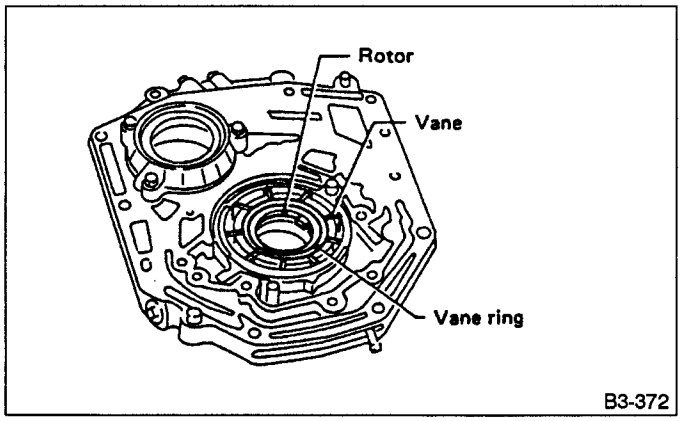

Fig. 237

3) Install the return spring and retainer between the housing and cam ring.

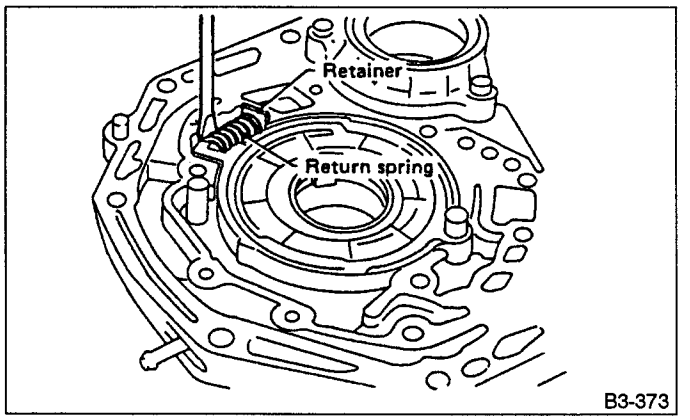

Fig. 238

4) Install the control piston to the oil pump housing. **Fit the seal in the piston groove, with the red seals facing the top side. (Two side seals and one plain seal are attached.)**

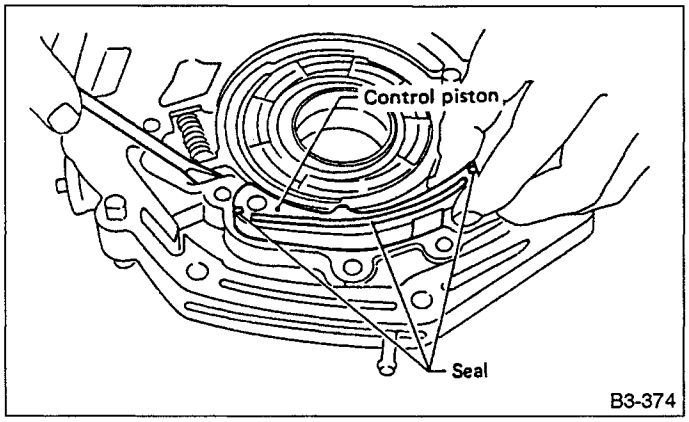

Fig. 239

5) Set the rotor at the center of the housing bore. Apply ATF abundantly to each rotary portion.
6) Install the oil pump cover.

Tightening torque:
23 — 26 N•m (2.3 — 2.7 kg-m, 17 — 20 ft-lb)

a. Align both pivots with the pivot holes of the cover, and install the cover being careful not to apply undue force to the pivots.
b. After assembling, turn the oil pump shaft to check for smooth rotation of the rotor.

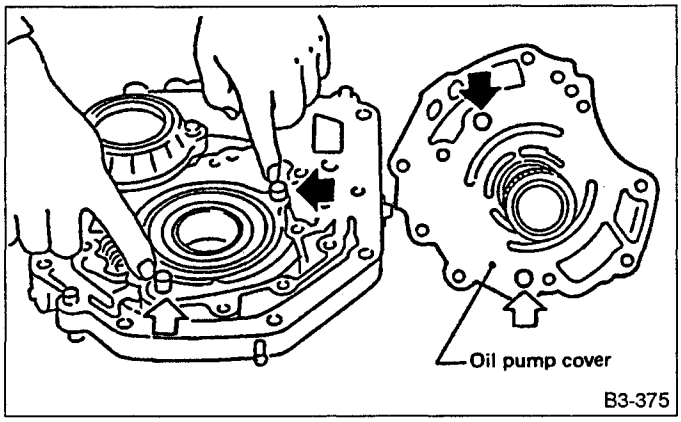

Fig. 240

Install the oil seal retainer and seal rings (R) and (H) after adjusting the drive pinion backlash and tooth contact.

8. Drive Pinion Shaft

A: DISASSEMBLY

1) Straighten the staked portion of the lock nut, and remove the lock nut while locking the rear spline portion of the shaft. Then pull off the drive pinion collar.
Remove the O-ring

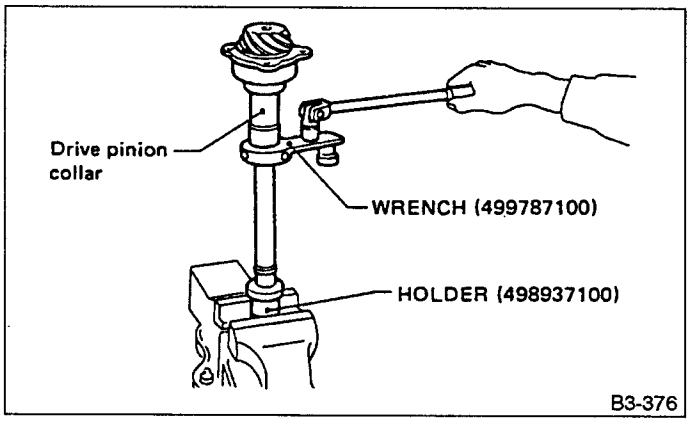

Fig. 241

2) Using a press, separate the rear roller bearing and outer race from the shaft.

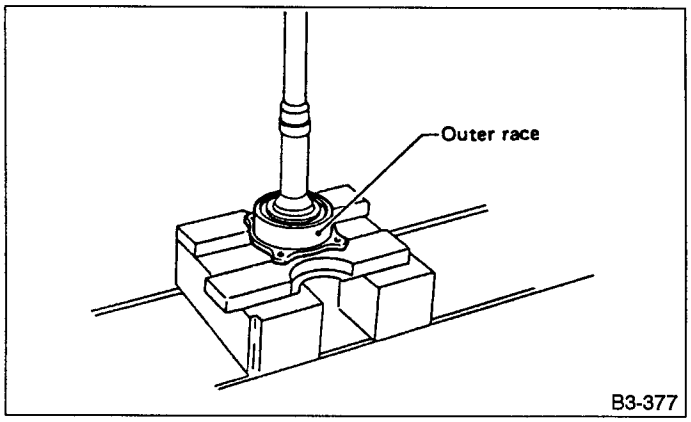

Fig. 242

3) Using a press, separate the front roller bearing from the shaft.

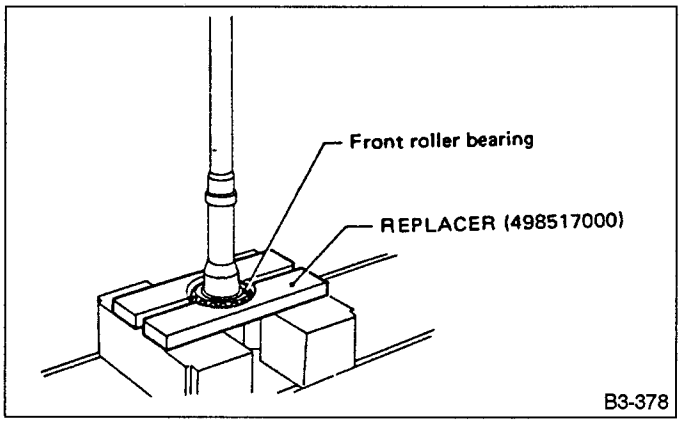

Fig. 243

B: INSPECTION

Make sure that all component parts are free of harmful cuts, gouges, and other faults.

C: ASSEMBLY

1) Measure dimension "A" of the drive pinion shaft.

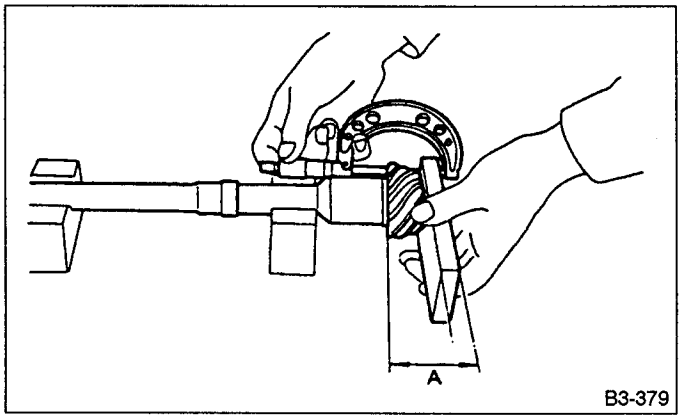

Fig. 244

2) Using a press, force-fit the roller bearing in position.
Do not change the relative positions of the outer race and bearing cone.

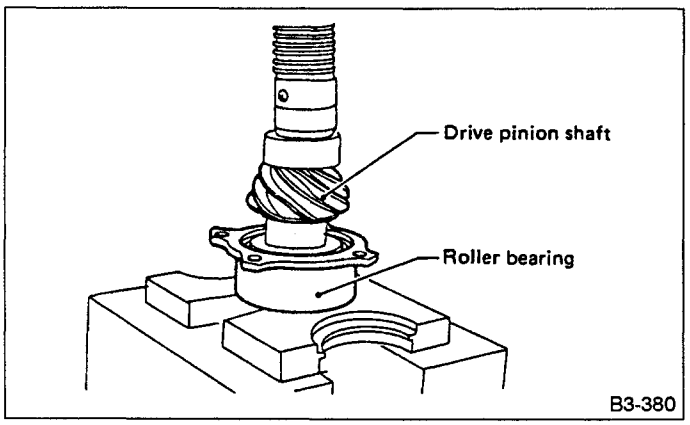

Fig. 245

3) After fitting the O-ring to the shaft, attach the drive pinion collar to the shaft. Be careful not to damage the O-ring.
4) Tighten the lock washer and lock nut.

Actual tightening torque:
108 — 118 N•m (11.0 — 12.0 kg-m, 80 — 87 ft-lb)

a. Pay attention to the orientation of lock washer.
b. When using special tool WRENCH (499787100) and torque wrench, tighten it to 88 N•m (9 kg-m, 65 ft-lb).

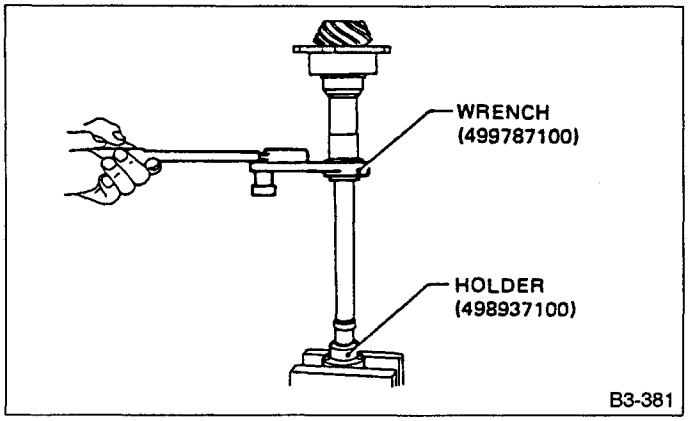

Fig. 246

5) Measure the starting torque of the bearing.
Make sure the starting torque is within the specified range. If out of the allowable range, replace the roller bearing.

Starting torque:
0.3 — 2.0 N•m (3 — 20 kg-m, 2.6 — 17.4 ft-lb)

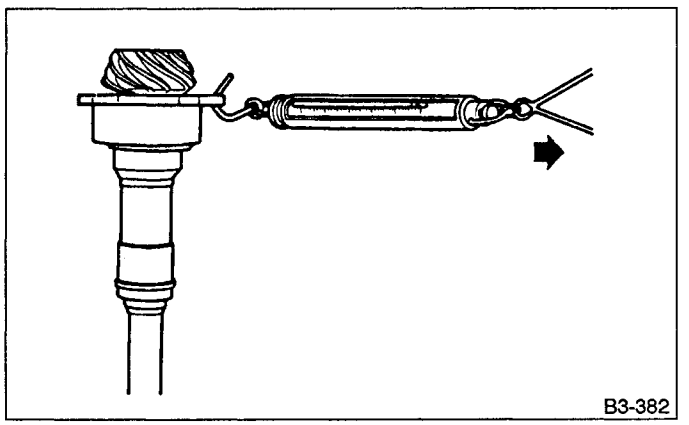

Fig. 247

6) Stake the lock nut securely at two places.
7) Measure dimension "B" of the drive pinion shaft.

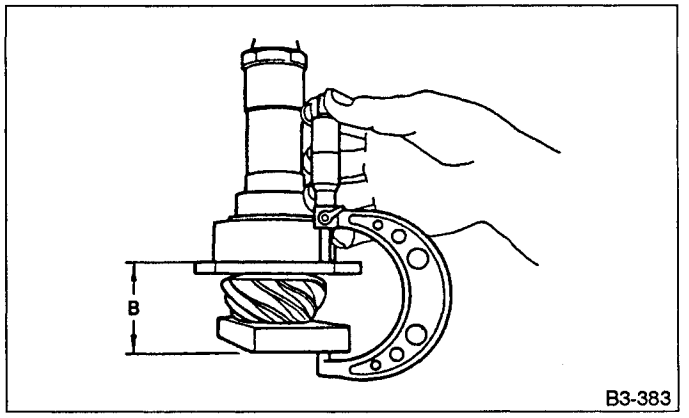

Fig. 248

8) Determine the thickness t (mm) of the drive pinion shim.

t = 6.5 — (B — A)

The number of shims must be three or less.
- **Available drive pinion shims**

Part No.	Thickness mm (in)	
31451AA050	0.15	(0.0059)
31451AA060	0.175	(0.0069)
31451AA070	0.2	(0.008)
31451AA080	0.225	(0.0089)
31451AA090	0.25	(0.0098)
31451AA100	0.275	(0.0108)

9. Reverse Clutch

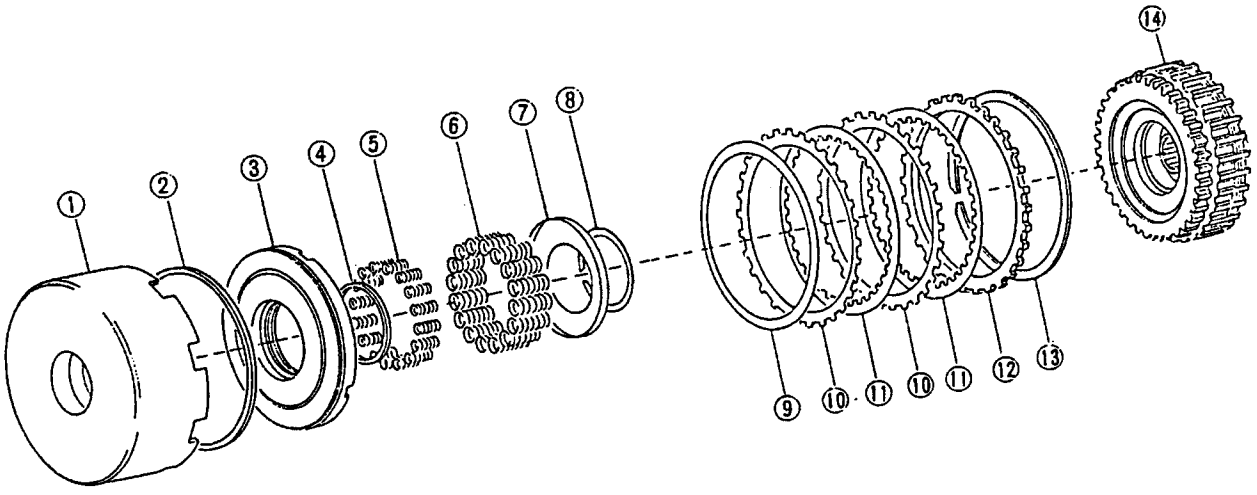

Fig. 249

A: DISASSEMBLY

1) Remove the snap ring, and take out the retaining plate, drive plates, driven plates, and dish plate.
2) Using the COMPRESSOR (398673600), INSTALLER (398177700) and PLIER (399893600), remove the snap ring and take out the spring retainer and springs.
3) Take out the piston by applying compressed air.

B: INSPECTION

1) Drive plate facing for wear and damage
2) Snap ring for wear, return spring for breakage or setting, and spring retainer for deformation
3) Lip seal and lathe cut seal ring for damage
4) Piston check ball for operation

C: ASSEMBLY

1) Using the same special tools as those used in disassembling, assemble piston the return springs, spring retainer and snap ring.
2) Assemble the dish plate, driven plates, drive plates and retaining plate in that order and attach the snap ring.

Pay attention to the orientation of the dish plate.
3) Checking operation:
Apply compressed air intermittently to the oil hole, and check the reverse clutch for smooth operation.
4) Measuring clearance (Retaining plate selection).

Standard value:
0.5 — 0.8 mm (0.020 — 0.031 in)
Allowable limit: 1.2 mm (0.047 in)

Before measuring clearance, place the same thickness of shim on both sides to prevent retaining plate from tilting.

- **Available retaining plates**

Part No.	Thickness mm (in)
31567AA000	4.6 (0.181)
31567AA020	4.8 (0.189)
31567AA030	5.0 (0.197)
31567AA040	5.2 (0.205)
31567AA050	5.4 (0.213)

10. High Clutch

A: DISASSEMBLY

1) Remove the snap ring, and take out the retaining plate, drive plates, and driven plates.
2) Using the COMPRESSOR (398673600), INSTALLER (398177700), and PLIERS (399893600), remove the snap ring and take out the spring retainer CP.
3) Apply compressed air to the clutch drum to remove the piston.

B: INSPECTION

1) Drive plate facing for wear and damage
2) Snap ring for wear, return spring for setting and breakage, and spring retainer for deformation
3) Lathe cut rings (large) (small) for damage
4) Piston check ball for smooth operation

C: ASSEMBLY

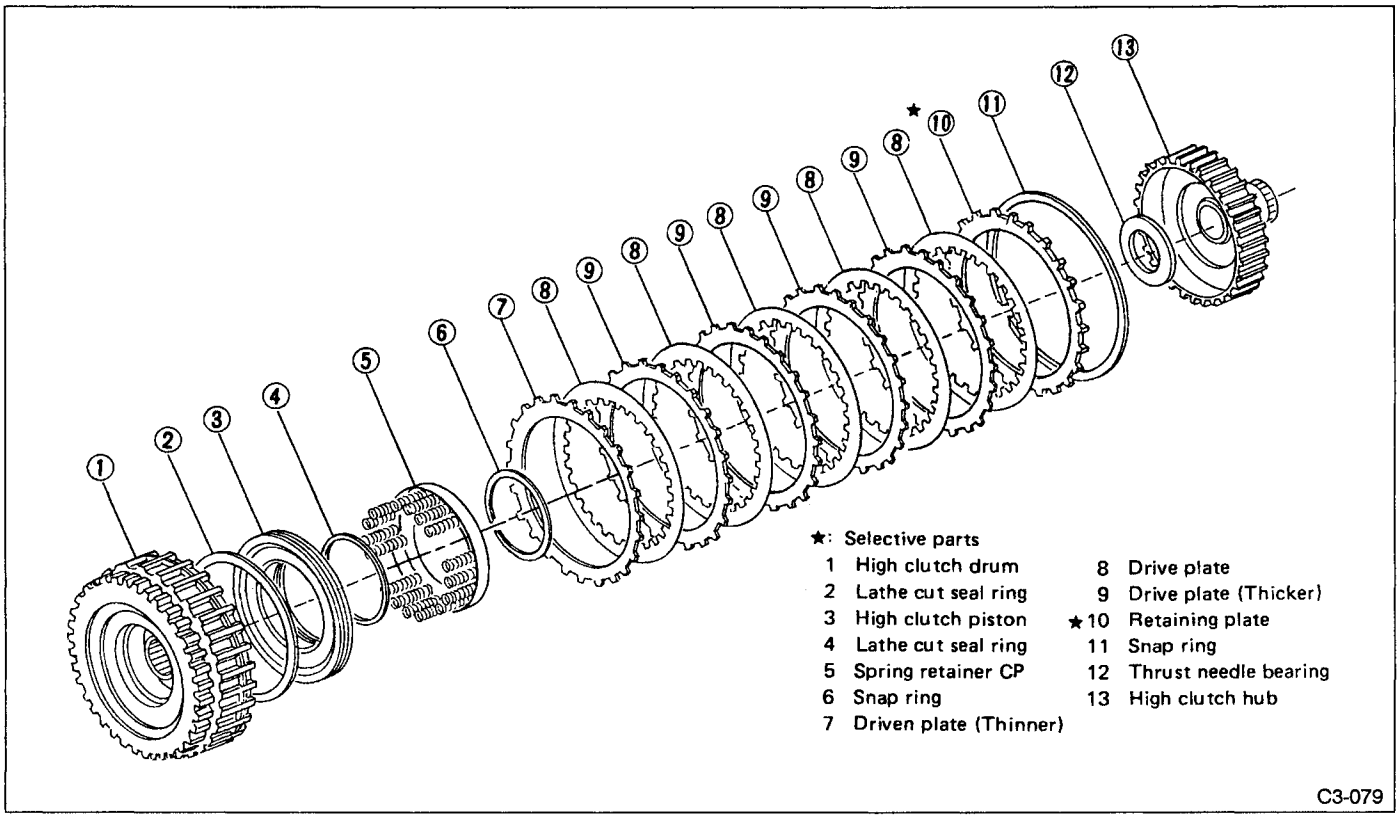

Fig. 250

1) Using the same special tools as those used in disassembling, assemble the piston, spring retainer CP, and snap ring.
2) Install the driven plate (thin), drive plates, driven plates, and retaining plate in that order. Then attach the snap ring.
3) Checking operation:
Apply compressed air intermittently to the oil hole, and check the high clutch for smooth operation.
4) Measuring clearance (Retaining plate selection).

Standard value:
1.8 — 2.2 mm (0.071 — 0.087 in)
Allowable limit: 2.6 mm (0.102 in)

Before measuring clearance, place the same thickness of shim on both sides to prevent retaining plate from tilting.

- **Available retaining plates**

Part No.	Thickness mm (in)
31567AA190	3.6 (0.142)
31567AA200	3.8 (0.150)
31567AA210	4.0 (0.157)
31567AA220	4.2 (0.165)
31567AA230	4.4 (0.173)
31567AA240	4.6 (0.181)
31567AA250	4.8 (0.189)
31567AA260	5.0 (0.197)

11. Forward Clutch Drum

A: DISASSEMBLY

1) Remove two snap rings from the forward clutch drum.

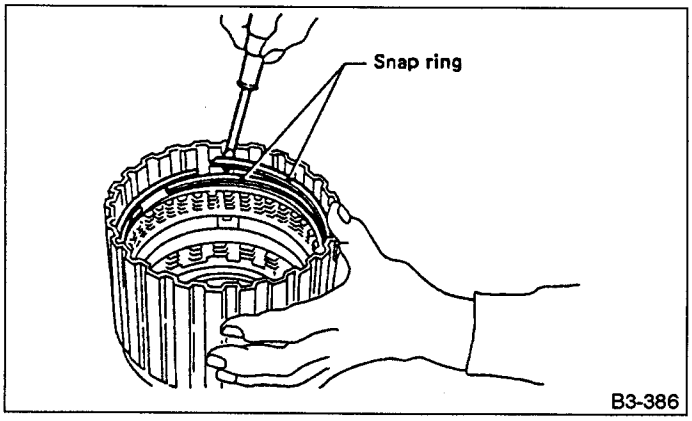

Fig. 251

2) Remove the retaining plate, drive plates, driven plates and dish plate. (Forward clutch)
3) Remove the snap ring from the forward clutch drum.

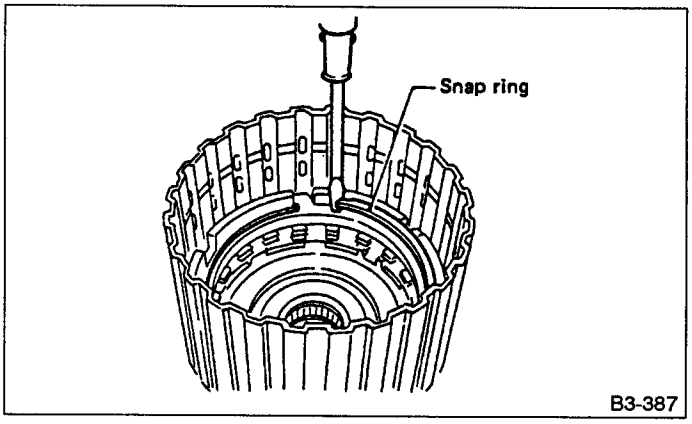

Fig. 252

4) Remove the retaining plate, drive plates, driven plates and dish plate. (Overrunning clutch)
5) Compress the spring retainer, and remove the snap ring from the forward clutch, by using SEAT (498627100) and COMPRESSOR (398673600).
6) Install the one-way clutch inner race to the forward clutch drum, and apply compressed air to remove the overrunning piston and forward piston.

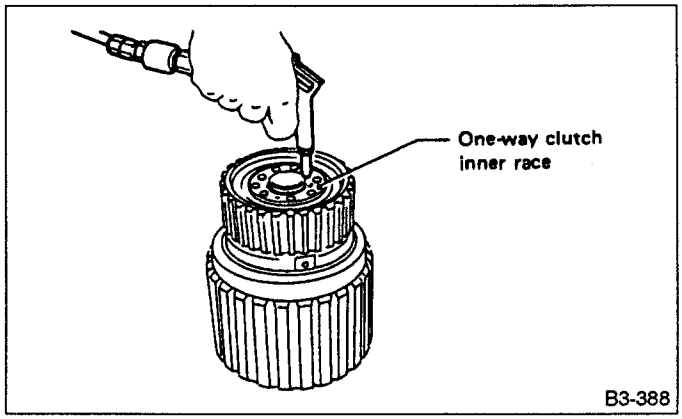

Fig. 253

7) Remove the one-way clutch after taking out the snap ring.
8) Remove the needle bearing after taking out the snap ring.

B: INSPECTION

1) Drive plate facing for wear and damage
2) Snap ring for wear, return spring for setting and breakage, and snap ring retainer for deformation
3) Lip seal and lathe cut ring for damage
4) Piston and drum check ball for operation

C: ASSEMBLY

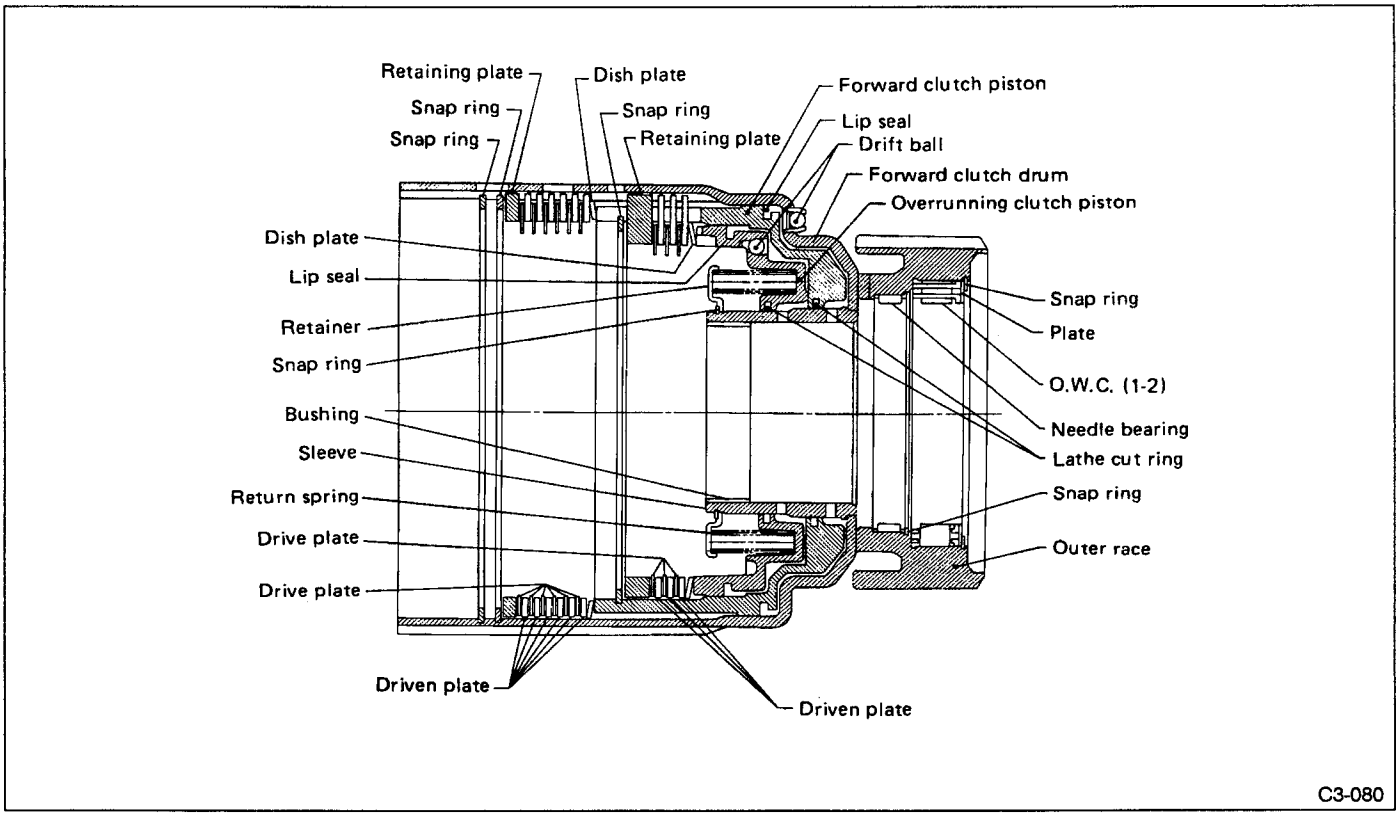

Fig. 254

1) Fit the forward piston and overrunning piston to the forward clutch drum.
Align the forward piston cut-out portion with the spline of the drum.

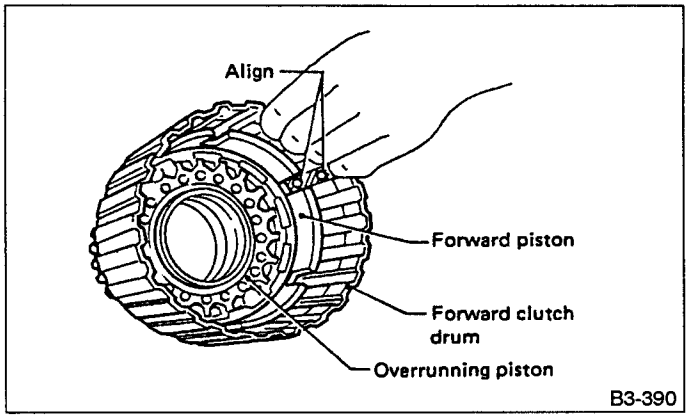

Fig. 255

2) Set the springs and retainer on the piston with a press and attach the snap ring.

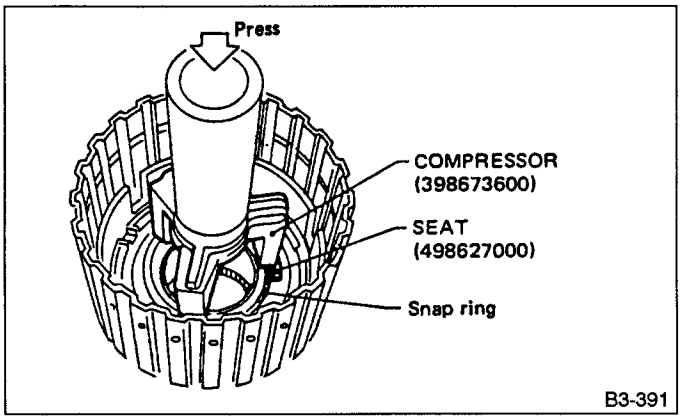

Fig. 256

3) Install the dish plate, driven plates, drive plates, and retaining plate, and secure with the snap ring. (Overrunning clutch)
Pay attention to the orientation of the dish plate.

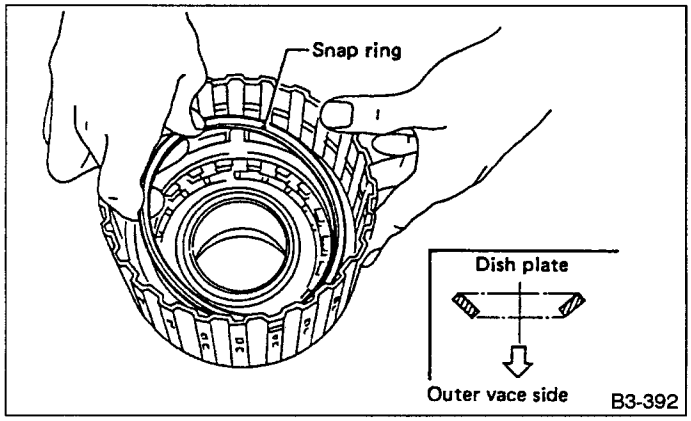

Fig. 257

4) Install the dish plates, driven plates, drive plates, and retaining plate, and secure with the snap ring. (Forward clutch)

Pay attention to the orientation of the dish plate.

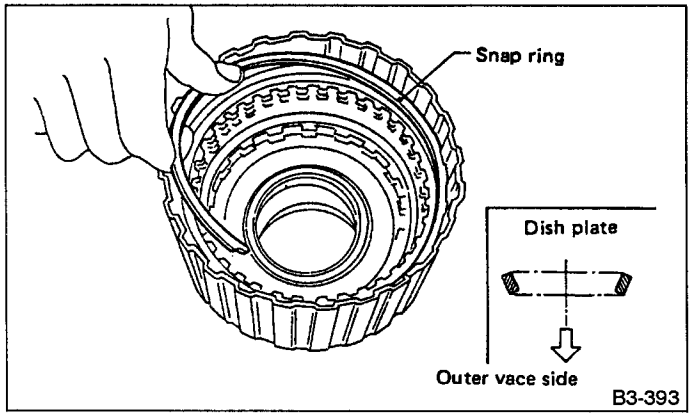

Fig. 258

5) Install the snap ring (for front planetary carrier).

6) Check the forward clutch and overrunning clutch for operation.

Set the one-way clutch inner race, and apply compressed air for checking.

7) Checking clearance:

	Standard value mm (in)	Allowable limit mm (in)
Forward clutch	0.45 — 0.85 (0.0177 — 0.0335)	1.6 (0.063)
Overrunning clutch	1.0 — 1.4 (0.039 — 0.055)	2.0 (0.079)

Before measuring clearance, place the same thickness of shim on both sides to prevent retaining plate from tilting.

If the clearance is out of the specified range, select a proper retaining plate so that the standard clearance can be obtained.

(Forward clutch)

Part No.	Thickness mm (in)
31567AA010	8.0 (0.315)
31567AA060	8.2 (0.323)
31567AA070	8.4 (0.331)
31567AA080	8.6 (0.339)
31567AA090	8.8 (0.346)
31567AA100	9.0 (0.354)

(Overrunning clutch)

Part No.	Thickness mm (in)
31567AA120	8.0 (0.315)
31567AA130	8.2 (0.323)
31567AA140	8.4 (0.331)
31567AA150	8.6 (0.339)
31567AA160	8.8 (0.346)
31567AA170	9.0 (0.354)
31567AA180	9.2 (0.362)

8) Install the needle bearing, and secure with the snap ring.

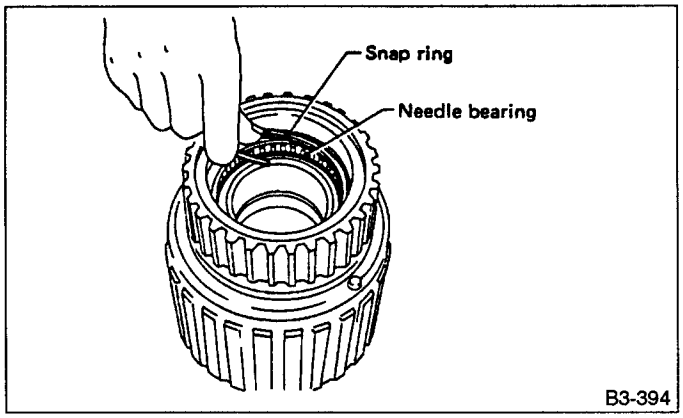

Fig. 259

9) Install the one-way clutch (1-2) and plate, and secure with the snap ring.

Set the inner race. Make sure that the forward clutch is free in the clockwise direction and locked in the counterclockwise direction, as viewed from the front of the vehicle.

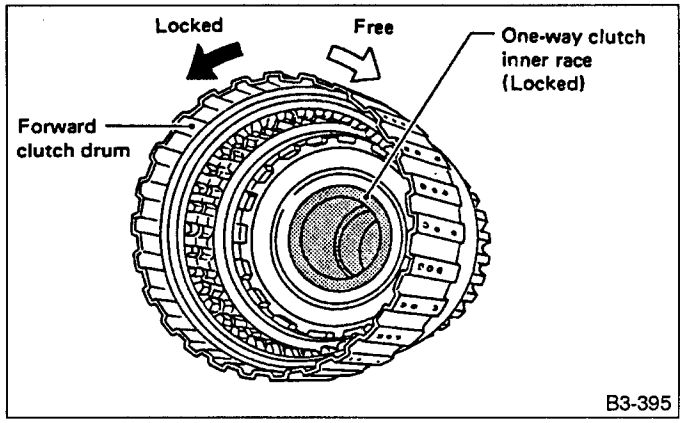

Fig. 260

12. One-way Clutch Outer Race

A: DISASSEMBLY

Remove the snap ring. Then remove the one-way clutch (3-4).

B: INSPECTION

Check the sliding surface and one-way clutch (3-4) for any harmful cuts, damage, or other faults.

C: ASSEMBLY

Assemble the one-way clutch (3-4), and secure with the snap ring.
Pay attention to the orientation of the one-way clutch (3-4).
Confirm:
Assemble the rear internal gear, and secure the outer race. Make sure that the internal gear is locked in the clockwise direction, and free to rotate in the counter-clockwise direction.

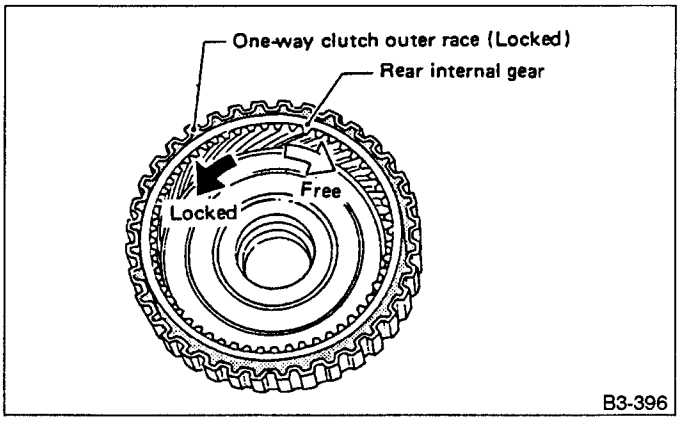

Fig. 261

13. Servo Piston

A: DISASSEMBLY

1) Remove the spring.
2) Remove the band servo piston O.D.
3) While compressing the retainer from above, remove the snap ring. Then remove the retainer, spring and stem.
4) Take out the band servo piston.

B: INSPECTION

1) Check each component for harmful cuts, damage, or other faults.
2) Check the O-ring and lathe cut ring for damage.

C: ASSEMBLY

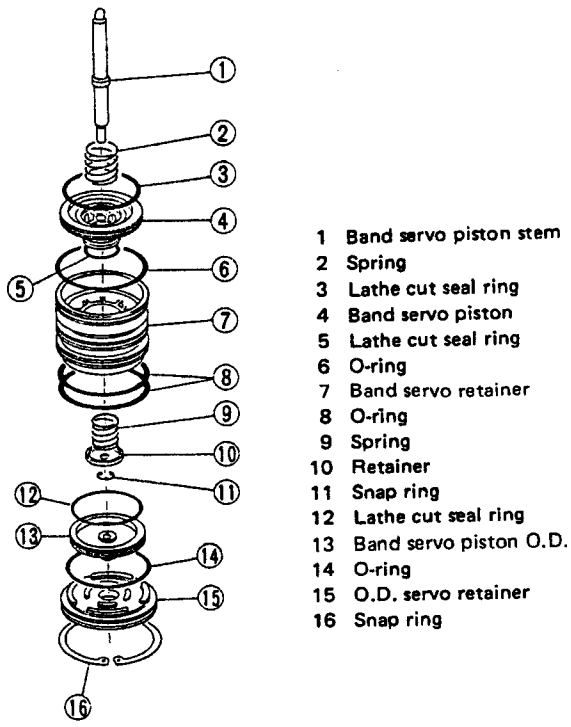

Fig. 262

1) Install the band servo piston to the retainer, and insert the stem.
2) Put the spring and retainer on the piston. Fit the snap ring securely while compressing the spring.
3) Install the band servo piston O.D.
4) Install the spring securely to the band servo piston.

a. Many different O-rings and lathe cut rings are used. Be careful not to confuse them when installing.
b. Be careful not to damage O-rings and lathe cut rings.

14. Differential Case Assembly

A: DISASSEMBLY

1) Using a press, remove the taper roller bearing.
Be careful not to damage the speedometer drive gear.

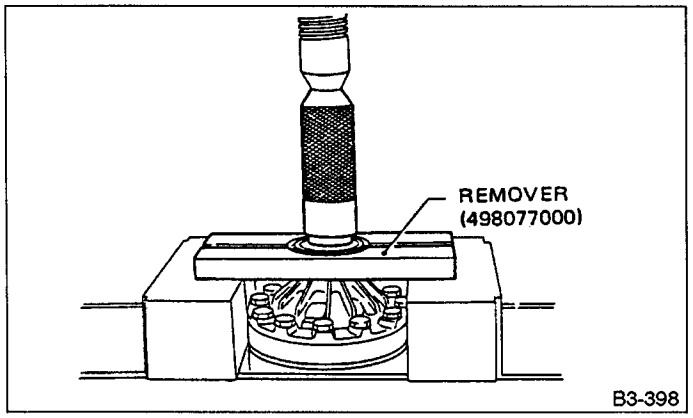

Fig. 263

2) Secure the case in a vise and remove the crown gear tightening bolts, then separate the crown gear, case (RH) and case (LH).

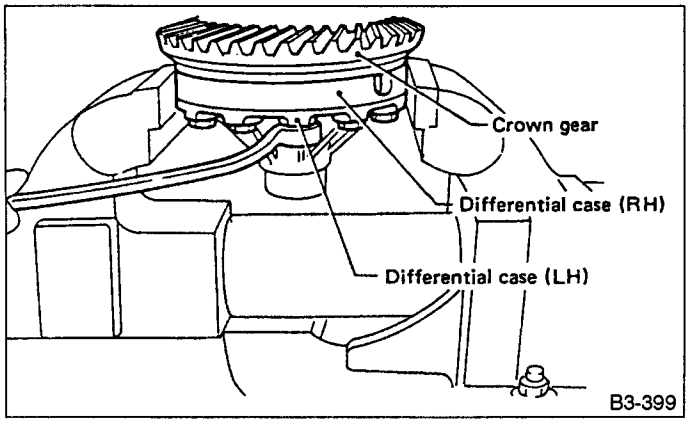

Fig. 264

3) Pull out the straight pin and shaft, and remove the differential bevel gear, washer, and differential bevel pinion.

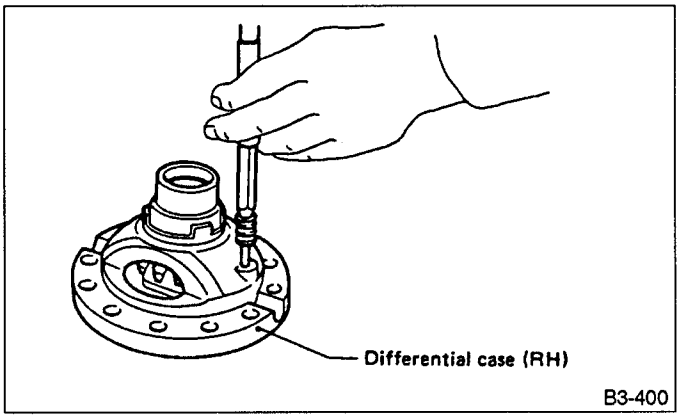

Fig. 265

B: INSPECTION

Check each component for harmful cuts, damage and other faults.

C: ASSEMBLY

1) Install the washer, differential bevel gear and differential bevel pinion in the differential case (RH). Insert the pinion shaft, and fit the straight pin.
Make sure that the case (RH) is staked in order to lock the straight pin.
2) Install the washer and differential bevel gear to the differential case (LH). Then put the case over the differential case (RH), and connect both cases.
3) Install the crown gear and secure by tightening the bolt.

Standard tightening torque:
59 — 65 N•m (6.0 — 6.6 kg-m, 43 — 48 ft-lb)

4) Measurement of backlash (Selection of washer).
Measure the gear backlash by inserting a dial gauge through the access window of the case.

Standard value:
0.13 — 0.18 mm (0.0051 — 0.0071 in)

Measure the backlash by applying a pinion tooth between two bevel gear teeth.

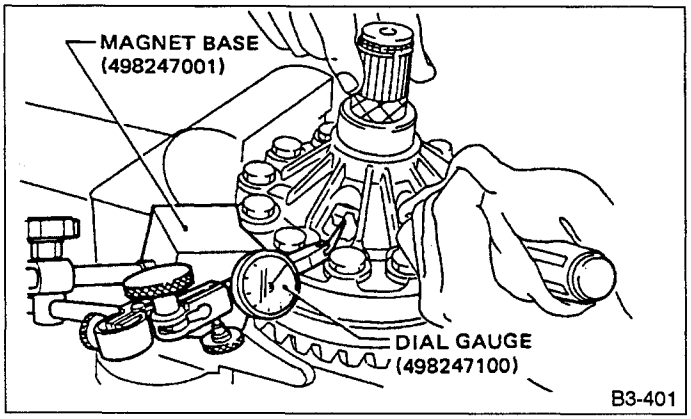

Fig. 266

5) Install the speedometer drive gear. Then force-fit the taper roller bearing with a press.

Be sure to position correctly the locking end of the speedometer drive gear.

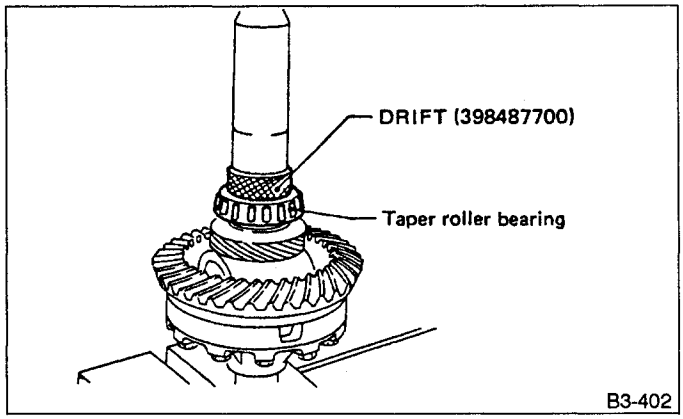

Fig. 267

15. Transfer Clutch

A: DISASSEMBLY

1) Remove the seal ring.
Be careful not to damage the seal ring.

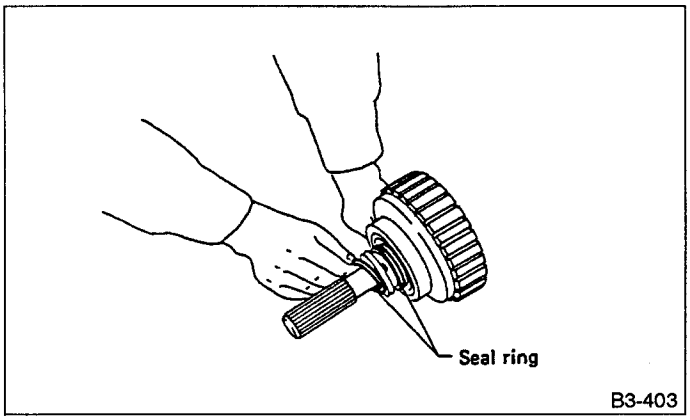

Fig. 268

2) Using a press, remove the ball bearing.
Do not reuse the bearing.

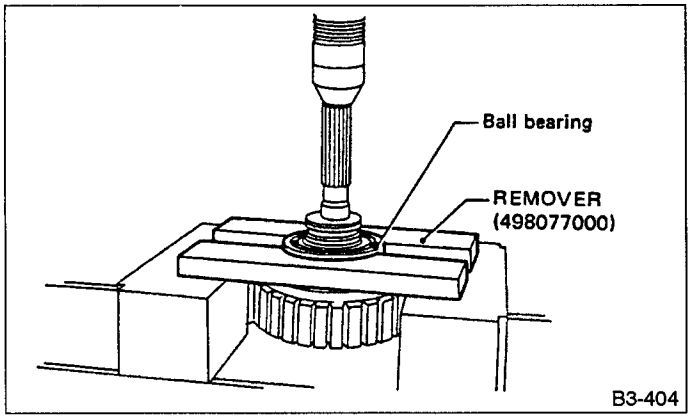

Fig. 269

3) Remove the snap ring, and take out the pressure plate, drive plates, and driven plates.

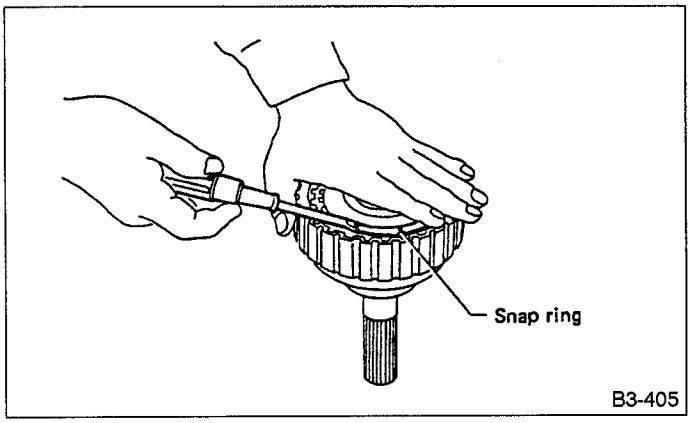

Fig. 270

4) Remove the snap ring, and take out the spring retainer CP.

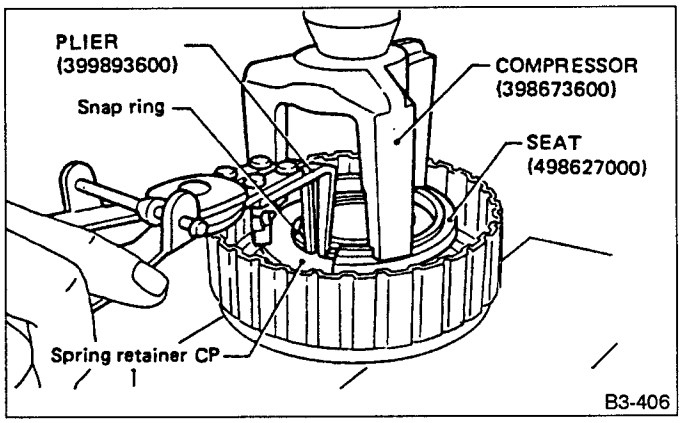

Fig. 271

5) Apply compressed air to the rear drive shaft to remove the piston.

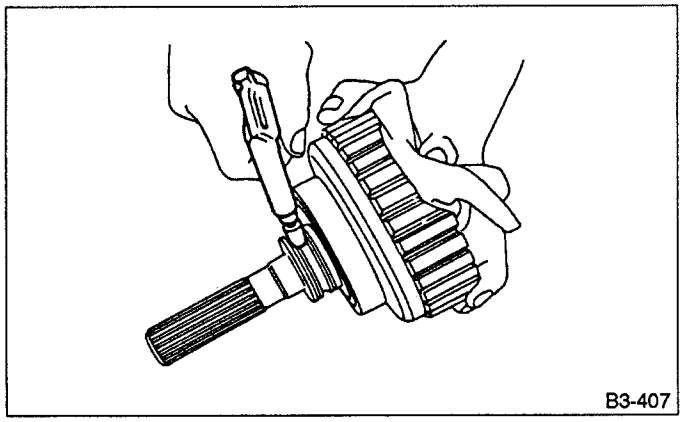

Fig. 272

B: INSPECTION

1) Check the drive plate facing for wear and damage.
2) Check the snap ring for wear, return spring for permanent set and breakage, and spring retainer for deformation.
3) Check the lathe cut ring for damage.

C: ASSEMBLY

1) Install the lathe cut seal ring to the I.D./O.D. of the transfer clutch piston.
2) Install piston.
   (1) Connect piston to rear drive shaft (until it reaches hole in valve body).
   (2) Install spring retainer to piston.
   (3) Using SPECIAL TOOL, attach transfer piston seal to transfer piston seal guide.

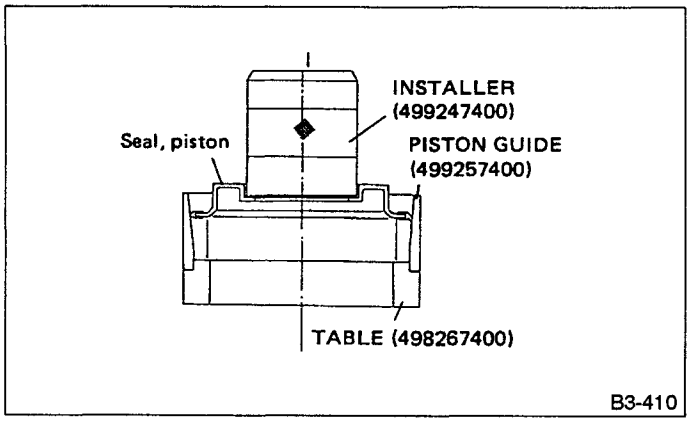

Fig. 273

Be careful not to tilt transfer piston seal.

(4) Place transfer piston seal guide onto rear drive shaft so that spring can be inserted into hole in transfer piston seal.

(5) Attach outer snap ring guide to rear drive shaft. Using an outer snap ring installer, press into place.

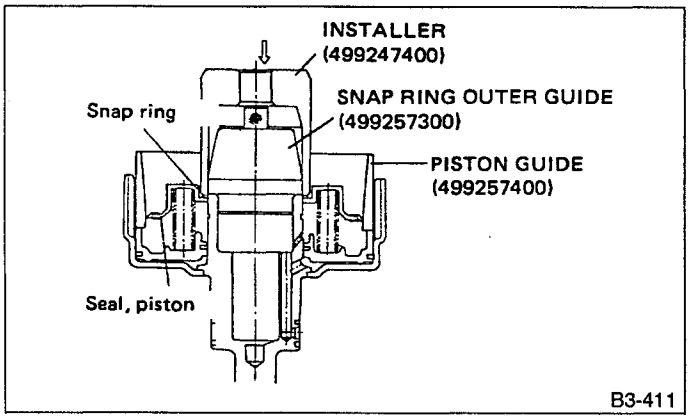

Fig. 274

Do not allow lip of transfer piston seal to fold back.

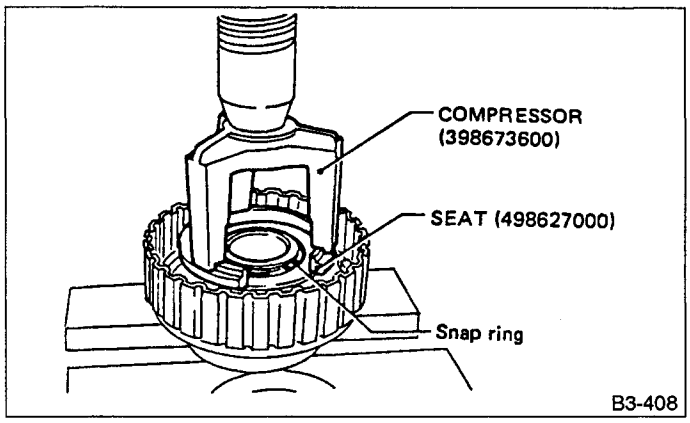

Fig. 275

3) Install the driven plates, drive plates, and pressure plate, and secure with a snap ring.

4) Apply compressed air to see if the assembled parts move smoothly.

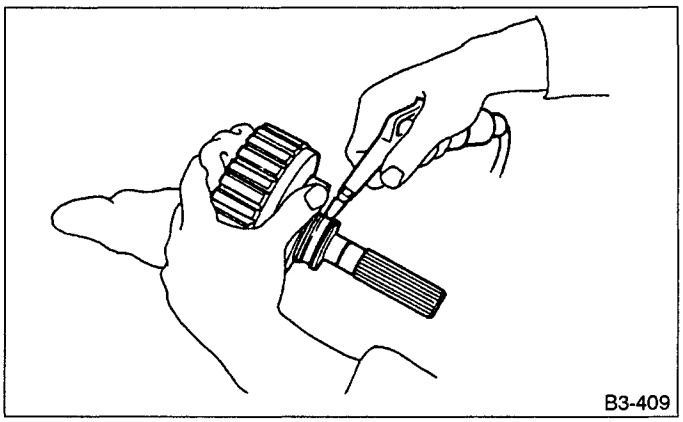

Fig. 276

5) Check the clearance:

Standard value:
0.2 — 0.6 mm (0.008 — 0.024 in)
Allowable limit: 1.6 mm (0.063 in)

If the clearance is not within the specified range, select a proper pressure plate.

Before measuring clearance, place the same thickness of shim on both sides to prevent pressure plate from tilting.

- **Available pressure plates**

Part No.	Thickness mm (in)
31593AA150	3.3 (0.130)
31593AA160	3.7 (0.146)
31593AA170	4.1 (0.161)
31593AA180	4.5 (0.177)

6) Press-fit the ball bearing.

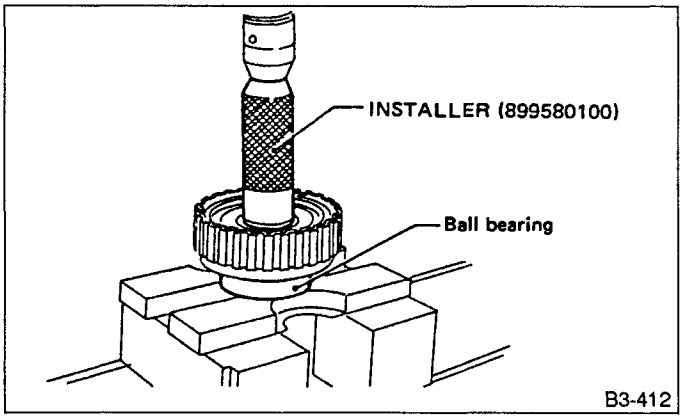

Fig. 277

7) Coat the seal ring with vaseline, and install it in the seal ring groove of the shaft.

Do not expand the seal ring excessively when installing.

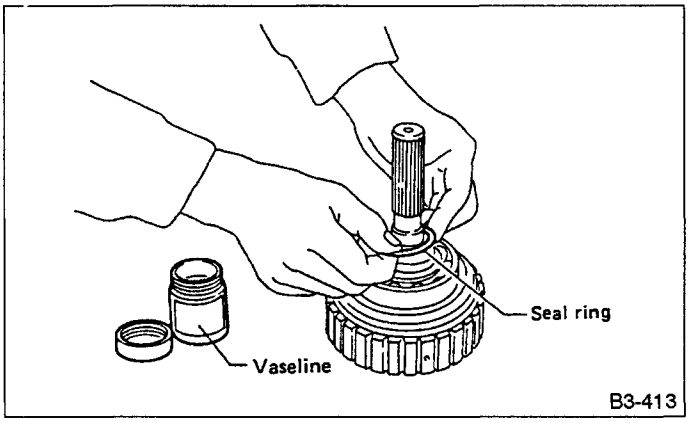

Fig. 278

16. Transfer Valve Body

A: DISASSEMBLY

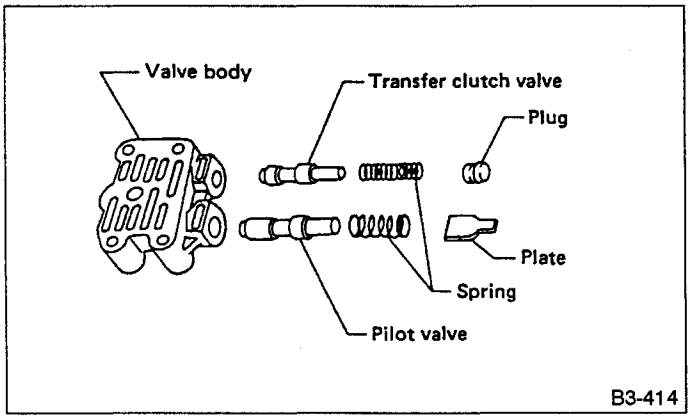

Fig. 279

1) Remove the plate. Then remove the spring and pilot valve together.
2) Remove the straight pin and pry out the plug with a screwdriver. Then extract the spring and transfer clutch valve together.
Be careful not to damage the valve and valve body.

B: INSPECTION

Check each component for harmful cuts, damage, or other faults.

C: ASSEMBLY

To assemble, reverse the removal sequence.
Make sure the valve slides smoothly after assembling.

T TROUBLESHOOTING AIRBAG

1. Supplemental Restraint System "Airbag"

Airbag system wiring harness is routed near the transmission control unit (TCU).

1. **All Airbag system wiring harness and connectors are colored yellow. Do not use electrical test equipment on these circuit.**
2. **Be careful not to damage Airbag system wiring harness when troubleshooting and servicing the TCU.**

2. Precaution

1) Problems in the electronic-controlled automatic transmission may be caused by failure of the engine, the electronic control system, the transmission proper, or by a combination of these. These three causes must be distinguished clearly when troubleshooting.
2) Troubleshooting should be conducted by rotating with simple, easy operations and proceeding to complicated, difficult operations. The most important thing in troubleshooting is to understand the customer's complaint, and distinguish between the three causes.

3. Troubleshooting Chart for Self-diagnosis System

A: BASIC TROUBLESHOOTING PROCEDURE

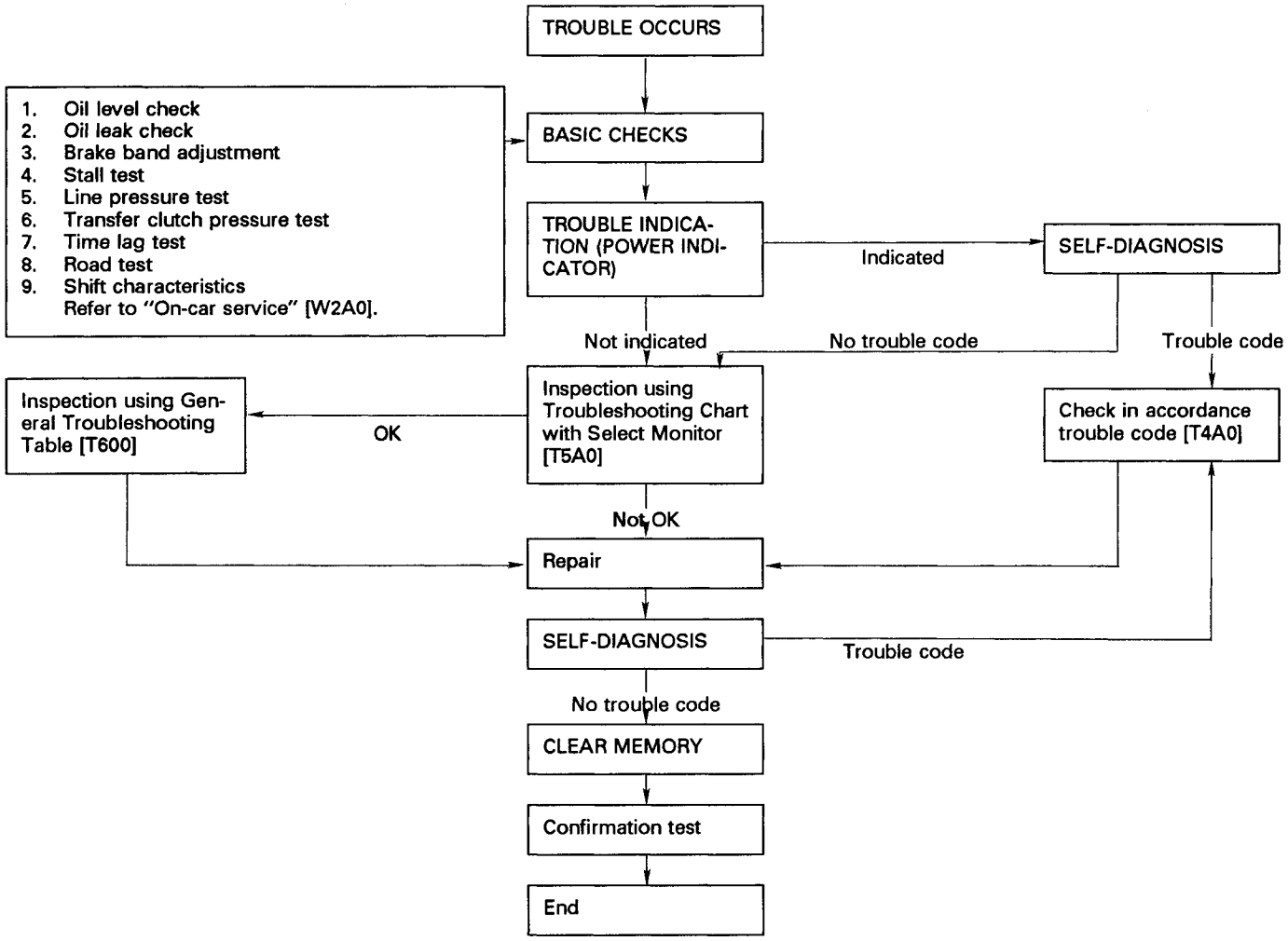

B: ABNORMAL DISPLAY ON POWER INDICATOR

When any self-diagnostic item is malfunctioning, the display on the power indicator blinks immediately after the engine starts.
The malfunctioning part or unit can be determined by a trouble code during self-diagnosis operation. Problems which occurred previously can also be identified through the memory function.
If the power indicator does not show a problem (although a problem is occurring), the problem can be determined by checking the performance characteristics of each sensor using the select monitor.
Indicator signal is as follows:

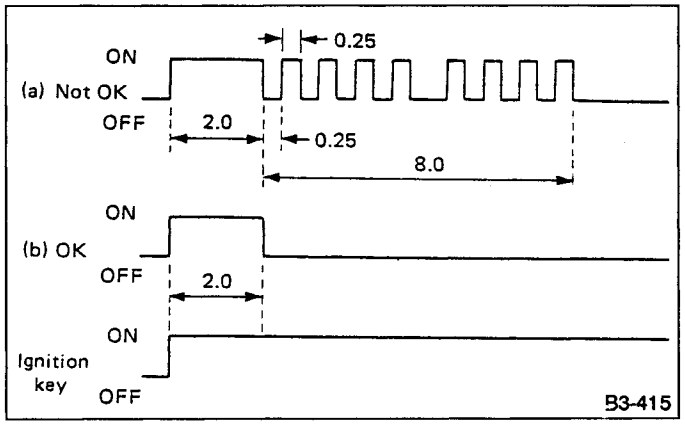

Fig. 280

Warning can be noticed only when the ignition switch is initially turned to ON.

C: SELF-DIAGNOSIS

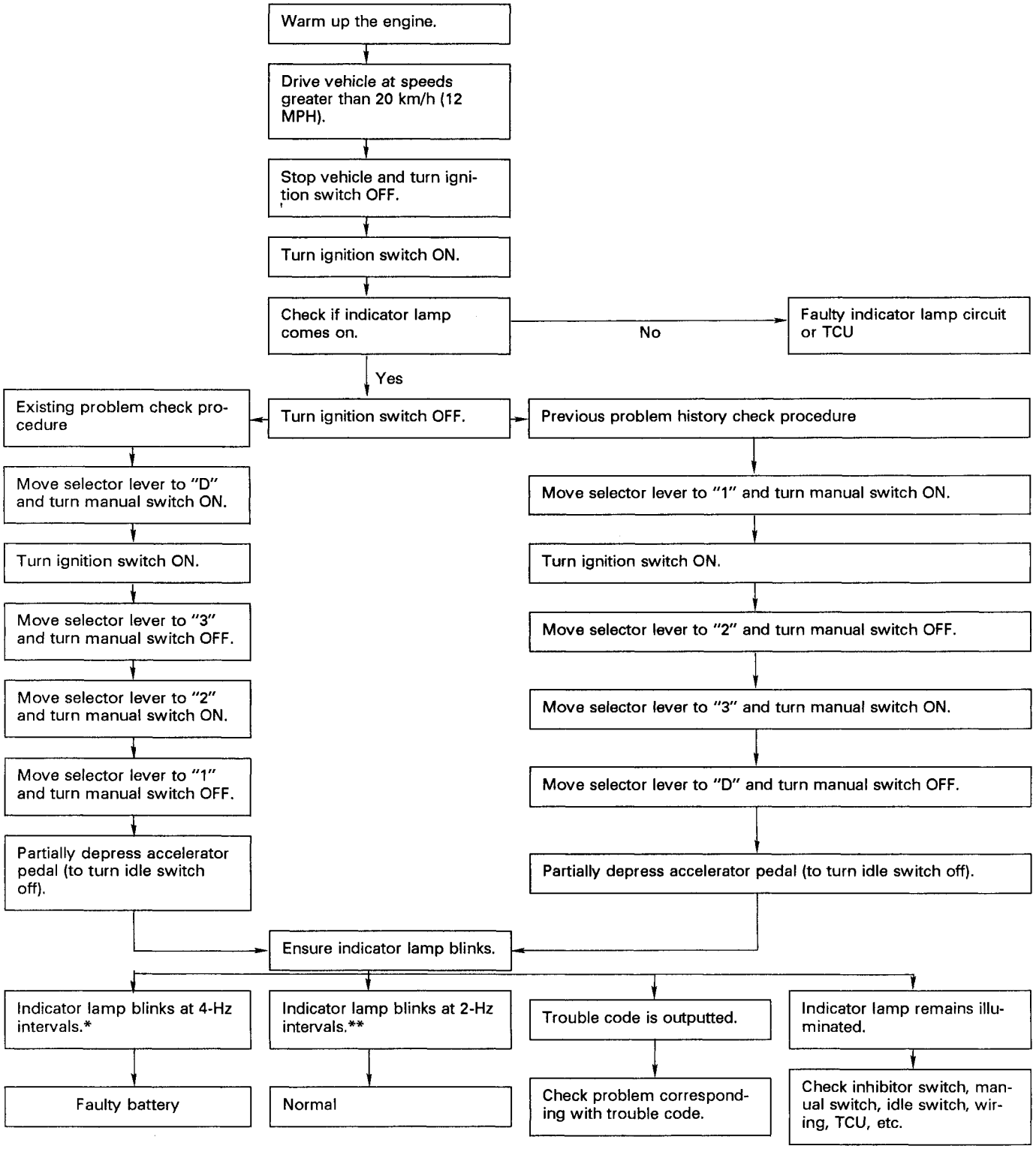

*: Blinks every 0.125 (1/8) seconds (with ignition switch OFF).
**: Blinks every 0.25 (1/4) seconds (until ignition switch is turned OFF).

D: SELF-DIAGNOSIS WITH SELECT MONITOR

1. CONNECT SELECT MONITOR.

1) Connect select monitor to select monitor connector located under instrument panel (on driver's side).
Applicable cartridge : Type "R" (No. 498348500)
2) Turn ignition switch and select monitor switch ON.
3) After display is shown, press slash "/" key.
4) After AT mode is displayed, press function "[0]". (Display returns to AT mode when slash "/" is pressed during self-diagnosis operation.)

2. READ TROUBLE CODE SHOWN ON DISPLAY.

1) Connect select monitor.
2) Designate mode using function key.
Press [F] [B] [0] [ENT] in that order.
3) Ensure trouble code(s) is shown.

3. PREVIOUS TROUBLE CODE READING

1) Connect select monitor.
2) Designate mode using function key.
Press [F] [B] [1] [ENT] in that order.
3) Ensure displayed trouble code(s).

E: LIST OF TROUBLE CODE

1. TROUBLE CODE

Trouble code	Item	Content of diagnosis	Abbr. (Select monitor)
11	Duty solenoid A	Detects open or shorted drive circuit, as well as valve seizure.	PL
12	Duty solenoid B	Detects open or shorted drive circuit, as well as valve seizure.	L/U
13	Shift solenoid 3	Detects open or shorted drive circuit, as well as valve seizure.	OVR
14	Shift solenoid 2	Detects open or shorted drive circuit, as well as valve seizure.	SFT2
15	Shift solenoid 1	Detects open or shorted drive circuit, as well as valve seizure.	SFT1
21	ATF temperature sensor	Detects open or shorted input signal circuit.	ATFT
22	Atmospheric sensor	Detects a faulty atmospheric sensor built into ECU (MPFI).	BARO.P
23	Engine revolution signal	Detects open or shorted input signal circuit.	EREV
24	Duty solenoid C	Detects open or shorted drive circuit, as well as valve seizure.	4WD
25	Engine torque control signal	Detects open or shorted output signal circuit.	TRQ
31	Throttle sensor	Detects open or shorted input signal circuit.	THV
32	Vehicle speed sensor 1	Detects open or shorted input signal circuit.	VSP1
33	Vehicle speed sensor 2	Detects open or shorted input signal circuit.	VSP2

2. HOW TO READ TROUBLE CODE OF INDICATOR LIGHT

The power indicator light flashes the code corresponding to the faulty part.

The long segment (1.2 sec on) indicates a "ten", and the short segment (0.2 sec on) signifies a "one".

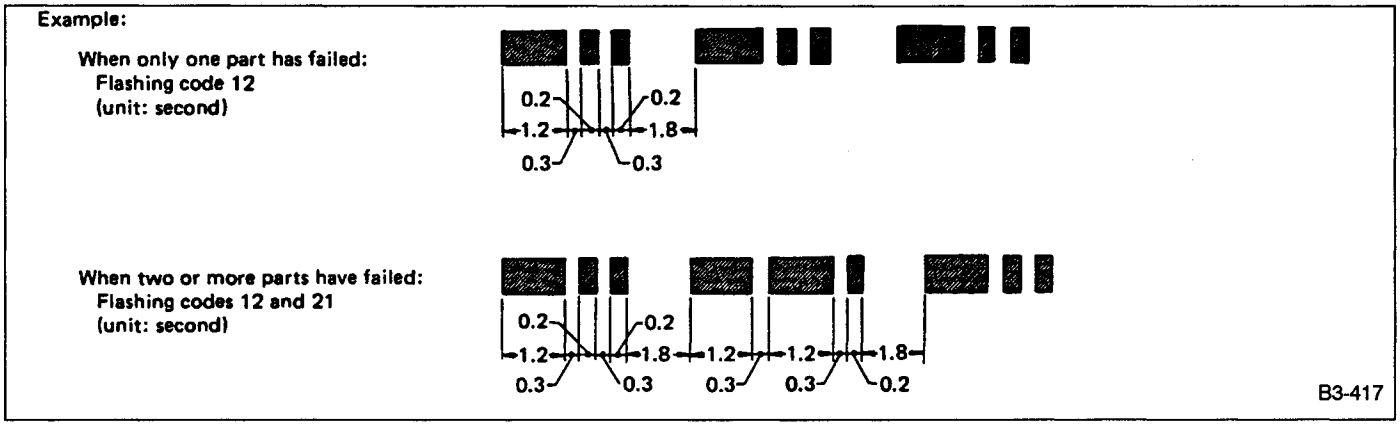

Fig. 281

F: CLEAR MEMORY

Current trouble codes shown on the display are cleared by turning the ignition switch OFF after conducting self-diagnosis operation. Previous trouble codes, however, cannot be cleared since they are stored in the ECU memory which is operating on the back-up power supply. These trouble codes can be cleared by removing the specified fuse (located under the right lower portion of the instrument panel), as shown in the following table.

CLEAR MEMORY:
Removal of No. 14 fuse (for at least one minute)

- The No. 14 fuse is located in the line to the memory back-up power supply of the TCU and ECU (MPFI). Removal of this fuse clears the previous trouble codes stored in the TCU and ECU (MPFI) memory.
- Be sure to remove the No. 14 fuse for at least the specified length of time. Otherwise, trouble codes may not be cleared.

4. Transmission Control Unit (TCU) I/O Signal

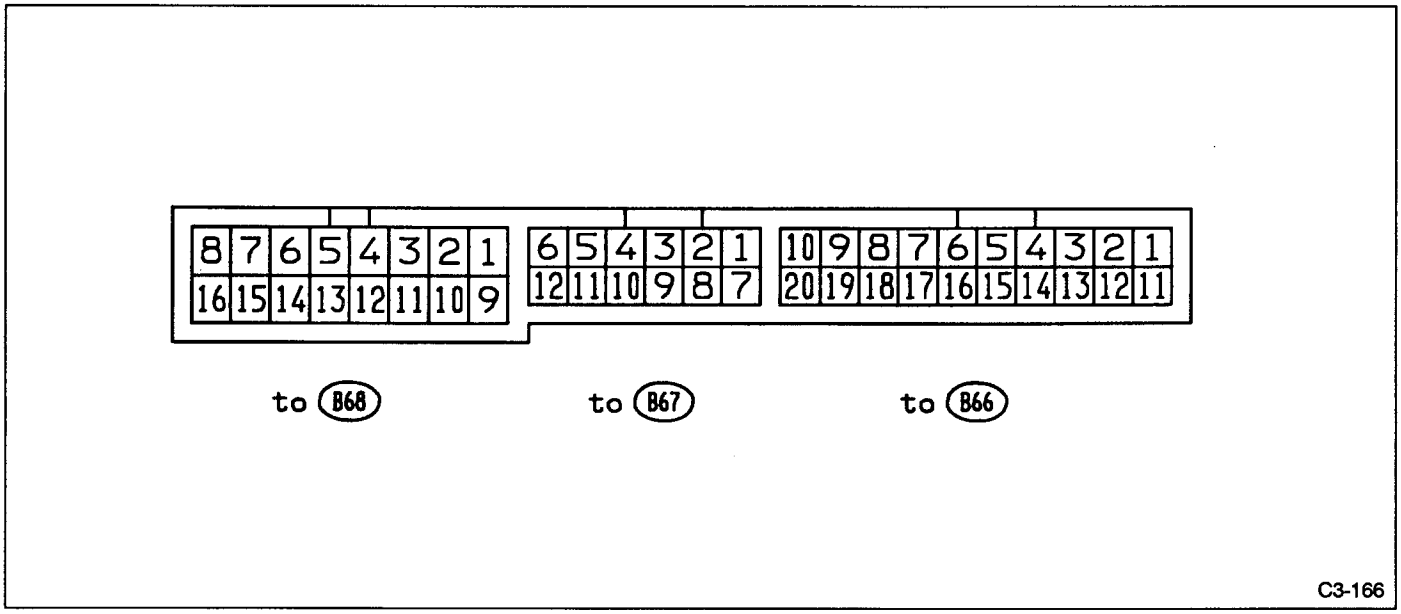

Fig. 282

Check with ignition switch ON.

Content			Connector No.	Terminal No.	Measuring conditions	Voltage (V)
Battery supply			B66	14	Ignition switch OFF	10 — 14
Ignition power supply			B68 B67	1 6	Ignition switch ON (with engine OFF)	10 — 14
Inhibitor switch	"P" range switch	Signal (—)	B66	9	Selector lever in "P" range	Less than 1
					Selector lever in any other than "P" range	9 — 13
	"R" range switch	Signal (—)	B66	10	Selector lever in "R" range	Less than 1
					Selector lever in any other than "R" range	6 — 10
	"N" range switch	Signal (—)	B66	8	Selector lever in "N" range	Less than 1
					Selector lever in any other than "N" range	9 — 13
	"D" range switch	Signal (—)	B67	1	Selector lever in "D" range	Less than 1
					Selector lever in any other than "D" range	4 — 7
	"3" range switch	Signal (—)	B67	2	Selector lever in "3" range	Less than 1
					Selector lever in any other than "3" range	6 — 10
	"2" range switch	Signal (—)	B67	3	Selector lever in "2" range	Less than 1
					Selector lever in any other than "2" range	6 — 10
	"1" range switch	Signal (—)	B67	4	Selector lever in "1" range	Less than 1
					Selector lever in any other than "1" range	6 — 10
Manual switch		Signal (—)	B66	6	Manual switch ON	Less than 1
					Manual switch OFF	6 — 10
Brake switch		Signal (+)	B66	7	Brake pedal depressed	10 — 14
					Brake pedal released	Less than 0.5
ABS signal		Signal (—)	B66	5	ABS switch ON	Less than 1
					ABS switch OFF	6 — 10

Content		Connector No.	Terminal No.	Measuring conditions	Voltage (V)	Resistance to body (ohms)
Throttle sensor	Signal	B67	8	Throttle fully closed	4.0 — 4.8	—
				Throttle fully open	0.7 — 1.7	
Engine torque control signal	Signal	B68	16	Selector lever in "N" range (with throttle fully closed)	4.5 — 5.0	—
ATF temperature sensor	Signal (+)	B67	10	ATF temperature 20°C (68°F)	3.0 — 3.5	2.3 k — 2.7 k
				ATF temperature 80°C (176°F)	1.0 — 1.3	280 — 360
Vehicle speed sensor 1	Signal (+)	B67	12	Vehicle stopped	0	450 — 650
				Vehicle speed at least 20 km/h (12 MPH)	Greater than 1 (AC range)	
Vehicle speed sensor 2	Signal (+)	B66	11	When vehicle is slowly moved at least 2 meters (7ft)	Less than 1→↑greater than 4	—
Atmospheric sensor	Signal (+)	B67	9	—	—	—
Cruise set signal	Signal (—)	B66	3	When cruise control is set (SET lamp ON)	Less than 1	—
				When cruise control is not set (SET lamp OFF)	6 — 10	
Shift solenoid 1		B68	14	Selector lever in 1st or 4th gear	10 — 14	20 — 30
				Selector lever in 2nd or 3rd gear	Less than 1	
Shift solenoid 2		B68	13	Selector lever in 1st or 2nd gear	10 — 14	20 — 30
				Selector lever in 3rd or 4th gear	Less than 1	
Shift solenoid 3		B68	15	Selector lever in "N" range (with throttle fully closed)	Less than 1	20 — 30
				Selector lever in "D" range (with throttle fully closed)	10 — 14	
Duty solenoid A		B68	8	Throttle fully closed (with engine OFF) after warm-up	1.5 — 3.0	1.5 — 4.5
				Throttle fully open (with engine OFF) after warm-up	Less than 0.5	
Dropping resistor		B68	7	Throttle fully closed (with engine OFF) after warm-up	5 — 14	9 — 15
				Throttle fully open (with engine OFF) after warm-up	Less than 0.5	
Duty solenoid B		B68	5	When lockup occurs	8 — 14	9 — 15
				When lockup is released	Less than 0.5	
Duty solenoid C		B68	3	Fuse on FWD switch	8 — 14	9 — 15
				Fuse removed from FWD switch (with throttle fully open and with select lever in 1st gear	Less than 0.5	
Sensor ground line 1		B67	7	—	0	Less than 1
Sensor ground line 2		B66	20	—	0	Less than 1
System ground line		B66	1	—	0	Less than 1
Power system ground line		B68	10	—	0	Less than 1
FWD switch		B66	2	Fuse removed	10 — 14	
				Fuse installed	Less than 1	

Engine revolution

5. Troubleshooting Chart with Trouble Code

A: TROUBLE CODE (11) — DUTY SOLENOID A —

CONTENT OF DIAGNOSIS:
Output signal circuit of duty solenoid A or resistor is open or shorted.

TROUBLE SYMPTOM:
Excessive shift shock

1	Measure signal voltage output emitted from TCU.	Not OK →	Repair TCU terminal poor contact. (Replace TCU.)
↓ OK			
2	Check harnesses between TCU and duty solenoid A and TCU and resistor.	Not OK →	Repair harness/connector.
↓ OK			
3	Check duty solenoid A's ground line.	Not OK →	Repair ground line.
↓ OK			
4	Check resistor.	Not OK →	Check and replace resistor if necessary.
↓ OK			
5	Check duty solenoid A.	Not OK →	Replace duty solenoid A.
↓ OK			
Check contact of TCU connector terminal.		Not OK →	Repair TCU connector and terminal.
↓ OK			
Repair TCU terminal poor contact. (Replace TCU.)			

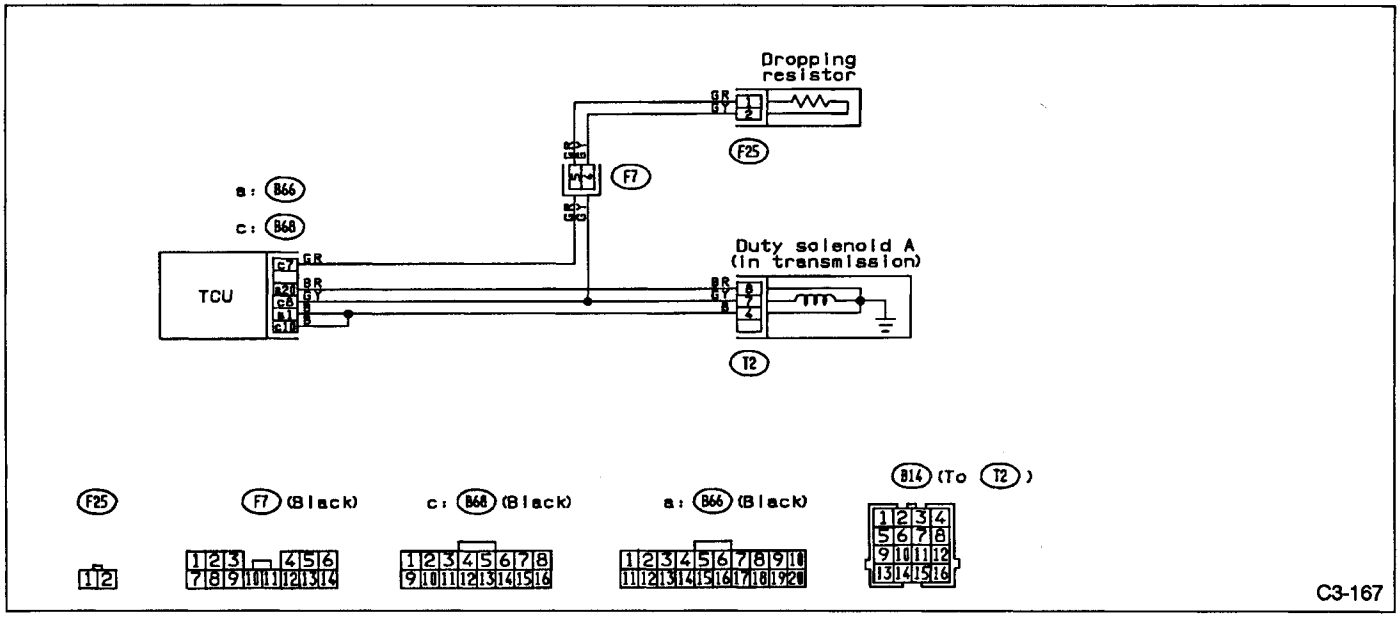

Fig. 283

1. MEASURE SIGNAL VOLTAGE OUTPUT EMITTED FROM TCU.

1) Warm up the engine and transmission.
2) Ignition switch ON (Engine OFF).
3) Move selector lever to "N".
4) While opening and closing throttle valve, measure voltage between TCU connector and body.

Connector & terminal / Specified resistance:
(B68) No. 8 — No. 10 /
1.5 — 3.0 V (Throttle is fully closed.)
0.5 V, max. (Throttle is fully open.)
(B68) No. 7 — No.10 /
5 — 14 V (Throttle is fully closed.)
0.5 V, max.(Throttle is fully open.)

- **SELECT MONITOR FUNCTION MODE**

Mode: F11	
Condition: Ignition switch ON (Engine OFF) N range	
Specified data: PLDTY F11	
5%	(Throttle is fully open)
100%	(Throttle is fully closed)

2. CHECK HARNESSES BETWEEN TCU AND DUTY SOLENOID A AND BETWEEN TCU AND RESISTOR.

1) Disconnect connector from TCU.

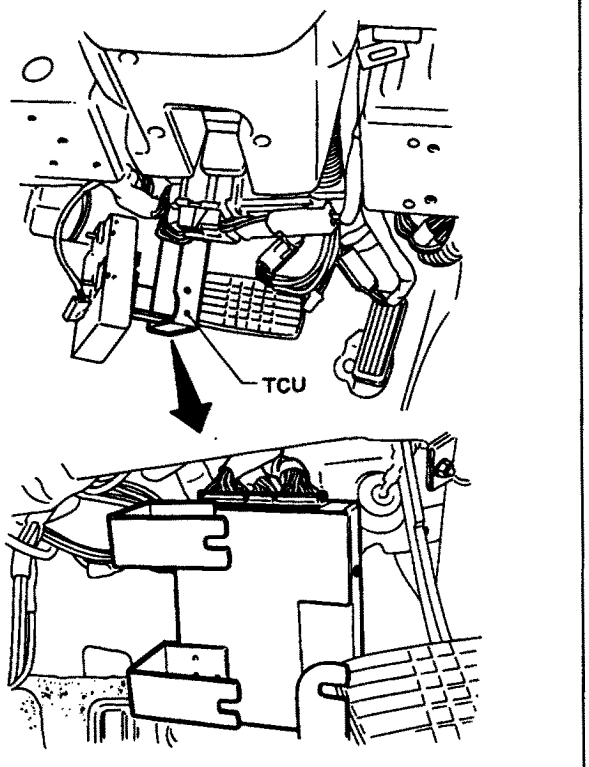

Fig. 284

2) Disconnect connector from transmission.
3) Disconnect connector from resistor.
4) Measure resistance between TCU connector and transmission and between TCU connector and body.

Connector & terminal / Specified resistance:
(B68) No. 8— (B14) No. 7 / 0 Ω
(B68) No. 8 — Body / 1 MΩ min.

5) Measure resistance between TCU connector and resistor connector and between TCU connector and body.

Connector & terminal / Specified resistance:
(B68) No. 7 — (F25) No. 1 / 0 Ω
(B68) No. 7 — Body / 1 MΩ min.

3. CHECK DUTY SOLENOID A'S GROUND LINE.

1) Disconnect connector from transmission.
2) Measure resistance between transmission connector receptacle (on transmission) and transmission case.

Connector & terminal / Specified resistance:
(T2) No. 4 — Transmission / 1 Ω max.

4. CHECK RESISTOR.

1) Disconnect connector from resistor.
2) Measure resistance between resistor terminals.

Specified resistance:
9 — 15 Ω

5. CHECK DUTY SOLENOID A.

1) Disconnect connector from transmission.
2) Measure resistance between transmission connector receptacle (on transmission) terminals.

Connector & terminal / Specified resistance:
(T2) No. 7 — No. 4 / 1.5 — 4.5 Ω

B: TROUBLE CODE 12 — DUTY SOLENOID B —

CONTENT OF DIAGNOSIS:
Output signal circuit of duty solenoid B is open or shorted.

TROUBLE SYMPTOM:
No "locking-up" (after engine warm-up)

1	Measure signal voltage output emitted from TCU.	Not OK	Repair TCU terminal poor contact. (Replace TCU.)
↓ OK			
2	Check harness between TCU and duty solenoid B.	Not OK	Repair harness.
↓ OK			
3	Check duty solenoid B's ground line.	Not OK	Repair ground line.
↓ OK			
4	Check duty solenoid B.	Not OK	Replace duty solenoid B.
↓ OK			
Repair TCU terminal poor contact. (Replace TCU.)			

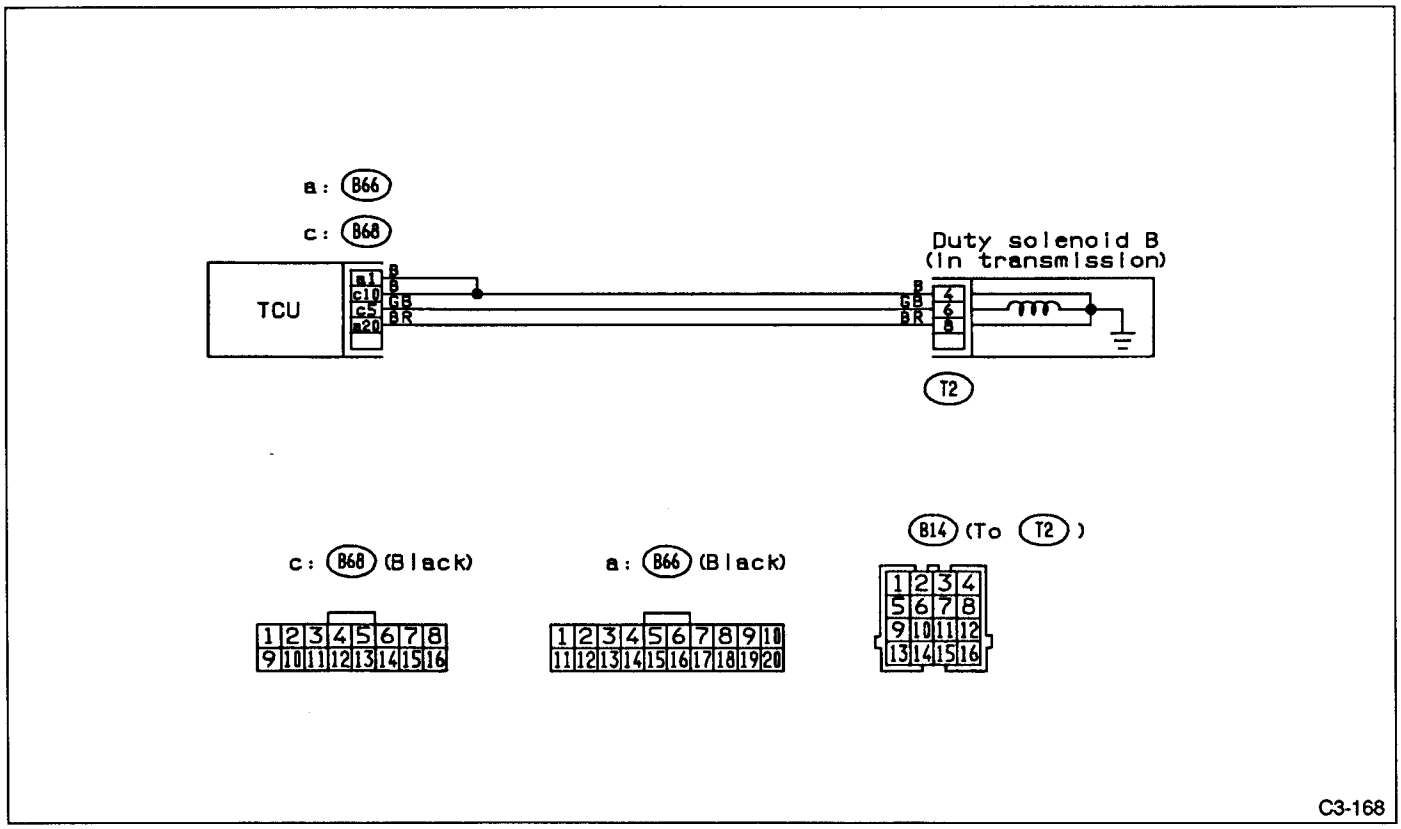

Fig. 285

1. MEASURE SIGNAL VOLTAGE OUTPUT EMITTED FROM TCU.

1) Raise vehicle and support with safety stands.
On 4-wheel drive models, raise all wheels off ground.
2) Warm up the engine and transmission.
3) Move selector lever to "D" and slowly increase vehicle speed to 60 km/h (37 MPH). Measure voltage output emitted from TCU.

Connector & terminal / Specified voltage:
(B68) No. 5 — No. 10 / 8 — 14 V (when wheels are locked up)

4) Return the engine to idling speed. Move selector lever to "N" and measure voltage output emitted from TCU.

Connector & terminal / Specified voltage:
(B68) No. 5 — No. 10 / 0.5 V, max.

- **SELECT MONITOR FUNCTION MODE**

Mode: 12	
Condition: Start the engine and increase vehicle speed to 60 km/h (37 MPH). When wheels are locked up:	
Specified data: LUDTY F12	
95% 5%	(wheel locked up) (release)

2. CHECK HARNESS BETWEEN TCU AND DUTY SOLENOID B.

1) Disconnect connector from TCU.
2) Disconnect connector from transmission.
3) Measure resistance between TCU connector and transmission connector, and between TCU connector and body.

Connector & terminal / Specified resistance:
(B68) No. 5— (B14) No. 6 /0 Ω
(B68) No. 5— Body / 1 MΩ min.

3. CHECK DUTY SOLENOID B'S GROUND LINE.

1) Disconnect connector from transmission.
2) Measure resistance between transmission connector receptacle and transmission case.

Connector & terminal / Specified resistance:
(T2) No. 4 — Transmission / 1 Ω max.

4. CHECK DUTY SOLENOID B.

1) Disconnect connector from transmission.
2) Measure resistance between transmission connector receptacle's terminals.

Connector & terminal / Specified resistance:
(T2) No. 6 — No. 4 / 9 — 15 Ω

C: TROUBLE CODE 13 — SHIFT SOLENOID 3 —

CONTENT OF DIAGNOSIS:
Output signal circuit of shift solenoid 3 is open or shorted.

TROUBLE SYMPTOM:
Ineffective engine brake with shift lever in "3"

1	Measure signal voltage output emitted from TCU.	Not OK	Repair TCU terminal poor contact.
↓ OK			
2	Check harness between TCU and shift solenoid 3.	Not OK	Repair harness.
↓ OK			
3	Check shift solenoid 3's ground line.	Not OK	Repair ground line.
↓ OK			
4	Check shift solenoid 3.	Not OK	Replace shift solenoid 3.
↓ OK			
Repair TCU terminal poor contact. (Replace TCU.)			

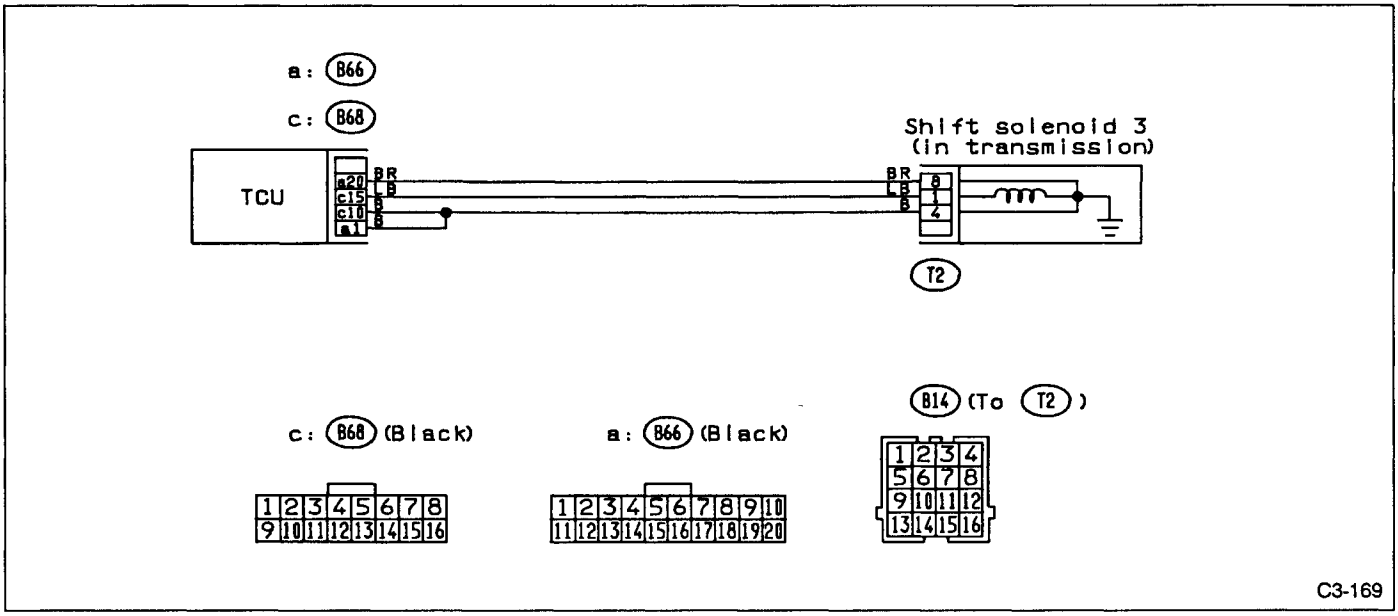

Fig. 286

1. MEASURE SIGNAL VOLTAGE OUTPUT EMITTED FROM TCU.

1) Raise vehicle and support with safety stands.
On 4-wheel drive models, raise all wheels off ground.
2) Warm up the engine and transmission.
3) Move selector lever to "D."
4) Measure signal voltage output emitted from TCU while idling the engine.

Connector & terminal / Specified voltage:
(B68) No. 15 — No. 10 / 10 — 14 V

2. Check harness between TCU and shift solenoid 3.

1) Disconnect connector from TCU.
2) Disconnect connector from transmission.
3) Measure resistance between TCU connector and transmission connector, and between TCU connector and body.

Connector & terminal / Specified resistance:
(B68) No. 15 — (B14) No. 1 / 0 Ω
(B68) No. 15 — Body/ 1 MΩ min.
(B68) No. 10 — (B14) No. 4 / 0 Ω
(B68) No. 10— Body / 1 MΩ min.

3. Check shift solenoid's grounding line.

1) Disconnect connector from transmission.
2) Measure resistance between transmission connector receptacle and transmission case.

Connector & terminal / Specified resistance:
(T2) No. 4 — Transmission / 0 Ω

4. Check shift solenoid.

1) Disconnect connector from transmission.
2) Measure resistance between transmission connector receptacle's terminals.

Connector & terminal / Specified resistance:
(T2) No. 1 — No. 4 / 20 — 30 Ω

D: TROUBLE CODE 14 — SHIFT SOLENOID 2 —

CONTENT OF DIAGNOSIS:
Output signal circuit of shift solenoid 2 is open or shorted.

TROUBLE SYMPTOM:
No shift

1	Measure output signal voltage emitted from TCU.	Not OK	Repair TCU terminal poor contact. (Replace TCU.)
↓ OK			
2	Check harness between TCU and shift solenoid 2.	Not OK	Repair harness.
↓ OK			
3	Check shift solenoid 2's grounding line.	Not OK	Repair grounding line.
↓ OK			
4	Check shift solenoid 2.	Not OK	Replace shift solenoid 2.
↓ OK			
Repair TCU terminal poor contact. (Replace TCU.)			

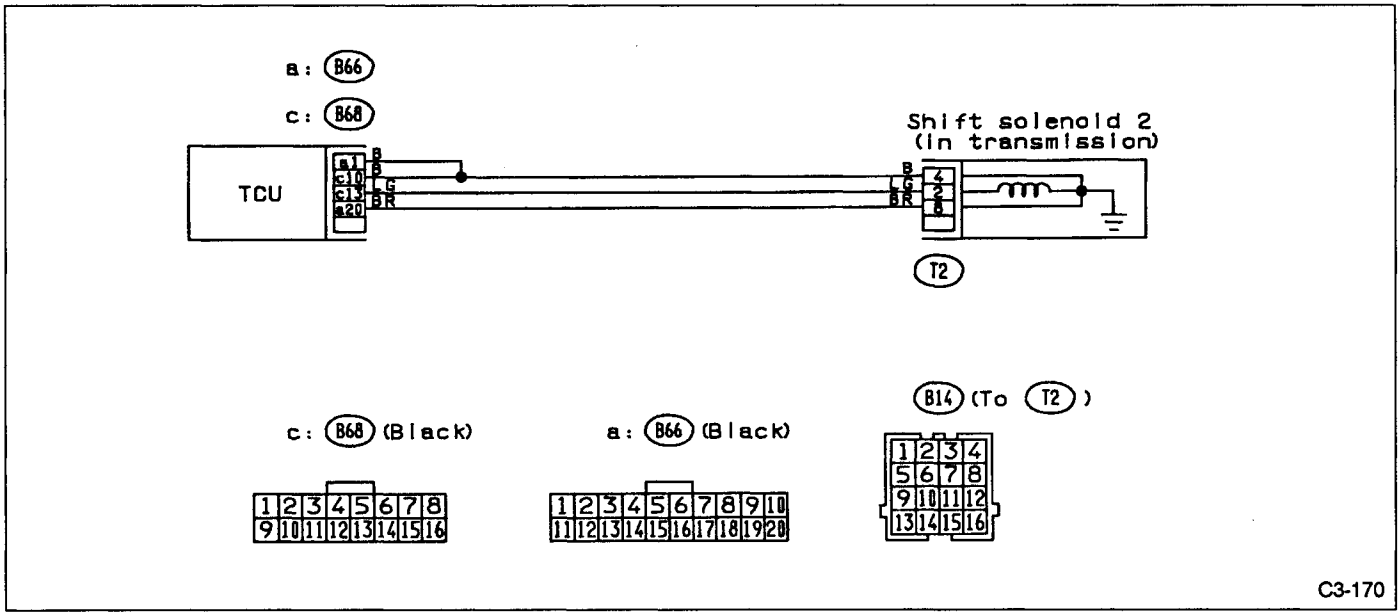

Fig. 287

1. MEASURE SIGNAL VOLTAGE OUTPUT EMITTED FROM TCU.

1) Raise vehicle and support with safety stands.
On 4-wheel drive models, raise all wheels off ground.
2) Warm up the engine and transmission.
3) Move selector lever to "D."
4) Measure signal voltage output emitted from TCU while idling the engine.

Connector & terminal / Specified voltage:
(B68) No. 13 — No. 10 / 10 — 14 V

2. CHECK HARNESS BETWEEN TCU AND SHIFT SOLENOID 2.

1) Disconnect connector from TCU.
2) Disconnect connector from transmission.
3) Measure resistance between TCU connector and transmission connector, and between TCU connector and body.

Connector & terminal / Specified resistance:
(B68) No. 13— (B14) No. 2 / 0 Ω
(B68) No. 13 — Body / 1 MΩ min.
(B68) No. 10— (B14) No. 4 / 0 Ω
(B68) No. 10— Body / 1 MΩ min.

3.CHECK SHIFT SOLENOID 2'S GROUNDING LINE.

1) Disconnect connector from transmission.
2) Measure resistance between transmission connector receptacle and transmission case.

Connector & terminal / Specified resistance:
(T2) No. 4 — Transmission / 0 Ω

4. Check shift solenoid 2.

1) Disconnect connector from transmission.
2) Measure resistance between transmission connector receptacle's terminals.

Connector & terminal / Specified resistance:
(T2) No. 2 — No. 4 / 20 — 30 Ω

E: TROUBLE CODE 15 — SHIFT SOLENOID 1 —

CONTENT OF DIAGNOSIS:
Output signal circuit of shift solenoid 1 is open or shorted.

TROUBLE SYMPTOM:
No shift

1	Measure signal voltage output emitted from TCU.	Not OK	Repair TCU terminal poor contact. (Replace TCU.)
↓ OK			
2	Check harness between TCU and shift solenoid 1.	Not OK	Repair harness.
↓ OK			
3	Check shift solenoid 1's ground line.	Not OK	Repair ground line.
↓ OK			
4	Check shift solenoid 1.	Not OK	Replace shift solenoid 1.
↓ OK			
Repair TCU terminal poor contact. (Replace TCU.)			

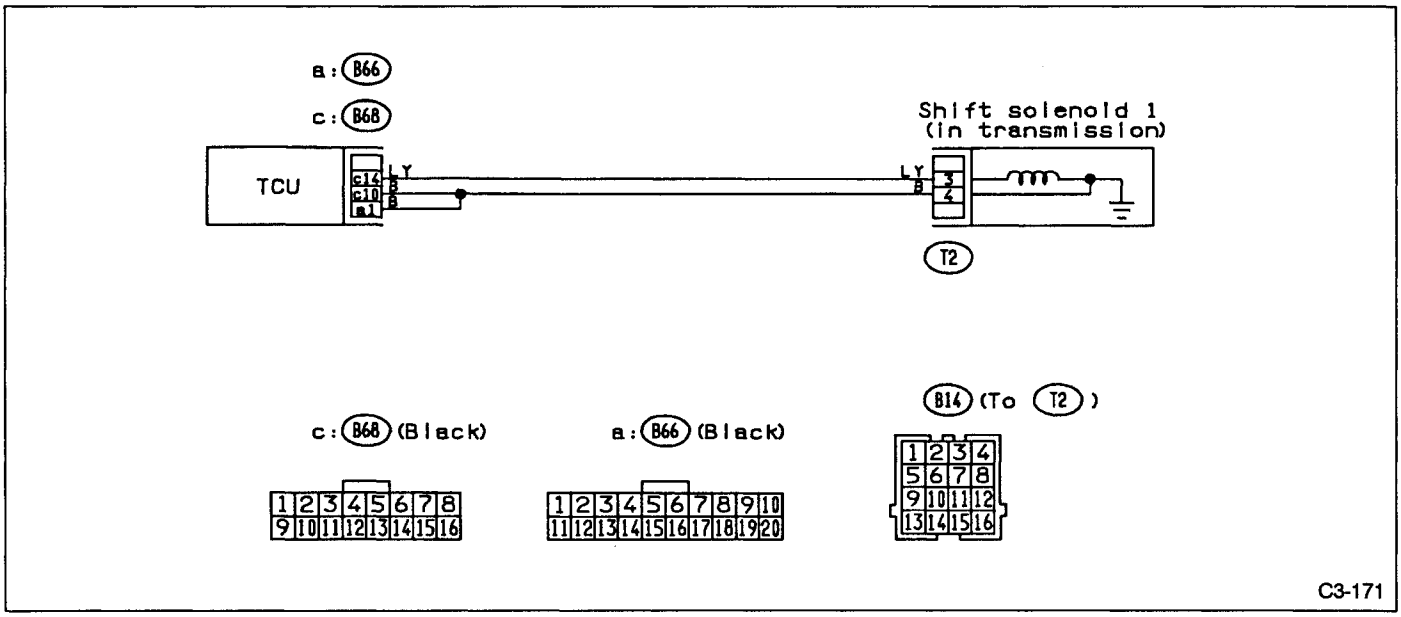

Fig. 288

1. MEASURE SIGNAL VOLTAGE OUTPUT EMITTED FROM TCU.

1) Raise vehicle and support with safety stands.
On 4-wheel drive models, raise all wheels off ground.
2) Warm up the engine and transmission.
3) Move selector lever to "D."
4) Measure signal voltage output emitted from TCU while idling the engine.

Connector & terminal / Specified voltage:
(B68) No. 14 — No. 10 / 10 — 14 V

2. CHECK HARNESS BETWEEN TCU AND SHIFT SOLENOID 1.

1) Disconnect connector from TCU.
2) Disconnect connector from transmission.
3) Measure resistance between TCU connector and transmission connector, and between TCU connector and body.

Connector & terminal/Specified resistance:
(B68) No. 14 — (B14) No. 3/0 Ω
(B68) No. 14 — Body/1 MΩ min.
(B68) No. 10 — (B14) No. 4/0 Ω
(B68) No. 10 — Body/1 MΩ min.

3. CHECK SHIFT SOLENOID 1'S GROUND LINE.

1) Disconnect connector from transmission.
2) Measure resistance between transmission connector receptacle and transmission case.

Connector & terminal / Specified resistance:
(T2) No. 4 — Transmission / 0 Ω

4. CHECK SHIFT SOLENOID 1.

1) Disconnect connector from transmission.
2) Measure resistance between transmission connector receptacle's terminals.

Connector & terminal / Specified resistance:
(T2) No. 3 — No. 4 / 20 — 30 Ω

F: TROUBLE CODE 21 — ATF TEMPERATURE SENSOR —

CONTENT OF DIAGNOSIS:
Input signal circuit of TCU to ATF temperature sensor is open or shorted.

TROUBLE SYMPTOM:
- **ATF indicator full time ON**

1	Measure signal voltage input of TCU.	OK →	Repair TCU terminal poor contact. (Replace TCU.)
↓ Not OK			
2	Check harness between TCU and ATF temperature sensor.	Not OK →	Repair harness.
↓ OK			
3	Check ATF temperature sensor.	Not OK →	Replace ATF temperature sensor.
↓ OK			
Repair TCU terminal poor contact. (Replace TCU.)			

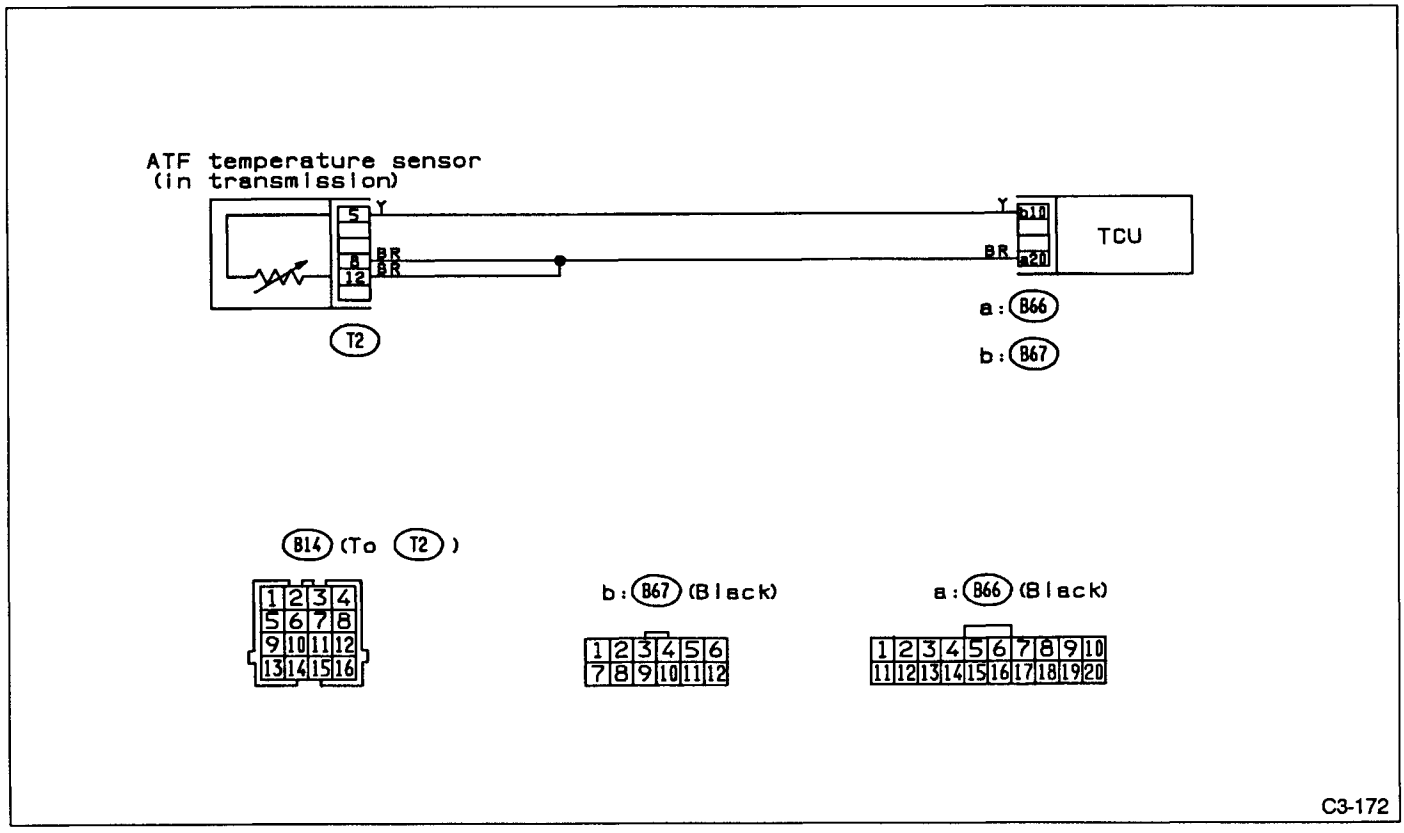

Fig. 289

1. MEASURE SIGNAL VOLTAGE INPUT OF TCU.

1) Turn ignition switch ON (with engine OFF) and measure signal voltage input of TCU.
2) Start and warm up the engine. Measure signal voltage input of TCU.

Connector & terminal / Specified voltage:
(B67) No. 10 — (B66) No. 20 /
1.4 — 1.7 V [ATF temperature: 20°C (68°F)]
0.3 — 0.6 V [ATF temperature: 80°C (176°F)]

- **SELECT MONITOR FUNCTION MODE**

Mode: 07 or 08
Condition:
Warm up the engine to increase ATF temperature.
Specified data:
ATFT F07 or 08
(Temperature shown on display increases)

2. CHECK HARNESS BETWEEN TCU AND ATF TEMPERATURE SENSOR.

1) Disconnect connector from TCU.
2) Disconnect connector from transmission.
3) Measure resistance between TCU connector and transmission connector, and between TCU connector and body.

Connector & terminal / Specified voltage:
(B67) No. 10— (B14) No. 5 / 0 Ω
(B67) No. 10— Body / 1 MΩ min.
(B66) No. 20— (B14) No. 12 / 0 Ω

3. CHECK ATF TEMPERATURE SENSOR.

1) Disconnect connector from transmission.
2) Measure resistance between transmission connector receptacle's terminals.

Connector & terminal / Specified resistance:
(T2) No. 5 — No. 12 /
2.3 — 2.7 kΩ [ATF temperature: 20°C (68°F)]

3) Connect connector to transmission, and warm up the engine to increase ATF temperature.
4) Stop the engine and disconnect connector from transmission.
5) Measure resistance between transmission connector receptacle's terminals.

Connector & terminal / Specified resistance:
(T2) No. 5 — No. 12 /
280 — 360 Ω [ATF temperature: 80°C (176°F)]

G: TROUBLE CODE 23 — ENGINE REVOLUTION SIGNAL —

CONTENT OF DIAGNOSIS:
Engine revolution input signal circuit is open or shorted.

TROUBLE SYMPTOM:
No lockup occurs (after engine warm-up)
Power indicator remains on when vehicle speed is "0".

1	Measure signal voltage input of TCU.	OK →	Repair TCU terminal poor contact. (Replace TCU.)
↓ Not OK			
2	Check harness between TCU and ECU (MPFI).	Not OK →	Repair harness.
↓ OK			
Conduct troubleshooting for MPFI's ignition system.			

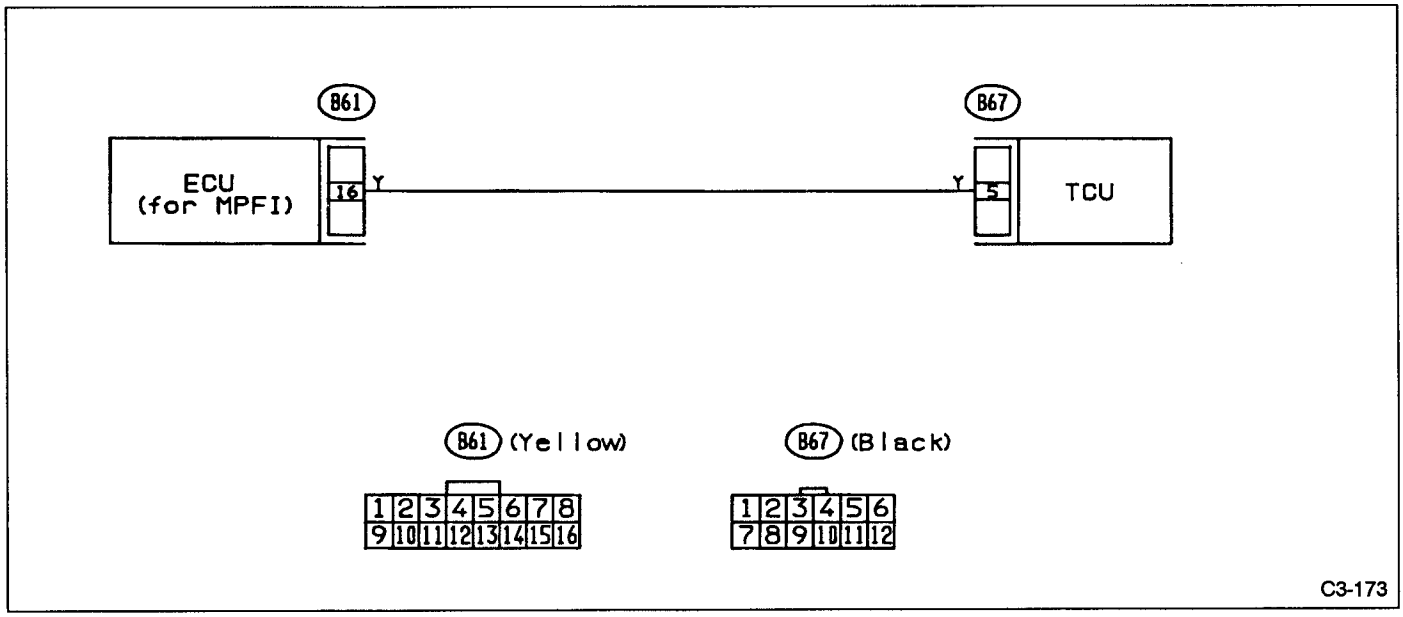

Fig. 290

1. MEASURE SIGNAL VOLTAGE INPUT OF TCU.

1) Turn ignition switch ON (with engine OFF).
2) Measure signal voltage input of TCU.

Connector & terminal / Specified voltage:
(B67) No. 5 — Body / 10 V, min.

- **SELECT MONITOR FUNCTION MODE**

Mode: 06
Condition:
After warming up the engine
Specified data: EREV F06
(Engine speed is shown in rpm.)

2. CHECK HARNESS BETWEEN TCU AND ECU (MPFI).

1) Disconnect connector from TCU.
2) Disconnect connector from ECU.
3) Measure resistance between TCU connector and ECU connector.

Connector & terminal / Specified resistance:
(B67) No. 5— (B61) No. 16 / 0 Ω
(B67) No. 5— Body / 1 MΩ, min.

H: TROUBLE CODE 24 — DUTY SOLENOID C —

CONTENT OF DIAGNOSIS:
Output signal circuit of duty solenoid C is open or shorted.

TROUBLE SYMPTOM:
Excessive "braking" in tight corners

1	Measure signal voltage output emitted from TCU.	Not OK	Repair TCU terminal poor contact. (Replace TCU.)
	↓ OK		
2	Check harness between TCU and duty solenoid.	Not OK	Repair harness.
	↓ OK		
3	Check duty solenoid C's ground line.	Not OK	Repair ground line.
	↓ OK		
4	Check duty solenoid C.	Not OK	Replace duty solenoid C.
	↓ OK		
	Repair TCU terminal poor contact. (Replace TCU.)		

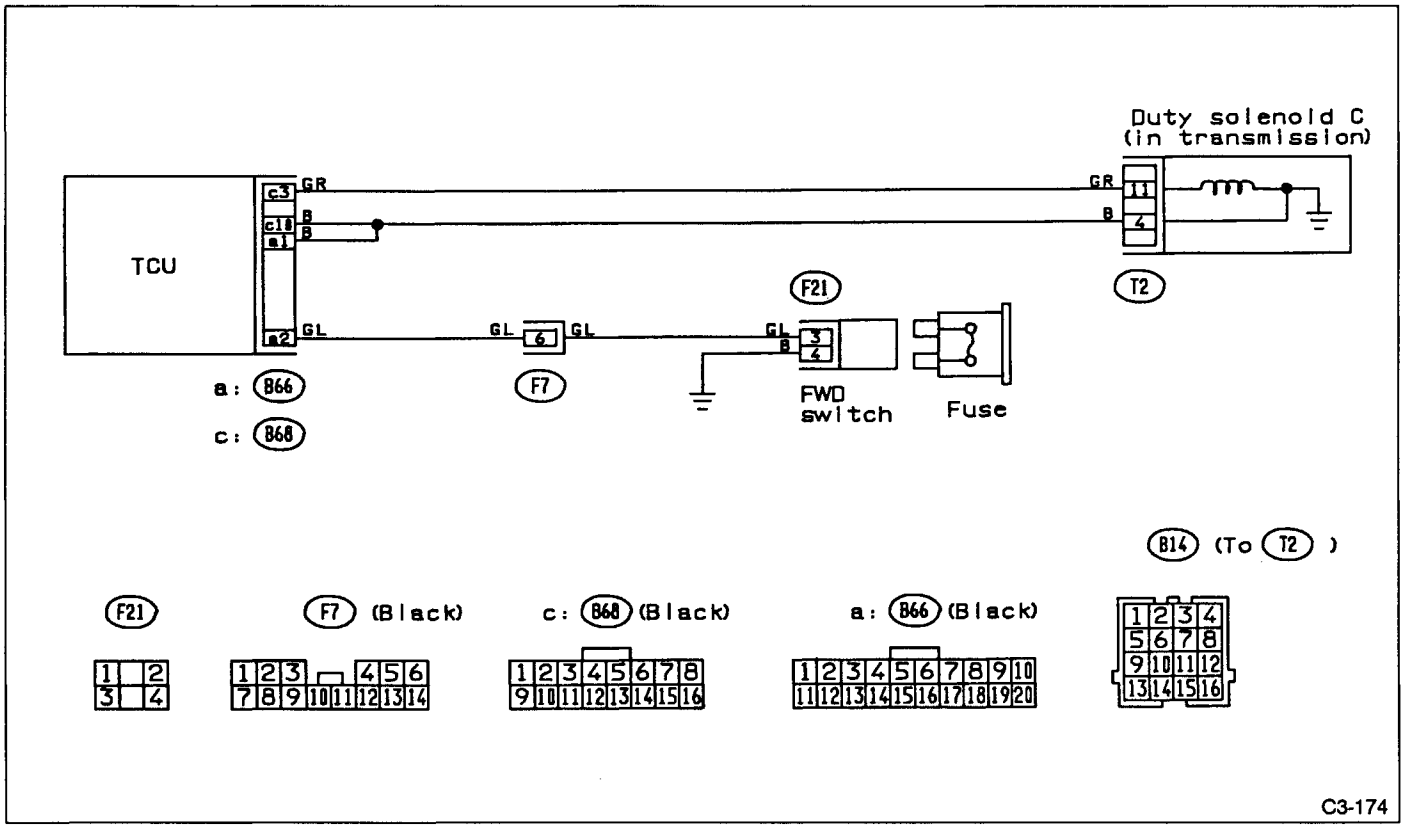

Fig. 291

1. CHECK SIGNAL VOLTAGE OUTPUT EMITTED FROM TCU.

1) Install spare fuse on FWD connector and set in FWD mode.

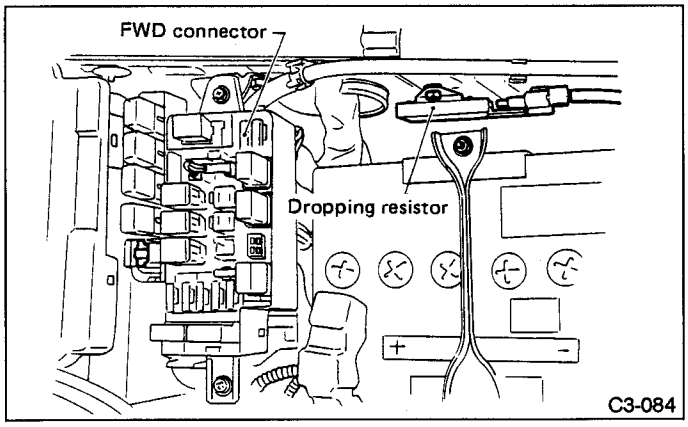

Fig. 292

2) Turn ignition switch ON (with engine OFF).
3) Move selector lever to "D".
4) Measure voltage output emitted from TCU (with accelerator pedal released).

Connector & terminal / Specified voltage:
(B68) No. 3 — No. 10 / 8 — 14 V

5) Turn ignition switch OFF.
6) Remove spare fuse from FWD switch.
7) Turn ignition switch ON (with engine OFF).
8) Move selector lever to "D."
9) Measure voltage output emitted from TCU (with accelerator pedal fully depressed).

Connector & terminal / Specified voltage:
(B68) No. 3 — No. 10 / 0.5 V, max.

- **SELECT MONITOR FUNCTION MODE**

Mode: 13
Condition:
Ignition switch ON (Engine OFF)
Specified data:
4WDTY F13
95% (FWD mode)
25%, max. (AWD mode, D-range, Full throttle)

2. CHECK HARNESS BETWEEN TCU AND DUTY SOLENOID C.

1) Disconnect connector from TCU.
2) Disconnect connector from transmission.
3) Measure resistance between TCU connector and transmission connector.

Connector & terminal / Specified resistance:
(B68) No. 3 — (B14) No. 11 / 0 Ω
(B68) No. 3 — Body / 1 MΩ, min.
(B68) No. 10 — (B14) No. 4 / 0 Ω
(B68) No. 10 — Body / 1 MΩ, min.

3. CHECK DUTY SOLENOID C'S GROUND LINE.

1) Disconnect connector from transmission.
2) Measure resistance between transmission connector receptacle and transmission case.

Connector & terminal / Specified resistance:
(T2) No. 4 — Transmission / 1 Ω, max.

4. CHECK DUTY SOLENOID C.

1) Disconnect connector from transmission.
2) Measure resistance between transmission connector receptacle's terminals.

Connector & terminal / Specified resistance:
(T2) No. 11 — No. 4 / 9 — 15 Ω

I: TROUBLE CODE 25 — ENGINE TORQUE CONTROL SIGNAL —

CONTENT OF DIAGNOSIS:
Engine torque control output signal circuit is open or shorted.

TROUBLE SYMPTOM:
Excessive shift shock

1	Measure signal voltage output of ECU (MPFI).	Not OK	Repair ECU (MPFI) terminal poor contact. (Replace ECU.)
↓ OK			
2	Measure signal voltage input of TCU.	Not OK	Repair or replace harness/connector.
↓ OK			
Repair TCU terminal poor contact. (Replace TCU.)			

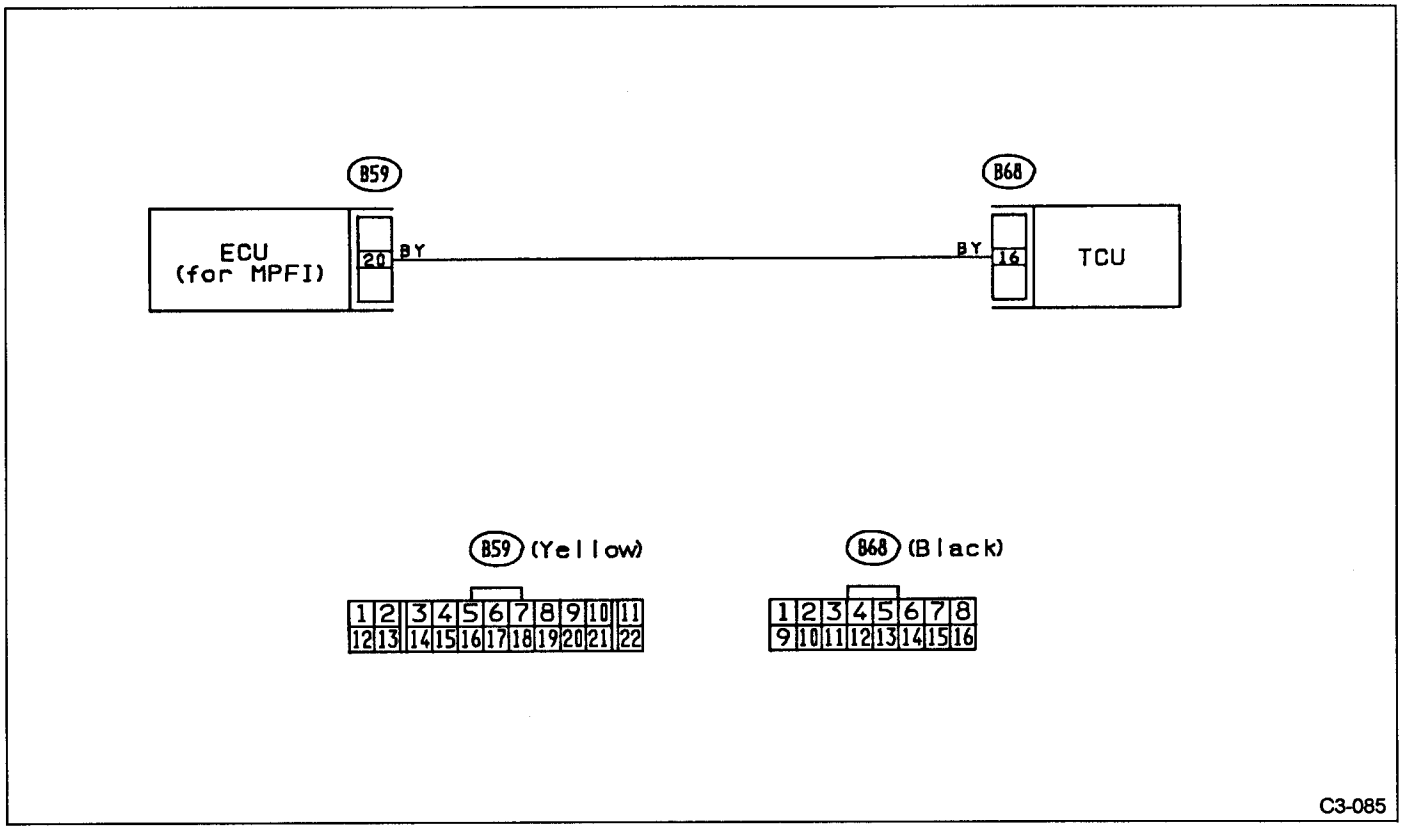

Fig. 293

1. MEASURE SIGNAL VOLTAGE OUTPUT OF ECU (MPFI).

1) Turn ignition switch ON (with engine OFF).
2) Measure signal voltage output of ECU (MPFI).

Connector & terminal / Specified voltage:
(B59) No. 20 — Body / 4 — 5 V

2. MEASURE SIGNAL VOLTAGE INPUT OF TCU.

1) Disconnect connector from TCU.
2) Turn ignition switch ON (with engine OFF).
3) Measure signal voltage input of TCU.

Connector & terminal / Specified resistance:
(B68) No. 9 — Body / 4 — 5 V

J: TROUBLE CODE 31 — THROTTLE SENSOR —

CONTENT OF DIAGNOSIS:
Input signal circuit of throttle sensor is open or shorted.

TROUBLE SYMPTOM:
Shift point too high or too low; engine brake not effected in "3" range; excessive shift shock; excessive tight corner "braking"

1	Measure signal voltage input of TCU.	OK	Repair TCU terminal poor contact. (Replace TCU.)
	↓ Not OK		
2	Check harness/connector between TCU and throttle sensor.	Not OK	Repair harness/connector.
	↓ OK		
3	Check throttle sensor.	Not OK	Replace throttle body.
	↓ OK		
	Repair TCU terminal poor contact. (Replace TCU.)		

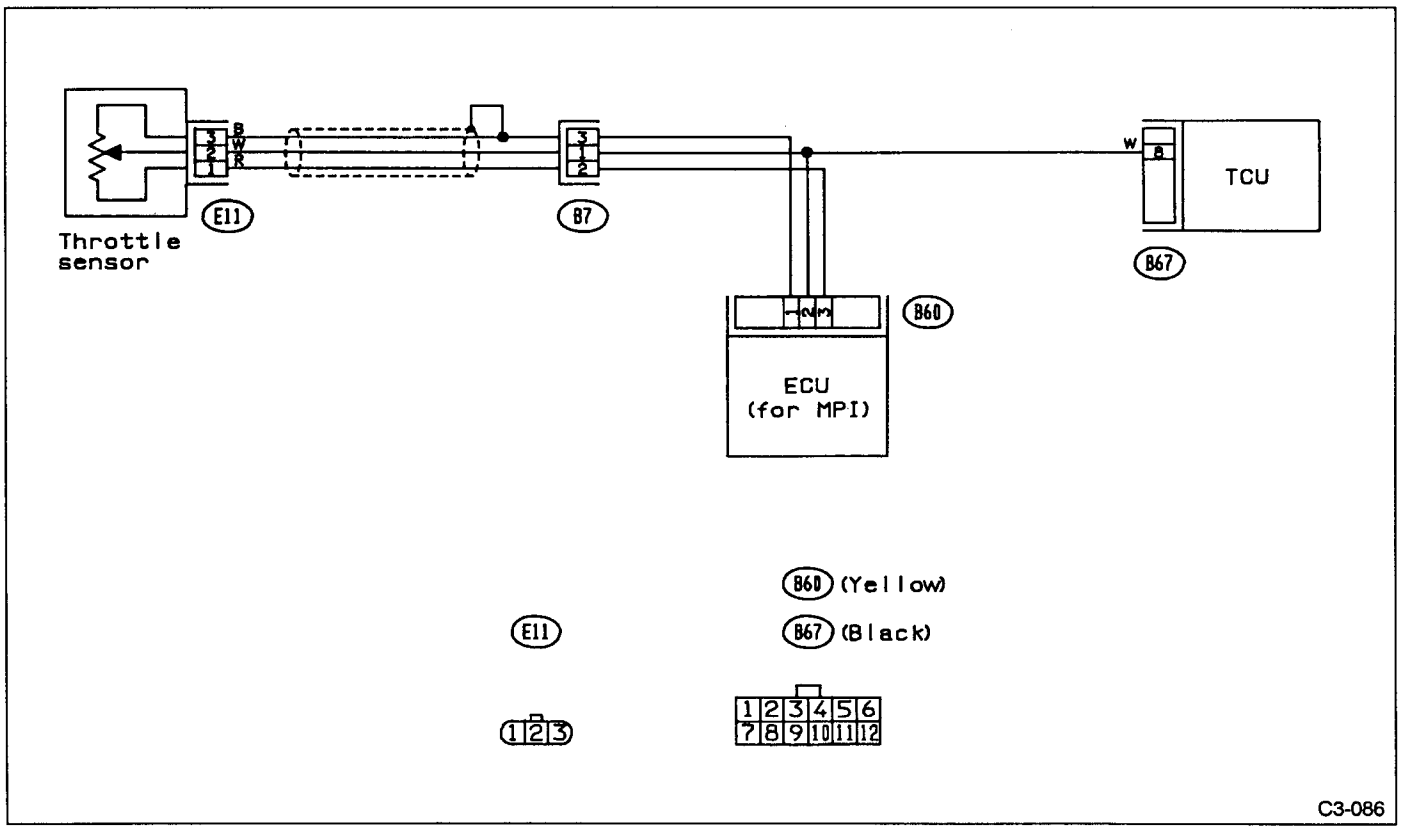

Fig. 294

1. MEASURE SIGNAL VOLTAGE INPUT OF TCU.

1) Turn ignition switch ON (with engine OFF).
2) Measure signal voltage input emitted from throttle sensor with accelerator pedal fully depressed.

Connector & terminal / Specified voltage:
(B67) No. 8 — Body/
.5 V (Throttle fully closed)
4.5 V (Throttle fully open)

- **SELECT MONITOR FUNCTION MODE**

Mode: 09		
Condition: Ignition switch ON (Engine OFF)		
Specified data:	THV F09	
	4.7 — 1.6 V	(Must be changed correspondingly with accelerator pedal operation (from "released" to "depressed" position.)

2. CHECK HARNESS/CONNECTOR BETWEEN TCU AND THROTTLE SENSOR.

1) Disconnect connector from TCU.
2) Disconnect connector from throttle sensor.
3) Measure resistance between TCU and throttle sensor connectors.

Connector & terminal / Specified resistance:
(B67) No. 8 — (E11) No. 1 / 0 Ω
(B67) No. 8 — Body / 1 MΩ min.

3. CHECK THROTTLE SENSOR.

1) Disconnect connector from throttle sensor.
2) Measure resistance between throttle sensor terminals.

Terminal / Specified resistance:
No. 1 — No. 2 /
.5 kΩ (Throttle fully closed)
4.5 kΩ (Throttle fully open)

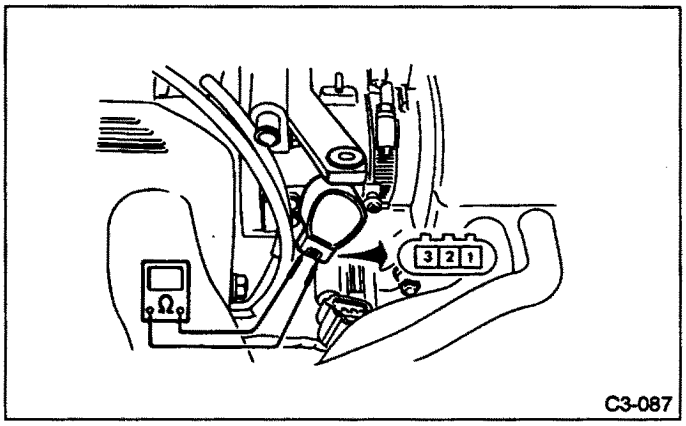

Fig. 295

K: TROUBLE CODE 32 — VEHICLE SPEED SENSOR 1 —

CONTENT OF DIAGNOSIS:
Input signal circuit of TCU is open or shorted.

TROUBLE SYMPTOM:
No shift or excessive tight corner "braking"

1 Measure signal voltage input of TCU.
- OK → Repair TCU terminal poor contact. (Replace TCU.)
- Not OK ↓

2 Check harness between TCU and vehicle speed sensor 1.
- Not OK → Repair harness/connector.
- OK ↓

3 Check vehicle speed sensor 1.
- Not OK → Replace vehicle speed sensor 1.
- OK ↓

Replace TCU terminal poor contact. (Replace TCU.)

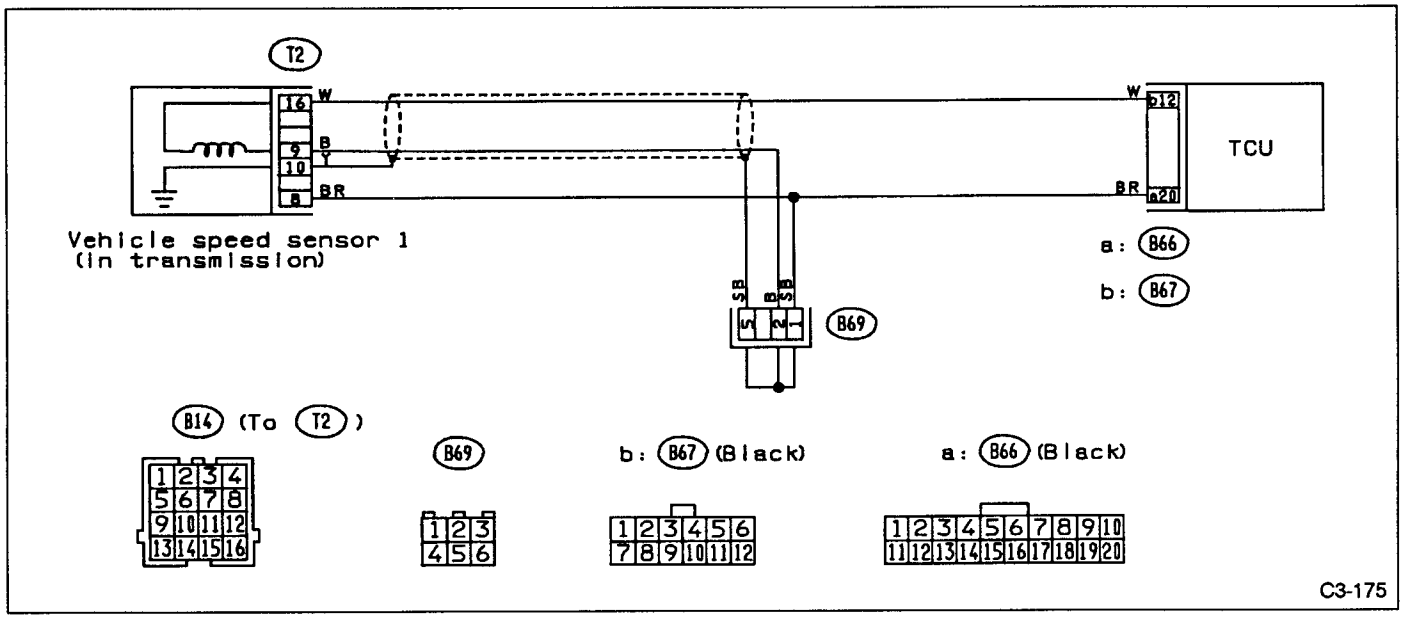

Fig. 296

1. MEASURE SIGNAL VOLTAGE INPUT OF TCU.

1) Raise vehicle and place safety stands.

On AWD models, raise all wheels off floor.

2) Start the engine. Set vehicle in 12 miles/h condition.

3) Measure signal voltage input of TCU.

Connector & terminal / Specified voltage:
(B67) No. 12 — (B66) No. 20 / AC 1 V, min.

- **SELECT MONITOR FUNCTION MODE**

Mode: 02	
Condition: Simulated driving	
Specified data:	VSP1 F02 (Vehicle speed) miles/h

Mode 03: "km/h" indication

2.CHECK HARNESS/CONNECTOR BETWEEN TCU AND VEHICLE SPEED SENSOR 1.

1) Disconnect connector from TCU.

2) Disconnect connector from transmission.

3) Measure resistance between TCU connector and transmission connector.

Connector & terminal / Specified resistance:
(B67) No. 12 — (B14) No. 16 / 0 Ω
(B67) No. 12 — Body / 1 MΩ min.
(B66) No. 20 — (B14) No. 9 / 0 Ω
(B66) No. 20 — Body / 1 MΩ min.

3. CHECK VEHICLE SPEED SENSOR 1.

1) Disconnect connector from transmission.

2) Measure resistance between transmission connector receptacle's terminals.

Connector & terminal / Specified resistance:
(T2) No. 16 — No. 9 / 450 — 650 Ω

L: TROUBLE CODE 33 — VEHICLE SPEED SENSOR 2 —

CONTENT OF DIAGNOSIS:
Input signal circuit of vehicle speed sensor 2 is open or shorted.

TROUBLE SYMPTOM:
Improper shift points

1	Measure signal voltage input of TCU.	OK	Repair TCU terminal poor contact. (Replace TCU.)
↓ Not OK			
2	Check harness/connector between TCU and vehicle speed sensor 2.	Not OK	Repair harness/connector.
↓ OK			
3	Check voltage of power supply line.	Not OK	Repair or replace power supply circuit.
↓ OK			
4	Check vehicle speed sensor 2.	Not OK	Replace vehicle speed sensor 2.
↓ OK			
Mechanical trouble in transmission.			

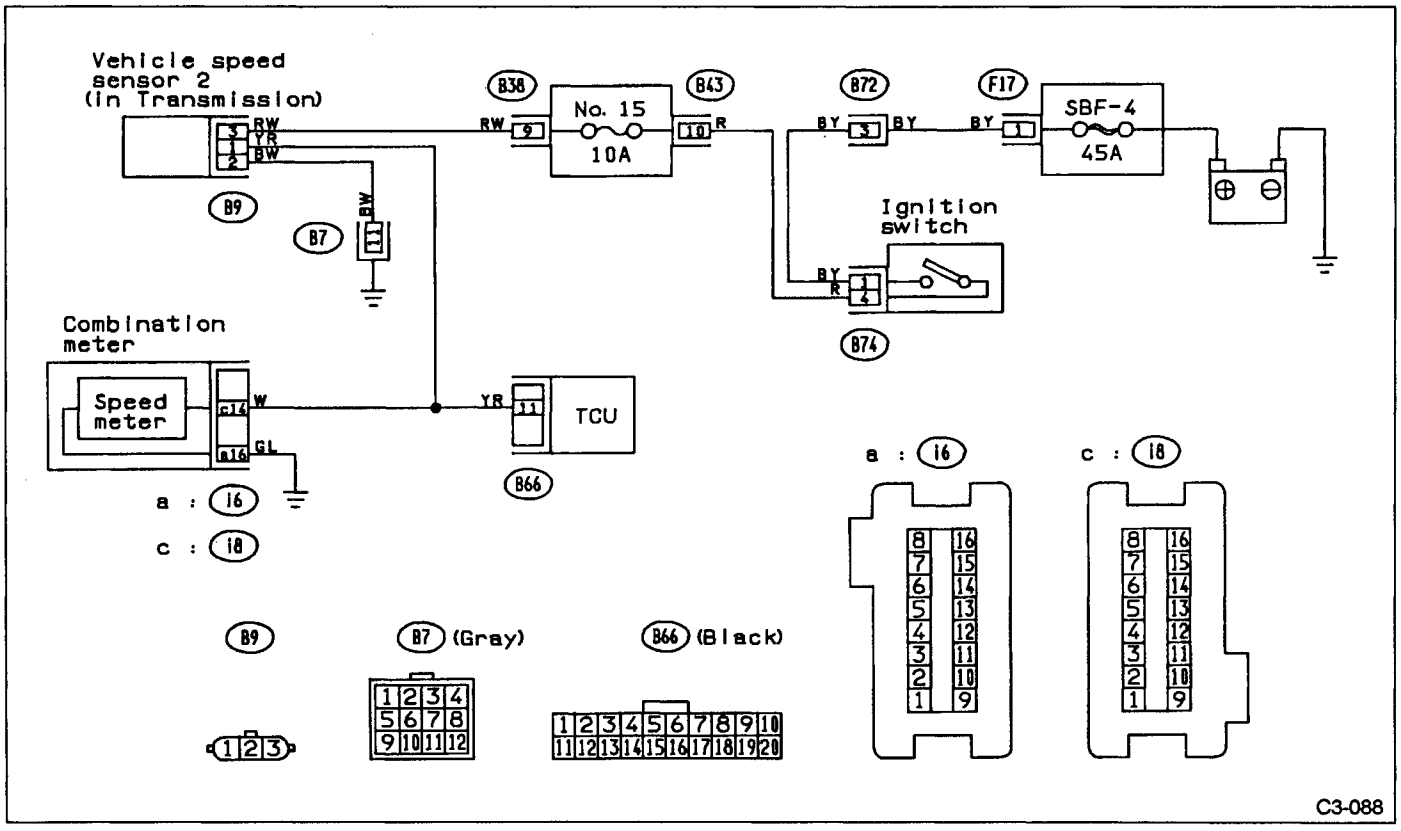

Fig. 297

1.MEASURE SIGNAL VOLTAGE INPUT OF TCU.

1) Turn ignition switch ON (with engine OFF).
2) Move select lever to "N" and slowly move vehicle by pushing it.
3) While vehicle is slowly moving, measure signal voltage input of TCU.

Connector & terminal / Specified voltage:
(B66) No. 11 — (B66) No. 20 / 0 ⇄ 5V

- **SELECT MONITOR FUNCTION MODE**

Mode: 04	
Condition: Simulated driving	
Specified data:	VSP2 04 (vehicle speed) miles/h*

***: "km/h" indication in mode 05.**

2. CHECK HARNESS/CONNECTOR BETWEEN TCU AND VEHICLE SPEED SENSOR 2.

1) Disconnect connector from TCU.
2) Disconnect connector from vehicle speed sensor 2.
3) Measure resistance between TCU connector and vehicle speed sensor 2 connector, and vehicle speed sensor 2 connector and body.

Connector & terminal / Specified resistance:
(B66) No. 11 — (B9) No. 1 / 0 Ω
(B66) No. 11 — Body / 1 MΩ, min.
(B9) No. 2 — Body / 0 Ω

3. CHECK VOLTAGE OF POWER SUPPLY LINE.

1) Turn ignition switch ON (with engine OFF).
2) Measure voltage between vehicle speed sensor 2 connector and body.

Connector & terminal / Specified voltage:
(B9) No. 3 — Body / 10V, min.

4. CHECK VEHICLE SPEED SENSOR 2.

1) Remove vehicle speed sensor 2 from transmission, connect body harness connector (B9) to vehicle speed sensor 2 and turn ignition switch ON.
2) Rotate vehicle speed sensor 2.
3) Check that voltage across vehicle speed sensor 2's connector terminals change (from 0 to 5) volts four times per rotation.

Connector & terminal / Specified voltage:
(B9) No. 1 — (B9) No. 2 / 0 ⇄ 5 V

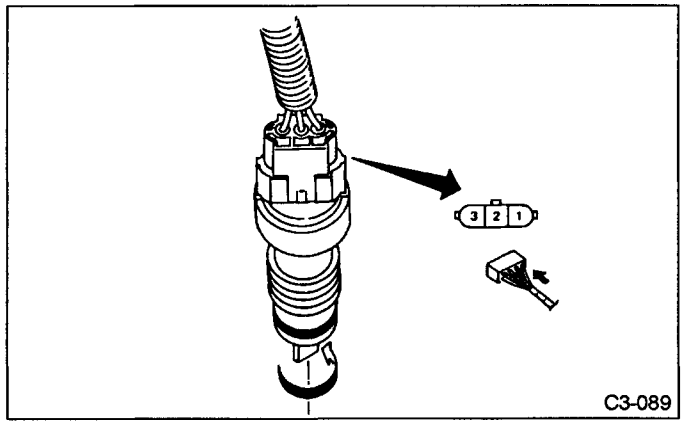

Fig. 298

6. Troubleshooting Chart with Select Monitor

A: BASIC TROUBLESHOOTING CHART

If no trouble codes appear in the self diagnosis function (although problems have occurred or are occurring), measure performance characteristics of sensors, actuators, etc., in the "F" mode (select-monitor function), and compare with the "basic data" to determine the cause of problems.

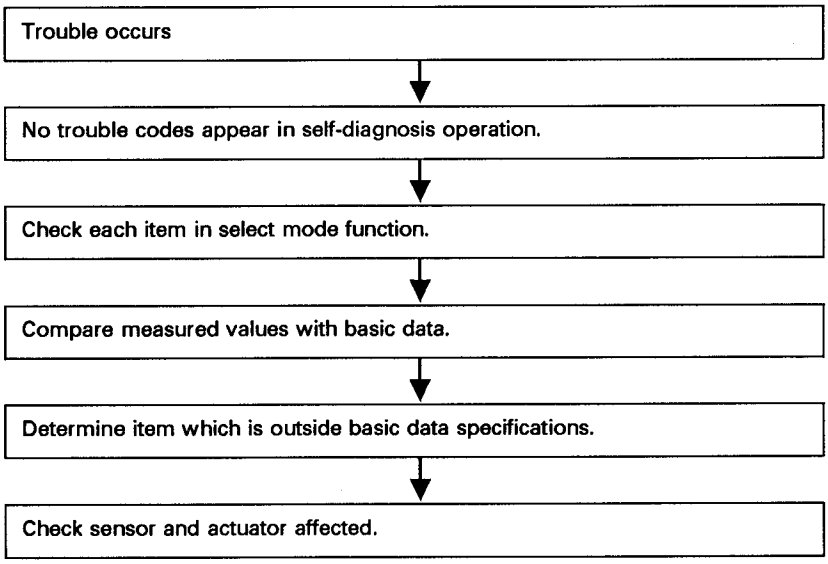

B: LIST OF OUTPUT MODES

1. FUNCTION MODE

Mode	Contents	Abbr.	Unit	Contents of display
00	Mode display	—	—	AT or EGI mode (when monitor is connected)
01	Battery voltage	VB	V	Battery voltage applied to control unit.
02	Vehicle speed sensor 1	VSP1	m/h	Vehicle speed (miles/h) sent from vehicle speed sensor 1.
03	Vehicle speed sensor 1	VSP1	km/h	Vehicle speed (km/h) sent from vehicle speed sensor 1.
04	Vehicle speed sensor 2	VSP2	m/h	Vehicle speed (miles/h) sent from vehicle speed sensor 2.
05	Vehicle speed sensor 2	VSP2	km/h	Vehicle speed (km/h) sent from vehicle speed sensor 2.
06	Engine RPM	EREV	rpm	Engine speed sent from EGI unit.
07	ATF temperature sensor	ATFT	°F	ATF temperature (°F) sent from ATF temperature sensor.
08	ATF temperature sensor	ATFT	°C	ATF temperature (°C) sent from ATF temperature sensor.
09	Throttle sensor	THV	V	Voltage sent from throttle sensor.
10	Gear position	GEAR	—	Transmission gear position.
11	Line pressure duty	PLDTY	%	Duty ratio flowing through duty solenoid A.
12	Lock-up duty	LUDTY	%	Duty ratio flowing through duty solenoid B.
13	AWD duty	4WDTY	%	Duty ratio flowing through duty solenoid C.
14	Atmospheric sensor	BARO.P	mmHg	—

2. ON ←→ OFF SIGNAL LIST

Mode	LED No.	Contents	Display	LED "ON" requirements
A0	5	ABS switch	AB	When ABS signal is entered
	6	Cruise control set	CR	When cruise control is set
	7	OD cut	OD	When OD cut signal is entered
	8	FWD switch	FF	When fuse is installed in FWD switch
A1	1	N/P range switch	NP	When N/P range is selected
	2	R range switch	RR	When R range is selected
	3	2 range switch	R2	When 2 range is selected
	4	3 range switch	R3	When 3 range is selected
	5	D range switch	RD	When D range is selected
	6	1 range switch	R1	When 1 range is selected
	7	Manual switch	MS	When manual switch is turned ON
A2	2	Engine torque control signal	TS	When engine torque control signal is entered
	3	Brake switch	BR	When brake switch is turned ON

3. DIAGNOSIS MODE

Mode	Contents	Abbr.	Contents of display
B0	Self-diagnosis	DIAG.U	Current trouble code determined by self-diagnosis
B1	Self-diagnosis	DIAG.M	Previous trouble code stored in memory by self-diagnosis
C0	Back-up clear	—	Function of clearing trouble code stored in memory

C: MODE 00 — MODEL YEAR —

CONDITION:

SPECIFIED DATA:
Following data should be indicated.
(Indications)

E-4AT	(F00)
4WD	1992

Probable cause (if outside "specified data")

1	Communication failure (No communication method can be confirmed with power ON)	(1) Check loose or poor connectors, or shortcircuit. (2) Check type of cartridge.
2	Vehicle types cannot be identified (due to communication failure).	Check improper cartridge. Replace with proper one.

D: MODE 01 — BATTERY VOLTAGE (VB) —

CONDITION:
(1) Ignition switch ON
(2) Engine idling after warm-up

SPECIFIED DATA:
VB: 10 — 15 V
(Indications)

VB	(F01)
12 V	

1	Battery	Check battery voltage and specific gravity of electrolyte.
2	Charging system	(1) Measure regulating voltage under no loads (2) Check alternator (as a single unit).

E: MODE 02 — SPEED SENSOR 1 (VSP 1) —

CONDITION:
Raise vehicle off ground and operate at constant speed.

SPECIFIED DATA:
Compare speedometer with monitor indications.
Probable cause (if indications are different)
⟨Indications⟩

VSP1	**(F02)**
18 m/h	

Probable cause (if outside "specified data")

1	Vehicle speed sensor 1

→ Check performance characteristics of vehicle speed sensor 1. ⟨Ref. to [T4K0.]⟩

↓ OK

Check TCU and replace if necessary.

F: MODE 04 — SPEED SENSOR 2 (VSP 2) —

CONDITION:
Raise vehicle off ground and operate at constant speed.

SPECIFIED DATA:
Compare speedometer with monitor indications.
Probable cause (if indications are different)
⟨Indications⟩

VSP2	**(F04)**
12 m/h	

Probable cause (item outside "specified data")

1	Vehicle speed sensor 2

→ Check performance characteristics of vehicle speed sensor 2. ⟨Ref. to [T4L0]⟩

↓ OK

Check TCU and replace if necessary.

G: MODE 06 — ENGINE SPEED (EREV) —

CONDITION:
Measure with engine operating at constant speed.

SPECIFIED DATA:
Same as tachometer reading (in combination meter)
⟨Indications⟩

EREV	**(F06)**
1,500 rpm	

Probable cause (if outside "specified data")

1	Conduct troubleshooting in relation to EGI system for engine speed.

→ OK

Check TCU and replace if necessary.

H: MODE 08 — ATF TEMPERATURE (ATFT) —

CONDITION:
(1) Low ATF temperature (before engine/vehicle starts)
(2) High ATF temperature (after driving vehicle for warm-up)

SPECIFIED DATA:
(1) Ambient temperature: ± 10°C
(2) ATF temperature: 70 — 110°C
⟨Indications⟩

ATFT	**deg C**	**(F08)**
80 deg C		

Probable cause (if outside "specified data")

1	ATF temperature sensor

→ Check performance characteristics of ATF temperature sensor.

↓ OK

Check TCU and replace if necessary.

F07 = ATF temperature (ATFT): to be indicated in "deg F".

I: MODE 09 — THROTTLE SENSOR (THV) —

CONDITION:
Ignition switch ON (with engine OFF) Measure voltage while operating throttle valve from a fully closed position to a fully open position.

SPECIFIED DATA:
Fully closed position: .5 V
Fully open position: 4.5 V
From fully closed to fully open position: Voltage must smoothly decrease.
⟨Indications⟩

THV	(F09)
4.7V	

Probable cause (if outside "specified data")

1	Throttle sensor	Check performance characteristics of throttle sensor. ⟨Ref. to [T4J0]⟩ → OK → Check TCU and replace if necessary.

J: MODE 10 — GEAR POSITION (GEAR) —

CONDITION:
Check while driving vehicle (after sufficient warm-up).

SPECIFIED DATA:
Gear position (Ref. shift performance characteristics chart)
⟨Indications⟩

GEAR	(F10)
1 st	

Probable cause (item outside "specified data")

1	Shift solenoid 1	Check performance characteristics of shift solenoid 1. ⟨Ref. to [T4E0.]⟩ → OK
2	Shift solenoid 2	Check performance characteristics of shift solenoid 2. ⟨Ref. to [T4D0.]⟩ → OK
3	Shift solenoid 3	Check performance characteristics of shift solenoid 3. ⟨Ref. to [T4C0.]⟩ → OK → Check TCU and replace as necessary.

K: MODE 11 — LINE PRESSURE DUTY (PLDTY) —

CONDITION
- Ignition ON (engine OFF)
- N range

SPECIFIED DATA:
Throttle fully closed: 100%
Throttle fully open: 5%

Probable cause (If outside "specified data")

1	Throttle sensor	Check in FO9 mode. ⟨Ref. to [T5I0.]⟩
		↓ OK
2	Vehicle speed sensor 1	Check in FO2 mode. ⟨Ref. to [T5E0.]⟩
		↓ OK
3	Vehicle speed sensor 2	Check in FO4 mode. ⟨Ref. to [T5F0.]⟩
		↓ OK
4	Engine speed	Check in FO6 mode. ⟨Ref. to [T5G0.]⟩
		↓ OK
5	ATF temperature sensor	Check in FO8 mode. ⟨Ref. to [T5H0.]⟩
		↓ OK
6	Inhibitor switch	Check for operation.
		↓ OK
7	Manual switch	Check for operation.
		↓ OK
		Check TCU and replace if necessary.

L: MODE 12 — LOCK-UP DUTY (LUDTY) —

CONDITION:
(1) Idling (after sufficient warm-up) with lock-up system released
(2) Driving at 50 km/h (31 MPH) (after sufficient warm-up) with lock-up system applied

SPECIFIED DATA:
(1) Lock-up system released: 5%
(2) Lock-up system applied: 95%
⟨Indications⟩

LUDTY	(F12)
5%	

Probable cause (if outside "specified data")

1	Throttle sensor	Check in FO9 mode. ⟨Ref. to [T5I0.]⟩
2	Vehicle speed sensor 1	Check in F02 mode. ⟨Ref. to [T5E0.]⟩
3	Vehicle speed sensor 2	Check in F04 mode. ⟨Ref. to [T5F0.]⟩
4	Engine speed	Check in F06 mode. ⟨Ref. to [T5G0.]⟩
5	Inhibitor switch	Check for operation.

OK

OK

OK

OK

OK

Check TCU and replace if necessary.

M: MODE 13 — AWD DUTY (4WDTY) —

CONDITION:
- **After sufficient warm-up**
- **Ignition switch ON (engine OFF)**

1) FWD mode
2) AWD mode, D-range, Full throttle

SPECIFIED DATA:
(1) 95%
(2) 25%, max. (vehicle speed 0 m/h)
⟨Indications⟩

4WDTY	(F13)
95%	

Probable cause (if outside "specified data")

1	Throttle sensor	Check in F09 mode. ⟨Ref. to [T5I0.]⟩
2	Vehicle speed sensor 1	Check in F02 mode. ⟨Ref. to [T5E0.]⟩
3	Vehicle speed sensor 2	Check in F04 mode. ⟨Ref. to [T5F0.]⟩
4	ATF temperature sensor	Check in F08 mode. ⟨Ref. to [T5H0.]⟩
5	Inhibitor switch	Check for operation. ⟨Ref. to [W2B2.]⟩
6	ABS signal	Check ABS system for operation. .
		Check TCU and replace if necessary.

N: MODE 14 — ATMOSPHERIC SENSOR (BARO. P) —

CONDITION:
Ground surface (not high altitude)

SPECIFIED DATA:
***(Atmospheric pressure) mmHg**
***"—9 to 10 mmHg" changes at an altitude of 100 meters.**
⟨Indications⟩

BARO.P	(F14)
760 mmHg	

Probable cause (if outside "specified data")

1	Atmospheric sensor	Replace ECU (MPFI).

O: A0 MODE — SWITCH 1 (SW1) —

DISPLAY

LED No.	Signal name	Symbol
5	ABS switch	AB
6	Cruise control set	CR
8	FWD switch	FF

—	—	—	—	AB
CR	—	FF	—	—

1	2	3	4	5
6	7	8	9	10

Reference values

(1) Lights up when the ABS signal is entered (No. 5).
(2) Lights up when the cruise control is set (No. 6).
(3) Lights up when the fuse is installed in FWD switch (No. 8).

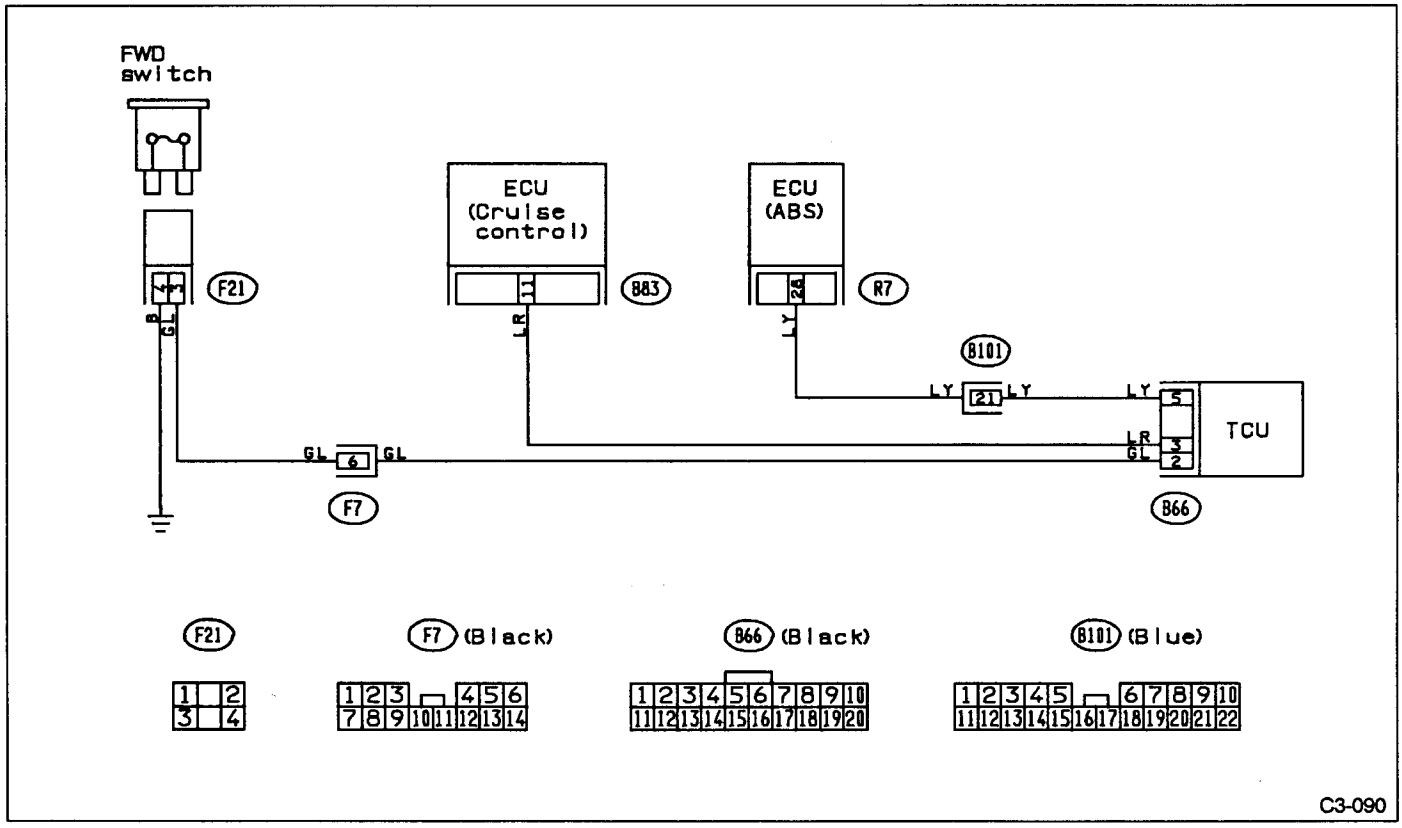

Fig. 299

P: A1 MODE — SWITCH 2 (SW2) —

DISPLAY

LED No.	Signal name	Symbol
1	N/P range switch	NP
2	R range switch	RR
3	2 range switch	R2
4	3 range switch	R3
5	D range switch	RD
6	1 range switch	R1
7	Manual switch	MS

NP	RR	R2	R3	RD
R1	MS	—	—	—

1	2	3	4	5
6	7	8	9	10

Reference values

(1) Lights up when the N or P range is selected (No. 1).
(2) Lights up when the R range is selected (No. 2).
(3) Lights up when the 2 range is selected (No. 3).
(4) Lights up when the 3 range is selected (No. 4).
(5) Lights up when the D range is selected (No. 5).
(6) Lights up when the 1 range is selected (No. 6).
(7) Lights up when the manual switch is turned ON (No. 7).

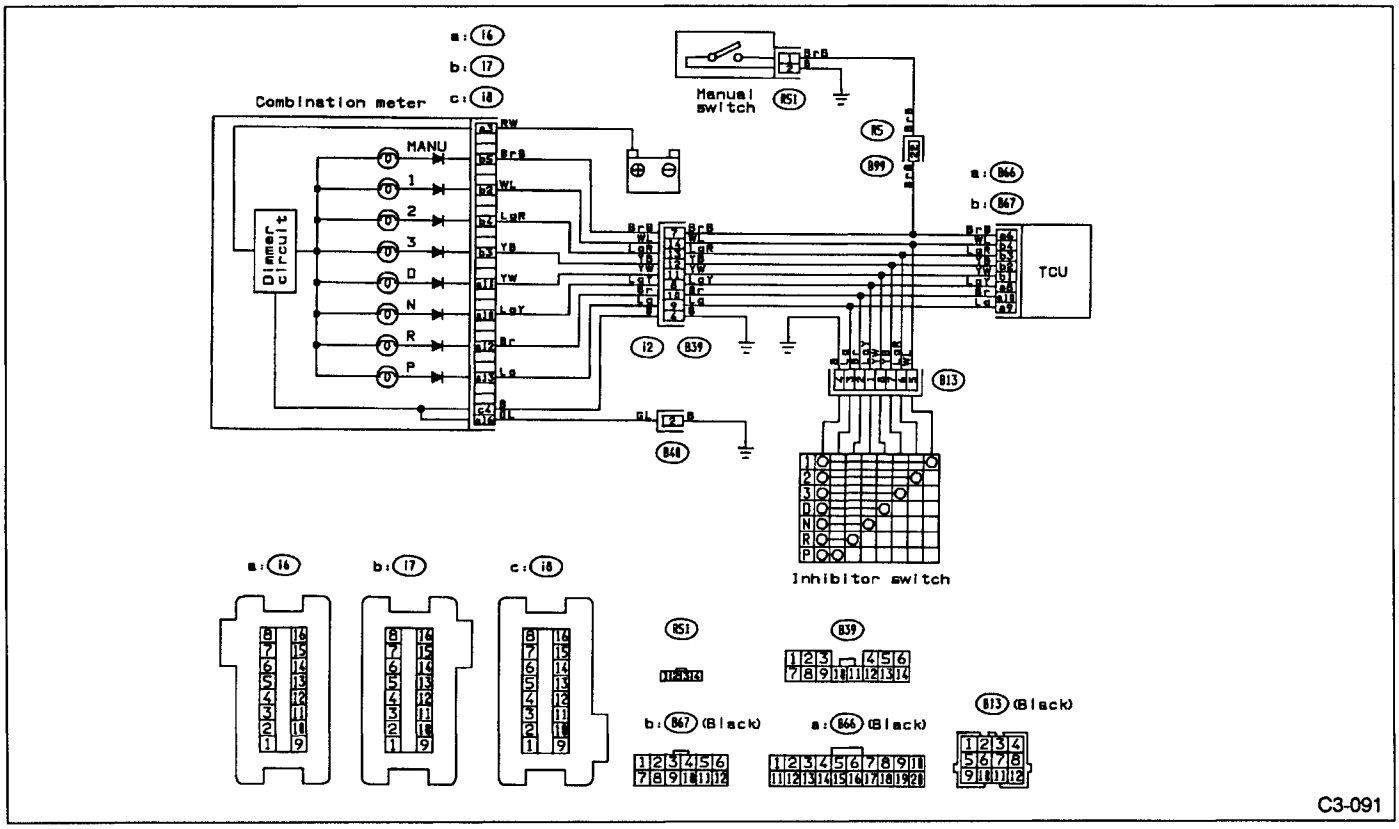

Fig. 300

Q: A1 MODE — LED NO. 7, MANUAL SWITCH —

CONTENT OF DIAGNOSIS:
LED does not come on when manual switch is ON.
Manual switch circuit is open or shorted.

TROUBLE SYMPTOM:
- **Tight corner "braking"**
- **2nd and 3rd gears not held**
- **Failure of vehicle to start in 2nd range 2nd gear**

Probable cause (if outside "specified data")

1	Measure signal voltage input of TCU.	OK	Repair TCU terminal poor contact.
	↓ Not OK		
2	Check harness/connector between TCU and manual switch.	Not OK	Repair harness/connector.
	↓ OK		
3	Check manual switch ground line.	Not OK	Repair ground line.
	↓ OK		
4	Check manual switch.	Not OK	Replace manual switch.
	↓ OK		
	Repair TCU terminal poor contact.		

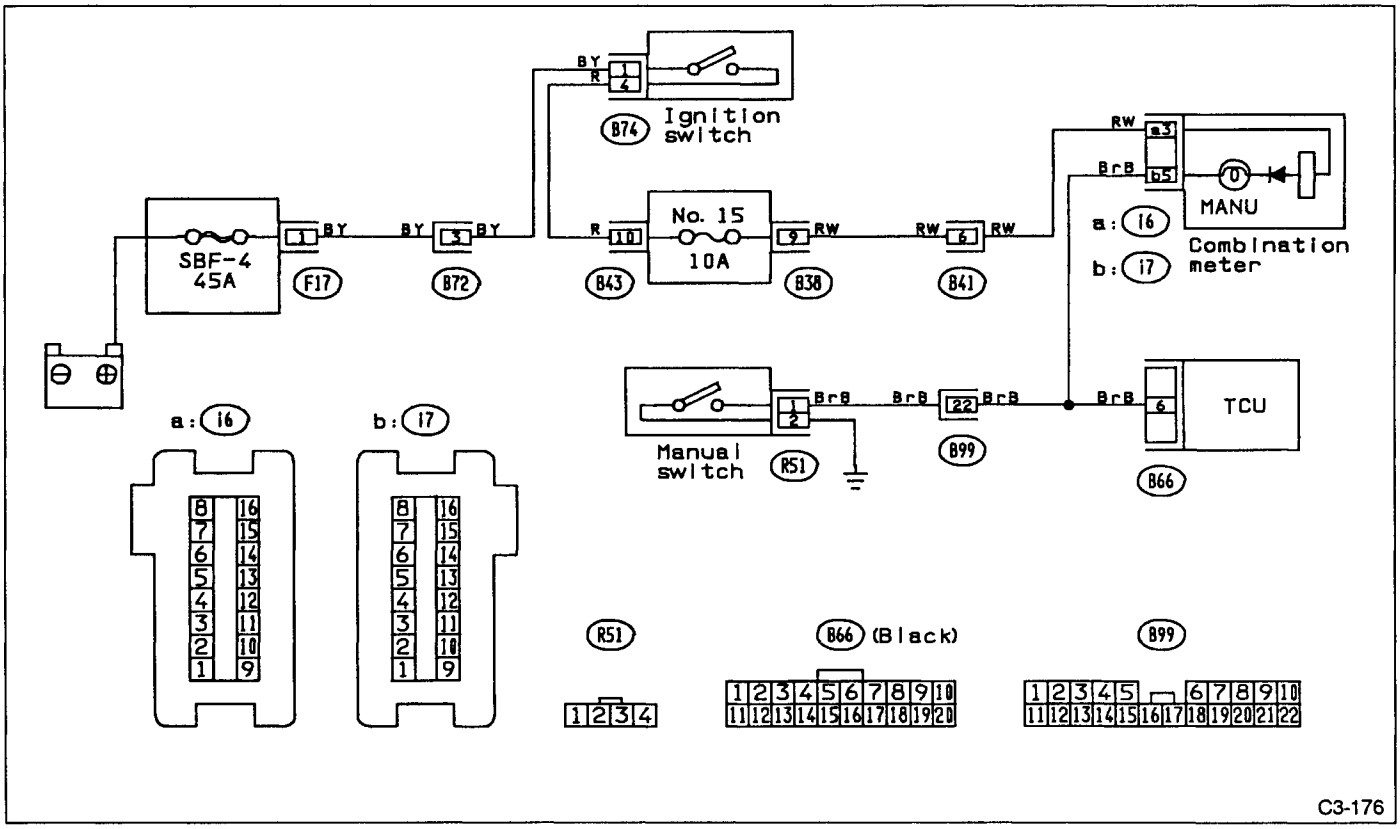

Fig. 301

1. MEASURE SIGNAL VOLTAGE INPUT OF TCU.

1) Turn ignition switch ON (with engine OFF).
2) Measure difference in voltage inputs of TCU when manual switch is ON and OFF.

Connector & terminal / Specified voltage:
(B66) No. 6 — / Body 1 V (ON)
(B66)No. 6 — Body / 10 V (OFF)

2. CHECK HARNESS/CONNECTOR BETWEEN TCU AND MANUAL SWITCH.

1) Disconnect connector from TCU.
2) Disconnect manual switch connector from selector lever connection.

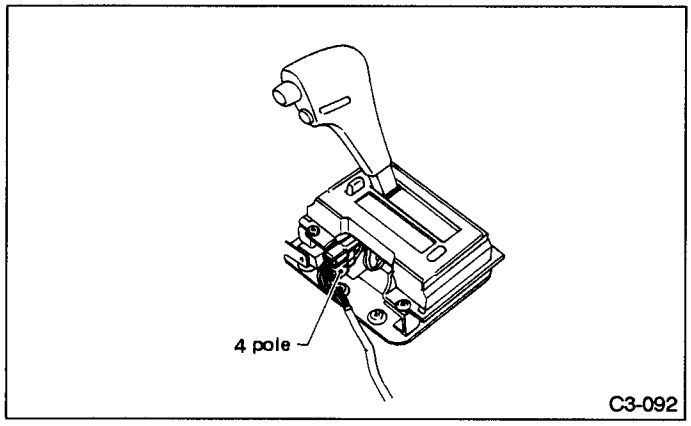

Fig. 302

3) Measure resistance between TCU connector and manual switch connector, and between TCU and body.

Connector & terminal / Specified resistance:
(B66) No. 6— (R51) No. 1 / 0 Ω
(B66) No. 6— Body/ 1 MΩ min.

3. CHECK MANUAL SWITCH GROUND LINE.

1) Disconnect manual switch connector from selector lever connection.
2) Measure resistance between manual switch connector and body.

Connector & terminal / Specified resistance:
(R51) No. 1 — Body / 1 Ω max.

4. CHECK MANUAL SWITCH.

1) Disconnect manual switch connector from selector lever connection.
2) Measure resistance between manual switch terminals.

Specified resistance:
(Switch ON) 0 Ω
(Switch OFF) 1 MΩ min.

R: A2 MODE — SWITCH 3 (SW3) —

DISPLAY

LED No.	Signal name	Symbol
2	Engine torque control signal	TS
3	Brake switch	BR

—	TS	BR	—	—
—	—	—	—	—

1	2	3	4	5
6	7	8	9	10

Reference values

(1) Lights up when the engine torque control signal is entered (No. 2).

(2) Lights up when the brake switch is turned ON (No. 3).

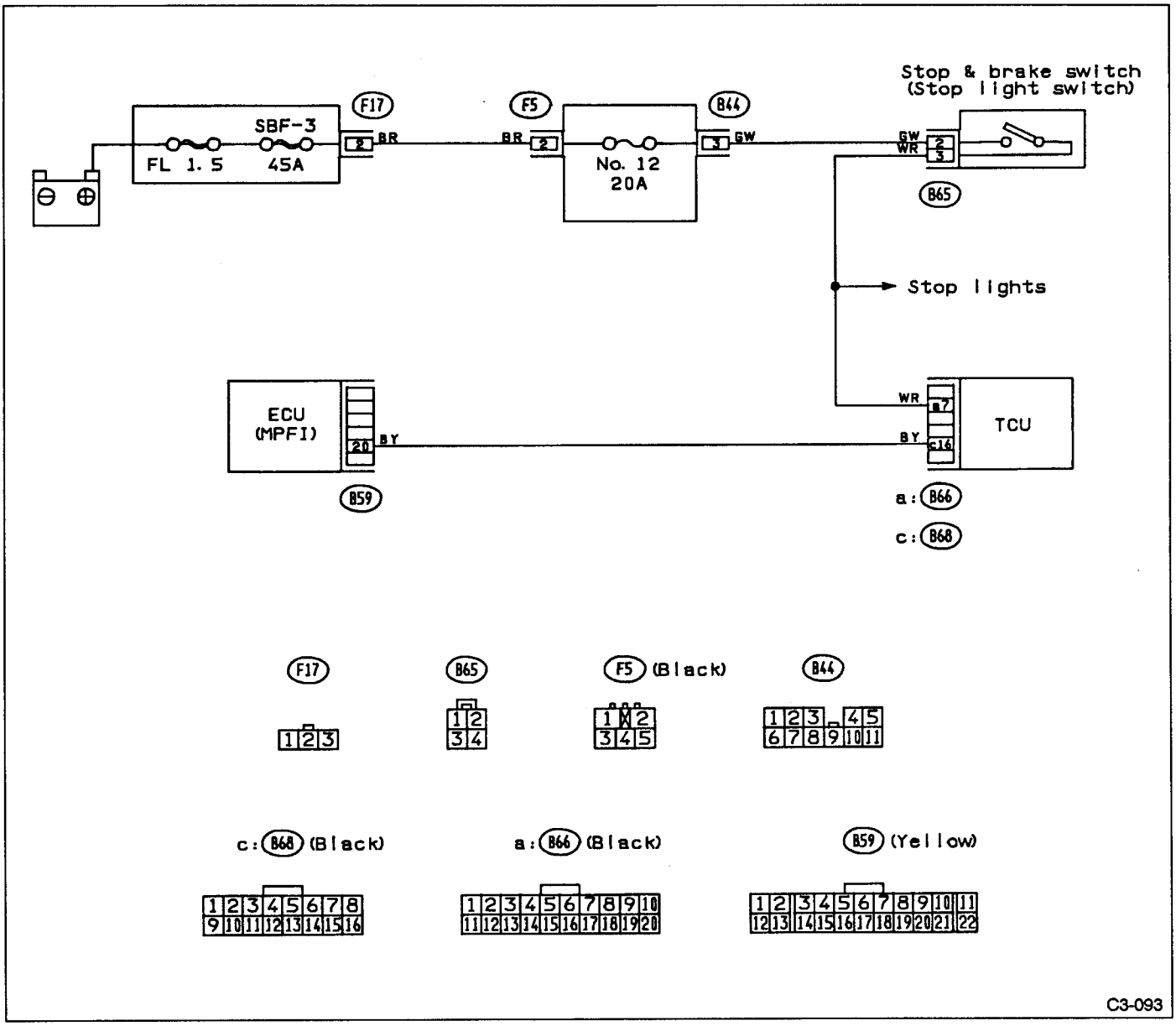

Fig. 303

SUBARU

SVX

1992

Precaution for Supplemental Restraint System "Airbag"
The Supplemental Restraint System "Airbag" helps to reduce the risk or severity of injury to the driver in a frontal collision.
The Supplemental Restraint System consists of an airbag module (located in the center of the steering wheel), sensors, a control unit, warning light, wiring harness and spiral cable.
Information necessary to service the safety is included in the "5-5. SUPPLEMENTAL RESTRAINT SYSTEM" of this Service Manual.
WARNING:
- To avoid rendering the Airbag system inoperative, which could lead to personal injury or death in the event of a severe frontal collision, all maintenance must be performed by an authorized SVX dealer.
- Improper maintenance, including incorrect removal and installation of the Airbag system, can lead to personal injury caused by unintentional activation of the Airbag system.
- All Airbag system electrical wiring harnesses and connectors are covered with yellow outer insulation. Do not use electrical test equipment on any circuit related to the Supplemental Restraint System "Airbag".

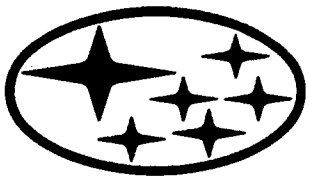

Page
M MECHANISM AND FUNCTION 2
Shift Lock System (With Key Interlock) 2
C COMPONENT PARTS 5
Automatic Transmission 5
W SERVICE PROCEDURE 6
Automatic Transmission 6
T TROUBLESHOOTING AIRBAG 12
1. Supplemental Restraint System "Airbag" 12
2. Wiring Diagram 12
3. Troubleshooting Chart 13

M MECHANISM AND FUNCTION

Shift Lock System (With Key Interlock)

1. GENERAL

To increase safety during "standing start", a shift lock system is utilized to prevent shifting of the selector lever from "P" to any other position unless the brake pedal is depressed. This system is also provided with a key interlock which prevents removal of the ignition key from the key cylinder unless the selector lever is set at "P".

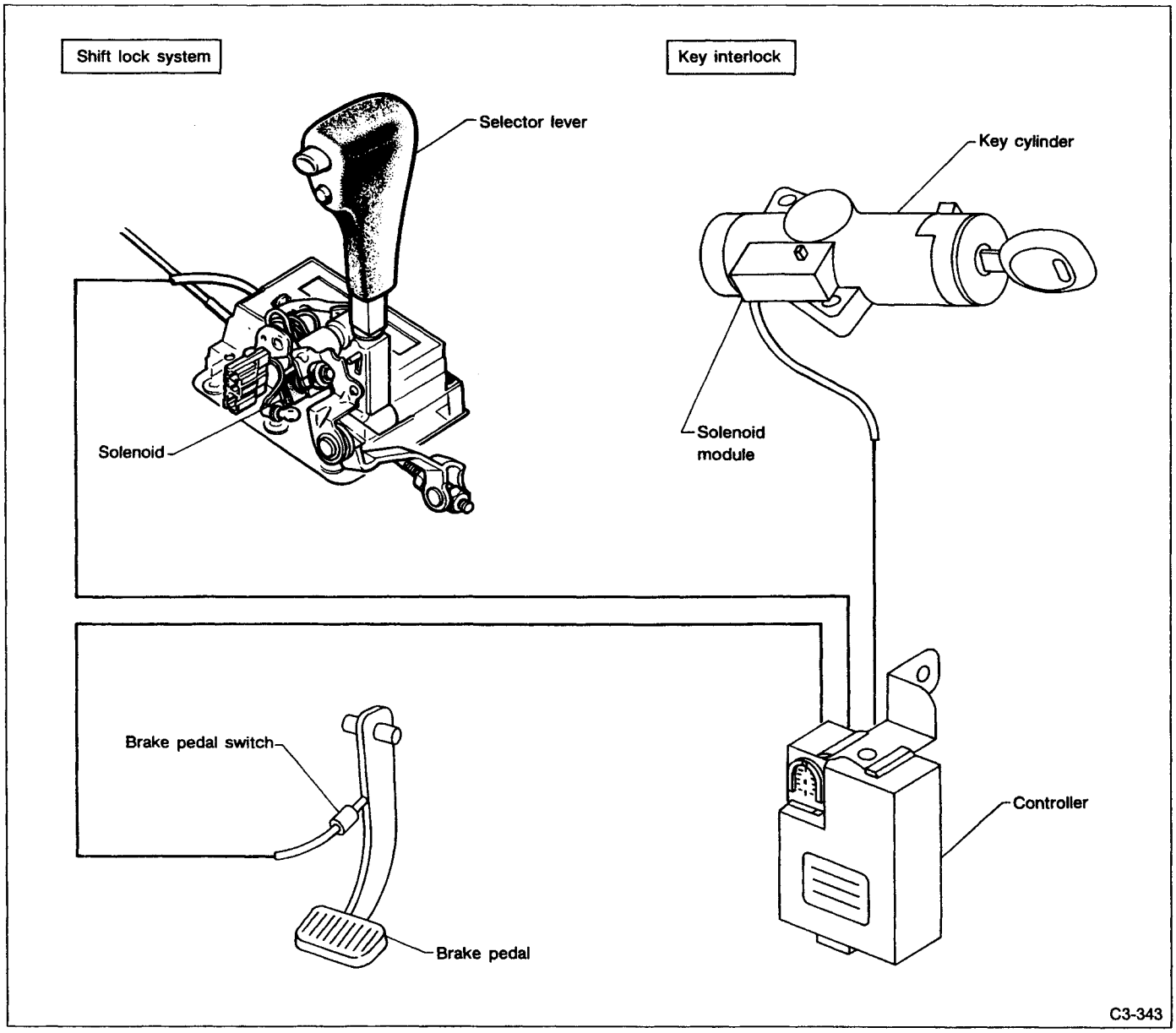

Fig. 1

2. SHIFT LOCK SYSTEM

The selector lever can be moved from "P" to any other position in either of the following cases:

- The brake pedal is depressed with the ignition key set at "ON" or "START".
- The ignition key can be rotated from the "ACC" to the "LOCK" position and then removed from its key cylinder only when the selector lever is set at "P".
- Shift lock is designed to properly release even when shift lever is hard to shift due to current flow interruption, run-down battery, etc.

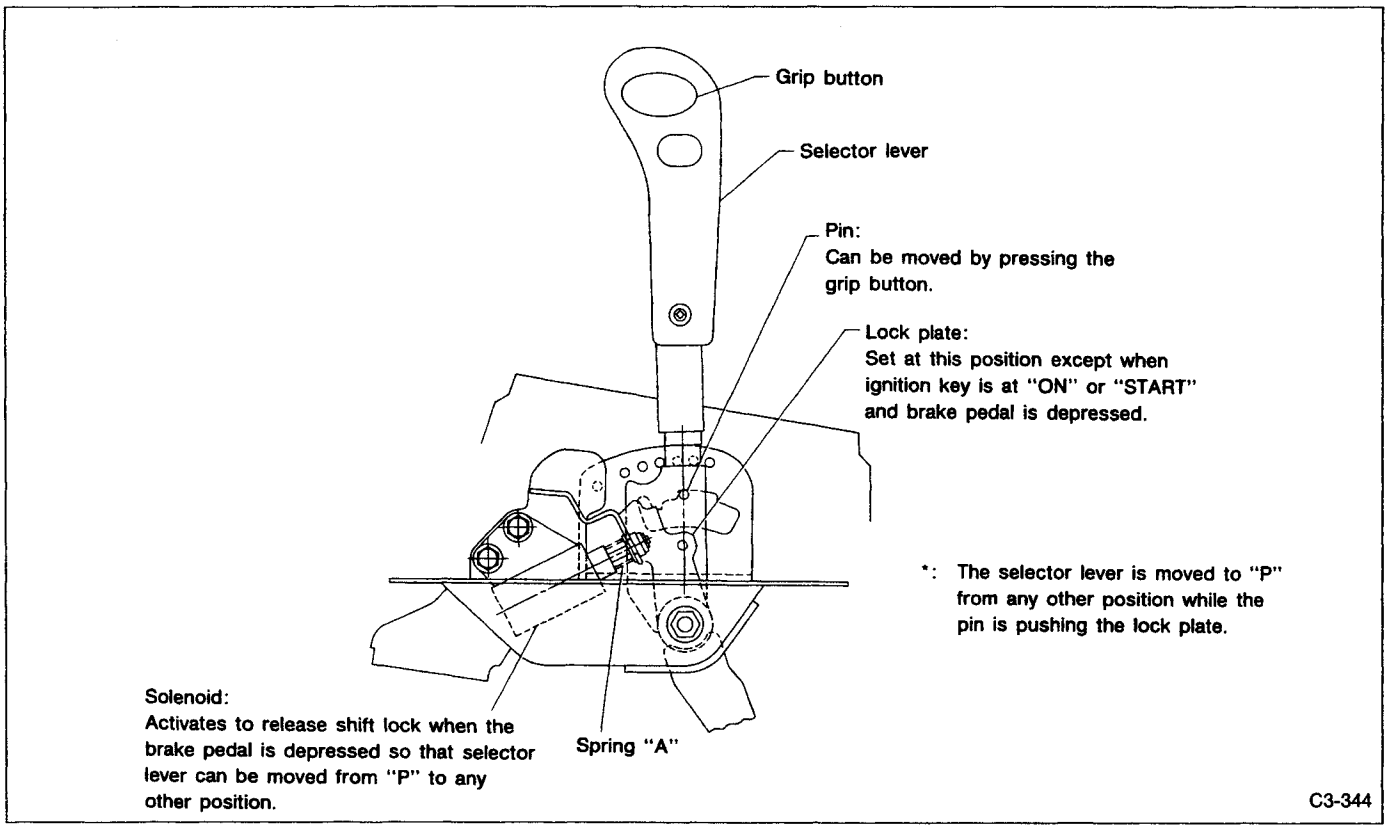

Fig. 2

3. KEY INTERLOCK

1) Selector lever in any position other than "P"
   (1) When the selector lever is moved to any position other than "P", the solenoid is energized to moves the solenoid rod to the operation position.
   (2) The interlock lever, which is connected to the end of the solenoid rod, then moves the stopper in the direction of the rotator.
   (3) As a result, the key plate can be rotated to the "LOCK" position. The key plate can be inserted into or removed from the "LOCK" position only.
   (3) With the key in the "ACC" (key push) position, the key cylinder is held in that position by the stopper.

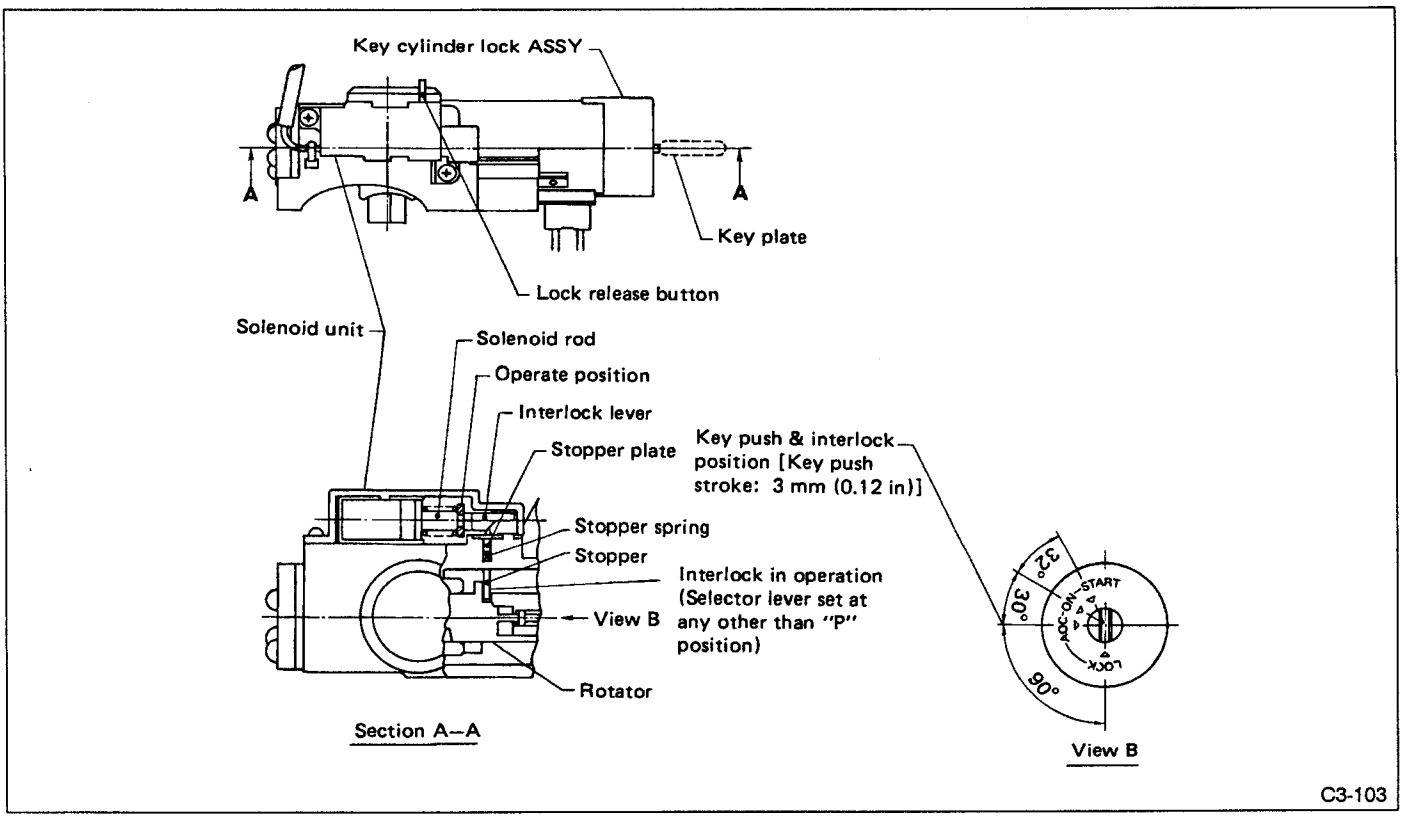

Fig. 3

2) Selector lever in the "P" position
   (1) When the selector lever is moved to "P", the solenoid is energized to moves the solenoid rod to the release position.
   (2) The interlock lever, which is connected to the end of the solenoid rod, also moves so that the tension of the spring overcomes the stopper. The key will then be released (pushed).
   (3) As a result, the key plate can be rotated to the "LOCK" position. The key plate can be inserted into or removed from the "LOCK" position only.
3) If the key plate is hard to remove, release the key interlock system by pressing the lock release button (located under the steering column cover). The key plate can then be removed.

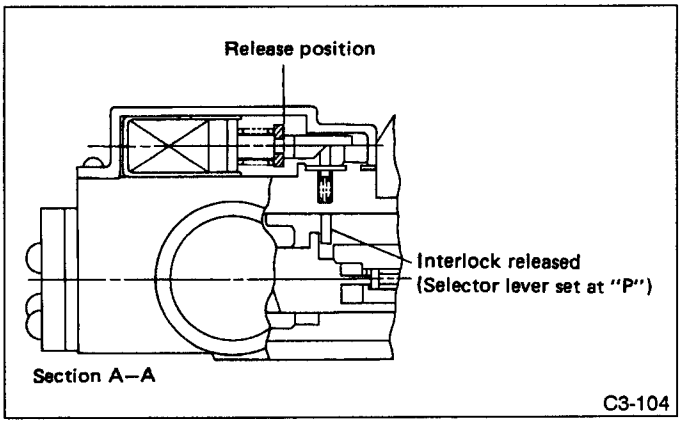

Fig. 4

C COMPONENT PARTS

Automatic Transmission

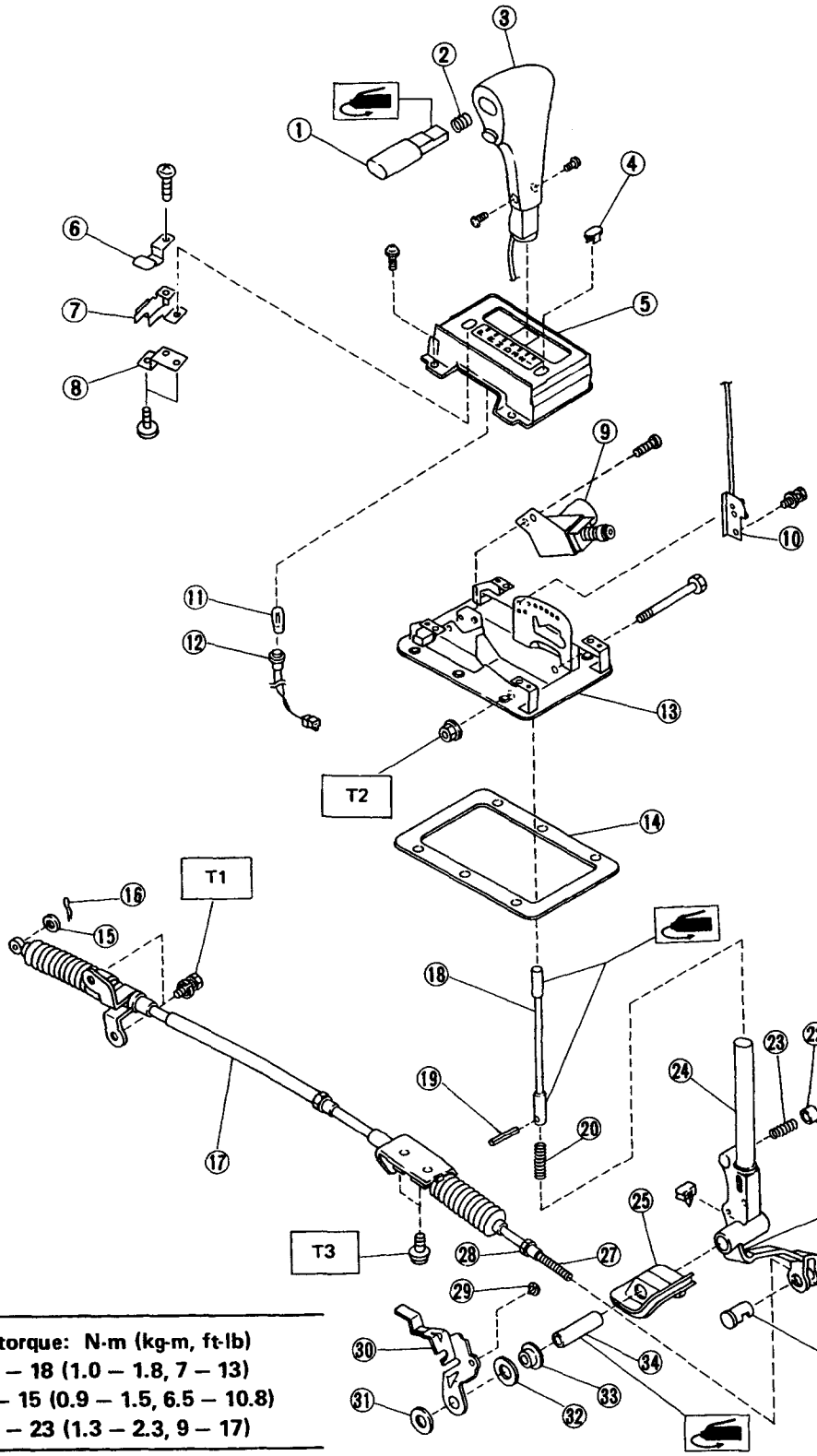

1 Grip button
2 Spring
3 Grip
4 Cap
5 Indicator cover
6 Bracket
7 Bracket
8 Guide plate
9 Solenoid
10 P position switch
11 Bulb
12 Socket
13 Plate
14 Packing
15 Washer
16* Snap pin
17 Outer cable
18 Rod
19 Spring pin
20 Spring
21 Ball
22 Seat
23 Spring
24 Selector lever
25 Boot
26 Nut (1)
27 Inner cable
28 Nut (2)
29 Bushing
30 Lock plate
31 Washer (shift lock)
32* Washer (shift lock)
33 Spacer (shift lock)
34 Spacer
35 Pin
*: Replacement parts

Tightening torque: N·m (kg-m, ft-lb)
T1: 10 – 18 (1.0 – 1.8, 7 – 13)
T2: 9 – 15 (0.9 – 1.5, 6.5 – 10.8)
T3: 13 – 23 (1.3 – 2.3, 9 – 17)

C3-339

Fig. 3

W SERVICE PROCEDURE

Automatic Transmission

A: REMOVAL

1) Move the selector lever to "N".
2) Remove the front exhaust cover.
   (1) Remove the eight bolts to take off the front exhaust cover.

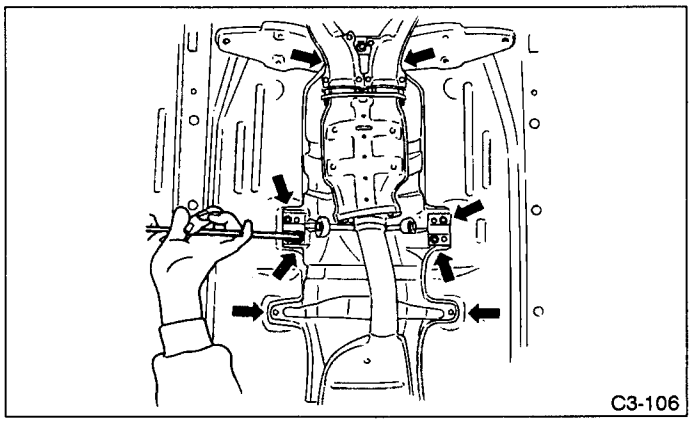

Fig. 6

   (2) Remove the front exhaust cover.

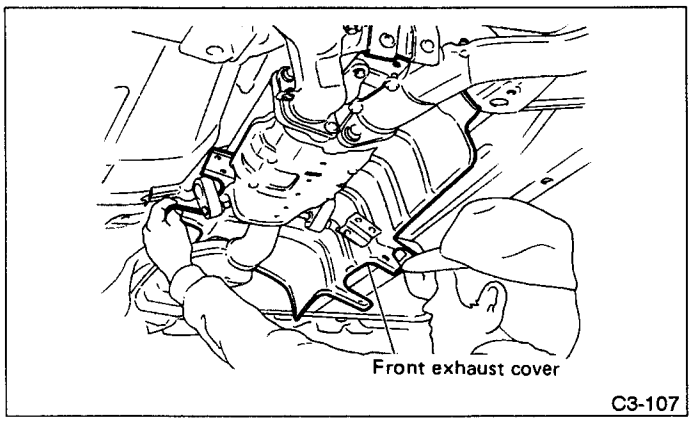

Fig. 7

Be careful not to bend the front exhaust cover when removing.

3) Remove the cable ASSY.
   (1) Remove the snap pin to separate the cable from the transmission lever.
   (2) Remove the clamp from the transmission case.

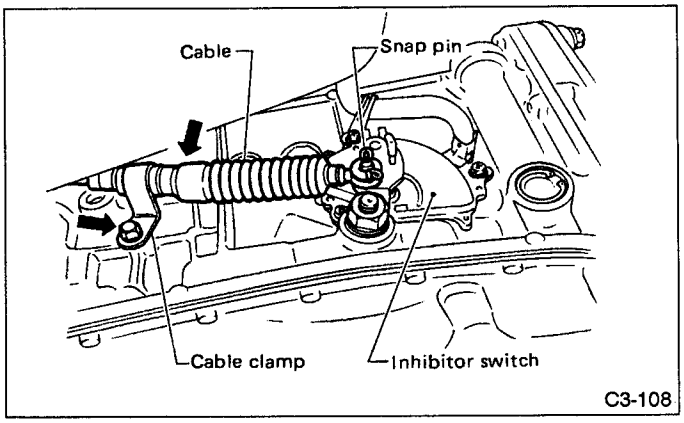

Fig. 8

   (3) Disconnect the cable from the selector lever.

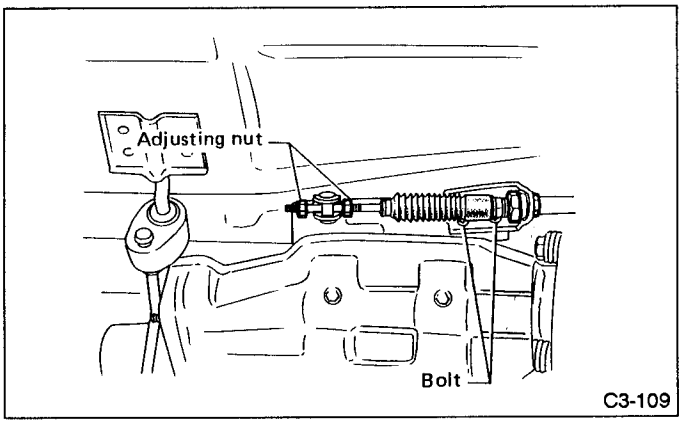

Fig. 9

4) Remove the console box.
For removal of the console box, refer to "5-4 INSTRUMENT PANEL" [W1A0].

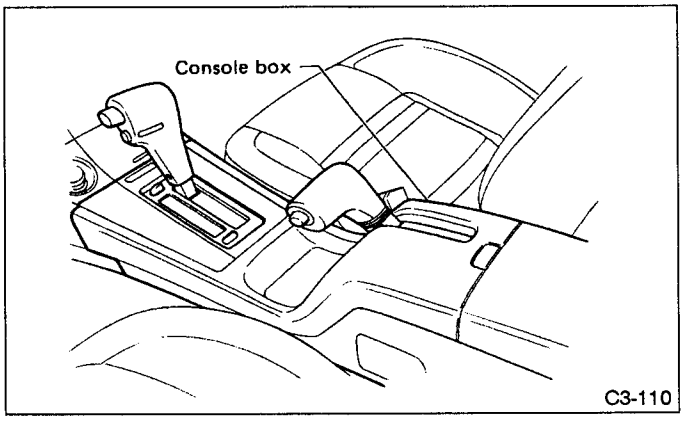

Fig. 10

5) Disconnect the connector.

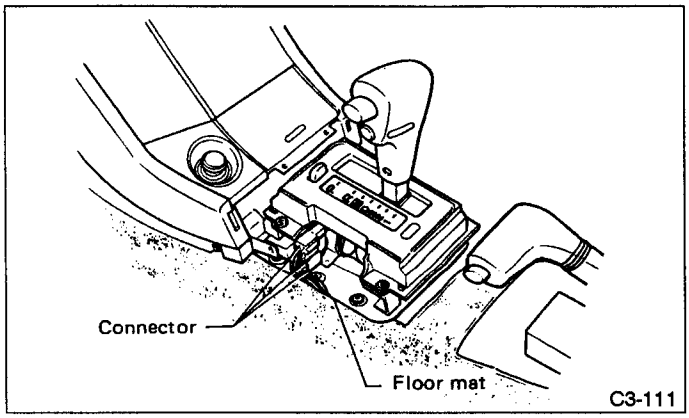

Fig. 11

6) Remove the selector lever ASSY
   (1) Prior to removal, set the lever to "N".
   (2) Remove the screws to take off the plate from the body.

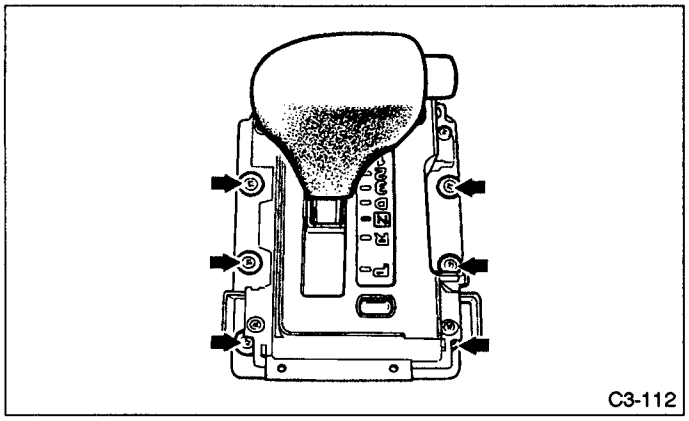

Fig. 12

7) Remove the selector lever ASSY.

B: DISASSEMBLY

1) Remove the grip from the selector lever CP.
   (1) Remove the screw to take off the grip from the selector lever CP.

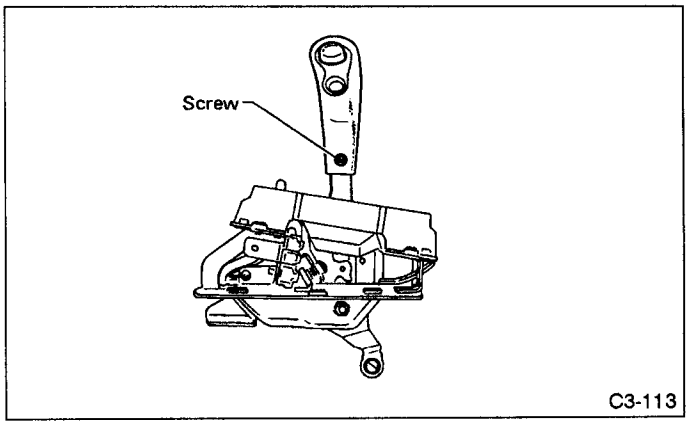

Fig. 13

2) Remove the indicator cover from the plate.

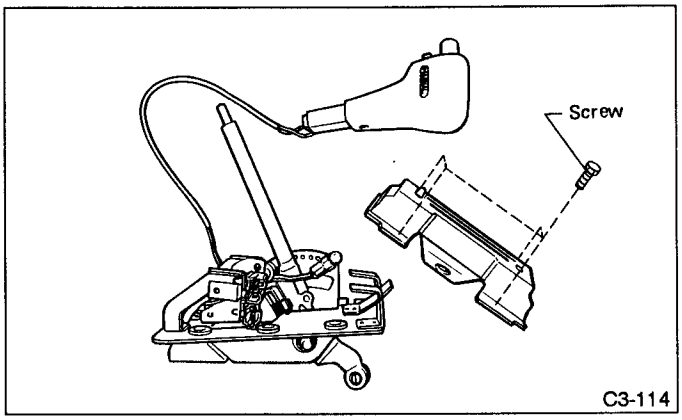

Fig. 14

3) Remove the following parts from the grip.
   ① Grip button
   ② Spring

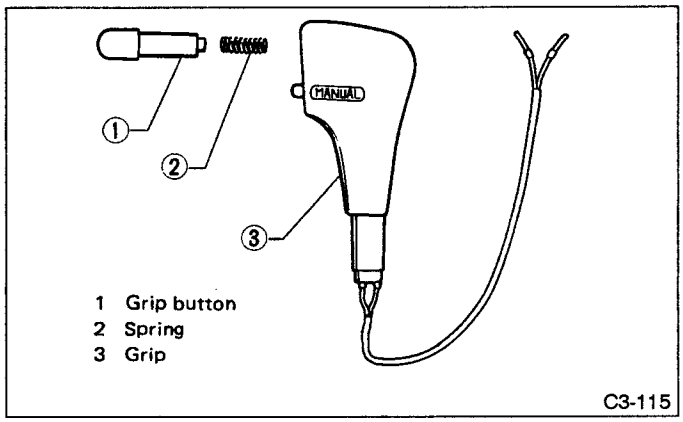

Fig. 15

4) Remove the shift lock release button from the indicator cover.

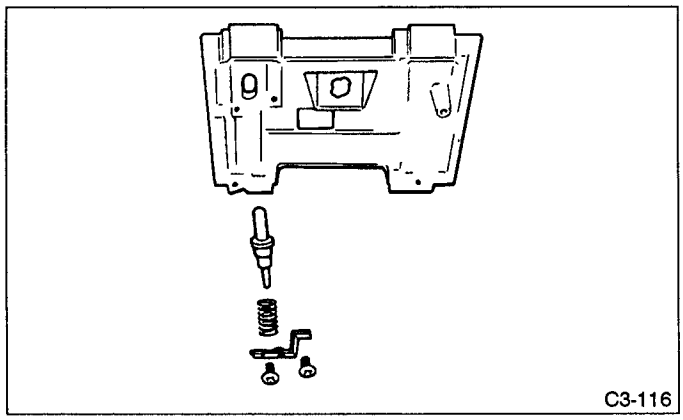

Fig. 16

5) Remove the solenoid.

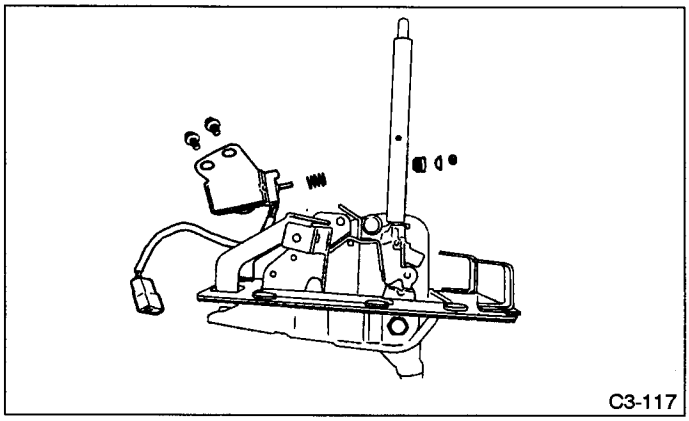

Fig. 17

6) Remove the screw to take off the "P" position switch CP.

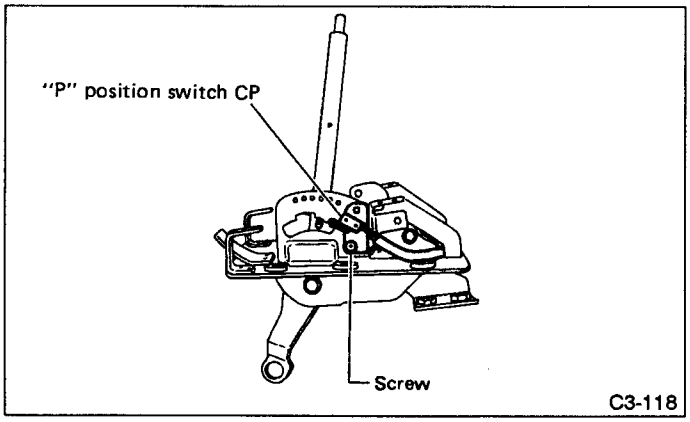

Fig. 18

7) Remove the bolt to take off the selector lever CP from the plate.

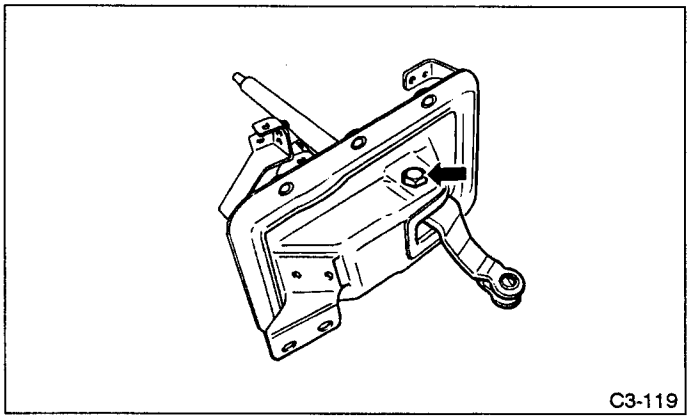

Fig. 19

8) Remove the lock plate.
9) Remove the selector lever CP from the plate.

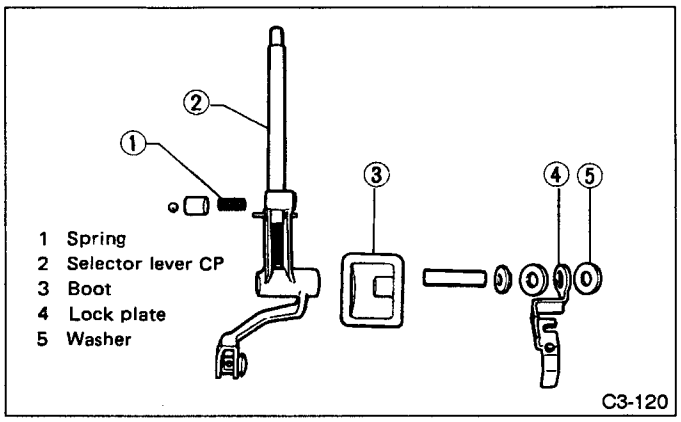

Fig. 20

C: INSPECTION

1) Inspect the removed parts by comparing with new ones for deformation, damage and wear. Correct or replace if defective.
2) Confirm the following parts for operating condition before ASSY.
   (1) Sliding condition of the grip button in the grip ... it should move smoothly.
   (2) Insertion of the grip on the selector lever ... when pushing the grip on the selector lever by hand, the screw holes should be aligned.
   (3) Operation of the selector lever and rod ... they should move smoothly.
   (4) Insertion of the spacer into the selector lever ... it should be inserted lightly by finger pressure.

D: ASSEMBLY

1) Clean all parts before assembly.
2) Assemble the selector lever CP and the lock plate to the plate.
3) Insert the bolt and tighten the flange nut to the specified torque.

Tightening torque (Flange nut):
11 — 17 N•m (1.1 — 1.7 kg-m, 8 — 12 ft-lb)

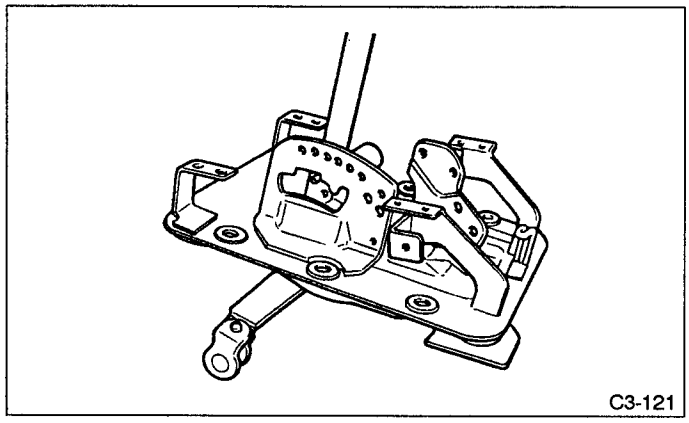
C3-121

Fig. 21

4) Assemble the solenoid.
5) Adjust the position of the solenoid.

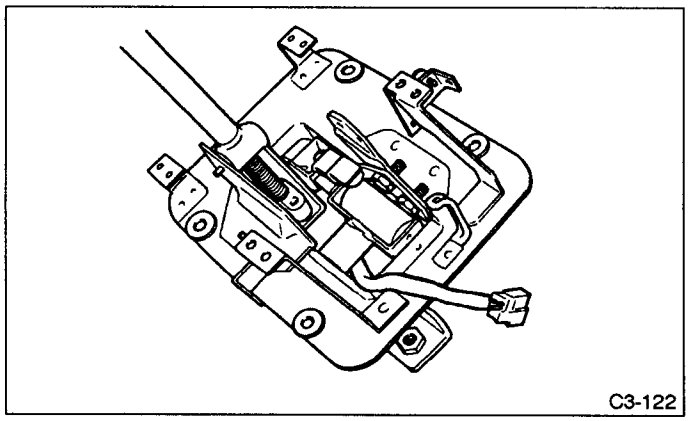
C3-122

Fig. 22

6) Make sure you tighten the bolts when installing the solenoid.
7) Assemble the "P" position switch CP to the plate.
8) Assemble the shift lock release button to the indicator cover.
9) Assemble the indicator cover to the plate.

Tightening torque:
1.3 — 2.6 N•m (0.13 — 0.27 kg-m, 0.9 — 2.0 ft-lb)

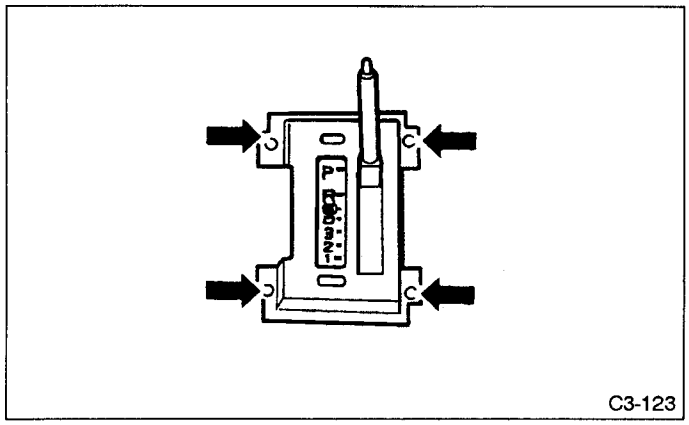
C3-123

Fig. 23

10) Assemble the following parts to the grip.
Apply grease on the sliding surfaces of the following parts.

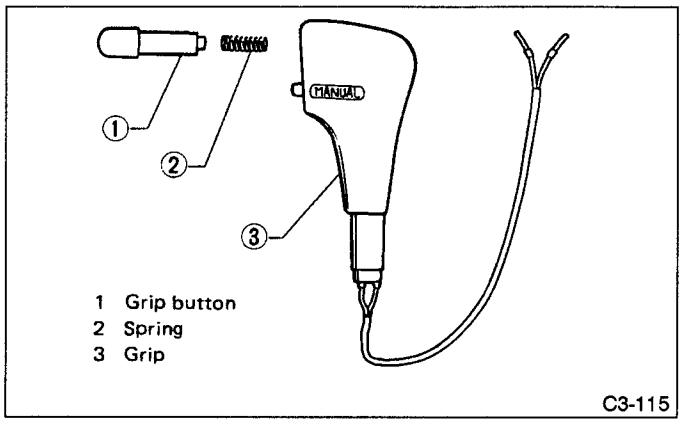

C3-115

Fig. 24

11) Assemble the grip to the selector lever CP.

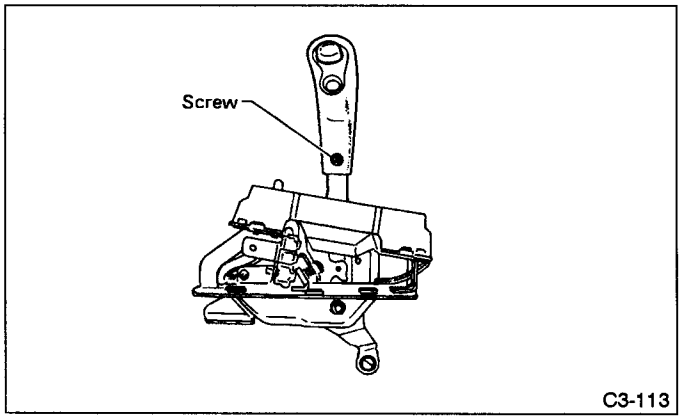

C3-113

Fig. 25

12) Route bulb, solenoid and switch harnesses as shown in Fig. 26.

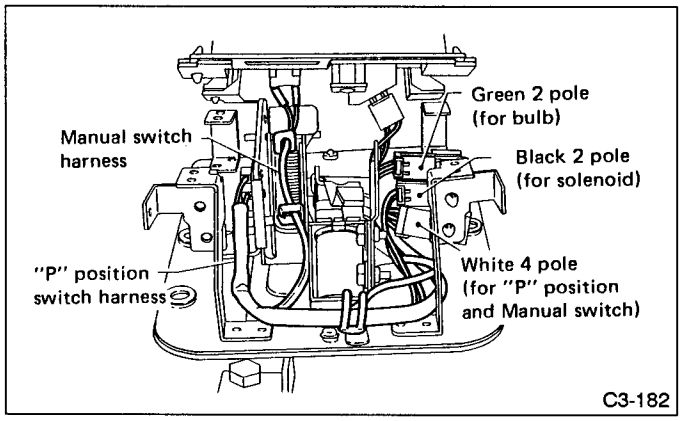

C3-182

Fig. 26

13) After the completion of fitting, transfer the selector lever to range "P" — "1", pressing the grip button of the grip; then check whether the indicator and select lever agree, whether the pointer and position mark agree and what the operating force is.

E: INSTALLATION

1) Mount the selector lever ASSY onto the car body.
2) Tighten the six screws to install the selector lever ASSY to the car body.

Tightening torque:
4.4 — 7.4 N•m (0.45 — 0.75 kg-m, 3.3 — 5.4 ft-lb)

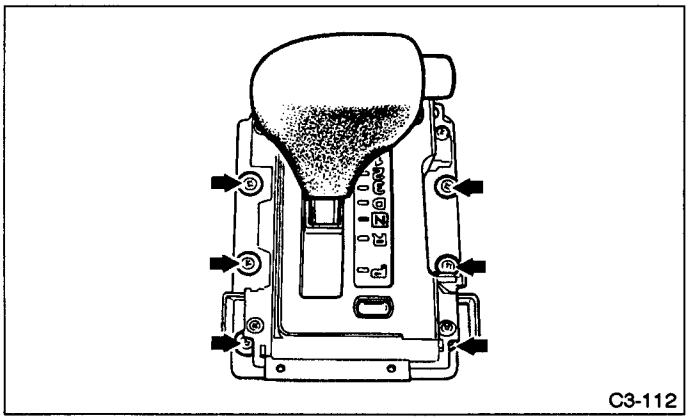

Fig. 27

3) Set the location of the selector lever at "N".
4) Set the location of the selector arm of the transmission at "N".
5) Pass the inner cable through the selector arm pin and then connect it using a washer and snap pin.

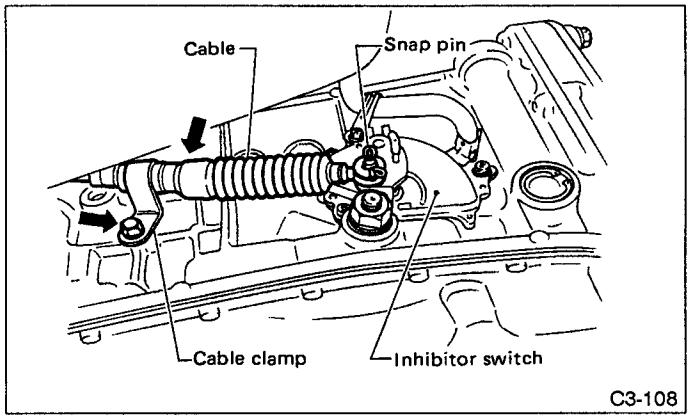

Fig. 28

6) Attach the outer cable to the transmission case with the bolts.
7) Insert the thread portion of the other inner cable and into the connector hole of the selector lever, and fix the other outer cable end to the bracket.
8) Adjust the inner cable length.
(1) Put connector into contact with nut ②.
(2) Return nut ② to rotate 1/2.
(3) Tighten nut ①.

Tightening torque:
13 — 23 N•m (1.3 — 2.3 kg-m, 9 — 17 ft-lb)

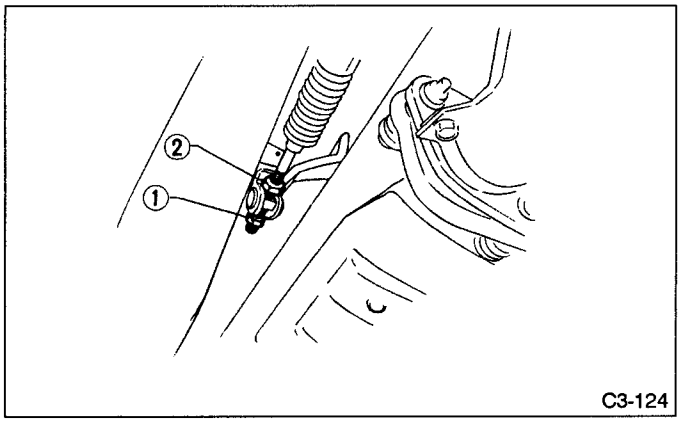

Fig. 29

9) After completion of fitting, make sure that the selector lever operates smoothly all across the operating range.
10) Connect the harnesses and check the following items.
(1) The engine starts operating when the selector lever is in position "P", but not in other positions.
(2) The back-up light is lit when the selector lever is in position "R", but not in other positions.
11) Check selector lever operation.
Stop the engine while checking the operation of the selector lever.
(1) Check that the selector lever does not move from "N" to "R" without pushing the grip button.
(2) Check that the selector lever does not move from "R" to "P" without pushing the grip button.
(3) Check that the selector lever does not move from "P" to "R" without pushing the grip button.
(4) Check that the selector lever does not move from "3" to "2" without pushing the grip button.

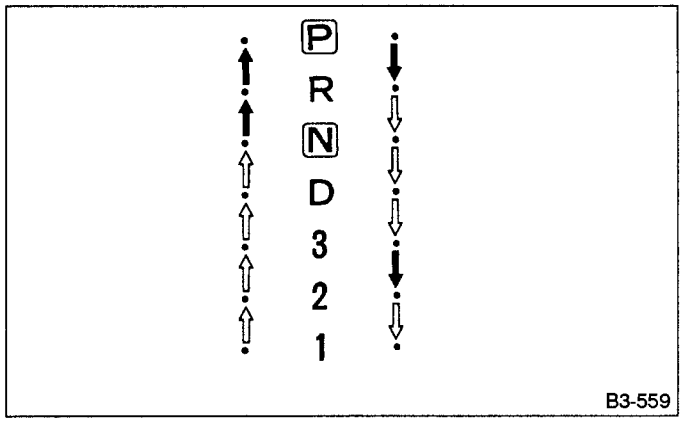

Fig. 30

12) Check shift lock system.
   (1) Ensure the ignition switch rotates from "ACC" to "LOCK" when the selector lever is set at "P". Also check that the ignition key can be removed from the "LOCK" position only.
   (2) Ensure the selector lever moves from "P" to any other position when the brake pedal is depressed with ignition key set at "ON" or "START".
13) Install the front exhaust cover.
Ensure that the exhaust system is completely cooled off before installation.
14) Install the console box.

T TROUBLESHOOTING AIRBAG

1. Supplemental Restraint System "Airbag"

Airbag system wiring harness is routed near the steering shaft ASSY.

a. All Airbag system wiring harness and connectors are colored yellow. Do not use electrical test equipment on these circuit.

b. Be careful not to damage Airbag system wiring harness when servicing the steering shaft ASSY.

2. Wiring Diagram

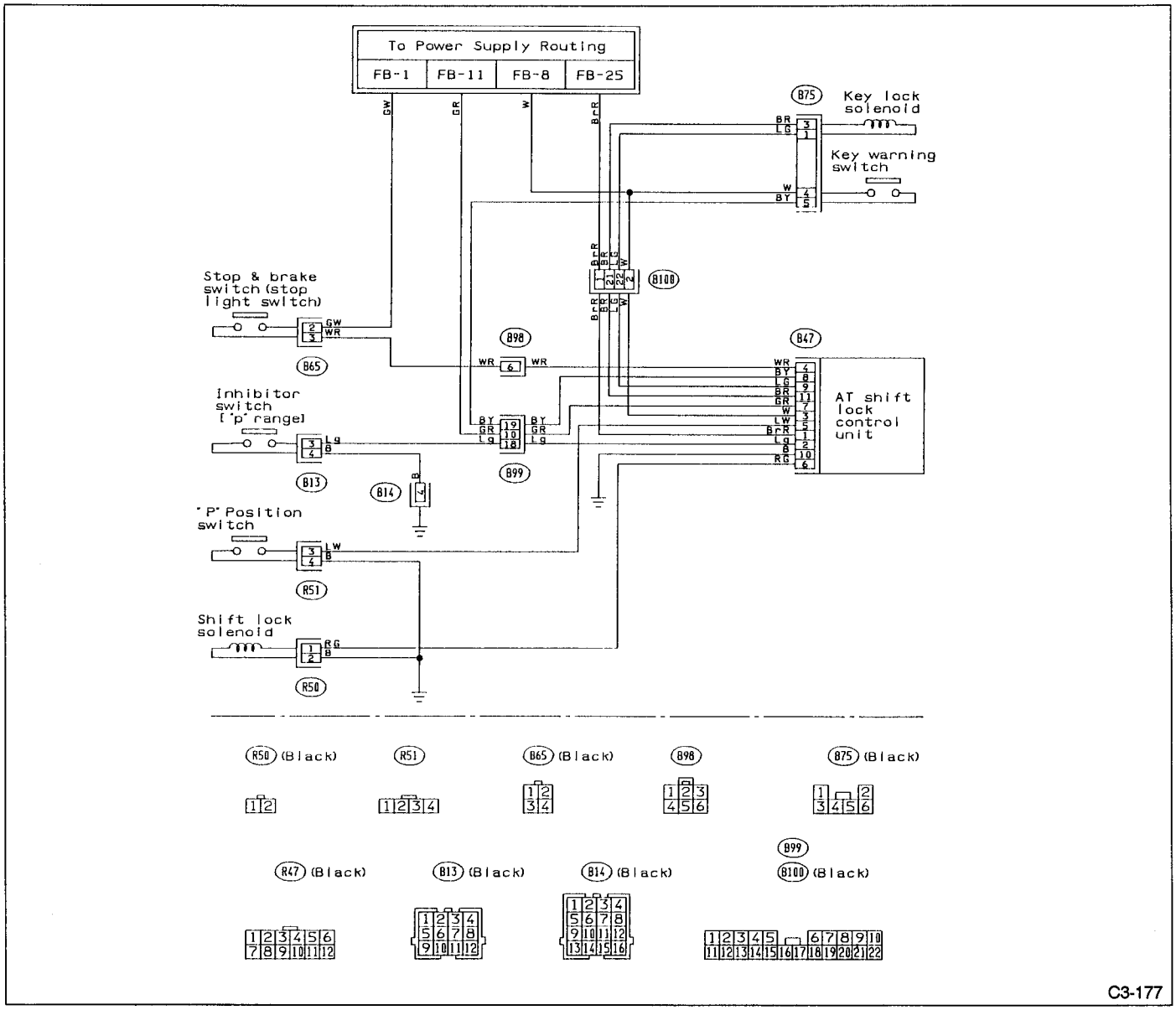

Fig. 31

3. Troubleshooting Chart

A: BASIC TROUBLESHOOTING CHART

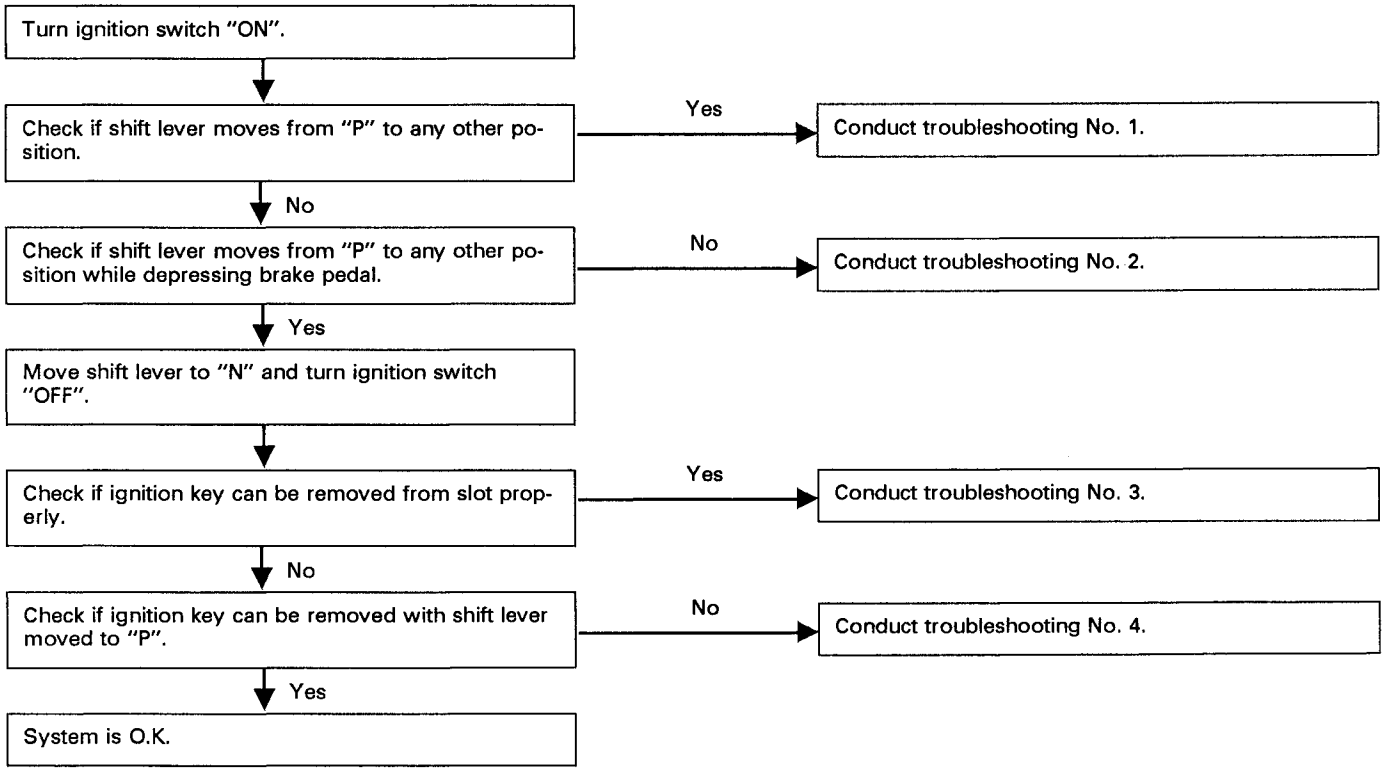

B: TROUBLESHOOTING NO. 1

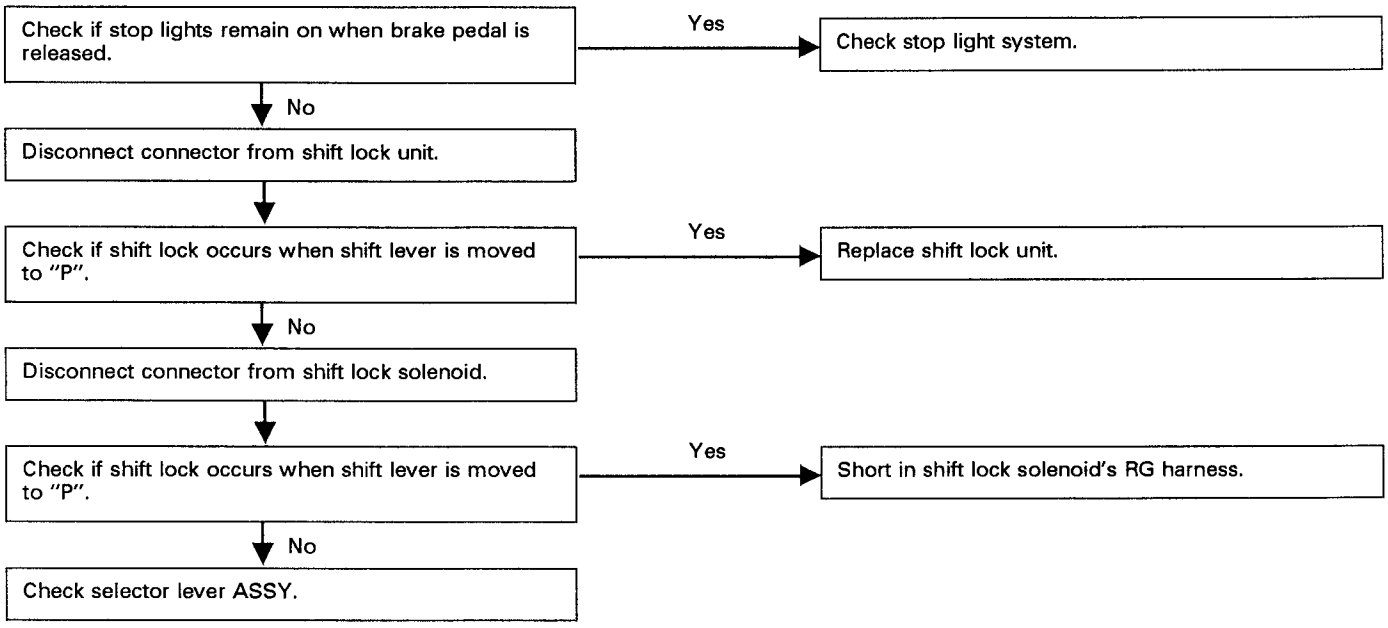

C: TROUBLESHOOTING NO. 2 (SHIFT LOCK DOES NOT RELEASE.)

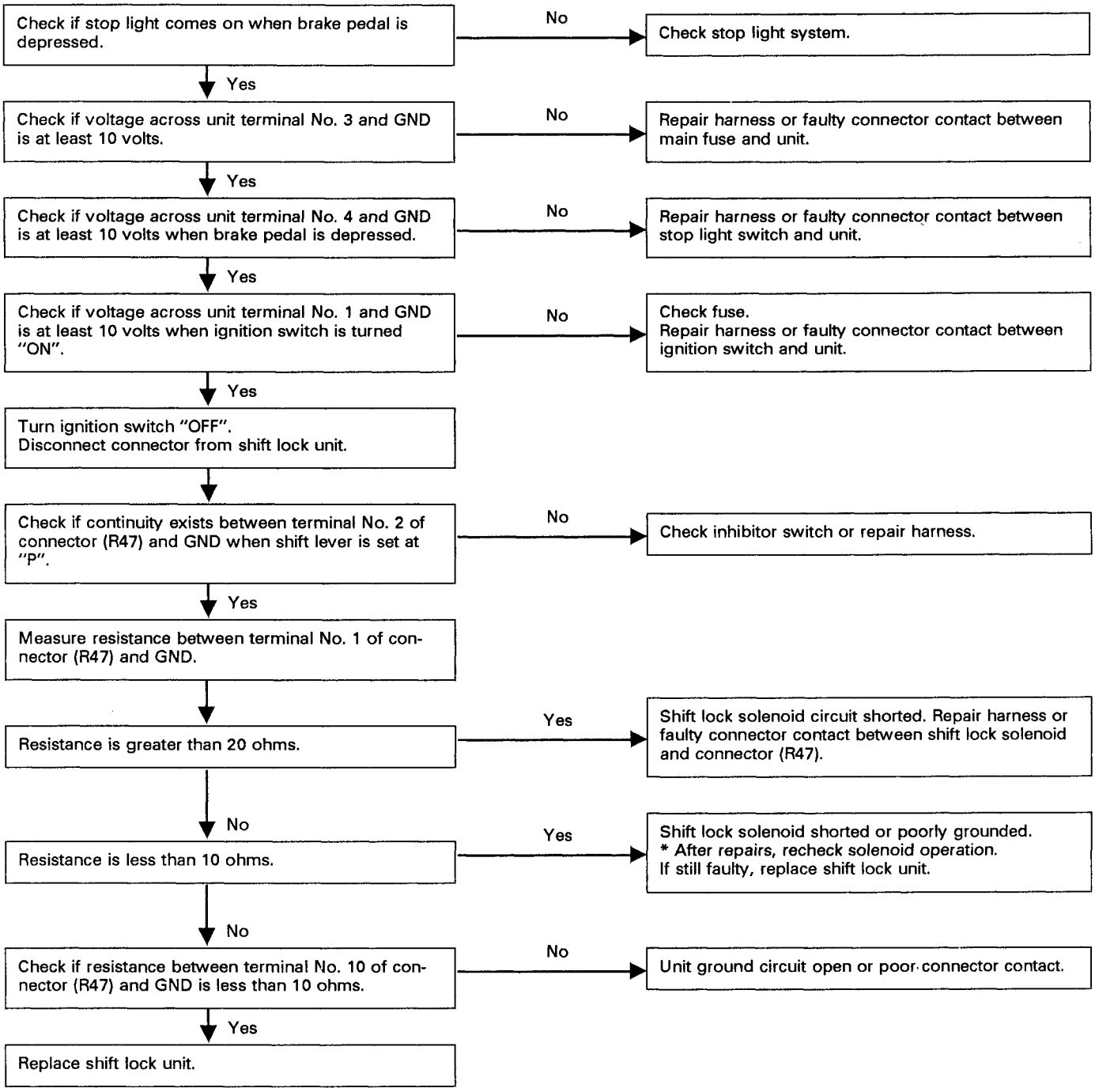

D: TROUBLESHOOTING NO. 3 (KEY INTERLOCK DOES NOT OPERATE.)

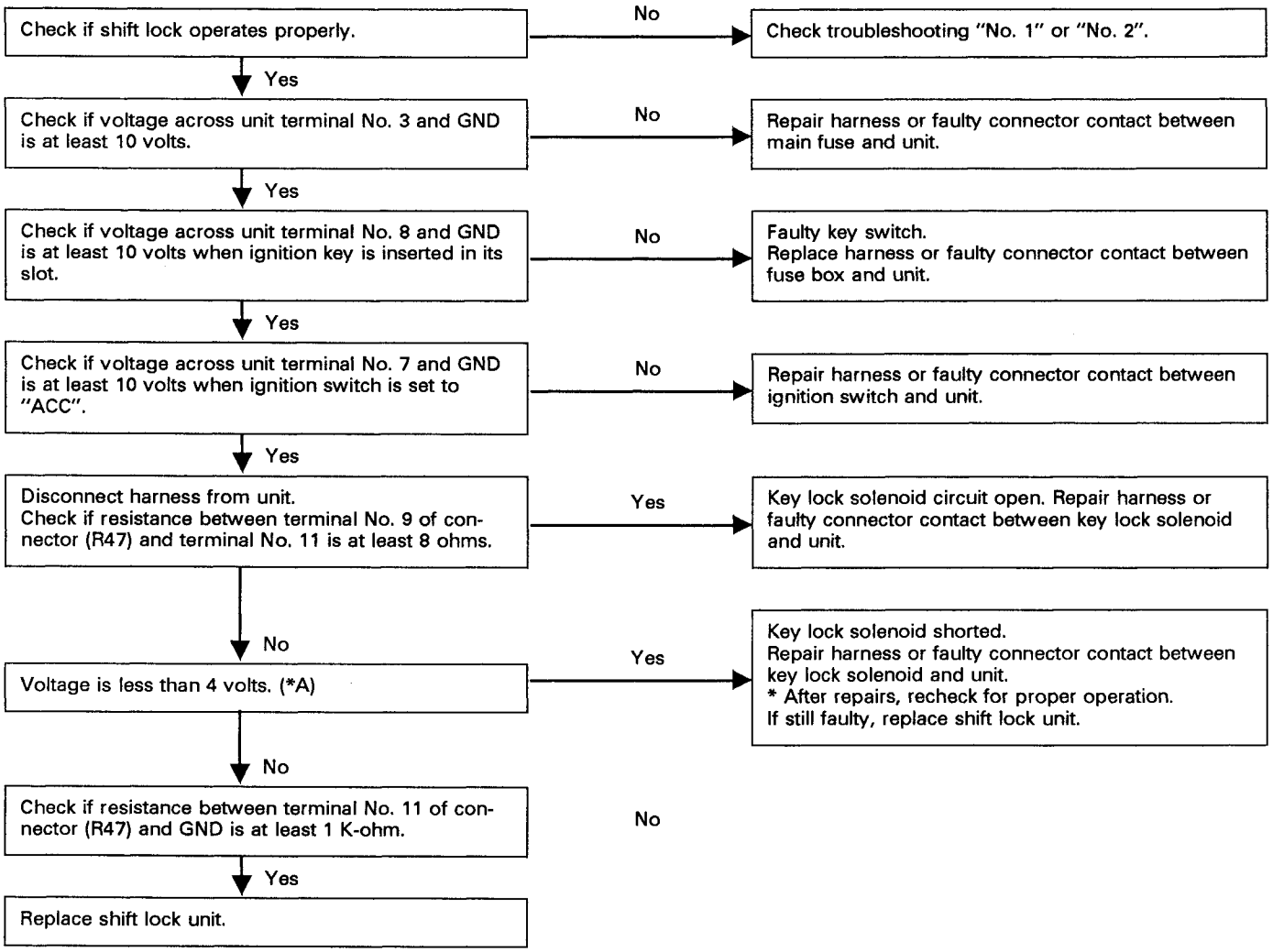

***A: When conducting operational checks of the key lock solenoid, do not apply 12 volts to solenoid for more than one second, since this may break solenoid circuit.**

E: TROUBLESHOOTING NO. 4 (KEY INTERLOCK DOES NOT RELEASE.)

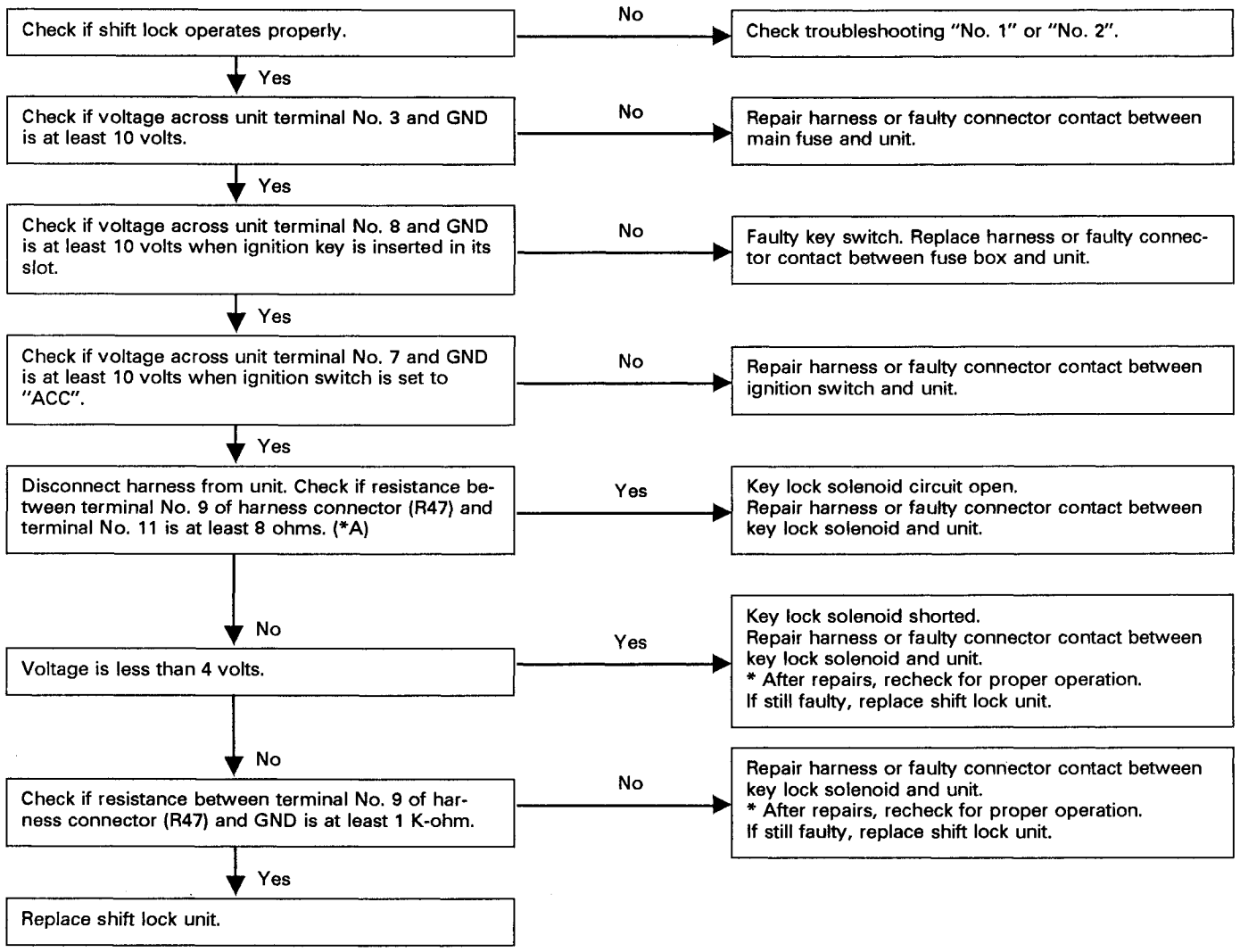

***A: When conducting operational checks of the key lock solenoid, do not apply 12 volts to solenoid for more than one second, since this may break solenoid circuit.**

SUBARU

SVX

1992

		Page
M	MECHANISM AND FUNCTION	2
	1. AWD System	2
	2. Propeller Shaft	3
	3. Rear Differential	4
	4. Limited Slip Differential (LSD)	5
S	SPECIFICATIONS AND SERVICE DATA	7
C	COMPONENT PARTS	9
	1. Rear Differential Mounting System	9
	2. Propeller Shaft and Drive Shaft	10
	3. Rear Differential Assembly	11
W	SERVICE PROCEDURE	12
	1. Propeller Shaft	12
	2. Rear Differential	16
	3. Rear Differential Member	32
T	TROUBLESHOOTING	35
	1. Rear Differential	35
	2. Propeller Shaft	36

M MECHANISM AND FUNCTION

1. AWD System

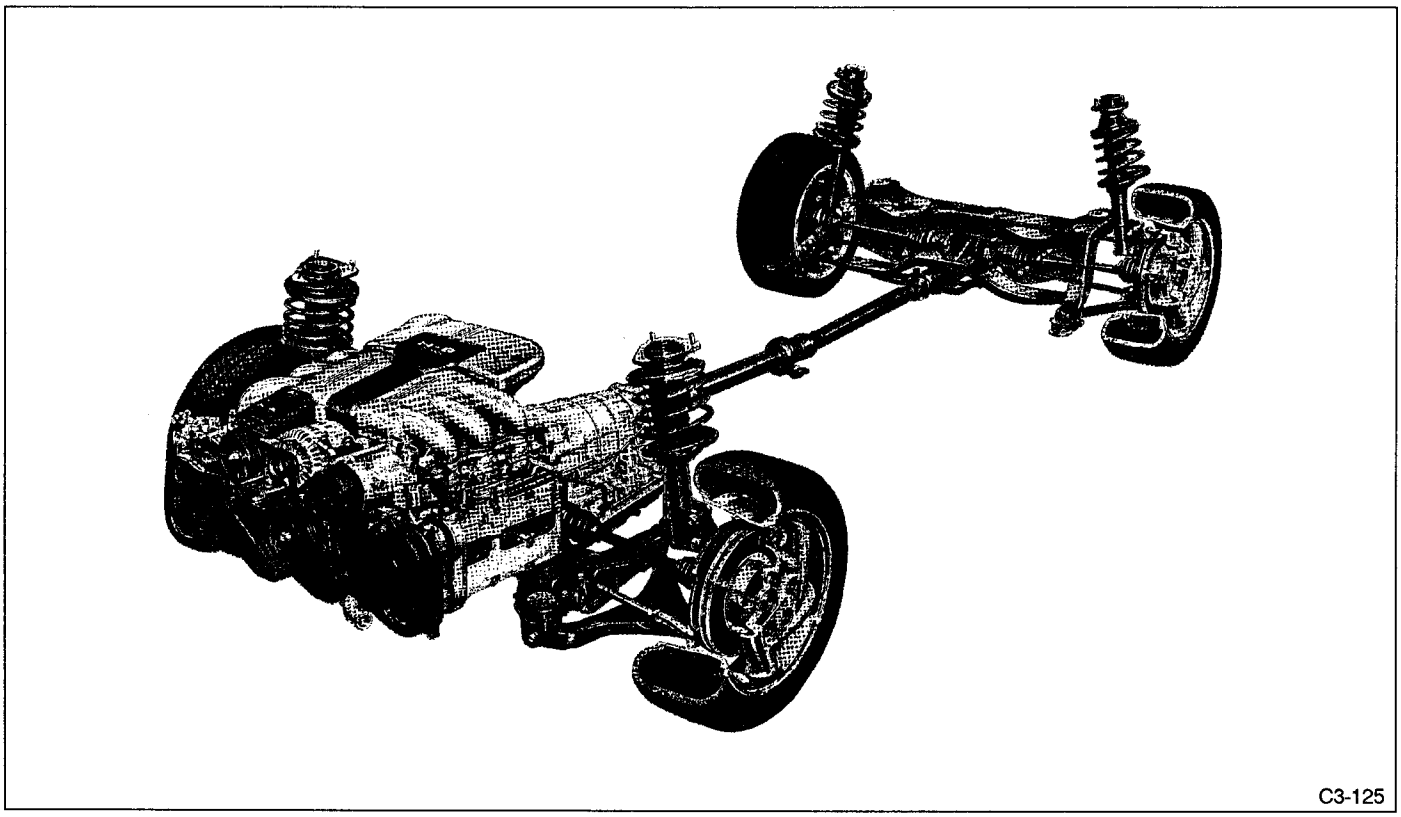

Fig. 1

M MECHANISM AND FUNCTION

2. Propeller Shaft

The propeller shaft utilizes a 2-piece design that is provided with three joints.

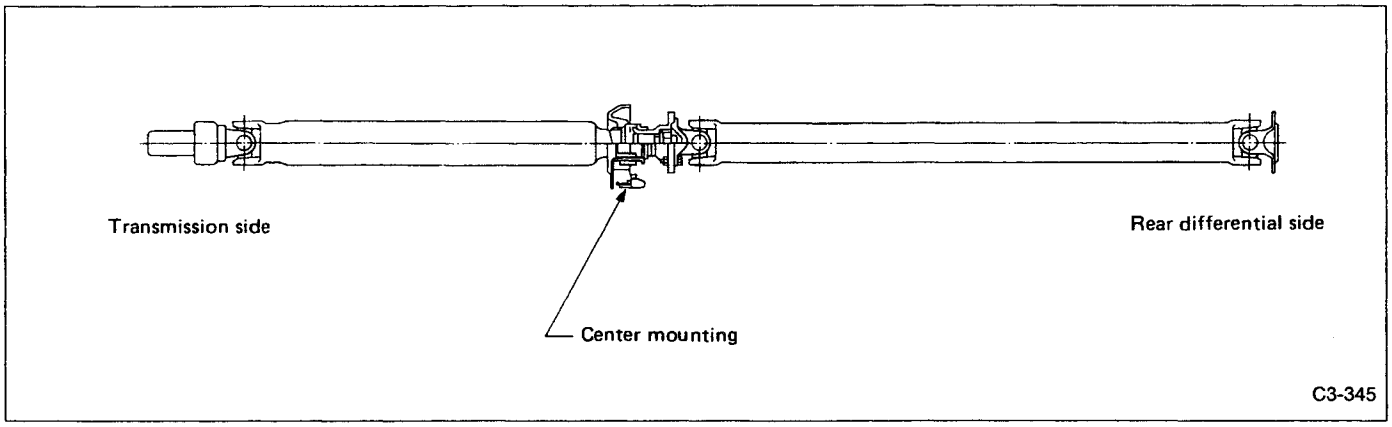

Fig. 1

3. Rear Differential

The rear differential is a limited slip differential (LSD) incorporating outer plates, inner plates and viscous coupling with silicon oil. The spindle, which is an integral part of the rear drive shaft, is coupled with the differential side gear and viscous coupling (VC) by circlips.

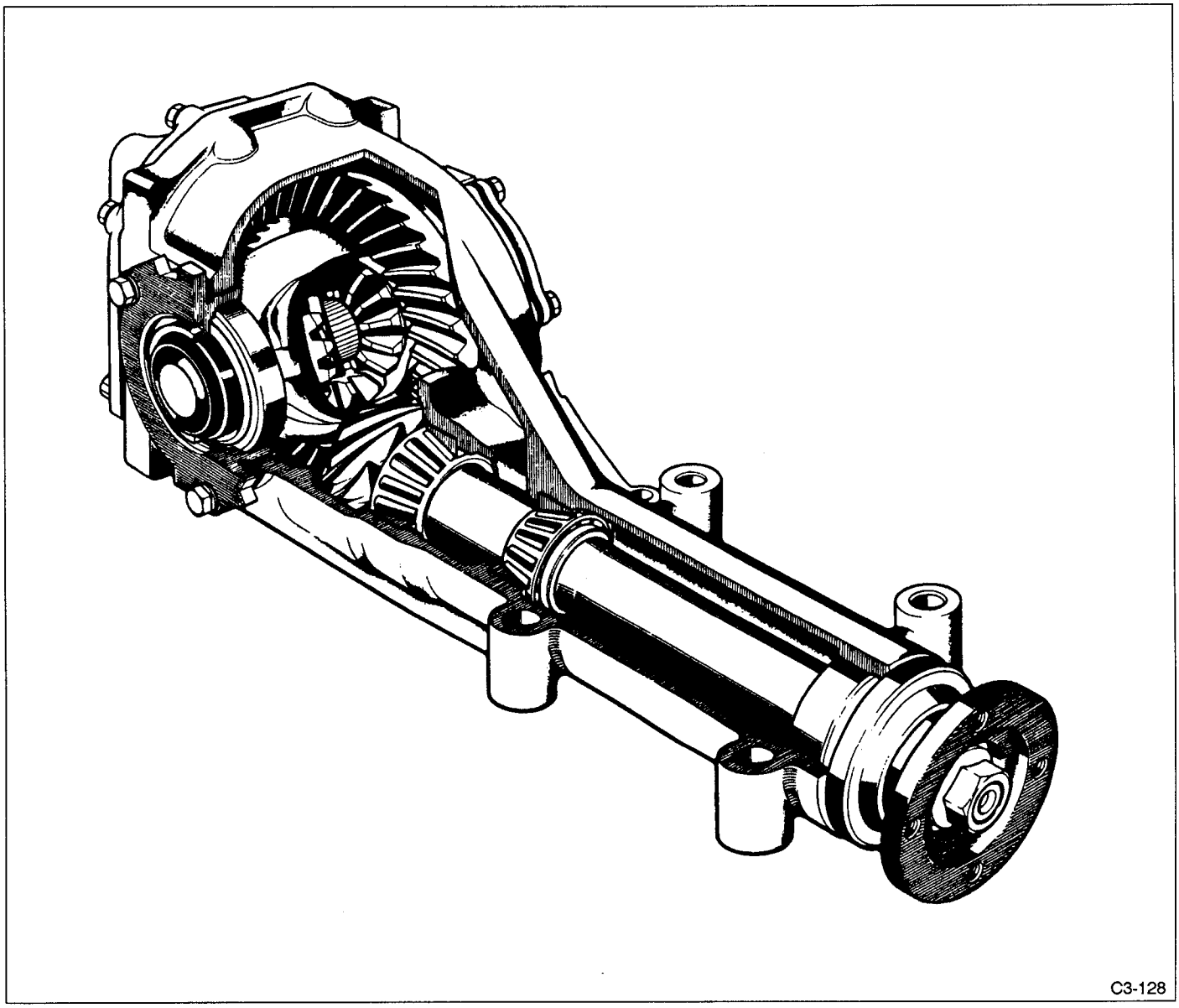

Fig. 4

4. Limited Slip Differential (LSD)

A viscous coupling (VC) type LSD has been adopted so as to ensure safe and smooth transfer of increased power under various driving conditions. This VC type LSD features ease of turning while maintaining excellent stability when driving over slippery roads or when using engine brake, thus enabling engine power to be utilized efficiently. Smooth restriction of the differential operation of the left and right wheels results in improved running stability on bad roads, snowy roads, and also on muddy roads.

1. STRUCTURE

The VC type LSD adopts a "shaft to shaft system" in which the RH and LH rear drive shafts are coupled by a VC. This results in a compact structure with high performance.

The inside of the VC housing is formed by alternately combining the outer plates (the outer periphery of each plate engages with the internal spline of the housing) and inner plates (the inner periphery of each plate engages with the outer spline of the hub).

On the outer periphery of the outer plate, the spacer ring is fitted and set in position. On the inner plate, no positioning ring is used: The plate can be moved a certain amount on the hub spline in the axial direction.

Sealed inside the housing is a mixture of high viscosity silicon oil and air. The housing is sealed by X-rings so that silicon oil will not leak into the rear final drive even when the pressure increases due to a greater difference in the rotation speed between LH and RH wheels.

The spindle (LH) which is integral with the rear drive shaft (LH) is coupled by the VC case spline, and is fitted to the side gear (LH) which is integral with the VC case. The spindle (RH) which is integral with the rear drive shaft (RH) is spline fitted to the side gear (RH). The end of the spindle is fitted by splines to the VC hub. No disassembling of the VC is allowed.

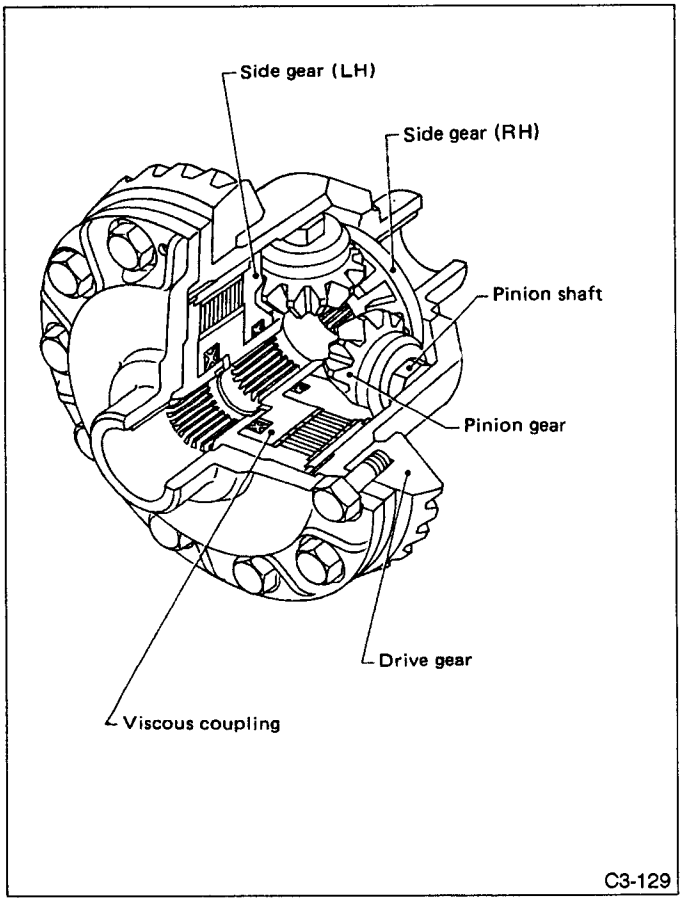

Fig. 5

2. OPERATION

1) When right and left wheels turn at equal speed

During normal straight-road driving where the right and left wheels run at an equal speed, the differential case and side gears rotate together, just as in conventional differentials. As a result, driving torque is transmitted equally to the right and left side gears as shown in Figure 6.

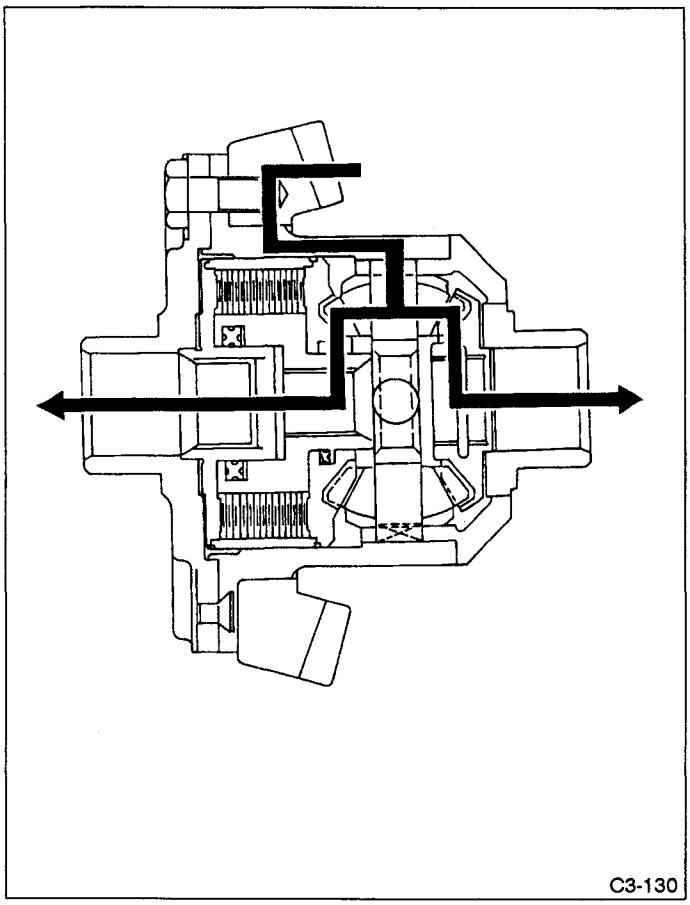

Fig. 6

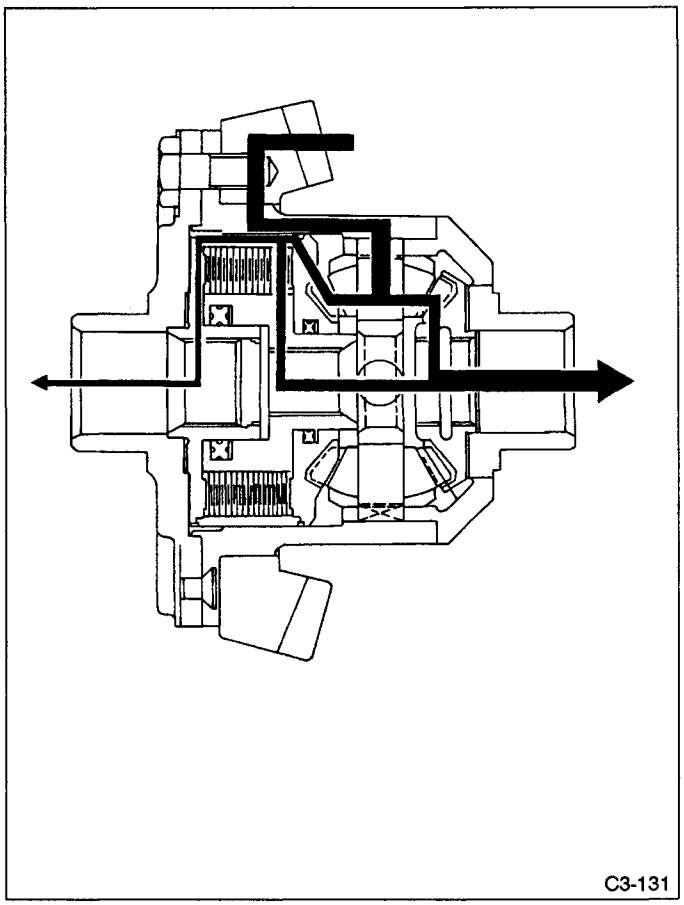

Fig. 7

2) When right and left wheels turn at different speeds. When a speed difference occurs between the right and left wheels, the VC housing and VC hub turn relatively at the same speed difference as that of the rear drive shaft. Because of the shearing force caused in the silicon oil, a differential torque is generated, which controls differential operation (idle rotation). For example, if the left wheel turns idle due to a difference in the road resistance, a speed difference occurs between the right and left wheel. Since the VC is installed between the right and left wheels, a differential torque is generated in the VC corresponding to this speed difference, and this differential torque is transferred from the left wheel to the right wheel. Accordingly, a greater driving force is transferred to the right wheel which is rotating at a lower speed as shown in Figure 7.

3. SERVICE PROCEDURES FOR LSD

The component parts of LSD ASSY are not available as piece parts.
Therefore, it is recommended to not disassemble LSD ASSY.

S SPECIFICATIONS AND SERVICE DATA

A: SPECIFICATIONS

1. REAR FINAL REDUCTION GEAR RATIO

Type of gear	Hypoid
Gear ratio (Number of gear teeth)	3.545 (39/11)
Oil capacity	0.8 ℓ (0.8 US qt, 0.7 Imp qt)

2. PROPELLER SHAFT

Front propeller shaft joint-to-joint length: mm (in)	L	528 (20.79)
Outside dia. of tube mm (in)	D_1	63.5 (2.500)
	D_2	57.0 (2.244)

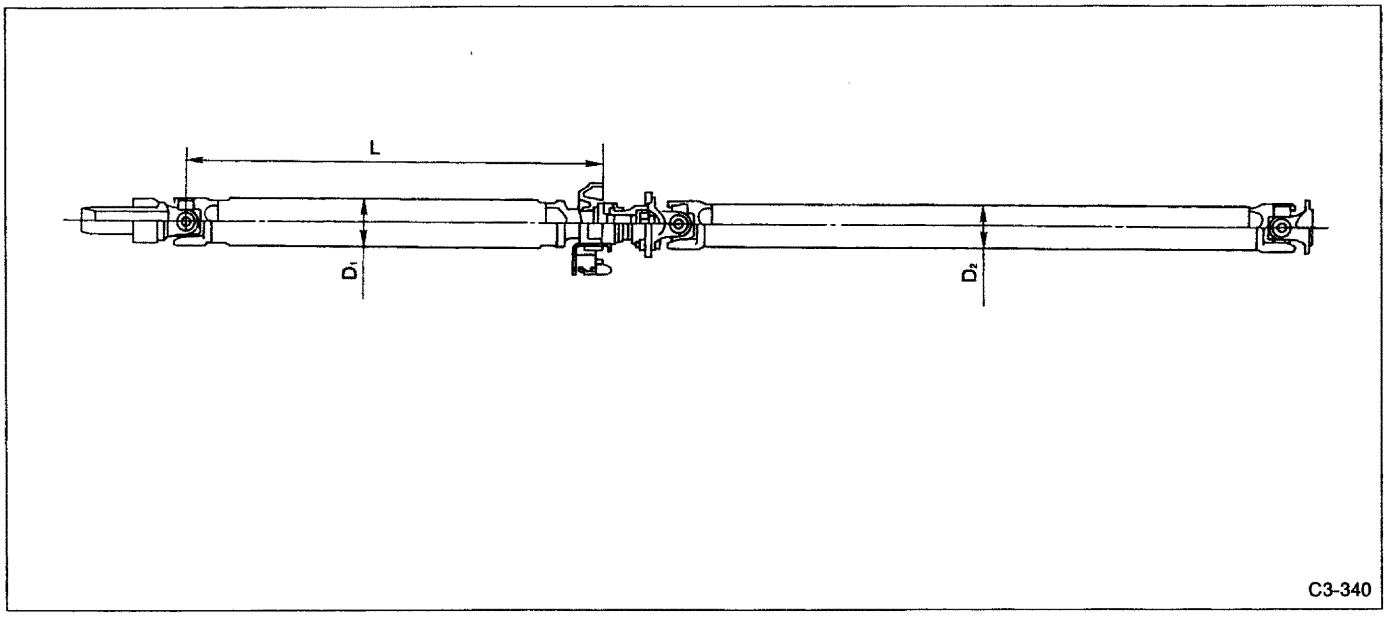

Fig. 2

3. REAR DRIVE SHAFT

	Type of drive shaft	Outside dia. of shaft mm (in)	Distance between boots: L mm (in)
		D	
Right-hand drive shaft	87AC-RH	22.2 (0.874)	305 (12.01)
Left-hand drive shaft	87AC-LH		

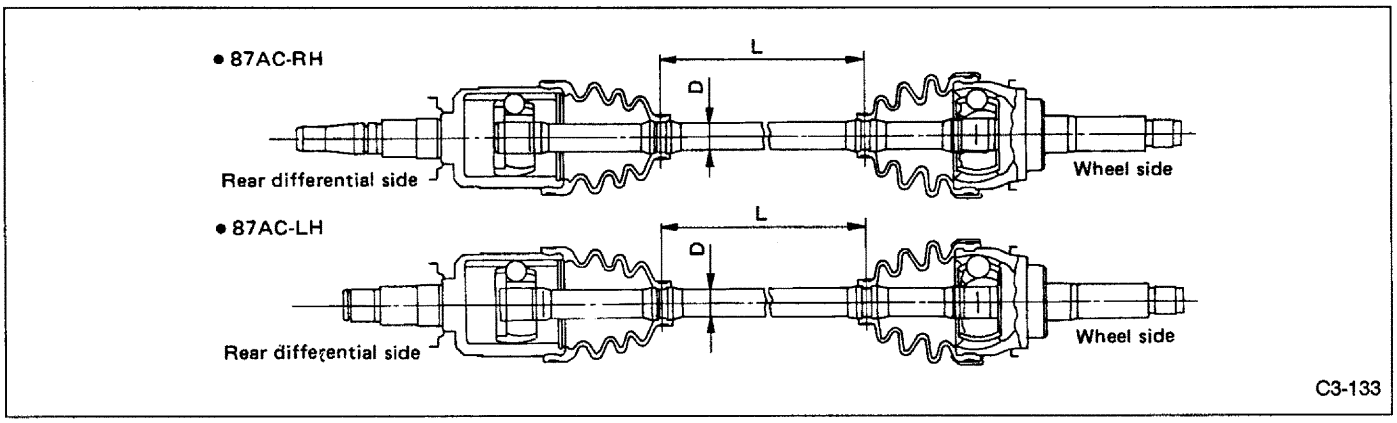

Fig. 9

B: SERVICE DATA

Rear differential

Front & rear bearing preload at companion flange bolt hole	New bearing	19.6 — 28.4 N (2.0 — 2.9 kg, 4.4 —6.4 lb)
	Used bearing	8.34 — 16.67 N (0.85 — 1.7 kg, 1.87 — 3.75 lb)
Preload adjusting washer length	Part No.	
	383705200	2.59 mm (0.1020 in)
	383715200	2.57 mm (0.1012 in)
	383725200	2.55 mm (0.1004 in)
	383735200	2.53 mm (0.0996 in)
	383745200	2.51 mm (0.0988 in)
	383755200	2.49 mm (0.0980 in)
	383765200	2.47 mm (0.0972 in)
	383775200	2.45 mm (0.0965 in)
	383785200	2.43 mm (0.0957 in)
	383795200	2.41 mm (0.0949 in)
	383805200	2.39 mm (0.0941 in)
	383815200	2.37 mm (0.0933 in)
	383825200	2.35 mm (0.0925 in)
	383835200	2.33 mm (0.0917 in)
	383845200	2.31 mm (0.0909 in)
Preload adjusting spacer length	Part No.	
	383695201	56.2 mm (2.213 in)
	383695202	56.4 mm (2.220 in)
	383695203	56.6 mm (2.228 in)
	383695204	56.8 mm (2.236 in)
	383695205	57.0 mm (2.244 in)
	383695206	57.2 mm (2.252 in)
Pinion height adjusting washer thickness	Part No.	
	383495200	3.09 mm (0.1217 in)
	383505200	3.12 mm (0.1228 in)
	383515200	3.15 mm (0.1240 in)
	383525200	3.18 mm (0.1252 in)
	383535200	3.21 mm (0.1264 in)
	383545200	3.24 mm (0.1276 in)
	383555200	3.27 mm (0.1287 in)
	383565200	3.30 mm (0.1299 in)
	383575200	3.33 mm (0.1311 in)
	383585200	3.36 mm (0.1323 in)
	383595200	3.39 mm (0.1335 in)
	383605200	3.42 mm (0.1346 in)
	383615200	3.45 mm (0.1358 in)
	383625200	3.48 mm (0.1370 in)
	383635200	3.51 mm (0.1382 in)
	383645200	3.54 mm (0.1394 in)
	383655200	3.57 mm (0.1406 in)
	383665200	3.60 mm (0.1417 in)
	383675200	3.63 mm (0.1429 in)
	383685200	3.66 mm (0.1441 in)
Side gear to thrust washer clearance		0.1 — 0.2 mm (0.004 — 0.008 in)
Side gear thrust washer thickness	Part No.	
	383445201	0.75 — 0.80 mm (0.0295 — 0.0315 in)
	383445202	0.80 — 0.85 mm (0.0315 — 0.0335 in)
	383445203	0.85 — 0.90 mm (0.0335 — 0.0354 in)
Side bearing standard width	20.00 mm (0.7874 in)	
Side bearing retainer shim thickness	Part No.	
	383475201	0.20 mm (0.0079 in)
	383475202	0.25 mm (0.0098 in)
	383475203	0.30 mm (0.0118 in)
	383475204	0.40 mm (0.0157 in)
	383475205	0.50 mm (0.0197 in)
Drive gear to drive pinion backlash	Limit	0.10 — 0.20 mm (0.0039 — 0.0079 in)
Drive gear runout on its back surface		0.05 mm (0.0020 in)
Oil capacity		0.8 ℓ (0.8 US qt, 0.7 Imp qt)

C COMPONENT PARTS

1. Rear Differential Mounting System

1 Rear sub frame
2 Rear differential member
3 Stopper (Upper)
4 Front bushing
5 Stopper (Under)
6 Rear differential
7 Bracket

Tightening torque: N·m (kg-m, ft-lb)
T1: 53 – 65 (5.4 – 6.6, 39 – 48)
T2: 61 – 76 (6.2 – 7.8, 45 – 56)
T3: 127 – 157 (13.0 – 16.0, 94 – 116)
T4: 127 – 157 (13.0 – 16.0, 94 – 116)

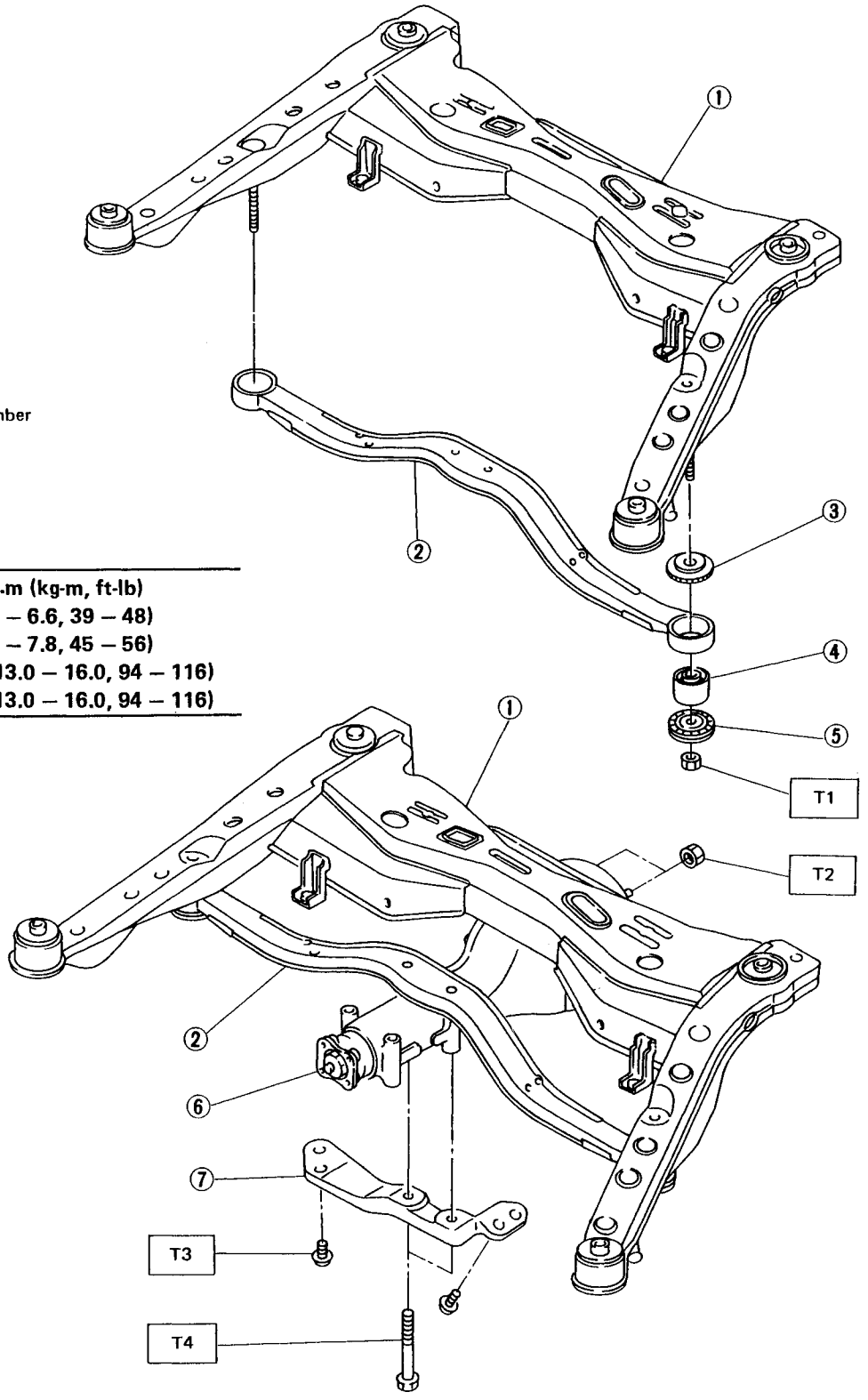

Fig. 10

C COMPONENT PARTS

2. Propeller Shaft and Drive Shaft

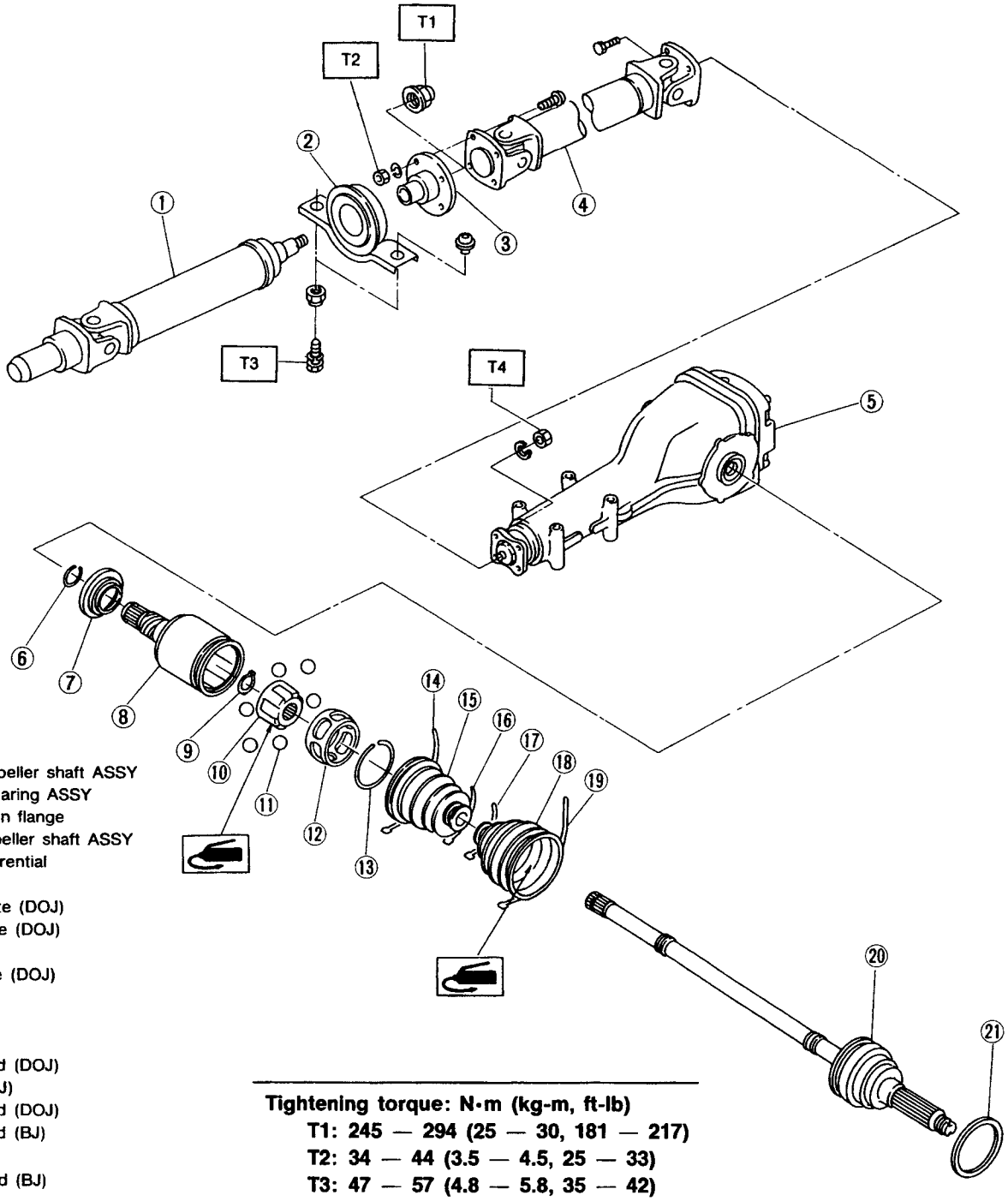

1 Front propeller shaft ASSY
2 Center bearing ASSY
3 Companion flange
4 Rear propeller shaft ASSY
5 Rear differential
6 Circlip
7 Baffle plate (DOJ)
8 Outer race (DOJ)
9 Snap ring
10 Inner race (DOJ)
11 Ball
12 Cage
13 Circlip
14 Boot band (DOJ)
15 Boot (DOJ)
16 Boot band (DOJ)
17 Boot band (BJ)
18 Boot (BJ)
19 Boot band (BJ)
20 BJ ASSY
21 Baffle plate (BJ)

Tightening torque: N·m (kg-m, ft-lb)
T1: 245 — 294 (25 — 30, 181 — 217)
T2: 34 — 44 (3.5 — 4.5, 25 — 33)
T3: 47 — 57 (4.8 — 5.8, 35 — 42)
T4: 24 — 39 (2.4 — 4.0, 17 — 29)

C3-341

Fig. 3

3. Rear Differential Assembly

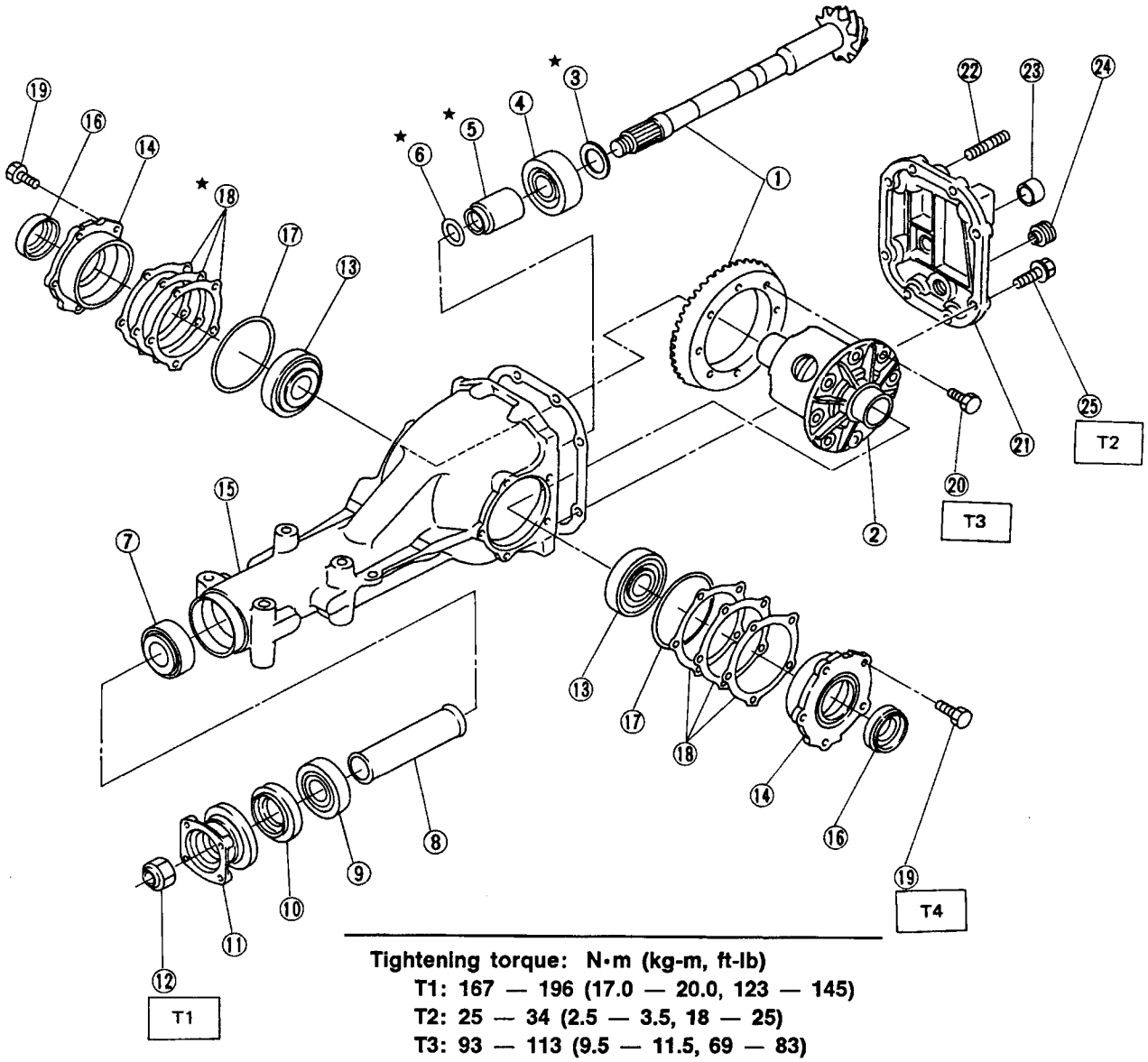

Tightening torque: N·m (kg-m, ft-lb)
T1: 167 — 196 (17.0 — 20.0, 123 — 145)
T2: 25 — 34 (2.5 — 3.5, 18 — 25)
T3: 93 — 113 (9.5 — 11.5, 69 — 83)
T4: 9 — 12 (0.9 — 1.2, 6.5 — 8.7)

★: Selective parts

1 Pinion crown gear set
2 Differential case
★3 Pinion height adjusting washer
4 Rear bearing
★5 Bearing preload adjusting spacer
★6 Bearing preload adjusting washer
7 Front bearing
8 Spacer
9 Pilot bearing
10 Front oil seal
11 Companion flange
12 Self locking nut
13 Side bearing
14 Side bearing retainer
15 Differential carrier
16 Side oil seal
17 Side bearing retainer O-ring
★18 Side bearing retainer shim
19 Bolt (8x20x14 mm)
20 Bolt (11x18x11 mm)
21 Rear cover
22 Stud bolt
23 Plug
24 Plug CP
25 Bolt (10x30x18 mm)

C3-136

Fig. 12

W SERVICE PROCEDURE

1. Propeller Shaft

A: ON-CAR SERVICE

Check the following points with propeller shaft installed in vehicle.

1) Joints and connections

Check for any looseness of yoke flange connecting bolts and center bearing retaining bolts.

2) Splines and bearing locations

Turn propeller shaft by hand to see if abnormal free play exists at splines. Also move yokes to see if abnormal free play exists at spiders and bearings.

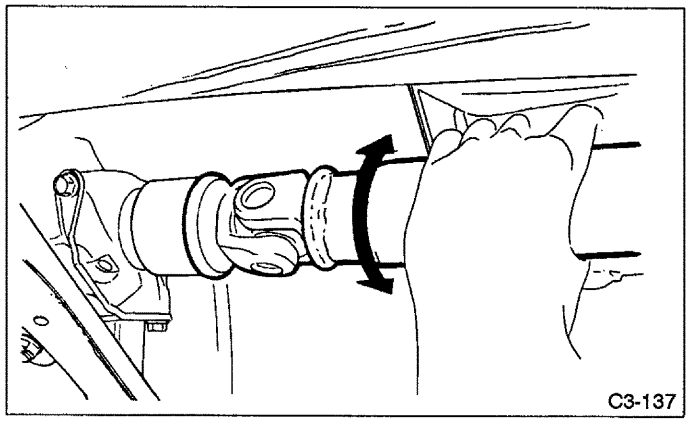

Fig. 13

3) Runout of propeller shaft

Turn rear wheels by hand to check for "runout" of propeller shaft.

(1) Put steel plate on stand, and install magnet stand for dial gauge.

a. Pay attention not to move the vehicle body.

Run out:
Limit 0.6 mm (0.024 in)

Measure runout with a dial gauge at the center of front and rear propeller shaft tubes.

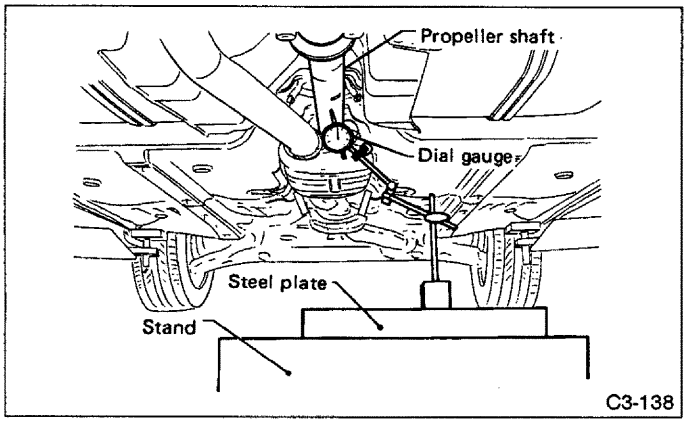

Fig. 14

4) Center bearing free play

While holding propeller shaft near center bearing with your hand, move it up and down, and left and right to check for any abnormal bearing free play.

B: REMOVAL

1) Disconnect the ground cable from battery.
2) Move the selector lever to "N".
3) Release the parking brake.
4) Jack-up the vehicle and support it with rigid racks.
5) Remove the rear exhaust pipe.

For removal of rear exhaust pipe, refer to "2-9 EXHAUST SYSTEM" [W5A0].

6) Remove the front exhaust cover.

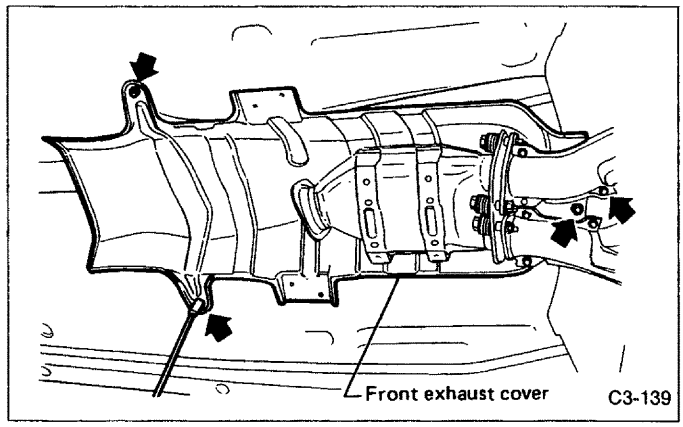

Fig. 4

7) Loosen the four bolts which hold propeller shaft to rear differential.

Remove all but one bolt.

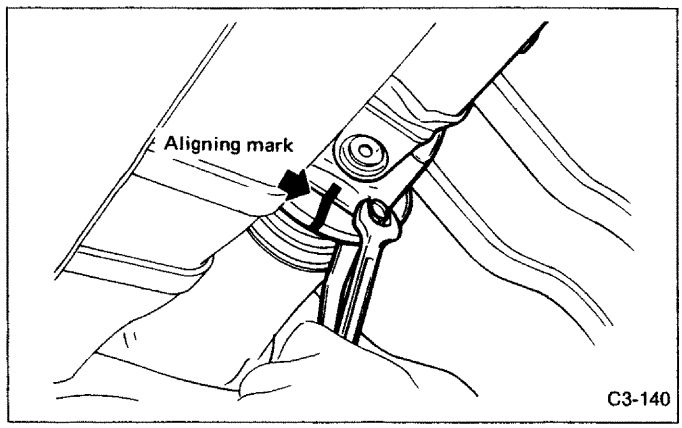

Fig. 5

8) Remove the two bolts which hold center bearing to car body.

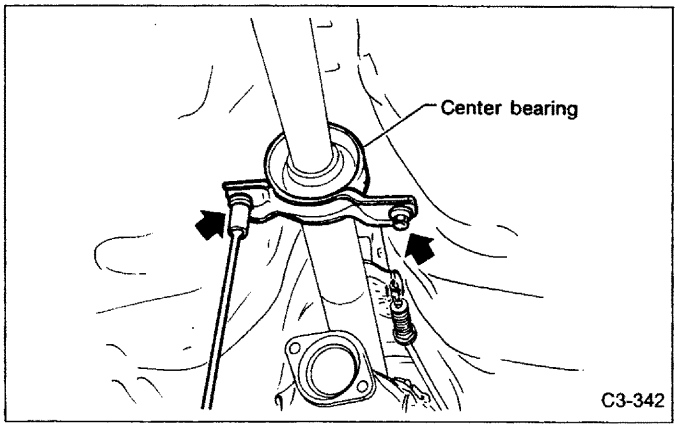

Fig. 6

9) Remove propeller shaft from transmission.

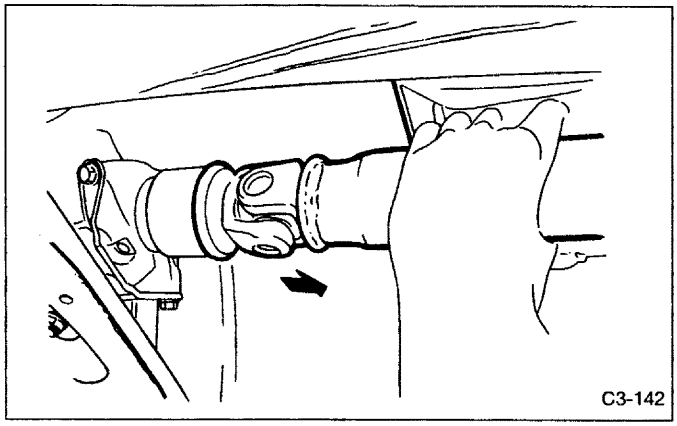

Fig. 7

10) Install the extension cap to transmission.

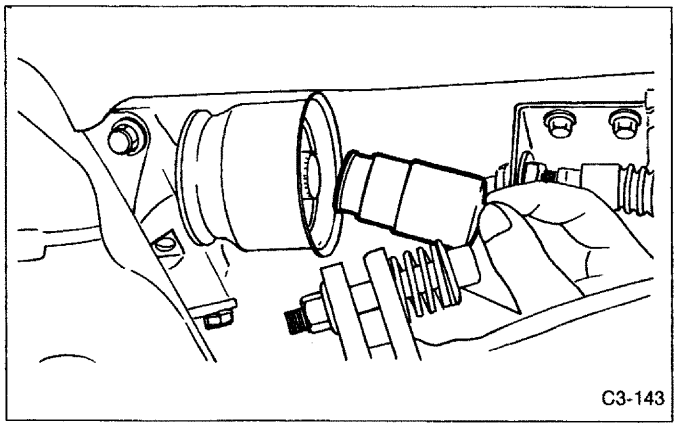

Fig. 8

a. Be sure to use an empty oil can to catch oil flowing out when removing propeller shaft.
b. Be sure not to damage oil seals and the frictional surface of sleeve yoke.
c. Be sure to plug the opening in transmission after removal of propeller shaft.

C: DISASSEMBLY

Before removing center bearing, check its condition. If it does not operate smoothly or if there is any free play or leakage, remove as follows:

1) Put matching marks on affected parts.

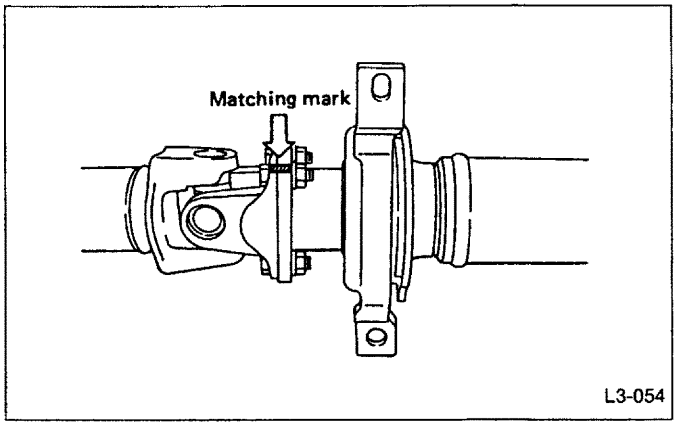

Fig. 9

2) Remove bolts which hold front propeller shaft to rear propeller shaft.

3) Place companion flange in a vise and remove stake nut.

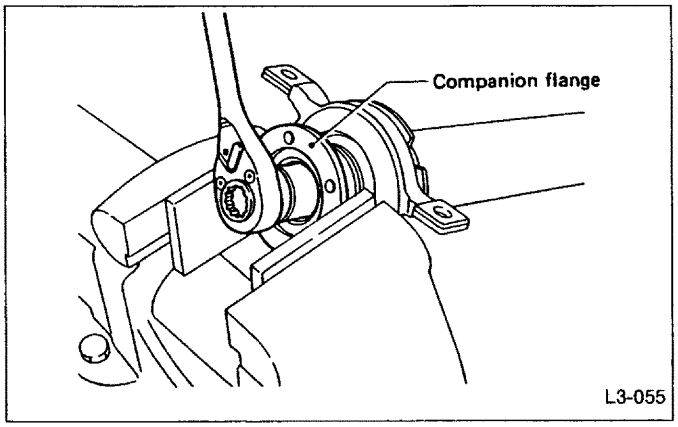

Fig. 10

Be sure not to hold propeller shaft pipe portion in the vise.

4) Drive out companion flange with a puller or press.

Before disassembling, put aligning mark on relevant parts.

5) Lightly tap the head of front shaft with a copper hammer until center bearing is removed.

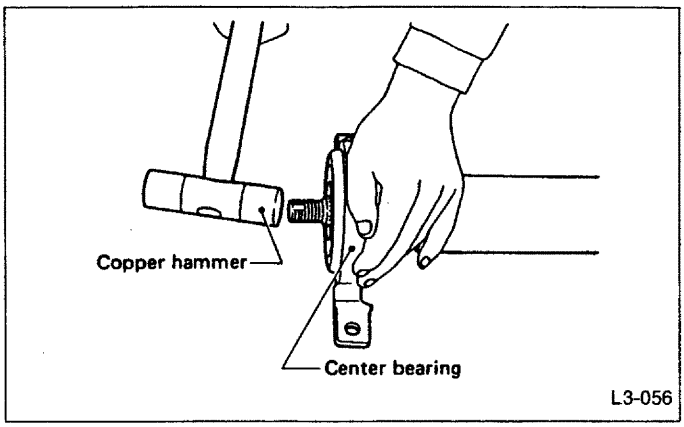

Fig. 11

Be careful not to damage the thread portion.

D: INSPECTION

Do not disassemble propeller shaft. Check the following and replace if necessary.

1) Tube surfaces for dents or cracks
2) Splines for deformation or abnormal wear
3) Joints for non-smooth operation or abnormal noise
4) Center bearing for free play, noise or non-smooth operation
5) Oil seals for abnormal wear or damage
6) Center bearing for breakage or damage to rubber boot

E: INSTALLATION

1) Install center bearing onto front propeller shaft.
2) Install washer to center bearing.

Apply a coat of grease to both surfaces of washer before installation.

Recommended grease:
Molybdenum disulfide grease

3) Align marks and install companion flange.
4) Tighten stake nut until center bearing is set in position.

Be sure to install new stake nut.

Tightening torque:
245 — 294 N·m (25 — 30 kg-m, 181 — 217 ft-lb)

Stake the nut after tightening.

5) Align marks and connect front and rear shafts.

Tightening torque:
24 — 32 N·m (2.4 — 3.3 kg-m, 17 — 24 ft-lb)

6) Remove the extension cap from transmission.
7) Insert sleeve yoke into transmission and attach center bearing to car body.

Tightening torque:
47 — 57 N·m (4.8 — 5.8 kg-m, 35 — 42 ft-lb)

8) Connect flange yoke and rear differential.

Tightening torque:
24 — 39 N·m (2.4 — 4.0 kg-m, 17 — 29 ft-lb)

9) Install front exhaust cover.
10) Install rear exhaust pipe.

2. Rear Differential

A: ON-CAR SERVICE

1. FRONT OIL SEAL

1) Disconnect the ground cable from battery.
2) Move the selector lever to "N".
3) Release the parking brake.
4) Drain gear oil.
5) Jack up rear wheels and support the vehicle body with rigid racks.
6) Remove propeller shaft from body.
[Refer to "Propeller Shaft".]
Wrap metal parts (installed at the rubber boot center DOJ) with a cloth or rubbered material to prevent it from damage by interference with adjacent metal parts.
7) Measure turning resistance of companion flange.
Measure turning resistance after making sure that the companion flange turns smoothly.

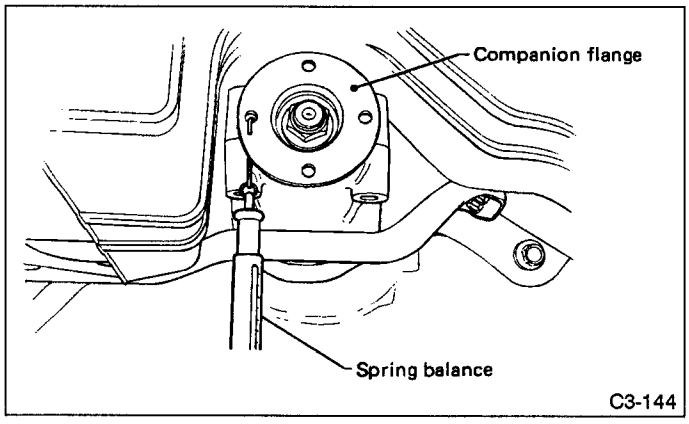

Fig. 24

8) Remove self-locking nut while holding companion flange with FLANGE WRENCH.

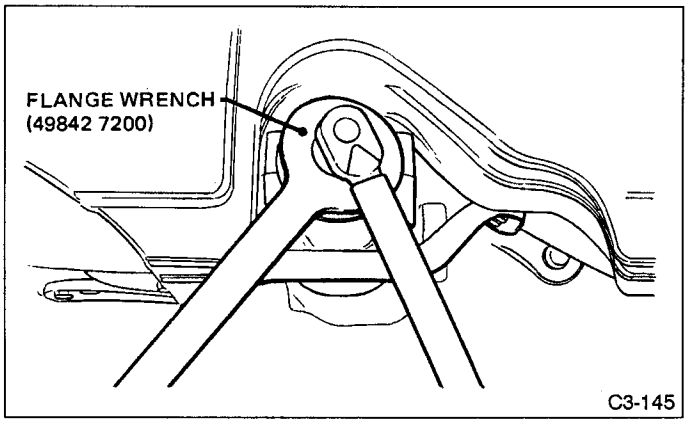

Fig. 25

9) Extract companion flange with a puller.
10) Remove oil seal.

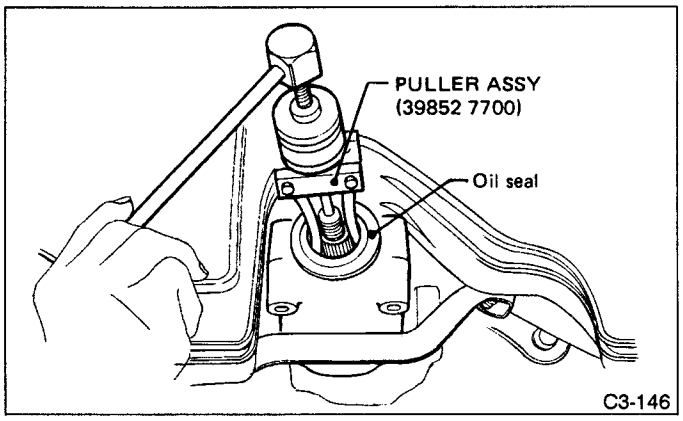

Fig. 26

11) Fit a new oil seal.

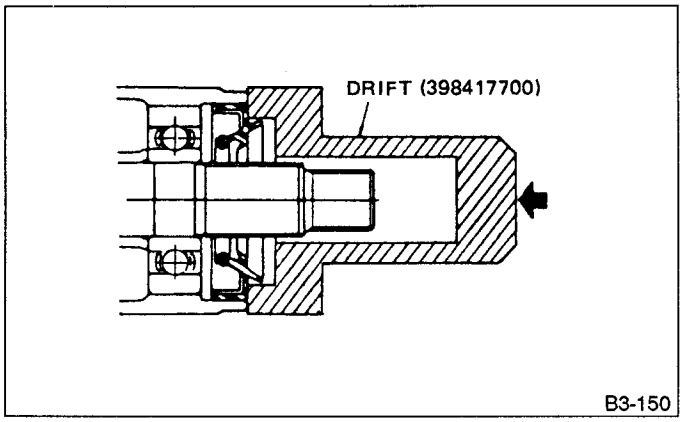

Fig. 27

12) Install companion flange.
13) Tighten self-locking nut within the specified torque range so that the turning resistance of companion flange becomes the same as that before replacing oil seal.

Torque (Drive pinion nut):
167 — 196 N•m
(17.0 — 20.0 kg-m, 123 — 145 ft-lb)

14) Reassembling procedure hereafter is the reverse of the disassembling.

2. SIDE OIL SEAL

1) Disconnect the ground cable from battery.
2) Move the selector lever to "N".
3) Release the parking brake.
4) Loosen wheel nuts.
5) Jack up the vehicle and support it with rigid racks.
6) Remove the wheels.
7) Remove the rear exhaust pipe.

For removal of the rear exhaust pipe, refer to "2-9 EXHAUST SYSTEM" [W5A0].

8) Remove the DOJ of rear drive shaft from the rear differential.

(1) Remove the ABS sensor cable clamp and parking brake cable guide from the trailing link.

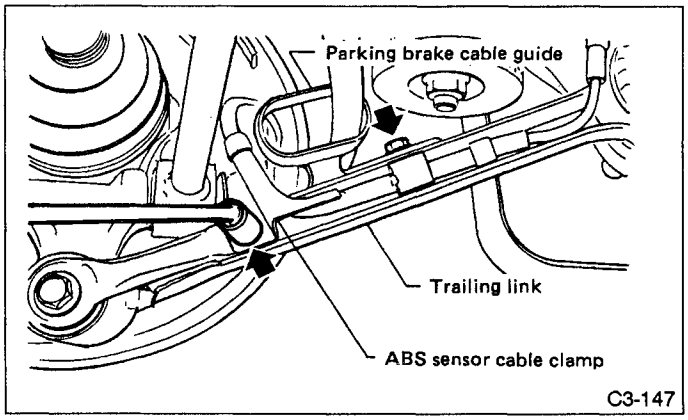

Fig. 28

(2) Remove the parking brake cable clamp from the rear sub frame.

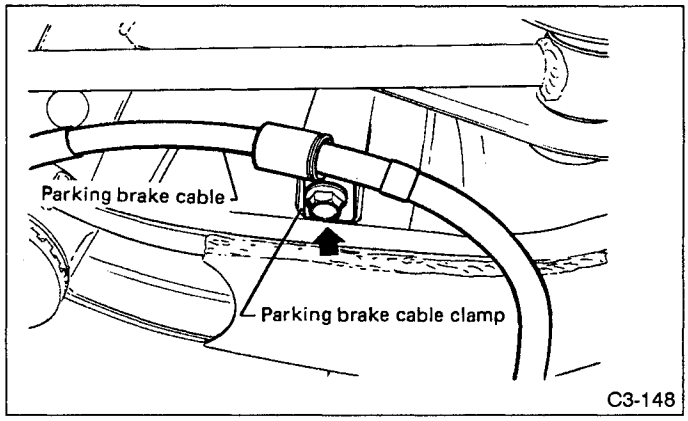

Fig. 29

(3) Remove the rear stabilizer link.

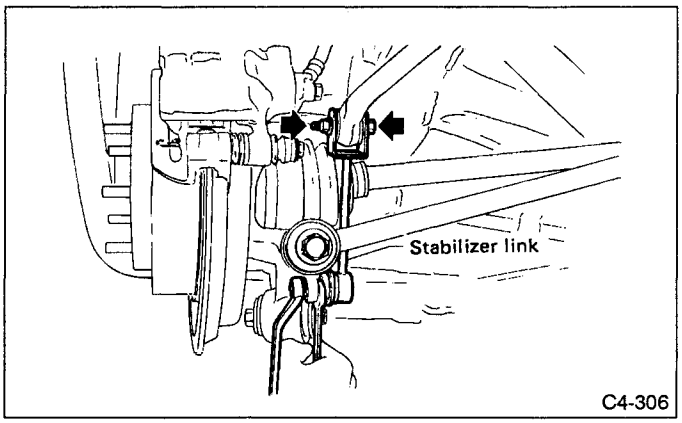

Fig. 30

(4) Remove the brake hose clamps from rear strut.

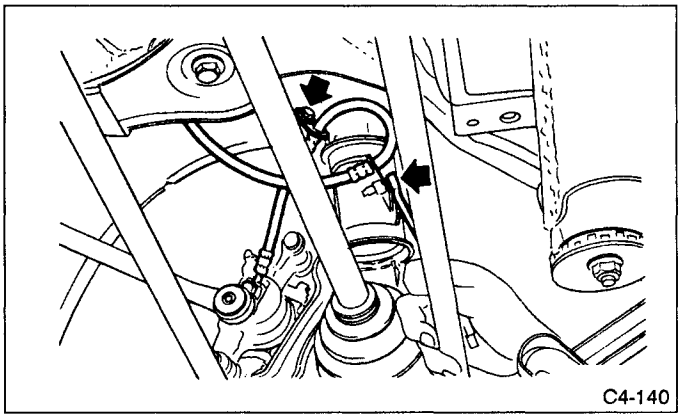

Fig. 31

(5) Remove the bolts which secure the trailing link to the rear housing.

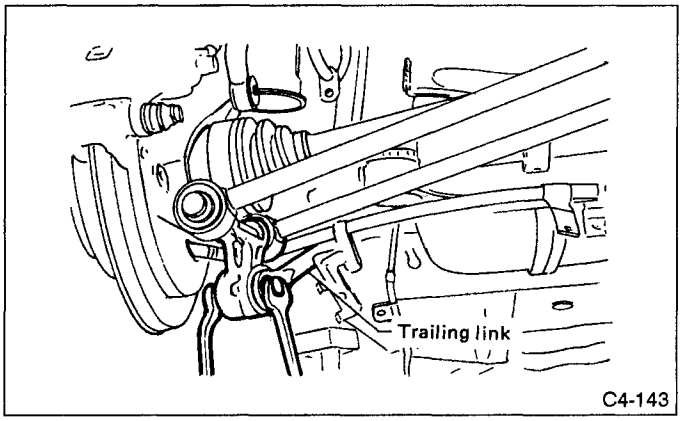

Fig. 32

(6) Remove the bolts which secure the front and rear lateral link to the rear housing.

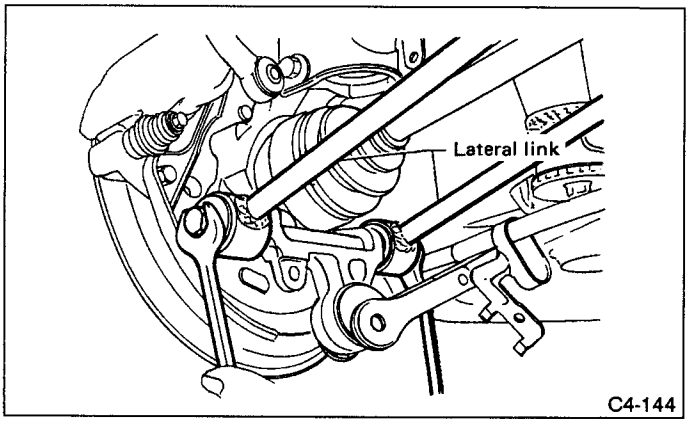

Fig. 33

(7) Remove the DOJ from the rear differential by using the DRIVE SHAFT REMOVER.

Special tool:
DRIVE SHAFT REMOVER (28099PA100)

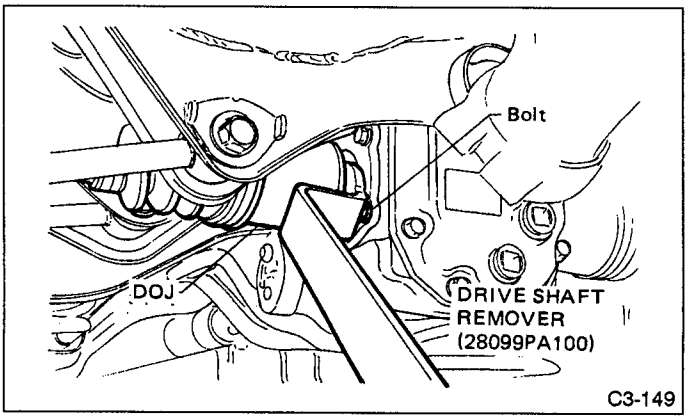

Fig. 34

When removing DOJ from rear differential using remover, fit remover to the bolt as shown in Fig. 35 so as not to damage side bearing retainer.

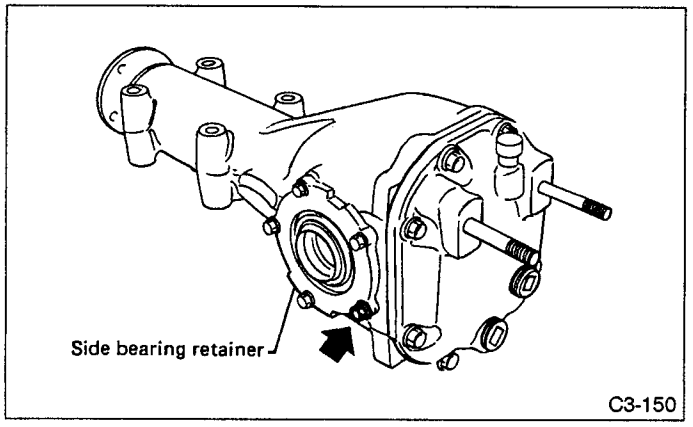

Fig. 35

9) Secure rear drive shaft to rear sub frame using wire.

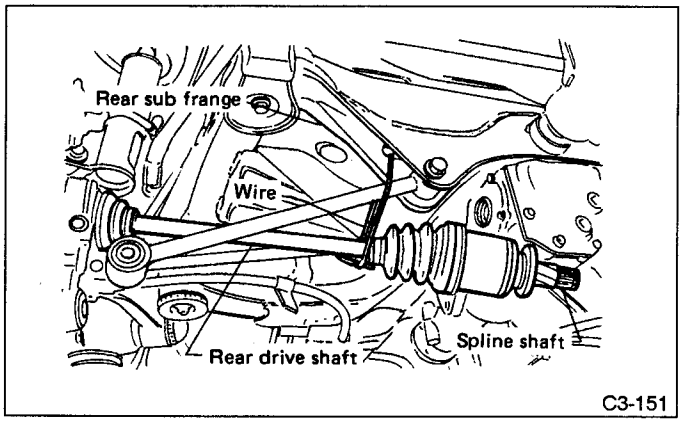

Fig. 36

The LH side spline shaft circlip only comes out together with the shaft. RH side circlip is fitted inside the rear differential, and it need not be removed.

10) Remove the side oil seal.

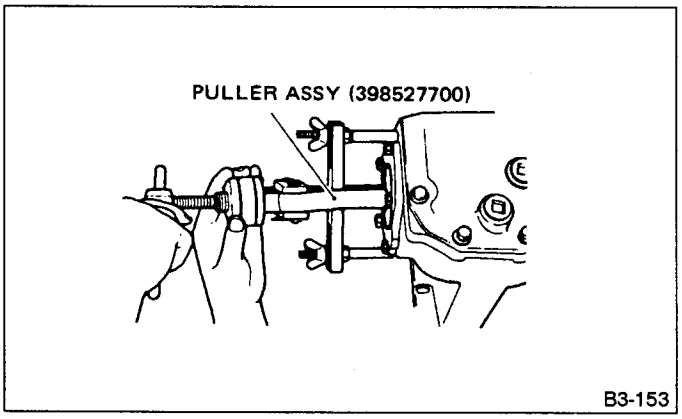

Fig. 37

11) Drive in a new side oil seal with DRIFT.
Apply chassis grease between the oil seal lips.

Special tool:
DRIFT (398437700)

12) Insert the DOJ into rear differential.
Before inserting, replace the circlip at the end of the LH spline shaft with a new one.
For replace of circlip, refer to "4-2 WHEEL AND AXLES.

(1) Install the side oil seal protector to rear differential.

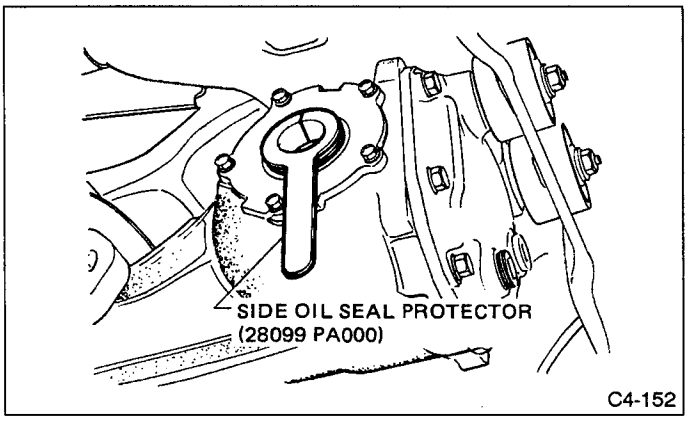

Fig. 38

(2) Insert the spline shaft until the spline portion is inside the side oil seal.

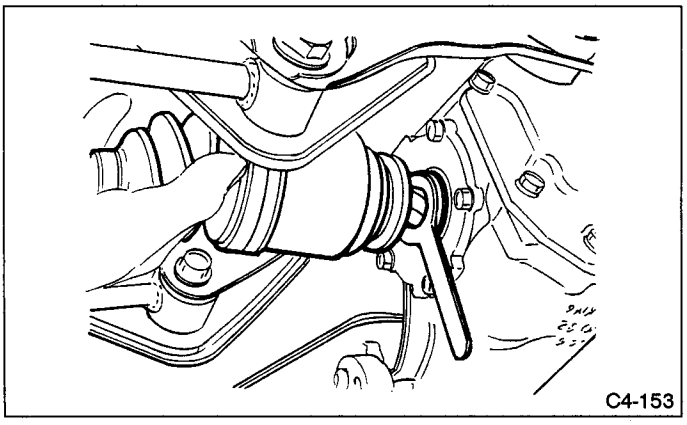

Fig. 39

(3) Remove the side oil seal protector.

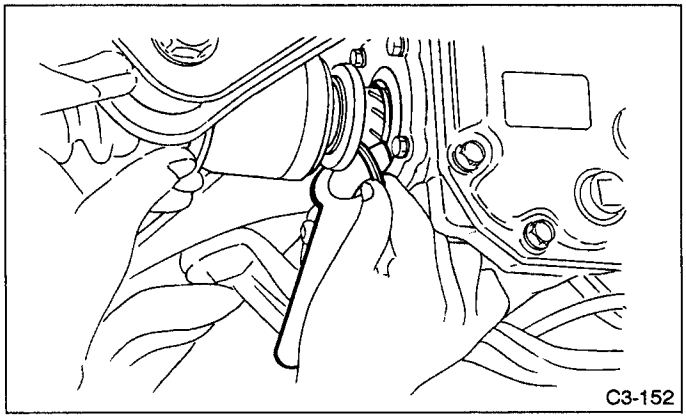

Fig. 40

(4) Completely insert DOJ into rear differential by pressing rear housing.

Check that oil seal lip is not folded over inward.

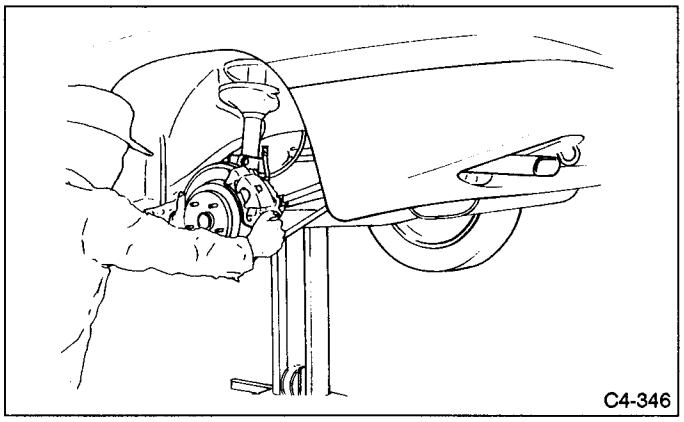

Fig. 41

13) Reassembling procedure hereafter is the reverse of the disassembling.

For installation of rear suspension parts, refer to "4-1 SUSPENSION".

B: IDENTIFICATION

When replacing the rear differential ASSY, select the correct rear differential ASSY.

Using an incorrect rear differential ASSY causes the drive line and wheels to "drag" or emit abnormal noise.

Gear ratio	Part number	Label stuck on rear differential
3.545	27011AA242	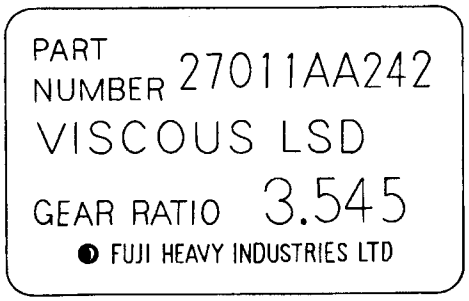

Fig. 42

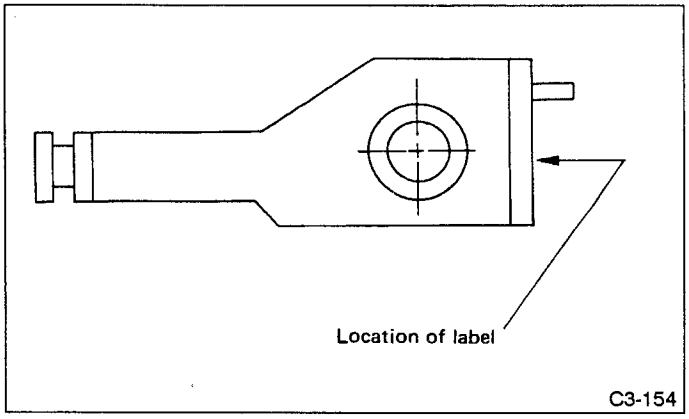

Fig. 43

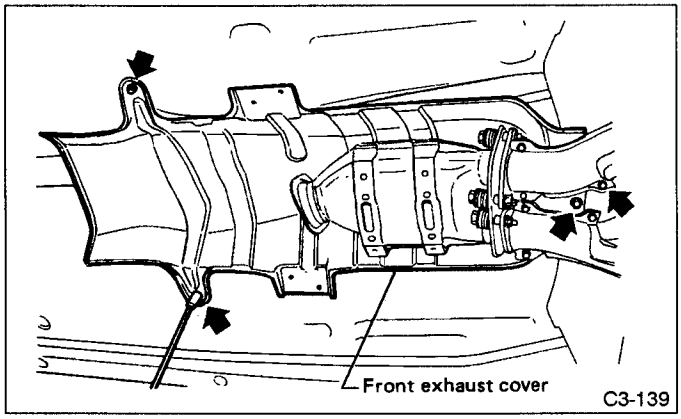

Fig. 44

C : REMOVAL

1) Disconnect the ground cable from battery.
2) Move the selector lever to "N".
3) Release the parking brake.
4) Loosen wheel nuts.
5) Jack up the vehicle and support it with rigid racks.
6) Remove the wheels.
7) Remove the rear exhaust pipe.
8) Remove the front exhaust cover.
9) Remove the propeller shaft from body.
[Refer to "Propeller Shaft".]
a. Wrap center DOJ with a cloth or rubbered material to prevent rubber boot from damage.

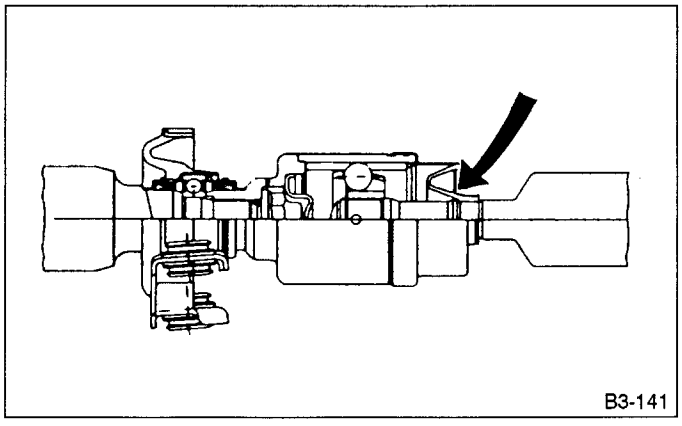

Fig. 45

b. Prepare an oil can and cap since the transmission oil flows out from the extension at removing propeller shaft.
c. When removing propeller shaft, pay attention not to damage the sliding surfaces of rear drive shaft (extension) spline, oil seal and sleeve yoke.
d. Insert the cap into the extension to prevent transmission oil from flowing out immediately after removing the propeller shaft.
10) Remove the DOJ of rear drive shaft from the rear differential.
For removal of DOJ from the rear differential, refer to "3-4 AWD SYSTEM" [W2A2].
11) Secure rear drive shaft to rear sub frame using wire.
12) Remove the rear differential ASSY from body.
(1) Remove the four bolts which secure the bracket to the rear differential member.

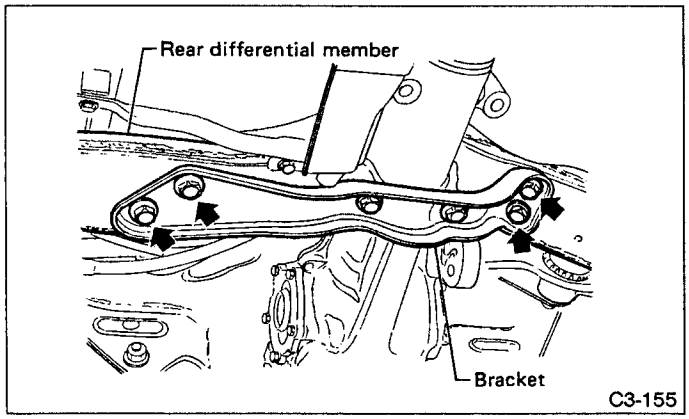

Fig. 46

(2) Support the rear differential with transmission jack.

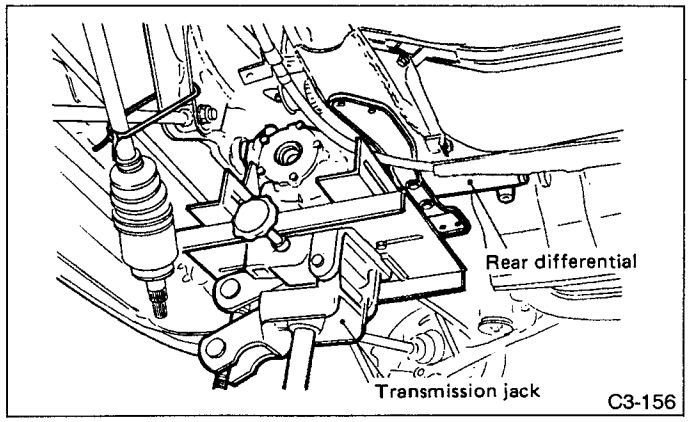

Fig. 47

(3) Remove the two bolts which secure the bracket and rear differential to rear differential member.

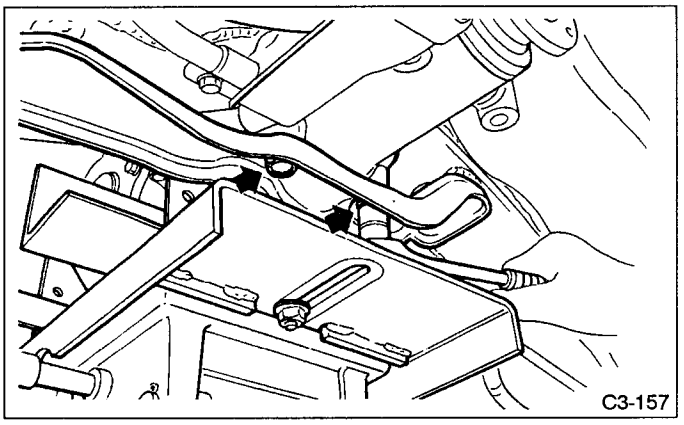

Fig. 48

(4) Remove the self locking nuts which connect the rear differential to the rear sub frame.

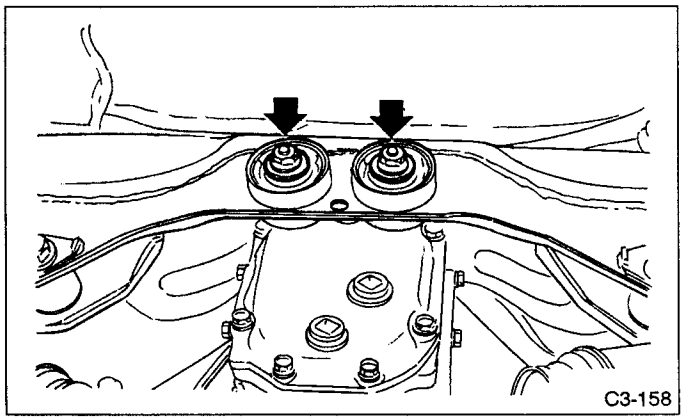

Fig. 49

(5) While slowly lowering transmission jack, move the rear differential forward and remove bolts from the rear sub frame.

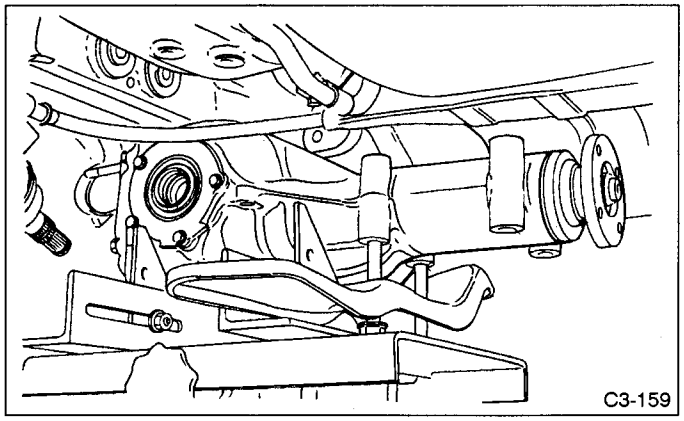

Fig. 50

Do not tilt the rear differential, or rear differential gear oil will spill out.
(6) Remove the rear differential ASSY from body.

D: DISASSEMBLY

To detect real cause of trouble, inspect the following items before disassembling. (Refer to "ASSEMBLY" for inspection procedures.)

- Tooth contact of hypoid drive gear and pinion, and backlash
- Runout of drive gear at its back surface
- Turning resistance of drive pinion

1) Set ATTACHMENT on vise and install the differential assembly to Attachment.

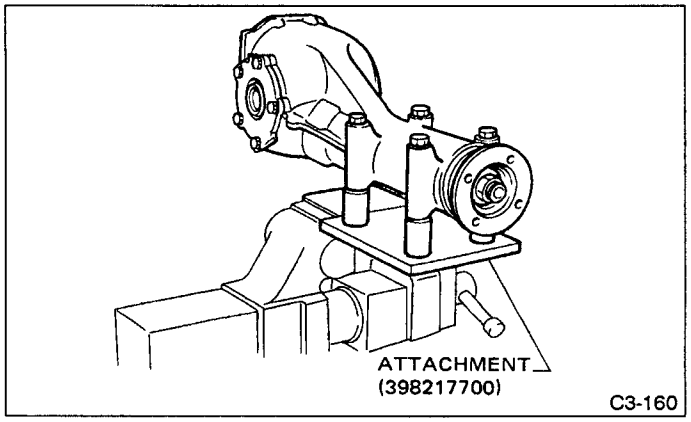

Fig. 51

2) Drain gear oil by removing plug.
3) Remove rear cover by loosening retaining bolts.

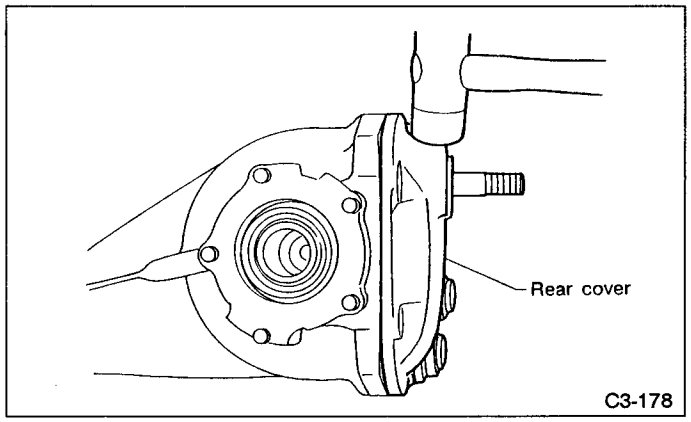

Fig. 52

4) Make right and left side bearing retainers in order to identify them at reassembly. Remove side bearing retainer attaching bolts, set ATTACHMENT to differential case, and extract right and left side bearing retainers with a puller.

Each shim, which is installed to adjust the side bearing preload, should be kept together with its mating retainer.

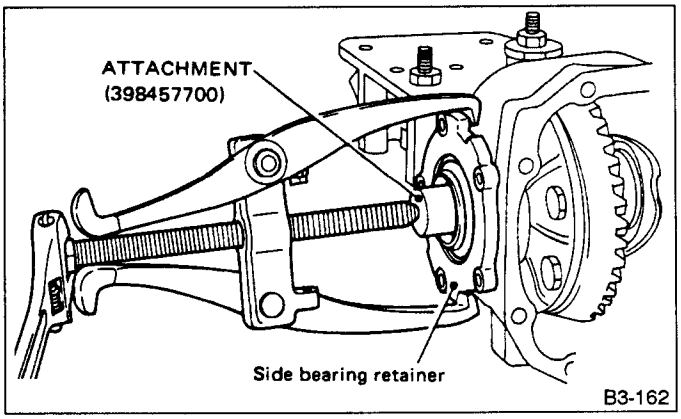

Fig. 53

5) Pull out differential case.

Be careful not to permit the teeth to contact the case.

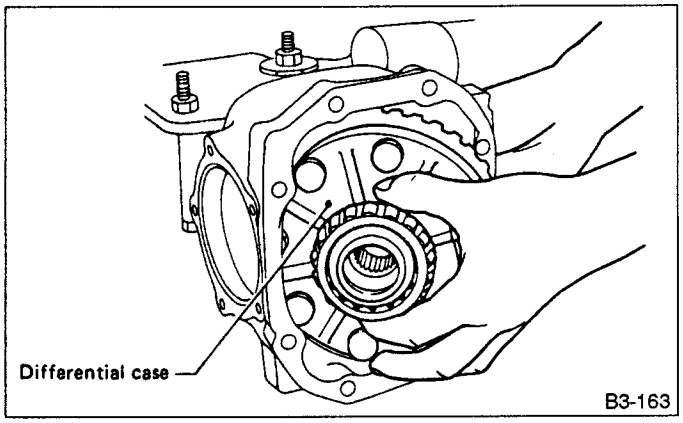

Fig. 54

6) When replacing side bearing, pull bearing cup from side bearing retainer.

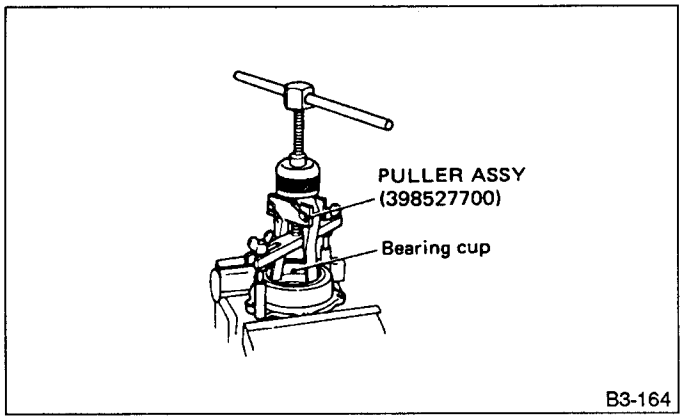

Fig. 55

7) Extract bearing cone with PULLER SET.

a. Set Puller so that its claws catch the edge of the bearing cone.

b. Never mix up the right and left hand bearing cups and cones.

Do not attempt to disassemble the parts unless necessary.

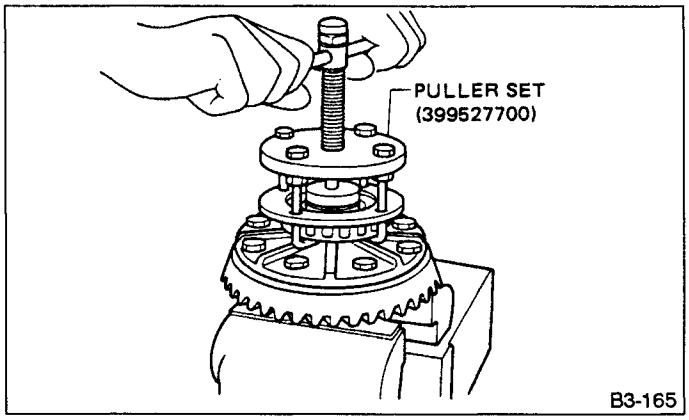

Fig. 56

8) Remove drive gear by loosening drive gear bolts.

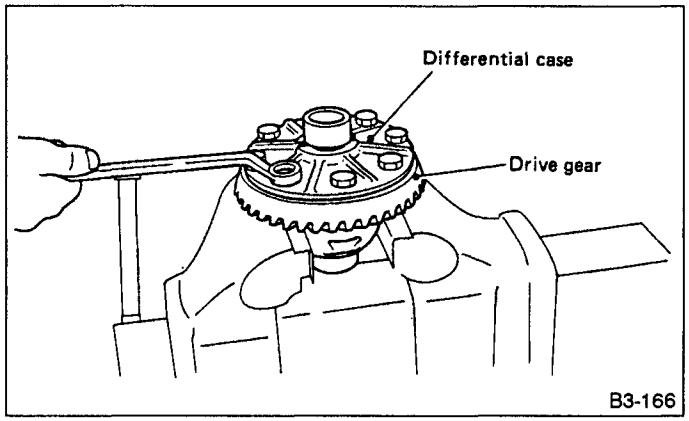

Fig. 57

Further disassembling is not allowed.

9) Hold companion flange with FLANGE WRENCH and remove drive pinion nut.

10) Extract the companion flange with a puller.

11) Press the end of drive pinion shaft and extract it together with rear bearing cone, preload adjusting spacer and washer.

Hold the drive pinion so as not to drop it.

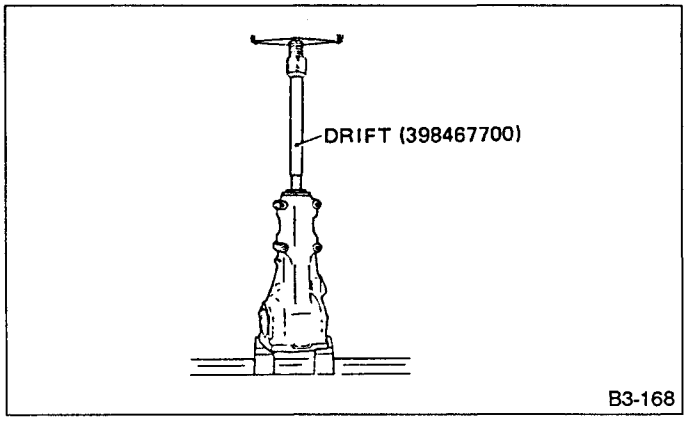

Fig. 58

12) Remove rear bearing cone from drive pinion by supporting cone with REPLACER.

Place the replacer so that its center-recessed side faces the pinion gear.

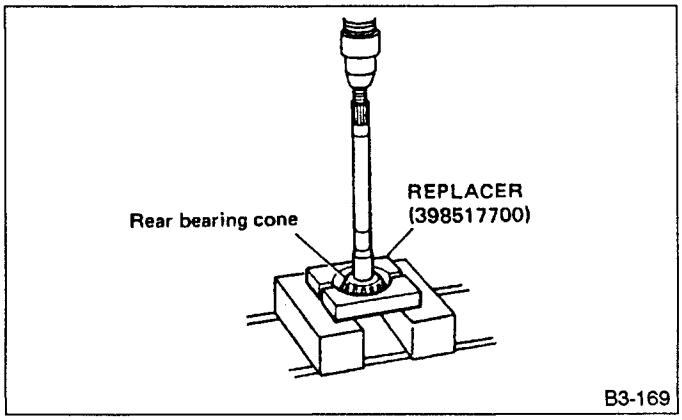

Fig. 59

13) Remove front oil seal from differential carrier.

14) Remove pilot bearing together with front bearing cone.

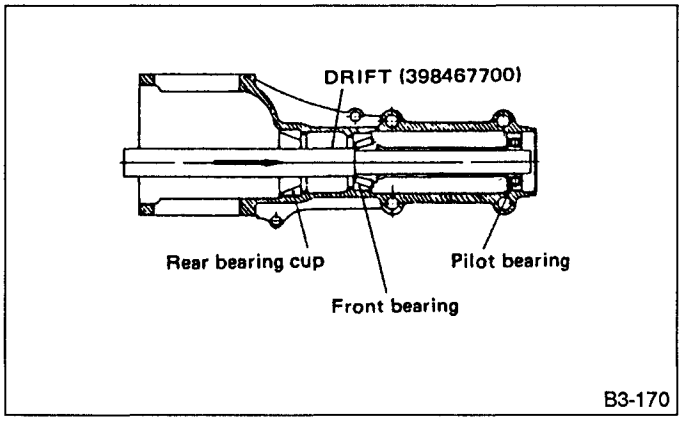

Fig. 60

15) When replacing bearings, tap front bearing cup and rear bearing cup in this order out of case by using a brass bar.

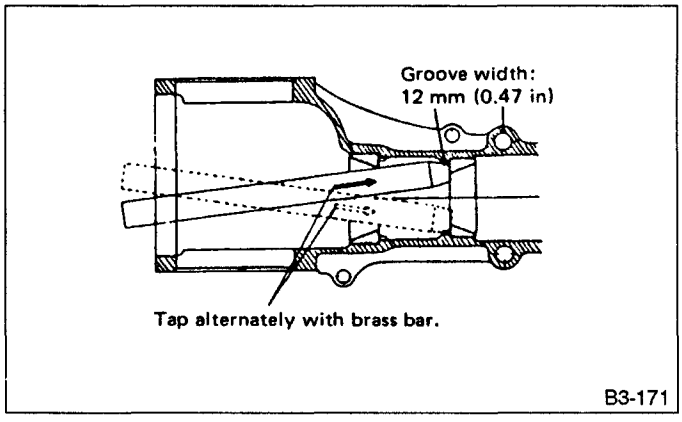

Fig. 61

E: INSPECTION

Wash all the disassembled parts clean, and examine them for wear, damage, or other defects. Repair or replace defective parts as necessary.

1) Drive gear and drive pinion
   (1) If abnormal tooth contact is evident, find out the cause and adjust to give correct tooth contact at assembly. Replace the gear if excessively worn or incapable of adjustment.
   (2) If crack, score, or seizure is evident, replace as a set. Slight damage of tooth can be corrected by oil stone or the like.
2) Bearing

Replace if seizure, peeling, wear, rust, dragging during rotation, abnormal noise or other defect is evident.

3) Oil seal

Replace if deformed or damaged, and at every disassembling.

4) Differential carrier

Replace if the bearing bores are worn or damaged.

5) Differential case

Replace if its sliding surfaces are worn or cracked.

6) Companion flange

Replace if the oil seal lip contacting surfaces have flaws.

F: ASSEMBLY

1) Precautions for assembling
   (1) Assemble in the reverse order of disassembling. Check and adjust each part during assembly.
   (2) Keep the shims and washers in order, so that they are not misinstalled.
   (3) Thoroughly clean the surfaces on which the shims, washers and bearings are to be installed.
   (4) Apply gear oil when installing the bearings and thrust washers.
   (5) Be careful not to mix up the right and left hand cups of the bearings.
   (6) Replace the oil seal with new one at every disassembly. Apply chassis grease between the lips (*) when installing the oil seal.
   (7) Do not reuse old gaskets. Install new ones.

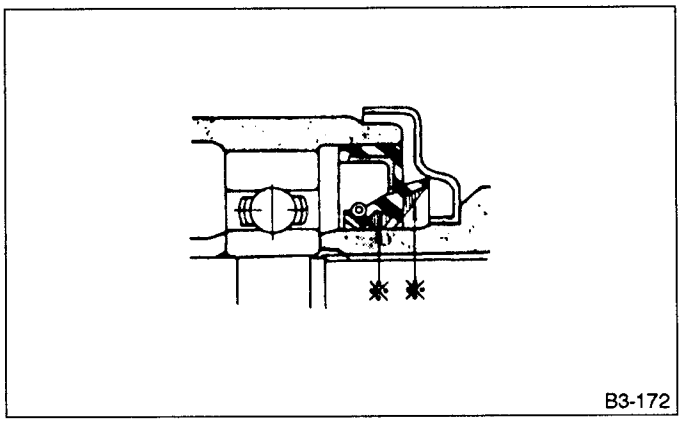

Fig. 62

2) Adjusting preload for front and rear bearings.

Adjust the bearing preload with spacer and washer between front and rear bearings. Pinion height adjusting washer has nothing to do with this adjustment. The adjustment must be carried out without oil seal.

(1) Press front and rear bearing cups into differential carrier.

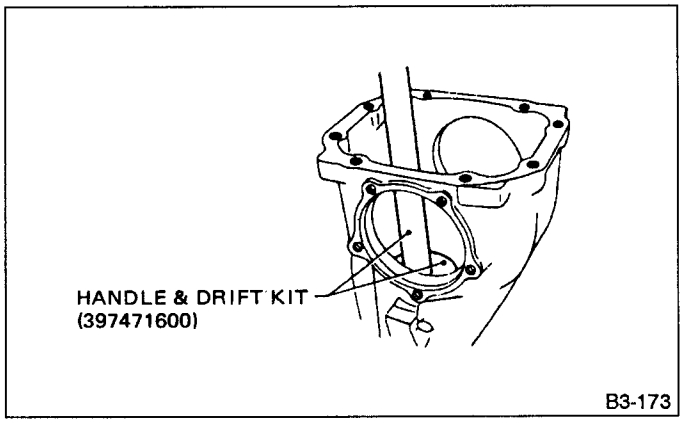

Fig. 63

(2) Insert DUMMY SHAFT with pinion height adjusting washer and rear bearing cone fitted on it into case.

Reuse the used washer if they show normal tooth contact pattern when checked before disassembly.

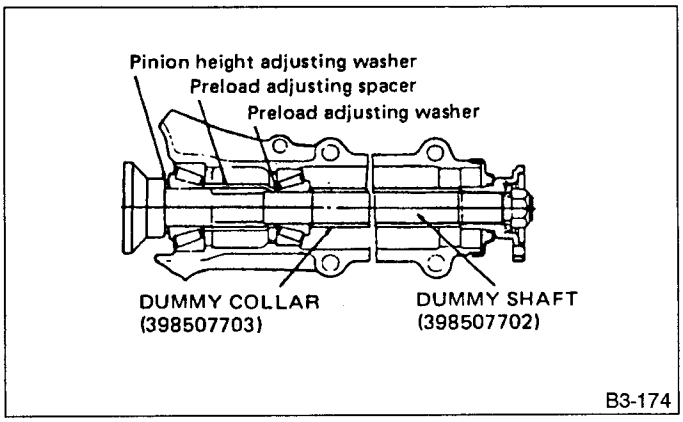

Fig. 64

(3) Then, install preload adjusting spacer and washer, front bearing cone, DUMMY COLLAR, companion flange, washer and drive pinion nut.
(4) Turn Dummy Shaft with hand to make it seated, and tighten drive pinion nut while measuring the preload with spring balance as shown in the figure. Select preload adjusting washer and spacer so that the specified preload is obtained when nut is tightened to the specified torque.

a. Be careful not to give excessive preload.
b. When tightening the drive pinion nut, lock Dummy Shaft with BLOCK as illustrated here.

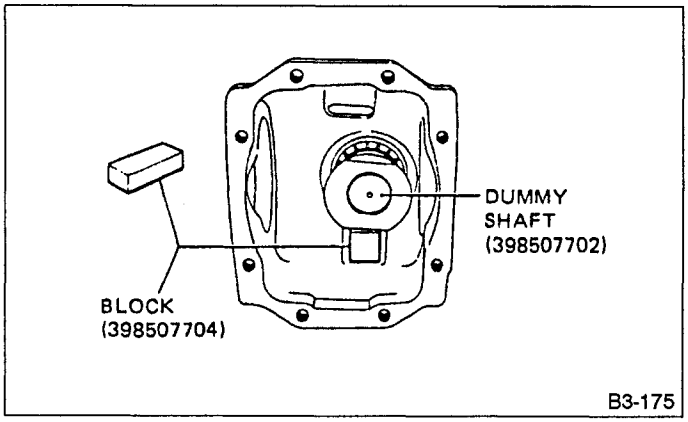

Fig. 65

Torque (Drive pinion nut):
167 — 196 N·m (17.0 — 20.0 kg-m, 123 — 145 ft-lb)

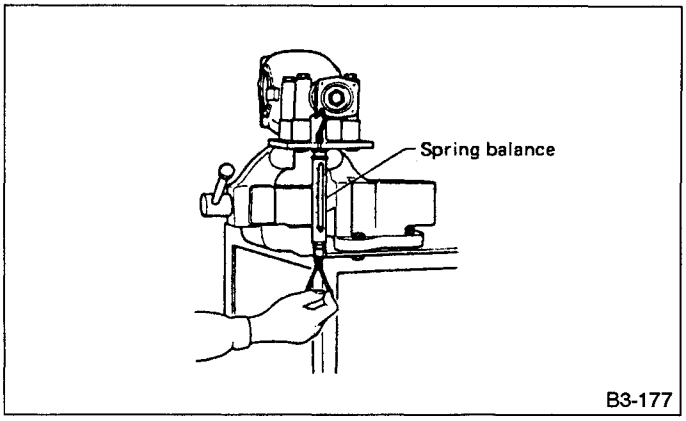

Fig. 66

Front & rear bearing preload
For new bearing: 19.6 — 28.4 N (2.0 — 2.9 kg, 4.4 — 6.4 lb) at companion flange bolt hole
For used bearing: 8.34 — 16.67 N (0.85 — 1.7 kg, 1.87 — 3.75 lb) at companion flange bolt hole

Preload adjusting washers

Part No.	Length mm (in)
383705200	2.59 (0.1020)
383715200	2.57 (0.1012)
383725200	2.55 (0.1004)
383735200	2.53 (0.0996)
383745200	2.51 (0.0988)
383755200	2.49 (0.0980)
383765200	2.47 (0.0972)
383775200	2.45 (0.0965)
383785200	2.43 (0.0957)
383795200	2.41 (0.0949)
383805200	2.39 (0.0941)
383815200	2.37 (0.0933)
383825200	2.35 (0.0925)
383835200	2.33 (0.0917)
383845200	2.31 (0.0909)

Preload adjusting spacers

Part No.	Length mm (in)
383695201	56.2 (2.213)
383695202	56.4 (2.220)
383695203	56.6 (2.228)
383695204	56.8 (2.236)
383695205	57.0 (2.244)
383695206	57.2 (2.252)

3) Adjusting drive pinion height
Adjust drive pinion height with washer installed between rear bearing cone and the back of pinion gear.
(1) Install Dummy Shaft, Collar and Gauge, as shown in the figure, and apply the specified preload on the bearings. (Refer to 2.) Adjusting preload for front and rear bearings.

At this time, install a pinion height adjusting washer which is temporarily selected or the same as that used before.

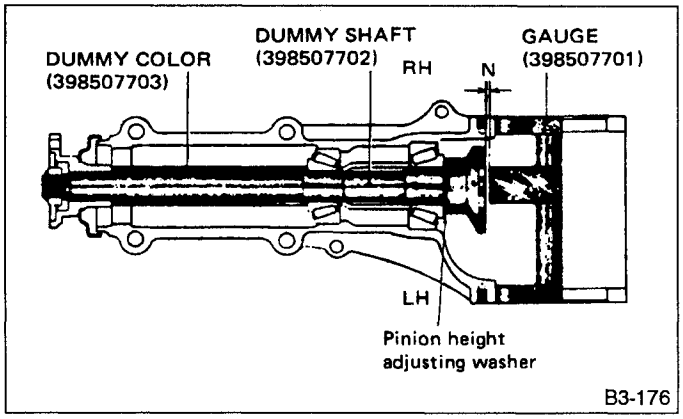

Fig. 67

(2) Measure the clearance N between the end of Gauge and the end surface of Dummy Shaft by using a thickness gauge.

Make sure there is no clearance between the case and Gauge.

(3) Obtain the thickness of pinion height adjusting washer to be inserted from the following formula, and replace the temporarily installed washer with this one.

T = To + N — (H x 0.01) — 0.20 (mm)

where

T = Thickness of pinion height adjusting washer (mm)

To = Thickness of washer temporarily inserted (mm)

N = Reading of thickness gauge (mm)

H = Figure marked on drive pinion head

(Example of calculation)

To = 2.20 + 1.20 = 3.40 mm

N = 0.23 mm H = + 1,

T = 3.40 + 0.23 — 0.01 — 0.20 = 3.42

Result: Thickness = 3.42 mm

Therefore use the washer 383605200.

Pinion height adjusting washers

Part No.	Thickness mm (in)
383495200	3.09 (0.1217)
383505200	3.12 (0.1228)
383515200	3.15 (0.1240)
383525200	3.18 (0.1252)
383535200	3.21 (0.1264)
383545200	3.24 (0.1276)
383555200	3.27 (0.1287)
383565200	3.30 (0.1299)
383575200	3.33 (0.1311)
383585200	3.36 (0.1323)
383595200	3.39 (0.1335)
383605200	3.42 (0.1346)
383615200	3.45 (0.1358)
383625200	3.48 (0.1370)
383635200	3.51 (0.1382)
383645200	3.54 (0.1394)
383655200	3.57 (0.1406)
383665200	3.60 (0.1417)
383675200	3.63 (0.1429)
383685200	3.66 (0.1441)

4) Install the selected pinion height adjusting washer on drive pinion, and press the rear bearing cone into position with INSTALLER.

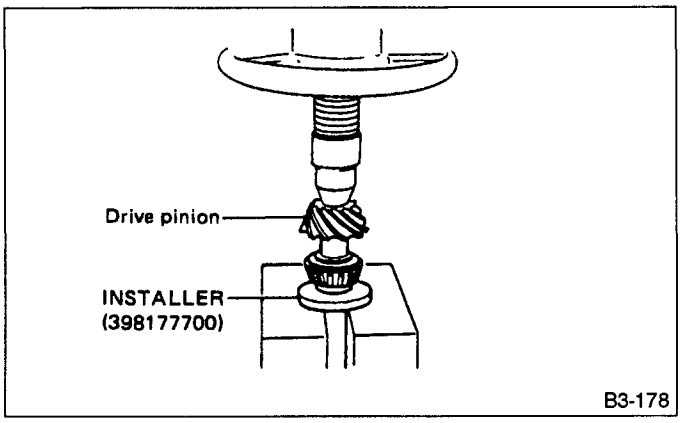

Fig. 68

5) Insert drive pinion into differential carrier, install the previously selected preload adjusting spacer and washer.

6) Press-fit front bearing cone into case.

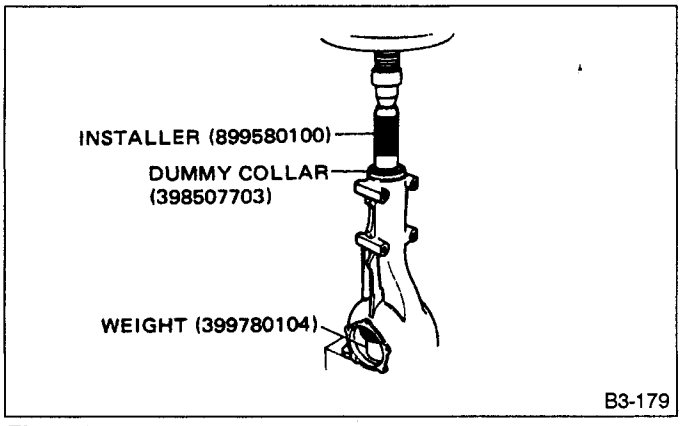

Fig. 69

7) Insert spacer, then press-fit pilot bearing with WEIGHT and INSTALLER.

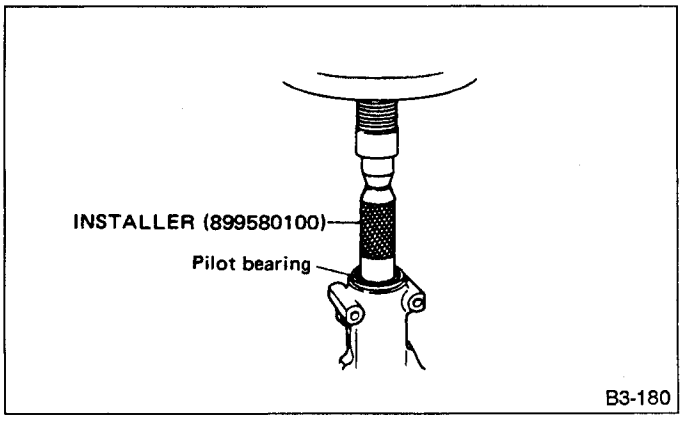

Fig. 70

8) Fit a new oil seal with DRIFT.

Apply grease between the oil seal lips. (Refer to 1.) Precautions for assembling.

Special tool:
DRIFT (398417700)

9) Press-fit companion flange with INSTALLER and WEIGHT.

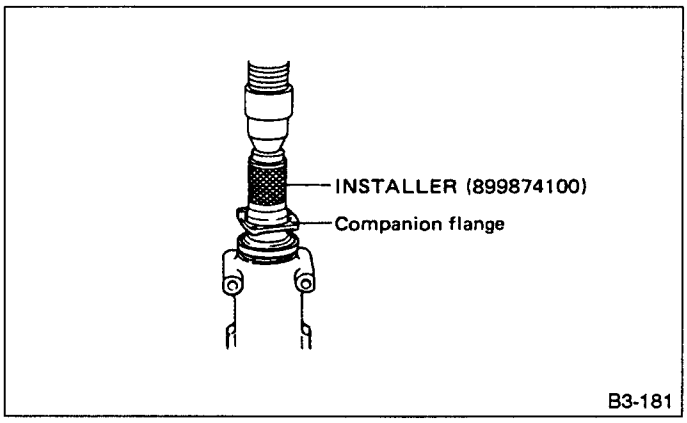

Fig. 71

10) Install self-locking nut with washer.

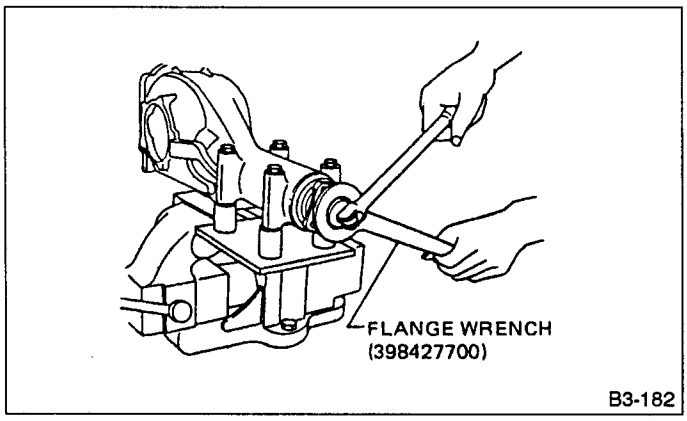

Fig. 72

Torque (Drive pinion nut):
167 — 196 N•m (17.0 — 20.0 kg-m, 123 — 145 ft-lb)

11) Assembling differential case
Install side gears and pinion mate gears, with their thrust washers and pinion mate shaft, into differential case.
Apply gear oil on both sides of the washer and on the side gear shaft before installing.
Insert the pinion mate shaft into the differential case by aligning the lock pin holes.
(1) Measure the clearance between differential case and the back of side gear.
(2) Adjust the clearance as specified by selecting side gear thrust washer.

Side gear back clearance:
0.1 — 0.2 mm (0.004 — 0.008 in)

Side gear thrust washers

Part No.	Thickness mm (in)
383445201	0.75 — 0.80 (0.0295 — 0.0315)
383445202	0.80 — 0.85 (0.0315 — 0.0335)
383445203	0.85 — 0.90 (0.0335 — 0.0354)

(3) Check the condition of rotation after applying oil to the gear tooth surfaces and thrust surfaces.
(4) After driving in pinion shaft lock pin, stake the both sides of the hole to prevent pin from falling off.
(5) Install drive gear on differential case.

Torque (Drive gear bolt):
93 — 113 N•m (9.5 — 11.5 kg-m, 69 — 83 ft-lb)

Tighten diagonally while tapping the bolt heads.

12) Before installing side bearing, measure the bearing width by using a dial gauge, WEIGHT and GAUGE.

Standard bearing width:
20.00 mm (0.7874 in)

Set the dial gauge needle to zero, using a standard bearing or block of specified height in advance.

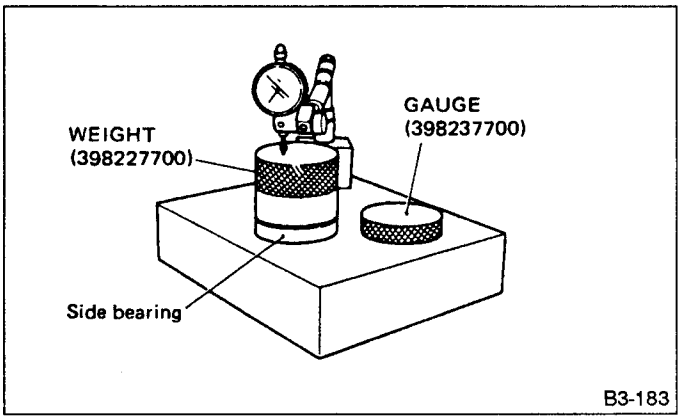

Fig. 73

13) Press side bearing cone onto differential case with DRIFT and ADAPTER included in PULLER SET (399527700).

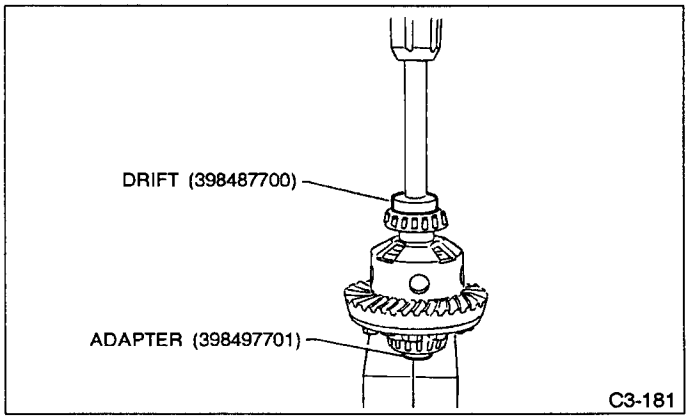

Fig. 74

14) Adjusting side bearing retainer shims

(1) The drive gear backlash and side bearing preload can be determined by the side bearing retainer shim thickness.

(2) When replacing differential case, differential carrier, side bearing and side bearing retainer, obtain the right and left retainer shim thickness from the following formulas.

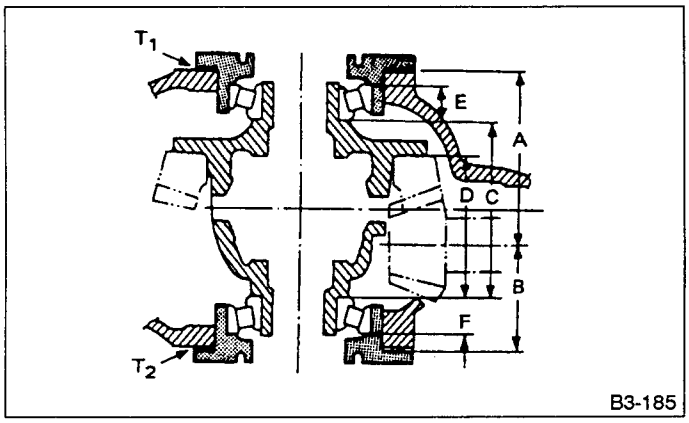

Fig. 75

T_1 (Left) = (A + C + G_1 — D) x 0.01 + 0.76 — E (mm)

T_2 (Right) = (B + D + G_2) x 0.01 + 0.76 — F (mm)

T_1 & T_2 : Thickness of left and right side bearing retainer shim (mm)

A & B : Number marked on differential carrier.

C & D : Number marked on differential case.

E & F : Difference of width of left and right side bearing from standard width 20.0 mm, expressed in a unit of 0.01 mm. For example, if the bearing measured width is 19.89 mm, value of E or F is as follows. 20.00 — 19.89 = 0.11 (E or F)

G_1 & G_2 : Number marked on side bearing retainer.

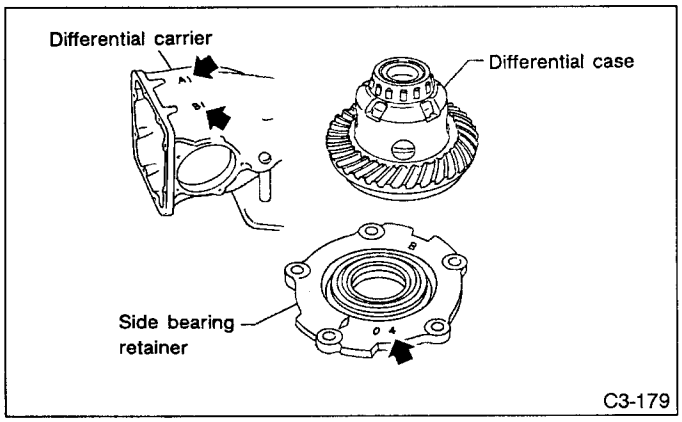

Fig. 76

If a number is not marked, regard it as zero.

Use several shims to obtain the calculated thickness.

Side bearing retainer shims

Part No.	Thickness mm (in)
383475201	0.20 (0.0079)
383475202	0.25 (0.0098)
383475203	0.30 (0.0118)
383475204	0.40 (0.0157)
383475205	0.50 (0.0197)

Example of calculation

Ex. 1

A = 5, B = 5, C = 3, D = 3, G_1 = 4, G_2 = 1, E = 0.10 mm, F = 0.15 mm

Left side

T_1 = (A + C + G_1 — D) x 0.01 + 0.76 — E
= (5 + 3 + 4 — 3) x 0.01 + 0.76 — 0.10
= 0.09 + 0.76 — 0.10 = 0.75 mm

The correct shims are as follows

Thickness	Q'ty	
0.25	x 1	= 0.25
0.50	x 1	= 0.50

Total shim thickness = 0.75 mm

Right side

T_2 = (B + D + G_2) x 0.01 + 0.76 — F
= (5 + 3 + 1) x 0.01 + 0.76 — 0.15
= 0.09 + 0.76 — 0.15
= 0.70 mm

The correct shims are as follows

Thickness	Q'ty	
0.20	x 1	= 0.20
0.50	x 1	= 0.50

Total shim thickness = 0.70 mm

Ex. 2

A = 2, B = 3, C = 0, D = 3, G_1 = 2, G_2 = 3, E = 0.22 mm, F = 0.10 mm

Left side

T_1 = (A + C + G_1 — D) x 0.01 + 0.76 — E
= (2 + 0 + 2 — 3) x 0.01 + 0.76 — 0.22
= 0.01 + 0.76 — 0.22
= 0.55 mm

The correct shims are as follows

Thickness	Q'ty	
0.25	x 1	= 0.25
0.30	x 1	= 0.30

Total shim thickness = 0.55 mm

Right side

T_2 = (B + D + G_2) x 0.01 + 0.76 — F
= (3 + 3 + 3) x 0.01 + 0.76 — 0.10
= 0.09 + 0.76 — 0.10
= 0.75 mm

The correct shims are as follows

Thickness	Q'ty	
0.25	x 1	= 0.25
0.50	x 1	= 0.50

Total shim thickness = 0.75 mm

(3) Install the differential case ASSY into differential carrier in the reverse order of disassembling.
(4) Fit the selected shims and O-ring on side bearing retainer and install them on differential carrier with the arrow mark on the retainer directed as shown in Figure.

Be careful that side bearing cup is not damaged by bearing roller.

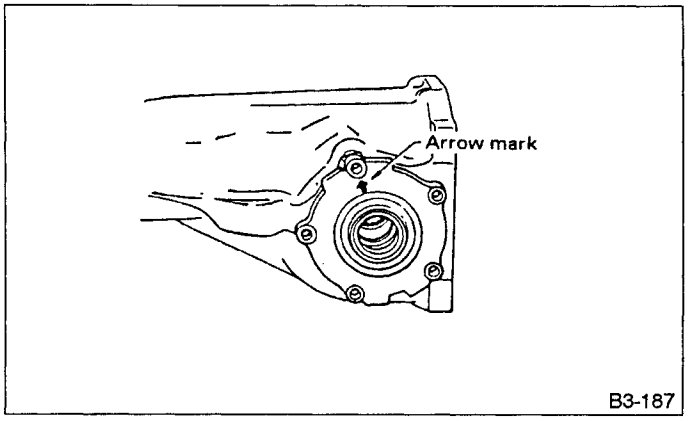

Fig. 77

(5) Tighten side bearing retainer bolts.

On vehicle with LSD, apply a coat of Three Bond 1215 (P/N 004403007) to threads.

Torque (Side bearing retainer):
9 — 12 N•m (0.9 — 1.2 kg-m, 6.5 — 8.7 ft-lb)

(6) Measure the drive gear-to-drive pinion backlash. If the reading is not within the specified range, correct by decreasing the shim thickness on one side and increasing the shim thickness on the other side the same amount. Total shim thickness must be the same to maintain proper preload.

Backlash: 0.10 — 0.20 mm (0.0039 — 0.0079 in)

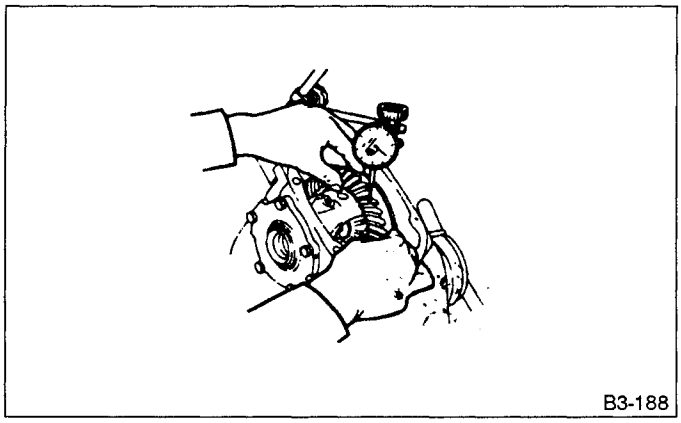

Fig. 78

(7) At the same time, measure the turning resistance of drive pinion. Compared with the resistance when differential case is not installed, if the increase of the resistance is not within the specified range, readjust side bearing retainer shims.

Turning resistance increase:
0.1 — 0.6 N•m (1 — 6 kg-cm, 0.9 — 5.2 in-lb)

(8) Recheck drive gear-to-pinion backlash after readjusting shims.
(9) Check the drive gear runout on its back surface, and make sure pinion and drive gear rotate smoothly.

Limit of runout:
0.05 mm (0.0020 in)

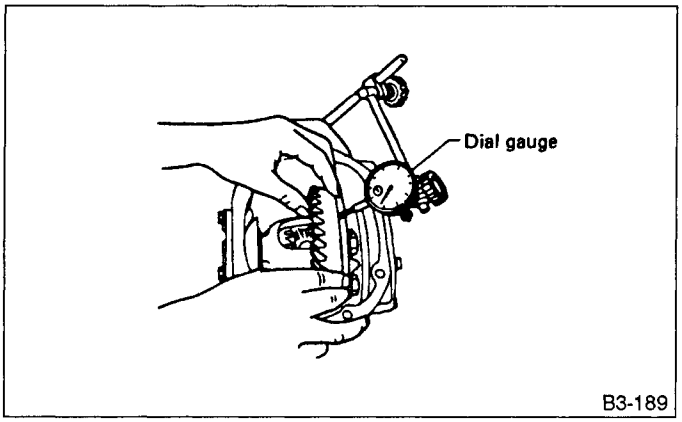

Fig. 79

15) Checking and adjusting tooth contact of drive gear.
(1) Paint evenly both sides of three or four teeth on drive gear with red lead. Check the contact pattern after rotating drive gear several revolutions back and forth until definite contact pattern develops on drive gear.
(2) When the contact pattern is incorrect, readjust according to the instructions given in "Tooth contact pattern".

Be sure to wipe off red lead completely upon completion of adjustment.

(3) After completing the above adjustment, install oil seal in side bearing retainer.

a. Use DRIFT (398437700) to press the oil seal into position.

b. Apply chassis grease between the oil seal lips.

(4) Install rear cover.

Torque (Rear cover bolt):
19 — 25 N•m (1.9 — 2.6 kg-m, 14 — 19 ft-lb)

G: INSTALLATION

To install, reverse the removal sequence.

1) Install the rear differential ASSY to body.

2) Insert the DOJ of rear drive shaft into the rear differential.

For installation of the DOJ, refer to "3-4 AWD SYSTEM" [W2A2].

3) Install other parts in the reverse order of removal.

4) After installation fill differential carrier with gear oil to the upper plug level.

Apply fluid packing to plug.

Fluid packing:
Three-bound 1205 or equivalent
Oil capacity:
0.8 ℓ (0.8 US qt, 0.7 Imp qt)

TOOTH CONTACT PATTERN

Condition	Contact pattern	Adjustment
Correct tooth contact. Tooth contact pattern slightly shifted towards toe under no load rotation. (When loaded, contact pattern moves toward heel.)		
Face contact Backlash is too large.	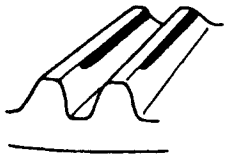 This may cause noise and chipping at tooth ends.	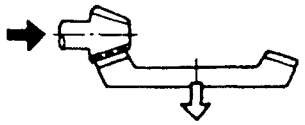 Increase thickness of drive pinion height adjusting washer in order to bring drive pinion closer to drive gear center.
Flank contact Backlash is too small.	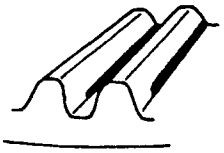 This may cause noise and stepped wear on surfaces.	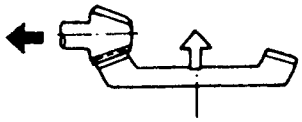 Reduce thickness of drive pinion height adjusting washer in order to move drive pinion away from drive gear.
Toe contact	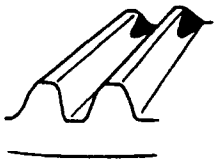 Contact area is small. This may cause chipping at toe ends.	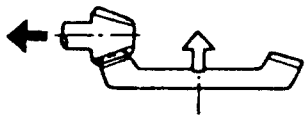 Adjust as for flank contact.
Heel contact	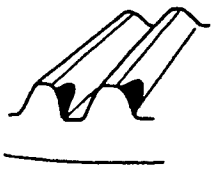 Contact area is small. This may cause chipping at heel ends.	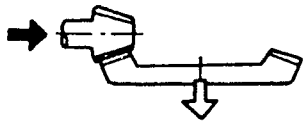 Adjust as for face contact.

Fig. 80 B3-190

3. Rear Differential Member

A: REMOVAL

1) Disconnect the ground cable from battery.
2) Move the selector lever to "N".
3) Release the parking brake.
4) Jack up the vehicle and support it with rigid racks.
5) Remove the rear exhaust pipe.

For removal of rear exhaust pipe, refer to "2-9 EXHAUST SYSTEM" [W5A0].

6) Remove the front exhaust cover.

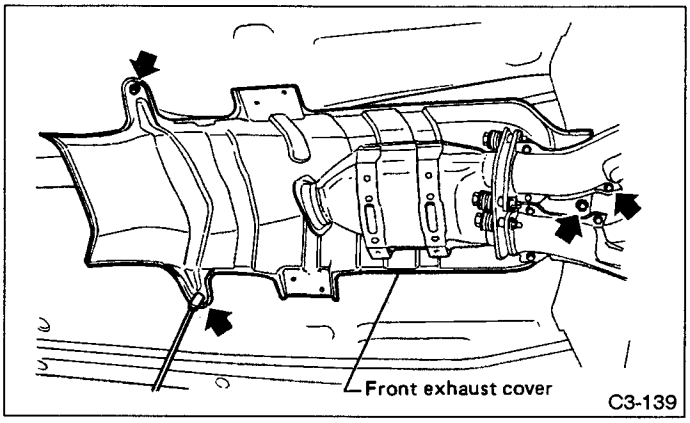

Fig. 81

7) Remove the propeller shaft from body.
[Refer to "Propeller Shaft".]

Wrap metal parts (installed at the rubber boot center DOJ) with a cloth or rubbered material to prevent it from damage by interference with adjacent metal parts.

8) Install the extension cap to transmission.
9) Remove the parking brake cable guide from the trailing link.

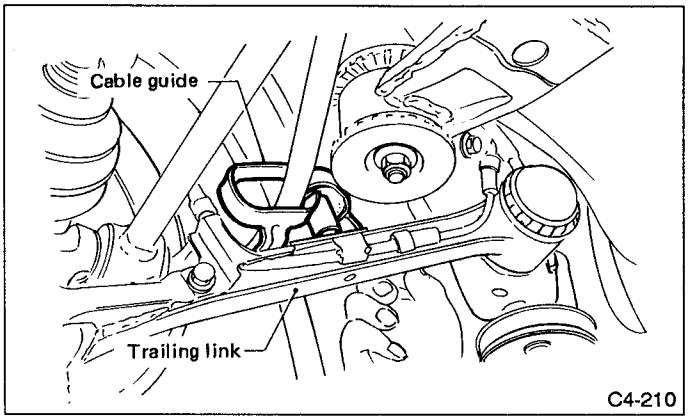

Fig. 82

10) Disconnect the parking brake cable clamps.

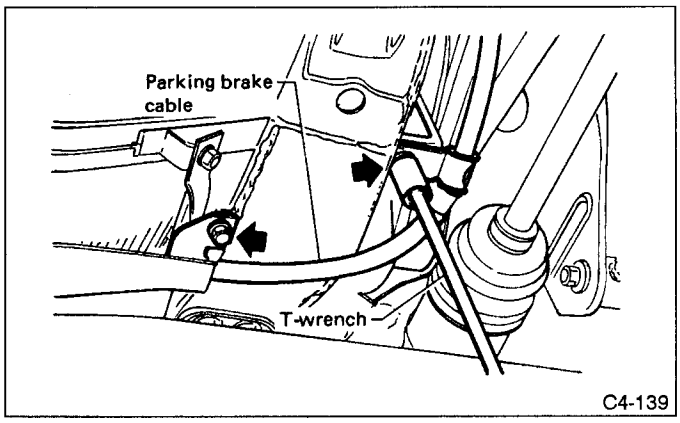

Fig. 83

11) Disconnect the parking brake cable from the clip at the tank cover.

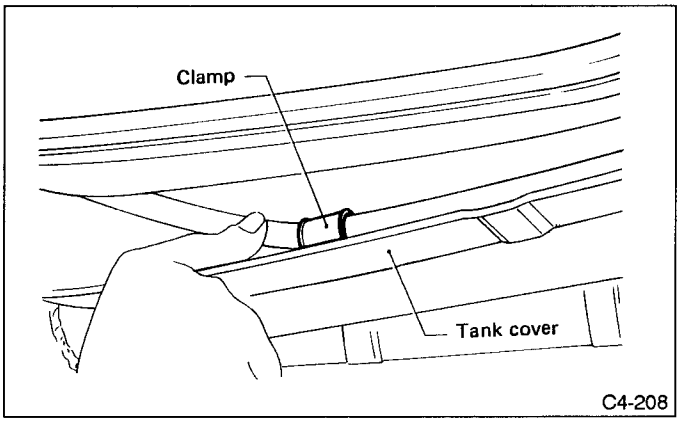

Fig. 84

12) Remove the tank cover.

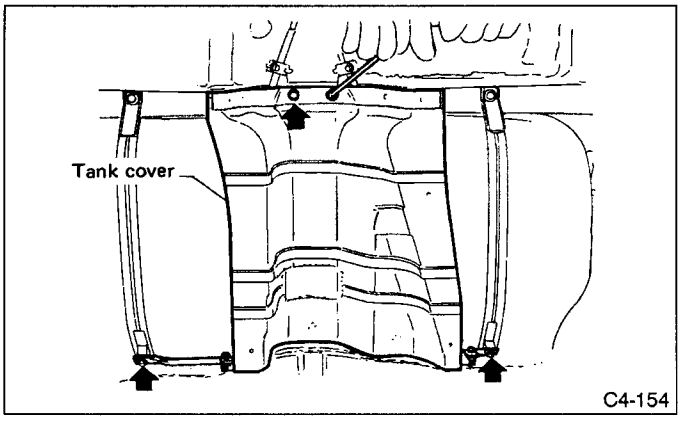

Fig. 85

13) Remove the four bolts which secure the bracket to the rear differential member.

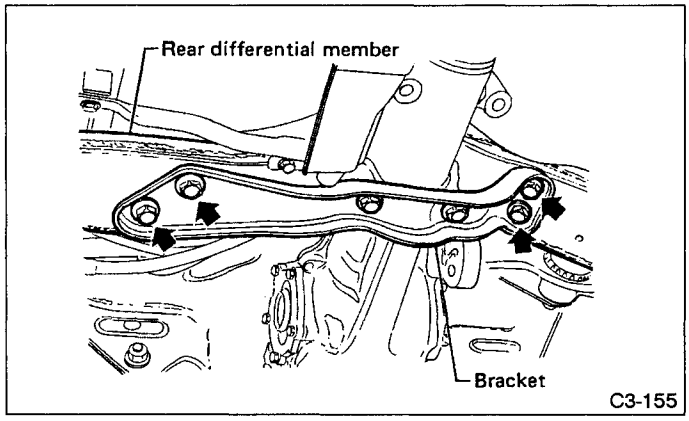

Fig. 86

14) Support the rear differential with transmission jack.

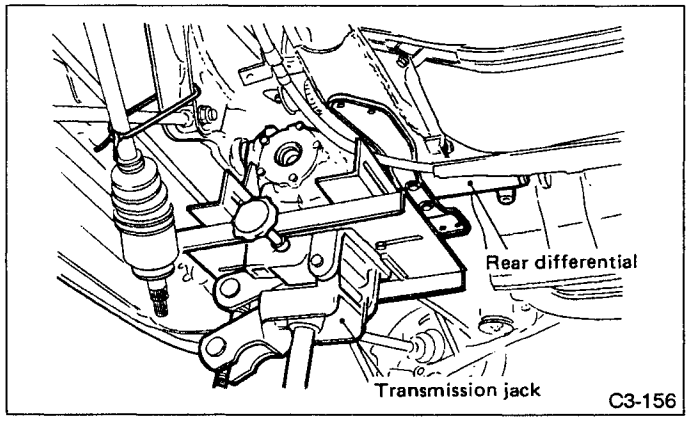

Fig. 87

15) Remove the two bolts which secure the bracket and rear differential to rear differential member.

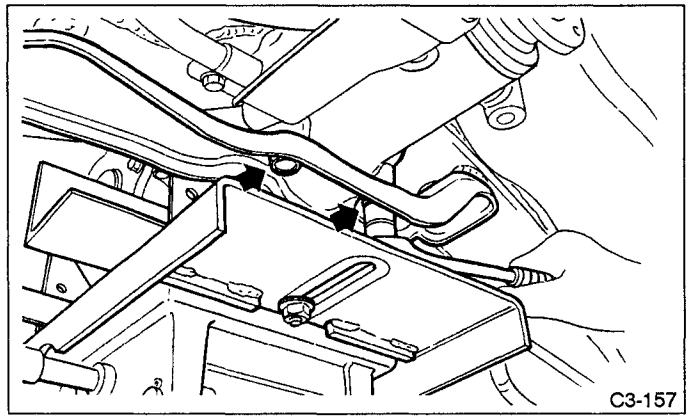

Fig. 88

16) Remove the self locking nuts which connect the rear differential to the rear sub frame.
17) While slowly lowering transmission jack, move the rear differential forward and remove bolts from the rear sub frame.
Do not tilt the rear differential, or the rear differential gear oil will spill out.
Do not lower the rear differential excessively, or the rear drive shaft boot may be damaged.
18) Remove the bolts which secure the rear differential member to rear sub frame.

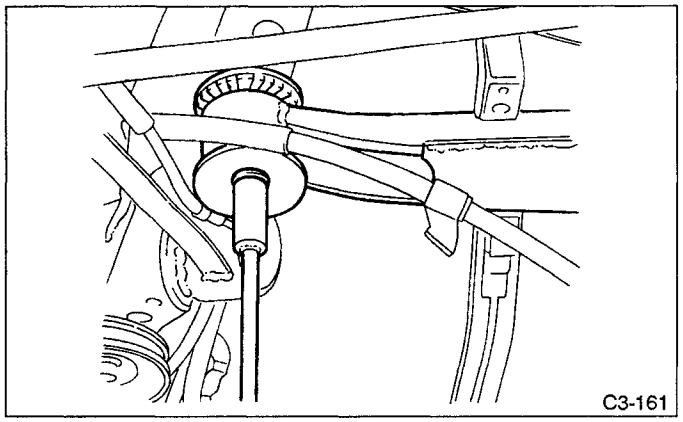

Fig. 89

19) Remove the rear differential member.

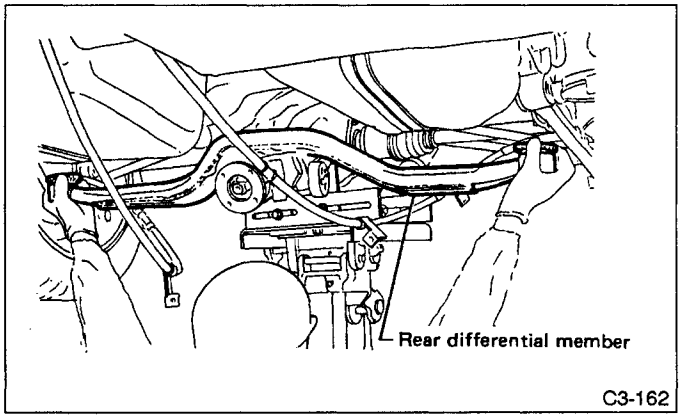

Fig. 90

B: INSTALLATION

To install, reverse the removal sequence.
1) Install the rear differential member.
When installing the rear differential member, pay attention not to confuse the installation sequence of the upper and lower stoppers.

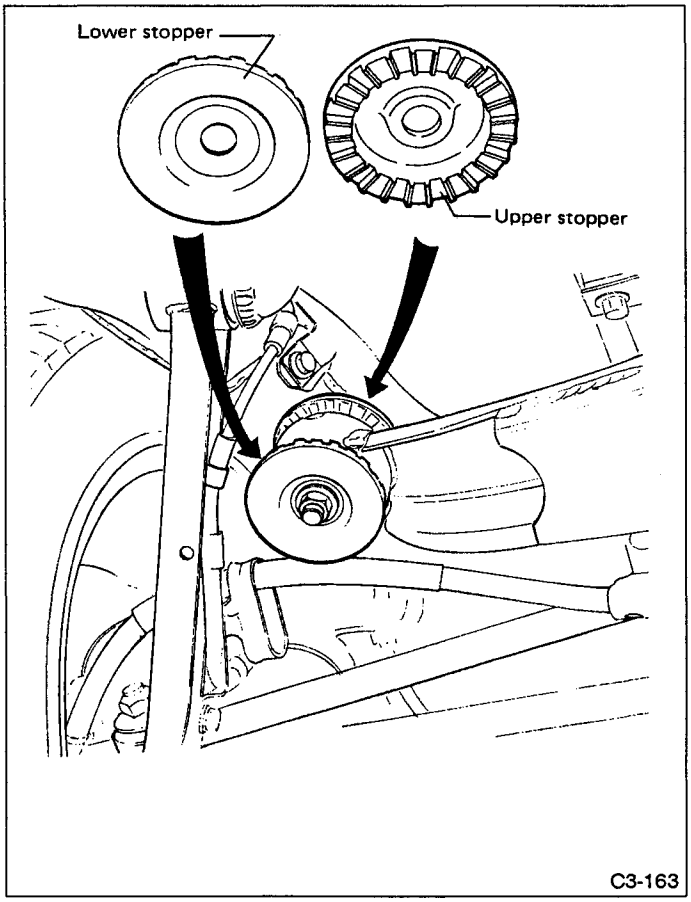

Fig. 91

2) Installing procedure hereafter is the reverse of the removal.

T TROUBLESHOOTING

1. Rear Differential

Symptom and possible cause	Remedy
Oil leakage	
• Worn, scratched, or incorrectly seated front or side oil seal. Scored, battered, or excessively worn sliding surface of companion flange.	Repair or replace.
• Clogged or damaged air breather.	Clean, repair or replace.
• Loose bolts on differential spindle or side retainer, or incorrectly fitted O-ring.	Tighten bolts to specified torque. Replace O-ring.
• Loose rear cover attaching bolts or damaged gasket.	Tighten bolts to specified torque. Replace gasket and apply liquid packing.
• Loose oil filler or drain plug.	Retighten and apply liquid packing.
• Wear, damage or incorrectly fitting for spindle, side retainer and oil seal.	Repair or replace.
Seizure Seized or damaged parts should be replaced, and also other parts should be thoroughly checked for any defect and should be repaired or replaced as required.	
• Insufficient backlash for hypoid gear.	Readjust or replace.
• Excessive preload for side, rear, or front bearing.	Readjust or replace.
• Insufficient or improper oil used.	Replace seized part and fill with specified oil to specified level.
Damage Damaged parts should be replaced, and also other parts should be thoroughly checked for any defect and should be repaired or replaced as required.	
• Improper backlash for hypoid gear.	Replace.
• Insufficient or excessive preload for side, rear, or front bearing.	Readjust or replace.
• Excessive backlash for differential gear.	Replace gear or thrust washer.
• Loose bolts and nuts such as drive gear bolt.	Retighten.
• Damage due to overloading.	Replace.
Noises when starting or shifting gears Noises may be caused by differential ASSY, universal joint, wheel bearing, etc. Find out what is actually making noise before disassembly.	
• Excessive backlash for hypoid gear.	Readjust.
• Excessive backlash for differential gear.	Replace gear or thrust washer.
• Insufficient preload for front or rear bearing.	Readjust.
• Loose drive pinion nut.	Tighten to specified torque.
• Loose bolts and nuts such as side bearing retainer attaching bolt.	Tighten to specified torque.

Symptom and possible cause	Remedy
Noises when cornering	
• Damaged differential gear.	Replace.
• Excessive wear or damage of thrust washer.	Replace.
• Broken pinion mate shaft.	Replace.
• Seized or damaged side bearing.	Replace.
Gear noises Since noises from engine, muffler, transmission, propeller shaft, wheel bearings, tires, and body are sometimes mistaken for noises from differential ASSY, be careful in checking them. Inspection methods to locate noises include coasting, accelerating, cruising, and jacking up all four wheels. Perform these inspections according to condition of trouble. When listening to noises, shift gears into four wheel drive and fourth speed position, trying to pick up only differential noise.	
• Improper tooth contact of hypoid gear.	Readjust or replace hypoid gear set.
• Improper backlash for hypoid gear.	Readjust.
• Scored or chipped teeth of hypoid gear.	Replace hypoid gear set.
• Seized hypoid gear.	Replace hypoid gear set.
• Improper preload for front or rear bearings.	Readjust.
• Seized, scored, or chipped front or rear bearing.	Replace.
• Seized, scored, or chipped side bearing.	Replace.
• Vibrating differential carrier.	Replace.

2. Propeller Shaft

Trouble and possible cause	Remedy
Vibration of propeller shaft Vibration is caused by propeller shaft during operation and is transferred to vehicle body. Generally vibration increase in proportion to vehicle speed.	
• Worn or damaged universal joint / DOJ	Replace.
• Unbalanced propeller shaft due to bend or dent.	Replace.
• Loose installation of propeller shaft.	Retighten.
• Worn or damaged center bearing and damaged center mounting rubber.	Replace.
Tapping when starting and noise while cruising, caused by propeller shaft.	
• Worn or damaged universal joint/ DOJ.	Replace.
• Worn spline of sleeve yoke.	Replace.
• Loose installation of propeller shaft.	Retighten.
• Loose installation of joint.	Replace.
• Worn or damaged center bearing and damaged center mounting rubber.	Replace.

Vibration while cruising may be caused by an unbalanced tire, improper tire inflation pressure, improper wheel alignment, etc.

11. General Troubleshooting Table

Priority "part of check" is shown by figures (1, 2, 3, ..., 17, 18).

Symptom \ Part to check		ECU power supply	Air flow sensor	Water temperature sensor	Throttle sensor	Fuel pump	Pressure regulator	Fuel injector	Ignitor	Ignition coil	Spark plug	Knock sensor 1 & 2	Crank angle sensor 1	Crank angle sensor 2	Cam angle sensor	O_2 sensor 1 & 2	Induction solenoid valve	By-pass air control solenoid valve	Auxiliary air control valve
Failure of engine to start	Internal combustion does not occur.	1	11	12		5	6	7	2	3	4		8	9	10				
	Internal combustion occur.	1	11			2	3	4	5	6	7		8	9	10			12	13
	Engine stalls after initial combustion.	1	2	8	9	5	6	7	13	14	15		10	11	12			3	4
Rough idling		1	3	11	10	7	8	9	4	5	6		12	13	14	15		2	
Hard to drive at constant speed		1	4	6	7	3	2	8	12	13	14		9	10	11	5			
Poor acceleration/ deacceleration		1	2	6	7	3	4	5	13	14	15	8	10	11	12		16	9	
Poor return to idle				3	2													1	
Backfire				4	5		6	7					1	2	3				
Knocking			1	2			4	5				3	6	7					
Excessive fuel consumption			3	4			1	2											
Shocks while driving		1	9					8	5	6	7		2	3	4				
Poor engine reving			2	3	4		1												
Remarks		Include ECU grounding circuit.															Check hoses and relating part	Check hoses	Check hoses

7. General Troubleshooting Table

| Symptom \ Problem parts | 1 Inhibitor switch | 2 Control unit | 3 Vehicle speed sensor 1 | 4 Vehicle speed sensor 2 | 5 Select cable | 6 Select lever | 7 FWD switch | 8 Starter motor and harness | 9 Throttle sensor | 10 Manual switch | 11 Accumulator ("N" – "D") | 12 Accumulator (2A) | 13 Accumulator (4A) | 14 Accumulator (3R) | 15 ATF temperature sensor | 16 Strainer | 17 Duty solenoid A | 18 Duty solenoid B | 19 Shift solenoid 1 | 20 Shift solenoid 2 | 21 Shift solenoid 3 | 22 Control valve | 23 Detent spring | 24 Manual plate | 25 Transfer clutch | 26 Transfer valve | 27 Transfer pipe | 28 Duty solenoid C | 29 Forward clutch | 30 Overrunning clutch | 31 Drive pinion | 32 Crown gear | 33 Axle shaft | 34 Differential gear | 35 Final gear | 36 Seal pipe | 37 Oil pump | 38 High clutch | 39 Band brake | 40 Low & reverse clutch | 41 Reverse clutch | 42 One-way clutch (1:2) | 43 One-way clutch (3-4) | 44 Double oil seal | 45 Input shaft | 46 Output shaft | 47 Planetary gear | 48 Reduction gear | 49 Drive plate | 50 Torque converter one-way clutch | 51 Lock-up facing | 52 Lock-up damper | 53 ATF deterioration | 54 ATF level too high or too low | 55 Differential gear oil level too high or too low | 56 Engine performance | 57 Engine revolution signal | 58 Parking brake mechanism | 59 Engine torque control signal |
|---|---|---

| Symptom \ Problem parts | 1 Inhibitor switch | 2 Control unit | 3 Vehicle speed sensor 1 | 4 Vehicle speed sensor 2 | 5 Select cable | 6 Select lever | 7 FWD switch | 8 Starter motor and harness | 9 Throttle sensor | 10 Manual switch | 11 Accumulator ("N" – "D") | 12 Accumulator (2A) | 13 Accumulator (4A) | 14 Accumulator (3R) | 15 ATF temperature sensor | 16 Strainer | 17 Duty solenoid A | 18 Duty solenoid B | 19 Shift solenoid 1 | 20 Shift solenoid 2 | 21 Shift solenoid 3 | 22 Control valve | 23 Detent spring | 24 Manual plate | 25 Transfer clutch | 26 Transfer valve | 27 Transfer pipe | 28 Duty solenoid C | 29 Forward clutch | 30 Overrunning clutch | 31 Drive pinion | 32 Crown gear | 33 Axle shaft | 34 Differential gear | 35 Final gear | 36 Seal pipe | 37 Oil pump | 38 High clutch | 39 Band brake | 40 Low & reverse clutch | 41 Reverse clutch | 42 One-way clutch (1·2) | 43 One-way clutch (3·4) | 44 Double oil seal | 45 Input shaft | 46 Output shaft | 47 Planetary gear | 48 Reduction gear | 49 Drive plate | 50 Torque converter one-way clutch | 51 Lock-up facing | 52 Lock-up damper | 53 ATF deterioration | 54 ATF level too high or too low | 55 Differential gear oil level too high or too low | 56 Engine performance | 57 Engine revolution signal | 58 Parking brake mechanism | 59 Engine torque control signal |
|---|---|---

SUBARU®

SVX

SERVICE MANUAL

FOREWORD

This service manual has been prepared to provide SUBARU service personnel with the necessary information and data for the correct maintenance and repair of SUBARU SVX.
This manual include the procedures for maintenance disassembling, reassembling, inspection and adjustment of components and trouble-shooting for guidance of both the fully qualified and the less-experienced mechanics.
Please peruse and utilize this manual fully to ensure complete repair work for satisfying our customers by keeping their vehicle in optimum condition. When replacement of parts during repair work is needed, be sure to use SUBARU genuine parts.
All information, illustration and specifications contained in this manual are based on the latest product information available at the time of publication approval.

FUJI HEAVY INDUSTRIES LTD.

All right reserved. This book may not be reproduced or copied, in whole or in part, without the written permission of
FUJI HEAVY INDUSTRIES LTD., TOKYO JAPAN.

SUBARU, and ❼ are trademarks of
FUJI HEAVY INDUSTRIES LTD.

© Copyright 1991 FUJI HEAVY INDUSTRIES LTD.

4 MECHANICAL COMPONENTS SECTION

SUSPENSION 4-1
WHEELS AND AXLES 4-2
STEERING SYSTEM 4-3
BRAKES 4-4
PEDAL SYSTEM AND CONTROL CABLES 4-5
★ ★ ★ ★ ★ ★ ★ ★ ★ ★ ★ ★ ★ ★ ★ ★ ★ 4-6
AIR CONDITIONING SYSTEM 4-7
BODY AND EXTERIOR 5-1
DOORS AND WINDOWS 5-2
SEATS, SEAT BELTS, AND INTERIOR 5-3
INSTRUMENT PANEL 5-4
SUPPLEMENTAL RESTRAINT SYSTEM 5-5

SUBARU

SVX

1992

Precaution for Supplemental Restraint System "Airbag"
The Supplemental Restraint System "Airbag" helps to reduce the risk or severity of injury to the driver in a frontal collision.
The Supplemental Restraint System consists of an airbag module (located in the center of the steering wheel), sensors, a control unit, warning light, wiring harness and spiral cable.
Information necessary to service the safety is included in the "5-5. SUPPLEMENTAL RESTRAINT SYSTEM" of this Service Manual.
WARNING:
- To avoid rendering the Airbag system inoperative, which could lead to personal injury or death in the event of a severe frontal collision, all maintenance must be performed by an authorized SUBARU dealer.
- Improper maintenance, including incorrect removal and installation of the Airbag system, can lead to personal injury caused by unintentional activation of the Airbag system.
- All Airbag system electrical wiring harnesses and connectors are covered with yellow outer insulation. Do not use electrical test equipment on any circuit related to the Supplemental Restraint System "Airbag".



		Page
M	MECHANISM AND FUNCTION	2
	1. Front Suspension	2
	2. Rear Suspension	3
S	SPECIFICATIONS AND SERVICE DATA	4
C	COMPONENT PARTS	5
	1. Front Suspension	5
	2. Rear Suspension	6
W	SERVICE PROCEDURE FOR CONVENTIONAL SUSPENSION	7
	1. On-car Services	7
	2. Lower Arm	11
	3. Ball Joint	13
	4. Front Strut	14
	5. Front Stabilizer	18
	6. Front Sub Frame AIRBAG	20
	7. Trailing Link	25
	8. Lateral Link	26
	9. Rear Strut	31
	10. Rear Stabilizer	33
	11. Rear Sub Frame	35
T	TROUBLESHOOTING	38

M MECHANISM AND FUNCTION

1. Front Suspension

A: OUTLINE

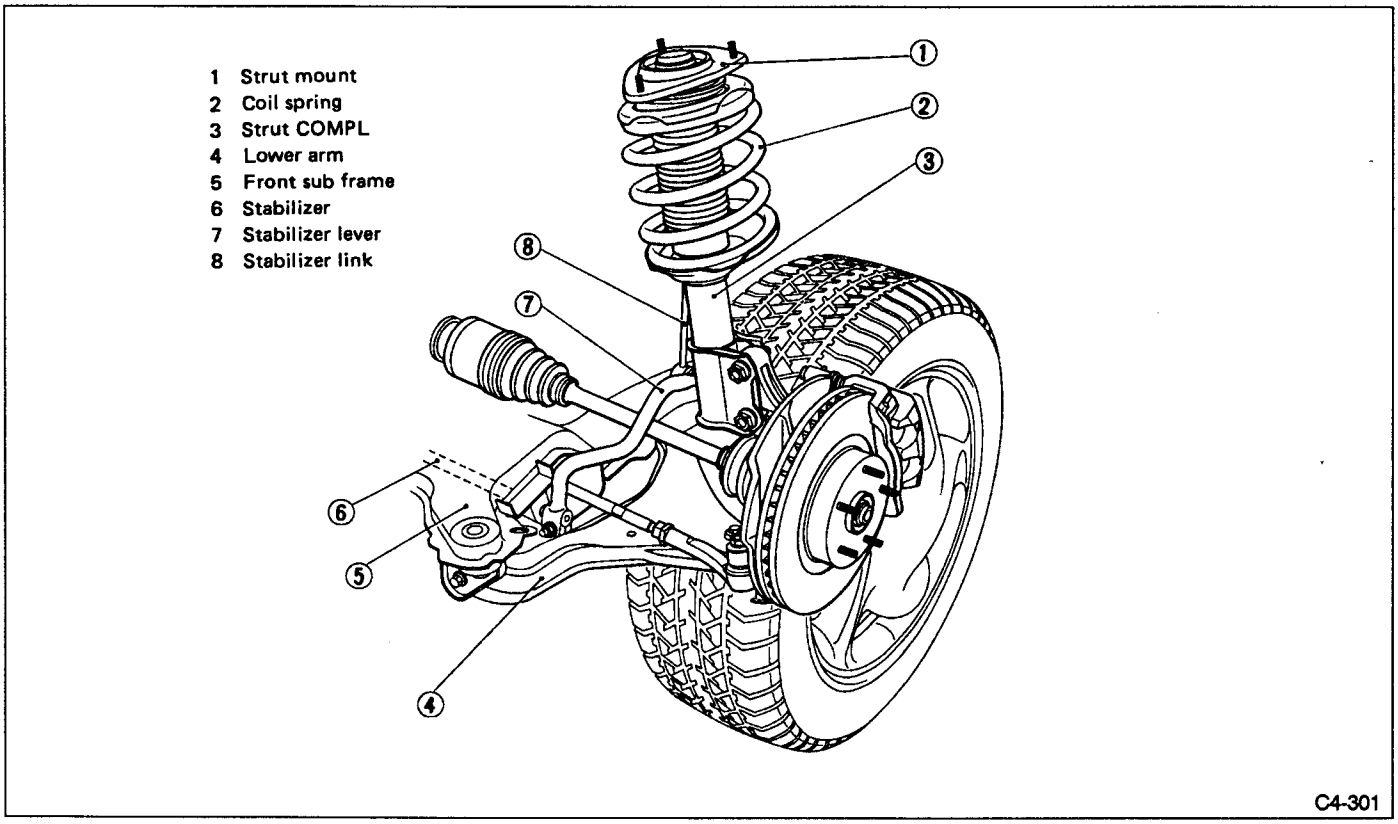

Fig. 1

The front suspension is a strut-type independent suspension, with cylindrical double-acting oil damper and coil spring.

The top of the strut CP is mounted on the body through the cushion rubber, which has resulted in elimination of any vibration by combined use of other rubbers to improve passenger comfort. This type also maintains a wide distance between the upper and lower supporting points and makes adjustment of the caster unnecessary.

- The stabilizer is mounted through the subframe. The upper and lower ends of the stabilizer are connected to the strut assembly by stabilizer links.
- The front subframe supports the lower arm and engine. It is installed on the car body via four bushings to effectively dampen vibration and noise conveyed from the engine and road surfaces.

2. Rear Suspension

A: OUTLINE

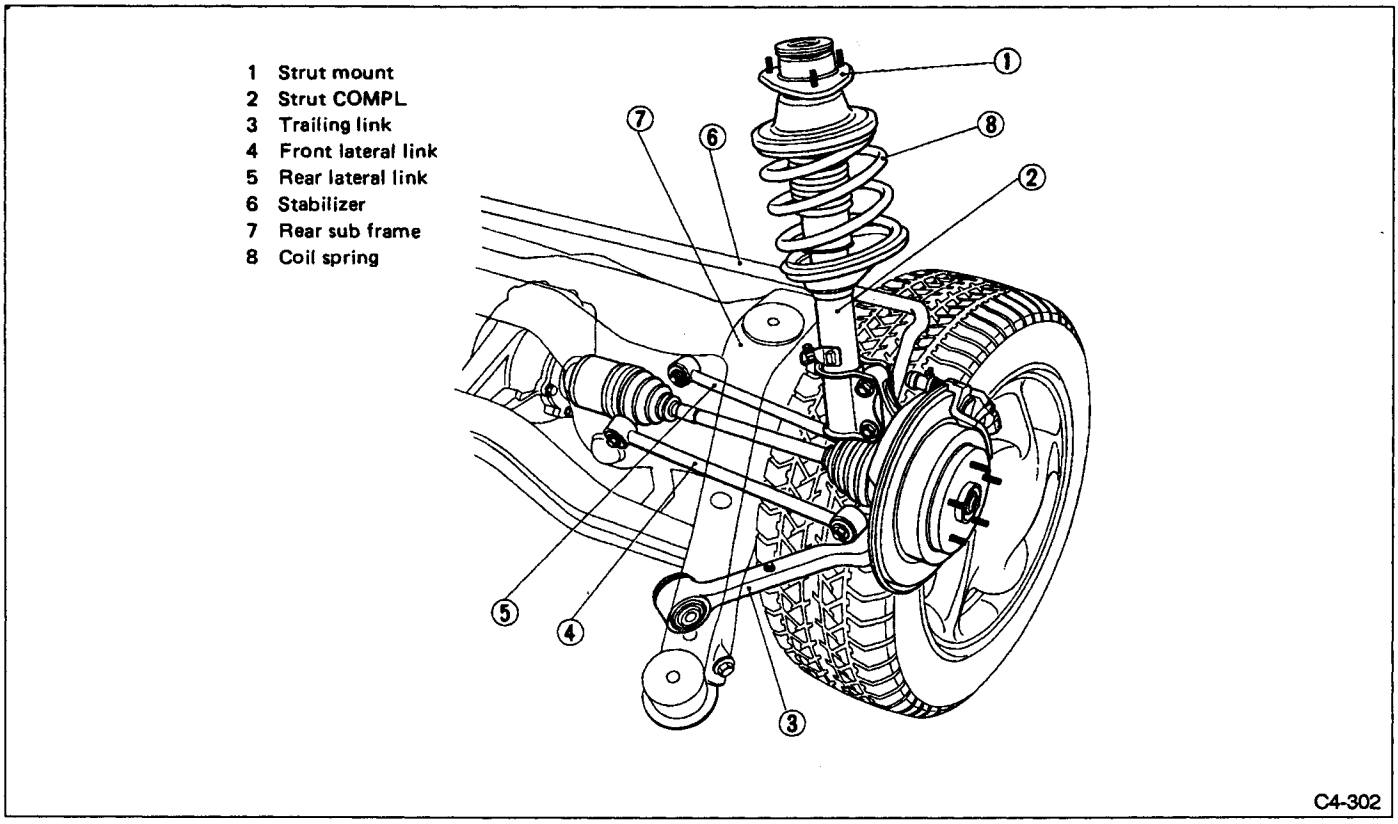

Fig. 2

The rear suspension is an independent, dual link strut type. It consists of two parallel lateral links, a trailing link which moves back and forth, and strut COMPL's. The strut COMPL is joined with a cylindrical double- acting oil damper and coil spring.
The respective component parts of this suspension are optimally designed to act in response to vertical, lateral and longitudinal loads transmitted from the tires. Thus, riding comfort and steering stability are substantially enhanced.

- Longitudinal loads act on the trailing link.
- Vertical loads act on the coil spring, rear strut and rear rubber mount (which is located on the strut).
- Lateral loads act on the two lateral links.
- The lower end of the stabilizer is installed on the housing via a stabilizer link wich uses a ball joint.
- The rear subframe supports the trailing link, lateral link and rear differential. It is connected to the car body via bushings (four places) to effectively dampen vibration and noise transmitted from the drive-line system and road surfaces.

S SPECIFICATIONS AND SERVICE DATA

A: SPECIFICATIONS

				LS	LS-L
Front suspension	Stabilizer	Bar diameter mm (in)		18 (0.71)	
	Coil spring	Coil diameter mm (in)		UPR 140 (5.51), LWR 160 (6.30)	
		Coefficient of spring N/mm (kg/mm, lb/in)		24.5 (2.50, 140.0)	
	Damper strut	Outer cylinder length mm (in)		319 (12.56)	
		Piston rod diameter mm (in)		25 (0.98)	
		Damping force [at the piston speed 0.3 m (1.0 ft)/sec] N (kg, lb)	Expansion	1,510 (154, 340)	
			Compression	343 (35, 77)	
Rear suspension	Stabilizer	Bar diameter mm (in)		17 (0.67)	
	Coil spring	Coil diameter mm (in)		UPR 135 (5.31), LWR 155 (6.10)	
		Coefficient of spring N/mm (kg/mm, lb/in)		19.2 (1.96, 109.8)	20.3 (2.07, 115.9)
	Damper strut	Outer cylinder length mm (in)		372 (14.65)	
		Piston rod diameter mm (in)		25 (0.98)	
		Damping force [at the piston speed 0.3 m (1.0 ft)/sec] N (kg, lb)	Expansion	1,196 (122, 269)	
			Compression	284 (29, 64)	

B: WHEEL ALIGNMENT

		All models
Front	Camber	− 0°25′ ± 45′
	Caster	4°50′ ± 45′
	Toe mm (in)	0 ± 3 (0 ± 0.12)
	Kingpin angle	16°00′
	Wheel arch height mm (in)	380^{+10}_{-20} ($14.96^{+0.39}_{-0.79}$)
Rear	Camber	− 0°40′ ± 45′
	Toe mm (in)	0 ± 3 (0 ± 0.12)
	Wheel arch height mm (in)	335^{+10}_{-20} ($13.19^{+0.39}_{-0.79}$)

C COMPONENT PARTS

1. Front Suspension

1 Cap
2 Dust seal
3 Strut mount
4 Spacer
5 Upper spring seat
6 Upper rubber seat
7 Dust cover
8 Coil spring
9 Helper
10 Lower rubber seat
11 Strut COMPL
12 Adjusting bolt
13 Sub frame
14 Lower arm

Tightening torque: N·m (kg-m, ft-lb)

T1:	132 – 172 (13.5 – 17.5, 97.4 – 126.9)
T2:	127 – 167 (13.0 – 17.0, 93.7 – 123.2)
T3:	108 – 138 (11.0 – 14.1, 79.7 – 101.8)
T4:	76 – 100 (7.8 – 10.2, 56.1 – 73.8)
T5:	49 – 59 (5.0 – 6.0, 36.1 – 43.5)
T6:	45 – 59 (4.6 – 6.0, 33.2 – 43.5)
T7:	34 – 48 (3.5 – 4.9, 25.1 – 35.4)
T8:	32 – 42 (3.3 – 4.3, 23.6 – 31.0)
T9:	21 – 28 (2.1 – 2.9, 15.5 – 21.0)
T10:	42 – 62 (4.3 – 6.3, 31.0 – 45.7)

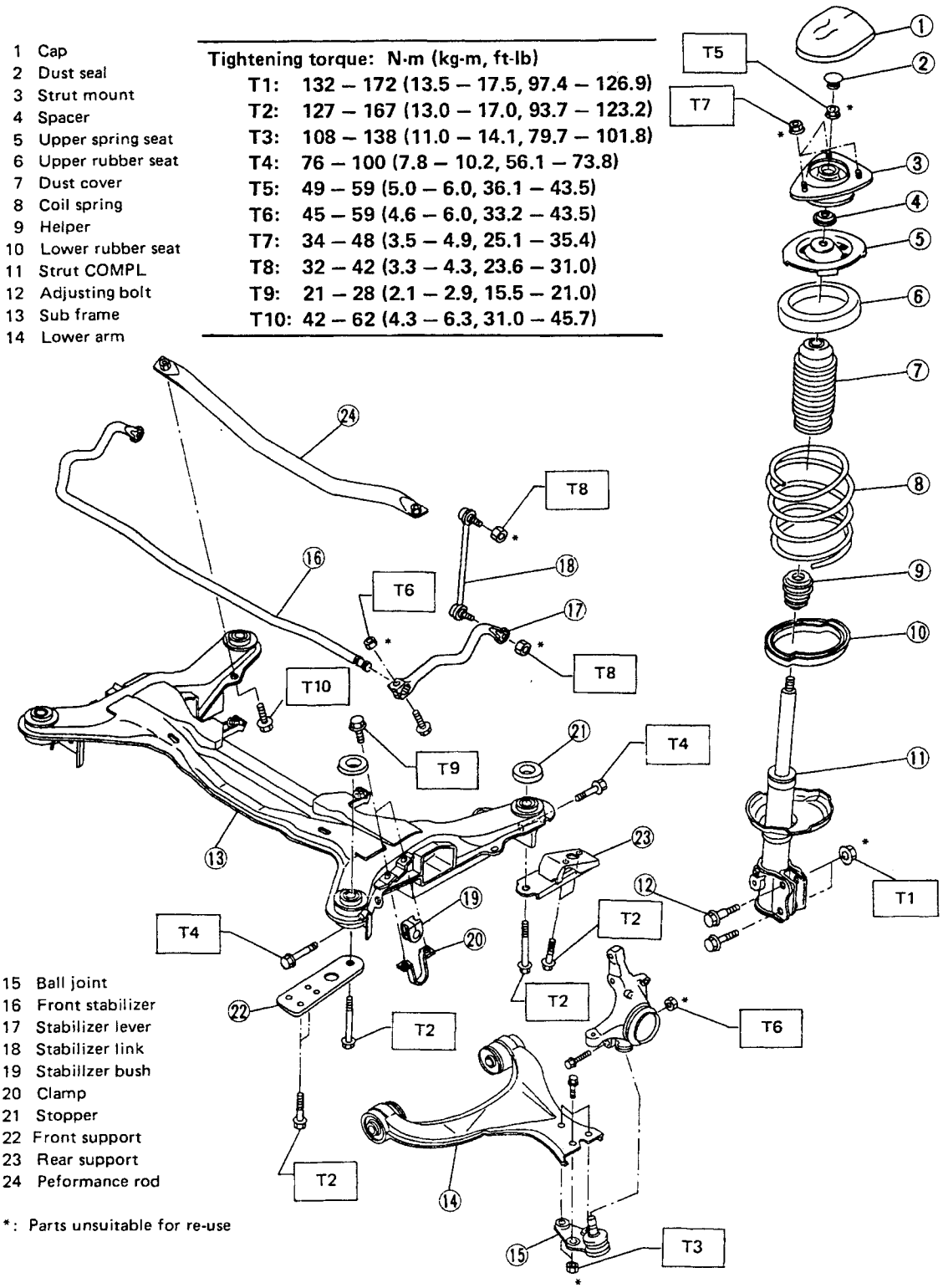

15 Ball joint
16 Front stabilizer
17 Stabilizer lever
18 Stabilizer link
19 Stabillzer bush
20 Clamp
21 Stopper
22 Front support
23 Rear support
24 Peformance rod

*: Parts unsuitable for re-use

C4-465

Fig. 3

2. Rear Suspension

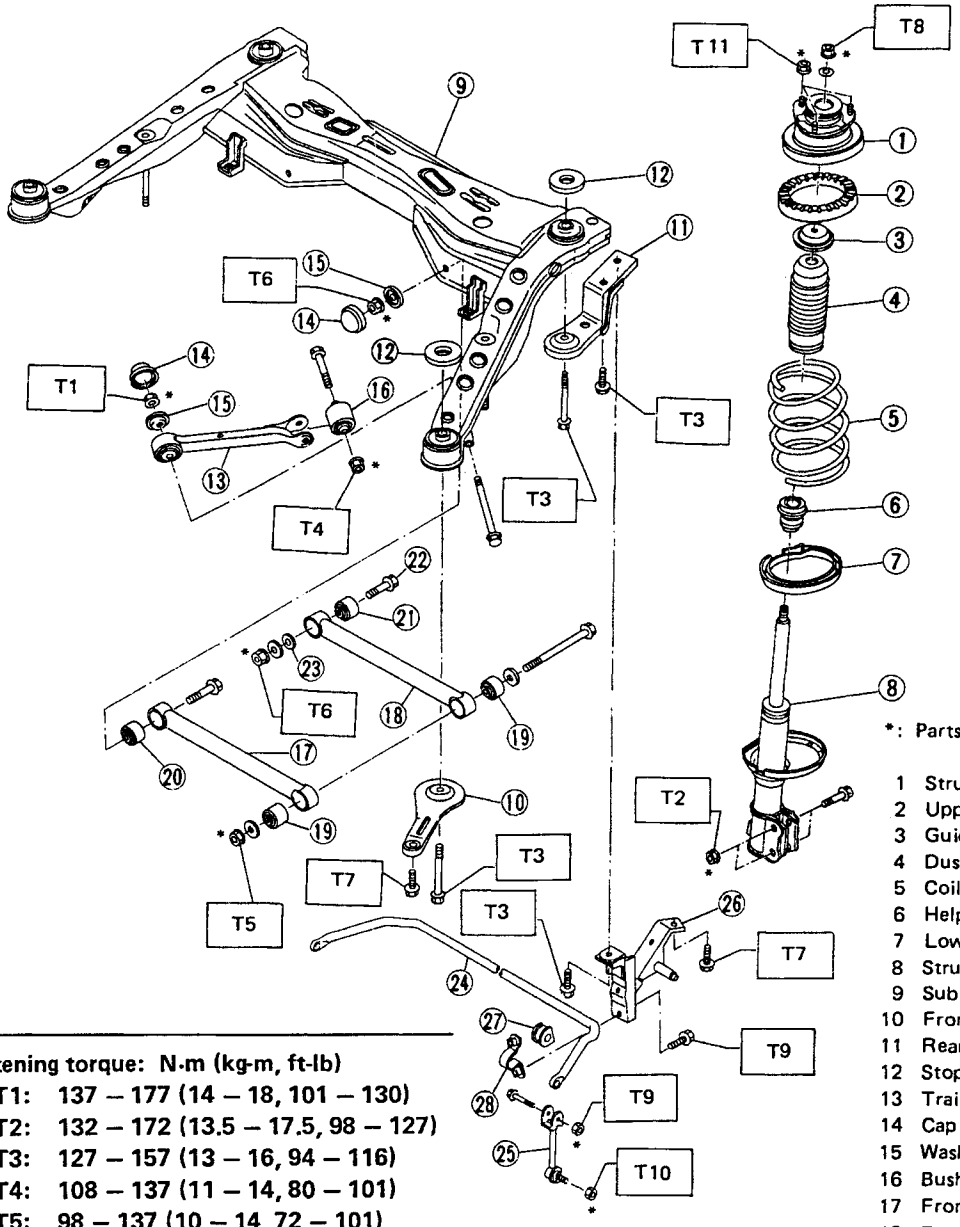

Tightening torque: N·m (kg-m, ft-lb)

- **T1: 137 – 177 (14 – 18, 101 – 130)**
- **T2: 132 – 172 (13.5 – 17.5, 98 – 127)**
- **T3: 127 – 157 (13 – 16, 94 – 116)**
- **T4: 108 – 137 (11 – 14, 80 – 101)**
- **T5: 98 – 137 (10 – 14, 72 – 101)**
- **T6: 83 – 113 (8.5 – 11.5, 61 – 83)**
- **T7: 44 – 74 (4.5 – 7.5, 33 – 54)**
- **T8: 49 – 69 (5 – 7, 36 – 51)**
- **T9: 14 – 25 (1.4 – 2.6, 10 – 19)**
- **T10: 16 – 24 (1.6 – 2.4, 12 – 17)**
- **T11: 12 – 24 (1.2 – 2.4, 9 – 17)**

*: Parts unsuitable for re-use

1 Strut mount
2 Upper rubber seat
3 Guide
4 Dust cover
5 Coil spring
6 Helper
7 Lower rubber seat
8 Strut COMPL
9 Sub frame
10 Front support
11 Rear support
12 Stopper
13 Trailing link
14 Cap
15 Washer
16 Bush
17 Front lateral link
18 Rear lateral link
19 Pillow ball bush
20 Bush E
21 Bush C
22 Adjusting bolt
23 Adjusting washer
24 Rear stabilizer
25 Stabilizer link
26 Stabilizer bracket
27 Stabilizer bush
28 Clamp

C4-466

Fig. 4

W SERVICE PROCEDURE FOR CONVENTIONAL SUSPENSION

1. On-car Services

Check, adjust and/or measure wheel alignment in accordance wit procedures indicated below:

A: WHEEL ALIGNMENT

1. Wheel arch height
2. Camber and caster
3. Toe-in
4. Thrust angle
5. Wheel steering angle

1. WHEEL ARCH HEIGHT

1) Inflate tire pressure to specifications.
2) Set vehicle under "curb weight" conditions. (Empty luggage compartment, install spare tire, jack, service tools, and top up fuel tank.)
3) Set steering wheel in a wheel-forward position.
4) Suspend thread from wheel arch to determine a point directly above center of spindle.
5) Measure distance between measuring point and center of spindle.

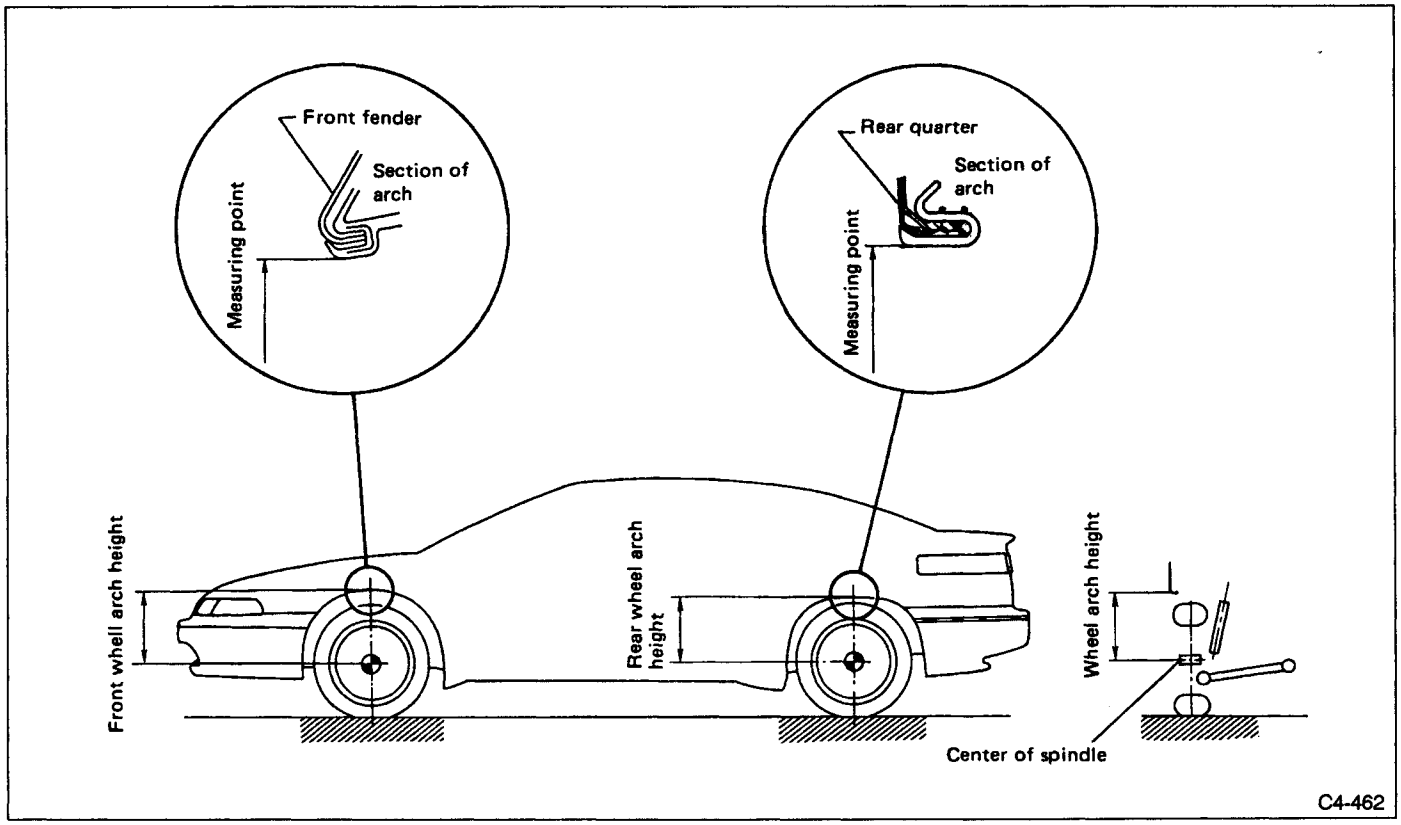

Fig. 5

	Front	Rear
Wheel arch height mm (in)	380^{+10}_{-20} ($14.96^{+0.39}_{-0.79}$)	335^{+10}_{-20} ($13.19^{+0.39}_{-0.79}$)

2. CAMBER AND CASTER

• Inspection

1) Place the wheel to be measured on the turning radius gauge, and make sure the vehicle is level.

2) Set ADAPTER (927380000) into the center of the wheel, and then install the alignment gauge.

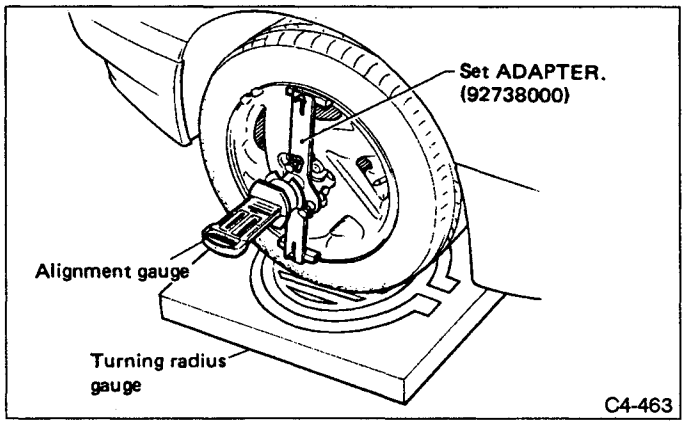

Fig. 6

	Front	Rear
Camber	0°25′ ± 45′	0°40′ ± 45′
Caster	4°50′ ± 45′	—

• Front camber adjustment

1) Loosen two self-locking nuts located at lower front portion of strut.

a. When adjustment bolt needs to be adjusted, hold its head with a wrench and turn self-locking nut.

b. Discard old self-locking nut and replace with a new one.

2) While aligning scale for adjustment bolt (located at rear of vehicle) with mark on strut bracket, set camber angle within proper specifications.

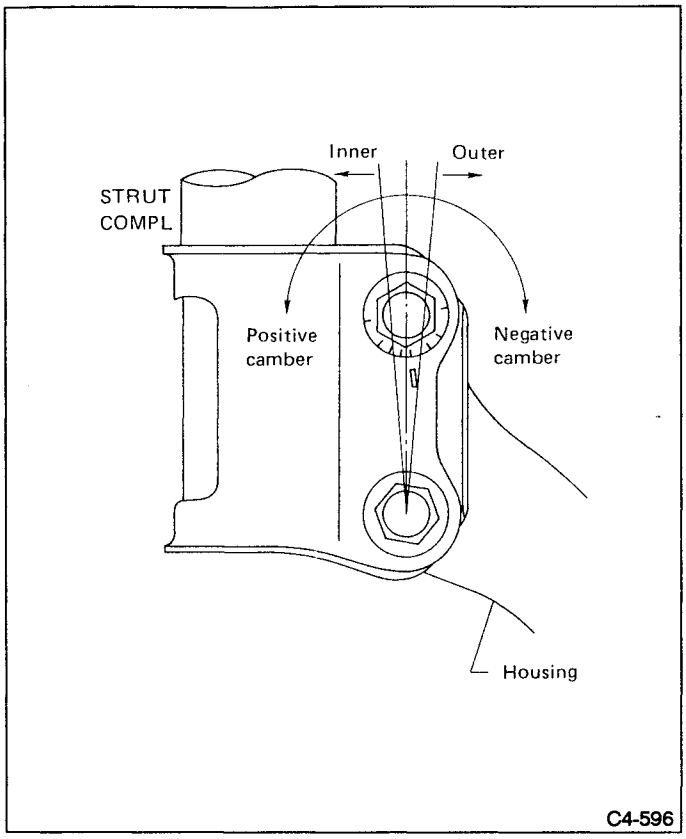

Fig. 7

	Left side	Right side
Rotate clockwise	Negative camber is increased	Positive: Same
Rotate counterclockwise	Positive camber is increased	Negative: Same

3) Tighten two self-locking nuts.

Tightening torque:
132 — 172 N•m (13.5 — 17.5 kg-m, 97.4 — 126.9 ft-lb)

3. TOE-IN

• Inspection

Measure toe-in using a toe gauge:

	Front	Rear
Toe-in mm (in)	0± 3 (0± 0.12)	

When using a toe gauge, make sure to measure as follows:

To measure toe-in, select one point on tire and move vehicle forward until the tire rotate exactly 180°.

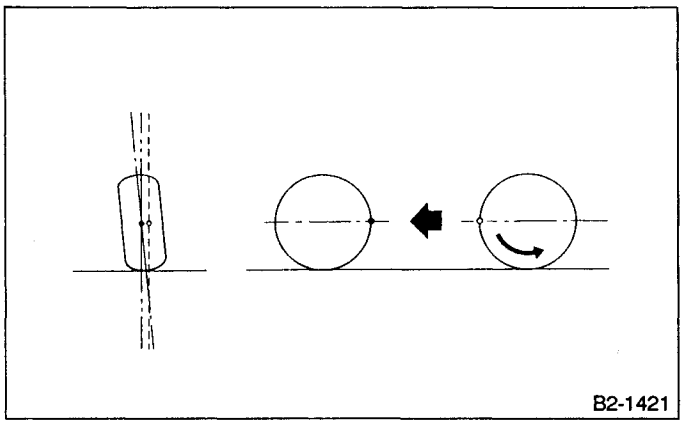

Fig. 8

- Front toe-in adjustment

1) Loosen the left and right side rod lock nuts.
2) Turn the left and right tie rods equal amounts until the toe is within the specified range.
Both the left and right tie-rods are right-hand threaded. To increase toe-in, turn both tie-rods counterclockwise equal amounts (as viewed from the outside of the vehicle).

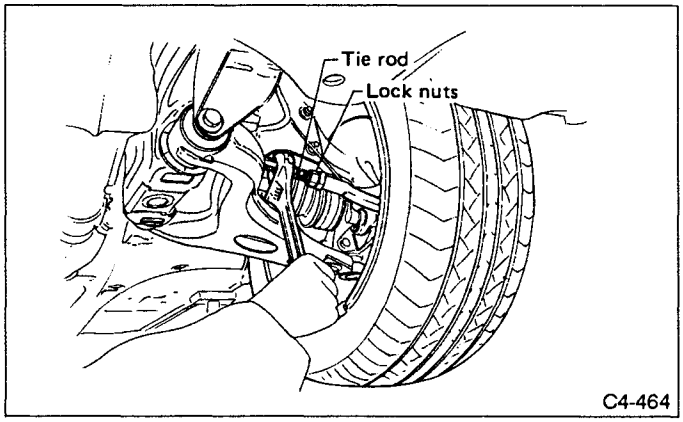

Fig. 9

3) Tighten tie-rod lock nut.

Tightening torque:
78 — 88 N•m (8 — 9 kg-m, 58 — 65 ft-lb)

a. Check that left and right wheel steering angle is within specifications.
b. Correct tie-rod boot if twisted.

- Rear toe-in adjustment

1) Loosen self-locking nut on rear lateral link.
a. When loosening or tightening adjustment bolt, hold bolt head and turn self-locking nut.
b. Replace self-locking nut with a new one.
2) Turn adjustment bolt head until toe-in and -out are within specifications.

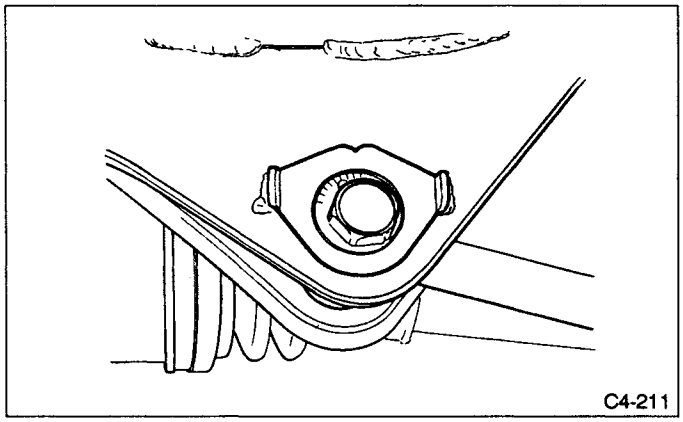

Fig. 10

Movement of one scale graduation changes toe-in or -out by approximately 2 mm (0.08 in).
3) Tighten self-locking nut.

Tightening torque:
83 — 113 N•m (18.5 — 11.5 kg-m, 61 — 83 ft-lb)

Rotation direction of adjustment bolt	Toe-in/-out of left wheel	Toe-in/-out of right wheel
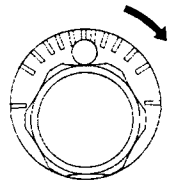	Changes for more "toe-in"	Changes for more "toe-out"
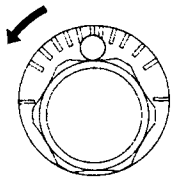	Changes for more "toe-out"	Changes for more "toe-in"

Fig. 11

B4-738

4. THRUST ANGLE

- Inspection

1) Position vehicle on a level surface.
2) Move vehicle 3 to 4 meters directly forward.
3) Determine locus of both front and rear axles.
4) Measure difference "L" between locus on the axles. (For reference)

Thrust angle is less than 20′ when "L" is equal to or less than 15 mm (0.59 in).

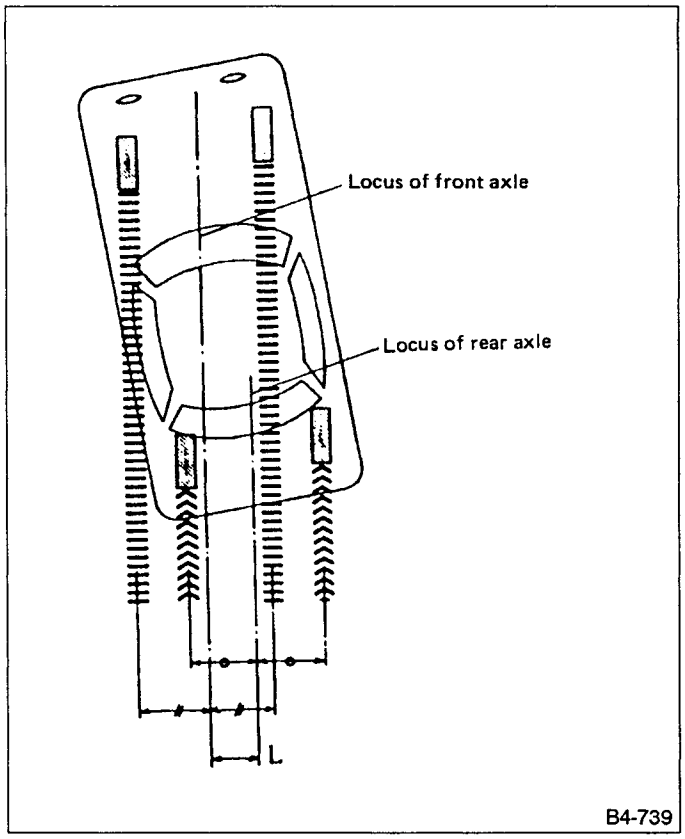

Fig. 12

- Adjustment

Make thrust angle adjustments for left and right rear wheels by turning toe-in and -out adjustment bolts equally in the same direction. (For reference)

- When one rear wheel is adjusted in a toe-in direction, adjust the other rear wheel equally in toe-out direction, in order to make thrust angle adjustment.
- When left and right adjustment bolts are turned incrementally in the same direction, the thrust angle will change approximately 10′ ["L" is nearly equal to 7.5 mm (0.295 in)].

Standard thrust angle:
Less than ± 20′

5. STEERING ANGLE

- Inspection

1) Place vehicles on a turning radius gauge.
2) While depressing brake pedal, turn steering wheel fully to the left and right. With steering wheel held at each fully turned position, measure both the inner and outer wheel steering angle.

Steering angle	Inner wheel	36.2° ± 1.5°
	Outer wheel	31.6° ± 1.5°

- Adjustment

Turn tie-rod to adjust steering angle of both inner and outer wheels.

a. Check toe-in and -out.
b. Correct both if twisted.

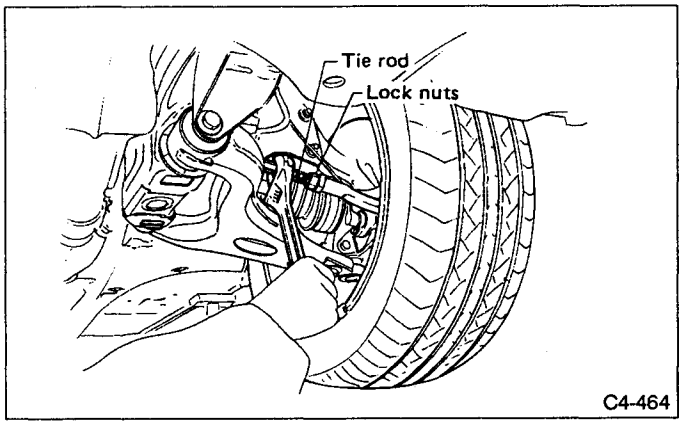

Fig. 13

2. Lower Arm

A: REMOVAL AND INSTALLATION

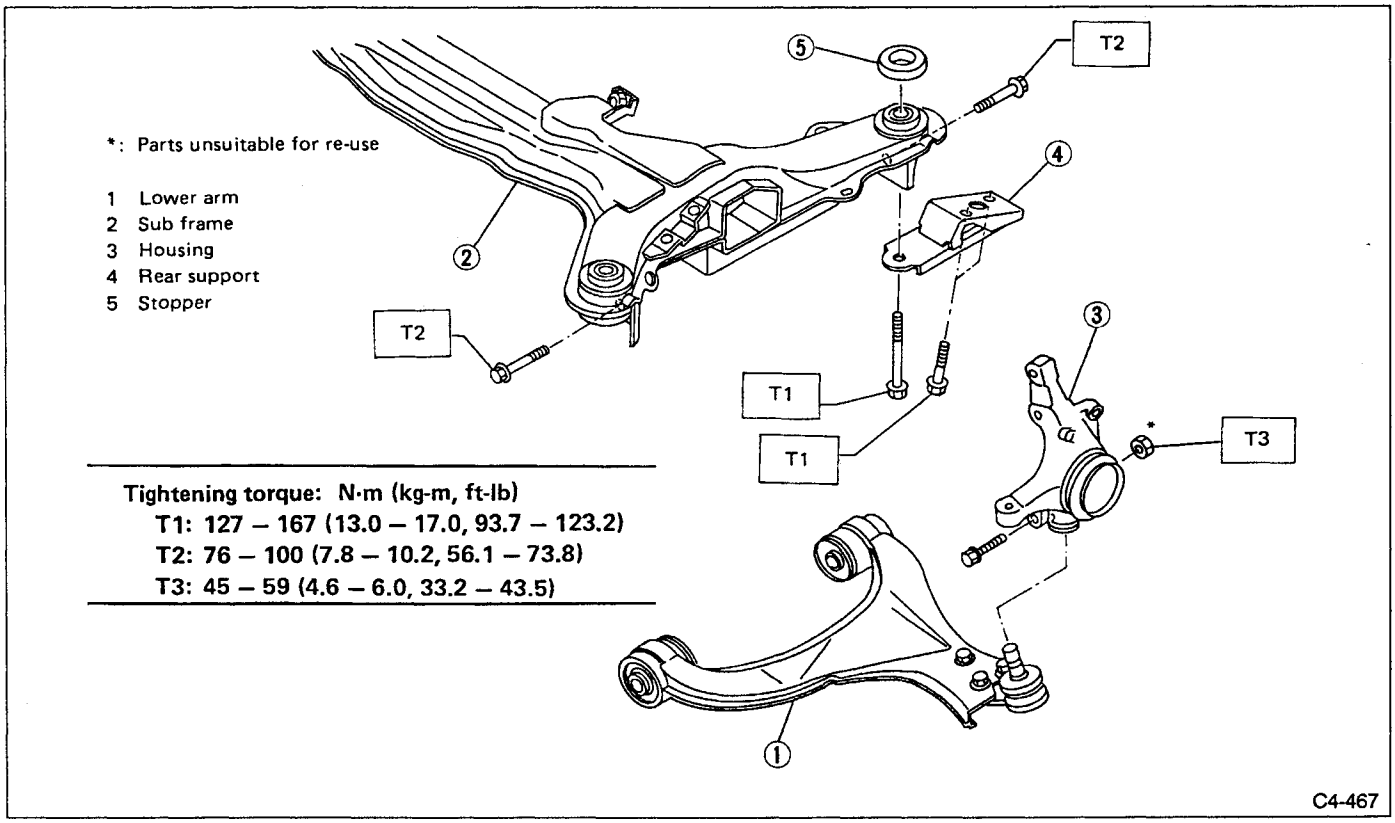

Fig. 14

1) Lift up vehicle and remove front wheels.
2) Separate housing and ball joint at connections.

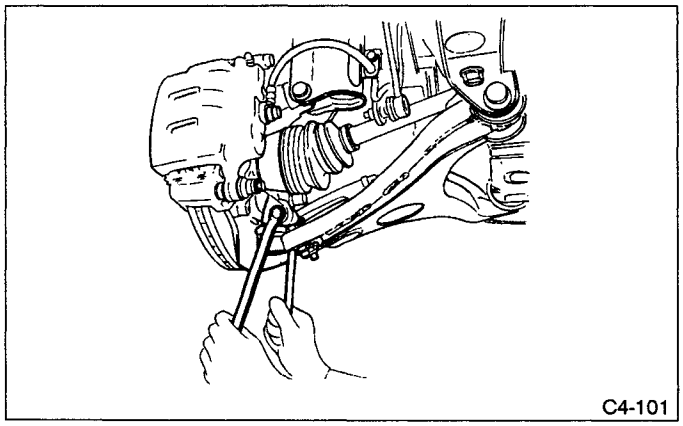

Fig. 15

3) Remove rear support.
Do not remove rear support on both sides simultaneously.

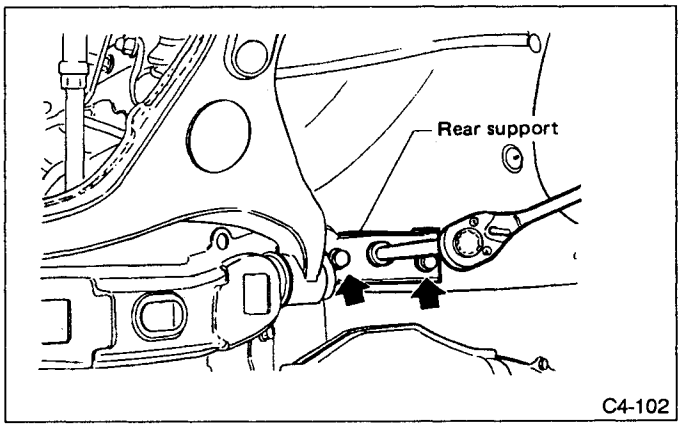

Fig. 16

4) Remove lower arm.

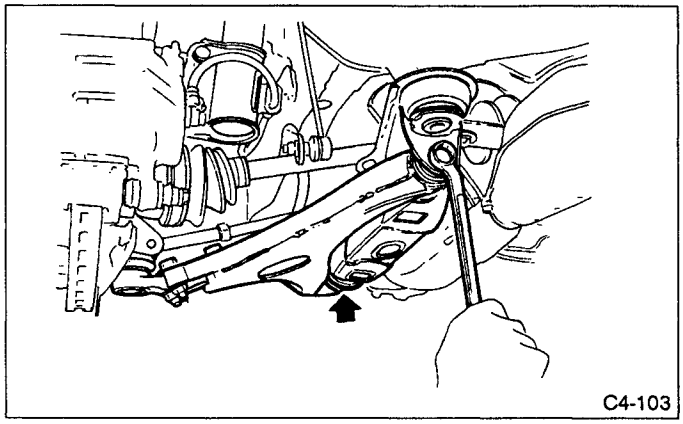

Fig. 17

5) To install, reverse above removal procedures.
Always install front sub frame and lower arm and tighten bolts with vehicle weight on suspension.
Self-lock nut must be replaced with a new one whenever it is removed.

B: INSPECTION

1) Check lower arm for wear, damage and cracks, and correct or replace if defective.
2) Check bushings for cracks, fatigue or damage.

3. Ball Joint

A: REMOVAL AND INSTALLATION

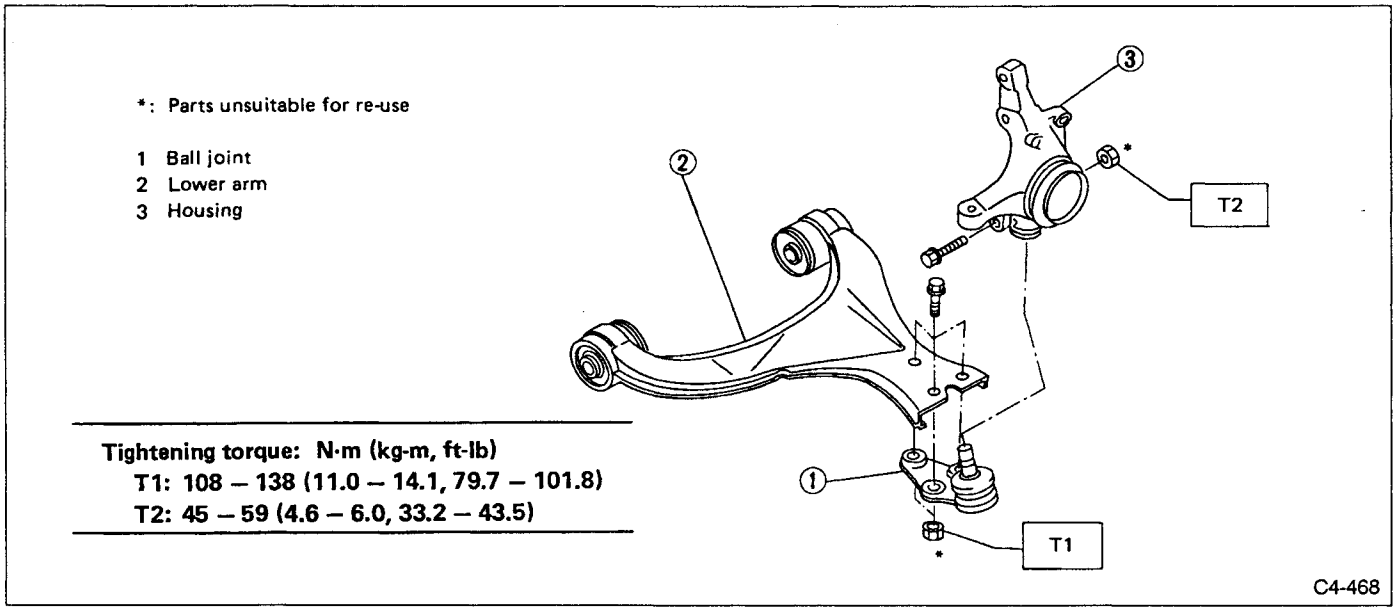

Fig. 18

1) Lift up vehicle and remove front wheels.
2) Remove four bolts, then ball joint.

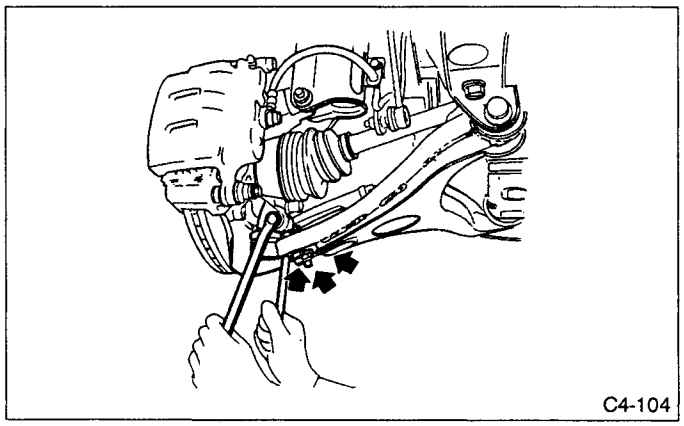

Fig. 19

3) To install, reverse above removal procedures.

B: INSPECTION

1) Check ball joint free play in three directions (fore-aft, lateral and vertical). Replace ball joint if necessary.
2) The ball joint and boot that have been removed must be checked for wear, damage or cracks and any defective part must be replaced.

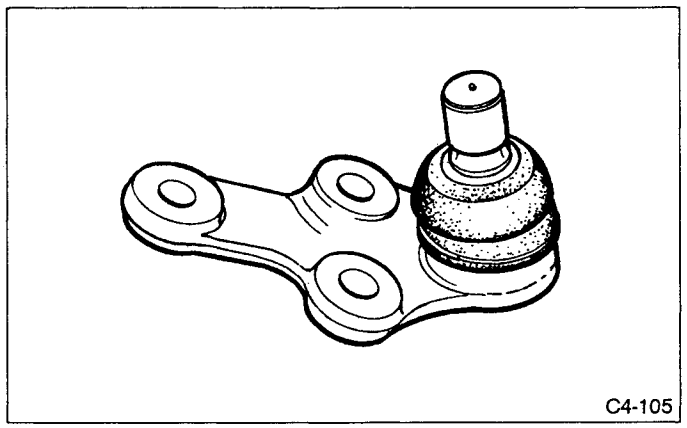

Fig. 20

4. Front Strut

A: REMOVAL AND INSTALLATION

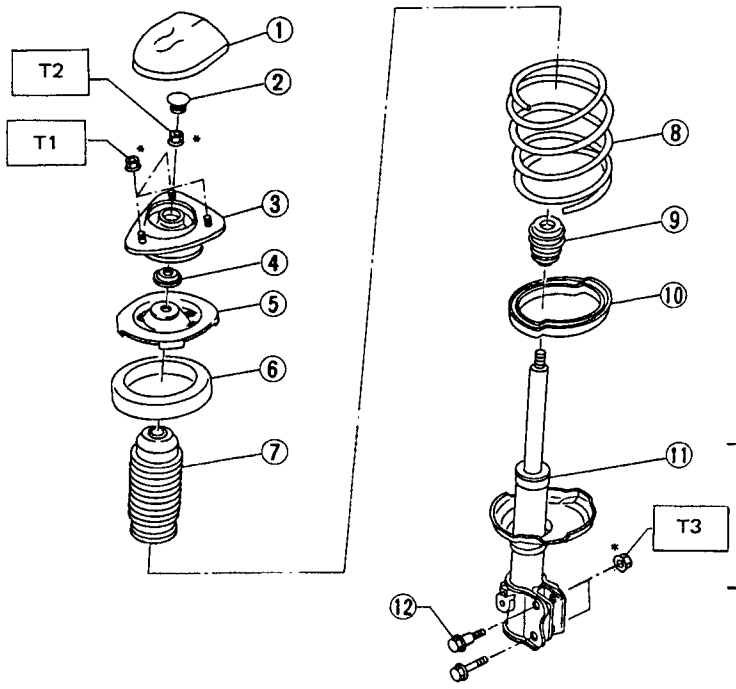

*: Parts unsuitable for re-use

1 Cap
2 Dust seal
3 Strut mount
4 Spacer
5 Upper spring seat
6 Upper rubber seat
7 Dust cover
8 Coil spring
9 Helper
10 Lower rubber seat
11 Strut COMPL
12 Adjusting bolt

Tightening torque: N·m (kg-m, ft-lb)
T1: 34 – 48 (3.5 – 4.9, 25.1 – 35.4)
T2: 49 – 59 (5.0 – 6.0, 36.1 – 43.5)
T3: 132 - 172 (13.5 – 17.5, 97.4 – 126.9)

C4-469

Fig. 21

1) Lift up vehicle and remove front wheels.
2) Remove stabilizer link.

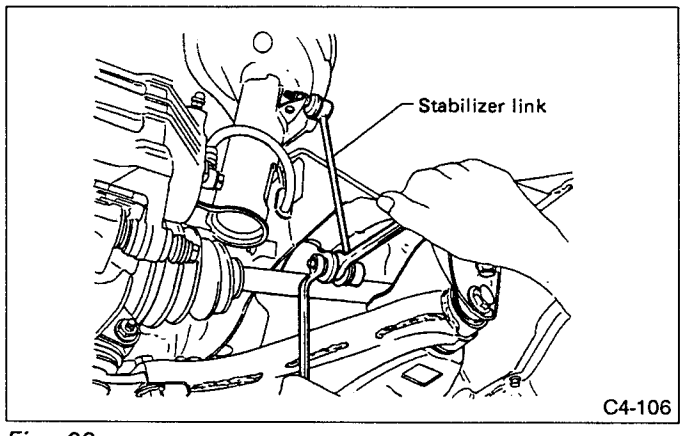

C4-106

Fig. 22

3) Disconnect ABS sensor clamp from strut.

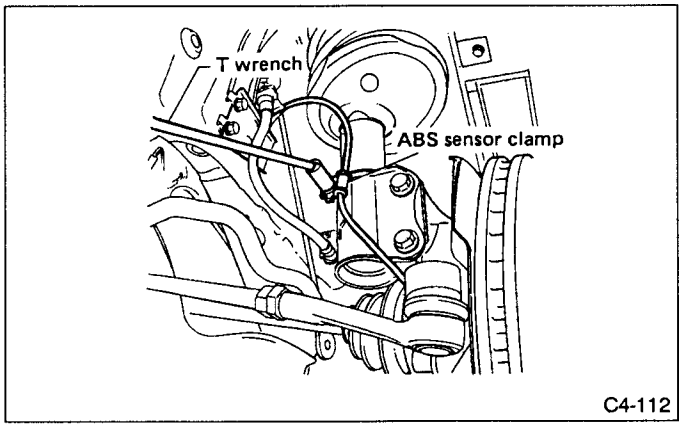

C4-112

Fig. 23

4) Disconnect brake hose clamp from strut.

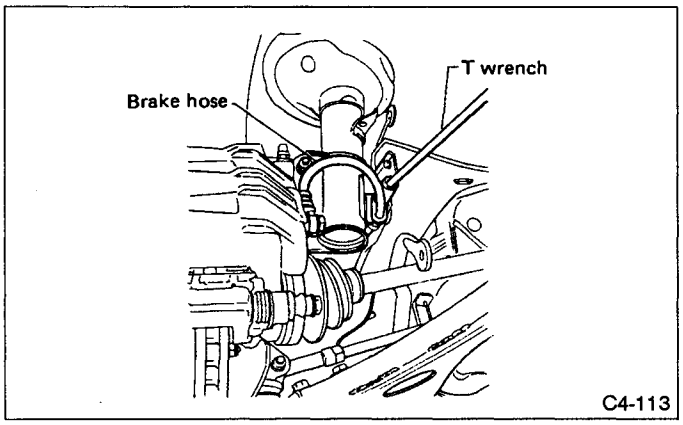

Fig. 24

5) After scribing an alignment mark on camber adjusting bolt head, remove nuts which connect housing and strut.
Do not remove upper bolt.

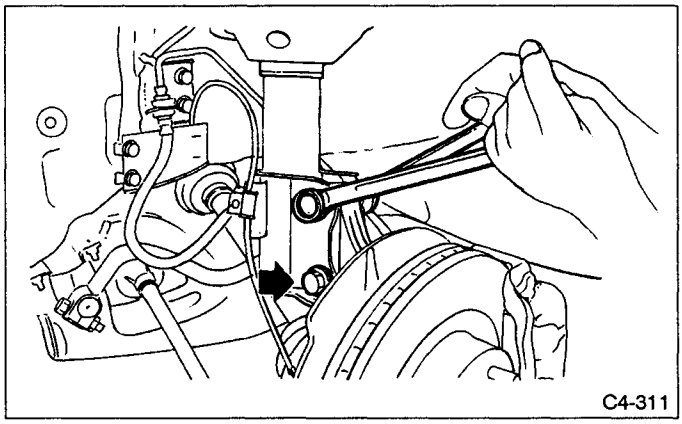

Fig. 25

6) Support housing assembly using a garage jack.

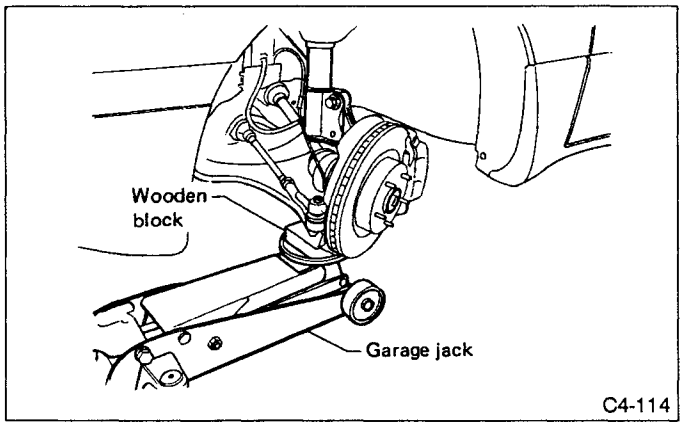

Fig. 26

7) Remove strut mount cap.
8) Remove the three nuts.

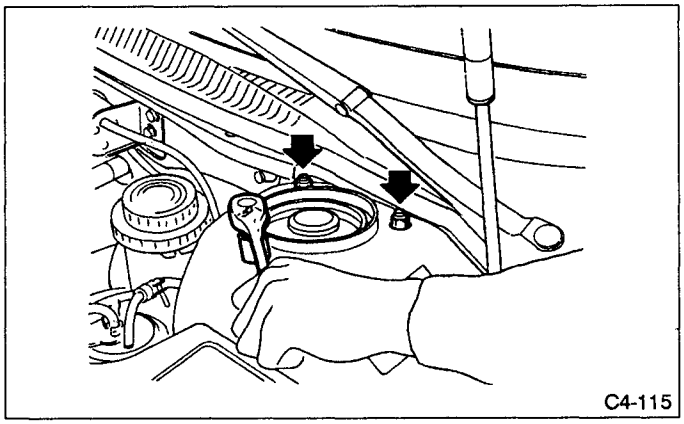

Fig. 27

9) Remove bolts from housing and remove strut.
Be careful not to damage ABS sensor harness and brake piping.
10) To install, reverse above removal procedures.
After installation, check wheel alignment.

B: DISASSEMBLY

1) Using a coil spring compressor, compress coil spring.

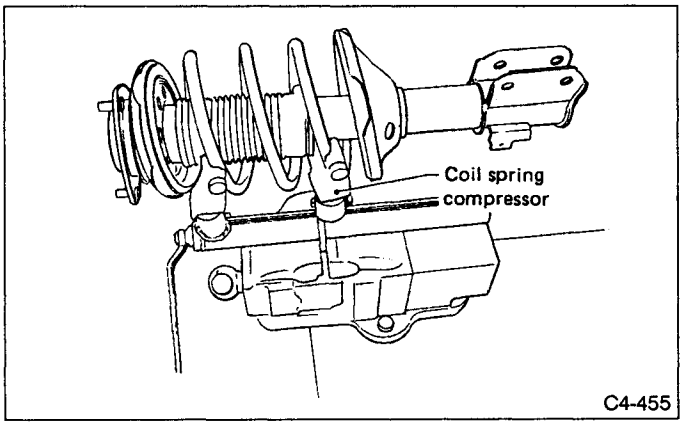

Fig. 28

2) Using STRUT MOUNT SOCKET (20099PA000), remove self-locking nut.

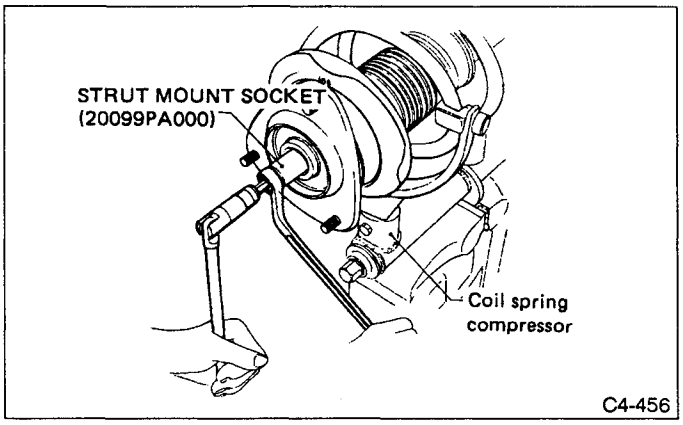

Fig. 29

3) Remove strut mount, upper spring seat and upper rubber seat from strut ASSY.
4) While gradually decreasing compression force, remove coil spring.
5) Remove dust cover, helper spring and lower rubber seat.

C: INSPECTION

Check the disassembled parts for cracks, damage and wear, and replace with new parts if defective.

1. DAMPER STRUT

1) Check for oil leakage.
2) Move the piston rod up and down to check its operates smoothly without any binding.
3) Deflection of piston rod
Measure the deflection as follows:
Fix the outer shell and fully extend the rod. Set a dial gauge at the end of the rod, and apply a weight of ± 20 N (± 2 kg, ± 4 lb) to the threaded portion. Read the dial gauge indication. The amplitude of the gauge needle pointer is the deflection of the rod.

Limit of deflection:
Less than 0.8 mm (0.031 in)

If the deflection is greater, replace the strut.

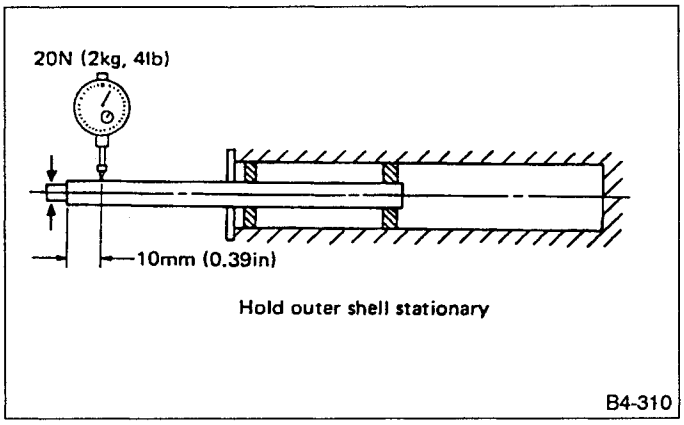

Fig. 30

2. STRUT MOUNT

1) Check rubber part for creep, cracks and deterioration, and replace it with new one if defective.
2) If distortion is found on its connecting surface to body, replace it with a new one.

3. DUST COVER

If any cracks or damage are found, replace it with a new one.

4. COIL SPRING

One having permanent strain should be replaced with a new one. When vehicle posture is uneven, although there are no considerable reasons like tire puncture, uneven loading, etc., check coil spring for its free length, cracks, etc. Replace it with a new one if defective.

5. HELPER

Replace it with new one if cracked or damaged.

D: ASSEMBLY

1) Compress the coil spring.
2) Install lower rubber seat to the spring seat.
3) Set the coil spring correctly so that its end face fits well into the spring seat as shown.

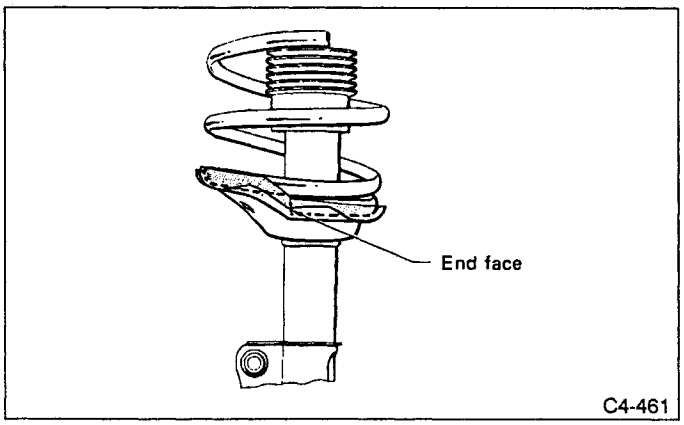

Fig. 31

4) Install helper and dust cover to the piston rod.
Ensure helper and dust cover are aligned with graded section of piston rod as shown in Figure 32.

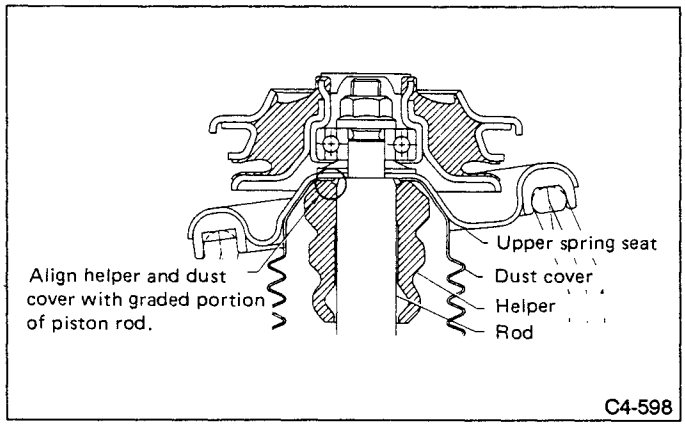

Fig. 32

5) Pull the piston rod fully upward, and install rubber seat and spring seat.
Ensure that upper spring seat is positioned with "OUT" mark facing outward.

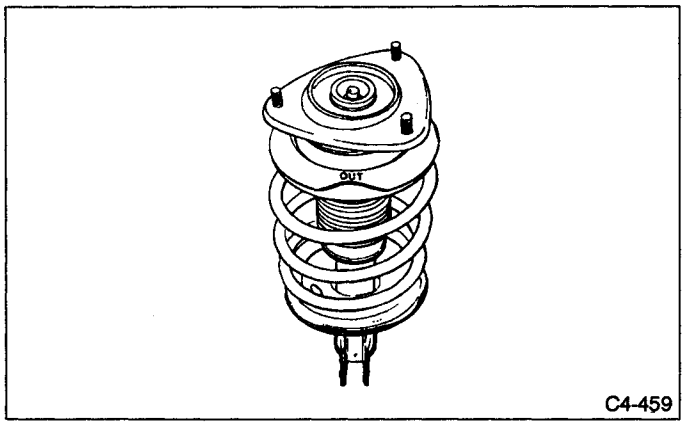

Fig. 33

6) Install strut mount to the piston rod, and tighten the self-lock nut temporarily.
Be sure to use a new self-lock nut.
7) Loosen the coil spring carefully.
8) While fixing the spring seat, tighten the self-lock nut with SOCKET (20099PA000).

5. Front Stabilizer

A: REMOVAL AND INSTALLATION

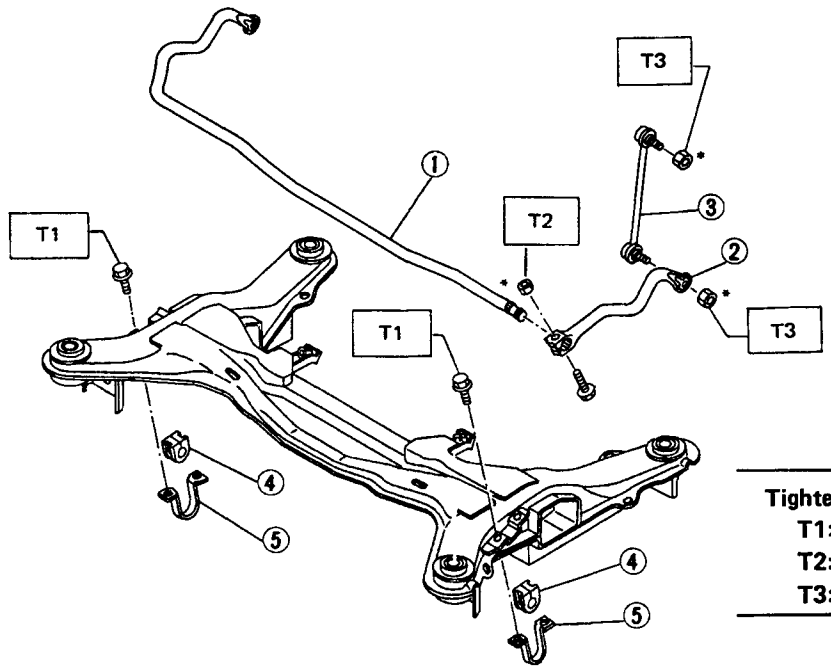

*: Parts unsuitable for re-use

1 Front stabilizer
2 Stabilizer lever
3 Stabilizer link
4 Stabilizer bush
5 Clamp

Tightening torque: N·m (kg-m, ft-lb)
T1: 21 – 28 (2.1 – 2.9, 15.5 – 21.0)
T2: 45 – 59 (4.6 – 6.0, 33.2 – 43.5)
T3: 32 – 42 (3.3 – 4.3, 23.6 – 31.0)

C4-470

Fig. 34

1) Lift up vehicle and remove front wheels.
2) Remove stabilizer link.

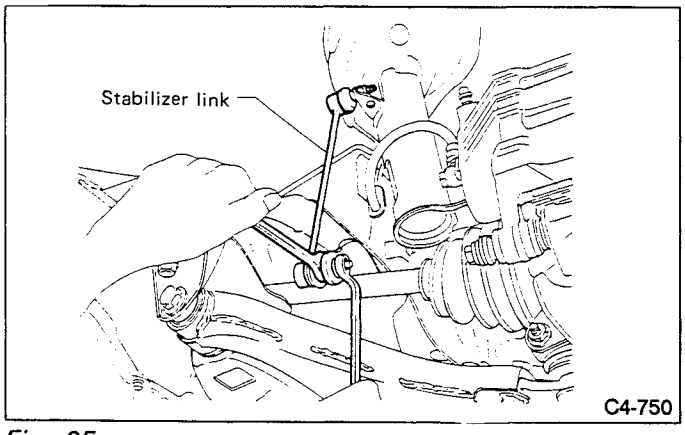

C4-750

Fig. 35

3) Remove right ABS sensor clamp.

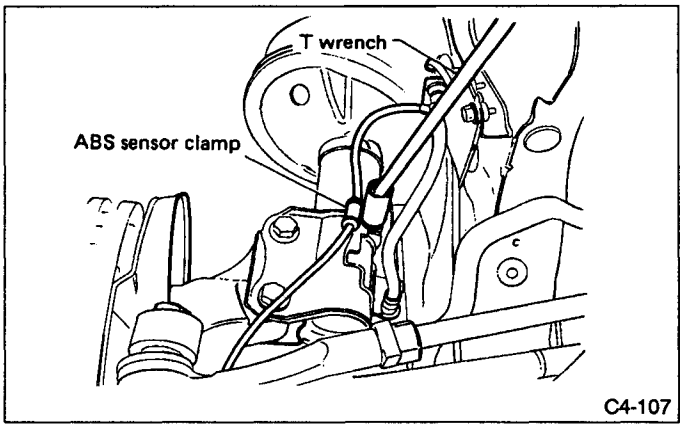

C4-107

Fig. 36

4) Remove right brake hose clamp.

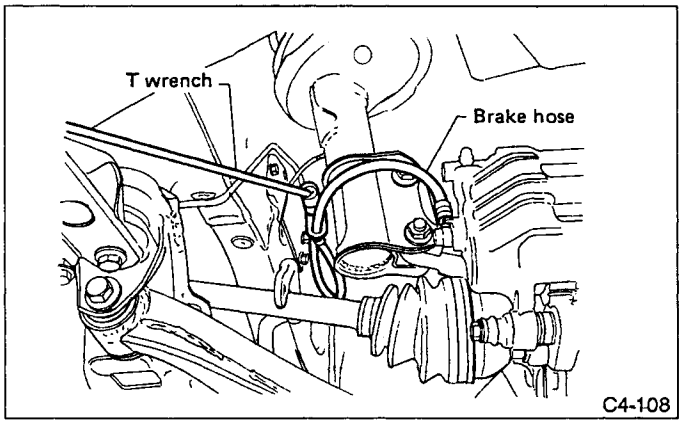

Fig. 37

5) Place alignment mark on stabilizer and stabilizer lever, and remove both parts.

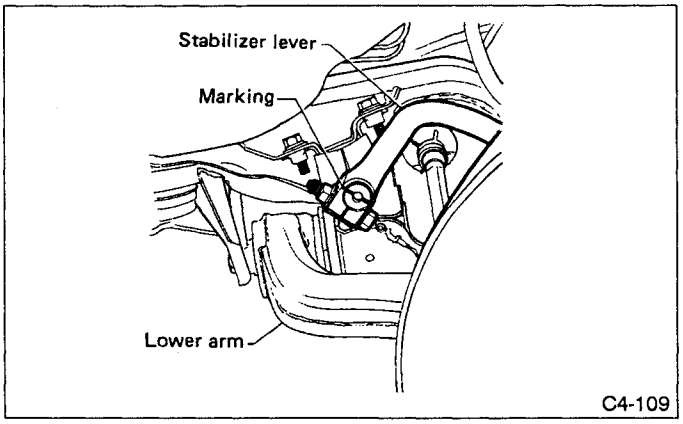

Fig. 38

6) Remove stabilizer bushing.

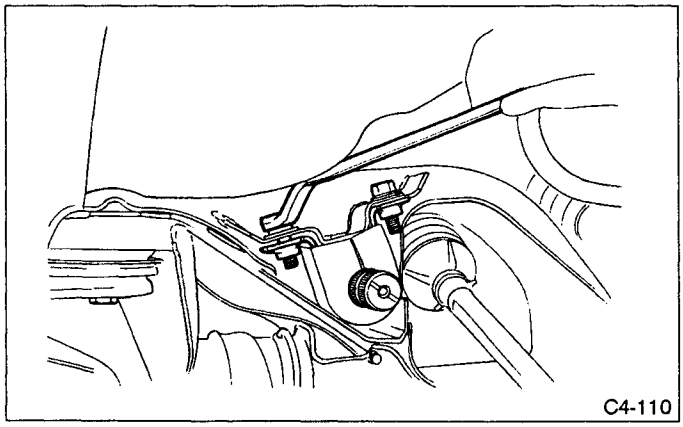

Fig. 39

7) Remove stabilizer from right side of vehicle.
Be careful not to damage ABS sensor harness and brake piping.
8) To install, reverse above removal procedures.
a. Be sure to align paint mark on stabilizer with bushing during installation.

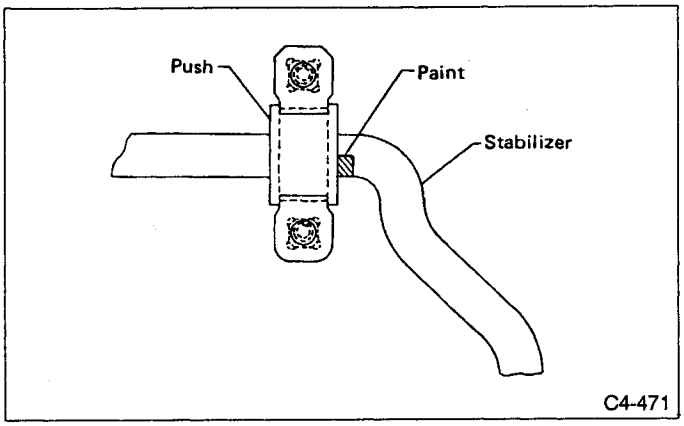

Fig. 40

b. Do not confuse front side of clamp with rear side during installation.

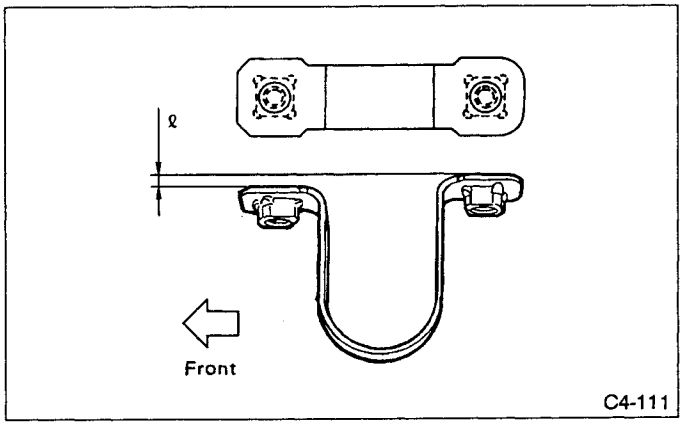

Fig. 41

c. Be sure to align alignment mark when installing stabilizer lever and stabilizer.

B: INSPECTION

1) Check bushing for cracks, fatigue or damage.
2) Check links for deformities, cracks, or damage, and bushing for protrusions beyond clamp.

6. Front Sub Frame AIRBAG

A: REMOVAL AND INSTALLATION

Supplemental Restraint System "Airbag"

Airbag system wiring harness is routed near the steering ASSY.

a. All Airbag system wiring harness and connectors are colored yellow. Do not use electrical test equipment on these circuit.

b. Be careful not to damage Airbag system wiring harness when servicing the steering ASSY.

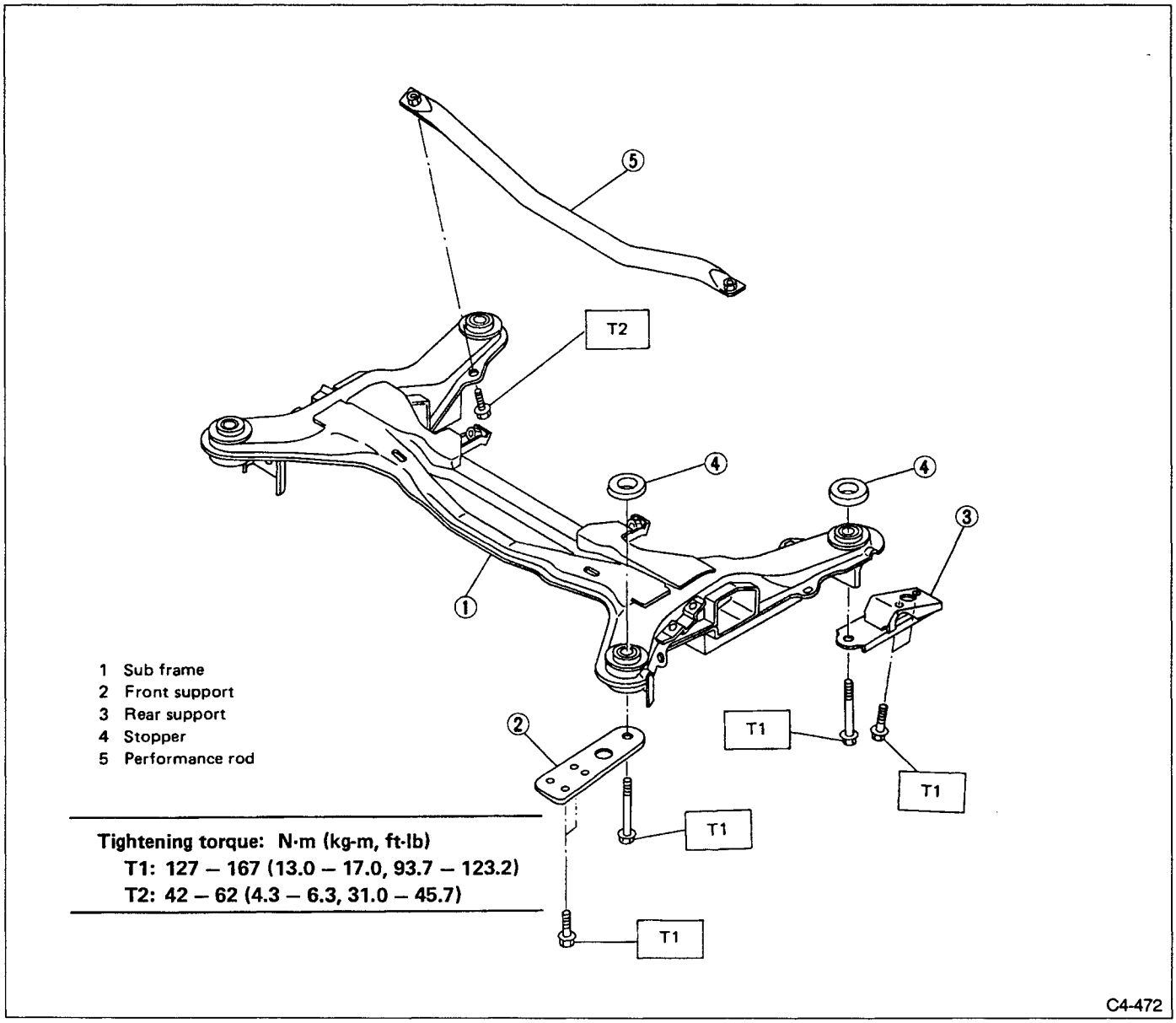

Fig. 42

1) Lift up vehicle and remove front wheels.
2) Move front hood damper stay to another hole position.

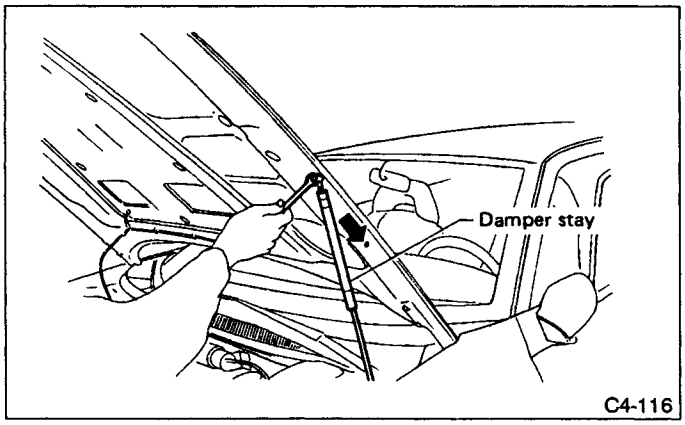

Fig. 43

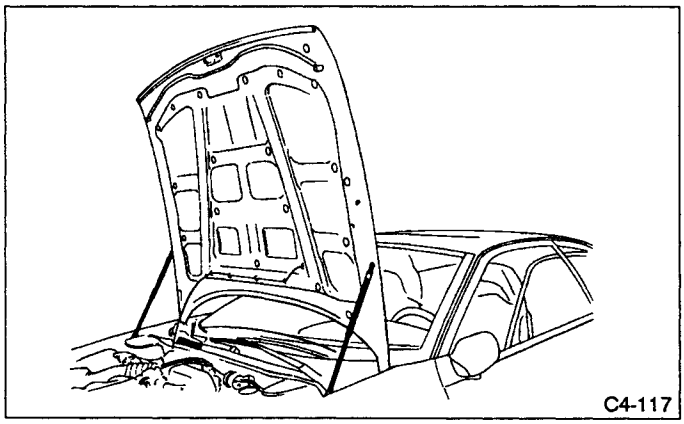

Fig. 44

3) Remove O_2 sensor connector.
4) Remove power steering connector.
5) Remove throttle cover.
6) Remove air intake duct.
7) Attach lifting wire to engine.

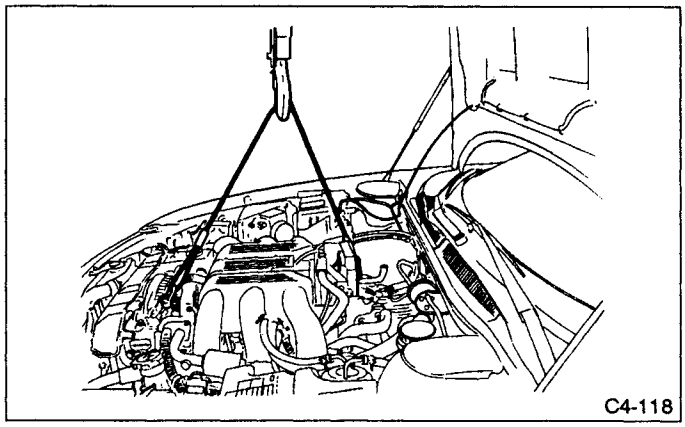

Fig. 45

8) Carefully lift engine.
Be sure to lift engine just enough to unload sub frame.
9) Remove front exhaust pipe.
10) Remove steering universal joint. (Refer to 4-3 [W2B0].)
Place alignment mark before removing.

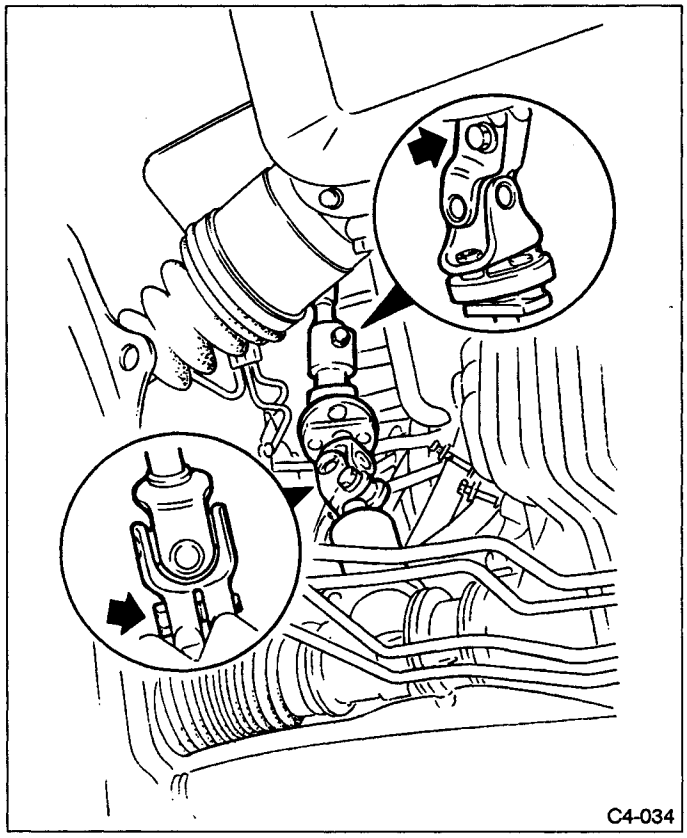

Fig. 46

11) Remove tie rod end from housing.

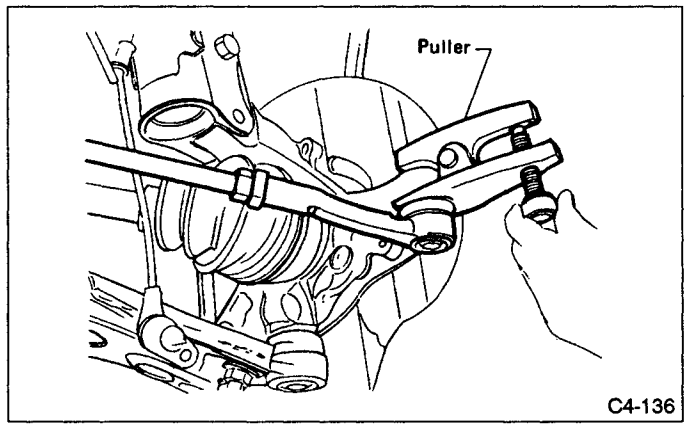

Fig. 47

12) Remove stabilizer link.

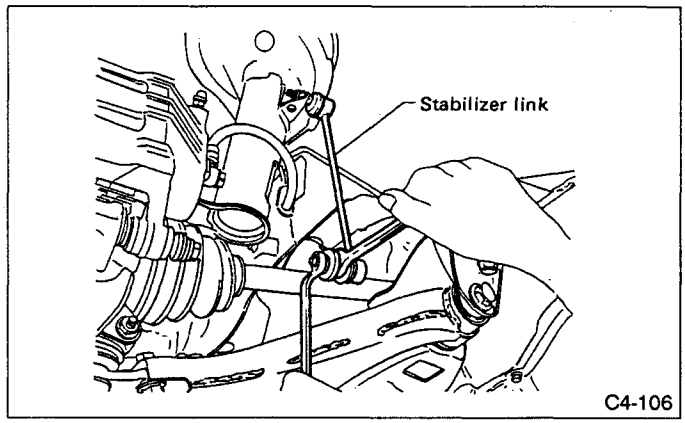

Fig. 48

13) Place alignment mark on stabilizer and stabilizer lever before removing.

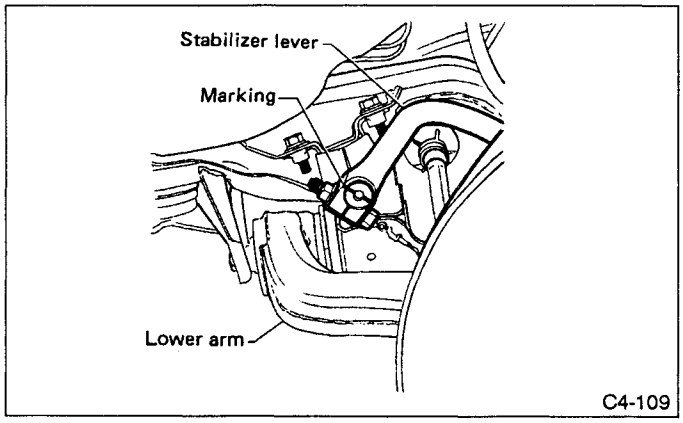

Fig. 49

14) Remove left stabilizer clamp.

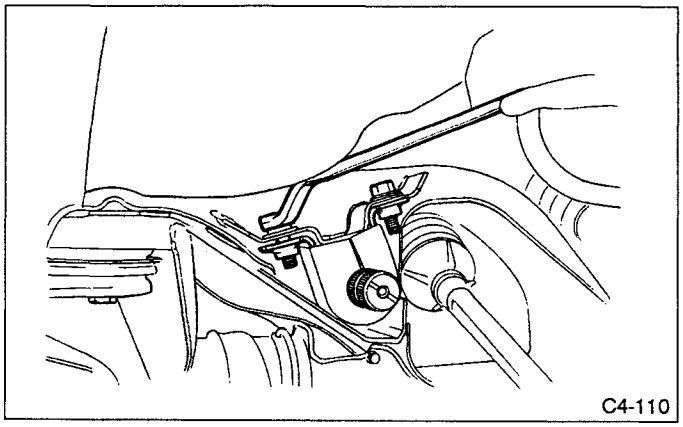

Fig. 50

15) Disconnect hose from steering gear box pipe.
16) Remove pipe joint bracket from sub frame.
17) Remove pipe joint from steering gear box pipe.

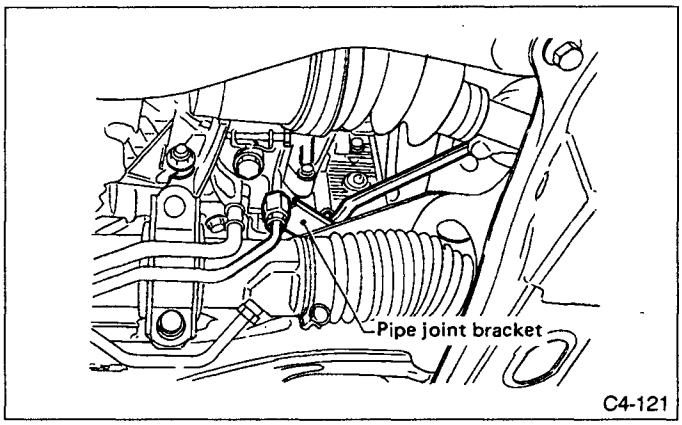

Fig. 51

18) Plug steering hose and pipe openings to prevent entry of foreign matter.

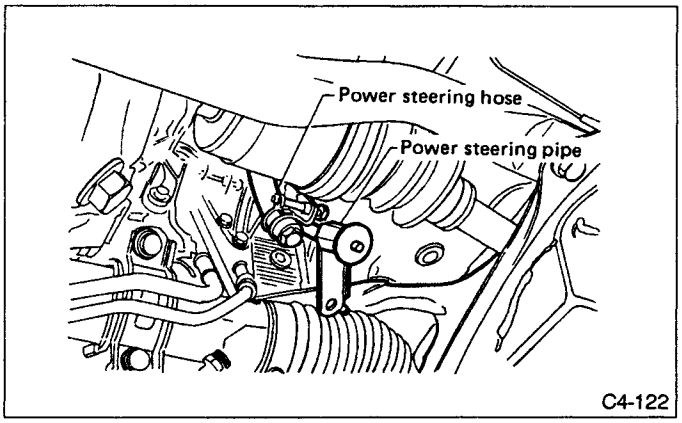

Fig. 52

19) Disconnect lower arm ball joint from housing.

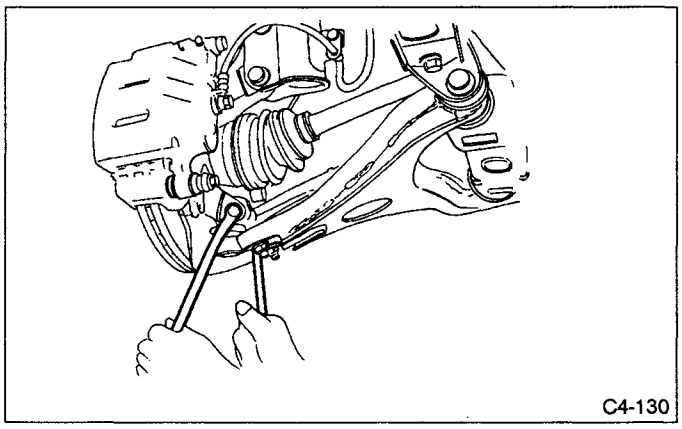

Fig. 53

20) Remove rear support.
Make sure engine is securely supported.

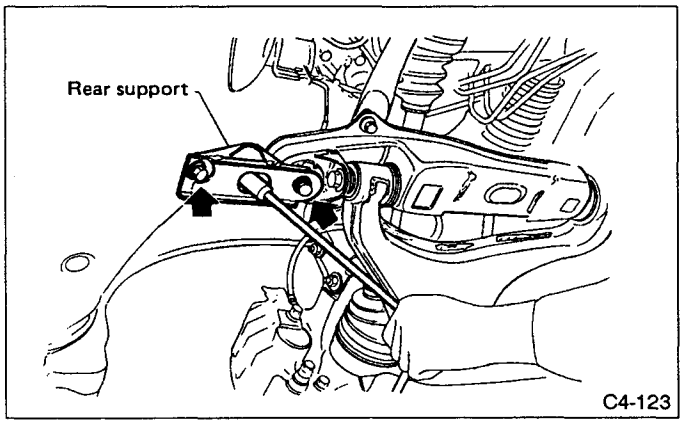

Fig. 54

21) Remove lower arm.

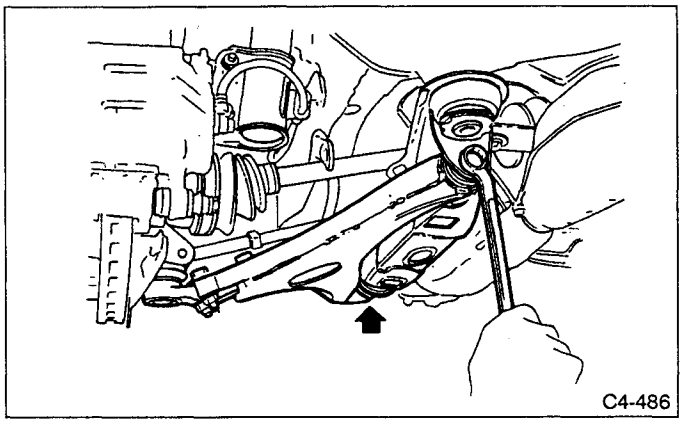

Fig. 55

22) Support sub frame with transmission jack.

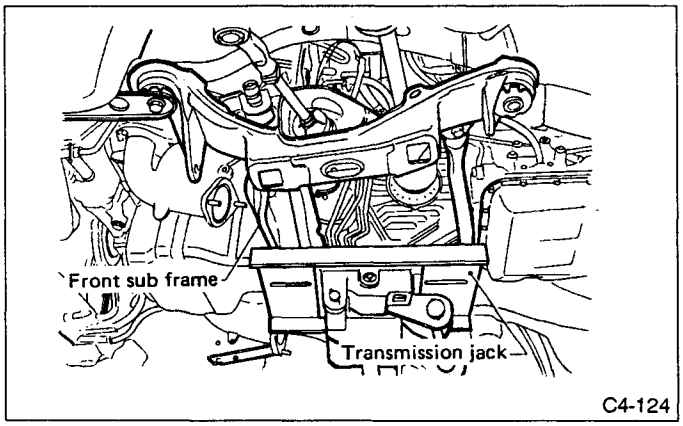

Fig. 56

23) Remove front support.

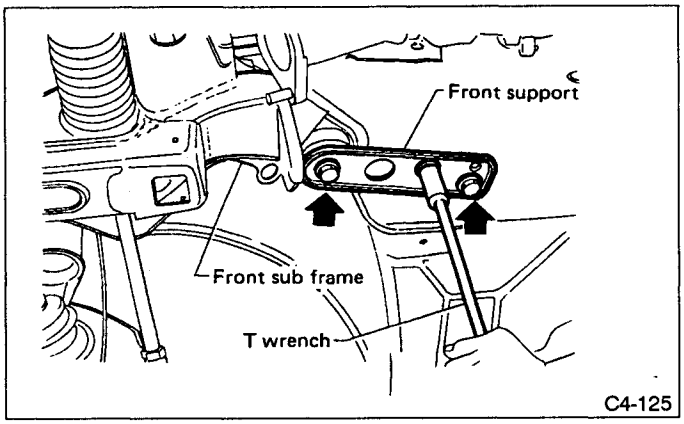

Fig. 57

24) Disconnect sub frame from front cushion rubber.

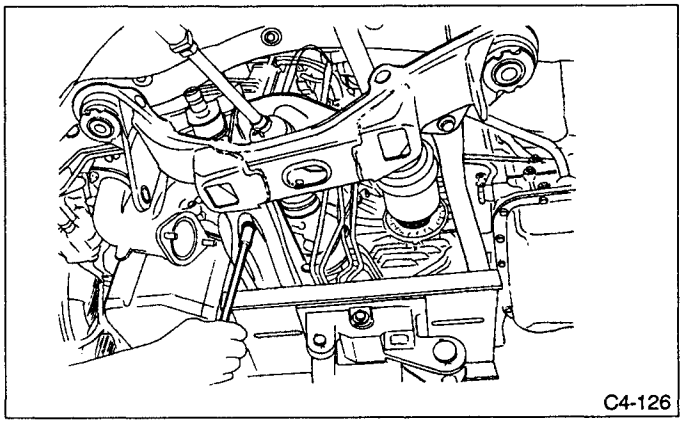

Fig. 58

25) Remove sub frame.
Be careful not to damage power steering solenoid harness.
26) Remove stabilizer from sub frame.
27) Remove gear box assembly from sub frame.
28) To install, reverse above removal procedures.
a. Make sure sub frame stoppers are properly installed.

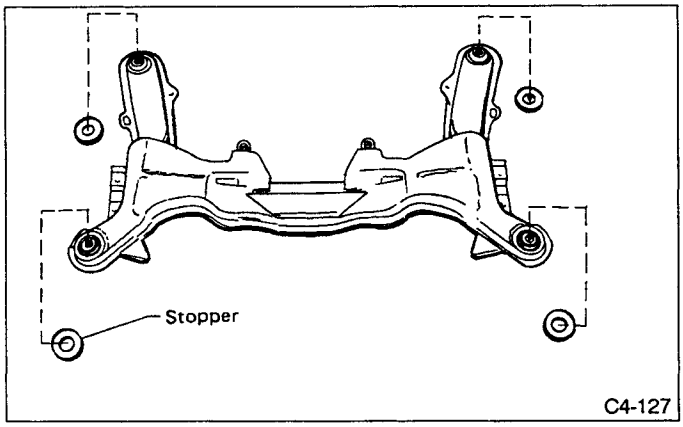

Fig. 59

b. Align locators when assembling front rubber cushions to sub frame.

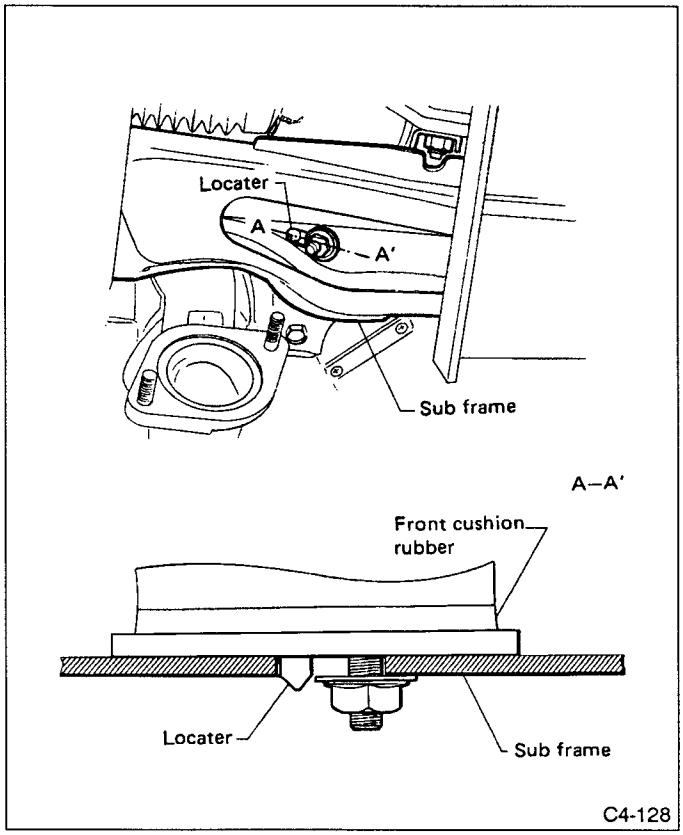

Fig. 60

c. When installing universal joint, refer to instructions under "4-3. STEERING SYSTEM" as a guide.
d. Center roll connector as instructed under 5-5. [W1E1].
e. Purge air from power steering system (refer to 4-3. [W5G0]).
f. When tightening lower arm-to-sub frame securing bolts, make sure vehicle weight is on suspension.
g. Adjust wheel alignment.

7. Trailing Link

A: REMOVAL AND INSTALLATION

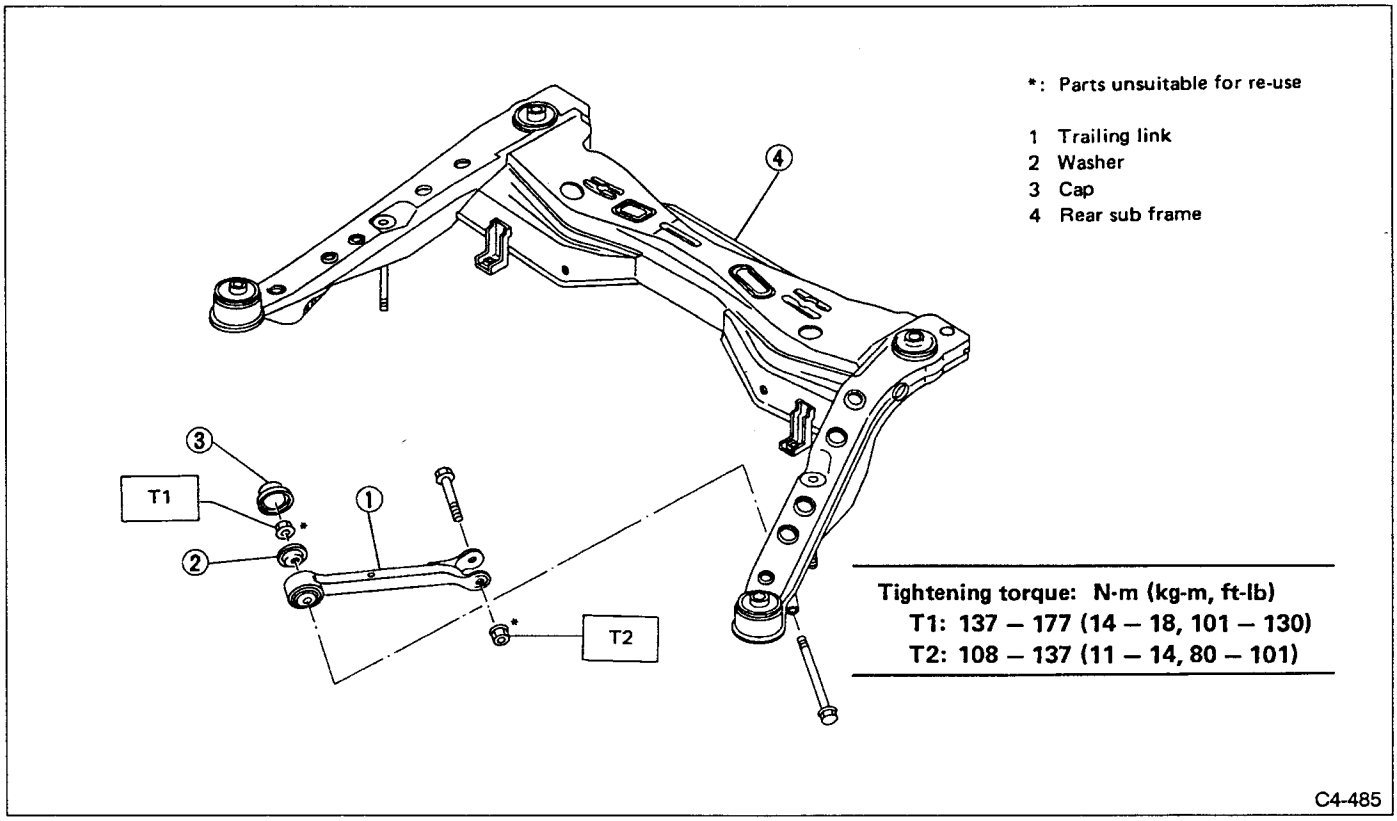

Fig. 61

1) Lift up vehicle and remove rear wheels.
2) Disconnect ABS sensor clamp and parking brake cable bracket.

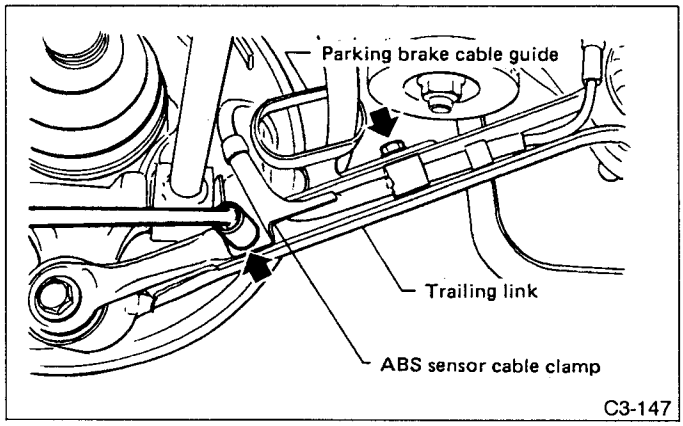

Fig. 62

3) Remove trailing link.

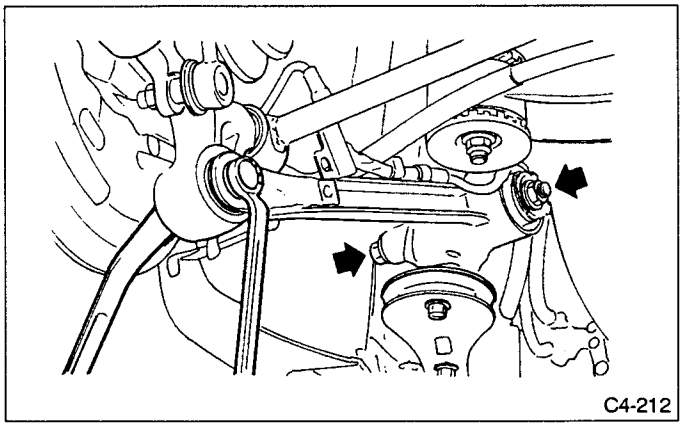

Fig. 63

4) To install, reverse above removal procedures.
When tightening rubber bushings, make sure vehicle weight is on suspensions.

B: INSPECTION

Check trailing link for bends, corrosion or damage.

8. Lateral Link

A: REMOVAL AND INSTALLATION

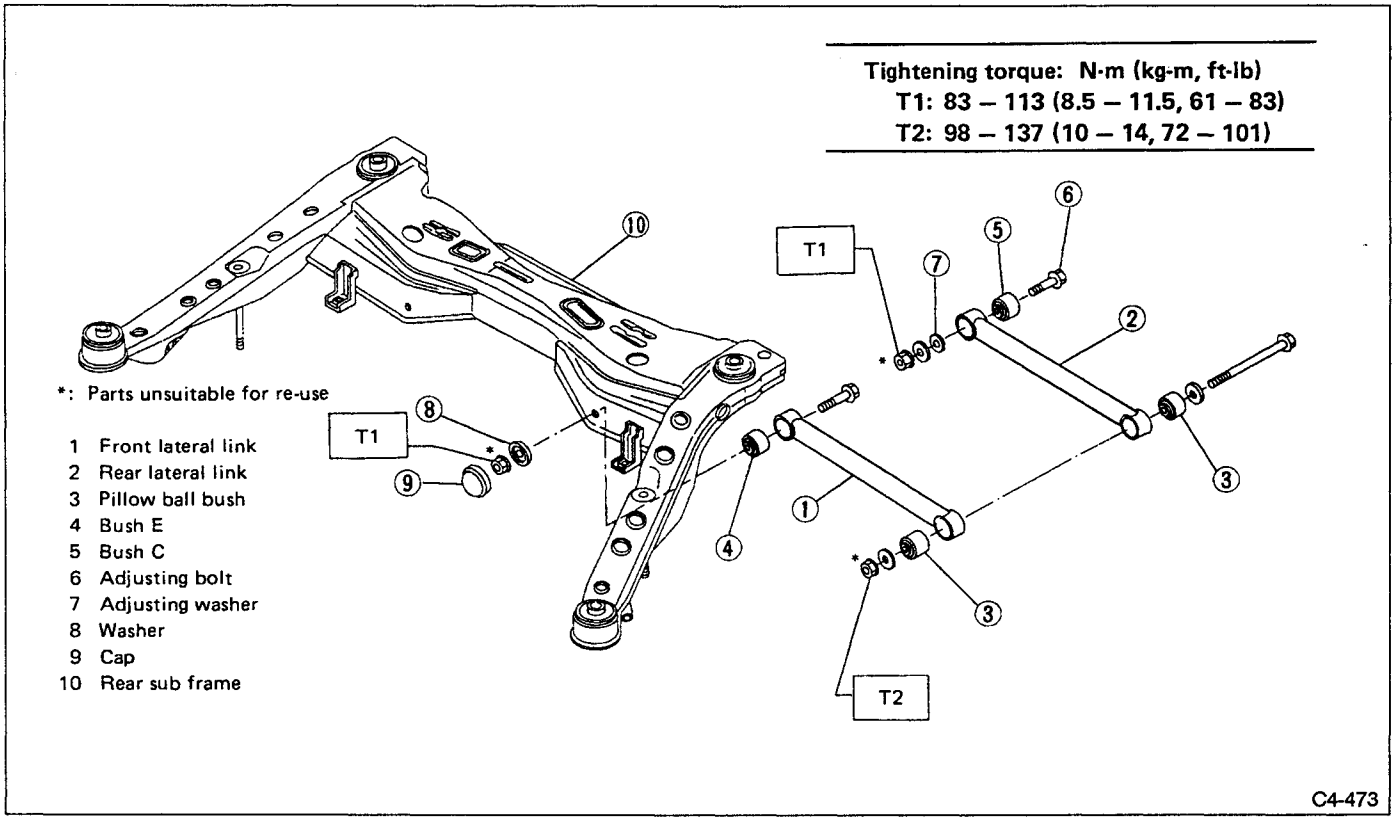

Fig. 64

1) Lift up vehicle and remove rear wheels.
2) Remove rear exhaust pipe.
3) Remove stabilizer link.

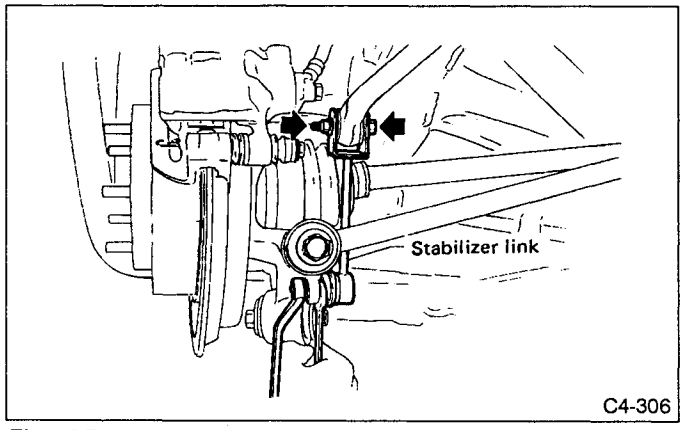

Fig. 65

4) Remove parking brake cable and ABS sensor harness brackets.

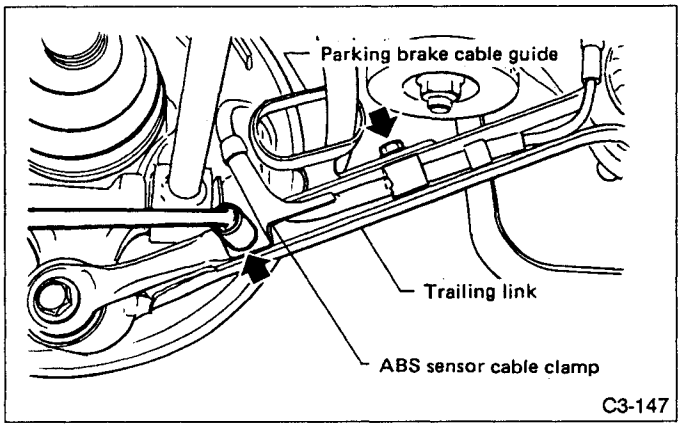

Fig. 66

5) Disconnect parking brake cable clamp.

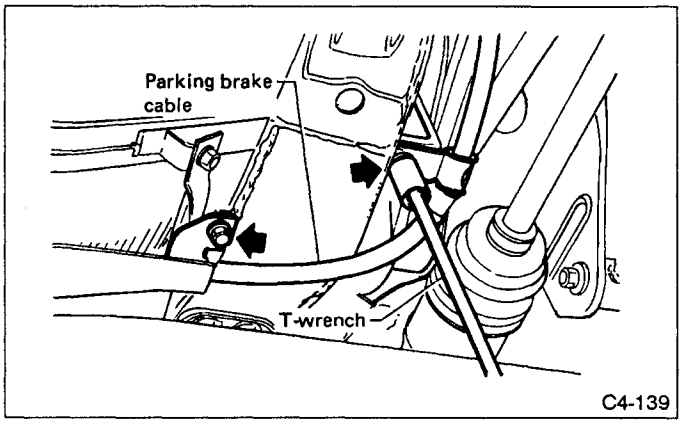

Fig. 67

6) Disconnect trailing link at housing.

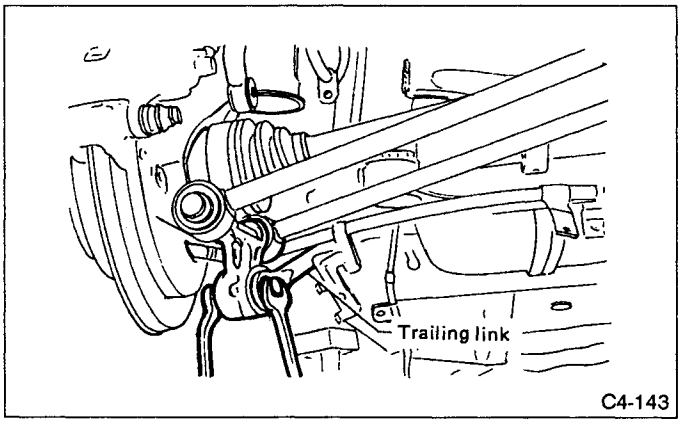

Fig. 68

7) Disconnect lateral link to housing.

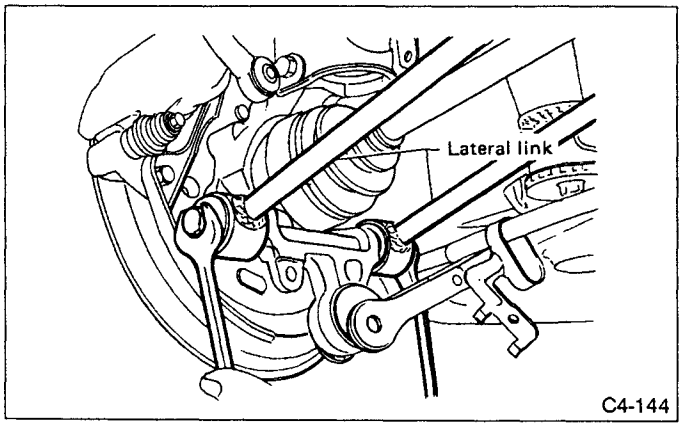

Fig. 69

8) Extract DOJ from differential using DRIVE SHAFT REMOVER (28099PA100).
Use bolt (shown in Fig. 71) as a supporting point for REMOVER to prevent side bearing retainer from sustaining damage.

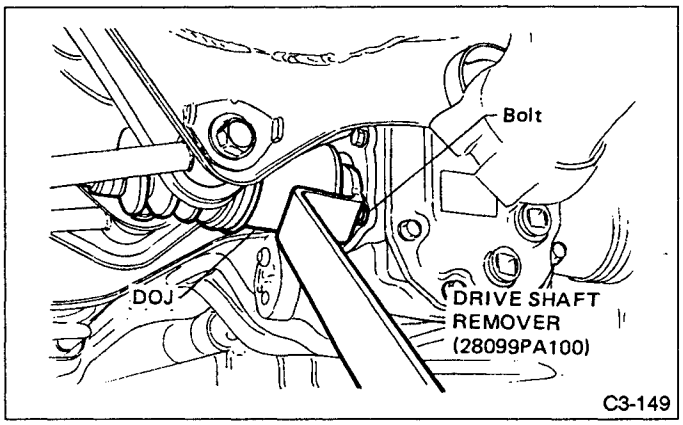

Fig. 70

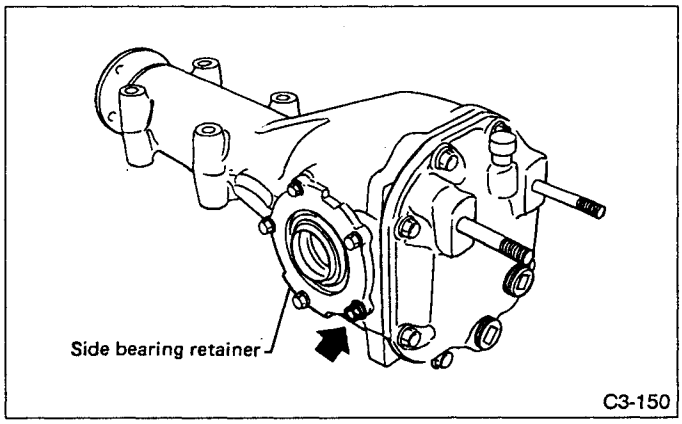

Fig. 71

9) Place alignment mark on adjustment bolt.

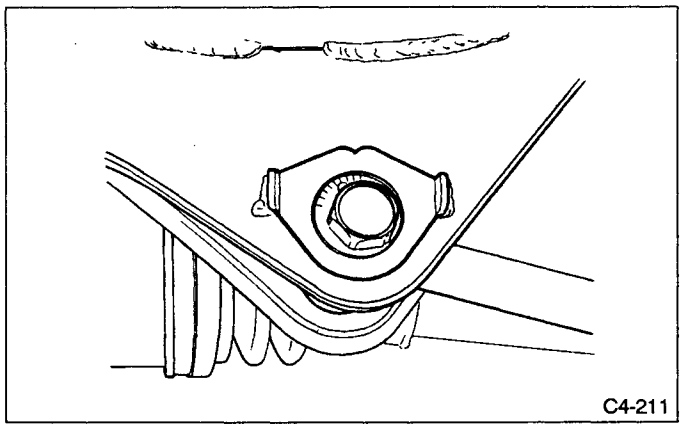

Fig. 72

10) Remove lateral link from sub frame.

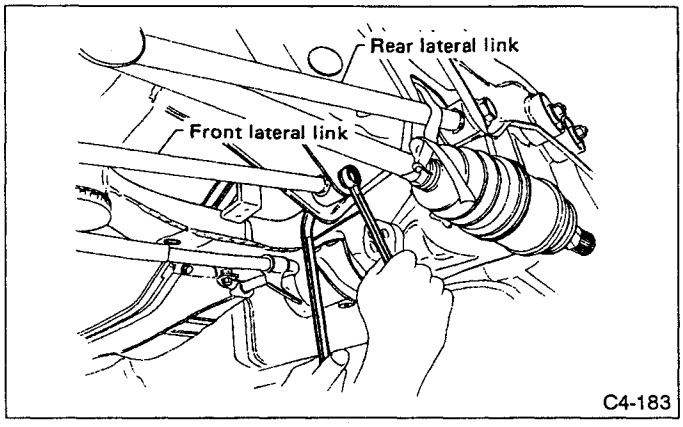

Fig. 73

11) To install, reverse above removal procedures.
Replace self-locking nuts with new ones.

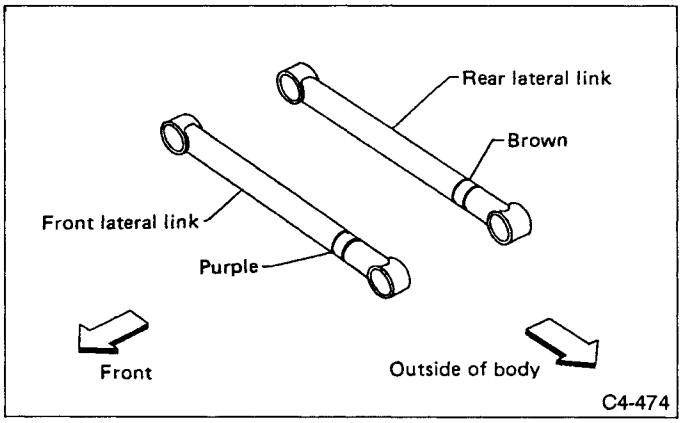

Fig. 74

a. When tightening bushing, make sure vehicle weight is on suspension.
b. Align alignment mark when installing adjustment bolt.

B: INSPECTION

Check bushing for cracks, fatigue or damage. Check lateral links for damage or bends.

C: DISASSEMBLY

1) Using an INSTALLER & REMOVER, press bushing C and bushing E out of place.

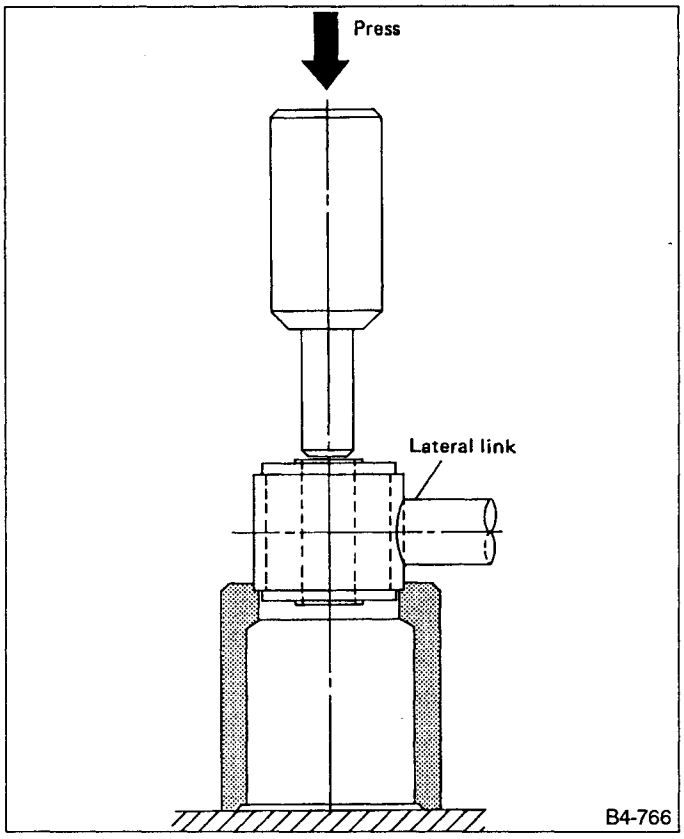

Fig. 75

2) Using an INSTALLER & REMOVER, press pillow ball bushing out of place.

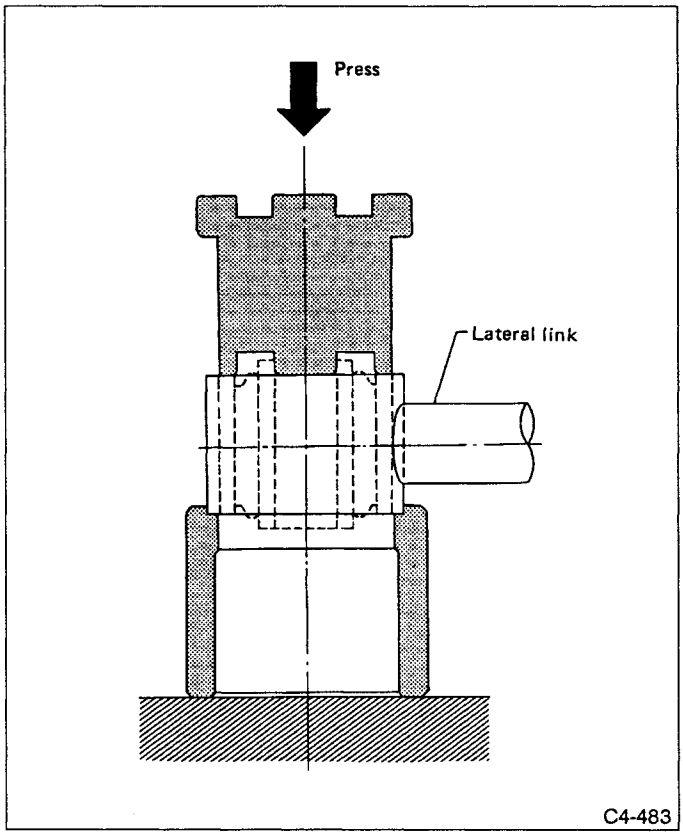

Fig. 76

a. Using the following figure as a guide, verify the type of bushings.
b. Select INSTALLER & REMOVER according to the type of bushings used.

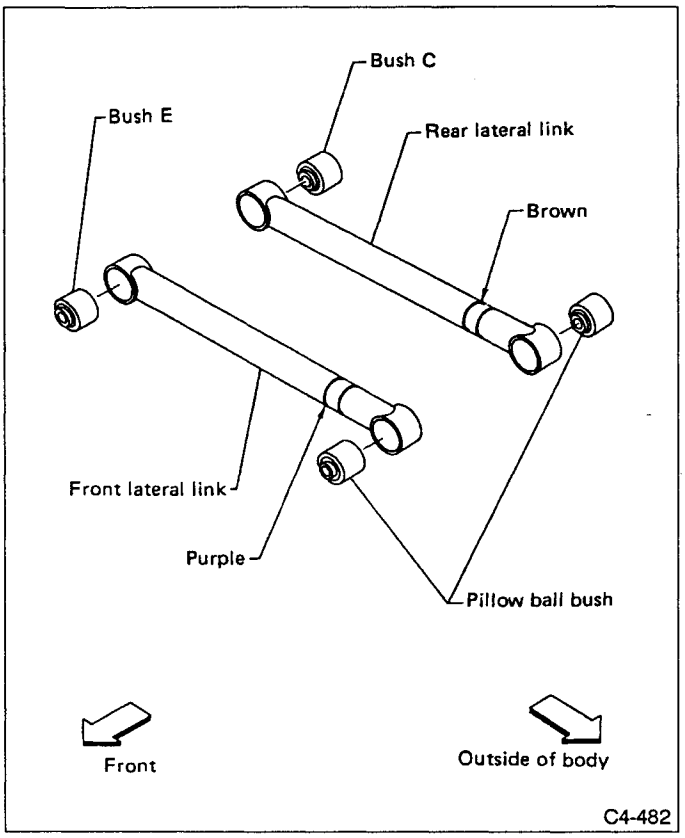

Fig. 77

Bushing	INSTALLER & REMOVER SET
Bushing C	927700000
Bushing E	927690000
Pillow ball bushing	20099PA010

D: ASSEMBLY

1) Using an INSTALLER & REMOVER, press bushing C and bushing E into place.

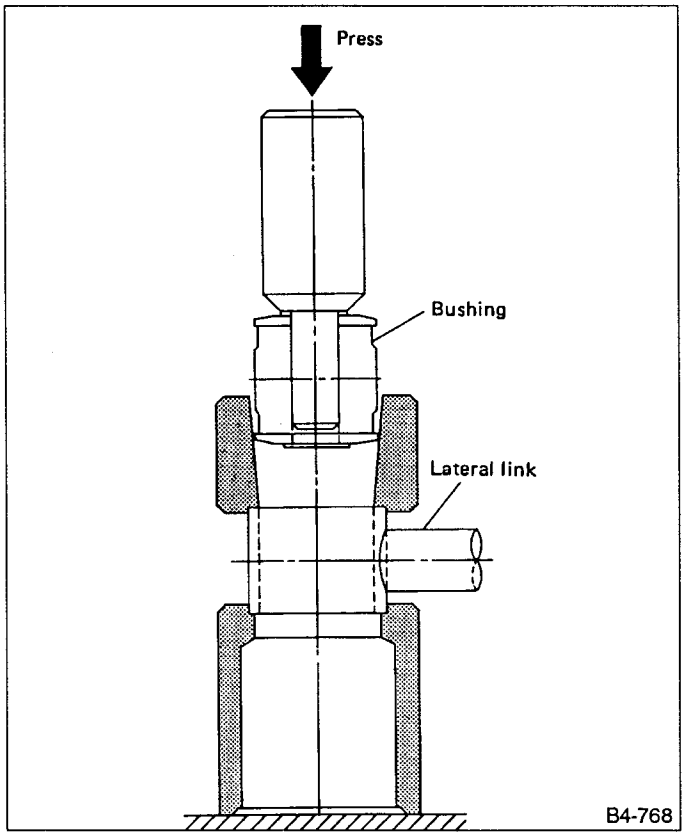

Fig. 78

2) Using an INSTALLER & REMOVER, press pillow ball bushing into place.

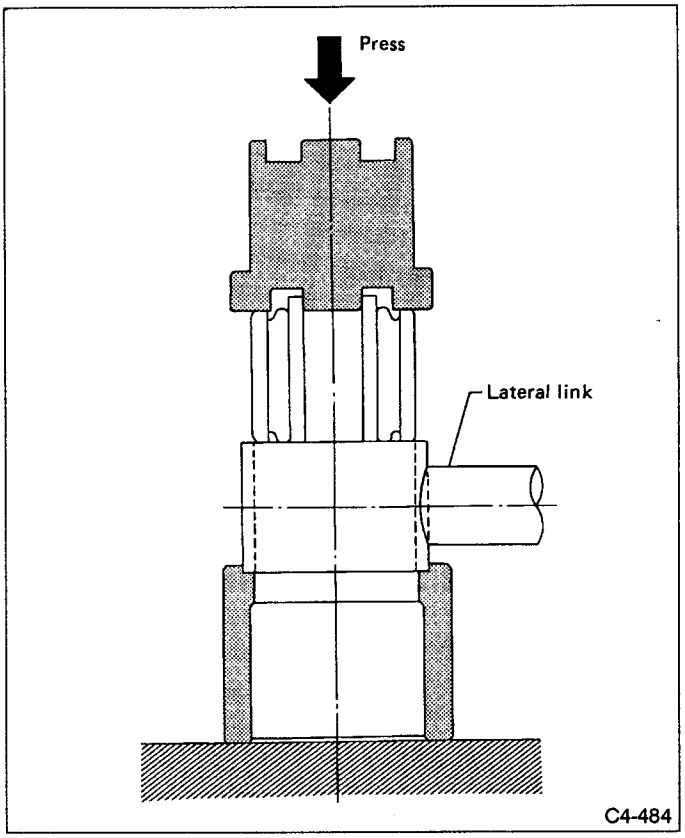

Fig. 79

a. Discard old bushing and replace with a new one.

9. Rear Strut

A: REMOVAL AND INSTALLATION

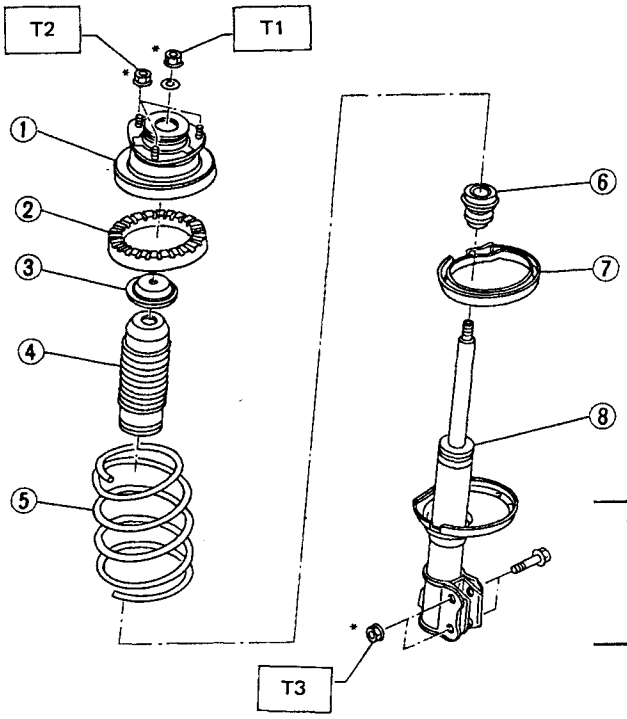

*: Parts unsuitable for re-use

1 Strut mount
2 Upper rubber seat
3 Guide
4 Dust cover
5 Coil spring
6 Helper
7 Lower rubber seat
8 Strut COMPL

Tightening torque: N·m (kg-m, ft-lb)
T1: 49 – 69 (5 – 7, 36 – 51)
T2: 12 – 24 (1.2 – 2.4, 9 - 17)
T3: 132 – 172 (13.5 – 17.5, 98 – 127)

C4-475

Fig. 80

1) Lift up vehicle and remove rear wheels.
2) Disconnect battery ground cable.
3) Remove rear quarter trim.
4) Separate brake hose from strut.

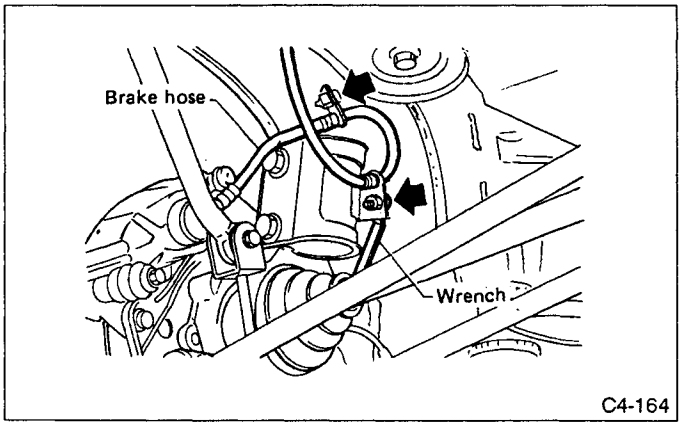

Fig. 81

5) Remove strut-to-housing securing nuts.
Leave one bolt connected.

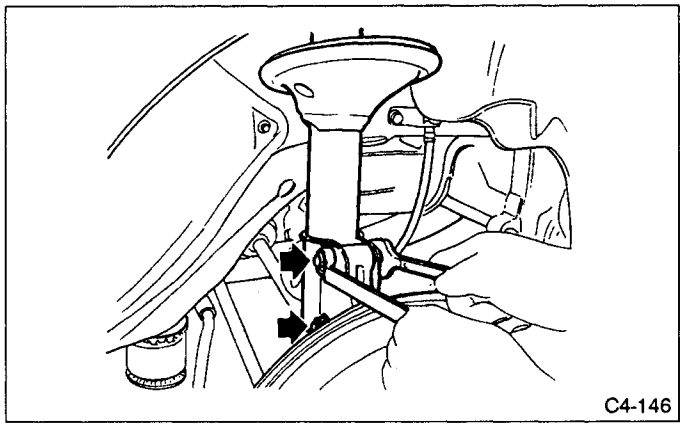

Fig. 82

6) Support housing assembly using a garage jack.

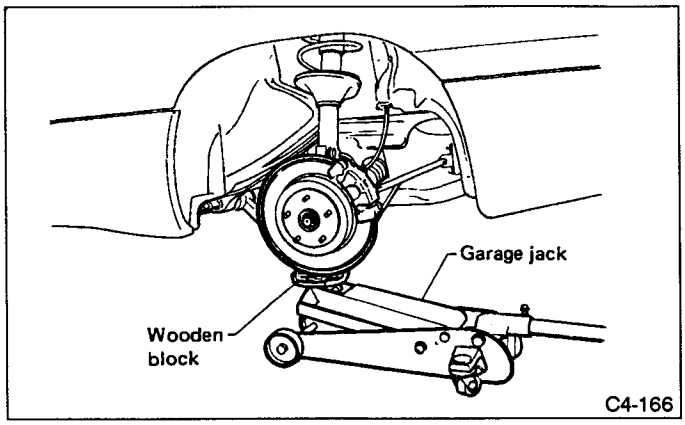

Fig. 83

7) Remove strut mount from body.

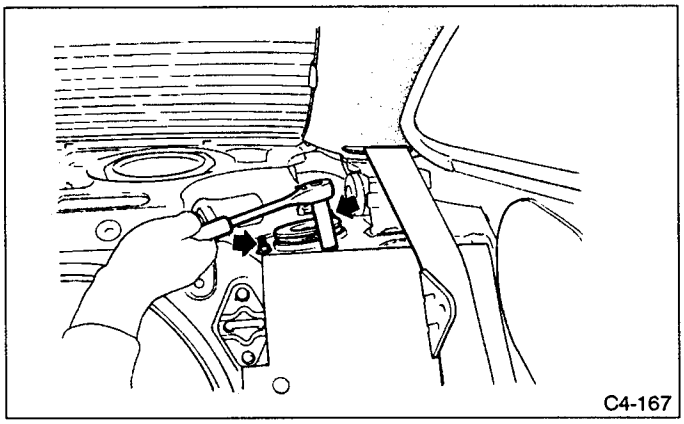

Fig. 84

8) Remove the bolt that was left connected from housing, and remove strut.
9) Installation is in the reverse order of removal.

B: DISASSEMBLY

For disassembly of rear strut ASSY, refer to procedures outlined under front strut ASSY as a guide.

C: INSPECTION

Refer to Front Strut ASSY as a guide for inspection procedures.

D: ASSEMBLY

Refer to Front Strut ASSY as a guide for assembly procedures.

a. Install rear strut assembly with notch outside of vehicle body.

b. Right side of strut ASSY has white paint mark and left side yellow mark.

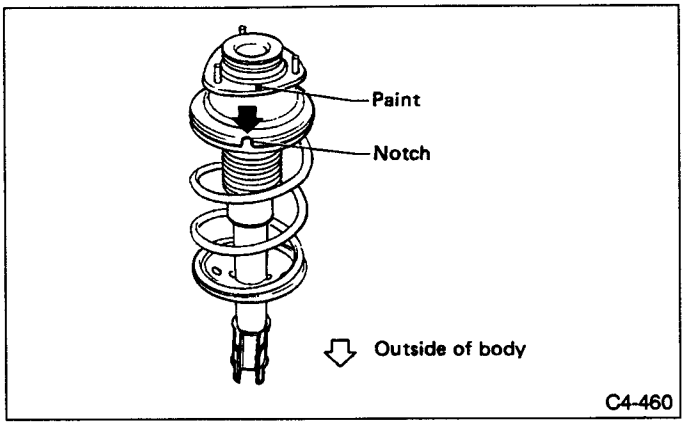

Fig. 85

Do not allow washer or strut mount to ride over graded section of piston rod during installation.

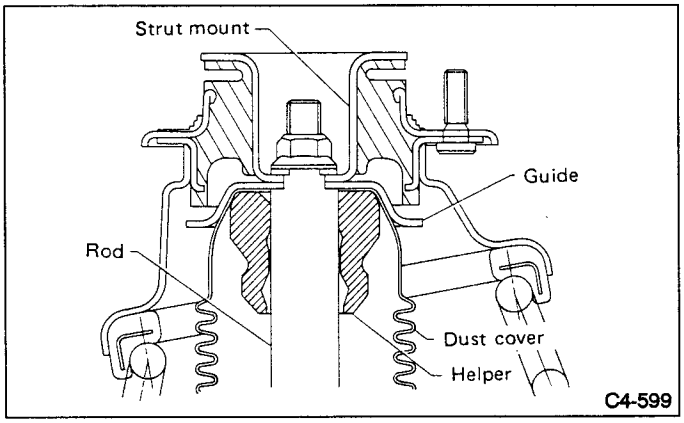

Fig. 86

10. Rear Stabilizer

A: REMOVAL AND INSTALLATION

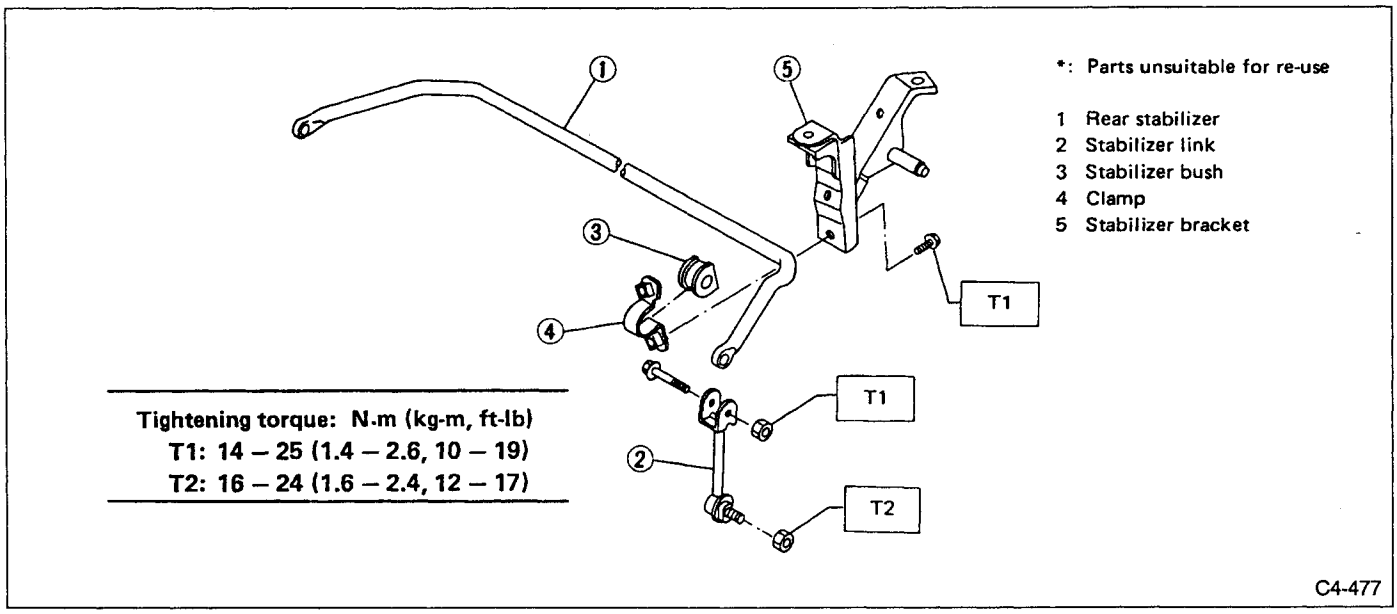

Fig. 87

1) Lift up vehicle.
2) Remove stabilizer link.

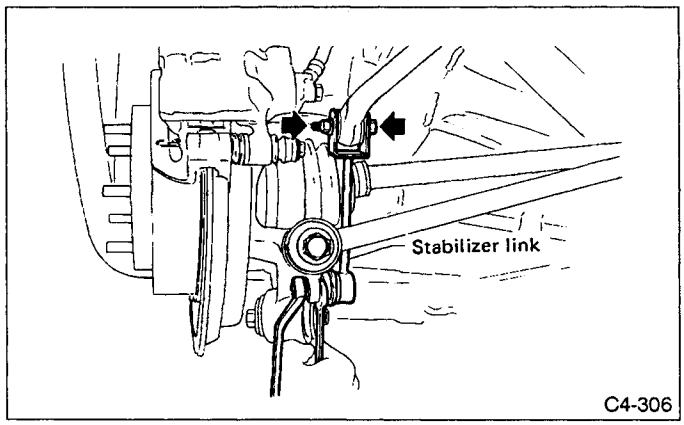

Fig. 88

3) Remove stabilizer clamps.

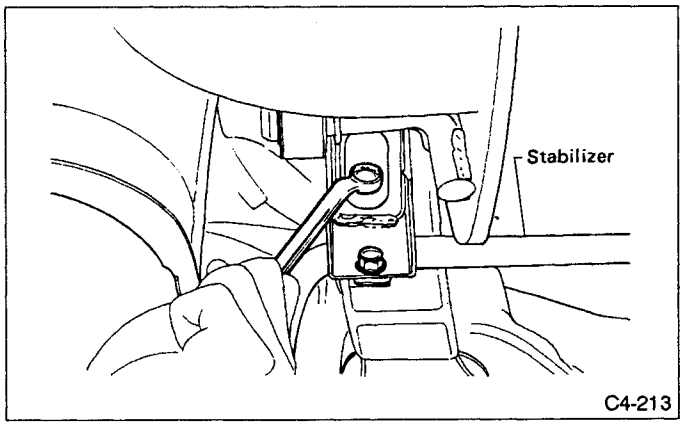

Fig. 89

4) Install in reverse order of removal.
a. Do not confuse left and right stabilizers during installation.
b. Right stabilizer has one more bend section than left stabilizer.

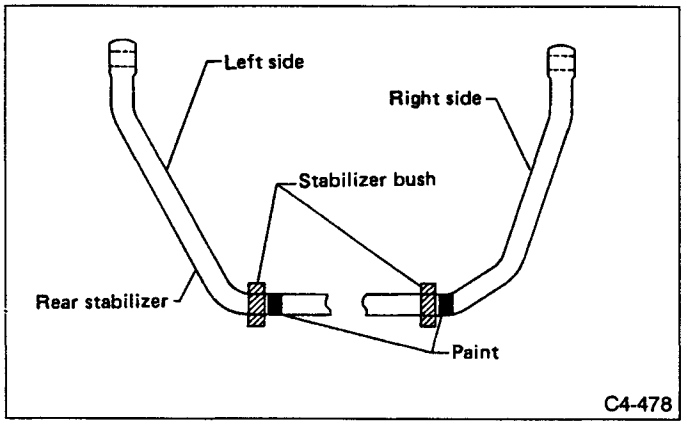

Fig. 90

c. Do not confuse upper and lower sides of clamp during installation.

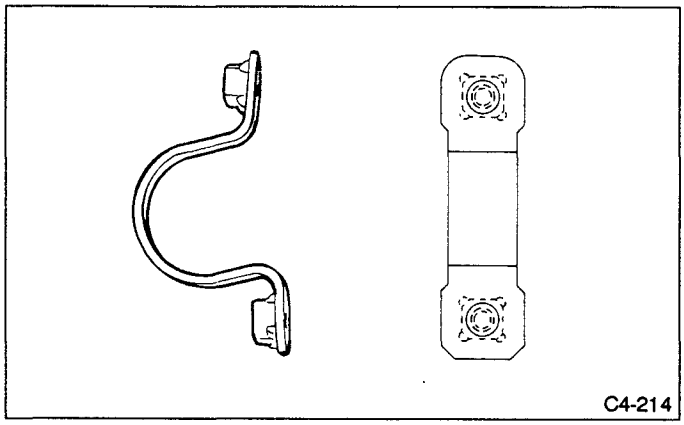

Fig. 91

B: INSPECTION

1) Check bushing for cracks, fatigue or damage.
2) Check stabilizer and link for damage, or bends.

11. Rear Sub Frame

A: REMOVAL AND INSTALLATION

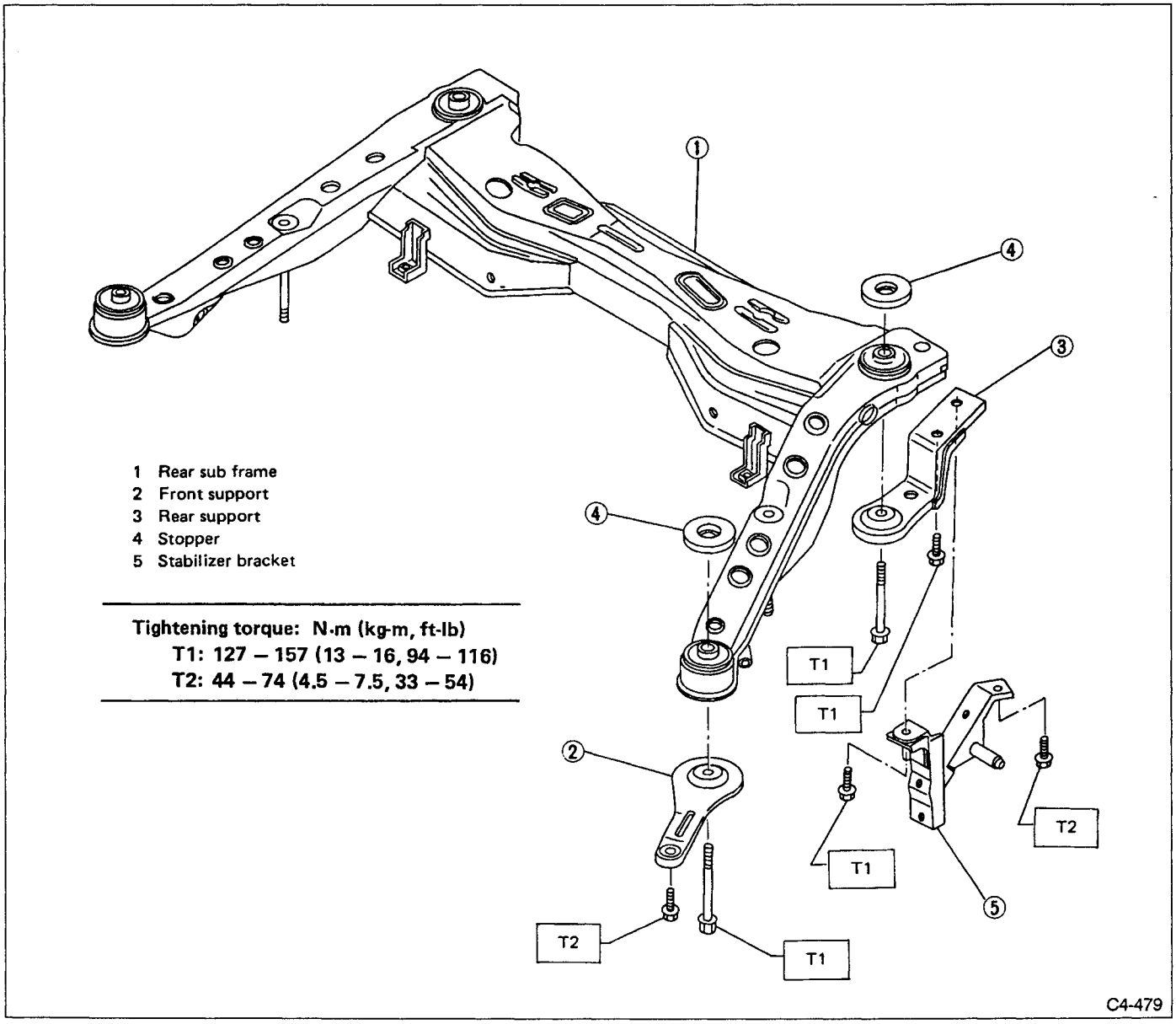

Fig. 92

1) Lift up vehicle and remove rear wheels.
2) Set shift lever to "N" range.
3) Release parking brakes.
4) Remove rear exhaust pipe and muffler.
5) Remove rear differential. (refer to 3-4 [W2A0].)
6) Remove tank cover.

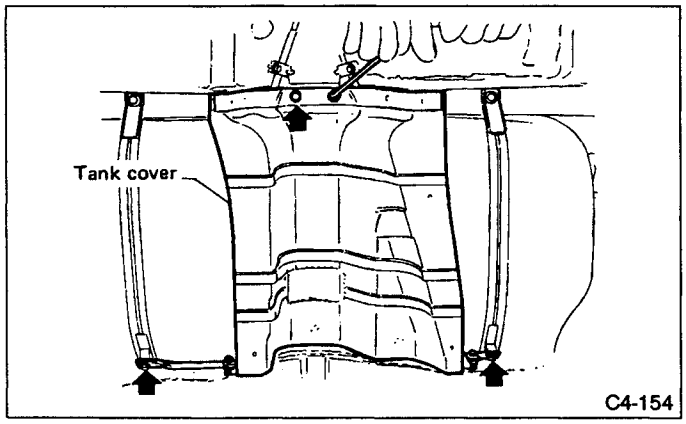

Fig. 93

7) Remove differential member.

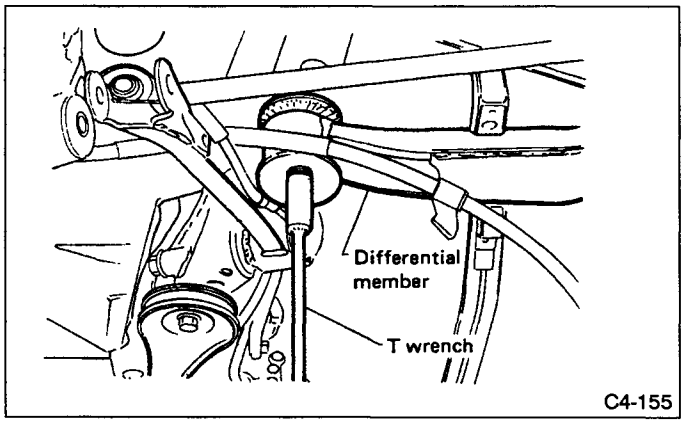

Fig. 94

8) Remove stabilizers.

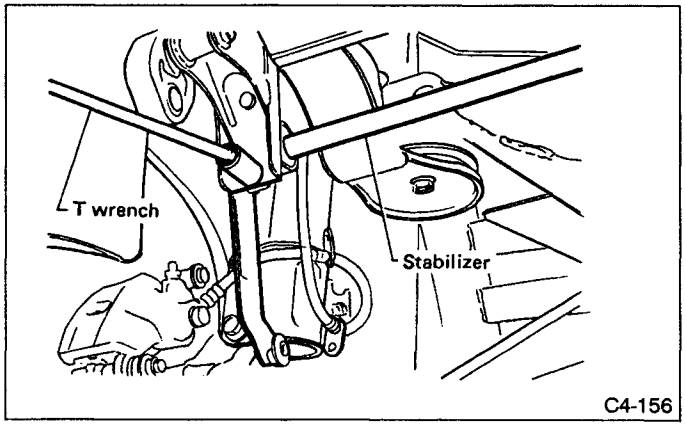

Fig. 95

9) Remove stabilizer brackets.

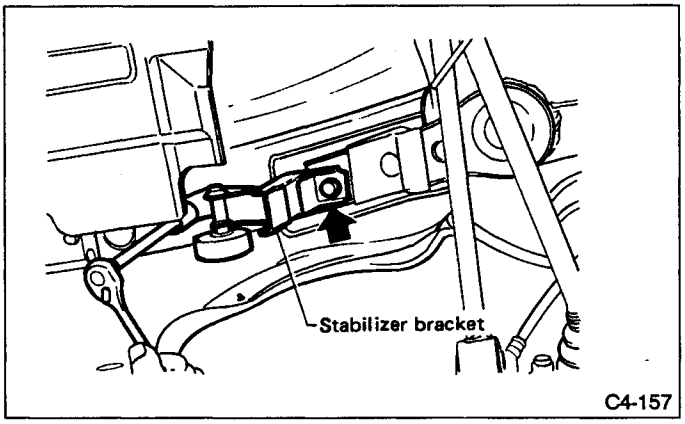

Fig. 96

10) Remove trailing links.

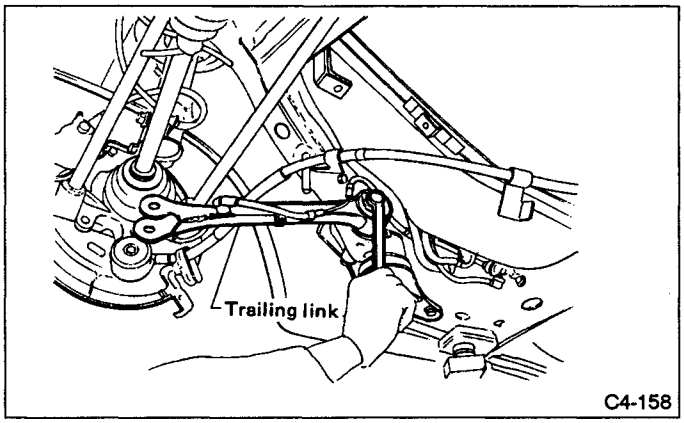

Fig. 97

11) Remove ABS sensor from back plate.

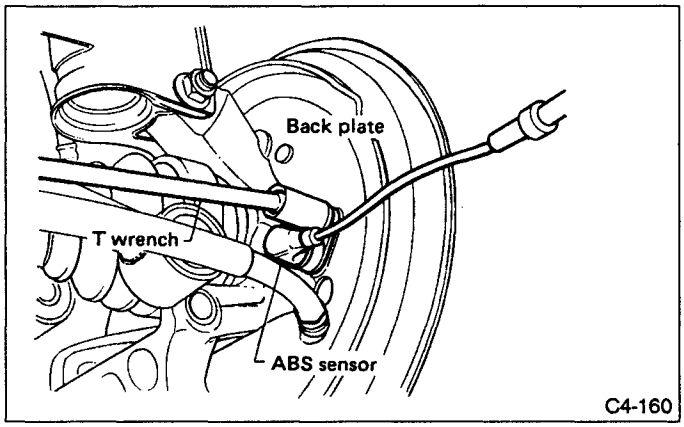

Fig. 98

12) Remove ABS sensor harness from sub frame.

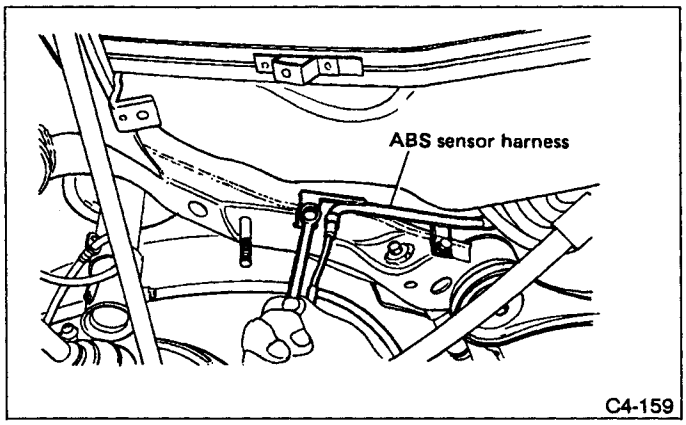

Fig. 99

13) Place transmission jack under sub frame.

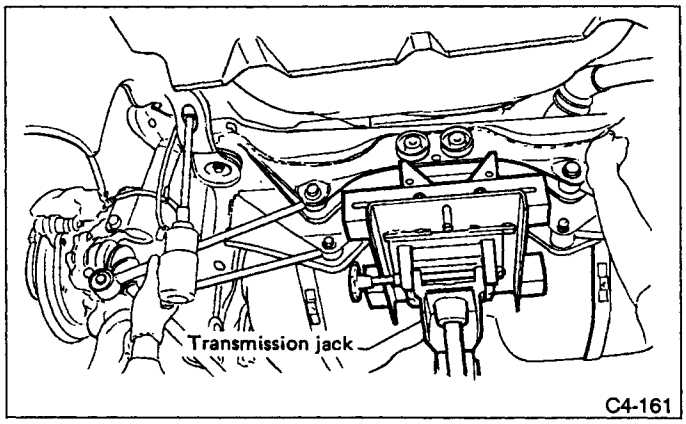

Fig. 100

14) Remove sub frame bracket.
Get help to remove sub frame bracket.

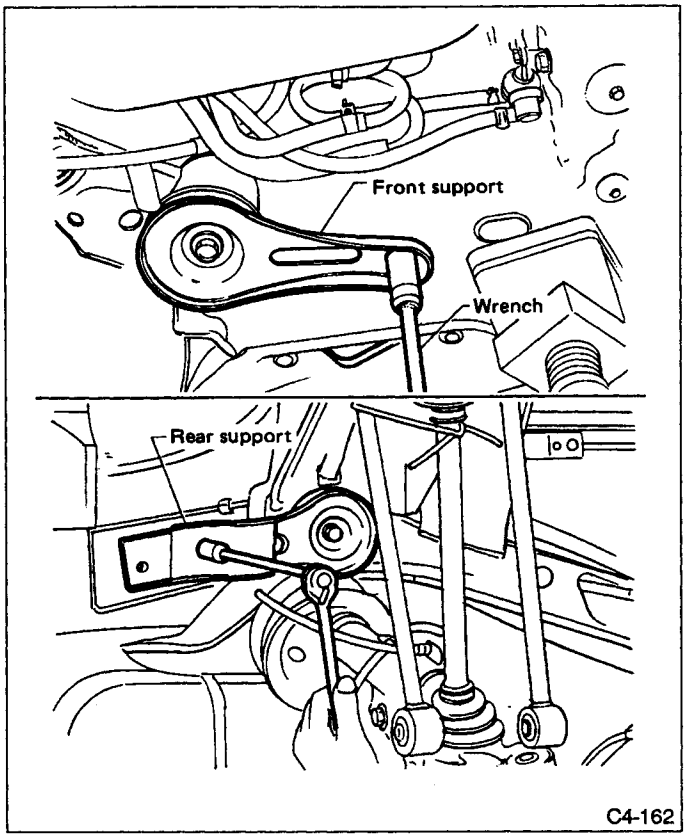

Fig. 101

15) Remove sub frame.
Be careful not to damage ABS harness and parking brake wire.
16) Place alignment mark on adjustment bolt and sub frame.
17) Remove lateral links.
a. For installation and tightening torque of rear differential, refer to 3-4 [W2A0].
b. For installation and tightening torque of brake parts, refer to 4-4 [W2A1].
c. When tightening trailing and lateral links, make sure vehicle weight is on suspension.
d. When replacing rear subframe with new one, cut hanger using saw and apply Knock Thrust Paint (7703) to prevent rust formation.

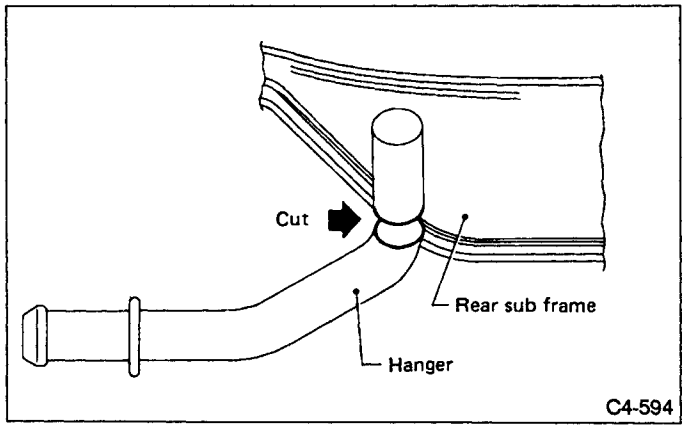

Fig. 102

T TROUBLESHOOTING

1. IMPROPER VEHICLE POSTURE OR IMPROPER WHEEL ARCH HEIGHT

Possible causes	Countermeasures
(1) Permanent distortion or breakage of coil spring	Replace.
(2) Unsmooth operation of damper strut	Replace.
(3) Installation of wrong lower arm	Replace with proper parts.
(4) Deformation of lower arm	Replace.

2. POOR RIDE COMFORT

1) Large rebound shock.
2) Rocking of vehicle continues too long after running over bump and/or hump.
3) Large shock in bumping.

Possible causes	Countermeasures
(1) Breakage of coil spring	Replace.
(2) Overinflation pressure of tire	Adjust.
(3) Improper wheel arch height	Replace coil springs with new ones.
(4) Fault in operation of damper strut	Replace.
(5) Damage or deformation of damper strut lower end bushing	Replace.
(6) Unsuitability of maximum and/or minimum length of damper strut	Replace with proper parts.
(7) Deformation or loss of bushing	Replace.
(8) Deformation or damage of helper	Replace.

3. NOISE

Possible causes	Countermeasures
(1) Wear or damage of damper strut component parts	Replace.
(2) Damage or deformation of damper strut lower end bushing	Replace.
(3) Loosening of lower arm installing bolt	Retighten to the specified torque.
(4) Deformation or loss of bushing	Replace.
(5) Loosening of lateral link installing bolt to sub frame bracket	Retighten to the specified torque.
(6) Unsuitability of maximum and/or minimum length of damper strut	Replace with proper parts.
(7) Breakage of coil spring	Replace.
(8) Loosening of each bolt and/or nut	Retighten to the specified torque.

SUBARU

SVX

1992

Page

M MECHANISM AND FUNCTION 2
1. Front Axle 2
2. Rear Axle 4
3. Aluminum Wheel 5
S SPECIFICATIONS AND SERVICE DATA 6
C COMPONENT PARTS 9
1. Front Axle 9
2. Rear Axle 10
W SERVICE PROCEDURE 11
1. Front Axle 11
2. Front Drive Shaft 17
3. Replacement of Front Drive Shaft Boot 22
4. Rear Axle 27
5. Rear Drive Shaft 34
6. Replacement of Rear Drive Shaft Boot 39
7. Aluminum Wheel and Tire 43
8. Wheel Balancing 44
9. Installation of Wheel Assembly to Vehicle 45
10. Tire Rotation 45
11. "T-type" Tire 46

M MECHANISM AND FUNCTION

1. Front Axle

A: GENERAL

The inboard end of the axle shaft is connected to the transmission via a constant velocity joint (Free-ring tripod joint: FTJ) which provides flexible capabilities in the longitudinal direction while the outboard end is supported by taper roller bearings located inside the housing via a bell joint (BJ) which features a large operating angle.

Since the drive shaft employs constant velocity joints, it provides smooth, even rotation of the drive wheels without any vibration.

The bearing utilizes a preloaded, non-adjustable tapered roller unit design.

The hub is fitted to the tapered roller bearing inside the housing. The BJ's spindle is "serration-fitted" to the hub and is clinched to it with axle nuts. After front axle parts have been repaired, toe-in should be adjusted.

The disc rotor is an external mounting type. It is secured together with the disc wheel using hub bolts to facilitate maintenance of the disc rotor.

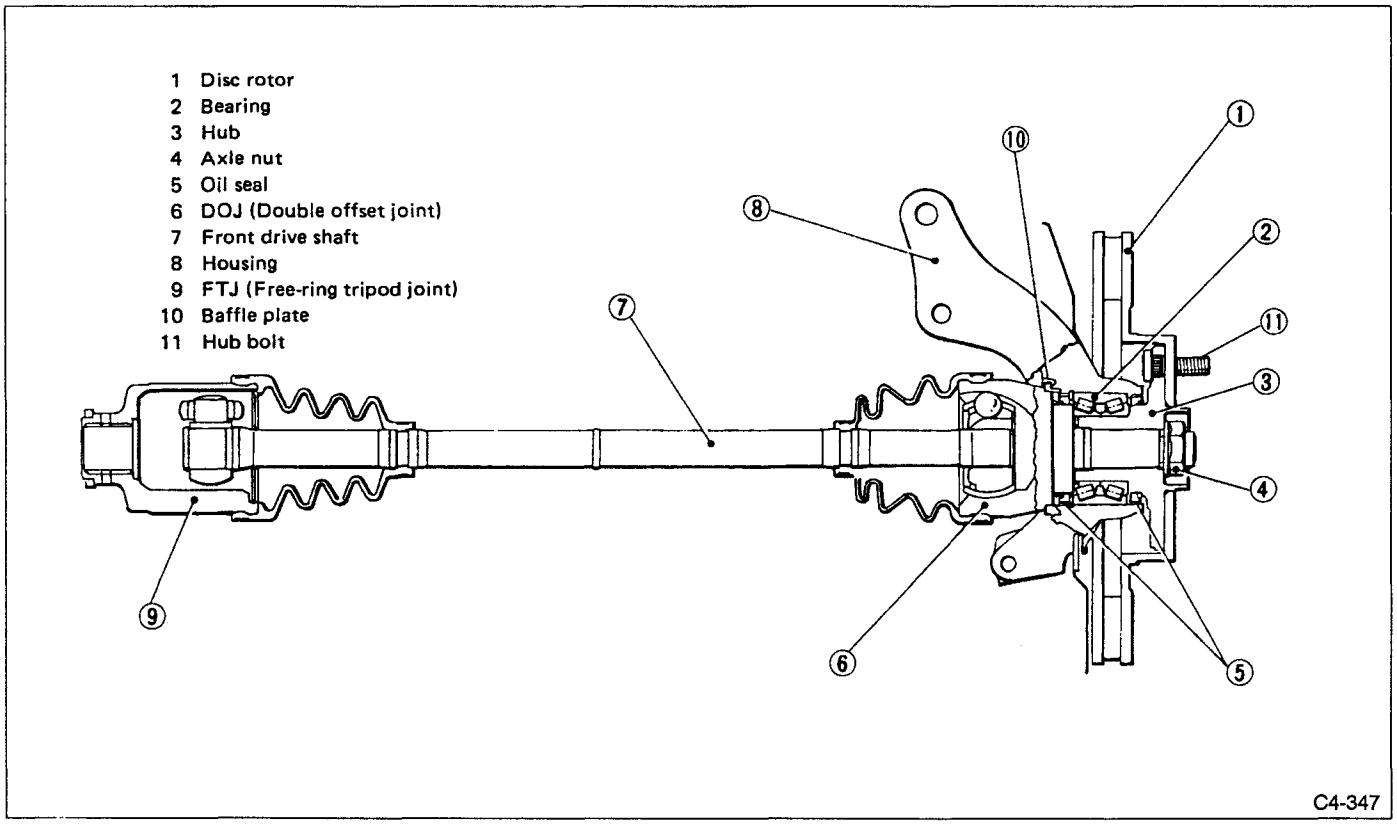

Fig. 1

B: FRONT DRIVE SHAFT

The constant-velocity joint on the transmission side uses a free ring tripod joint (FTJ) design which slides a maximum angle of 23° in the axial direction.

The FTJ features low sliding resistance that imparts engine vibration to vehicle body, especially during idling in the "D" range.

The constant-velocity joint on the tire side is a bell joint (BJ) which provides a maximum operating angle of 46°.

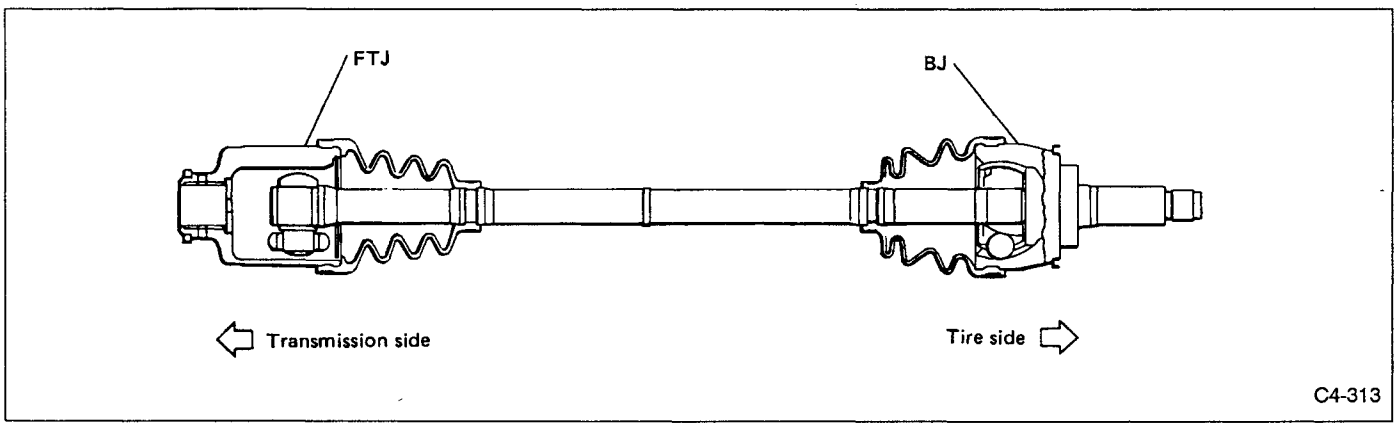

Fig. 2

1. CONSTRUCTION OF FREE-RING TRIPOD JOINT (FTJ)

The FTJ is an improved version of the TJ (tripod joint) to minimize sliding resistance.

In the previous TJ design, the roller rotated only in the axial direction. When the joint was subjected to a "bending" angle in the sliding direction, the roller slipped causing resistance.

In the new FTJ design, the outer surface of the roller is provided with a free ring to minimize roller slippage, greatly reducing sliding resistance.

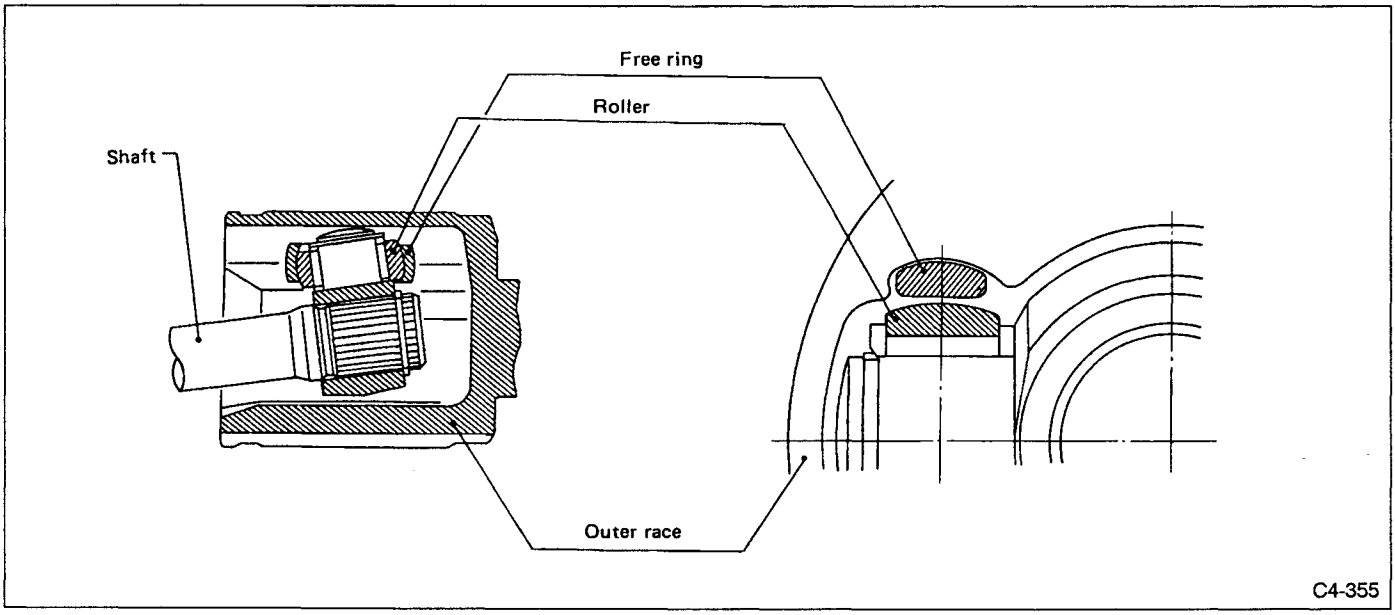

Fig. 3

2. Rear Axle

A: GENERAL

The inboard end of the axle shaft is connected to the transmission via a constant velocity joint (double offset joint: DOJ) which provides flexible capabilities in the longitudinal direction. The outboard end is supported by taper roller bearings located inside the housing via a bell joint (BJ) which features a large operating angle. Since the drive shaft employs constant velocity joints, it provides smooth, even rotation of the drive wheels without any vibration.

The bearing is a preloaded, non-adjustable tapered roller unit type.

The hub is fitted to the tapered roller bearing inside the housing. The BJ's spindle is "serration-fitted" to the hub and is clinched to it with axle nuts.

The disc rotor is externally mounted to facilitate maintenance. Hub bolts and axle nuts are also used to secure the front axle.

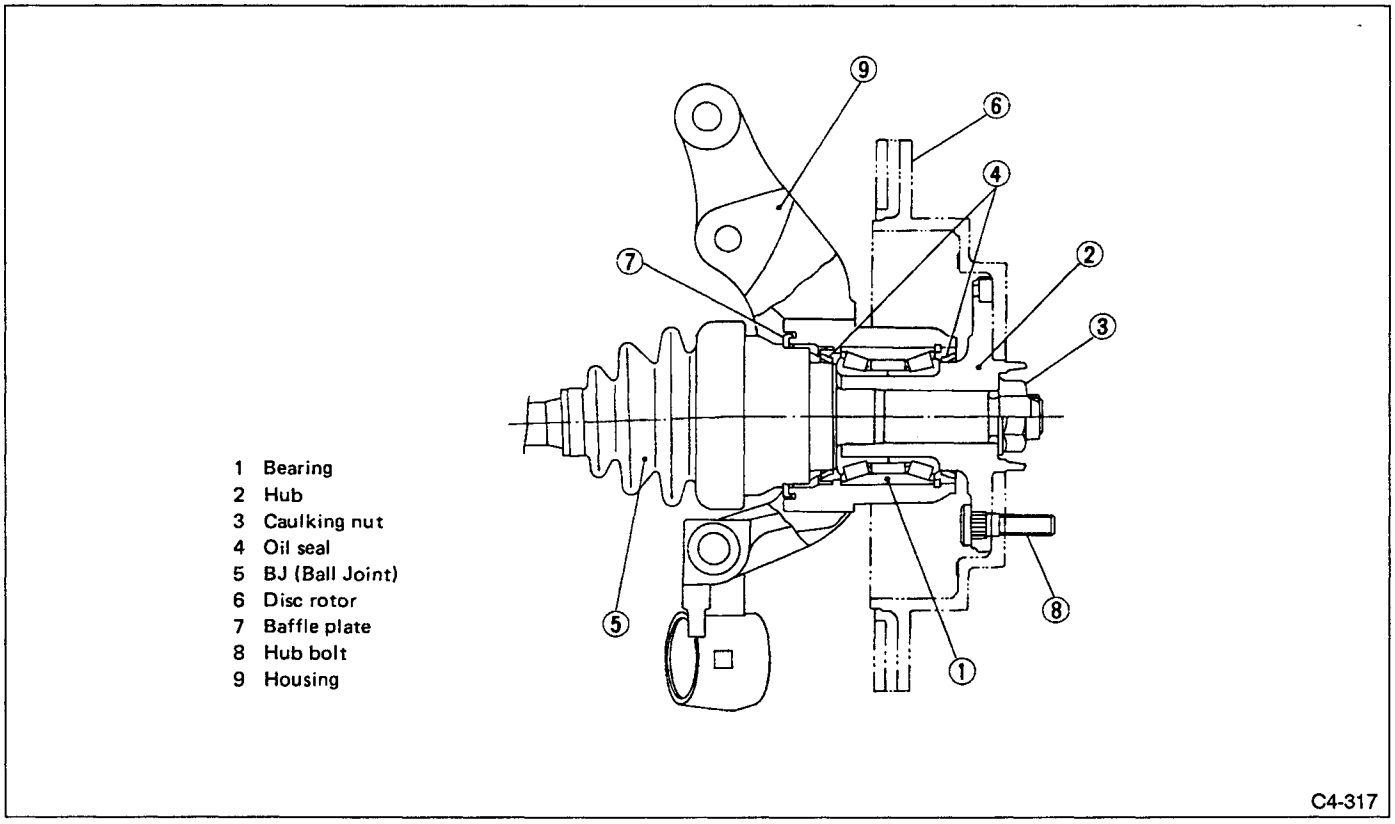

Fig. 4

B: REAR DRIVE SHAFT

The constant-velocity joint on the differential side is a double offset type (DOJ) which can be disassembled for maintenance. It provides the maximum operating angle of 23° and can be moved in the axial direction.
DOJ outer race and the rear differential spindle are combined in order to improve resistance to corrosion.
The constant-velocity joint on the tire side is a bell type (BJ) which provides a maximum operating angle of 46°.

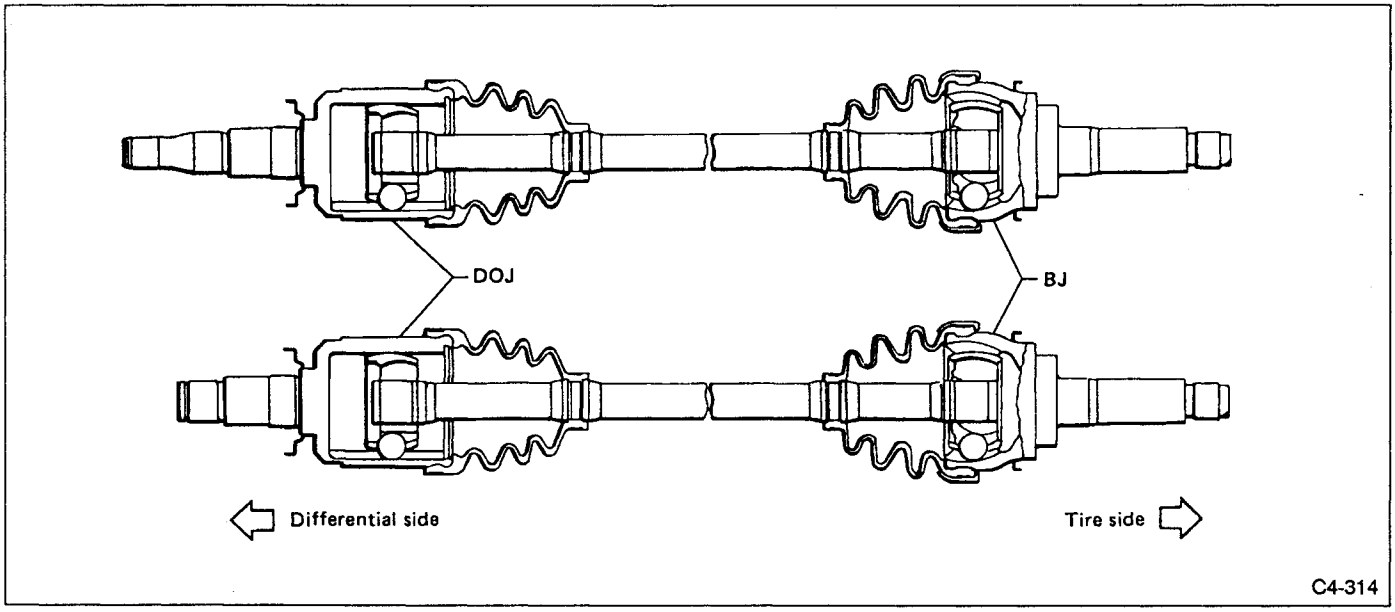

Fig. 5

3. Aluminum Wheel

A: GENERAL

Aluminum wheels are used as standard equipment to reduce unsprung weight, increase steering stability and improve riding comfort. These wheels provide both functional design and are aesthetically pleasing.

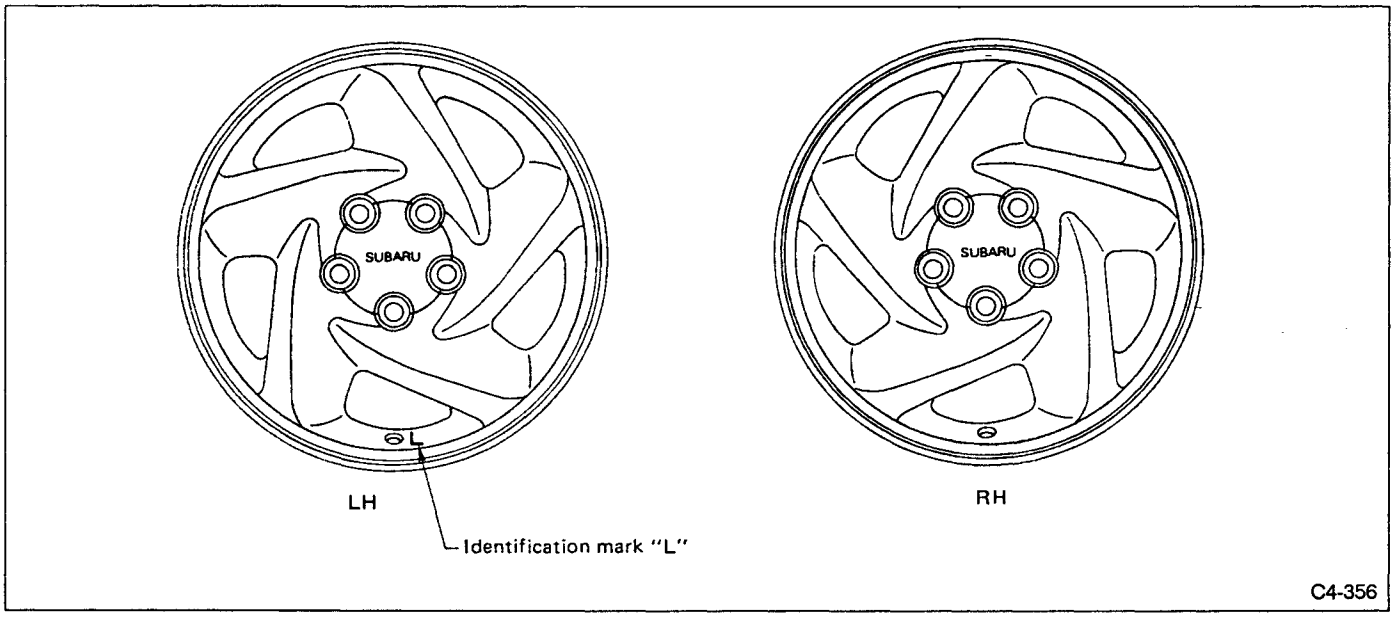

Fig. 6

S SPECIFICATIONS AND SERVICE DATA

A: SPECIFICATIONS

1. TIRE & WHEEL SIZE

Front and Rear			
Tire size	Rim size	Rim offset mm (in)	PCD mm (in)
P225/50R16 91V	16 × 7 1/2JJ	55 (2.17)	114.3 (4.50)

"T-type" Spare tire			
Tire size	Rim size	Rim offset mm (in)	PCD mm (in)
T135/80D16	16 × 4T	45 (1.77)	114.3 (4.50)

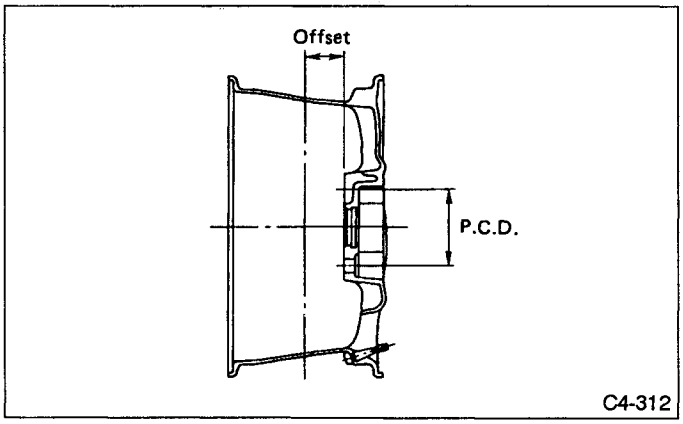

Fig. 7

2. TIRE INFLATION PRESSURE

Tire size	Tire inflation pressure kPa (kg/cm^2, psi)	
	Front	Rear
P225/50R16 91V	230 (2.3, 33)	200 (2.0, 28)
*T135/80D16	420 (4.2, 60)	

*: "T-type" Spare tire

3. FRONT DRIVE SHAFT ASSEMBLY

Type of axle shaft ASSY	Distance between inner and outer boots (L) mm (in)	Diameter (D) mm (in)
95AC — 25	286.5 (11.28)	24.0 (0.945)

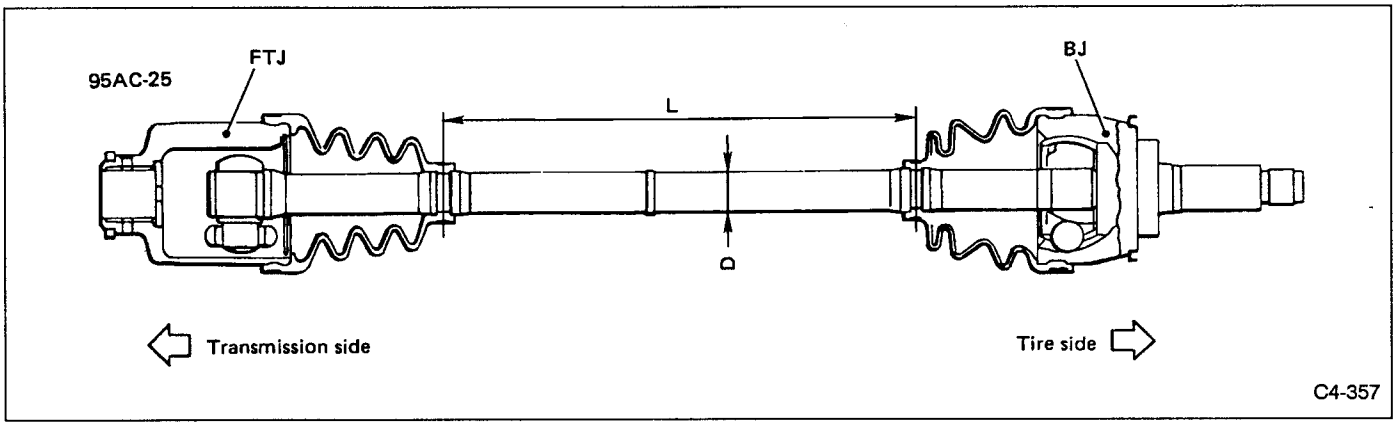

Fig. 8

4. REAR DRIVE SHAFT ASSEMBLY

Type of axle shaft ASSY	Distance between inner and outer boots (L) mm (in)	Diameter (D) mm (in)
87AC — RH	305 (12.01)	22.2 (0.874)
87AC — LH		

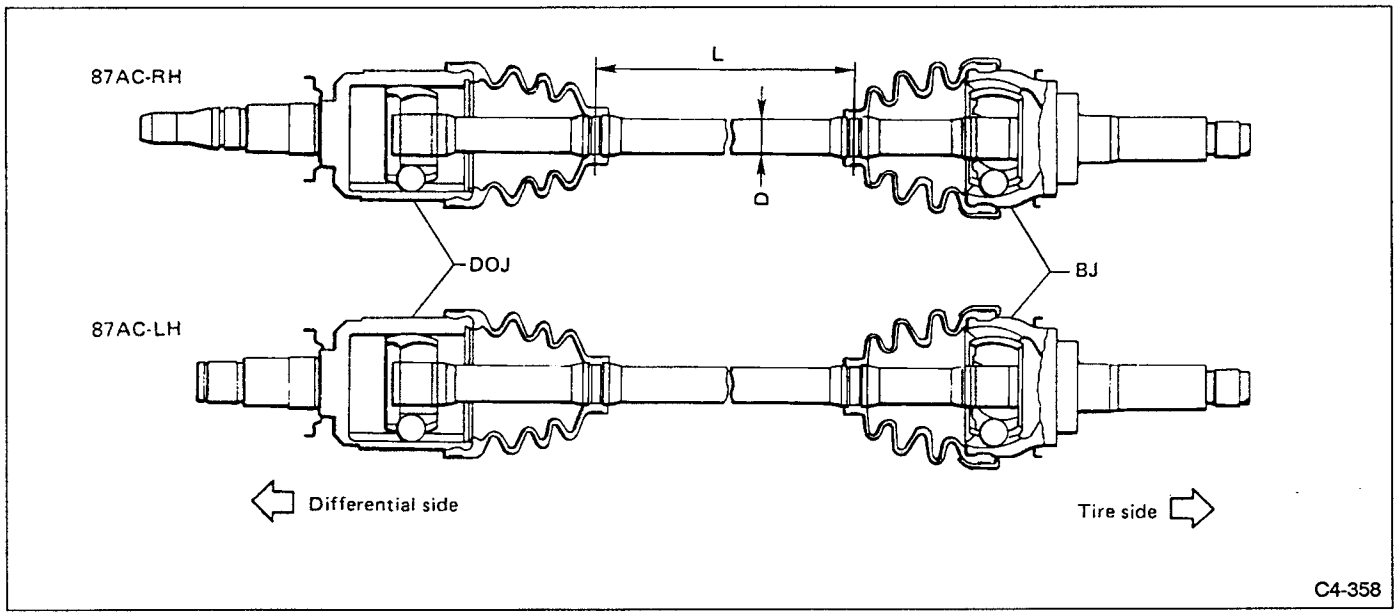

Fig. 9

B: SERVICE DATA

Item			Standard	Service Limit
Wheel balancing	Dynamic unbalance		Less than 5 g (0.18 oz)	
	Balance weight part number			
		For aluminum wheel	Weight g (oz)	
		23141GA462	5 (0.18)	
		23141GA472	10 (0.35)	
		23141GA481	15 (0.53)	
		23141GA491	20 (0.71)	
		23141GA501	25 (0.88)	
		23141GA511	30 (1.06)	
		23141GA521	35 (1.23)	
		23141GA531	40 (1.41)	
		23141GA541	45 (1.59)	
		23141GA551	50 (1.76)	
		—	55 (1.94)	
		23141GA571	60 (2.12)	

C COMPONENT PARTS

1. Front Axle

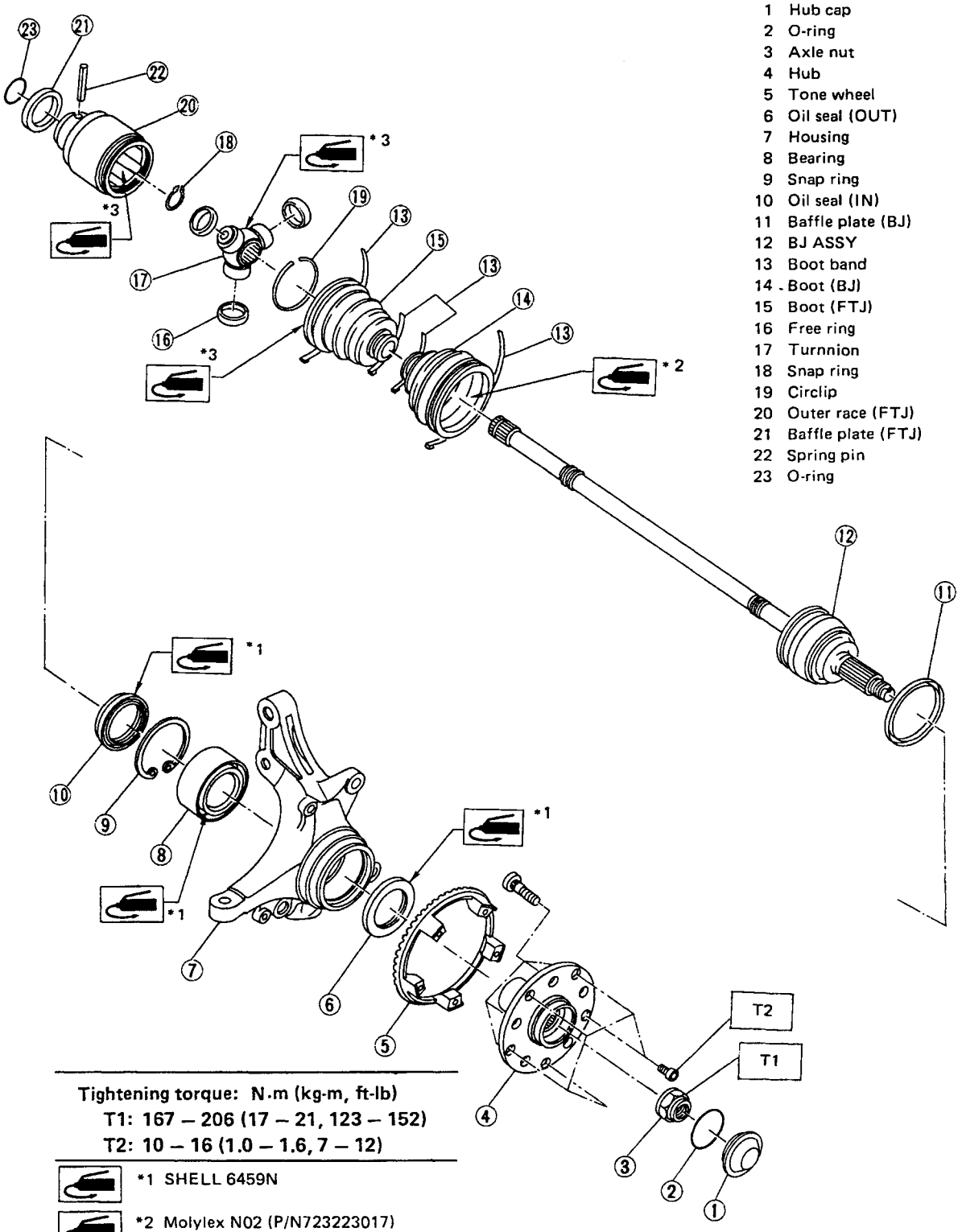

Fig. 10

2. Rear Axle

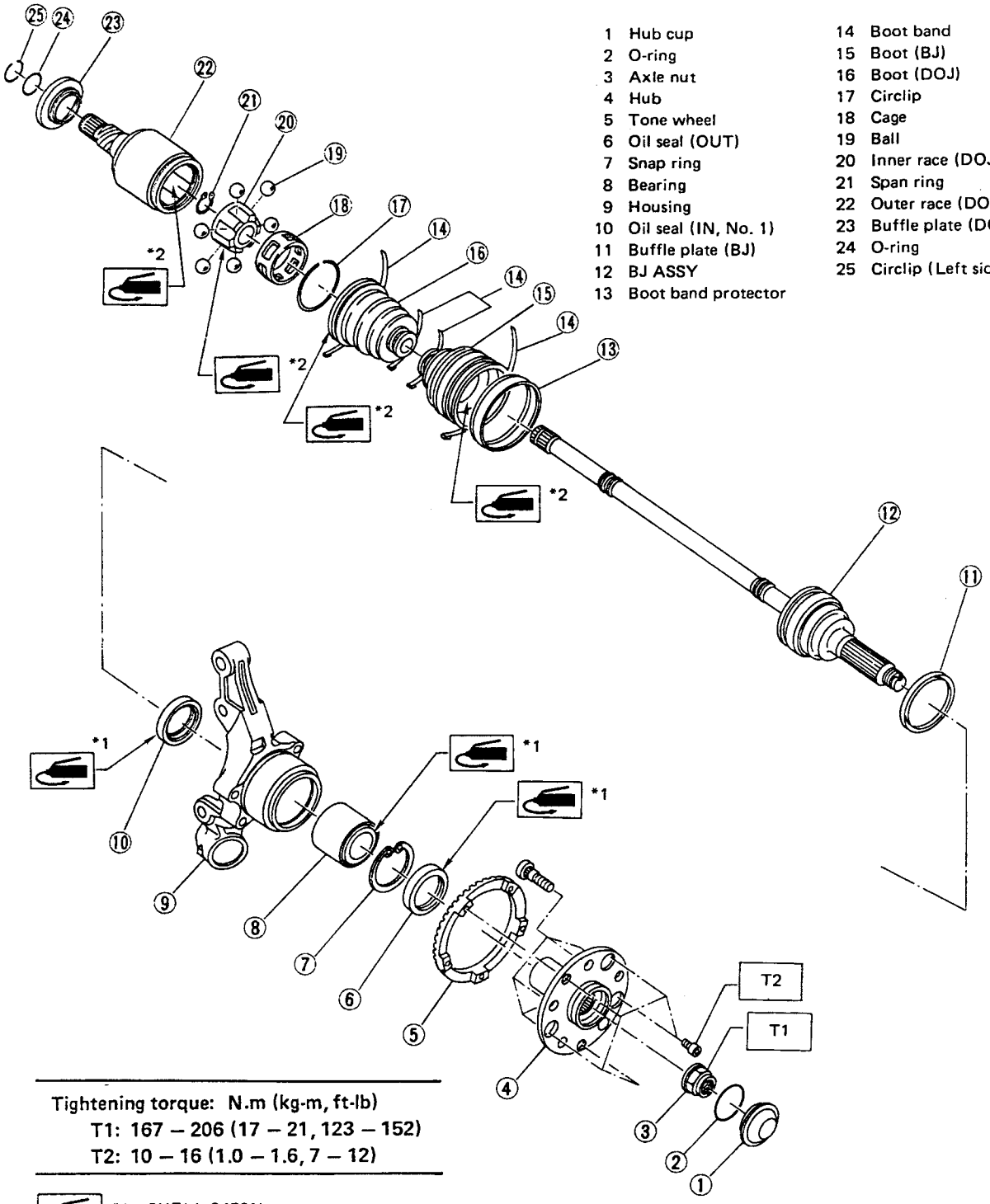

Tightening torque: N.m (kg-m, ft-lb)
T1: 167 – 206 (17 – 21, 123 – 152)
T2: 10 – 16 (1.0 – 1.6, 7 – 12)

*1: SHELL 6459N

*2: Molylex No. 2 (P/N723223010)

C4-316

Fig. 11

W SERVICE PROCEDURE

1. Front Axle

A: REMOVAL AND INSTALLATION

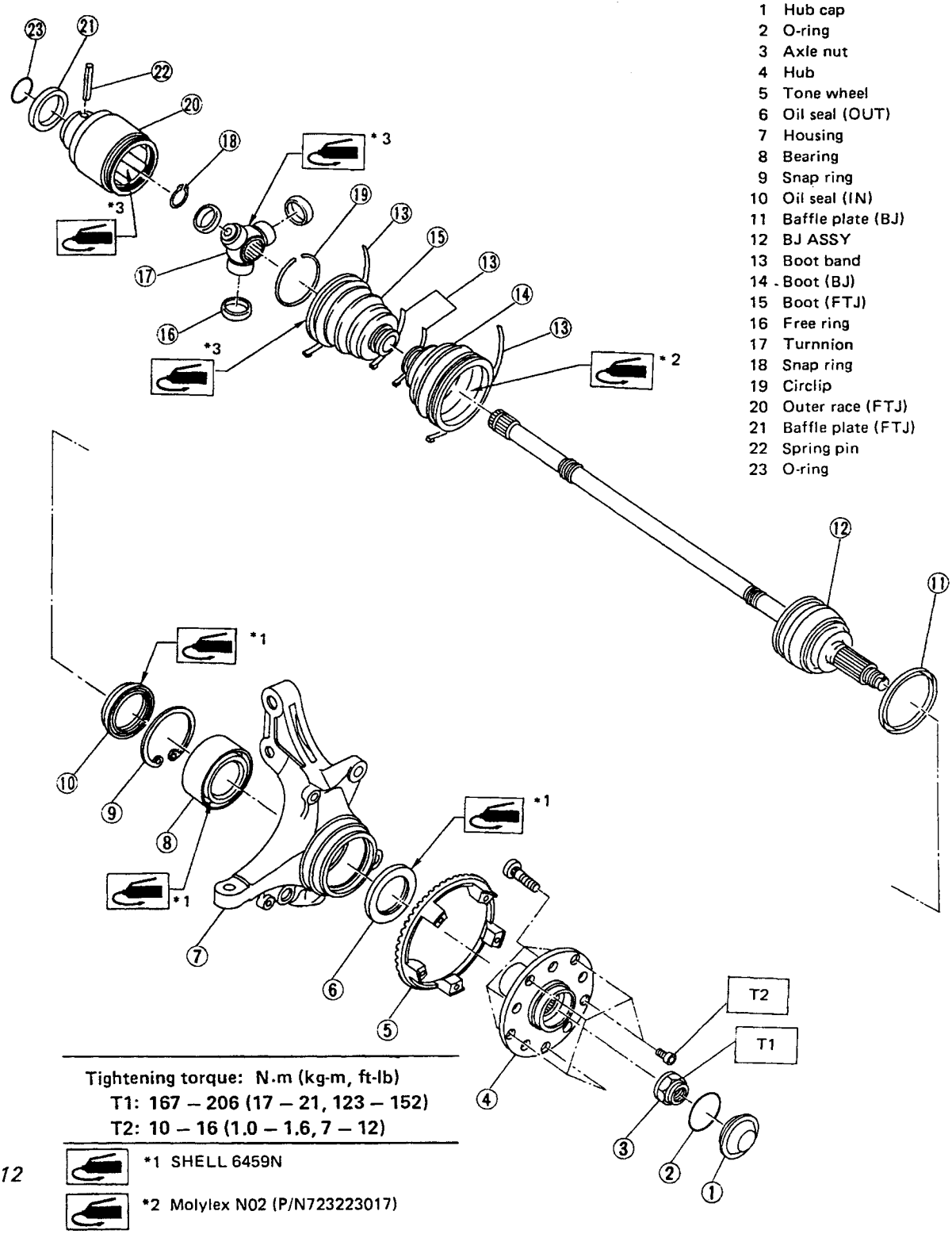

Tightening torque: N·m (kg-m, ft-lb)
T1: 167 – 206 (17 – 21, 123 – 152)
T2: 10 – 16 (1.0 – 1.6, 7 – 12)

*1 SHELL 6459N

*2 Molylex N02 (P/N723223017)

*3 SSG 6003

Fig. 12

1) Lift up and remove front wheels.
2) Remove hub caps.
3) Unlock axle nut.

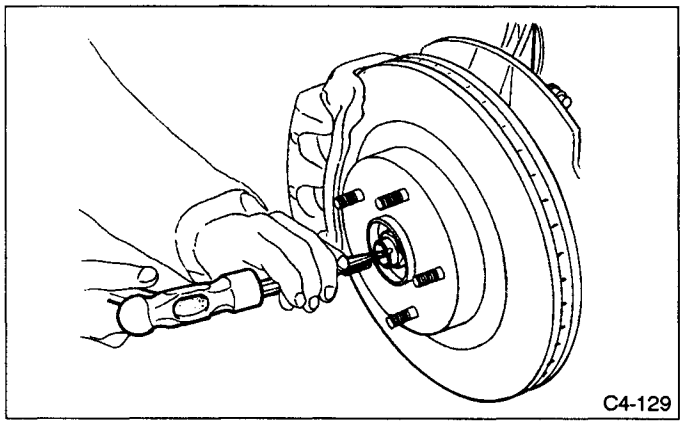

Fig. 13

4) Depress brake pedal to stop drive shaft rotation. Remove axle nut with socket wrench.
Be sure to loose and retighten axle nut after removing wheel from vehicle. Failure to follow this rule may damage wheel bearings.
5) Remove bolts which secure ball joint to housing.

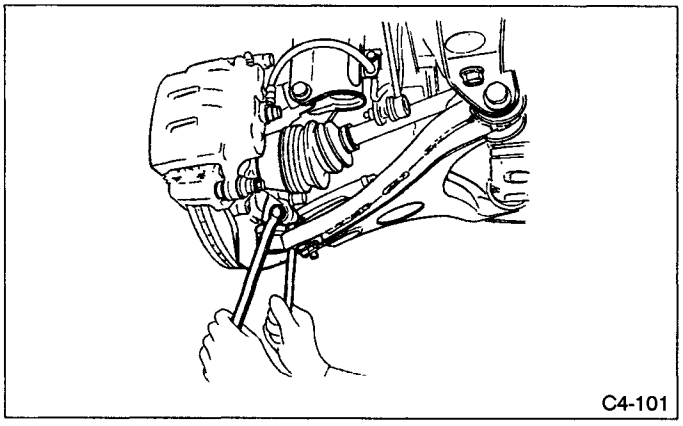

Fig. 14

6) Disconnect ABS sensor from housing.

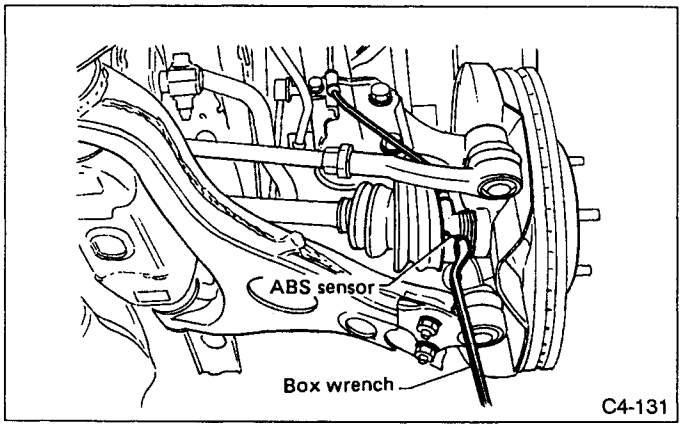

Fig. 15

7) Disconnect brake hose clamp from strut.

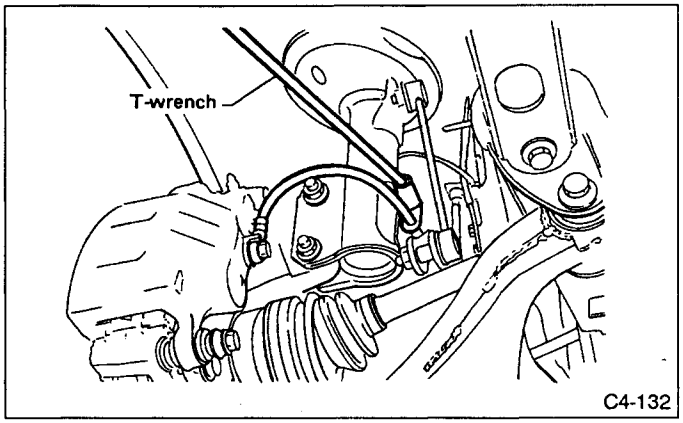

Fig. 16

8) After scribing an alignment mark on camber adjusting bolt head, remove nuts which connect housing and strut.
Do not remove upper bolt.

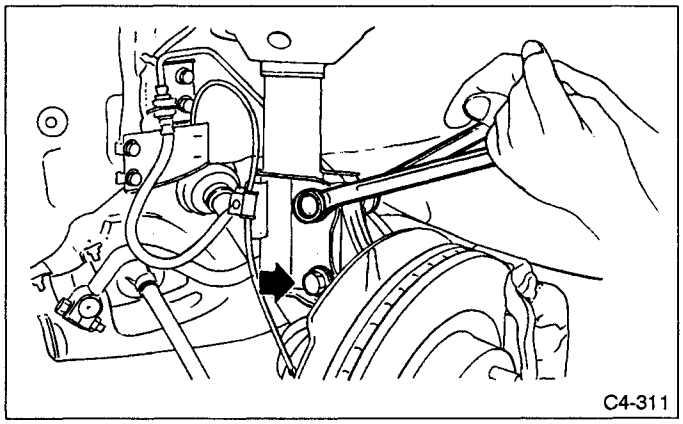

Fig. 17

9) Disconnect brake caliper ASSY from housing.

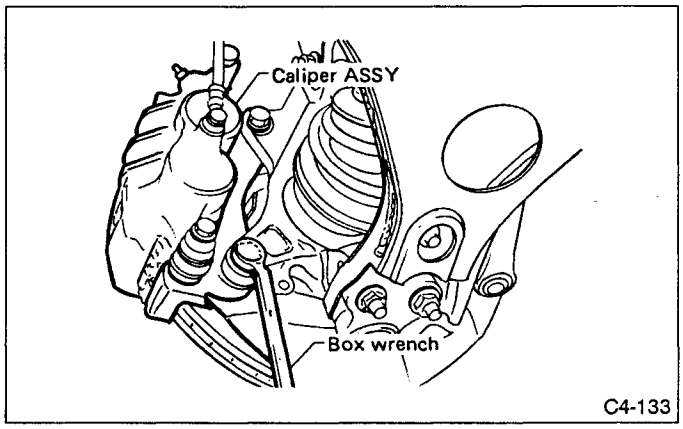

Fig. 18

10) Fasten caliper assembly to strut using wire.

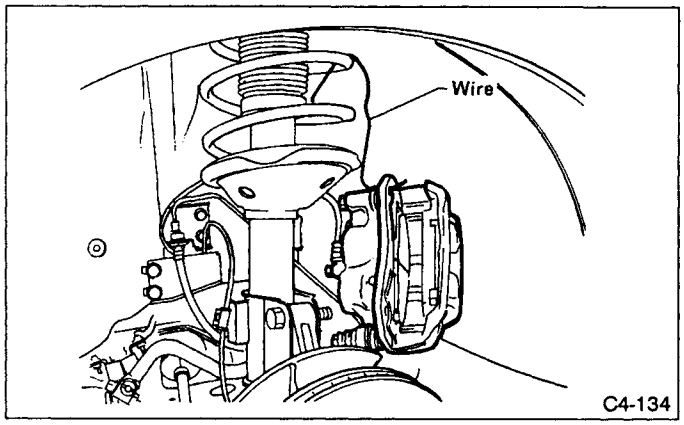

Fig. 19

11) Remove BJ from housing. If it is hard to remove, use REMOVER (926470000) and PLATE (28099PA110).
a. Be careful not to damage oil seal lip when removing drive shaft.
b. When replacing drive shaft, also replace inner oil seal.
12) Remove disc rotor from hub.
If disc rotor seizes up within hub, drive disc rotor out by installing an 8-mm bolt in screw hole on the rotor.

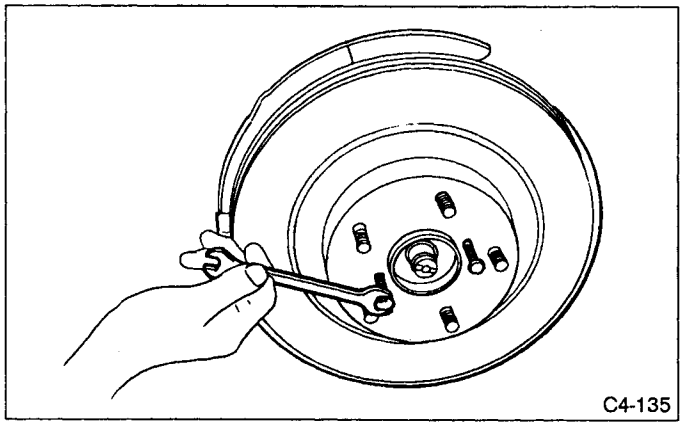

Fig. 20

13) Remove cotter pin and castle nut which secure tie-rod end to housing knuckle arm.
14) Using a puller, remove tie rod ball joint from knuckle arm.

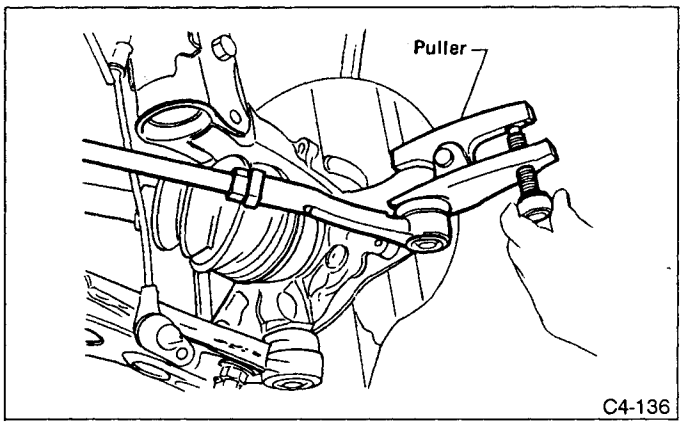

Fig. 21

15) Remove housing assembly.
16) Install in reverse order of removal. For installation and tightening torque of suspension parts, refer to 4-1 [C100].
For installation and tightening torque of brake parts, refer to 4-4 [C100].
a. Be careful not to damage inner oil seal lip.
b. Use a new self-locking nut.
c. Use a new axle nut.
d. Always tighten axle nut before installing wheel on vehicle. If wheel is installed and comes in contact with ground when axle nut is loose, wheel bearings may be damaged.
e. Be sure to tighten axle nut to specified torque. Do not overtighten it as this may damage wheel bearing.
17) After tightening axle nut, caulk it securely.

B: DISASSEMBLY

1) Using HUB STAND (28099PA080), support housing and hub ASSY securely.
2) Attach HUB REMOVER "FRONT" (28099PA040) to housing and drive hub COMPL out.

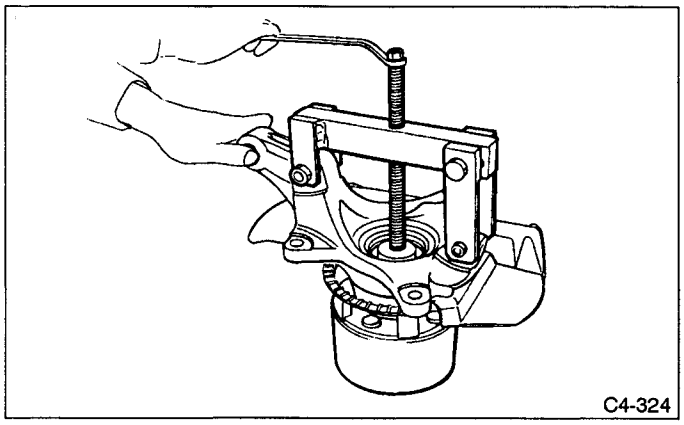

Fig. 22

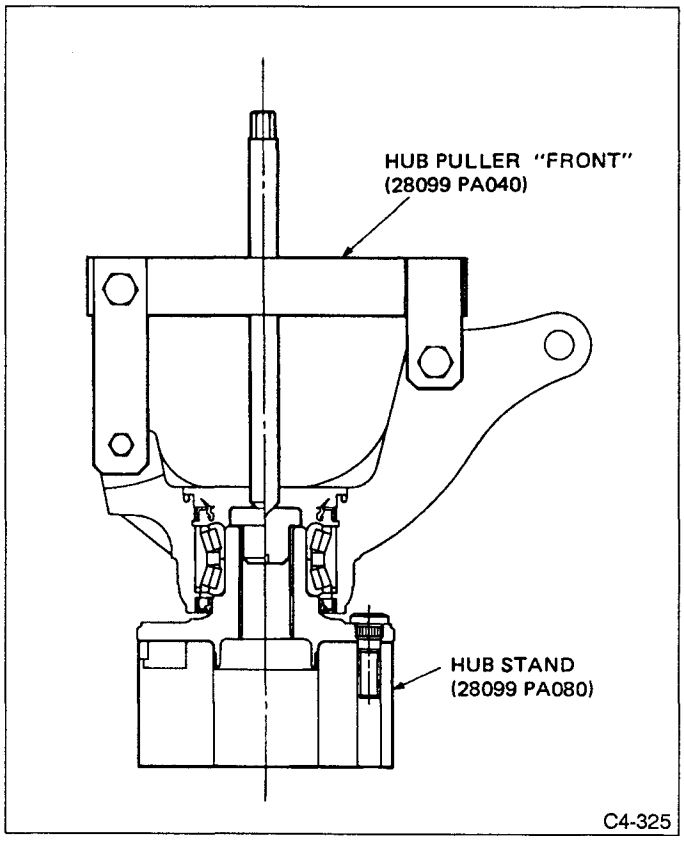

Fig. 23

If inner bearing race remains in the hub, remove it with a suitable tool (commercially available).
a. Be careful not to scratch polished area of hub.
b. Be sure to install inner race on the side of outer race from which it was removed.

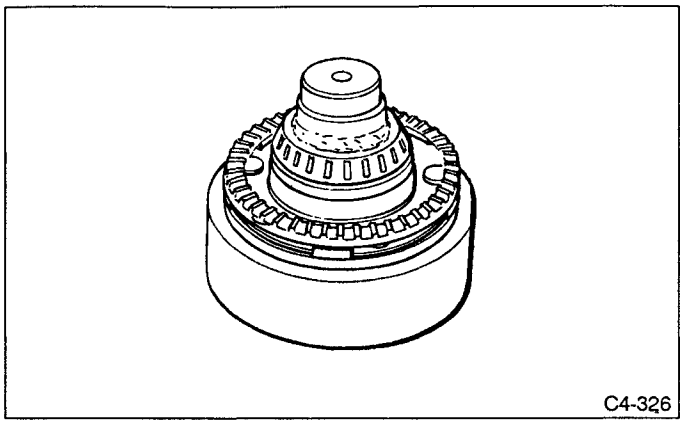

Fig. 24

3) Remove disc cover from housing.

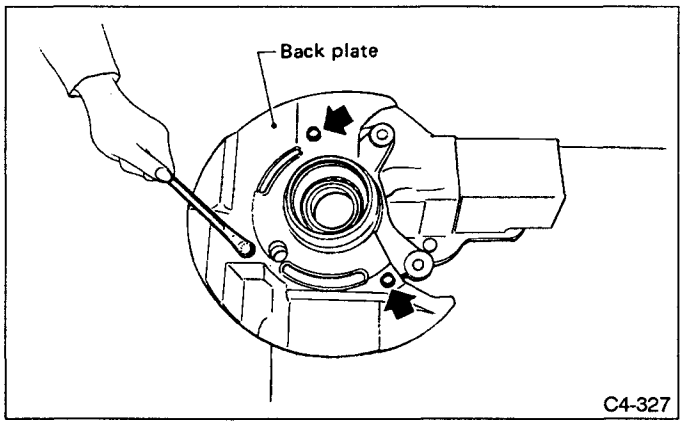

Fig. 25

4) Using a standard screwdriver, remove outer and inner oil seals.
Do not use old oil seals.
5) Using pliers, remove snap ring.

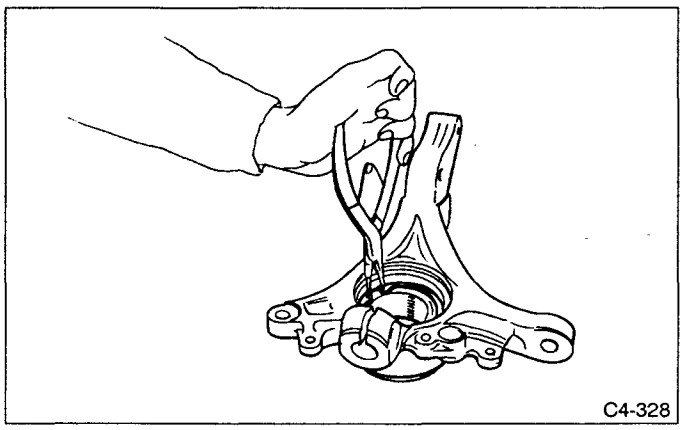

Fig. 26

6) Using HOUSING STAND "FRONT" (28099PA010), support housing securely.
7) Using BEARING INSTALLER "FRONT" (28099PA000), press inner race to drive out outer bearing.
a. Do not remove outer race unless it is faulty.
b. Discard outer race after removal.

c. Do not replace inner or outer race separately; always replace as a unit.

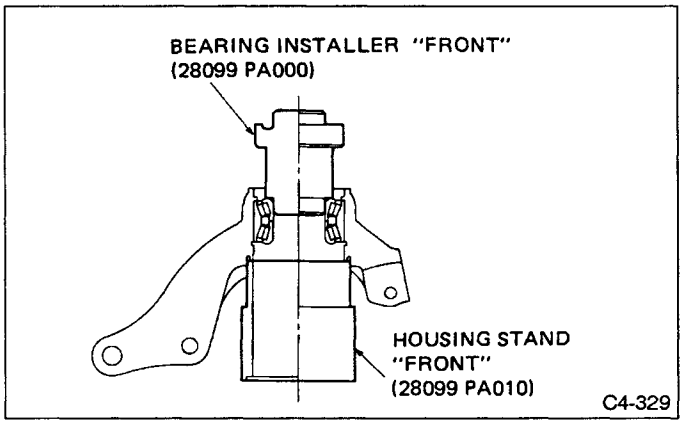

Fig. 27

8) Loosen bolts which secure tone wheel to hub. Remove tone wheel.

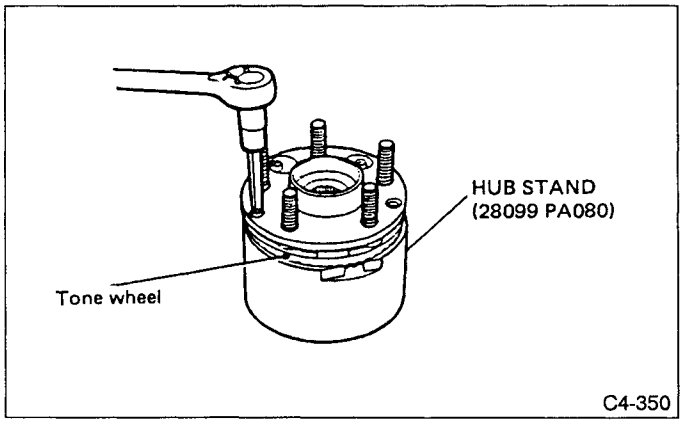

Fig. 28

9) Using HUB STAND (28099PA080) and a hydraulic press, drive hub bolts out.
Be careful not to hammer hub bolts. This may deform hub.

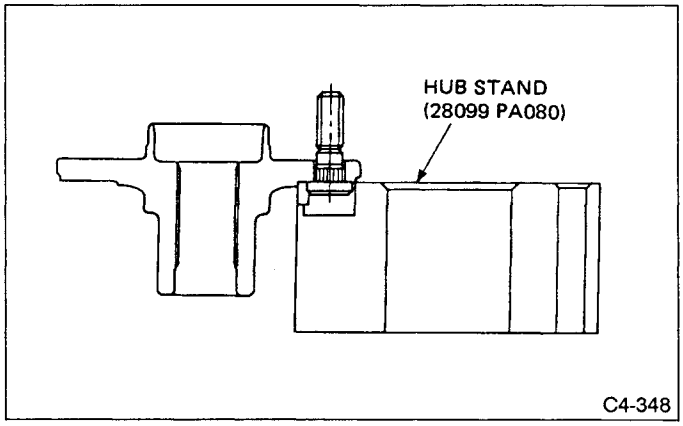

Fig. 29

C: INSPECTION

Check the removed parts for wear and damage. If defective, replace with a new one.
a. If a bearing is faulty, replace it as the bearing set.
b. Be sure to replace oil seal at every overhaul.

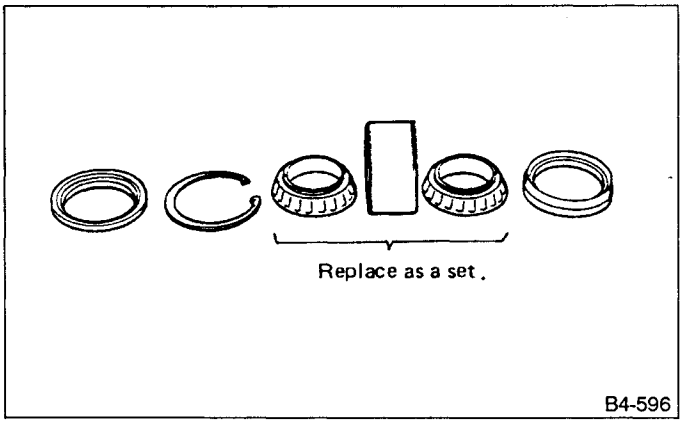

Fig. 30

D: ASSEMBLY

1) Attach hub COMPL to HUB STAND (28099PA080) securely.
2) Using a hydraulic press, press new hub bolts into place.
a. Use 12 mm (0.47 in) dia. holes in HUB STAND to prevent bolts from tilting.
b. Be sure to press hub bolts until their seating surfaces contact the hub.

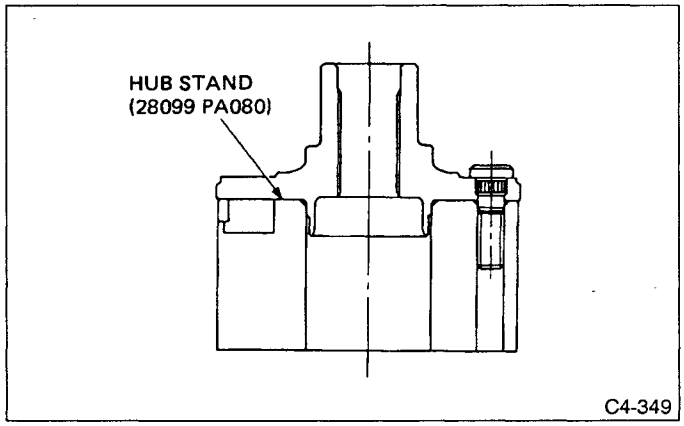

Fig. 31

3) Remove foreign particles (dust, rust, etc.) from mating surfaces of hub and tone wheel, and install tone wheel to hub.
a. Ensure tone wheel closely contacts hub.
b. Be careful not to damage tone wheel teeth.

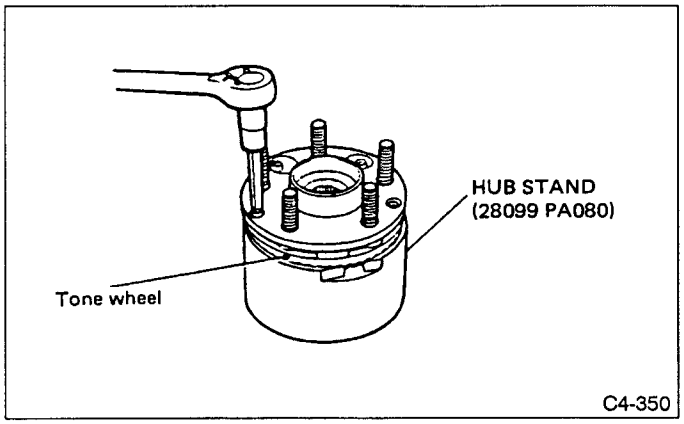

Fig. 32

4) Clean dust or foreign particles from inside the housing.
5) Using HOUSING STAND (28099PA010) and BEARING INSTALLER "FRONT" (28099PA000), press a new bearing into place.

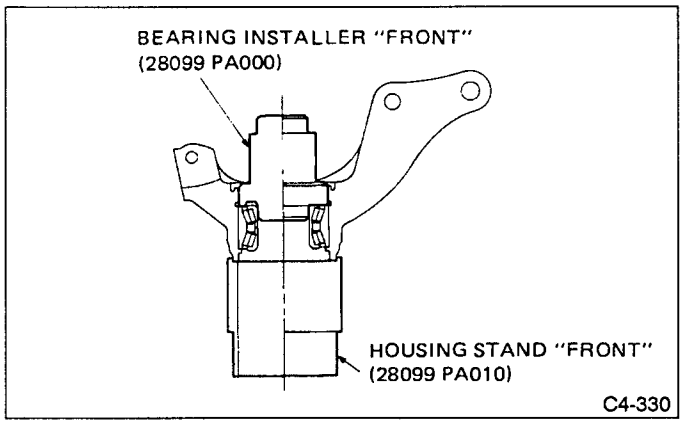

Fig. 33

a. Always press outer race when installing bearing.
b. Be careful not to remove plastic lock from inner race when installing bearing.
c. Charge bearing with new grease when outer race is not removed.
6) Install snap ring in its groove.
Make sure to install it firmly to groove.
7) Using OIL SEAL INSTALLER "FRONT" (28099PA030) , press inner oil seal until it contacts circlip.

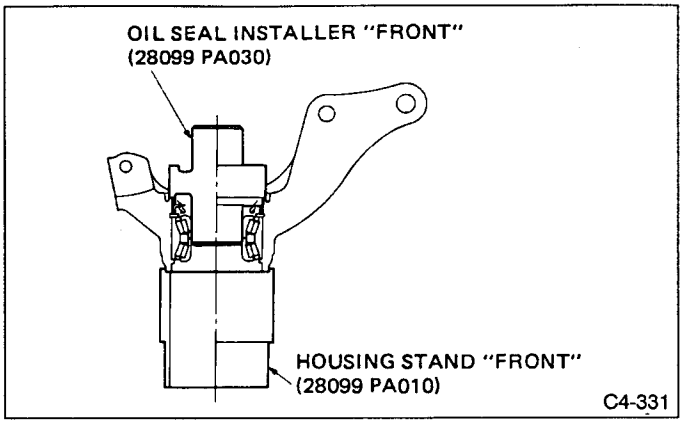

Fig. 34

8) Turn upper side of HOUSING STAND, housing and FRONT SEAL INSTALLER down.
9) Using OIL SEAL INSTALLER "FRONT" (28099PA030) , press outer oil seal until it contacts the bottom of housing.

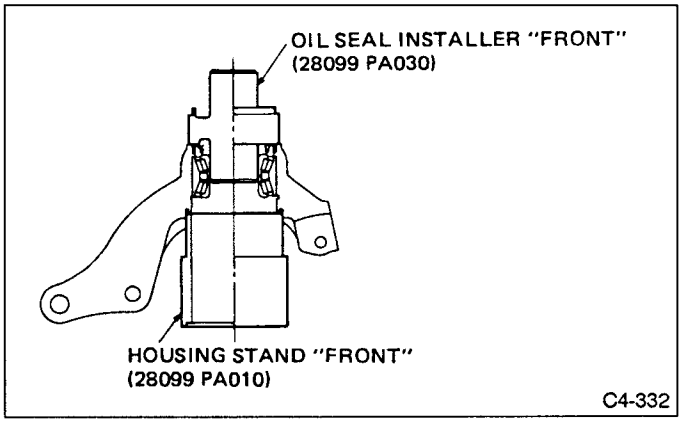

Fig. 35

10) Apply sufficient grease to oil seal lip.

Specified grease:
SHELL 6459N

a. If specified grease is not available, remove bearing grease and apply Auto Rex A instead.
b. Do not mix different types of grease.

11) Install disc cover to housing the three bolts.

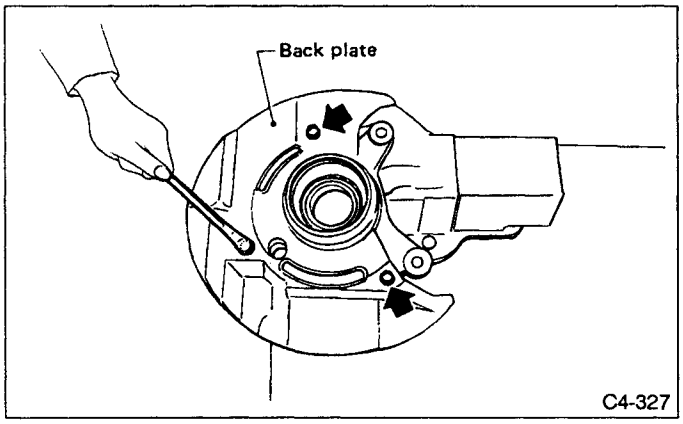

Fig. 36

12) Attach hub COMPL to HUB STAND (28099PA080) securely.
13) Clean dust or foreign particles from the polished surface of hub.
14) Using HUB INSTALLER "FRONT" (28099PA020), press bearing into hub by driving inner race.

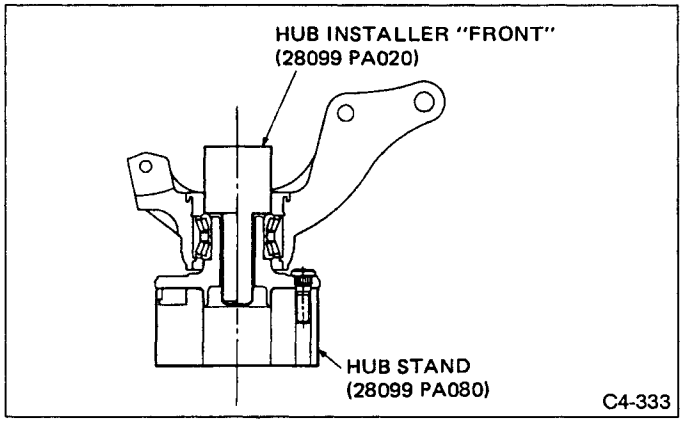

Fig. 37

2. Front Drive Shaft

A: REMOVAL AND INSTALLATION

1) Move select lever to Neutral.
2) Release parking brake lever.
3) Lift up vehicle and remove front wheel.
4) Remove hub cap.
5) Unlock axle nut.

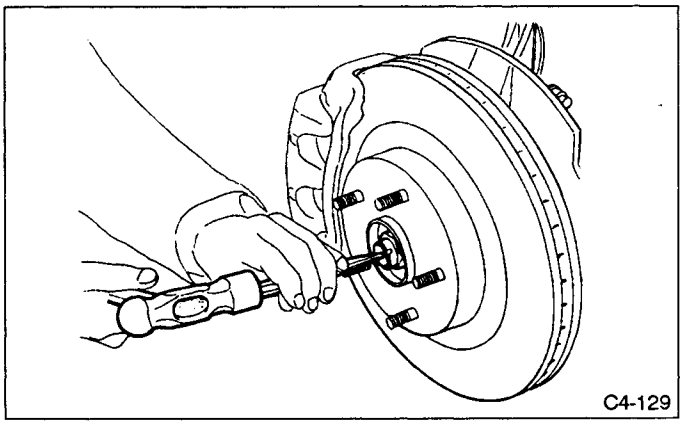

Fig. 38

6) Depress brake pedal to stop drive shaft rotation. Remove axle nut with socket wrench.
Be sure to loose and retighten axle nut after removing wheel from vehicle. Failure to follow this rule may damage wheel bearings.
7) Remove stabilizer link.

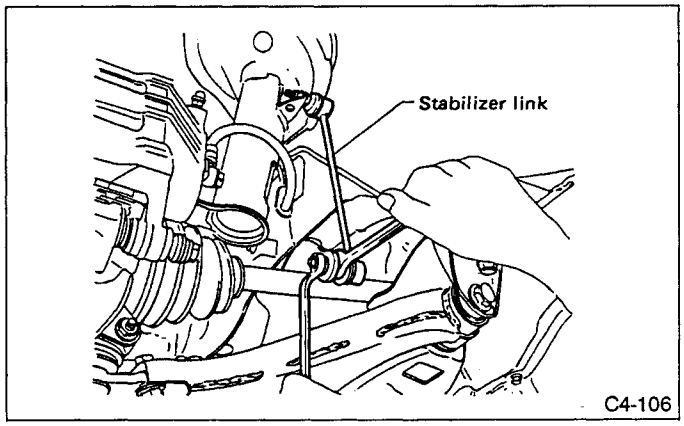

Fig. 39

8) Disconnect ABS harness clamp from strut.

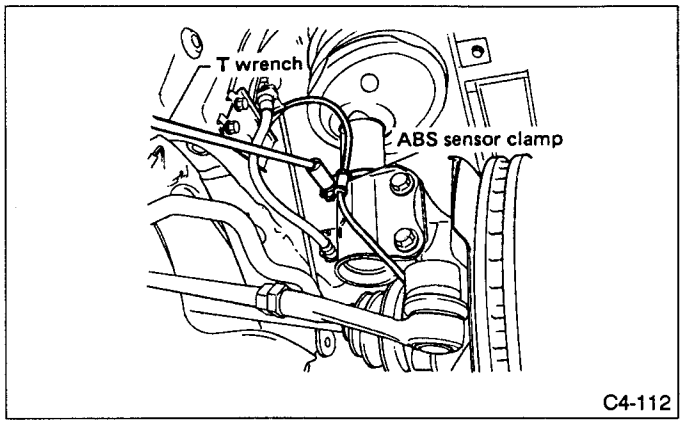

Fig. 40

9) Disconnect brake hose clamp from strut.

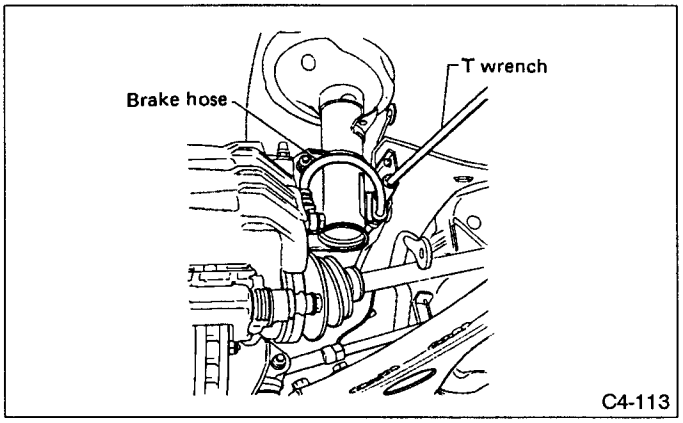

Fig. 41

10) Place alignment marks on stabilizer lever and stabilizer and remove stabilizer lever.

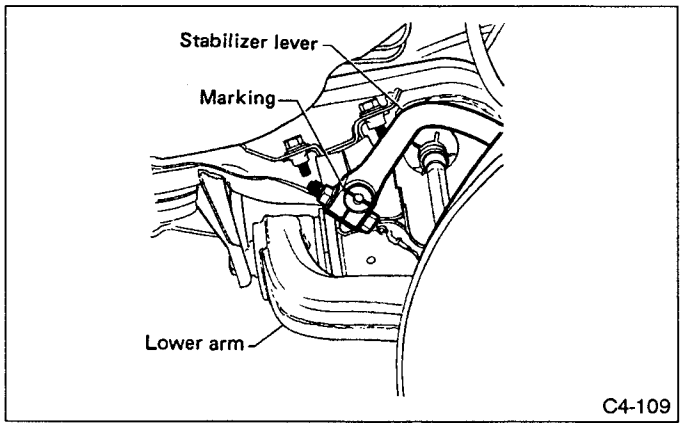

Fig. 42

11) Loosen stabilizer clamp.

Step 11) is performed only when right drive shaft is removed.

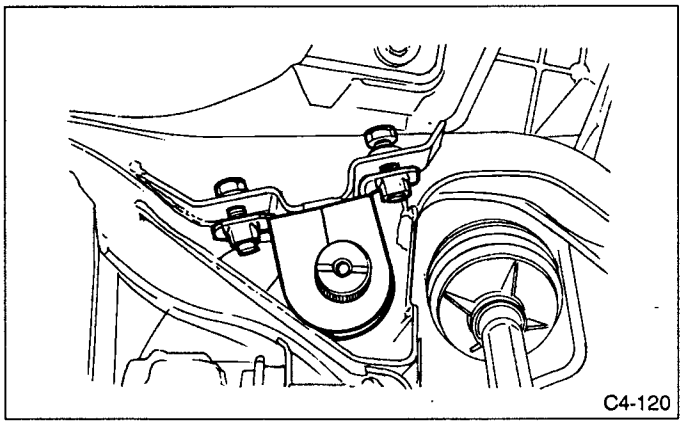

Fig. 43

12) Disconnect lower arm from housing.

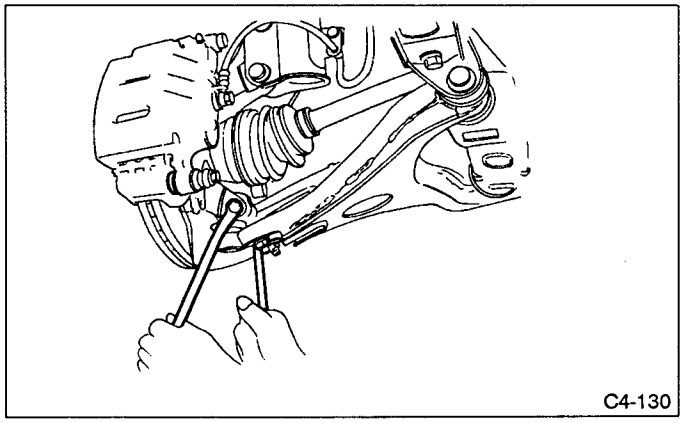

Fig. 44

13) Protect ball joint using cloth to prevent damage.

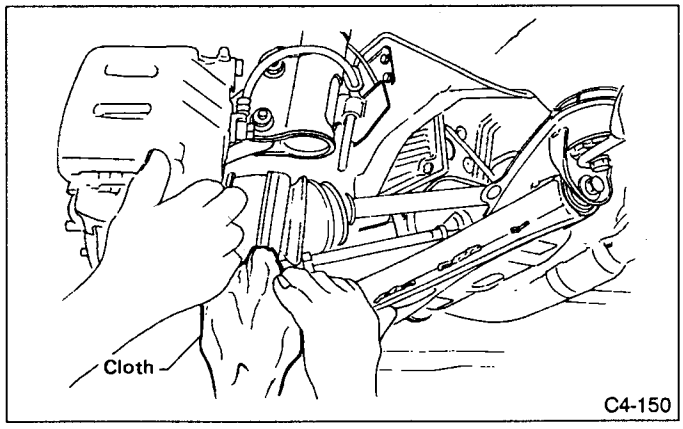

Fig. 45

14) Remove spring pin which secures transmission spindle to FTJ.

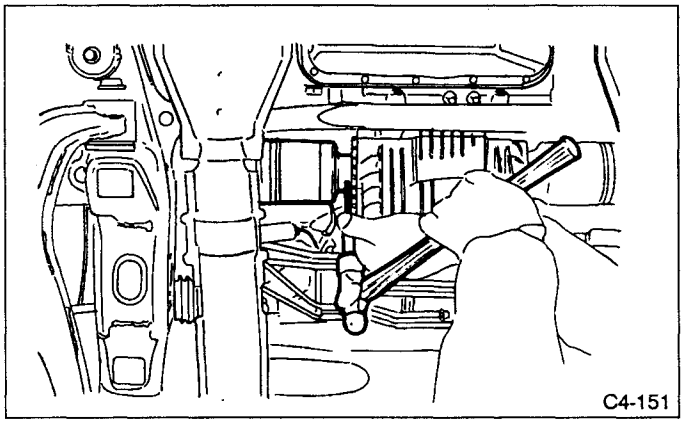

Fig. 46

15) Remove BJ from housing. If it is hard to remove, use REMOVER (926470000) and PLATE (28099PA110).
a. When using REMOVER and PLATE, remove caliper body from housing in advance.
b. Be careful not to damage oil seal lip when removing drive shaft.
c. When replacing drive shaft, also replace inner oil seal.
16) Remove drive shaft from housing side.
17) Install in reverse order of removal.
For installation and tightening torque of suspension parts, refer to 4-1 [C100].
For installation and tightening torque of brake parts, refer to 4-4 [C100].
Be careful not to damage inner oil seal lip.
(1) Using AXLE SHAFT INSTALLER (922431000) and ADAPTER (927390000), pull drive shaft into place.
a. Make sure O-ring is properly installed on transmission spindle.
b. Apply a sufficient coat of grease to transmission spindle splines.
c. Always use new sealer-pack type spring pin.
d. Use a new self-locking nut.
e. Use a new axle nut.
f. Always tighten axle nut before installing wheel on vehicle. If wheel is installed and comes in contact with ground when axle nut is loose, wheel bearings may be damaged.
g. Be sure to tighten axle nut to specified torque. Do not overtighten it as this may damage wheel bearing.
(2) After tightening axle nut, caulk it securely.

B: DISASSEMBLY

1) Place alignment marks on shaft and outer race.

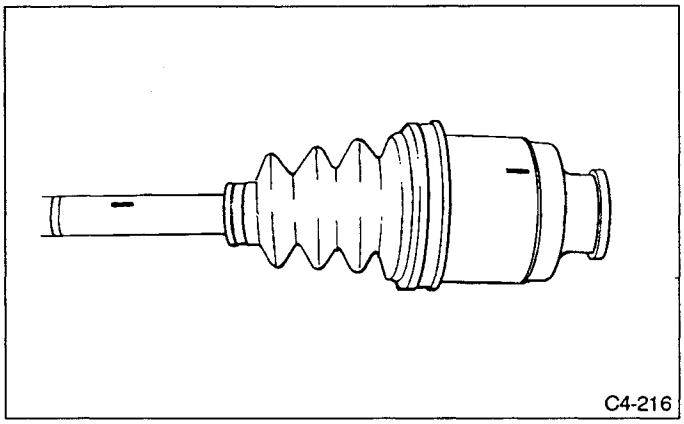

Fig. 47

2) Remove FTJ boot band and boot.
Be careful not to damage boot.

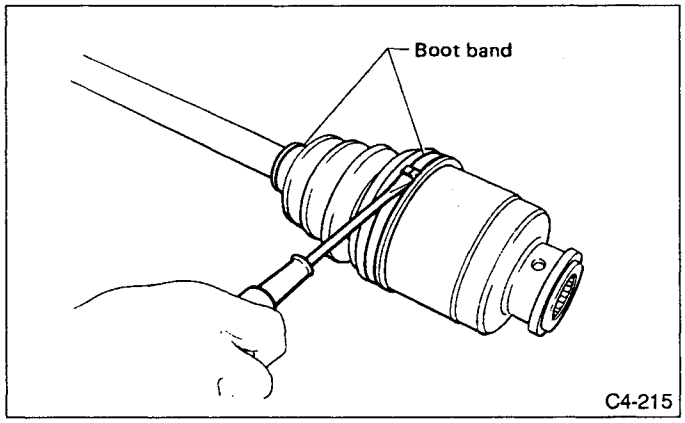

Fig. 48

3) Remove circlip from FTJ outer race using screwdriver.

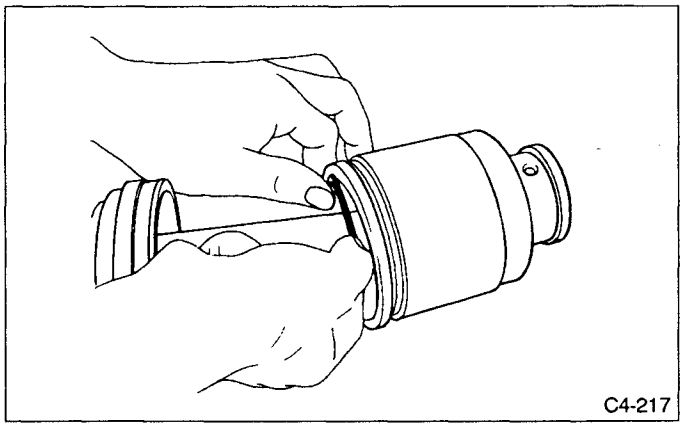

Fig. 49

4) Remove FTJ outer race from shaft ASSY.
5) Wipe off grease.
The grease is a special grease. Do not confuse with other greases.
6) Place alignment mark on free ring and trunnion.

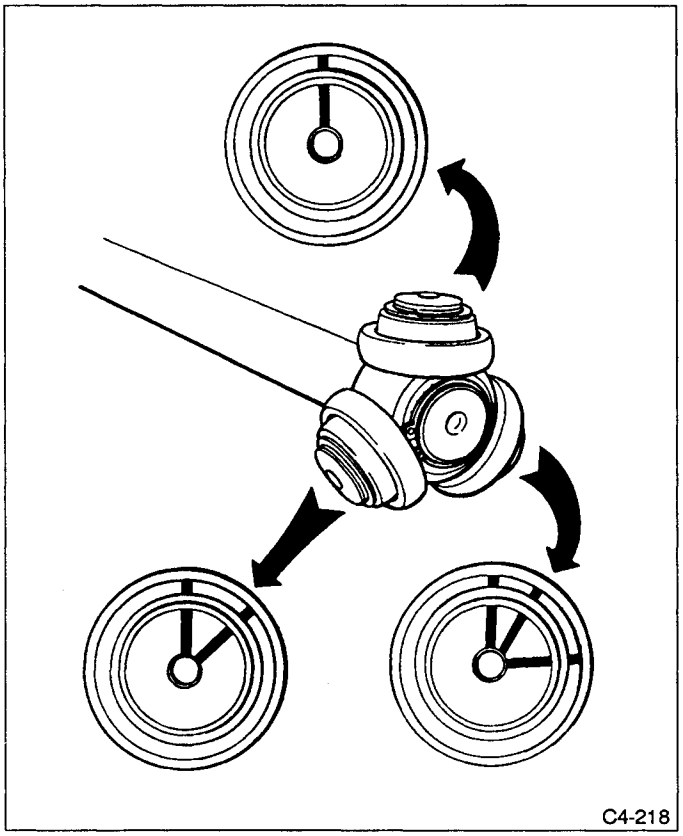

Fig. 50

7) Remove free ring from trunnion.
8) Place alignment mark on trunnion and shaft.

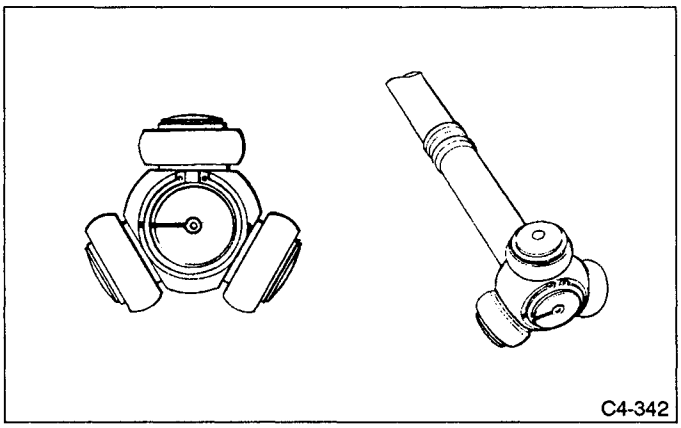

Fig. 51

9) Remove snap ring and trunnion.

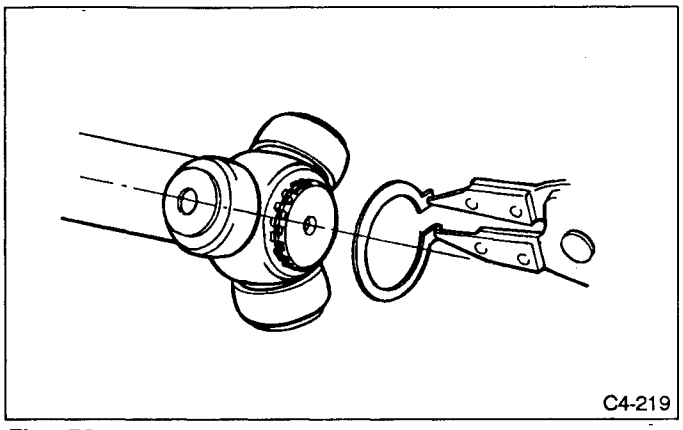

Fig. 52

Be sure to wrap shaft splines with vinyl tape to prevent boot from scratches.
10) Remove FTJ boot.
11) Remove BJ boot band and boot.

C: INSPECTION

Check the removed parts for damage, wear, corrosion, etc. If faulty, repair or replace.
1) FTJ (Free-ring tripod joint) and BJ (Bell Joint)
Check seizure, corrosion, damage, wear and excessive play.
2) Shaft
Check excessive bending, twisting damage and wear.
3) Boot
Check for wear, warping, breakage or scratches.
4) Grease
Check for discoloration or fluidity.

D: ASSEMBLY

Use specified grease.

BJ side:
Molylex No. 2 (P/N 723223010) or Sunlight TB2-A
FTJ side:
SSG 6003

Be sure to wraps shaft splines with vinyl tape to prevent boot from scratches.
1) Install BJ boot in specified position and fill it with 60 to 70 g (2.12 to 2.47 oz) of specified grease.
The inside of the larger end of BJ boot and the boot groove must be cleaned so as to be free from grease and other substances.
2) Place FTJ boot at the center of shaft.
3) Align alignment marks and install trunnion on shaft.

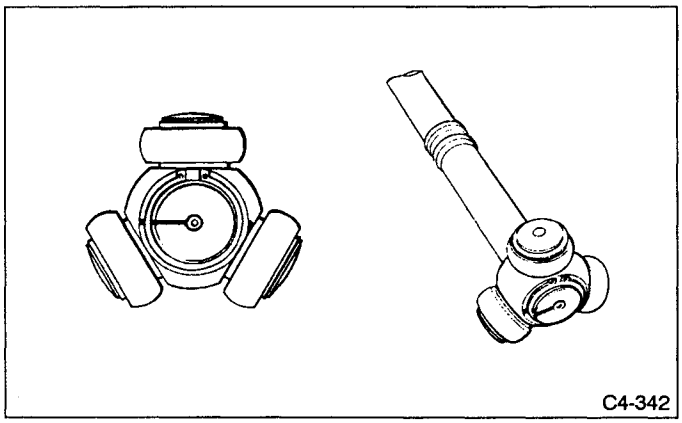

Fig. 53

4) Install snap ring to shaft.
Confirm that the snap ring is completely fitted in the shaft groove.
5) Fill 100 to 110 g (3.53 to 3.88 oz) of specified grease into the interior of FTJ outer race.
6) Apply a coat of specified grease to free ring and trunnion.
7) Align alignment marks on free ring and trunnion and install free ring.

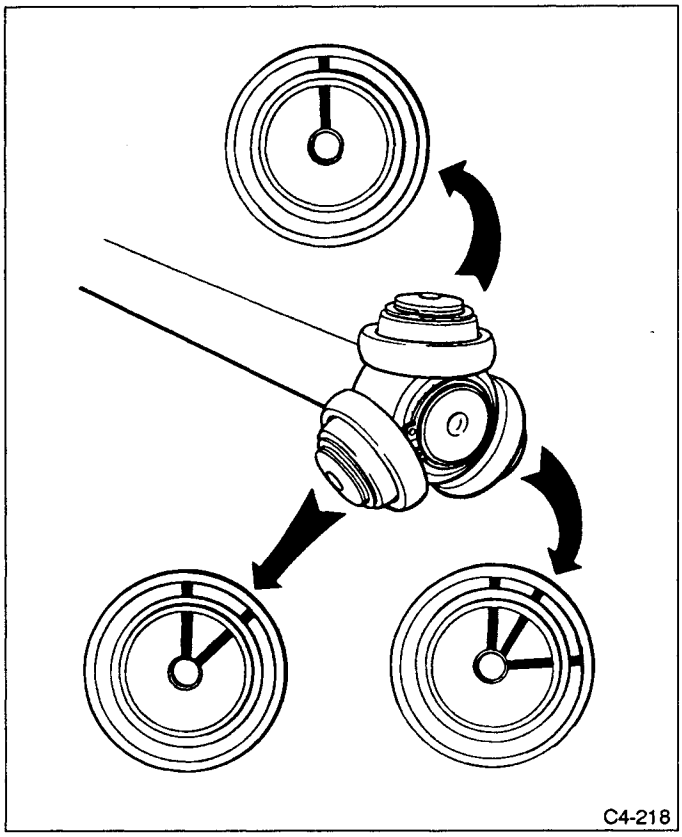

Fig. 54

8) Align alignment marks on shaft and outer race, and install outer race.

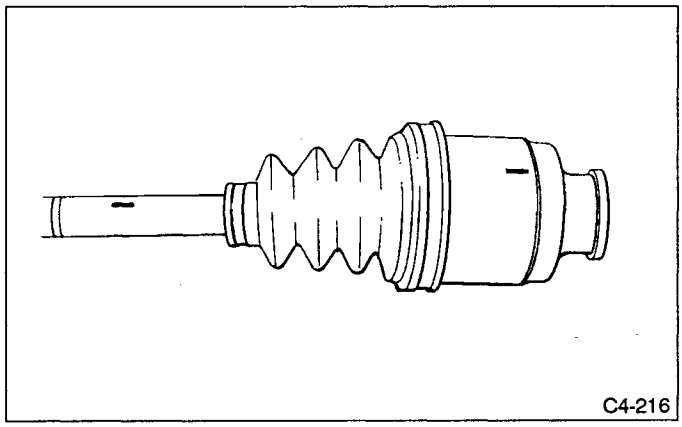

Fig. 55

9) Install circlip in the groove on FTJ outer race.
Pull the shaft lightly and assure that the circlip is completely fitted in the groove.
10) Apply an even coat of the specified grease 30 to 40 g (1.06 to 1.41 oz) to the entire inner surface of boot.
11) Install FTJ boot taking care not to twist it..
a. The inside of the larger end of FTJ boot and the boot groove shall be cleaned so as to be free from grease and other substances.

b. When installing FTJ boot, position outer race of FTJ at center of its travel.

12) Put a band through the clip and wind twice in alignment with band groove of boot.

Use a new band.

13) Pinch the end of band with pliers. Hold the clip and tighten securely.

When tightening boot, exercise care so that the air within the boot is appropriate.

14) Tighten band by using BAND TIGHTENING TOOL (925091000).

a. Tighten band until it cannot be moved by hand.

b. Former BAND TIGHTENING TOOL (925090000) is interchangeable with this 925091000.

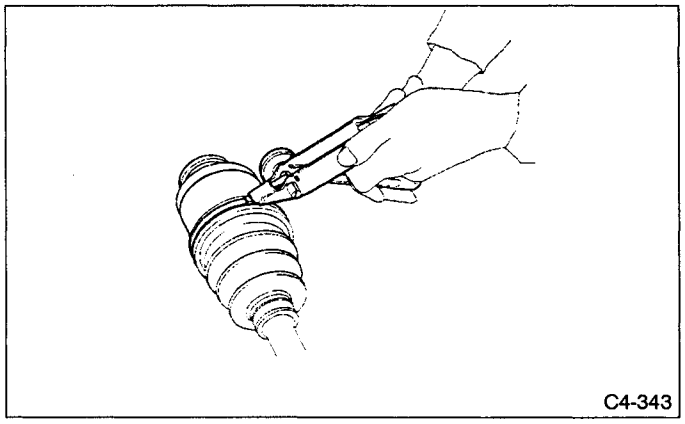

Fig. 56

15) Tap on the clip with the punch provided at the end of BAND TIGHTENING TOOL.

Tap to an extent that the boot underneath is not damaged.

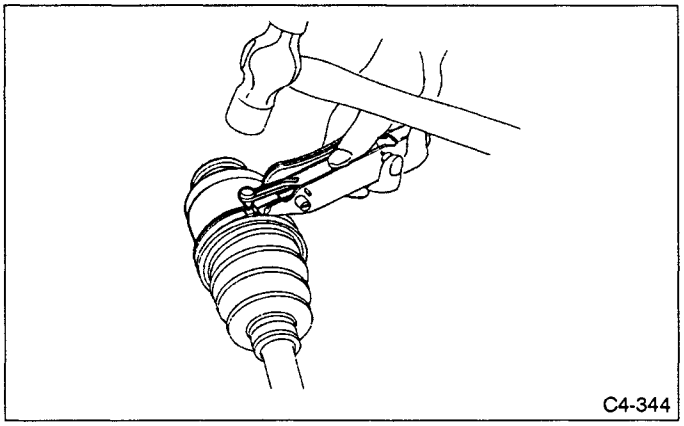

Fig. 57

16) Cut off band with an allowance of about 10 mm (0.39 in) left from the clip and bend this allowance over the clip.

Be careful so that the end of the band is in close contact with clip.

17) Fix up boot on BJ in the same manner.

Extend and retract FTJ to provide equal grease.

3. Replacement of Front Drive Shaft Boot

A: REMOVAL

1) Move select lever to Neutral.
2) Release parking brake lever.
3) Lift up vehicle and remove front wheel.

Do not remove axle nut.

4) Disconnect front exhaust pipe.
5) Remove stabilizer link.
6) Disconnect ABS harness clamp from strut.
7) Disconnect brake hose clamp from strut.
8) Disconnect lower arm from housing.

Protect ball joint using cloth to prevent damage.

9) Remove spring pin which secures transmission spindle to FTJ.
10) Place alignment marks on shaft and outer race.

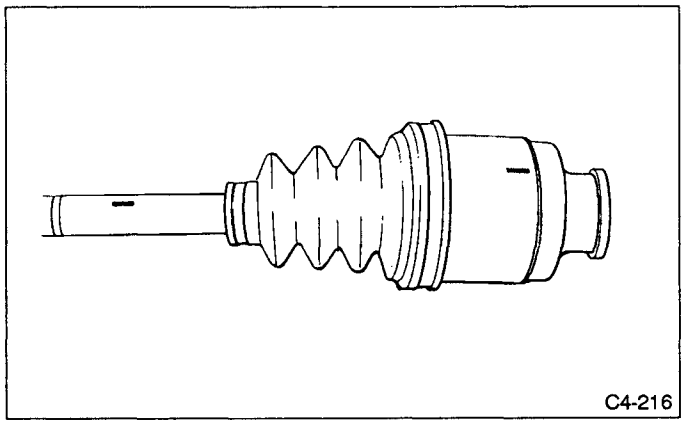

Fig. 58

11) Remove FTJ boot band and boot.

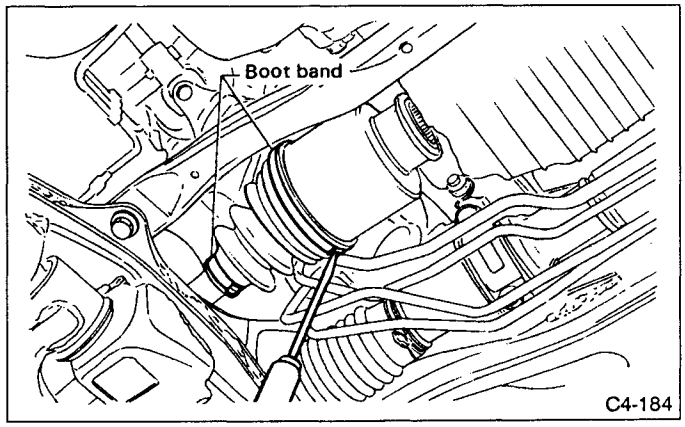

Fig. 59

12) Remove circlip from FTJ outer race using screwdriver.

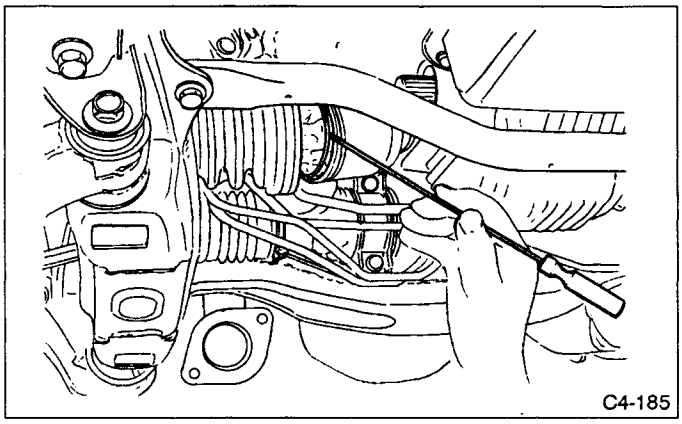

Fig. 60

13) Remove FTJ outer race.

The grease is a special grease. Do not confuse with other greases.

14) Place alignment marks on free ring and trunnion.

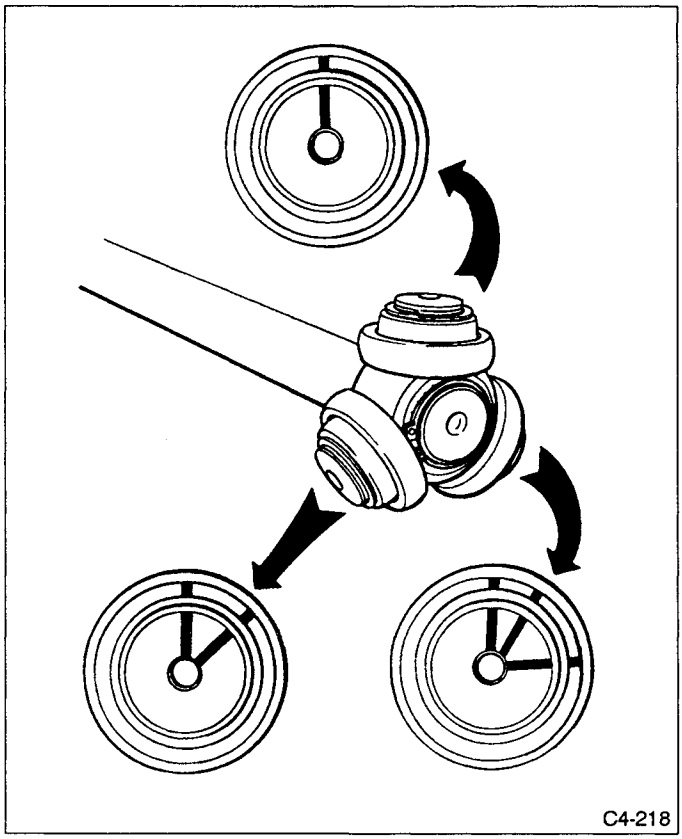

Fig. 61

15) Remove free ring from trunnion.

16) Place alignment marks on trunnion and shaft.

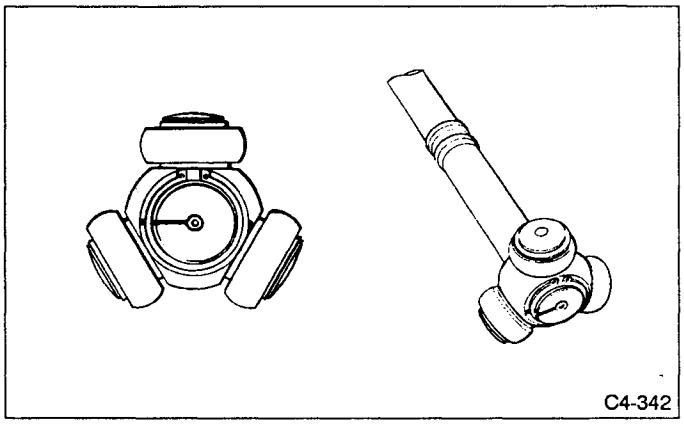

Fig. 62

17) Remove snap ring and trunnion.

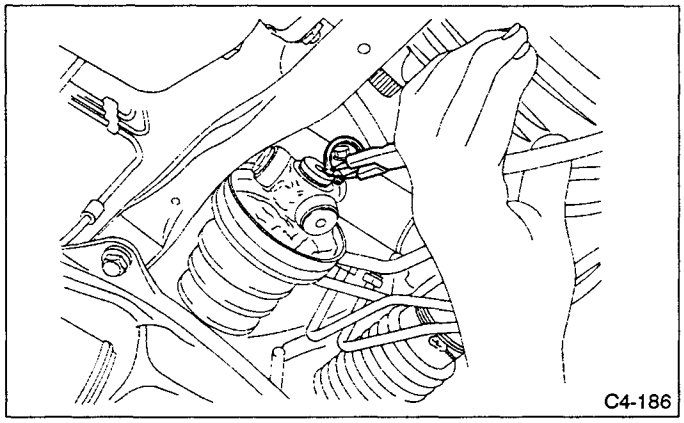

Fig. 63

Be sure to wrap shaft splines with vinyl tape to prevent boot from scratches.

18) Remove FTJ boot.

19) Remove BJ boot band.

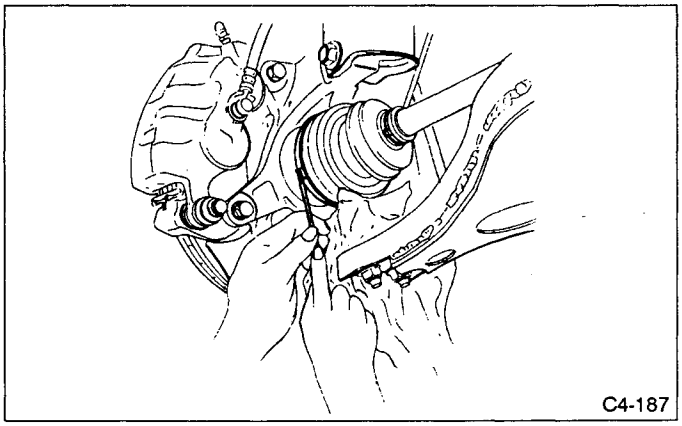

Fig. 64

20) Remove BJ boot.

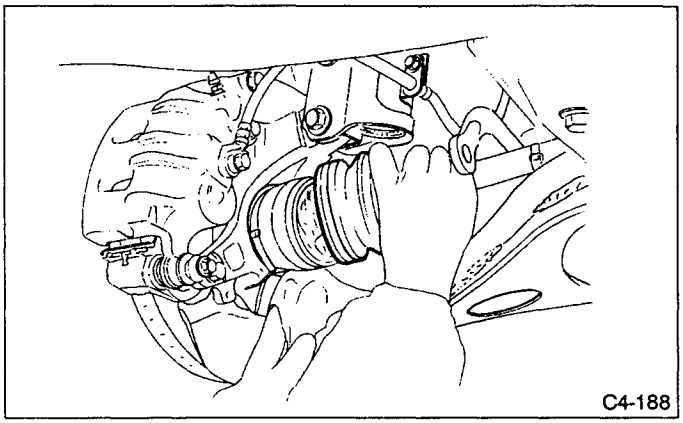

Fig. 65

B: INSPECTION

Check the removed parts for damage, wear, corrosion, etc. If faulty, repair or replace.
1) FTJ (Free ring tripod joint) and BJ (Ball Joint)
Check seizure, corrosion, damage, wear and excessive play.
2) Shaft
Check excessive bending, twisting damage and wear.
3) Boot
Check for wear, warping, breakage or scratches.
4) Grease
Check for discoloration or fluidity.

C: INSTALLATION

Use specified grease.

BJ side:
Molylex No. 2 (P/N 723223010) or Sunlight TB2-A
FTJ side:
SSG 6003

Be sure to wrap shaft splines with vinyl tape to prevent boot from scratches.

1) Install BJ boot in specified position and fill it with 60 to 70 g (2.12 to 2.47 oz) of specified grease.
The inside of the larger end of BJ boot and the boot groove must be cleaned so as to be free from grease and other substances.
2) Place FTJ boot at the center of shaft.
3) Align alignment marks on trunnion and shaft, and install turnnion

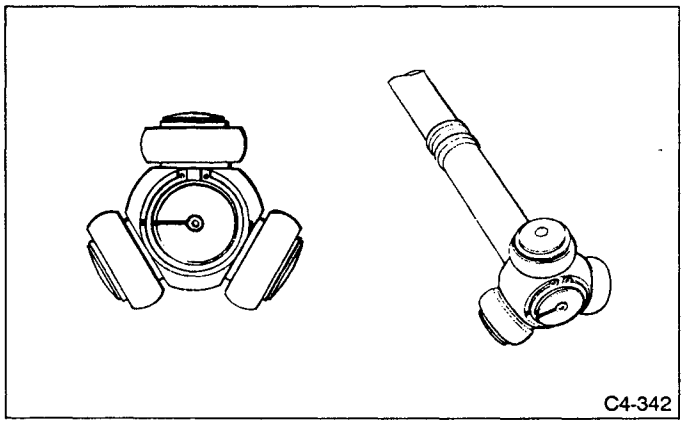

Fig. 66

4) Install snap ring to shaft.
Confirm that the snap ring is completely fitted in the shaft groove.
5) Fill 100 to 110 g (3.53 to 3.88 oz) of specified grease into the interior the FTJ outer race.
6) Apply a coat of specified grease to free ring and trunnion.

7) Align alignment marks on free ring and trunnion, and install free ring.

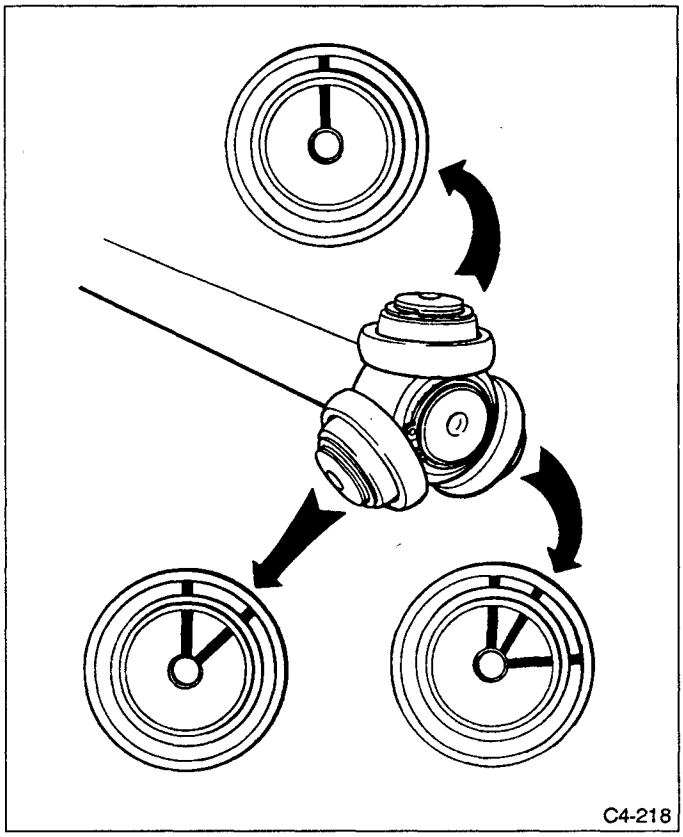

Fig. 67

8) Align alignment marks on outer race and shaft and install outer race.

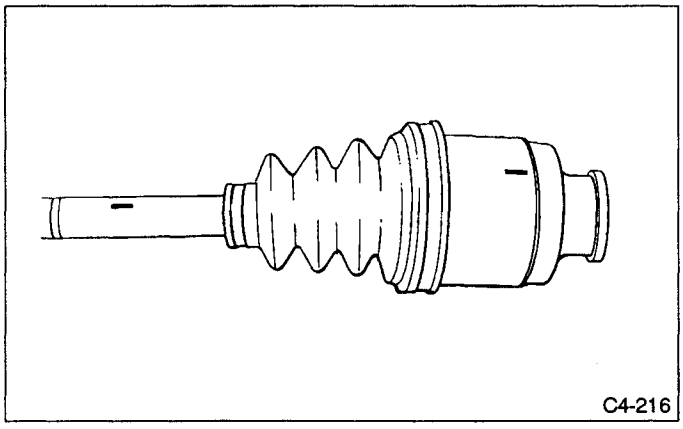

Fig. 68

9) Install circlip in the groove on FTJ outer race.
Pull the shaft lightly and assure that the circlip is completely fitted in the groove.

10) Apply an even coat of the specified grease 30 to 40 g (1.06 to 1.41 oz) to the entire inner surface of boot.
11) Install FTJ boot taking care not to twist it.
a. The inside of the larger end of FTJ boot and the boot groove must be cleaned so as to be free from grease and other substances.
b. When installing FTJ boot, position outer race of FTJ at center of its travel.
12) Put a band through the clip and wind twice in alignment with band groove of boot.
Use a new band.
13) Pinch the end of band with pliers. Hold the clip and tighten securely.
When tightening boot, exercise care so that the air within the boot is appropriate.
14) Tighten band by using BAND TIGHTENING TOOL (925091000).
a. Tighten band until it cannot be moved by hand.
b. Former BAND TIGHTENING TOOL (925090000) is interchangeable with 925091000.

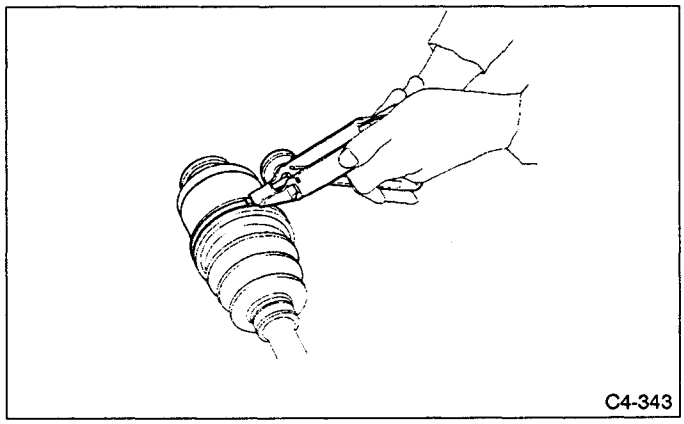

Fig. 69

15) Tap on the clip with the punch provided at the end of BAND TIGHTENING TOOL.
Tap gently so that the boot underneath is not damaged.

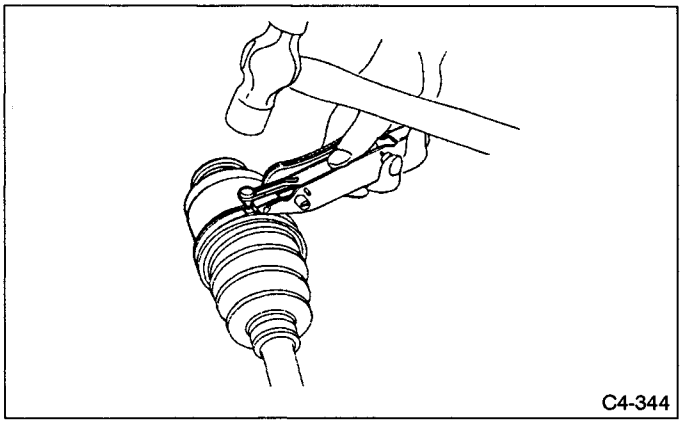

Fig. 70

16) Cut off band with an allowance of about 10 mm (0.39 in) left from the clip and bend this allowance over the clip.
Make sure that the end of the band is in close contact with clip.
17) Fix boot on BJ in the same manner.
Extend and retract FTJ to provide equal grease coating.
18) Install remaining parts in reverse order of removal.
For installation and tightening torque of suspension parts, refer to 4-1 [C100].
For installation and tightening torque of brake parts, refer to 4-4 [C100].
a. Use a new self-locking nut.
b. Make sure O-ring is properly installed on transmission spindle.
c. Apply a sufficient coat of grease to transmission spindle splines.
d. Always use new sealer-pack type spring pin.

4. Rear Axle

A: REMOVAL AND INSTALLATION

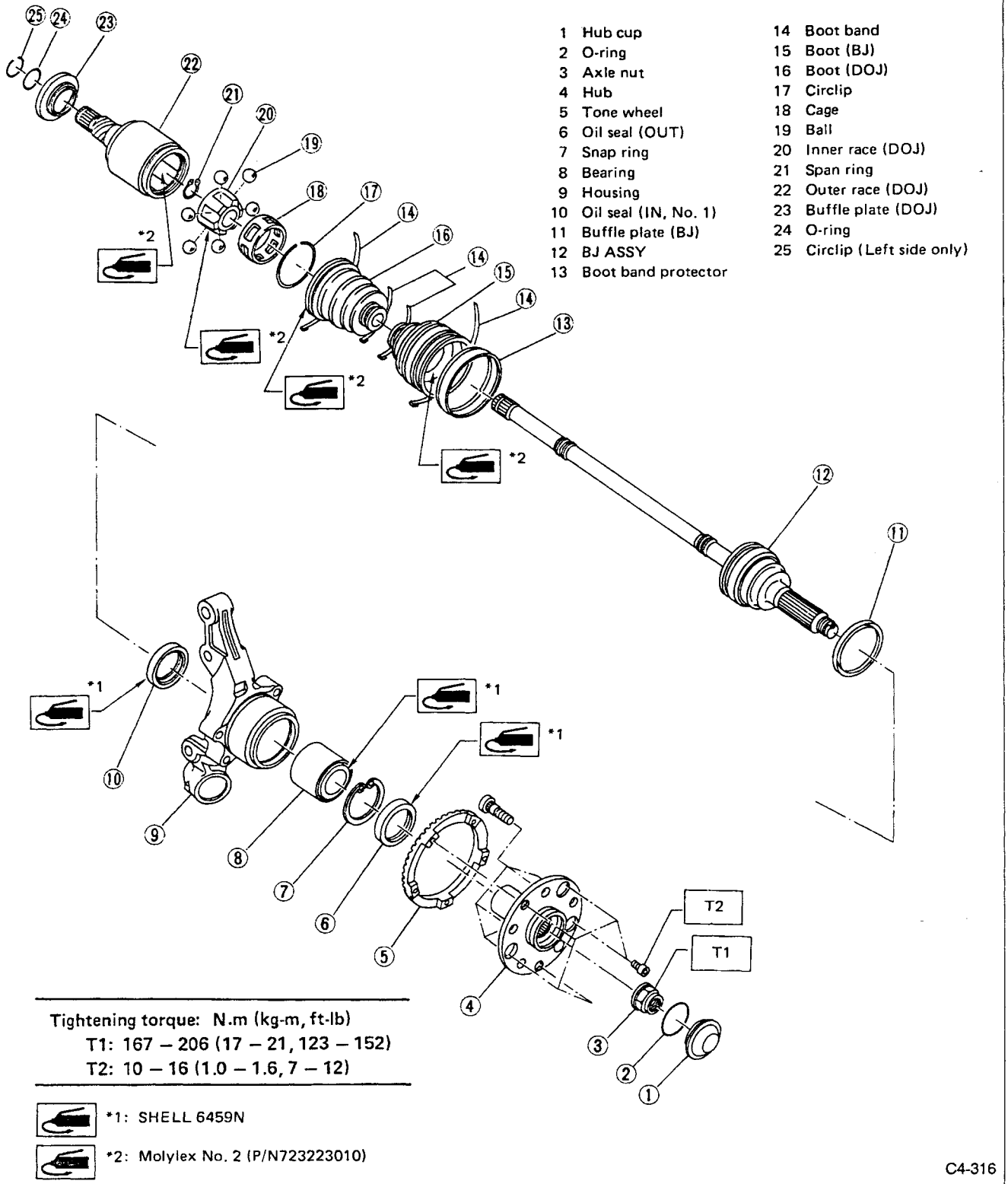

Fig. 71

1) Move select lever to "P".
2) Set parking brake.
3) Lift up vehicle and remove rear wheel.
4) Remove hub cap.
5) Unlock axle nut.

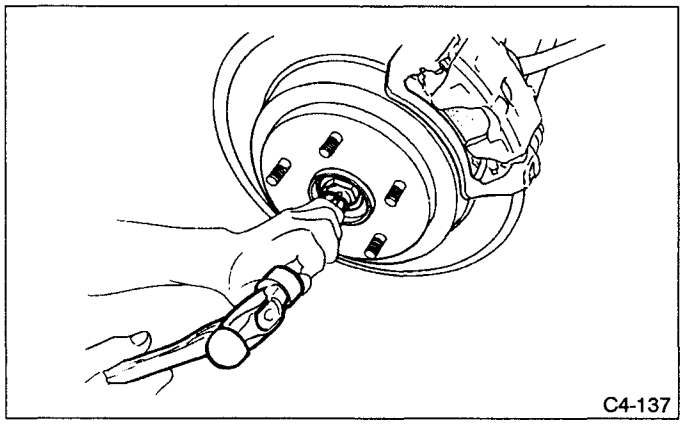

Fig. 72

6) Remove axle nut using a socket wrench.
Be sure to loosen and retighten axle nut after removing wheel from vehicle. Failure to follow this rule may damage wheel bearings.
7) Return parking brake lever.
8) Remove console box lid.

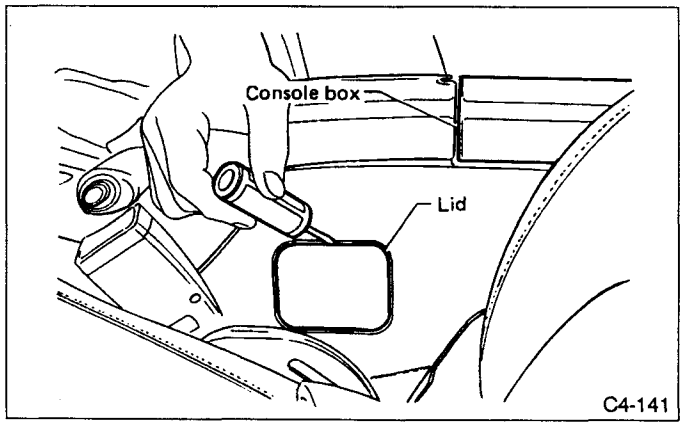

Fig. 73

9) Loosen parking brake adjuster nut.

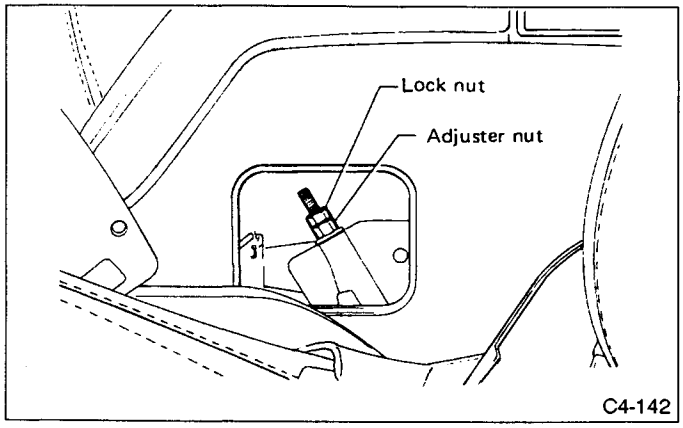

Fig. 74

10) Remove stabilizer link.

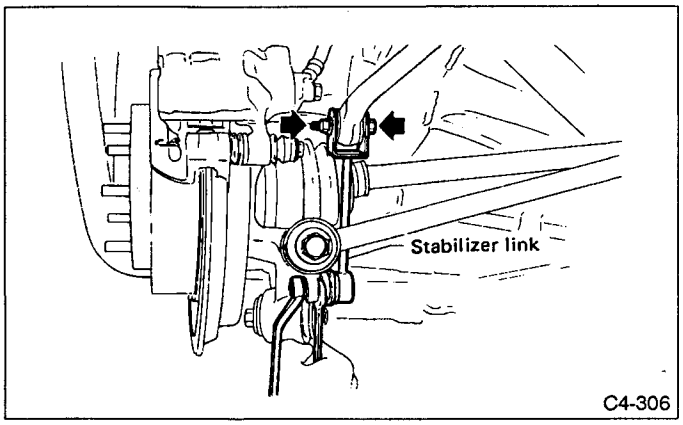

Fig. 75

11) Remove ABS sensor and clamp.

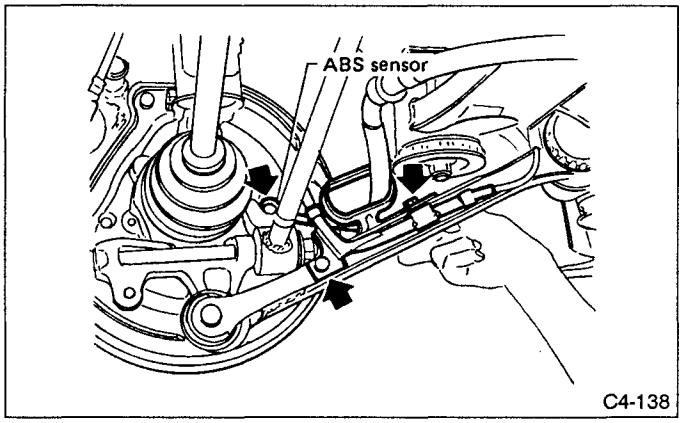

Fig. 76

12) Disconnect parking brake cable clamp.

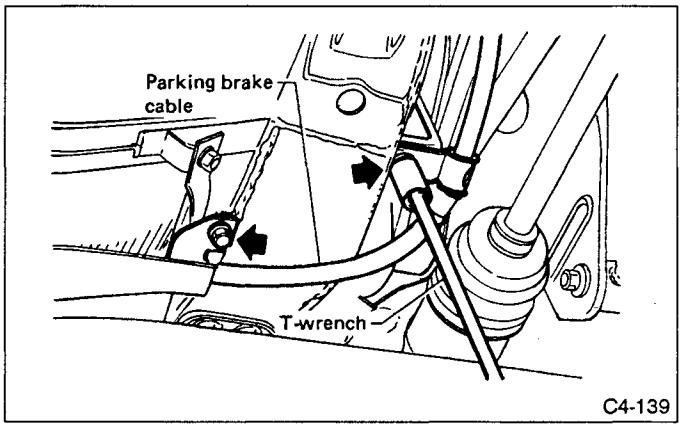

Fig. 77

13) Disconnect brake hose from strut.

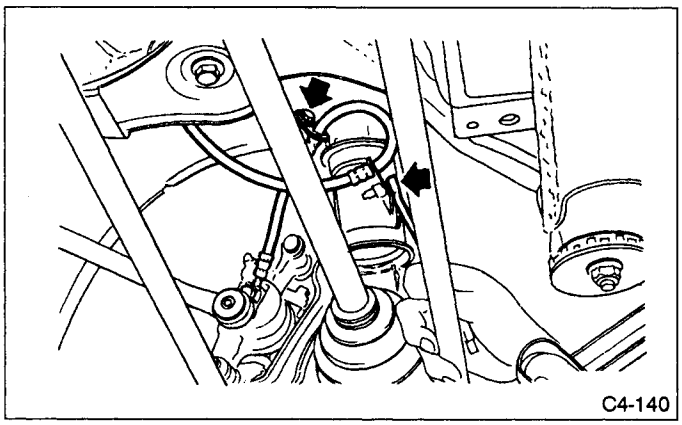

Fig. 78

14) Loosen caliper assembly securing bolts.

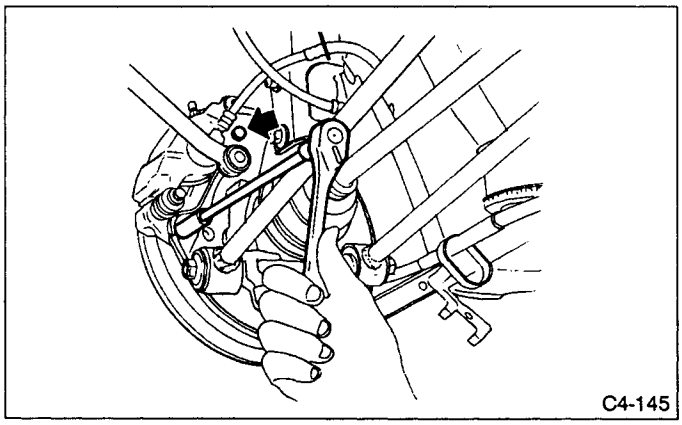

Fig. 79

15) Disconnect trailing link from housing.

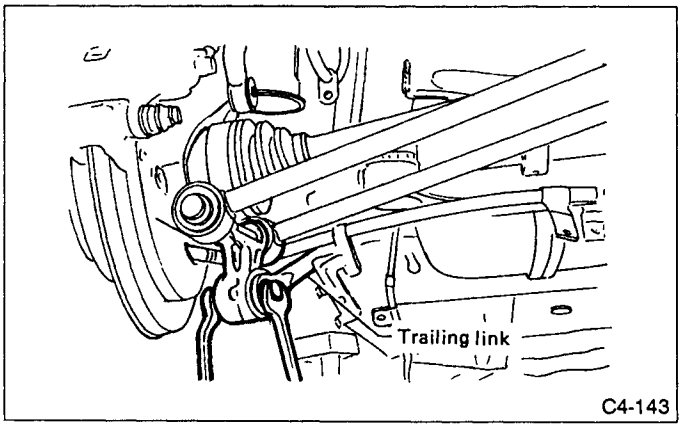

Fig. 80

16) Remove the nut securing lateral link to housing.

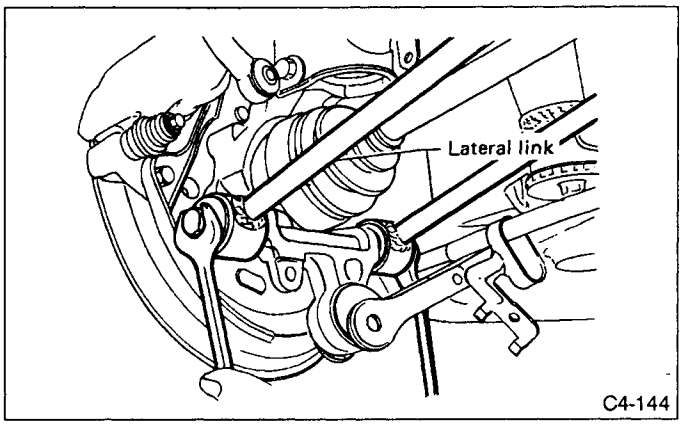

Fig. 81

17) Remove two nuts securing strut to housing.
Do not remove upper bolts.

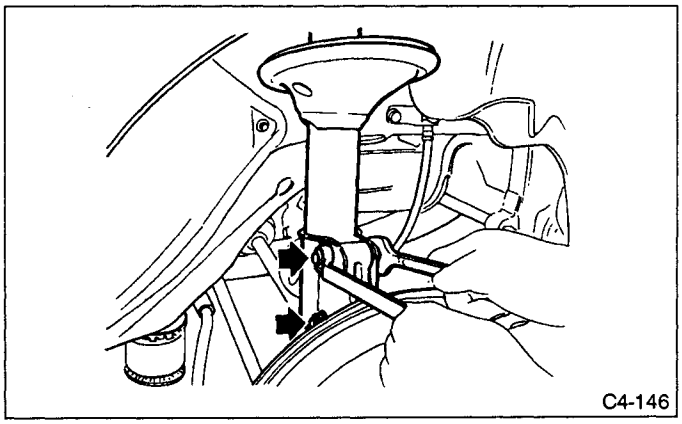

Fig. 82

18) Remove caliper assembly, and fasten to strut using wire.

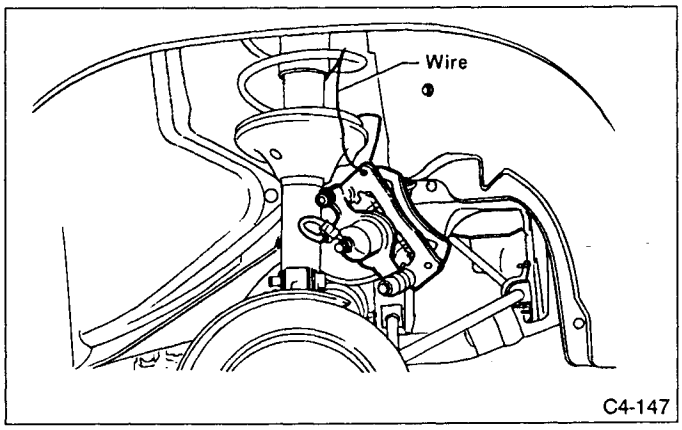

Fig. 83

19) Remove disc rotor.
If disc rotor seizes up within hub, drive it out by installing an 8-mm (0.31 in) bolt hole in disc rotor.
20) Remove parking brake lining and disconnect cable from lining.

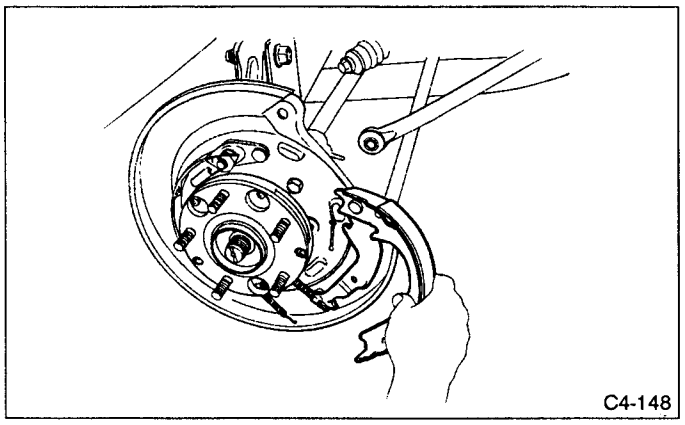

Fig. 84

21) Remove parking brake cable clamp; remove cable from back plate.

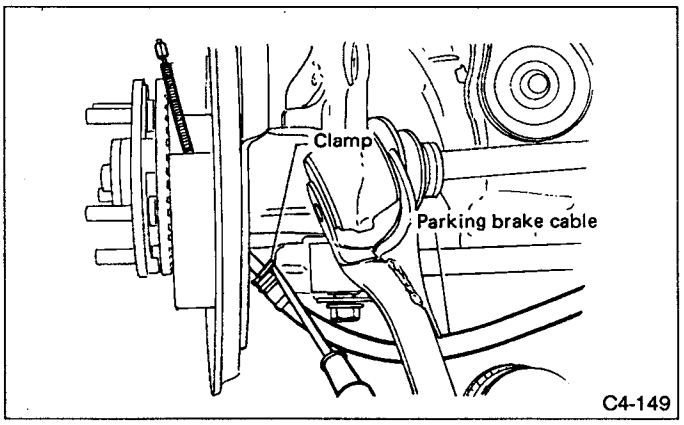

Fig. 85

22) Remove BJ from housing. If it is hard to remove, use REMOVER (926470000) and PLATE (28099PA110).
a. Be careful not to damage oil seal lip when removing BJ.
b. When replacing BJ, also replace inner oil seal with a new one.
23) Remove securing bolts and housing.
24) Install in reverse order of removal.
For installation and tightening torque of suspension parts, refer to 4-1 [C200].
For installation and tightening torque of brake parts, refer to 4-4 [C200].
a. Be careful not to damage inner oil seal lip.
b. Use a new self-locking nut.
c. Use a new axle nut.
d. Always tighten axle nut before installing wheel on vehicle. If wheel is installed and comes in contact with ground when axle nut is loose, wheel bearings may be damaged.
e. Be sure to tighten axle nut to specified torque. Do not overtighten it as this may damage wheel bearing.
f. When front drive shaft is to be replaced, also replace inner oil seal with a new one.
25) After tightening axle nut, lock it securely.

B: DISASSEMBLY

1) Using HUB STAND (28099PA080) and HUB REMOVER "REAR" (28099PA050), remove hub COMPL from rear housing.

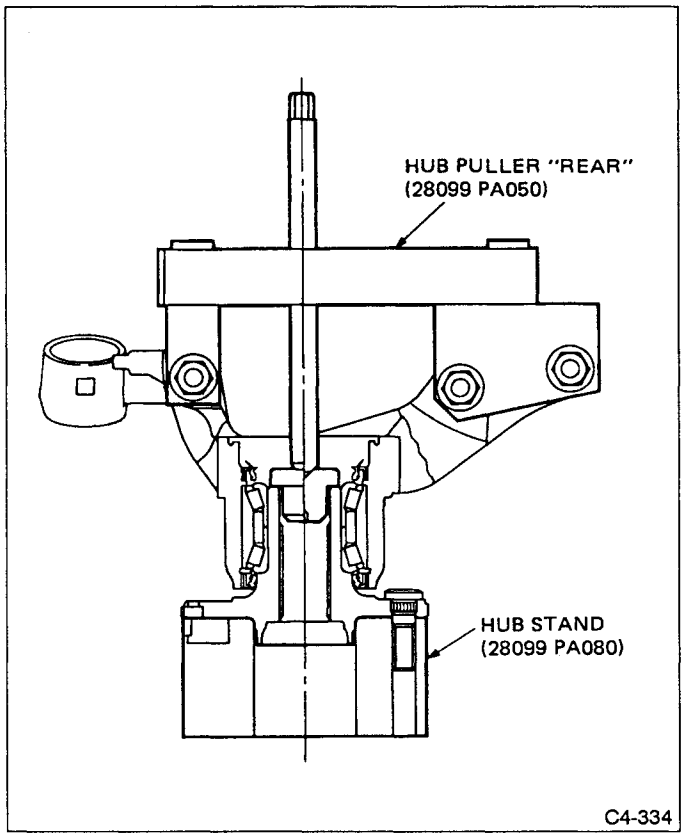

Fig. 86

If inner bearing race remains in the hub, remove it with a suitable tool (commercially available).

a. Be careful not to scratch polished area of hub.

b. Be sure to install inner race on the side of outer race from which it was removed.

2) Remove back plate from rear housing.

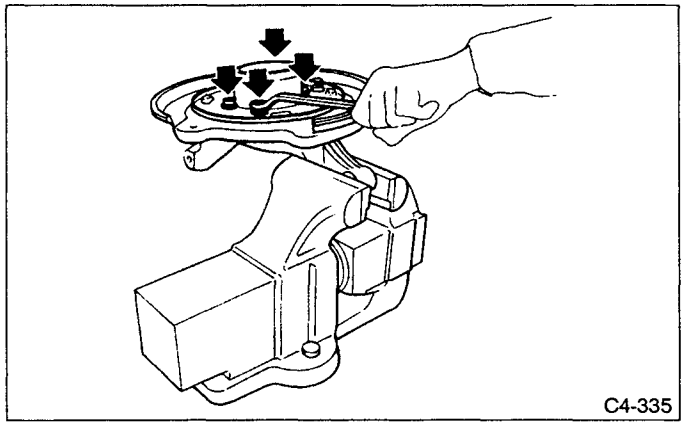

Fig. 87

3) Using a standard screwdriver, remove outer and inner oil seals.

Use new oil seals.

4) Using plier, remove snap ring.

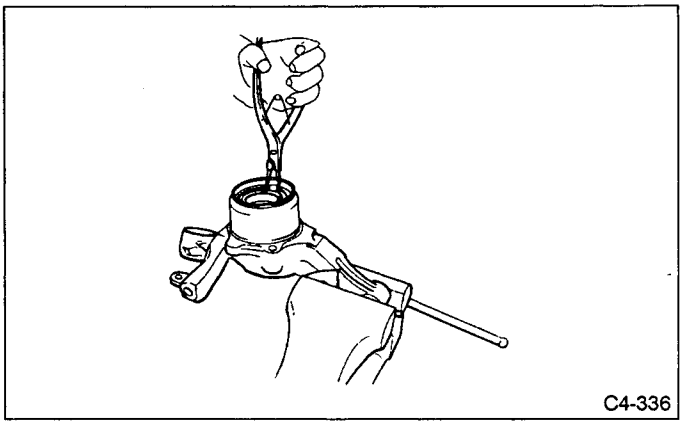

Fig. 88

5) Using HOUSING STAND "REAR" (28099PA060) and BEARING PULLER "REAR" (927100000), remove bearing by pressing inner race.

a. Do not remove bearing unless damaged.

b. Do not re-use bearing after removal.

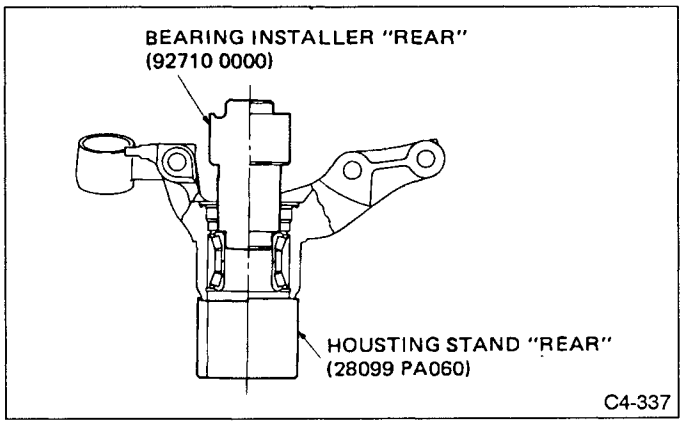

Fig. 89

6) Remove tone wheel bolts and remove tone wheel from hub.
7) Using HUB STAND (28099PA080), press hub bolt out.
Be careful not to hammer hub bolts. This may deform hub.

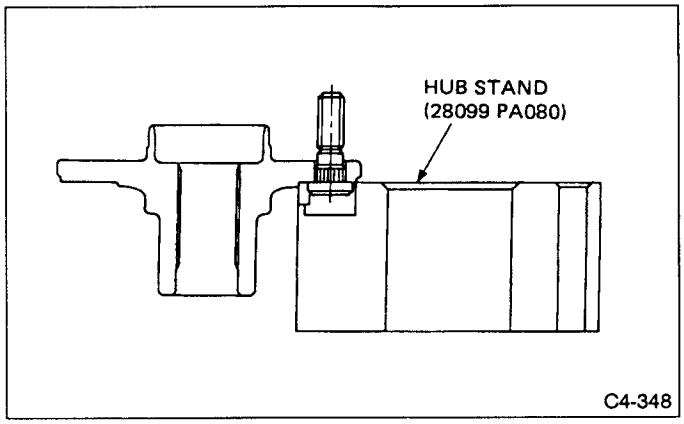

Fig. 90

C: INSPECTION

Check the removed parts for wear and damage. If defective, replace with a new one.
a. If a bearing is faulty, replace it as the bearing set.
b. Be sure to replace oil seal at every overhaul.

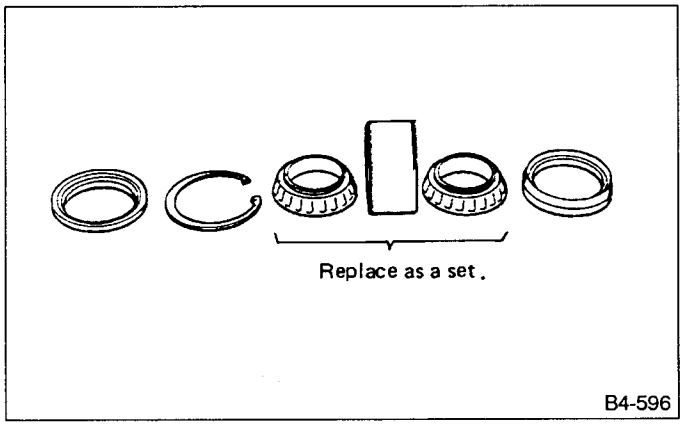

Fig. 91

D: ASSEMBLY

1) Using HUB STAND (28099PA080), press new hub bolt into place.
a. Ensure hub bolt closely contacts hub.
b. Use a 12 mm (0.42 in) hole in the HUB STAND (28099PA080) to prevent hub bolt from tilting during installation.

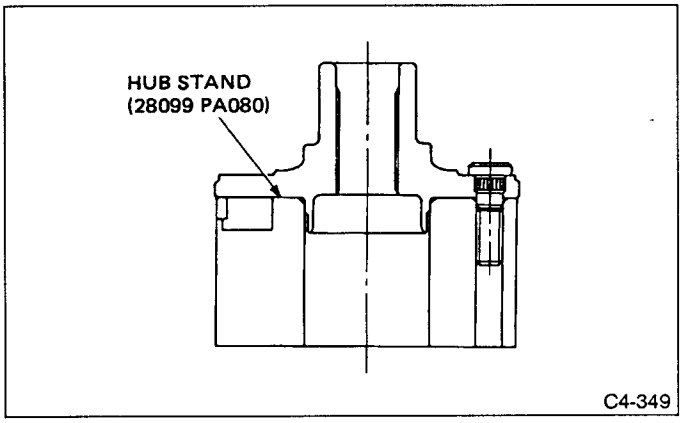

Fig. 92

2) Remove foreign particles (dust, rust, etc.) from mating surfaces of hub and tone wheel, and install tone wheel to hub.
a. Ensure tone wheel closely contacts hub.
b. Be careful not to damage tone wheel teeth.

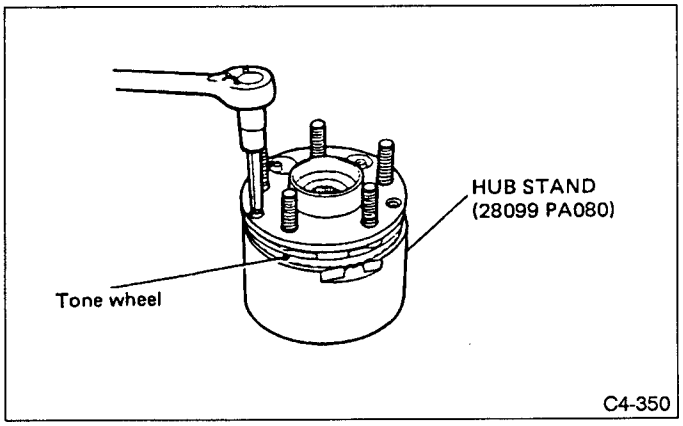

Fig. 93

3) Clean housing interior completely. Using HOUSING STAND "REAR" (28099PA060) and BEARING (927100000), press bearing into housing.
a. Always press outer race when installing bearing.
b. Be careful not to remove plastic lock from inner race when installing bearing.
c. Charge bearing with new grease when outer race is not removed.

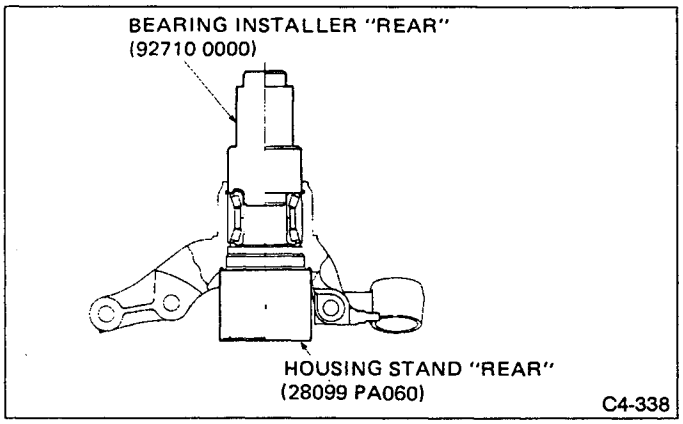

Fig. 94

4) Install snap ring.
Ensure snap ring fits in groove properly.

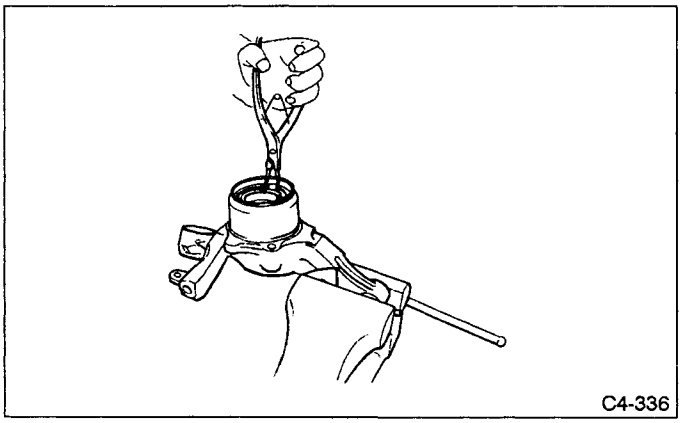

Fig. 95

5) Using HOUSING STAND "REAR" (28099PA060) and OIL SEAL INSTALLER "REAR" (28099PA070), press outer oil seal until it comes in contact with snap ring.

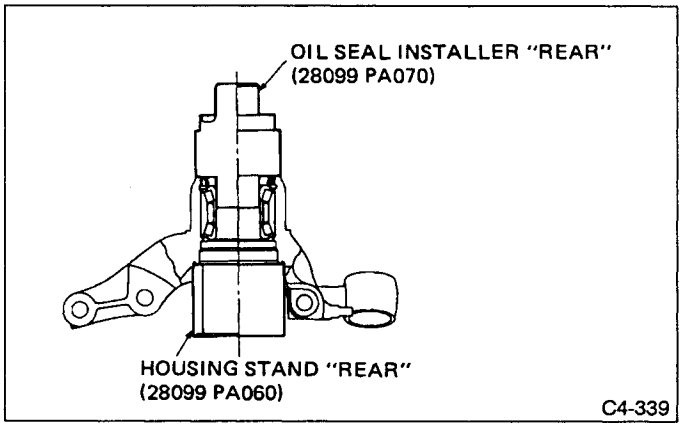

Fig. 96

6) Invert both HOUSING STAND "REAR" (28099PA060) and housing.
7) Invert both OIL SEAL INSTALLER "REAR" (28099PA070), using it press inner oil seal into housing until it touches bottom.

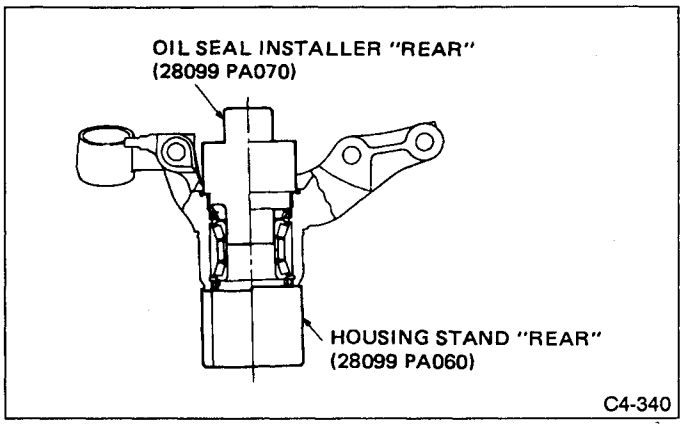

Fig. 97

8) Apply sufficient grease to oil seal lip.

Specified grease:
SHELL 6459N

a. If specified grease is not available, remove bearing grease and apply Auto Rex A instead.
b. Do not mix different types of grease.
9) Install back plate to rear housing.

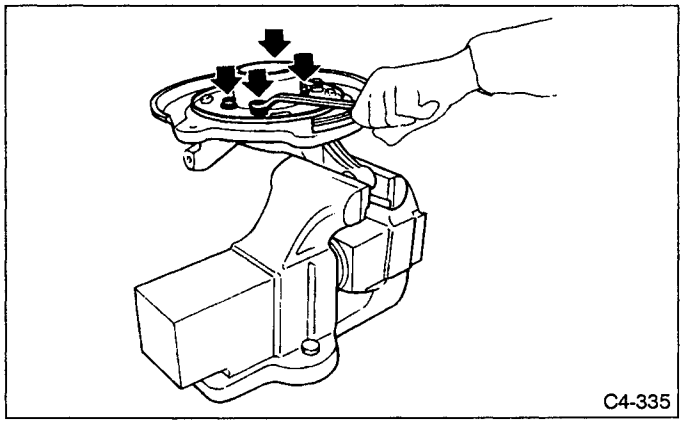

Fig. 98

10) Using HUB STAND (28099PA080) and HUB INSTALLER "REAR" (927120000), press bearing into hub.

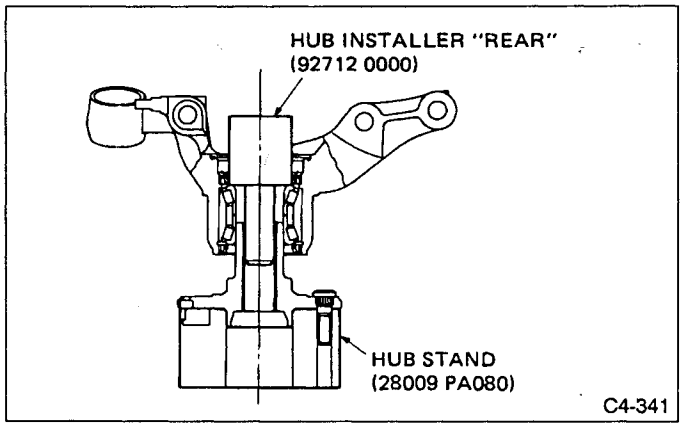

Fig. 99

5. Rear Drive Shaft

A: REMOVAL

1) Move select lever to "P".
2) Set parking brake.
3) Lift up vehicle and remove rear wheels.
4) Unlock axle nut.

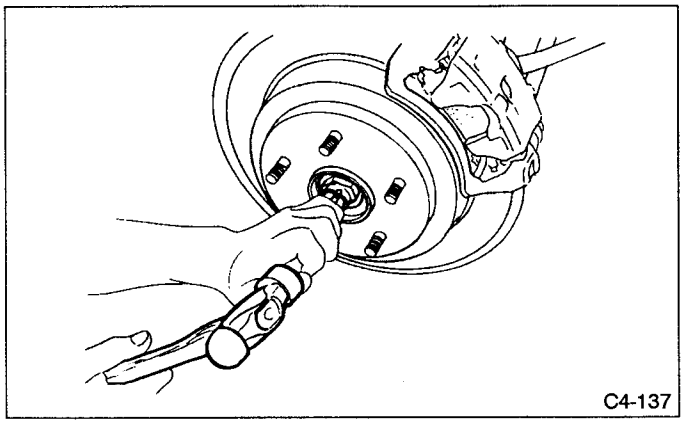

Fig. 100

5) Loosen axle nut using socket wrench.
a. Do not remove axle nut.
b. Be sure to loosen and retighten axle nut after removing wheel from vehicle. Failure to follow this rule may damage wheel bearings.
6) Move shift lever to Neutral.
7) Move parking brake lever forward.
8) Disconnect rear exhaust pipe.
9) Remove stabilizer link.

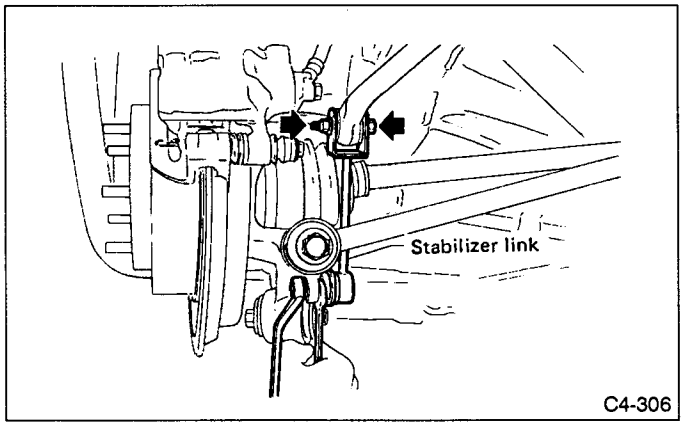

Fig. 101

10) Remove ABS sensor clamps and parking brake cable bracket.

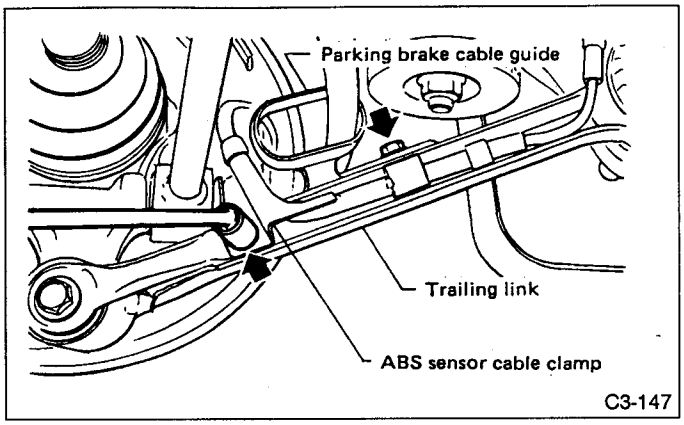

Fig. 102

11) Disconnect parking brake cable clamp.

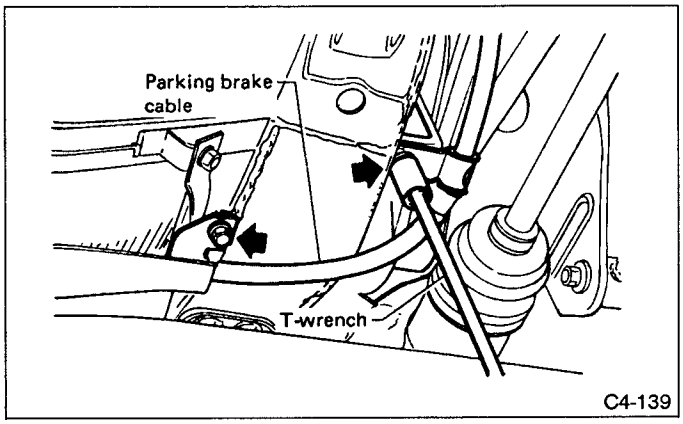

Fig. 103

12) Disconnect brake hose from strut.

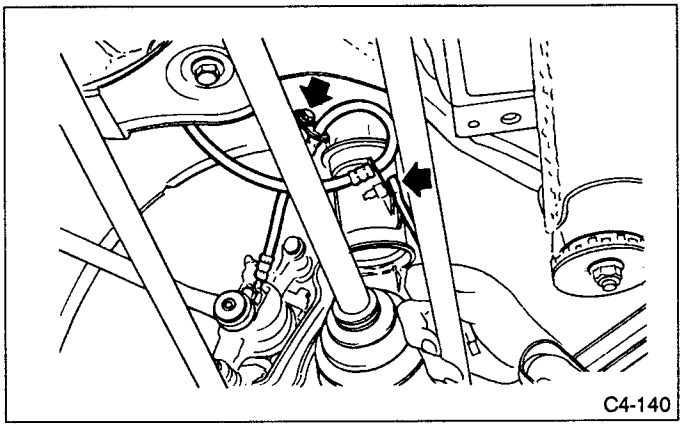

Fig. 104

13) Disconnect trailing link from housing.

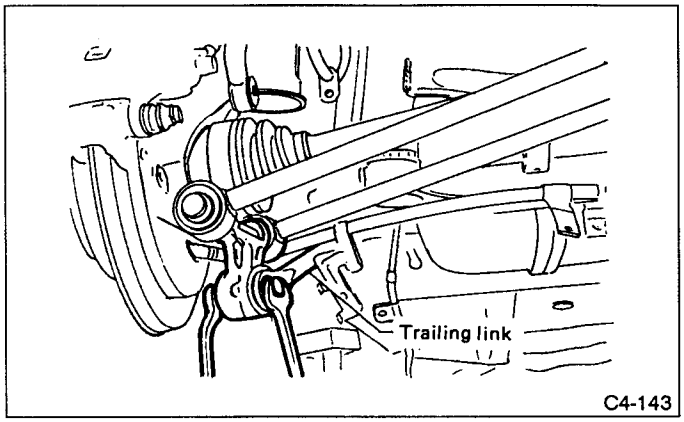

Fig. 105

14) Disconnect lateral link from housing.

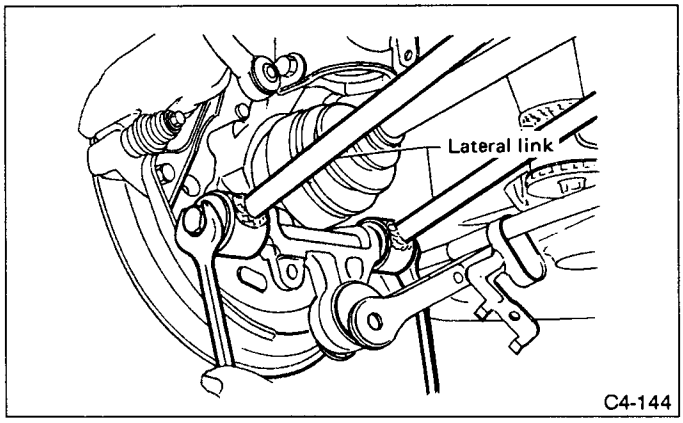

Fig. 106

15) Remove DOJ from rear differential using DRIVE SHAFT REMOVER (28099PA100).

Be careful not to damage side bearing retainer. Always use bolt (shown in Figure 108.) as supporting point for REMOVER during removal.

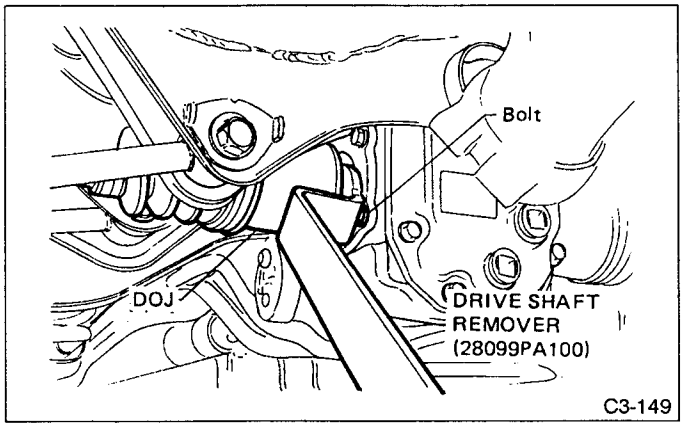

Fig. 107

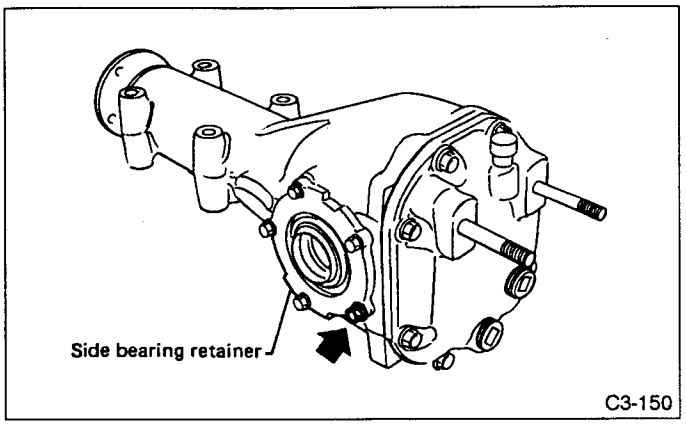

Fig. 108

16) Remove axle nut and drive shaft. If it is hard to remove, use REMOVER (926470000) and PLATE (28099 PA110).

a. Be careful not to damage oil seal lip when removing drive shafts.

b. Left-DOJ spline end is removed together with circlip. Do not remove circlip (from right DOJ) installed inside of rear differential.

c. Wrap ground surface of DOJ stem with cloth to prevent it from scratching.

B: INSTALLATION

1) Replace circlip from left-DOJ splines with new one.
2) Insert BJ into hub splines.

Be careful not to damage inner oil seal lip.

3) Using AXLE SHAFT INSTALLER (922431000) and ADAPTER (927390000), pull drive shaft into hub.
4) Temporarily tighten axle nut.
5) Using SIDE OIL SEAL PROTECTOR (28099PA090), install DOJ into differential.

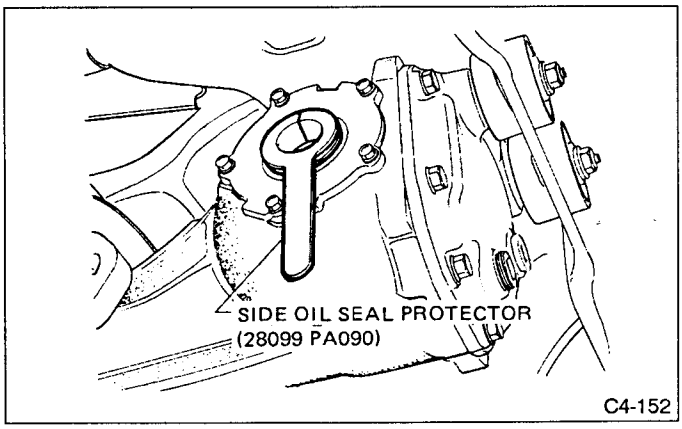

Fig. 109

6) Insert DOJ spline end into bore of side oil seal, and remove SIDE OIL SEAL PROTECTOR.
Do not allow DOJ splines to damage side oil seal.

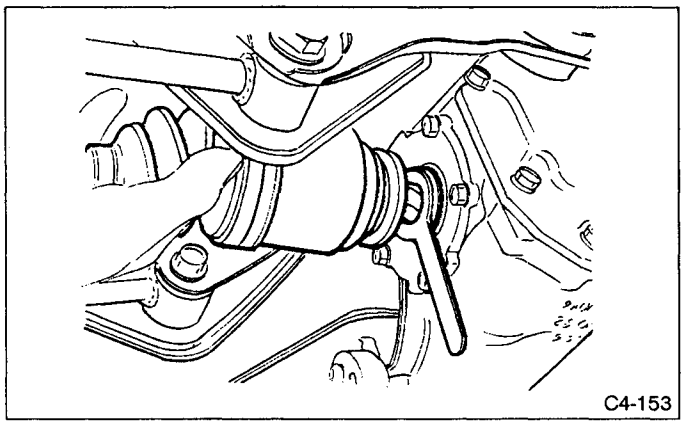

Fig. 110

7) Align DOJ and differential splines.
8) Push housing to insert DOJ into differential.
Make sure DOJ is inserted properly.

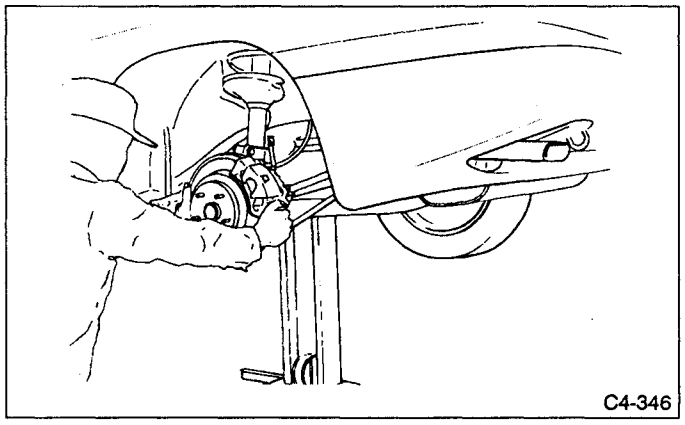

Fig. 111

9) Install remaining parts in reverse order of removal.
10) For installation and tightening torque of suspension parts, refer to 4-1 [C200].
For installation and tightening torque of brake parts, refer to 4-4 [C200].
a. Use a new self-lock nut.
b. Always tighten axle nut before installing wheel on vehicle. If wheel is installed and comes in contact with ground when axle nut is loose, wheel bearings may be damaged.
c. Be sure to tighten axle nut to specified torque. Do not overtighten it as this may damage wheel bearing.
11) After tightening axle nut, lock it securely.

C: DISASSEMBLY

1) Remove DOJ boot band.
Be careful not to damage boot.

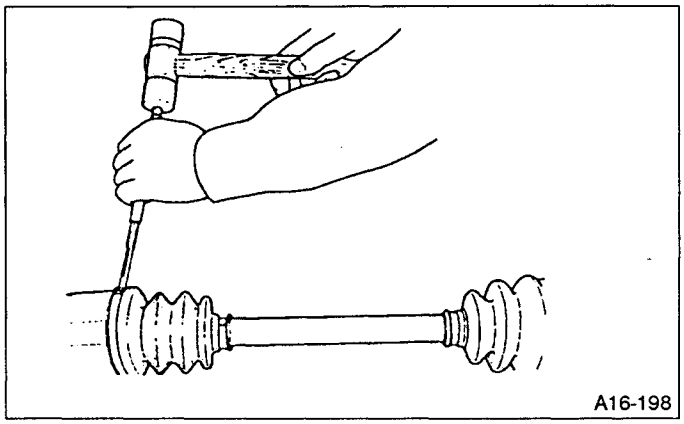

Fig. 112

2) Remove boot from DOJ.
3) Remove circlip from DOJ outer race using screwdriver.

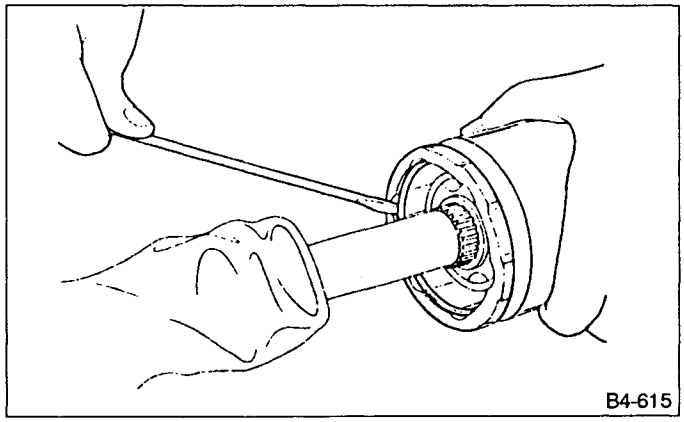

Fig. 113

4) Take out DOJ outer race from shaft ASSY.

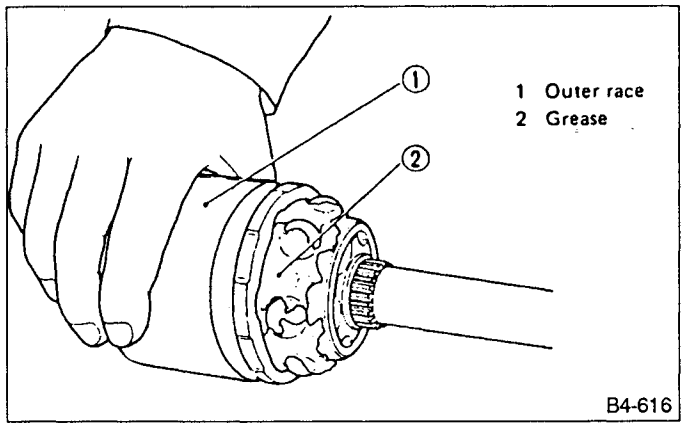

Fig. 114

5) Wipe off grease and take out balls.
a. Disassemble exercising care not to lose balls (6 pcs).
b. The grease is a special grease (grease for constant-velocity joint). Do not confuse with other greases.
6) To remove the cage from the inner race, turn the cage by a half pitch to the track groove of the inner race and shift the cage.
7) Remove snap ring, which fixes inner race to shaft, by using special pliers.
8) Take out DOJ inner race.
9) Take off DOJ cage from shaft and remove DOJ boot.
Be sure to wrap shaft splines with vinyl tape to prevent boot from scratches.
10) Remove protector from BJ boot band.
11) Remove boot band and boot.
12) Thus, disassembly of axle is completed, but BJ is unable to be disassembled.

D: INSPECTION

Check the removed parts for damage, wear, corrosion, etc. If faulty, repair or replace.
1) DOJ (Double Offset Joint) and BJ (Bell Joint)
Check seizure, corrosion, damage, wear and excessive play.
2) Shaft
Check excessive bending, twisting, damage and wear.
3) Boot
Check for wear, warping, breakage or scratches.
4) Grease
Check for discoloration or fluidity.

E: ASSEMBLY

Use specified grease.

BJ and DOJ:
Molylex No. 2 (P/N 723223010) or Sunlight TB2-A

Be sure to wrap shaft splines with vinyl tape to prevent boot from scratches.
1) Install BJ boot in specified position, and fill it with 60 to 70 g (2.12 to 2.47 oz) of specified grease.
2) Place boot band protector and DOJ boot at the center of shaft.
3) Insert DOJ cage onto shaft.
Insert the cage with the cut-out side facing the shaft end, since the cage has an orientation.

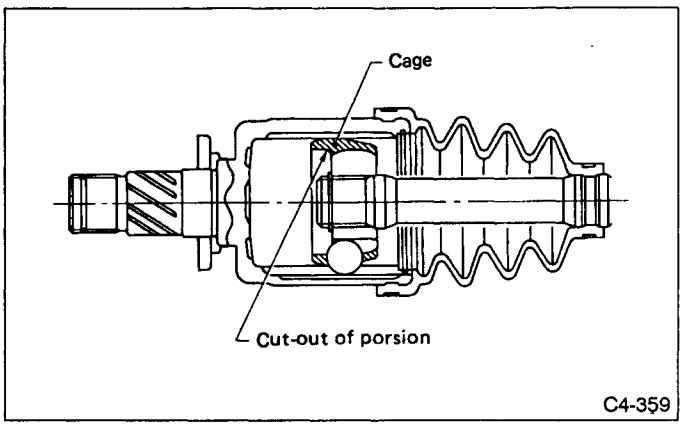

Fig. 115

4) Install DOJ inner race on shaft and fit snap ring with special pliers.
Confirm that the snap ring is completely fitted in the shaft groove.

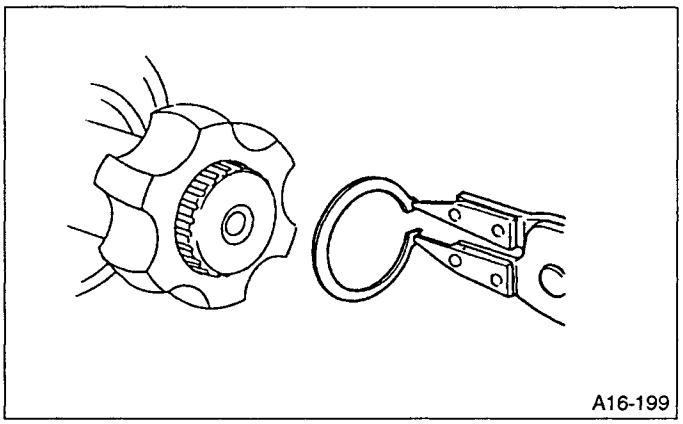

Fig. 116

5) Install cage, which was previously fitted, to inner race fixed upon shaft.
Fit the cage with the protruded part aligned with the track on the inner race and then turn by a half pitch.

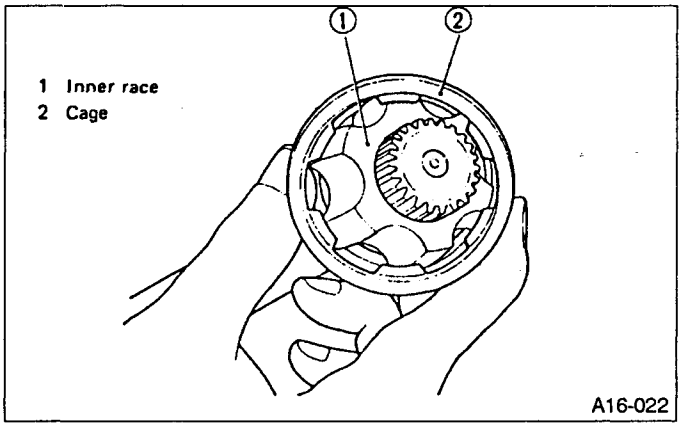

Fig. 117

6) Fill 80 to 90 g (2.82 to 3.17 oz) of specified grease into the interior of DOJ outer race.
7) Apply a coat of specified grease to the cage pocket and six balls.
8) Insert six balls into the cage pocket.
9) Align the outer race track and ball positions and place in the part where shaft, inner race, cage and balls are previously installed, and then fit outer race.

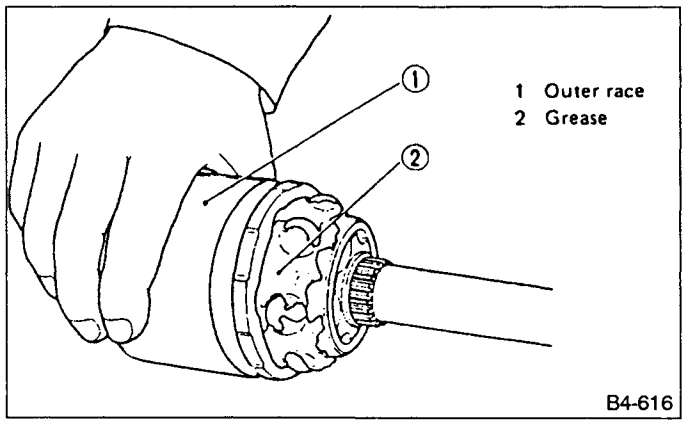

Fig. 118

10) Install circlip in the groove on DOJ outer race.
a. Assure that the balls, cage and inner race are completely fitted in the outer race of DOJ.
b. Exercise care not to place the matched position of circlip in the ball groove of outer race.
c. Pull the shaft lightly and assure that the circlip is completely fitted in the groove.

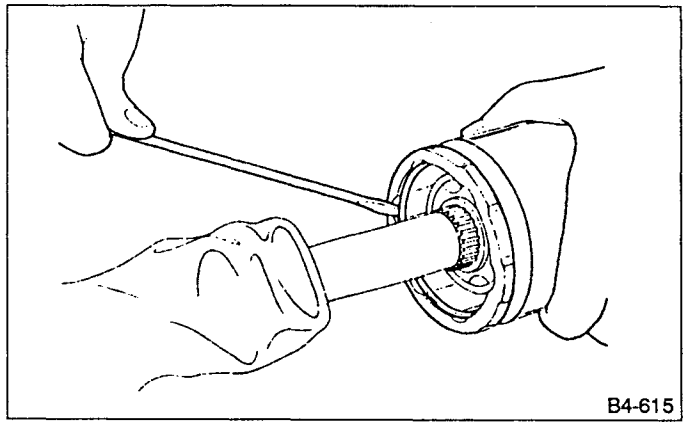

Fig. 119

11) Apply an even coat of the specified grease [20 to 30 g (0.71 to 1.06 oz)] to the entire inner surface of boot. Also apply grease to shaft.
12) Install DOJ boot taking care not to twist it.
a. The inside of the larger end of DOJ boot and the boot groove shall be cleaned so as to be free from grease and other substances.
b. When installing DOJ boot, position outer race of DOJ at center of its travel.
13) Put a band through the clip and wind twice in alignment with band groove of boot.
Use a new band.
14) Pinch the end of band with pliers. Hold the clip and tighten securely.
When tightening boot, exercise care so that the air within the boot is appropriate.
15) Tighten band by using BAND TIGHTENING TOOL (925091000).
a. Tighten band until it cannot be moved by hand.
b. Former BAND TIGHTENING TOOL (925090000) is interchangeable with this 925091000.

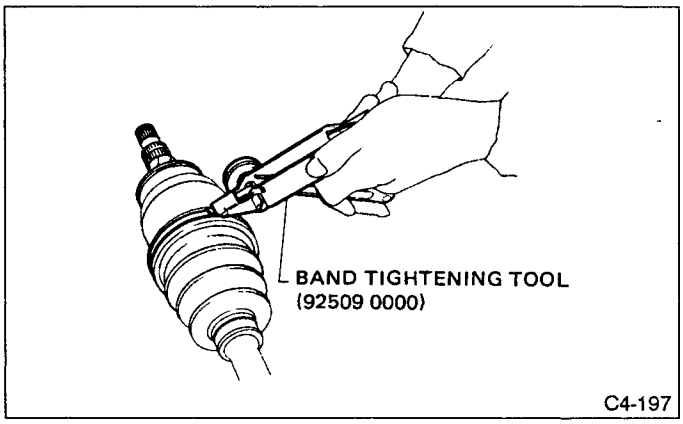

Fig. 120

16) Tap on the clip with the punch provided at the end of BAND TIGHTENING TOOL.
Tap to an extent that the boot underneath is not damaged.

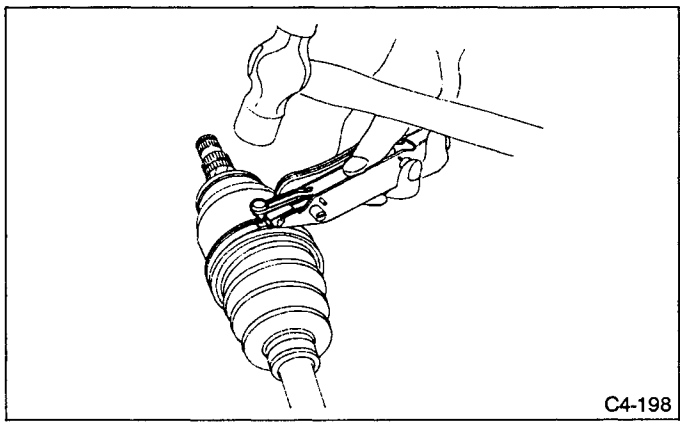

Fig. 121

17) Cut off band with an allowance of about 10 mm (0.39 in) left from the clip and bend this allowance over the clip.
Be careful so that the end of the band is in close contact with clip.
18) Fix up boot on BJ in the same manner.
19) Install protector onto BJ boot band.
Extend and retract DOJ to provide equal grease coating.

6. Replacement of Rear Drive Shaft Boot

A: REMOVAL

1) Move select lever to Neutral.
2) Move parking brake lever forward.
3) Lift up vehicle and remove rear wheels.
4) Disconnect rear exhaust pipe.
5) Remove stabilizer link.
6) Remove ABS sensor clamp and parking brake cable bracket.
7) Disconnect parking brake cable clamp.
8) Disconnect brake hose from strut.
9) Disconnect trailing link from housing.
10) Disconnect lateral link from housing.
11) Remove DOJ from rear differential using DRIVE SHAFT REMOVER (28099PA100).
Be careful not to damage side bearing retainer. Always use bolt (shown in Figure 123.) as supporting point for REMOVER during removal.

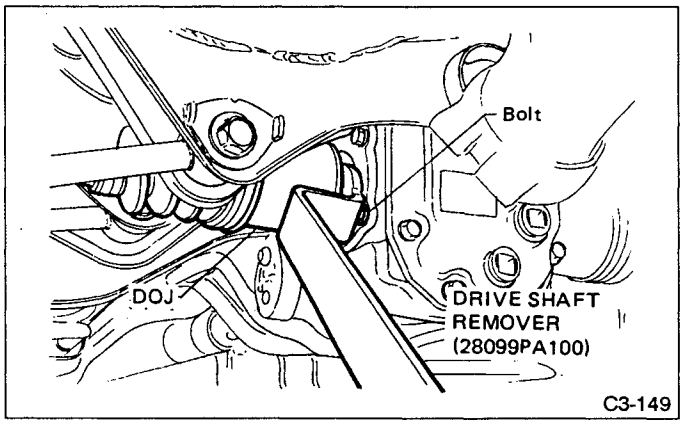

Fig. 122

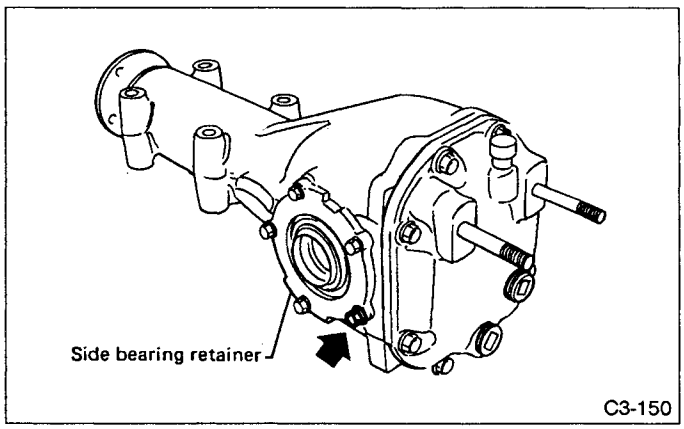

Fig. 123

Left spline end of DOJ is removed together with circlip. Do not remove right circlip attached to inside of differential.
12) Remove DOJ boot band.
Be careful not to damage boot.

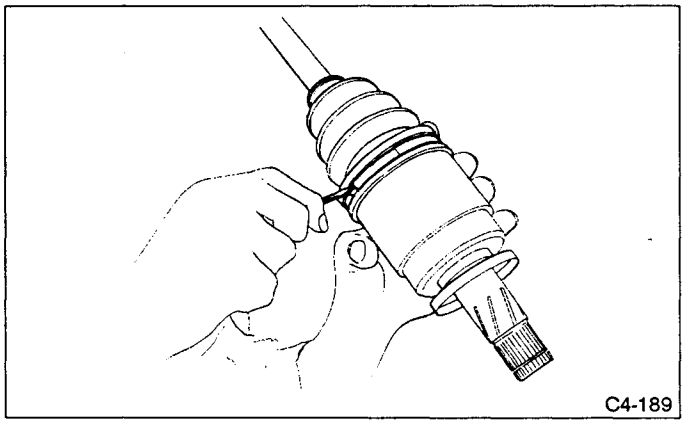

Fig. 124

13) Remove boot from DOJ.
14) Remove circlip from DOJ outer race using screwdriver.

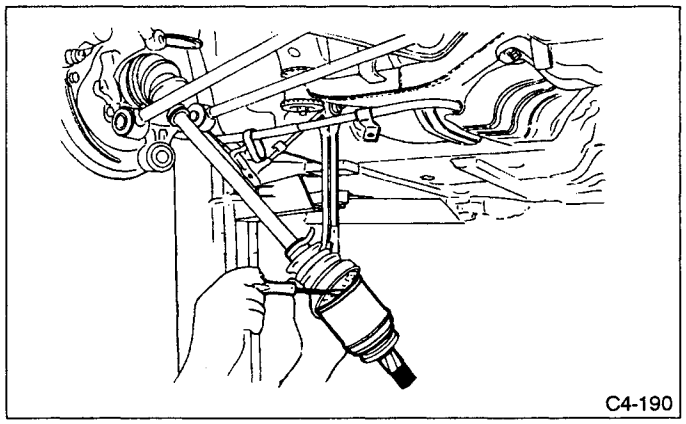

Fig. 125

15) Take out DOJ outer race from shaft ASSY.
Do not allow DOJ splines to damage side oil seal.
16) Remove snap ring.

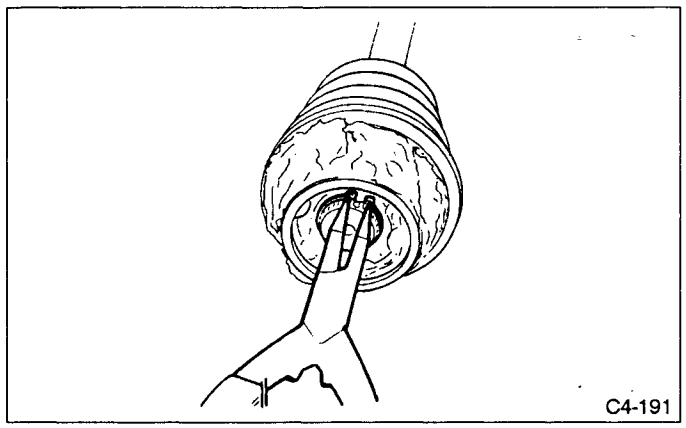

Fig. 126

17) Remove DOJ inner race assembly from shaft.

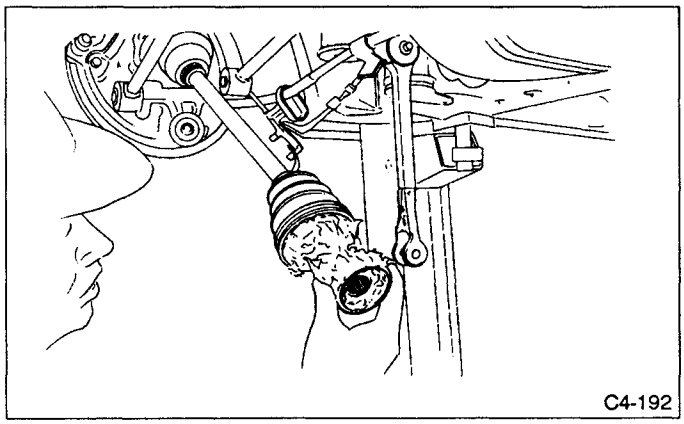

Fig. 127

Be sure to wrap shaft splines with vinyl tape to prevent boot from scratches.

18) Remove DOJ boot.

19) Remove BJ boot band protector.

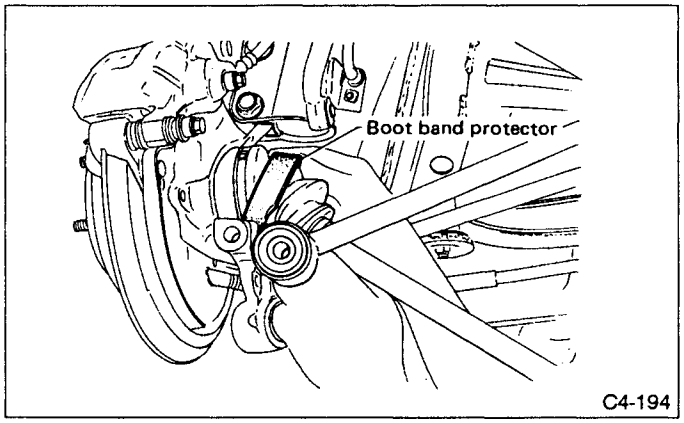

Fig. 128

20) Remove BJ boot band.

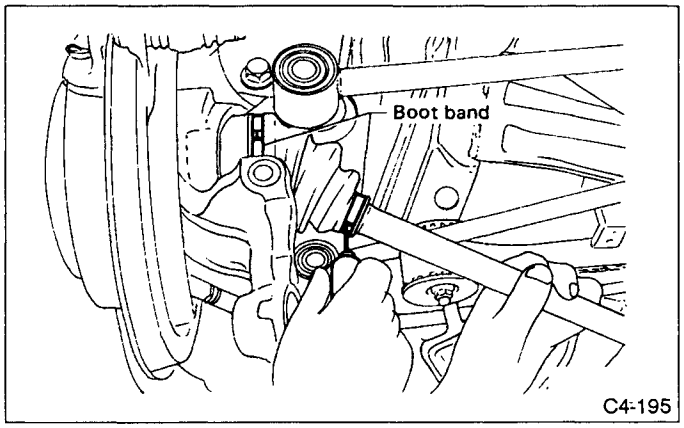

Fig. 129

21) Remove BJ boot.

B: INSPECTION

Check the removed parts for damage, wear, corrosion, etc. If faulty, repair or replace.

1) DOJ (Double Offset Joint) and BJ (Bell Joint)
Check seizure, corrosion, damage, wear and excessive play.

2) Shaft
Check excessive bending, twisting, damage and wear.

3) Boot
Check for wear, warping, breakage or scratches.

4) Grease
Check for discoloration or fluidity.

C: INSTALLATION

Use specified grease.

BJ and DOJ:
Molylex No. 2 (P/N 723223010) or Sunlight TB2-A

Be sure to wrap shaft splines with vinyl tape to prevent boot from scratches.

1) Install BJ boot in specified position, and fill it with 60 to 70 g (2.12 to 2.47 oz) of specified grease.

2) Place boot band protector and DOJ boot at the center of shaft.

3) Insert DOJ cage onto shaft.
Insert the cage with the cut-out side facing the shaft end, since the cage has an orientation.

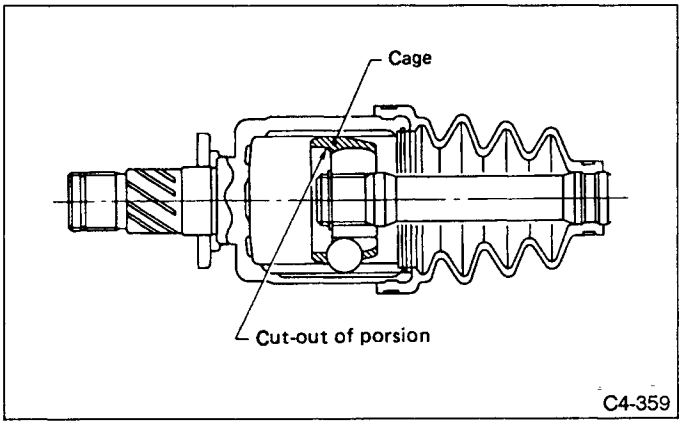

Fig. 130

4) Install DOJ inner race on shaft and fit snap ring with special pliers.
Confirm that the snap ring is completely fitted in the shaft groove.

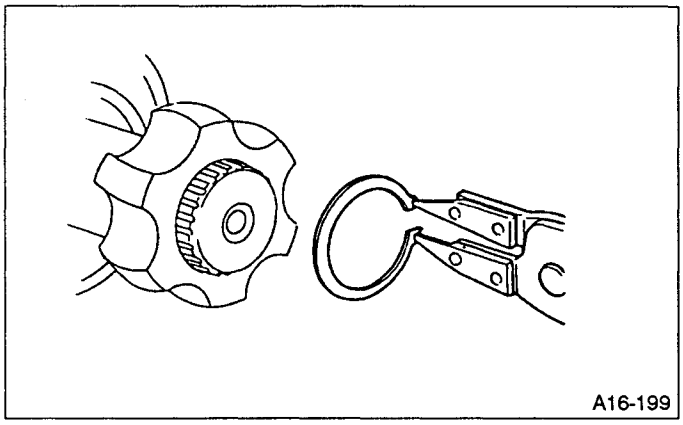

Fig. 131

5) Install cage, which was previously fitted, to inner race fixed upon shaft.
Fit the cage with the protruded part aligned with the track on the inner race and then turn by a half pitch.

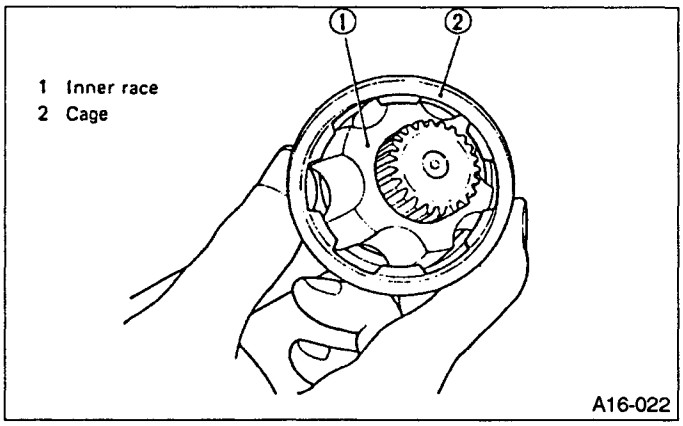

Fig. 132

6) Fill 80 to 90 g (2.82 to 3.17 oz) of specified grease into the interior of DOJ outer race.
7) Apply a coat of specified grease to the cage pocket and six balls.
8) Insert six balls into the cage pocket.

9) Align the outer race track and ball positions and place in the part where shaft, inner race, cage and balls are previously installed, and then fit outer race.

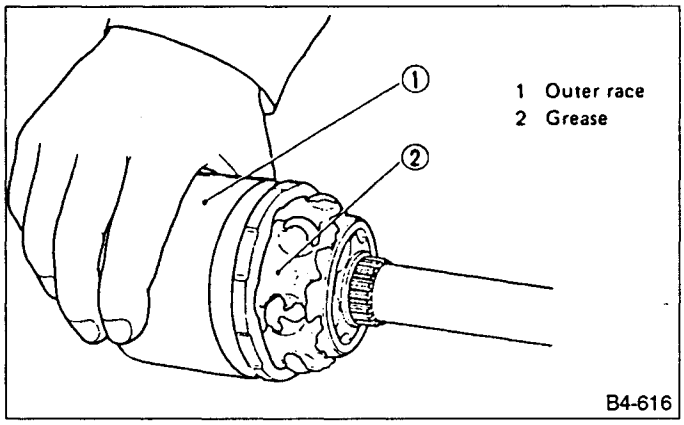

Fig. 133

10) Install circlip in the groove on DOJ outer race.
a. Assure that the balls, cage and inner race are completely fitted in the outer race of DOJ.
b. Exercise care not to place the matched position of circlip in the ball groove of outer race.
c. Pull the shaft lightly and assure that the circlip is completely fitted in the groove.

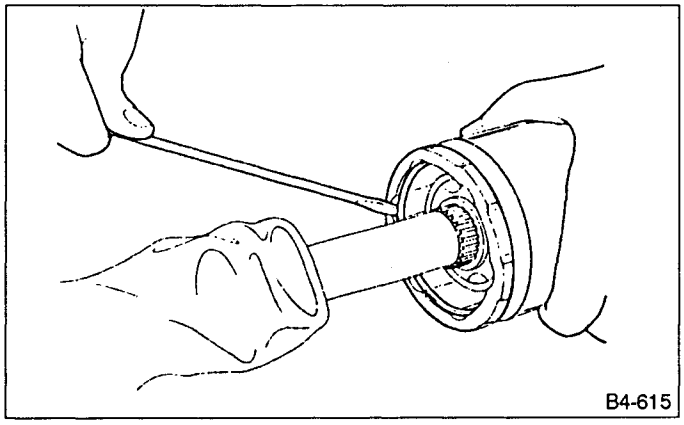

Fig. 134

11) Apply an even coat of the specified grease [20 to 30 g (0.71 to 1.06 oz)] to the entire inner surface of boot. Also apply grease to shaft.
12) Install DOJ boot taking care not to twist it.
a. The inside of the larger end of DOJ boot and the boot groove shall be cleaned so as to be free from grease and other substances.
b. When installing DOJ boot, position outer race of DOJ at center of its travel.
13) Put a band through the clip and wind twice in alignment with band groove of boot.
Use a new band.
14) Pinch the end of band with pliers. Hold the clip and tighten securely.
When tightening boot, exercise care so that the air within the boot is appropriate.

15) Tighten band by using BAND TIGHTENING TOOL (925091000).
a. Tighten band until it cannot be moved by hand.
b. Former BAND TIGHTENING TOOL (925090000) is interchangeable with this 925091000.

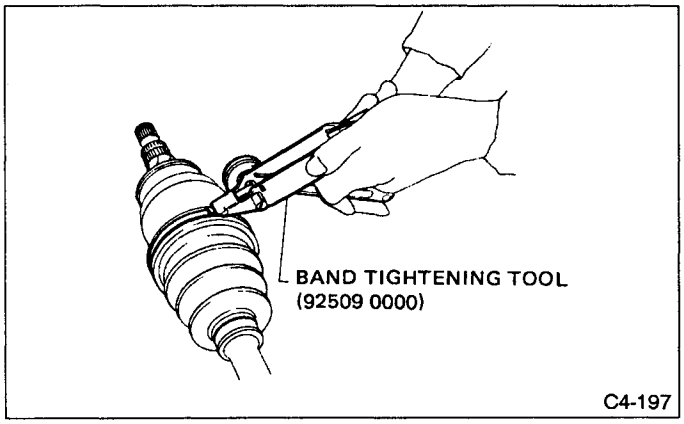

Fig. 135

16) Tap on the clip with the punch provided at the end of BAND TIGHTENING TOOL.
Tap to an extent that the boot underneath is not damaged.

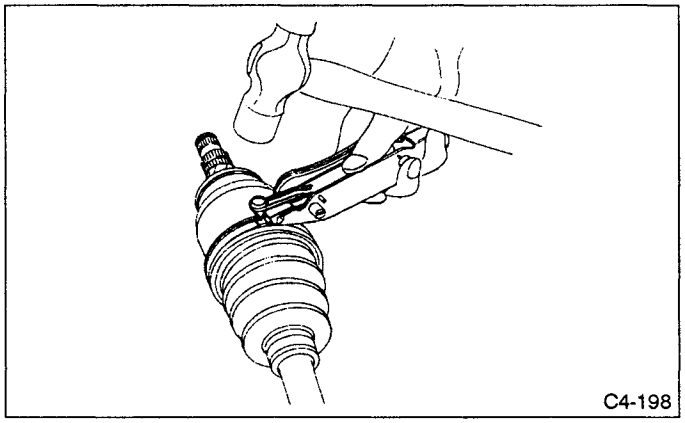

Fig. 136

17) Cut off band with an allowance of about 10 mm (0.39 in) left from the clip and bend this allowance over the clip.
Be careful so that the end of the band is in close contact with clip.
18) Fix up boot on BJ in the same manner.
19) Place protector onto BJ boot band.

Extend and retract DOJ to provide equal grease coating.
Discard circlip on left DOJ spline, and install new one.
20) Using SIDE OIL SEAL PROTECTOR (28099PA090), install DOJ into differential.

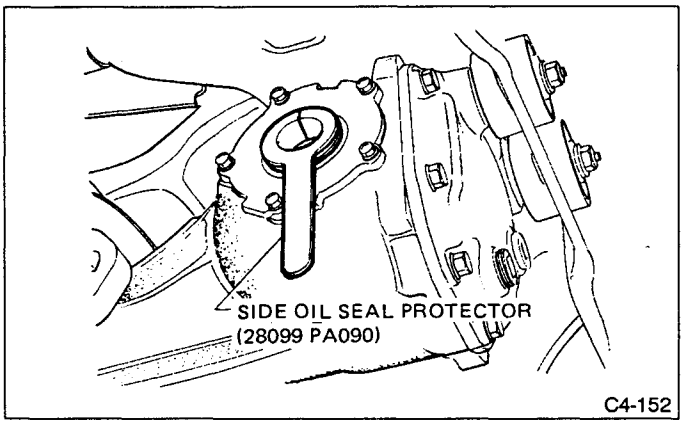

Fig. 137

21) Insert DOJ splined end into bore of oil side seal, and remove SIDE OIL SEAL PROTECTOR.
Do not allow DOJ splines to damage side oil seal.

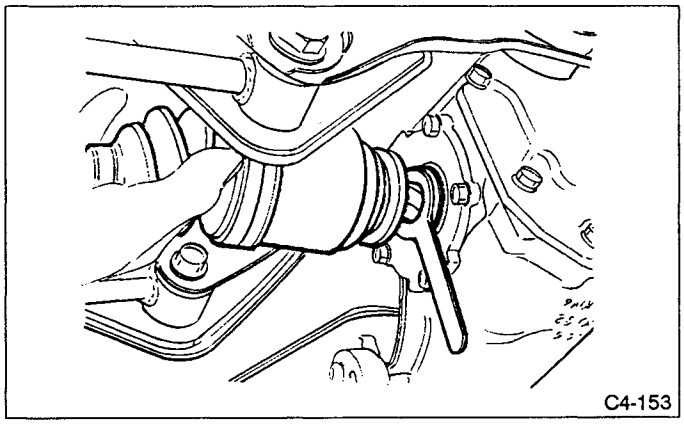

Fig. 138

22) Mesh DOJ with differential splines.
23) Push housing to insert DOJ into differential.
Check to make sure DOJ is inserted properly.

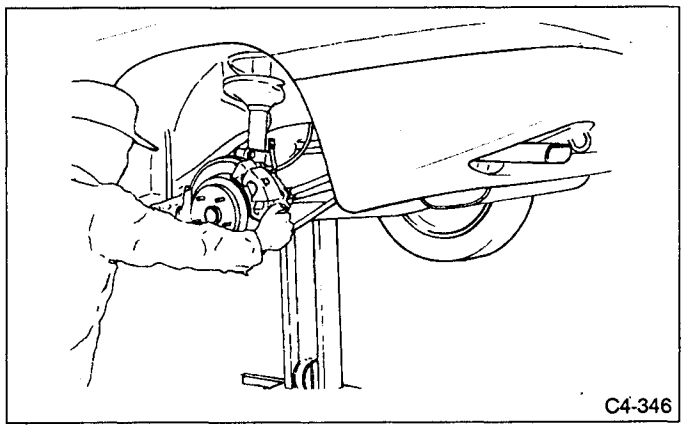

Fig. 139

24) Install remaining parts in reverse order of removal procedures.
25) For installation and tightening torque of suspension parts, refer to 4-1 [C200].
For installation and tightening torque of brake parts, refer to 4-4 [C200].
Use a new self-lock nut.

7. Aluminum Wheel and Tire

1) Deformation or damage on the rim can cause air leakage. Check the rim flange for deformation, crack, or damage, and repair as necessary.
2) Take stone, glass, nail etc. off the tread groove.
3) Replace tire:
- when large crack on side wall, damage or crack on tread is found.
- when the "tread wear indicator" appears as a solid band across the tread.

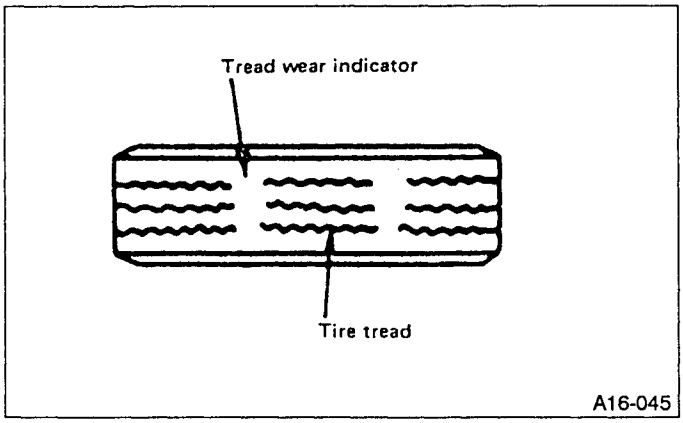

Fig. 140

a. When replacing a tire, make sure to use only the same size, construction and load range as originally installed. Avoid mixing radial, belted bias or bias tires on the vehicle.
b. Left and right aluminum wheels have different designs. Install them in their correct positions.
c. Identification mark "RH" or "LH" is indicated on rear surface of each wheel. "LH" wheels have "L" marked beside tire valve.

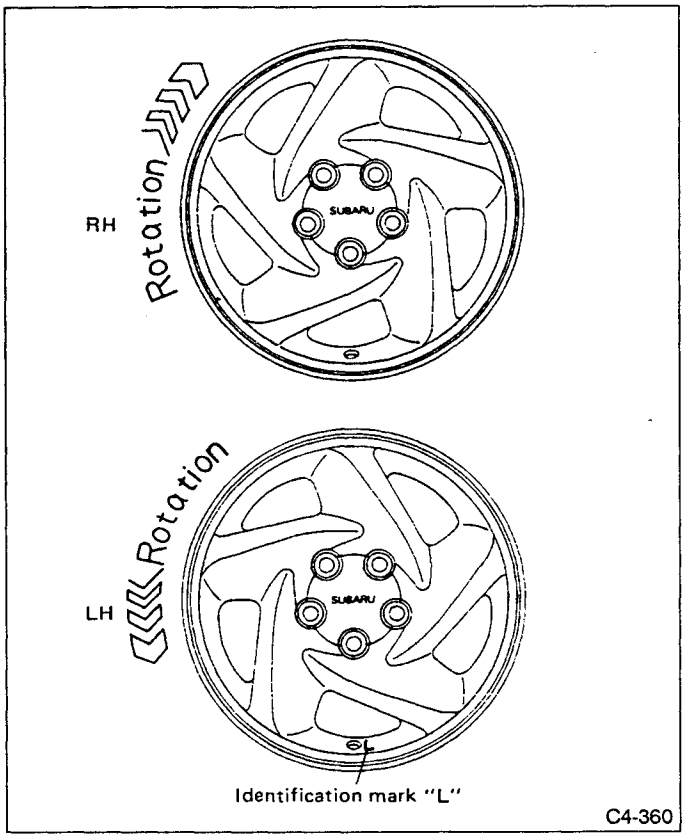

Fig. 141

A: INSPECTION OF WHEEL RUNOUT

1) Jack up vehicle until wheels clear the floor.
2) Slowly rotate wheel to check rim "runout" using a dial gauge.

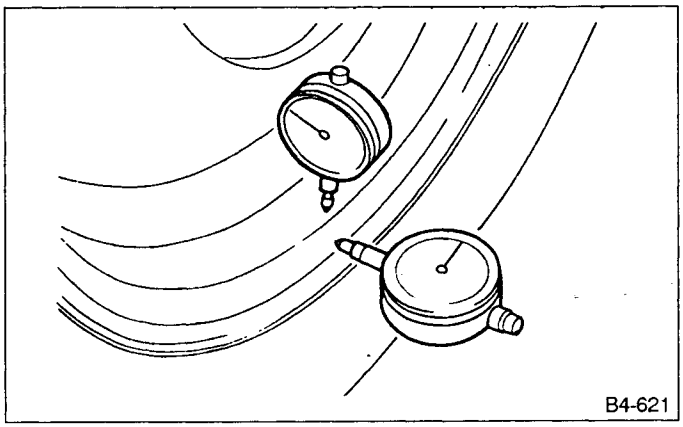

Fig. 142

	Axial runout limit	Radial runout limit
Aluminum wheel	1.0 mm (0.039 in)	

3) If rim runout exceeds specifications, remove tire from rim and check runout while attaching dial gauge to positions shown in the figure below.

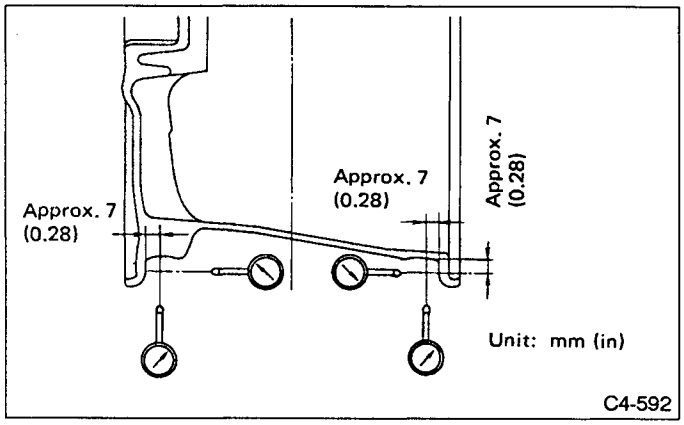

Fig. 143

If measured runout still exceeds specifications, replace the wheel.

B: PRECAUTIONS

Aluminum wheels are easily scratched. To maintain their appearance and safety, observe the following:
1) Do not damage aluminum wheels during removal, disassembly, installation, wheel balancing, etc. After removing aluminum wheels, place them on a rubber mat, etc.
2) While vehicle is being driven, be careful not to ride over sharp obstacles or allow aluminum wheels to contact the shoulder of the road.
3) When installing tire chain, be sure to install it properly not to have a slack; otherwise it may hit wheel while driving.
4) When washing aluminum wheel, use neutral synthetic detergent and water. Avoid using the cleanser including abrasive, hard brushes or an automatic car washer.

8. Wheel Balancing

1) Proper wheel balance may be lost if the tire is repaired or if it wears. Check the tire for dynamic balance, and repair as necessary.
2) To check for dynamic balance, use a dynamic balancer. Drive in the balance weight on both the top and rear sides of the rim.
3) Some types of balancer can cause damage to the wheel. Use an appropriate balancer when adjusting the wheel balance.
4) Use genuine balance weights.

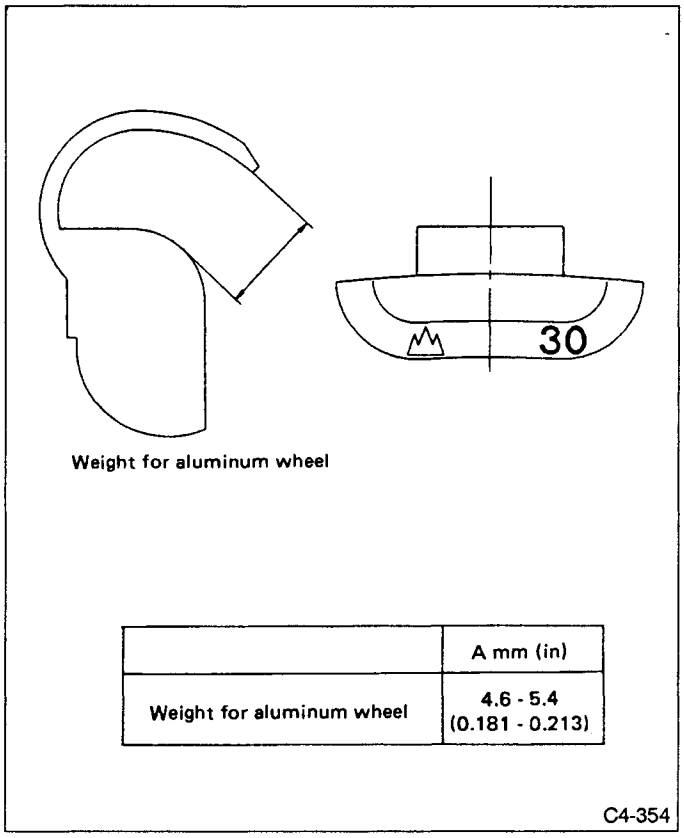

	A mm (in)
Weight for aluminum wheel	4.6 - 5.4 (0.181 - 0.213)

Fig. 144

a. All balance weights shown in Table are colored silver.
b. 55 g (1.94 oz) weight used with aluminum wheel is not available.
c. Balance weights are available for use with any of 16-inch wheels.

9. Installation of Wheel Assembly to Vehicle

1) Before installing each wheel on vehicle, apply a continuous coat of grease to entire perimeter of centering boss on wheel hub using fingers.
2) Attach the wheel to the hub by aligning the wheel bolt hole with the hub bolt.
3) Temporarily attach the wheel nuts and washer to the hub bolts.
a. Use only wheel nuts (w/washers) designed for SVX models.
b. Wheel nuts designed exclusively for SVX's aluminum wheels cannot be used on any other vehicle, and those designed for conventional vehicles cannot be used on SVX's aluminum wheels.

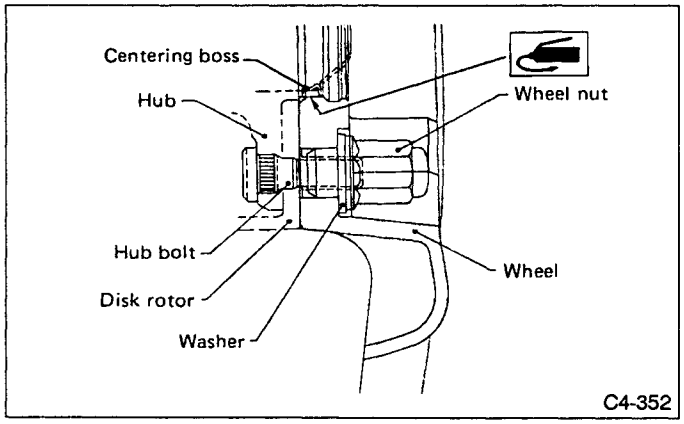

Fig. 145

4) Manually tighten the nuts making sure the wheel hub hole is aligned correctly to the guide portion of hub.
5) Tighten the wheel nuts in a diagonal selection to the specified torque. Use a wheel nut wrench.

Wheel nut tightening torque:
98 — 118 N•m (10 — 12 kg-m, 72 — 86 ft-lb)

a. Tighten the wheel nuts in two or three steps by gradually increasing the torque and working diagonally, until the specified torque is reached.
b. Do not depress the wrench with a foot; Always use both hands when tightening.
c. Make sure the bolt, nut and the nut seating surface of the wheel are free from oils.
6) If a wheel is removed for replacement or for repair of a puncture, retighten the wheel nuts to the specified torque after running 1,000 km (600 miles).

10. Tire Rotation

If tires are maintained at the same positions for a long period of time, uneven wear results. Therefore, they should be periodically rotated.
This lengthens service life of tires.
a. When rotating tires, replace unevenly worn or damaged tires with new ones.
b. Since "T-type" tire for temporary use is prepared as a spare tire, tire rotation is as follows.

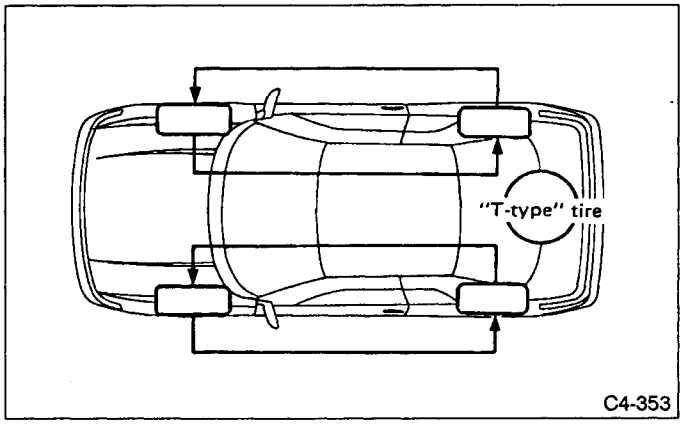

Fig. 146

11. "T-type" Tire

"T-type" tire for temporary use is prepared as a spare tire.

a. Keep the inflation pressure at 412 kPa (4.2 kg/cm^2, 60 psi) at all times.

b. When the wear indicator appears on the tread surface, replace the tire with a new one.

c. Do not use a tire chain with the "T-type" tire. Because of the smaller tire size, a tire chain will not fit properly and will result in damage to the vehicle and the tire.

d. When using a T-type tire:

- **Do not drive at a speed greater than 80 km/h (50 MPH).**
- **Drive as slowly as possible and avoid running over bumps.**
- **Replace it with a conventional tire as soon as possible since this "T-type" tire is only for temporary use.**
- **"T" type tires must be installed using wheels nuts specifically designed for SVX's aluminum wheels.**

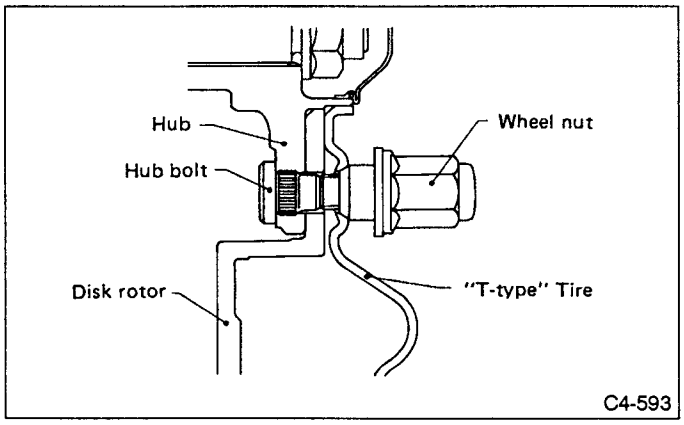

Fig. 147

SUBARU

SVX

1992

Precaution for Supplemental Restraint System "Airbag"
The Supplemental Restraint System "Airbag" helps to reduce the risk or severity of injury to the driver in a frontal collision.
The Supplemental Restraint System consists of an airbag module (located in the center of the steering wheel), sensors, a control unit, warning light, wiring harness and spiral cable.
Information necessary to service the safety is included in the "5-5. SUPPLEMENTAL RESTRAINT SYSTEM" of this Service Manual.
WARNING:
- To avoid rendering the Airbag system inoperative, which could lead to personal injury or death in the event of a severe frontal collision, all maintenance must be performed by an authorized SUBARU dealer.
- Improper maintenance, including incorrect removal and installation of the Airbag system, can lead to personal injury caused by unintentional activation of the Airbag system.
- All Airbag system electrical wiring harnesses and connectors are covered with yellow outer insulation. Do not use electrical test equipment on any circuit related to the Supplemental Restraint System "Airbag".



Page

M MECHANISM AND FUNCTION 2
1. Steering Column 2
2. Power Steering System (Engine Speed Sensing Type) 5
3. Power Steering System (Vehicle Speed Sensing, Electronically Controlled, Hydraulic Reaction Type) 11
4. Self-Diagnosis System 20
S SPECIFICATIONS AND SERVICE DATA 21
C COMPONENT PARTS 23
1. Steering Wheel & Column 23
2. Power Steering System 24
3. Steering Gearbox 25
4. Power Steering Oil Pump & Tank 26
W SERVICE PROCEDURE AIRBAG 27
1. Supplemental Restraint System "Airbag" 27
2. Tilt & Telescopic Steering Column with Memory Function 27
3. Steering Gearbox (Power Steering System) 32
4. Control Valve (Power Steering Gearbox) 49
5. Oil Cooler and Hose & Pipe ASSY (Power Steering System) 57
6. Oil Pump & Reservoir Tank 58
T TROUBLESHOOTING AIRBAG 67
1. Supplemental Restraint System "Airbag" 67
2. Power Steering 67
3. Troubleshooting for Self-diagnosis System 79
4. Troubleshooting Chart with Trouble Code 84

M MECHANISM AND FUNCTION

1. Steering Column

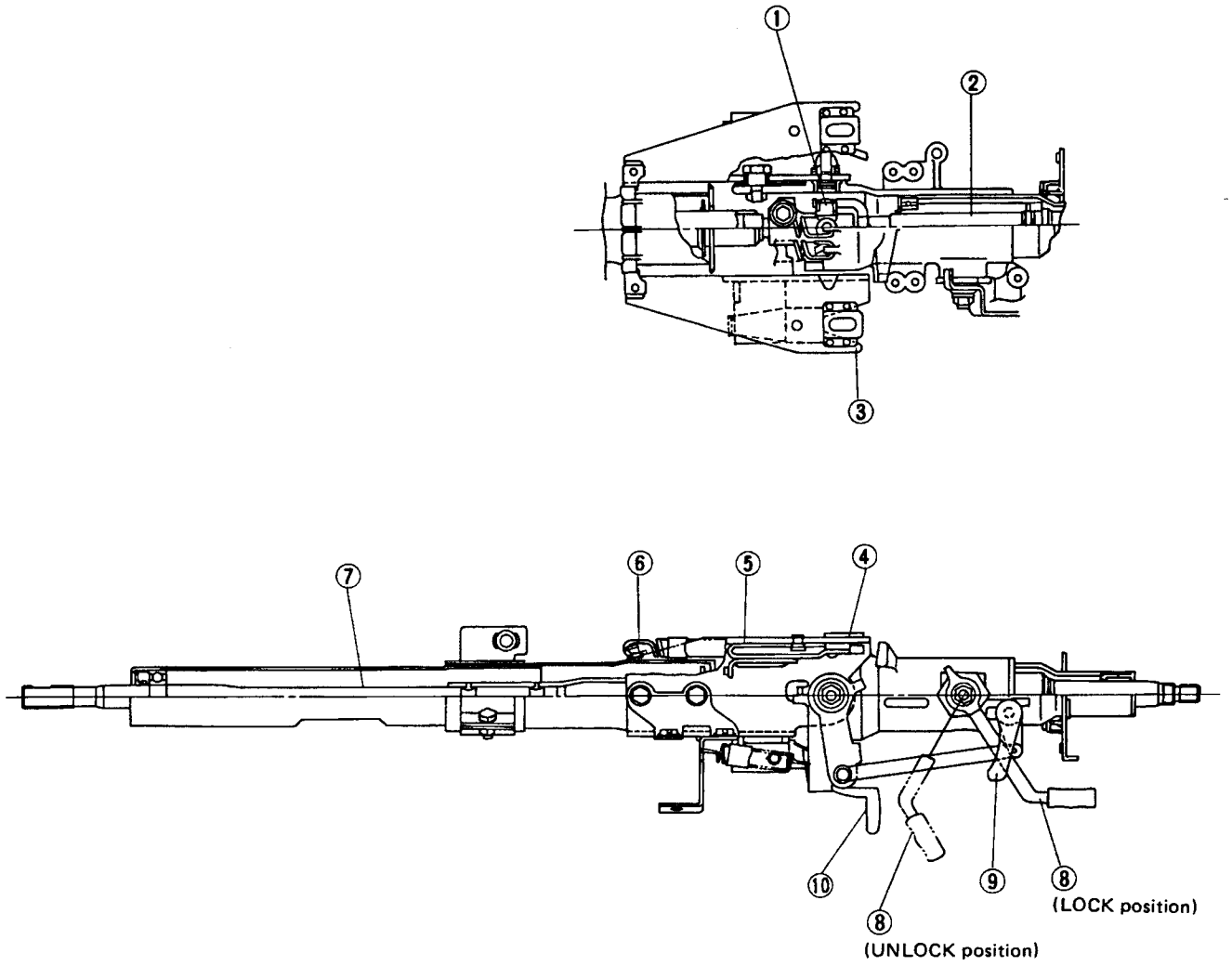

1 Universal joint
2 Telescopic shaft
3 Coating plate
4 Capsule
5 Curling plate
6 Lifting spring
7 Steering shaft
8 Telescopic lever
9 Tilt up lever
10 Tilt select lever
11 Movable gear
12 Memory gear

C4-001

Fig. 1

A: FEATURE

1. TILT & TELESCOPIC STEERING COLUMN WITH MEMORY FUNCTION

1) The tilt position is determined by engagement of the movable gear and stationary gear.
The tilt position can be adjusted up and down in 3 steps each way from the neutral position. Each step changes the column tilt angle 1.925 degrees [or 34/3 mm (1.34/3 in)]. Also, when swung up, the steering column can be tilted up an additional 21 mm (0.83 in) from the top position.
2) The previous column position is memorized via the memory gear when the steering column is tilted upwards.
3) The gears are engaged directly below the steering column to increase rigidity.
4) The tilt-up lever tilts the steering column all the way up, and the tilt-select lever tilts it to an optimum driving position.

2. TELESCOPIC FUNCTION

1) The telescopic lever adjusts the driving position forward and backward in a 37 mm (1.46 in) range for the optimum driving posture.
2) The high-precision splines are used to provide smooth telescopic steering wheel operation.

3. ENERGY ABSORBING MECHANISM OF CURLING PLATE

1) Effective impact-absorbing performance is assured.
2) The plate comes in a detachable capsule set.

4. RUBBER COUPLING

A rubber coupling is used between the two universal joints in the engine compartment to reduce flutter, kickbacks and the noise from the steering gearbox.

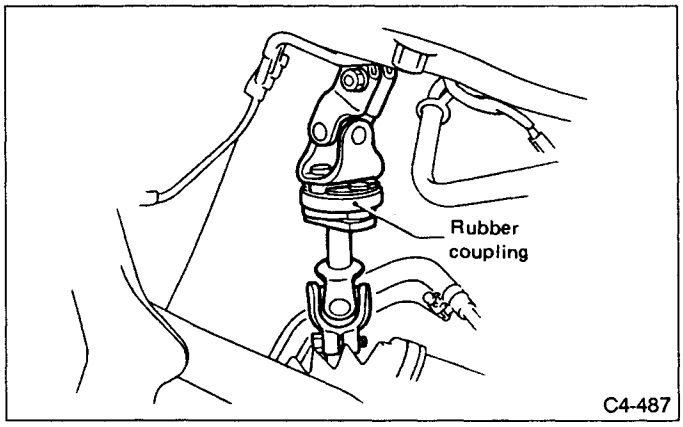

Fig. 2

B: OPERATION

1. TILT STEERING COLUMN WITH MEMORY FUNCTION

1) When the tilt-up lever is pulled back, the movable gear is disengaged from the stationary gear. This causes the coil spring to tilt the steering column up.
At this point, the memory gear is held engaged with the movable gear and operates according to the movement of the movable gear.
A plate united with the memory gear is then interposed between the movable and stationary gears. This holds the two gears disengaged (when the tilt-up lever is released).
2) When the stationary gear and the memory gear, which is engaged with it, return to the original position while pushing the steering wheel down, the movable gear is disengaged from the plate. This causes the tilt-up lever to be locked.

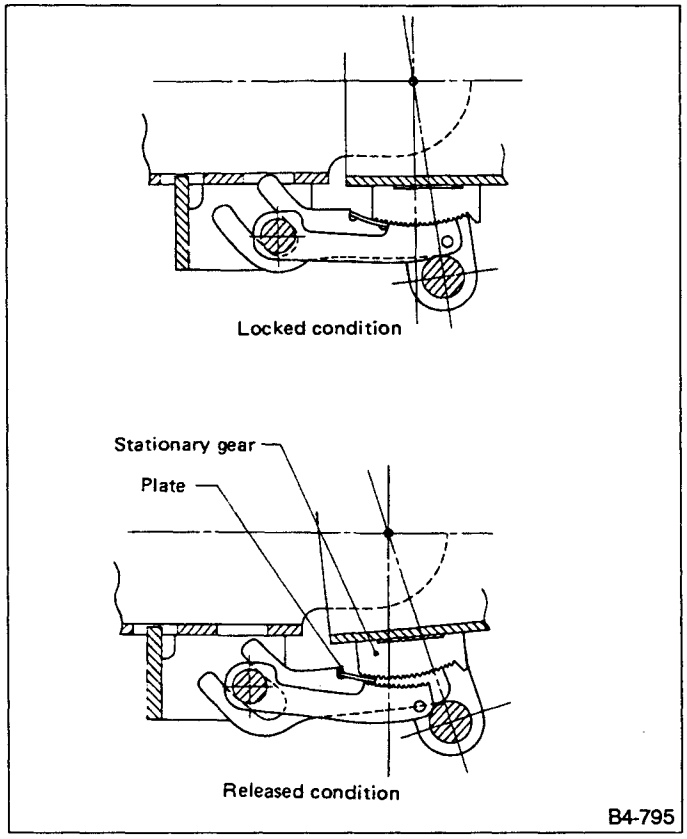

Fig. 3

3) When the tilt-select lever is pulled toward the driver, both the movable and memory gears are simultaneously disengaged from the stationary gear. This unlocks the tilt-select lever. (The tilt-up lever is also moved by the movement of the tilt-select lever.)
When the steering wheel is released at the desired position, it will remain locked there.

2. TELESCOPIC FUNCTION

The telescopic lever is locked when pulled toward the driver. Pushing it releases the steering wheel for adjustment. After adjusting the wheel position, the lever must be locked.

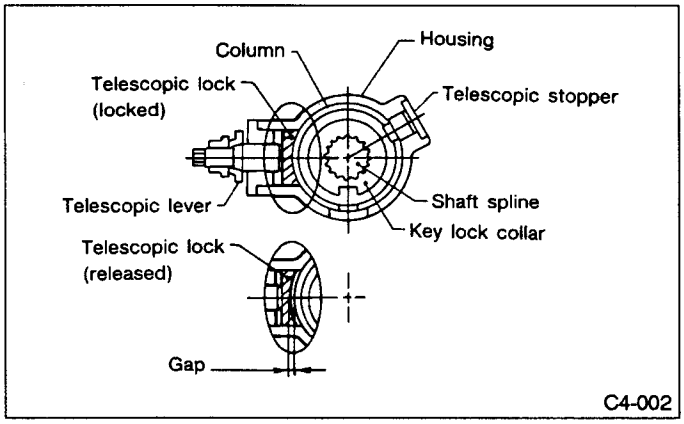

Fig. 4

3. ENERGY ABSORBING MECHANISM OF CURLING PLATE

The curling plate is installed between the column mounting bracket and the support bracket. In a collision, the curling plate deforms to effectively absorb the energy of the impact.

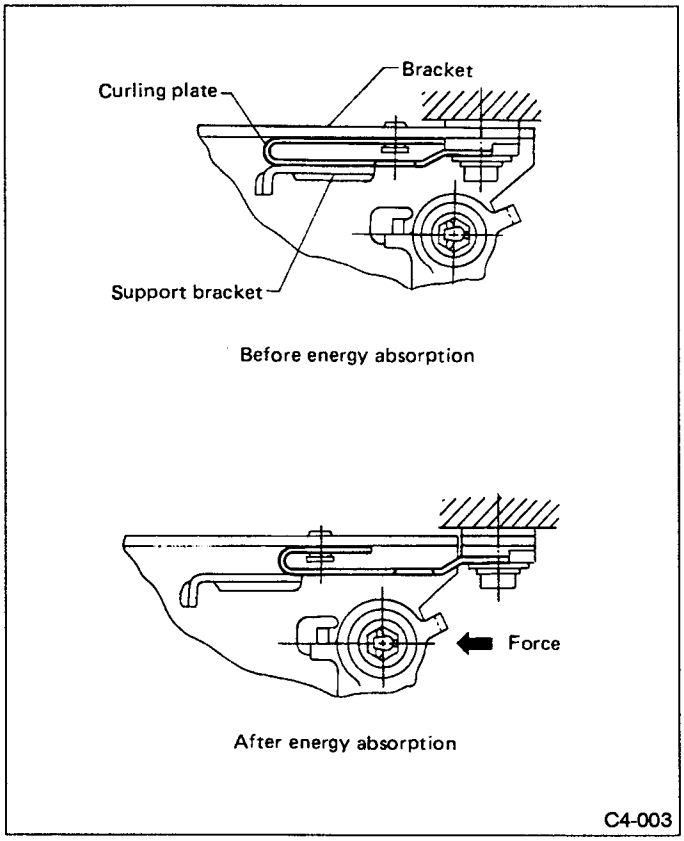

Fig. 5

- The steering column is held by a support beam located close to the steering wheel to reduce the overhang. The upper bearing is also located close to the steering wheel to increase supporting rigidity, as well as to reduce the problem of a shaking or shimmying wheel.

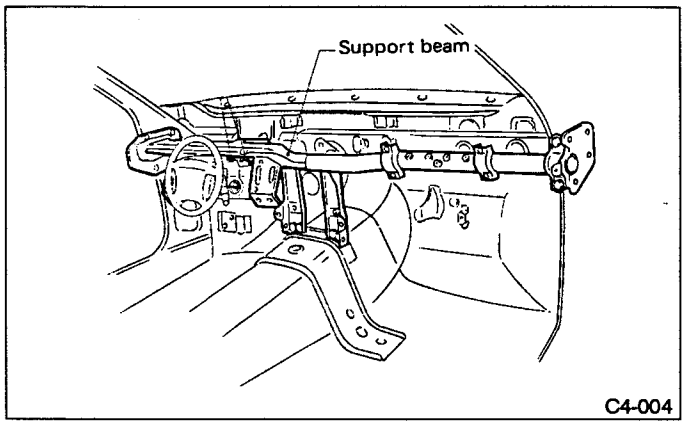

Fig. 6

- The steering column is supported solely by the support beam. So, in the case of a frontal collision, even if the toe-board is deformed, the throwback of the column can be minimized.

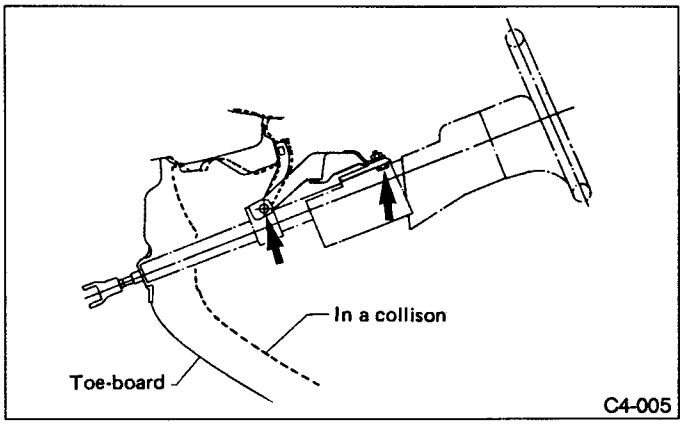

Fig. 7

2. Power Steering System (Engine Speed Sensing Type)

1. HYDRAULIC SYSTEM

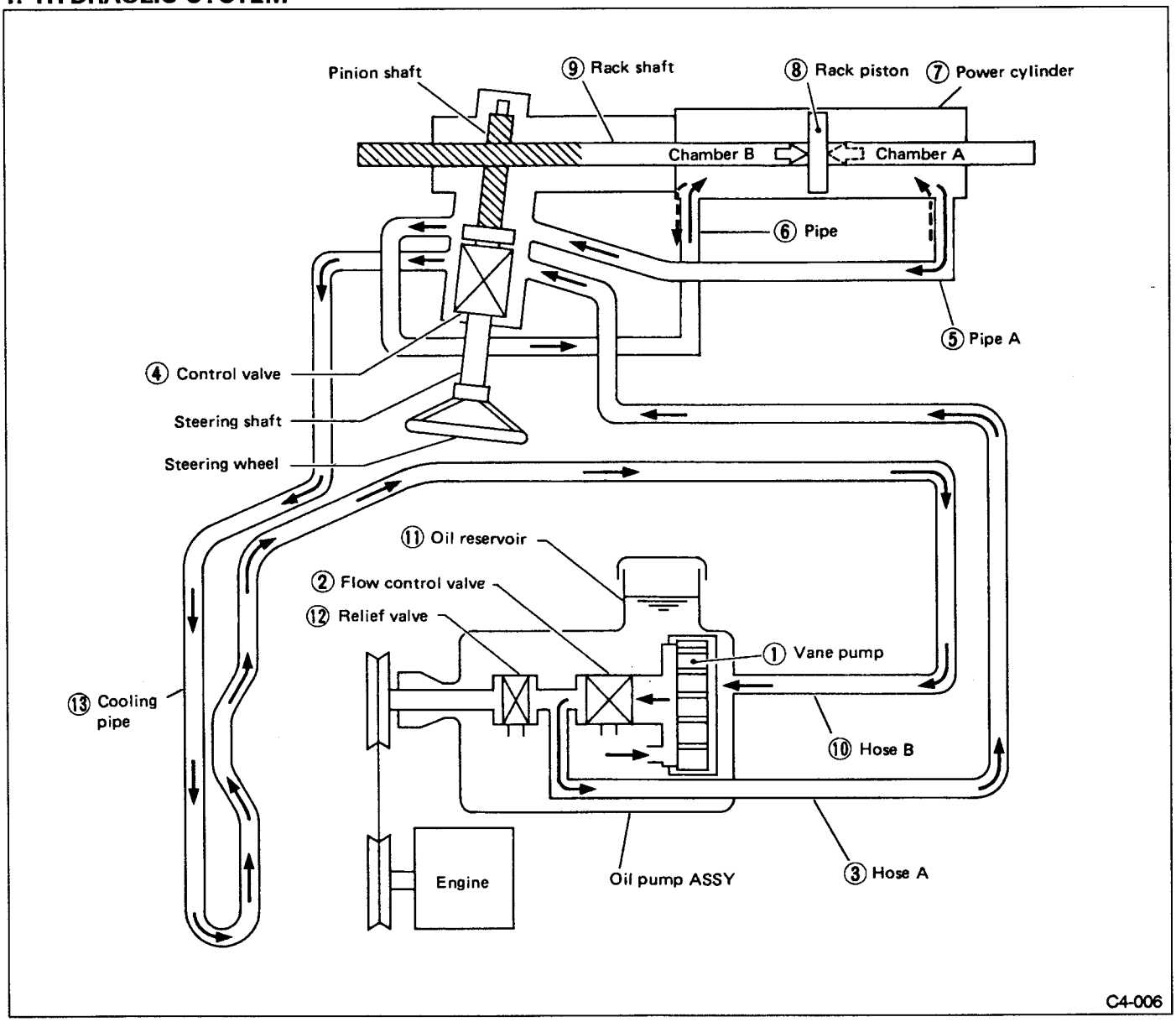

Fig. 8

1) Vane pump ① is belt-driven from the engine to discharge oil under pressure.
2) Oil under pressure is controlled by the flow control valve ② located inside the oil pump ASSY in response to engine speed and is delivered to control valve ④ via hose A ③.
3) When the steering wheel is turned, control valve ④ connected to the pinion shaft activates to form an oil flow circuit corresponding to the rotation direction of the steering wheel. Oil will then be delivered to chamber A or B via pipe A ⑤ or B ⑥.
4) Oil in chamber A or B acts on rack piston ⑧ to produce the force required to move rack shaft ⑨ to the left or the right. This helps reduce the effort required to operate the steering wheel.
5) Movement of rack piston ⑧ in turn causes oil in the other chamber to return to oil reservoir ⑪ via pipe A ⑤ or B ⑥, control valve ④, cooling pipe and hose B ⑩.
   - If the hydraulic system becomes inoperative, the steering shaft will then be connected to the pinion shaft mechanically via control valve ④. Thus, the steering shaft can act as one similar to a manual steering system to move the rack and pinion.
   - To control the maximum oil pressure setting, relief valve ⑫ is built into flow control valve ② of the oil pump ASSY to release excess oil pressure.

6) Cooling pipe

A cooling pipe is incorporated to prevent the deterioration of the power steering oil due to an increase in oil temperature. By cooling the oil the stability of the oil temperature is improved.

2. GEARBOX ASSY

1) Power cylinder

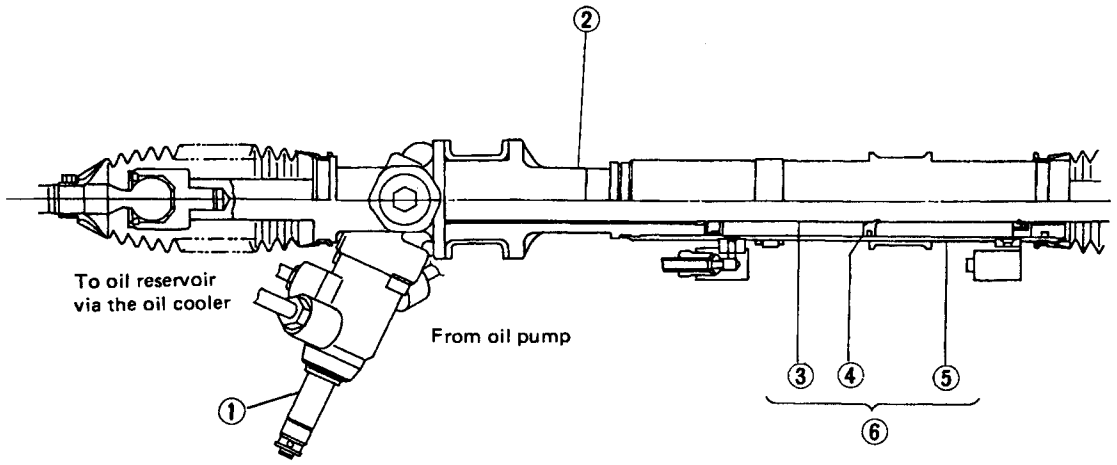

Fig. 9

The gearbox is integrated with a built-in control valve and power cylinder. The rack shaft is used as a power cylinder piston and a rotary control valve is located in such a manner as to enclose the pinion shaft.

The control valve and power cylinder are connected to each other by two pipes through which hydraulic oil flows.

2) Control valve

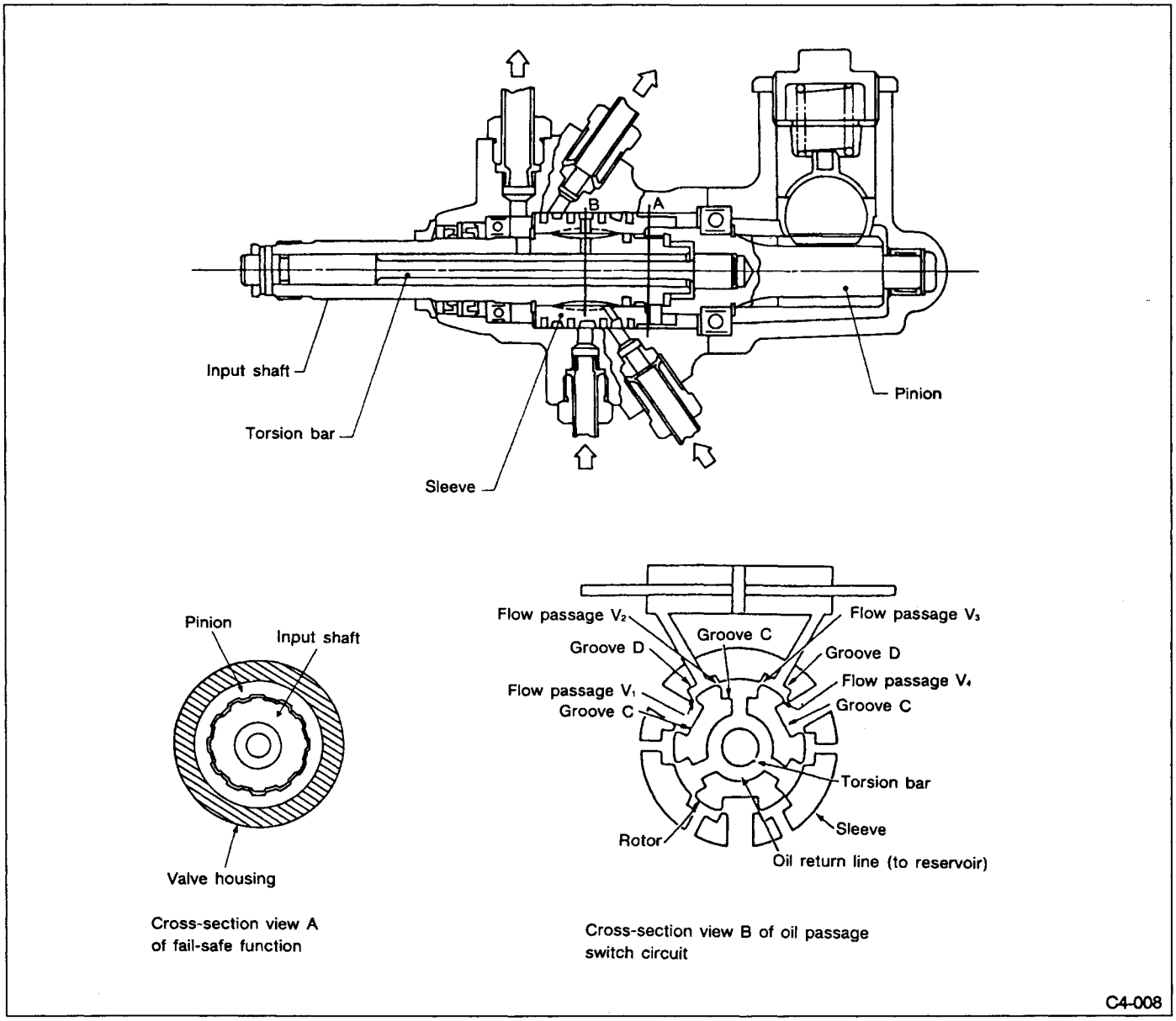

Fig. 10

The control valve consists of a rotor (which rotates together with the steering shaft), a pinion (which is connected to the rotor and torsion bar), and a sleeve (which rotates together with the pinion). Oil grooves C and D are located in the rotor and sleeve to form oil flow passages V_1 through V_4.
The pinion and rotor are meshed with adequate clearance. They utilize a fail-safe design.

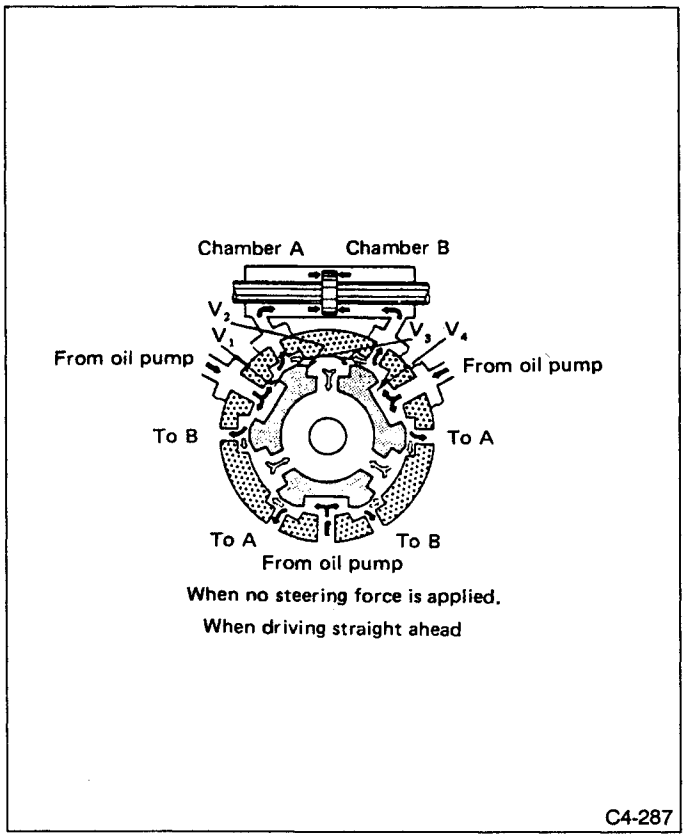

Fig. 11

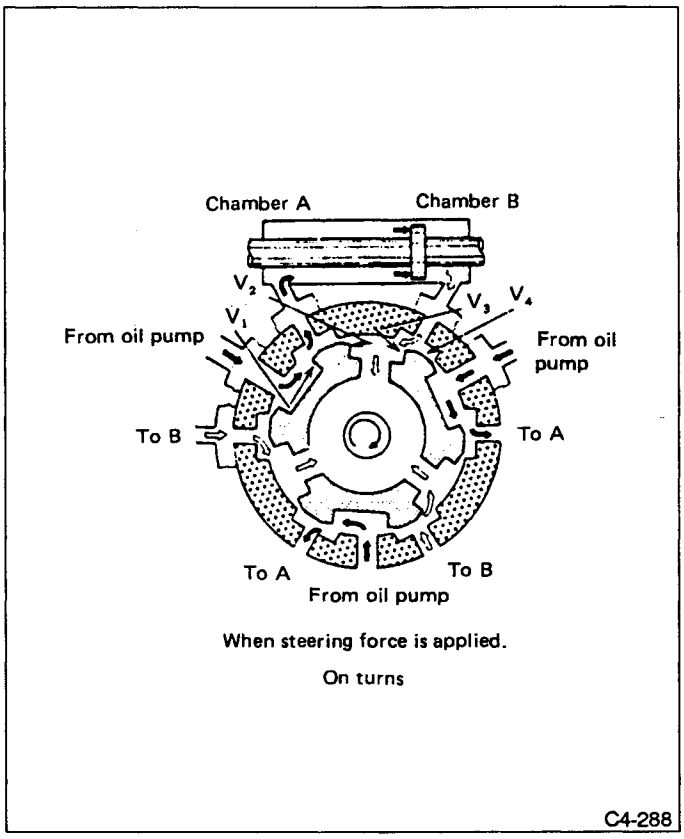

Fig. 12

3) Operating principle

When the torsion bar twists in relation to the steering force, a relative rotational displacement occurs between the rotor and sleeve. This displacement changes the cross-sectional area of oil passages V_1, V_2, V_3 and V_4, which in turn switches oil passages and controls oil pressure.

(1) When no steering force is applied:

The rotor and sleeve are held at the neutral position. Oil passages V_1, V_2 and V_3, which are formed by valve grooves C and D are open equally. Under this condition, oil delivered from the oil pump returns to the oil reservoir so that neither oil pressure builds up nor does the power cylinder activate.

(2) When steering force is applied:

When the steering wheel is turned to the right, for example, oil passages V_1 and V_3 open while oil passages V_2 and V_4 nearly close.

At this point, oil under pressure in chamber A increases in response to the throttle position of oil passages V_2 and V_4 so that the rack piston moves to the right. Oil in chamber B, on the other hand, is discharged through oil passage V_3, returning to the oil reservoir.

4) Fail-safe function

If oil pressure fails to build up due to a broken oil pump drive belt, torque is transmitted from the valve rotor to the pinion by way of the fail-safe function.

3. OIL PUMP & RESERVOIR TANK

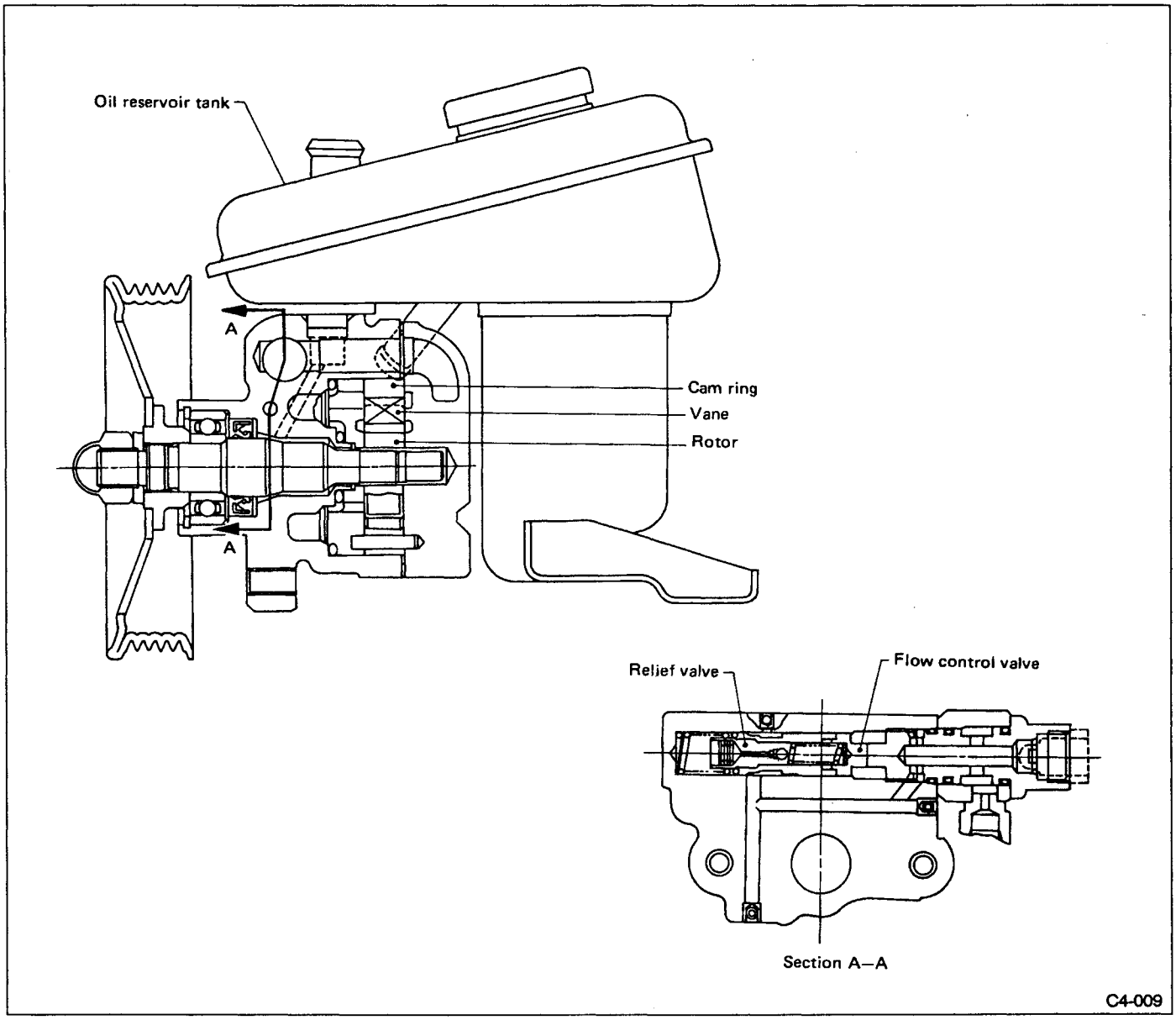

Fig. 13

The oil pump is belt-driven from the engine. The oil flow is controlled in response to engine speed so that an adequately "heavy" steering effort is maintained during high-speed operation.

The oil pump is a vane type. It is integrated with an oil reservoir and houses the flow control and relief-valves.

1) Vane pump

The vane pump consists of a rotor, cam rings, and ten vanes.

When the rotor rotates, the vane located in each groove of the rotor is radially swung out by centrifugal force and pressed against the cam ring. The tip of the vane slides along the inner oval wall of the cam ring so that oil is delivered to the chamber formed by the rotor, cam ring and vane by way of a pea-shaped groove. Oil from the chamber is discharged into the oil circuit via the discharge port.

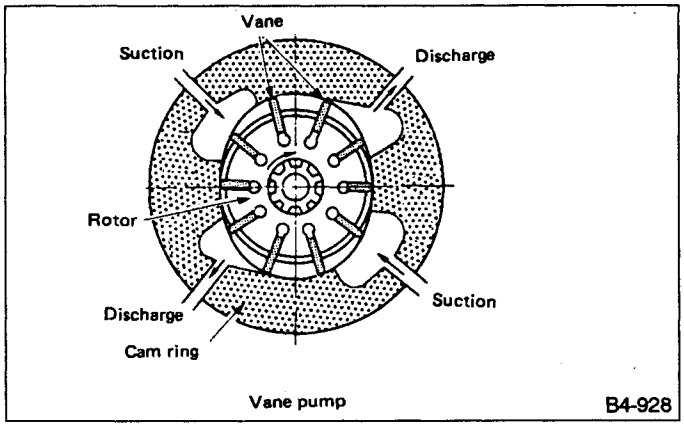

Fig. 14

2) Flow control valve

The flow control valve adequately regulates the discharge flow of oil which increases in proportion to pump speed and delivers it to the gearbox. It consists of orifices 1 and 2, valve spool, return port and flow control spring. When a pressure differential occurs between the front and rear of orifice 2 in response to increases in discharge flow, the valve spool moves against the tension of the flow control spring so that the oil flow is controlled by the open and close operation of the return port and orifice 3.

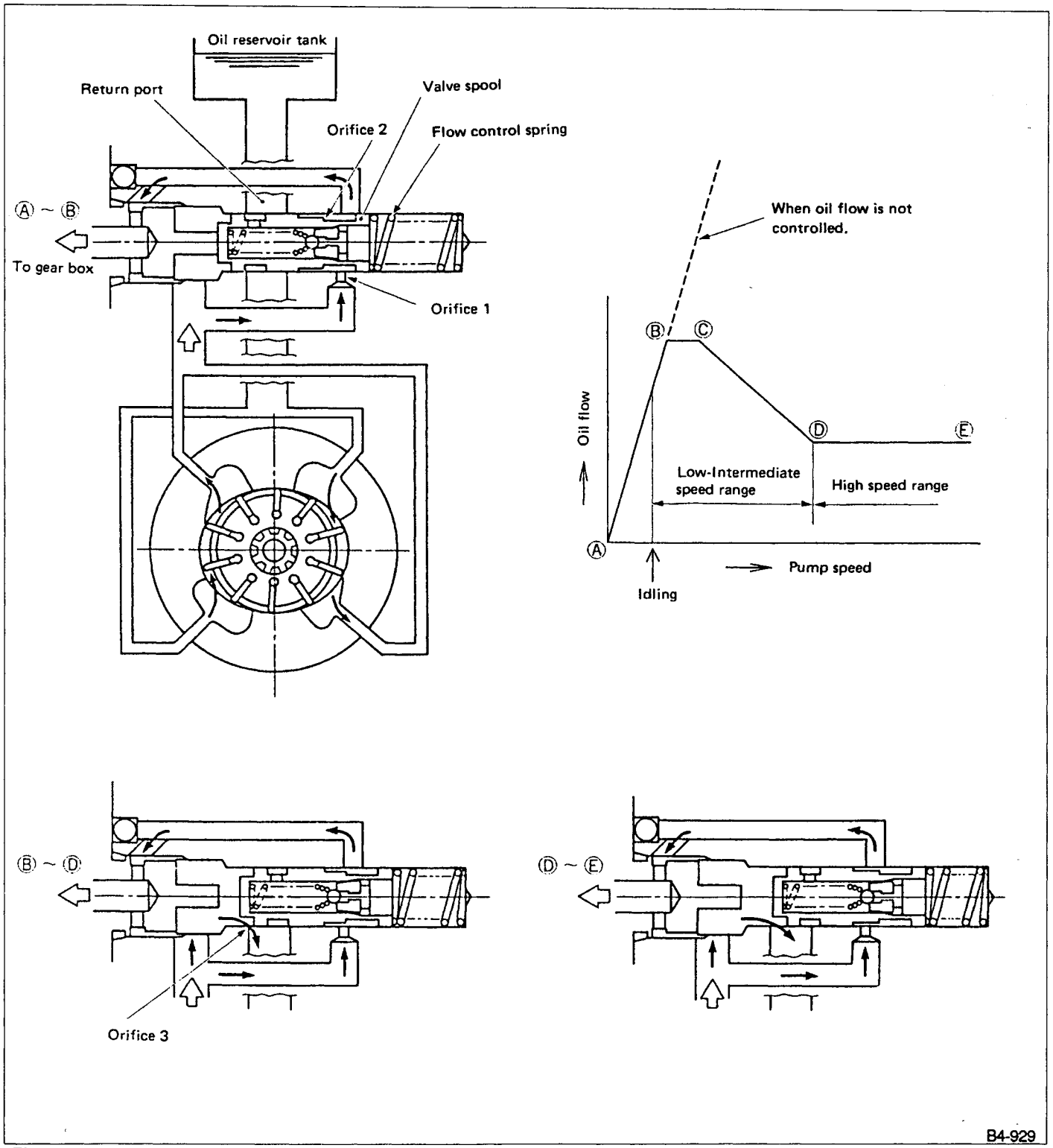

Fig. 15

3. Power Steering System (Vehicle Speed Sensing, Electronically Controlled, Hydraulic Reaction Type)

A hydraulic reaction mechanism is installed between the pinion shaft and input shaft to vary the oil pressure according to the vehicle speed. This permits the driver to use less steering effort during low-speed driving and to have a firm, rigid response during high-speed driving.

A: FEATURE

1) Less steering effort is required even when the steering wheel is fully turned or when driving at reduced speeds. The same light steering feeling as with a conventional power steering system can be enjoyed.
2) The steering power is controlled according to the vehicle speed responding to the road conditions.

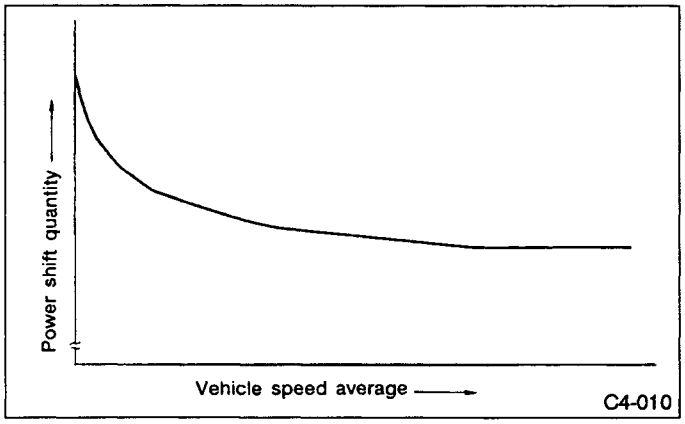

Fig. 16

3) A built-in failsafe function enables the system to maintain the same steering characteristic as a conventional steering system even when a problem occurs in such electrical units as ECU, vehicle speed signal, engine speed signal, solenoid valve, etc.

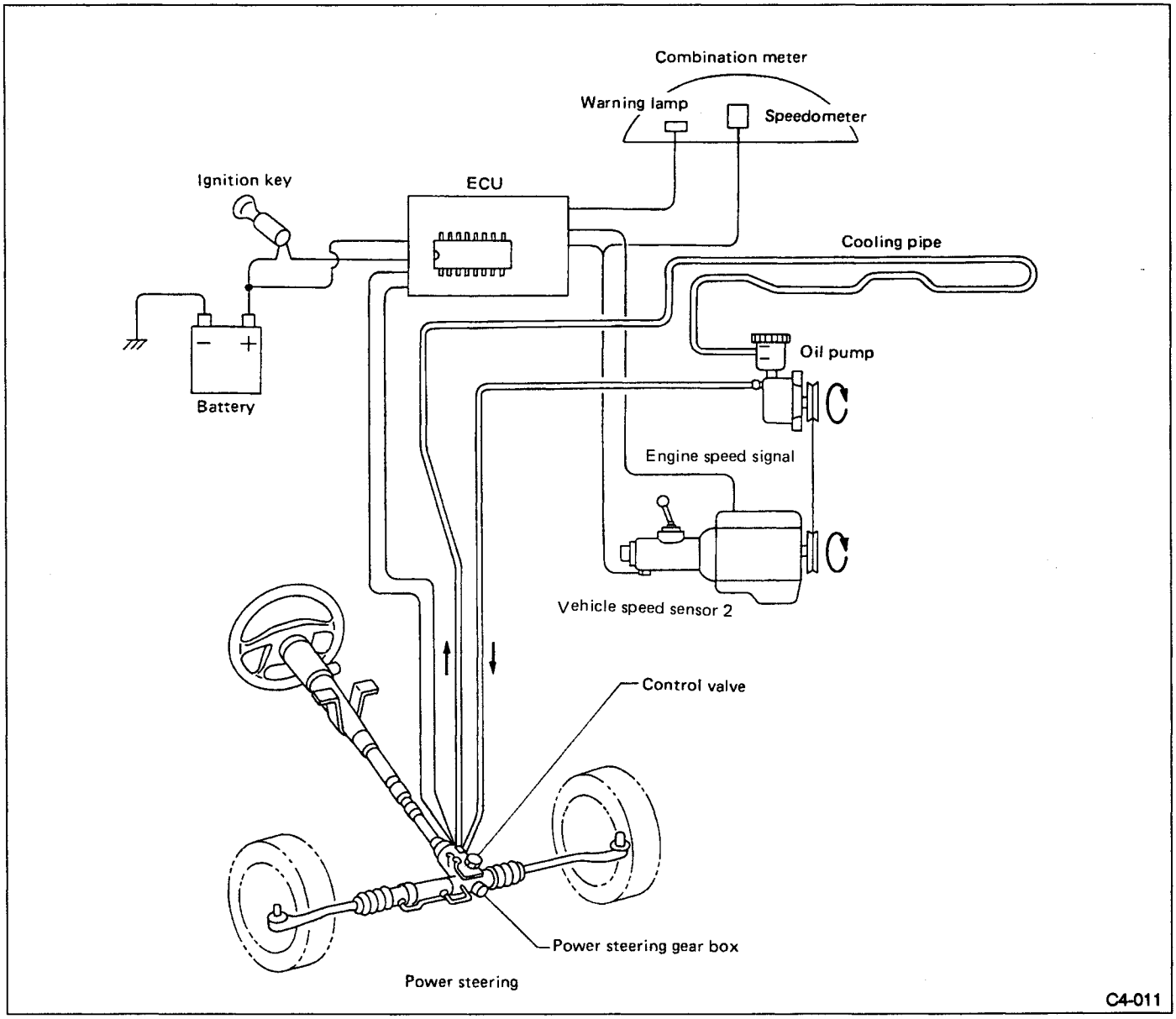

Fig. 17

B: OPERATION

1. HYDRAULIC SYSTEM

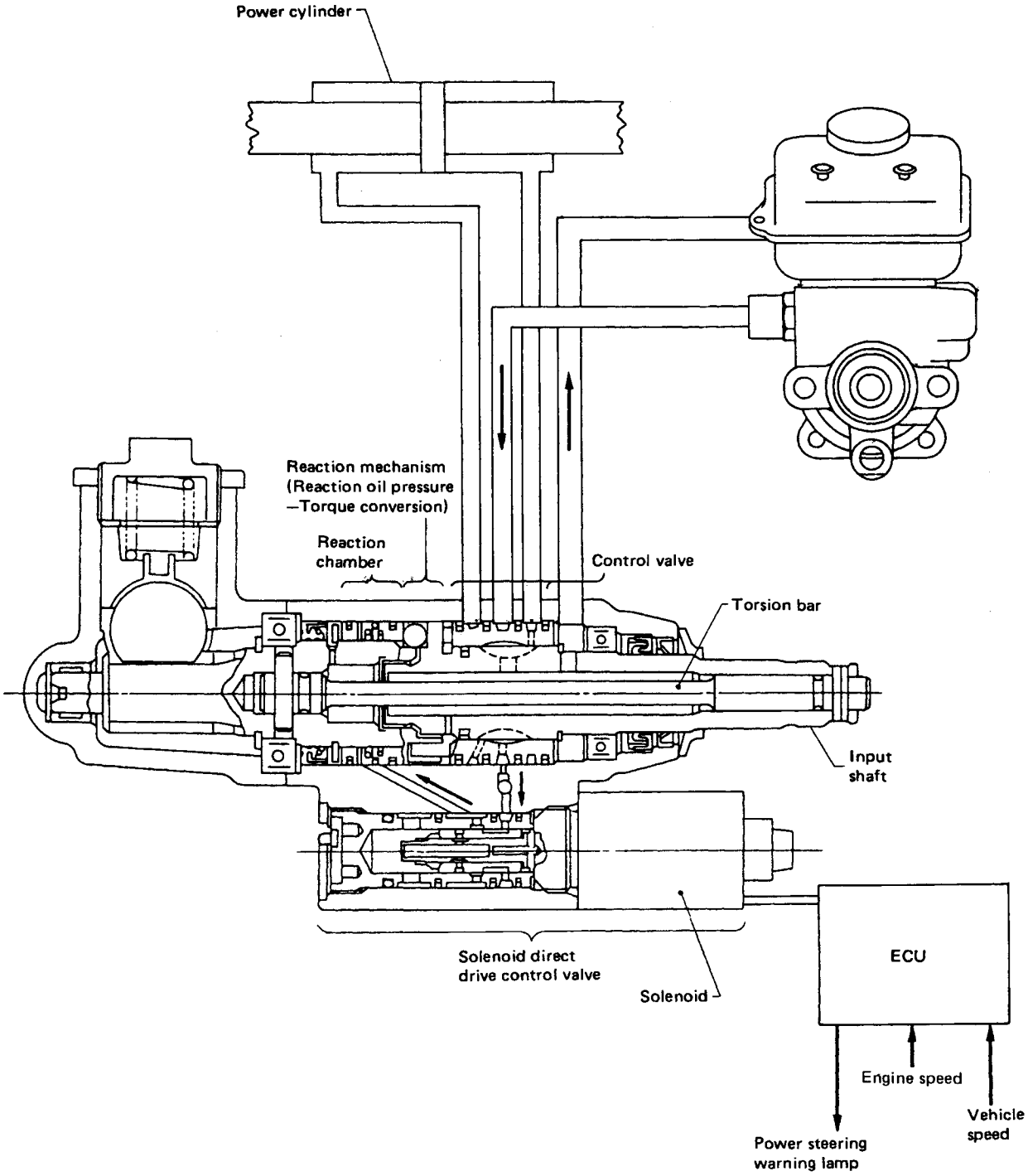

Fig. 18

2. GEARBOX ASSEMBLY

The gearbox components are:

Rotary type control valve composed of sleeve and pinion shaft; torsion bar and reaction chamber; reaction piston and solenoid direct drive control valve.

The control valve is made up of a direct drive solenoid valve, solenoid plunger, reaction valve and a sleeve (that forms a passage). It drives the solenoid by current from the ECU to control reaction pressure. The power cylinder is the same as that used in the engine speed sensing type power steering.

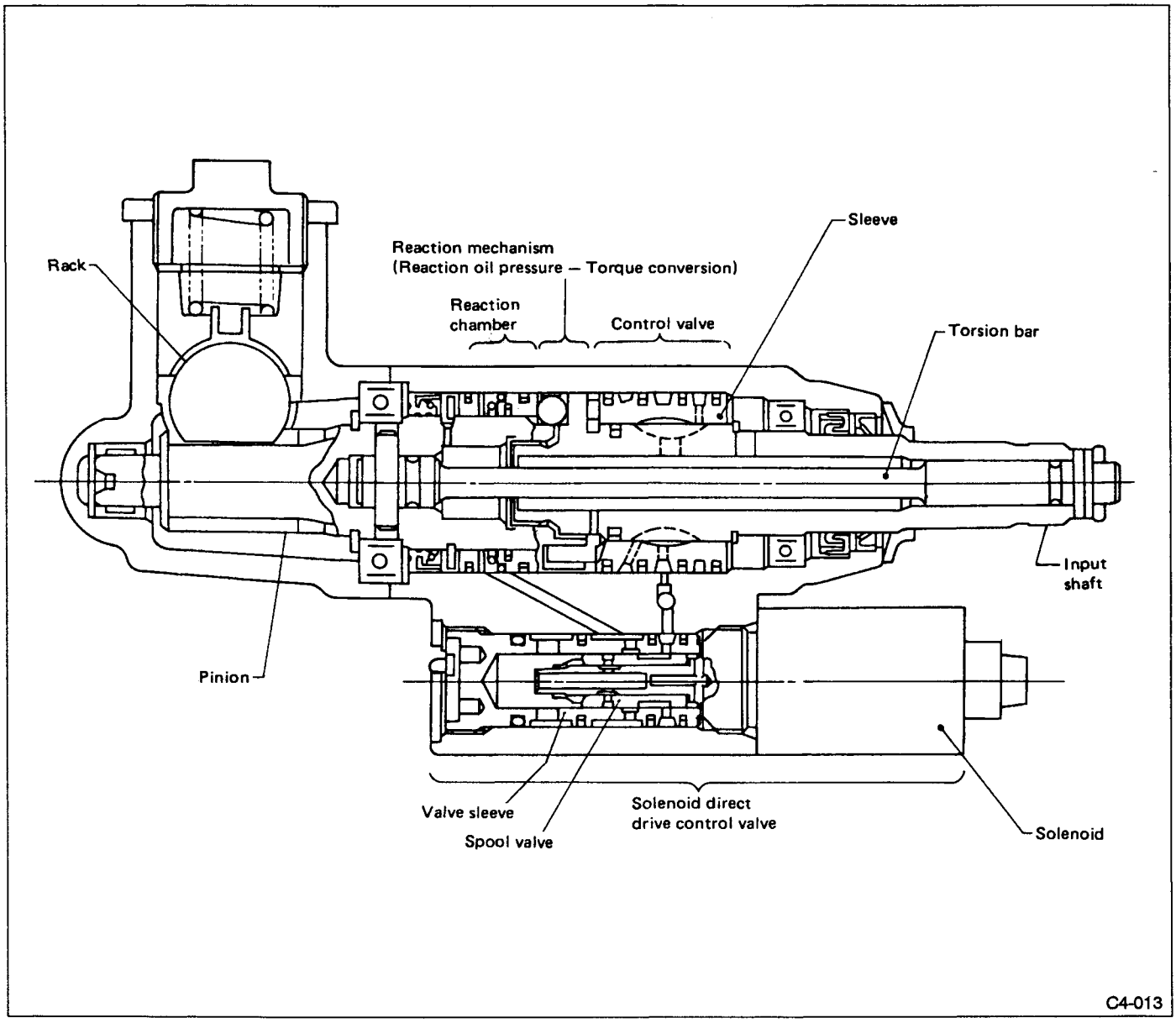

Fig. 19

3. REACTION MECHANISM

1) Construction

The input shaft has 3 reaction arms, each with a "V" groove cut lengthwise to convert thrust from the reaction piston into turning torque.

The reaction piston moves back and forth in the axial direction to provide thrust to the V groove via a ball. The pinion shaft has holes on its flange to hold steel balls. The ball corresponding with the V groove moves freely in the axial direction.

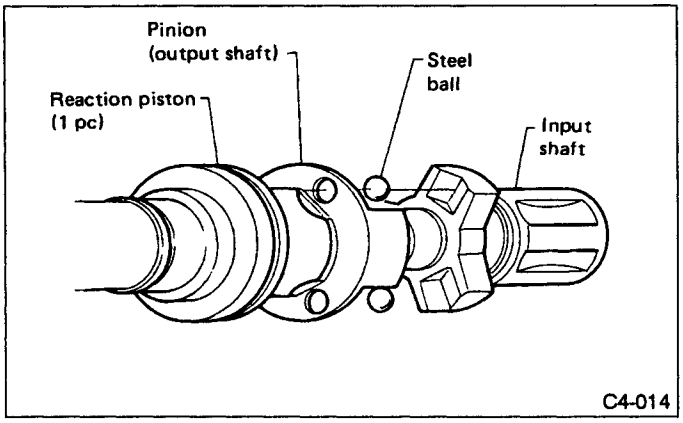

Fig. 20

2) Operation

(1) When driving straight ahead:

The ball is pressed onto the innermost position of the V groove by means of reaction spring and preset hydraulic pressure.

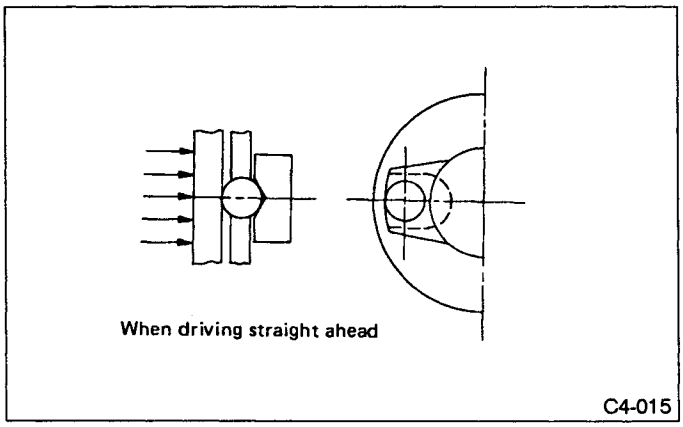

Fig. 21

(2) On turns:

When steering wheel is turned, a relative displacement occurs between input shaft and pinion shaft in the corresponding direction because of the tire load on the pinion shaft. This causes the ball to push the reaction piston via the reclining angle of the V groove. Since the reaction piston is under reaction hydraulic pressure, the ball receives thrust F from the reaction piston. Thrust F creates a vector (Ft = F tan θ), which is converted into a reaction torque (T = Ft $\times$ ℓ) by the reaction arm.

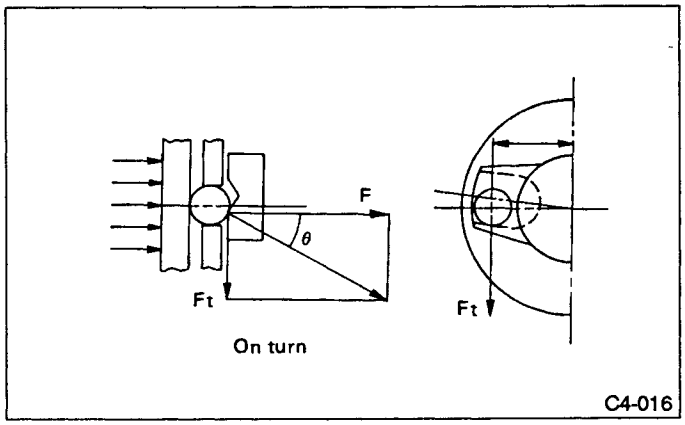

Fig. 22

4. OIL PUMP & RESERVOIR TANK

The construction is basically the same as the engine speed sensing type, but flow control valve design is different because of difference in the flow control characteristic.

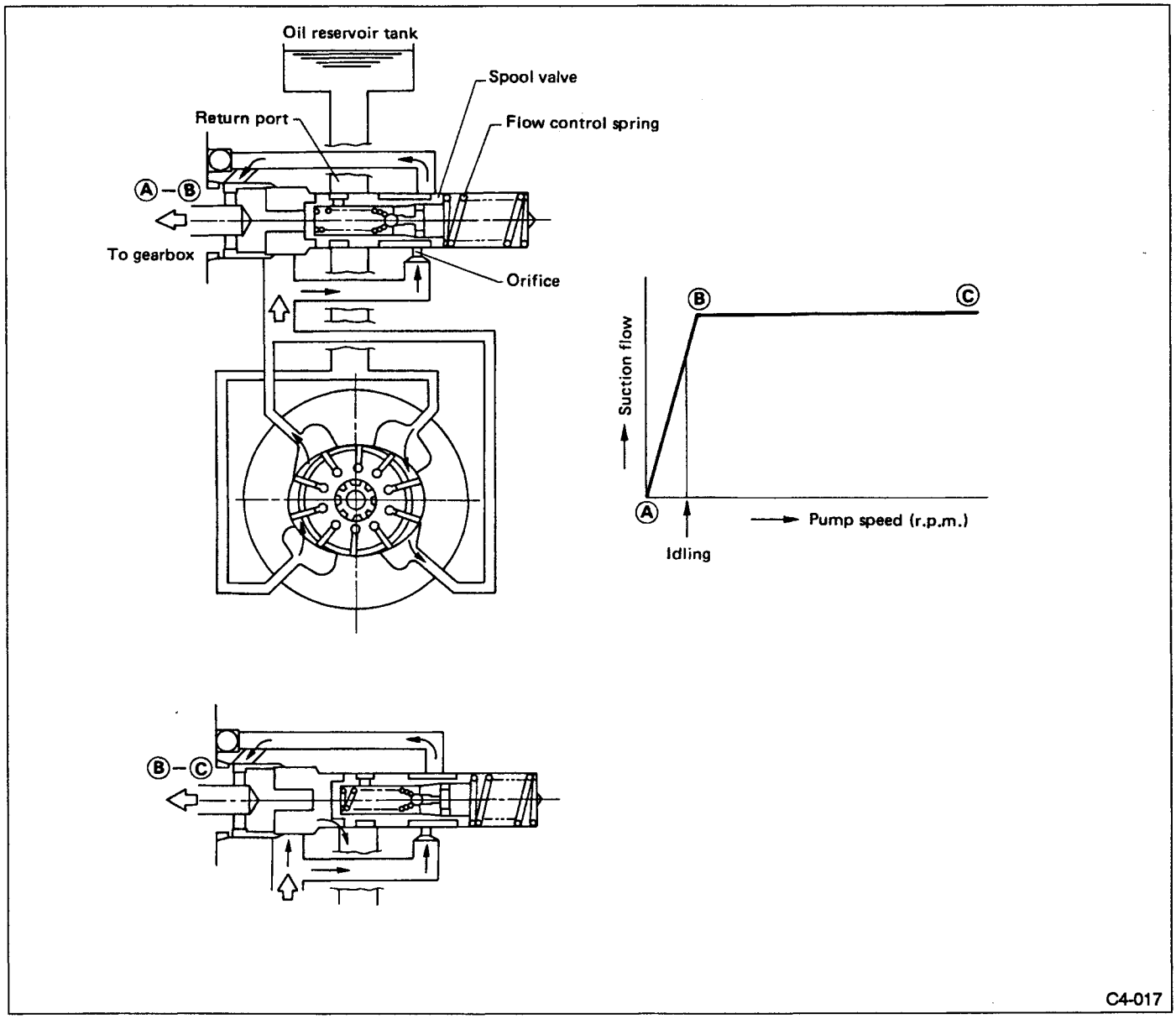

Fig. 23

5. SYSTEM OPERATION

The ECU, receiving signals input from vehicle speed and engine speed sensors, sends current (corresponding with vehicle speed) to the control valve to control reaction pressure via reaction control valve.

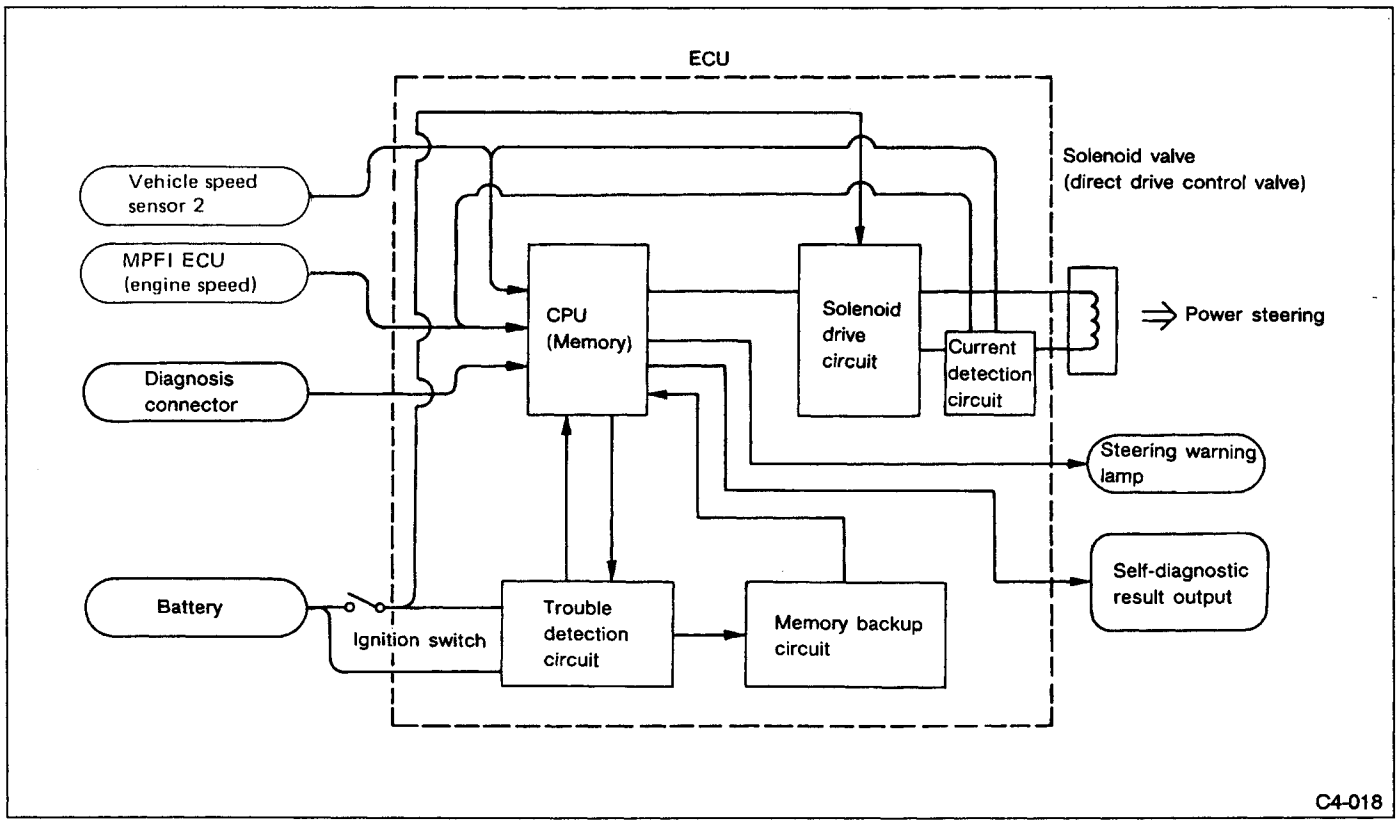

Fig. 24

1) When steering wheel is fully turned or during low-speed driving:
As a large current flow is supplied to the solenoid, the solenoid plunger moves right while the spool valve, unitized with the plunger, is pushed right. The power steering reaction chamber and oil reservoir tank are connected by a path, making the reaction pressure 0 kPa (0 kg/cm^2, 0 psi). In this condition, the reaction pressure does not work on the reaction piston, nor does the reaction piston operate. So, light, effortless steering as with conventional power steering, can be enjoyed.

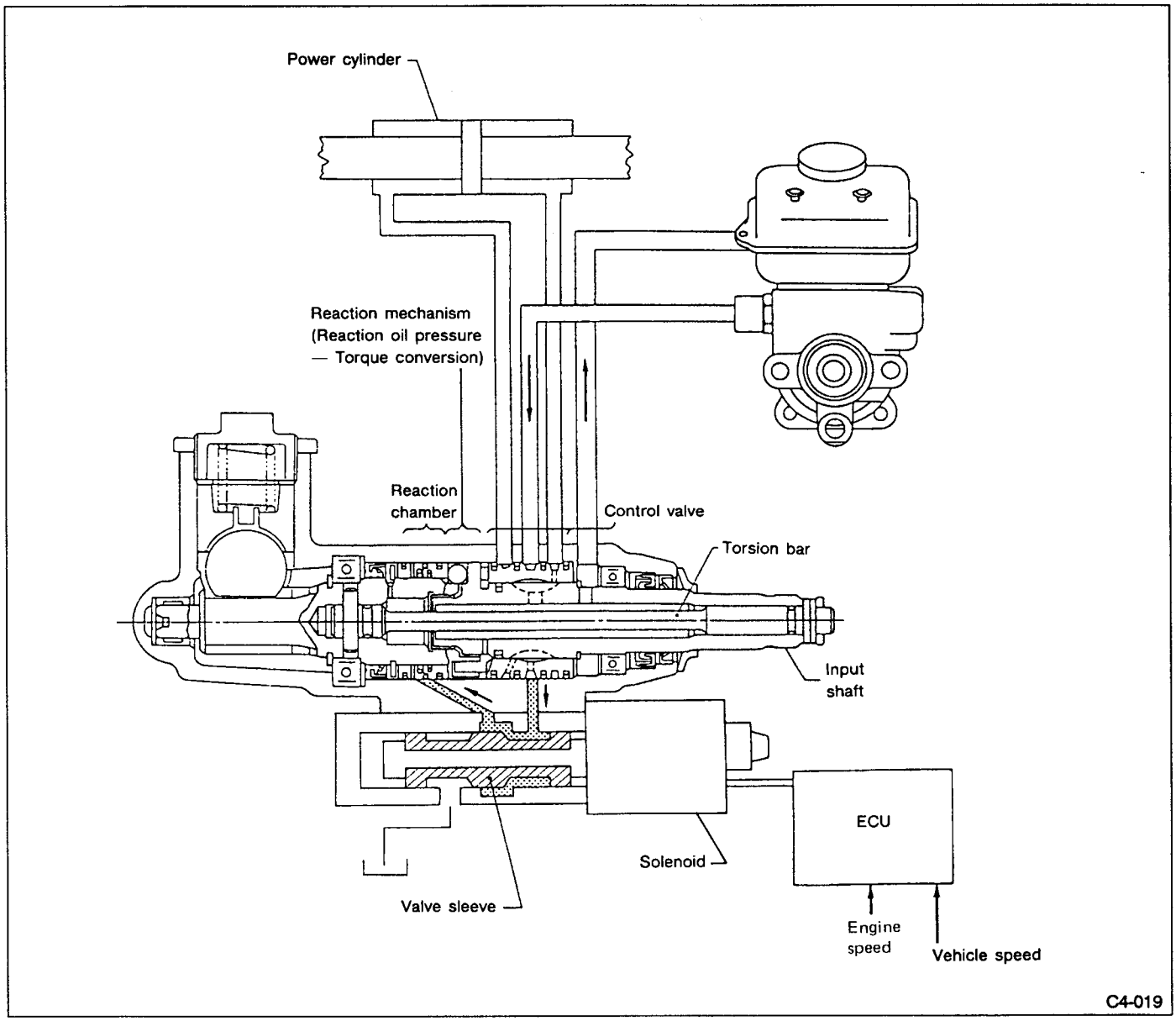

Fig. 25

2) When driving at a medium speed:
From low to high or from straight ahead to turns, the reaction pressure of the power steering changes continuously.
3) When driving at a high speed:
As the current being supplied to the plunger becomes the minimum value, and the solenoid plunger moves left to move the spool valve in the same direction, the pump pressure divided at the valve spot is led into the power steering reaction chamber to act on the reaction piston. As a result, a rigid steering response is felt by the driver during high-speed, straight ahead driving.

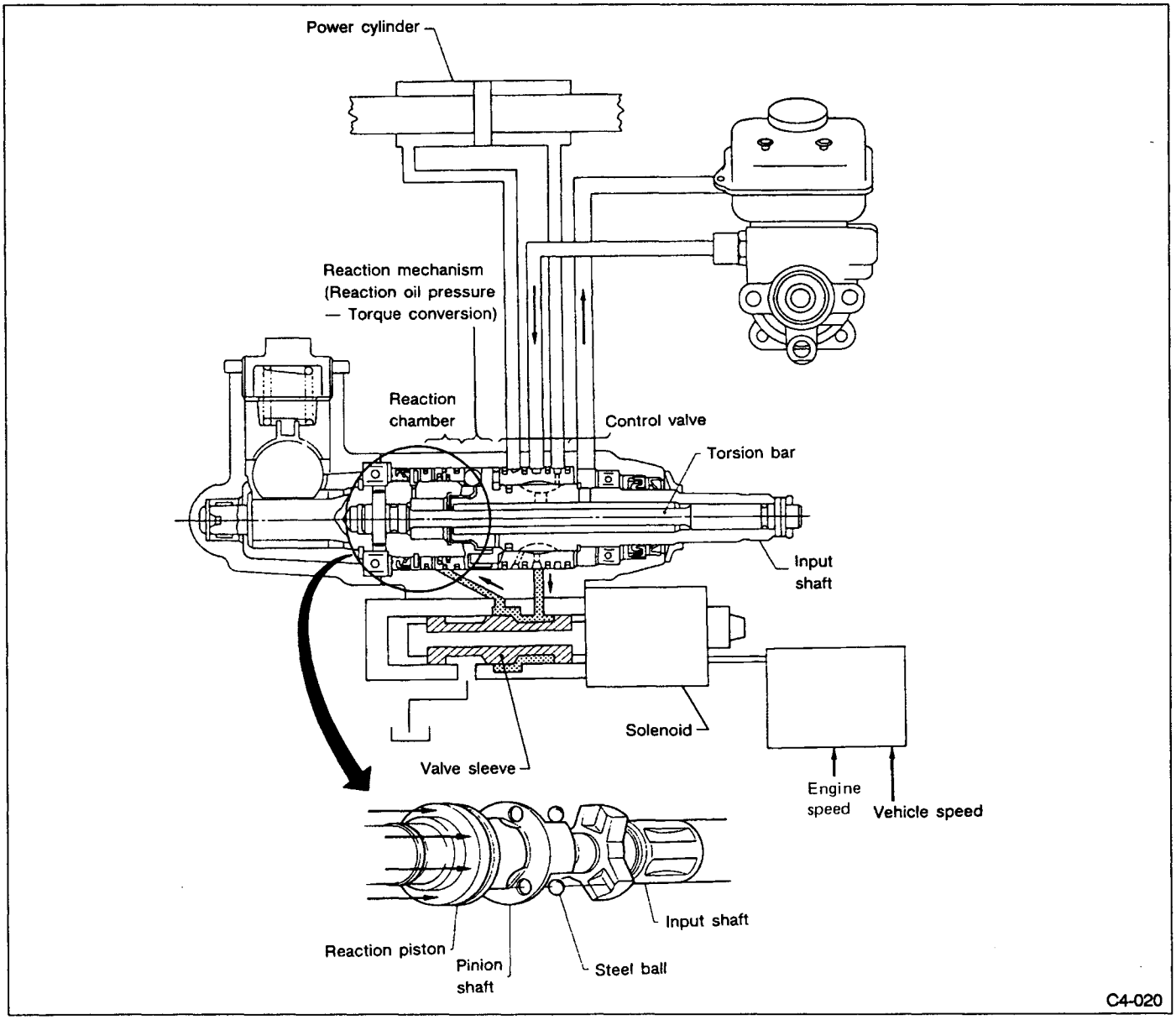

Fig. 26

4. Self-Diagnosis System

A: Function

1. SELF-DIAGNOSTIC FUNCTION

1) U-check mode:
Allows warning lamp to illuminate and trouble to be stored in memory if problem occurs.

2) Read memory mode:
Allows trouble memorized in U-check mode to read out.

3) D-check mode:
Used when troubleshooting systems.

4) Clear memory mode:
Clears or erases trouble stored in memory.

Troubleshooting and self-diagnostic results are identified by number of flashes on steering warning lamp located in instrument panel.

2. TROUBLE CODE

Trouble code	Check points	"ON" pattern "ON" Unit: second
VF	Power supply voltage or lamp wiring	ON
WF	Check mode terminal, lamp, wiring	OFF
1	Shorted solenoid circuit	0.3 1.2 0.3
2	Disconnected solenoid	0.3 0.3 0.3 1.2
3	Vehicle speed sensor 2 system	0.3 0.3 0.3 0.3 0.3 1.2
4	Backup power supply system	0.3 0.3 0.3 0.3 0.3 0.3 0.3 1.2
5	Engine speed signal system(incl. EGI ECU)	0.3 0.3 0.3 0.3 0.3 0.3 0.3 0.3 0.3 1.2
—	Normal	0.6 0.6
When two or more trouble codes are displayed: Example: Trouble codes are 1 and 3.		0.3 1.2 0.3 0.3 0.3 0.3 0.3 1.2 0.3

Fig. 27 *C4-286*

B: FAIL-SAFE FUNCTION

Faulty system	Description	Control function
Vehicle speed sensor 2	When vehicle speed sensor 2 is disconnected during driving	To maintain "assist" characteristic at the time the trouble occurred.
	When vehicle speed sensor 2 is disconnected before driving	To control by engine speed sensing instead of vehicle speed.
Engine speed signal system	Engine r.p.m. is not input while vehicle speed sensor 2 is input.	To control by vehicle speed sensor 2 alone.
Solenoid	Solenoid valve coil harness is disconnected or shorted.	To turn "OFF" solenoid (Heavy steering)
ECU	ECU is faulty.	To turn "OFF" solenoid (Heavy steering)

S SPECIFICATIONS AND SERVICE DATA

A: SPECIFICATIONS

			Engine speed sensing type	Electronically controlled type
Whole system	Minimum turning radius m (ft)		5.4 (17.7)	
	Steering angle (Inside-Outside)		36.2° — 31.6°	
	Steering wheel	Diameter mm (in)	385 (15.16)	
		Maximum revolution (rev.)	3.1	
Gearbox	Type		Rack and pinion, Integral	
	Backlash		0 (Automatically adjustable)	
	Valve (Power steering system)		Rotary valve	
	Overall gear ratio		16.2	
Oil pump (Power steering system)	Type		Vane pump	
	Oil reservoir tank		Installed on pump	
	Output cm^3 (cu in)/rev.		9.6 (0.586)	
	Relief pressure kPa (kg/cm^2, psi)		7,846 (80, 1,138)	
	Hydraulic fluid control		Dropping in response to increased engine revolution	Constant flow type
	Hydraulic fluid ℓ (US qt, Imp qt)/min	1,000 rpm	8.5 (9.0, 7.5)	9.0 (9.5, 7.9) (Constant)
		3,500 rpm	4.5 (4.8, 4.0)	
	Revolution speed range (rpm)		500 — 7,500	
	Direction of revolution		Clockwise	
Working fluid (Power steering system)	Name		ATF DEXRON II	
	Capacity ℓ (US qt, Imp qt)	Oil tank	0.3 (0.3, 0.3)	
		Total	1.0	

B: SERVICE DATA

ITEM		STANDARD	SERVICE LIMIT
Steering wheel	Free play mm (in)	17 (0.67)	
Turning angle	Inner tire & wheel	36.2°	
	Outer tire & wheel	31.6°	
Steering shaft	Clearance between steering wheel and column cover mm (in)	3.0 (0.118)	
Steering gearbox	Sliding resistance N (kg, lb)	265 (27, 60) less	
	Rack shaft play in radial direction mm (in) Right-turn steering Left-turn steering	 0.15 (0.0059) or less Horizontal movement: 0.3 (0.012) or less Vertical movement: 0.15 (0.0059) or less	
	Input shaft play mm (in) In radial direction In axial direction	 0.18 (0.0071) or less 0.1 (0.004) or less	
	Turning resistance N (kg, lb)	Within 30 mm (1.18 in) from rack center in straight ahead position: Less than 11.18 (1.14, 2.51) Maximum allowable value: 12.7 (1.3, 2.9)	
Oil pump (Power steering system)	Pulley shaft mm (in) Radial play Axial play	 0.4 (0.016) or less 0.9 (0.035) or less	
	Pulley Ditch deflection mm (in) Resistance to rotation N (kg, lb)	 1.0 (0.039) or less 9.22 (0.94, 2.07) or less	
	Regular pressure kPa (kg/cm^2, psi)	981 (10, 142) or less	
	Relief pressure kPa (kg/cm^2, psi)	7,649 — 8,336 (78 — 85, 1,109 — 1,209)	
Steering wheel effort (Power steering system)	At standstill with engine idling on a concrete road N (kg, lb) — Engine speed sensing type	30.4 (3.1, 6.8)	
	At standstill with engine idling on a concrete road N (kg, lb) — Electronically controlled type	24.5 (2.5, 5.5)	
	At standstill with engine stalled on a concrete road N (kg, lb)	147 (15, 33) or less	

C: RECOMMENDED POWER STEERING FLUID

Recommended power steering fluid	Manufacturer
ATF DEXRON II	B.P.
	CALTEX
	CASTROL
	MOBIL
	SHELL
	TEXACO

C COMPONENT PARTS

1. Steering Wheel & Column

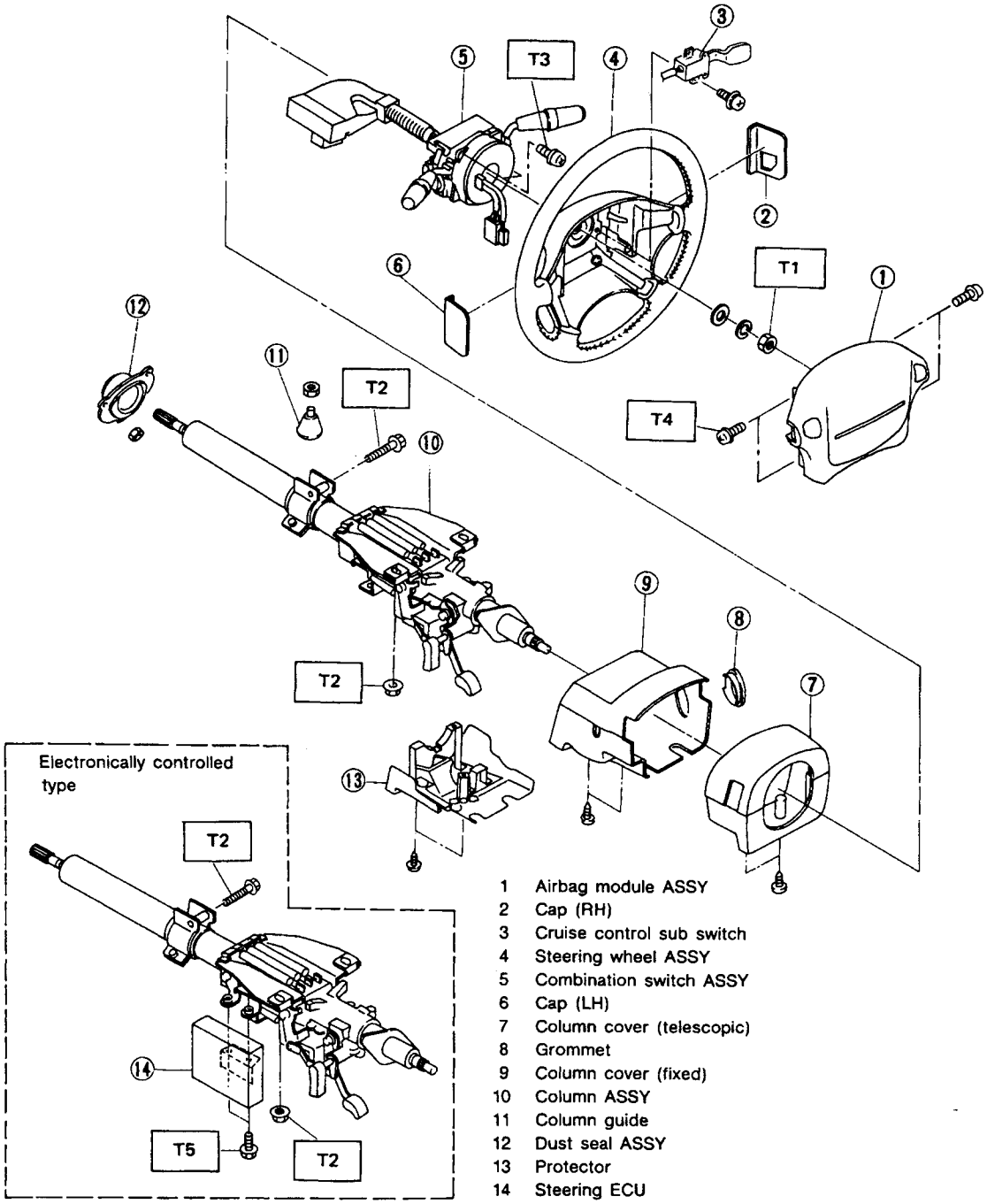

1 Airbag module ASSY
2 Cap (RH)
3 Cruise control sub switch
4 Steering wheel ASSY
5 Combination switch ASSY
6 Cap (LH)
7 Column cover (telescopic)
8 Grommet
9 Column cover (fixed)
10 Column ASSY
11 Column guide
12 Dust seal ASSY
13 Protector
14 Steering ECU

Tightening torque: N·m (kg-m, ft-lb)
T1: 29 — 39 (3.0 — 4.0, 22 — 29)
T2: 20 — 29 (2.0 — 3.0, 14 — 22)
T3: 3 — 5 (0.3 — 0.5, 2.2 — 3.6)
T4: 8 — 12 (0.8 — 1.2, 5.8 — 8.7)
T5: 6 — 9 (0.6 — 0.9, 4.3 — 6.5)

C4-021

Fig. 28

2. Power Steering System

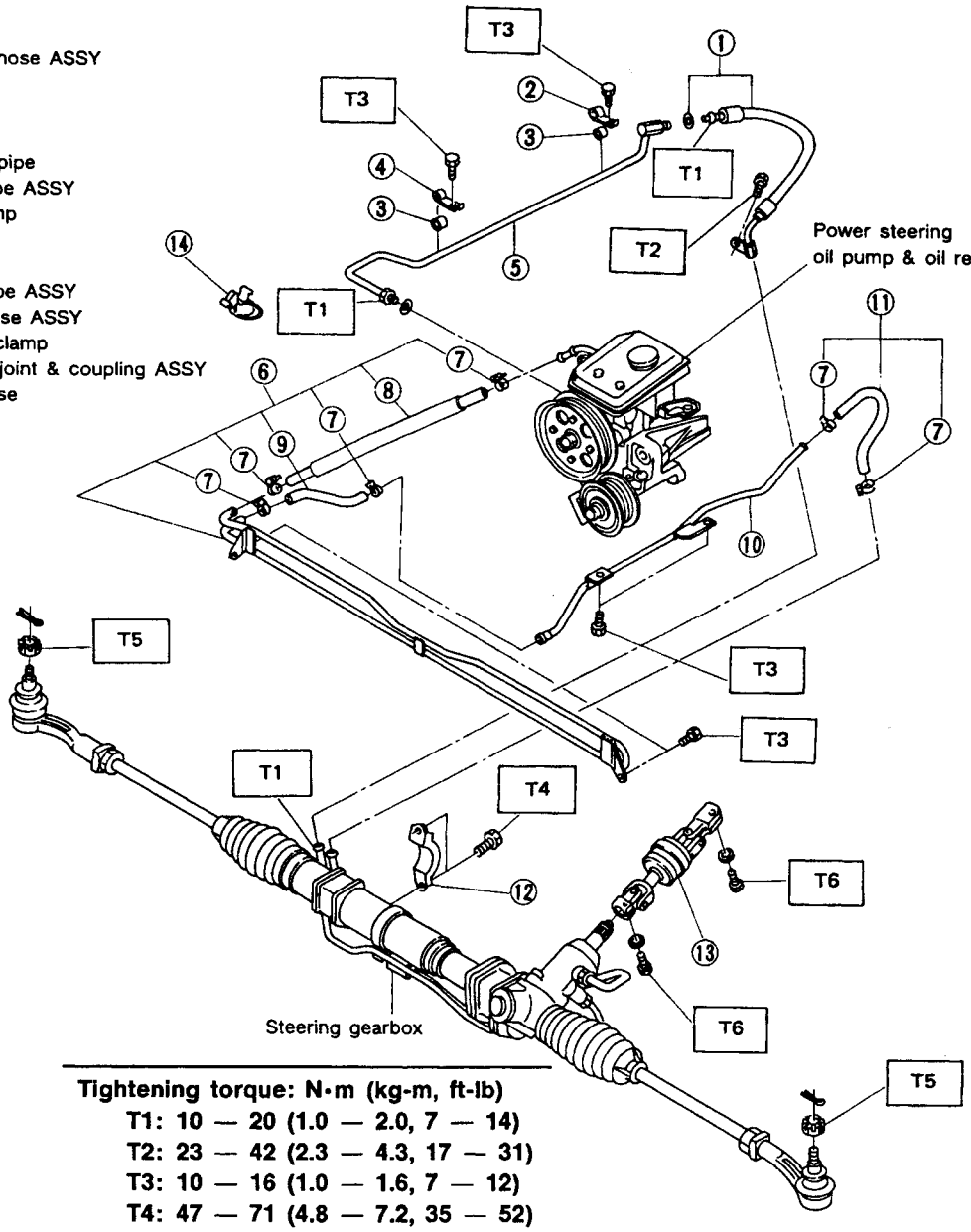

Tightening torque: N·m (kg-m, ft-lb)

T1: 10 — 20 (1.0 — 2.0, 7 — 14)
T2: 23 — 42 (2.3 — 4.3, 17 — 31)
T3: 10 — 16 (1.0 — 1.6, 7 — 12)
T4: 47 — 71 (4.8 — 7.2, 35 — 52)
T5: 29 — 49 (3.0 — 5.0, 22 — 36)
T6: 21 — 26 (2.1 — 2.7, 15 — 20)

C4-022

Fig. 29

3. Steering Gearbox

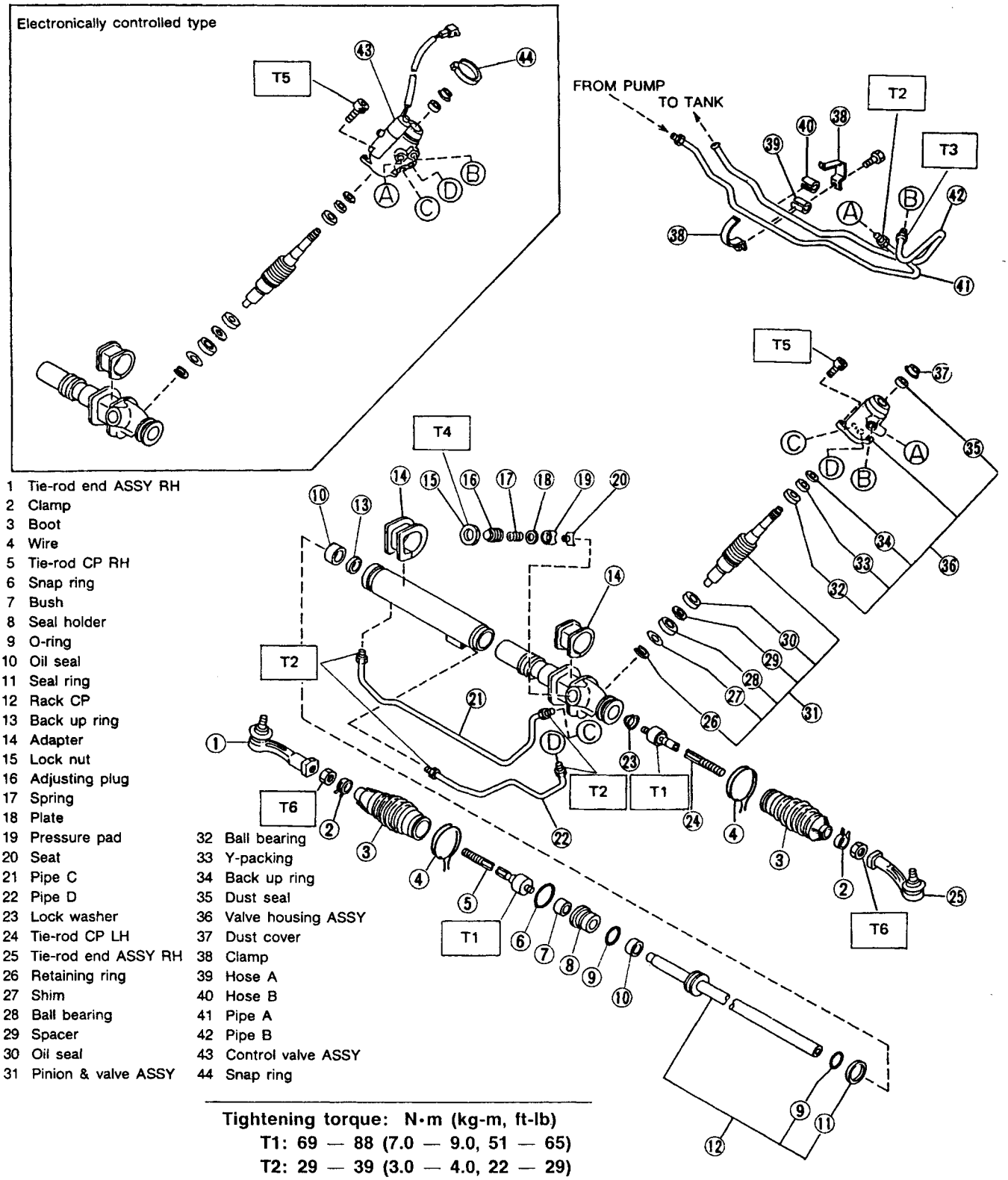

1 Tie-rod end ASSY RH
2 Clamp
3 Boot
4 Wire
5 Tie-rod CP RH
6 Snap ring
7 Bush
8 Seal holder
9 O-ring
10 Oil seal
11 Seal ring
12 Rack CP
13 Back up ring
14 Adapter
15 Lock nut
16 Adjusting plug
17 Spring
18 Plate
19 Pressure pad
20 Seat
21 Pipe C
22 Pipe D
23 Lock washer
24 Tie-rod CP LH
25 Tie-rod end ASSY RH
26 Retaining ring
27 Shim
28 Ball bearing
29 Spacer
30 Oil seal
31 Pinion & valve ASSY
32 Ball bearing
33 Y-packing
34 Back up ring
35 Dust seal
36 Valve housing ASSY
37 Dust cover
38 Clamp
39 Hose A
40 Hose B
41 Pipe A
42 Pipe B
43 Control valve ASSY
44 Snap ring

Tightening torque: N·m (kg-m, ft-lb)
T1: 69 — 88 (7.0 — 9.0, 51 — 65)
T2: 29 — 39 (3.0 — 4.0, 22 — 29)
T3: 39 — 49 (4.0 — 5.0, 29 — 36)
T4: 59 — 74 (6.0 — 7.5, 43 — 54)
T5: 20 — 29 (2.0 — 3.0, 14 — 22)
T6: 78 — 88 (8.0 — 9.0, 58 — 65)

C4-026

Fig. 30

4. Power Steering Oil Pump & Tank

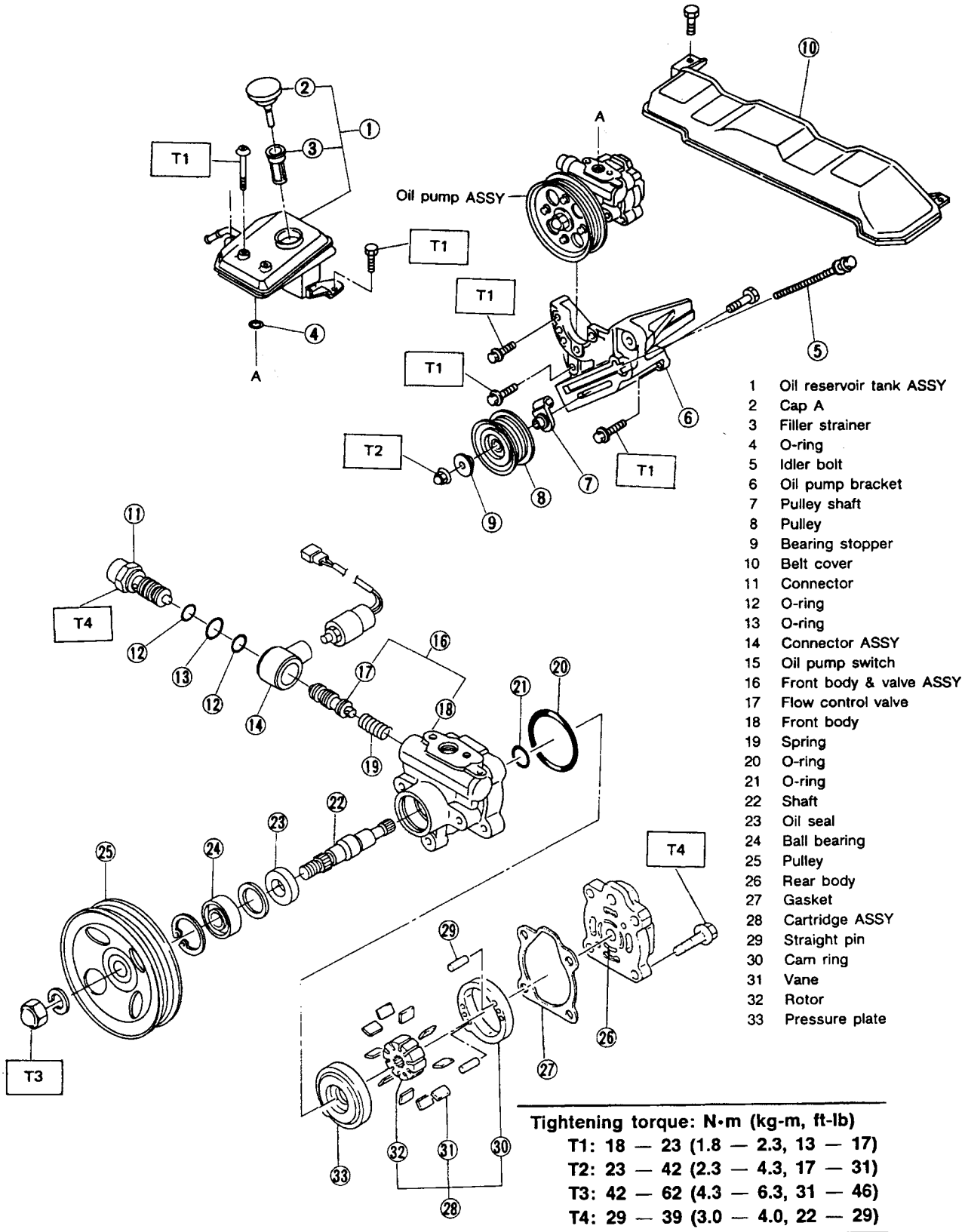

1 Oil reservoir tank ASSY
2 Cap A
3 Filler strainer
4 O-ring
5 Idler bolt
6 Oil pump bracket
7 Pulley shaft
8 Pulley
9 Bearing stopper
10 Belt cover
11 Connector
12 O-ring
13 O-ring
14 Connector ASSY
15 Oil pump switch
16 Front body & valve ASSY
17 Flow control valve
18 Front body
19 Spring
20 O-ring
21 O-ring
22 Shaft
23 Oil seal
24 Ball bearing
25 Pulley
26 Rear body
27 Gasket
28 Cartridge ASSY
29 Straight pin
30 Cam ring
31 Vane
32 Rotor
33 Pressure plate

Tightening torque: N·m (kg-m, ft-lb)
T1: 18 — 23 (1.8 — 2.3, 13 — 17)
T2: 23 — 42 (2.3 — 4.3, 17 — 31)
T3: 42 — 62 (4.3 — 6.3, 31 — 46)
T4: 29 — 39 (3.0 — 4.0, 22 — 29)

C4-024

Fig. 31

W SERVICE PROCEDURE AIRBAG

1. Supplemental Restraint System "Airbag"

Airbag system wiring harness is routed near the steering system.

a. All Airbag system wiring harness and connectors are colored yellow. Do not use electrical test equipment on these circuit.

b. Be careful not to damage system wiring harness when servicing steering system.

2. Tilt & Telescopic Steering Column with Memory Function

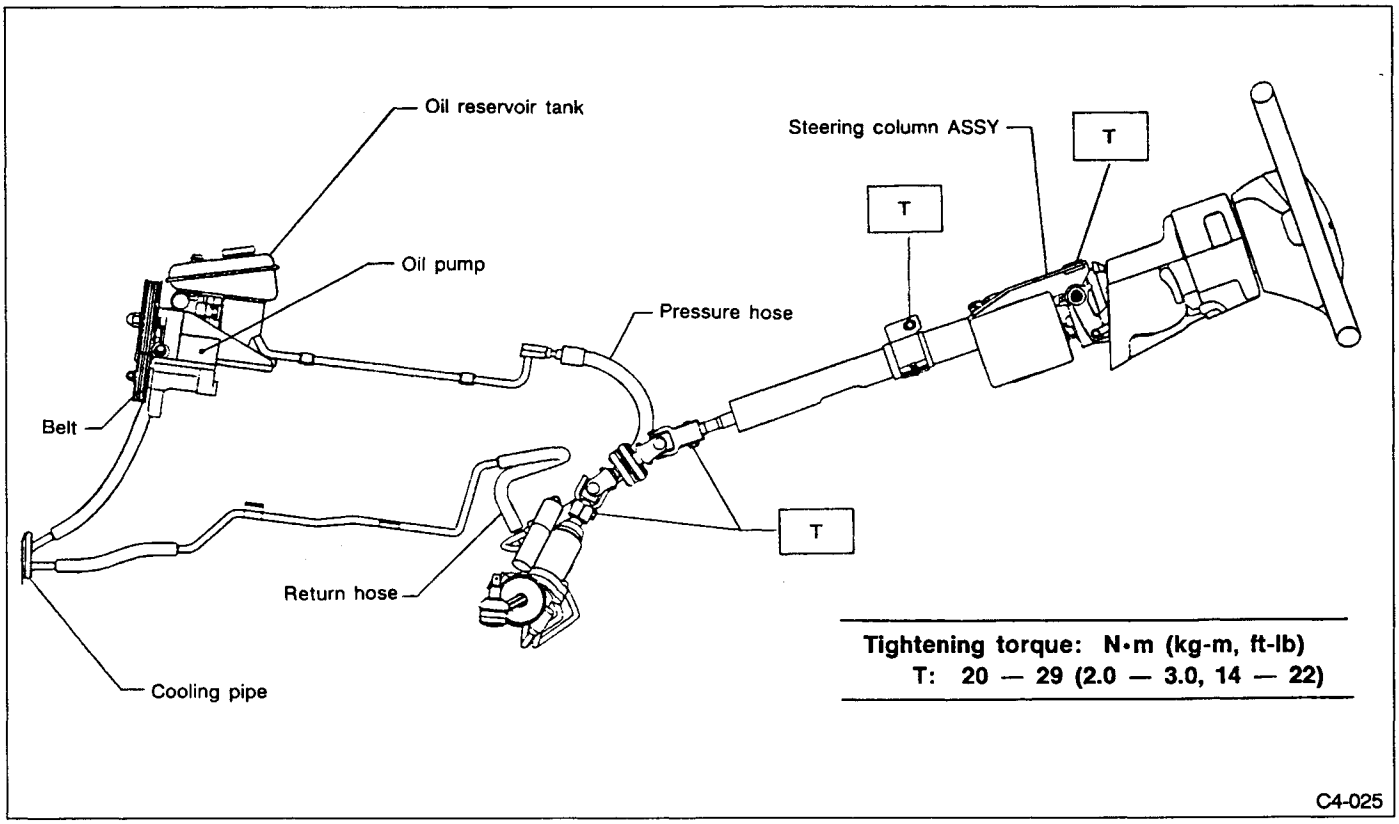

Fig. 32

A: REMOVAL

1) Disconnect battery earth (–) terminal.
2) Remove airbag module ASSY. ⟨Ref. to [5-5] No. W1B2.⟩

a. Turn ignition switch "OFF" and wait 10 minutes before starting work.

b. After removal, store airbag module with pad side facing upward. Do not put any object on pad.

(1) Remove cap (LH).
(2) Remove cap (RH).
(3) Disconnect airbag system connector at harness spool.
(4) Set front tires in straight ahead direction.
(5) Remove both steering wheel covers and remove bolts securing airbag module ASSY using TORX® bit T30.

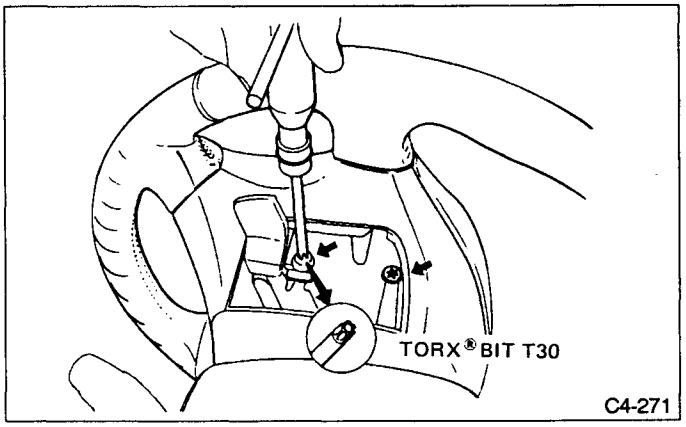

Fig. 33

(6) Turn over airbag module ASSY and disconnect airbag system connector. ⟨Ref. to [5-5] No. W1B2.⟩
(7) Disconnect horn and cruise control connectors.

3) Lift vehicle and remove lower and upper bolts from universal joint ASSY, and then remove universal joint in the upward direction.

Scribe alignment marks on universal joint ASSY so that it can be reassembled at the original serration.

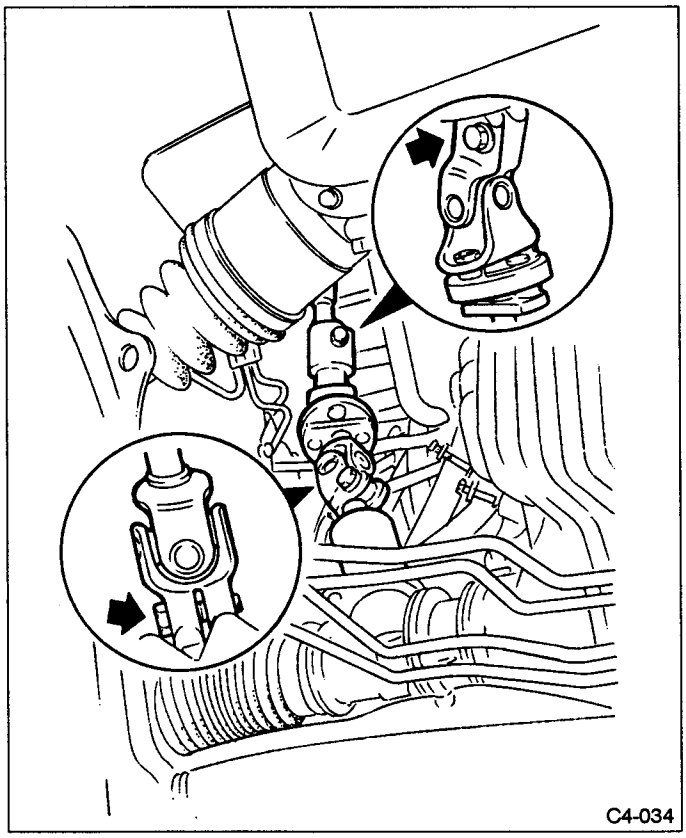

Fig. 34

4) Disconnect connectors for ignition switch, steering ECU, and combination switch wiring harness under instrument panel.

5) Remove two nuts and a bolt under instrument panel securing steering shaft.

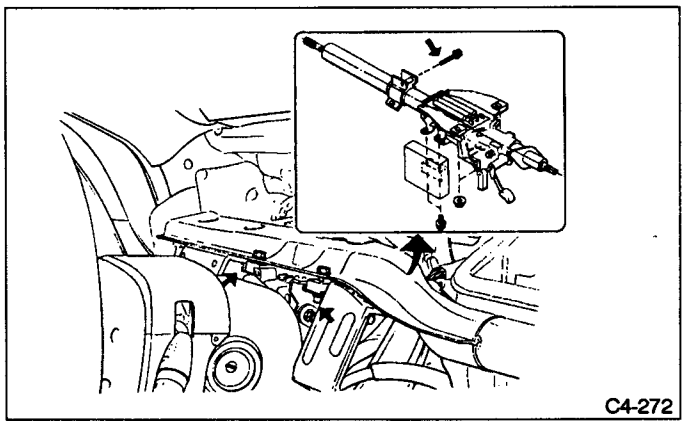

Fig. 35

6) Pull out steering shaft ASSY from hole on toe board.

Be sure to remove universal joint before removing steering shaft ASSY installing bolts when removing steering shaft ASSY or when lowering it for servicing of other parts.

B: DISASSEMBLY

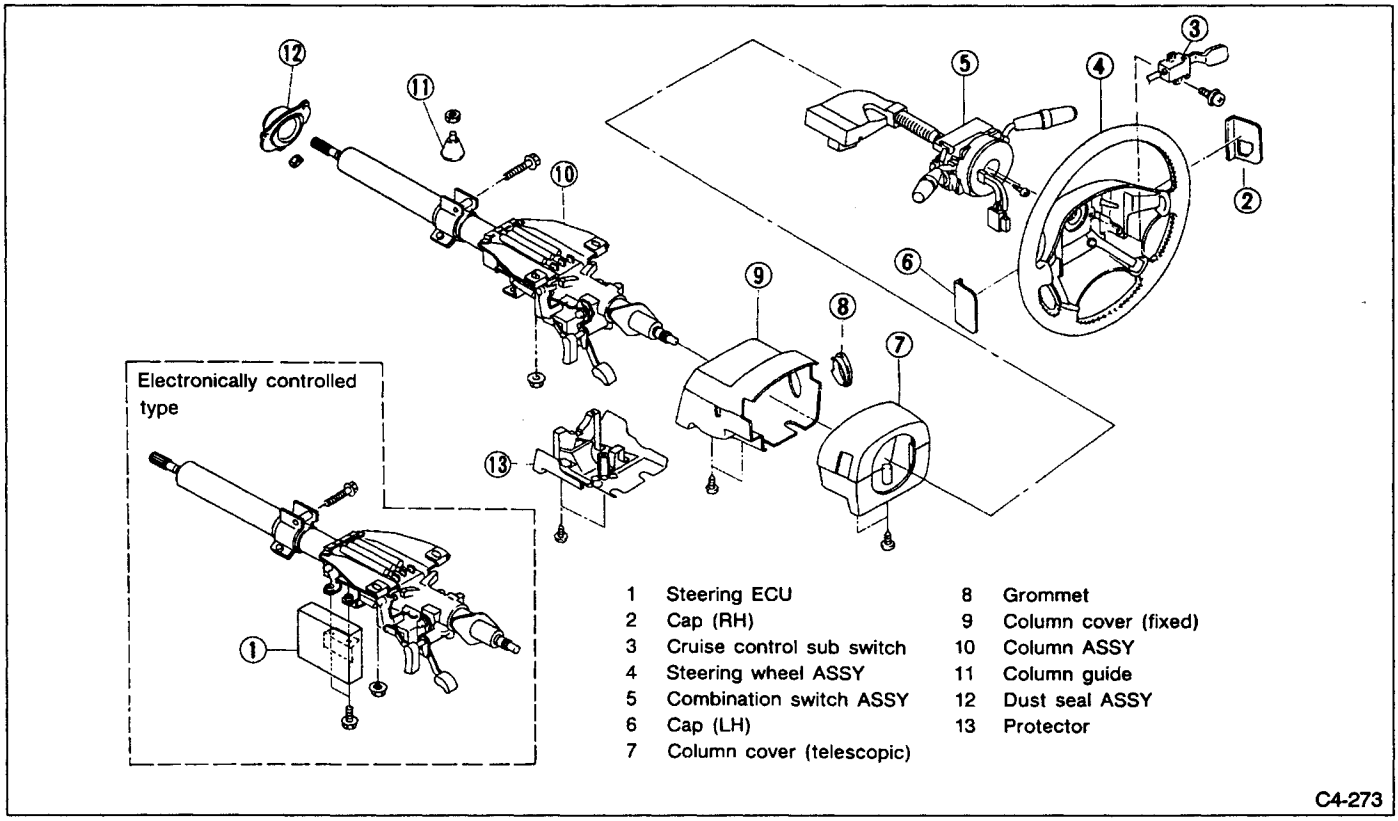

Fig. 36

1) Remove steering wheel nut, then draw out wheel from shaft using steering puller.

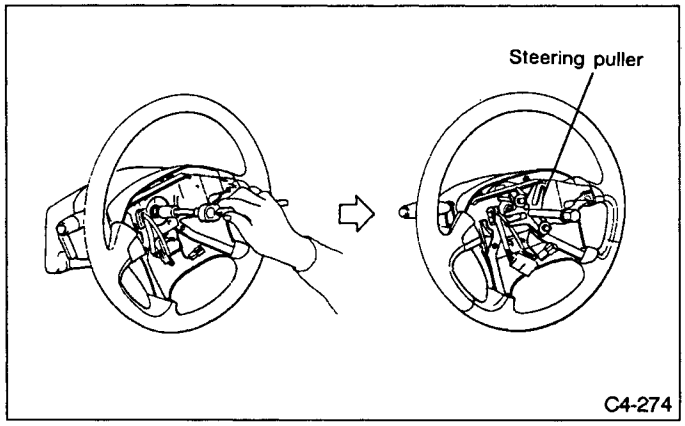

Fig. 37

Be careful not to catch connector when removing steering wheel.

2) Remove steering column covers, combination switch ASSY, protector and steering ECU (only for electronically controlled type).

Steering column ASSY is not disassembled.

C: INSPECTION

Clean the disassembled parts with a cloth, and check for wear, damage or any other faults. If necessary, repair or replace faulty parts.

Part name	Inspection	Corrective action
Universal joint ASSY	• Free play • Swinging torque Yawing torque Looseness 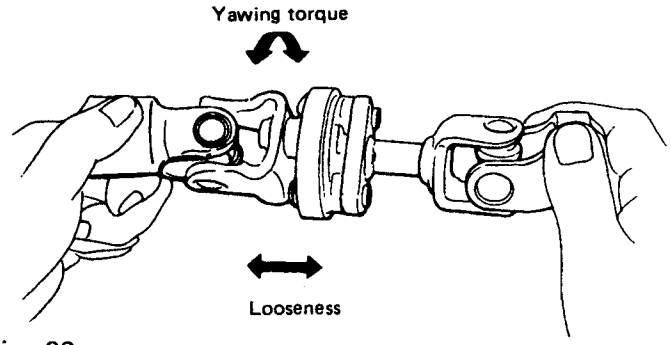 *Fig. 38* **Standard value of universal joint free play : 0 mm (0 in)** **Max. value of universal joint swinging torque : 0.3 N•m (0.03 kg-m, 0.2 ft-lb)**	Replace if faulty.
Steering column	• Overall length of steering column Measure overall length of steering column. Standard overall length of steering column. 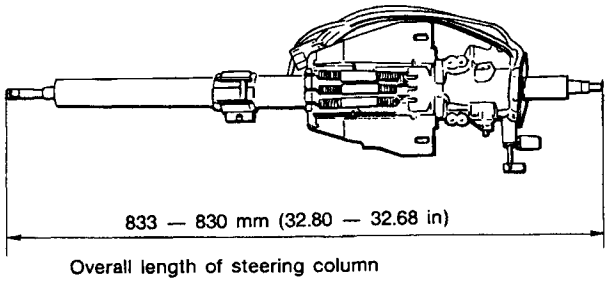 *Fig. 39*	Replace steering column ASSY.

Concerning "Airbag module", refer to chapter 5-5.

D: ASSEMBLY

Install steering ECU, protector, combination switch ASSY and steering column covers.
a. Don't overtorque screw.
b. Before installing combination switch ASSY, ensure that front wheels are set in straight-forward direction.
c. Before installing column cover (telescopic), turn airbag system roll connector to neutral (CENTER).
〈Ref. to [5-5] No. W1E1.〉

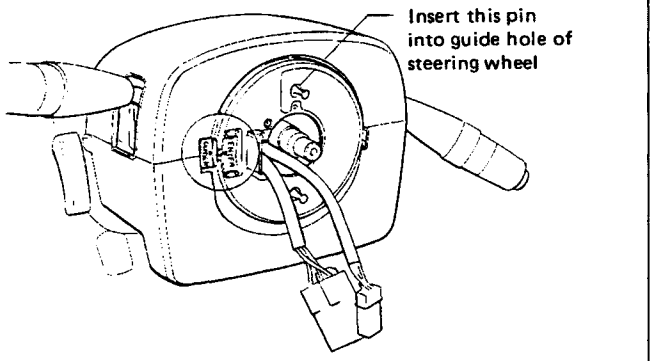

Fig. 40

E: INSTALLATION

1) Insert end of steering column ASSY into toe-board dust seal.
2) Tighten column ASSY mounting bolt and nuts under instrument panel.
3) Connect ignition and combination switch connectors under instrument panel.
4) Connect airbag system connector at harness spool.
Make sure to appy double lock.
5) Set steering wheel to neutral and install it onto steering shaft. Insert roll connector guide pin into guide hole on lower end of surface of steering wheel to prevent damage.
Draw out airbag system connector, horn connector and cruise control connectors from guide hole of steering wheel lower end.
6) Tighten steering wheel securing nut.
7) Install universal joint.
(1) While aligning marks scribed during disassembly, push long yoke of joint ASSY all the way into serrated portion of column ASSY, setting bolt hole in cutout.
(2) Then pull the short yoke all the way out of the serrated portion of the gear box ASSY setting the bolt hole in the cutout.
(3) Insert the bolt through the short yoke, pull the joint ASSY and confirm that the bolt is in cutout of the gearbox ASSY.
(4) Fasten the short yoke side with a spring washer and bolt, then fasten the long yoke side.

Tightening torque:
21 — 26 N•m (2.1 — 2.7 kg-m, 15 — 20 ft-lb)

a. Make sure that universal joint bolts are tightened through notch in shaft serration.
b. Excessively large tightening torque of universal joint bolts may lead to heavy steering wheel operation.

Standard clearance between universal joint ASSY and FTJ (Free ring Tripod Joint):
Over 15 mm (0.59 in)

5) Installation of airbag module.
a. Do not install deployed module.
b. Do not allow harness and connector to interfere with other parts or get caught between them.
(1) Make sure that ignition switch is turned "OFF".
After ignition switch is turned off, wait 10 minutes before starting work.
(2) Make sure that front tires are set in straight ahead direction.
(3) Make sure that roll connector is in neutral position.
(4) Connect airbag connector.
Make sure to apply double lock.
(5) Connect horn and cruise control connectors.
(6) Fasten bolts securing module using TORX® bit T30.〈Refer to 5-5 [C000].〉
(7) Install both steering wheel lower covers.
Airbag warning lamp check:
Make sure that when ignition switch is turned to "ON", airbag warning lamp goes off after being "lit" for 8 seconds.

3. Steering Gearbox (Power Steering System)

For disassembly and assembly of gearbox unit, refer to section Control Valve (Power Steering Gearbox).

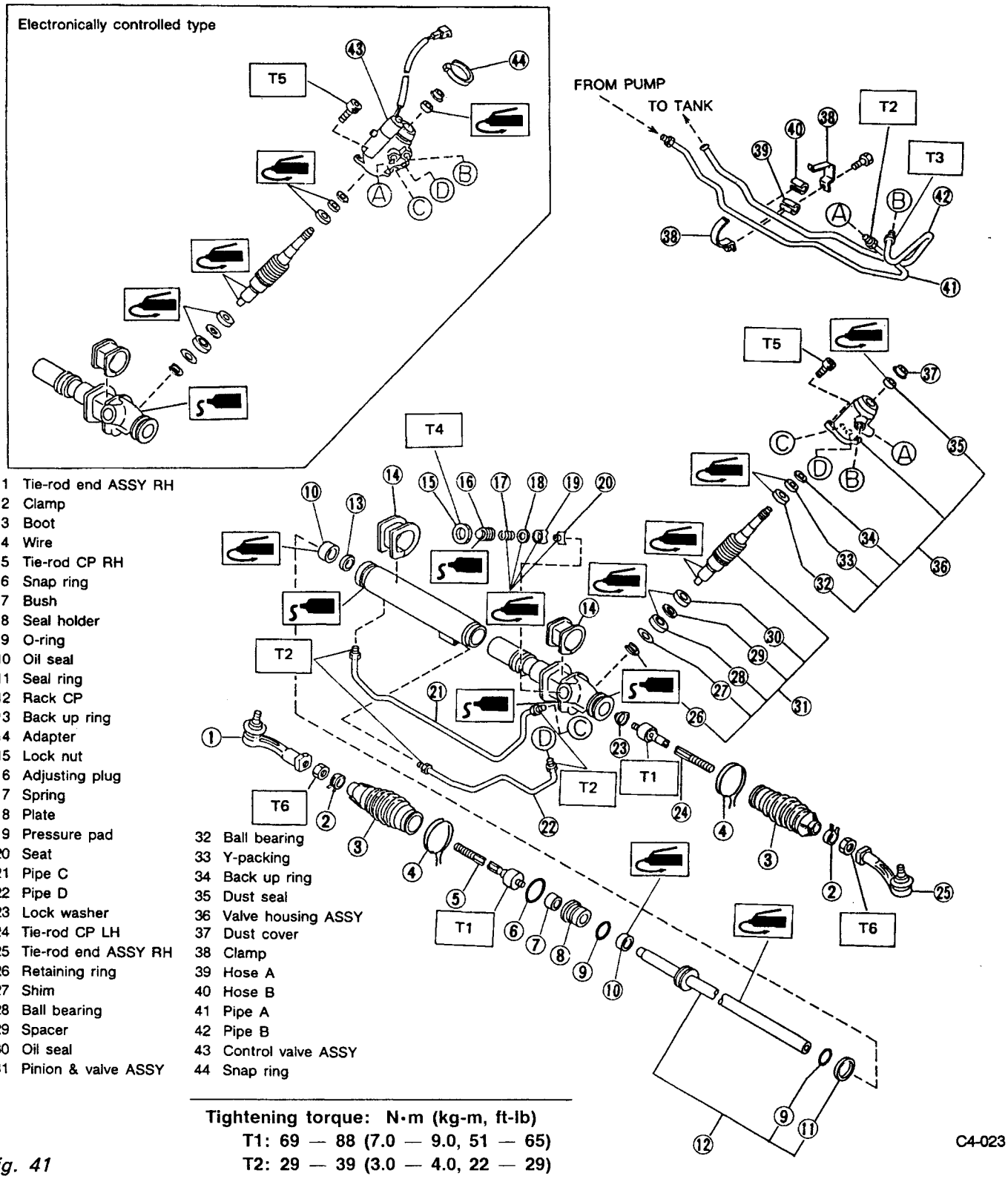

1 Tie-rod end ASSY RH
2 Clamp
3 Boot
4 Wire
5 Tie-rod CP RH
6 Snap ring
7 Bush
8 Seal holder
9 O-ring
10 Oil seal
11 Seal ring
12 Rack CP
13 Back up ring
14 Adapter
15 Lock nut
16 Adjusting plug
17 Spring
18 Plate
19 Pressure pad
20 Seat
21 Pipe C
22 Pipe D
23 Lock washer
24 Tie-rod CP LH
25 Tie-rod end ASSY RH
26 Retaining ring
27 Shim
28 Ball bearing
29 Spacer
30 Oil seal
31 Pinion & valve ASSY
32 Ball bearing
33 Y-packing
34 Back up ring
35 Dust seal
36 Valve housing ASSY
37 Dust cover
38 Clamp
39 Hose A
40 Hose B
41 Pipe A
42 Pipe B
43 Control valve ASSY
44 Snap ring

C4-023

Fig. 41

Tightening torque: N·m (kg-m, ft-lb)

T1:	69 — 88 (7.0 — 9.0, 51 — 65)
T2:	29 — 39 (3.0 — 4.0, 22 — 29)
T3:	39 — 49 (4.0 — 5.0, 29 — 36)
T4:	59 — 74 (6.0 — 7.5, 43 — 54)
T5:	20 — 29 (2.0 — 3.0, 14 — 22)
T6:	78 — 88 (8.0 — 9.0, 58 — 65)

A: ON CAR SERVICE

— **Replacement of gearbox boot (When replacing boot without removing gearbox)**

1) Remove front wheel.
2) Remove tie-rod end from knuckle arm. ⟨Ref. to [4-2] No. W1A0.⟩
3) Remove tie-rod end ASSY.

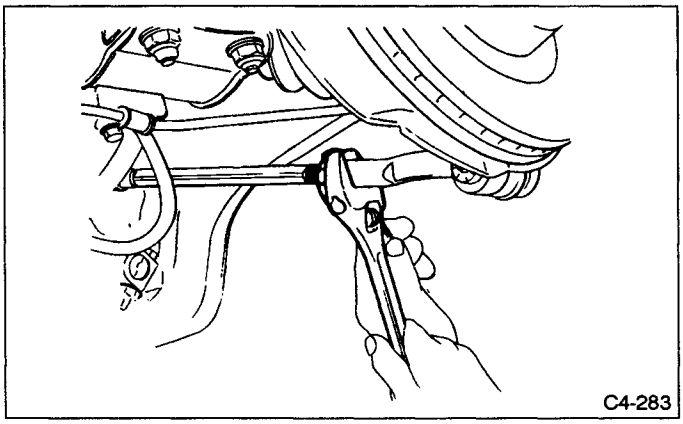

Fig. 42

4) Remove boot clip and wire.
5) Cut outer end of boot and remove boot.

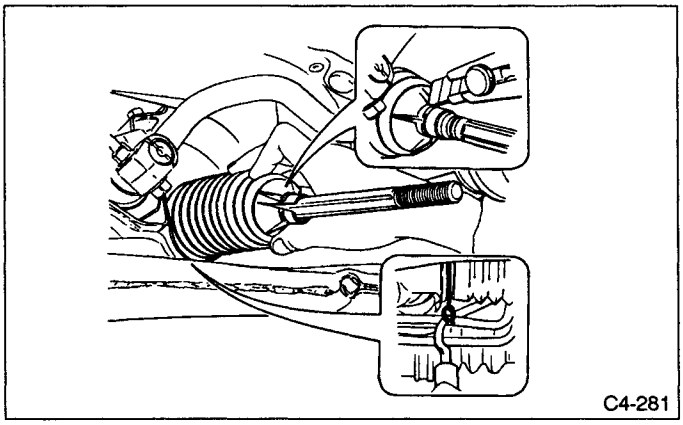

Fig. 43

6) Installation is in the reverse order of removal.

Apply sealant to large end of boot and silicon grease to small end.

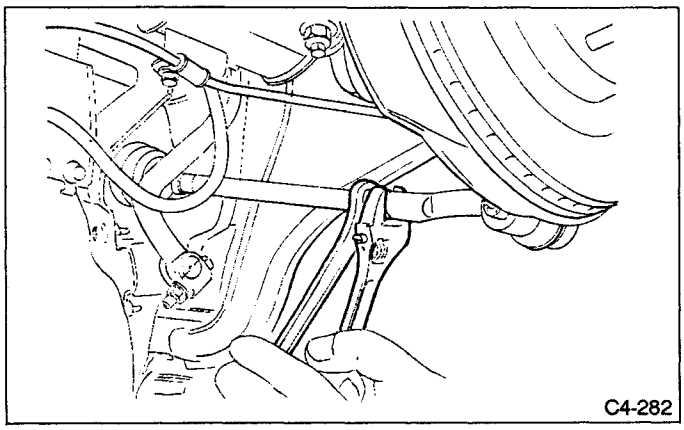

Fig. 44

a. When installing new boot, secure small side (wheel side) end of boot, then secure the other (large) end.
b. After replacing boot, make sure toe-in/out is adjusted.

B: REMOVAL

1) Disconnect battery earth (–) terminal.
2) Disconnect both O_2 sensor and steering harness connector. (only for electronically controlled type)
3) Raise vehicle with a jack and remove front wheels.
4) Remove front under cover.

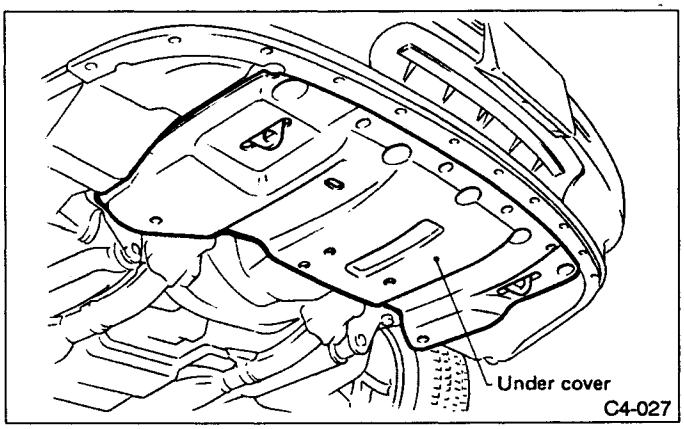

Fig. 45

5) Disconnect O_2 sensor harness from clip.
6) Remove collector cover and rear catalytic converter protector.
7) Disconnect front exhaust pipe. ⟨Ref. to [2-9] No. W3A0.⟩
8) Using a puller, remove tie-rod end from knuckle arm after pulling off cotter pin and removing castle nut.

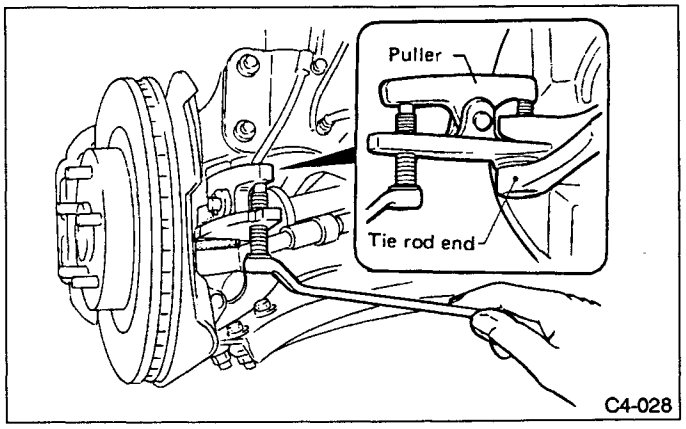

Fig. 46

9) Remove spring pin which secures transmission spindle to FTJ (Free ring Tripod Joint).

Discard old spring pin. Replace with a new one.

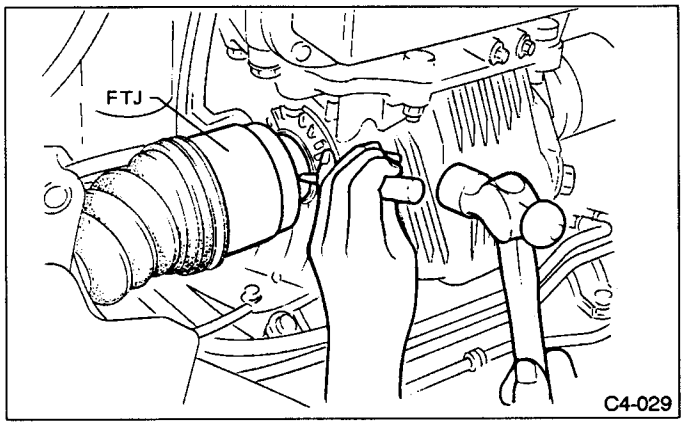

Fig. 47

10) Remove FTJ from transmission spindle and free from transmission.

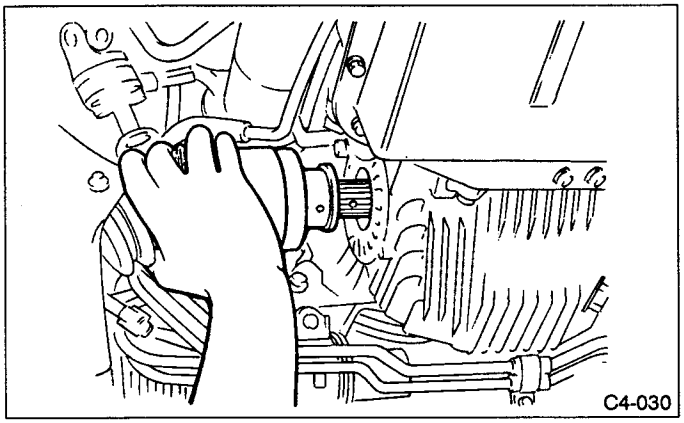

Fig. 48

11) Disconnect the pipe joint from upper hose and drain fluid rotating steering wheel to the right and left. Similarly, loosen flare nut securing other pipe and disconnect the pipe and drain fluid from the pipe.

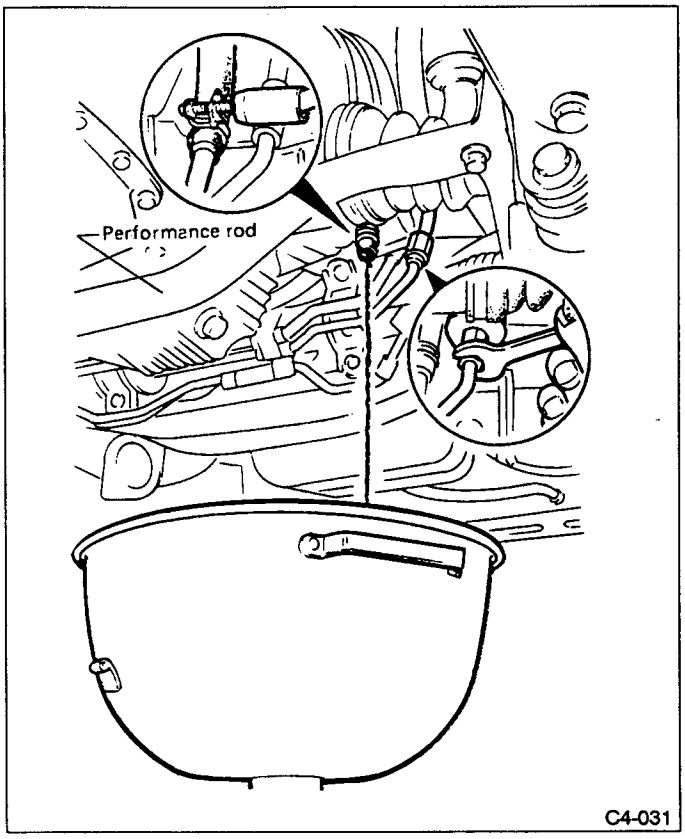

Fig. 49

12) Disconnect performance rod.
13) Disconnect transverse link ball joint from housing.

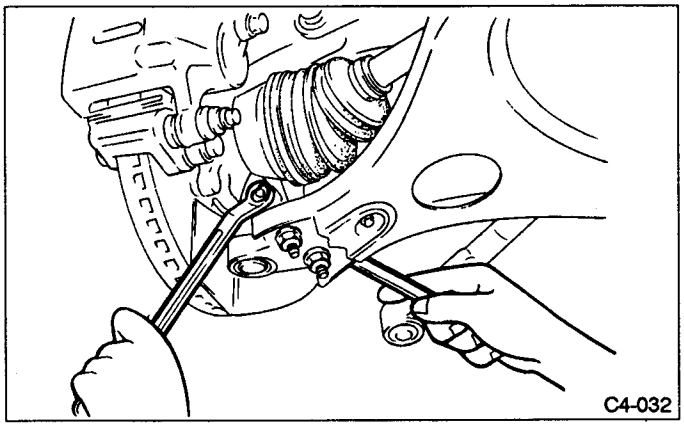

Fig. 50

a. After removal, cover with a waste cloth at the transverse link ball joint to prevent being scratched.
b. This step applies to facilitate operation for left side only.

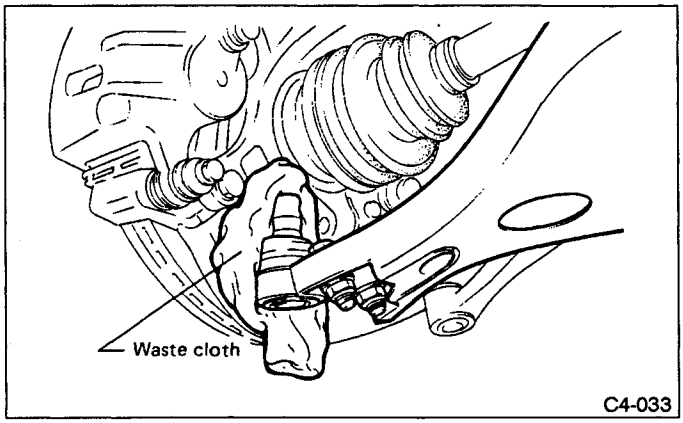

Fig. 51

14) Remove lower and upper bolts from universal joint ASSY, and remove universal joint in the upward direction.

a. Scribe alignment marks on universal joint ASSY so that it can be reassembled at the original serration.

b. Do not turn steering wheel as this will cause the airbag system roll connector become misaligned.

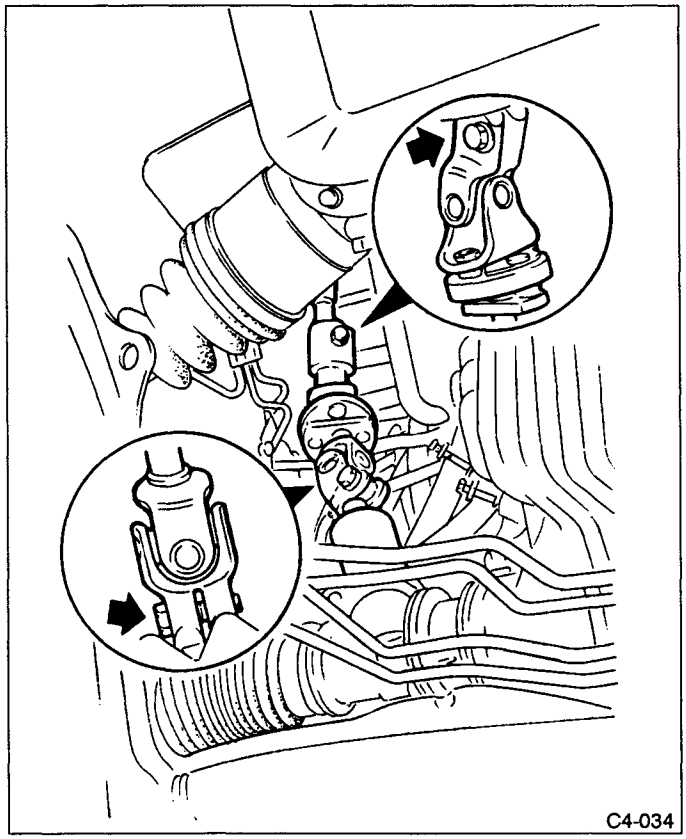

Fig. 52

15) Remove bolts securing gearbox to sub-frame, and detach gearbox.

- **To avoid scratching pipes, wrap with cloth during removal.**

(1) Remove securing bolts.

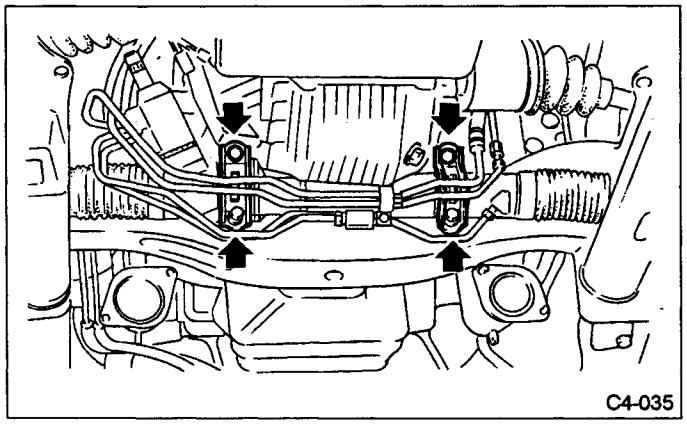

Fig. 53

(2) To ease removal of gearbox, turn gearbox ASSY around so that control valve faces rear.

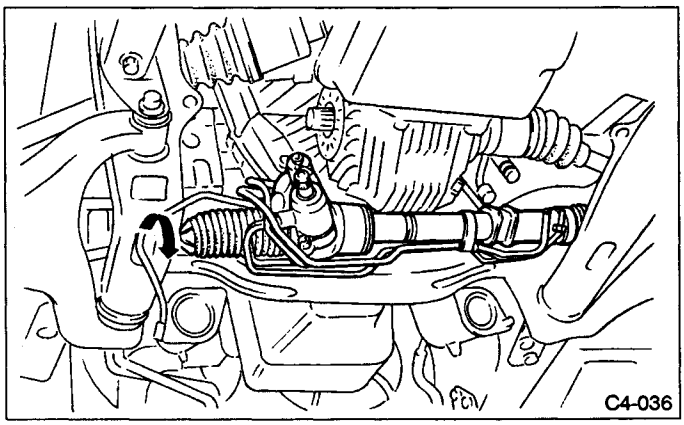

Fig. 54

(3) Move gearbox ASSY fully to the right so that left tie-rod end can be removed from subframe.

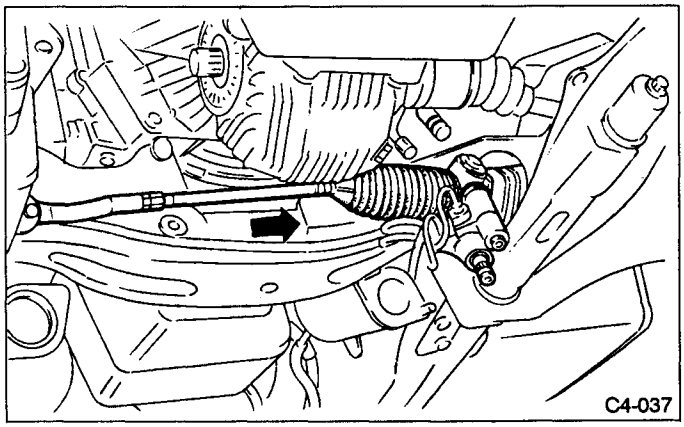

Fig. 55

(4) Remove gearbox ASSY from vehicle.

C: DISASSEMBLY

1) Secure gearbox removed from vehicle in vice using STAND.
Secure the gearbox ASSY in a vice using the special tool as shown. Do not attempt to secure it without this special tool.

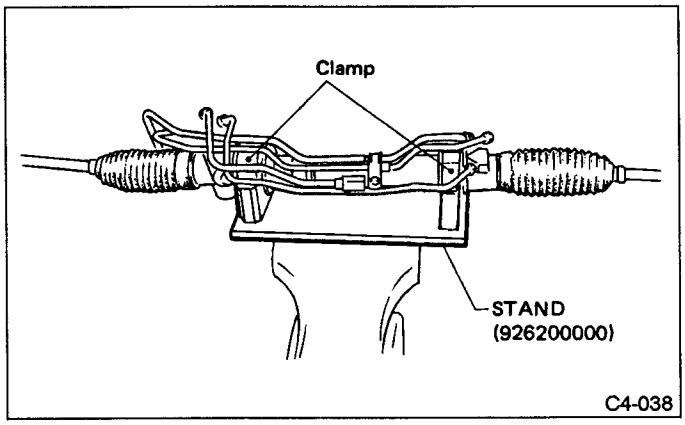

Fig. 56

2) Disconnect the two pipes in/out from gear box after removal of pipe clamp.
3) Disconnect pipes A and B from steering body and control valve housing.
Replace pipes and/or flare nuts if damaged.

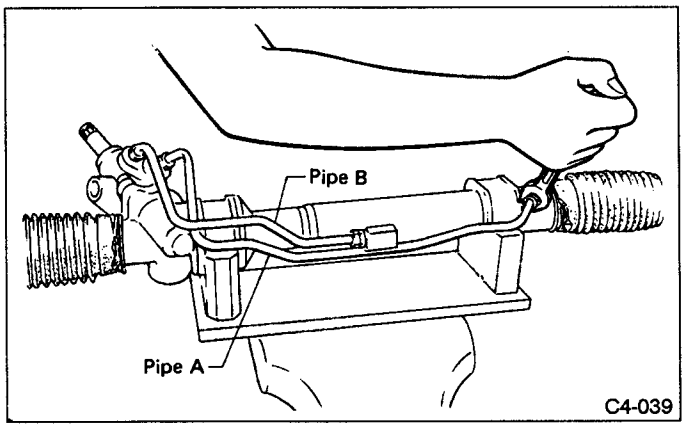

Fig. 57

4) Remove tie-rod end and lock nut.
5) Pry off clip from small end of boot, and slide it toward tie-rod end.

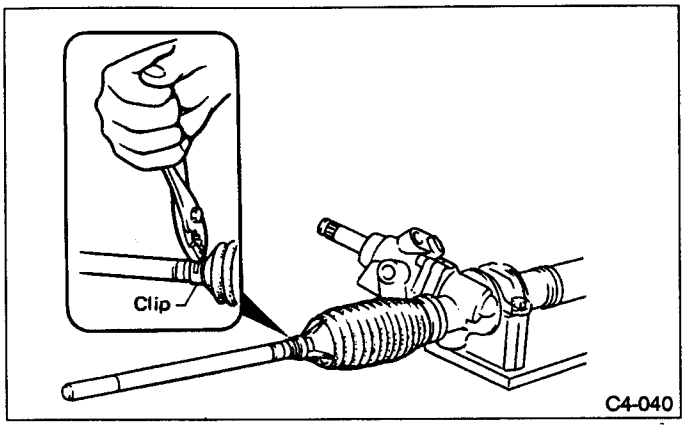

Fig. 58

6) Using special tool, remove lock wire from large end of boot.

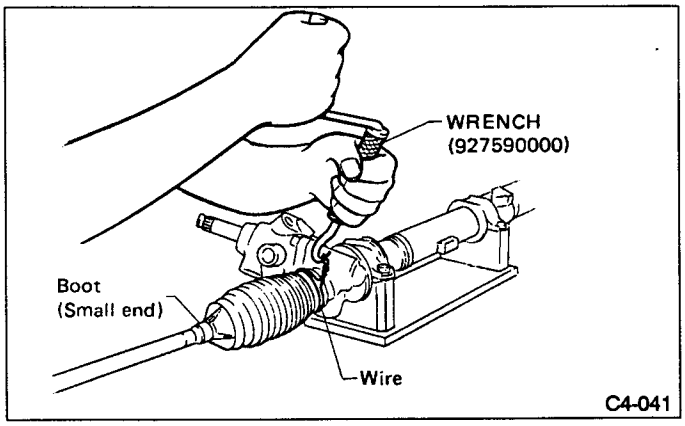

Fig. 59

7) Cut and remove the boot.
Boot must be replaced with a new one whenever it is removed.

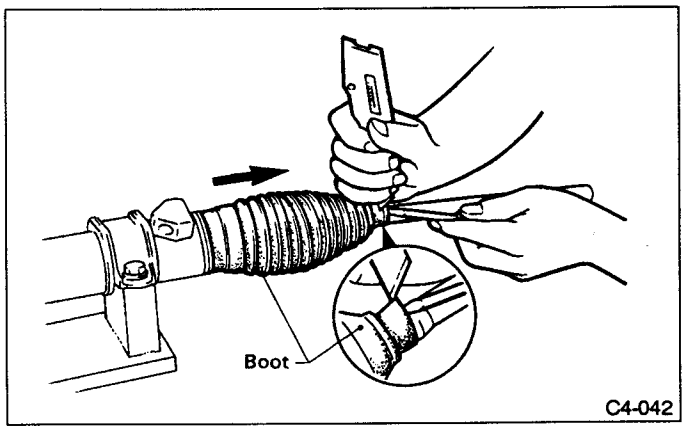

Fig. 60

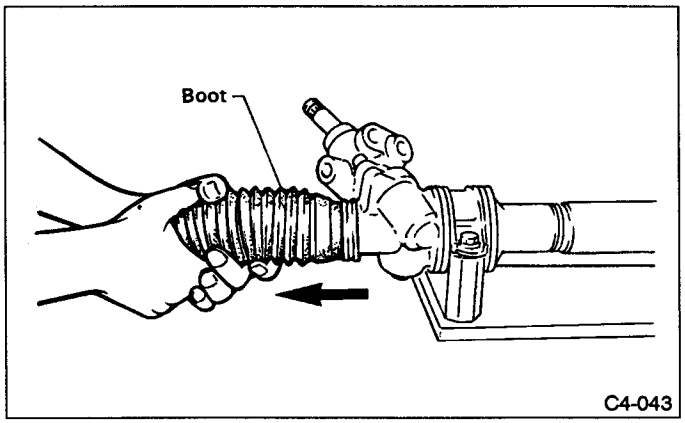

Fig. 61

8) Set rack so that it protrudes about 40 mm (1.57 in) outside. Pry clinched portion of tie-rod lock washer with standard screwdriver. (both left and right side)

a. Be careful not to scratch rack, since it can cause oil to leak.

b. Tie-rod lock washer must be replaced with a new one whenever it is removed.

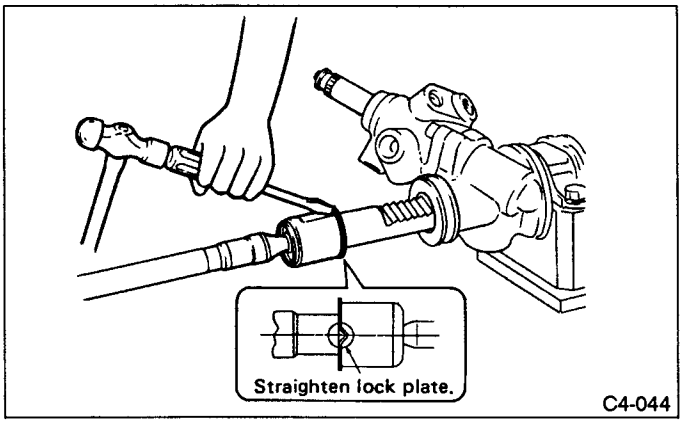

Fig. 62

9) Using special tool, loosen lock nut. Tighten adjusting screw until it no longer tightens.

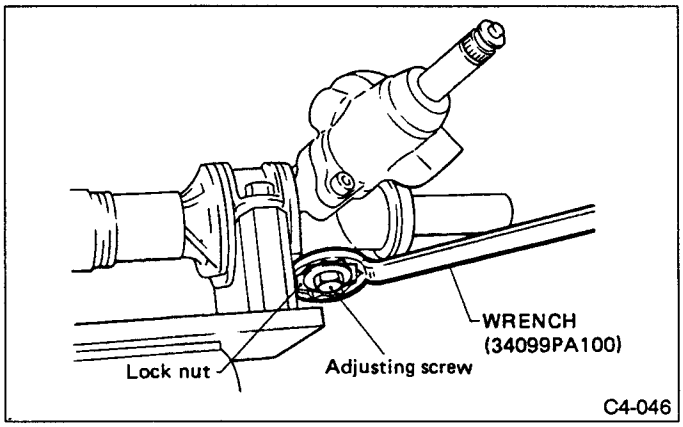

Fig. 63

10) Using WRENCH [32 mm (1.26 in) width across flats], (P/N 34099PA100) or adjustable wrench, remove tie-rod CP.

a. Check ball joint for free play, and tie-rod for bends; replace if necessary.

b. Check dust seals used with tie-rod end ball joint for damage or deterioration. Replace if necessary.

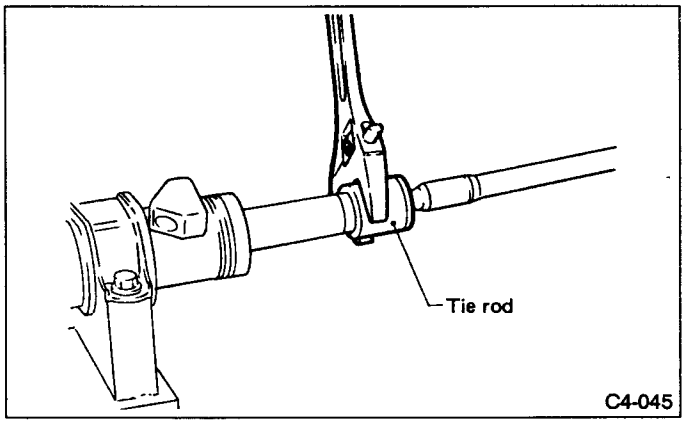

Fig. 64

11) Loosen adjusting screw and remove spring and sleeve.

Replace spring and/or sleeve if damaged.

12) Removal of valve ASSY

(1) Remove the two bolts securing valve housing ASSY.

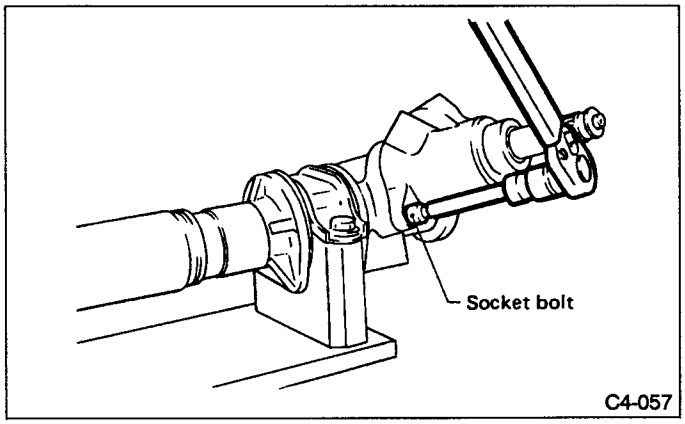

Fig. 65

(2) Remove valve housing ASSY, pinion and valve ASSY as a unit.

Extract input shaft when removing valve ASSY.

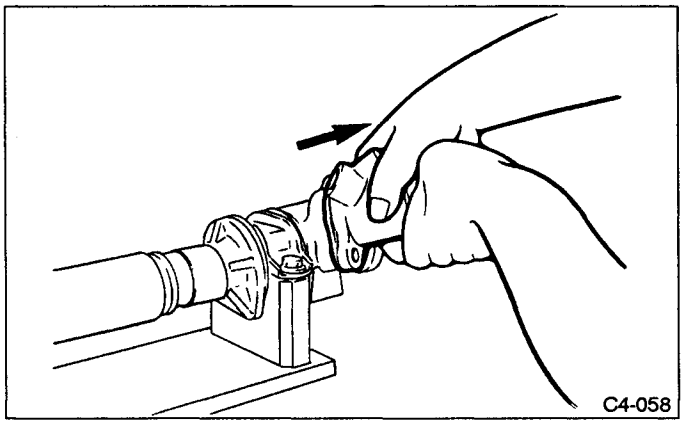

Fig. 66

13) Removal of snap ring from seal holder ASSY

While attaching small screwdriver blade to snap ring via groove on boot (on cylinder side of steering body ASSY), push the snap ring using another screwdriver.

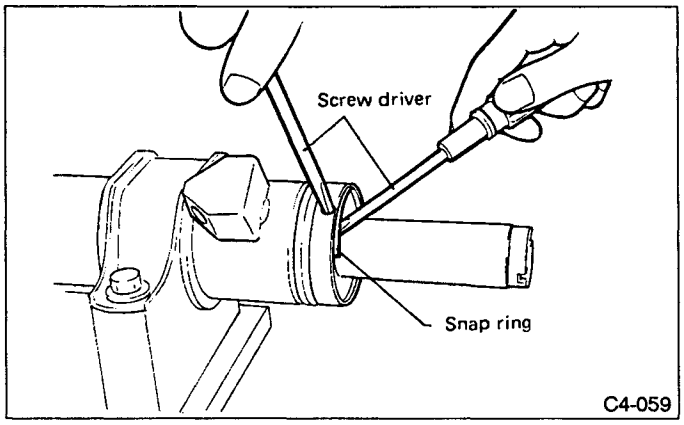

Fig. 67

14) Removal of rack ASSY

Push rack out of steering body ASSY while pushing it on valve side.

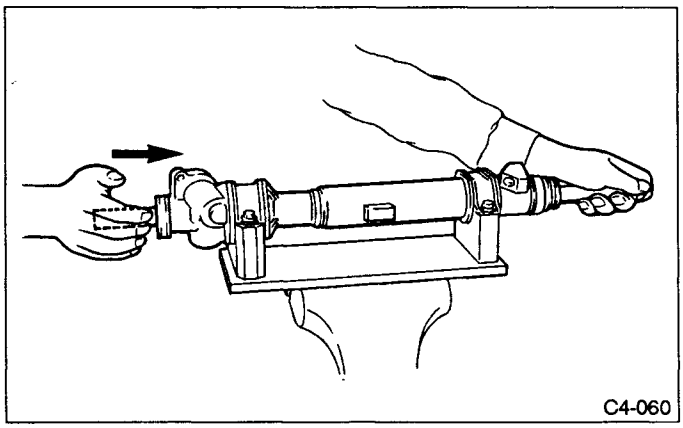

Fig. 68

a. Block pipe connection of steering body ASSY to prevent fluid from flowing out.

b. Do not allow rack to come in contact with inner wall of cylinder. Otherwise, cylinder wall may be scratched, resulting in oil leaks.

c. Remove holder ASSY and rack ASSY as a unit.

d. Check rack and steering body ASSY for bends or cracks; replace as required.

15) Removal of high-pressure seal

Insert REMOVER from valve side, and lightly tap it using a hammer to drive out back-up ring and oil seal.

Discard back-up ring and oil seal after removal; replace with new ones.

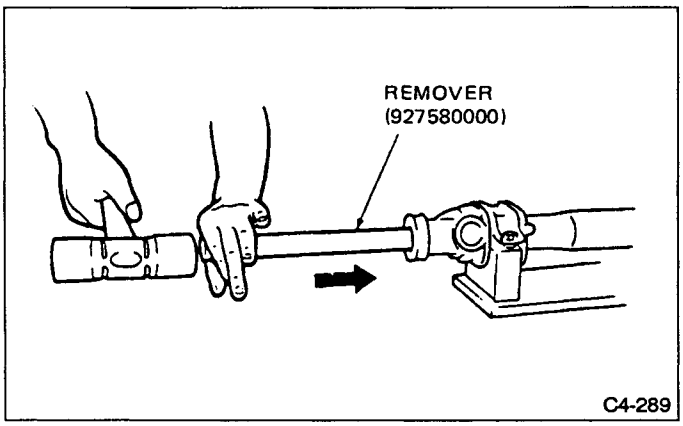

Fig. 69

16) Removal of oil seal and O-ring

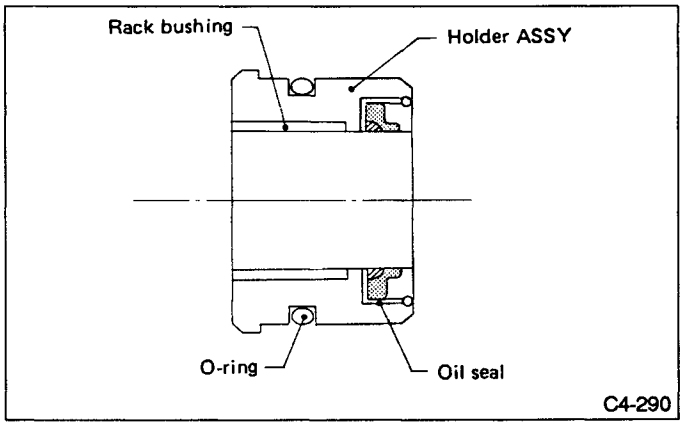

Fig. 70

(1) Using a small rod, pry out oil seal.

a. Be careful not to scratch oil seal groove on holder ASSY. A scratch may cause oil leaks.

b. Be careful not to scratch mating surfaces of holder ASSY and rack. A scratch may cause oil leaks.

c. Check rack bushing for wear or damage; replace as required.

d. Discard oil seal and O-ring after removal; replace with new ones.

(2) Remove O-ring.

(3) Apply a coat of grease to oil seal groove in holder ASSY.

(4) Install a new oil seal and O-ring.

17) Removal of rack piston seal ring and O-ring

(1) Using a sharp-edged, long rod, remove seal ring and O-ring from rack piston.

Be careful not to scratch outer surface of rack piston and seal ring groove. A scratch may reduce the sealing effect, resulting in faulty piston operation.

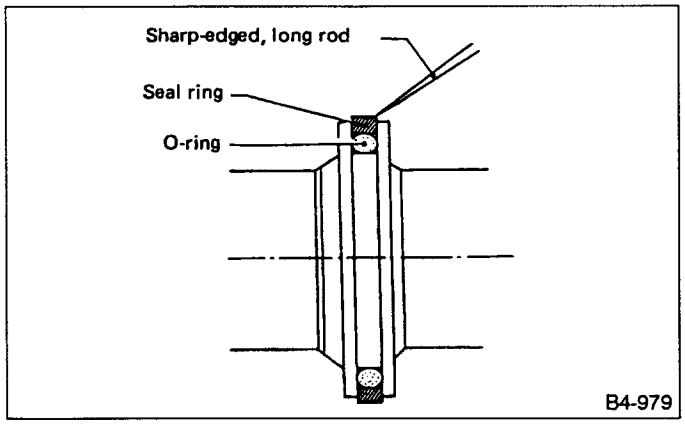

Fig. 71

(2) Wash clean rack piston.

(3) Install O-ring and seal ring in groove on rack piston.

a. Do not expand O-ring and seal ring more than necessary.

b. To facilitate installation of seal ring, first position one half of entire seal ring in groove. Then slowly position the second half using a spatula, as shown.

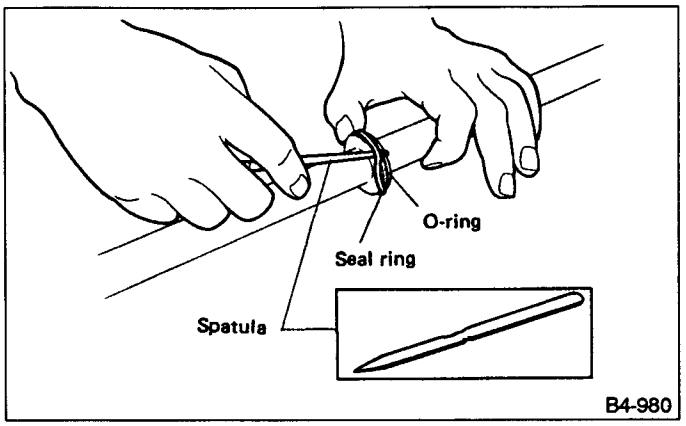

Fig. 72

(4) Apply a coat of grease to inner surface of FORMER (special tool) and insert rack piston into it. Leave FORMER at least 10 minutes until seal ring settles down in place.

Be careful not to scratch rack, piston and seal ring during installation.

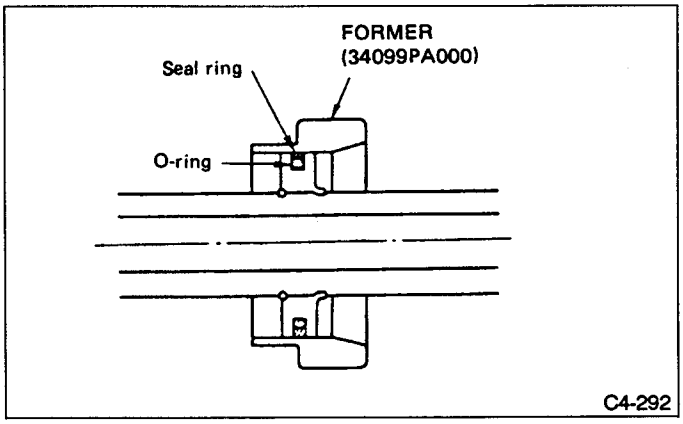

Fig. 73

D: INSPECTION

1) Clean all disassembled parts, and check for wear, damage, or any other faults, then repair or replace as necessary.

2) When disassembling, check inside of gearbox for water. If any water is found, carefully check boot for damage, input shaft dust seal, adjusting screw and boot clips for poor sealing. If faulty, replace with new parts.

No.	Parts	Inspection	Corrective action
1	Input shaft	(1) Bend of input shaft (2) Damage on serration	If bend or damage is excessive, replace entire gearbox ASSY.
2	Dust seal	(1) Crack or damage (2) Wear	If outer wall slips, lip is worn out or damage is found, replace it with new one.
3	Rack and pinion	Poor mating of rack with pinion	(1) Adjust backlash properly. By measuring turning torque of gearbox and sliding resistance of rack, check if rack and pinion engage uniformly and smoothly with each other. (Refer to "Service limit".) (2) Keeping rack pulled out all the way so that all teeth emerge, check teeth for damage. Even if abnormality is found in either (1) or (2), replace entire gearbox ASSY.
4	Gearbox unit	(1) Bend of rack shaft (2) Bend of cylinder portion (3) Crack or damage on cast iron portion	Replace gearbox ASSY with new one.
		(4) Wear or damage on rack bush	If free play of rack shaft in radial direction is out of the specified range, replace gearbox ASSY with new one. (Refer to "Service limit".)
		(5) Wear on input shaft bearing	If free plays of input shaft in radial and axial directions are out of the specified ranges, replace gearbox ASSY with new one. (Refer to "Service limit".)
5	Boot	Crack, damage or deterioration	Replace.
6	Tie-rod CP	(1) Looseness of ball joint (2) Bend of tie-rod	Replace.
7	Tie-rod end	Damage or deterioration on dust seal	Replace.
8	Adjusting screw spring	Deterioration	Replace.
9	Boot clip	Deterioration	Replace.
10	Sleeve	Damage	Replace.
11	Pipes	(1) Damage to flared surface (2) Damage to flare nut (3) Damage to pipe	Replace.
12	Control valve ASSY (only electronically controlled type)	Damage to solenoid harness	Replace.

1. SERVICE LIMIT

Make a measurement as follows. If it exceeds the specified service limit, adjust or replace.

When making a measurement, vise gearbox by using special tool (STAND; 926200000). Never vise gearbox by inserting aluminum plates, etc. between vise and gearbox.

Sliding resistance of rack shaft

Service limit:
304 N (31 kg, 68 lb) or less

Difference between left and right sliding resistance:
Less than 20%

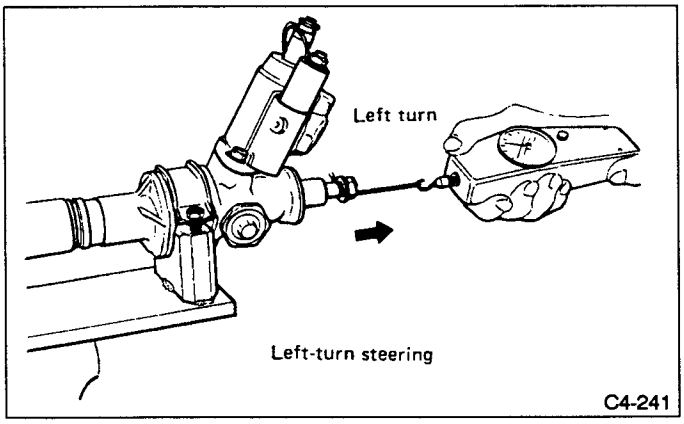

Fig. 74

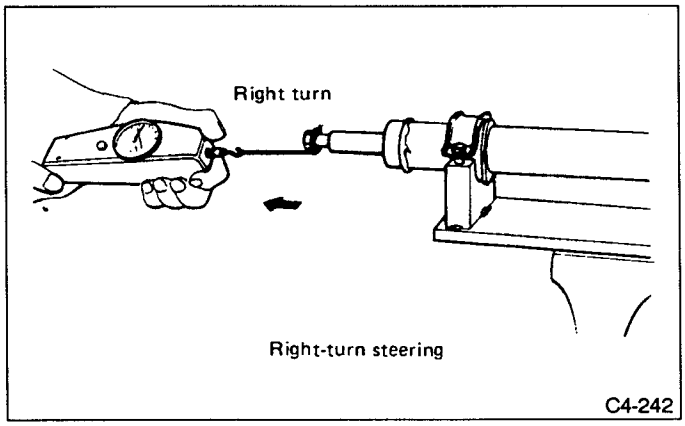

Fig. 75

2. RACK SHAFT PLAY IN RADIAL DIRECTION

- **Left-turn steering**

Service limit:
Less than 0.4 mm (0.016 in) (direction ⇐ ⇒)
Less than 0.6 mm (0.024 in) (direction ⇐ ⇒)

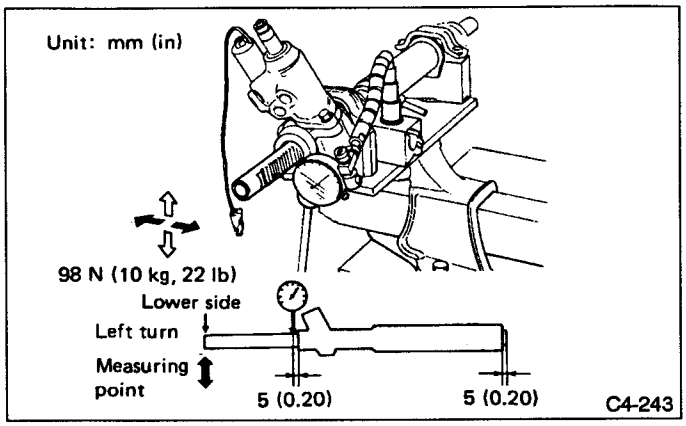

Fig. 76

- **Right-turn steering**

Service limit:
Less than 0.4 mm (0.016 in) (direction ⇐ ⇒ and ⇐ ⇒)

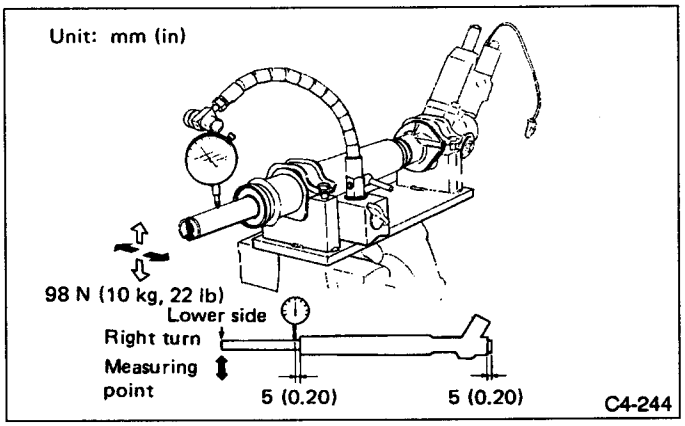

Fig. 77

3. INPUT SHAFT PLAY

- **In radial direction**

Service limit:
0.18 mm (0.0071 in) or less

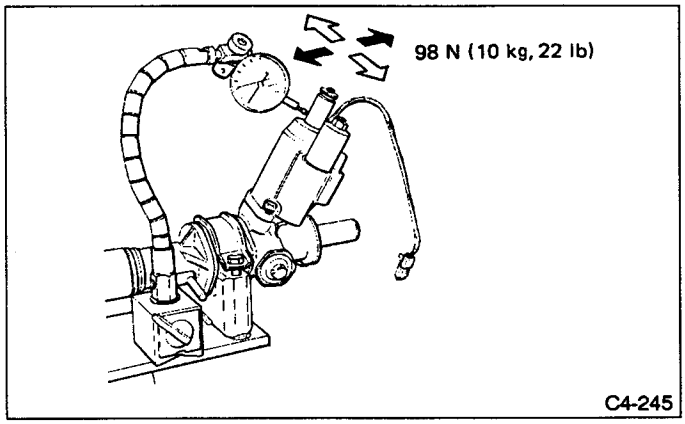

Fig. 78

- **In axial direction**

Service limit:
0.27 mm (0.0106 in) or less

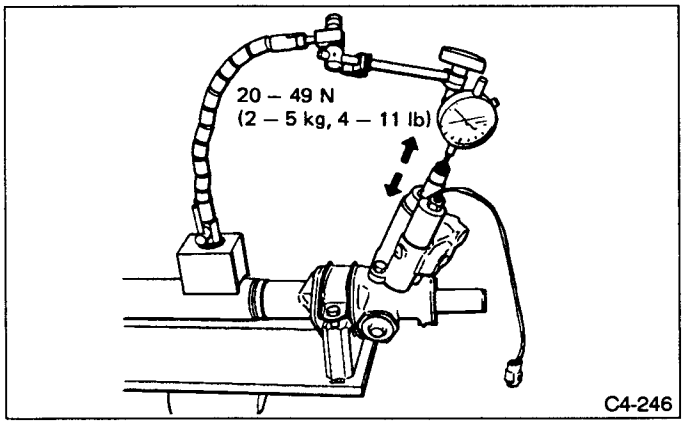

Fig. 79

4. TURNING RESISTANCE OF GEARBOX

Service limit:
Straight-ahead position within 30 mm (1.18 in) from rack center
Less than 11.18 N (1.14 kg, 2.51 lb)
Maximum allowable resistance
15.79 N (1.61 kg, 3.55 lb) or less
Difference between left and right sliding resistance:
Less than 20%

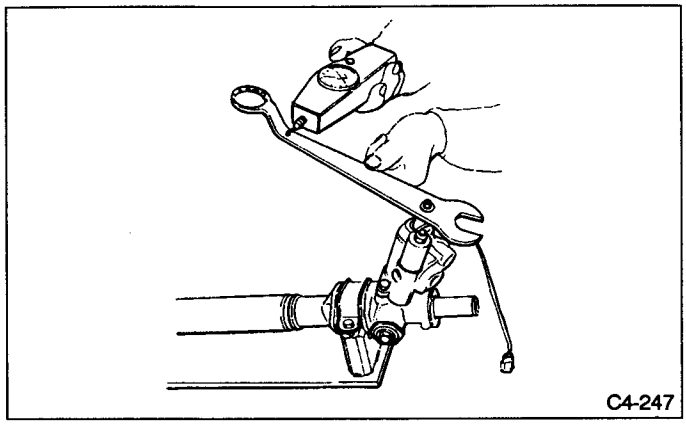

Fig. 80

E: ASSEMBLY

Use only SUBARU genuine grease for gearbox.

Specified grease for gearbox
VALIANT GREASE M2 [Parts No. 003608001, net 0.5 kg (1.1 lb)]

1) Reassembly of rack ASSY
(1) Attach steering body ASSY to STAND as shown. Apply a coat of grease to needle bearing.
a. Use a special tool to support steering body ASSY.
b. If steering body ASSY is removed from vehicle, be sure to remove rust and clean.
c. Ensure that needle bearing is free from defects. If it is faulty, replace steering body ASSY with a new one.

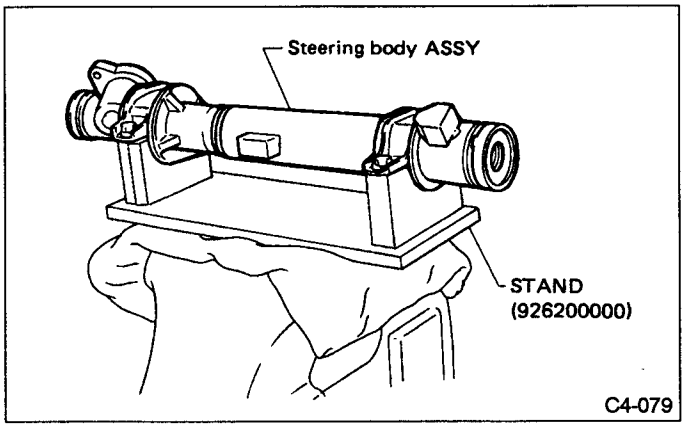

Fig. 81

(2) Using INSTALLERs B and C, attach oil seal to INSTALLER A. Insert INSTALLER A into rack ASSY from gear side. Remove oil seal from INSTALLER A when it approaches piston and remove INSTALLERs from rack ASSY.

Face oil seal in the direction shown in Figure 82.

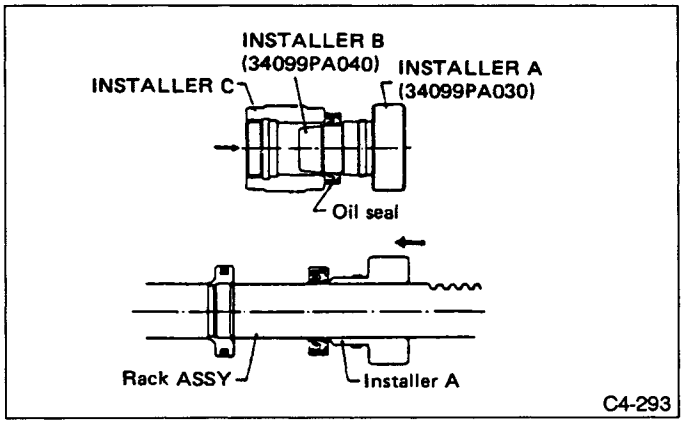

Fig. 82

(3) Install back-up ring from gear side of rack ASSY.
INSTALLER C (927490000) is furnished with INSTALLERs B and C as a tool set for use on all Legacy models.

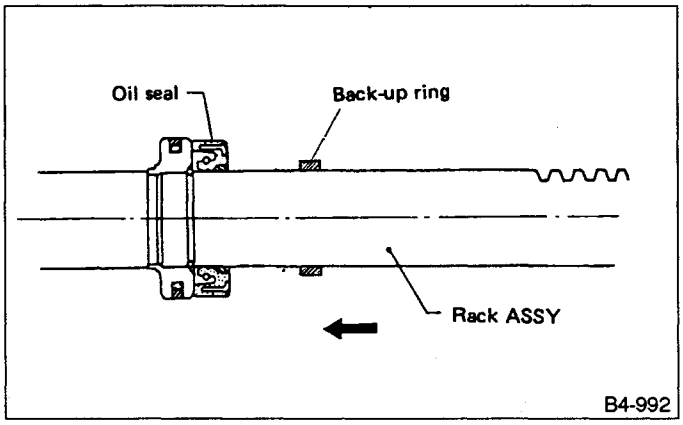

Fig. 83

(4) Apply a coat of grease to grooves in rack, sliding surface of sleeve and sealing surface of piston. Then insert rack ASSY into steering body ASSY from cylinder side.
a. Be sure to apply grease so that it covers the entire surface of rack gear teeth.
b. Do not allow grease to block air vent hole on rack.

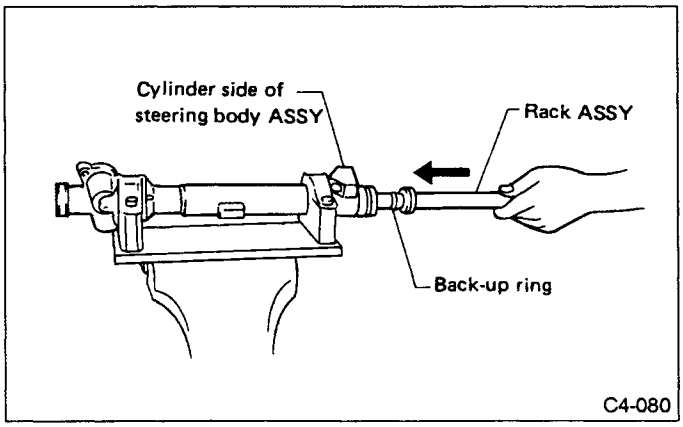

Fig. 84

(5) Installation of holder ASSY
Attach GUIDE to rack ASSY to prevent scratching cylinder, and apply a thin coat of grease to rack ASSY and GUIDE.

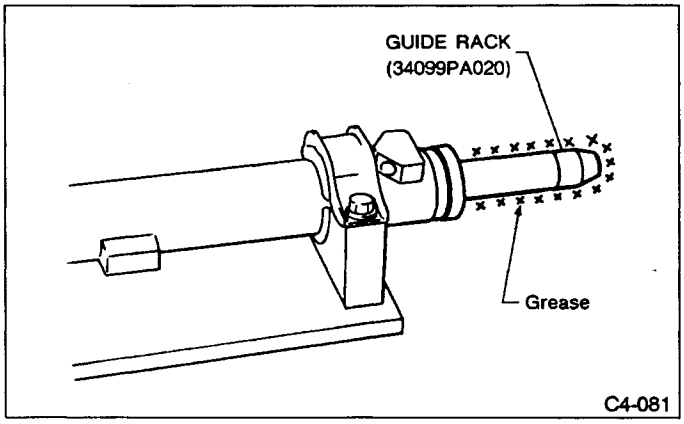

Fig. 85

(6) Apply a coat of grease to inner wall of holder ASSY and O-ring, and install holder ASSY on steering body ASSY.
a. Ensure that guide is free from scratches. Scratches may damage oil seal.
b. Be careful not to damage oil seal lips when installing holder ASSY.

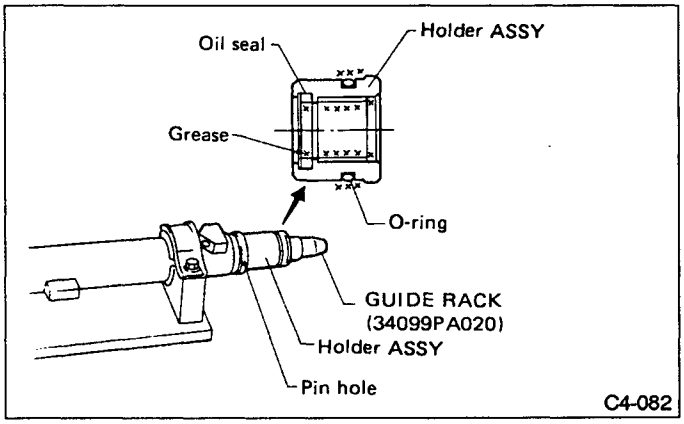

Fig. 86

(7) Apply a coat of grease to snap ring, and insert into groove in steering body ASSY. Secure holder ASSY.
Ensure that both ends of snap ring are close to pin hole when installed.
(8) Attach INSTALLER to rack ASSY's cylinder. Using a press, install back-up ring and oil seal.
Press INSTALLER until its groove is aligned with end of holder ASSY.

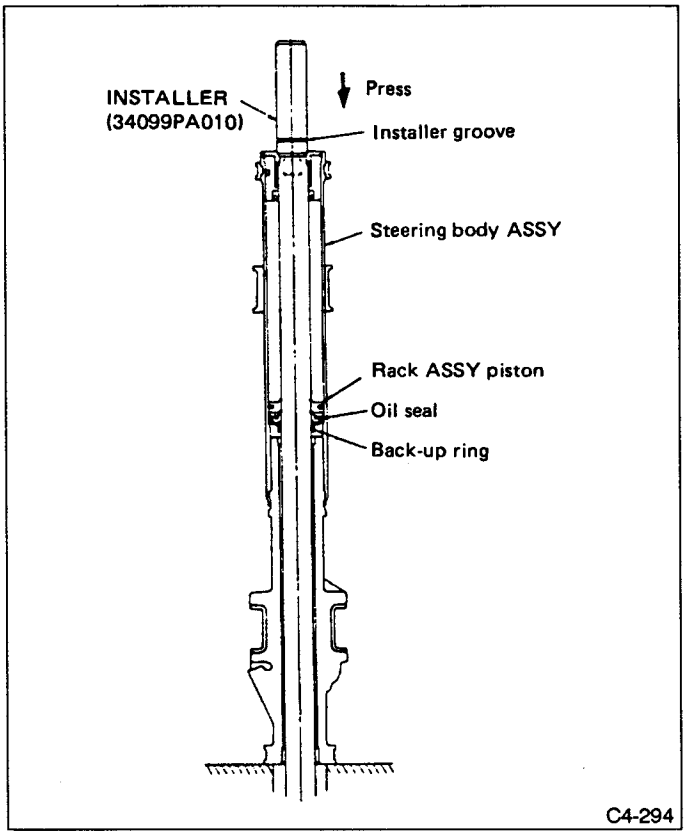

Fig. 87

2) Installation of valve ASSY

(1) Remove traces of sealer, oil, rust, etc., from mating surfaces of valve housing and steering body ASSY.

(2) Position a shim in graded portion of steering body ASSY's pinion housing, and apply an even coat of sealer (Fuji Bond: 004403004) to end of pinion housing.

a. Use the same number of shims as that used when steering body ASSY was removed.

b. If steering body ASSY, valve housing or pinion & valve ASSY is replaced with a new one, add two or three shims, install valve ASSY on pinion housing and tighten with two bolts to 20 — 29 N•m (2.0 — 3.0 kg-m, 14 — 22 ft-lb). Then, measure clearance between steering body ASSY and valve housing using a thickness gauge. Remove shims so that the clearance is zero.

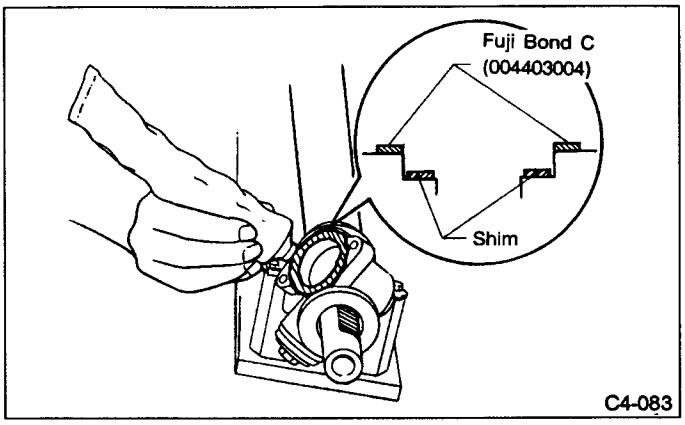

Fig. 88

(3) Extend rack ASSY 75.9 mm (2.988 in) beyond pinion side of steering body ASSY.

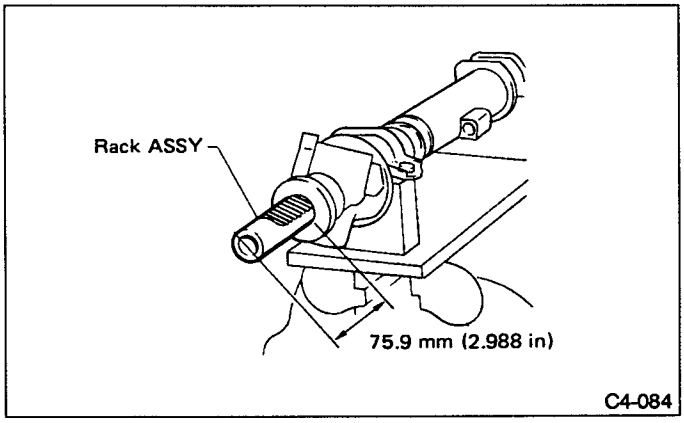

Fig. 89

(4) Apply grease to pinion gear teeth and ball bearing. Insert valve ASSY into place.

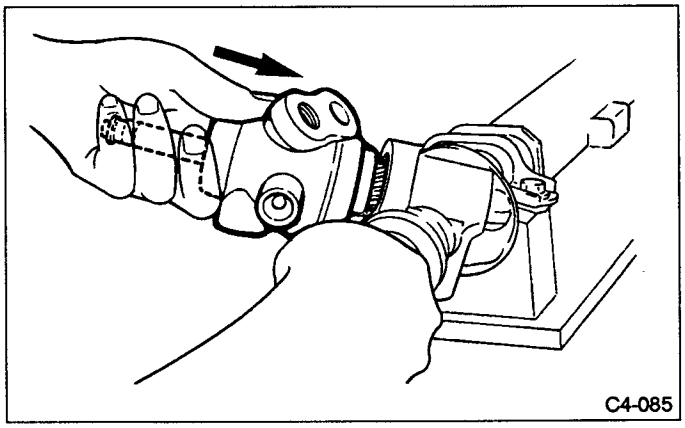

Fig. 90

(5) Alternately and slowly tighten socket bolts.

Replace faulty parts before installing valve ASSY. Otherwise, valve ASSY may not be installed properly.

Tightening torque:
20 — 29 N•m (2.0 — 3.0 kg-m, 14 — 22 ft-lb)

• Clean all parts and tools before reassembling.

1) Move rack shaft fully to the left and right two or three times to lubricate shaft ends with grease. Remove excess grease, being careful not to block air vent hole.

a. When rack is fully moved to its stroke ends with tie-rod removed, be careful not to bump rack ends.

b. Ensure that screw located at end of rack shaft is free from grease.

2) Apply grease to bore wall which accommodates sleeve.

Ensure that hands are clean when applying grease.

3) Apply a coat of grease to sliding surface of pressure pad and seating surface of spring, and insert pressure pad into steering body ASSY. Charge adjusting screw with grease, insert spring into adjusting plug and install on steering body ASSY.

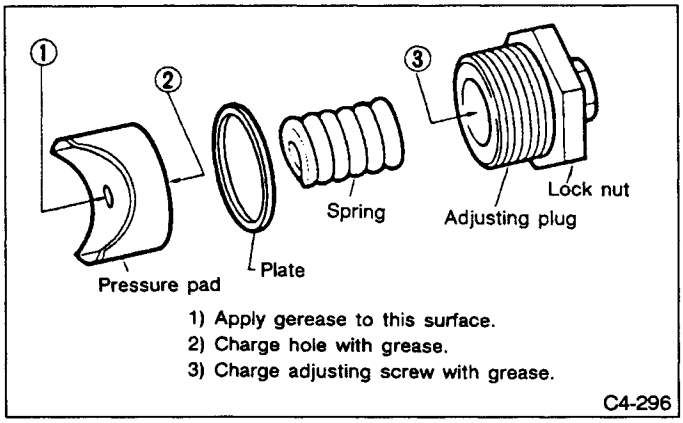

Fig. 91

The left and right tie-rod CP differ as indicated in the table below.

Left tie-rod (pinion side)	No air vent hole provided	Grooved (for identification)
Right tie-rod (cylinder side)	Air vent hole provided	Not grooved (for identification)

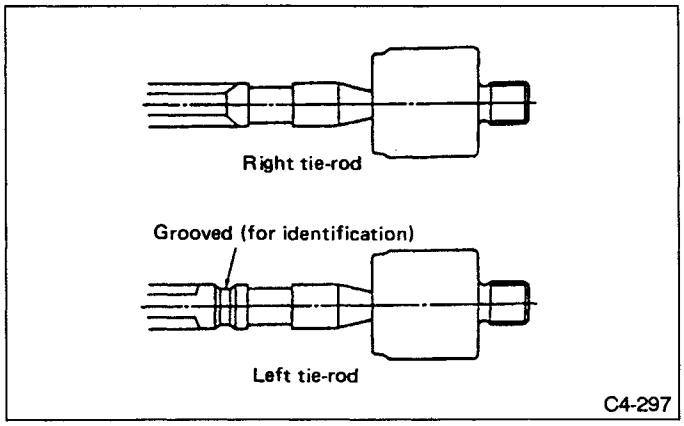

Fig. 92

4) Installation of tie-rod CP

(1) Rotate input shaft until rack extends approximately 40 mm (1.57 in).

(2) Tighten adjusting plug until it will no longer tighten.

(3) Install lock washers and tighten left and right tie-rod CPs into rack ends.

Tightening torque:
69 — 88 N·m (7.0 — 9.0 kg-m, 51 — 65 ft-lb)

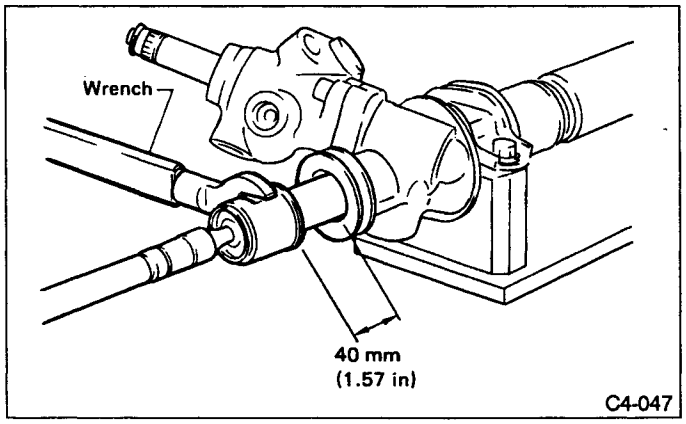

Fig. 93

(4) Using a chisel and hammer, bend lock washers (at two places).

Be careful not to scratch rack.

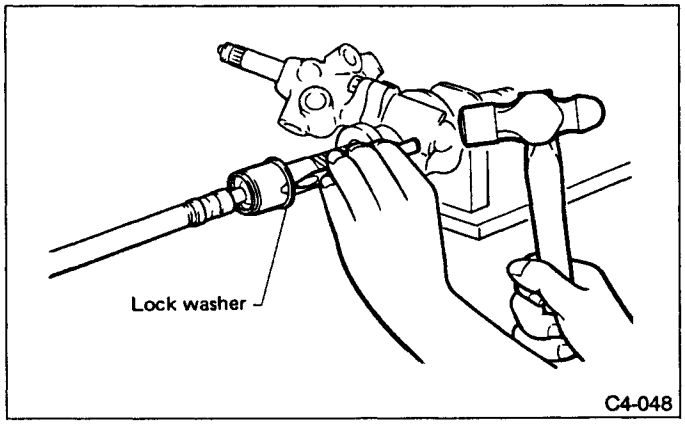

Fig. 94

5) Rack & pinion backlash adjustment

(1) Loosen adjusting plug.

(2) Rotate input shaft so that rack is in the straight ahead direction. [Ensure that distance between rack end and stopper is 75.9 mm (2.988 in).

(3) Tighten adjusting plug by two threads.

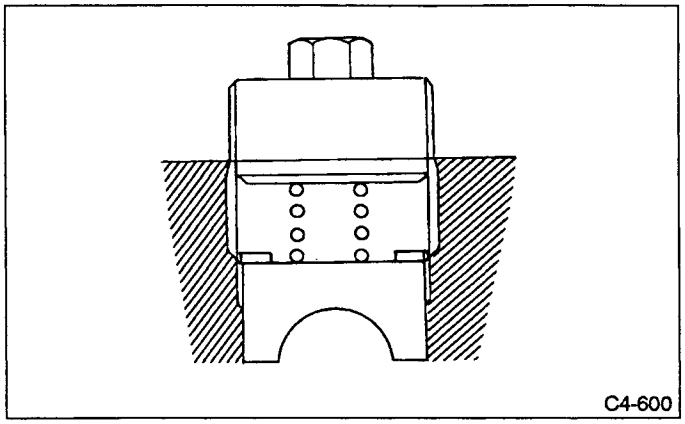

Fig. 95

(4) Turn adjusting screw so that the entire thread area is coated with liquid packing.

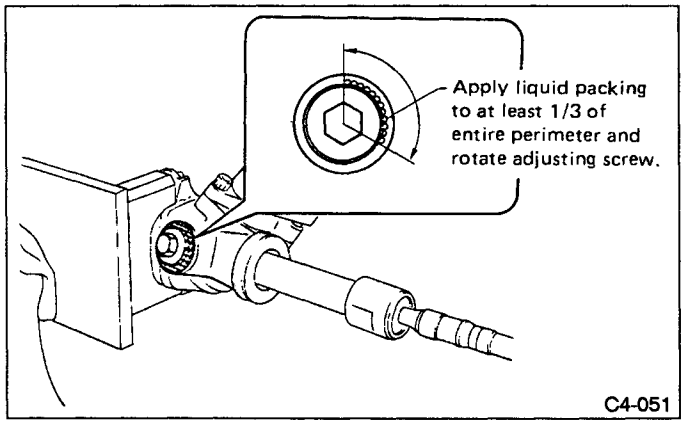

Fig. 96

a. Apply liquid packing of approximately 1.5 grams (0.053 oz) to adjusting screw thread area.
b. Also turn plug to ensure that its entire contact area is coated with liquid packing.

Liquid packing:
Three-bond 1102 or equivalent

(6) Tighten adjusting plug to 20 N•m (2.0 kg-m, 14 ft-lb) and loosen, then tighten to 5 N•m (0.5 kg-m, 3.6 ft-lb) and loosen, and finally tighten to 5 N•m (0.5 kg-m, 3.6 ft-lb) and loosen 25°.
(7) While holding adjusting plug using a closed wrench, tighten lock nut using LOCK NUT WRENCH.

Tightening torque:
59 — 74 N•m (6.0 — 7.5 kg-m, 43 — 54 ft-lb)

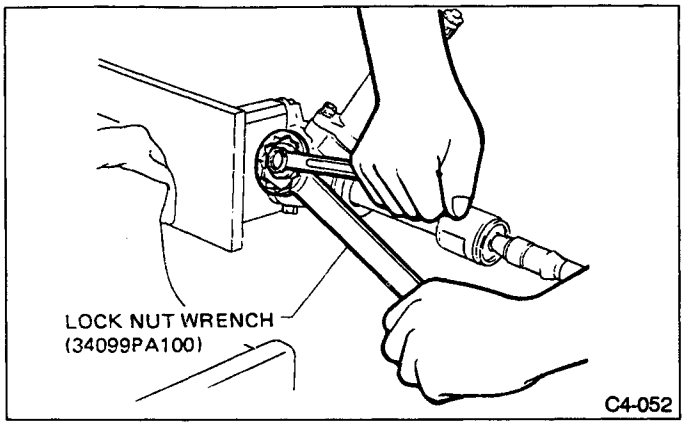

Fig. 97

a. Do not allow liquid packing to come in contact with pressure pad.
b. While rotating input shaft to fully move rack shaft to the left and right, ensure that rack moves smoothly without binding, and that rotating torque is constant.
6) Installation of boot
(1) Apply sealant to gearbox housing groove.
Use accessory sealant for boot kit (P/N: 34099PA110).

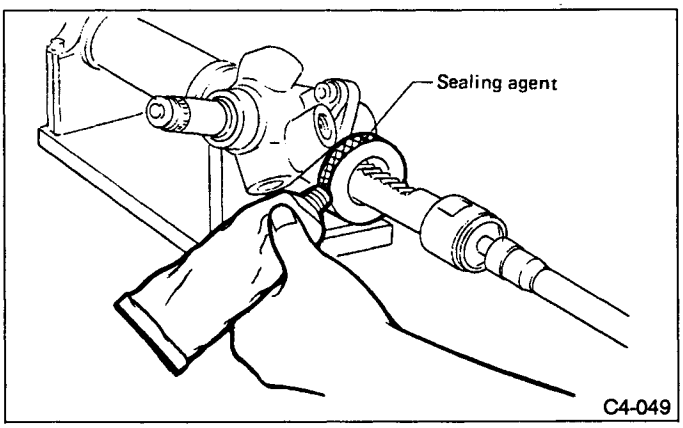

Fig. 98

(2) Position boot large end in groove of gearbox, and small end in groove of tie-rod CP.
a. Ensure that both ends of boot are properly situated in grooves.
b. When installing another side boot, secure small end of boot first and then secure large end to prevent an increase in gearbox internal pressure.

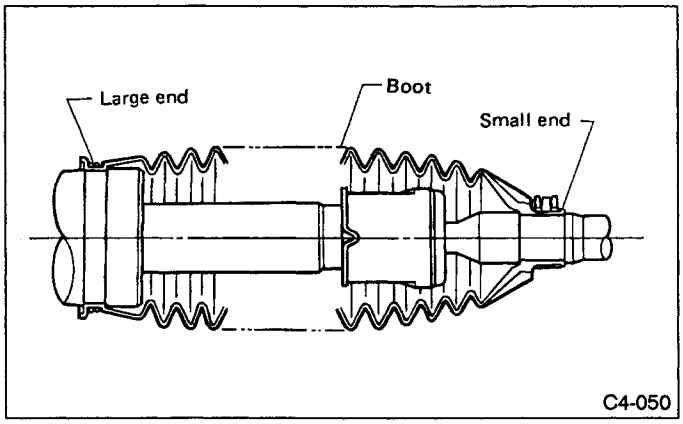

Fig. 99

c. Ensure that boot is free from abnormal swelling or dents.

(3) Wind two complete turns of lock wire on large end of boot, and twist it while pulling it upward (with a force of approximately 29 N– 49 N (3 N– 5 kg, 7 N– 11 lb). Then bend wire end along boot as shown.

a. Wind up wire until it contacts boot.

b. Ensure that lock wire is not loose.

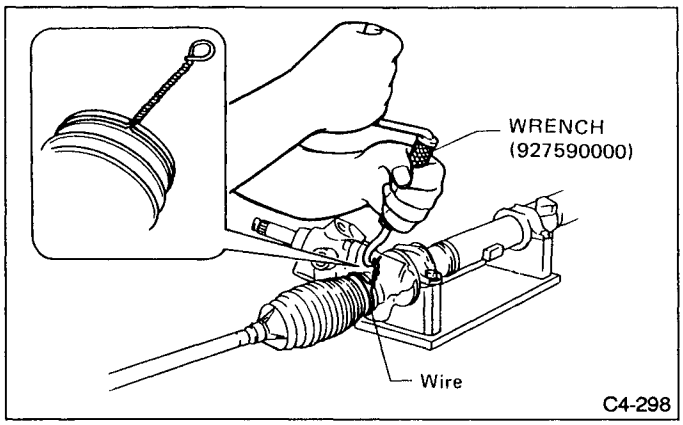

Fig. 100

(4) Install clip using pliers.

After installing clip, ensure that boot's small end is properly positioned in groove on tie-rod CP.

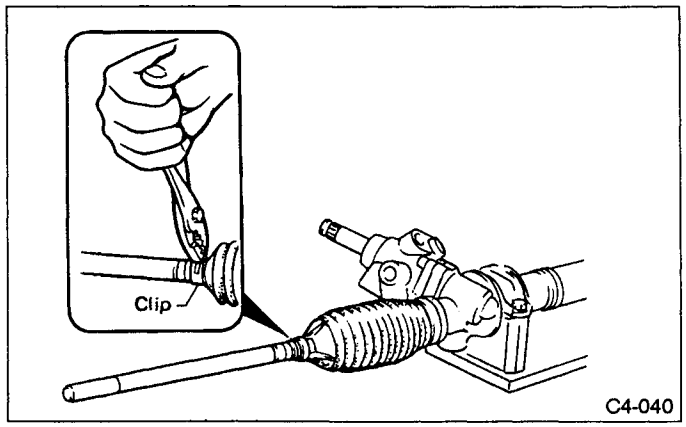

Fig. 101

(5) If tie-rod end was removed, screw in lock nut and tie-rod end to screwed portion of tie-rod, and tighten lock nut temporarily in a position as shown in the illustration.

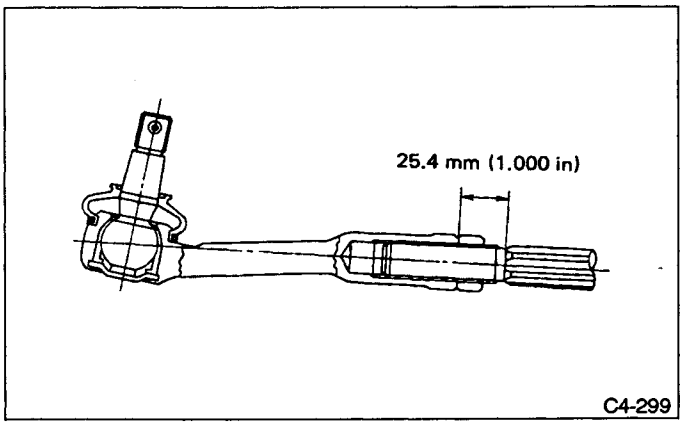

Fig. 102

Pay attention to difference between right and left tie-rod ends.

Identification mark	Left one	LH
	Right one	RH

7) Inspect gear box ASSY as follows:

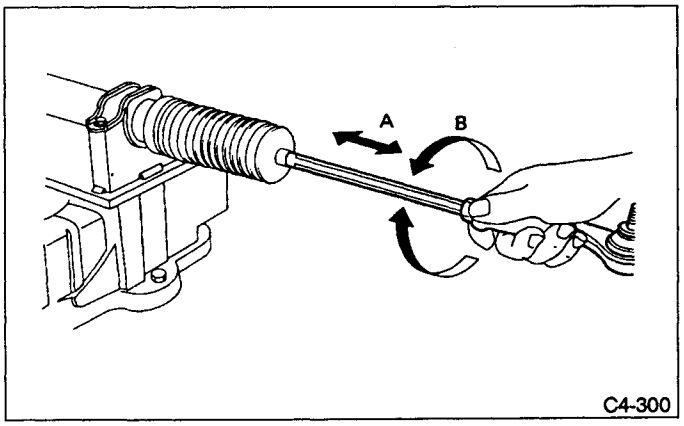

Fig. 103

(1) Holding tie-rod end, repeat lock to lock two (2) or three (3) times as quickly as possible.

(2) Holding tie-rod end, turn ASSY slowly at a radius one (1) or two (2) times as large as possible.

After all, make sure that boot is installed in the specified position without deflation.

8) Install four pipes on gearbox.

Tightening torque:
29 — 39 N•m (3.0 — 4.0 kg-m, 22 — 29 ft-lb)

F: INSTALLATION

Installation is in the reverse order of removal.
Observe the following:
a. If center airbag system roll connector becomes misaligned by accidental rotation of steering wheel, realign connector. ⟨Refer to C 5–5 [W1E1].⟩
b. When adjusting toe-in, hold boot as shown to prevent it from being rotated or twisted. If twisted, straighten it.

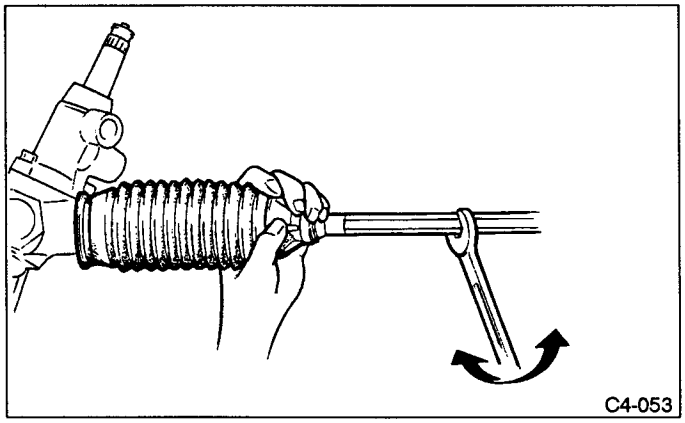

Fig. 104

G: ADJUSTMENT

1) Adjust front toe.

Standard of front toe:
IN 3 — OUT 3 mm (IN 0.12 — OUT 0.12 in)

2) Adjust steering angle of wheels.

Inner wheel:
34°42′ — 37°42′
Outer wheel:
30°06′ — 33°06′

3) If steering wheel spokes are not horizontal when wheels are set in the straight ahead position, and error is more than 5° on the periphery of steering wheel, correctly re-install the steering wheel.

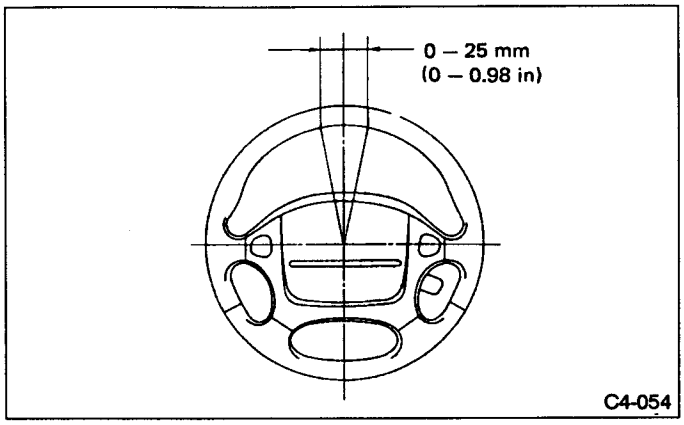

Fig. 105

If steering wheel spokes are not horizontal with vehicle set in the straight ahead position after this adjustment, correct it by turning the right and left tie-rods in the same direction by the same amount.

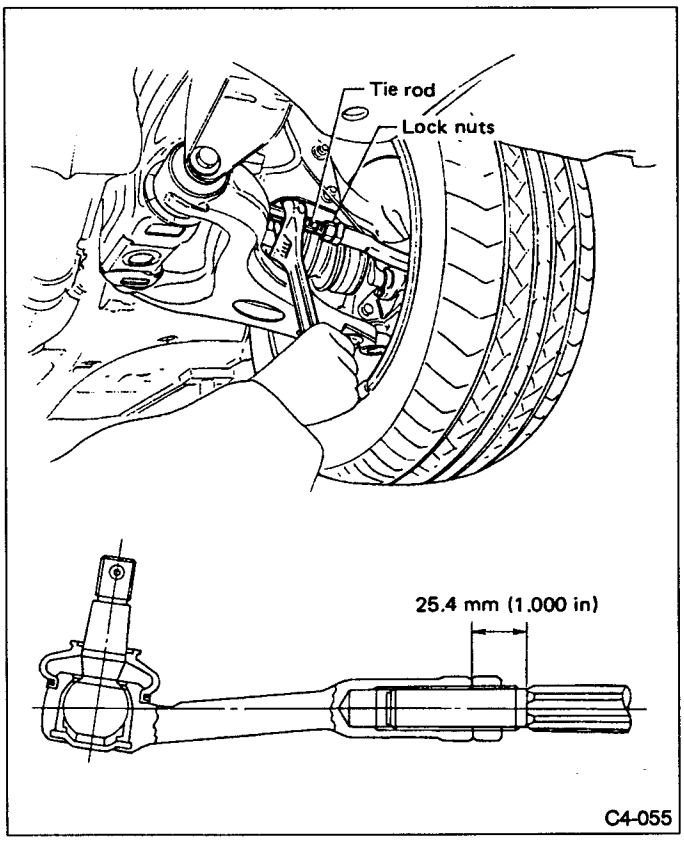

Fig. 106

Ensure that the lengths of the left and right tie-rod ends are the same.

4. Control Valve (Power Steering Gearbox)

This section focuses on the disassembly and reassembly of control valve. For the inspection and adjustment and the service procedures for associated parts, refer to "Steering Gearbox (Power Steering System)".

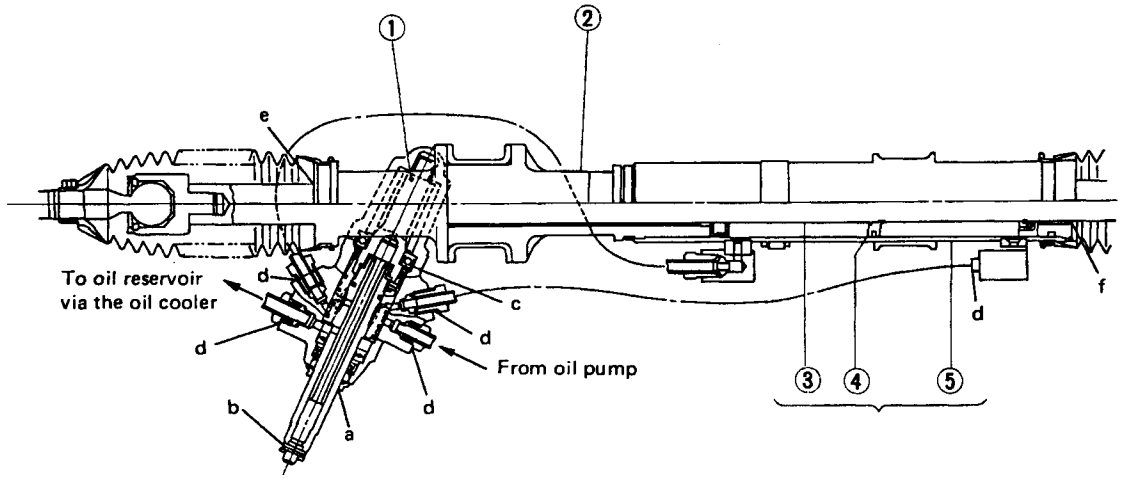

1 Pinion shaft
2 Gear box
3 Rack shaft
4 Rack piston
5 Cylinder
6 Power cylinder

The gearbox is integrated with a built-in control valve and power cylinder. The rack shaft is used as a power cylinder piston and a rotary control valve is located in such a manner as to enclose the pinion shaft.

The control valve and power cylinder are connected to each other by two pipes through which hydraulic oil flows.

C4-056

Fig. 107

A: CHECKING OIL LEAKING POINTS

1. OIL LEAKING POINTS

a. If leak point is other than a, b, c, or d, perform check (5) in 2) before dismounting gearbox ASSY from vehicle. If gearbox ASSY is dismounted without confirming where the leak is, it must be mounted again to locate the leak point.

b. Even if the location of the leak can be easily found by observing the leaking condition, it is necessary to thoroughly remove the oil from the suspected portion and turn the steering wheel from lock to lock about 30 to 40 times with engine running, then make comparison of the suspected portion between immediately after and several hours after this operation.

c. Before starting oil leak repair work, be sure to clean the gearbox ASSY, hoses, pipes, and surrounding parts. After completing repair work, clean these areas again.

2. OIL LEAK CHECK PROCEDURE AND REPLACEMENT PARTS

Parts requiring replacement are described in the smallest unit of spare parts including damaged parts and spare parts damaged. In actual disassembly work, accidental damage as well as inevitable damage to some related parts must be taken into account, and spare parts for them must also be prepared. However, it is essential to pinpoint the cause of trouble, and limit the number of replacement parts as much as possible.

1) Leakage from "a"
The oil seal is damaged. Replace valve ASSY with a new one.

2) Leakage from "b"
The torsion bar O-ring is damaged. Replace valve ASSY with a new one.

3) Leakage from "c"
The oil seal is damaged. Replace valve ASSY with a new one.

4) Leakage from "d"
The pipe ASSY is damaged. Replace the faulty pipe ASSY.

5) If leak is other than a, b, c, or d, and if oil is leaking from the gearbox ASSY, move the right and left boots toward tie-rod end side, respectively, with the gearbox

ASSY mounted to the vehicle, and remove oil from the surrounding portions. Then, turn the steering wheel from lock to lock 30 to 40 times with the engine running, then make comparison of the leaked portion immediately after and several hours after this operation.

(1) Leakage from "e"
The cylinder seal is damaged. Replace rack bush ASSY with a new one.

(2) Leakage from "f"
There are two possible causes. Take following step first. Remove the pipe ASSY B from the valve housing, and close the circuit with PLUG (926420000). Turn the steering wheel from lock to lock 30 to 40 times with the engine running, then make comparison of the leaked portion between immediately after and several hours after this operation.

a. If leakage from "f" is noted again:
The oil seal of pinion & valve ASSY is damaged. Replace pinion & valve ASSY with a new one. Or replace the oil seal and the parts that are damaged during disassembly with new ones.
b. If oil stops leaking from "f":
The oil seal of rack housing is damaged.
Replace the oil seal and the parts that are damaged during disassembly with new ones.

B: DISASSEMBLY

1. ENGINE SPEED SENSING TYPE

1) Remove dust cover.

a. Be careful not to scratch housing or input shaft during dust cover removal. Also do not allow foreign matter to enter housing interior.
b. Replace dust cover with a new one if its inside bore or lips are worn or damaged.

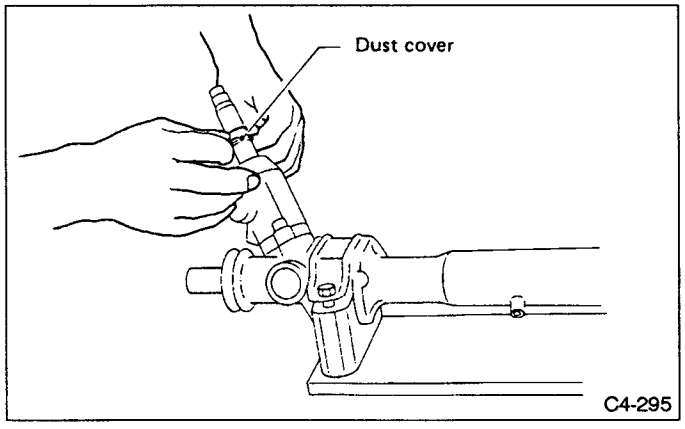

Fig. 108

2) Removal of valve ASSY
Refer to Step 11) to 15) on [W3C0].

1) Disassembly and reassembly of valve ASSY
(1) Press pinion & valve ASSY out from valve housing.

a. Discard Y-packing after removal; replace with a new one.
b. Check rotor for bends and serrations for damage; replace as required.

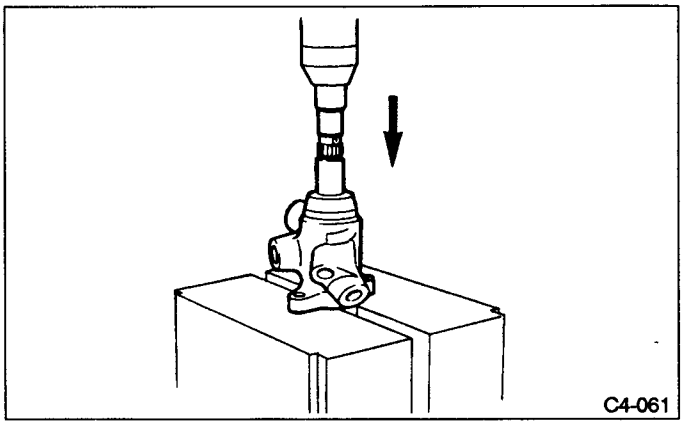

Fig. 109

(2) Using REMOVER and press, remove dust seal, back-up washer, Y-packing and ball bearing from valve housing.

a. Use the "A" end of remover.
b. Do not apply a force to end surface of valve housing.
c. Do not reuse Y-packing after removal.

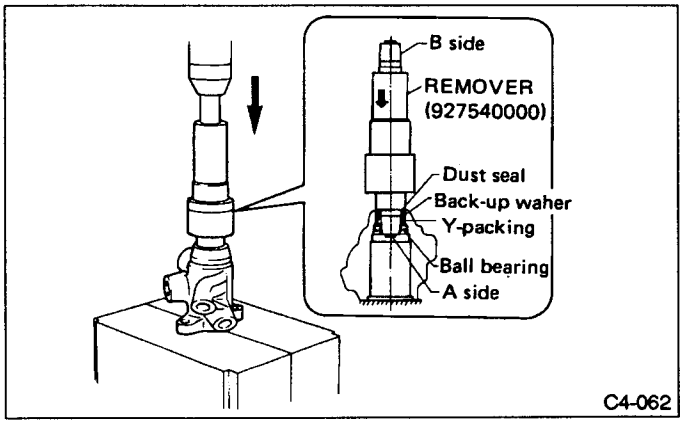

Fig. 110

(3) Remove snap ring securing valve sleeve to pinion & valve ASSY, and remove valve sleeve.

Before removal, paint alignment mark on the original position between valve sleeve groove and pinion pin.

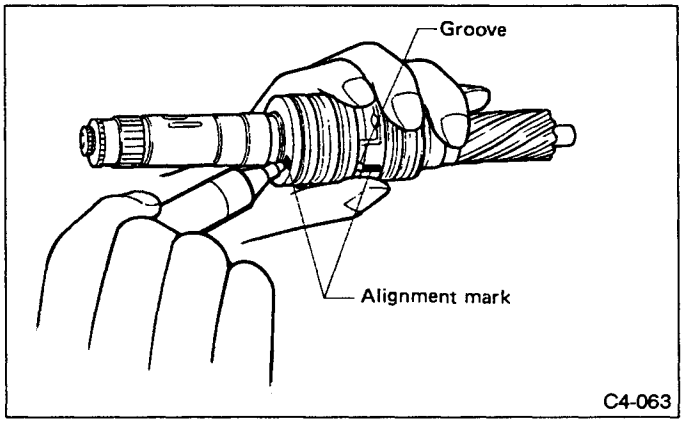

Fig. 111

Be careful not to scratch pinion & valve ASSY when removing retaining ring.

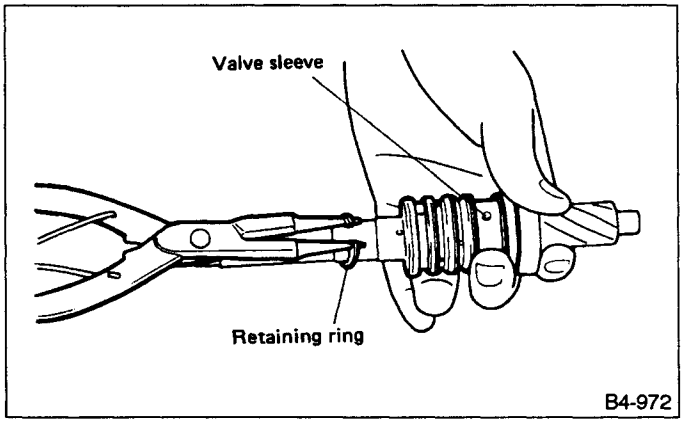

Fig. 112

(4) Remove oil seal and spacer.

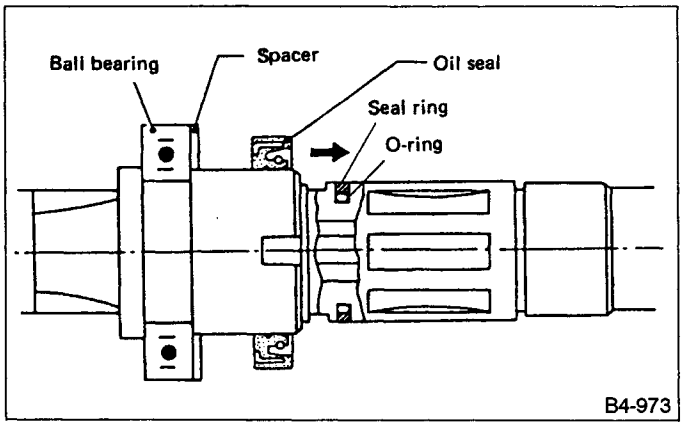

Fig. 113

(5) Using a long rod, remove seal ring and O-ring from pinion ASSY.

Be careful not to scratch outer surface and seal ring groove of input shaft. If scratched, sealing effect will be lost, resulting in a malfunctioning valve.

2. ELECTRONICALLY CONTROLLED TYPE

Disassembly of valve housing

Leave the clips and wire wound up on the housing as is.

1) Removal of valve ASSY

(1) Remove two retaining bolts from valve housing ASSY.

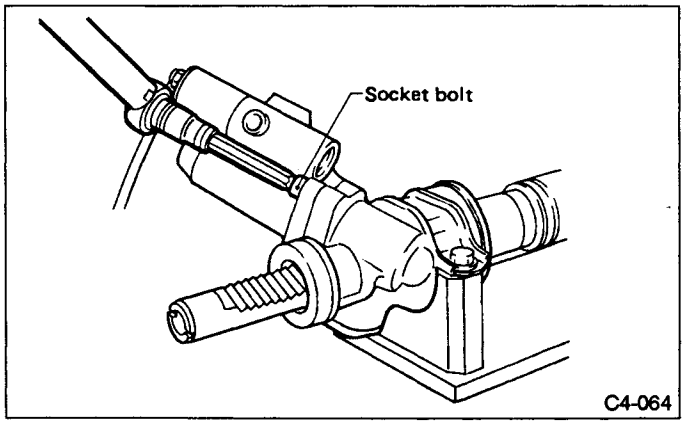

Fig. 114

(2) Remove valve housing ASSY together with pinion & valve ASSY as a unit.

When extracting valve ASSY, remove input shaft and valve ASSY as a unit.

2) Disassembly of control valve ASSY

(1) After removing dust cover, push pinion & valve ASSY out of valve housing.

a. If pinion & valve ASSY is difficult to remove, use pressing tool. DO NOT HAMMER INPUT SHAFT.

b. Discard old Y-packing and install new one.

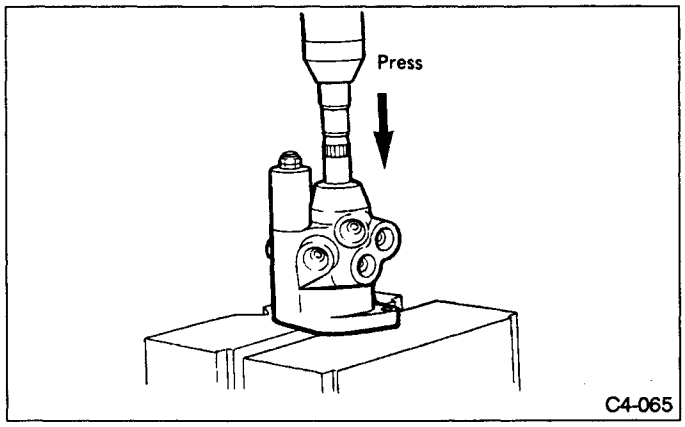

Fig. 115

(2) Using REMOVER and press, remove back-up ring, Y-packing and ball bearing from valve housing. (Same as the engine r.p.m. sensing type)

a. Use "A" side of REMOVER.

b. Do not apply undue force to valve housing end.

3) Removal of pinion ball bearing

(1) Remove retaining ring.

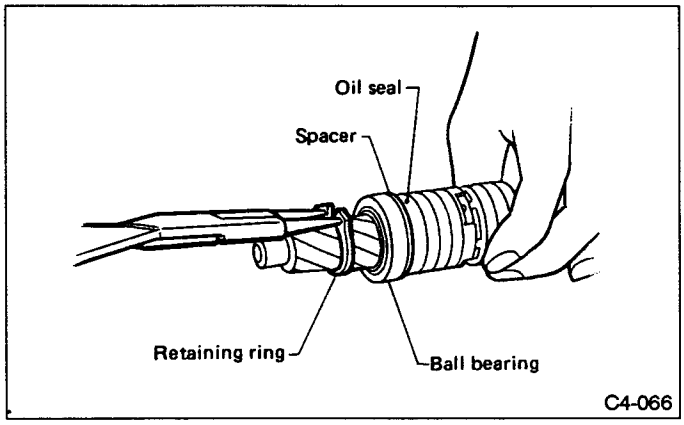

Fig. 116

(2) Using REMOVER, press pinion end carefully and remove ball bearing and spacer as a unit.

Be careful not to drop valve ASSY.

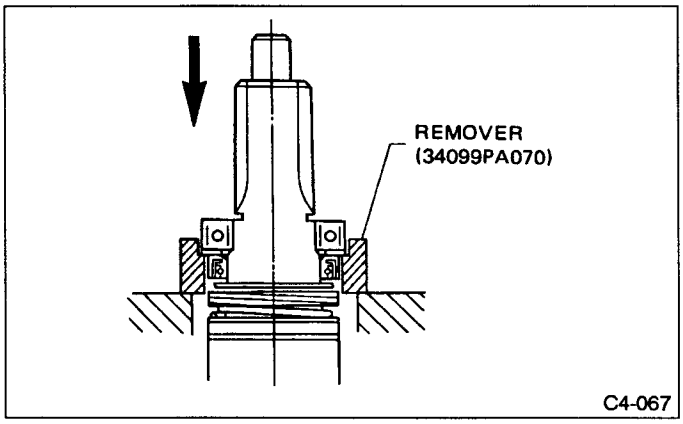

Fig. 117

(3) Remove oil seal with hands.

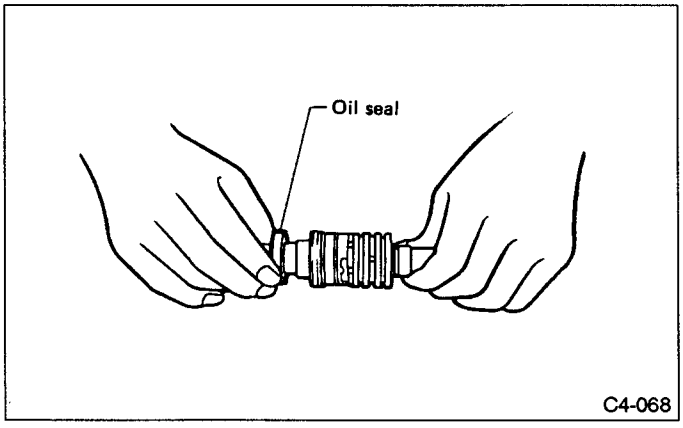

Fig. 118

4) Removal of valve sleeve

(1) Remove retaining ring.

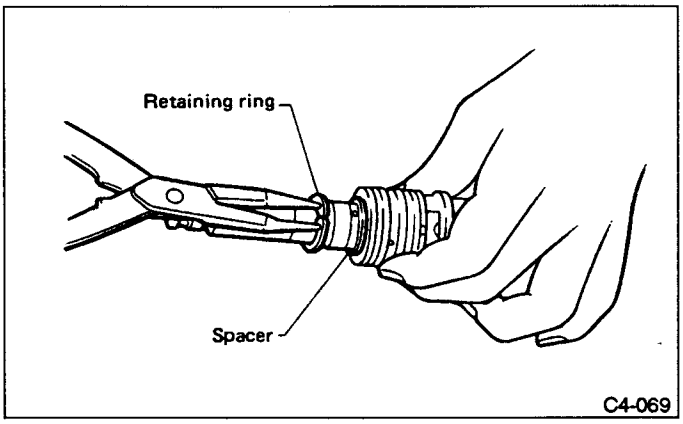

Fig. 119

(2) Remove spacer and take off the sleeve smoothly.

a. Scratching input shaft can cause oil to leak.

b. Do not deform spacer as it is reusable.

c. To facilitate reassembly, mark the point in valve sleeve groove meshed with pinion pin.

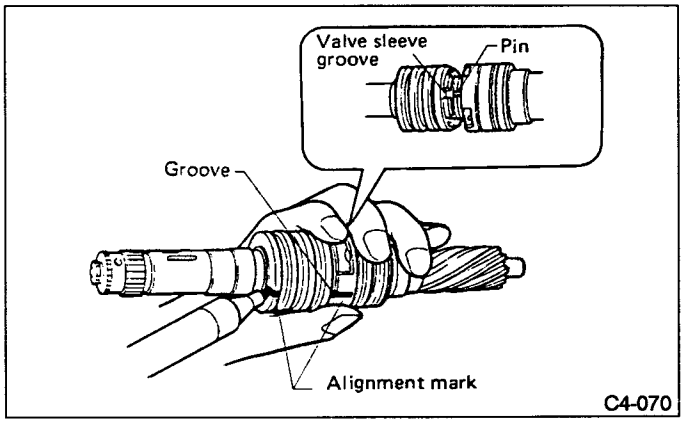

Fig. 120

C: ASSEMBLY

1. ENGINE SPEED SENSING TYPE

1) Wash and clean pinion & valve ASSY and valve housing.
2) Attach COVER to pinion ASSY, and apply grease to outer perimeter of the cover and mating surface of oil seal.

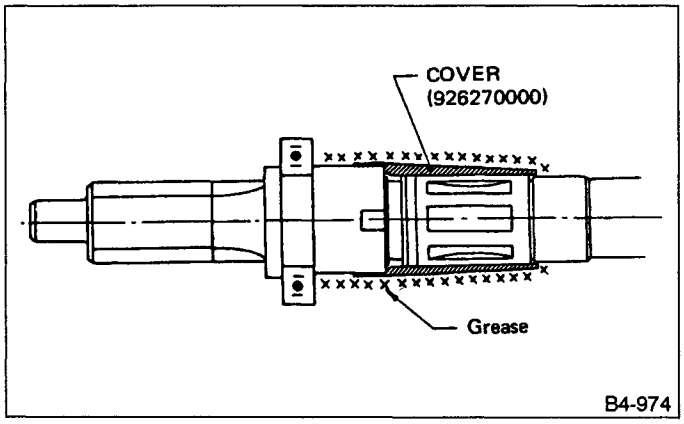

Fig. 121

3) Apply a coat of grease to spacer and sealing lips of oil seal, and install spacer and oil seal.
a. Face chamfered side of spacer toward oil seal.
b. Face oil seal in correct direction.

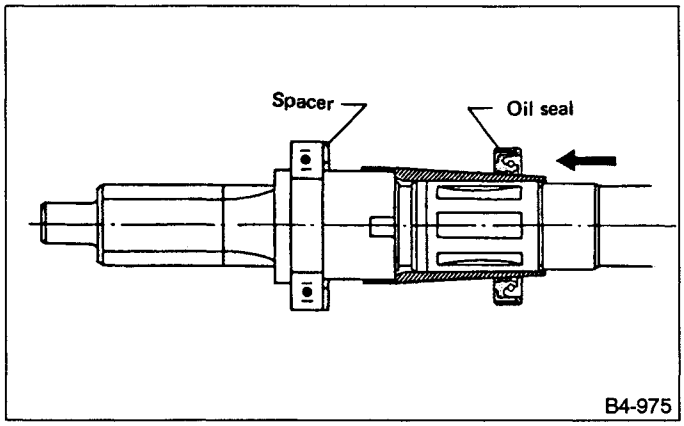

Fig. 122

4) Install COVER to input shaft, and apply a coat of grease to the cover surface. Install O-ring and seal ring. **Do not expand O-ring and seal ring more than necessary.**

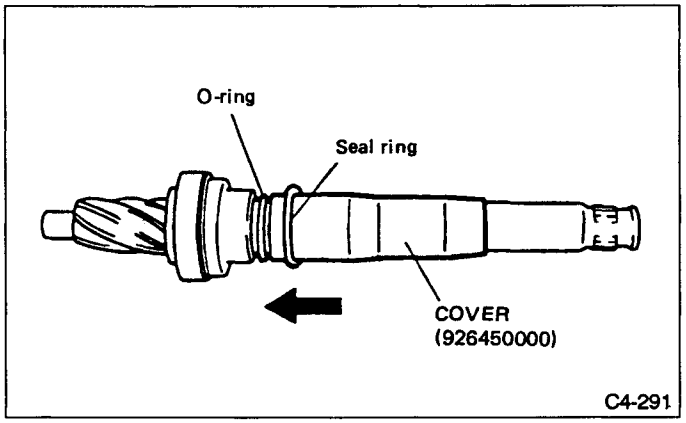

Fig. 123

5) Apply a coat of grease to inner wall of FORMER, and secure seal ring assembled in step (9) as shown. Leave seal ring unattended for approximately 10 minutes until it settles down.

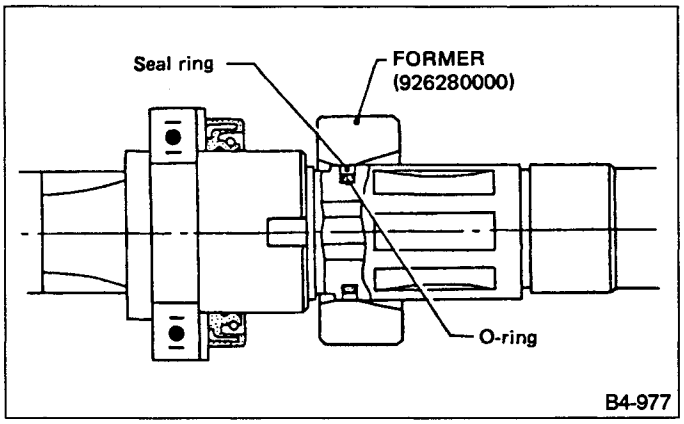

Fig. 124

6) While aligning valve sleeve pin with groove on pinion ASSY, secure with snap ring.
a. Be careful not to damage inner wall of valve sleeve and contact surface of pinion.
b. Align pinion groove with pin using alignment mark.
c. Before assembling valve sleeve and pinion ASSY, clean in kerosene and dry with compressed air.

7) Reassembly of valve ASSY

(1) Apply a coat of grease to inner wall of valve housing, Y-packing and outer perimeter of dust seal.

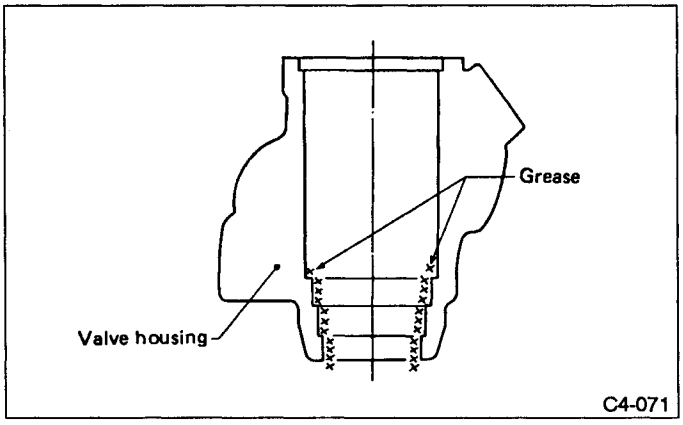

Fig. 125

(2) Using INSTALLER and press, install dust seal.

a. Face dust seal in the direction shown in Figure 126.

b. Apply a coat of grease to contact surface of installer and dust seal when installing dust seal. Be careful not to scratch dust seal during installation.

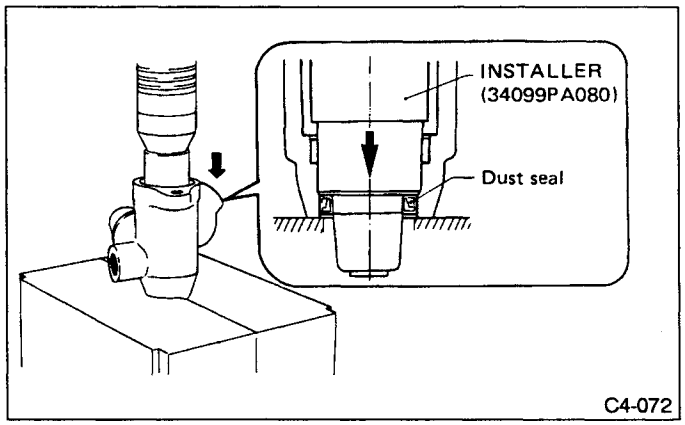

Fig. 126

(3) Using INSTALLER and press, install Y-packing and back-up washer in valve housing.

a. Face Y-packing in the direction shown in Figure 127 when installing.

b. To avoid scratching Y-packing, apply a coat of grease to contact surface of installer and Y-packing.

c. To facilitate installation, attach Y-packing and back-up washer to installer and position in valve housing before pressing into place.

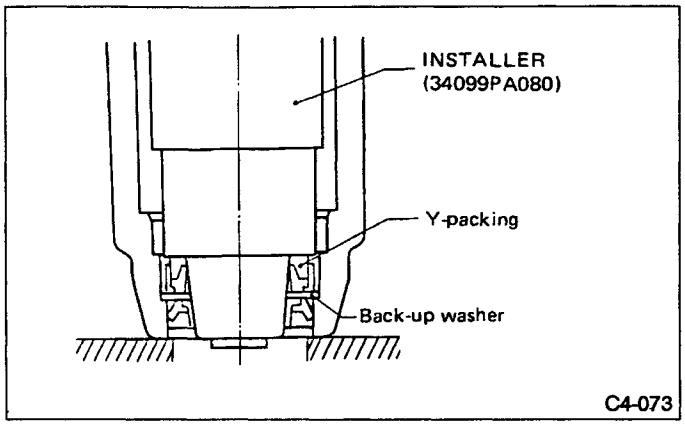

Fig. 127

(4) Attach SPACER to REMOVER, and press ball bearing into place using a press.

a. To facilitate installation, attach ball bearing to remover and position in valve housing before pressing it into place.

b. Use the "B" end of remover.

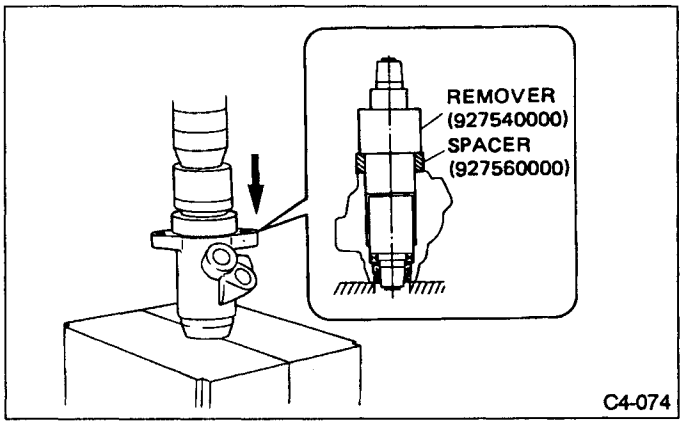

Fig. 128

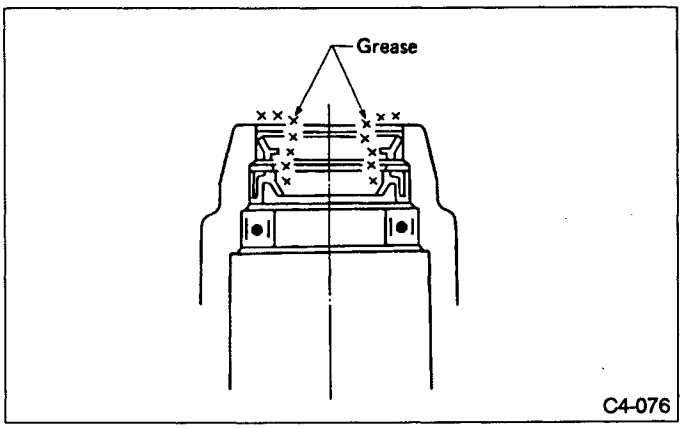

Fig. 129

(5) Apply a coat of grease to GUIDE surface, and install GUIDE onto end of input shaft. Insert pinion & valve ASSY until "A" of oil seal contacts "B" of valve housing. The GUIDE is used to prevent scratching Y-packing.

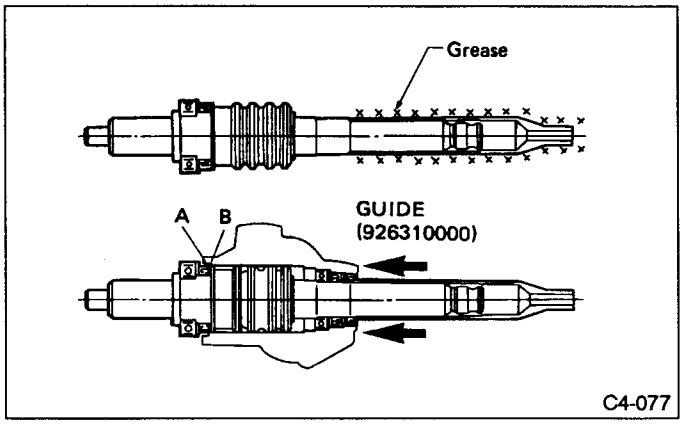

Fig. 130

(6) Secure input shaft with press and insert valve ASSY into valve housing.

Do not allow spacer to extend beyond brazed end. Otherwise, pinion cannot be inserted properly.

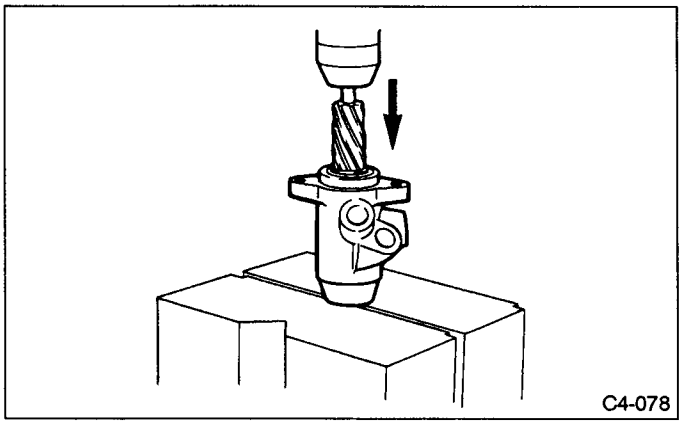

Fig. 131

(7) Apply a coat of grease to sealing lips of dust cover and insert dust cover until it contacts staged portion of input shaft.

2. ELECTRONICALLY CONTROLLED TYPE

Before assembly, clean parts and tools in kerosene and dry with compressed air. (Do not use organic solvent.)

1) Apply grease to oil seal lip. Drive COVER and SPACER into place as shown in figure below.

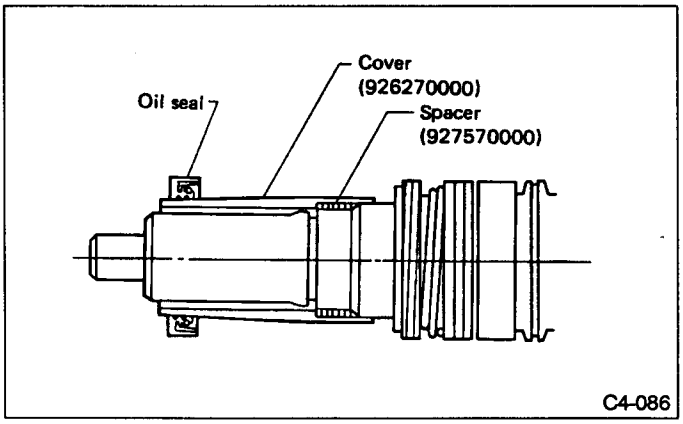

Fig. 132

2) Place INSTALLER D (927520000) on hand press. Set ball bearing packed with grease into INSTALLER and put spacer on it.

3) Place INSTALLER E onto pinion & valve ASSY with valve sleeve removed. Carefully press INSTALLER into place.

Set pinion pin into slot on INSTALLER E end surface.

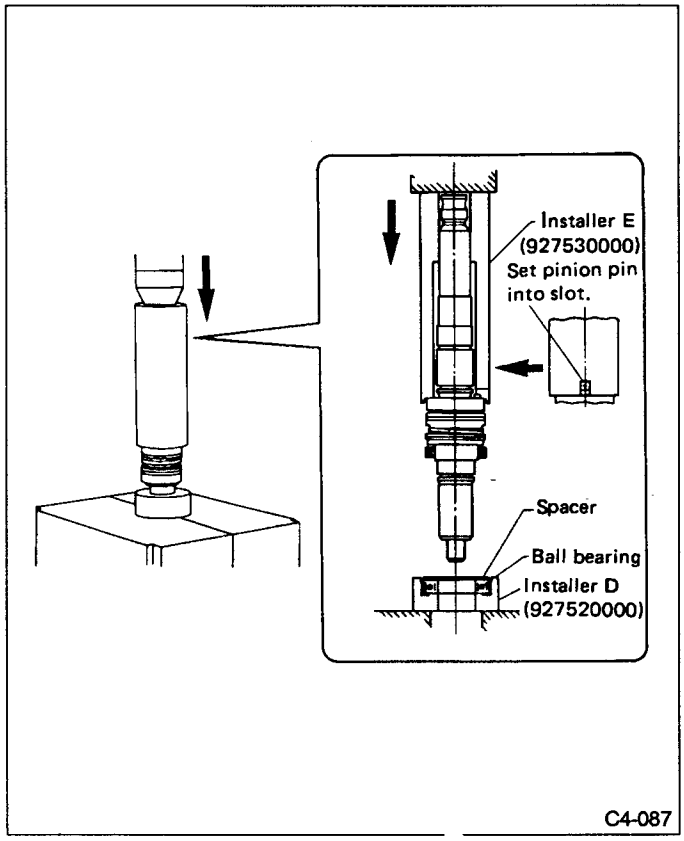

Fig. 133

4) Install retaining ring.

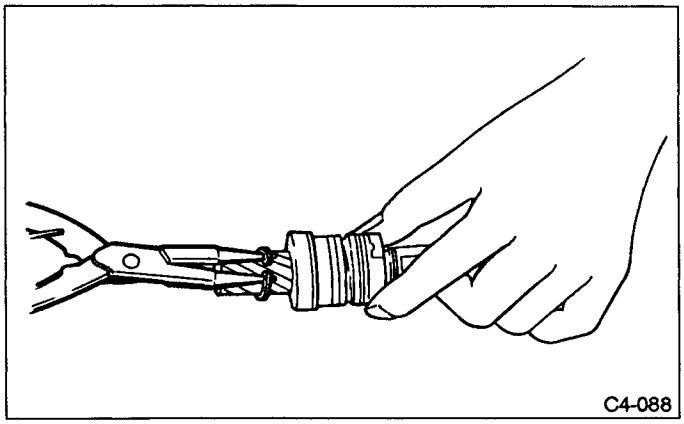

Fig. 134

5) Install valve in such a way that when valve sleeve is removed, pin groove is engaged properly with pinion shaft pin. (Align marking.)

a. Wrong alignment will affect symmetric characteristic of valve.

b. Make sure that the machined groove which is not marked with "x" is properly meshed with pinion shaft. (See figure below.)

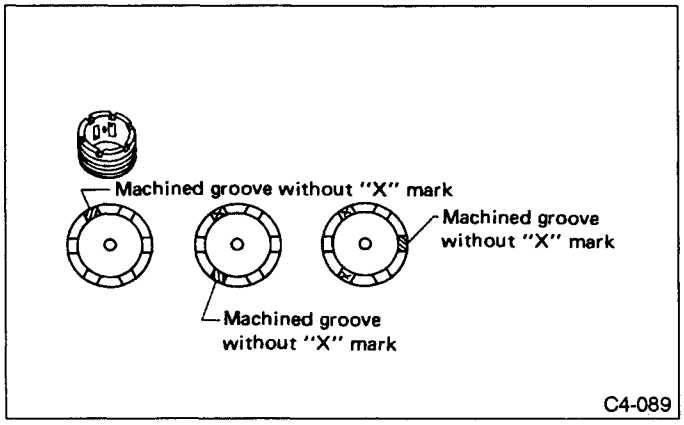

Fig. 135

6) Install spacer and retaining ring.

a. Fit retaining ring properly in groove.

b. Be careful not to scratch input shaft as it can cause oil to leak.

c. Do not expand retaining ring excessively.

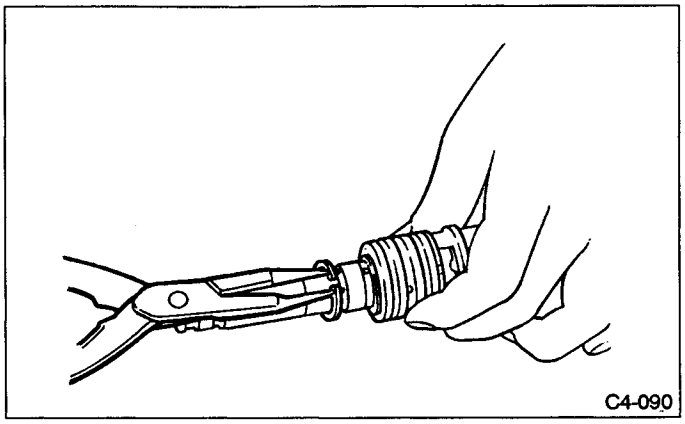

Fig. 136

7) Install Y-packing, back-up washer, dust seal and ball bearing in valve housing.
(Installation procedure is the same as that for the engine speed sensing type)

8) Secure input shaft with press and install valve ASSY in valve housing.

Do not allow spacer to extend beyond brazed end. Otherwise, pinion cannot be inserted properly.

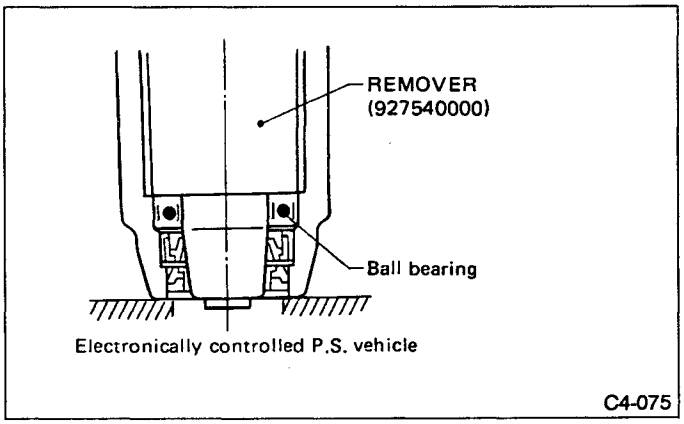

Fig. 137

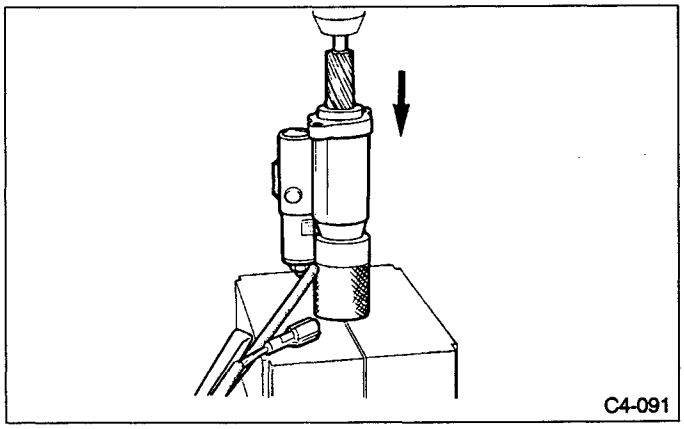

Fig. 138

9) Installation of valve ASSY.
Refer to 4-3 [W3E0] STEP 2).

5. Oil Cooler and Hose & Pipe ASSY (Power Steering System)

A: REMOVAL

1) Disconnect battery earth terminal.
2) Drain approximately 0.3 liters (0.3 US qt, 0.3 Imp qt) of fluid from oil tank. ⟨Ref. to [4-3] No. W5A0.⟩
3) Remove belt cover.
4) Remove radiator bracket.
5) Disconnect radiator fan connector.
6) Remove main and sub radiator fans.
7) Separate canister from bracket and leave as it is.
8) Raise vehicle.
9) Remove under cover.
10) Remove bolts securing oil cooler with condenser from both sides.

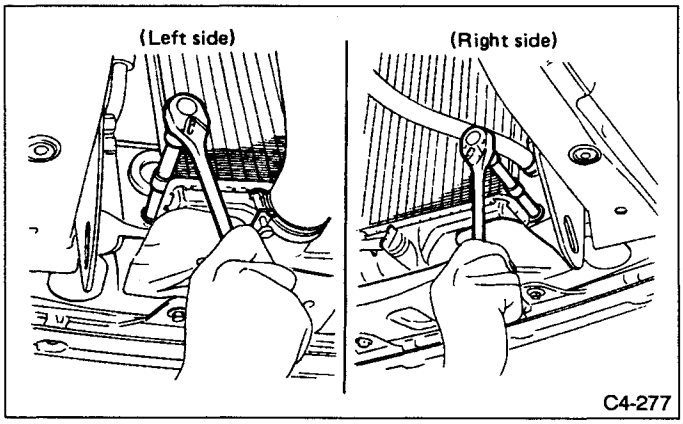

Fig. 139

11) Slightly lift and move radiator ASSY and draw out oil cooler.

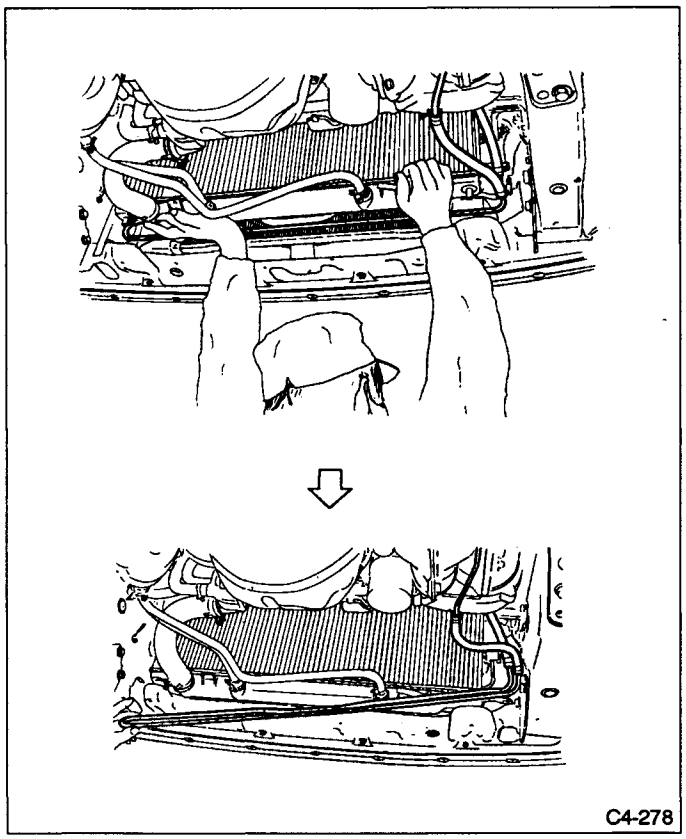

Fig. 140

12) Disconnect hoses A and B at points indicated in the figure below and remove oil cooler.

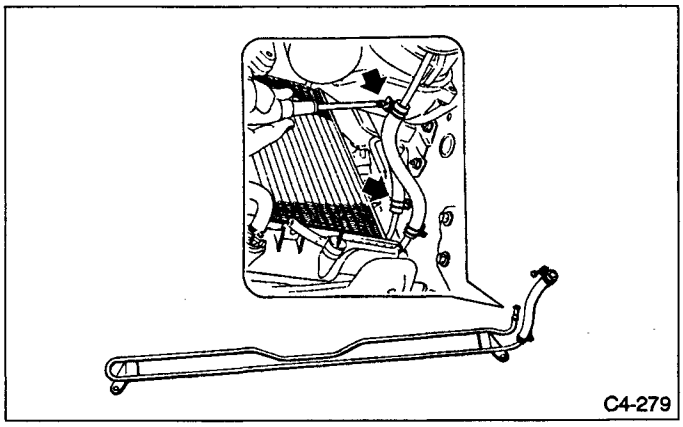

Fig. 141

a. Do not allow fluid from the hose end to come into contact with pulley belt.
b. To prevent foreign matter from entering the hose and pipe, cover the open ends with a clean cloth. (For removal of hose and pipe, refer to the component parts figure.)

B: CHECK

Check all disassembled parts for wear, damage or other abnormalities. Repair or replace faulty parts as required.

Part name	Inspection	Remedy
Pipe	• O-ring fitting surface for damage • Nut for damage • Pipe for damage	Replace with new one.
Clamp	• Clamps for weak clamping force	Replace with new one.
Hose	• Flared surface for damage • Flare nut for damage • Outer surface for cracks • Outer surface for wear • Clip for damage • End coupling or adapter for degradation	Replace with new one.

C: ASSEMBLY

Assembly is in the reverse order of removal.

6. Oil Pump & Reservoir Tank

A: REMOVAL

1) Disconnect battery earth (−) terminal
2) Remove belt cover.
3) Loosen nuts which secure idler pulley.
4) Loosen slider bolt, and remove V-belt.

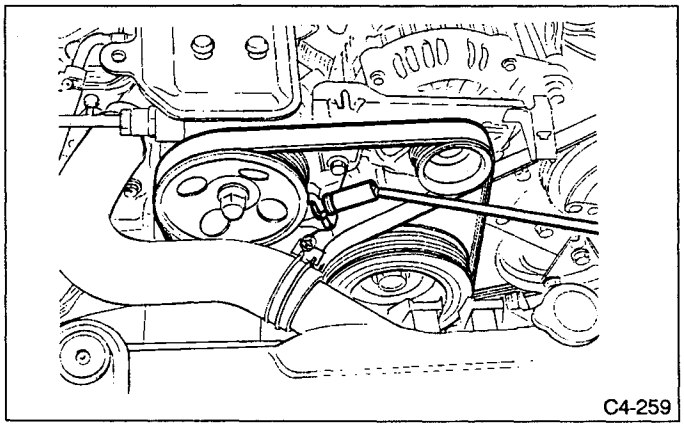

Fig. 142

5) Remove nut from front end of oil pump pulley, and detach oil pump pulley.

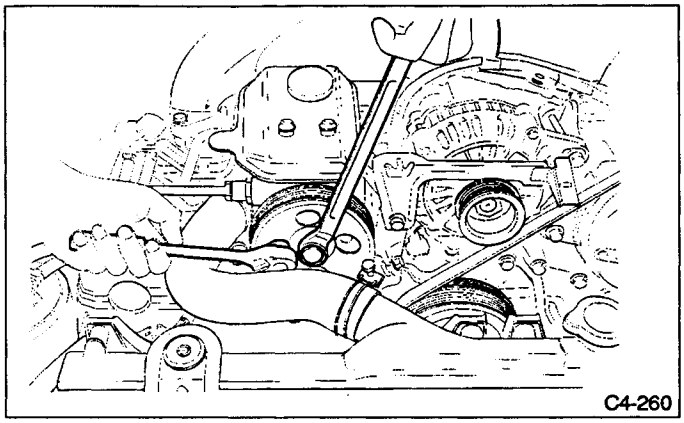

Fig. 143

6) Disconnect oil pump switch harness connector.
7) Drain approximately 0.3 liters (0.3 US qt, 0.3 Imp qt) of fluid from oil reservoir tank.

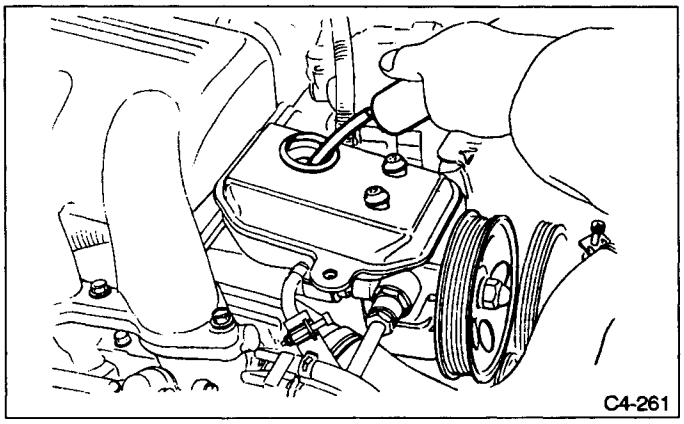

Fig. 144

8) Disconnect hose from oil reservoir tank.
a. Be careful not to spill fluid from hose end to V-belt.
b. Cover open ends of hose and pipe with a clean cloth to prevent entry of foreign matter.
9) Disconnect pressure pipe from pump.

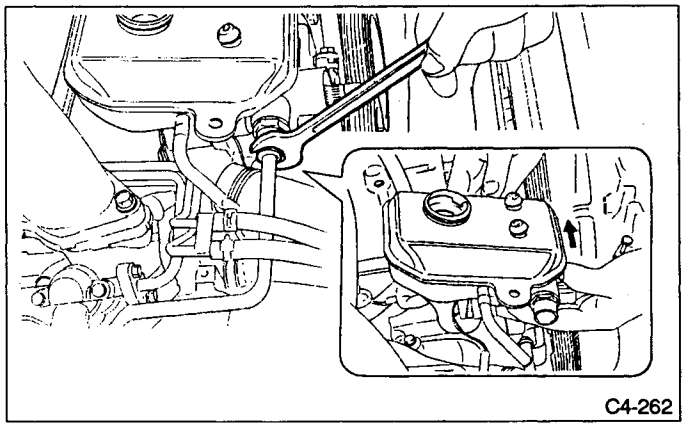

Fig. 145

10) Remove bolts securing oil pump & tank to bracket, and then remove pump and tank.

11) Place pump in a vise, and remove bolts from upper surface of tank.

a. Use soft jaws and lightly tighten vise jaws.

b. After bolts are loose enough to be rotated with your hand, press pump against tank while removing bolts. Failure to do so causes fluid to spill out. Remove tank as quickly as possible, and wipe clean fluid spilled on parts. Except when only tank is to be checked, remove tank and pump as a unit and separate from each other on a work bench. This prevents fluid from spilling on the engine.

B: CHECK

- In accordance with the following table, check all removed parts for wear and damage, and make repair or replacement if necessary.

No.	Parts	Inspection	Corrective action
1	Oil pump (Outside)	(1) Crack, damage or oil leakage	Replace oil pump ASSY with a new one.
		(2) Play of pulley shaft	Measure radial play and axial play. If any of these exceeds the service limit, replace oil pump ASSY with a new one. (Refer to "Service limit".)
2	Pulley	(1) Damage	Replace it with a new one.
		(2) Bend	Measure V ditch deflection. If it exceeds the service limit, replace pulley with a new one. (Refer to "Service limit".)
3	Tank cap	Crack or damage	Replace it with a new one.
4	Filler strainer	(1) Clogging with dirt	Wash it.
		(2) Breakage	Replace it with a new one.
5	Oil pump (Interior)	(1) Defect or burning of vane pump	Check resistance to rotation of pulley. If it is past the service limit, replace oil pump ASSY with a new one. (Refer to "Service limit".)
		(2) Bend in the shaft or damage to bearing	Oil pump emits a noise that is markedly different in tone and loudness from a sound of a new oil pump when turning with a string put around its pulley, replace oil pump ASSY with a new one.
6	O-ring	Crack or deterioration	Replace it with a new one.
7	Oil tank	Crack, damage or oil leakage	Replace it with a new one.
8	Bracket	Crack	Replace it with a new one.

1. SERVICE LIMIT

Make a measurement as follows. If it exceeds the specified service limit, replace the parts with a new one.

a. Fix oil pump ASSY on a vise to make a measurement. At this time, hold oil pump ASSY with the least possible force between two wood pieces.

b. Do not set outside of flow control valve or pulley on a vise; otherwise outside or pulley might be deformed. Select properly sized wood pieces.

Play of pulley shaft

Service limit:

Radial play (Direction ↔)

0.4 mm (0.016 in) or less

Axial play (Direction ⇔)

0.9 mm (0.035 in) or less

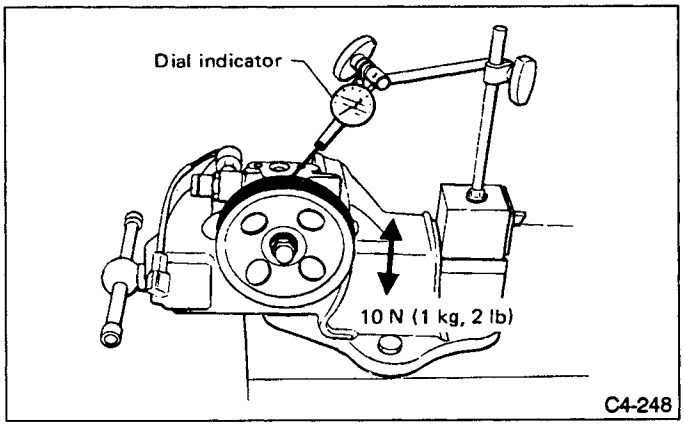

Fig. 146 Radial play

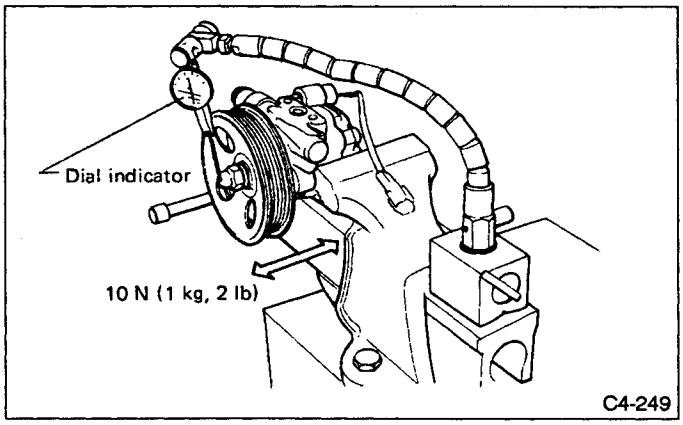

Fig. 147 Axial play

Ditch deflection of pulley

Service limit:
1.0 mm (0.039 in) or less

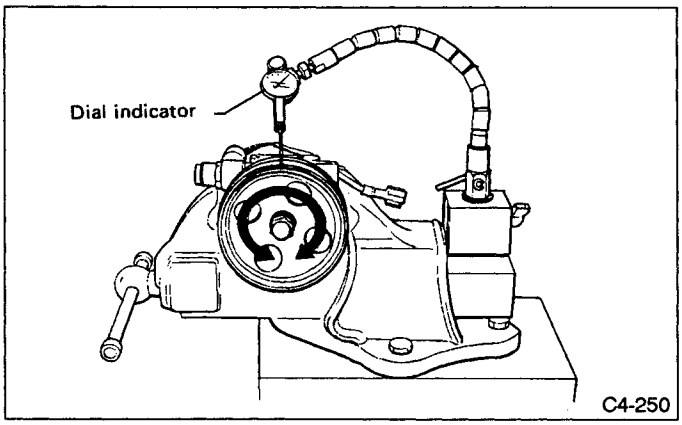

Fig. 148

Read the value for one surface of V ditch, and then the value for another off the dial.
Resistance to rotation of pulley

Service limit:
Maximum load; 9.22 N (0.94 kg, 2.07 lb) or less

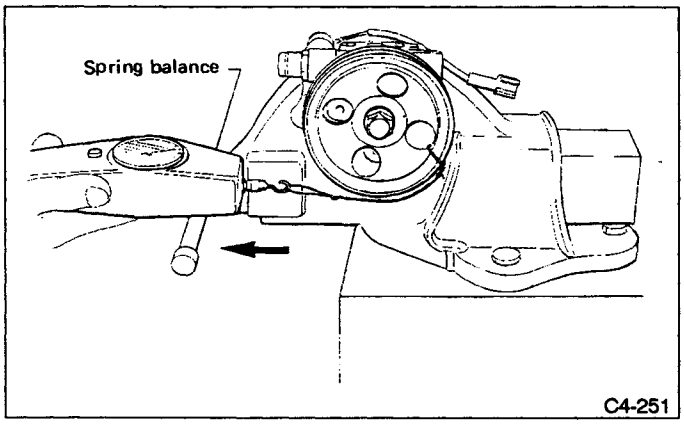

Fig. 149

A rather higher value may be indicated when pulley starts turning.
Measure the load during rotation and make a judgement.

C: DISASSEMBLY

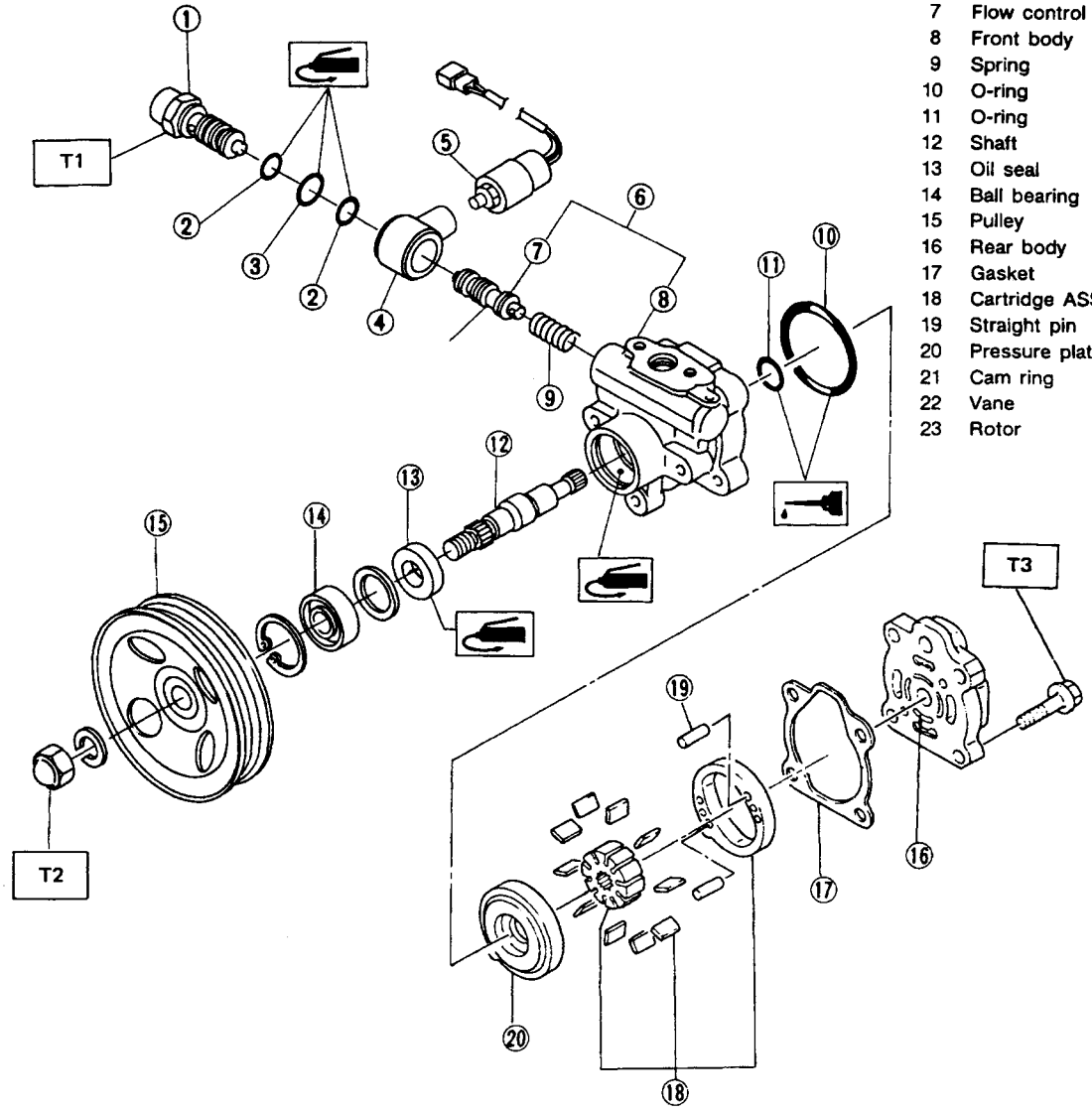

1 Connector
2 O-ring
3 O-ring
4 Connector ASSY
5 Oil pump switch
6 Front body & valve ASSY
7 Flow control valve
8 Front body
9 Spring
10 O-ring
11 O-ring
12 Shaft
13 Oil seal
14 Ball bearing
15 Pulley
16 Rear body
17 Gasket
18 Cartridge ASSY
19 Straight pin
20 Pressure plate
21 Cam ring
22 Vane
23 Rotor

Tightening torque: N·m (kg-m, ft-lb)
T1: 69 — 78 (7.0 — 8.0, 51 — 58)
T2: 42 — 62 (4.3 — 6.3, 31 — 46)
T3: 14 — 18 (1.4 — 1.8, 10 — 13)

C4-280

Fig. 150

1) Place pump bracket (with pump installed) in a vise using soft jaws.
Do not place pump itself in a vise.
2) Valve removal
Remove oil pump switch, and disconnect connectors and remove valve ASSY and spring.

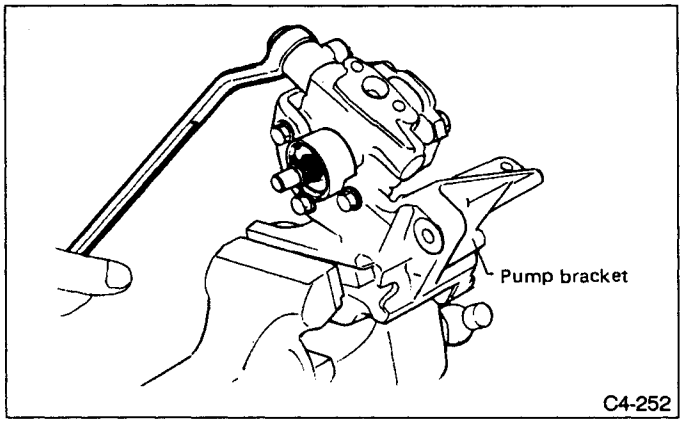

Fig. 151

3) Rear body removal
(1) Loosen bolts securing rear body so that they can be rotated by hand.

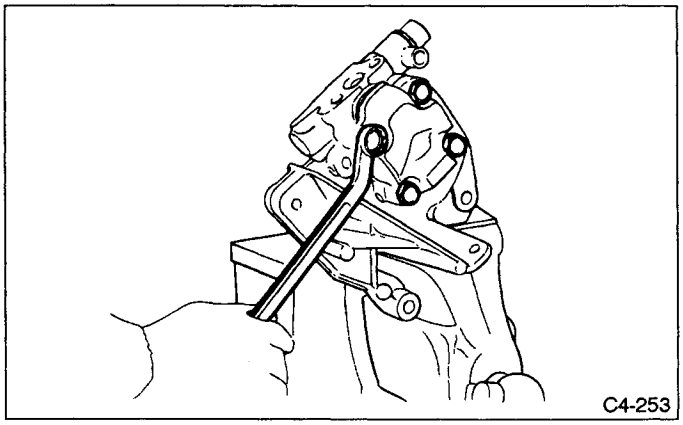

Fig. 152

(2) Remove pump from pump bracket.
(3) Remove pump bracket from vise.
(4) Place pump in a vise.
Use soft jaws.
(5) Remove bolts which have already been loosened in step (1) above.

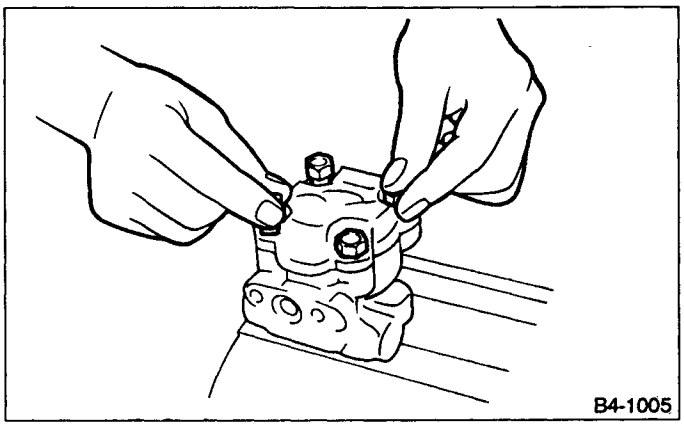

Fig. 153

(6) Remove gasket.
4) Removal of cartridge ASSY, pressure plate and pin
Remove cartridge ASSY, pressure plate and pin from front body as a unit. (Cartridge ASSY consists of a rotor, ten vanes and a cam.)
Be careful not to scratch cartridge ASSY.
5) Remove two types of O-rings by hand.

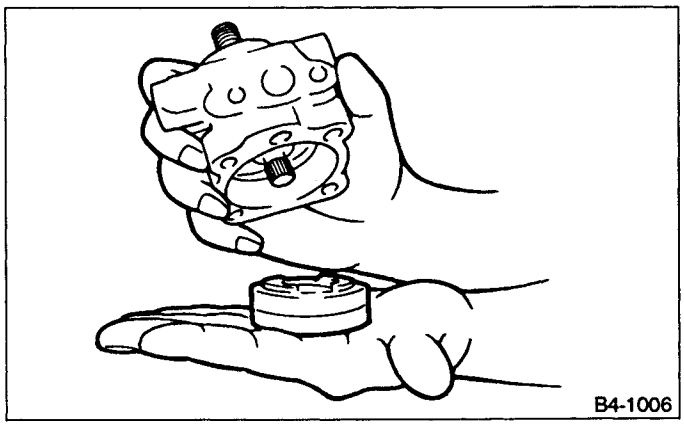

Fig. 154

6) Disassembly of front body
(1) Pry off retaining ring from inner perimeter groove of front body at pulley location.

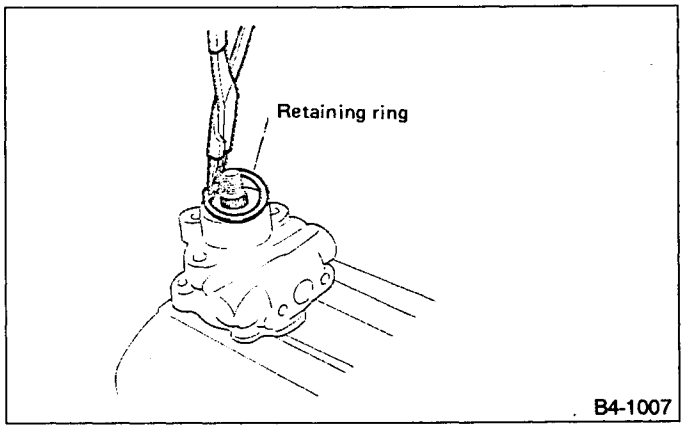

Fig. 155

(2) Using a hand press, press out drive shaft (on the cartridge side).
(3) Press ball bearing out of drive shaft using a hand press.
(4) Remove oil seal by attaching it to a hooked-end plate placed in a vise.

a. Use a plate without sharp edges.
b. Replace oil seal with new ones.

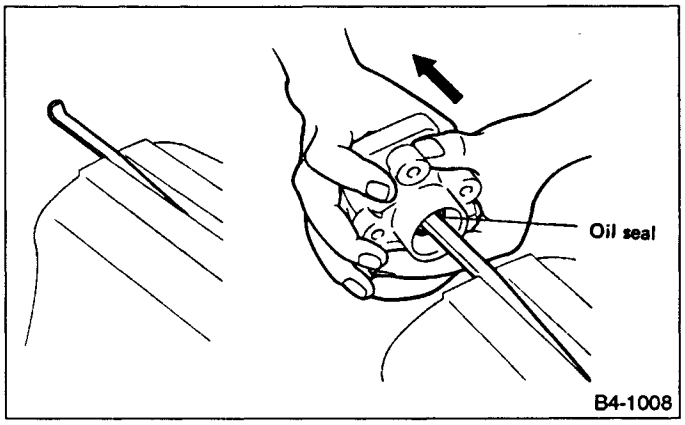

Fig. 156

D: INSPECTION

Perform following inspection procedures and repair or replace defective parts.

Part name	Description	Remedy
1. Front body	1) Damage on body surfaces 2) Excessive wear on hole, into which spool valve is inserted. 3) Wear and damage on cartridge ASSY mounting surface 4) Wear and damage on surfaces in contact with shaft and oil seal	Replace with a new one together with spool valve as selective fit is made.
2. Rear body	1) Damage on body surfaces 2) Wear and damage on sliding surfaces	Replace with a new one.
3. Shaft	1) Shaft bend 2) Wear and damage on surfaces in contact with bushing and oil seal 3) Wear and damage on rotor mounting surfaces 4) Bearing damage	Replace with a new one.
4. Side plate	Wear and damage on sliding surfaces	Replace with a new one.
5. Cam ring	Ridge wear on sliding surfaces	If damage is serious, replace with a new cartridge ASSY.
6. Vane	Excessive wear on nose radius and side surfaces	
7. Rotor	1) Wear and damage on sliding surfaces 2) Ridge wear on vane sliding grooves (If light leaks with vane in slit against light source)	
	3) Damage resulting from snap ring removal	Correct with oil stone. If damage is serious, replace with a new cartridge ASSY.
8. Spool valve	Damage or burrs on sliding surface periphery	Replace with a new one together with front casing as selective fit is made.
9. Connector	Damage on threads	Replace with a new one.
10. Spring	Damage	Replace with a new one.
11. Bolts and nuts	Damage on threads	Replace with a new one.
12. Oil pump switch	Damage on harness	Replace with a new one.

E: ASSEMBLY

1) Installation of oil seal
Apply a coat of lithium grease to outer perimeter of oil seal and charge sealing lips with grease. Using INSTALLER and a hand press, press oil seal into front body.

Place the seating surface of front body on a soft cloth to prevent it from sustaining scratches while pressing oil seal into place.

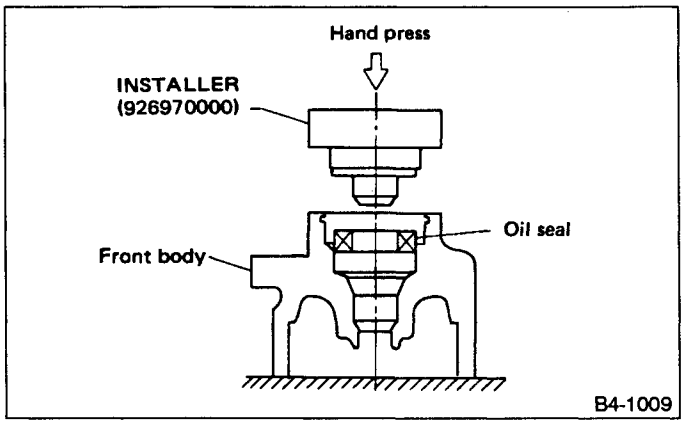

Fig. 157

2) Installation of drive shaft
(1) Using GUIDE and a hand press, drive bearing onto shaft.

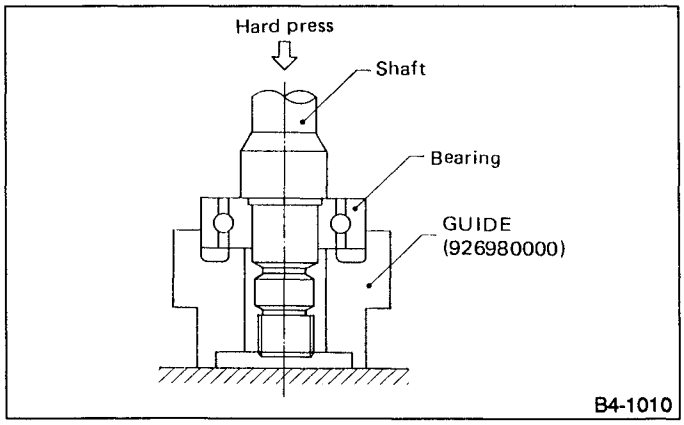

Fig. 158

(2) Install retaining ring on oil seal. Using GUIDE, press shaft & bearing ASSY into front body.
a. Be careful not to strike shaft splines on oil seal's sealing lips during installation.
b. Do not hit end of shaft during installation.

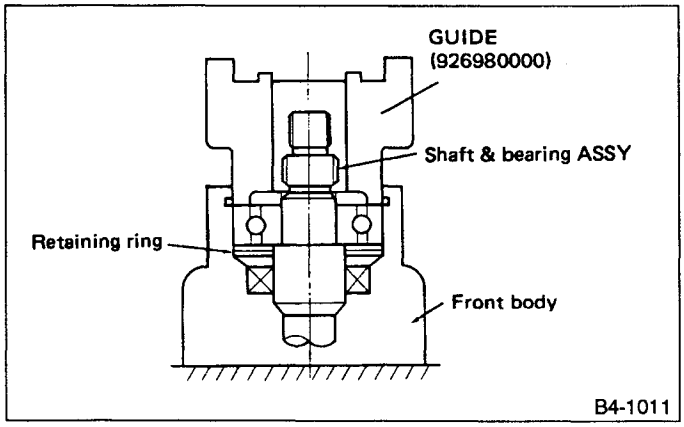

Fig. 159

(3) Lock drive shaft using a retaining ring.
3) Installation of pressure plate
Place front body in a vise with pulley side facing down. Position two O-rings and pressure plate in front body in that order.
Do not forget to install O-rings.
4) Installation of cartridge
(1) Install cam, rotor and vane in that order.
(2) Insert pin into holes in cam and pressure plate.
a. Ensure that vane is installed with "R" side facing the cam.
b. Check that vane moves smoothly.
c. Apply a coat of automatic transmission fluid (DEXRON II) to vane.
5) Installation of rear body
(1) While aligning pin hole of rear body with pin on the pump, install rear body using a gasket and tighten bolts by hand.
(2) Remove pump from vise.
(3) Place pump bracket in a vise, install pump on pump bracket.
(4) Tighten rear body mounting bolts in a criss-cross fashion to one-half of specified torque, then tighten to specified torque.
After tightening rear body mounting bolts, ensure that shaft rotates properly.

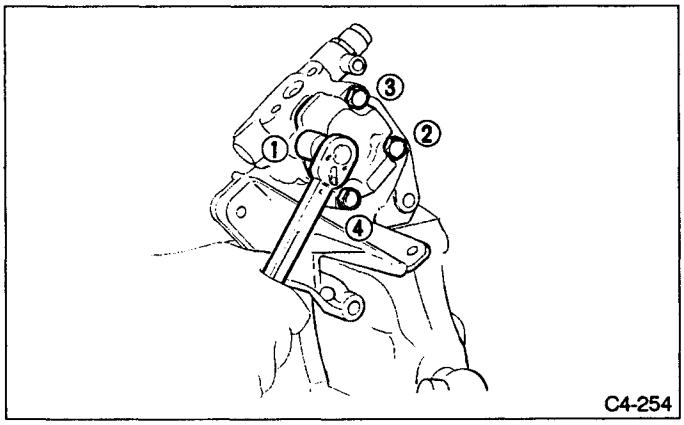

Fig. 160

6) Installation of valve
(1) Position spring and valve ASSY in front body in that order.
(2) Connect connector to front body with an O-ring in place.

Tightening torque:
29 — 39 N·m (3.0 — 4.0 kg-m, 22 — 29 ft-lb)

F: INSTALLATION

To install, reverse the order of removal procedures. Replenish specified fluid and purge air.
Do not operate engine before replenishing fluid as this will seize oil pump.

G: FILLING POWER STEERING FLUID AND AIR BLEEDING

Recommended power steering fluid	Manufacturer
ATF DEXRON II	B.P.
	CALTEX
	CASTROL
	MOBIL
	SHELL
	TEXACO

(1) Feed the specified fluid with its level being about 4 cm (1.6 in) lower than the mouth of tank.
(2) Continue to turn steering wheel slowly from lock to lock until bubbles stop appearing in the tank while keeping the fluid at that level.

In case air is absorbed to deliver bubbles into piping because the fluid level is lower, leave it about half an hour and then do the step (2) all over again.

(3) Start, and idle the engine.
(4) Continue to turn steering wheel slowly from lock to lock again until bubbles stop appearing in the tank while keeping the fluid at that level.
It is normal that bubbles stop appearing after three times turning of steering wheel.

In case bubbles do not stop appearing in the tank, leave it about half an hour and then do the step (4) all over again.

(5) Stop the engine, and take out safety stands after jacking up vehicle again.
Then lower the vehicle, and idle the engine.
(6) Continue to turn steering wheel from lock to lock until bubbles stop appearing and change of the fluid level is within 3 mm (0.12 in).

In case the following happens, leave it about half an hour and then do step (6) again.

a. The fluid level changes over 3 mm (0.12 in).
b. Bubbles remain on the upper surface of the fluid.
c. Grinding noise is generated from oil pump.

1) Check the fluid leakage at flare nuts after turning steering wheel from lock to lock with engine running.

a. Before checking, wipe off any fluid on flare nuts and piping.
b. In case the fluid leaks from flare nut, it is caused by dust (or the like) and/or damage between flare and tapered seat in piping.
So remove the flare nut, tighten again it to the specified torque after cleaning flare and tapered seat. If flare or tapered seat is damaged, replace it with a new one.

2) Inspect fluid level on flat and level surface with engine "OFF" by indicator of filler cap.
If the level is at lower point or below, add fluid to keep the level in the specified range of the indicator. If at upper point or above, drain fluid by using a syringe or the like.

Fluid capacity:
1.0 ℓ (1.1 US qt, 0.9 Imp qt)

(1) Check at temperature 21°C (70°F) on reservoir surface of oil pump.

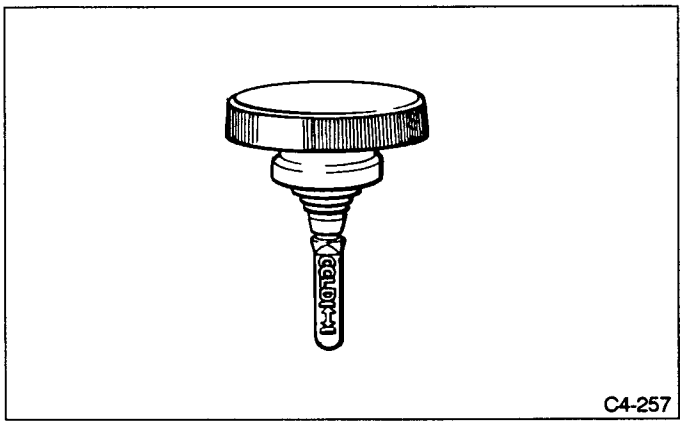

Fig. 161

(2) Check at temperature 60°C (140°F) on reservoir surface of oil pump.

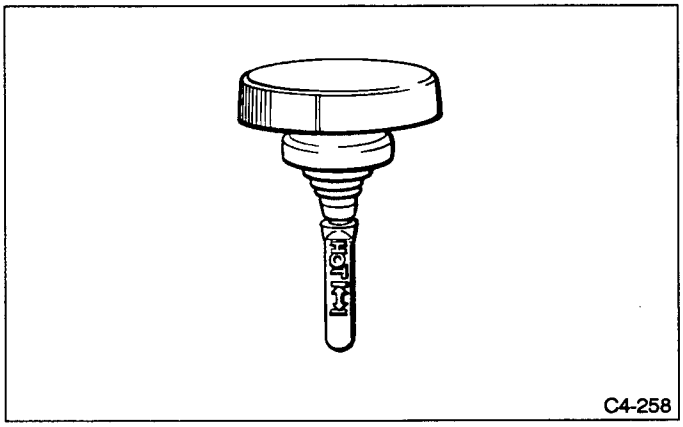

Fig. 162

T TROUBLESHOOTING AIRBAG

1. Supplemental Restraint System "Airbag"

Airbag system wiring harness is routed near the steering system.

a. All Airbag system wiring harness and connectors are colored yellow. Do not use electrical test equipment on these circuit.

b. Be careful not to damage Airbag system wiring harness when servicing the steering system.

2. Power Steering

1. STEERING CONDITION

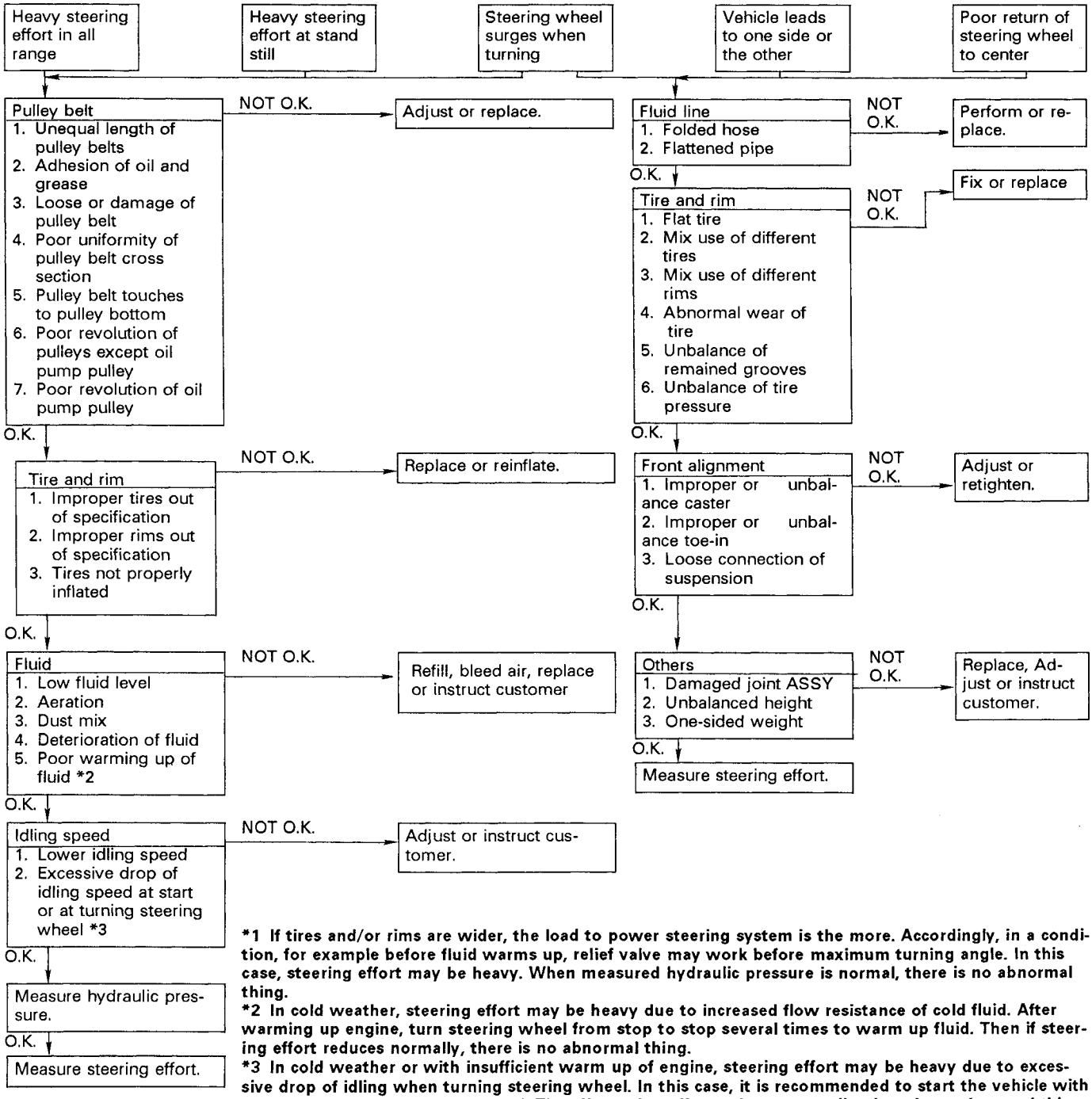

***1 If tires and/or rims are wider, the load to power steering system is the more. Accordingly, in a condition, for example before fluid warms up, relief valve may work before maximum turning angle. In this case, steering effort may be heavy. When measured hydraulic pressure is normal, there is no abnormal thing.**

***2 In cold weather, steering effort may be heavy due to increased flow resistance of cold fluid. After warming up engine, turn steering wheel from stop to stop several times to warm up fluid. Then if steering effort reduces normally, there is no abnormal thing.**

***3 In cold weather or with insufficient warm up of engine, steering effort may be heavy due to excessive drop of idling when turning steering wheel. In this case, it is recommended to start the vehicle with increasing engine speed than usual. Then if steering effort reduces normally, there is no abnormal thing.**

2. MEASUREMENT OF HYDRAULIC PRESSURE

a. Be sure to complete all items aforementioned in article 1), prior to measuring hydraulic pressure. Otherwise, pressure can not be measured correctly.

b. Do not leave the valve of pressure gauge closed or hold the steering wheel at stop end for 5 seconds or more in any case, as the oil pump may be damaged due to long keep of these conditions.

c. Put cotton cloth waste at a place where fluid drops before pressure gauge is installed. Wipe off split fluid thoroughly after the measurement.

d. Keep engine idling during the measurement.

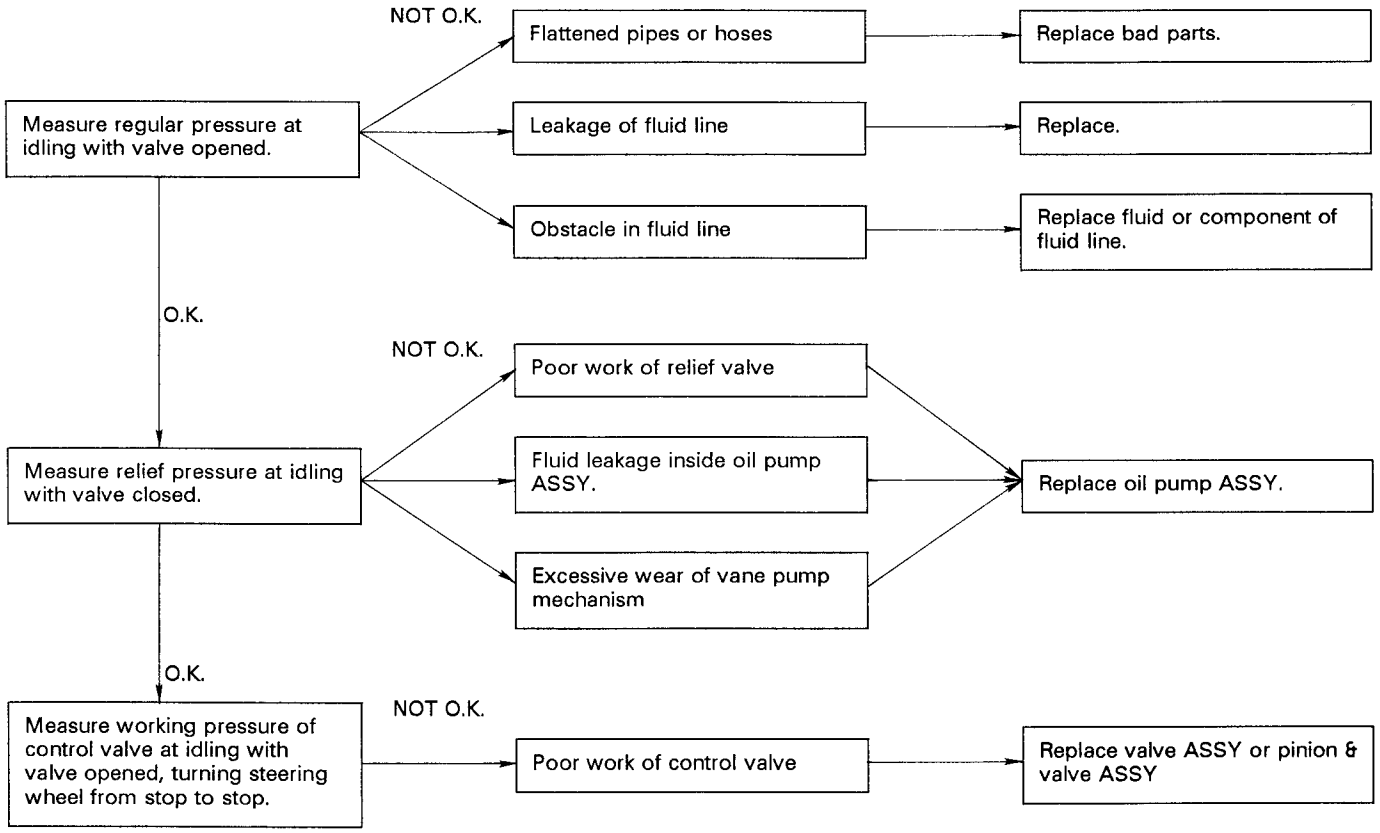

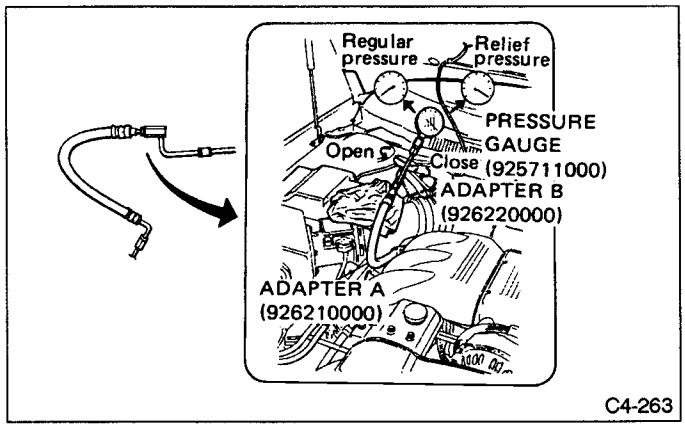

Fig. 163

Regular pressure:
981 kPa (10 kg/cm², 142 psi) or less

Relief pressure:
7,649 — 8,336 kPa (78 — 85 kg/cm², 1,109 — 1,209 psi)

3. MEASUREMENT OF STEERING EFFORT

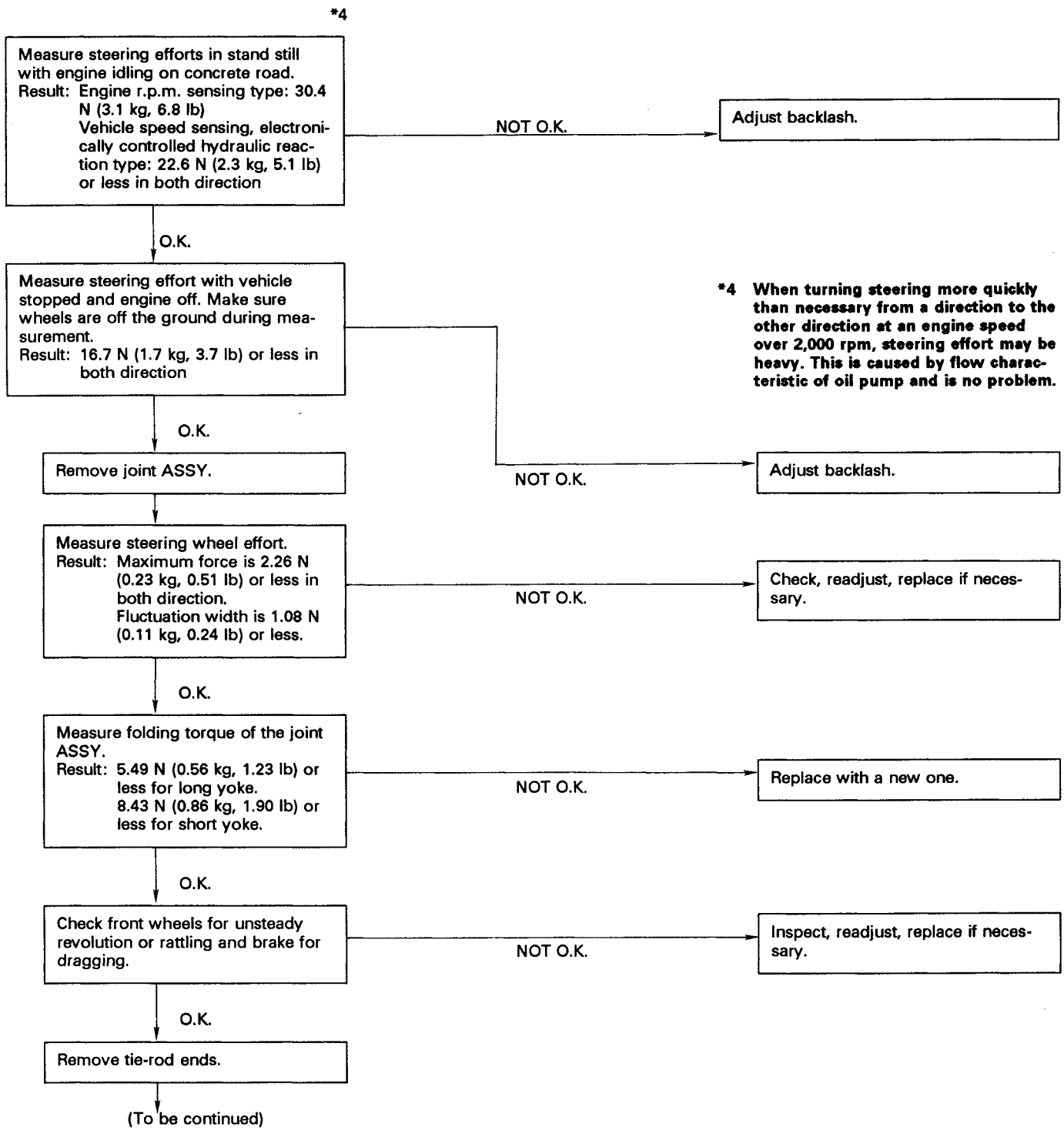

Check tie-rod ends, tie-rods and ball joints of suspension for unsteady revolution or rattling.

NOT O.K. → Inspect, replace if necessary.

O.K.

Measure rotating and sliding resistance of gearbox ASSY.
Result:

Unit: N (kg, lb)

		Engine speed sensing type	Vehicle speed sensing, hydraulic reaction type
Rotating resistance	Straight ahead	10.49 (1.07, 2.36) or less	
	All positions	11.8 (1.2, 2.6) or less	
	Difference between left and right turns	20% or less	
Sliding resistance	Difference between left and right turns	265 (27, 60) or less	
		20% or less	

NOT O.K. → Readjust backlash, if ineffective replace bad parts.

Measurement of steering effort

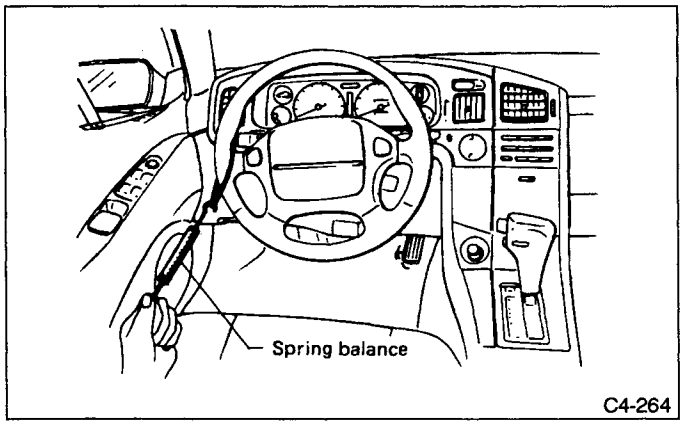

Fig. 164

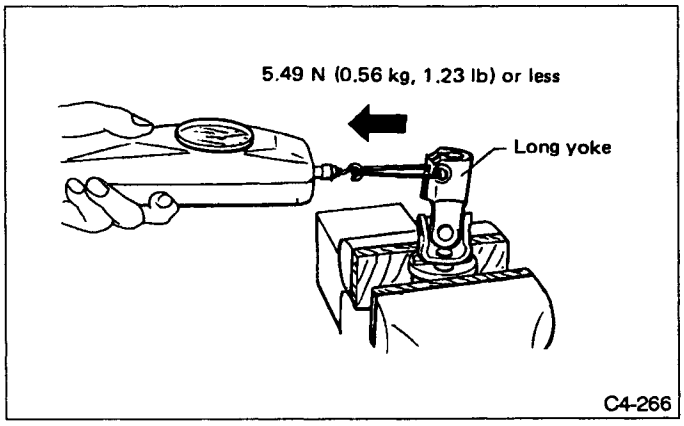

Fig. 166

Measurement of folding torque of joint assembly

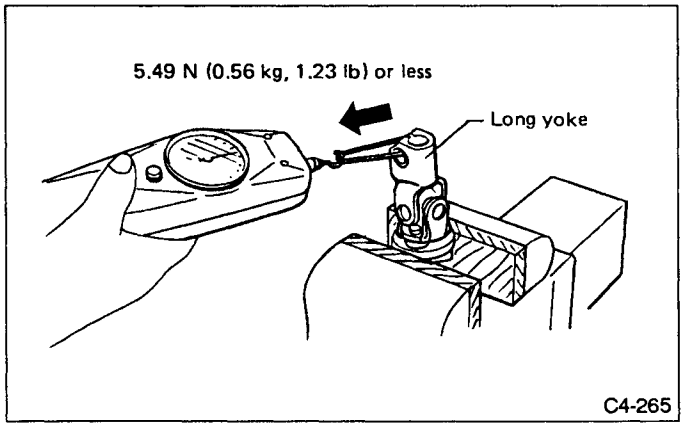

Fig. 165

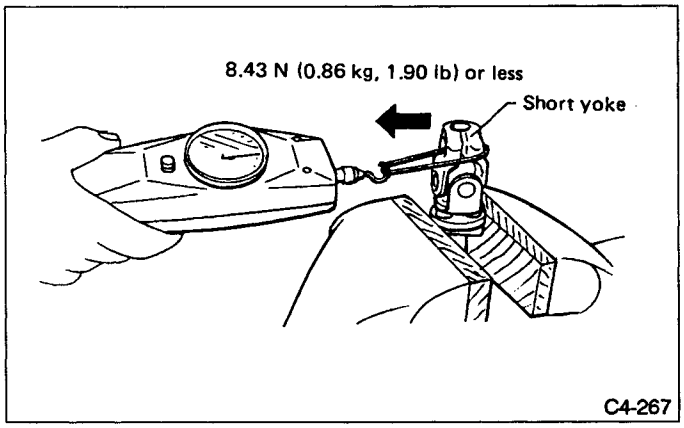

Fig. 167

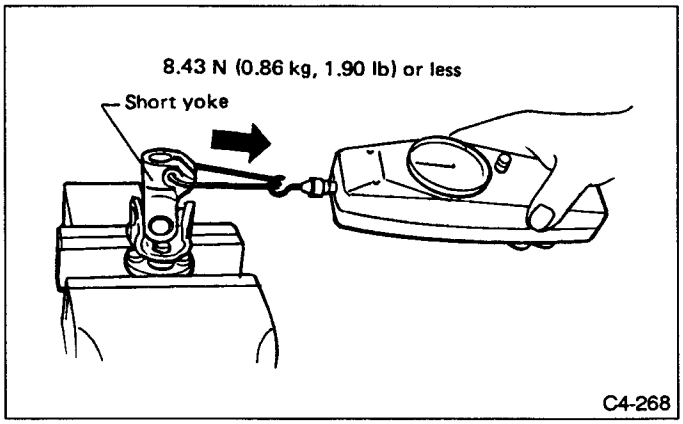

Fig. 168

Measurement of resistances of gearbox assembly

Rotating resistance:
Straight-ahead position within 30 mm (1.18 in) from rack center
Less than 10.49 N (1.07 kg, 2.36 lb)
Maximum allowable torque
11.8 N (1.2 kg, 2.6 lb)

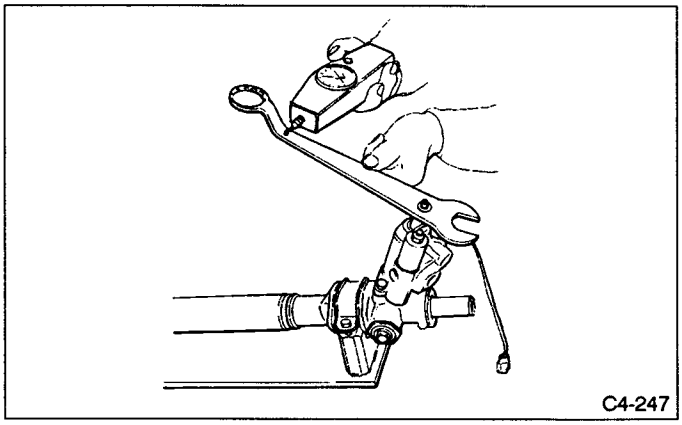

Fig. 169

Sliding resistance:
Left-turn steering
314 N (32 kg, 71 lb) or less
Right-turn steering
265 N (27 kg, 60 lb) or less

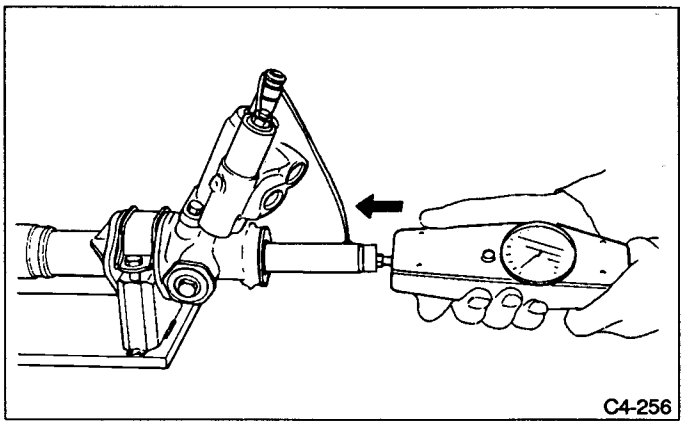

Fig. 170

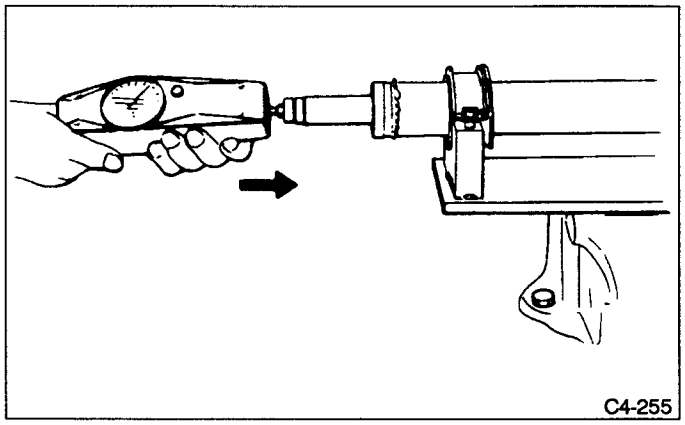

Fig. 171

4. FLUID LEAKAGE

It is likely that although one judges fluid leakage, there is actually no leakage. This is because the fluid spilt during the last maintenance was not completely wiped off. Be sure to wipe off spilt fluid thoroughly after maintenance.

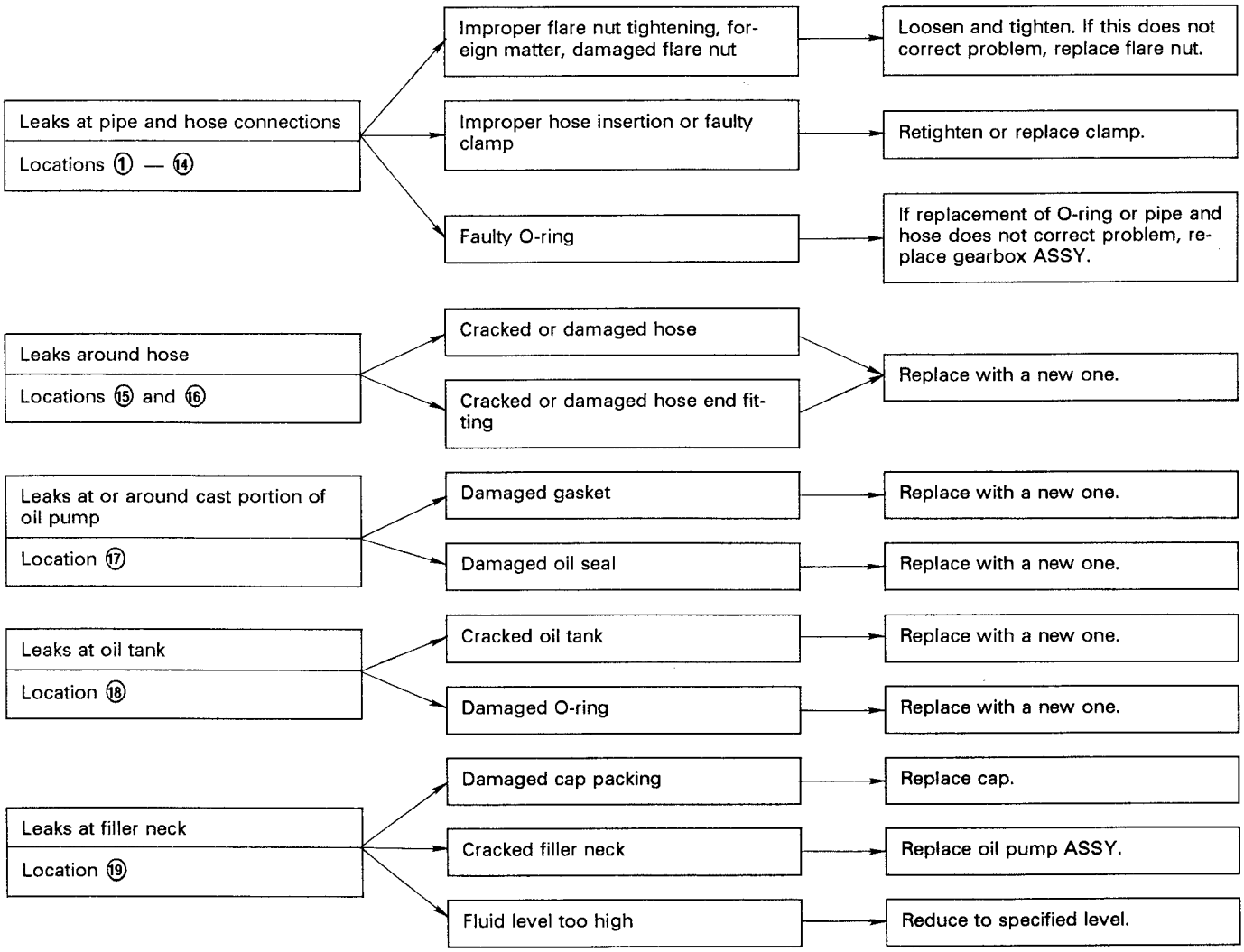

Severe operation of vehicle may cause fluid to ooze out at air vent in cap. However, this is not a problem.

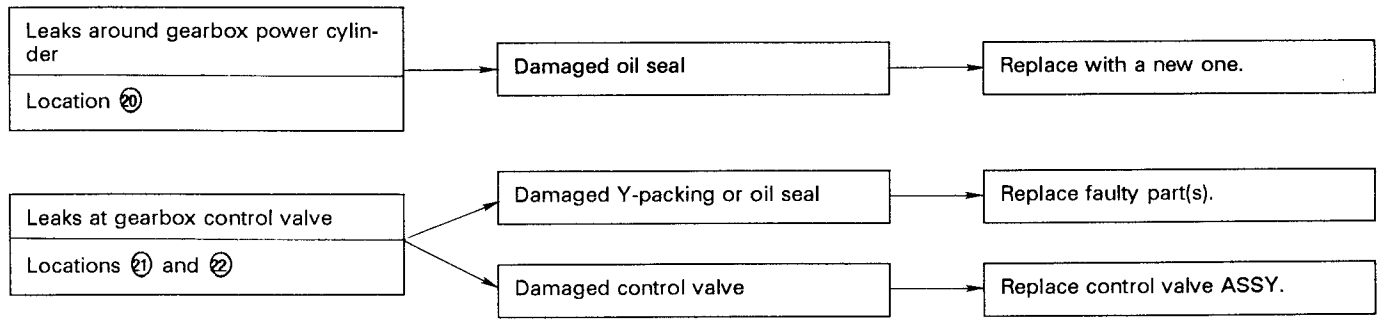

Wipe clean spilled fluid after servicing.

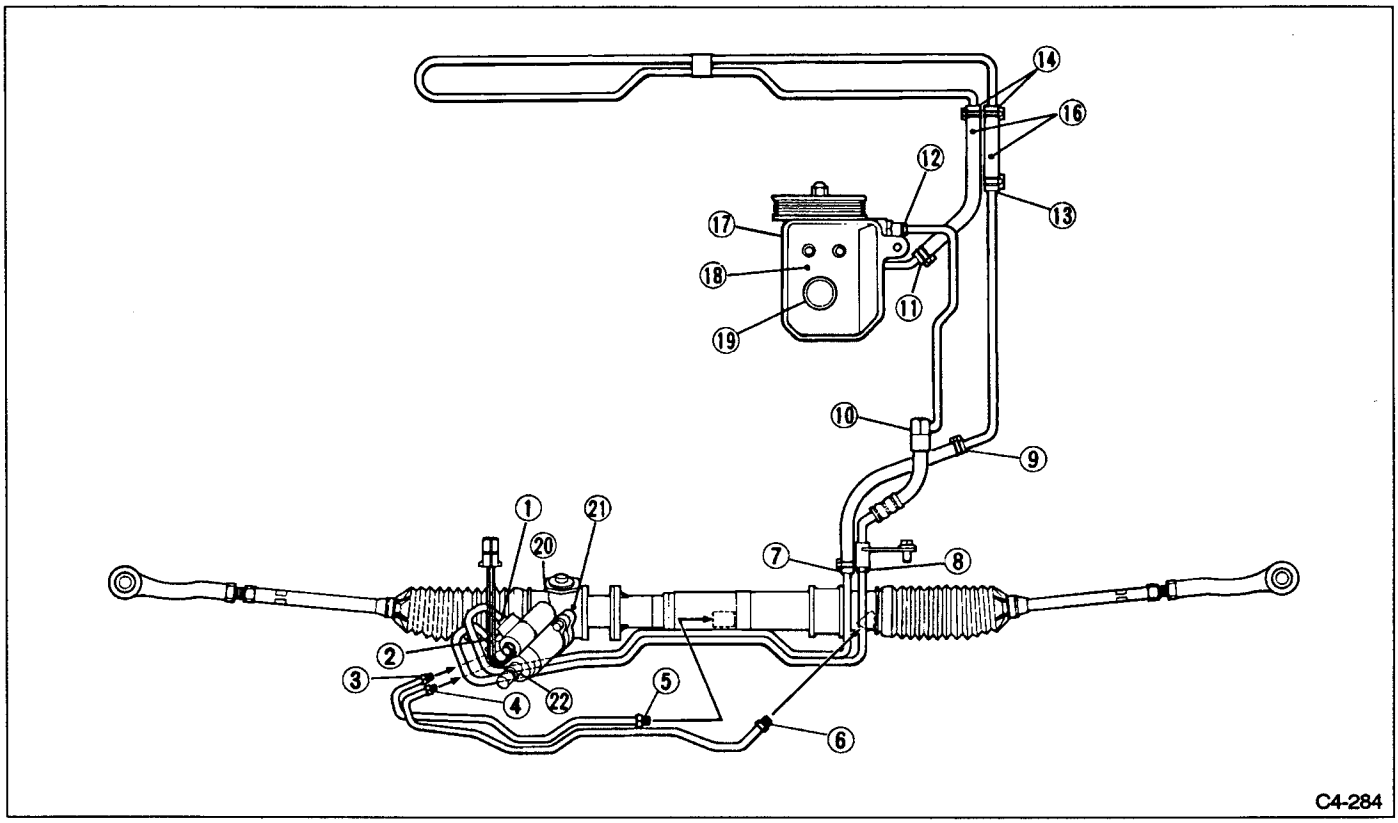

Fig. 172

5. NOISE AND VIBRATION

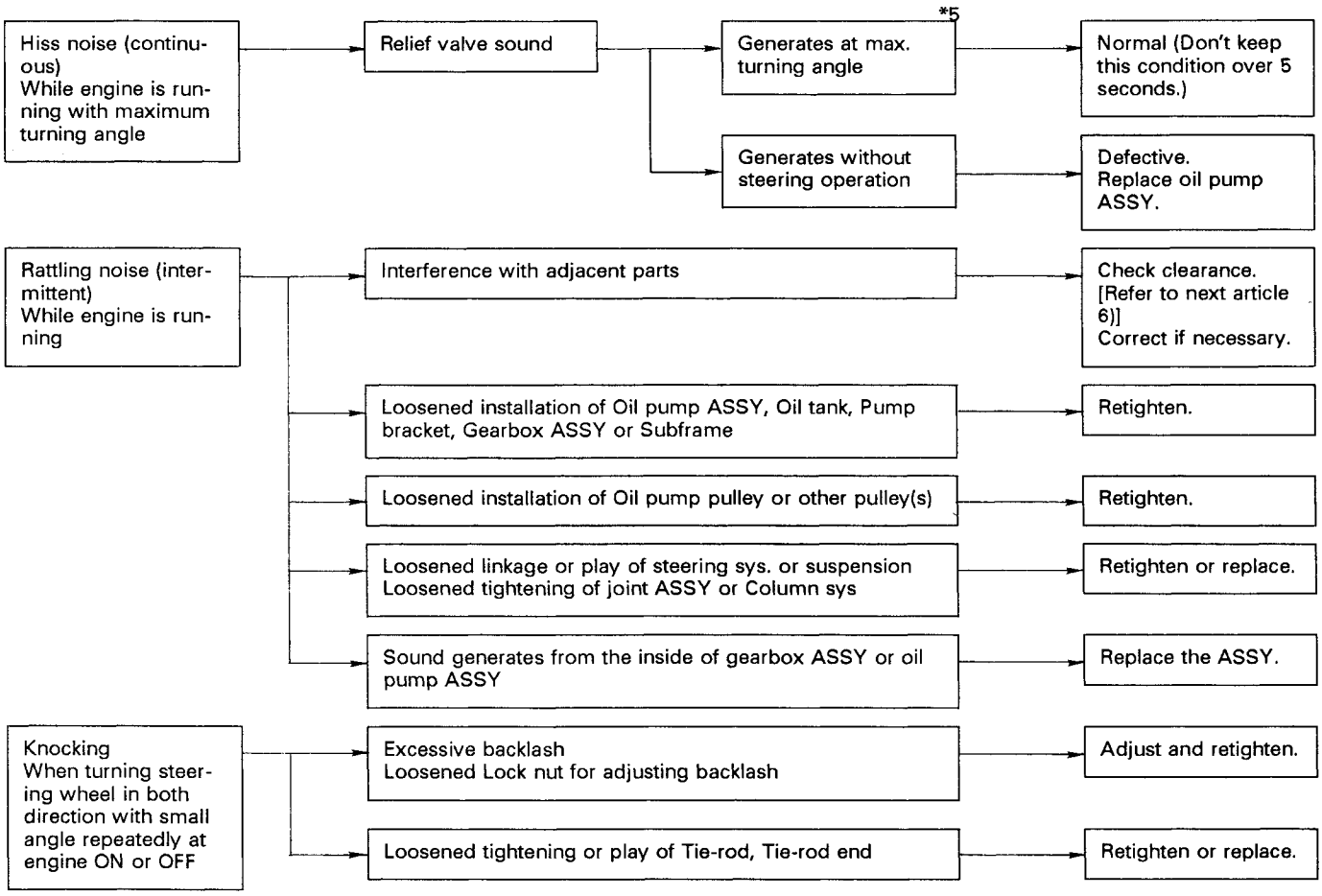

***5 Don't keep the relief valve operated over 5 sec. at any time or inner parts of the oil pump may be damaged due to rapid increase of fluid temperature.**

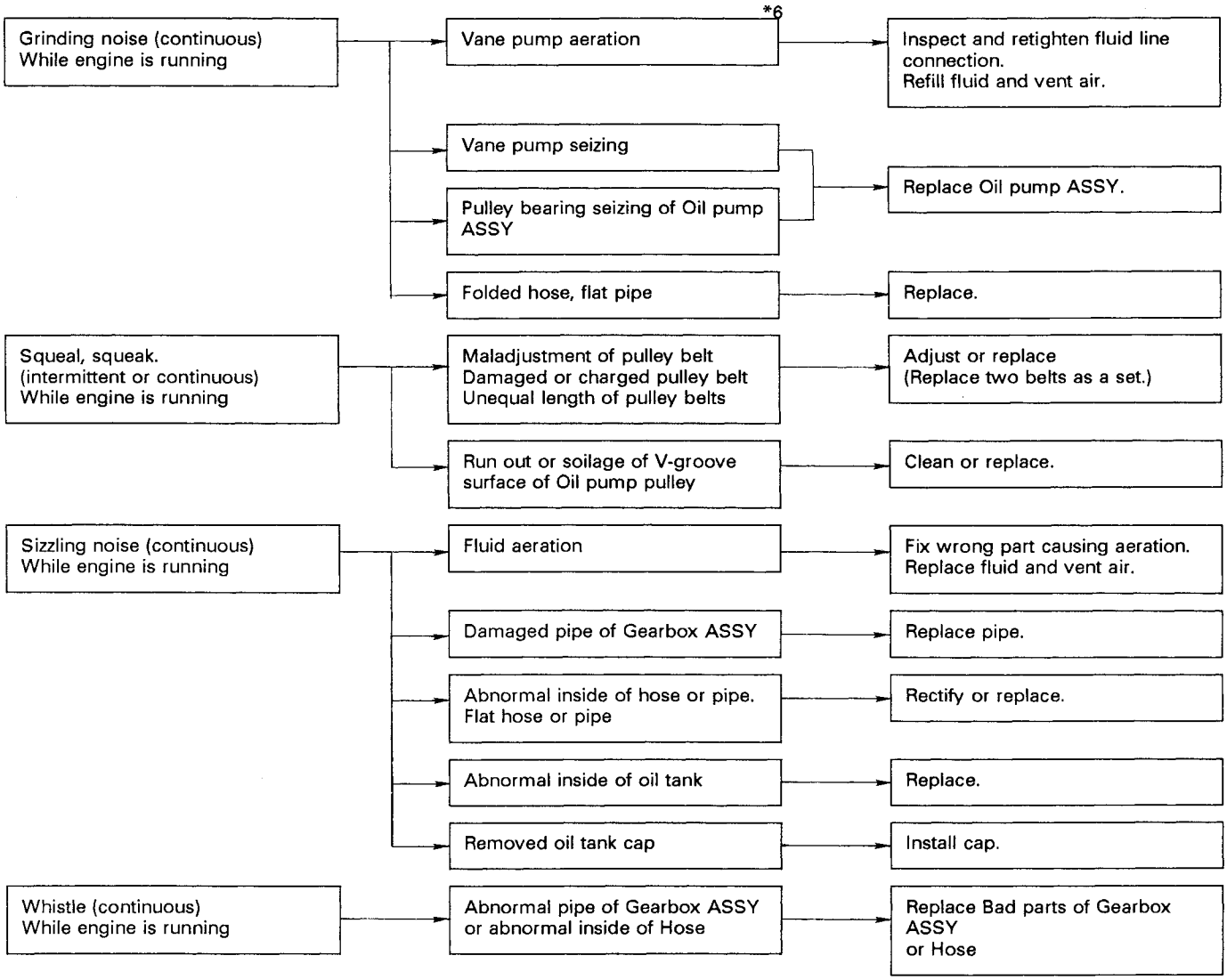

***6 Grinding noise may be heard immediately after the engine start in extremely cold condition. In this case, if the noise goes off during warm up there is no abnormal function in the system. This is due to the fluid characteristic in extremely cold condition.**

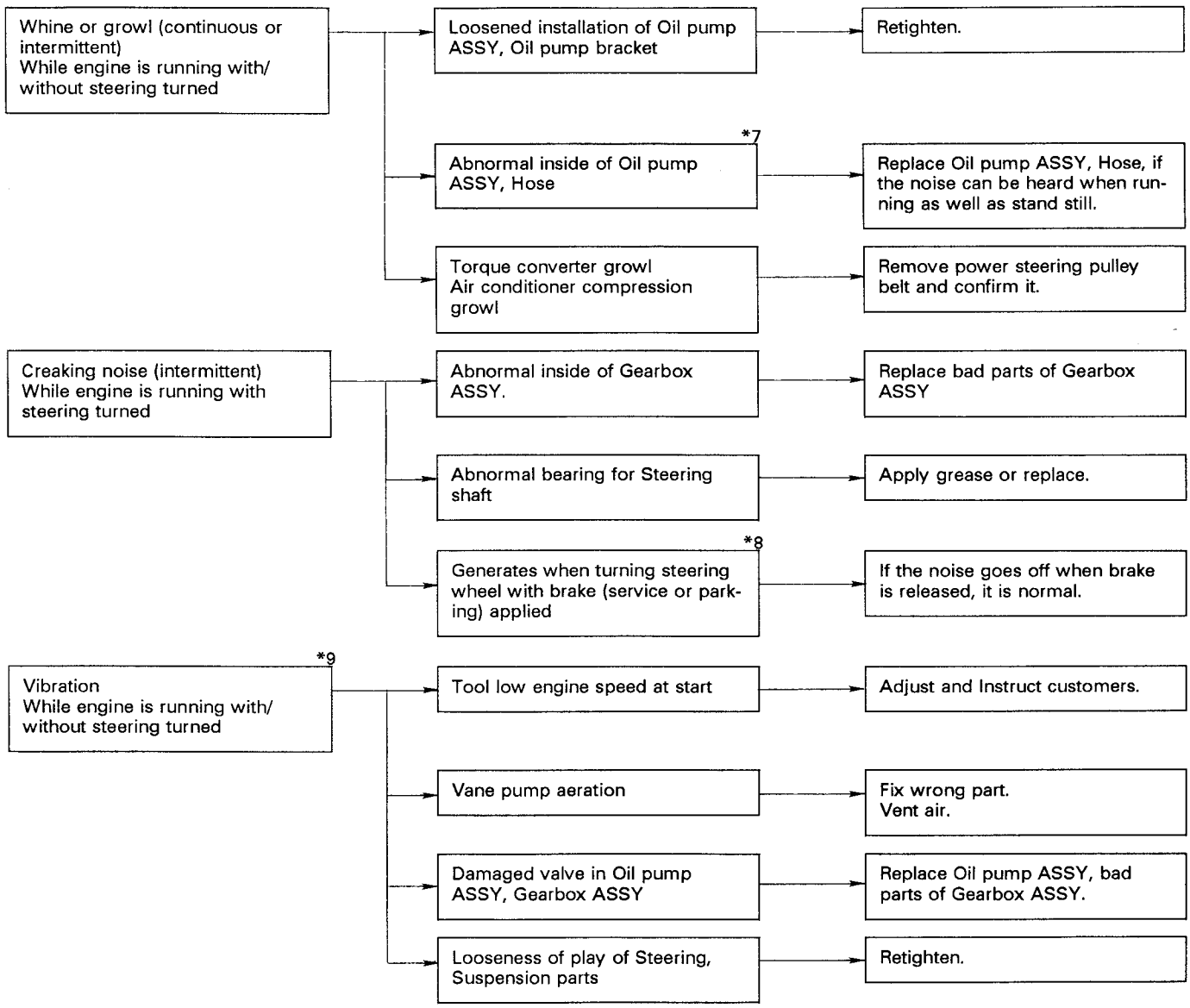

***7 Oil pump makes whine or growl noise slightly due to its mechanism. Even if the noise can be heard when steering wheel is turned at standstill there is no abnormal function in the system provided that the noise eliminates when the car is running.**

***8 When stopping with service brake and/or parking brake applied, power steering can be operated easily due to its light steering effort. If doing so, the disk rotates slightly and makes creaking noise. The noise is generated by creaking between the disk and pads. If the noise goes off when the brake is released, there is no abnormal function in the system.**

***9 There may be a little vibration around the steering devices when turning steering wheel at standstill, even though the component parts are properly adjusted and have no defects.**
Hydraulic systems are likely to generate this kind of vibration as well as working noise and fluid noise because of combined conditions, i.e.,
Road surface and tire surface, Engine speed and turning speed of steering wheel, Fluid temperature and braking condition.
This phenomena does not indicate there is some abnormal function in the system.
The vibration can be known when steering wheel is turned repeatedly at various speeds from slow to rapid step by step with parking brake applied on concrete road in "D" range.

6. CLEARANCE TABLE

This table lists various clearances that must be correctly adjusted to ensure normal vehicle driving without interfering noise, or any other faults.

No.	Location	Minimum clearance mm (in)	No.	Location	Minimum clearance mm (in)
①	Pipe to sub frame	5 (0.20)	⑦	Cylinder pipe to ATF pipe	15 (0.59)
②	FTJ (Free ring Tripod Joint) to Shaft and Universal joint ASSY	13 (0.51)	⑧	Hydraulic reaction harness to FTJ	20 (0.79)
③	FTJ to Valve housing	10 (0.39)	⑨	Hydraulic pressure reaction control solenoid to ATF cooling pipe	25 (0.98)
④	Pipe to Pipe	2 (0.08)	⑩	Radiator and condenser to Cooling pipe	5 (0.20)
⑤	Exhaust pipe to Gearbox boot	25 (0.98)	⑪	Return hose to cylinder block	20 (0.79)
⑥	FTJ to Pressure hose	20 (0.79)			

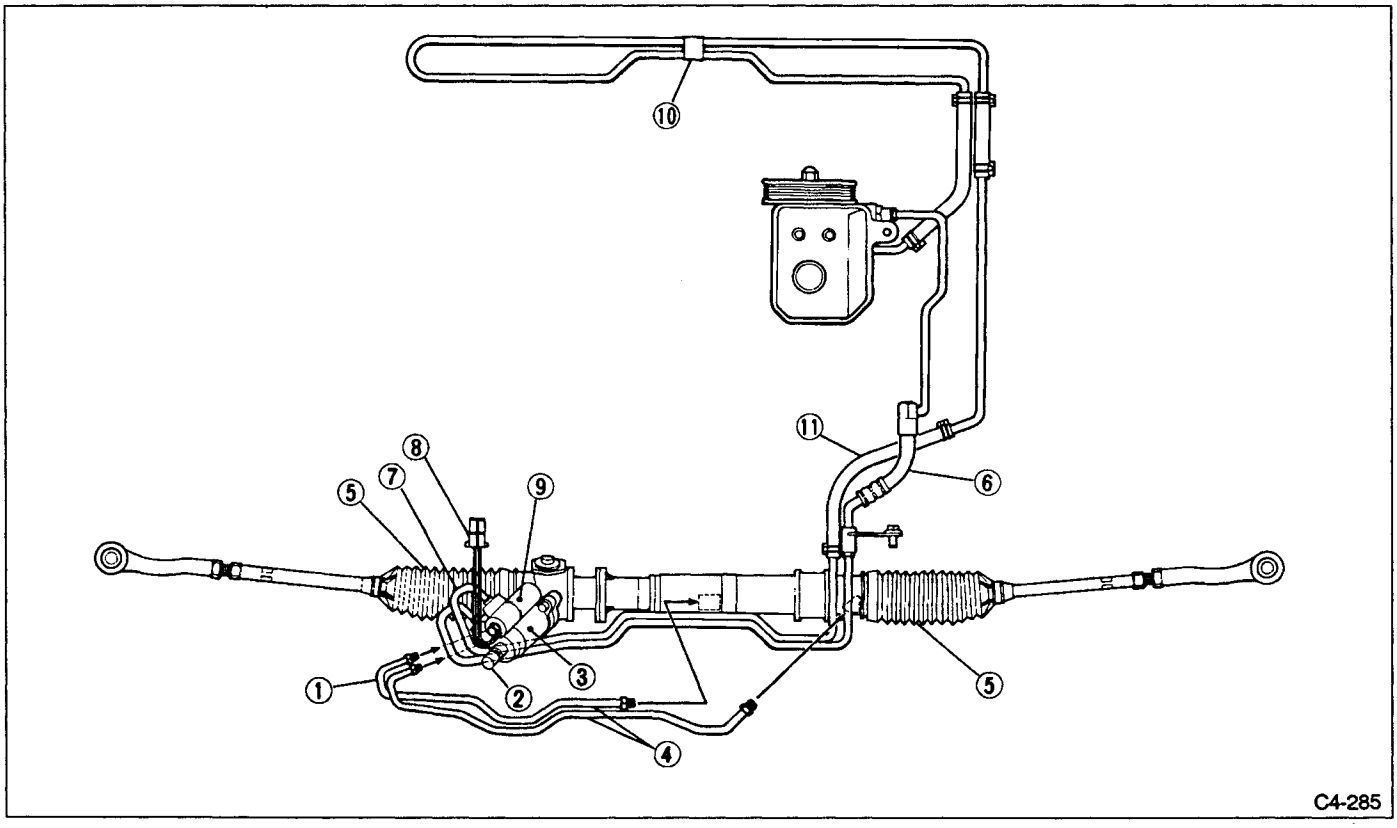

Fig. 173

7. BREAKAGE OF HOSES

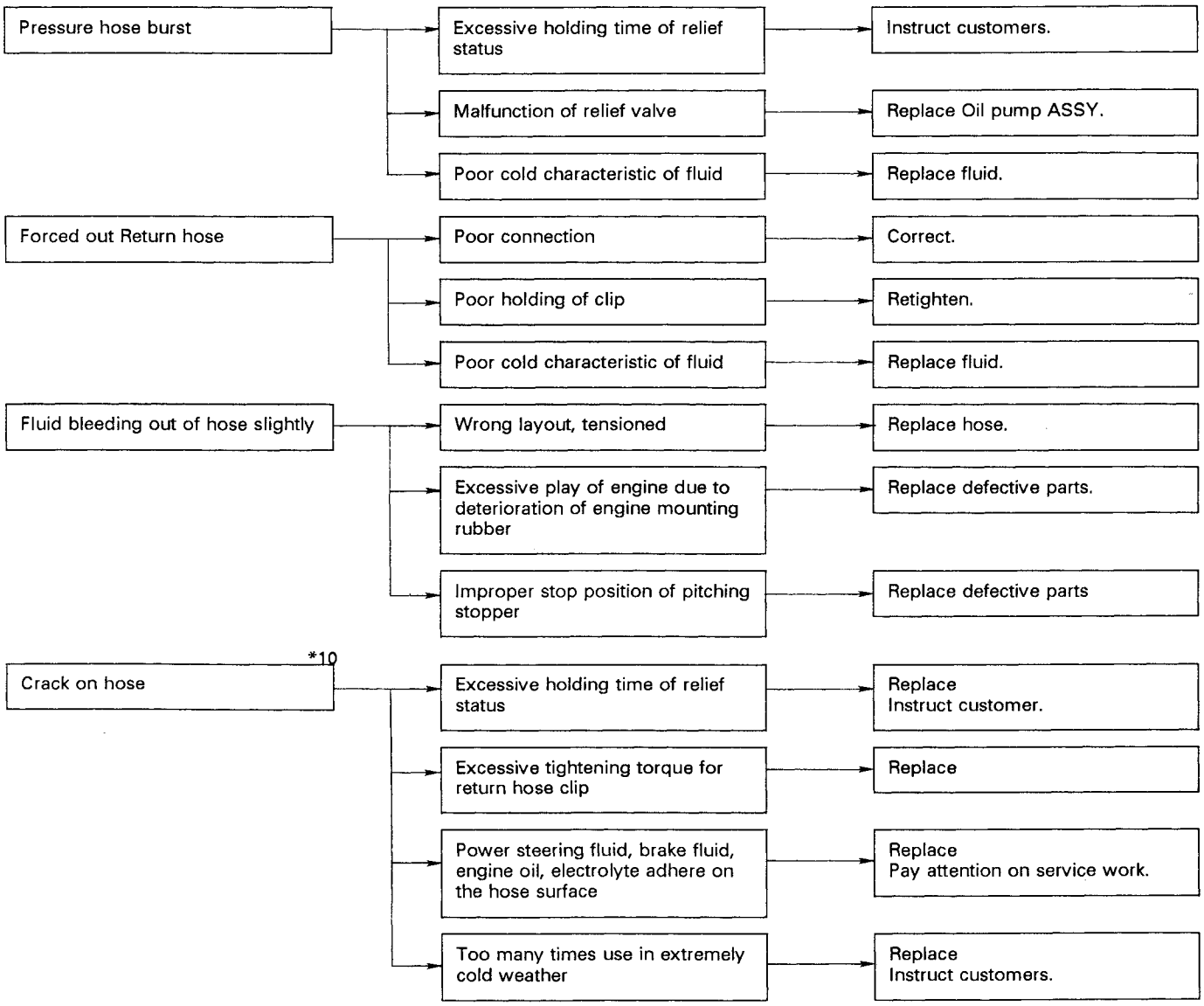

***10 Although surface layer materials of rubber hoses have excellent weathering resistance, heat resistance and resistance for low temperature brittleness, they are likely to be damaged chemically by brake fluid, battery electrolyte, engine oil and automatic transmission fluid and their service lives are to be very shortened. It is very important to keep the hoses free from before-mentioned fluids and to wipe out immediately when the hoses are adhered with the fluids.**
Since resistances for heat or low temperature brittleness are gradually declining according to time accumulation of hot or cold conditions for the hoses and their service lives are shortening accordingly, it is necessary to perform careful inspection frequently when the car is used in hot weather areas, cold weather area and/or a driving condition in which many steering operations are required in short time. Particularly continuous work of relief valve over 5 seconds causes to reduce service lives of the hoses, the oil pump ASSY, the fluid, etc. due to over heat.
So, avoid to keep this kind of condition when servicing as well as driving.

3. Troubleshooting for Self-diagnosis System — Only for Electronically Controlled Power Steering

A: HOW TO USE DIAGNOSIS CONNECTOR

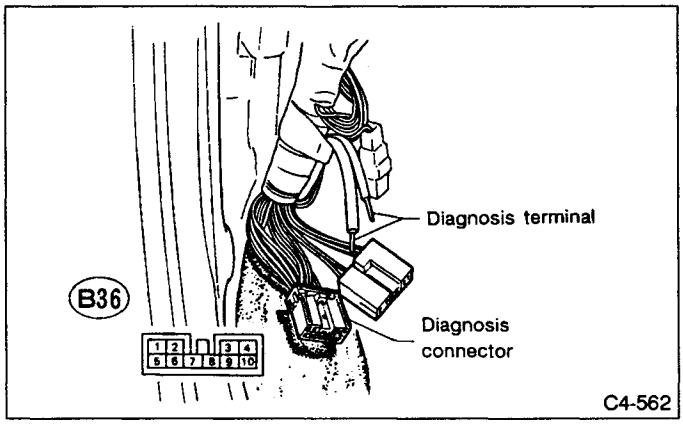

Fig. 174

1) Turn ignition switch "OFF."
2) Connect one of two DIAG. terminals to diagnosis connector mode* terminal No. 5, 6 or 7.
3) Turn ignition switch "ON." Read trouble code.
4) Disconnect male terminal from diagnosis connector terminal.

* Power steering mode terminals:
No. 5 - TEST
No. 6 - READ MEMORY
No. 7 - DIAGNOSIS

B: TROUBLESHOOTING PROCEDURE

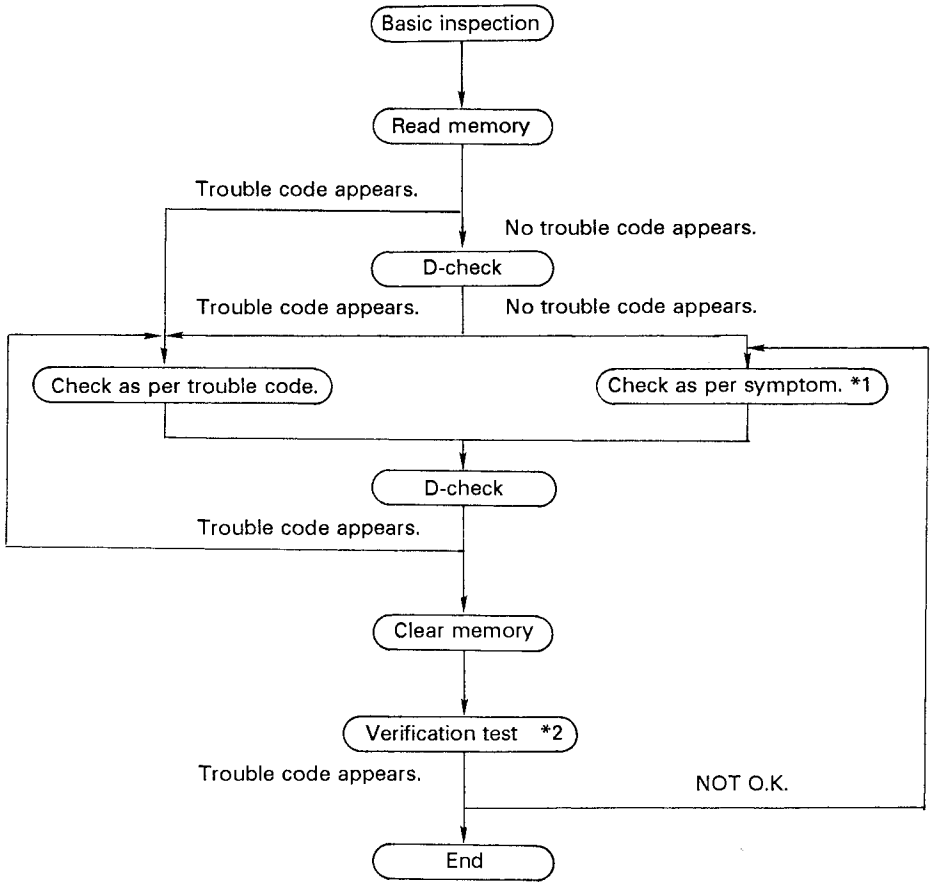

*1: Conduct normal power steering troubleshooting procedure. If no problems exist, replace ECU (Electronic Control Unit).
*2: In verification test, conduct D (Dealer's) check and basic inspection first, then actual drive test, to ensure that no problems exist.

a. Before disconnecting ECU connector, turn ignition switch "OFF".
b. Before removing ECU, disconnect battery cables.

1. BASIC INSPECTION

1) Check battery voltage.
2) Check fuses No. 8, 15 (in F/B) and 25 (in M/B).

2. READ MEMORY

1) Turn ignition switch "OFF."
2) Connect male terminal to diagnosis connector mode terminal No. 6.
3) Start engine.
4) Disconnect male terminal from diagnosis connector mode terminal No. 6.

3. D CHECK

1) Turn ignition switch "OFF."
2) Connect male terminal to diagnosis connector mode terminal No. 5.
3) Start engine.
4) Drive vehicle at least 10 meters (33 ft).
5) Disconnect male terminal from diagnosis connector mode terminal No. 5.

4. CLEAR MEMORY

1) Turn ignition switch "OFF."
2) Connect male terminals to diagnosis connector mode terminals No. 5 and 6.
3) Start engine.
4) Disconnect male terminals from diagnosis connector mode terminals No. 5 and 6.
5) Ensure that memory is cleared in read memory mode.

C: TROUBLE CODES LIST

1. TROUBLE CODES

Trouble code	Description	Flashing pattern
VF	Faulty source voltage	Remains on
WF	Faulty check mode terminal, lamp, wiring, etc.	Remains off
1	Shorted solenoid system circuit	
2	Open in solenoid system circuit	
3	Faulty vehicle sensor 2 system	
4	Faulty back-up power supply	
5	Engine speed signal system (including EGI ECU)	
—	Normal	

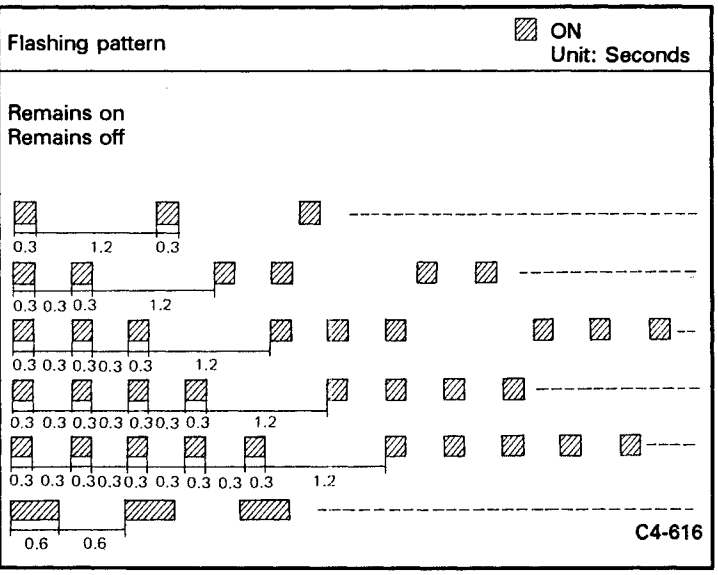

Fig. 175

2. HOW TO READ TROUBLE CODE (FLASHING)

The STEERING lamp flashes the code corresponding to the faulty part. The long segment (1.2 sec on) indicates a "ten", and the short segment (0.2 sec on) signifies "one".

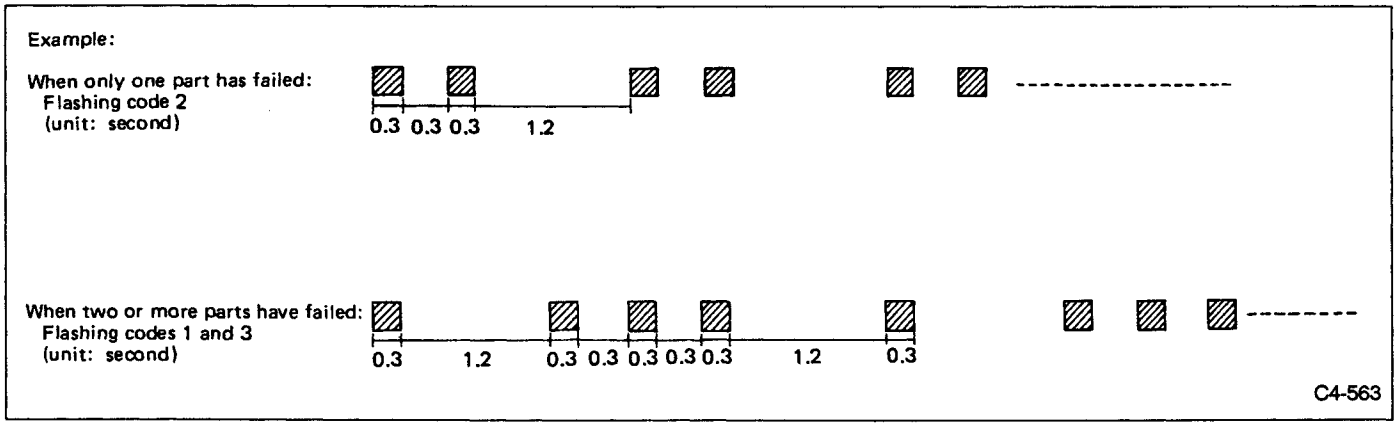

Fig. 176

D: SYSTEM COMPOSITION TABLE

System	Component parts		Description	Characteristics control	"Assist" amount control	Warning	Self-diagnostic function
Input signal (sensor)	Vehicle speed sensor 2		Detects vehicle speed.	O	O		
	ECU (MPFI)		Detects engine revolution.	O	O		
	Diagnosis connector	Read memory mode terminal	Connects read memory mode circuit.				O
		Test mode terminal	Connects test mode circuit.				O
		Diagnosis mode terminal	Connects diagnosis mode circuit.				O
Control unit	ECU		Computes and sends control output signal in relation to input signal received.	O	O	O	O
Output signal (Actuator)	Solenoid		Regulates reaction chamber oil pressure (Maximum reaction force (heavy steering operation) occurs when solenoid is "OFF").	O	O		
	Warning lamp		Indicates trouble code.			O	O

E: INPUT-OUTPUT DIAGRAM

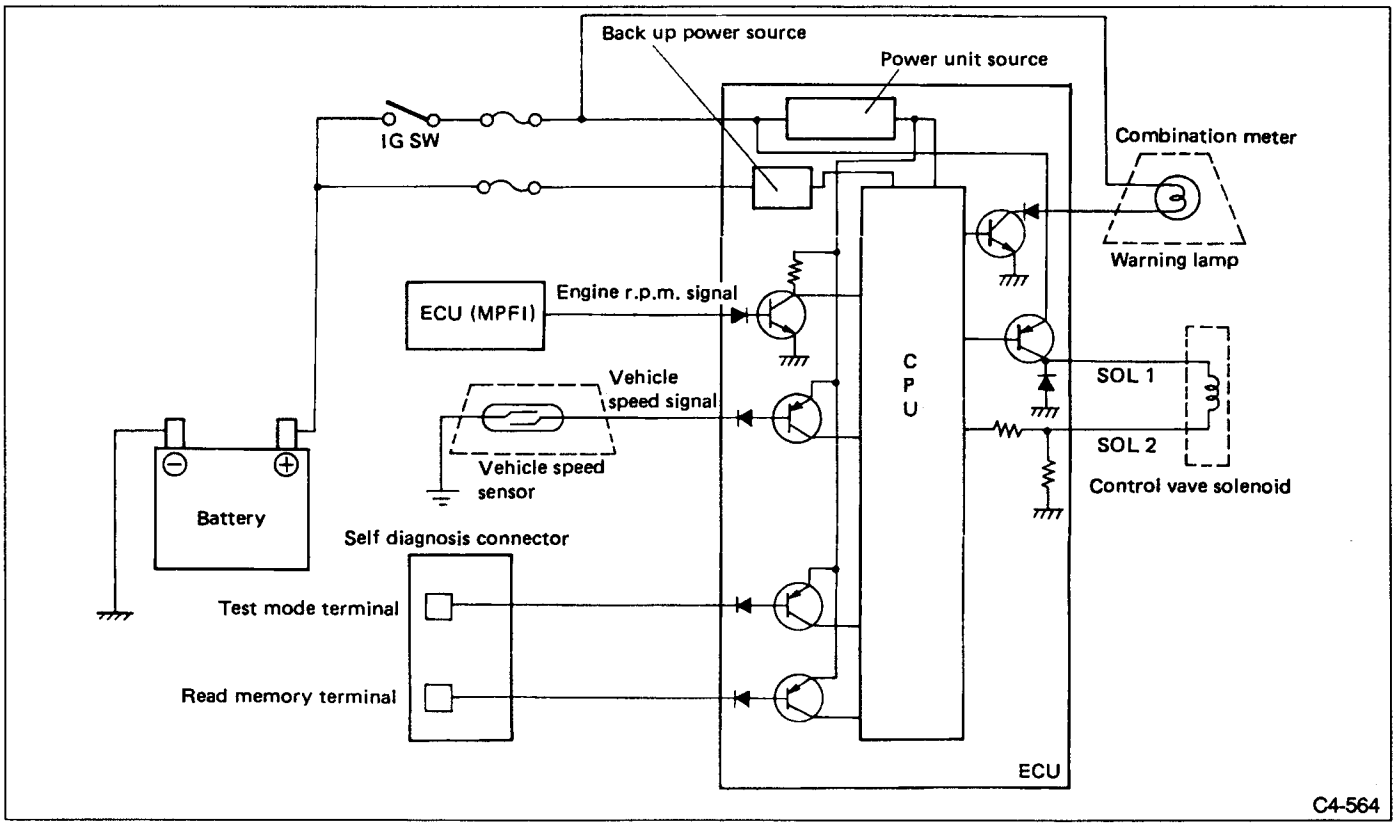

Fig. 177

F: I/O (INPUT/OUTPUT) VOLTAGE DATA

System to check		⟨Refer to NOTE.⟩ Measuring terminal		Measuring condition and measurement value			
				IG SW		Engine idling	Remarks
		NO.	Lead color	OFF	ON (engine off)		
Vehicle speed sensor 2		4	RW	0V	0 or 5V	0 or 5V	Vehicle speed: 0 km/h (0 MPH)
MPFI (engine speed)		3	BL	0V	10 V min.	10 V min.	Input rectangular
Solenoids	Solenoid-1 (+ side)	11	YG	0V	10V min.	10V min.	Output rectangular pulse [at vehicle speed of 0 km/h (0 MPH)]
	Solenoid-2 (Return side)	9	BrW	0V	0 to 1V	0 to 1V	
Warning lamp		9	WL	0V	10V min.	10V min.	
Self-diagnosis	Read memory mode	6	Br	0V	5V	5V	
	Test mode	5	YB	0V	5V	5V	
	Diagnosis mode	7	BrY				
Power supply	ECU power supply	16	BrR	0V	10V min.	10V min.	
	Back-up power supply (for memory)	15	LR	10V min.	10V min.	10V min.	
GND		13	B	0V	0V	0V	

NOTE:
1: Measure voltage across applicable terminal and GND (body metal).
2: Measuring terminals No.

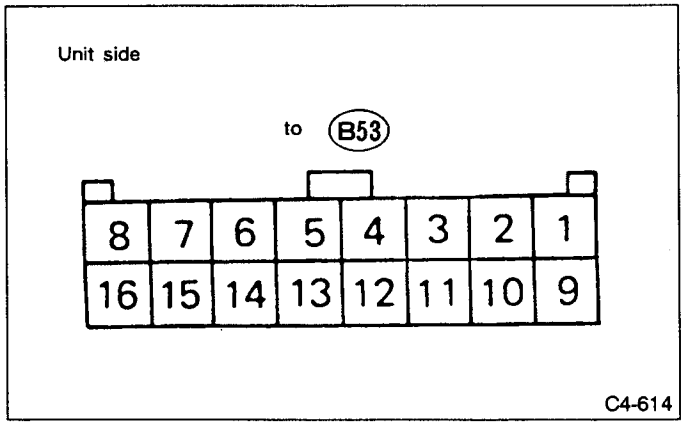

Fig. 178

4. Troubleshooting Chart with Trouble Code — Only for Electronically Controlled Power Steering

A: TROUBLE CODE "VF" — POWER SUPPLY SYSTEM OR LAMP WIRING IS FAULTY

Diagnosis
- Faulty lamp wiring
- Faulty power supply system
- Faulty ECU

Symptom
Warning lamp does not go out.

1. Check warning lamp wiring ("⊖" side)] wiring.
   - Not OK → Repair or replace wiring.
   - OK ↓
2. Check ECU power supply.
   - Not OK → 3. Check harness between ECU and F/B (fuse block).
   - OK ↓
3. Check ECU connector terminals for poor contact.
   - Not OK → Repair ECU connector terminals.
   - OK ↓
4. Replace ECU.

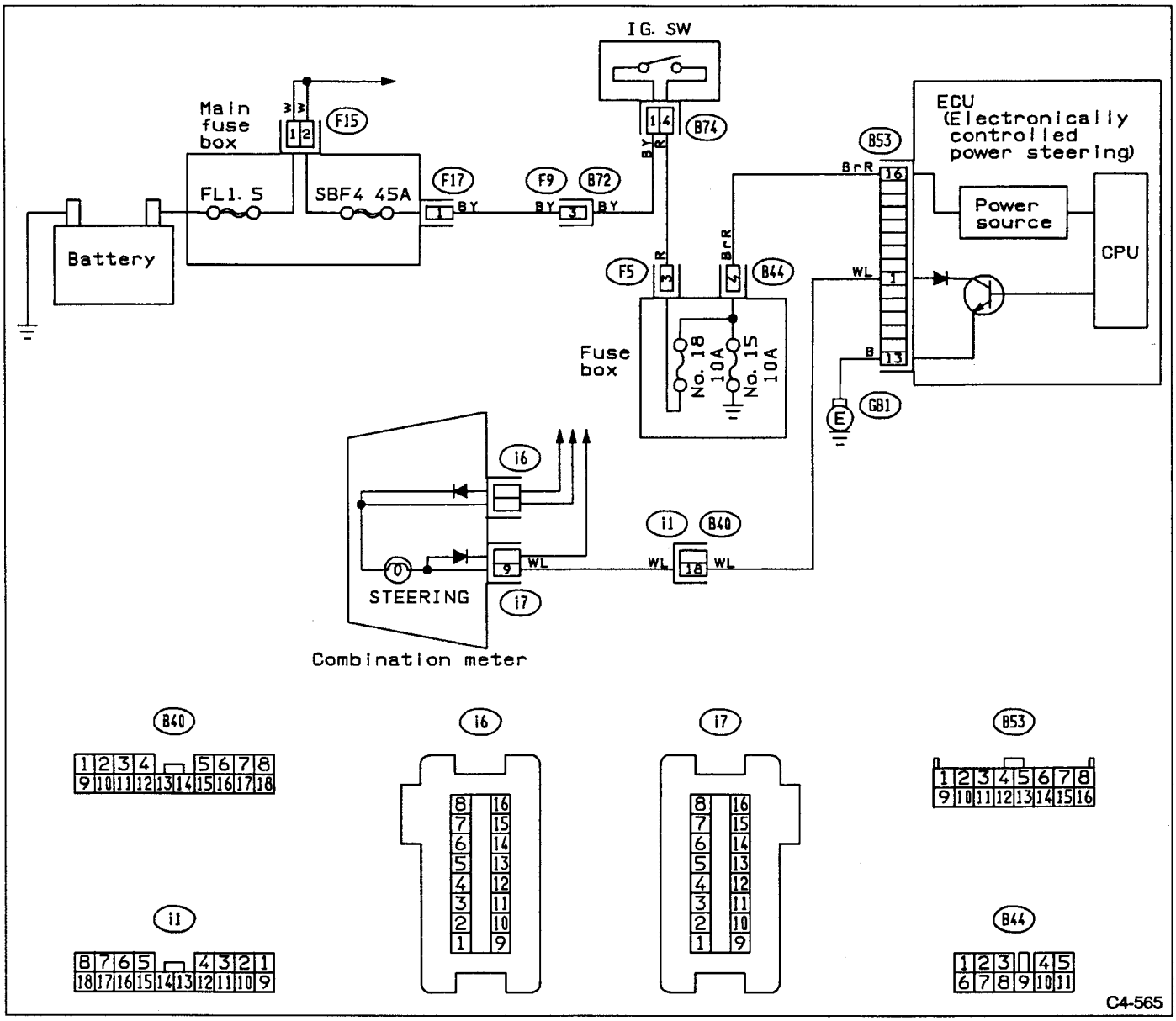
IG. SW
Main fuse box
F15
FL1. 5
SBF4 45A
F17
F9
B72
B74
Battery
BY
BrR
R
F5
B44
Fuse box
No. 18 10A
No. 15 10A
B53
ECU (Electronically controlled power steering)
Power source
CPU
WL
B
GB1
E
i6
i1
B40
i7
STEERING
Combination meter
C4-565

Fig. 179

1. CHECK WARNING LAMP WIRING ("⊖" SIDE).

1) Turn ignition switch "OFF."
2) Disconnect ECU from connector.
3) Disconnect connector (i1).
4) Check continuity between ECU connector terminal and GND.

Connector & Terminal/Specified resistance:
(B53) No. 1 — Body/1 MΩ min.

5) Extract combination meter assembly.
6) Disconnect connector (i7).
7) Check continuity between connector-(i7) terminal and GND.

Connector & Terminal/Specified resistance:
(i7) No. 9 — Body/1 MΩ min.

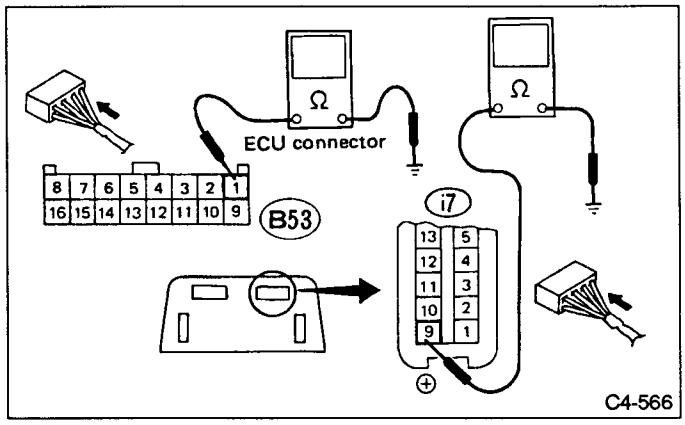

Fig. 180

2. CHECK ECU POWER SUPPLY

1) Turn ignition switch "OFF."
2) Disconnect ECU from connector.
3) Turn ignition switch "ON."
4) Measure voltage between ECU connector terminal and GND.

Connector & Terminal/Specified voltage:
(B53) No. 16 — Body/10V min.

5) Check continuity between ECU connector terminal and GND.

Connector & Terminal/Specified resistance:
(B53) No. 13 — Body/1 Ω min.

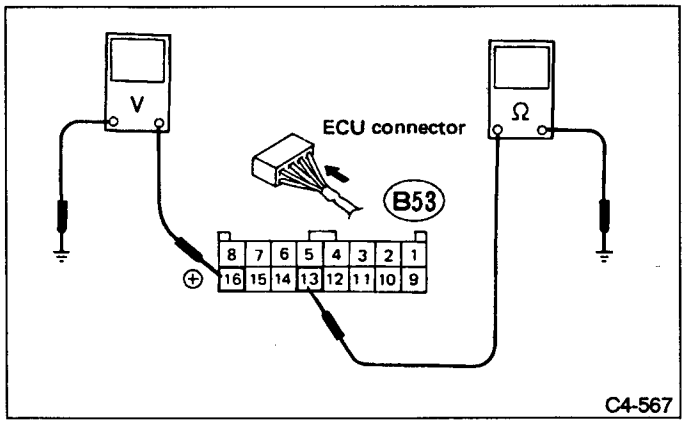

Fig. 181

3. CHECK WIRING HARNESS (between ECU and fuse block)

1) Disconnect ECU from connector.
2) Turn ignition switch "ON."
3) Measure voltage across connector-(B44) terminal and GND.

Connector & Terminal/Specified voltage:
(B44) No. 4 — Body/10V min.

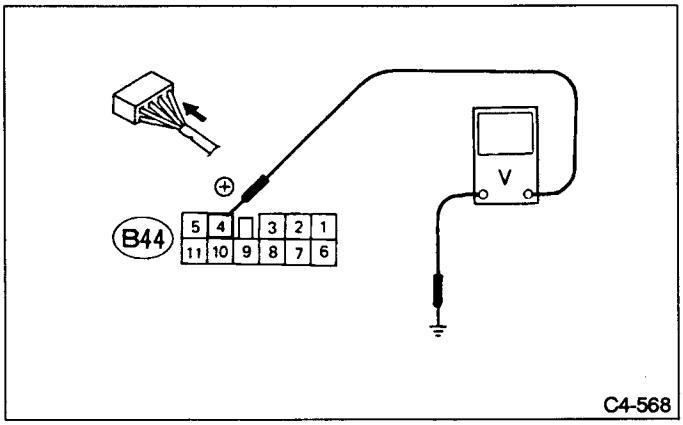

Fig. 182

B: TROUBLE CODE "WF" — FAULTY WARNING LAMP OR HARNESS

Diagnosis
- Faulty D-check and read-memory harnesses
- Faulty power supply or GND circuit.
- Faulty lamp or harness
- Faulty ECU

Symptom
Warning lamp remains off during diagnosis.

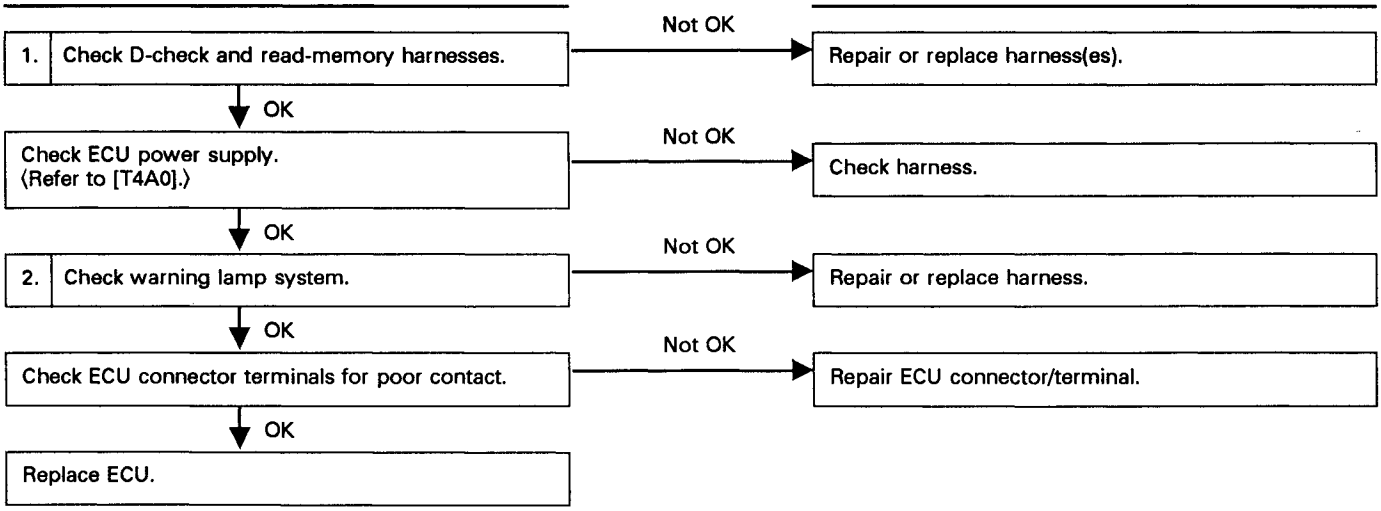

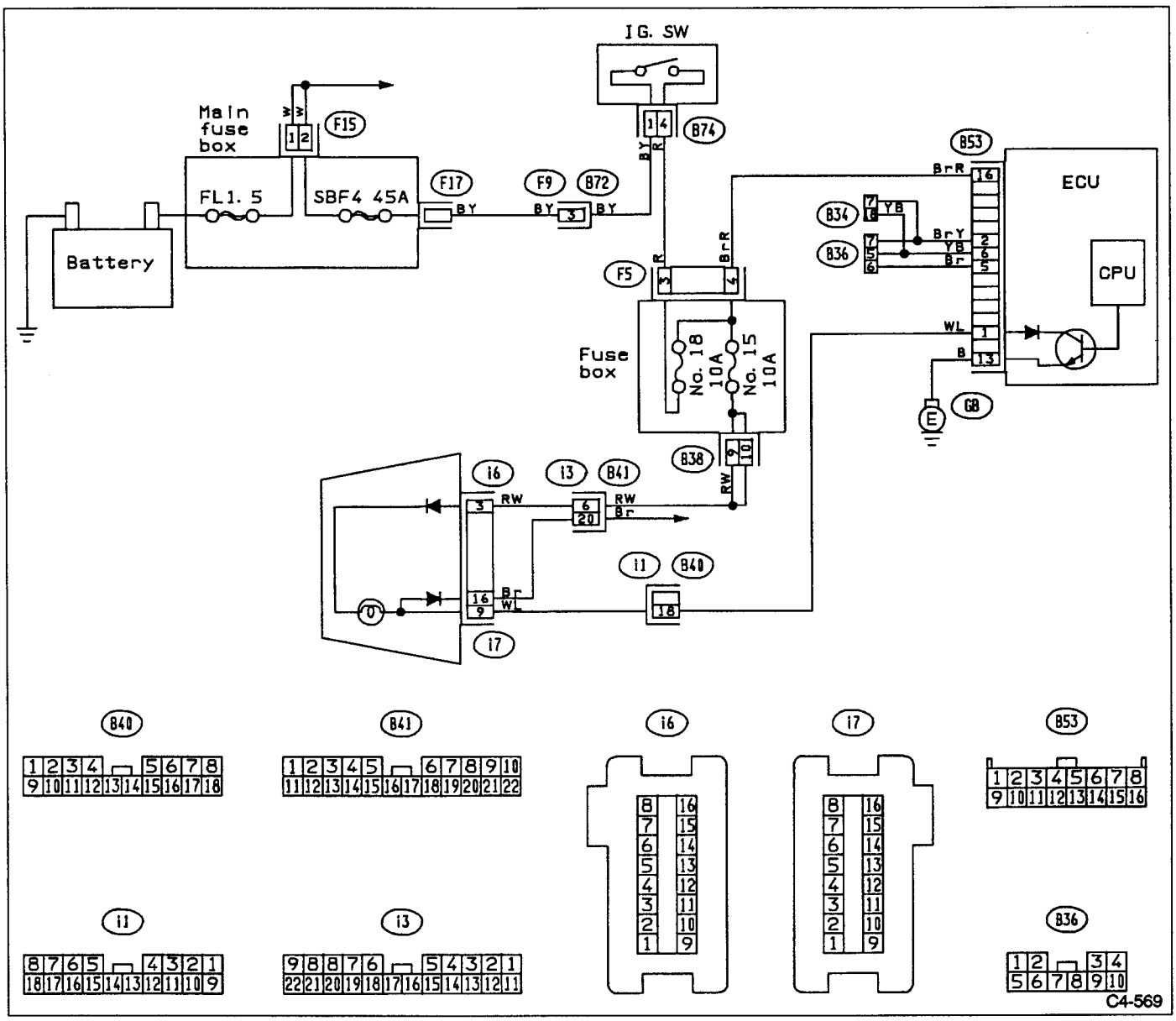
IG. SW
Main fuse box
F15
FL1. 5
SBF4 45A
F17
F9
B72
B74
Battery
F5
Fuse box
No. 18 10A
No. 15 10A
B38
B53
ECU
CPU
B34
B36
GB
i6
i3
B41
i1
B40
i7
B40
B41
i6
i7
B53
i1
i3
B36
C4-569

Fig. 183

1. CHECK D-CHECK AND READ-MEMORY HARNESSES

1) Turn ignition switch "OFF."
2) Disconnect ECU from connector.
3) Check continuity between ECU and connector-(34) terminals, and ECU and connector-(B36) terminals.

Read memory	Between (B53) ⑤ — (B36) ⑥
D check	Between (B53) ⑥ — (B36) ⑤

Specified resistance:
(B53) No. 13 — Body/1 Ω max.

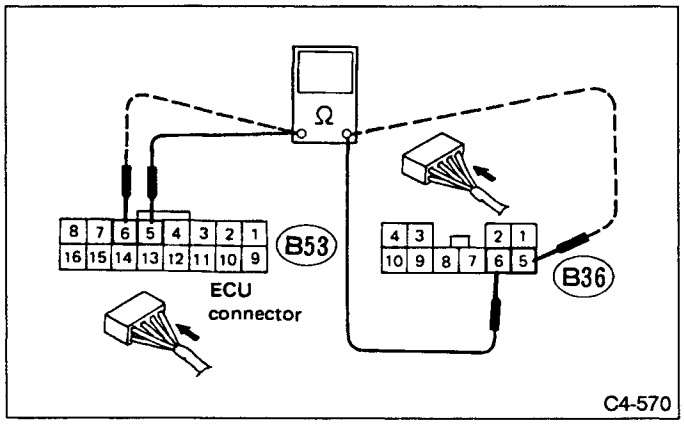

Fig. 184

4) Check connector-(B53) terminal and GND.

Connector & Terminal/Specified resistance:
(B53) No. 13 — Body/1 Ω max.

2. CHECK WARNING LAMP SYSTEM

1) Disconnect connector (i1). Turn ignition switch "ON."
2) Measure voltage across connector-(B40) terminal and GND.

Connector & Terminal/Specified voltage:
(B44) No. 18 — Body/10V min.

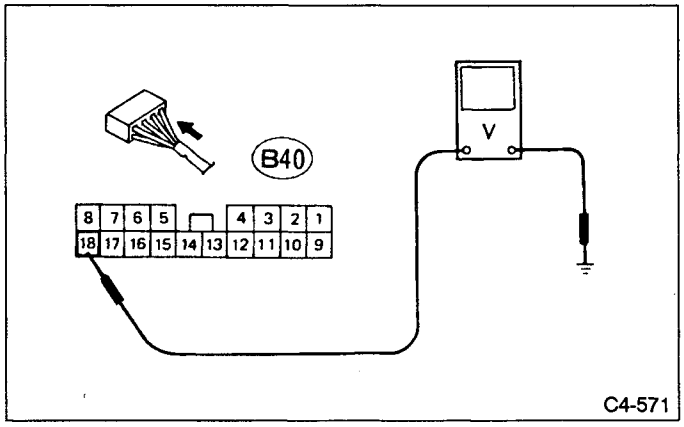

Fig. 185

O.K. → Go to (3).
NOT O.K. → Open circuit between connector (B40) and ECU terminals

3) Turn ignition switch "OFF."
4) Remove steering warning lamp (including combination meter).
5) Apply a voltage of 12 volts across warning lamp terminals to make sure it illuminates.
O.K. → Go to (6).
NOT O.K. → Faulty lamp
6) Disconnect connectors (i6) and (i7).
7) Check continuity between connector-(i1) and connector-(i7) terminals.

Connector & Terminal/Specified resistance:
(Pi1) No. 18 — (Pi7) No. 91/1 Ω max.

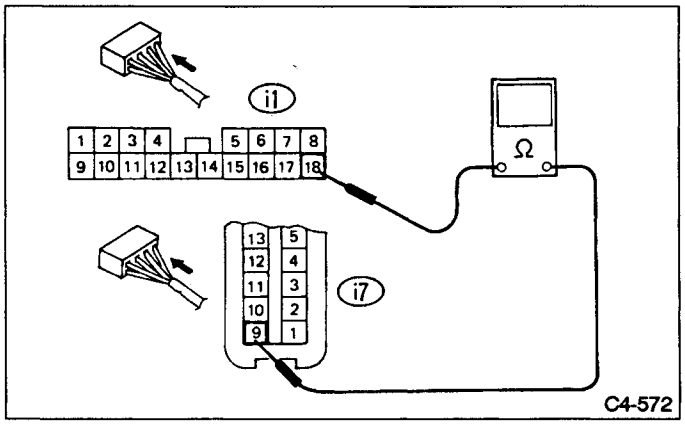

Fig. 186

8) Turn ignition switch "ON."
9) Measure voltage across connector-(i6) terminal and GND.

Connector & Terminal/Specified voltage:
(i6) No. 3 — Body/10V min.

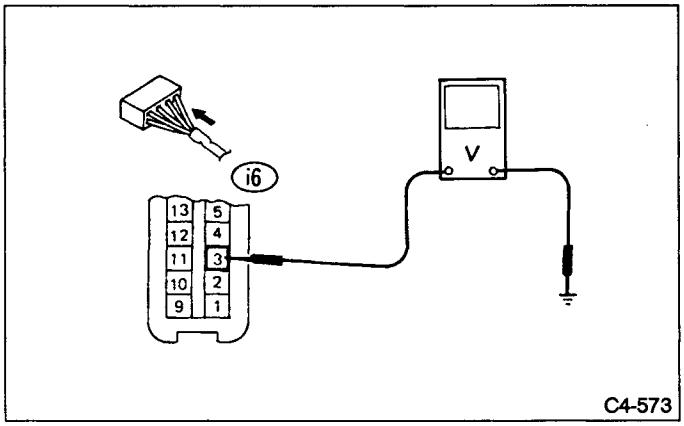

Fig. 187

O.K. → Faulty ECU
NOT O.K. → Open circuit between F/B (fuse block) and combination meter

C: TROUBLE CODE "1" — SHORTED SOLENOID

Diagnosis
- Faulty solenoid and wiring
- Faulty ECU

Symptom
- Steering wheel is too easy to turn (or does not become firm as vehicle speed increases).
- Warning lamp illuminates.

1. Check solenoid unit.	Not OK	Replace power steering assembly or valve.
OK ↓		
2. Check harness between ECU and solenoid.	Not OK	Repair or replace harness.
OK ↓		
3. Check harness between power supply and solenoid.	Not OK	Repair or replace harness.
OK ↓		
Check ECU connector terminals for poor contact.	Not OK	Repair ECU connector terminals.
OK ↓		
Replace ECU.		

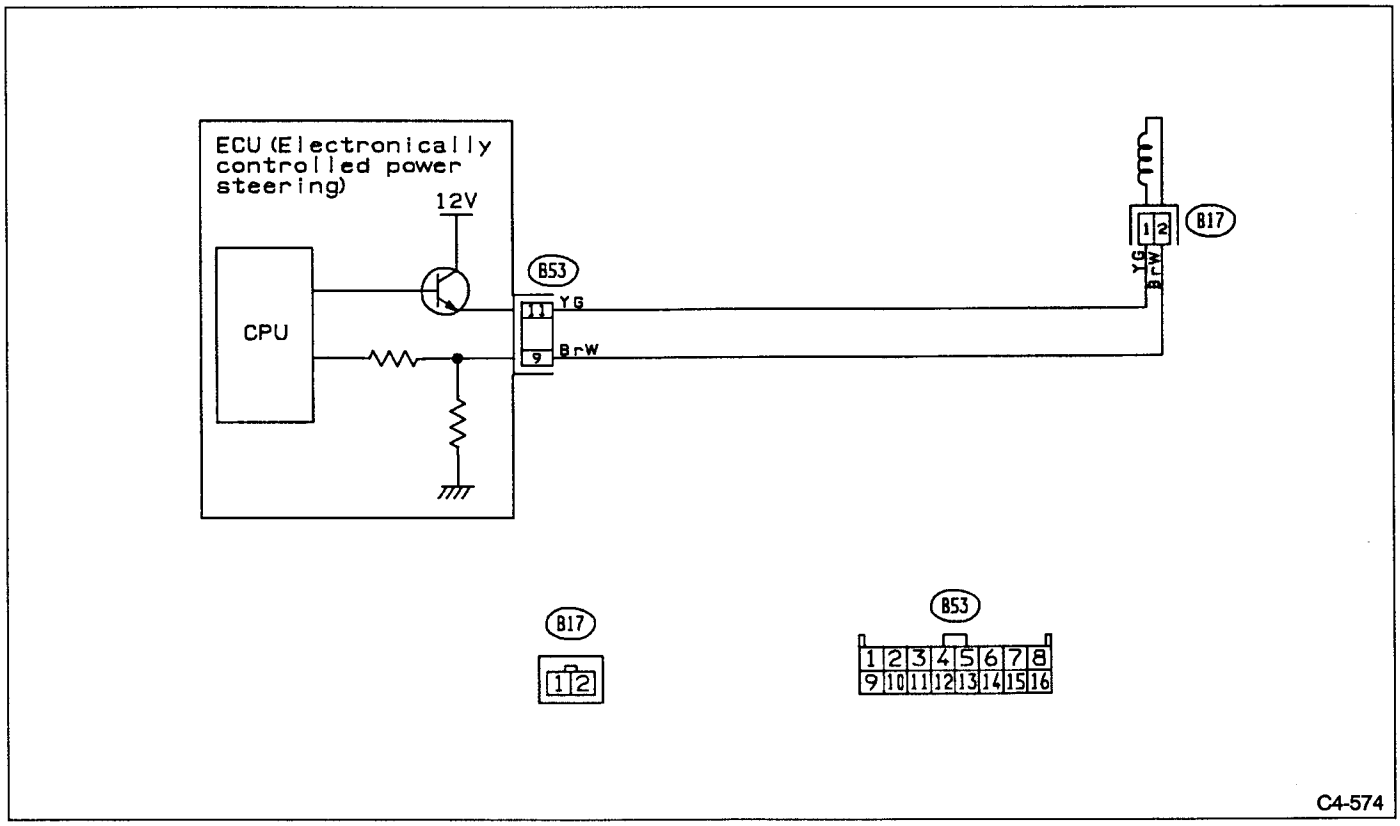

Fig. 188

1. CHECK SOLENOID UNIT

1) Turn ignition switch "OFF."
2) Disconnect connector (B17).
3) Measure resistance solenoid connector terminals (indicated below) using digital ohmmeter.

Connector & Terminal/Specified resistance:
(B17) No. 1 — No. 2/5 — 9 Ω

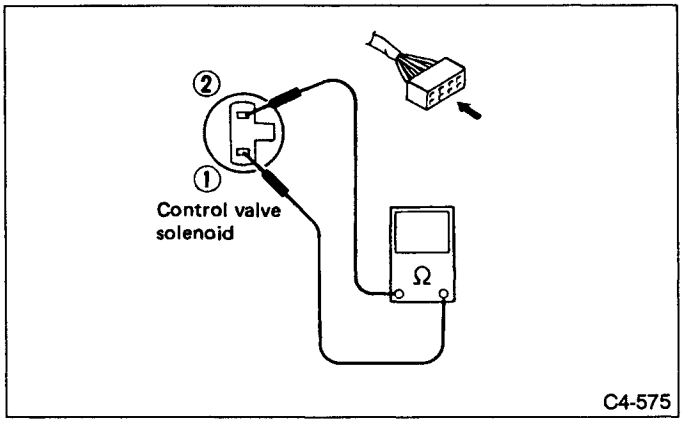

Fig. 189

2. CHECK HARNESS BETWEEN ECU AND SOLENOID

1) Disconnect ECU from connector.
2) Connect connector (B17).
3) Check resistance and continuity between connector-(B53) terminals indicated below.

Connector & Terminal/Specified resistance:
(B53) No. 9 — 11/5 — 9 Ω
(B53) No. 9 — Body/1 MΩ min.

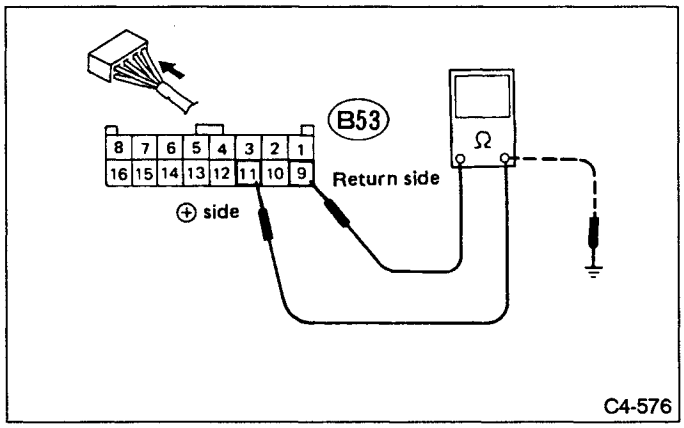

Fig. 190

3. CHECK HARNESS

1) Turn ignition switch "OFF."
2) Disconnect ECU from connector (B17).
3) Measure voltage across connector-(B17) and GND.

Connector & Terminal/Specified voltage:
(B17) No. 2 — Body/0 V

⟨For reference⟩
When battery voltage is produced, line between power supply harness and solenoid ⊕ terminal is shorted to set solenoid in "full assist" state.

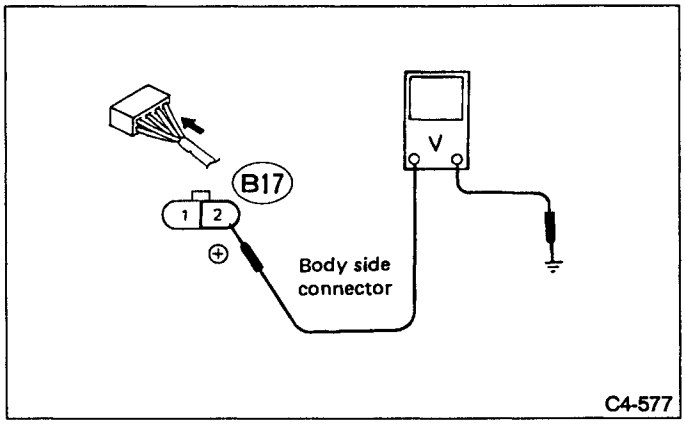

Fig. 191

D: TROUBLE CODE "2" — OPEN IN SOLENOID CIRCUIT

Diagnosis
- Faulty solenoid and wiring
- Faulty ECU

Symptom
- Effort is required to operate steering wheel.
- Warning lamp illuminates.

1. Check solenoid unit.
   - Not OK → Replace power steering or valve.
   - OK ↓
2. Check harness between ECU and solenoid.
   - Not OK → Repair or replace harness.
   - OK ↓

Check ECU connector terminals for poor contact.
- Not OK → Repair ECU connector terminals.
- OK ↓

Replace ECU.

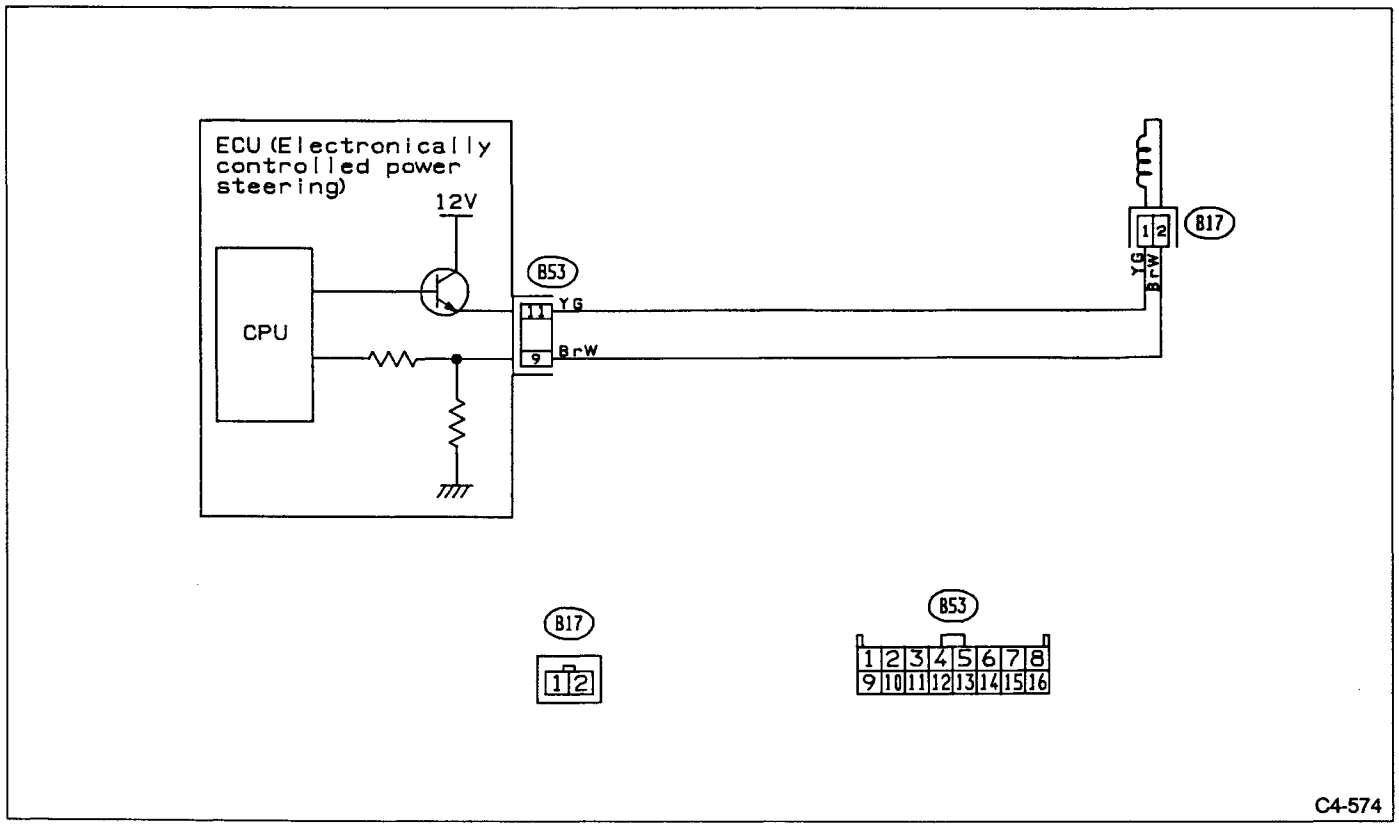

Fig. 192

1. CHECK SOLENOID UNIT

1) Turn ignition switch "OFF."
2) Disconnect connector (B17).
3) Measure resistance between solenoid terminals indicated below.

Connector & Terminal/Specified resistance:
(B17) No. 1 — No. 2/5 — 9 Ω

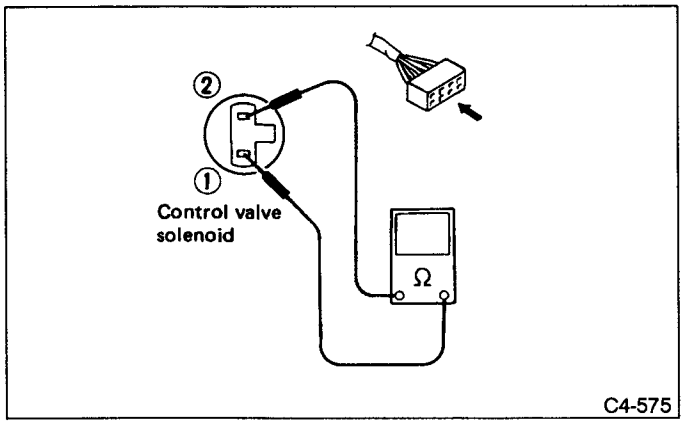

Fig. 193

2. CHECK HARNESS BETWEEN ECU AND SOLENOID

1) Disconnect ECU from connector.
2) Connect connector (B17).
3) Measure resistance between connector-(B53) terminals, and check continuity between connector-(B53) terminal and GND, indicated below.

Connector & Terminal/Specified resistance:
(B53) No. 9 — 11/5 — 9 Ω
(B53) No. 9 — Body/1 MΩ min.

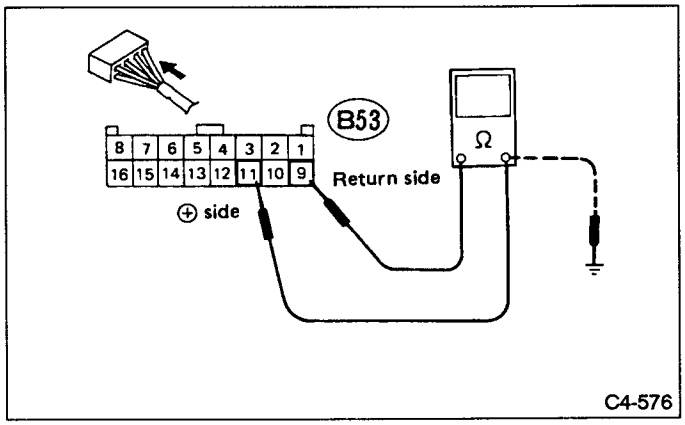

Fig. 194

E: TROUBLE CODE "3" — FAULTY VEHICLE SPEED SENSOR 2

Diagnosis
- Faulty speedometer or speedometer cable
- Faulty vehicle speed sensor 2 and wiring
- Faulty ECU

Symptom
Steering wheel is too easy to turn during high-speed operation.

Check speedometer operation.
- Not OK → Check speedometer cable.
- OK ↓

1. Check vehicle speed sensor 2 input signal at ECU.
- Not OK → 2. Check vehicle speed sensor 2 and harness.
- OK ↓

Check ECU connector terminals.
- Not OK → Repair ECU connector terminals.
- OK ↓

Replace ECU.

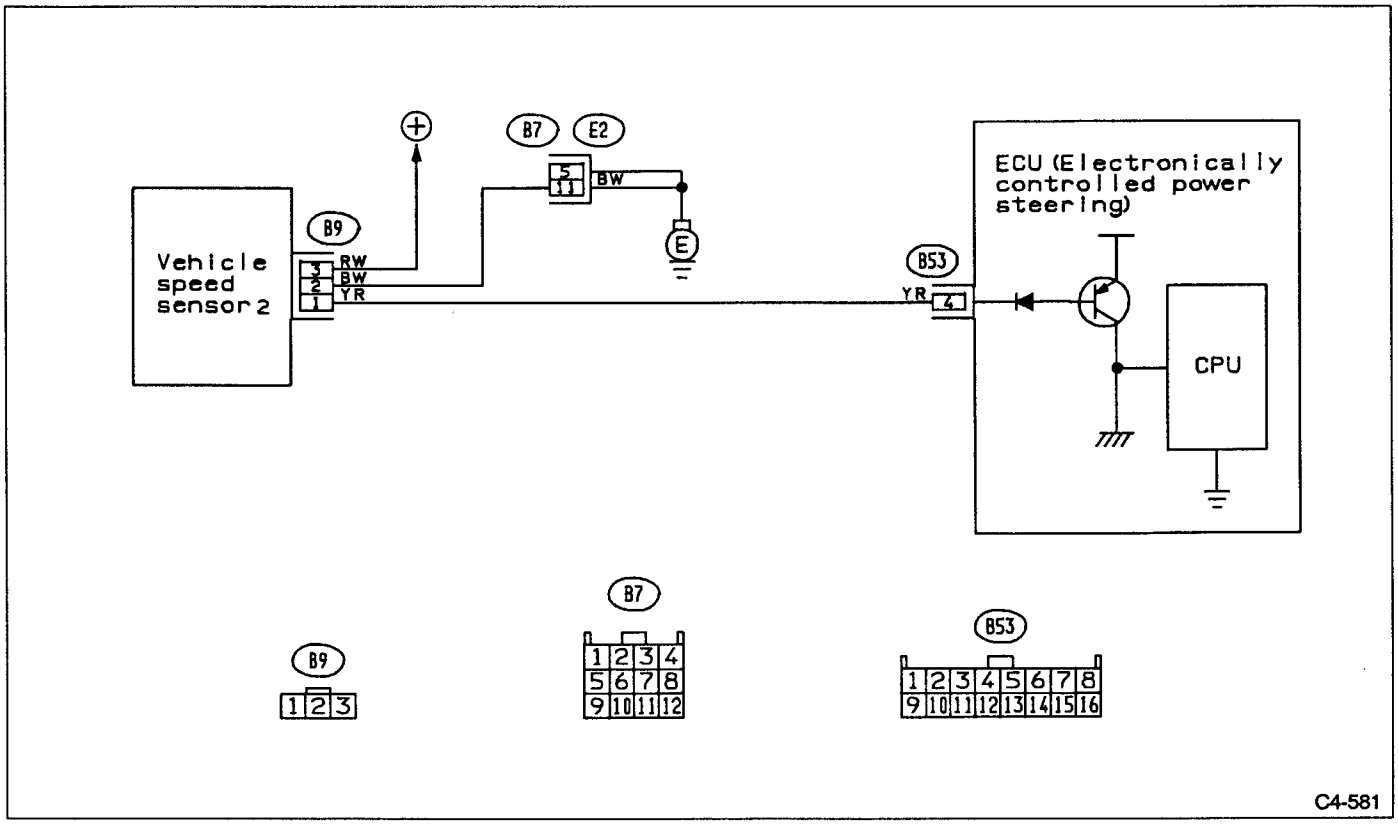

Fig. 195

1. CHECK VEHICLE SPEED SENSOR 2 INPUT SIGNAL AT ECU

1) Connect oscilloscope between ECU and GND. (DC COUP, 0.5V/Div, 1s/Div, x 10 probe)
2) Raise vehicle using jack and slowly rotate wheels.
3) Measure voltage across connector-(B53) terminal and GND indicated below.

Connector & Terminal/Specified voltage:
(B53) No. 4 — Body/0 ←→ 5V

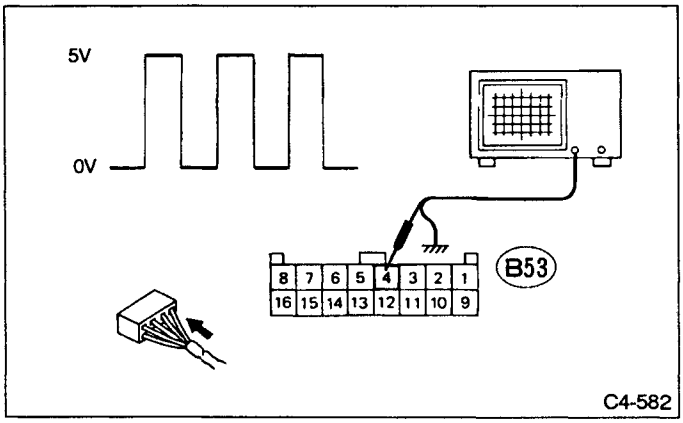

Fig. 196

2. CHECK VEHICLE SPEED SENSOR 2 AND HARNESS

1) Check harness routing outside instrument panel.
Measure resistance between connector-(B9) and ECU connector-(B53) terminals, and ECU connector-(B53) terminal and GND, indicated below.

Connector & Terminal/Specified resistance:
(B9) No. 1 — (B53) No. 4/1 Ω max.
(B53) No. 4 — Body/1 MΩ min.

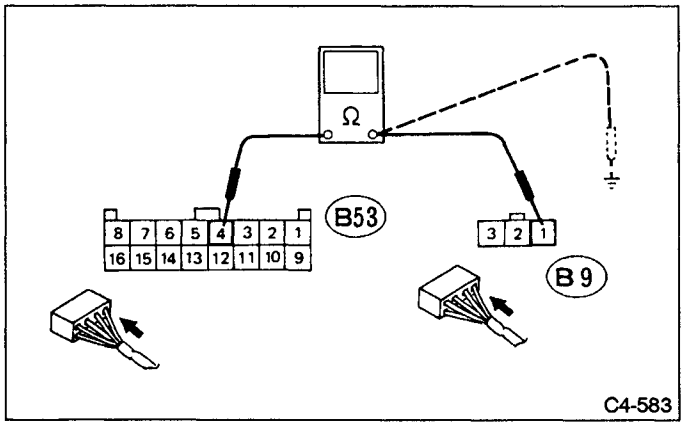

Fig. 197

2) Check harness routing inside instrument panel.
(1) Extract combination meter assembly and instrument panel.
(2) Disconnect connector (B9).
(3) Measure resistance between connector-(B9) and connector-(B7) terminals, and connector-(B7) terminal and GND, indicated below.

Connector & Terminal/Specified resistance:
(B9) No. 2 — (B7) No. 22/1 Ω max.
(B7) No. 11 — Body/1 MΩ min.

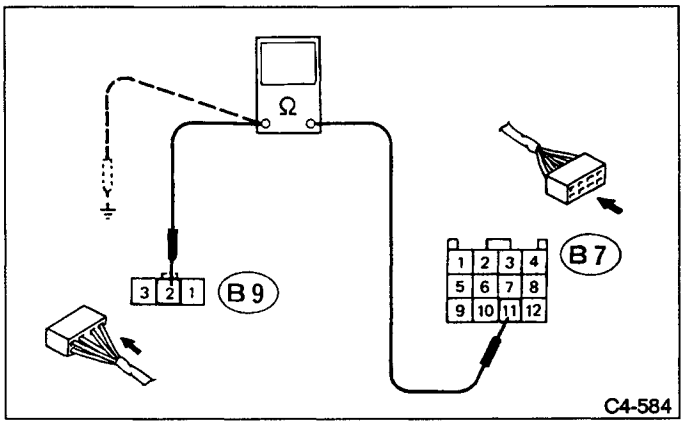

Fig. 198

(4) Check continuity between connector-(B9) and GND.

Connector & Terminal/Specified resistance:
(B9) No. 2 — Body/1 MΩ max.

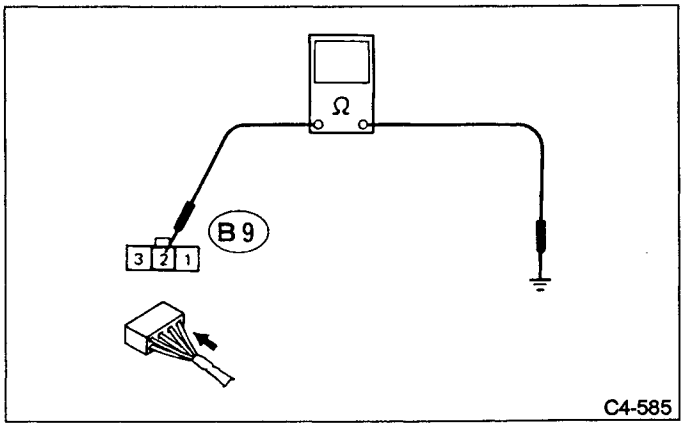

Fig. 199

F: TROUBLE CODE "4" — FAULTY BACK-UP POWER SUPPLY

Diagnosis
- Faulty back-up power supply harness
- Faulty ECU

Symptom
Trouble contents are not retained in memory.

1. Check input voltage at back-up terminals.
   - Not OK → 2. Check and repair back-up power supply harness or connector as necessary.
   - OK ↓
2. Check ECU connector terminals.
   - Not OK → Repair ECU connector terminals.
   - OK ↓
3. Replace ECU.

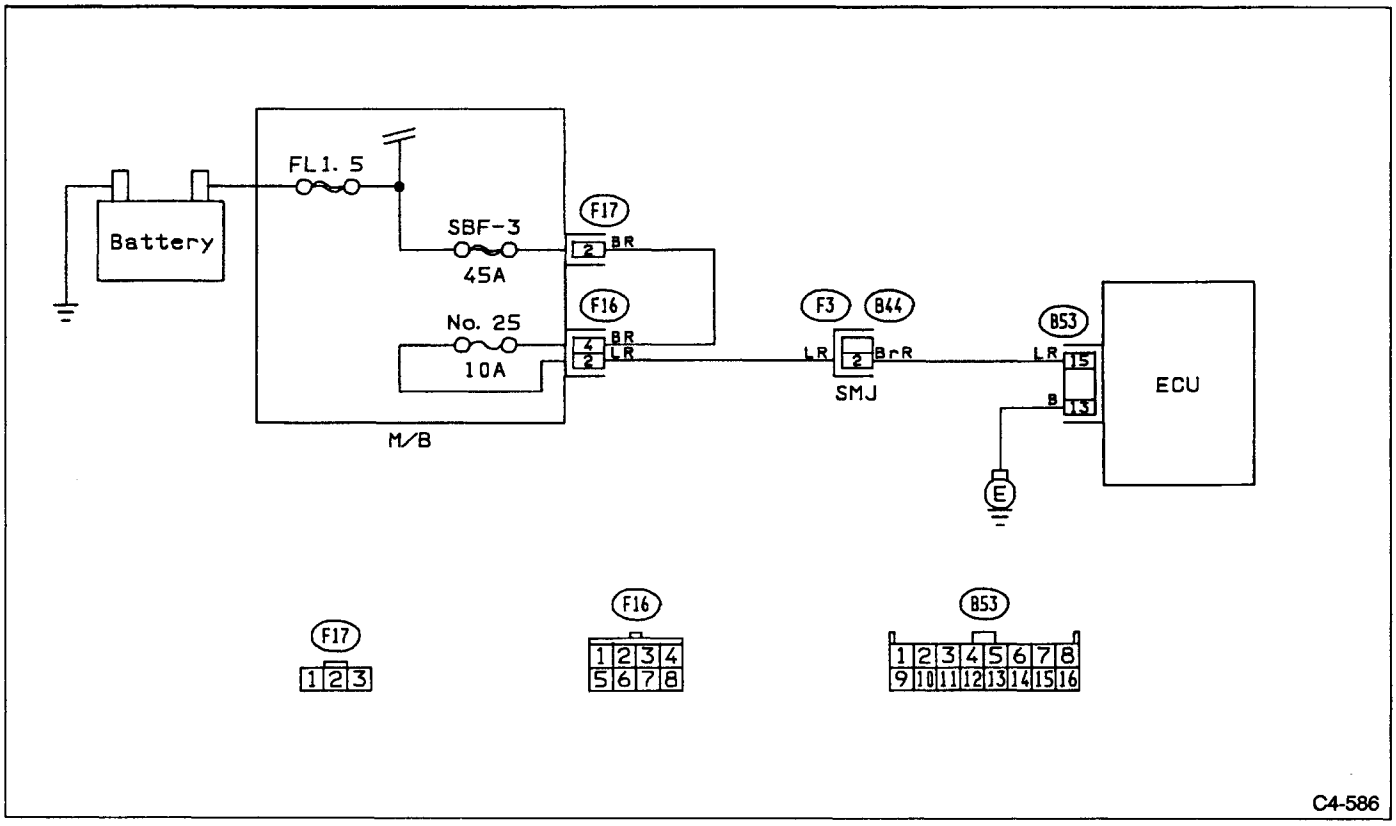

Fig. 200

1. CHECK ECU BACK-UP POWER SUPPLY

1) Disconnect connectors from ECU.
2) Measure voltage across ECU connector and GND.

Connector & Terminal/Specified voltage:
(B53) No. 15 — Body/10V min.

If fuse No. 25 is blown, it can be identified by shorted circuit between F/B (fuse block) and ECU.

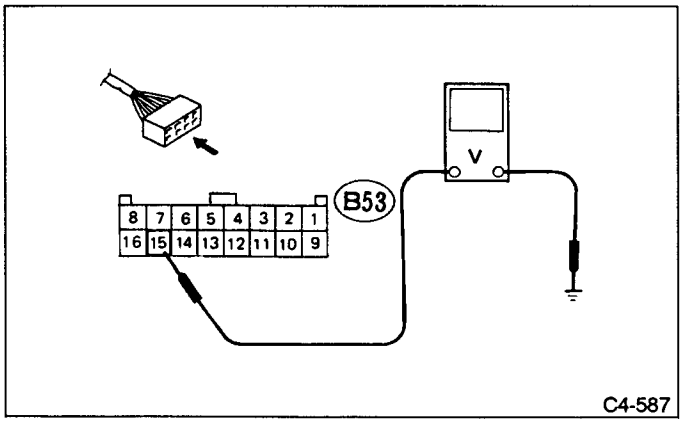

Fig. 201

2. CHECK AND REPAIR BACK-UP POWER SUPPLY HARNESS

1) Measure voltage across connector-(F16) terminal and GND.

Connector & Terminal/Specified voltage:
(F16) No. 2 — Body/10V min.

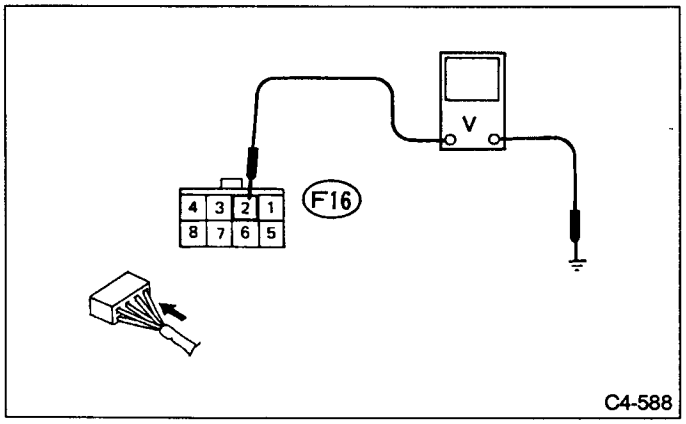

Fig. 202

O.K. → Open circuit between M/B and ECU (including SMJ)
NOT O.K. → Open circuit between connectors (F17) and (F16)

G: TROUBLE CODE "5" — FAULTY ENGINE SPEED SIGNAL

Diagnosis
- Faulty MPFI ECU or harness
- Faulty ECU

Symptom
Engine operation is controlled only by vehicle speed sensor 2.

1. Check engine rpm input signal at ECU.
   - Not OK → 2. Check and repair MPFI and engine rpm signal harness.
   - OK ↓
2. Check ECU connector terminals.
   - Not OK → Repair ECU connector terminals.
   - OK ↓
3. Replace ECU.

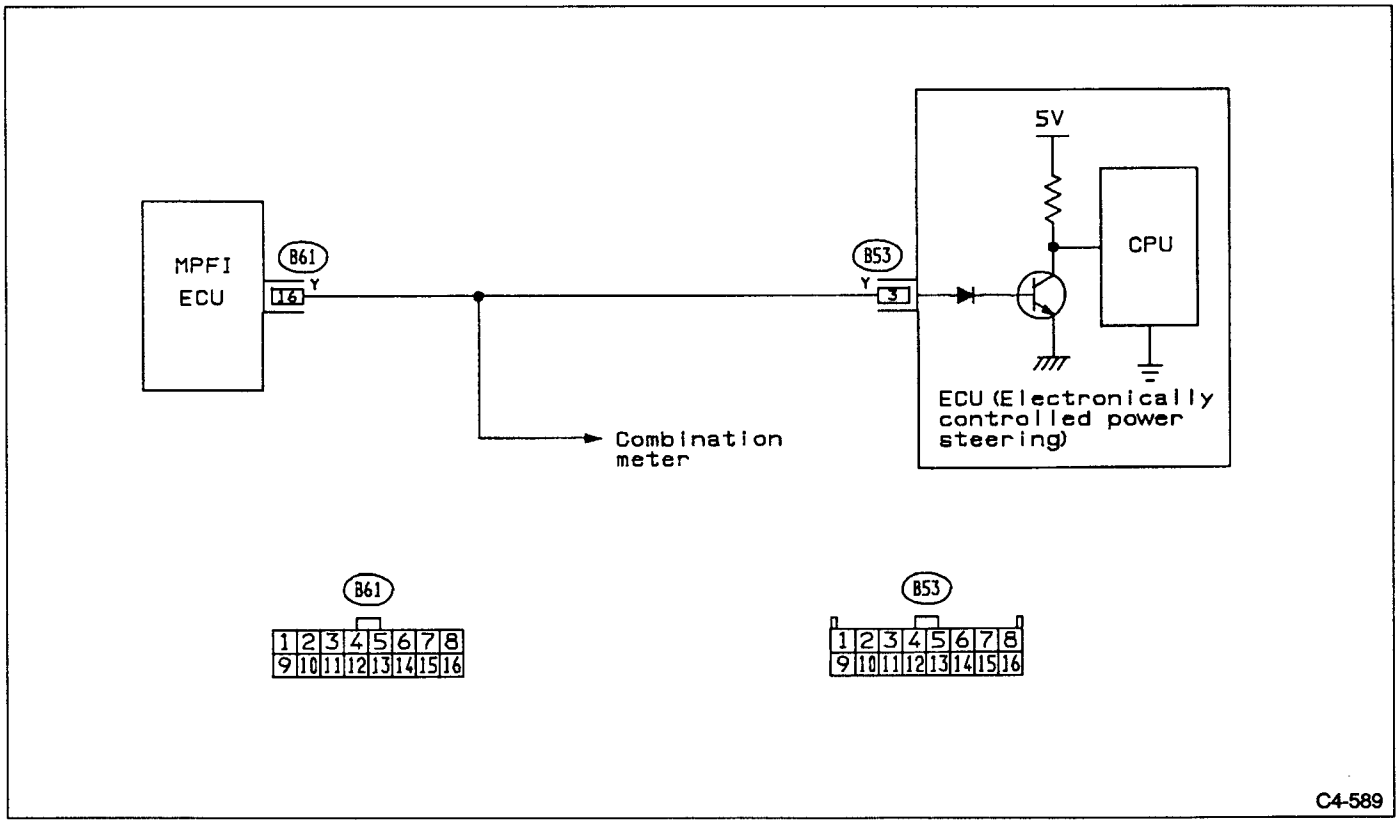

Fig. 203

1. CHECK ENGINE SPEED INPUT SIGNAL AT ECU

1) Connect oscilloscope between ECU and GND. (DC COUP, 0.5V/Piv, 5 ms/Div, x 10 probes)
2) Turn ignition switch "ON."
3) Start engine.
4) Observe waveform pattern shown on oscilloscope screen.

Connector & Terminal/Specified voltage:
(B53) No. 3 — Body/0 ←→ 10V

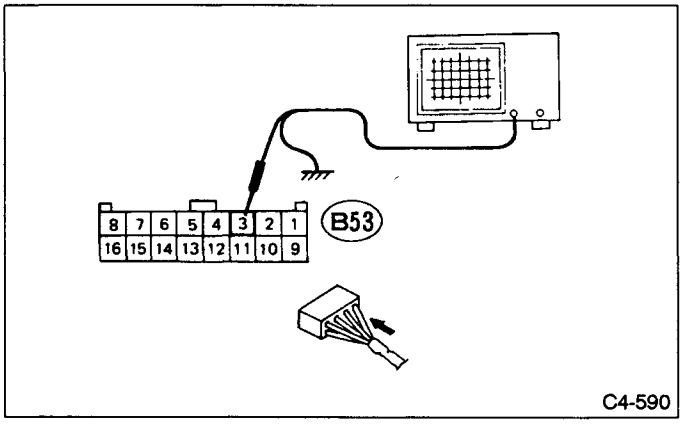

Fig. 204

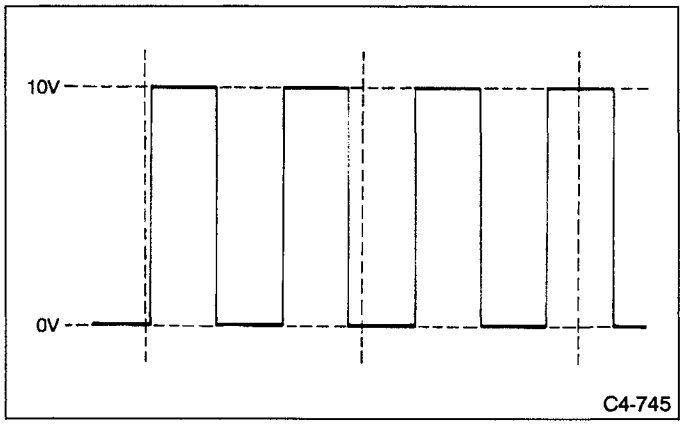

Fig. 205

2. CHECK AND REPAIR MPFI AND ENGINE SPEED SIGNAL HARNESSES

1) Turn ignition switch "OFF."
2) Disconnect ECU from connectors.
3) Disconnect MPFI ECU from connectors.
4) Measure resistance between ECU connector and MPFI ECU connector terminals indicated below.

Connector & Terminal/Specified resistance:
(B53) No. 3 — (B61) No. 16/1 Ω max.
(B53) No. 3 — Body/1 MΩ min.

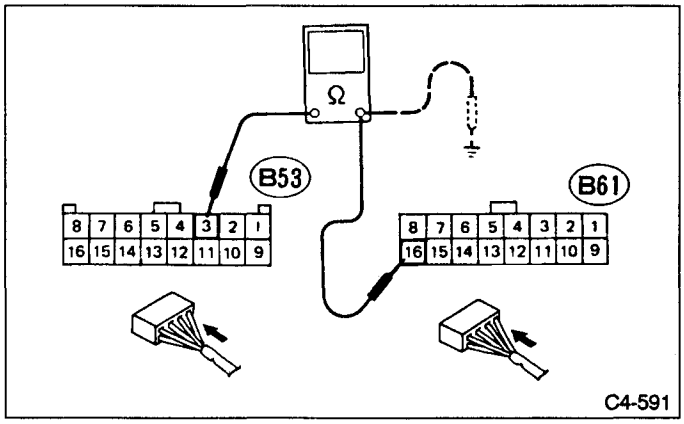

Fig. 206

SUBARU

SVX

1992

Precaution for Supplemental Restraint System "Airbag"
The Supplemental Restraint System "Airbag" helps to reduce the risk or severity of injury to the driver in a frontal collision.
The Supplemental Restraint System consists of an airbag module (located in the center of the steering wheel), sensors, a control unit, warning light, wiring harness and spiral cable.
Information necessary to service the safety is included in the "5-5. SUPPLEMENTAL RESTRAINT SYSTEM" of this Service Manual.
WARNING:
- To avoid rendering the Airbag system inoperative, which could lead to personal injury or death in the event of a severe frontal collision, all maintenance must be performed by an authorized SUBARU dealer.
- Improper maintenance, including incorrect removal and installation of the Airbag system, can lead to personal injury caused by unintentional activation of the Airbag system.
- All Airbag system electrical wiring harnesses and connectors are covered with yellow outer insulation. Do not use electrical test equipment on any circuit related to the Supplemental Restraint System "Airbag".

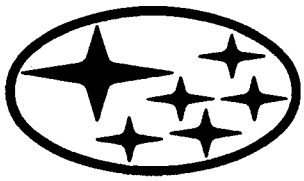

Page

M MECHANISM AND FUNCTION 2
1. Disc Brake 2
2. Master Cylinder 4
3. Brake Booster 5
4. Proportioning Valve 9
5. Anti-lock Brake System 12
6. Parking Brake 21
S SPECIFICATIONS AND SERVICE DATA 23
C COMPONENT PARTS 26
W SERVICE PROCEDURE 32
1. Front Disc Brake 32
2. Rear Disc Brake 37
3. Parking Brake 42
4. Parking Brake Cable 46
5. Parking Brake Lever 48
6. Master Cylinder 49
7. Brake Booster 52
8. Brake Hose and Pipe AIRBAG 56
9. Air Bleeding 57
10. Brake Fluid Replacement 58
11. Proportioning Valve 59
12. ABS Sensor 61
13. Hydraulic Unit for ABS System 64
14. Electronic Control Unit for ABS System 67
T TROUBLESHOOTING AIRBAG 68
1. Entire Brake System 68
2. Troubleshooting for ABS 70
3. ABS Control Unit I/O Signal 73
4. Diagram of ABS 76
5. Troubleshooting Chart with Trouble Code 78
6. General Troubleshooting Chart 92

M MECHANISM AND FUNCTION

1. Disc Brake

A: OUTLINE

The front brakes are 2-pot piston, 16" ventilated discs which feature high heat dissipation and superb braking stability.
The rear brakes are 15" disc which feature heat dissipation and superb braking stability.
In addition, the disc brake quickly restores the original braking performance even when wet.
The brake disc, which is externally mounted, is secured together with the disc wheel using the hub bolts, to facilitate removal or installation when servicing the vehicle.
The outer brake pad is provided with an indicator which indicates pad wear limits.

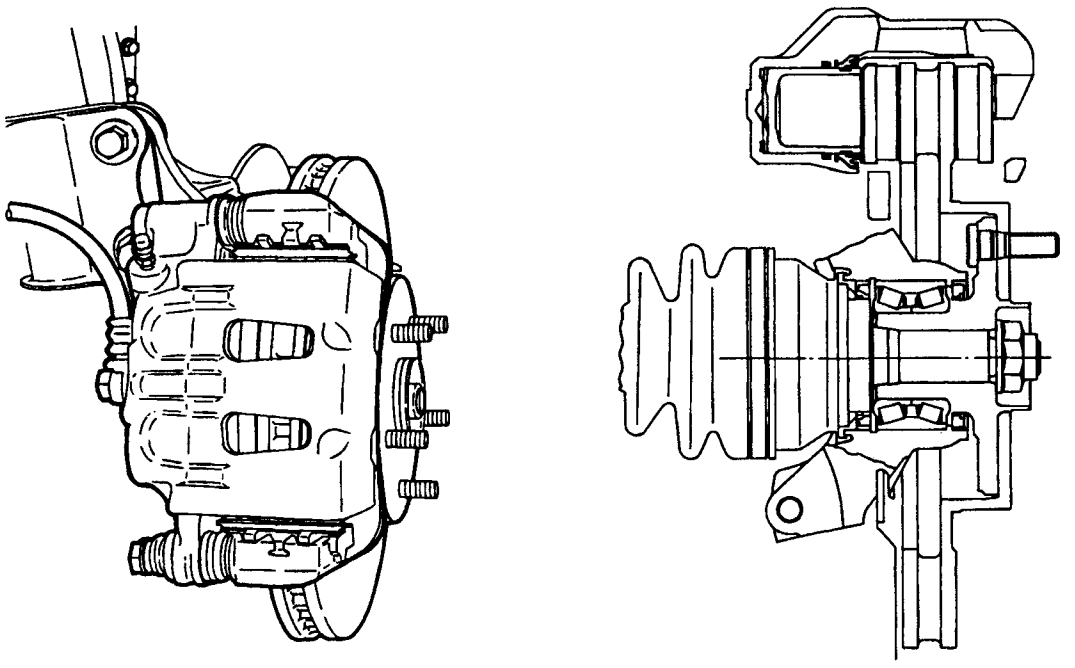

Fig. 1

B: DESCRIPTION OF BRAKE PADS

1. PAD WEAR INDICATOR

A wear indicator is provided on the outer disc brake pads. When the pad wears down to 1.5 mm (0.059 in) the tip of the wear indicator comes into contact with the disc rotor, and makes a squeaking sound as the wheel rotates.
This indicates that the pad needs to be replaced.

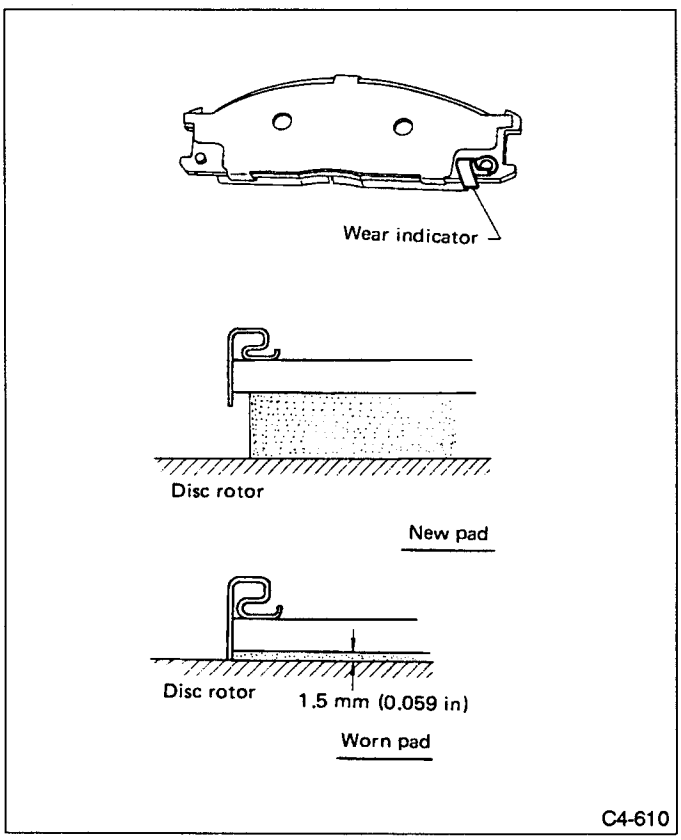

Fig. 2

2. FRICTIONAL MATERIAL OF BRAKE PADS

Frictional brake pad materials do not contain asbestos and are not harmful.

2. Master Cylinder

A: FUNCTION

1) A sealed reservoir tank is adopted to extend the service life of the brake fluid.
2) The fluid level indicator is built into the reservoir tank for easy and correct monitoring of the fluid level when adding brake fluid.

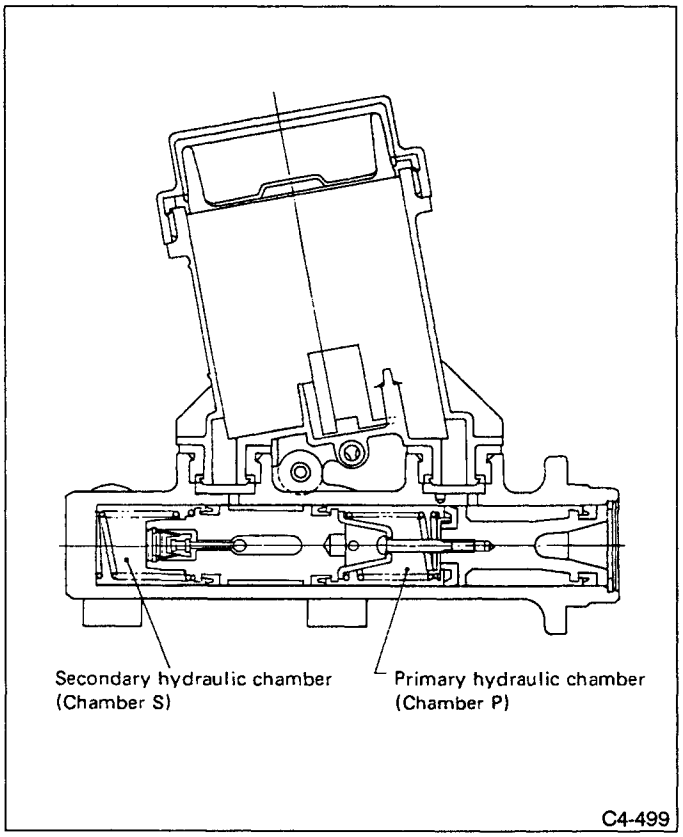

Fig. 3

1. BRAKE FLUID LEVEL INDICATOR

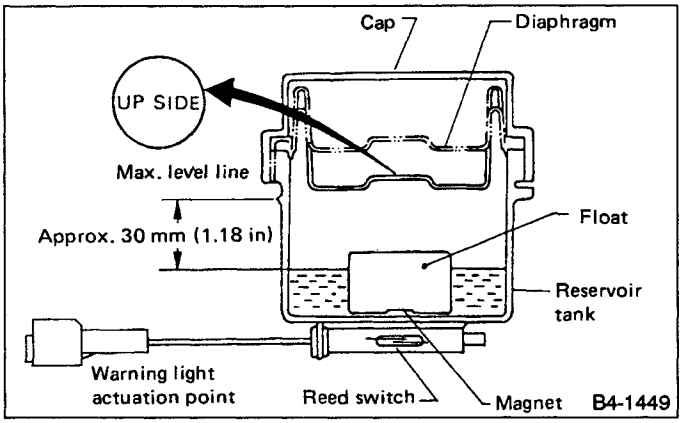

Fig. 4

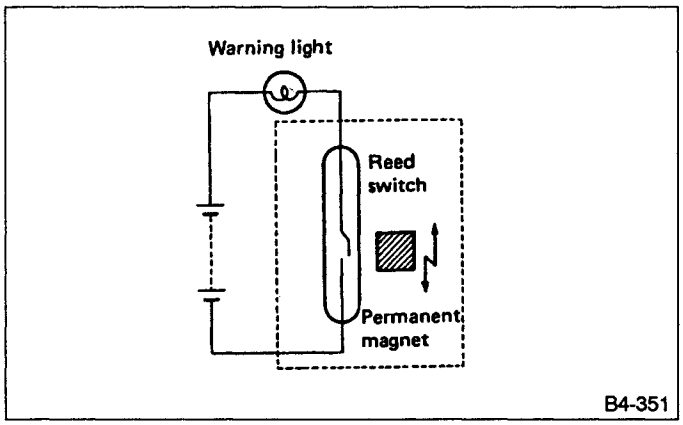

Fig. 5

Under normal conditions, the float remains above the reed switch, and the magnetic force from the permanent magnet in the float is unable to activate it. Therefore, the circuit is kept open, and the warning light remains off. The float lowers as the brake fluid level lowers, and if it falls below the specified fluid level [approx. 30 mm (1.18 in) below the MAX level line], the reed switch will be activated by the permanent magnet, closing the circuit. In this event, the warning light comes on and warns the driver of a reduction of the brake fluid level.
However, the lamp may be lighted momentarily even when the brake fluid surface is still above the specified level, if the vehicle body tilts or swings largely.

3. Brake Booster

A: GENERAL

The brake booster is a tandem type that utilizes two small diameter diaphragms to provide high brake boosting effects.

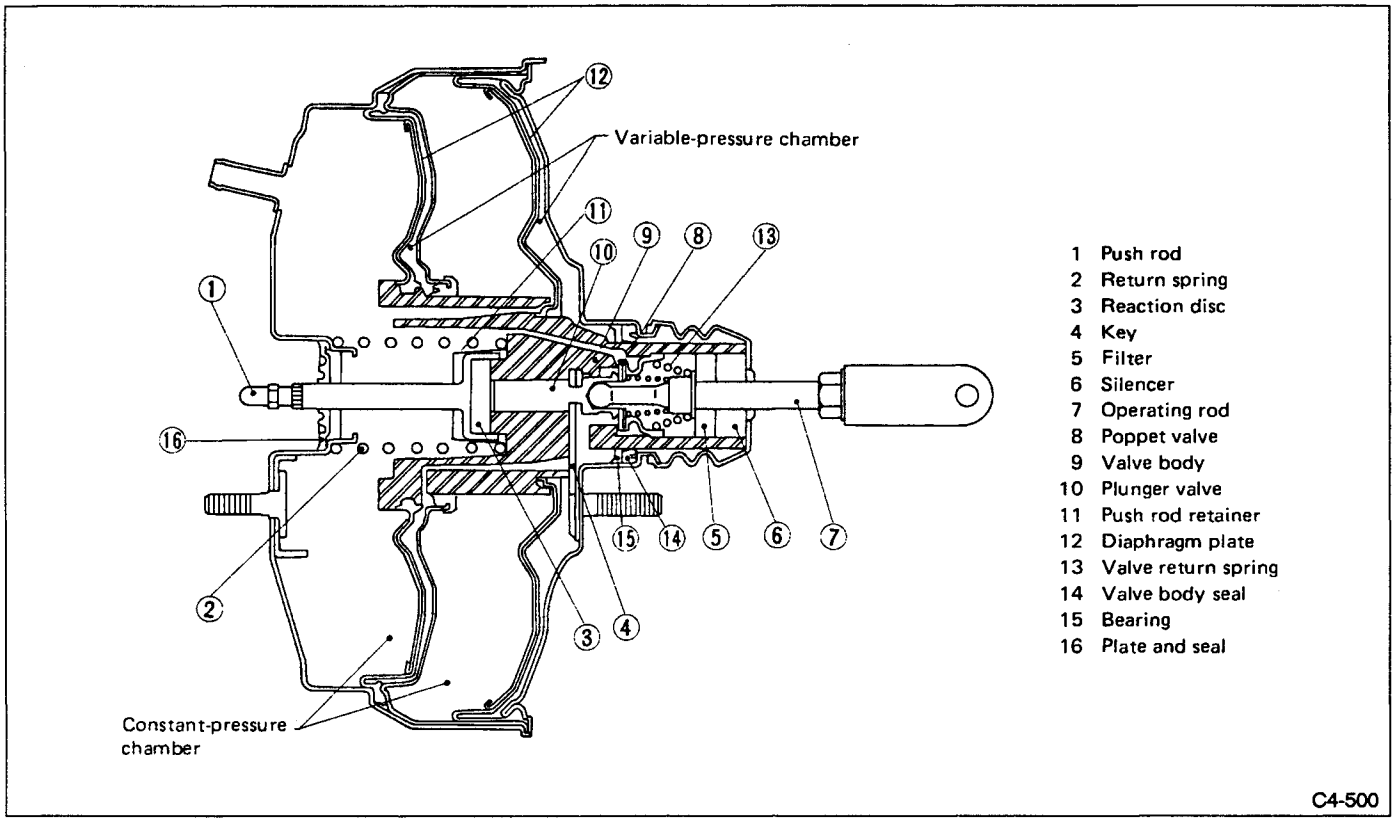

Fig. 6

B: OPERATION

1. BRAKE BOOSTER "OFF"

The plunger valve comes in contact with the poppet valve so that atmospheric air passing through the filter and silencer is shut out by the atmospheric valve (of the poppet valve).
The plunger valve is moved to the key at the right by the return spring so that the poppet valve is held at the right. Since the vacuum valve of the valve body and the poppet valve are kept away from each other, passage A is linked with passage B and the constant-pressure chamber is also linked with the variable-pressure chamber. At this point, pressure differential does not occur between the two chambers; the diaphragm plate is moved back to the right by return spring tension.

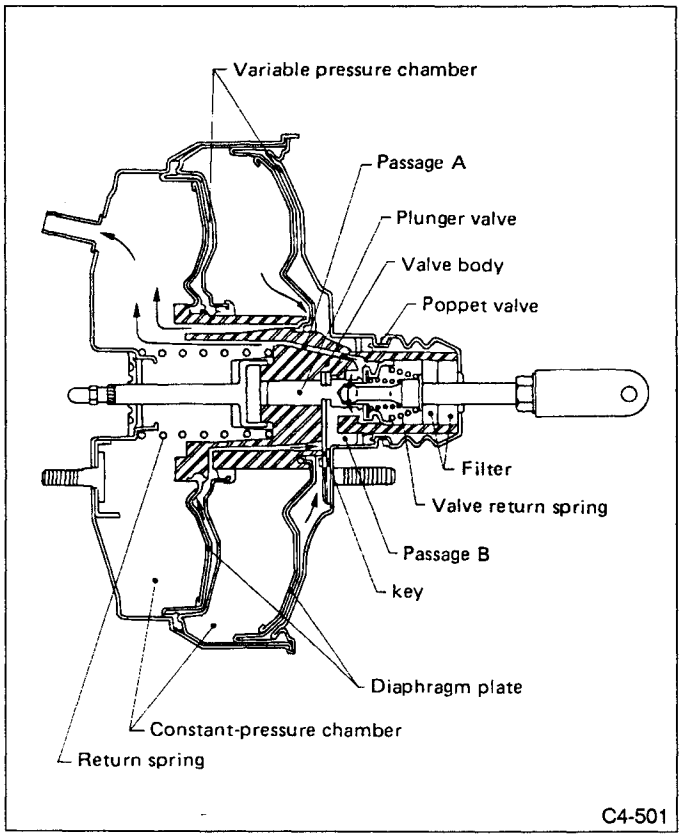

Fig. 7

2. BRAKE BOOSTER "ON"

When the brake pedal is depressed, the operating rod pushes the plunger valve so that the poppet valve comes in contact with the vacuum valve of the valve body. This shuts off the circuit between passages A and B, as well as the circuit between the constant- and variable-pressure chambers.
Further movement of the plunger valve moves the atmospheric valve away from it so that atmospheric air is directed to the variable-pressure chamber via passage B. This produces a pressure differential between the constant- and variable-pressure chambers.
As a result, the diaphragm and its plate are moved to the left as a single unit.
The power applied to the diaphragm plate by the pressure differential is then transmitted to the reaction disc via a hub, as well as to the push rod, and produces a booster output.

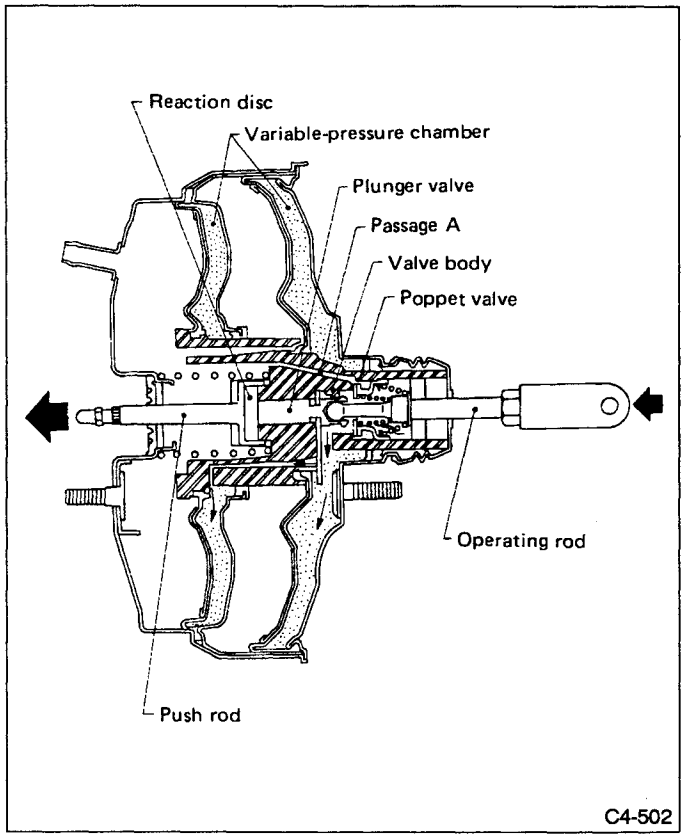

Fig. 8

3. BRAKE BOOSTER UNDER MEDIUM LOAD

The poppet valve comes in contact with the plunger valve and valve body when a force pushes the center of the reaction disc (at the contact portion of the plunger valve) via the operating rod and plunger valve. This occurs when brake pedal depression is balanced with a force pushing the plunger valve (via the push rod and reaction disc) due to the reaction force of oil pressure delivered from the master cylinder.

As a result, pressure differential is maintained between the constant-pressure chamber and variable-pressure chamber unless the pedal depression force is changed.

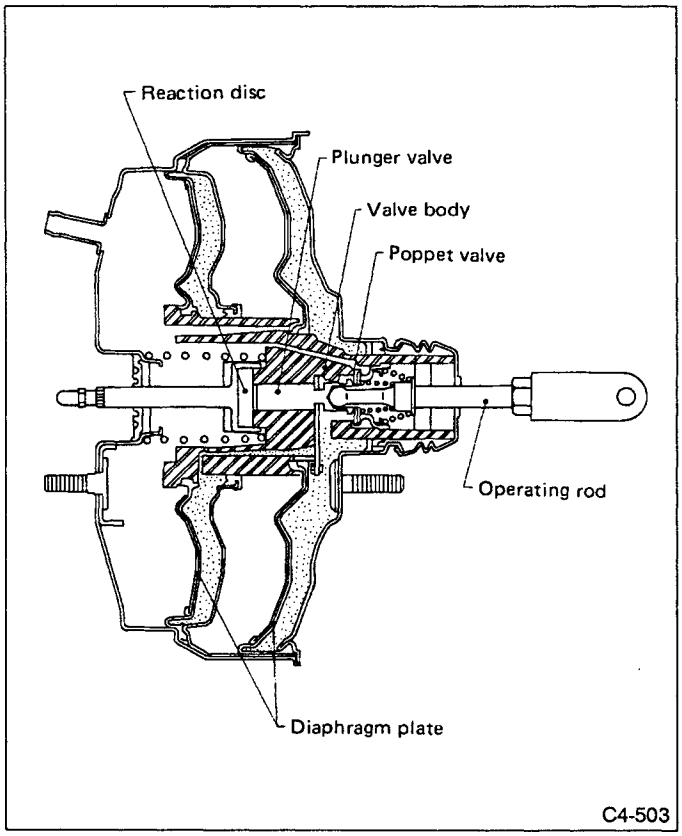

Fig. 9

4. BRAKE BOOSTER UNDER FULL-LOAD CONDITIONS

When pedal depression increases to such an extent that the variable-pressure chamber is maintained at atmospheric pressure, the maximum pressure differential acts on the diaphragm plate.

Further pedal depression does not act on the diaphragm plate but rather on the push rod.

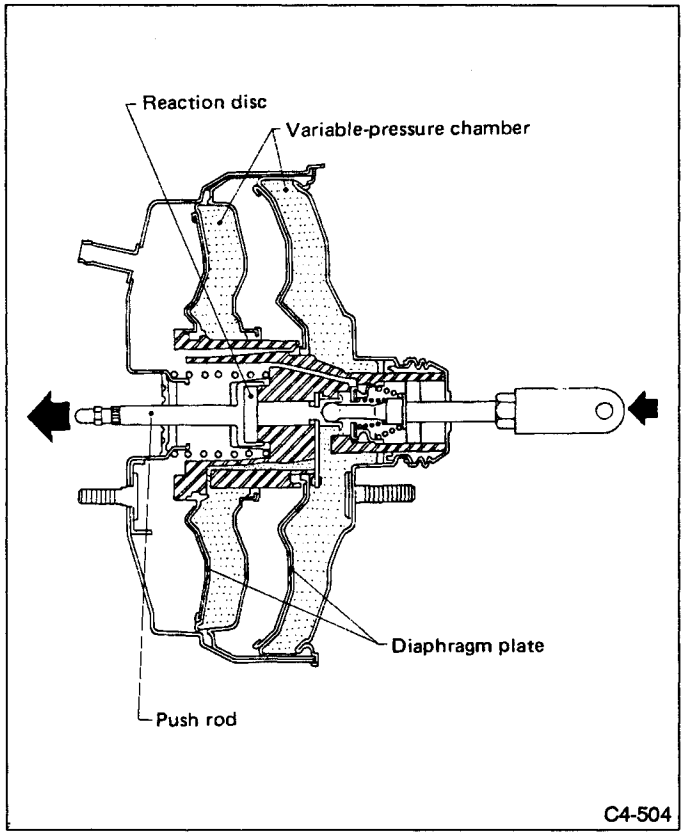

Fig. 10

5. BRAKE BOOSTER RELEASED

When the force of brake pedal depression decreases, the forces acting on the reaction disc and plunger valve are unbalanced, so that the plunger valve is moved to the right.

The plunger valve then comes in contact with the atmospheric valve of the poppet valve to shut off the passage between the variable-pressure chamber and atmospheric air and, at the same time, moves the poppet valve back. Movement of the poppet valve opens the vacuum valve so that passages A and B are linked with each other.

Air from the variable-pressure chamber is then delivered to the constant-pressure chamber. This eliminates any pressure differential between the two chambers. As a result, the diaphragm plate is pushed back to the "release" position by the return spring.

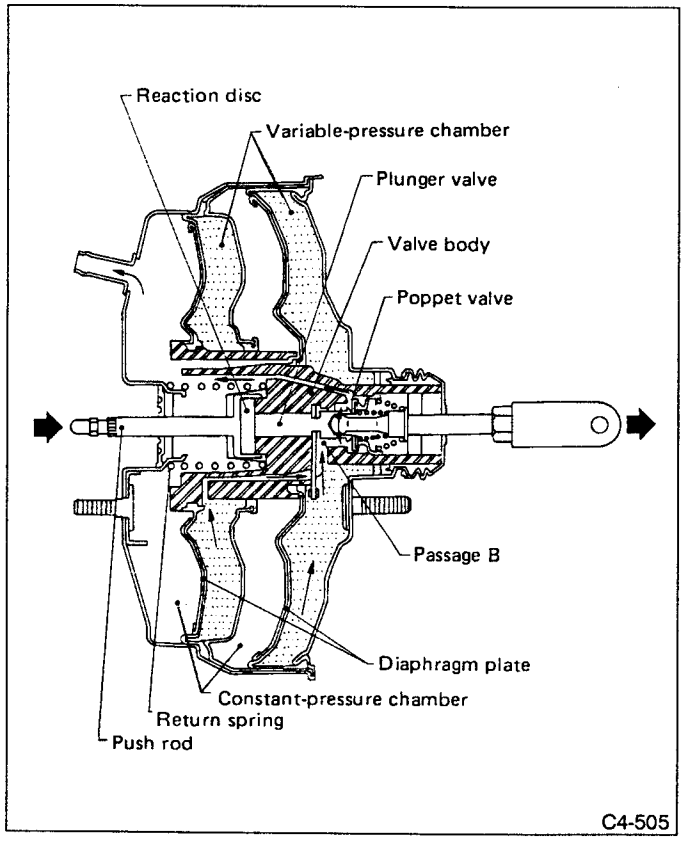

Fig. 11

6. BRAKE BOOSTER WITH NO VACUUM

When the brake pedal is depressed while the constant- and variable-pressure chambers are held at atmospheric pressure, the operating rod moves to the left. This moves the plunger valve which in turn pushes the hub via the key.

The reaction disc (which is built into the hub) then moves the master cylinder piston via the push rod. At this point a boosting force does not occur, but oil pressure is produced by movement of the master cylinder piston. As a result, the system serves as a hydraulic brake.

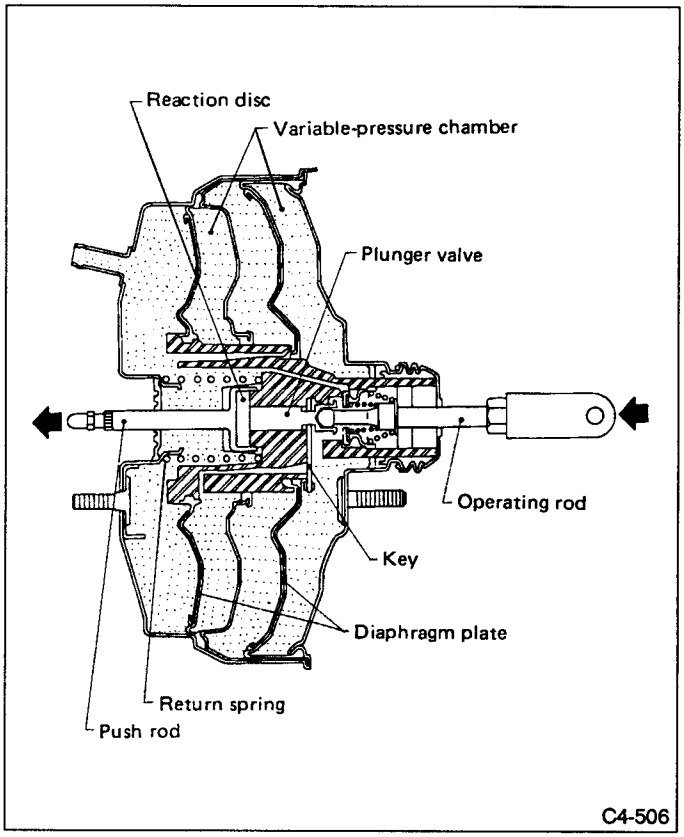

Fig. 12

4. Proportioning Valve

A: GENERAL

The proportioning valve for dual piping systems is adopted for controlling the braking force.

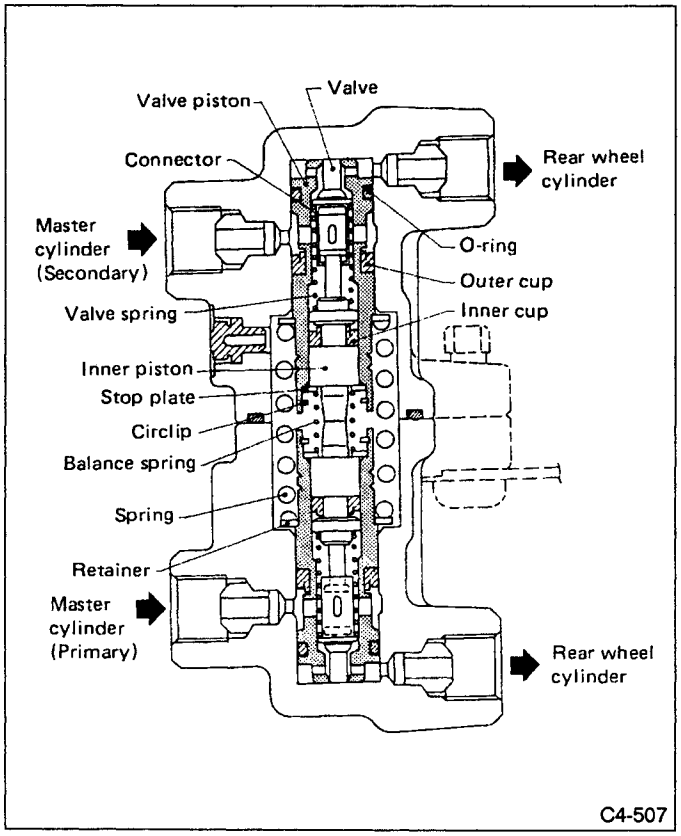

Fig. 13

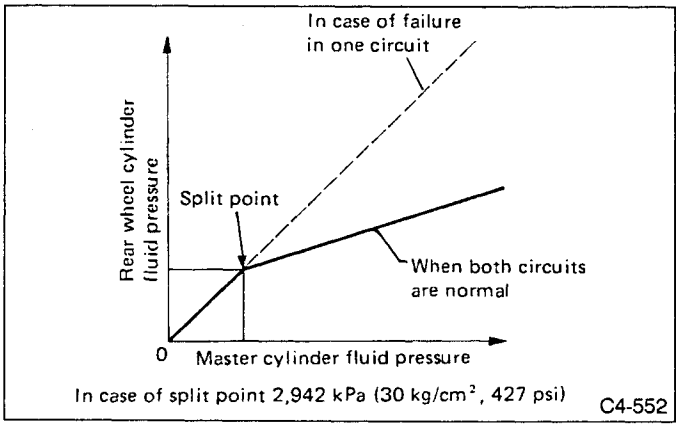

Fig. 14

B: OPERATION

1. OPERATION UNDER NORMAL CONDITIONS

1) Below the "split" point, the valve piston is held open by spring tension so that it is contact with the cylinder body. Under this condition, brake fluid pressure in the master cylinder is maintained equal to fluid pressure in the rear wheel cylinders.

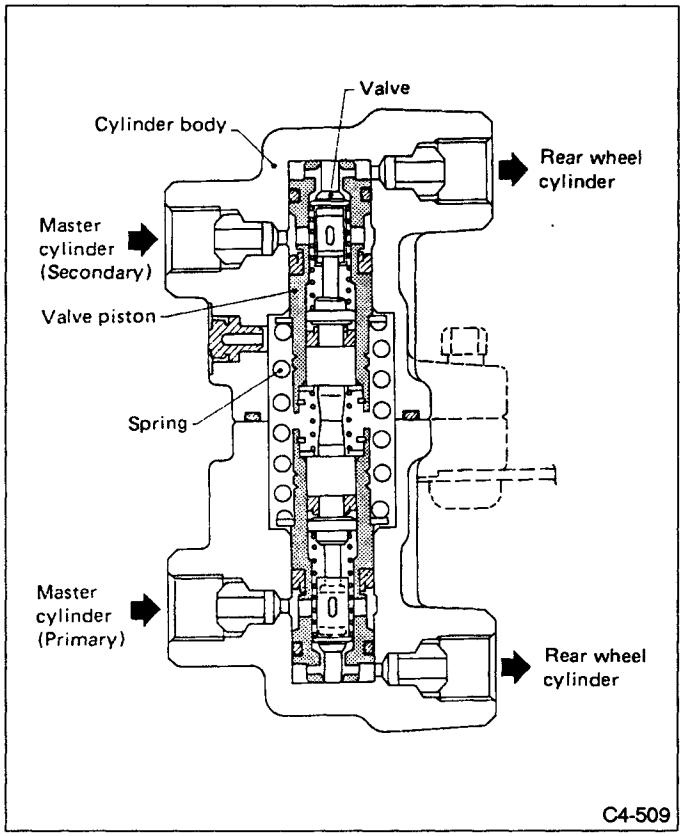

Fig. 15

2) As master cylinder fluid pressure increases, it overcomes spring tension so that the valve piston moves to the center of the master cylinder. This closes the valve to control the fluid pressure applied to the rear wheel cylinder. This is the split-point fluid pressure.

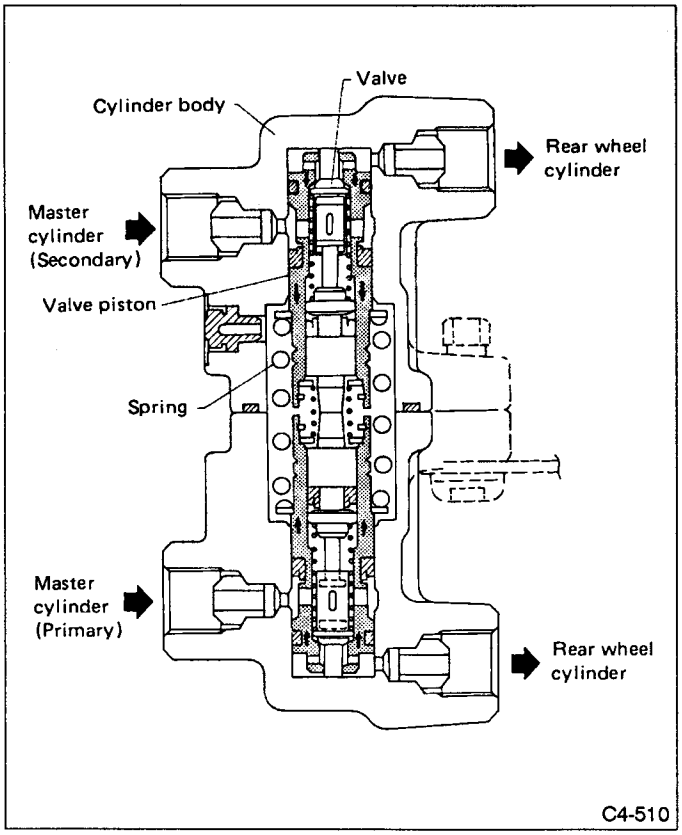

Fig. 16

3) As master cylinder fluid pressure increases further, the valve piston moves further outward. The valve then comes in contact with the cylinder body so that the valve is opened.
As the valve opens, the rear wheel cylinder fluid pressure increases. This moves the valve piston to the center of the master cylinder, closing the valve again.

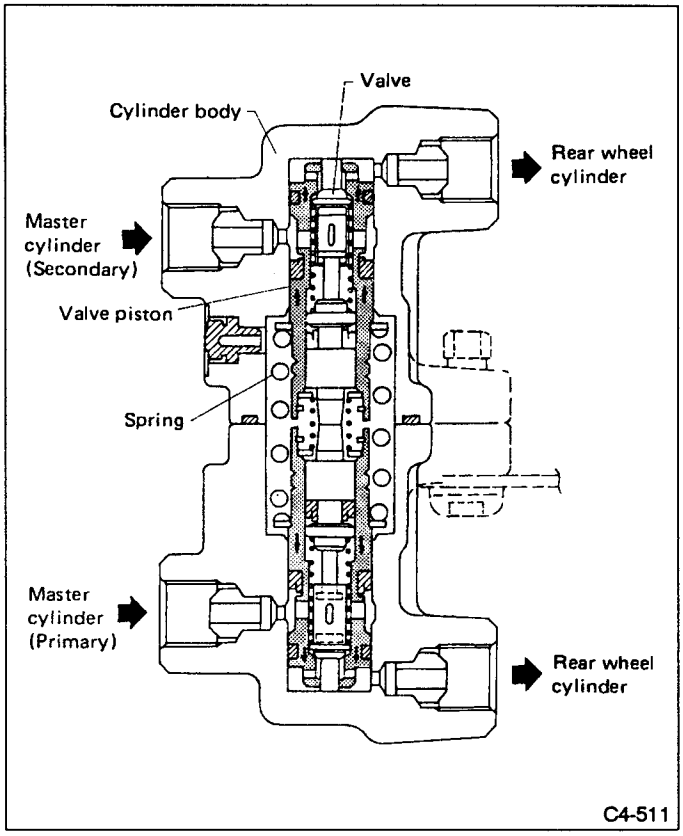

Fig. 17

2. OPERATION IN CASE OF CIRCUIT FAILURE (Failure of primary circuit)

1) If the primary circuit becomes inoperative, the secondary inner piston moves toward the primary circuit and compresses the balance spring until the stop plate is in contact with the circlip.

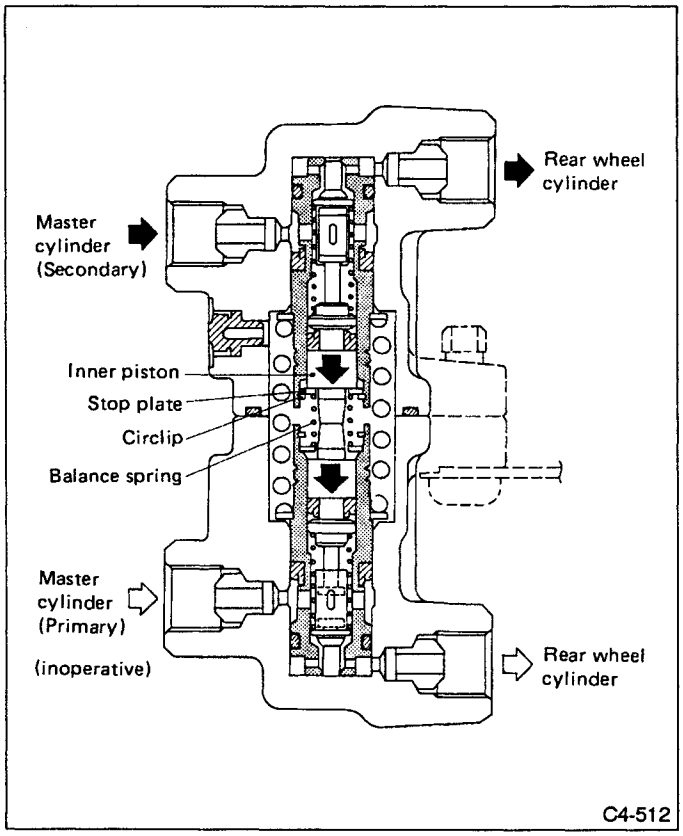

Fig. 18

2) As the master cylinder fluid pressure increases, it overcomes spring tension. This causes the secondary valve piston and inner piston to move toward the primary circuit as a unit. The valve is held open since it is pulled by the inner piston connector. For this reason, the fluid pressure in the secondary circuit of the rear wheel cylinder is not controlled as it decreases.

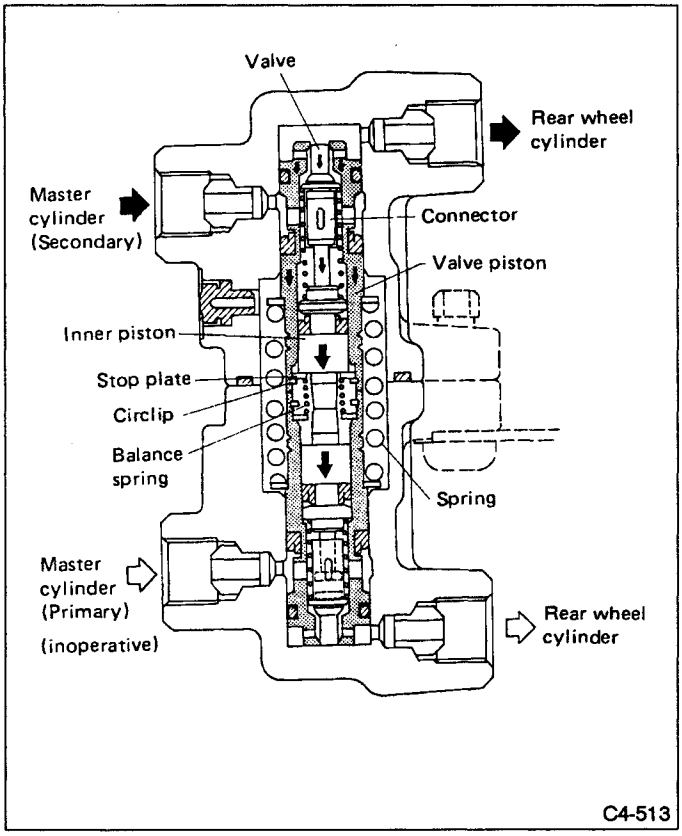

Fig. 19

5. Anti-lock Brake System

A: OUTLINE

1. FEATURE

The ABS (Anti-lock brake system) electrically controls brake fluid pressure to prevent wheel "lock" during braking on slippery road surfaces, thereby improving directional/steering stability as well as shortening the braking distance.

If the ABS becomes inoperative, the fail-safe system activates to ensure it acts as a conventional brake system. The warning light also comes on to indicate that the ABS is malfunctioning.

The front-and-rear wheels utilize a 4-sensor, 4-channel control design: the front wheels have an independent control design*1 and the rear wheels have a select low control design*2.

*1: A system which independently controls fluid pressure to left and right front wheels.

*2: A system which provides the same fluid pressure control for the two rear wheels if either wheel starts to "lock."

2. COMPONENTS

The ABS consists of four tone wheels ⑤, four ABS sensors ④, an electronic control unit ⑦, a hydraulic control unit ⑥, and a warning light ⑨.

ABS component parts

Item	Function
Tone wheel	Attached to each wheel hub and rotates at the same speed as the hub.
ABS sensor	Emits a wheel speed signal during tone wheel rotation.
Electronic control unit	Receives wheel-speed signals from speed sensors and sends a control signal to hydraulic unit so that fluid pressure is optimally controlled.
Hydraulic control unit	Receives a control signal from electronic control unit and controls respective wheel cylinder fluid pressure.
Warning light	Comes on when ABS becomes inoperative.

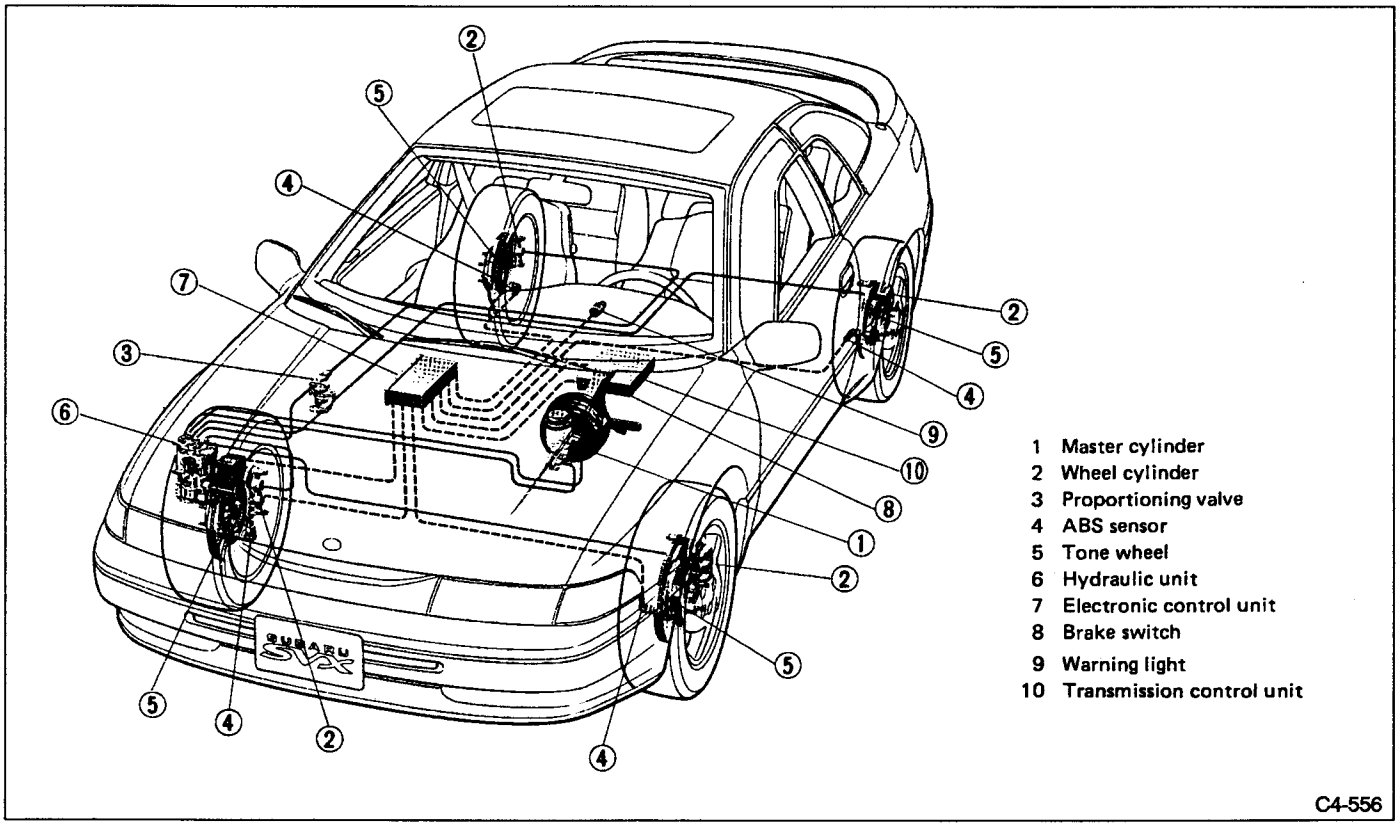

Fig. 20

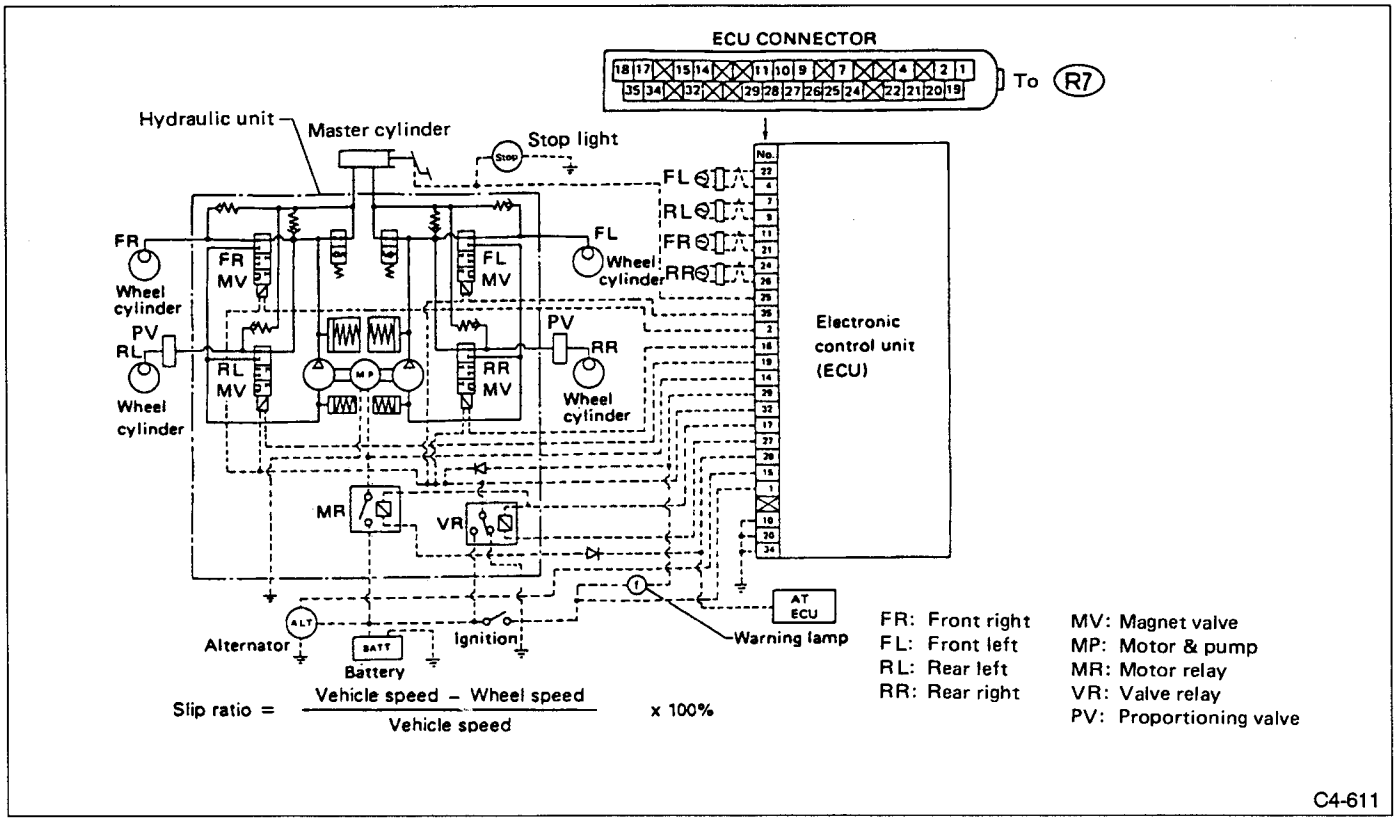

Fig. 21 ABS System diagram

3. THEORY OF ABS CONTROL

When the brake pedal is depressed during operation, wheel speed as well as vehicle speed decreases. The difference which occurs between wheel speed and vehicle speed is called the "slip" phenomenon. The magnitude of this action is expressed by "slip" the ratio which is determined by the following equation:

$$\text{Slip ratio} = \frac{\text{Vehicle speed} - \text{Wheel speed}}{\text{Vehicle speed}} \times 100\%$$

When the "slip" ratio is 0% vehicle speed equals wheel speed and the wheel rotates without any slippage. When the "slip" is 100% the wheel locks and does not rotate (wheel speed = 0) although vehicle speed exists. The relationship between the frictional force of a wheel in the fore-and-aft direction and the "slip" ratio is shown by two characteristic curves in Figure 22.

These curves are determined by the relationship between the wheel and road surface. Where the same type of wheel are used; the curve shown by a solid line indicates wheels driven on asphalt or paved roads, the curve shown by dotted lines refers wheels subjected to slippery (snowy or icy) roads.

When different types of wheels are used, although the road surface is the same, these curves will change. In general, the frictional coefficient between wheel and road surface in relation to an increase in the "slip ratio" will reach the maximum value in the 8 — 30%range and will tend to decrease after that.

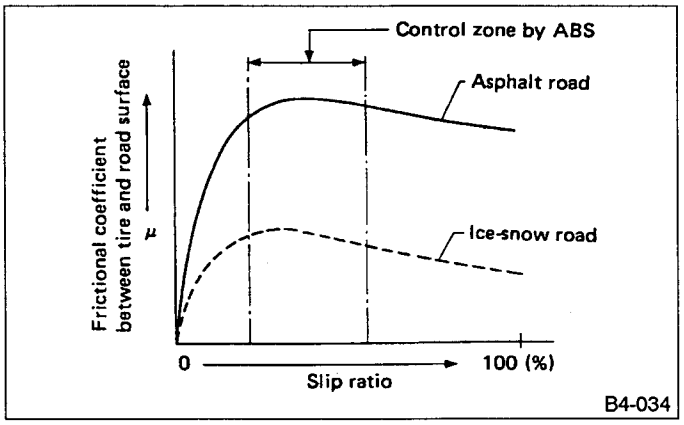

Fig. 22

B: CONSTRUCTION AND OPERATION

1. WHEEL SPEED SENSOR

The wheel speed sensor detects wheel speed and consists of a permanent magnet, coil, tone wheel, etc. The magnetic flux produced by the permanent magnet varies with the tone wheel (which rotates together with the wheel) and the sensor emits an alternating voltage corresponding with the wheel speed by electromagnetic induction.

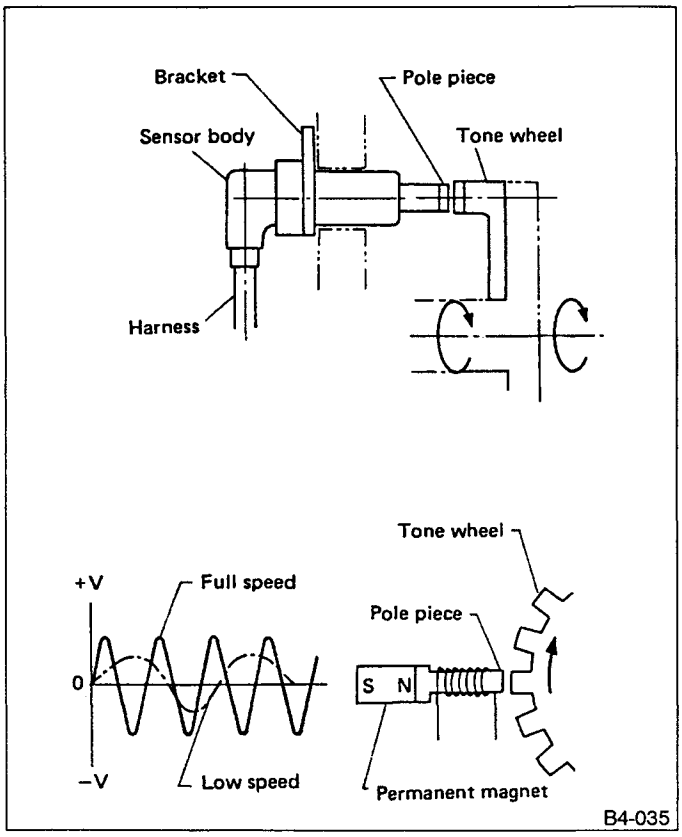

Fig. 23

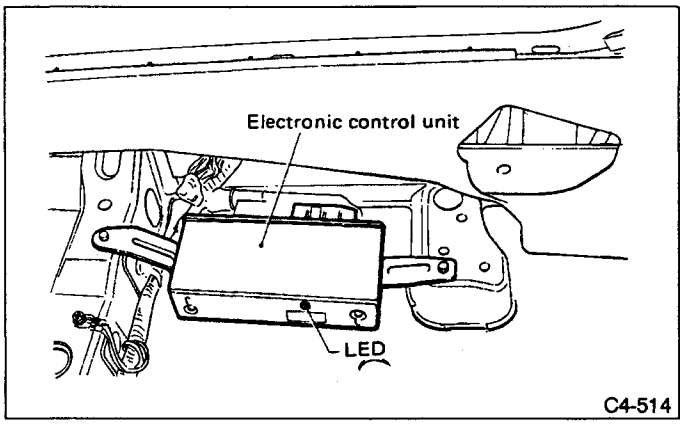

Fig. 24

2. ELECTRONIC CONTROL UNIT (E.C.U.)

The electronic control unit is a digital type that utilizes LSI elements to achieve compact structure and improve circuit reliability.

It consists of an arithmetic circuit, control circuit, signal input-output circuits, a safety circuit and a regulated power circuit. All these circuits are housed in the case located on the PC board.

Figure 36 shows a block diagram of the electronic circuits. When the speed sensor sends an alternating voltage corresponding with the wheel speed to the input amplifier circuit, the signal voltage is converted into a rectangular wave which is sent to the digital signal generating circuit. (This circuit receives two channels of signal at a time.)
The LSI circuit, which consists of approximately 16,000 transistors, computes wheel speed in relation to the signal sent from the speed sensor. It then emits the required control signal as a result of computation. This circuit also contains a safety circuit for monitoring purposes. The control signal emitted from the LSI circuit is then sent to the current-control and -amplification circuits where a signal is produced to operate the magnet valve of the hydraulic control unit.
The memory circuit, which serves to memorize system failure, and monitor the regulated power circuit and others, is housed in a separate IC. When the E.C.U. power is applied with the ignition switch "ON", the safety circuit begins to monitor electronic circuits, sensors, the hydraulic control unit, etc. If any circuits or units malfunction, a warning lamp (dual circuit design) comes on to warn the driver of a problem. The LED in the ECU illuminates to show a trouble code. The brake system then functions as a conventional brake system in place of the ABS.

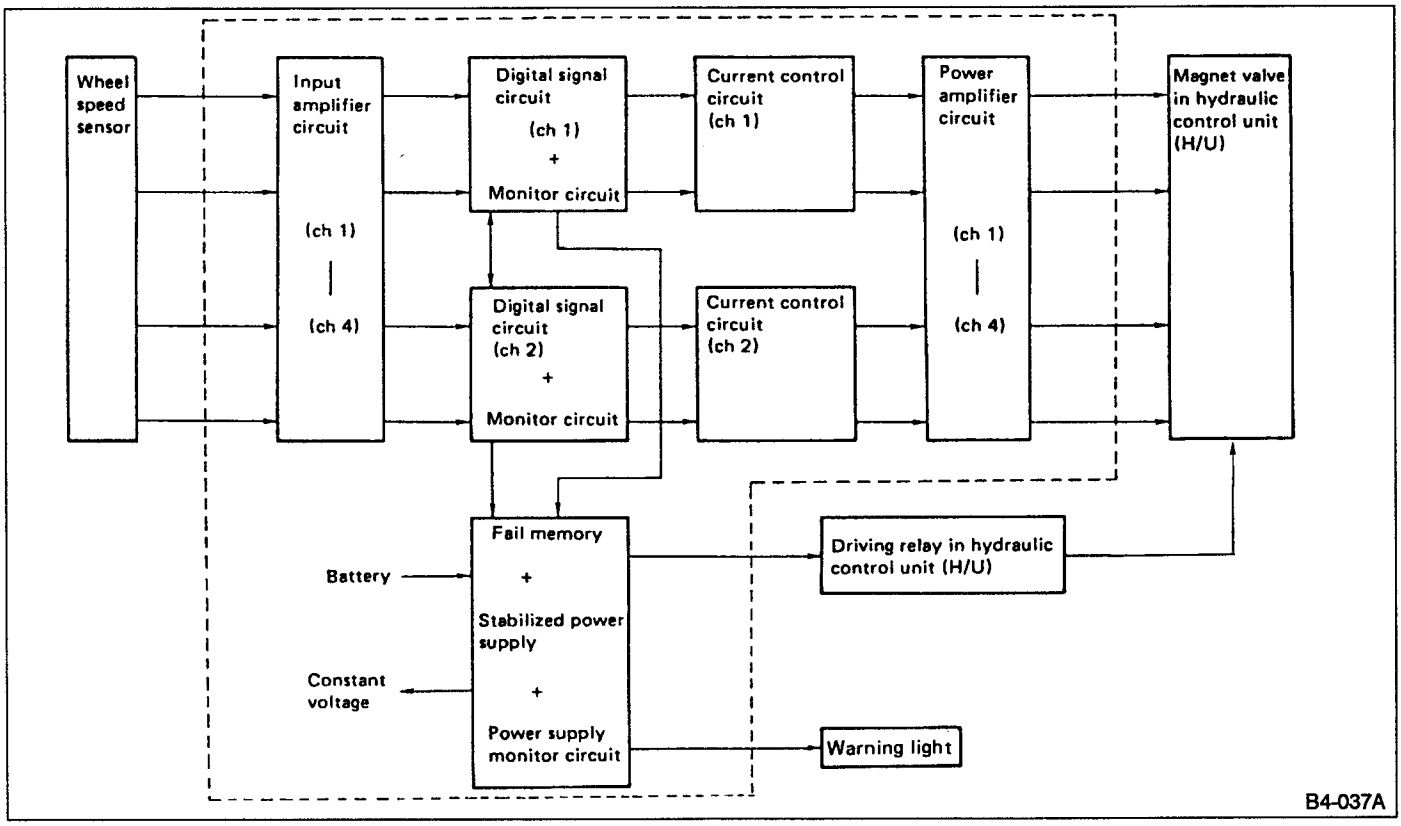

Fig. 25

3. ABS CONTROL CYCLE CURVES

As the brake pedal is depressed, brake fluid pressure increases correspondingly, which in turn decreases wheel speed. When brake fluid pressure reaches point "A" (where wheel deceleration exceeds "$-b_0$"), the control unit transmits a "hold" signal to hold the brake fluid pressure in wheel cylinder at that point. At the same time, the control unit computes a "dummy" vehicle speed. When the wheel speed drops below the slip-ratio setting (= speed less than the dummy vehicle speed based on the predetermined value) at point "B" of the brake fluid pressure, the control unit then transmits a "decrease" signal to prevent wheel lock-up. This causes the brake fluid pressure to decrease.
After brake fluid pressure is decreased, wheel acceleration increases. When it exceeds the wheel acceleration setting "$+b_{10}$" at point "C" (brake fluid pressure), the control unit transmits a "hold" signal to hold the brake fluid pressure at that point. When wheel acceleration setting value "$+b_{10}$" is exceeded and when brake fluid pressure is at point "D", the control unit judges that wheel lockup will not occur and then transmits an "increase" signal to increase brake fluid pressure.
When wheel acceleration drops below "$+b_0$" at point "E" (which occurred due to a brake fluid pressure increase), the repetition of the "hold" and "increase" signals takes place at a constant cycle.
When wheel deceleration exceeds "$-b_0$", at point "F" of the brake fluid pressure, the control unit immediately

transmits a "decrease" signal to decrease brake fluid pressure.

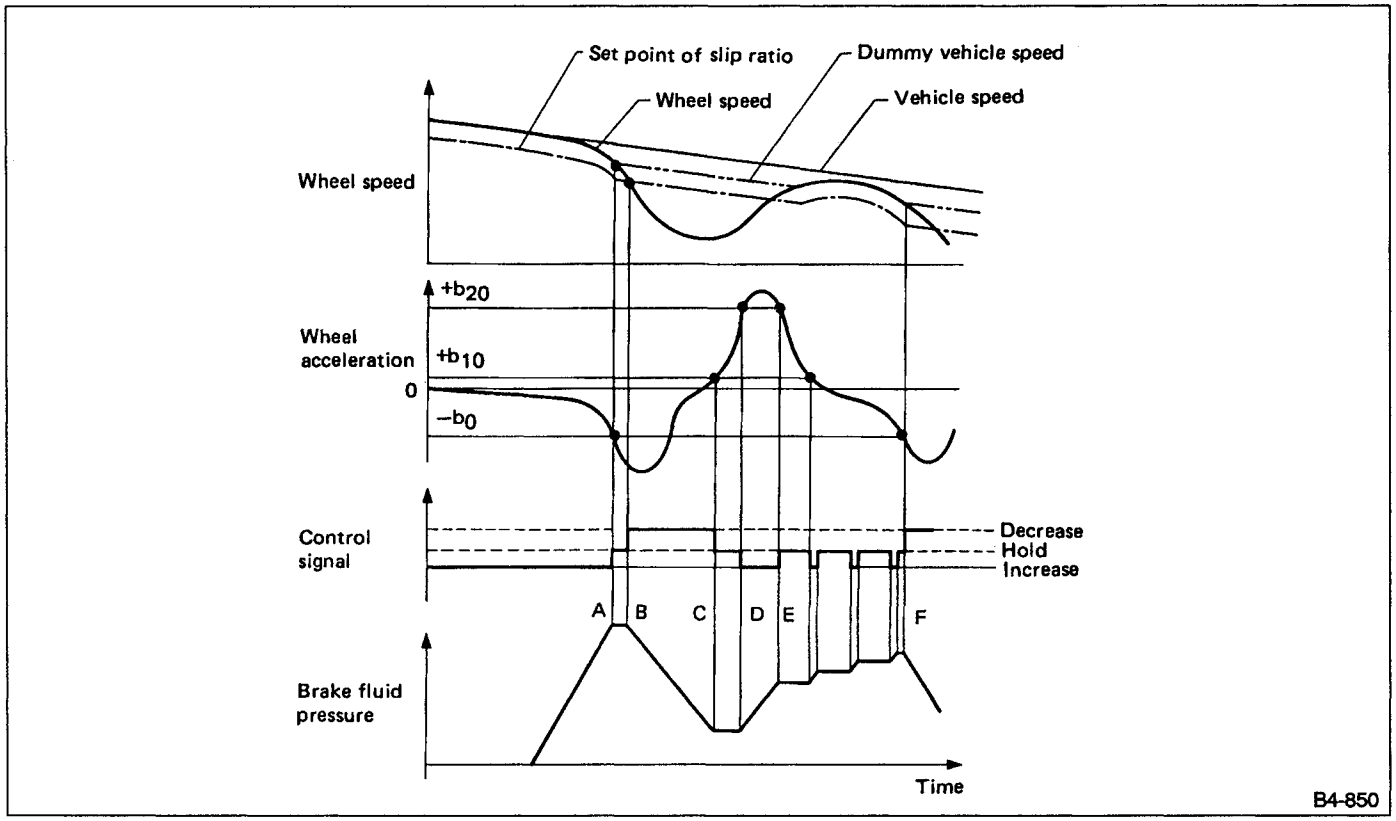

Fig. 26

4. ABS WARNING LIGHT

When a signal system or the electronic control unit (E.C.U.) becomes inoperative, the warning light in the instrument panel comes on to indicate that the system or control unit is malfunctioning. At the same time, current flowing through the hydraulic control unit is interrupted so that the brake system functions as a conventional brake system. The circuit through which the warning light comes on utilizes a dual system design.

If the warning light comes on upon detection of a system malfunction, the control unit's LED also shows a trouble code.

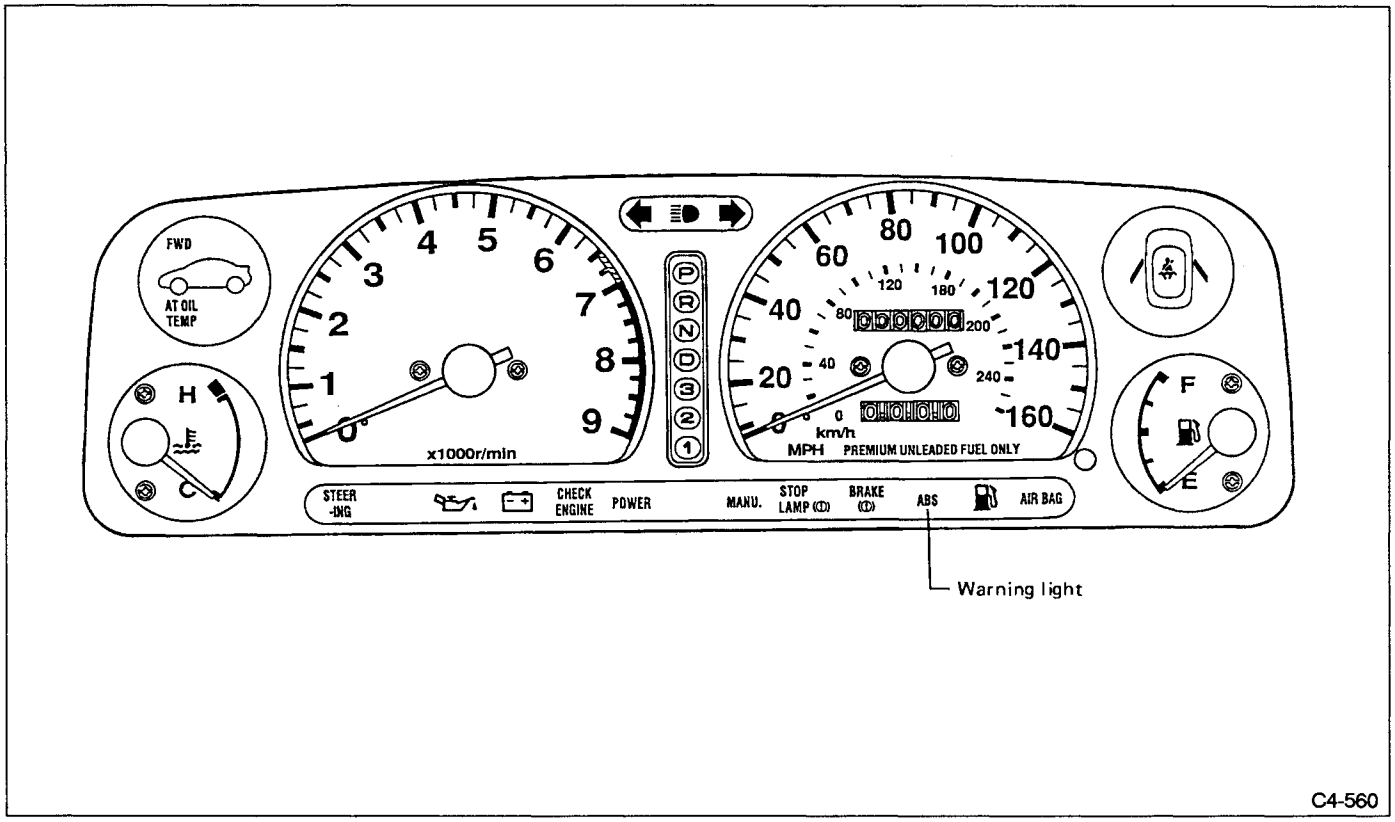

Fig. 27

5. HYDRAULIC CONTROL UNIT

The hydraulic control unit is a fluid pressure control assembly which consists of an electric motor, plunger pump, damper, housing, magnet valve and relay. The magnet valve moves to three positions, as shown in Figure 28. When it is moved to position "1" (current "OFF"), the master cylinder and brake system are connected to each other. With the valve moved to position "2" (part of current flow "ON"), all passages are closed. At position "3" (full-current flow "ON"), master cylinder ports are closed and the line between the hydraulic unit reservoir is connected to the brake system.

As wheel deceleration exceeds the specified deceleration setting during braking, the magnet valve moves to position "2" to hold brake fluid pressure. Further deceleration increases moves the magnet valve to position "3" so that brake fluid pressure is released and, at the same time, the motor starts to drive the plunger pump. When wheel deceleration stops, the magnet valve is held at position "2" to maintain brake fluid pressure.

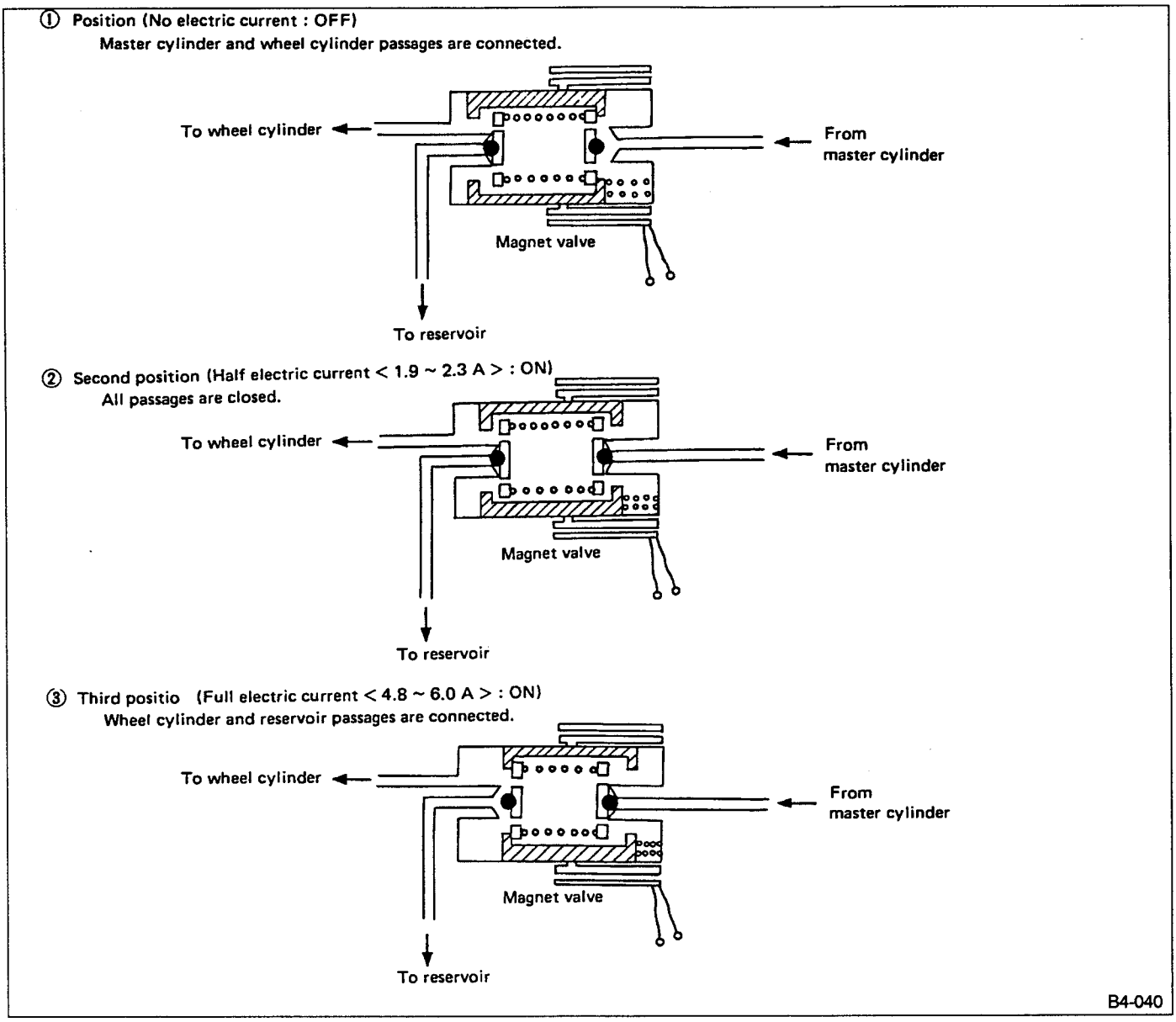

Fig. 28

1) During normal braking

When the brake pedal is depressed, fluid pressure is delivered from master cylinder ① to magnet valve ④ via F-valve ② while moving the ball up. Since current does not flow through the magnet valve, fluid pressure is delivered to wheel cylinder ⑫ so that normal braking force occurs.

Fluid pressure delivered to the F-valve ② also reaches outlet valve ⑧ which is sealed by the ball.

Accumulator ⑪ has its spring set to act by high fluid pressure, and not by normal fluid pressure. When current does not flow through the magnet valve, the outlet port is sealed so that the oil passage to reservoir ⑤ is not linked.

When the brake pedal is released, master cylinder ① fluid pressure will decrease. Wheel cylinder ⑫ pressure will then return to the master cylinder ① while pushing the ball of check valve ③. At this point, F-valve ② is moved up by the ball to prevent wheel cylinder ⑫ pressure from returning to the master cylinder ①.

However, when master cylinder ① pressure drops below approximately 981 kPa (10 kg/cm^2, 142 psi), the F-valve ②'s return spring is moved to the left to push the ball up. This allows a slight amount of residual pressure (applied to check valve ③) to be delivered to wheel cylinder ⑫ via magnet valve ④.

When the brake pedal is slightly released while the ABS is operating, excess wheel cylinder fluid pressure returns to the master cylinder via check valve ③ so that wheel cylinder fluid pressure is balanced with master cylinder fluid pressure.

During the time the excess wheel cylinder fluid pressure returns to the master cylinder, the driver may feel a pedal "kickback".

This is not an indication of a problem.

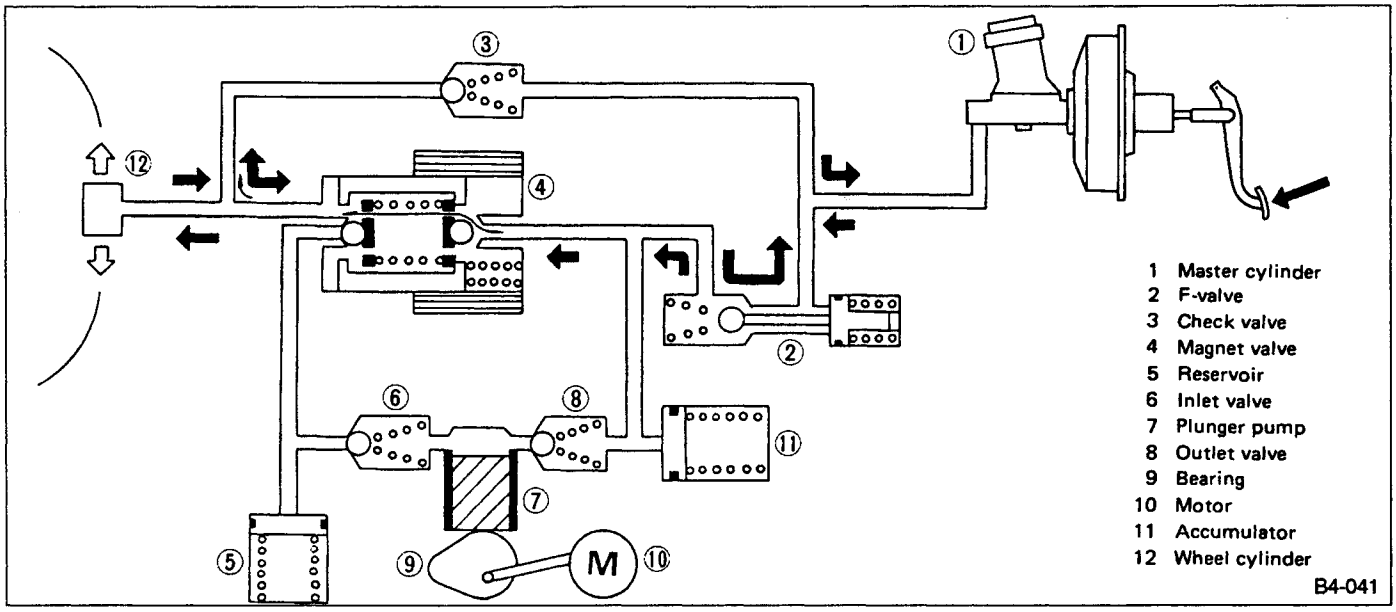

Fig. 29

2) Pressure-decrease action with ABS in operation
When the wheels begin to lock during brake application, the E.C.U. emits an instruction so that a current of 4.8 to flows through magnet valve ④.
This closes the inlet port of the magnet valve ④ and opens the outlet port so that wheel cylinder ⑫ pressure is delivered to reservoir ⑤ via the outlet port. Since current also flows through the motor ⑩ (simultaneously when the current flows through the magnet valve), motor ⑩ will start to activate the plunger pump ⑦ via the bearing ⑨ (provided with an eccentric cam) connected to it. Brake fluid pressure delivered to reservoir ⑤ then passes through inlet valve ⑥ and is increased by plunger pump ⑦. Increased brake fluid then passes through inlet valve ⑥ and is stored in accumulator ⑪. At this point, the increased brake fluid pressure is sealed by the ball of valve F ② to shut out the fluid pressure in master cylinder ①: Fluid pressure in wheel cylinder ⑫ also shuts out the fluid pressure in the master cylinder ① by means of check valve ③.
Wheel cylinder ⑫ fluid pressure will then decrease to prevent the brake pedal from kicking back while it is being controlled to accommodate vehicle deceleration.

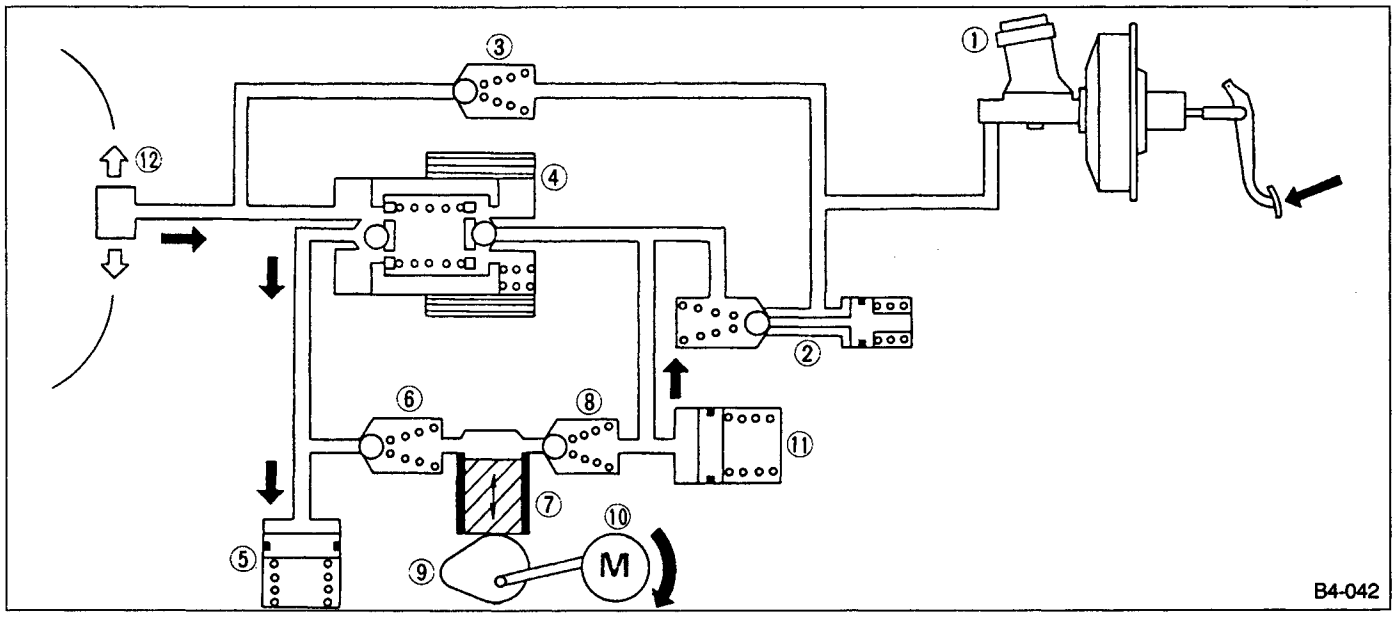

Fig. 30

3) Pressure "hold" action with ABS in operation
When wheel cylinder ⑫ fluid pressure is decreased or increased to the optimum point, the controller emits an instruction so that a hold current of 1.9 to 2.3 amperes flows through magnet valve ④. The inlet and outlet ports will then be closed. At this point, the controlled fluid pressure is held in the wheel cylinder ⑫, the fluid pressure increased by the pump (which increases the decreased wheel cylinder) is stored in accumulator ⑪, the fluid pressure increased by brake pedal depression force is held in master cylinder ① and the fluid pressure discharged from the pump is held in reservoir ⑤.

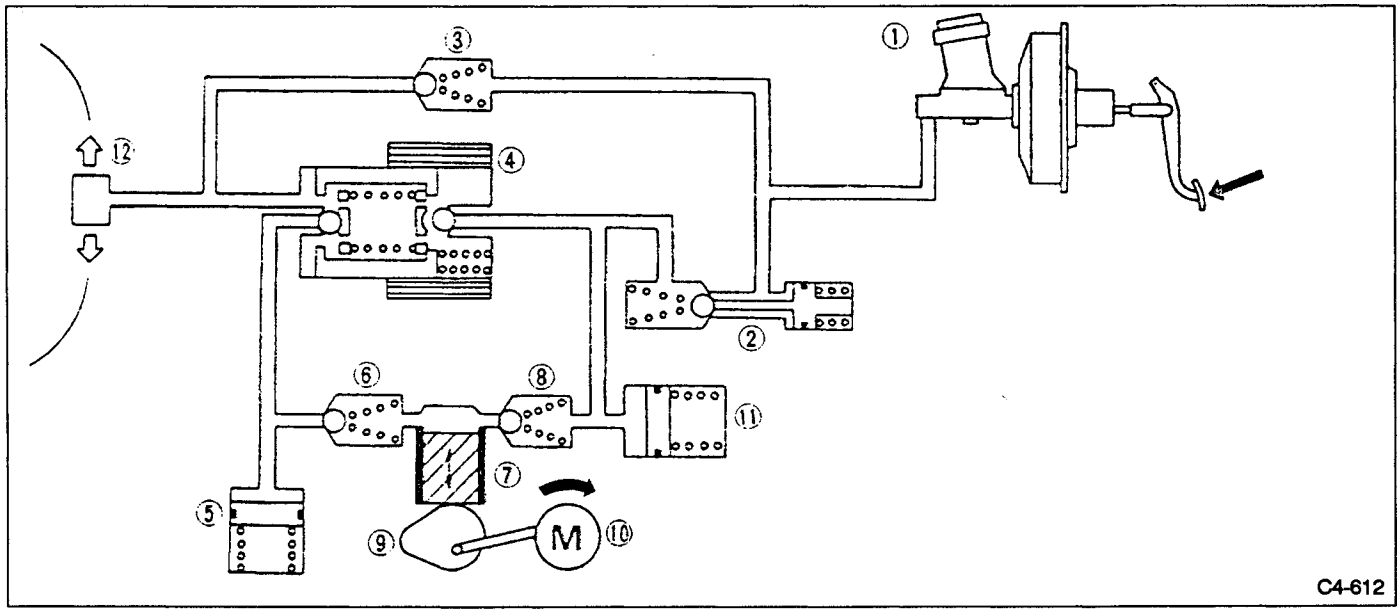

Fig. 31

4) Pressure-increase action with ABS in operation
When current flowing through magnet valve ④ is interrupted (OFF) by an instruction emitted from the E.C.U., the fluid pressure of wheel cylinder ⑫ is increased. (At this point, internal passages of the magnet valve function the same as in a conventional brake system.) When the magnet valve ④ is OFF, the inlet port is opened and the outlet port is closed. High fluid pressure is then delivered from accumulator ⑪ to wheel cylinder ⑫ via the inlet port so that wheel cylinder pressure is increased. Since check valve ③ and F-valve ② remain sealed by the fluid pressure of master cylinder ① and high fluid pressure of accumulator ⑪ respectively, only wheel cylinder ⑫ fluid pressure is increased. Accordingly, a sensation of brake pedal "pull" will not occur.

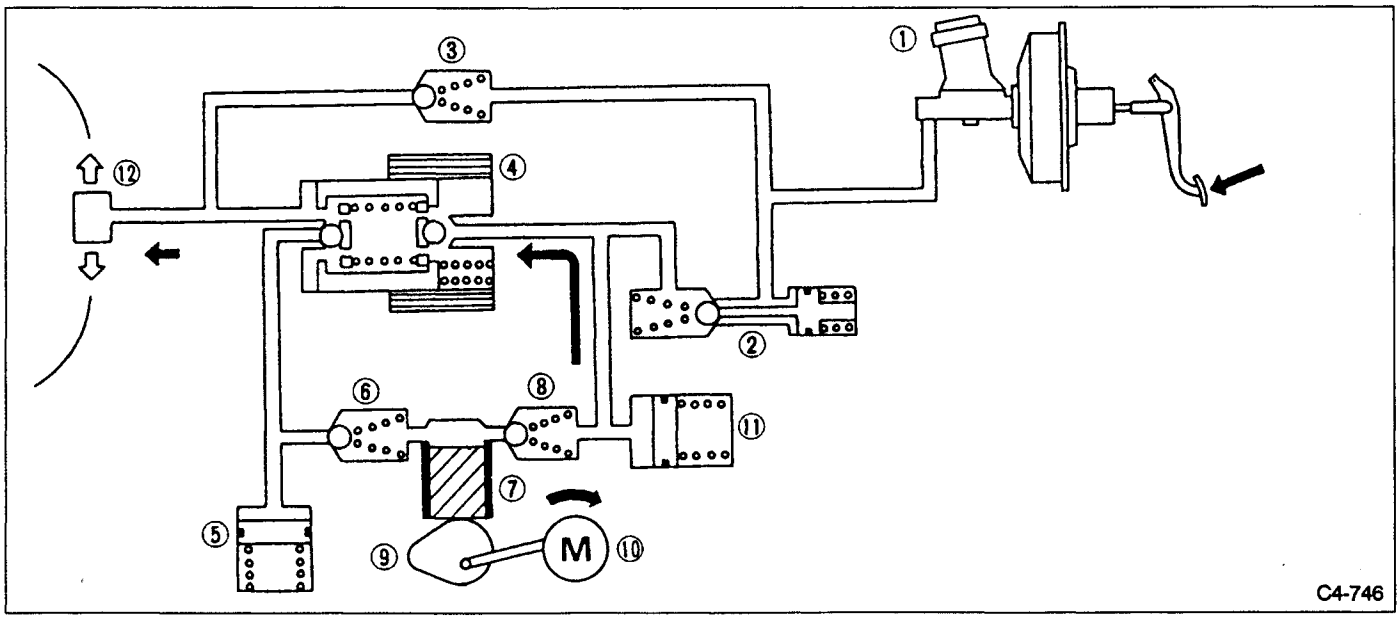

Fig. 32

6. Parking Brake

A: OUTLINE

The rear disc brake has its parking brake drum housed in the disc rotor for improved performance.

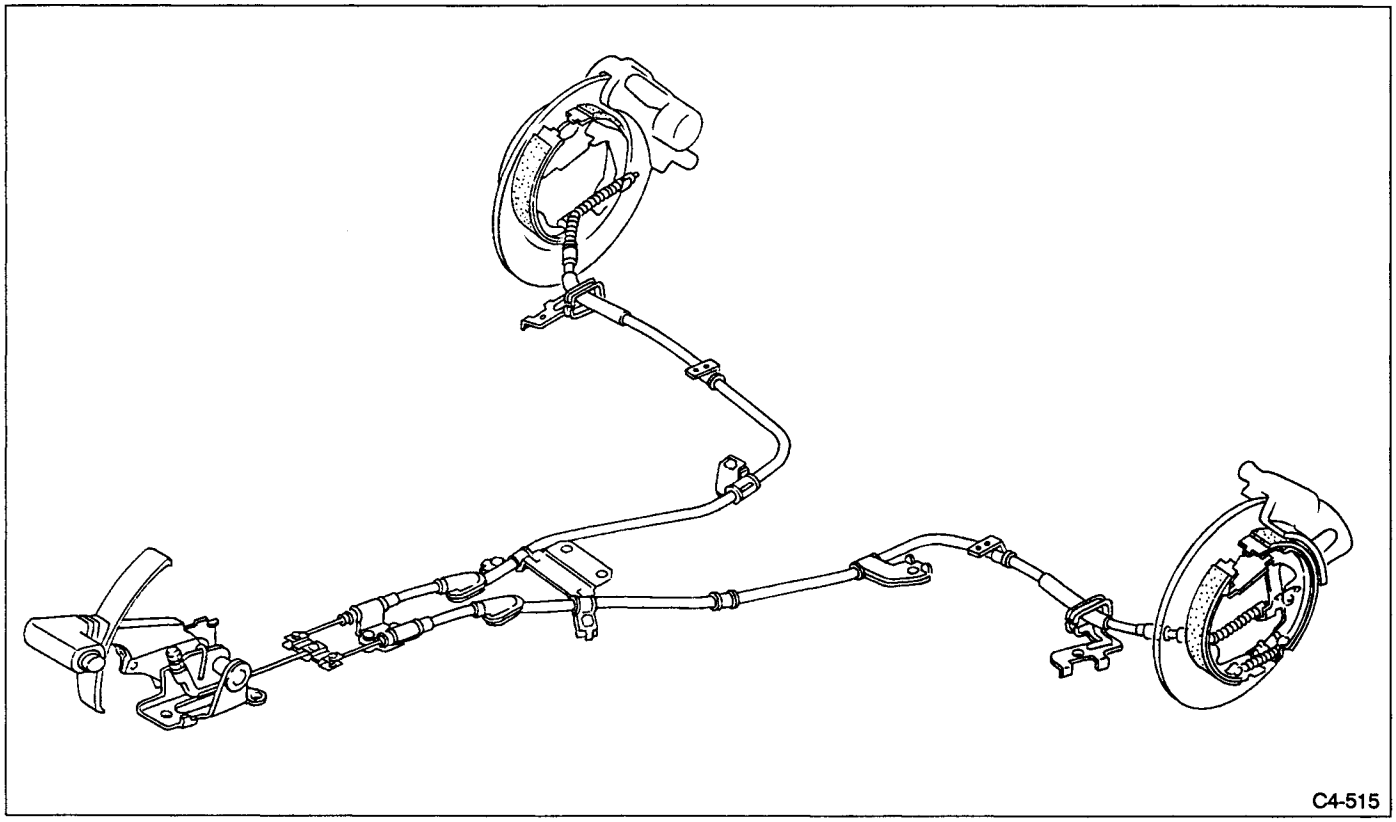

Fig. 33

B: OPERATION

1. PARKING BRAKE APPLICATION

When the parking brake lever is moved back, lever ② located on the end of the parking brake cable ① moves strut ③ in the direction of "A" with point "P" utilized as a fulcrum.

The strut then presses brake shoes ④ and ⑤ against the drum. These brake shoes utilize a floating design and are lightly supported by hold-down pins ⑦. The force applied to brake shoe ④, and the reaction force of "A" applied to brake shoe ⑤ via point "P" provide brake application when the shoes are pressed against the brake drum.

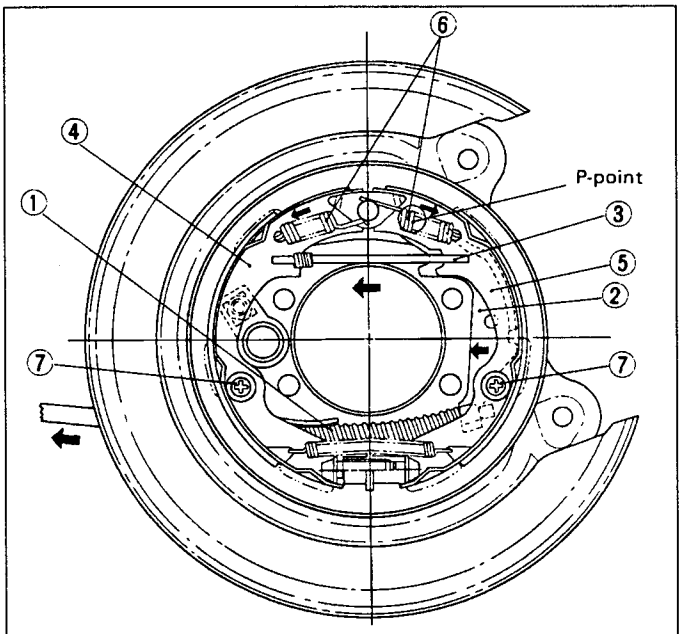

Fig. 34

2. PARKING BRAKE RELEASE

When the parking brake lever is moved forward, parking brake cable ① is loosened. This returns brake shoes ④ and ⑤ to their original position from the tension of return spring ⑥ so that the parking brake is released.

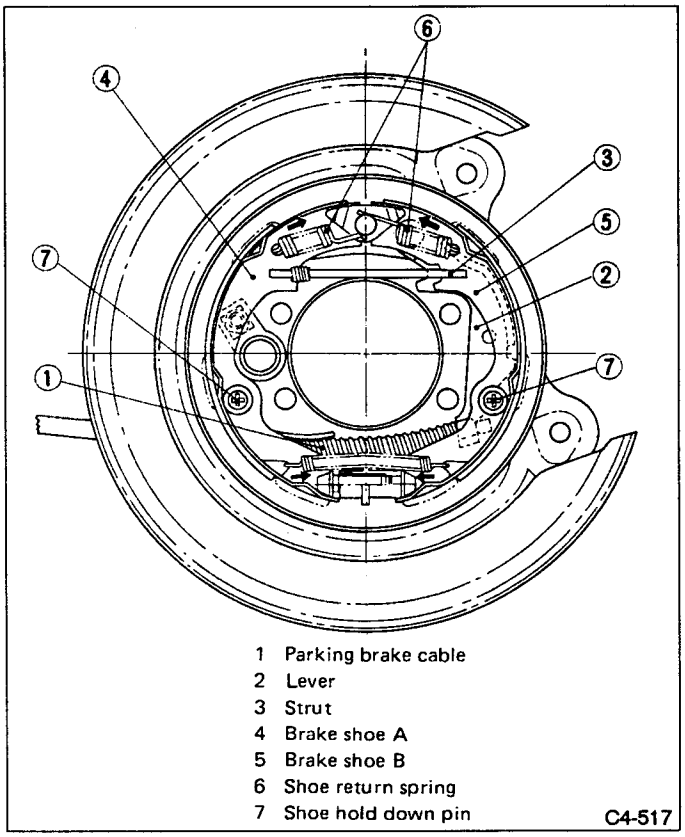

Fig. 35

S SPECIFICATIONS AND SERVICE DATA

A: SPECIFICATIONS

	Model	SVX
	Engine (cc)	3300
	Driving system	AWD
Front brake	Type	Disc (Floating type, ventilated)
	Effective disc diameter mm (in)	253 (9.96)
	Disc thickness x Outer diameter mm (in)	28 x 302 (1.10 x 11.89)
	Effective cylinder diameter mm (in)	42.8 x 2 (1.685 x 0.08)
	Pad dimensions (length x width x thickness) mm (in)	146.6 x 47.0 x 11.0 (5.77 x 1.850 x 0.433)
	Clearance adjustment	Automatic adjustment
Rear brake	Type	Disc (Floating type)
	Effective or disc diameter mm (in)	254 (10)
	Disc thickness x Outer diameter mm (in)	10 x 290 (0.39 x 11.42)
	Effective cylinder diameter mm (in)	38.1 (1.500)
	Pad dimensions (length x width x thickness mm (in)	92.4 x 33.7 x 10 (3.638 x 1.327 x 0.39)
	Clearance adjustment	Automatic adjustment

	Model	SVX
	Engine (cc)	3300
	Driving system	AWD
Parking brake	Type	Mechanical on rear brakes, drum in disc
	Effective drum diameter mm (in)	190 (7.48)
	Lining dimensions (length x width x thickness) mm (in)	182.3 x 30 x 3.2 (7.18 x 1.18 x 0.126)
	Clearance adjustment	Manual adjustment
Master cylinder	Type	Tandem
	Effective diameter mm (in)	26.99 (1 - 1/16)
	Reservoir type	Sealed type
	Brake fluid reservoir capacity cm^3 (cu in)	180 (10.98)
Brake booster	Type	Vacuum suspended
	Effective diameter mm (in)	205 + 230 (8.07 + 9.06)
Proportioning valve	Split point kPa (kg/cm^2, psi)	2,942 (30,427)
	Reducing ratio	0.4
Brake line		Dual circuit system
ABS		With ABS

B: SERVICE DATA

ITEM		STANDARD	SERVICE LIMIT
Front brake	Pad thickness (including back metal)	17 mm (0.67 in)	7.5 mm (0.295 in)
	Disc thickness ventilated disc	28 mm (1.10 in)	26 mm (1.02 in)
	Disc run-out	—	0.10 mm (0.0039 in)
Rear brake	Pad thickness (including back metal)	15 mm (0.59 in)	6.5 mm (0.256 in)
	Disc thickness disc	10 mm (0.39 in)	8.5 mm (0.335 in)
	Disc run-out	—	0.10 mm (0.0039 in)
Parking brake	Inside diameter	190 mm (7.48 in)	191 mm (7.52 in)
	Lining thickness	3.2 mm (0.126 in)	1.5 mm (0.059 in)
Brake booster		Brake pedal force	All model
	Brake fluid pressure without engine running	147N (15 kg, 33 lb)	490 kPa (5 kg /cm^2, 71 psi)
		294N (30kg, 66 lb)	1,569 kPa (16 kg /cm^2, 228 psi)
	Brake fluid pressure with engine running and vacuum at 66.7 kPa (500 mmHg, 19.69 inHg)	147N (15 kg, 33 lb)	4,511 kPa (46 kg /cm^2, 654 psi)
		294N (30kg, 66 lb)	9,513 kPa (97 kg /cm^2, 1,379 psi)

C: RECOMMENDED BRAKE FLUID

FMVSS No. 116, fresh DOT3 or 4 brake fluid

a. Avoid mixing brake fluid of different brands to prevent the fluid performance from degrading.

b. When brake fluid is supplemented, be careful not to allow any dust into the reservoir.

c. Use fresh DOT3 or 4 brake fluid when replacing or refilling the fluid.

D: BRAKE FLUID LEVEL INDICATOR

Reserve tank with level indicator:

Residual fluid quantity at light ON

Approx. 80 cm^3 (80cc, 4.88 cu in)

Tank capacity

180 cm^3 (180cc, 10.98 cu in)

C COMPONENT PARTS

1. Front Disc Brake

1 Lock pin
2 Caliper body
3 Air bleeder screw
4 Guide pin boot
5 Lock pin boot
6 Lock pin sleeve
7 Piston seal
8 Piston
9 Piston boot
10 Guide pin
11 Pad clip
12 Support
13 Housing
14 Shim
15 Inner shim
16 Inner pad
17 Outer pad
18 Outer shim
19 Disc cover
20 Disc rotor

Tightening torque: N·m (kg-m, ft-lb)
T1: 34 – 44 (3.5 – 4.5, 25 – 33)
T2: 7 – 9 (0.7 – 0.9, 5.1 – 6.5)
T3: 68 – 88 (7 – 9, 51 – 65)
T4: 10 – 18 (1 – 1.8, 7 – 13)
T5: 34 – 44 (3.5 – 4.5, 25 – 33)

Grease:
Rubber Grease or NIGLUBE RX-2

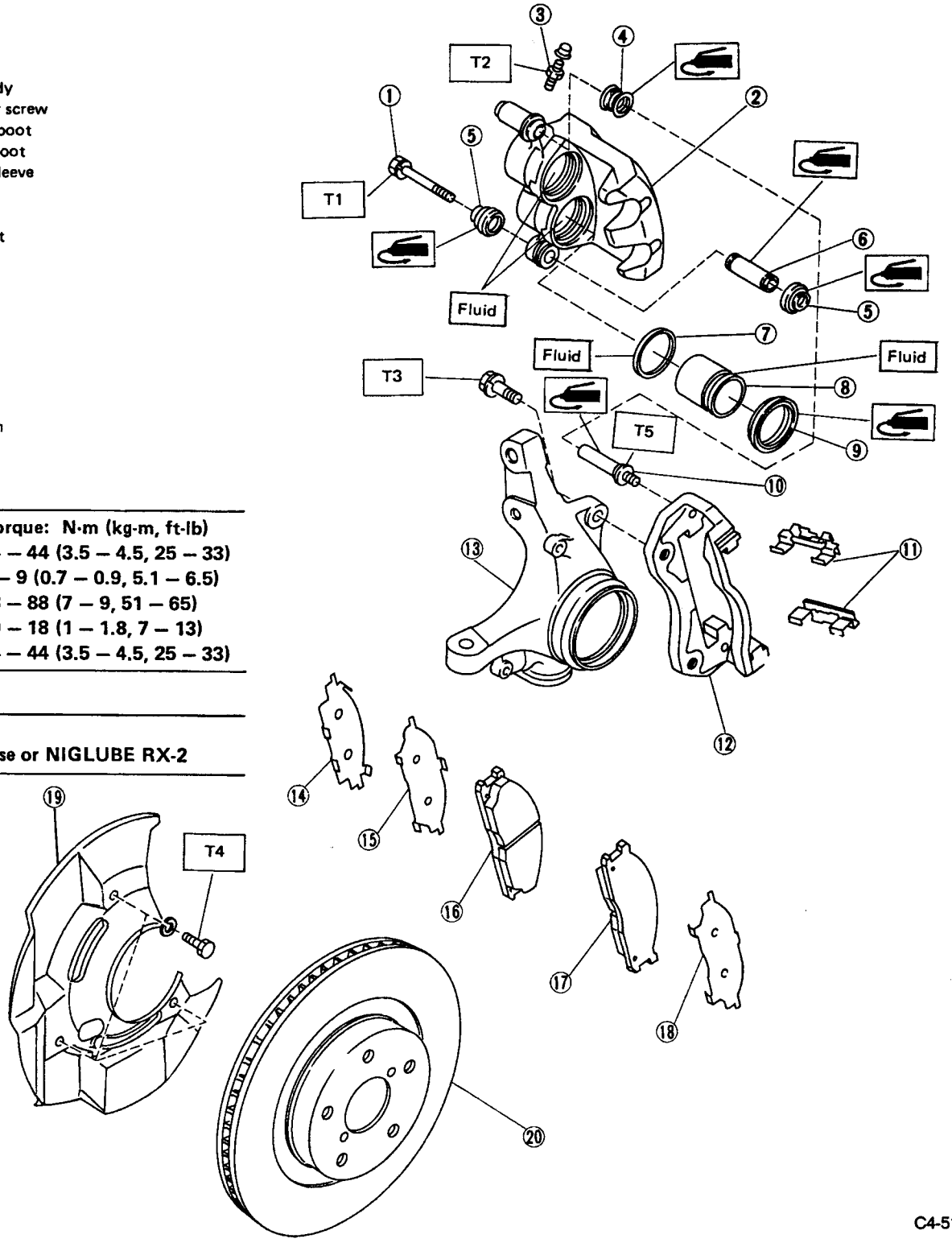

C4-518

Fig. 36

2. Rear Disc Brake

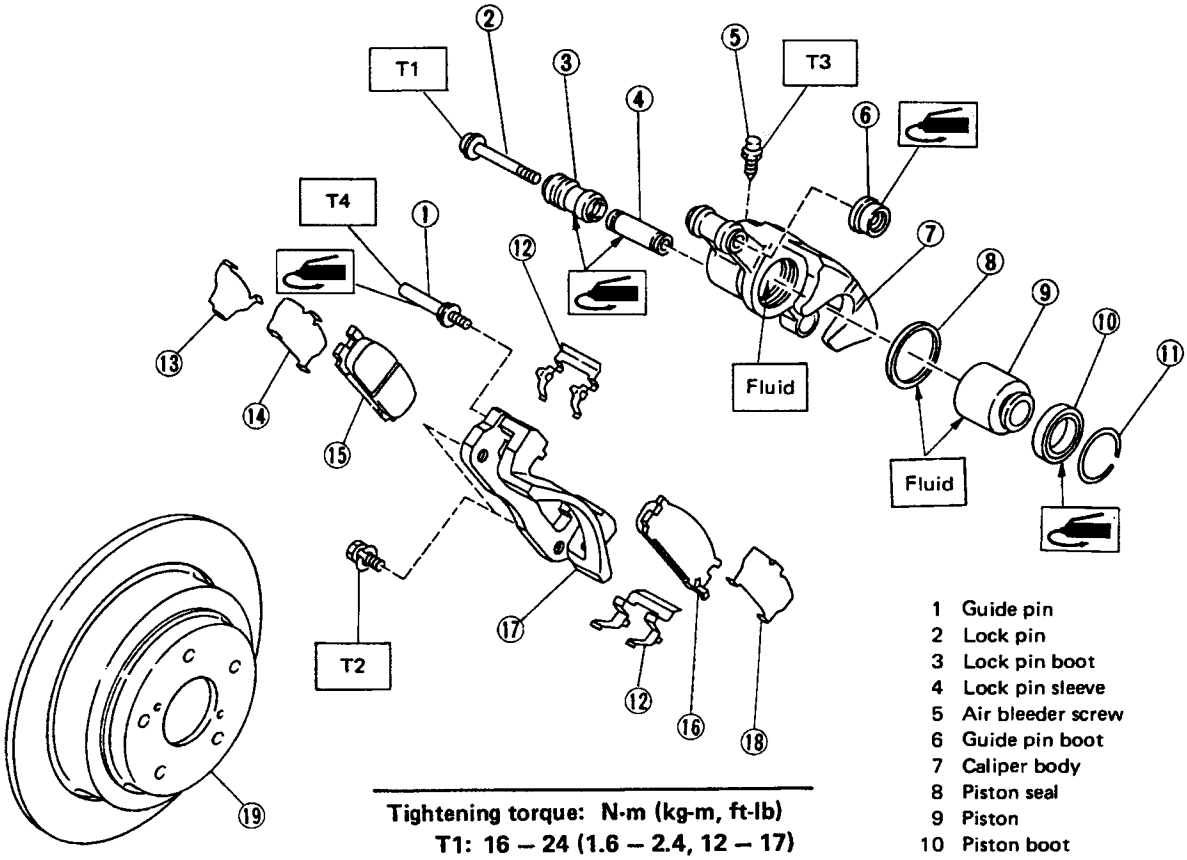

Tightening torque: N·m (kg-m, ft-lb)
T1: 16 – 24 (1.6 – 2.4, 12 – 17)
T2: 46 – 58 (4.7 – 5.9, 34 – 43)
T3: 7 – 9 (0.7 – 0.9, 5.1 – 6.5)
T4: 22 – 31 (2.2 – 3.2, 16 – 23)

Grease:
RUBBER GREASE or
NIGLUBE RX-2 GREASE

1 Guide pin
2 Lock pin
3 Lock pin boot
4 Lock pin sleeve
5 Air bleeder screw
6 Guide pin boot
7 Caliper body
8 Piston seal
9 Piston
10 Piston boot
11 Boot ring
12 Pad clip
13 Shim
14 Inner shim
15 Inner pad
16 Outer pad
17 Support
18 Outer shim
19 Disc rotor

C4-519

Fig. 37

3. Master Cylinder

1 Cap
2 Reserve tank
3 Seal
4 Cylinder body
5 Secondary piston
6 Primary piston
7 C-ring
8 Level indicator ASSY
9 Secondary piston stopper
10 Gasket
11 Reservoir stopper bolt
12 Connector bracket

Tightening torque: N·m (kg-m, ft-lb)
T1: 10 – 18 (1.0 – 1.8, 7 – 13)
T2: 13 – 18 (1.3 – 1.8, 9 – 13)
T3: 1.5 – 2.9 (0.15 – 0.3, 1.1 – 2.2)

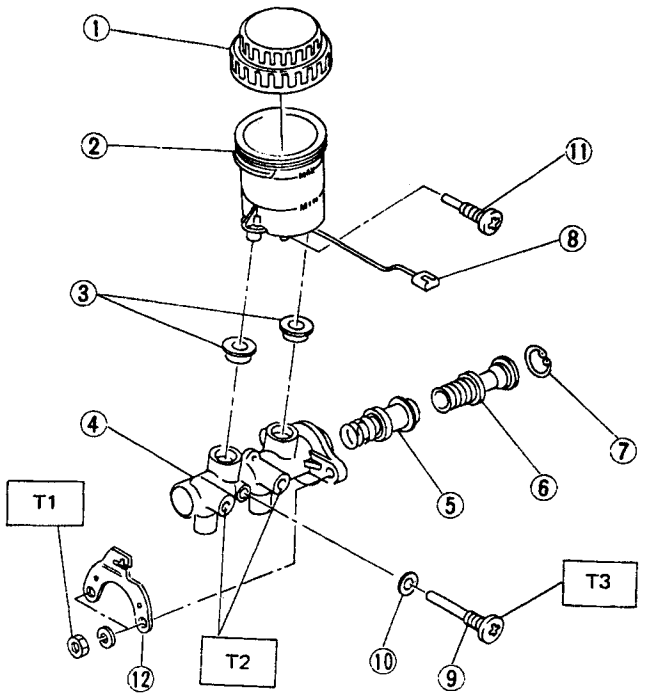

C4-545

Fig. 38

4. Brake Booster

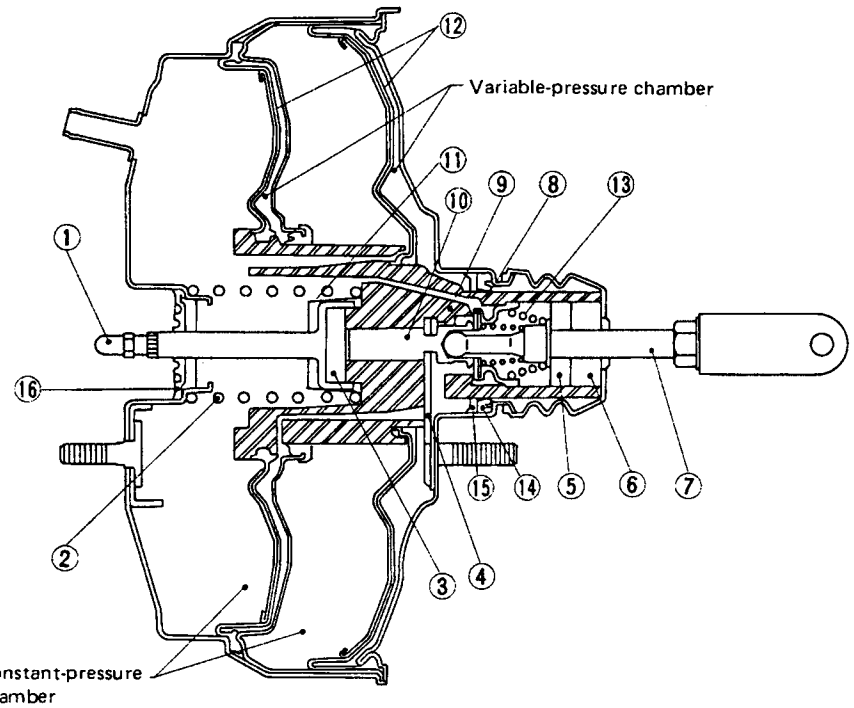

Fig. 39

5. ABS System

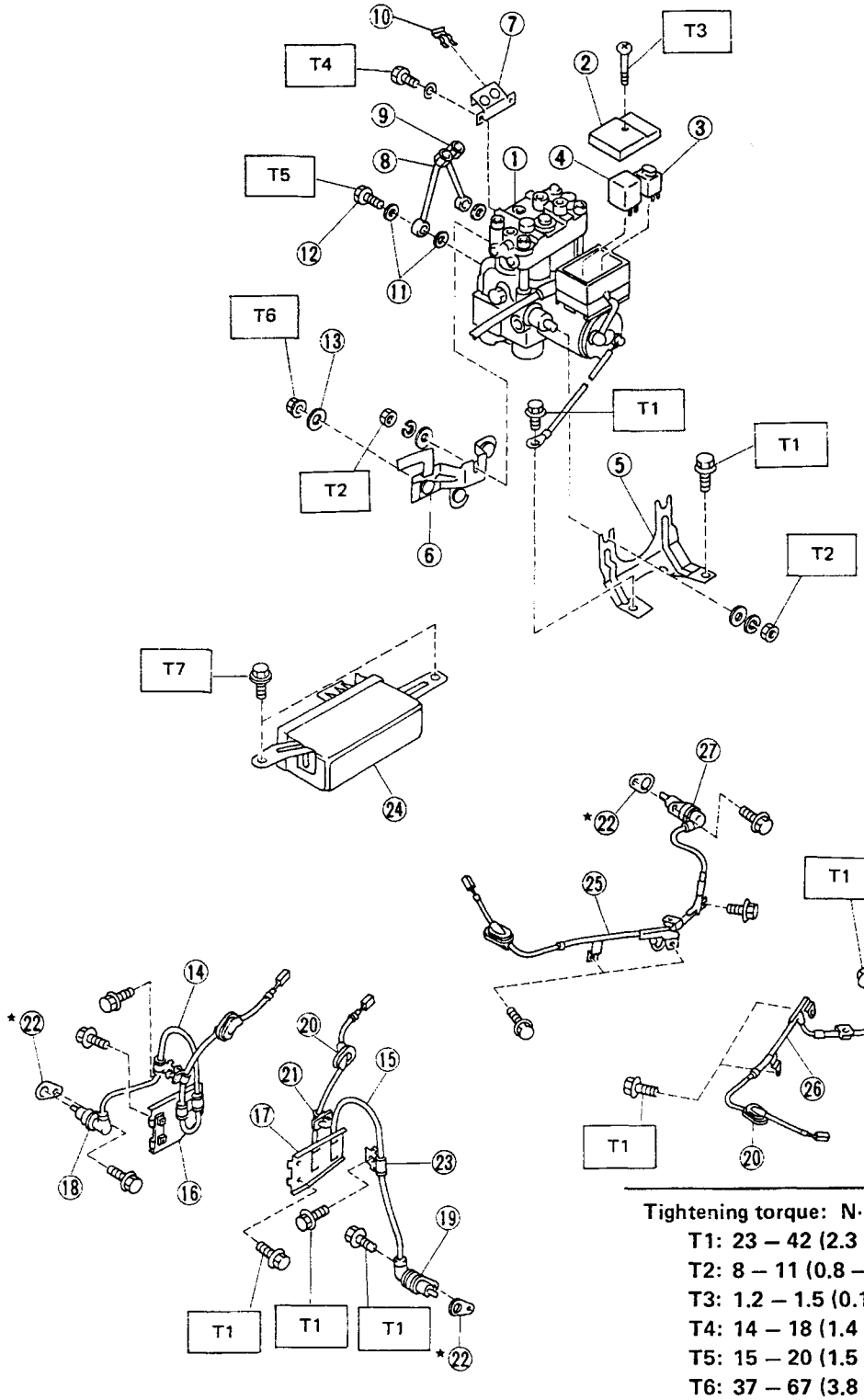

* Selective parts
1 Hydraulic control unit ASSY
2 Relay cover
3 Motor relay
4 Valve relay
5 Hydraulic control unit bracket (A)
6 Hydraulic control unit bracket (B)
7 Joint bracket
8 Inlet joint RH
9 Inlet joint LH
10 Clamp
11 Gasket
12 Union bolt
13 Spacer
14 Front sensor sub ASSY RH
15 Front sensor sub ASSY LH
16 Body COMPL bracket RH
17 Body COMPL bracket LH
18 Front ABS sensor RH
19 Front ABS sensor LH
20 Grommet
21 Bracket
22 Control spacer
23 Front harness clamp
24 Electronic control unit ASSY
25 Rear sensor sub ASSY RH
26 Rear sensor sub ASSY LH
26 Rear ABS sensor RH
28 Rear ABS sensor LH

Tightening torque: N·m (kg-m, ft-lb)
T1: 23 – 42 (2.3 – 4.3, 17 – 31)
T2: 8 – 11 (0.8 – 1.1, 5.8 – 8.0)
T3: 1.2 – 1.5 (0.12 – 0.15, 0.9 – 1.1)
T4: 14 – 18 (1.4 – 1.8, 10 – 13)
T5: 15 – 20 (1.5 – 2.0, 11 – 14)
T6: 37 – 67 (3.8 – 6.8, 27 – 49)
T7: 5.4 – 9.3 (0.55 – 0.95, 4.0 – 6.9)
T8: 2.2 – 2.6 (0.22 – 0.27, 1.6 – 2.0)

C4-520

Fig. 40

6. Parking Brake

1 Parking brake lever
2 Cable ASSY
3 Adjuster nut
4 Lock nut
5 Parking brake switch
6 Bracket
7 Clamp
8 Bracket
9 Parking brake cable LH
10 Parking brake cable RH
11 Cable guide LH
12 Cable guide RH
13 Clamp
14 Back plate
15 Retainer
16 Spring washer
17 Lever
18 Parking brake shoe (Secondary)
19 Parking brake shoe (Primary)
20 Strut spring
21 Strut
22 Shoe guide plate
23 Primary return spring
24 Secondary return spring
25 Adjusting spring
26 Adjusting ASSY
27 Shoe hold down cup
28 Shoe hold down spring
29 Shoe hold down pin
20 Adjusting hole cover

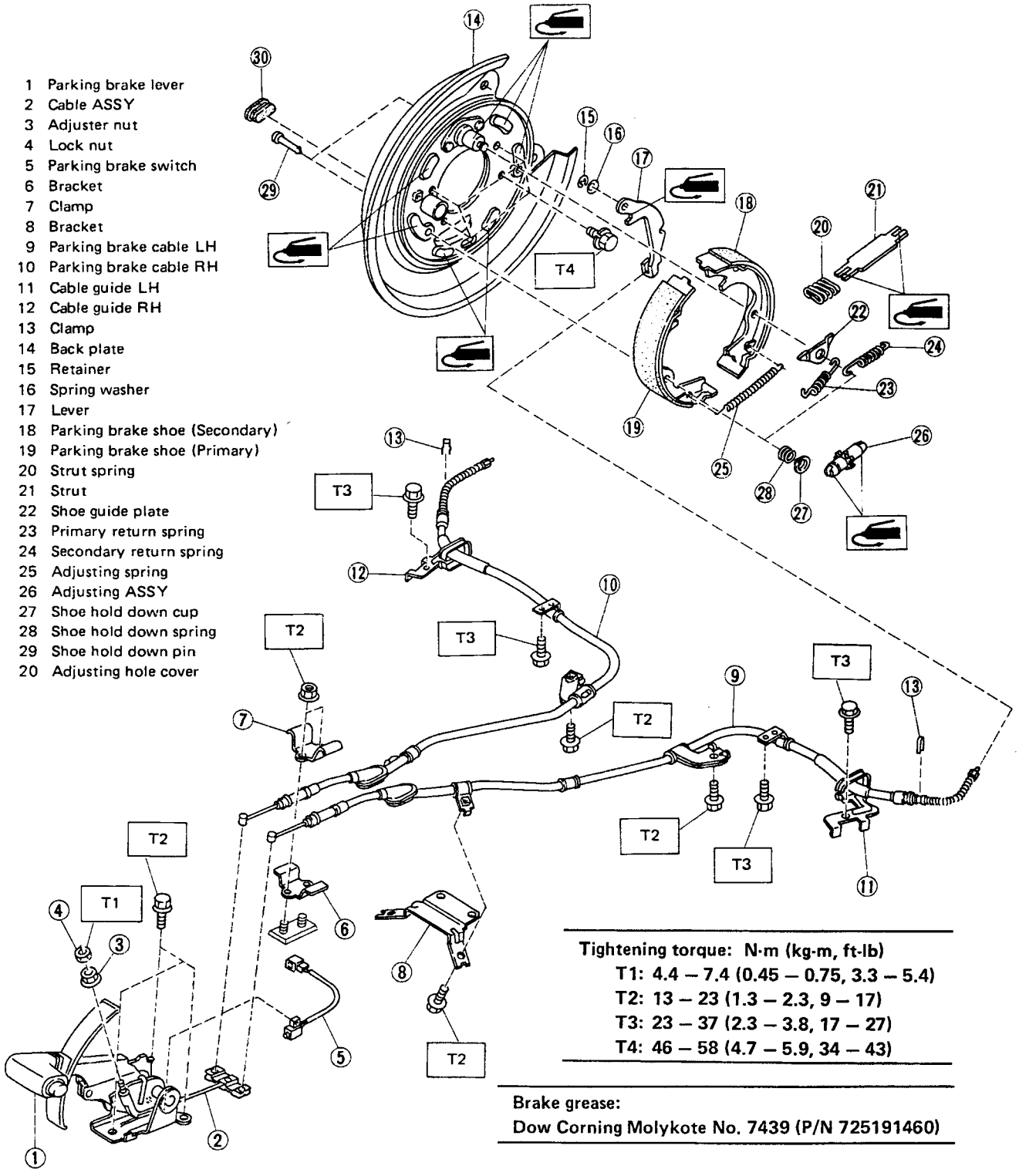

Tightening torque: N·m (kg-m, ft-lb)
T1: 4.4 – 7.4 (0.45 – 0.75, 3.3 – 5.4)
T2: 13 – 23 (1.3 – 2.3, 9 – 17)
T3: 23 – 37 (2.3 – 3.8, 17 – 27)
T4: 46 – 58 (4.7 – 5.9, 34 – 43)

Brake grease:
Dow Corning Molykote No. 7439 (P/N 725191460)

C4-521

Fig. 41

W SERVICE PROCEDURE

1. Front Disc Brake

1 Lock pin
2 Caliper body
3 Air bleeder screw
4 Guide pin boot
5 Lock pin boot
6 Lock pin sleeve
7 Piston seal
8 Piston
9 Piston boot
10 Guide pin
11 Pad clip
12 Support
13 Housing
14 Shim
15 Inner shim
16 Inner pad
17 Outer pad
18 Outer shim
19 Disc cover
20 Disc rotor

Tightening torque: N·m (kg-m, ft-lb)
T1: 34 – 44 (3.5 – 4.5, 25 – 33)
T2: 7 – 9 (0.7 – 0.9, 5.1 – 6.5)
T3: 68 – 88 (7 – 9, 51 – 65)
T4: 10 – 18 (1 – 1.8, 7 – 13)
T5: 34 – 44 (3.5 – 4.5, 25 – 33)

Grease:
Rubber Grease or NIGLUBE RX-2

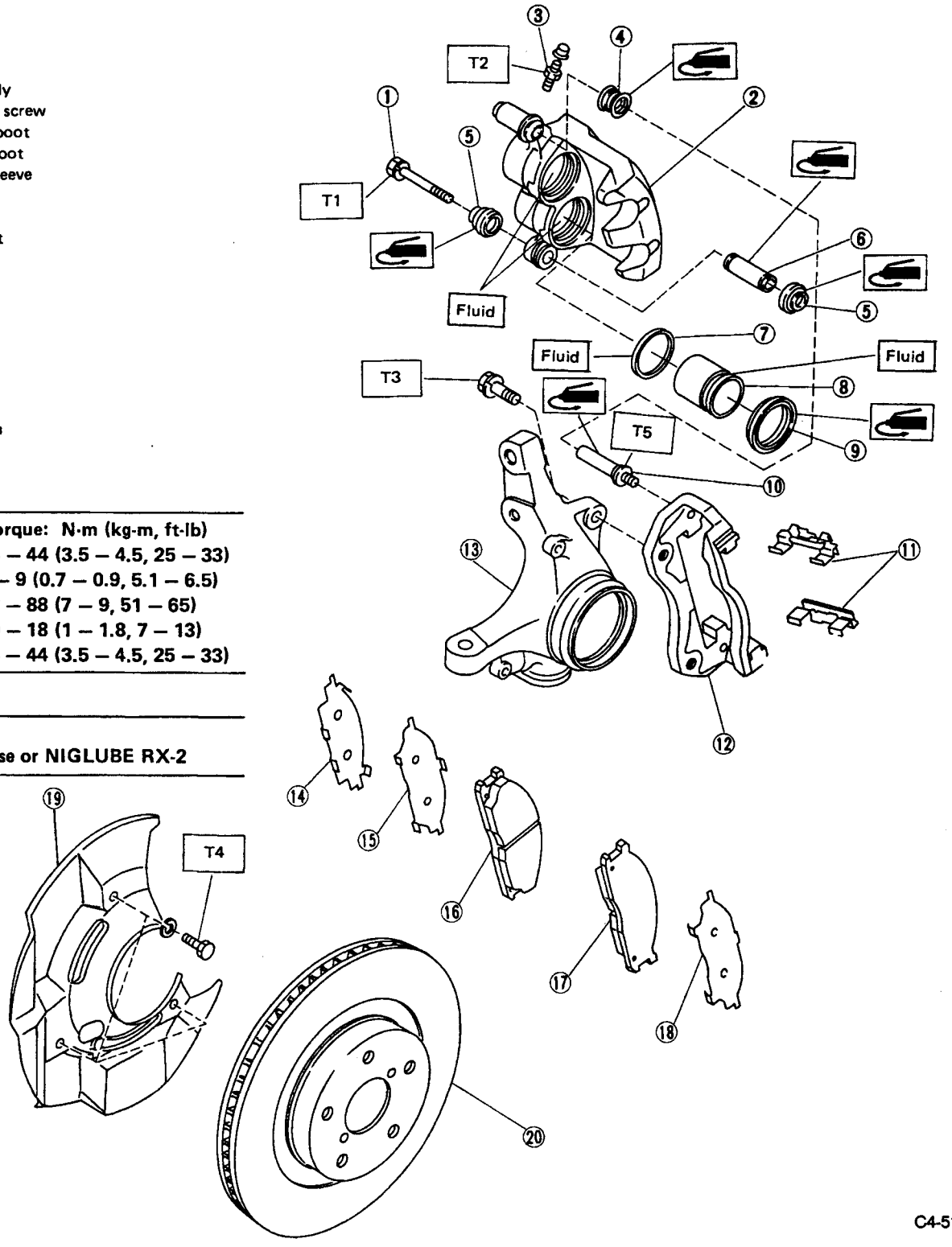

Fig. 42

A: ON-CAR SERVICE

1. PAD

1) Disconnect brake hose from strut.
2) Remove lock pin.

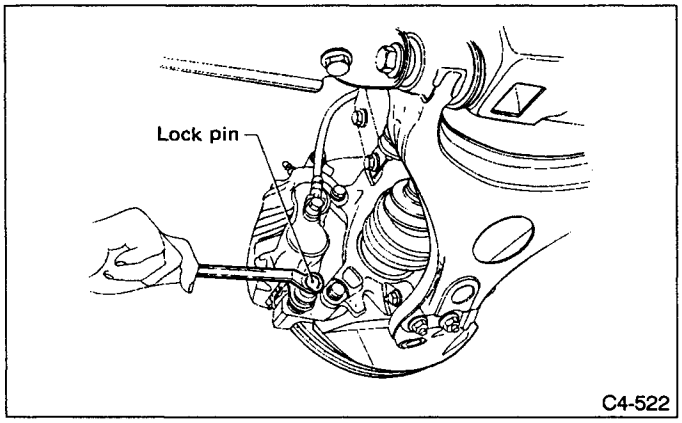

Fig. 43

3) Raise caliper body.
4) Remove pad.

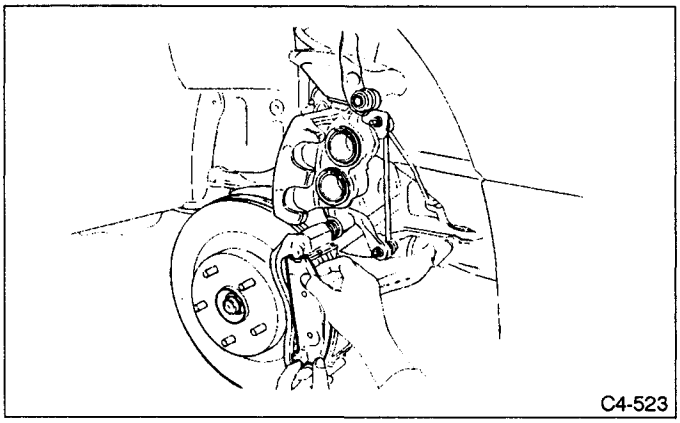

Fig. 44

5) Check pad thickness A.

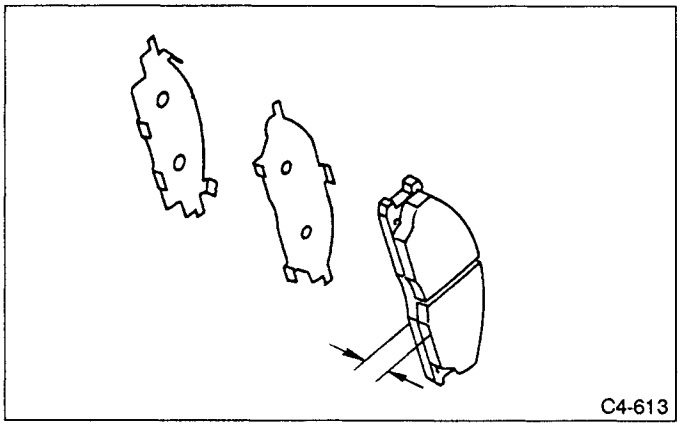

Fig. 45

Pad thickness (including back metal) mm (in)	Standard value	17 (0.67)
	Wear limit	7.5 (0.295)

a. Always replace the pads for both the left and right wheels at the same time. Also replace pad clips if they are twisted or worn.
b. A wear indicator is provided on the outer disc brake pad. If the pad wears down to such an extent that the end of the wear indicator contacts the disc rotor, a squeaking sound is produced as the wheel rotates. If this sound is heard, replace the pad.
c. Replace pad if there is oil or grease on it.
6) Apply thin coat of PBC GREASE (725191330 or 003607000) to the frictional portion between pad and pad clip.
7) Install pads on support.

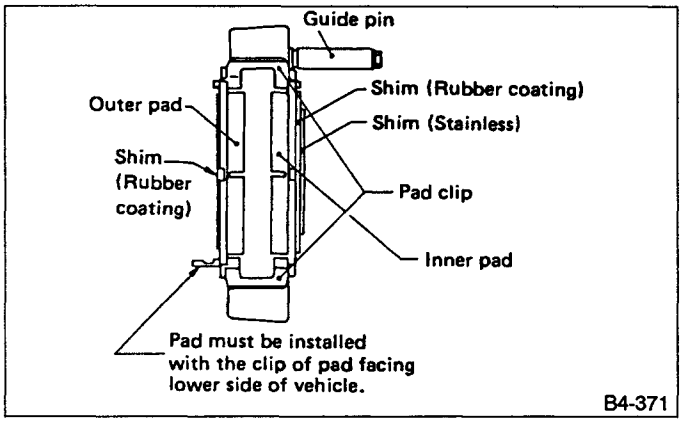

Fig. 46

8) Install caliper body on support.
If it is difficult to push piston during pad replacement, loosen air bleeder to facilitate work.

2. DISC ROTOR

1) Set a dial gauge on the disc rotor. Turn disc rotor to check runout.
Make sure that dial gauge is set 5 mm (0.20 in) inward of rotor outer perimeter.

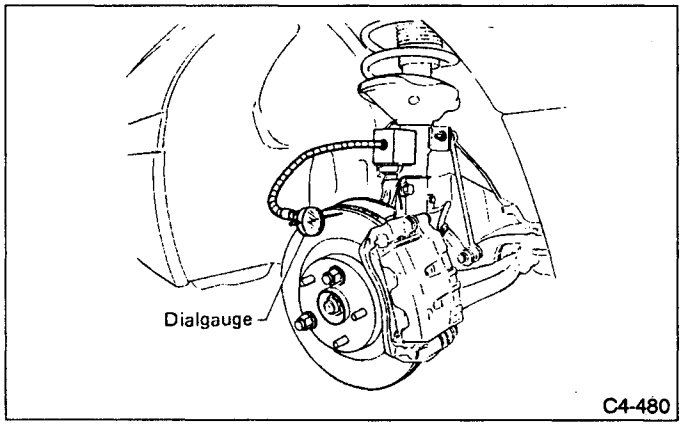

Fig. 47

Disc rotor runout limit:
0.1 mm (0.004 in)

2) Measure disc rotor thickness.
Make sure that micrometer is set 5 mm (0.20 in) inward of rotor outer perimeter.

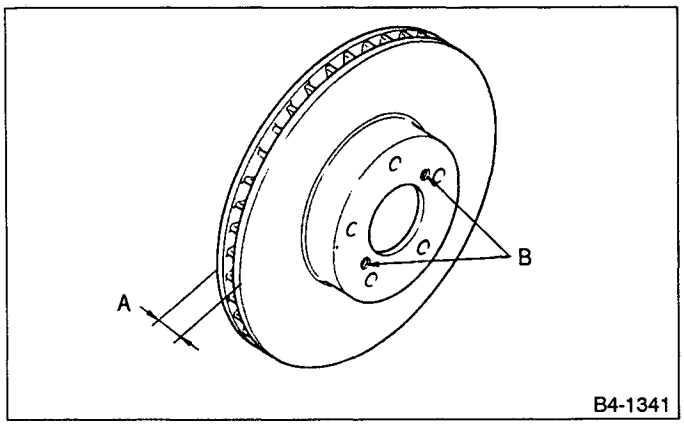

Fig. 48

Disc rotor thickness A mm (in)	Standard value	Service limit
	28.0 (1.102)	26.0 (1.024)

B: REMOVAL

1) Lift up vehicle and remove wheels.
2) Disconnect brake hose from caliper body ASSY.
Do not allow brake fluid to come in contact with vehicle body; wipe off completely if spilled.

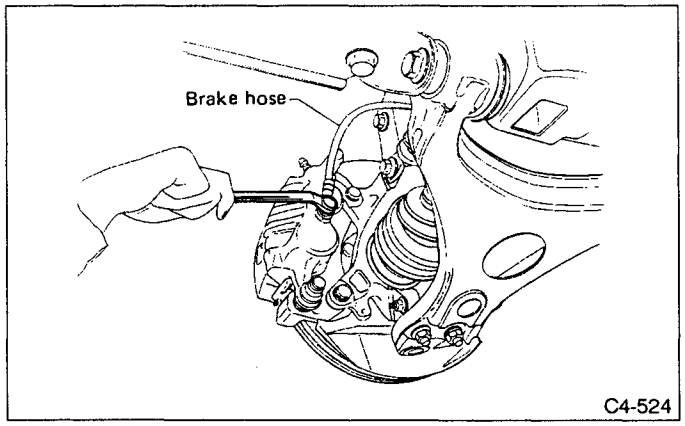

Fig. 49

3) Remove lock pin.

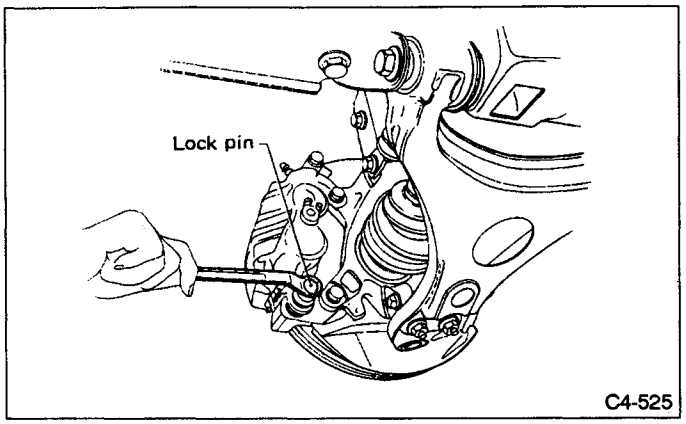

Fig. 50

4) Raise caliper body and move it toward vehicle center to separate it from support.
5) Remove support from housing.
Remove support only when replacing it or the rotor. It need not be removed when servicing caliper body ASSY.

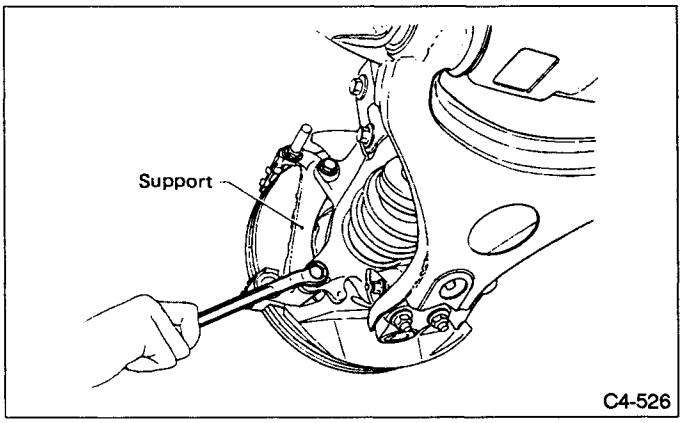

Fig. 51

6) Remove disc rotor from hub.
If disc rotor seizes up within hub, drive disc rotor out by installing an 8-mm bolt in holes B on the rotor.

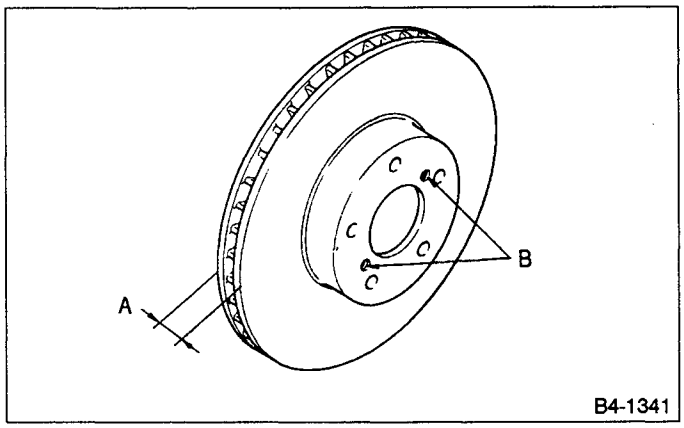

Fig. 52

7) Clean mud and foreign particles from caliper body ASSY and support.
Be careful not to allow foreign particles to enter inlet (at brake hose connector).

C: DISASSEMBLY

1) Gradually supply compressed air via inlet of caliper body to force piston out.
a. Place a wooden block as shown in Fig.53 to prevent damage to piston.
b. Do not apply excessively high pressure.

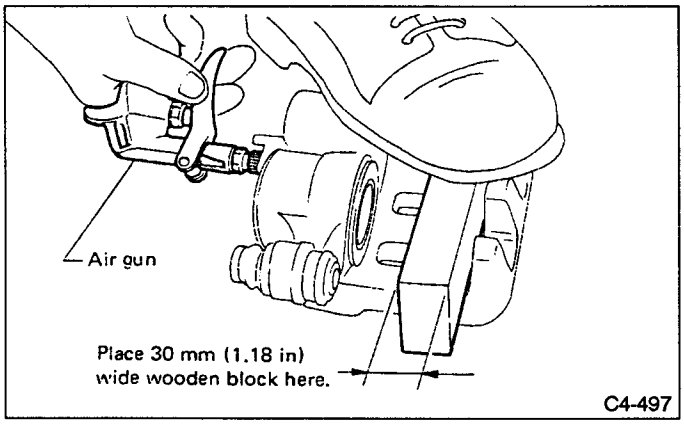

Fig. 53

2) Remove piston boot.
3) Remove piston seal from caliper body cylinder.

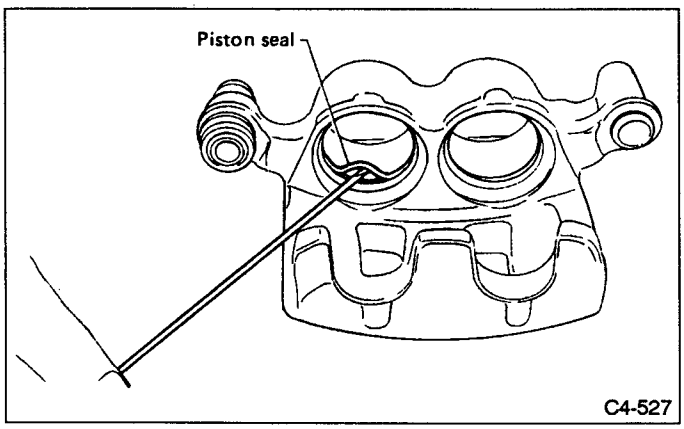

Fig. 54

4) Remove lock pin sleeve and boot from caliper body.
5) Remove guide pin boot.

D: INSPECTION

1) Repair or replace faulty parts.
2) Check caliper body and piston for uneven wear, damage or rust.
3) Check rubber parts for damage or deterioration.

E: ASSEMBLY

1) Clean caliper body interior using brake fluid.
2) Apply a coat of brake fluid to piston seal and fit piston seal in groove on caliper body.
3) Apply a coat of brake fluid to the entire inner surface of cylinder and outer surface of piston.
4) Apply a coat of specified grease to boot and fit in groove on ends of cylinder and install piston boot onto caliper body.

Grease:
RUBBER GREASE or NIGLUBE RX-2

5) Insert piston into boot and cylinder.
Do not force piston into cylinder.

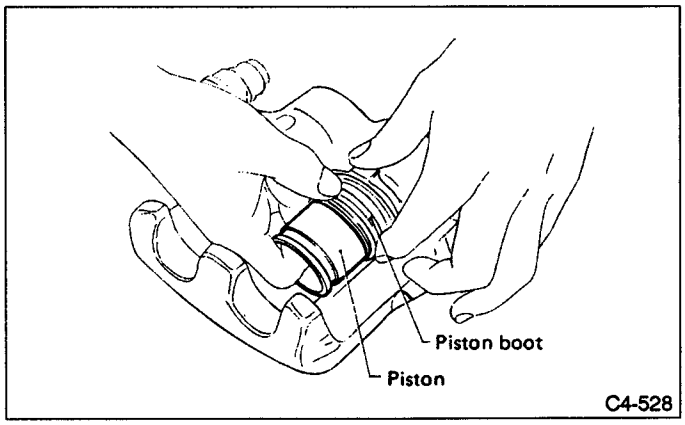

Fig. 55

6) Position boot in grooves on cylinder and piston.

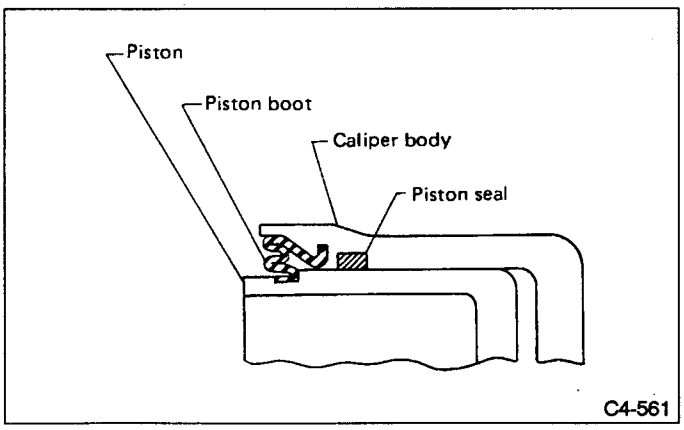

Fig. 56

7) Apply a coat of specified grease to guide pin outer surface, sleeve outer surface, cylinder inner surface and boot grooves.

Grease:
RUBBER GREASE or NIGLUBE RX-2

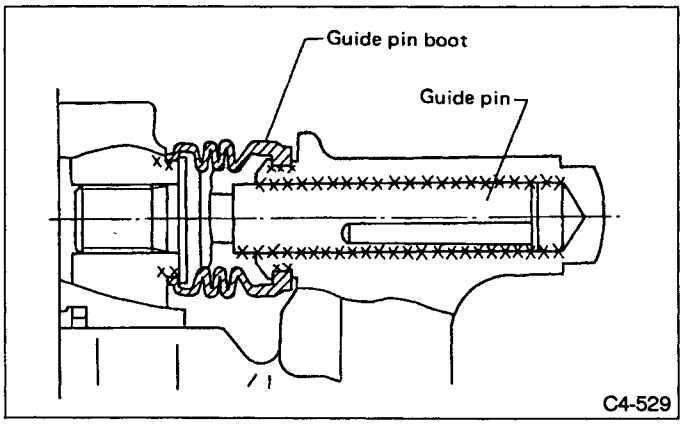

Fig. 57 Grease application to guide pin portion

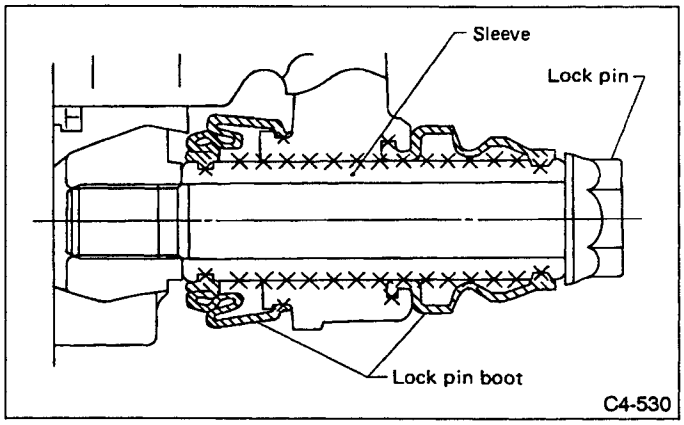

Fig. 58 Grease application to lock pin portion

8) Install guide pin boot on caliper body.
9) Install lock pin boot on caliper body and insert lock pin sleeve into place.

F: INSTALLATION

1) Install disc rotor on housing.
2) Install support on housing.
a. Always replace the pads for both the left and right wheels at the same time. Also replace pad clips if they are twisted or worn.
b. A wear indicator is provided on the outer disc brake pad. If the pad wears down to such an extent that the end of the wear indicator contacts the disc rotor, a squeaking sound is produced as the wheel rotates. If this sound is heard, replace the pad.
c. When replacing the pad, replace pads of the right and left wheels at the same time.
3) Apply thin coat of PBC GREASE (725191330 or 003607000) to the frictional portion between pad and pad clip.
4) Install pads, rubber coated shim and stainless shim on support.

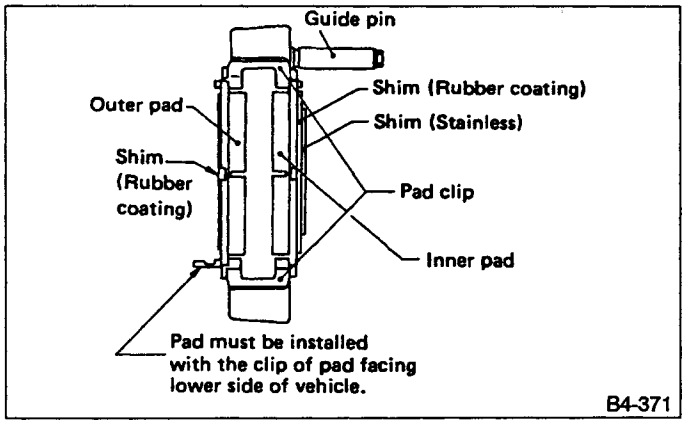

Fig. 59

5) Install caliper body on support.
6) Connect brake hose.
7) Bleed air from brake system.

2. Rear Disc Brake

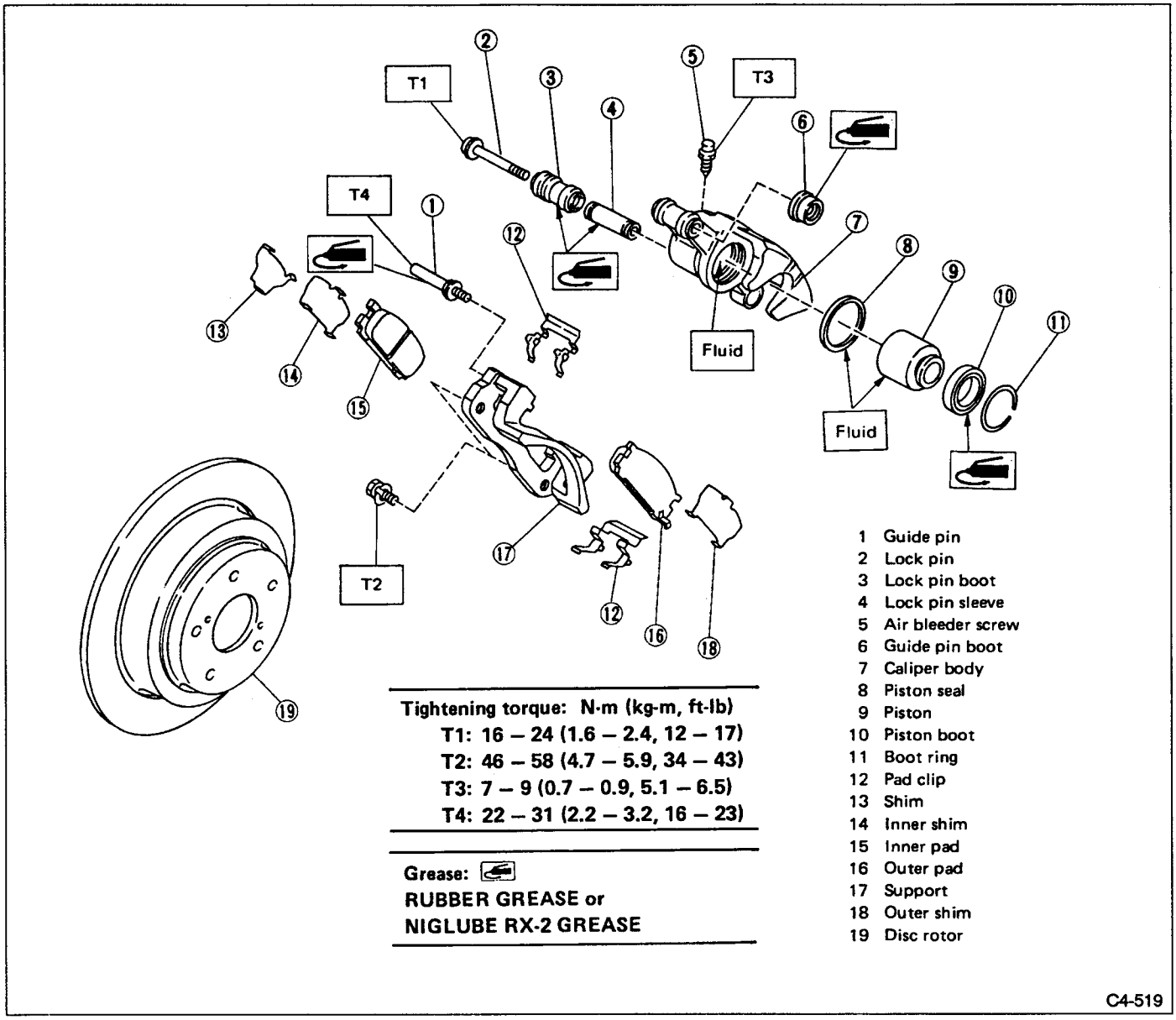

Fig. 60

A: ON-CAR SERVICE

1. PAD

1) Disconnect brake hose from strut.
2) Remove lock pin.

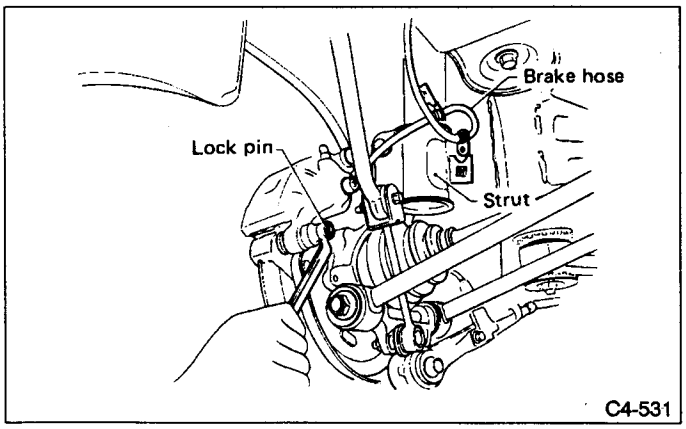

Fig. 61

3) Raise caliper body.
4) Remove pad from support.

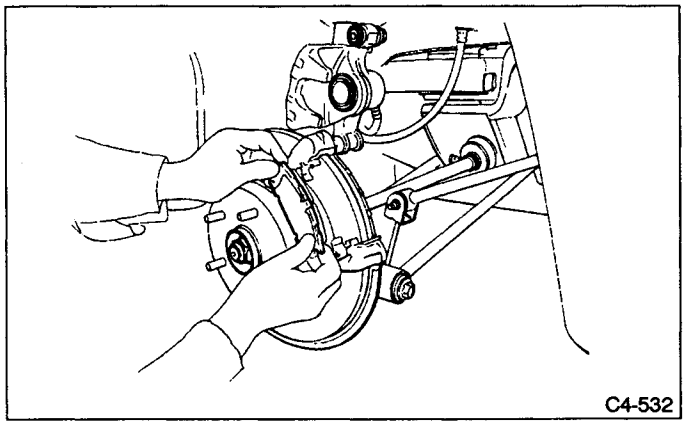

Fig. 62

5) Check pad thickness A.

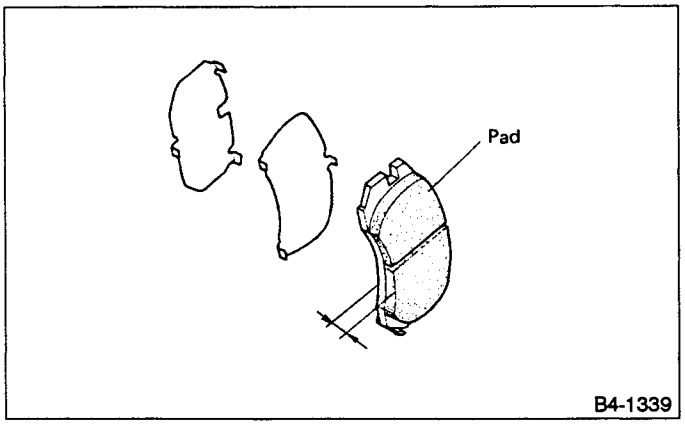

Fig. 63

Pad thickness (including back metal) mm (in)	Standard value	15.0 (0.591)
	Wear limit	6.5 (0.256)

a. Always replace the pads for both the left and right wheels at the same time. Also replace pad clips if they are twisted or worn.
b. A wear indicator is provided on the outer disc brake pad. If the pad wears down to such an extent that the end of the wear indicator contacts the disc rotor, a squeaking sound is produced as the wheel rotates. If this sound is heard, replace the pad.
c. Replace pad if there is oil or grease on it.
6) Apply thin coat of PBC GREASE (725191330 or 003607000) to the frictional portion between pad and pad clip.
7) Install pad on support.

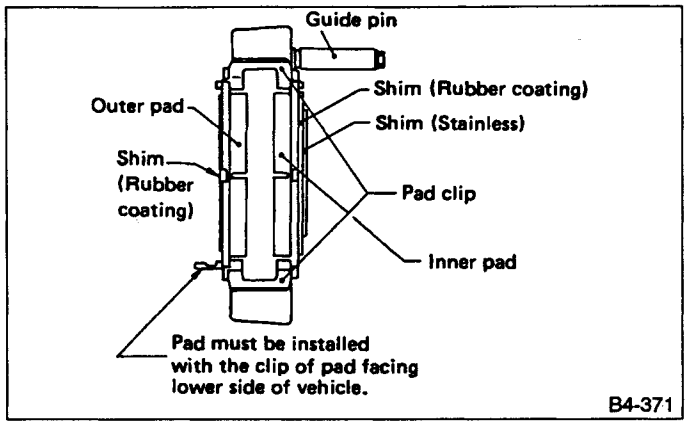

Fig. 64

8) Install caliper body on support.
If it is difficult to push piston during pad replacement, loosen air bleeder to facilitate work.

2. DISC ROTOR

1) Set a dial gauge on the disc rotor. Turn disc rotor to check runout.
Make sure that dial gauge is set 5 mm (0.20 in) inward of rotor outer perimeter.

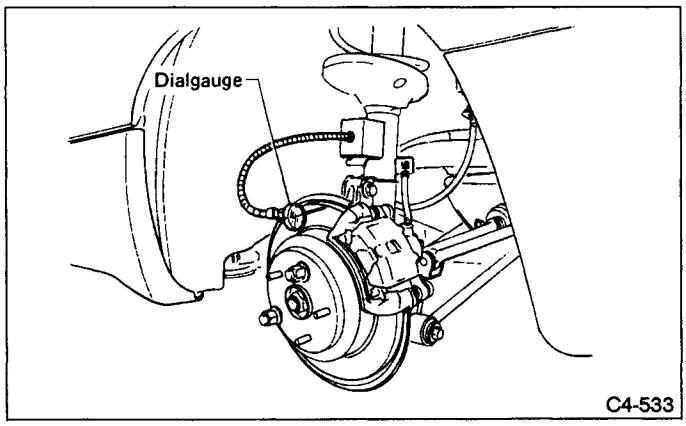

Fig. 65

Disc rotor runout limit:
0.1 mm (0.004 in)

2) Measure disc rotor thickness.
Make sure that micrometer is set 5 mm (0.20 in) inward of rotor outer perimeter.

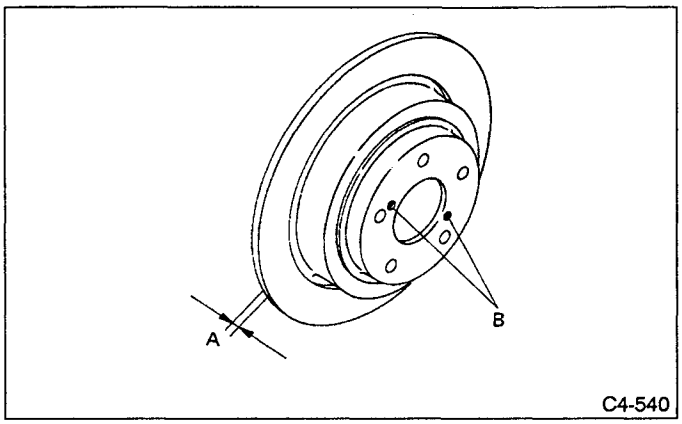

Fig. 66

Disc rotor thickness A mm (in)	Standard value	Service limit
	10 (0.39)	8.5 (0.335)

When removing disc rotor, refer to instructions under Parking Brake [W3A0].

B: REMOVAL

1) Lift up vehicle and remove wheels.
2) Disconnect brake hose from caliper body ASSY.
Do not allow brake fluid to come in contact with vehicle body; wipe off completely if spilled.

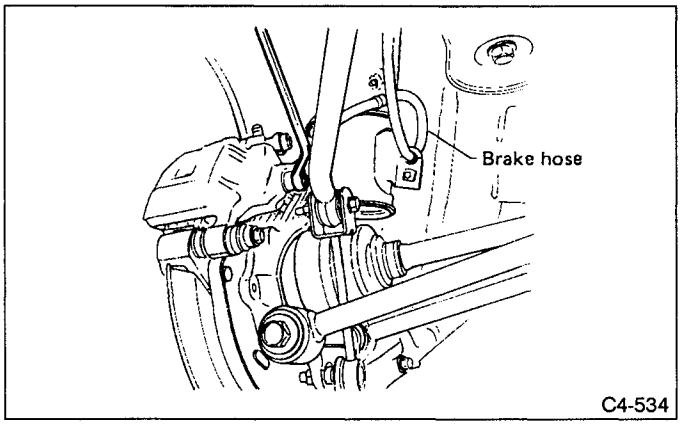

Fig. 67

3) Remove lock pin.

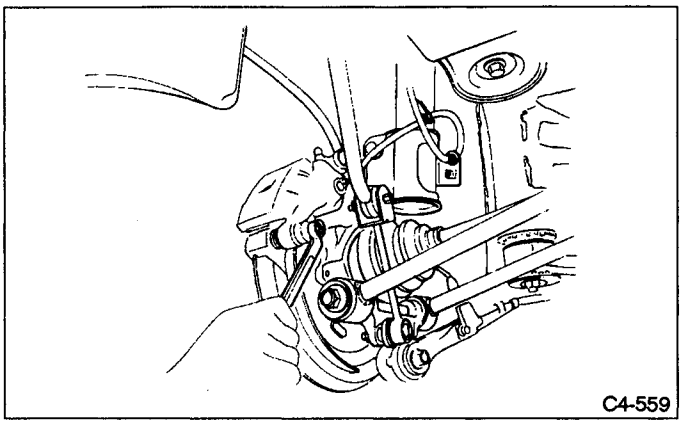

Fig. 68

4) Raise caliper body and move it toward vehicle center to separate it from support.
5) Remove support from back plate.
Remove support only when replacing it or the rotor. It need not be removed when servicing caliper body ASSY.
6) Clean mud and foreign particles from caliper body ASSY and support.
Be careful not to allow foreign particles to enter inlet (at brake hose connector).

C: DISASSEMBLY

1) Remove the boot ring.

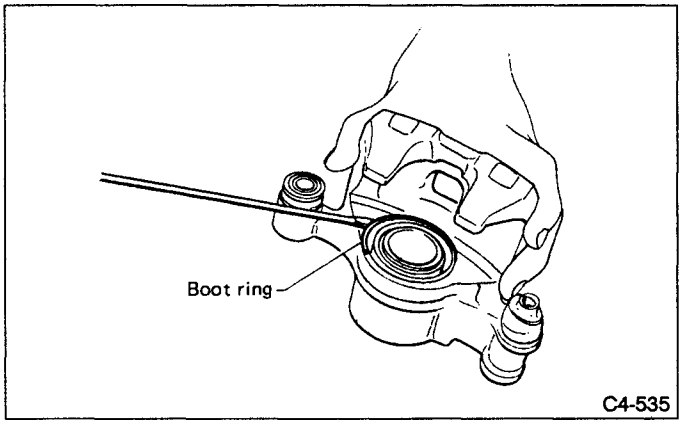

Fig. 69

2) Remove the piston boot.

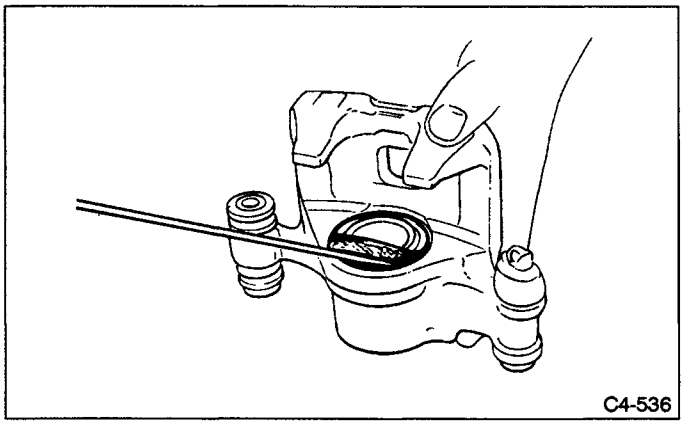

Fig. 70

3) Gradually supply compressed air via inlet of caliper body to force piston out.
a. Place a wooden block as shown in Fig. 71 to prevent damage to piston.
b. Do not apply excessively high pressure.

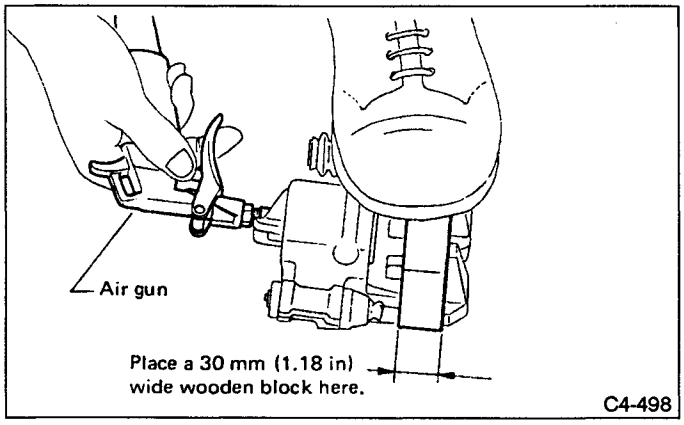

Fig. 71

4) Remove piston seal from caliper body cylinder.

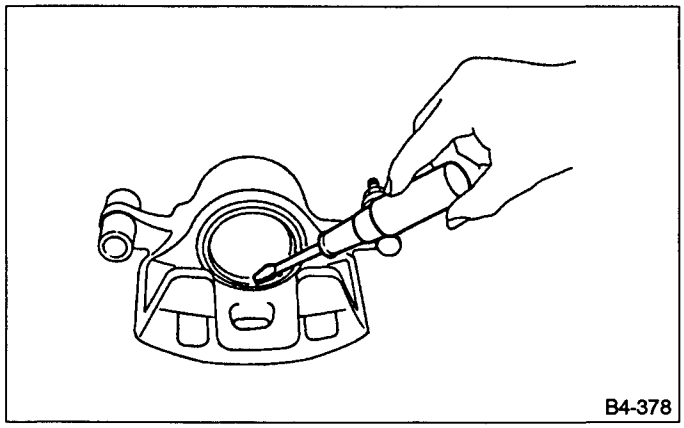

Fig. 72

5 Remove lock pin sleeve and boot from caliper body.
6) Remove guide pin boot.

D: INSPECTION

1) Repair or replace faulty parts.
2) Check caliper body and piston for uneven wear, damage or rust.
3) Check rubber parts for damage or deterioration.

E: ASSEMBLY

1) Clean caliper body interior using brake fluid.
2) Apply a coat of brake fluid to piston seal and fit piston seal in groove on caliper body.
3) Apply a coat of brake fluid to the entire inner surface of cylinder and outer surface of piston.
4) Insert piston into cylinder.
Do not force piston into cylinder.
5) Apply a coat of specified grease to boot and fit in groove on ends of cylinder and piston.

Grease:
RUBBER GREASE or NIGLUBE RX-2

6) Install the piston boot to the caliper body, and attach boot ring.

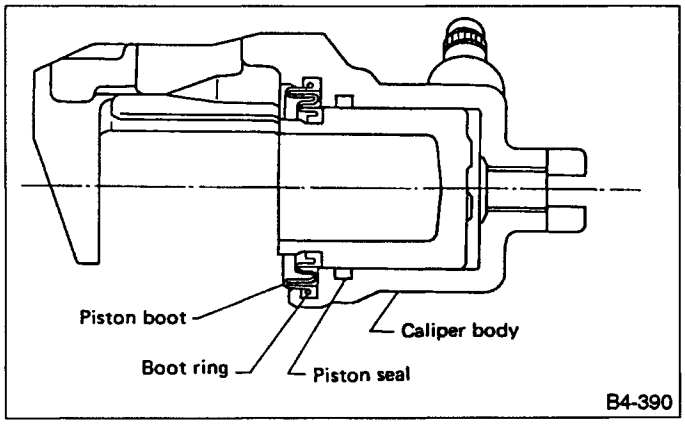

Fig. 73

7) Apply a coat of specified grease to guide pin, outer surface, sleeve outer surface, cylinder inner surface, and boot grooves.

Grease:
RUBBER GREASE or NIGLUBE RX-2

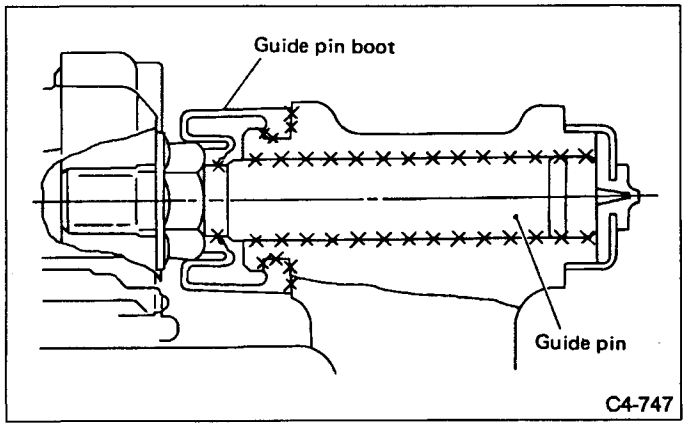

Fig. 74

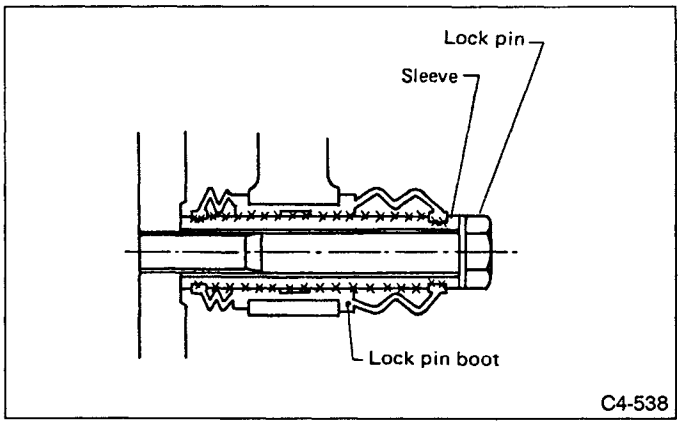

Fig. 75

8) Install guide pin boots on caliper body.
9) Install lock pin boots on caliper body and insert lock pin sleeve into place.

F: INSTALLATION

1) Install disc rotor on hub.
2) Install support on back plate.

a. Always replace the pads for both the left and right wheels at the same time. Also replace pad clips if they are twisted or worn.

b. A wear indicator is provided on the outer disc brake pad. If the pad wears down to such an extent that the end of the wear indicator contacts the disc rotor, a squeaking sound is produced as the wheel rotates. If this sound is heard, replace the pad.

c. Replace pads if there is oil or grease on them.

3) Apply thin coat of PBC GREASE (725191330 or 003607000) to the frictional portion between pad and pad clip.
4) Install pads on support.

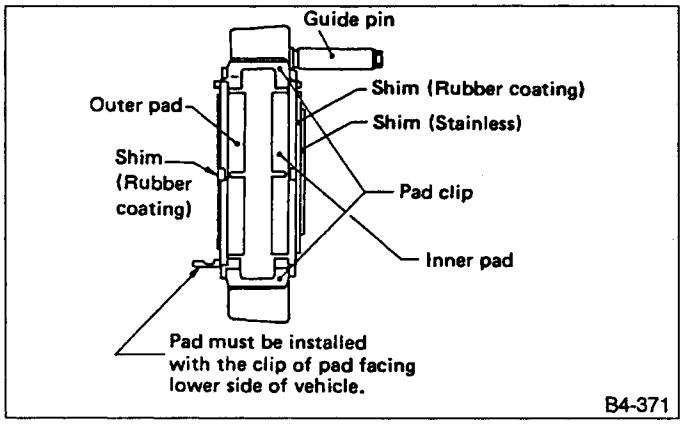

Fig. 76

5) Install caliper body on support.
6) Connect brake hose.
7) Bleed air from brake system.

3. Parking Brake

A: REMOVAL

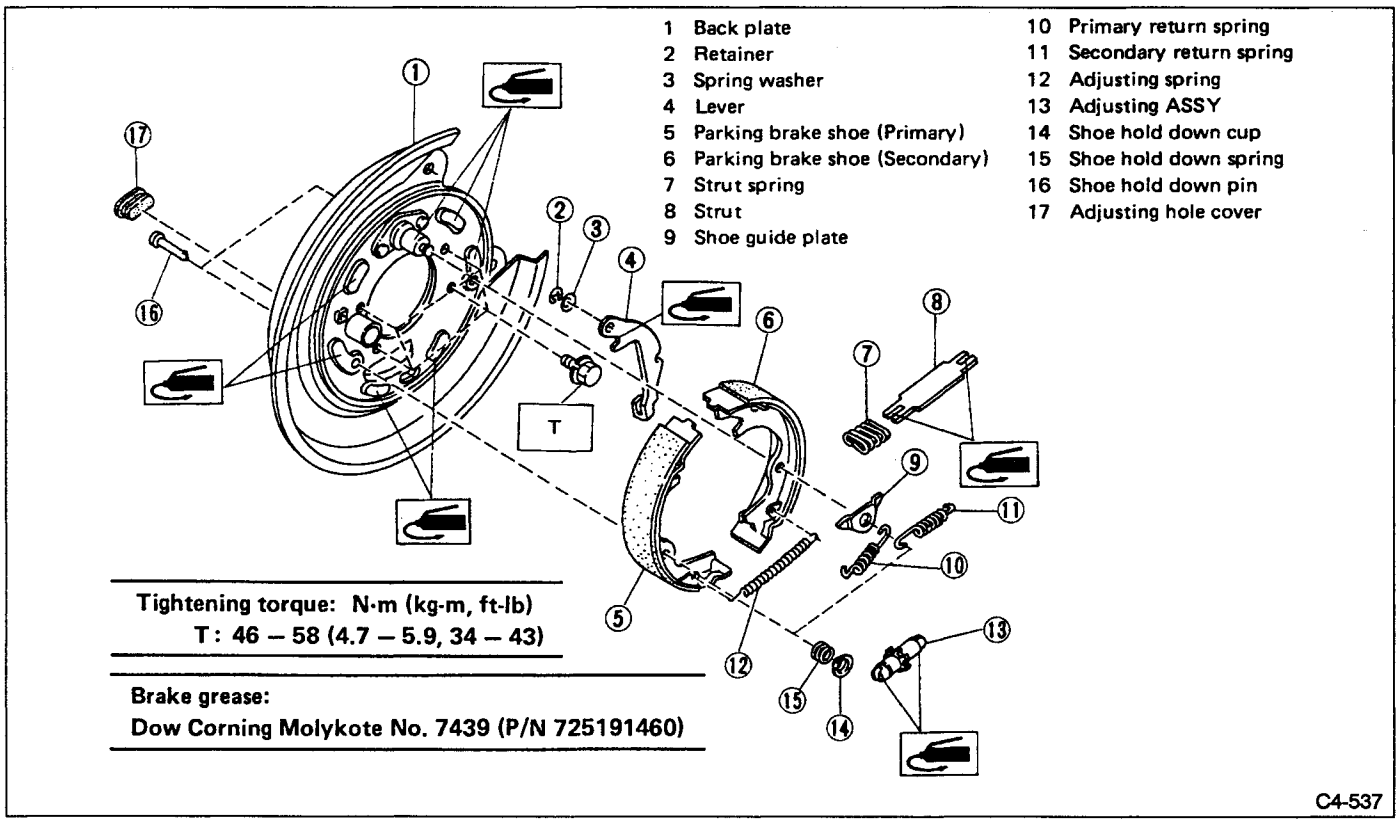

Fig. 77

1) Lift up vehicle and remove rear wheel.
2) Release parking brake lever.
3) Remove console box lid.

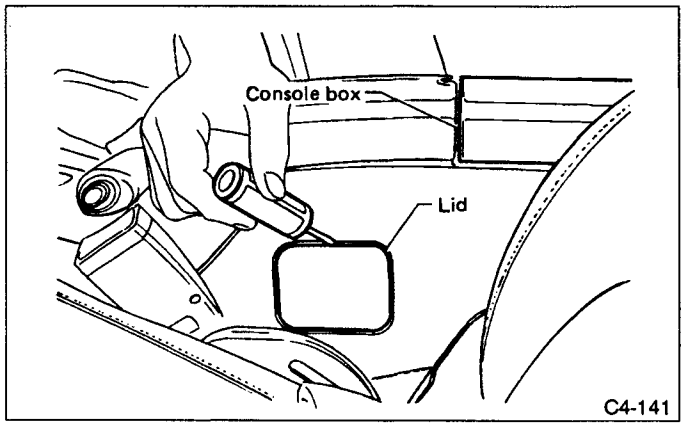

Fig. 78

4) Loosen adjuster.

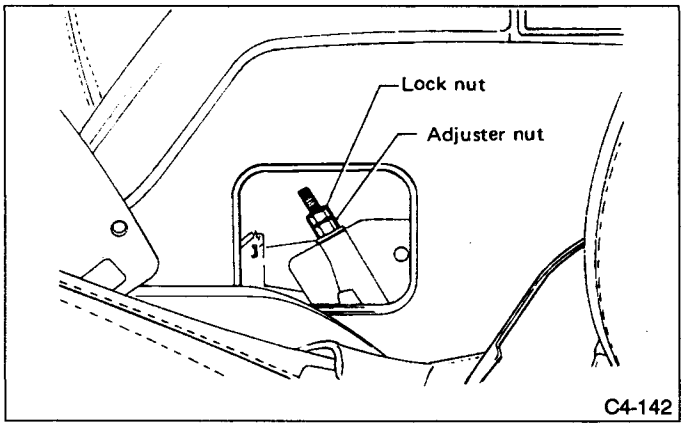

Fig. 79

5) Remove brake hose clamp from strut.
6) Remove brake caliper ASSY.

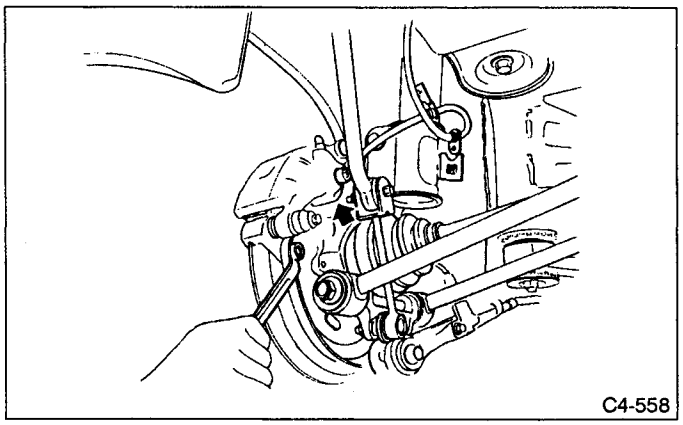

Fig. 80

7) Fasten caliper assembly to strut with wire.

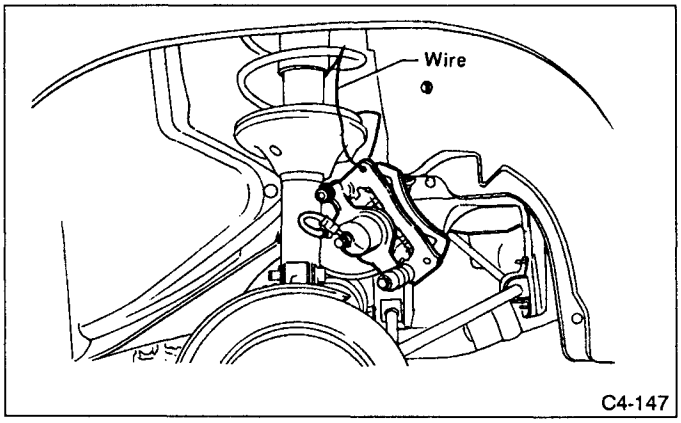

Fig. 81

8) Remove disc rotor.
If disc rotor seizes up within hub, drive it out by installing 8-mm bolts into holes "B" in disc rotor.

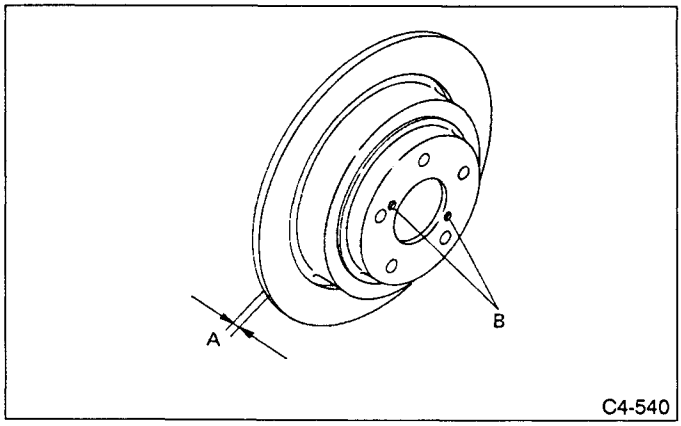

Fig. 82

9) Remove shoe return spring from parking brake ASSY.
10) Disconnect hold-down cup from hold-down pin by rotating hold-down cup.
11) Remove strut and strut spring.
12) Remove adjuster ASSY and adjuster spring.
13) Disconnect lever from parking brake cable.

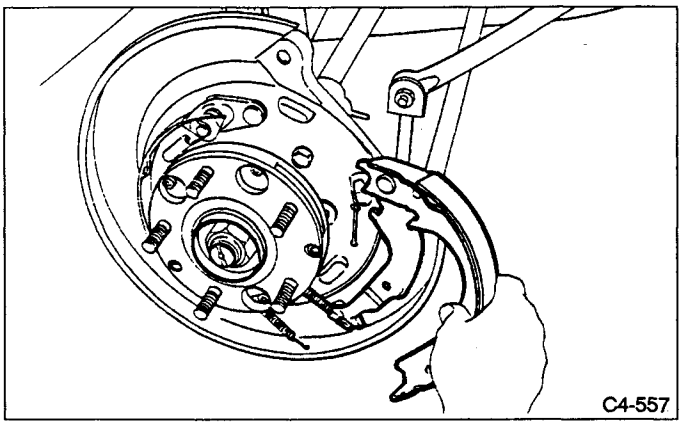

Fig. 83

B: INSPECTION

1) Measure brake disc inside diameter. If the disc is scored or worn, replace the brake disc.

Disc inside diameter:
Standard
190 mm (7.48 in)
Service limit
191 mm (7.52 in)

2) Measure the lining thickness. If it exceeds the limit, replace shoe ASSY.

Lining thickness:
Standard
3.2 mm (0.126 in)
Service limit
1.5 mm (0.059 in)

Replace the brake shoes on the right and left brake ASSY at the same time.
Use new retainers and clinch them when installing brake shoes to levers.

C: INSTALLATION

Be sure lining surface is free from oil contamination.

Brake grease:
Dow Corning Molykote No 7439 (P/N 725191460)

1) Apply brake grease to the following places. (Refer to Figure 77.)
(1) Six contact surfaces of shoe rim and back plate packing.
(2) Contact surface of shoe wave and anchor pin
(3) Contact surface of lever and strut
(4) Contact surface of shoe wave and adjuster assembly
(5) Contact surface of shoe wave and strut
(6) Contact surface of lever and shoe wave

2) Installation is in reverse order of removal.
a. Use new retainers and clinch them when installing brake shoes to levers.
b. Ensure that parking lever moves smoothly.
c. Do not confuse left parking lever with right one.
d. Do not confuse left strut with right one.
e. Ensure that adjuster assembly is securely installed with screw in the left side.

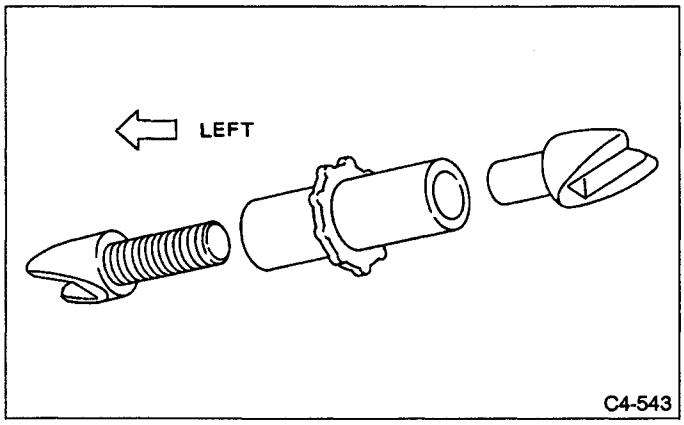

Fig. 84

f. Ensure that shoe return spring is installed as shown in Fig. 85.

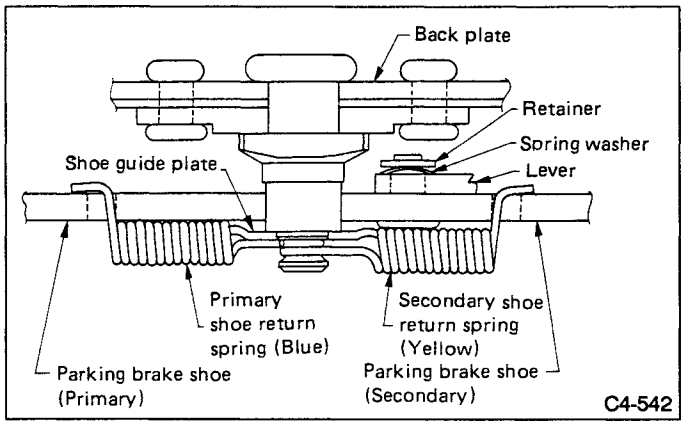

Fig. 85

3) Adjust parking brakes. Refer to 4-4 [W3D1].
a. After replacing parking brake lining, be sure to drive vehicle for "break-in" purposes.
b. Drive the vehicle about 35 km/h (22 MPH).
c. With the parking brake release button pushed in, pull the parking brake lever gently.
d. Drive the vehicle for about 200 meter (0.12 mile) in this condition.
e. Wait 5 to 10 minutes for the parking brake to cool down. Repeat this procedure once more.
f. After breaking-in, re-adjust parking brakes.

4) Check back plate bolt tightening torque as follows:
(1) Remove caliper and disc rotor.
(2) Remove tone wheel attaching bolts.

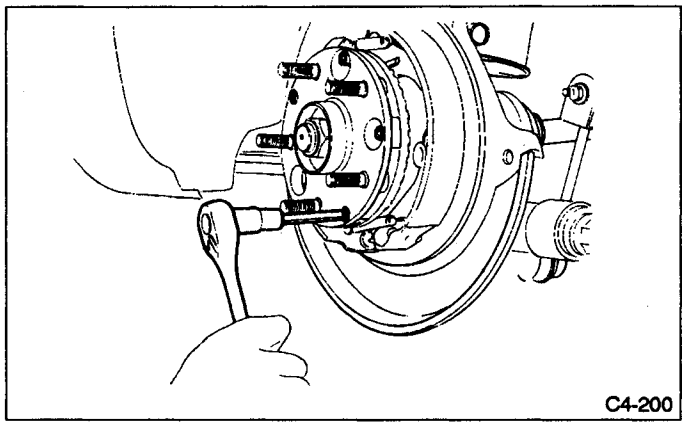

Fig. 86

(3) Check tightening torque of four back plate bolts through service hole in hub.

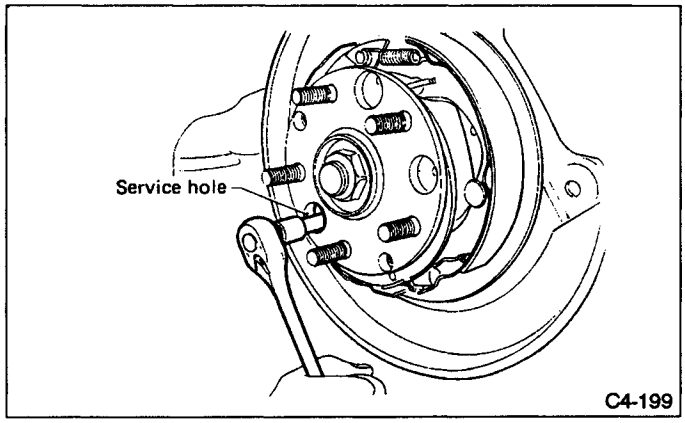

Fig. 87

D: PARKING BRAKE ADJUSTMENT

1. SHOE CLEARANCE ADJUSTMENT

1) Remove adjusting hole cover from back plate.
2) Turn adjusting screw using a slot-type screw driver until brake shoe is in close contact with disc rotor.
3) Turn back (downward) adjusting screw 3 or 4 notches.

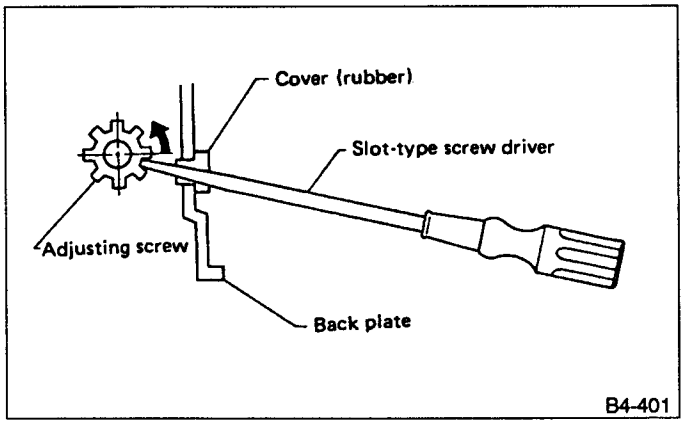

Fig. 88

4) Install adjusting hole cover to back plate.

2. LEVER STROKE ADJUSTMENT

1) Remove console box lid.

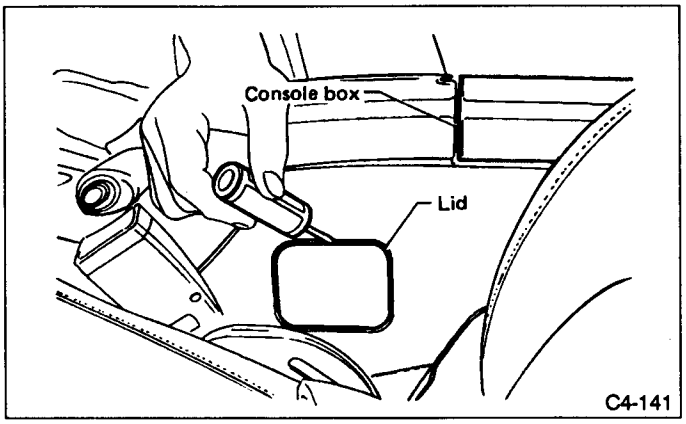

Fig. 89

2) Forcibly pull parking brake lever 3 to 5 times.
3) Adjust parking brake lever by turning adjuster until parking brake lever stroke is set at 6 to 7 notches with operating force of 196 N (20 kg, 44 lb).
4) Tighten lock nut.

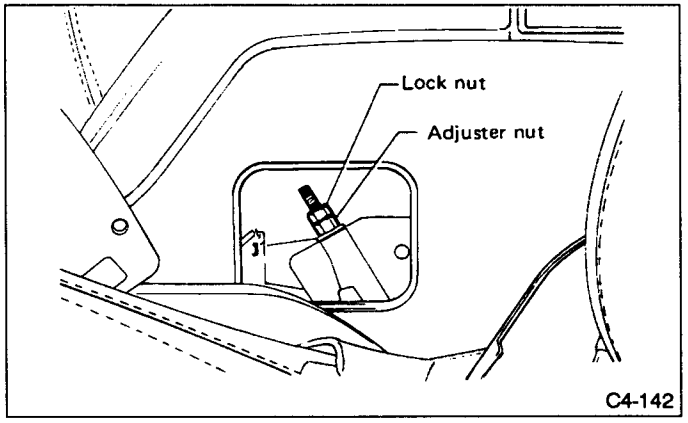

Fig. 90

5) Install console box lid.

Lever stroke:
6 to 7 notches when pulled with a force of 196 N (20 kg, 44 lb)

Torque (Adjuster lock nut):
4.4 — 7.4 N•m (0.45 — 0.75 kg-m, 3.3 — 5.4 ft-lb)

4. Parking Brake Cable

A: REPLACEMENT

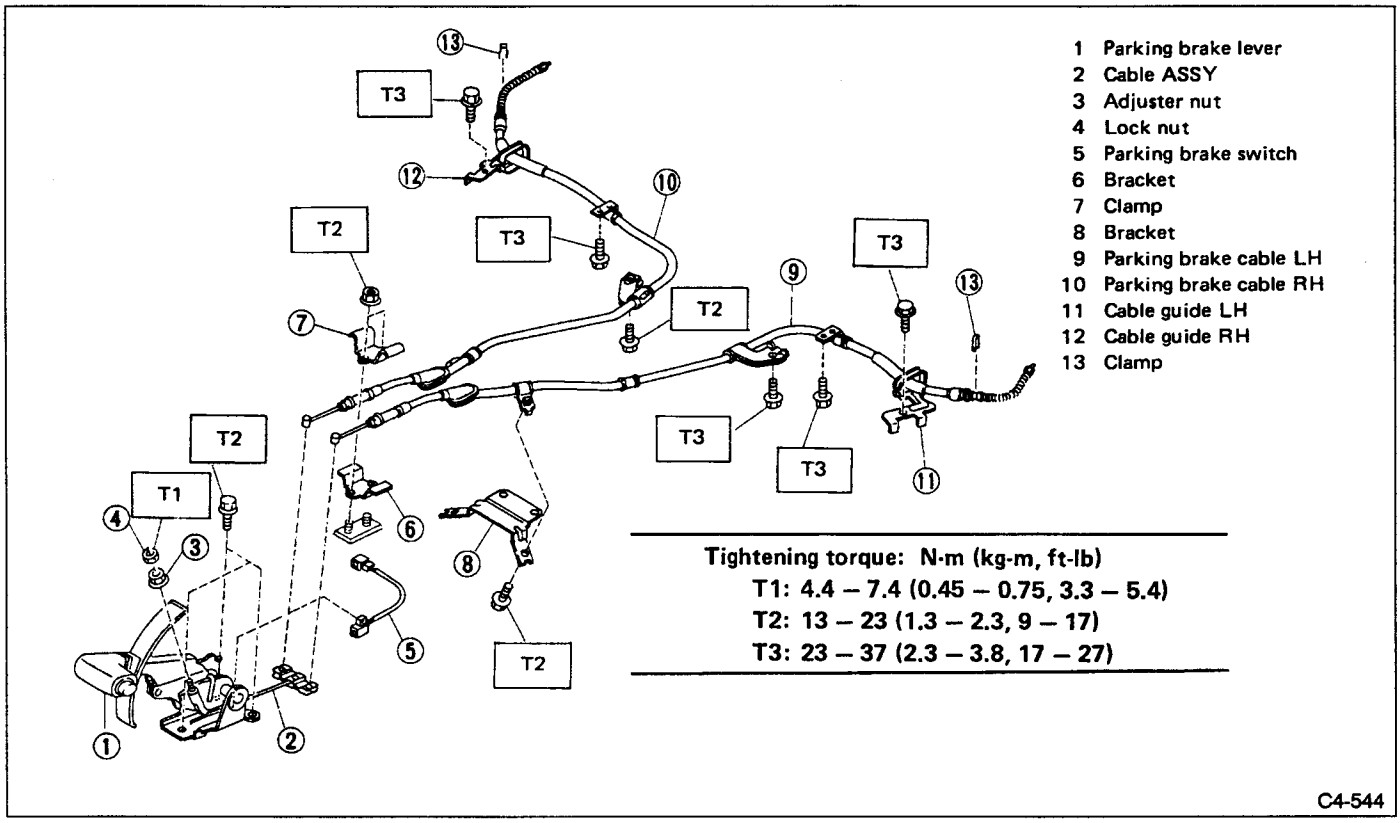

Fig. 91

1) Lift up vehicle and remove rear wheels.
2) Remove console box from front floor.
3) Remove adjuster and lock nut from parking brake cable.

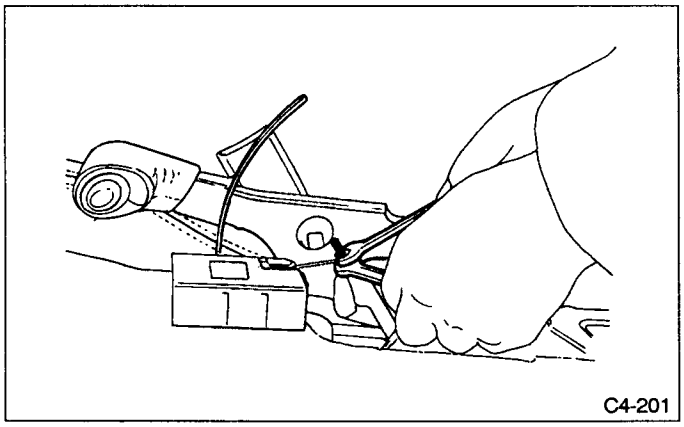

Fig. 92

4) Remove console bracket.

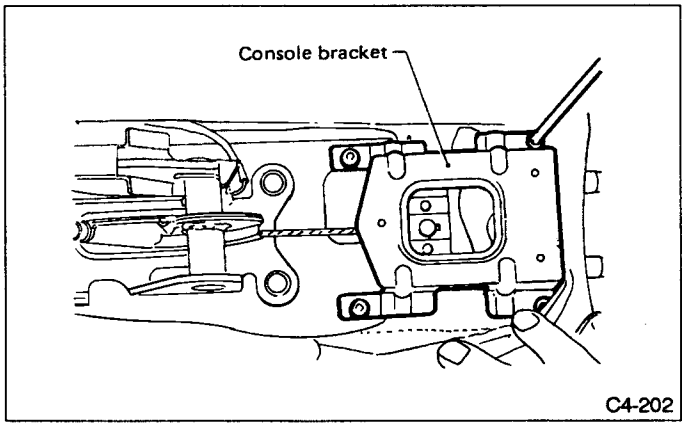

Fig. 93

5) Remove clamp.

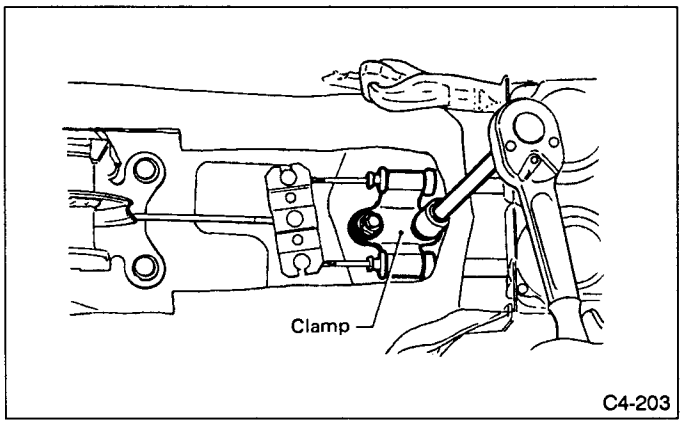

Fig. 94

6) Remove inner cable end from equalizer.

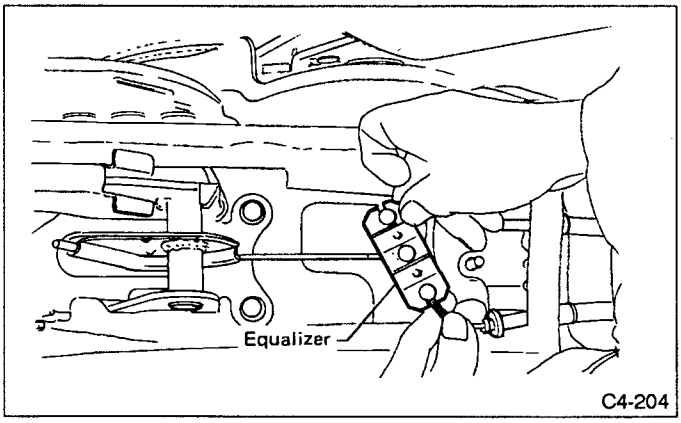

Fig. 95

7) Push grommet out of compartment.

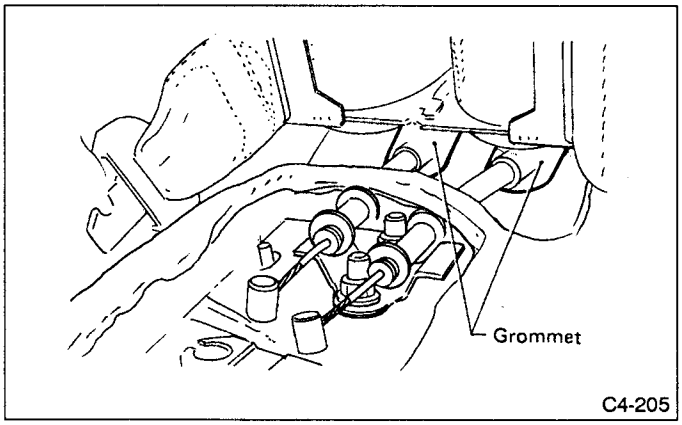

Fig. 96

8) Remove parking brake cable from cable guide.

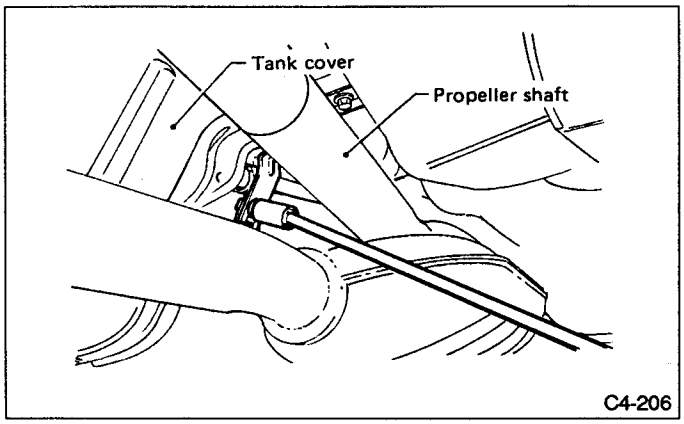

Fig. 97

9) Remove two bolts securing front of tank cover.

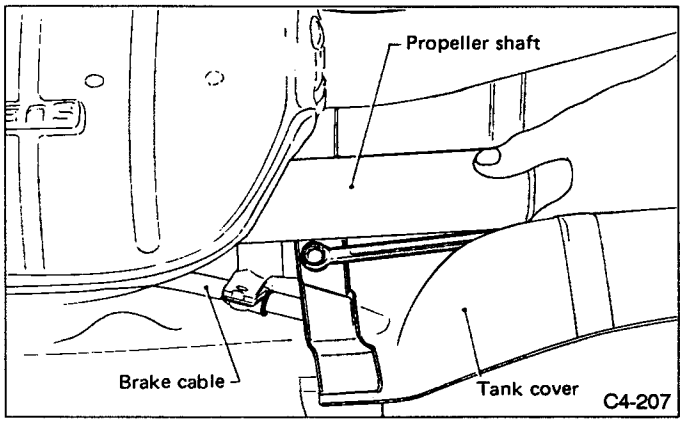

Fig. 98

10) While pushing brake cable, remove brake cable clamp from tank cover.

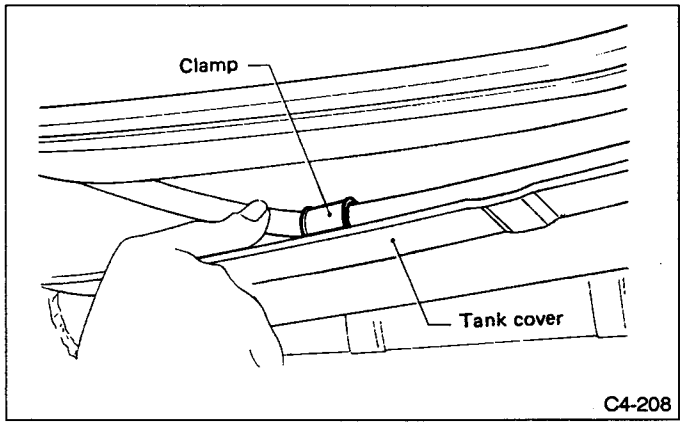

Fig. 99

11) Remove cable clamp.

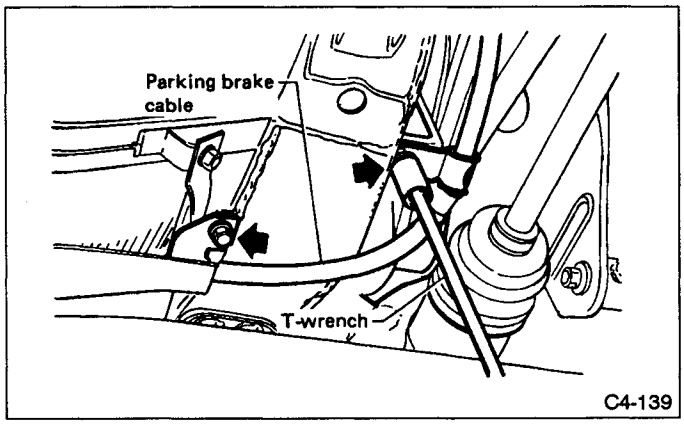

Fig. 100

12) Remove cable guide from trailing link.

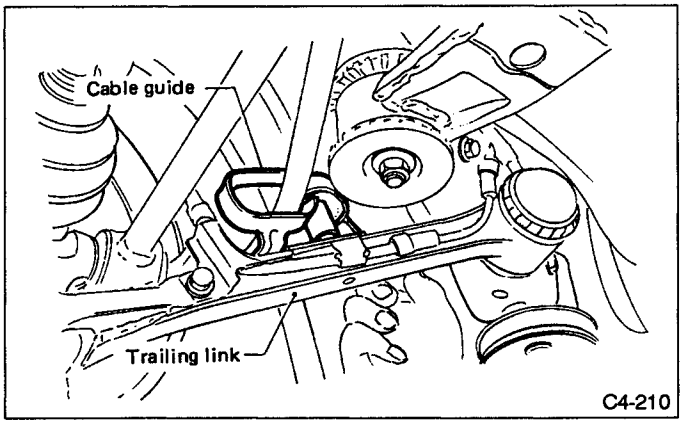

Fig. 101

13) Remove clamp from back plate.

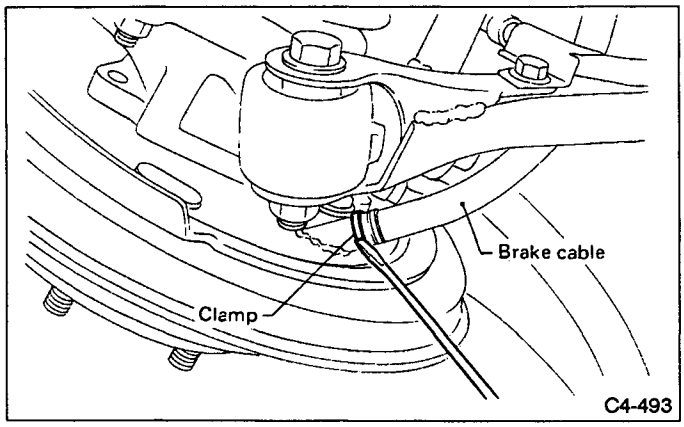

Fig. 102

14) Remove parking brake shoe (secondary) (Refer to 4-4 W3A0.)
15) Disconnect lever from parking brake cable.

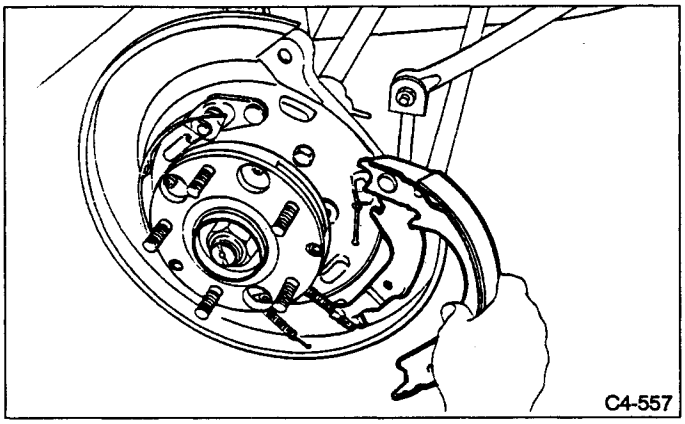

Fig. 103

16) Remove parking brake cable from vehicle.
17) Install (new) parking brake cable in the reverse order of removal.
Be sure to adjust the lever stroke and shoe clearance. (Refer to 4-4 W3D1.)

5. Parking Brake Lever

A: REPLACEMENT

1) Remove console box from front floor.
2) Disconnect electric connector for parking brake switch.
3) Disconnect shift lock unit for parking brake lever.
4) Remove adjuster and lock nut.
5) Remove parking brake lever.

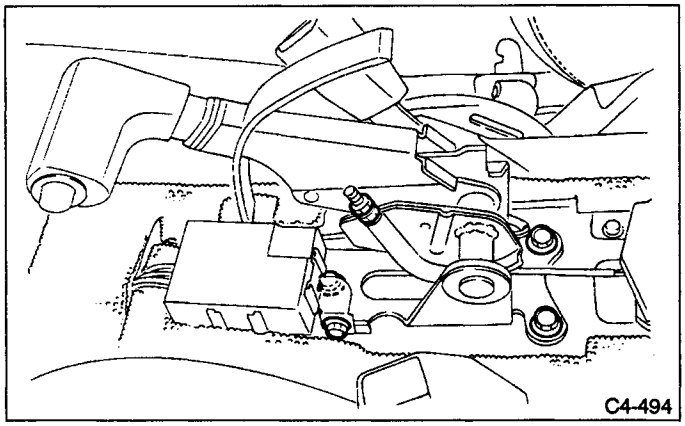

Fig. 104

6) Install parking brake lever in the reverse order of removal.
Be sure to adjust the lever stroke and shoe clearance. (Refer to 4-4 W3D1.)

6. Master Cylinder

A: REMOVAL

1 Cap
2 Reserve tank
3 Seal
4 Cylinder body
5 Secondary piston
6 Primary piston
7 C-ring
8 Level indicator ASSY
9 Secondary piston stopper
10 Gasket
11 Reservoir stopper bolt
12 Connector bracket

Tightening torque: N·m (kg-m, ft-lb)
T1: 10 – 18 (1.0 – 1.8, 7 – 13)
T2: 13 – 18 (1.3 – 1.8, 9 – 13)
T3: 1.5 – 2.9 (0.15 – 0.3, 1.1 – 2.2)

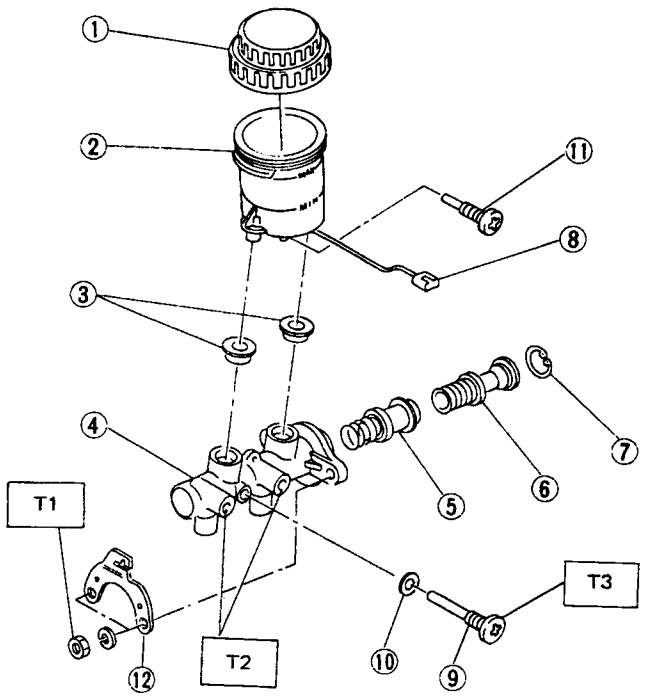

C4-545

Fig. 105

1) Disconnect battery ground cable.
2) Remove brake fluid using a syringe or similar tool.

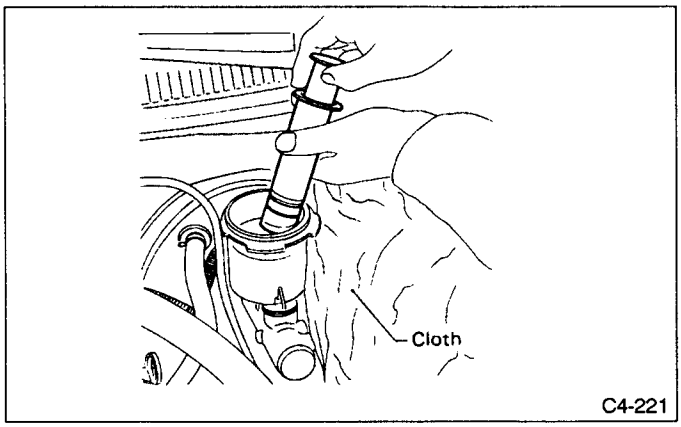

C4-221

Fig. 106

3) Disconnect fluid level indicator harness connector.

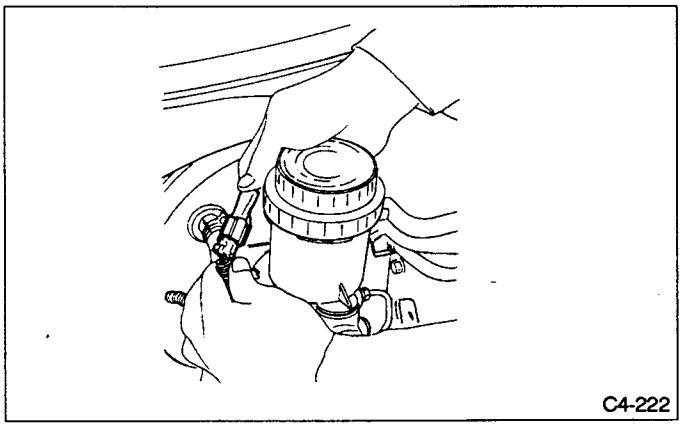

C4-222

Fig. 107

4) Disconnect brake pipes from master cylinder.

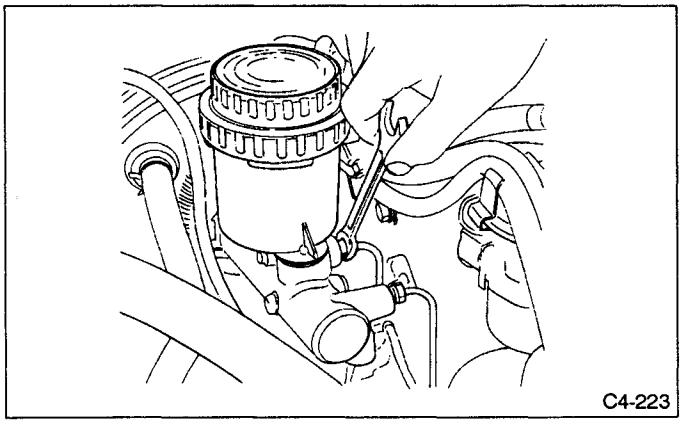

Fig. 108

5) Remove master cylinder from brake booster.

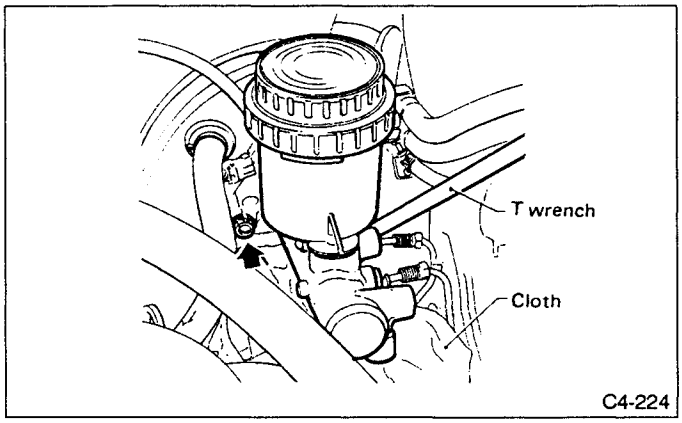

Fig. 109

Be extremely careful not to spill brake fluid. Brake fluid spilt on the vehicle body will harm the painted surface; wipe it off quickly if spilt.

B: DISASSEMBLY

1. PRECAUTIONS FOR DISASSEMBLY

1) Remove mud and dirt from the surface of brake master cylinder.
2) Prepare tools necessary for disassembly operation, and arrange them neatly on work bench.
3) Clean work bench.
4) Tools for disassembly operation:
- Phillips screwdriver 1
- C-ring pliers 1

2. DISASSEMBLY PROCEDURE

1) Remove supply valve stopper.
2) Remove C-ring with C-ring pliers pushing in primary piston slightly.

Piston may jump out from master cylinder.

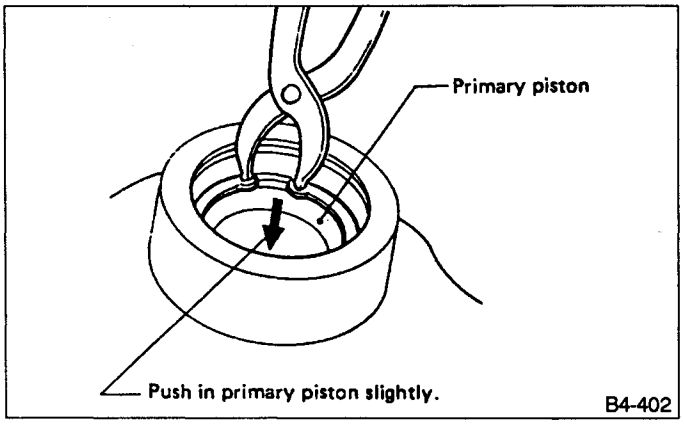

Fig. 110

3) Extract primary piston CP and secondary piston CP.

a. Do not disassemble the piston CP; otherwise, the spring set value may be changed.
b. Use brake fluid or methanol to wash inside wall of cylinder, pistons and piston cups. Be careful not to damage parts when washing. If methanol is used for washing, do not dip rubber parts, such as piston cups, in it for more than 30 seconds; otherwise, they may become swelled.

C: INSPECTION

If any damage, deformation, wear, swelling, rust, and other faults are found on the primary piston CP, secondary piston CP, supply valve stopper, or gasket, replace the faulty part.

a. The primary and secondary pistons must be replaced as complete assemblies.
b. The service limit of the clearance between each piston and the master cylinder inner dia. is 0.11 mm (0.0043 in).
c. When handling parts, be extremely careful not to damage or scratch the parts, or let any foreign matter get on them.

D: ASSEMBLY

1. PRECAUTIONS FOR ASSEMBLING

1) When assembling, be sure to use recommended brake fluid.
2) Ensure that the inside wall of cylinder, pistons, and piston cups are free from dirt when assembling.
3) Be extremely careful not to damage, scratch, or dent cylinder inside wall, pistons, and piston cups.
4) Do not drop parts. Never attempt to use any part that has been dropped accidentally.

2. ASSEMBLING OPERATION

1) Assembling piston CP:
Apply recommended brake fluid to inside wall of cylinder, and to outer surface of piston CP, and install piston CPs carefully into cylinder.
2) Assembling supply valve stopper:
After installing piston into cylinder, push primary piston in about 10 mm (0.39 in), using a rod, such as push rod then assemble gasket and supply valve stopper.

Tightening torque:
1.5 — 2.9 N•m (0.15 — 0.3 kg-m, 1.1 — 2.2 ft-lb)

If the gasket and secondary piston stopper are assembled without pushing in the primary piston, scratches may be caused on the secondary piston, and no pressure may be built up in the secondary side. To avoid such an error, be sure to push in the primary piston before assembling these parts.
3) Assembling C-ring:
With primary piston pushed in slightly, attach C-ring by using C-ring pliers.
After assembling, ensure that the C-ring is fitted securely in the ring groove.

E: INSTALLATION

Installation is in the reverse order of removal.
After installing master cylinder, bleed air from the brake system.
Be sure to use recommended brake fluid.

7. Brake Booster

A: REMOVAL

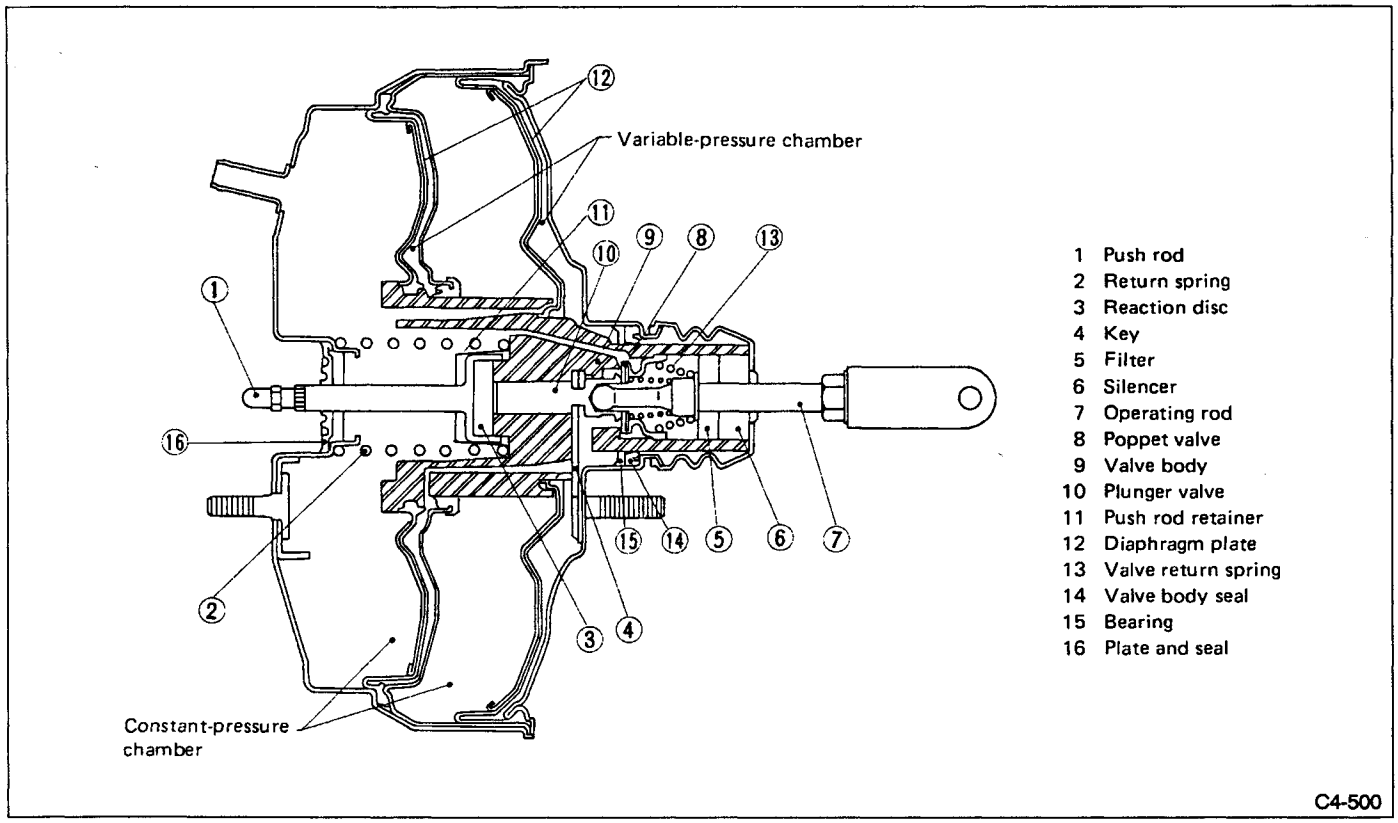

Fig. 111

1) Disconnect battery ground cable.
2) Raise vehicle using a jack.
3) Disconnect performance rod from sub frame.

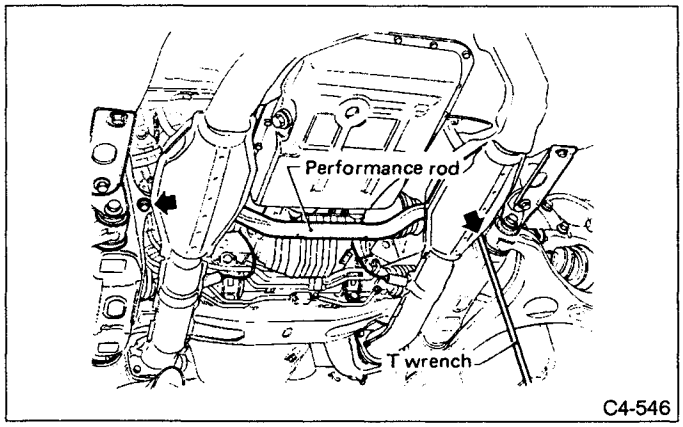

Fig. 112

4) Drain approximately 1 liter (1.1 US qt, 0.9 Imp qt) of ATF (automatic transmission fluid).
5) Loosen bolt securing upper side of ATF level guide pipe.
6) Remove bolt securing lower side of ATF level guide pipe.
7) Remove cruise control actuator.

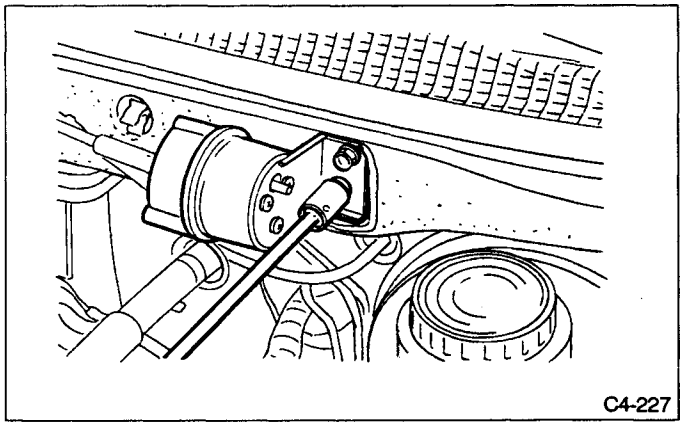

Fig. 113

8) Disconnect positive ⊕ terminal from starter motor.

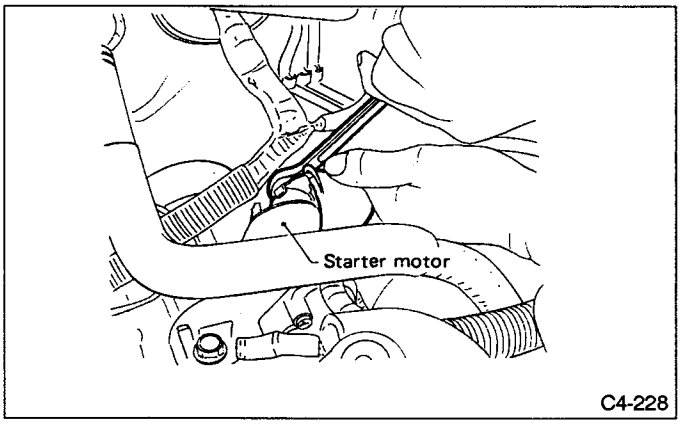

Fig. 114

9) Disconnect low-pressure air conditioner pipe. (Refer to 4-7 [W2A0].)
10) Disconnect vacuum hose from brake booster.

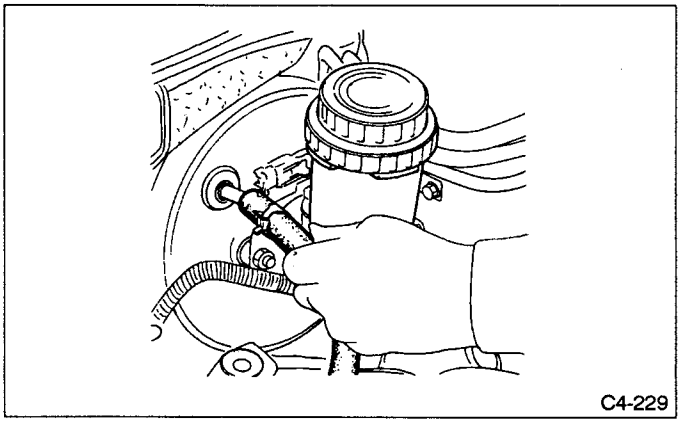

Fig. 115

11) Remove master cylinder. (Refer to 4-4 [W6A0].)
12) Remove snap pin and clevis pin.

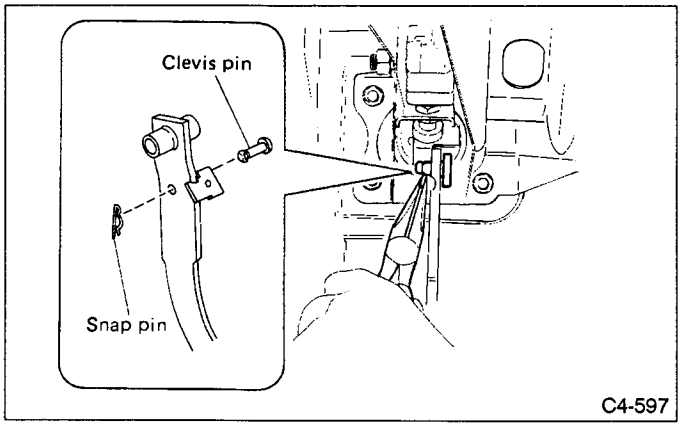

Fig. 116

13) Remove four nuts securing brake booster to pedal bracket.

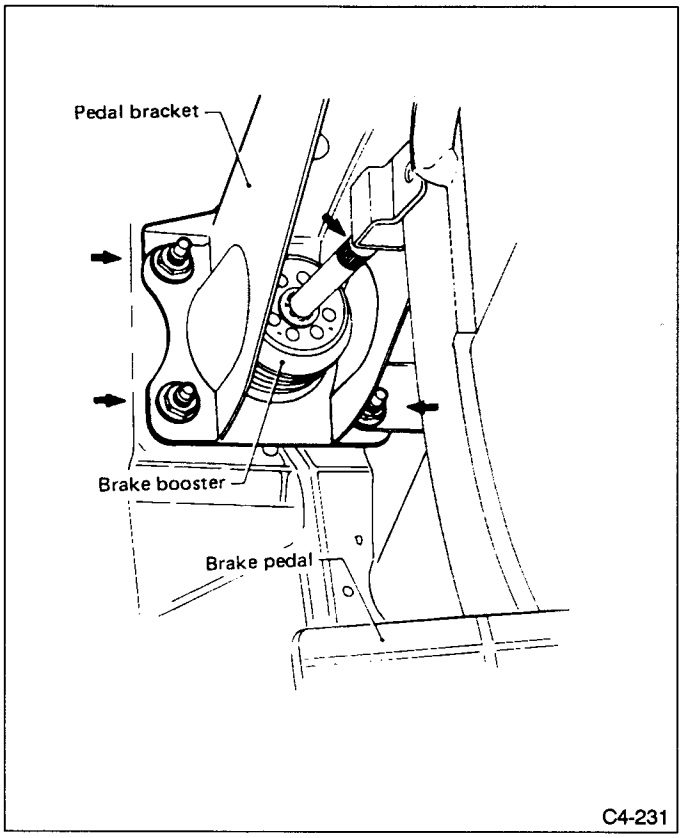

Fig. 117

14) Remove brake booster from engine compartment.

B: INSTALLATION

1) To install, reverse removal procedures.
2) Adjust operating rod of brake booster as follows:
   (1) Be sure engine is off. (No vacuum is applied to brake booster.)
   (2) There should be play between brake booster clevis and pin at brake pedal installing portion.
   (Depress brake pedal pad with a force of less than 10 N [1 kg, 2 lb] to a stroke of 1 to 3 mm [0.04 to 0.12 in].)

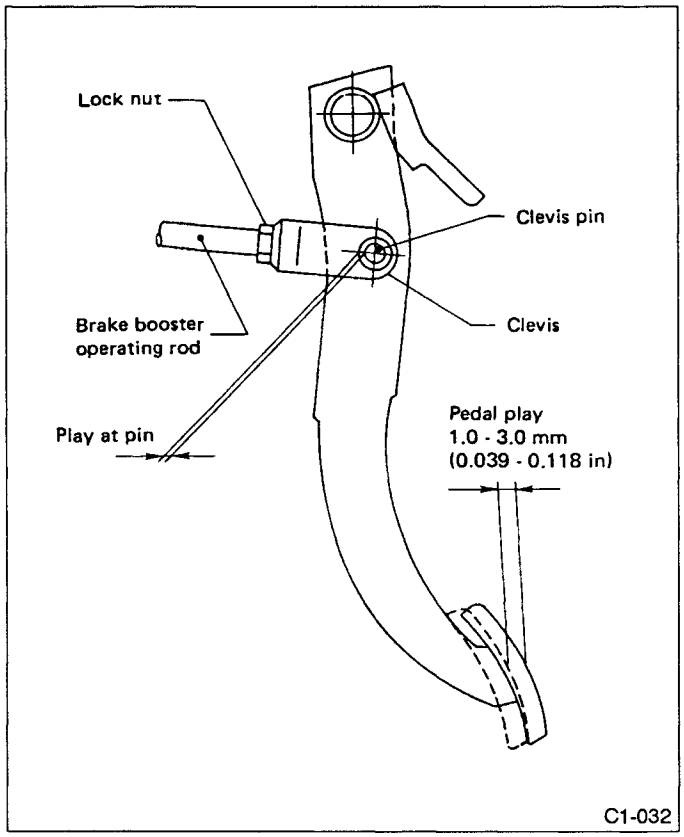

Fig. 118

   (3) Depress the surface of brake pad by hand.
   (4) If there is no free play between clevis pin and clevis, loosen lock nut for operating rod and adjust operating rod by turning in the direction that shortens it.
3) Bleed air from brake system.
4) Conduct road tests to ensure brakes do not drag.

C: OPERATION CHECK

When checking operation, be sure to securely apply the hand brake.

1. CHECKING WITHOUT USING GAUGES

This method cannot determine the exact portion which has failed, but it can provide a rough understanding of the nature of the failure if checking is conducted in accordance with the following procedure.

2. AIR TIGHTNESS CHECK

Start engine, and run it for 1 to 2 minutes, then turn it off. Depress brake pedal several times applying the same pedal force as that used in ordinary braking operations. The pedal stroke should be greatest on the 1st depression, and it should become smaller with each successive depression. If no change occurs in the pedal height while in a depressed state, brake booster is faulty.

In the event of defective operation, inspect the condition of the check valve and vacuum hose. Replace them if faulty and conduct the test again. If no improvement is observed, check precisely with gauges.

3. OPERATION CHECK

1) With engine off, depress brake pedal several times applying the same pedal force and make sure that the pedal height does not vary with each depression of the pedal.
2) With brake pedal depressed, start engine.
3) As engine starts, brake pedal should move slightly toward the floor. If no change occurs in the pedal height, brake booster is faulty.

If faulty, check precisely with gauges.

4. LOADED AIR TIGHTNESS CHECK

Depress brake pedal while engine is running, and turn off engine while the pedal is still depressed. Keep the pedal depressed for 30 seconds; if no change occurs in the pedal height, brake booster is functioning normally; if the pedal height increases, it is faulty.

If faulty, check precisely with gauges.

5. CHECKING WITH GAUGES

Connect gauges as shown in figure. After bleeding air from pressure gauges, proceed to each check.

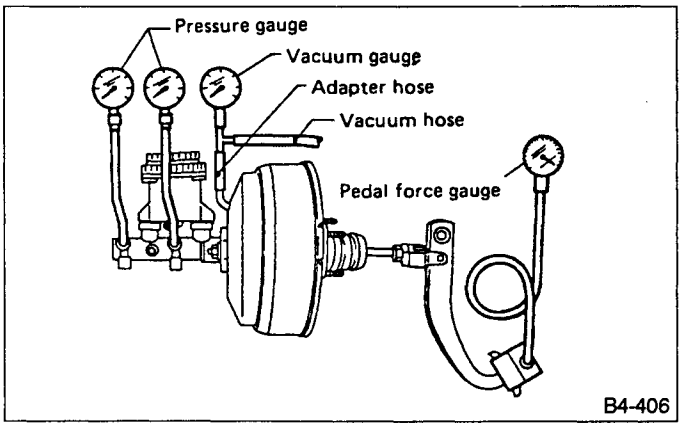

Fig. 119

6. AIR TIGHTNESS CHECK

1) Start engine and keep it running until a vacuum of 66.7 kPa (500 mmHg, 19.69 inHg) is indicated on vacuum gauge. Do not depress brake pedal.
2) Stop engine and watch the gauge. If the vacuum drop range is less than 3.3 kPa (25 mmHg, 0.98 inHg) within 15 seconds after stopping engine, brake booster is functioning properly.
If defective, the cause may be one of those listed below.

- Check valve malfunction
- Leak from vacuum hose
- Leak from the shell jointed portion or stud bolt welded portion
- Damaged diaphragm
- Leak from valve body seal and bearing portion
- Leak from plate and seal ASSY portion
- Leak from poppet valve ASSY portion

7. LOADED AIR TIGHTNESS CHECK

1) Start engine and depress brake pedal with pedal force of 196 N (20 kg, 44 lb). Keep engine running until a vacuum of 66.7 kPa (500 mmHg, 19.69 inHg) is indicated on vacuum gauge while the pedal is still depressed.
2) Stop engine and watch vacuum gauge.
If the vacuum drop range is less than 3.3 kPa (25 mmHg, 0.98 inHg) within 15 seconds after stopping engine, brake booster is functioning properly.
If defective, refer to "Air tightness check" described above.

8. LACK OF BOOSTING ACTION CHECK

Turn off engine, and set the vacuum gauge reading at "0". Then, check the fluid pressure when brake pedal is depressed. The pressure must be greater than the standard value listed below.

Brake pedal force	All model
147N (15 kg, 33 lb)	490 kPa (5 kg/cm^2, 71 psi)
294N (30kg, 66 lb)	1,569 kPa (16 kg/cm^2, 228 psi)

9. BOOSTING ACTION CHECK

Set the vacuum gauge reading at 66.7 kPa (500 mmHg, 19.69 inHg) by running engine. Then, check the fluid pressure when brake pedal is depressed. The pressure must be greater than the standard value listed below.

Brake pedal force	All model
147N (15 kg, 33 lb)	4,511 kPa (46 kg/cm^2, 654 psi)
294N (30kg, 66 lb)	9,513 kPa (97 kg/cm^2, 1,379 psi)

D: HANDLING PRECAUTIONS

1) After protector has been removed from push-rod, do not turn the master cylinder side of brake booster downwards.
(1) If the master cylinder side is turned downwards, push-rod may come loose by virtue of its own weight, and reaction disc may drop into brake booster.
(2) Whether or not reaction disc has dropped can be determined by measuring the dimension "L".
The projected amount "L" of pushrod should be as follows:

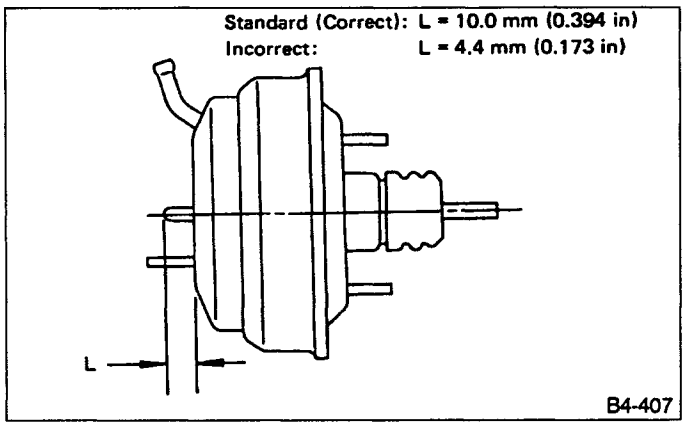

Fig. 120 Push rod projection

(3) If protector is fitted correctly, reaction disc will not fall out. be discarded if it has been dropped.
3) Use special care when handling operating rod.
If excessive force is applied to operating rod, sufficient to cause a change in the angle in excess of ± 3°, it may result in damage to the power piston cylinder.
4) Use care when placing brake booster on the floor.

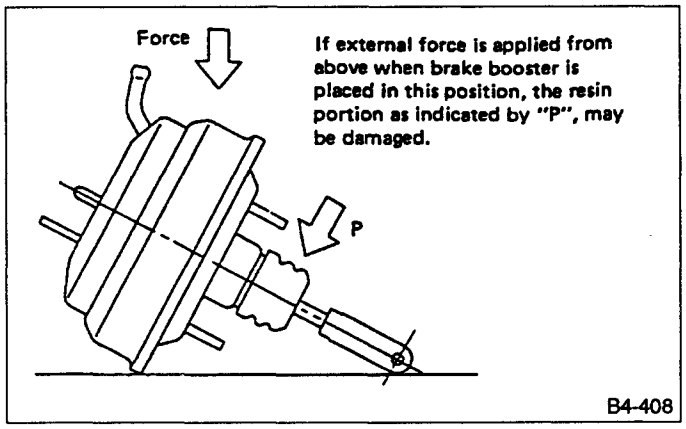

Fig. 121 Handling

8. Brake Hose and Pipe AIRBAG

Supplemental Restraint System "Airbag"

Airbag system wiring harness is routed near the brake pipe.

a. All Airbag system wiring harness and connectors are colored yellow. Do not use electrical test equipment on these circuit.

b. Be carefull not to damage Airbag system wiring harness when servicing the brake pipe.

A: REMOVAL AND INSTALLATION

a. When removing and installing the brake pipe, make sure that it is not bent.

b. After installing the brake pipe and hose, bleed the air.

c. After installing the brake hose, make sure that it does not touch the tire or suspension ASSY, etc.

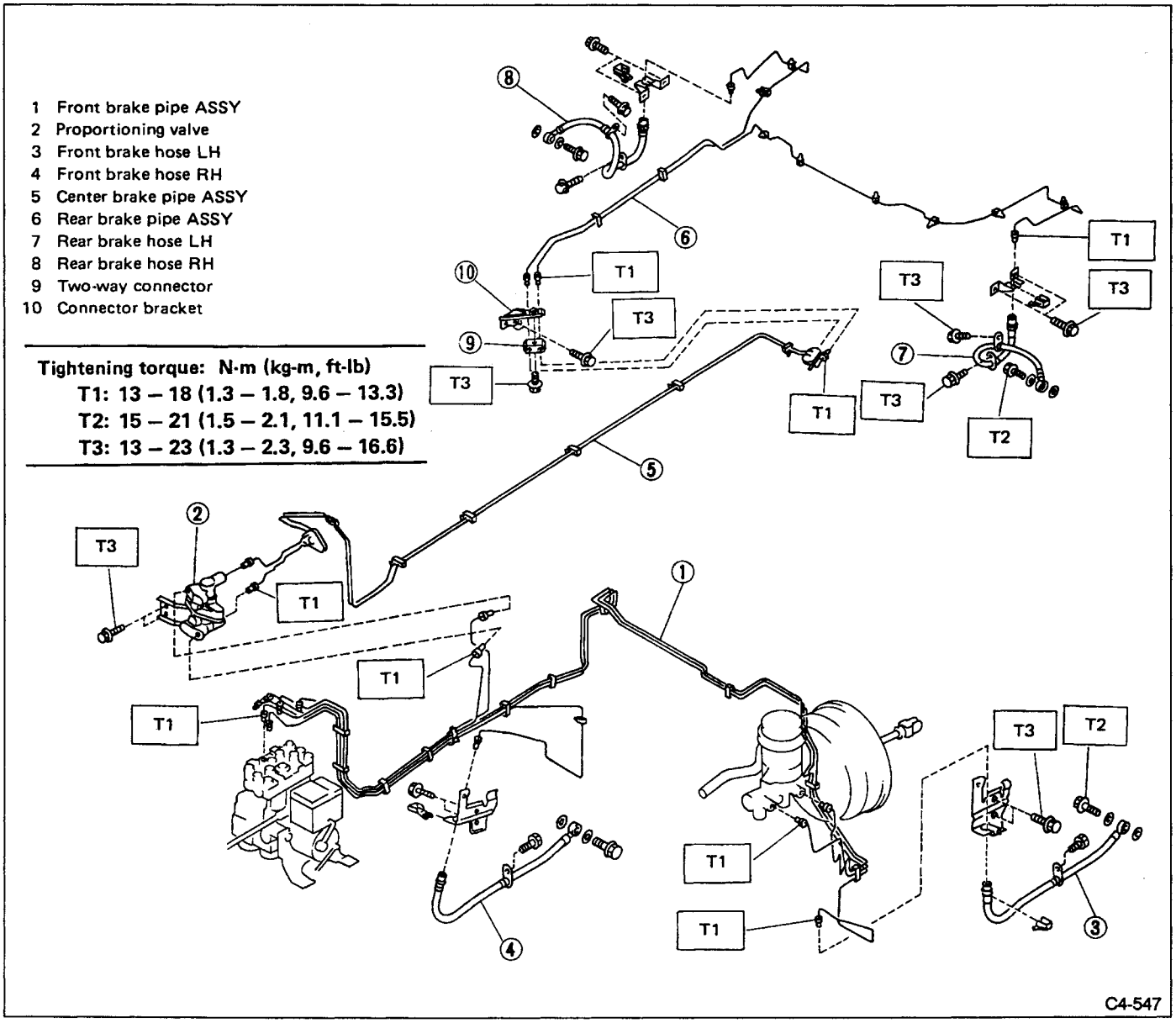

Fig. 122

9. Air Bleeding

A: BLEEDING PROCEDURE

a. The FMVSS No. 116, fresh DOT3 or 4 brake fluid must be used.
b. Cover bleeder with waste cloth, when loosening it, to prevent brake fluid from being splashed over surrounding parts.
c. Avoid mixing different brands of brake fluid to prevent degrading the quality of the fluid.
d. Be careful not to allow dirt or dust to get into the reservoir tank.
e. During bleeding operation, keep the brake reserve tank filled with brake fluid to eliminate entry of air.
f. Brake pedal operating must be very slow.
g. For convenience and safety, it is advisable to have two man working.
1) Make sure that there is no leak from joints and connections of the brake system.

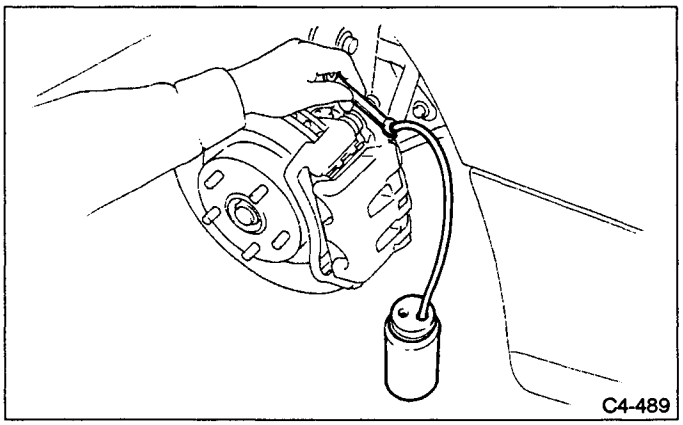

Fig. 123

2) Fit one end of vinyl tube into the air bleeder and put the other end into a brake fluid container.
3) Slowly depress the brake pedal and keep it depressed. Then, open the air bleeder to discharge air together with the fluid.
Release air bleeder for 1 to 2 seconds.
Next, with the bleeder closed, slowly release the brake pedal.
Repeat these steps until there are no more air bubbles in the vinyl tube.
Allow 3 to 4 seconds between two brake pedal operations.
4) Tighten air bleeder securely when no air bubbles are visible.

Tightening torque (Bleeder screw):
7 — 9 N•m (0.7 — 0.9 kg-m, 5.1 — 6.5 ft-lb)

5) Bleed air from brake system in numerical sequence shown in Figure 124 and 125 using above steps as a guide.

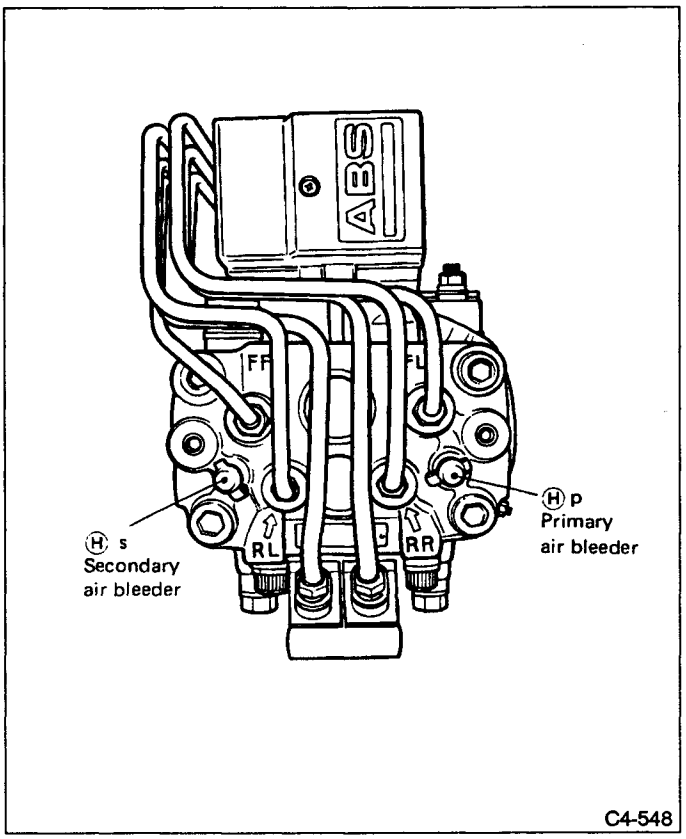

Fig. 124 Hydraulic unit

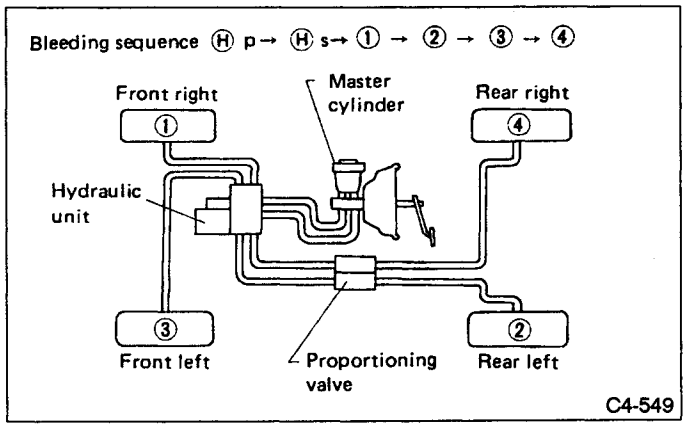

Fig. 125

6) If the pedal action is soft and spongy, or pedal travels excessively, the system must be bled of air again.
7) Depress brake pedal with a force of approximately 294 N (30 kg, 66 lb) and hold it there for approximately 20 seconds. At this time check pedal to see if it shows any unusual movement.
Visually inspect bleeder screws and brake pipe joints to make sure that there is no fluid leakage.
8) Add brake fluid to the required level (MAX level) of reserve tank.
9) Install wheels, and drive car for a short distance between 2 to 3 km (1 to 2 miles) to make sure that brakes are operating properly.

10. Brake Fluid Replacement

To always maintain the brake fluid characteristics, replace the brake fluid according to maintenance schedule or earlier than that when used in severe condition.

A: REPLACEMENT

a. The FMVSS No. 116, fresh DOT3 or 4 brake fluid must be used.
b. Cover bleeder with waste cloth, when loosening it, to prevent brake fluid from being splashed over surrounding parts.
c. Avoid mixing different brands of brake fluid to prevent degrading the quality of the fluid.
d. Be careful not to allow dirt or dust to get into the reservoir tank.
e. During bleeding operation, keep the brake reserve tank filled with brake fluid to eliminate entry of air.
f. Brake pedal operating must be very slow.
g. For convenience and safety, it is advisable to have two man working.
h. The amount of brake fluid required is approximately 300 mℓ (10.1 US fl oz, 10.6 Imp fl oz) for total brake system.
1) Either jack up vehicle and place a safety stand under it, or left up vehicle.
2) Remove both front and rear wheels.
3) Draw out the brake fluid from master cylinder with syringe.

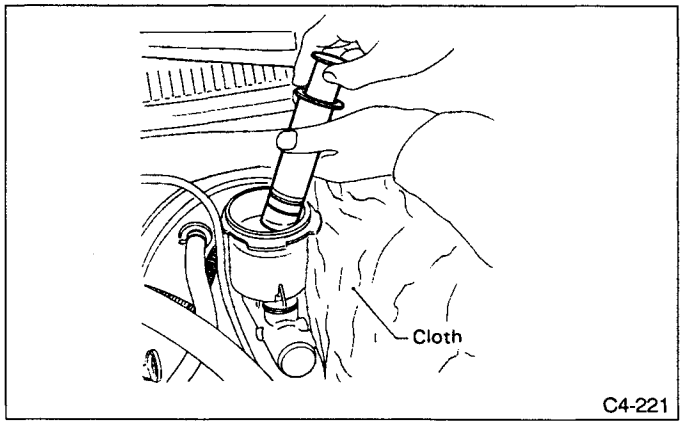

Fig. 126

4) Refill reservoir tank with recommended brake fluid.

Recommended brake fluid
FMVSS No. 116, fresh DOT3 or 4 brake fluid

5) Install one end of a vinyl tube onto the air bleeder of and insert the other end of the tube into a container to collect the brake fluid.

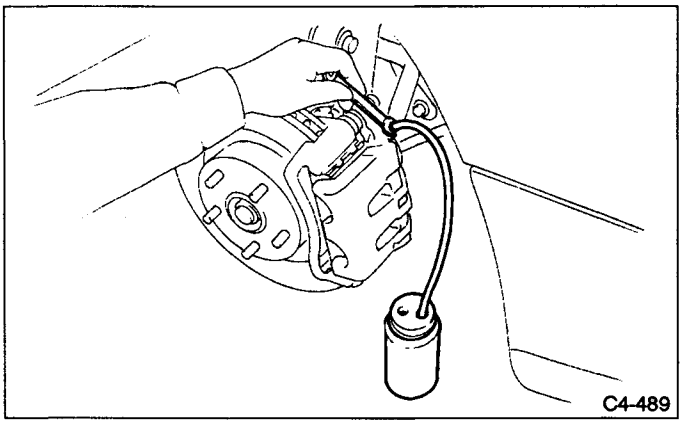

Fig. 127

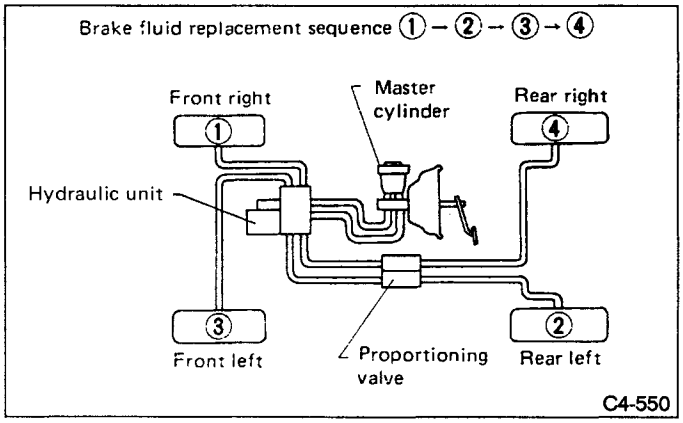

Fig. 128

6) Instruct your co-worker to depress the brake pedal slowly two or three times and then hold it depressed.
7) Loosen bleeder screw approximately 1/4 turn until a small amount of brake fluid drains into container, and then quickly tighten screw.
8) Repeat steps 6) and 7) above until there are no air bubbles in drained brake fluid and new fluid flows through vinyl tube.
Add brake fluid as necessary while performing the air bleed operation, in order to prevent the tank from running short of brake fluid.
9) After completing the bleeding operation, hold brake pedal depressed and tighten screw and install bleeder cap.

Tightening torque (Bleeder screw):
7 — 9 N•m (0.7 — 0.9 kg-m, 5.1 — 6.5 ft-lb)

10) Bleed air from each wheel cylinder using the same procedures as described in steps 5) through 9) above.
11) Depress brake pedal with a force of approximately 294 N (30 kg, 66 lb) and hold it there for approximately 20 seconds. At this time check pedal to see if it shows any unusual movement.
Visually inspect bleeder screws and brake pipe joints to make sure that there is no fluid leakage.
12) Install wheels, and drive car for a short distance between 2 to 3 km (1 to 2 miles) to make sure that brakes are operating properly.

11. Proportioning Valve

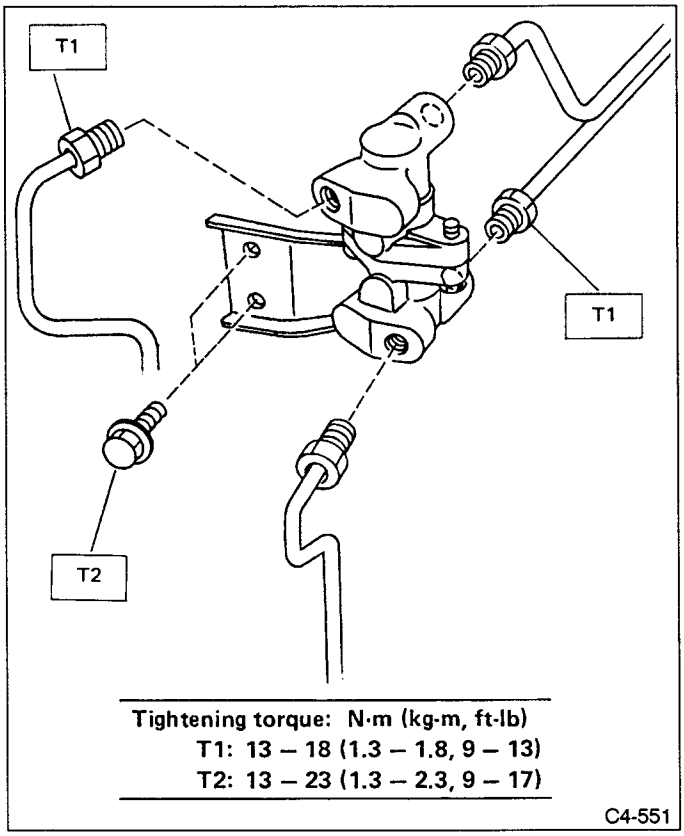

Fig. 129

A: INSPECTION

1) Install the oil pressure gauges to measure the master cylinder fluid pressure (front wheel brake fluid pressure) and rear wheel cylinder fluid pressure.
2) Bleed air from the oil pressure gauges.
3) Check the master cylinder fluid pressure and rear wheel cylinder fluid pressure.
The standard values are shown in figure.

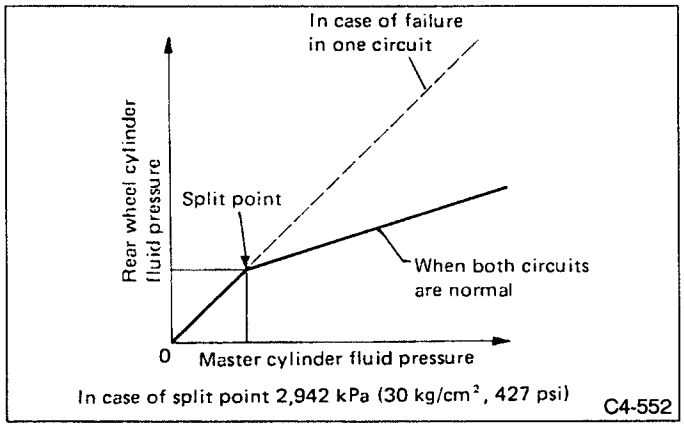

Fig. 130

B: REMOVAL

1) Remove washer cover.
2) Disconnect washer motor connector.
3) Disconnect washer pipe from body.

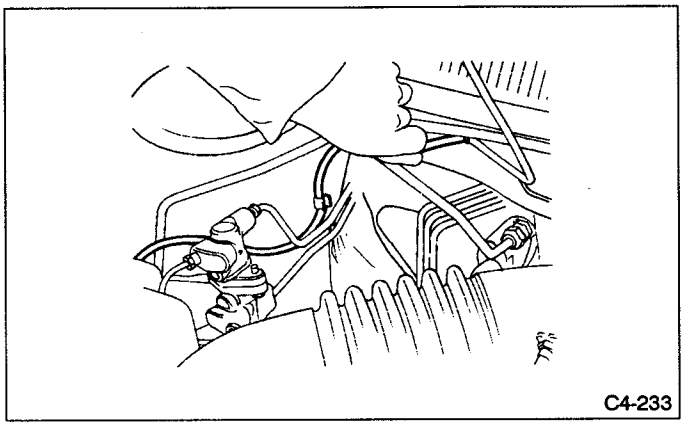

Fig. 131

4) Remove washer tank.

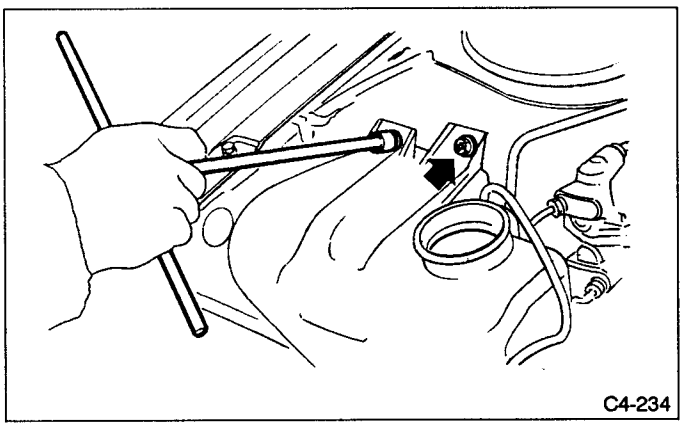

Fig. 132

5) Disconnect brake pipe from proportioning valve.

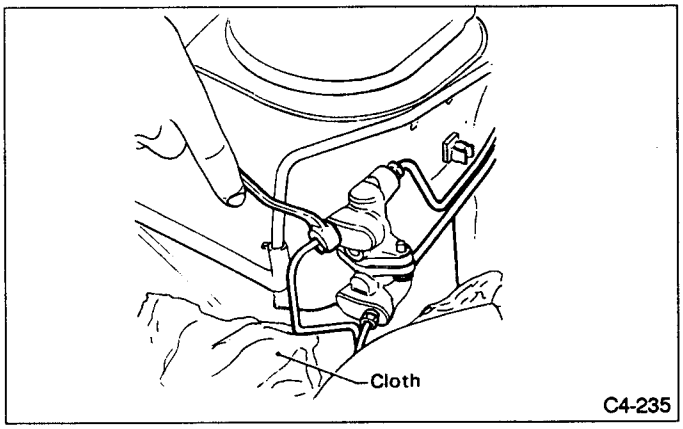

Fig. 133

Be extremely careful not to spill brake fluid. Brake fluid spilt on the vehicle body will harm the painted surface; wipe it off quickly if spilt.

6) Remove proportioning valve.

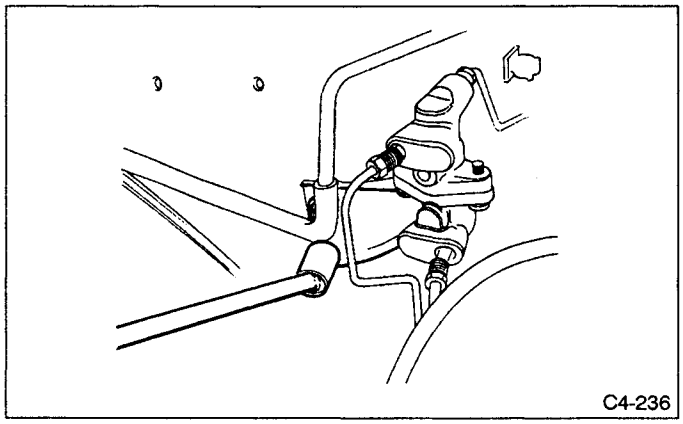

Fig. 134

Do not disassemble or adjust the proportioning valve. (The proportioning valve must be replaced as an assembly.)

C: INSTALLATION

1) To install, reverse removal procedures.
2) Bleed air from the brake system.
3) Check each brake pipe joint for oil leaks.

12. ABS Sensor

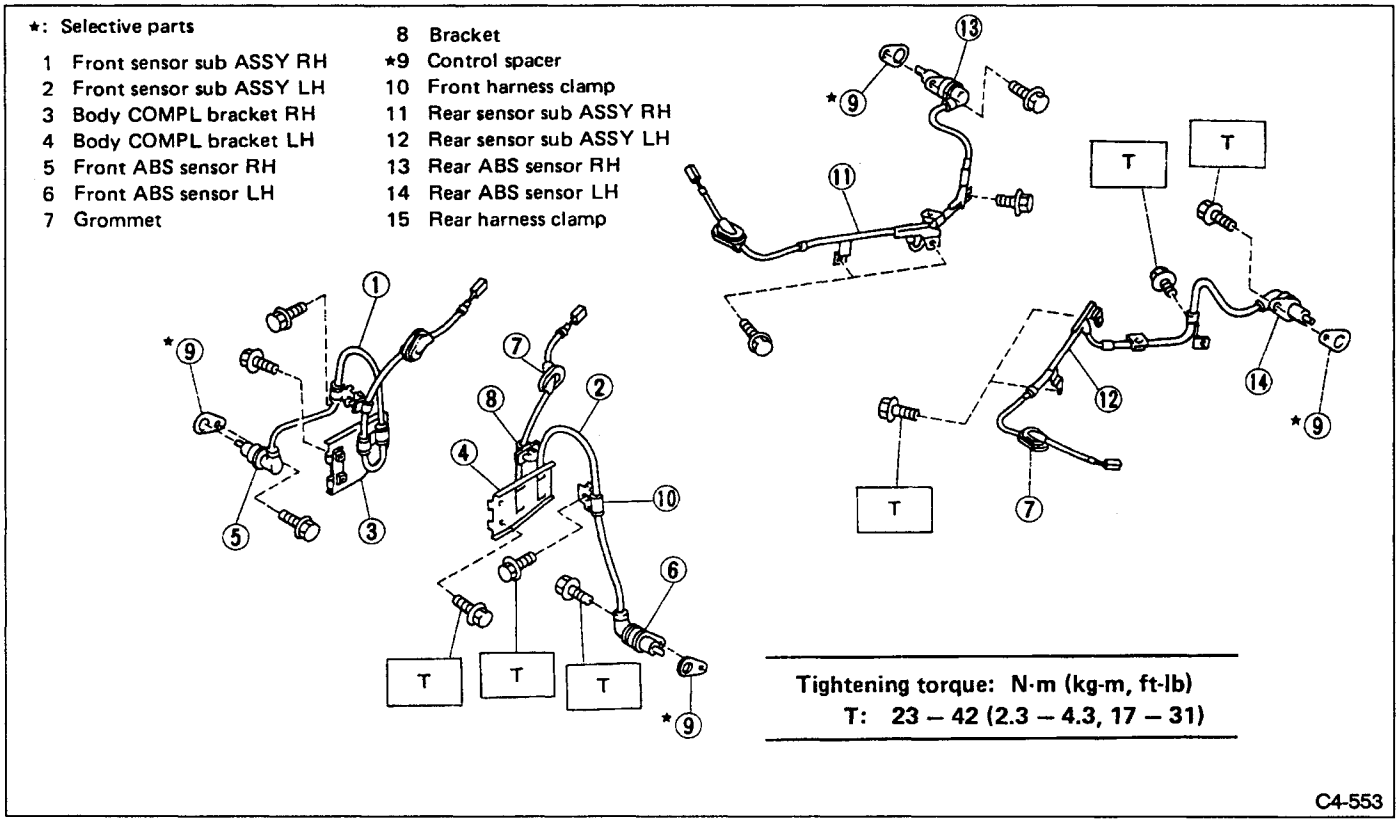

Fig. 135

A: REMOVAL

1. FRONT

1) Disconnect battery ground cable.
2) Disconnect ABS sensor connector located in engine compartment.
3) Remove ABS sensor and clamp.

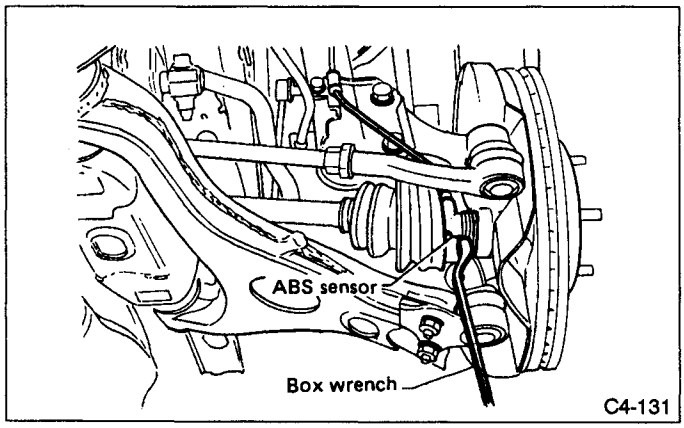

Fig. 136

Be careful not to damage pole piece located at tip of the sensor during removal.

4) Remove ABS sensor bracket and brake pipe bracket.

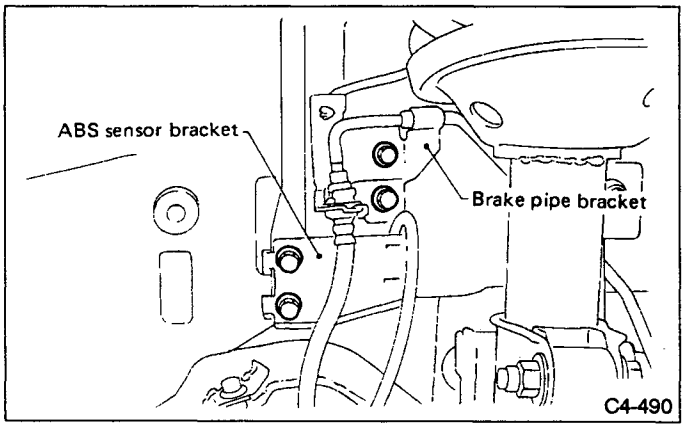

Fig. 137

5) Remove grommet and ABS sensor.
6) Remove tone wheel. 〈Refer to 4-2 [W1A0].〉

2. REAR

1) Disconnect battery ground cable.
2) Remove rear seat.
3) Disconnect ABS sensor connector.

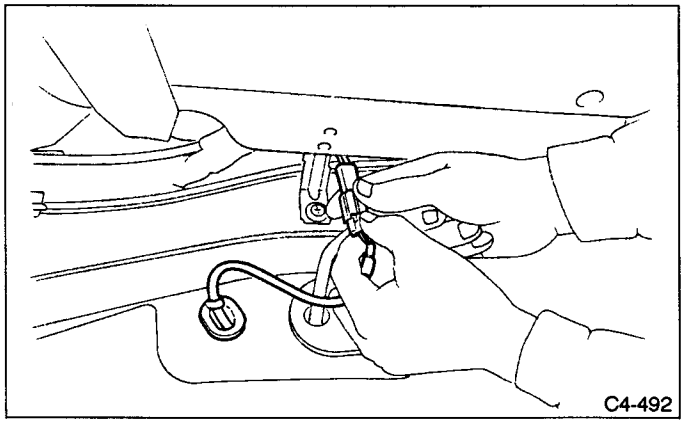

Fig. 138

4) Push grommet and ABS sensor connector out of compartment.
5) Remove ABS sensor and clamp.

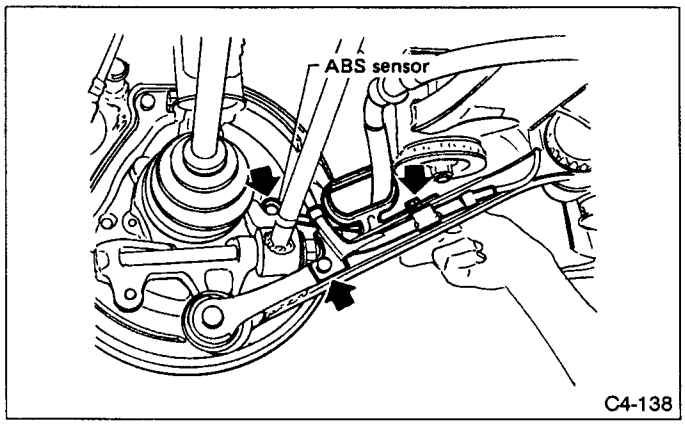

Fig. 139

Be careful not to damage pole piece located at tip of the sensor during removal.
6) Remove ABS sensor clamp.

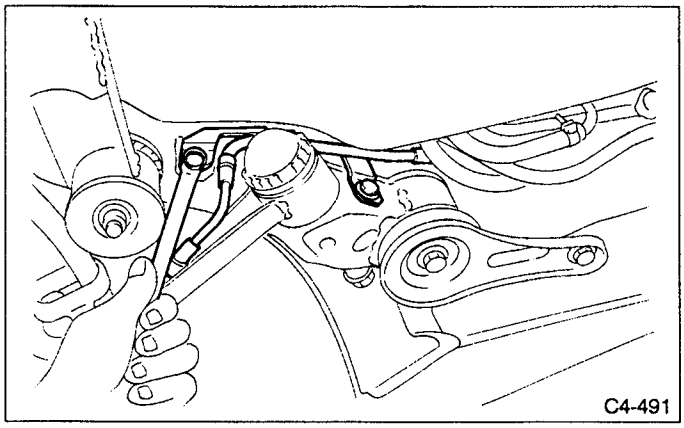

Fig. 140

7) Remove tone wheel. ⟨Refer to 4-2 [W4A0].⟩

B: INSPECTION

1. ABS SENSOR

1) Check pole piece of ABS sensor for foreign particles or damage. If necessary, clean pole piece or replace speed sensor.
2) Measure resistance between speed sensor terminals.

ABS sensor	Terminal No.	Standard
Front - LH	22 and 4	1.0 ± 0.2 kΩ
Front - RH	11 and 21	
Rear - LH	7 and 9	
Rear - RH	24 and 26	
Front - LH	22 and 10, 20, 34	More than 1,000 kΩ (Insulation resistance)
Front - RH	11 and 10, 20, 34	
Rear - LH	7 and 10, 20, 34	
Rear - RH	24 and 10, 20, 34	

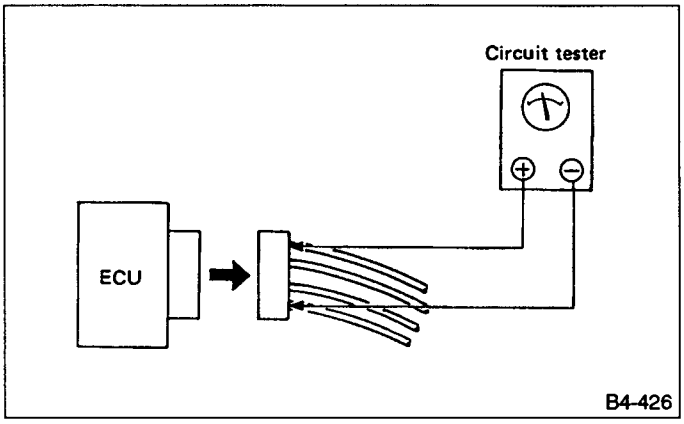

Fig. 141

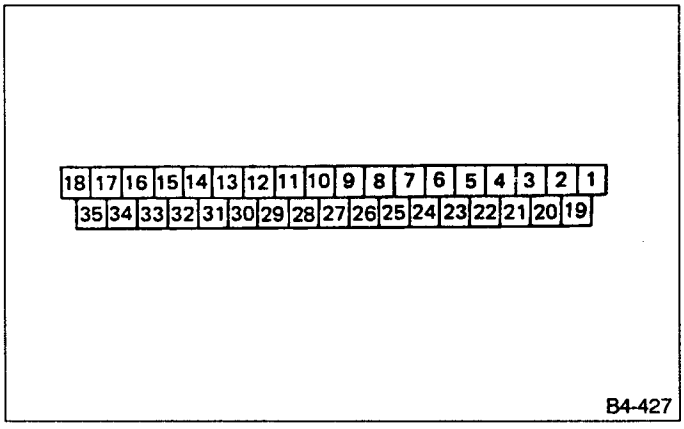

Fig. 142

a. If resistance is outside the standard value, replace wheel ABS sensor with new one or adjust sensor gap between ABS sensor and tone wheel.
b. Check ABS sensor cable for discontinuity. If necessary, replace with a new one.

2. TONE WHEEL

1) Check tone wheel's teeth (45 pieces) for cracks or dents. If necessary, replace tone wheel with a new one.
2) Clearances (sensor gaps) should be measured one by one to ensure tone wheel and ABS sensor are installed correctly.

ABS sensor clearance:
Front
0.7 — 1.0 mm (0.028 — 0.039 in)
Rear
0.5 — 1.0 mm (0.020 — 0.039 in)

a. If clearance is narrow, adjust by using ADJUSTMENT SPACER (P/# 26755AA000)
b. If clearance is wide, check the outputted voltage then replace ABS sensor or tone wheel if the outputted voltage is outside the specification.

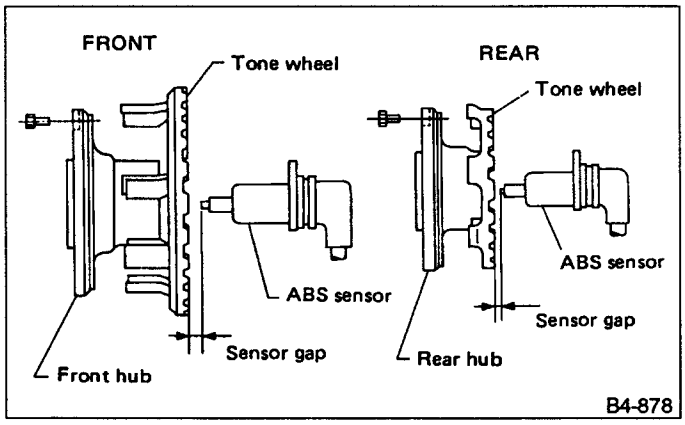

Fig. 143

3. OUTPUT VOLTAGE

1) Output voltage can be checked by the following method. Install resistor and condenser as follows, then rotate wheel about 2.75 km/h (1.7 MPH) or equivalent.

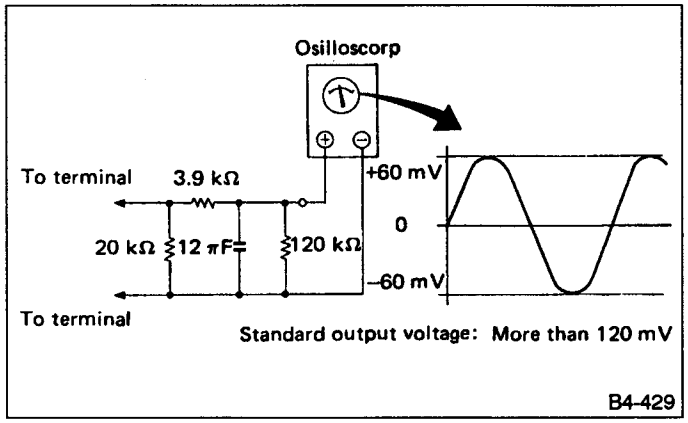

Fig. 144

Regarding terminal No., please refer to item ABS SENSOR.

C: INSTALLATION

1) To install, reverse removal procedures.
2) Place a thickness gauge between ABS sensor's pole piece and tone wheel's tooth face. After ABS sensor clearance is obtained over the entire perimeter, tighten ABS sensor on housing to specified torque.

ABS sensor clearance:
Front
0.7 — 1.0 mm (0.028 — 0.039 in)
Rear
0.5 — 1.0 mm (0.020 — 0.039 in)

a. If the clearance is outside specifications, readjust.
b. Sometimes adjustment spacer may not need be installed.

13. Hydraulic Unit for ABS System

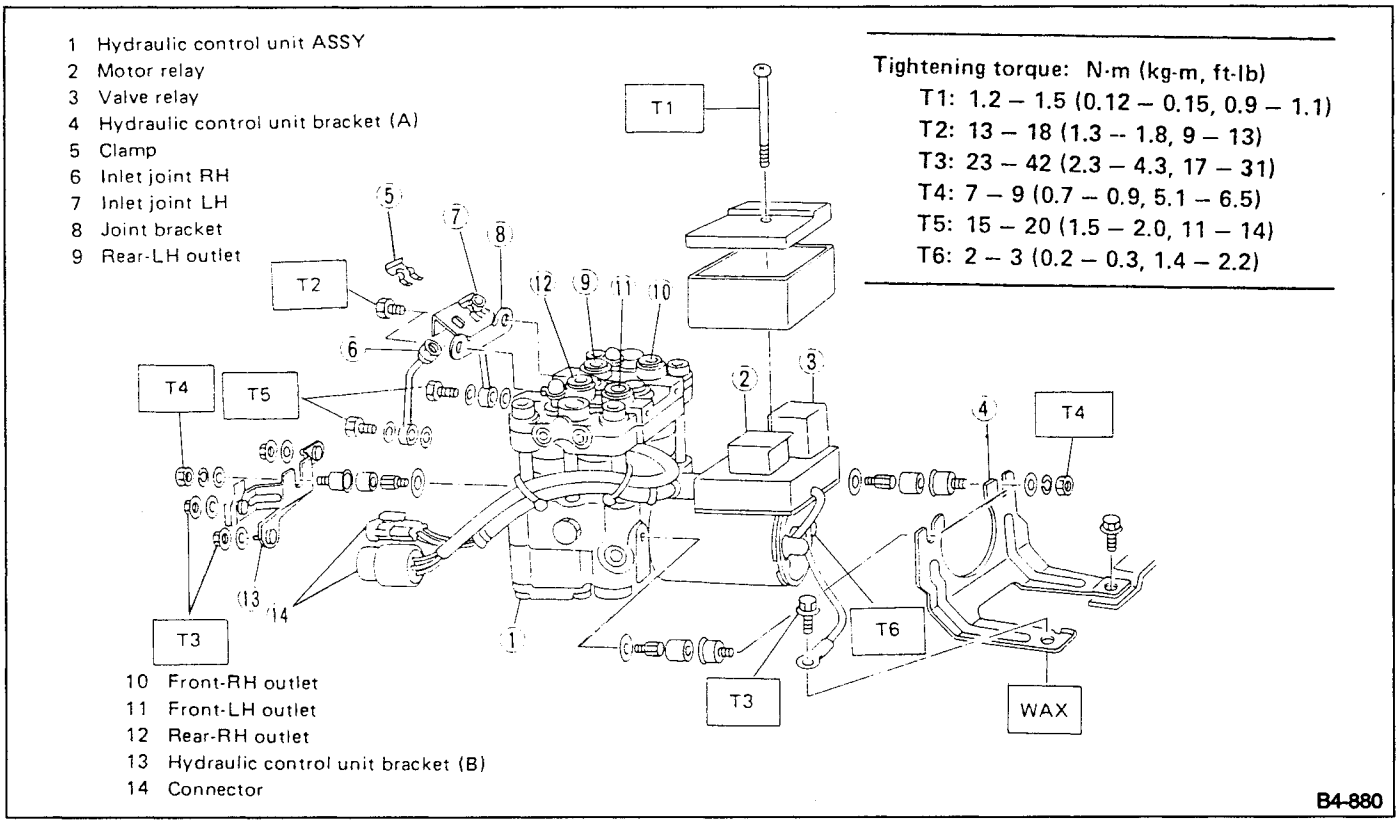

Fig. 145

A: REMOVAL

1) Disconnect battery ground cable.
2) Disconnect hydraulic unit connector.

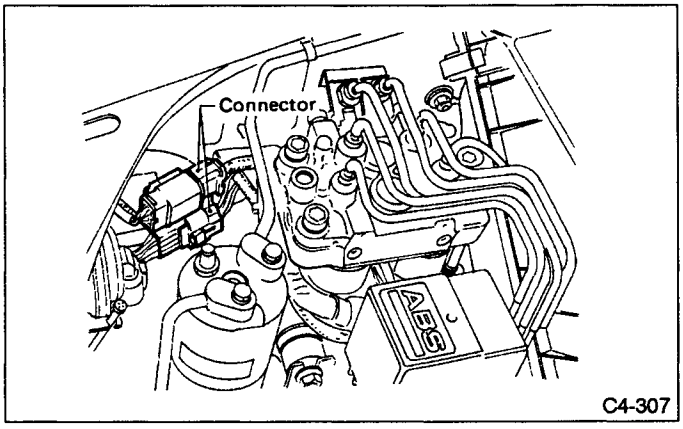

Fig. 146

3) Disconnect air flow meter connector.
4) Remove upper air cleaner cover.

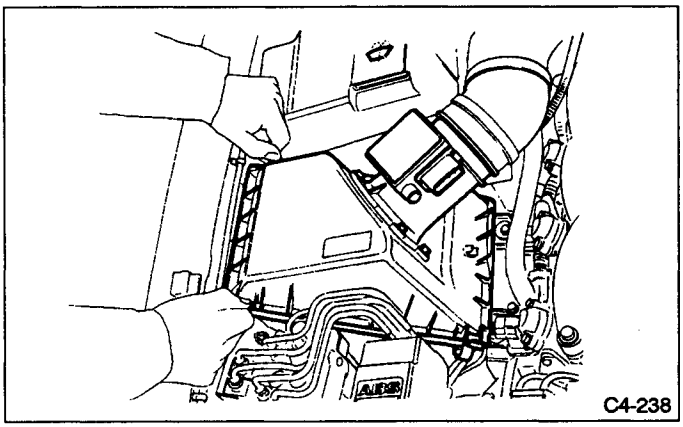

Fig. 147

5) Remove lower air cleaner cover.

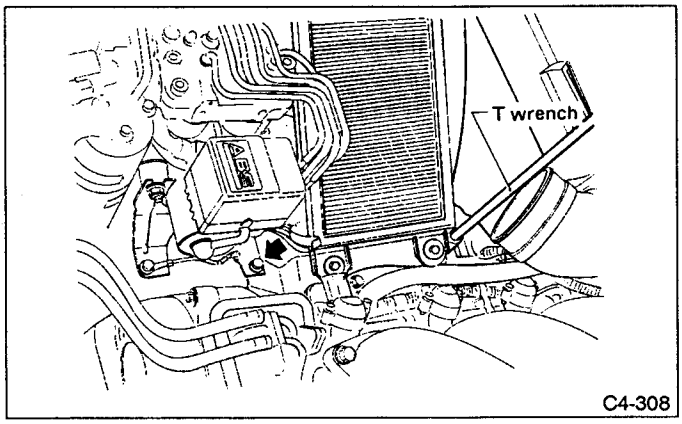

Fig. 148

6) Disconnect brake pipes from hydraulic unit.

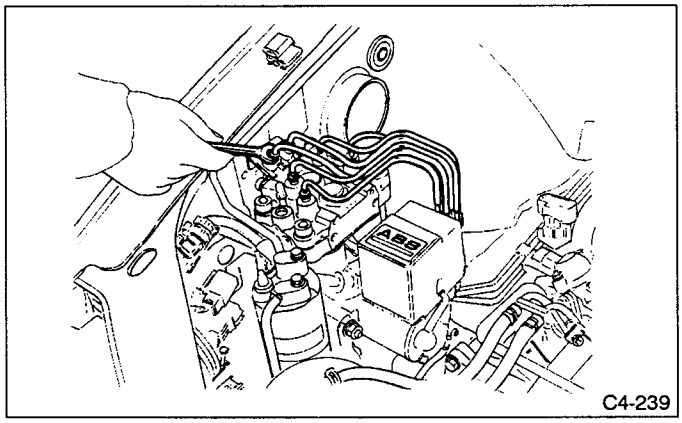

Fig. 149

7) Remove hydraulic unit mounting nuts and bolts.

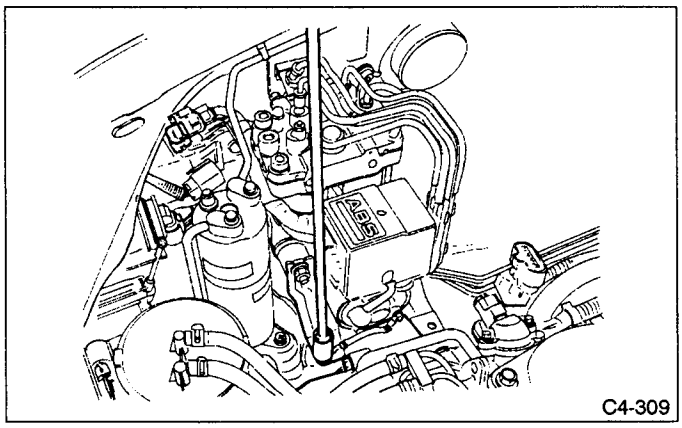

Fig. 150

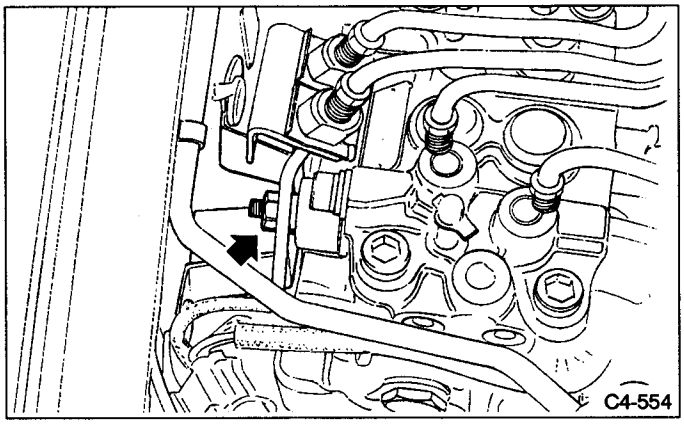

Fig. 151

8) Remove hydraulic unit.

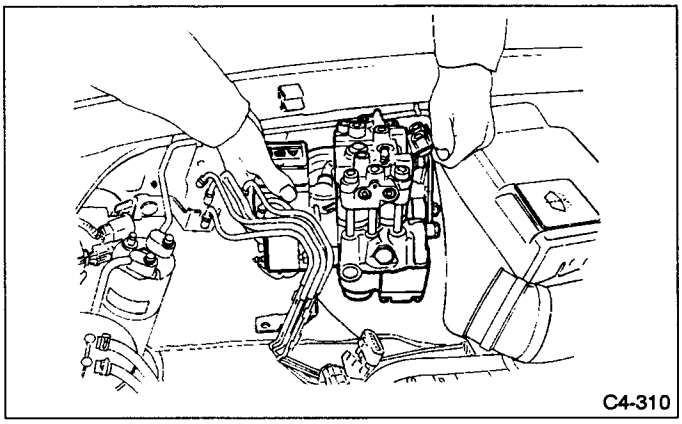

Fig. 152

a. Hydraulic unit cannot be disassembled. Do not attempt to loosen bolts and nuts.
b. Do not drop or bump hydraulic unit.
c. Do not turn the hydraulic unit upside down or place it on its side.
d. Be careful to prevent foreign particles from getting into hydraulic unit.
e. When a new hydraulic unit is installed, apply a coat of rust-preventive wax (Nippeco LT or GB) to bracket attaching bolts after tightening.
f. Do not pull harness disconnecting harness connector.
g. Be careful not to spill brake fluid onto painted surfaces.

B: INSPECTION

1) Check bracket (on vehicle) for looseness.
2) Check connected and fixed condition of connector.
3) Open hydraulic unit relay box and check for discontinuity or short-circuits.

	Condition	Terminal number	Standard	Diagram	Terminal location
Valve relay	Turning off electricity.	85 — 86	93 — 113 Ω	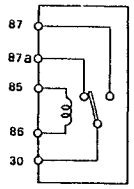	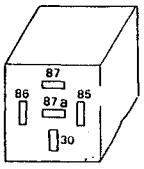
		30 — 87a	0 Ω		
		30 — 87	∞		
	Turning on electricity between 85 and 86. (DC 12 V)	30 — 87a	0Ω		
		30 — 87	0Ω		
			—		
Motor relay	Turning off electricity.	85 — 86	72 — 88 Ω	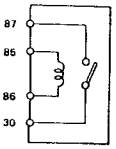	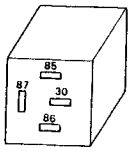
		30 — 87	∞		
	Turning on electricity between 85 and 86. (DC 12 V)	30 — 87	0 Ω		

Fig. 153 B4-435

C: INSTALLATION

1) To install, reverse above removal procedures.
2) Bleed air from brake system.

14. Electronic Control Unit for ABS System

A: REMOVAL

1) Remove right front seat.
2) Remove floor mat located under lower right side of front seat.
3) Remove bolts which secure electronic control unit to body.

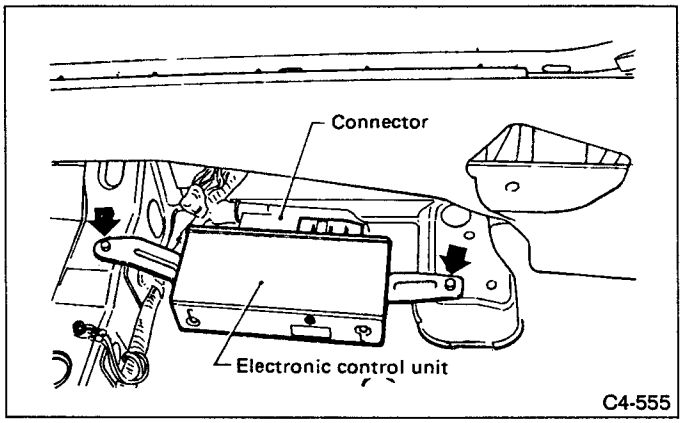

Fig. 154

4) Remove screws which secure connector to electronic control unit and disconnect connector.

B: INSPECTION

Check that connector is connected correctly and that connector terminal sliding resistance is correct.

C: INSTALLATION

To install, reverse above removal procedures.

T TROUBLESHOOTING AIRBAG

Supplemental Restraint System "Airbag"

Airbag system wiring harness is routed near the brake systems.

a. All Airbag system wiring harness and connectors are colored yellow. Do not use electrical test equipment on these circuit.

b. Be careful not to damage Airbag system wiring harness when servicing the brake systems.

1. Entire Brake System

Trouble and possible cause	Corrective action
1. Insufficient braking	
(1) Fluid leakage from the fluid line	Repair or replace (cup, piston seal, piston boot, master cylinder piston kit, pipe or hose).
(2) Entry of air into the fluid line	Bleed the air.
(3) Excessively wide shoe clearance	Adjust the clearance.
(4) Wear, deteriorated surface material, adhering water or fluid on the lining	Replace, grind or clean.
(5) Improper operation of master cylinder, disc caliper, brake booster or check valve	Correct or replace.
2. Unstable or uneven braking	
(1) Fluid on the lining, rotor	Eliminate cause of fluid leakage, clean, or replace.
(2) Rotor eccentricity	Correct or replace the rotor.
(3) Improper lining contact, deteriorated surface material, improper inferior material, or wear	Correct by grinding, or replace.
(4) Deformed back plate	Correct or replace.
(5) Improper tire inflation	Inflate to correct pressure.
(6) Disordered wheel alignment	Adjust alignment.
(7) Loosened back plate or the support installing bolts	Retighten.
(8) Loosened wheel bearing	Retighten to normal tightening torque or replace.
(9) Trouble in the hydraulic system	Replace the cylinder, brake pipe or hose.
(10) Uneven effect of the parking brake	Check, adjust, or replace the rear brake and cable system.
3. Excessive pedal stroke	
(1) Entry of air into the fluid line	Bleed the air.
(2) Excessive play in the master cylinder push rod	Adjust.
(3) Fluid leakage from the fluid line	Repair or replace (cup, piston seal, piston boot, master cylinder piston kit, pipe or hose).

Trouble and possible cause	Corrective action
4. Brake dragging or improper brake return	
(1) Insufficient pedal play	Adjust play.
(2) Improper master cylinder return	Clean or replace the cylinder.
(3) Clogged hydraulic system	Replace.
(4) Improper return or adjustment of parking brake	Correct or adjust.
(5) Weakened spring tension or breakage of shoe return spring	Replace the spring.
(6) Excessively narrow shoe clearance	Adjust the clearance.
(7) Improper disc caliper operation	Correct or replace.
(8) Improper adjusted wheel bearing	Adjust or replace.
5. Brake noise (1) (creak sound)	
(1) Hardened or deteriorated pad	Replace the pad.
(2) Worn pad	Replace the pad.
(3) Loosened back plate or the support installing bolts	Retighten.
(4) Loose wheel bearing	Retighten to normal tightening torque.
(5) Dirty rotor	Clean the rotor, or clean and replace the brake ASSY.
6. Brake noise (2) (hissing sound)	
(1) Worn pad	Replace the pad.
(2) Improper installed pad	Correct or replace the pad.
(3) Loose or bent rotor	Retighten or replace.
7. Brake noise (3) (click sound)	
(1) Excessively worn pad or the support	Replace the pad or the support.

2. Troubleshooting for ABS

A: BASIC TROUBLESHOOTING PROCEDURE

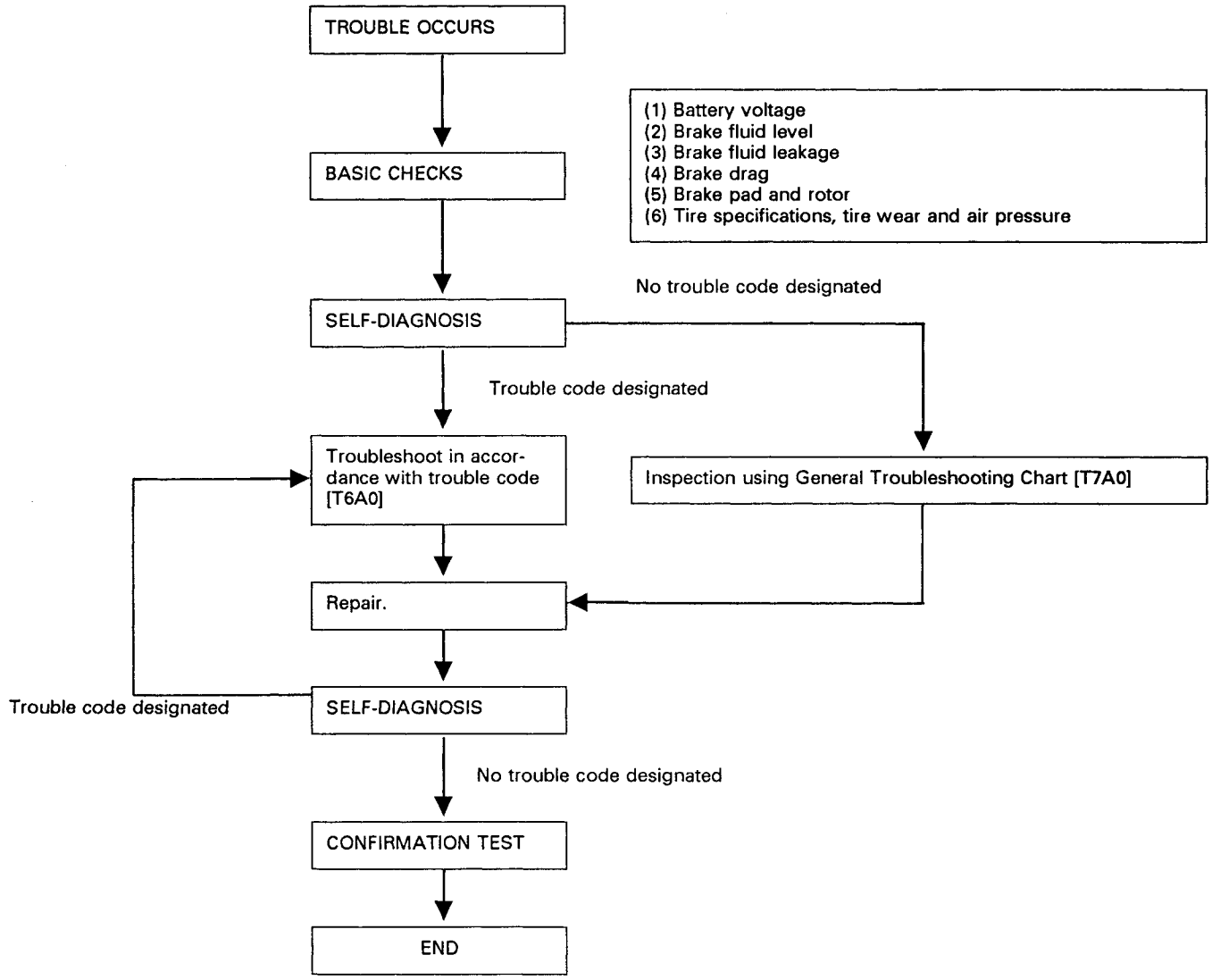

a. To check harness for broken wires or short-circuits, shake it while holding it or the connector.

b. When ABS warning lamp illuminates, read and record trouble code indicated by ECU's LED.

B: SELF-DIAGNOSIS

Conduct self-diagnosis after driving the vehicle at speeds greater than 30 km/h (19 MPH) for at least one minute. The vehicle must be stopped with the engine operating. When a problem is detected by self-diagnosis, the warning light in the instrument panel comes on.
Approximately 5 — 12 seconds after the warning light has come on, the problem detected by the ABS control unit (located under the right front seat) is displayed by a trouble code in terms of "the number of LED's blinks."
a. Both the warning light and the LED remain activated unless the ignition key is turned OFF. With the ignition key turned OFF, the contents of the problem stored in the memory are reset.
b. Only one trouble code is displayed at a time. When a multiple of problems occur, only the first problem detected is displayed.
c. If the LED does not activate (though the warning light is ON), the power supply may be inoperative.

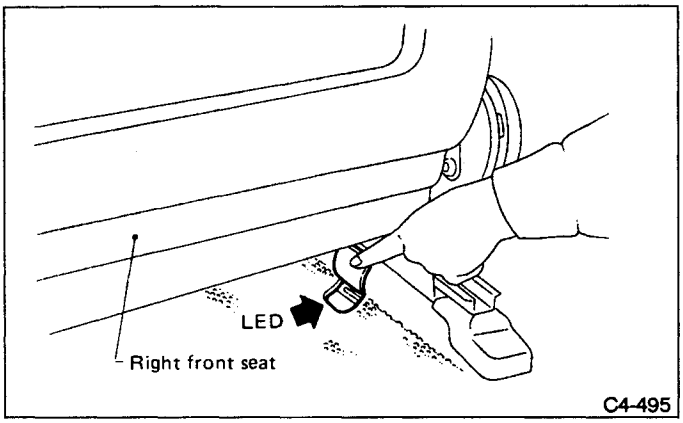

Fig. 155

C: LIST OF TROUBLE CODES

1. TROUBLE CODES

Trouble code	Contents of diagnosis	
0 [LED OFF]	Improper power line voltage or faulty harness	
1	Broken or shorted solenoid valve circuit(s) in hydraulic unit	Left front wheel control
2		Right front wheel control
3		Right rear wheel control
4		Left rear wheel control
5	Faulty wheel ABS sensor	Left front wheel speed
6		Right front wheel speed
7		Right rear wheel speed
8		Left rear wheel speed
9	Faulty motor and/or motor relay or broken or shorted harness circuit	
10	Faulty valve relay or broken or shorted harness circuit Faulty valve relay or broken or shorted harness, or interrupted ABS (causing brakes to function as a conventional brake system). Unidentified fault that are not equivalent to trouble codes 1 — 16.	
16	Faulty ABS control unit or broken or shorted harness circuit Faulty ABS control unit or broken or shorted harness, or malfunctioning system or line unidentified by vehicle ABS sensor fail-safe function.	

2. HOW TO READ TROUBLE CODE

The LED in the ABS control unit flashes the code corresponding to the faulty part.

Trouble codes are displayed by the number of LED blinks.

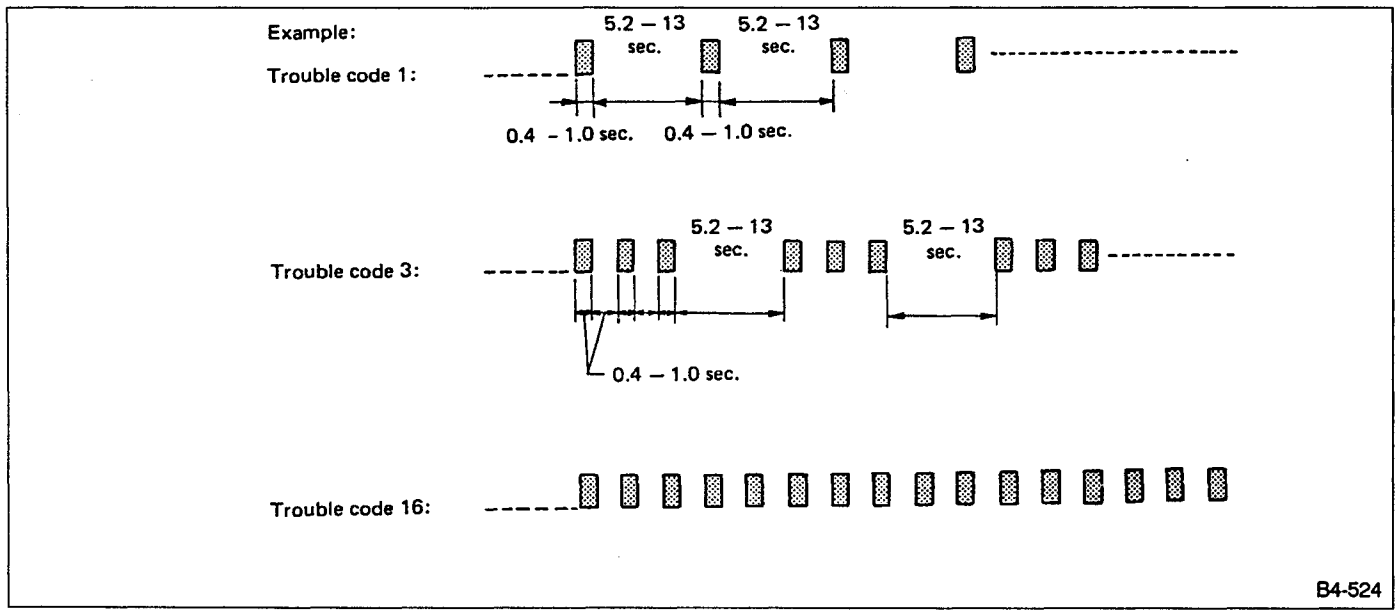

Fig. 156

3. ABS Control Unit I/O Signal

A: I/O SIGNAL VOLTAGE

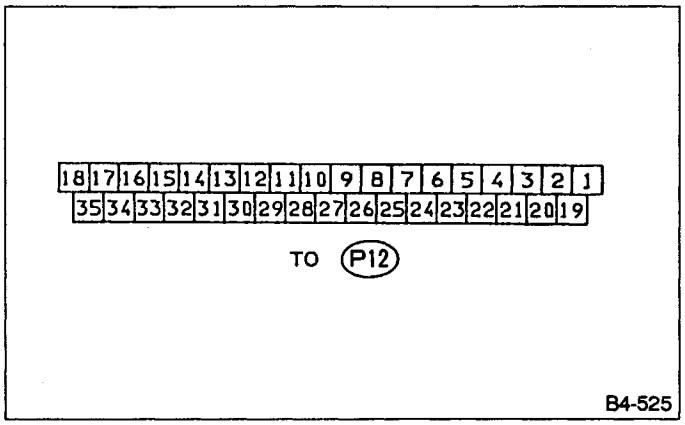

Fig. 157

Contents			Terminal No.	With engine idling	Input/output signals	
					Measured value	Measuring conditions
Wheel ABS sensors	Left front wheel		22	0V	200 — 300 mV (AC range)	• No. 22 — No. 4 • Vehicle speed 2.75 km/h (1.7 MPH)
	GND		4			
	Right front wheel		11	0V	200 — 300 mV (AC range)	• No. 11 — No. 21 • Vehicle speed 2.75 km/h (1.7 MPH)
	GND		21			
	Left rear wheel		7	0V	200 — 300 mV (AC range)	• No. 7 — No. 9 • Vehicle speed 2.75 km/h (1.7 MPH)
	GND		9			
	Right rear wheel		24	0V	200 — 300 mV (AC range)	• No. 24 — No. 26 • Vehicle speed 2.75 km/h (1.7 MPH)
	GND		26			
Stop light switch			25	0V	13 — 14V	When brake pedal is depressed.
Motor monitoring			14	0V	13 — 14V	When motor operates.
Valve power-supply monitoring			32	13 — 14V	13 — 14V	—
Hydraulic unit	Solenoid	Left front wheel	2	13 — 14V	0V	When solenoid is energized to produce output.
		Right front wheel	35	13 — 14V	0V	
		Left rear wheel	18	13 — 14V	0V	
		Right rear wheel	19	13 — 14V	0V	
	Valve relay coil		27	0V	0V	—
	Motor relay coil		28	13 — 14V	0V	When motor operates to produce output
Warning light			29	0V	13 — 14V	Ignition switch ON (Engine OFF)
Power supply	Alternator		15	13 — 14V	1.7V	Ignition switch ON (Engine OFF)
	Battery		1	13 — 14V	13 — 14V	—
	Relay coil (valve, motor, etc.)		17	13 — 14V	13 — 14V	—
Grounding line			10	0V	0V	—
			20	0V	0V	—
			34	0V	0V	—

B: I/O SIGNAL DIAGRAM

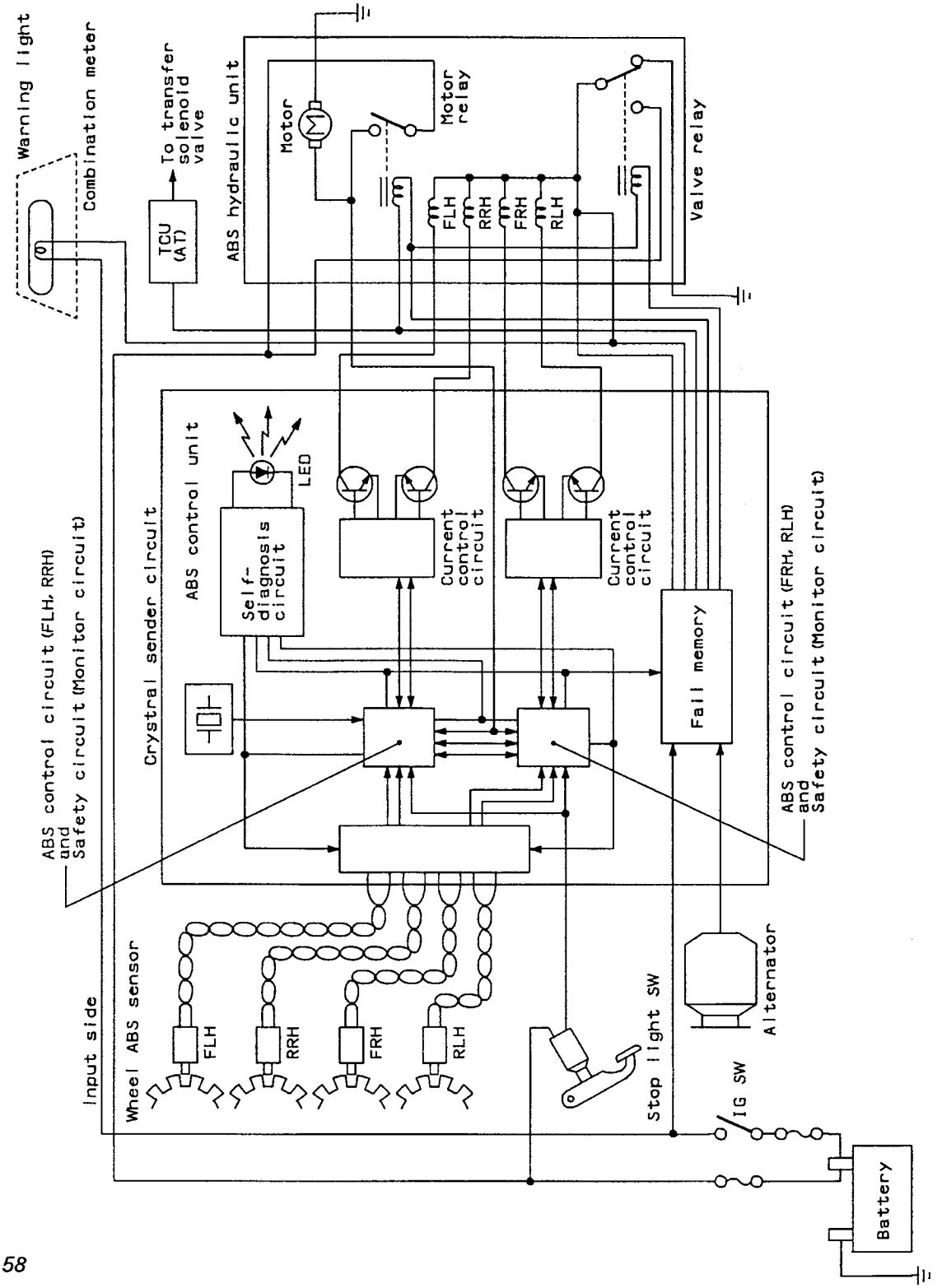

Fig. 158

4. Diagram of ABS

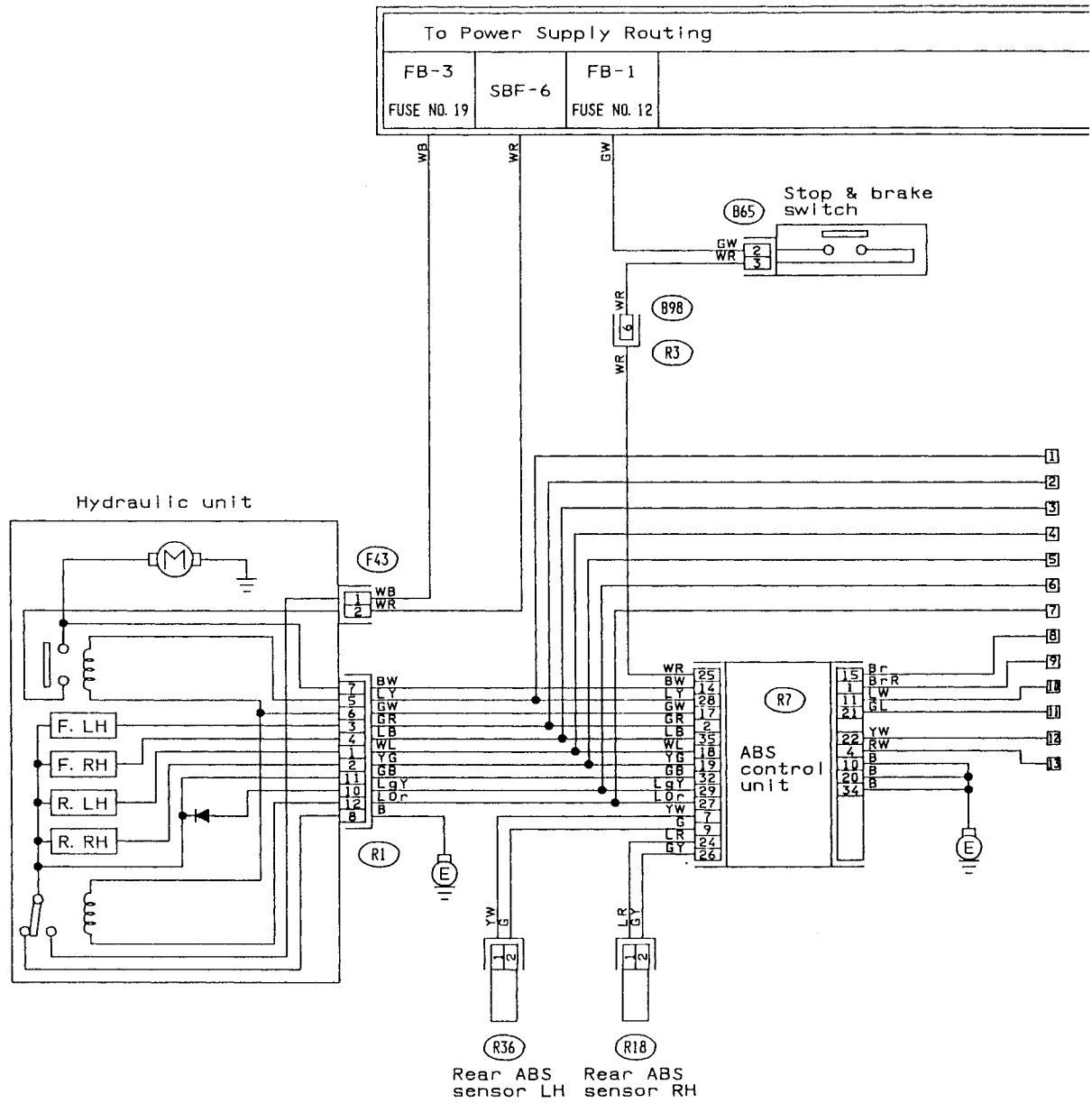

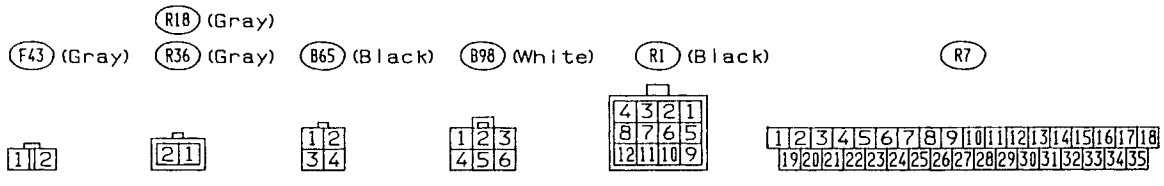

Fig. 159

CU82-01A

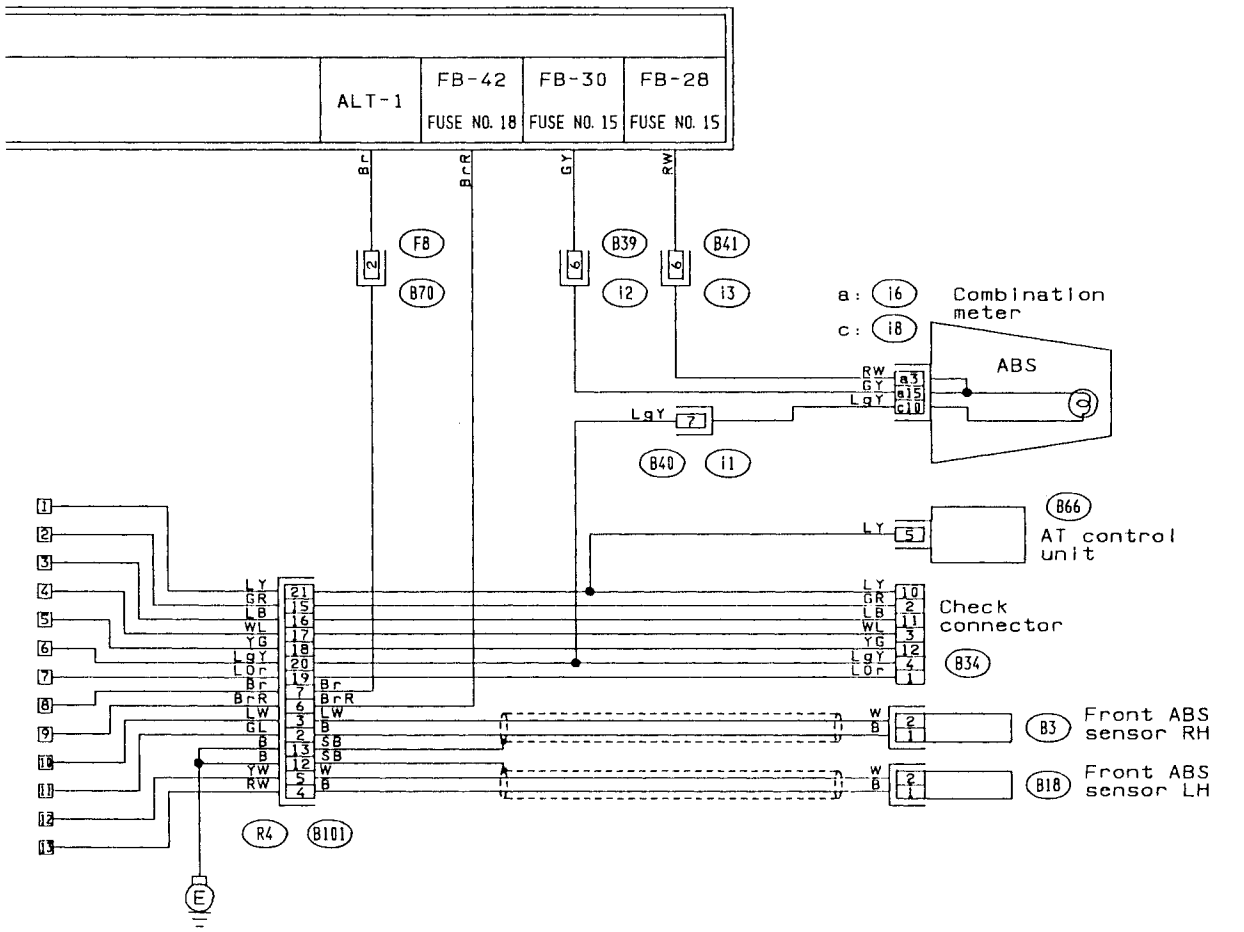
ALT-1
FB-42
FUSE NO. 18
FB-30
FUSE NO. 15
FB-28
FUSE NO. 15
Br
BrR
GY
RW
F8
B70
B39
i2
B41
i3
a: i6
c: i8
Combination meter
ABS
LgY
B40
i1
B66
AT control unit
Check connector
B34
B3
Front ABS sensor RH
B18
Front ABS sensor LH
R4
B101

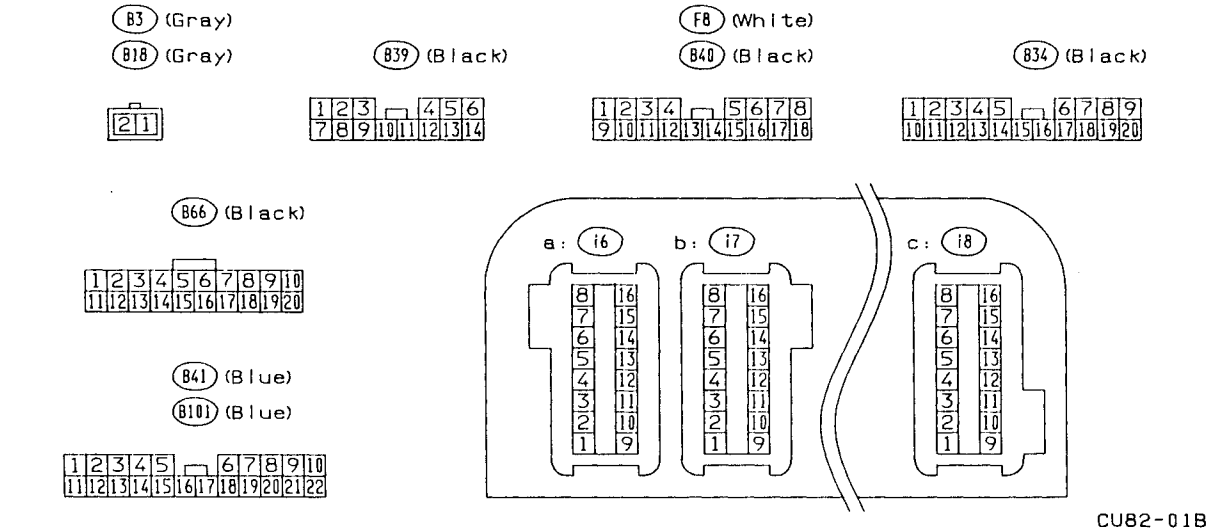
B3 (Gray)
B18 (Gray)
B39 (Black)
F8 (White)
B40 (Black)
B34 (Black)
B66 (Black)
B41 (Blue)
B101 (Blue)
a: i6
b: i7
c: i8

CU82-01B

5. Troubleshooting Chart with Trouble Code

A: TROUBLE CODE (0) — Improper power line voltage or faulty harness

CONTENTS OF DIAGNOSIS:
- Faulty ABS control unit
- Faulty harness
- Faulty alternator

TROUBLE SYMPTOM:
- Warning light comes on but ABS control unit LED does not.
- Normal ABS function resumes although ignition switch remains ON.

1	Check power supply (voltage) to ABS control unit.	Not OK	Repair harness/connector.
	↓ OK		
2	Check input voltage of ABS control unit to alternator.	Not OK	Repair harness/connector or alternator.
	↓ OK		
3	Check ABS control unit ground line (body metal).	Not OK	Repair ground harness.
	↓ OK		
	Repair ABS C/U terminal poor contact. (Replace ABS C/U.)		

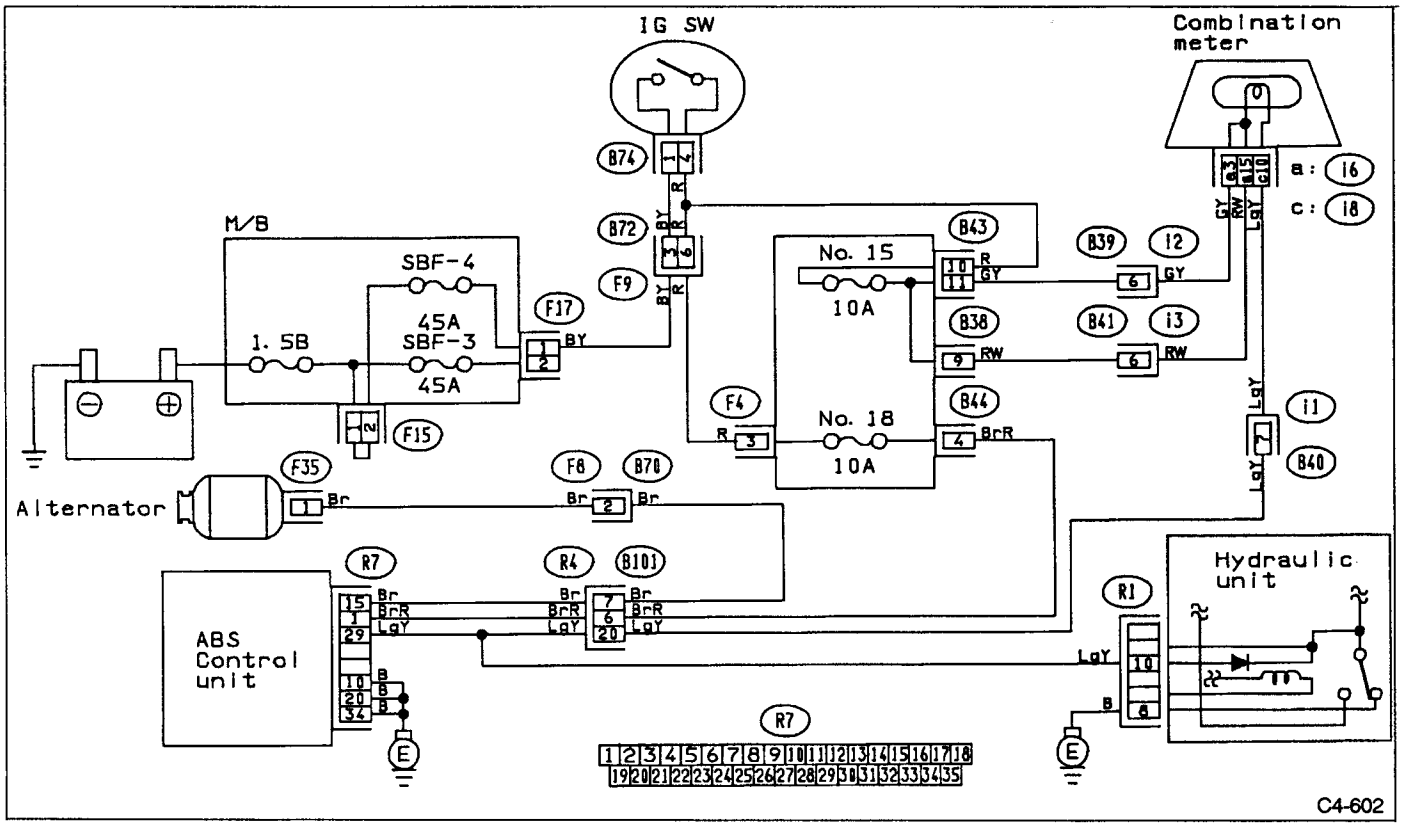

Fig. 160

1. CHECK POWER SUPPLY (VOLTAGE) TO ABS CONTROL UNIT

1) Turn ignition switch OFF.
2) Disconnect connector from ABS control unit.
3) Disassemble connector.
a) While pushing portion ① , disconnect connector.
b) Remove screw from portion ② .
c) Move rubber boot ③ back (toward harness).
d) Slide cover ④ in direction shown by arrow and remove.

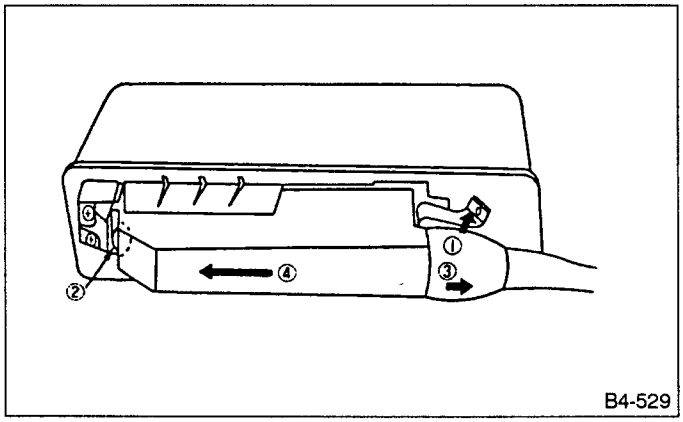

Fig. 161

4) Turn ignition switch ON.
5) Measure voltage between ABS control unit connector and ground.

Connector & terminal/Specified Voltage:
(R7) No. 1 — Body/10 — 12 V

2. CHECK INPUT VOLTAGE OF ABS CONTROL UNIT TO ALTERNATOR

1) Start the engine.
2) Measure voltage between ABS control unit connector and ground.

Connector & terminal/Specified Voltage:
(R7) No. 15 — Body/Approx. 13.5 V

3. CHECK ABS CONTROL UNIT GROUND SYSTEM

1) Turn ignition switch OFF.
2) Connect connector to ABS control unit.
3) Turn ignition switch ON.
4) Measure voltage between ABS control unit terminal and ground.

Terminal/Specified Voltage:
(R7) No. 20 — Body/0 V

B: TROUBLE CODE (1 — 4) Faulty solenoid valve circuit(s) in hydraulic unit

CONTENTS OF DIAGNOSIS:
- Faulty harness/connector in hydraulic unit
- Faulty solenoid valve in hydraulic unit

TROUBLE SYMPTOM:
- ABS does not operate.

1	Check hydraulic unit solenoid.	Not OK	Replace hydraulic unit.
	↓ OK		
2	Check signal emitted from solenoid (on ABS control unit side).	Not OK	Repair harness/connector between ABS control unit and hydraulic unit.
	↓ OK		
	Replace ABS control unit.		

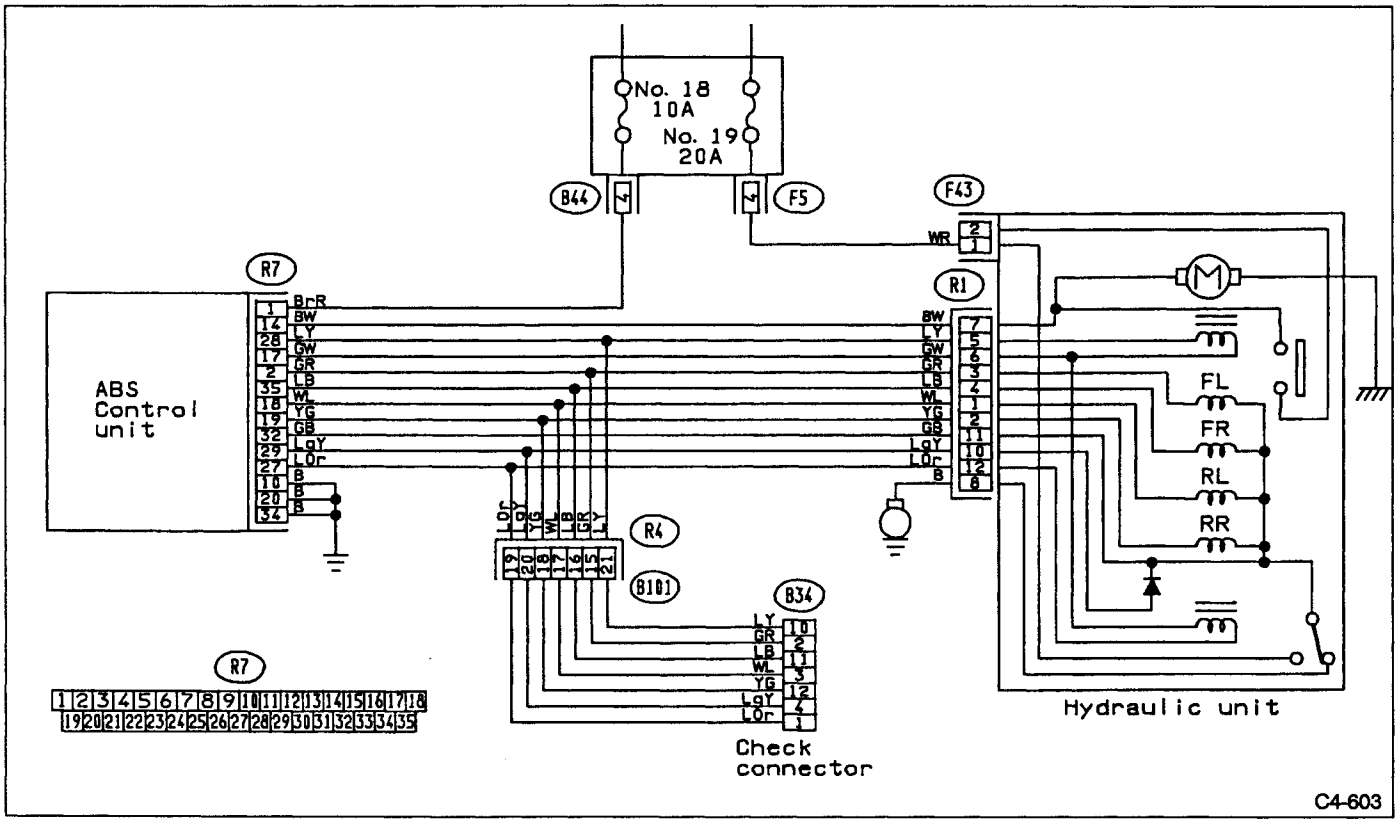

Fig. 162

1. CHECK HYDRAULIC UNIT SOLENOID

1) Turn ignition switch ON.
2) Ground check-connector terminal, and check solenoid valve for operation (sound which indicates proper operation).

Each time solenoid activates, system circuit is interrupted. To check again, first turn ignition switch OFF and then ON.

TROUBLE CODE/Connector & Terminal:
1 / (B34) No. 2 — Body
2 / (B34) No. 11 — Body
3 / (B34) No. 12 — Body
4 / (B34) No. 3 — Body

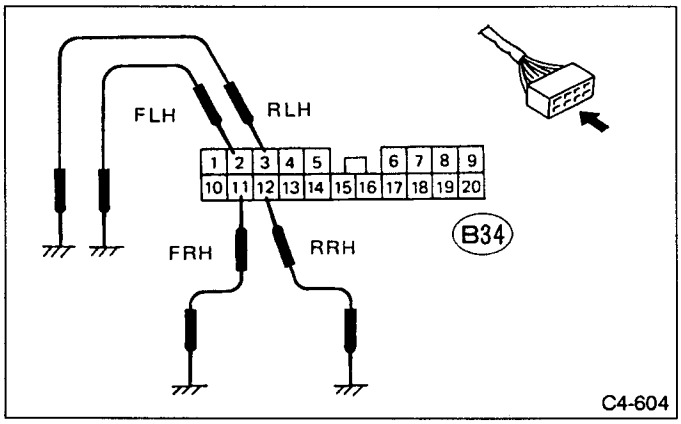

Fig. 163

2. CHECK SOLENOID (ON ABS CONTROL UNIT SIDE)

1) Turn ignition switch ON.
2) Attach circuit tester's positive probe to terminal (corresponding with solenoid) and ground probe to ground and measure voltage between terminal and ground.

Each time solenoid activates, system circuit is interrupted. To check again, first turn ignition switch OFF and then ON.

TROUBLE CODE/Connector & Terminal:
1 / (R7) No. 2 — Body
2 / (R7) No. 35 — Body
3 / (R7) No. 19 — Body
4 / (R7) No. 18 — Body
Specified Voltage: 0 V (solenoid in operation)

C: TROUBLE CODE (5 and 6) — Faulty front ABS sensor

CONTENTS OF DIAGNOSIS:
- Faulty front wheel speed sensor or harness
- Faulty ABS control unit

TROUBLE SYMPTOM:
- ABS does not operate.

1	Check signal emitted from sensor (on ABS control unit side).	OK	Replace ABS C/U terminal poor contact. (Replace ABS C/U.)
	Not OK		
2	Check sensor.	OK	Repair harness/connector.
	Not OK		
	(after tone wheel check) Replace sensor.		

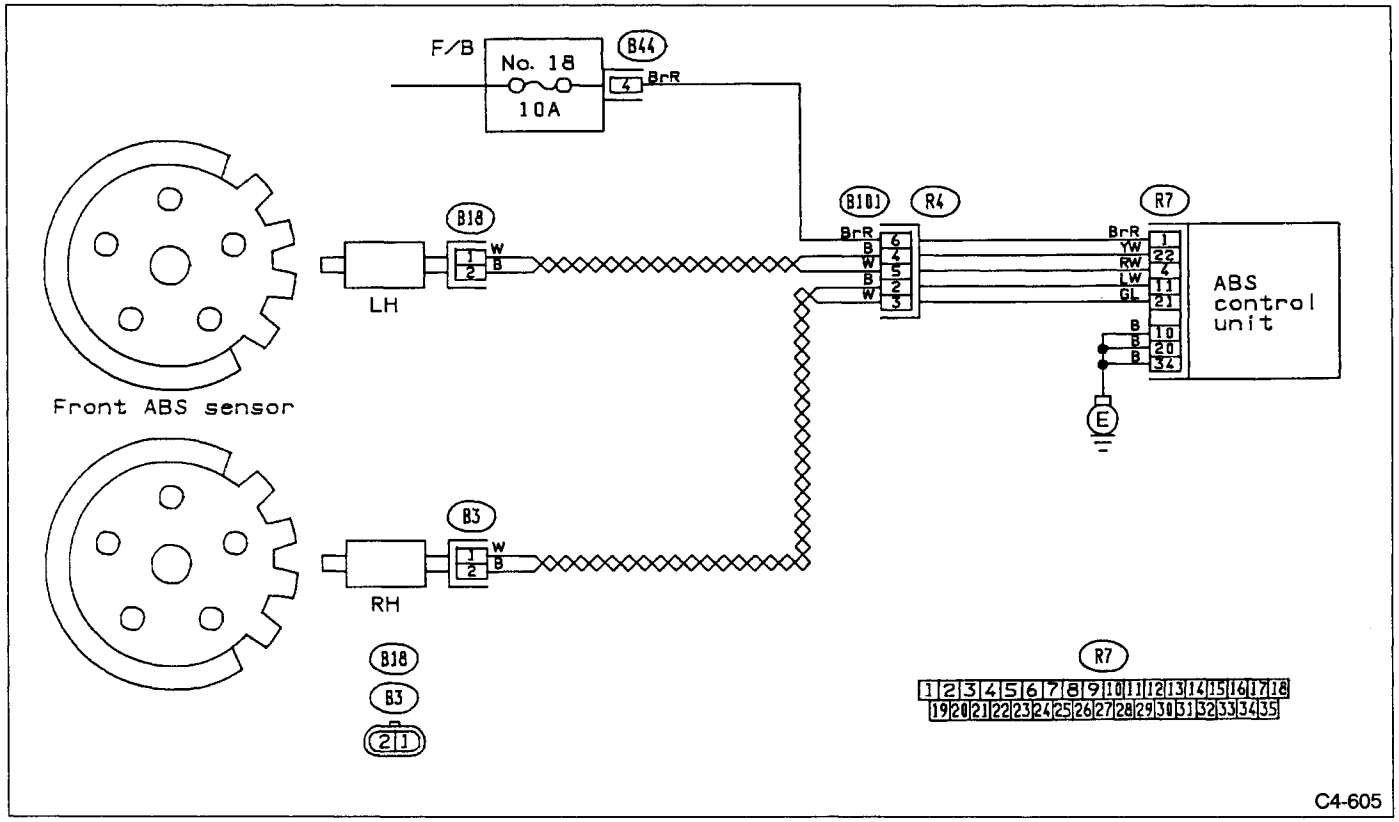

Fig. 164

1. CHECK SIGNAL EMITTED FROM SENSOR (ON ABS CONTROL UNIT SIDE)

1) Disconnect connector from ABS control unit. ⟨Refer to No. T6A1⟩
2) Raise all four wheels off ground.
3) Measure voltage between ABS control unit terminals using a digital circuit tester (set in "AC" range) according to trouble code.

TROUBLE CODE/Connector & Terminal:
5 / (R7) No. 4 — No. 22
6 / (R7) No. 11 — No. 21
Specified Voltage:
200 — 300 mV (at "creep" speed of AT model)

4) Disconnect ABS control unit connector, and measure resistance between sensor and ground.

Connector & terminal/Specified Resistance:
(R7) No. 22 — Body/1 MΩ min.
(R7) No. 21 — Body/1 MΩ min.

2. CHECK SENSOR

1) Disconnect sensor connector.
2) Measure resistance between sensor terminals.

TROUBLE CODE/Connector & Terminal:
5 / Sensor LH No. 1 — No. 2
6 / Sensor RH No. 1 — No. 2
Specified Resistance: 0.8 — 1.3 kΩ

3) Measure resistance between sensor connector terminal and ground.

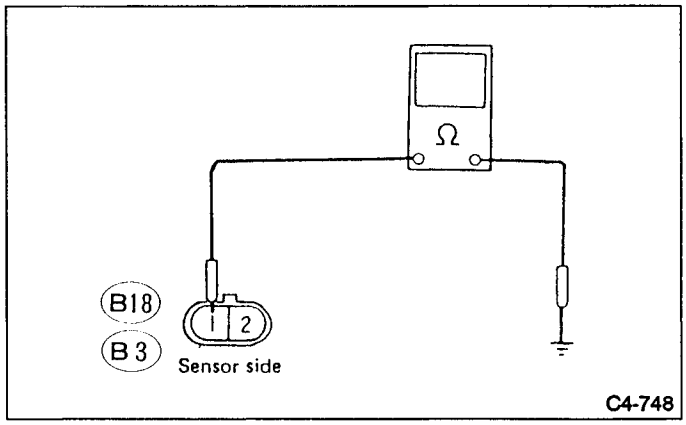

Fig. 165

Connector & terminal/Specified Resistance:
(B18) No. 1 — Body/1 MΩ min.
(B3) No. 1 — Body/1 MΩ min.

D: TROUBLE CODE (7 and 8) — Faulty rear ABS sensor

CONTENTS OF DIAGNOSIS:
- Faulty rear wheel ABS sensor or harness
- Faulty ABS control unit

TROUBLE SYMPTOMS:
- ABS does not operate.
- Rear wheels only are occasionally controlled by ABS.

1	Check signal emitted from sensor (on ABS control unit side).	OK	Replace ABS C/U terminal poor contact. (Replace ABS C/U.)
	▼ Not OK		
2	Check sensor.	OK	Repair harness/connector.
	▼ Not OK		
	Faulty sensor		

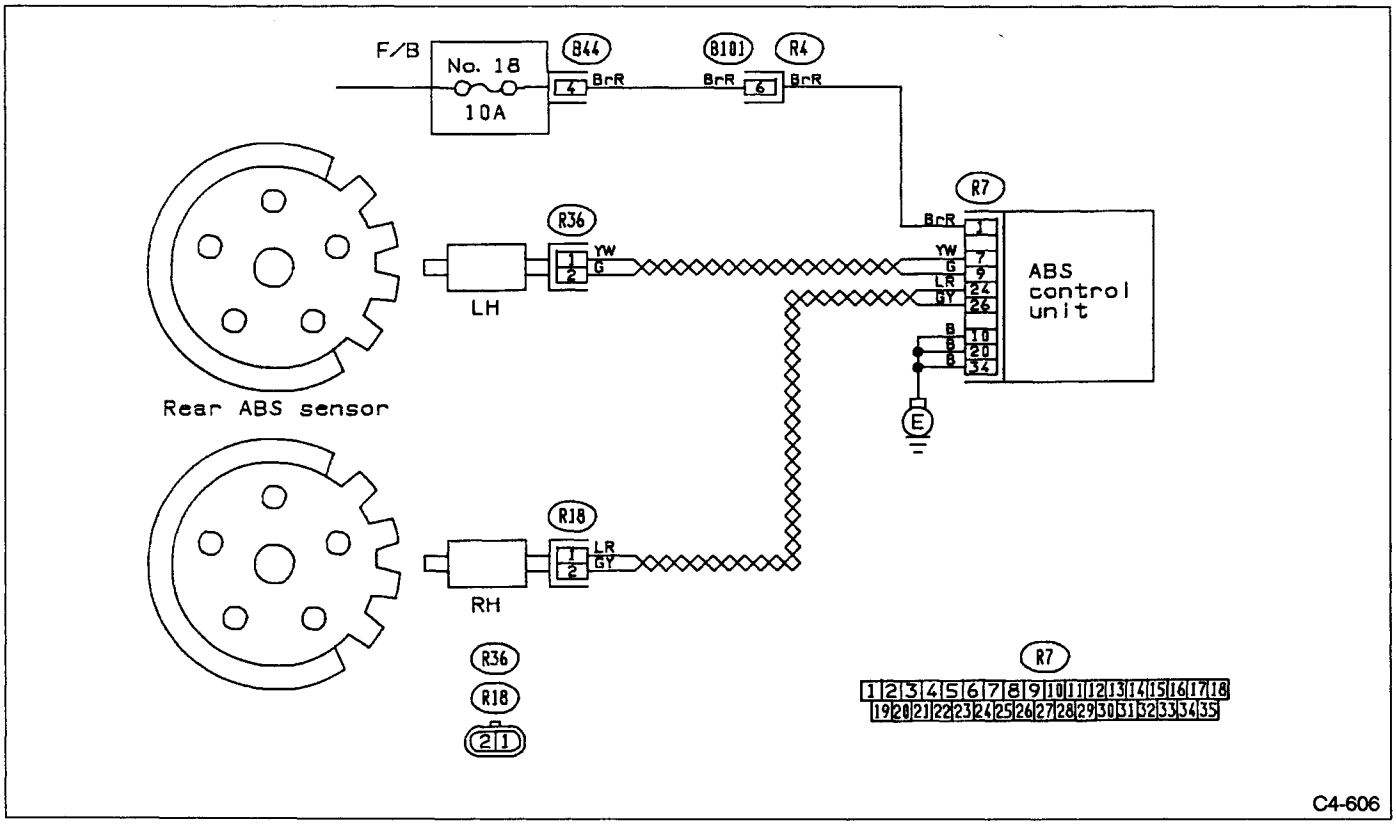

Fig. 166

1. CHECK INPUT SIGNAL OF SENSOR TO ABS CONTROL UNIT

1) Disconnect connector from ABS control unit. ⟨Refer to No. T6A1⟩
2) Raise wheels off ground.
3) Measure voltage between ABS control unit terminals using a digital circuit tester, (Set in "AC" range) according to trouble code.

TROUBLE CODE/Connector & Terminal:
7/(R7) No. 24 — No. 26
8/(R7) No. 7 — No. 9
Specified Voltage:
200 — 300 mV (at "creep" speed of AT model)

4) Disconnect ABS control unit connector and measure resistance between sensor and ground.

Connector & Terminal/Specified Resistance:
(R7) No. 26 — Body/1 MΩ min.
(R7) No. 9 — Body/1 MΩ min.

2. CHECK SENSOR

1) Disconnect sensor connector.
2) Measure resistance between sensor terminals.

TROUBLE CODE/Connector & Terminal:
7/Sensor RH No. 1 — No. 2
8/Sensor LH No. 1 — No. 2
Specified Voltage: 0.8 — 1.3 kΩ

3) Measure resistance between sensor connector terminal and ground.

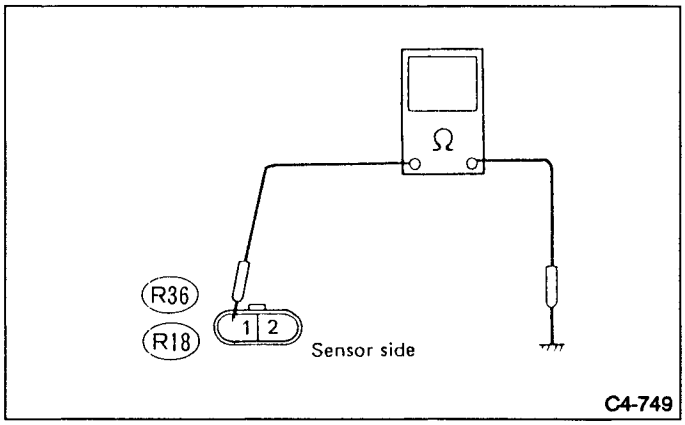

Fig. 167

Connector & Terminal/Specified Resistance:
(R36) No. 1 — Body/1 MΩ min.
(R18) No. 1 — Body/1 MΩ min.

E: TROUBLE CODE (9) — Faulty hydraulic motor or motor relay

CONTENTS OF DIAGNOSIS:
- Faulty main power supply
- Faulty hydraulic motor or motor relay built into hydraulic unit

TROUBLE SYMPTOM:
- ABS does not operate.

1 Check motor relay coil (on ABS control unit side).
- Not OK → 4 Check relay coil (on hydraulic unit side).
- OK ↓

2 Check motor relay contacts (on hydraulic unit side).
- OK → 5 Check and repair motor power line harness.
- Not OK ↓

3 Check motor relay.
- Not OK → Replace motor relay.
- OK ↓

Replace hydraulic unit.

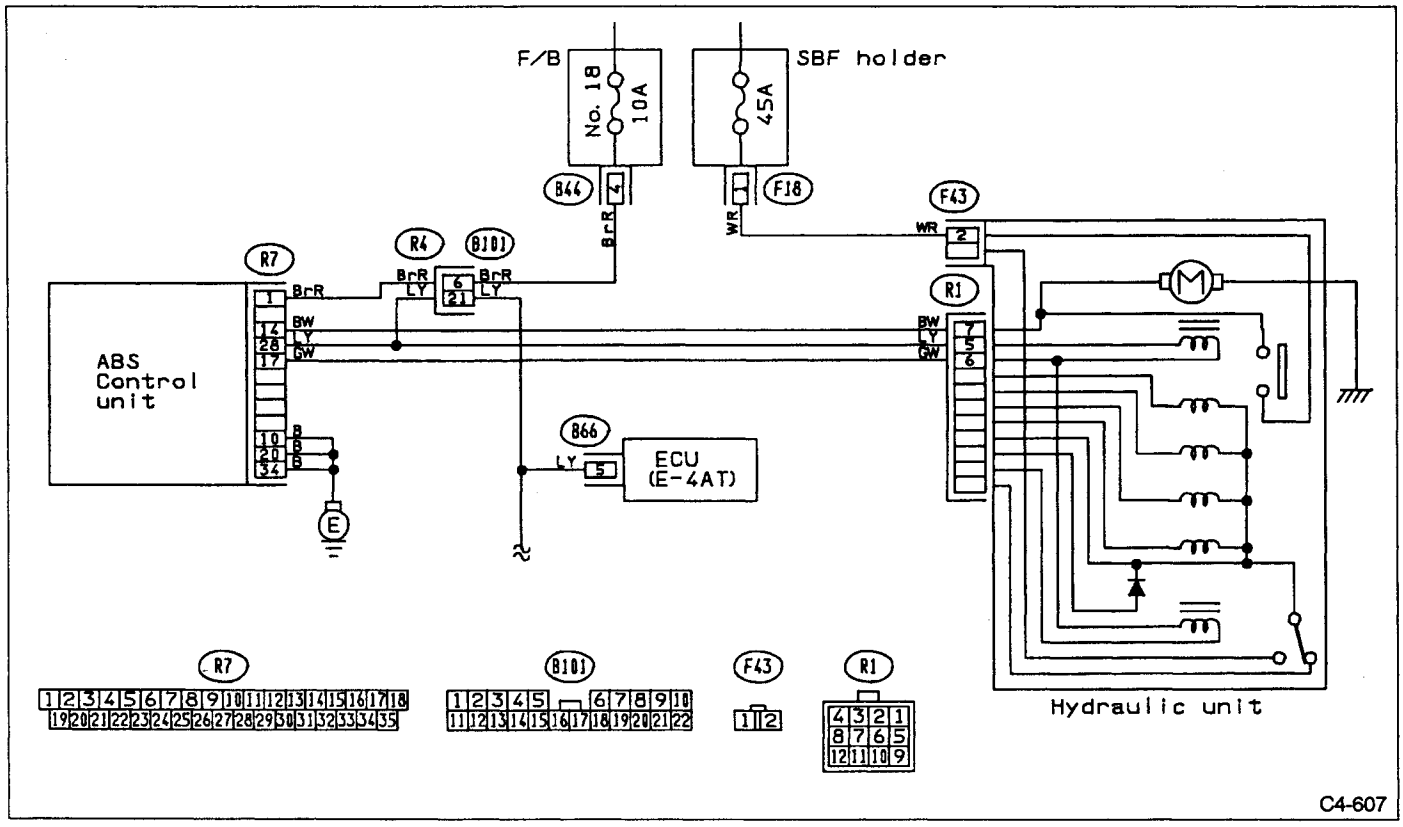

Fig. 168

1. CHECK RELAY COIL (ON ABS CONTROL UNIT SIDE)

1) Turn ignition switch OFF.
2) Disconnect ABS control unit connector.
3) Disassemble ABS control unit connector.
4) Measure resistance between ABS control unit terminals.

Connector & terminal/Specified Resistance:
(R7) No. 17 — No. 28/45 — 55 Ω

2. CHECK MOTOR RELAY CONTACTS (ON HYDRAULIC UNIT SIDE)

1) Disconnect connectors from hydraulic unit.
2) Measure resistance between hydraulic unit terminals.

Terminal/Specified Resistance:
(To F43) No. 2 — (To R1) No. 4/1 MΩ min.

3. CHECK MOTOR RELAY

1) Remove motor relay.
2) Attach circuit tester probes to terminals, as shown in Figure.

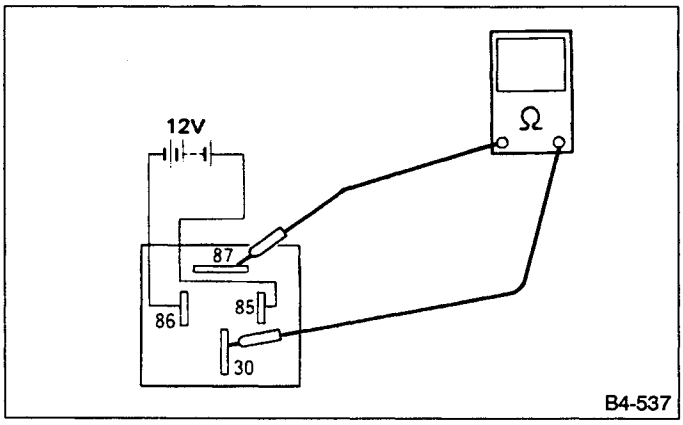

Fig. 169

3) Measure resistance between terminals.

Terminal/Specified Resistance:
No. 30 — 87/0 Ω (when 12 volts applied)
No. 30 — 87/1 MΩ min. (when no voltage is applied)

4. CHECK RELAY COIL (ON HYDRAULIC UNIT SIDE)

1) Disconnect connector from hydraulic unit.
2) Measure resistance between hydraulic unit terminals.

Terminal/Specified Resistance:
No. 5 — No. 6/45 — 55 Ω

When resistance checks out "Not OK", check relay as a single unit.
- **If resistance checks out "OK", replace hydraulic unit.**
- **If "Not OK", repair harness connector between ABS control unit and hydraulic unit.**

3) Disconnect connectors from ABS control unit and hydraulic unit. Measure resistance between connectors, and between each connector and ground.

Connector & terminal/Specified Resistance:
(R1) No. 5 — (R7) No. 28/0 Ω
(R1) No. 6 — (R7) No. 17/0 Ω
(R1) No. 5 — Body/1 MΩ min.
(R1) No. 7 — Body/1 MΩ min.

5. CHECK AND REPAIR MOTOR POWER HARNESS

1) Turn ignition switch ON.
2) Measure voltage between hydraulic unit connector and ground.

Connector & terminal/Specified Voltage:
(F43) No. 2 — Body/10 — 12 V

F: TROUBLE CODE (10) — Faulty valve relay or interrupted system operation (caused by symptoms other than those indicated at left.), unidentified fault are not equivalent to trouble codes (1) — (16).

CONTENTS OF DIAGNOSIS:
- Faulty main power supply (include earth pint)
- Faulty hydraulic unit valve relay
- Interference with other system

TROUBLE SYMPTOM:
- ABS does not operate.

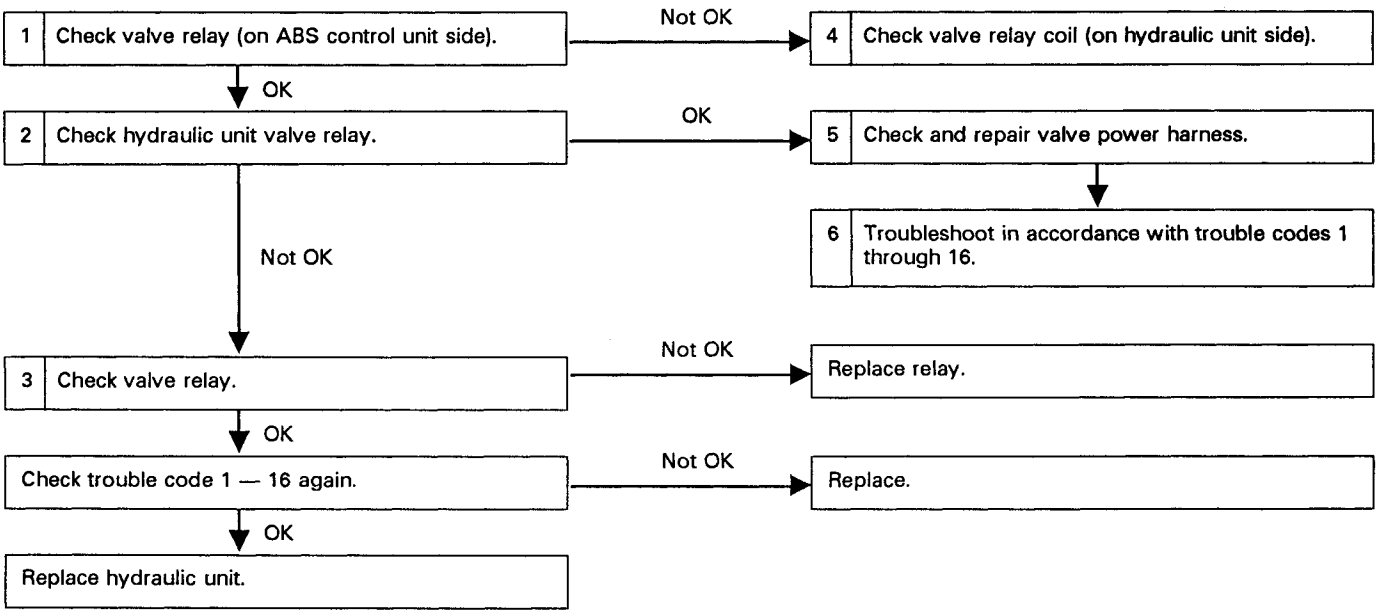

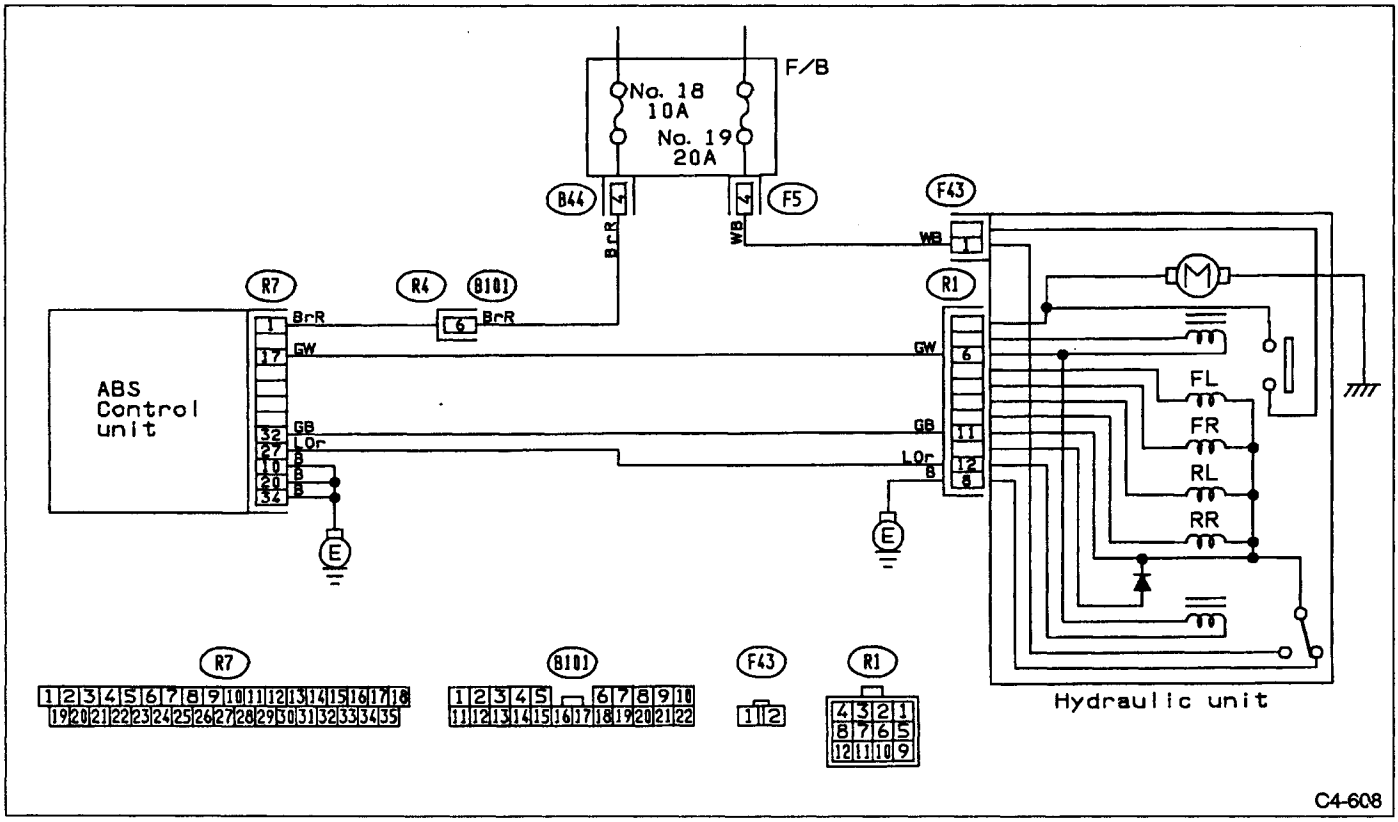
F/B
No. 18
10A
No. 19
20A
B44
F5
F43
WB
BrR
R7
R4
B101
R1
ABS
Control
unit
BrR
GW
GB
LOr
B
FL
FR
RL
RR
Hydraulic unit
C4-608

Fig. 170

1. CHECK VALVE RELAY COIL (ON ABS CONTROL UNIT SIDE)

1) Turn ignition switch OFF.
2) Disconnect ABS control unit connector.
3) Disassemble connector. (Refer to No. T6A1.)
4) Measure resistance between ABS control unit terminals.

Connector & terminal/Specified Resistance:
(R7) No. 17 — No. 27/80 — 90 Ω

2. CHECK HYDRAULIC UNIT VALVE RELAY

1) Disconnect connector from hydraulic unit.
2) Measure resistance between hydraulic unit terminals.

Terminal/Specified Resistance:
(To F43) No. 1 — (To R1) No. 11/1 MΩ min.

3. CHECK VALVE RELAY AS A SINGLE UNIT

1) Remove valve relay.
2) Attach circuit tester probes to terminals, as shown in Figure.

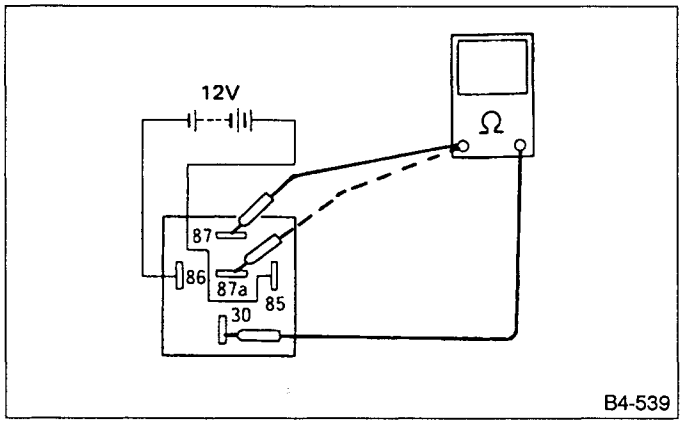

Fig. 171

3) Measure resistance between respective terminals.

Terminal/Specified Resistance:
No. 87 — 30/0 Ω (when 12 volts applied)
No. 87 — 30/1 MΩ (when no voltage is applied)
No. 87a — 30/1 MΩ (when 12 volts applied)
No. 87a — 30/0 Ω (when no voltage is applied)

4. CHECK HYDRAULIC UNIT VALVE RELAY COIL

1) Disconnect connector from hydraulic unit.
2) Measure resistance between hydraulic unit terminals.

Terminal/Specified Resistance:
(To R1) No. 6 — No.12/80 — 90 Ω

When resistance checks out "Not OK", check relay as a single unit.
3) Disconnect connectors from ABS control unit and hydraulic unit. Measure resistance between connectors.

Connector & terminal/Specified Resistance:
(R1) No. 6 — (R7) No. 17/0 Ω
(R1) No. 12 — (R7) No. 27/0 Ω
(R1) No. 6 — Body/1 MΩ min.
(R1) No. 12 — Body/1 MΩ min.

If resistance checks out "OK", replace hydraulic unit; if "Not OK", repair harness/connector between ABS control unit and hydraulic unit.

5. CHECK AND REPAIR POWER HARNESS

1) Turn ignition switch ON.
2) Measure resistance between hydraulic unit connector and ground.

Connector & terminal/Specified Voltage:
(F43) No. 1/10 — 12 V

G: TROUBLE CODE (16) — Faulty ABS control unit

CONTENTS OF DIAGNOSIS:
- Faulty ABS control unit
- Faulty power supply to ABS control unit or faulty ground system
- Faulty ABS sensor

TROUBLE SYMPTOMS:
- ABS control unit does not operate.
- ABS activates faster than specifications when braking on high "μ" (dry asphalt) road.

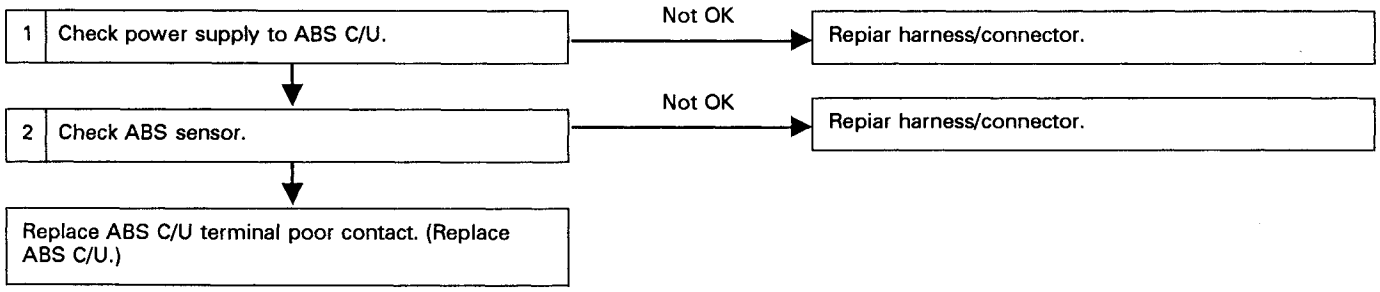

1. CHECK POWER SUPPLY TO ABS CONTROL UNIT

1) Refer to trouble code (0)[T5A0].

2. CHECK ABS SENSOR

1) Refer to trouble code (5 and 6)[T5C0] and trouble code (7 and 8)[T5D0].

6. General Troubleshooting Chart

A: VIBRATING PEDAL AND NOISE

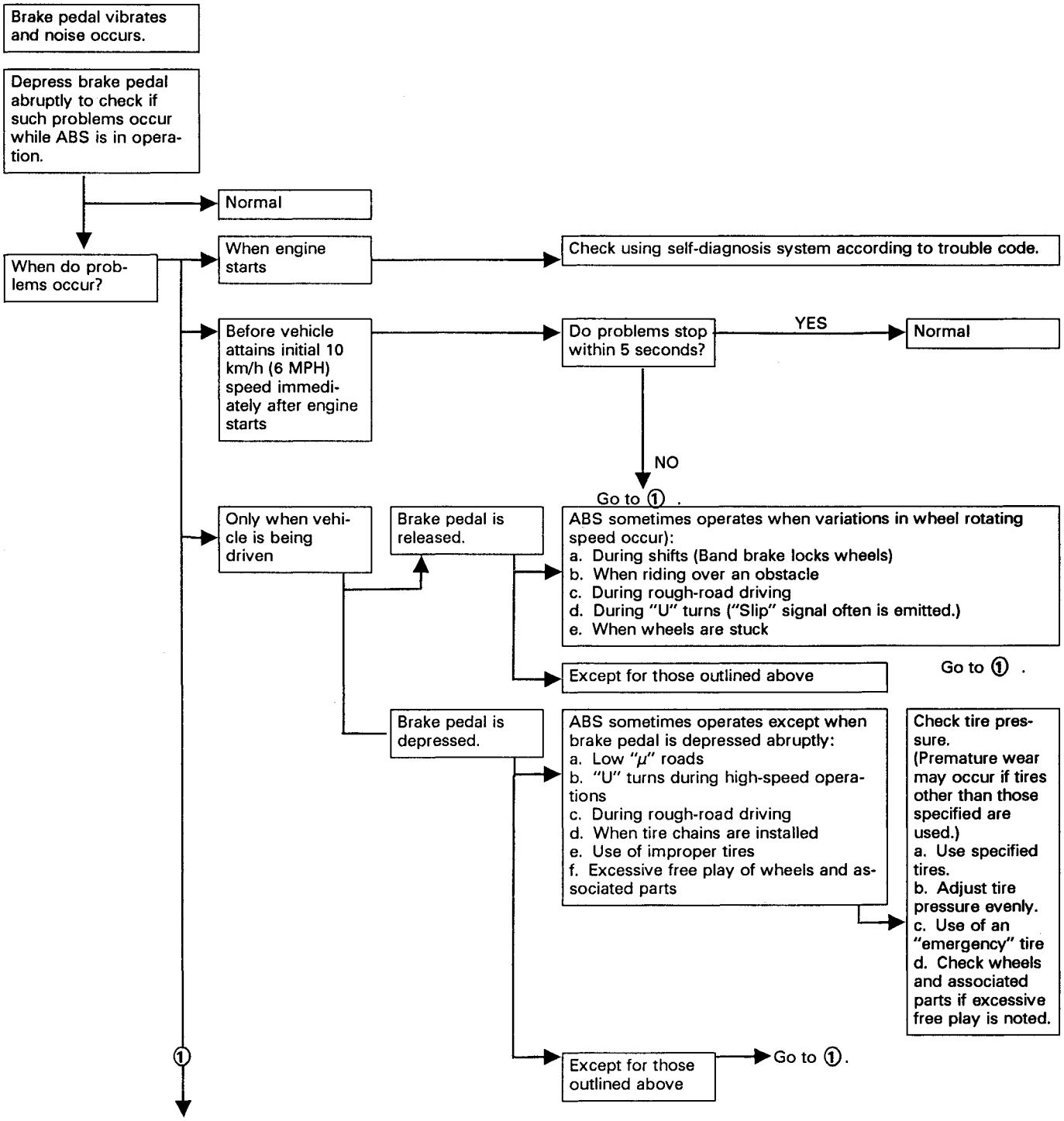

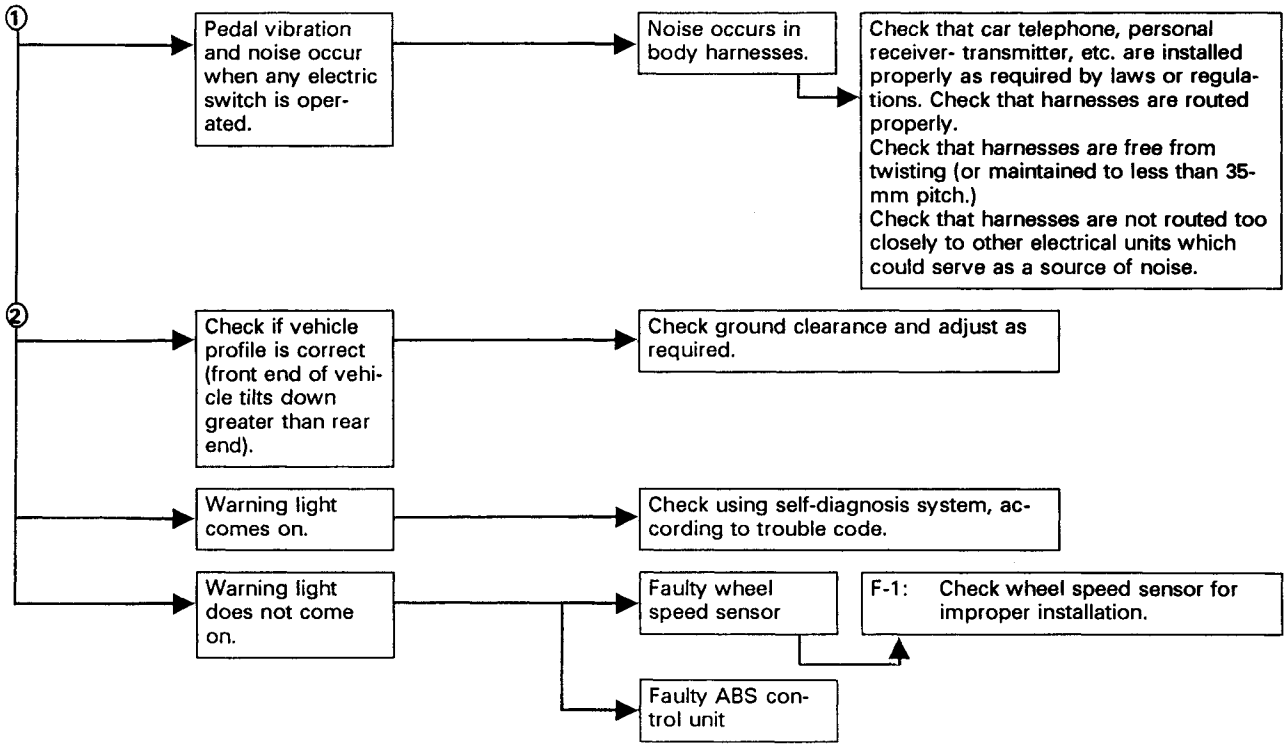
①
Pedal vibration and noise occur when any electric switch is operated.
Noise occurs in body harnesses.
Check that car telephone, personal receiver- transmitter, etc. are installed properly as required by laws or regulations. Check that harnesses are routed properly.
Check that harnesses are free from twisting (or maintained to less than 35-mm pitch.)
Check that harnesses are not routed too closely to other electrical units which could serve as a source of noise.
②
Check if vehicle profile is correct (front end of vehicle tilts down greater than rear end).
Check ground clearance and adjust as required.
Warning light comes on.
Check using self-diagnosis system, according to trouble code.
Warning light does not come on.
Faulty wheel speed sensor
F-1: Check wheel speed sensor for improper installation.
Faulty ABS control unit

B: EXCESSIVE STOPPING DISTANCE

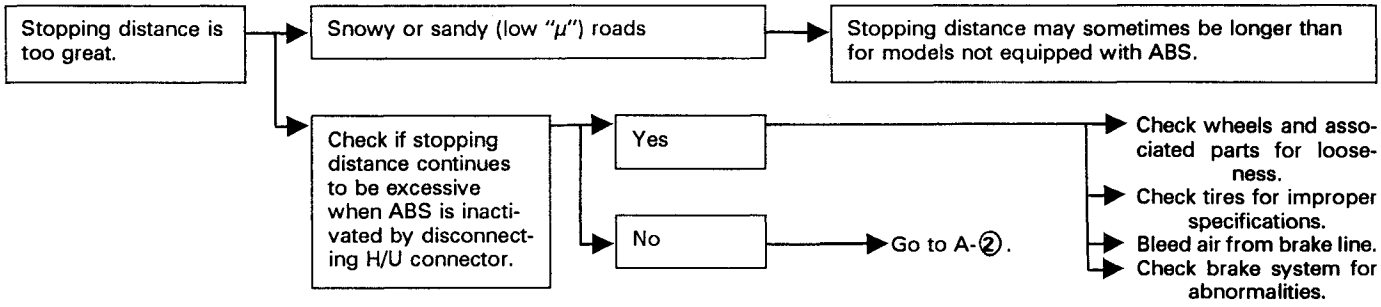

C: IMPROPER PEDAL OPERATION

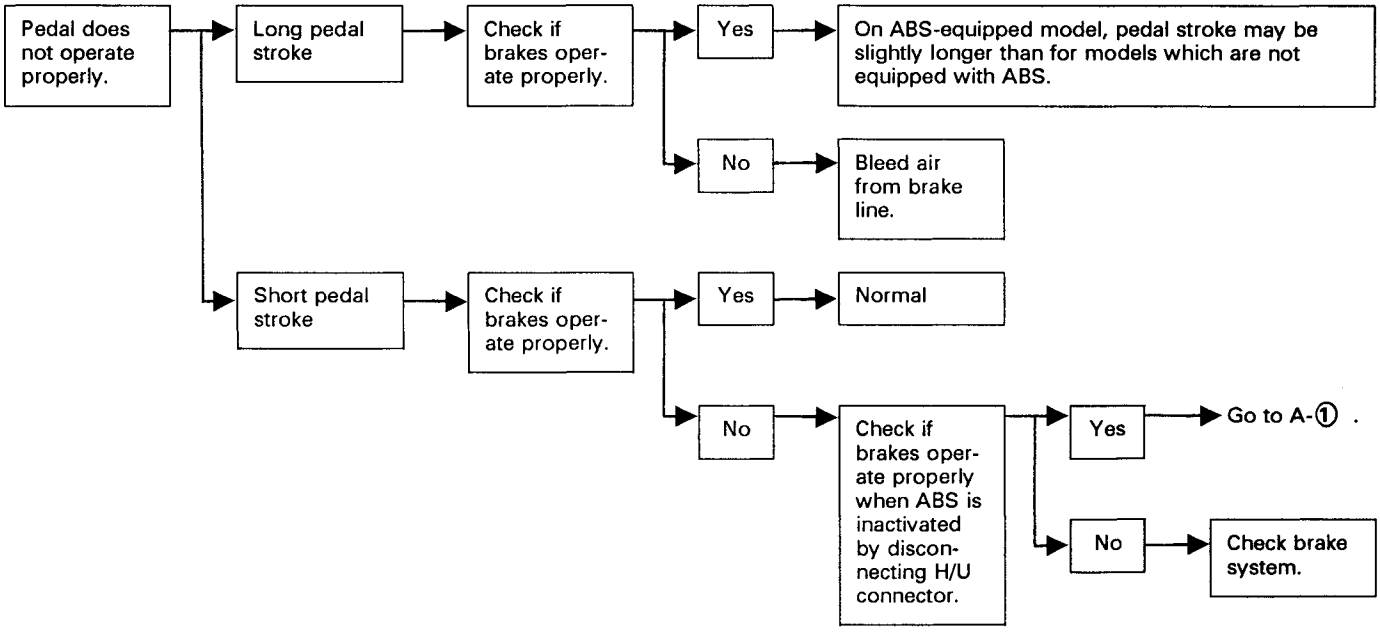

D: ABS INOPERATIVE

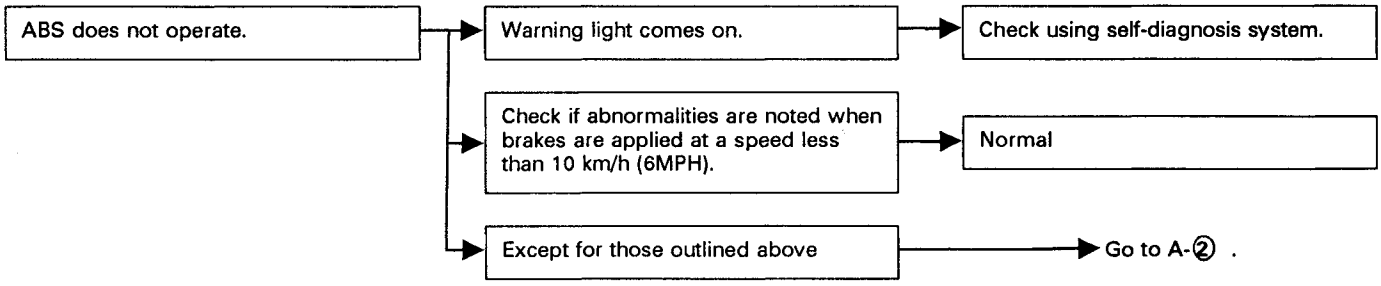

E: FREQUENT ABS OPERATION

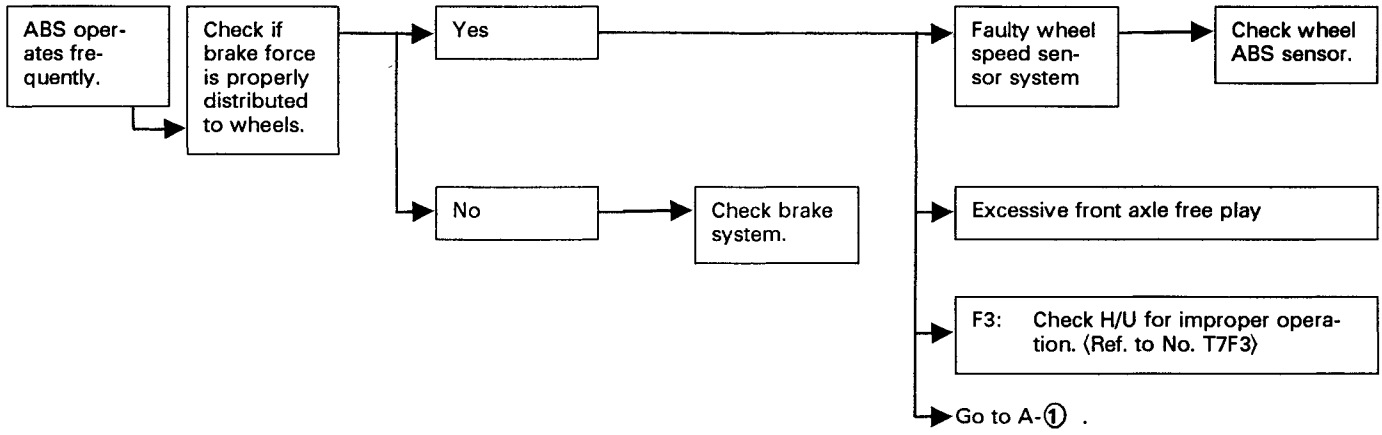

F: INSPECTION OF COMPONENTS

1. ABS SENSOR INSTALLATION

1) Dismount brake as outlined in manual to gain access to speed sensor and tone wheel for inspection.
2) Check pole piece and tone wheel for accumulation of foreign particles. If necessary, remove foreign particles and clean.
3) Check tone wheel teeth for cracks for deformities. If necessary, replace tone wheel (No. of teeth: 44) with a new one.
4) Check tone wheel for looseness.

Tightening torque:
10 — 16 N·m (1 — 1.6 kg-m, 7 — 12 ft-lb)

5) Measure tone wheel-to-pole piece gap over entire perimeter of the wheel.

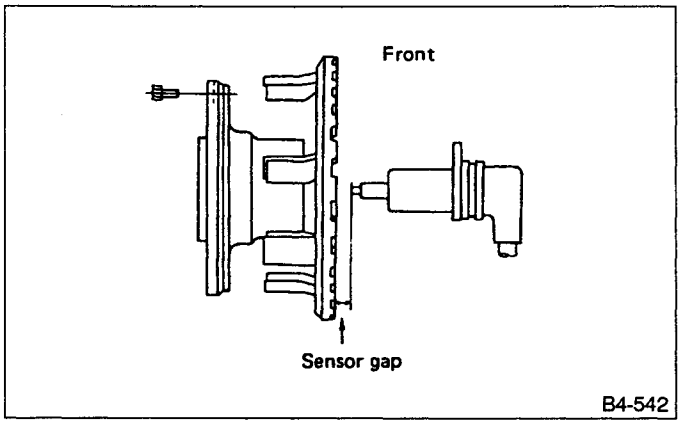

Fig. 172

Specifications	Front wheel	Rear wheel
	0.7 — 1.0 mm (0.028 — 0.039 in)	0.5 — 1.0 mm (0.020 — 0.039 in)

If measurements check out "Not OK", adjust the gap using spacers (Part No. 26755AA000). If spacers cannot correct the gap, replace worn sensor or worn tone wheel.
6) Check hub runout.

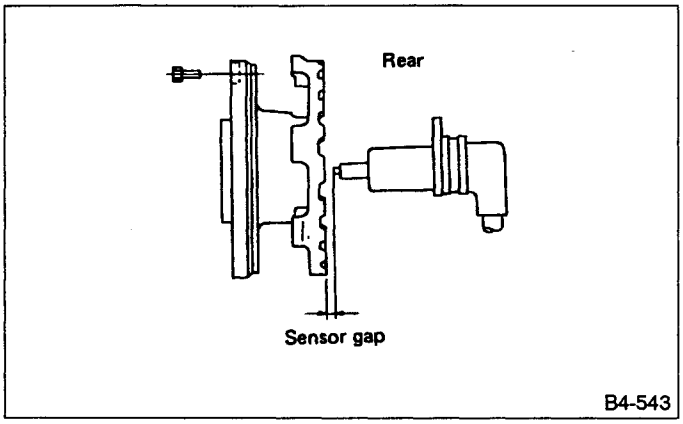

Fig. 173

Specifications	0.05 mm (0.0020 in)

7) For inspection procedures of sensors, refer to "Trouble Codes 5, 6, 7 and 8".

2. HYDRAULIC UNIT INSPECTION

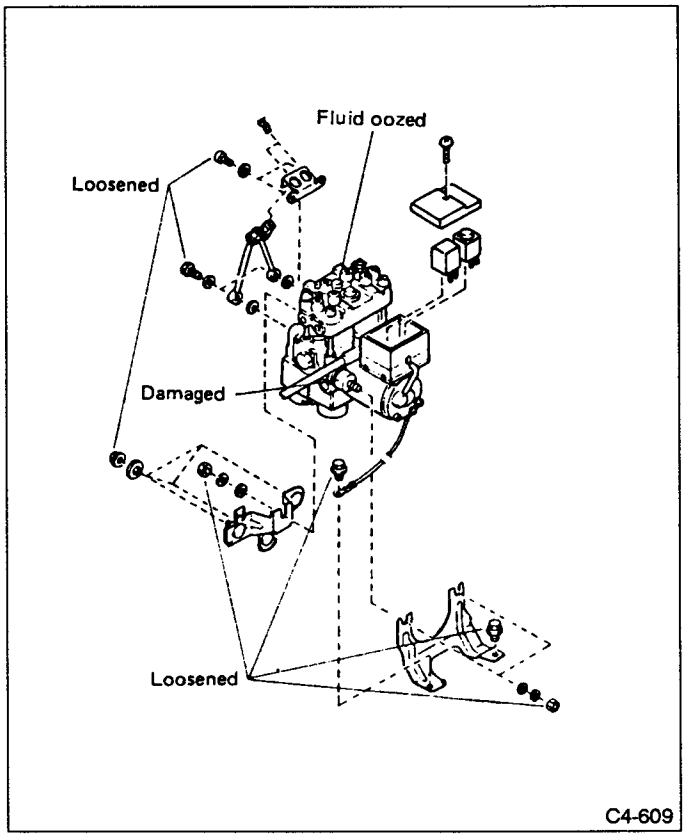

Fig. 174

1) Check parts for traces of brake fluid or dents. Clean parts and tighten pipe connections, etc. if traces of brake fluid are noted. Replace hydraulic unit if parts are excessively dented or damaged.
2) Check bracket for looseness or improper installation, damper for damage, and attaching nuts for looseness.

Specifications	Parts must be tightly in place and free from damage.

3) Check connectors for improper installation.

Specifications	Connectors must be tight and secure.

4) Check each relay as a single unit. Refer to "Trouble Code 9" for inspection of motor relay and "Trouble Code 10" for valve relay.
5) Valve inspection
Refer to step 1 under "Trouble Code 1 through 4" for instructions. OK

PEDAL SYSTEM AND CONTROL CABLES

SUBARU

SVX

1992

Precaution for Supplemental Restraint System "Airbag"
The Supplemental Restraint System "Airbag" helps to reduce the risk or severity of injury to the driver in a frontal collision.
The Supplemental Restraint System consists of an airbag module (located in the center of the steering wheel), sensors, a control unit, warning light, wiring harness and spiral cable.
Information necessary to service the safety is included in the "5-5. SUPPLEMENTAL RESTRAINT SYSTEM" of this Service Manual.
WARNING:

- To avoid rendering the Airbag system inoperative, which could lead to personal injury or death in the event of a severe frontal collision, all maintenance must be performed by an authorized SUBARU dealer.
- Improper maintenance, including incorrect removal and installation of the Airbag system, can lead to personal injury caused by unintentional activation of the Airbag system.
- All Airbag system electrical wiring harnesses and connectors are covered with yellow outer insulation. Do not use electrical test equipment on any circuit related to the Supplemental Restraint System "Airbag".

Page

S SPECIFICATIONS AND SERVICE DATA 2
C COMPONENT PARTS 3
W SERVICE PROCEDURE 4
Supplemental Restraint System AIRBAG 4
T TROUBLESHOOTING 8

S SPECIFICATIONS AND SERVICE DATA

A: SERVICE DATA

Brake pedal	Free play		1 — 3 mm (0.04 — 0.12 in) [Depress brake pedal pad with a force of less than 10 N (1 kg, 2 lb)]
Accelerator pedal	Free play	At pedal pad	1 — 4 mm (0.04 — 0.16 in)
	Stroke	At pedal pad	53 — 57 mm (2.09 — 2.24 in)

C COMPONENT PARTS

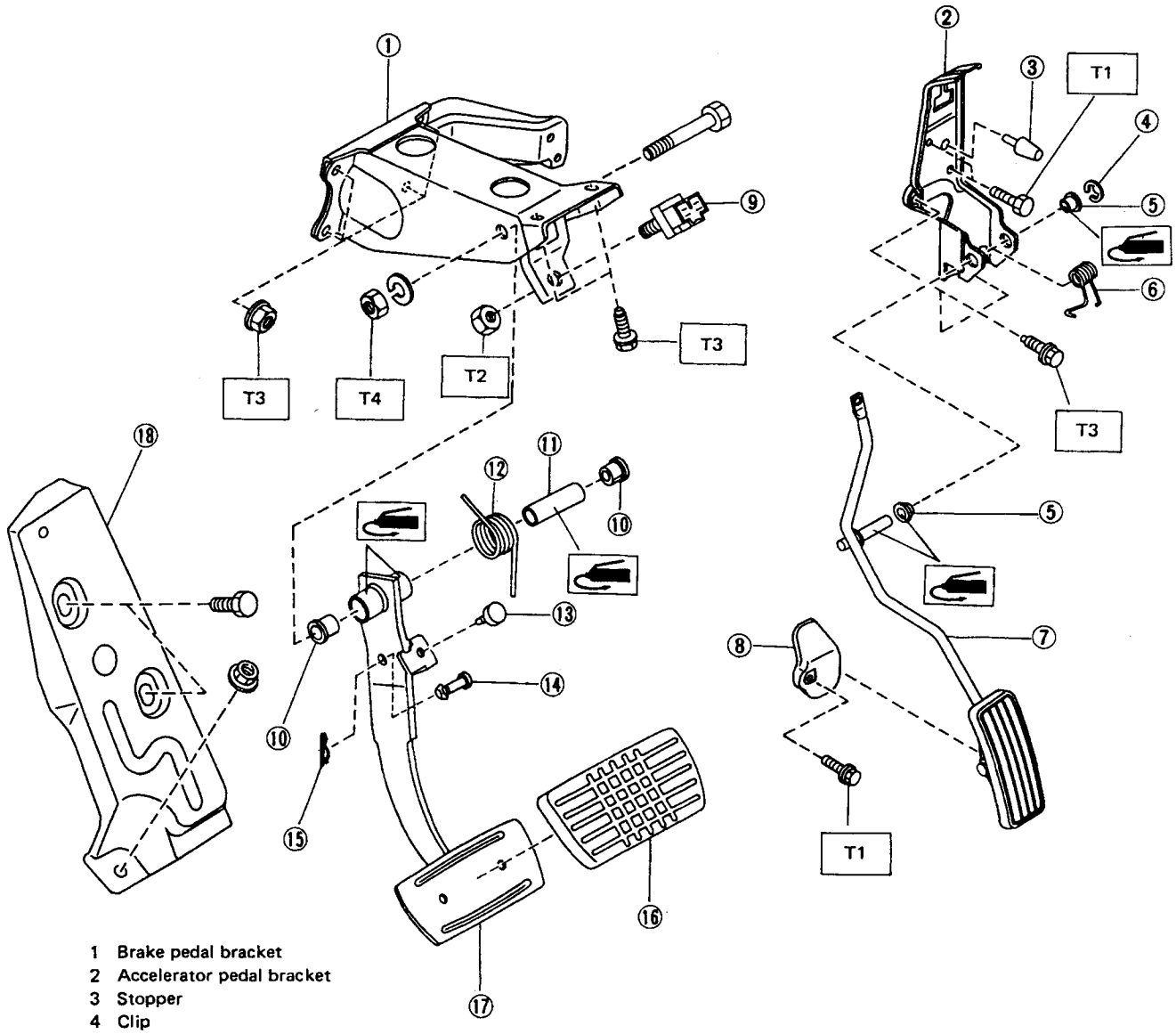

1 Brake pedal bracket
2 Accelerator pedal bracket
3 Stopper
4 Clip
5 Bushing
6 Spring
7 Accelerator pedal
8 Accelerator pedal stopper
9 Stop lamp switch
10 Bushing
11 Spacer
12 Spring
13 Stop lamp switch stopper
14 Clevis pin
15 Snap pin
16 Pedal pad
17 Brake pedal
18 Footrest ASSY

Tightening torque: N.m (kg-m, ft-lb)
T1: 5.4 – 9.3 (0.55 – 0.95, 4.0 – 6.9)
T2: 6 – 10 (0.6 – 1.0, 4.3 – 7.2)
T3: 13 – 23 (1.3 – 2.3, 9 – 17)
T4: 23 – 36 (2.3 – 3.7, 17 – 27)

C4-276

Fig. 1

W SERVICE PROCEDURE

Supplemental Restraint System "Airbag"

Airbag system wiring harness is routed near the pedal system.

a. **All Airbag system wiring harness and connectors are colored yellow. Do not use electrical test equipment on these circuit.**
b. **Be careful not to damage Airbag system wiring harness when servicing the pedal system.**

A: ON-CAR SERVICE

1. BRAKE PEDAL

1) Check position of pedal pad.
If it is not in specified value, adjust it by adjusting brake booster operating rod length.
2) Check free play by operating pedal by hand.
If it is not in specified value, adjust it by adjusting position of stop lamp switch.
Be careful not to rotate stop lamp switch.
3) Apply grease to operating rod connecting pin to prevent it from wearing.

Brake pedal free play:
1 — 3 mm (0.04 — 0.12 in)
[Depress brake pedal pad with a force of less than 10 N (1 kg, 2 lb)]

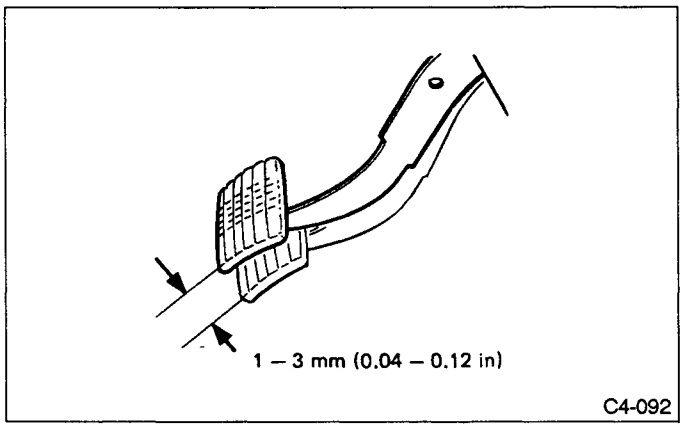

Fig. 2

2. ACCELERATOR PEDAL

Check pedal stroke and free play by operating accelerator pedal by hand.
If it is not within specified value, adjust it by turning nut connecting accelerator cable to throttle body.

Free play at pedal pad:
1 — 4 mm (0.04 — 0.16 in)
Stroke:
at pedal pad
53 — 57 mm (2.09 — 2.24 in)

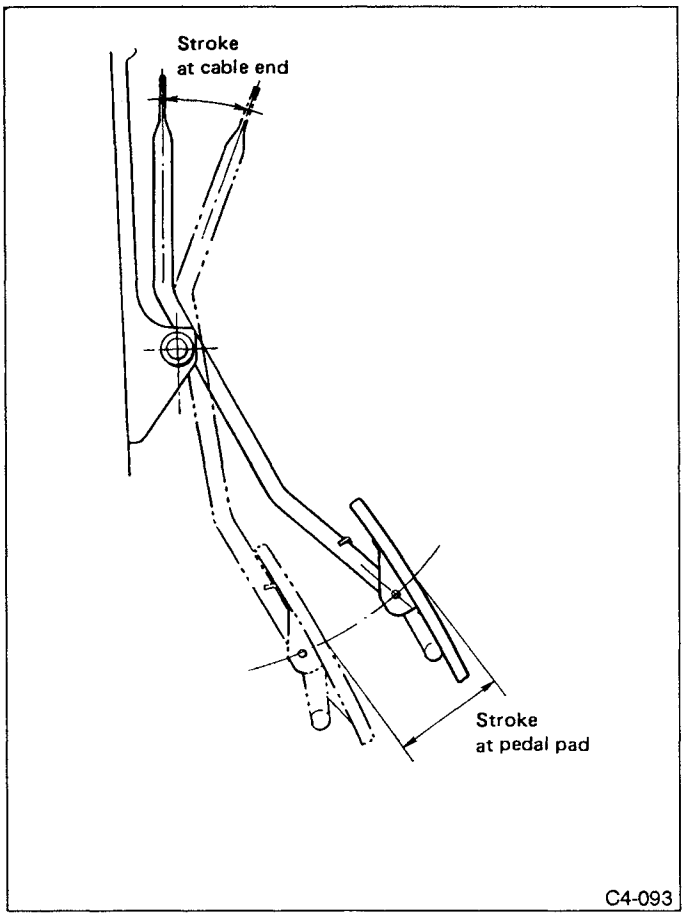

Fig. 3

B: REMOVAL

1. ACCELERATOR PEDAL ASSY TOGETHER WITH ACCELERATOR CABLE

1) Disconnect ground cable from battery.
2) Remove collector cover, and disconnect accelerator cable from throttle body and holder.

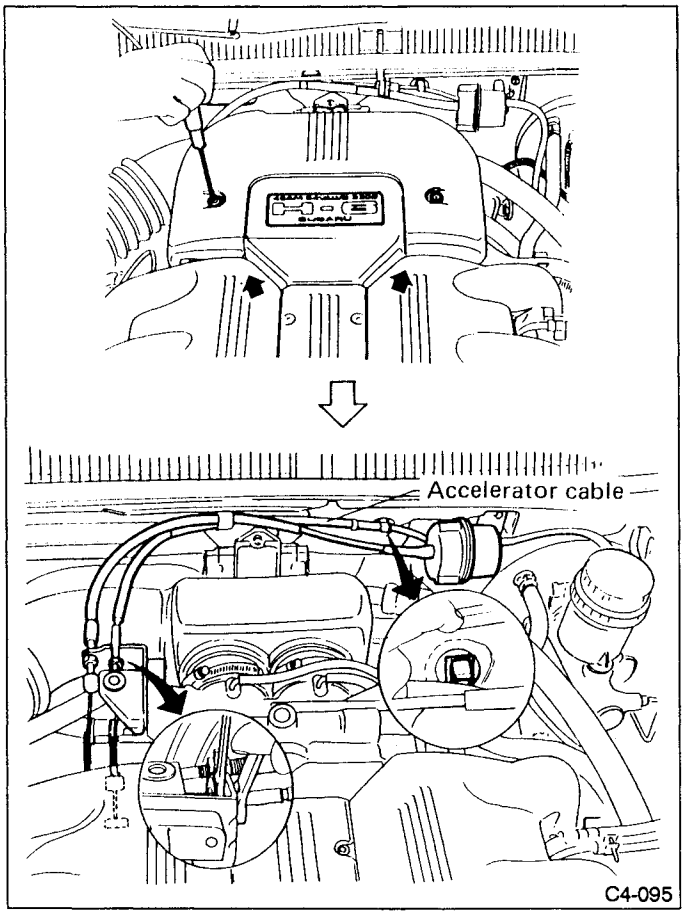

Fig. 4

3) Remove lower instrument cover and lower instrument cover panel located under steering column.
4) If necessary, remove steering shaft ASSY. ⟨Ref. to [4-3] No. W1A0⟩
5) Remove bolts which secure pedal bracket.

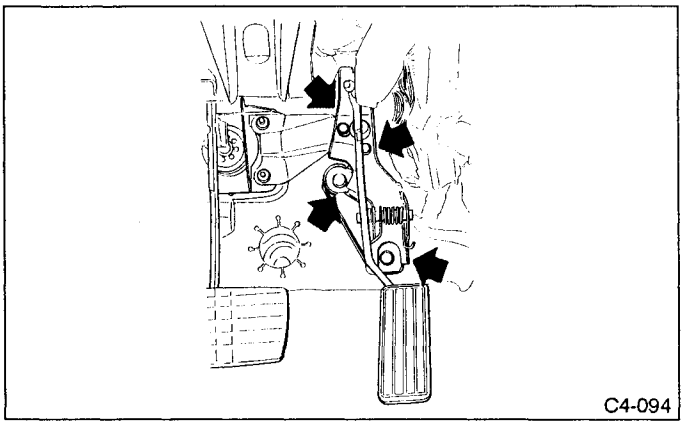

Fig. 5

6) Disconnect grommet from toe board, and remove accelerator pedal and bracket together with accelerator cable.
7) Remove bushing and cable stopper from front end of accelerator pedal.
While using a standard screw driver or a suitable tool to rear of bushing, lever off bushing and cable stopper.

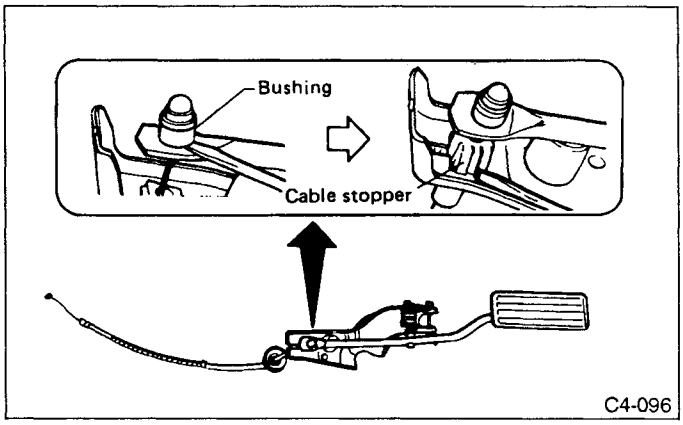

Fig. 6

2. BRAKE PEDAL ASSY
(After removal of accelerator pedal ASSY.)

1) Remove steering shaft ASSY. ⟨Ref. to [4-3] No.W1A0⟩
2) Remove front seat ASSY.
3) Disconnect TCU and ECU connectors, and remove TCU and ECU.
4) Disconnect stop lamp connector.
5) Remove snap pin which connects brake pedal and operating rod.
Operating rod length is preset at the factory. Do not attempt to loosen the lock nut.

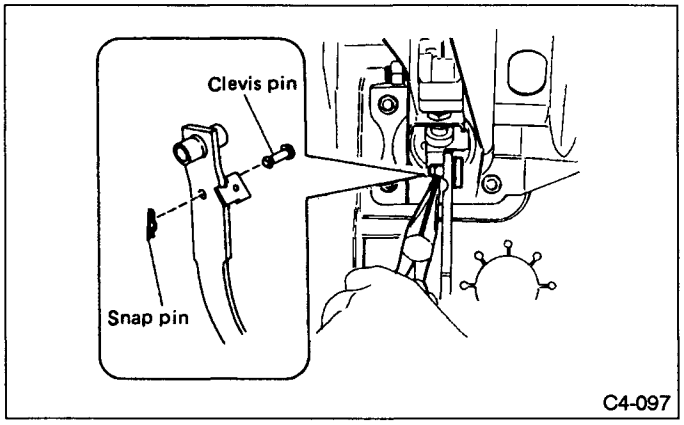

Fig. 7

6) Remove bolts which secure pedal bracket.

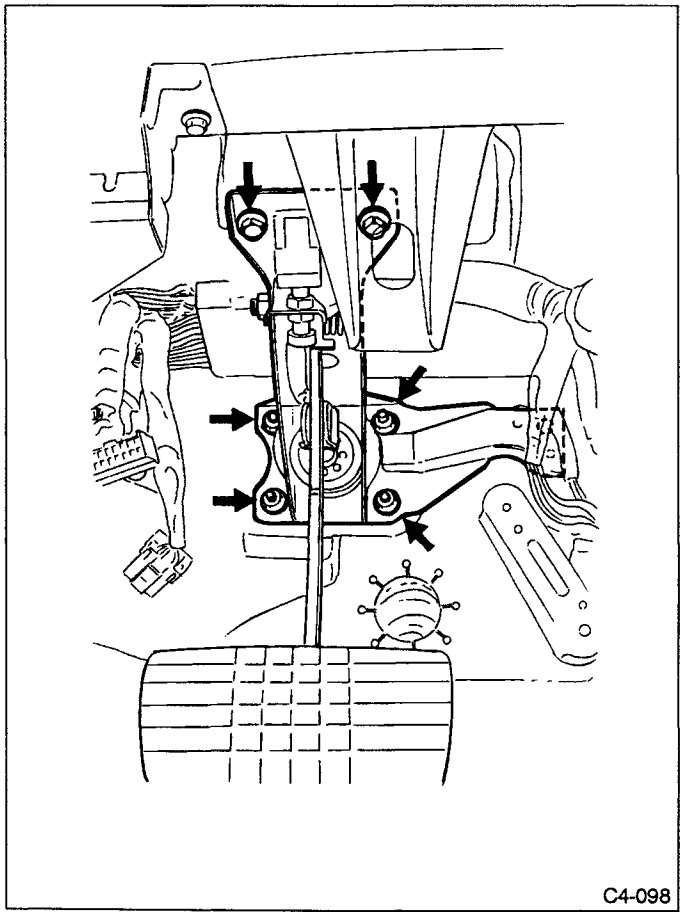

Fig. 8

7) Remove brake pedal ASSY together with bracket.

C: INSPECTION

1. ACCELERATOR AND BRAKE PEDAL ASSY

1) Disassemble accelerator and brake pedals. Remove any grease from the shaft, spacer, and bushing and check these parts for wear or damage.
2) Lightly move pedal pad in the lateral direction to ensure pedal deflection is in specified range.

Deflection of brake and accelerator pedal:
Service limit
5.0 mm (0.197 in) or less

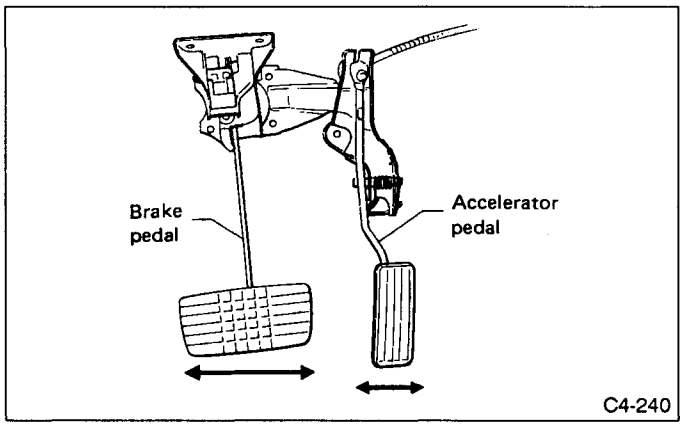

Fig. 9

If excessive deflection is noted, replace bushing and clip with new ones.

2. STOP LAMP SWITCH

If stop lamp switch does not operate properly (or if it does not stop at the specified position), replace with a new one.

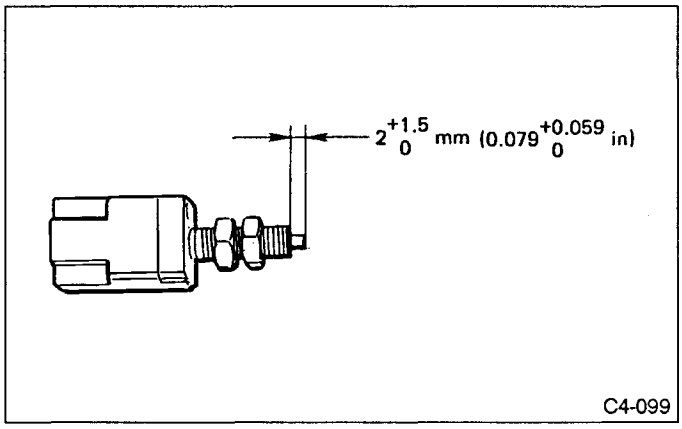

Fig. 10

D: INSTALLATION

1. ACCELERATOR AND BRAKE PEDAL ASSY TOGETHER WITH ACCELERATOR CABLE

Installation is in the reverse order of removal.

1) After installing accelerator cable bracket on toe board, check that grommet is properly connected at the position.

2) Check brake pedal free play and stroke.

Free play:
1 — 3 mm (0.04 — 0.12 in)
Stroke:
140 mm (5.51 in)

3) After installing accelerator cable, check the deflection between throttle lever and outer end cable.

Deflection:
1 — 8 mm (0.04 — 0.31 in)

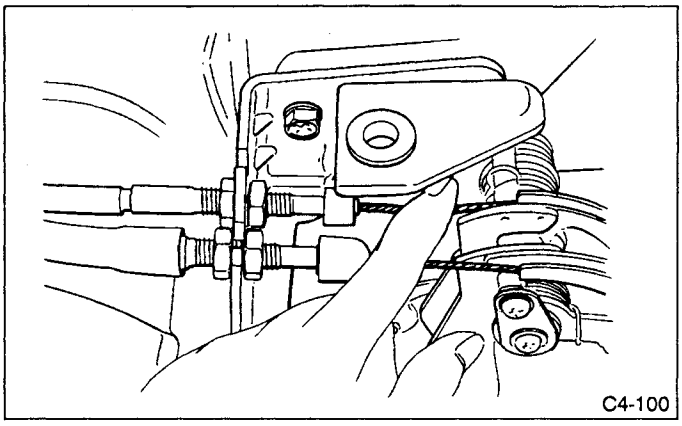

Fig. 11

T TROUBLESHOOTING

Trouble	Corrective action
Excessively worn brake pedal pad	Replace.
Failure of accelerator pedal to operate	Connect cables correctly.
Stop lamp switch does not light up.	Adjust position of stop lamp switch.
Stop lamp switch is not smooth and/or stroke is not correct.	Replace.
Insufficient pedal play	Adjust pedal play.
Brake pedal freeplay insufficient	Adjust pedal freeplay.
Maladjustment of brake pedal or booster push rod	Inspect and adjust.
Excessively worn and damaged pedal shaft and/or bushing	Replace bushing and/or shaft with new one.

SUBARU

SVX

1992

Page

M MECHANISM AND FUNCTION 2
1. Outline 2
2. Switch Functions 2
3. Air Flow 7
4. Air Conditioning System 10
5. Automatic Climate Control System 25
S SPECIFICATIONS 43
C COMPONENT PARTS 44
1. Air Conditioning System 44
W SERVICE PROCEDURE 45
1. Safety Precautions 45
2. Basic Information 45
3. Tools and Equipment 46
4. O-ring Connections 49
5. Refrigerant Service Procedure 51
6. Discharge the System 52
7. Evacuating and Charging 52
8. Leak Testing 55
9. Compressor Oil 57
10. Cooling Unit 58
11. Heater Unit 60
12. Blower Motor Assembly 60
13. Control Unit 61
14. Compressor 62
15. Condenser 66
16. Receiver Drier 68
17. Trinary Switch 69
18. Pipe & Hose 71
19. Relay and Fuse 72
T TROUBLESHOOTING 73
1. Precautions 73
2. Pre-inspection 73
3. Troubleshooting Chart for Self-diagnosis System 74
4. Self-diagnosis System 75
5. Output Modes of Select Monitor 79
6. Schematic 81
7. Control Unit I/O Signal 82
8. Troubleshooting for A/C System Failure 84
9. Basic Check 103
10. Trouble Diagnosis for Abnormal Pressure 105
11. Troubleshooting Chart with Trouble Cord 108
12. Troubleshooting Chart with Select Monitor 130
13. Troubleshooting Guide by Fault 139

M MECHANISM AND FUNCTION

1. Outline

1. The outlet air temperature, outlet air flow, intake port mode and outlet port mode are automatically selectable so as to provide comfortable air conditioning at all times of the year.
2. In addition to the AUTO switch, a manual switch is provided for selecting the outlet air flow (3 steps), outlet mode (VENT and DEF), intake port (RECIRC for 10 minutes) and economy mode (Compressor OFF).
3. The compressor is a wobble, variable delivery type. It is electronically controlled by way of communication between the MPFI unit and the A/C auto amplifier to increase driving ability as well as power-saving, cool-down and dehumidifying performance.
4. The push-button type control panel features improved ergonomic design.
5. The side defroster outlet port is located in the door trim area. This arrangement reduces dust from entering the door window, and improves side mirror visibility.
6. A large, specialized air outlet is provided on the rear side of the rear bumper to improve ventilation efficiency.
7. The auto amplifier has a self-diagnosis function, which allows easy trouble-diagnosis. An air outlet temperature correcting function is added which corrects for external temperature, depending on the temperature requirements of the passengers.
8. An electric cooling fan is used with three settings (LOW, MEDIUM, HIGH), which reduces noise and energy.
9. To improve the accelerating performance of the vehicle, the compressor stops when the accelerator is moved to the full throttle position.
10. The sunload sensor features high sensitivity to sunlight from both vertical and horizontal directions.
11. All A/C system components are designed to increase efficiency, and delivery- and refrigerant-saving performance, as well as to reduce weight.

2. Switch Functions

A: PUSH SWITCH

1. OFF SWITCH

When the OFF switch is pressed, the set temperature display and switch LED will be turned off, and the following operation pattern established.

Intake door control	Mode door control	Air mix door control	Fan speed control	Compressor
FRESH	HEAT	AUTO	OFF	OFF

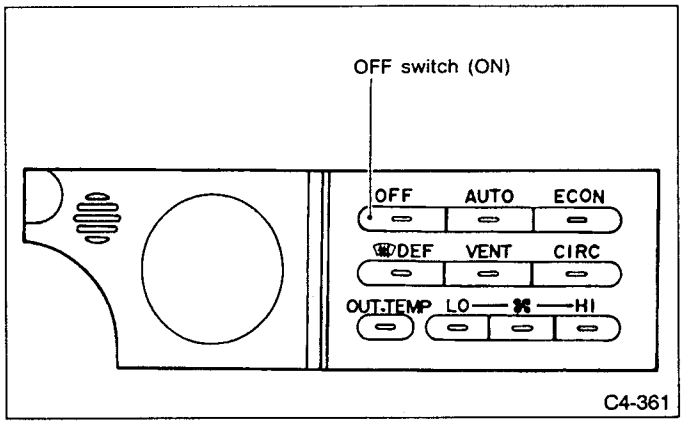

Fig. 1

2. AUTO SWITCH

When the AUTO switch is pressed, the set temperature display and AUTO switch LED (umber) will illuminate. **At the same time, the air conditioner automatic control mode will start.**

Intake door control	Mode door control	Air mix door control	Fan speed control	Compressor
AUTO	AUTO	AUTO	AUTO	AUTO

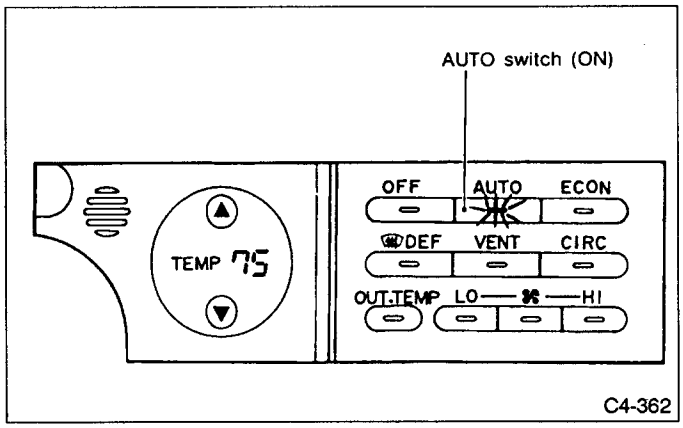

Fig. 2

3. ECON SWITCH

When the ECON switch is pressed, the set temperature display and ECON switch LED (umber) will illuminate, and the following operation pattern established.

At the same time, the heater automatic control mode (Compressor OFF) will start.

Intake door control	Mode door control	Air mix door control	Fan speed control	Compressor
FRESH	AUTO	AUTO	AUTO	OFF

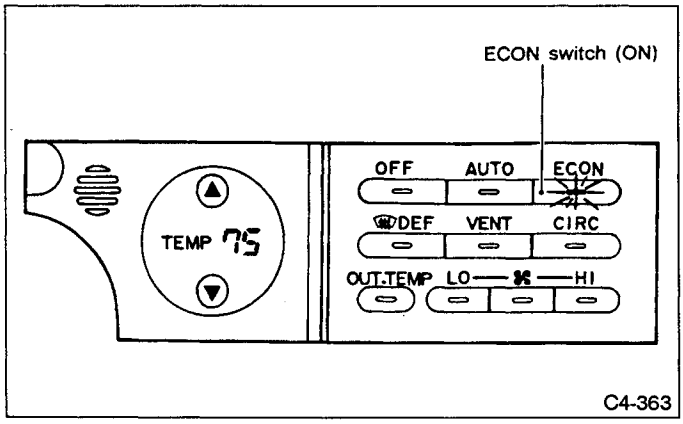

Fig. 3

4. DEF SWITCH

When the DEF switch is pressed, the set temperature display and DEF switch LED (umber) will illuminate, and the following operation pattern established.

Intake door control	Mode door control	Air mix door control	Fan speed control	Compressor
FRESH	DEF	AUTO	Approx. 8V or more	ON

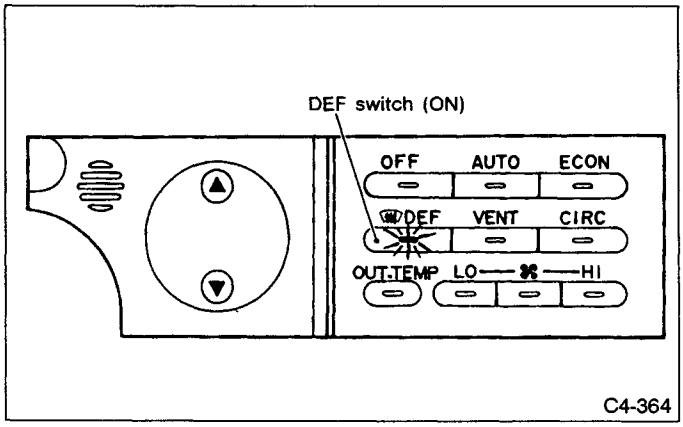

Fig. 4

5. VENT SWITCH

When the VENT switch is pressed, the set temperature display will be turned off and the VENT switch LED (umber) turned on, and the following operation pattern established.

If VENT switch is pressed when the AUTO switch or ECON switch is ON, the set temperature display will be turned OFF. If the VENT switch is pressed when the AUTO or ECON switch is OFF, the display will remain OFF. The VENT switch also allows the VENT outlets to discharge fresh outside air into the passenger compartment.

Intake door control	Mode door control	Air mix door control	Fan speed control	Compressor
FRESH	VENT	FULL COLD	Med Approx. 7V	OFF

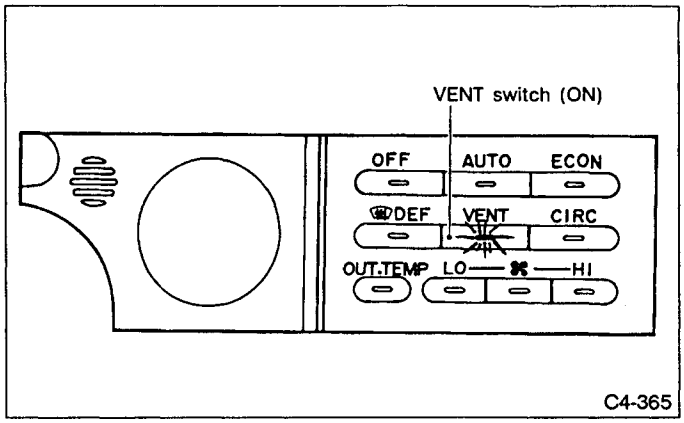

Fig. 5

6. CIRC SWITCH

When the CIRC switch is pressed, the suction port is fixed in the internal air recirculation position for 10 minutes. All other positions remain with the CIRC switch LED (umber) illuminated.

The automatic control mode and internal air recirculation mode alternate when the CIRC switch is pressed.

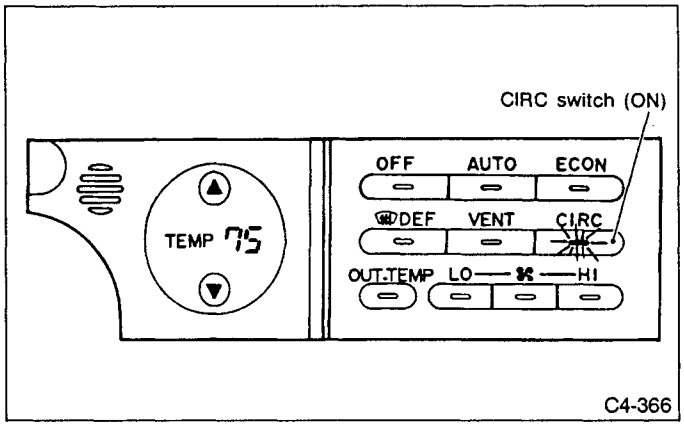

Fig. 6

7. OUT. TEMP SWITCH

When the OUT.TEMP switch is pressed, the external temperature will be displayed by blinking for five seconds.

During this period, the TEMP control switch (▲, ▼) remain OFF.

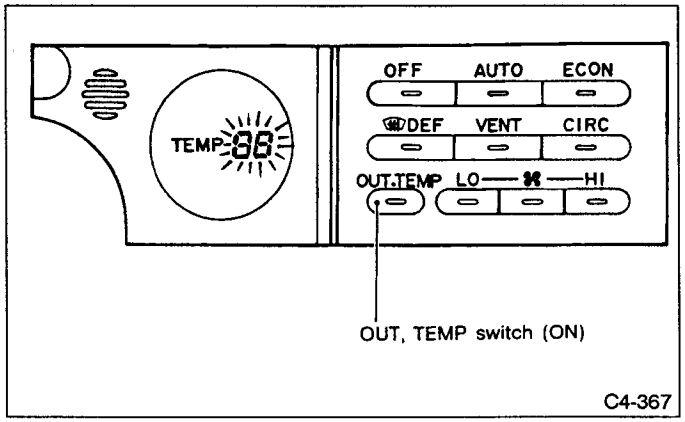

Fig. 7

8. LO (LOW) SWITCH

When the LO switch is pressed when any of the AUTO, ECON, DEF and VENT switches are ON, the LO switch LED (umber) will illuminate, and the fan speed fixed in the LOW (approx. 4 V) position. All other previous conditions are maintained.

When the LO switch is pressed, the AUTO switch and LO switch LEDS (umber) will illuminate, and operation will start with the AUTO mode.

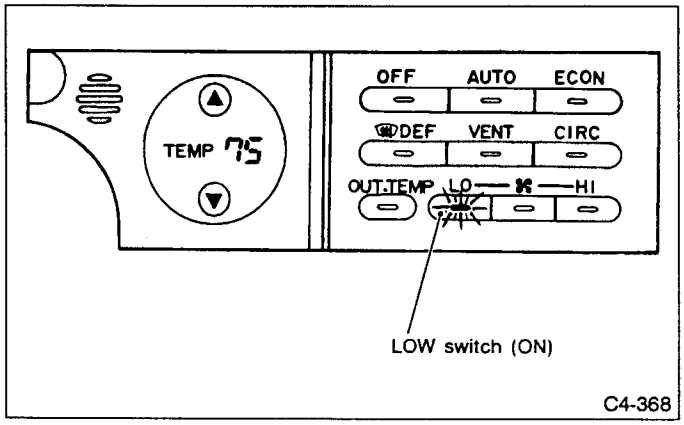

Fig. 8

9. MED (MEDIUM) SWITCH

The operation is the same as the LO switch, except the fan will operate at Medium (approx. 7.5V) speed.

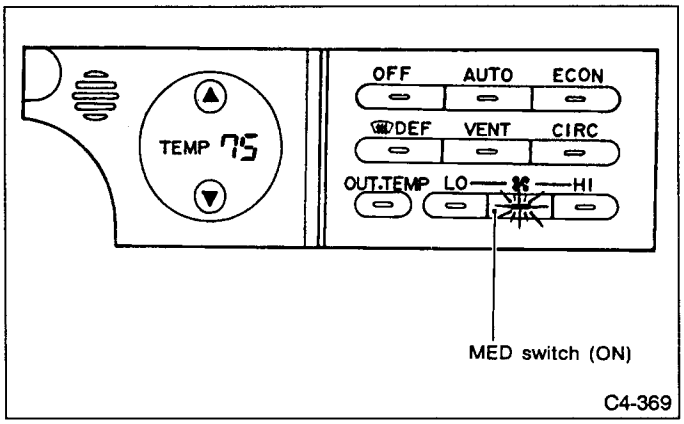

Fig. 9

10. HI (HIGH) SWITCH

The operation is the same as the LO switch, except the fan will operate at High (approx. 12V) speed.

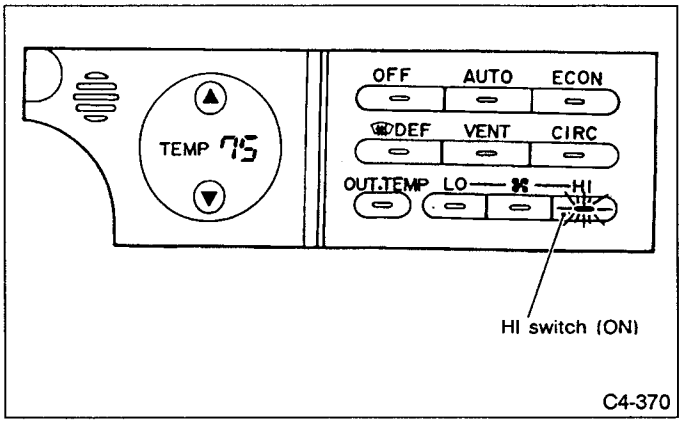

Fig. 10

11. TEMP CONTROL SWITCH

This switch is used to control the set temperature in the display within the range from 18°C to 32°C (65°F to 85°F).
Each press of the "△" switch will increase the temperature 1°C (1°F).
Each press of the "▽" switch will decrease the temperature 1°C (1°F).
When the set temperature is 18°C (65°F), the air mix door is fixed at the max cold position.
When the set temperature is 32°C (85°F), the air mix door is fixed at the max hot position.

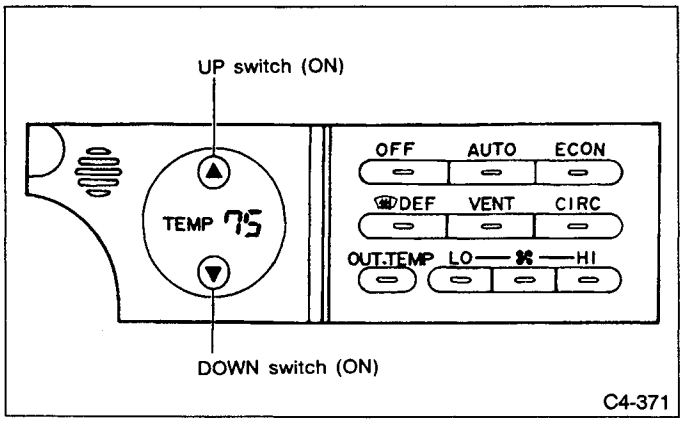

Fig. 11

B: OPERATION CHART

Operation	Display ON status	Switch (LED) ON status									Intake door control	Air flow control	Air mix door control	Mode door control	Compressor control	Starting air flow control	Remarks
Switch	Temp	AUTO	ECON	LO	MED	HI	DEF	VENT	Temp CONT.	CIRC							
AUTO	○	○							○		Automatic control	Automatic control	Automatic control	Automatic control	Automatic control	Yes	
ECON	○		○						○		Set at ambient air	Automatic control	Automatic control	Automatic control	OFF	Yes	
LO	○			○					○			Set at LO	Automatic control			No	If operation is started from the OFF state, the same status as starting with pressing the AUTO switch will be established.
MED	○				○				○			Set at MED	Automatic control			No	
HI	○					○			○			Set at HIGH	Automatic control			No	
DEF	○						○		○		Set at ambient air	Automatic control at DEF	Automatic control	Set at DEF	ON	No	Air flow is automatically controlled when voltage is higher than approx. 8V.
VENT								○			Set at ambient air	Set at MED	Set at max cold	Set at VENT	OFF	No	
Temp cont. °C (°F) 18 (65)													Set at max cold				
Temp cont. °C (°F) 32 (85)													Set at max hot				
CIRC										○	Set at in-vehicle air						In-vehicle fixed mode is canceled after 10 minutes.
OFF											Set at ambient air	Stop	Automatic control	Set at HEAT	OFF	No	
OUT.TEMP	○																Ambient temperature is displayed for 5 sec.

Note: The mark "○" indicates the lit (ON) status. The ON status is determined by switch position.

3. Air Flow

A: AIR FLOW

1. VENT

VENT position can be selected by the following switches:
AUTO switch
ECON switch
VENT switch
If AUTO switch is ON and ambient temperature is high and the set temperature is MAX COLD 18°C (65°F), then the intake door will be set in the RECIRC position.

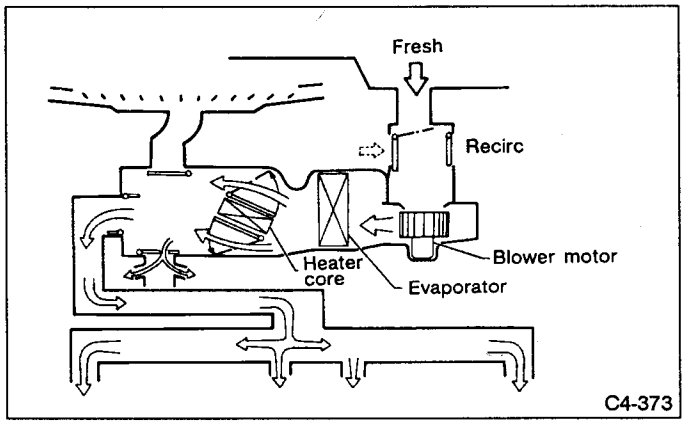

Fig. 12

2. BI-LEVEL

BI-LEVEL position can be selected by the following switches:
AUTO switch
ECON switch

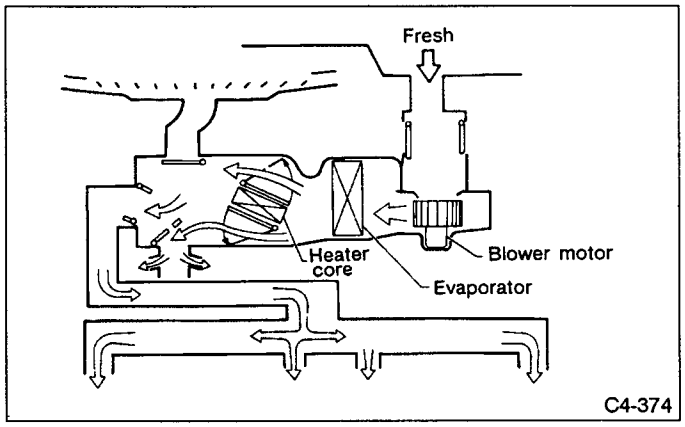

Fig. 13

3. HEAT

HEAT position can be selected by the following switches:
AUTO switch
ECON switch

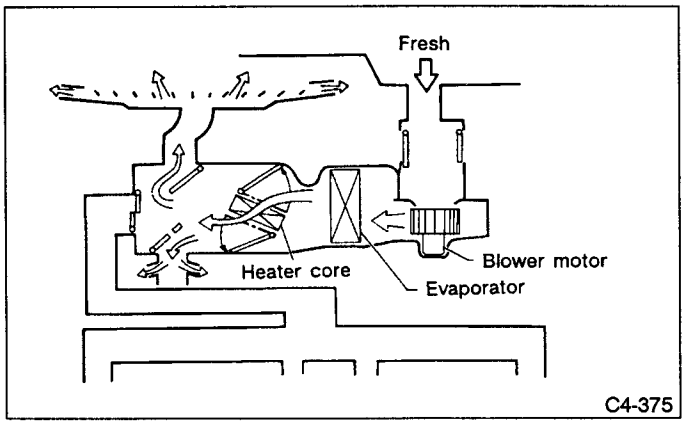

Fig. 14

4. DEF

DEF position can be selected by the following switch:
DEF switch

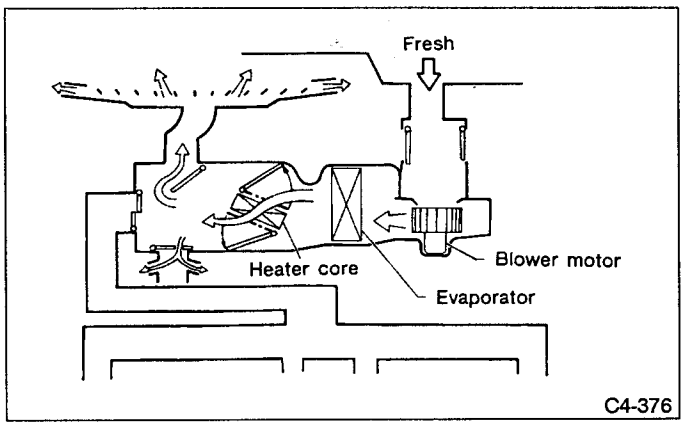

Fig. 15

B: AIR FLOW AND OPERATION OF EACH DOOR

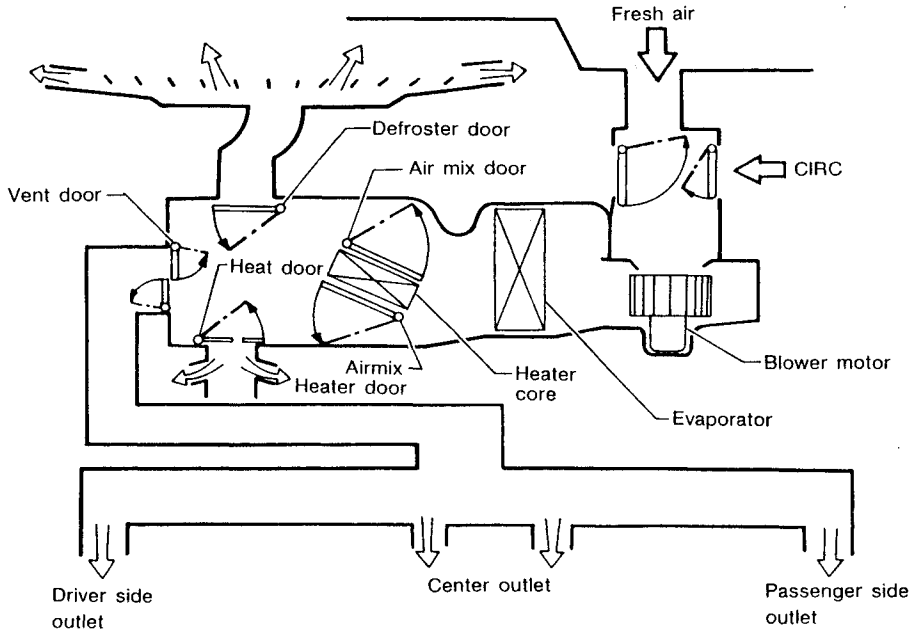

Fig. 16

C: AIR DISTRIBUTION RATIO

The diagram shows the distribution ratio of air in each outlet mode. The BILEVEL and HEAT positions permit AUTO mode operation only, and cannot be operated manually. The DEF/HEAT mode is set only in the heater start control mode.

A cut-off is provided in the heat door so that small amounts of air can flow out heat outlet even in the VENT and DEF modes.

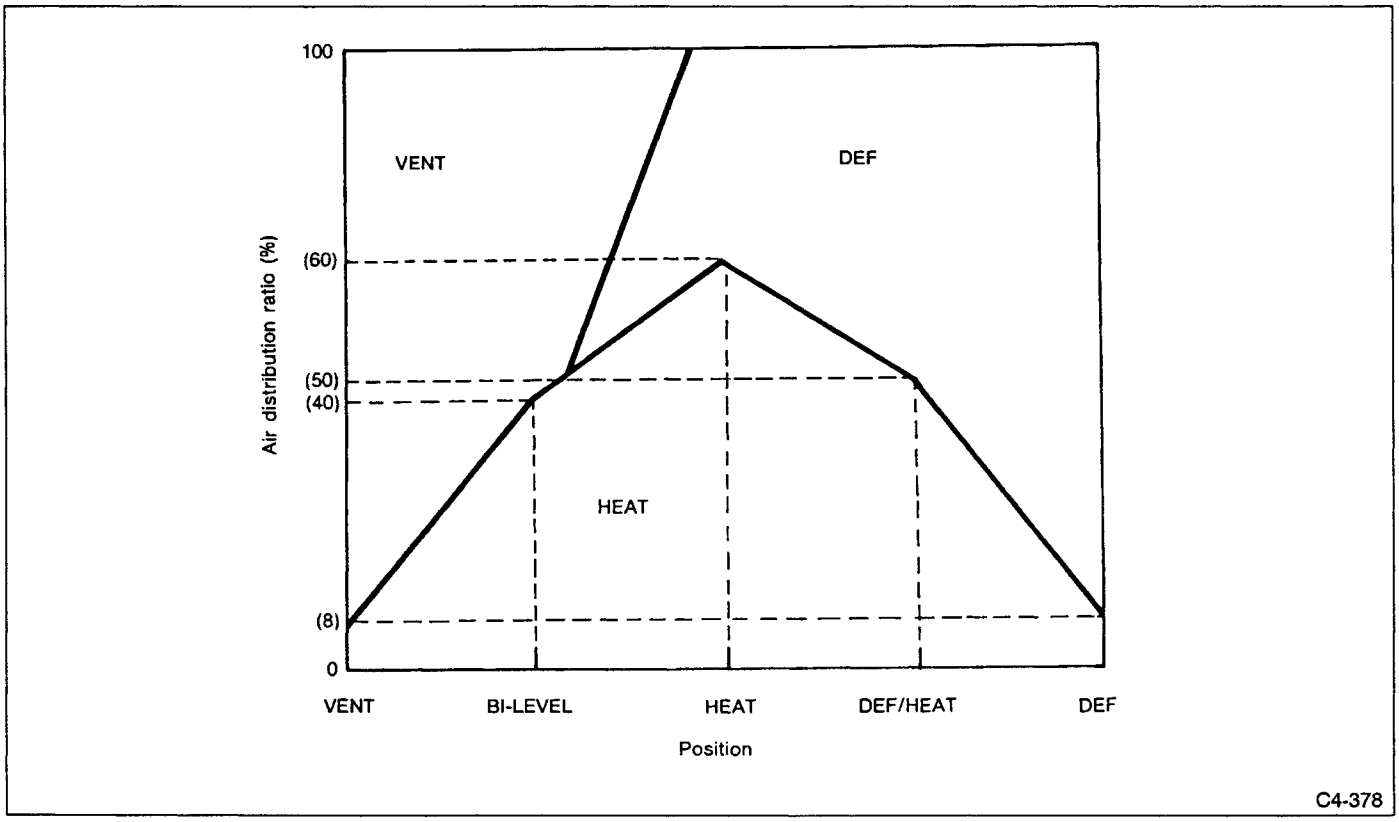

Fig. 17

M MECHANISM AND FUNCTION

4. Air Conditioning System

1. COMPRESSOR

1) General

A wobble plate type electronically controlled variable delivery compressor is used. The solenoid actuator built in the compressor is controlled by the auto control unit. This ensures optimum compressor delivery with less power and less fuel, as well as smooth driving feel since compressor ON-OFF is eliminated.

In addition, the quick cool-down capability and defrosting capability during low temperatures are improved as well.

2) Mechanism

Five cylinders and pistons are axially arranged around the drive shaft with equal separation of 72°. These pistons perform the suction, compression and discharge strokes.

The piston operating in the cylinder is driven by a wobble plate, hence this construction is called the wobble plate type. The compressor delivery is changed by changing the piston stroke, and the piston stroke is changed by changing the inclination angle of the wobble plate.

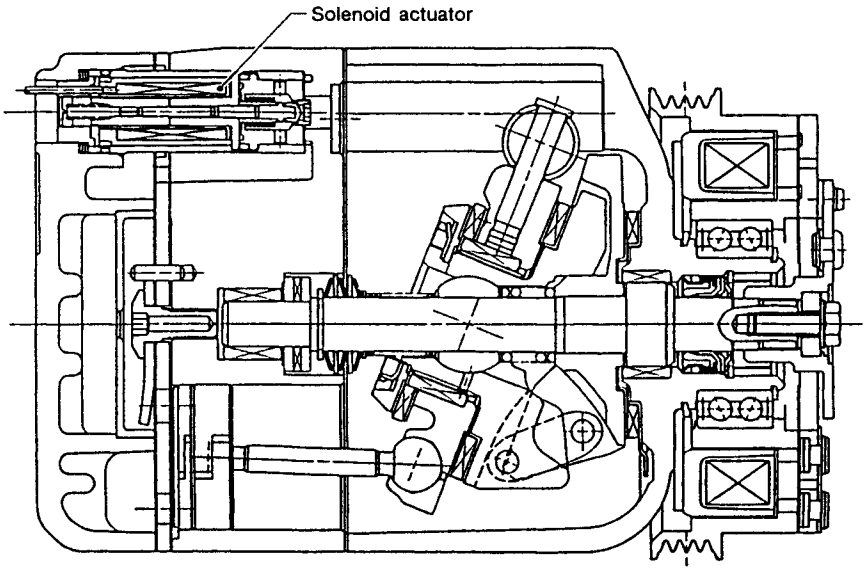

Operation of wobble plate type compressor

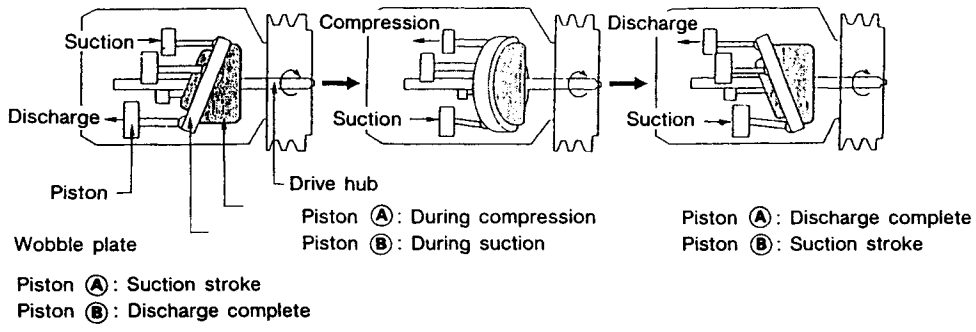

C4-1012

Fig. 1

(1) Variable delivery mechanism

The piston delivery is changed when the hinge ball slides on the drive shaft. As the hinge ball slides, the inclination angle "α" of the wobble plate changes. That is, as the wobble plate tilts down, the effective piston stroke increases, and this results in increased piston delivery. Contrary, as the wobble plate rises, the effective piston stroke decreases, and this results in reduced piston delivery.

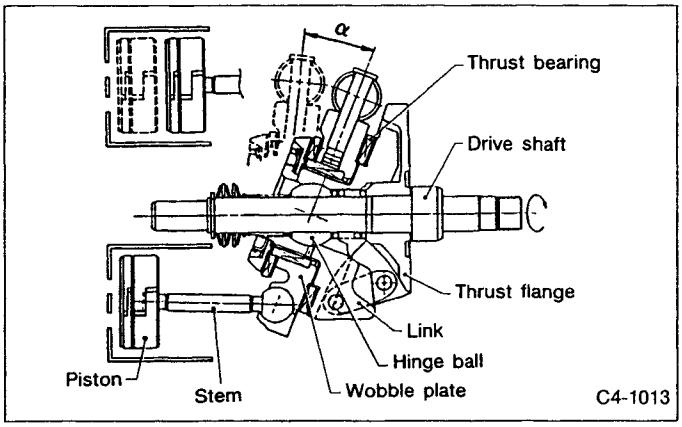

Fig. 2

(2) Operating principle

The wobble plate inclination angle is determined by the equilibrium of the force caused by the discharge and suction pressure acting on the piston top and the force caused by the wobble chamber pressure acting on the underside of the piston.

The wobble chamber pressure is determined by the opening of the solenoid valve in the cylinder (valve stroke).

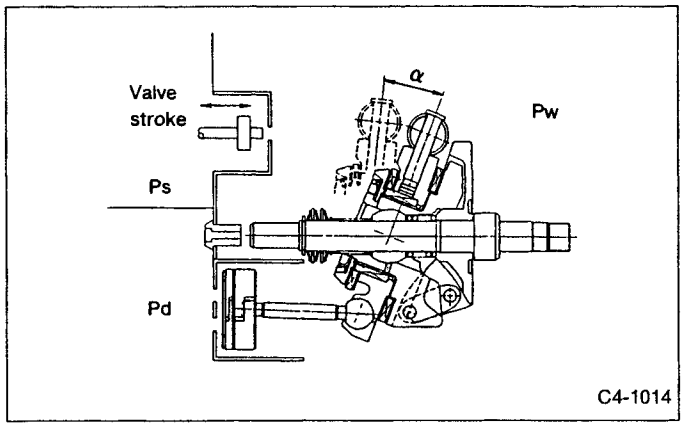

Fig. 3

Pd: Discharge pressure
Ps: Suction pressure
Pw: Wobble chamber pressure (Blow by from discharge pressure + pressure from orifice)

(3) Control of solenoid valve

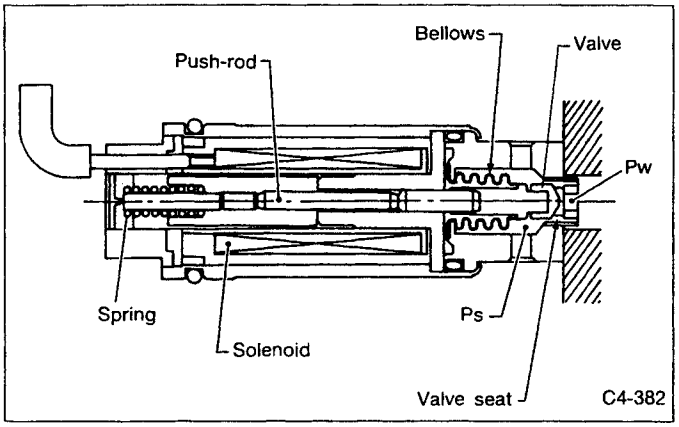

Fig. 4

The valve opening force is created by the suction pressure (Ps) while the valve closing force originates from the spring and solenoid activating current. The spring set force is constant. The pressure (Pw) in the wobble chamber is varied by changing the amount of solenoid valve input current.

As the solenoid valve input current is increased, the valve opening decreases. As a result, the pressure (Pw) in the wobble chamber increases, and the wobble plate tilt angle decreases, which in turn decreases the compressor delivery.

Contrary, if the solenoid valve input current is reduced, the valve opening increases, and the wobble chamber pressure (Pw) decreases. This results in a reduced wobble plate tilt angle and increased compressor delivery.

The solenoid valve input current is continuously controlled by the auto control unit.

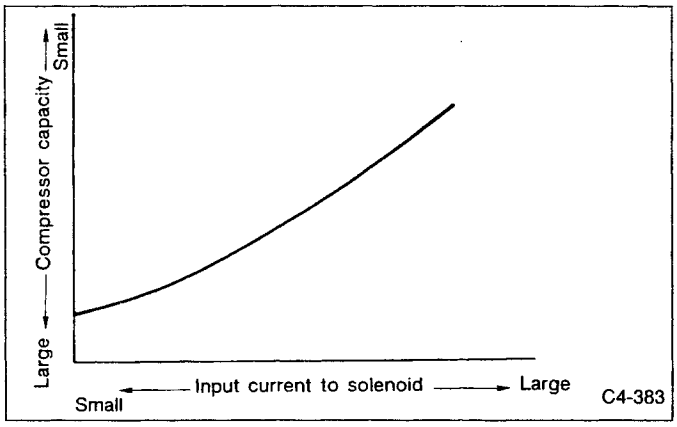

Fig. 5

(4) Relief valve

The relief valve is installed on the rear part of the compressor. This valve opens to release refrigerant if the high-pressure inside the compressor rises abnormally, thereby protecting the compressor against damage. If the high pressure lowers below the spring force, the seat rubber closes to stop release of refrigerant.

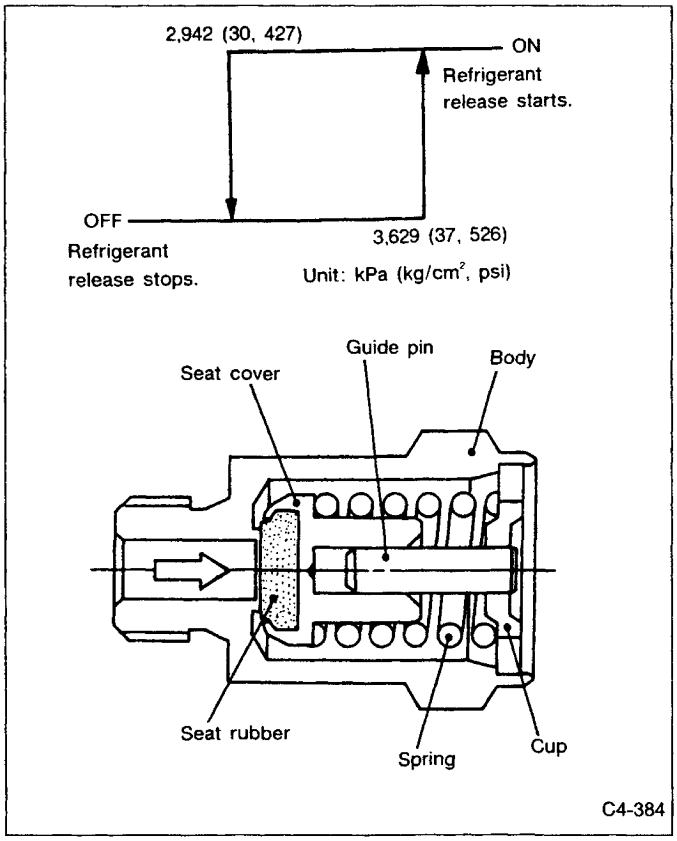

Fig. 6

(5) Magnet clutch

The magnet clutch serve to transmit engine power to the compressor unit. It is built into the compressor shaft. When current flow through the magnet clutch coil, the drive plate is attracted so that the pulley and compressor shaft rotate as a unit. When the compressor is not in use, the pulley alone rotates freely.

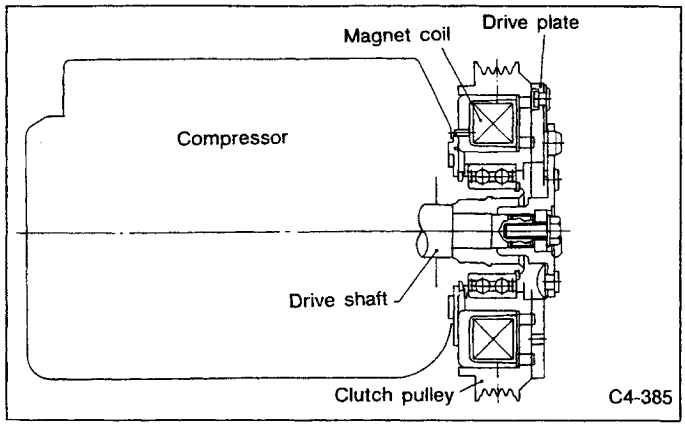

Fig. 7

2. CONDENSER

The high temperature and high pressure gaseous refrigerant discharged from the compressor is cooled down and turned into the liquid state in the condenser which is cooled by the ambient air delivered by the cooling fan.

The condenser is composed of tubes and radiating fins. The heat from hot refrigerant radiates to the ambient air when high temperature gaseous refrigerant passes through the condenser tubes.

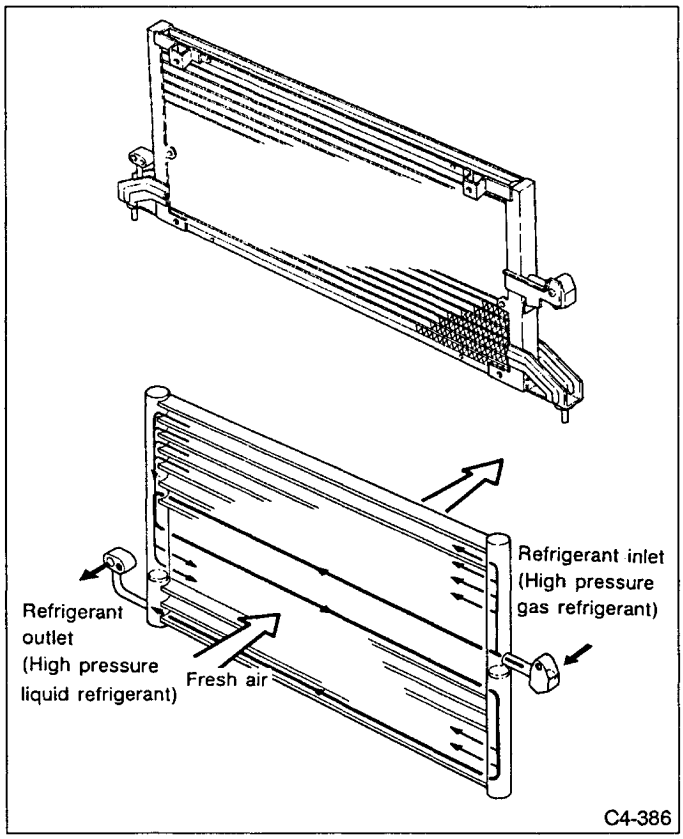

Fig. 25

3. RECEIVER DRIER

The amount of refrigerant circulating varies with the heat load changes. The receiver driver supplies the amount of refrigerant necessary for the cycle according to such changes.

1) It removes bubbles from the condensed refrigerant so that only liquid refrigerant may be delivered to the expansion valve. (If bubbles are present, the refrigerant passing through the expansion valve varies in quantity, temperature, and pressure, resulting in insufficient cooling.)
2) It removes moisture from the refrigerant.
3) It removes foreign substance from the refrigerant.
4) It permits a visual observation of the amount of refrigerant through the sight glass. *

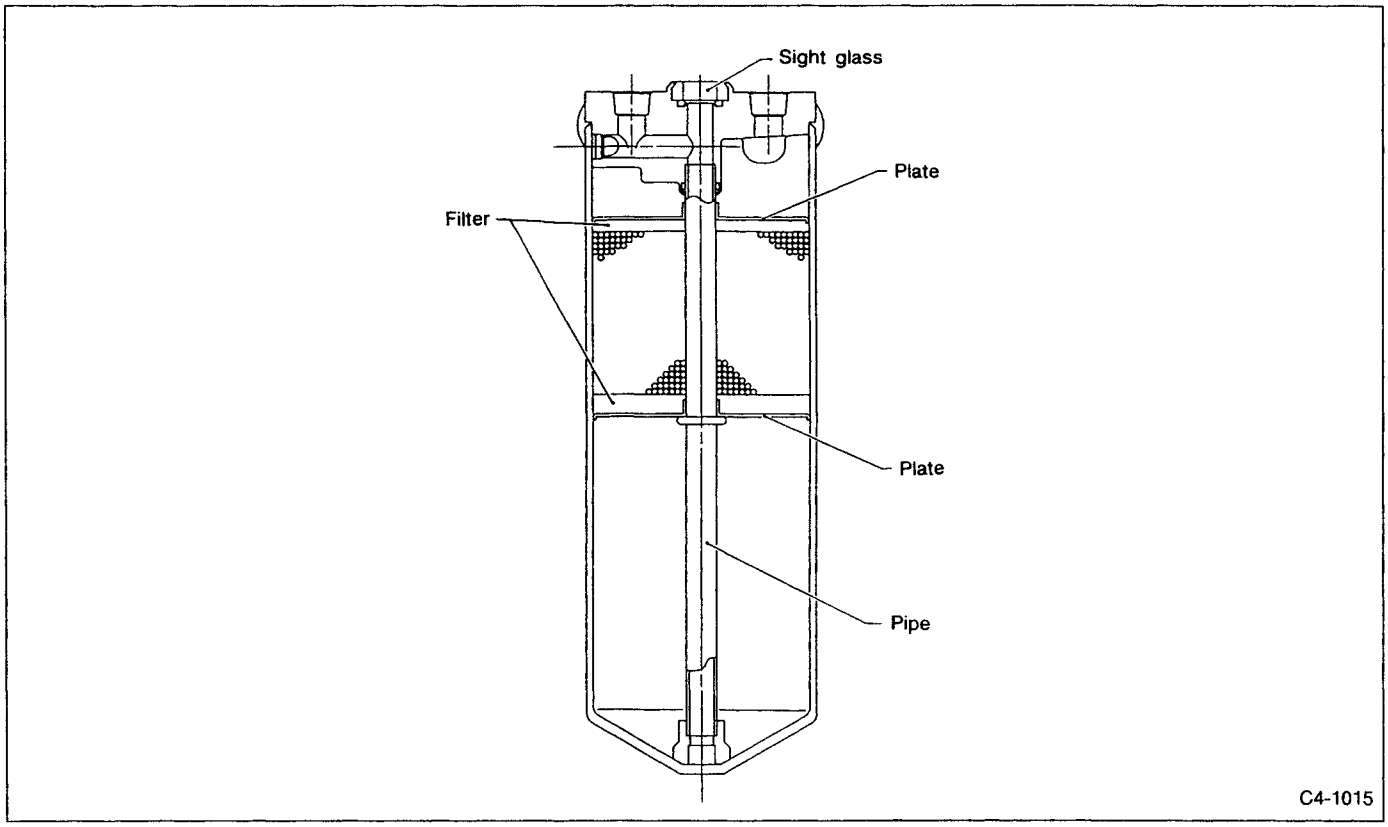

Fig. 8

The receiver drier consists of a strainer to remove foreign substance, desiccant to absorb moisture from refrigerant, a sight glass to check the amount of refrigerant.

*** Use of sight glass for determining refrigerant charge level on R-134a Systems is not recommended.**

4. TRINARY SWITCH

The trinary switch is located in the high-pressure line of the refrigeration cycle. It consists of a diaphragm which receives pressure, diaphragm springs, pin and contact points. Two types of contact points are used. One type activates when the internal pressure is low or when it is too high while the other type controls the operation of the condenser fan.

1) Prevention of operation when there is no gases in the line due to absence of refrigerant — (during low-pressure operation).
2) Protection of refrigeration cycle from abnormal refrigerant pressure rise — (during high-pressure operation).
3) 3-speed control to provide a quiet condenser fan operation — (during intermediate-pressure operation).

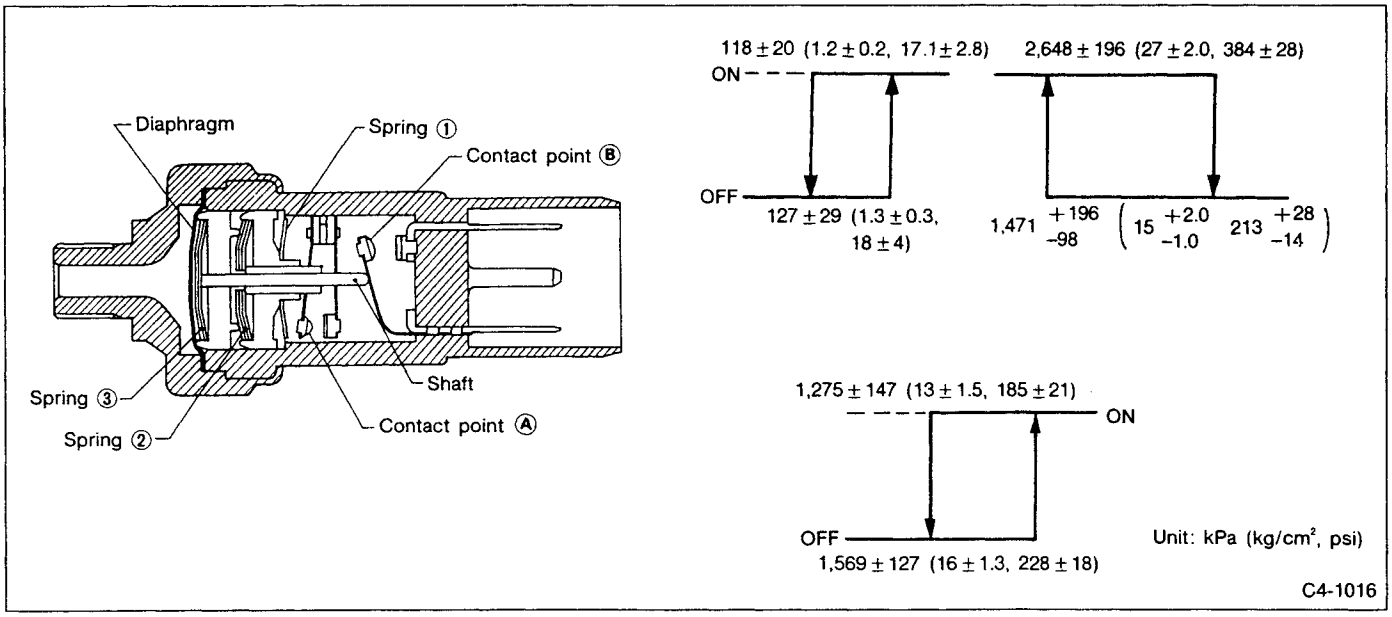

Fig. 9

4) High-low pressure switch

(1) When pressure is abnormally low
[P < Approx. 118 kPa (1.2 kg/cm², 17 psi)]
The tension of springs ①, ② and ③ is greater than the refrigerant pressure, and the contact Ⓐ opens to turn the switch OFF.

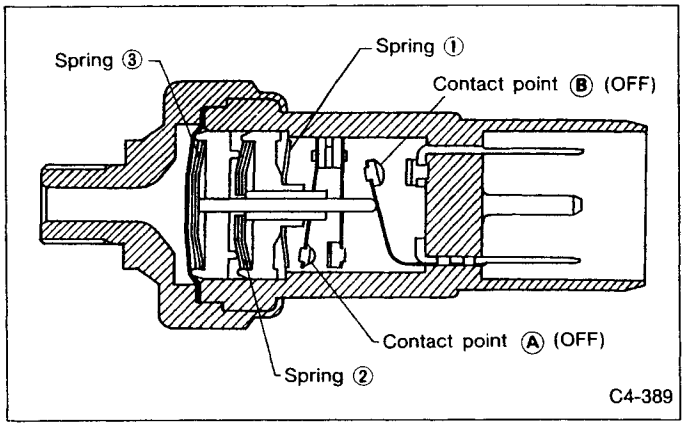

Fig. 10

(2) When pressure is normal.
[Approx. 127 kPa (1.3 kg/cm², 18 psi) < P < Approx. 2,648 kPa (27 kg/cm², 384 psi)]
When the refrigerant pressure rises above 127 kPa (1.3 kg/cm², 18 psi), the spring ① reverses, and the contact closes to turn the switch ON.

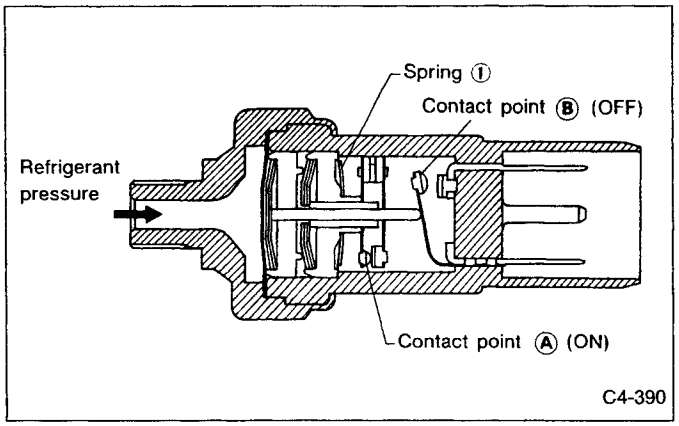

Fig. 11

(3) When pressure is abnormally high.
[P < Approx. 2,648 kPa (27 kg/cm^2, 384 psi)]
If the refrigerant pressure exceeds approx. 2,648 kPa (27 kg/cm^2, 384 psi), the spring ② reverses, and the contact Ⓐ opens to turn the switch OFF.
If the refrigerant pressure lowers to approx. 1,471 kPa (15 kg/cm^2, 213 psi), the spring ② recovers, and the contact closes to turn the switch ON.

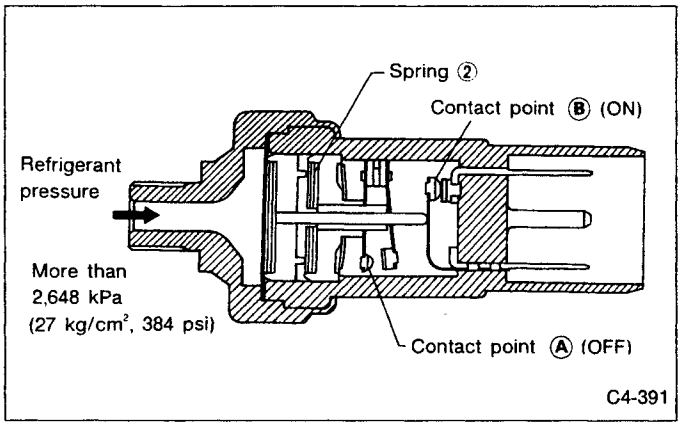

Fig. 12

5) Intermediate-pressure switch
[P < Approx. 1,275 kPa (13 kg/cm^2, 185 psi)]
When the refrigerant pressure is below 1,275 kPa (13 kg/cm^2, 185 psi), the tension of spring ③ exceeds the refrigerant pressure, and pushes the shaft down to open the contact, turning the switch OFF.

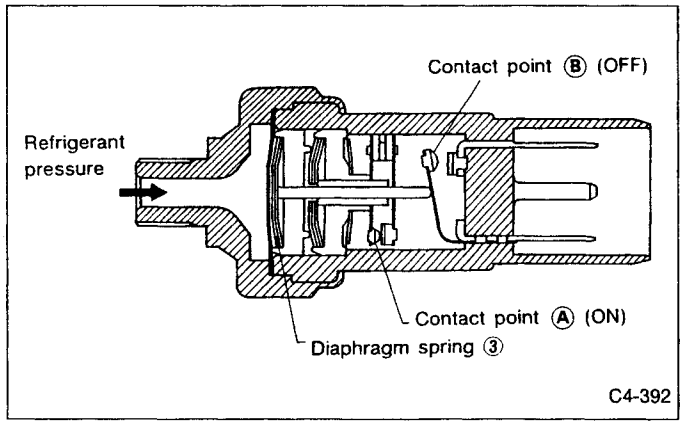

Fig. 13

[P > Approx. 1,569 kPa (16 kg/cm^2, 228 psi)]
When the refrigerant pressure is higher than approx. 1,569 kPa (16 kg/cm^2, 228 psi), it surpasses the tension of spring ③, and pushes the shaft up. As a result, the contact is closed and the switch is turned ON.

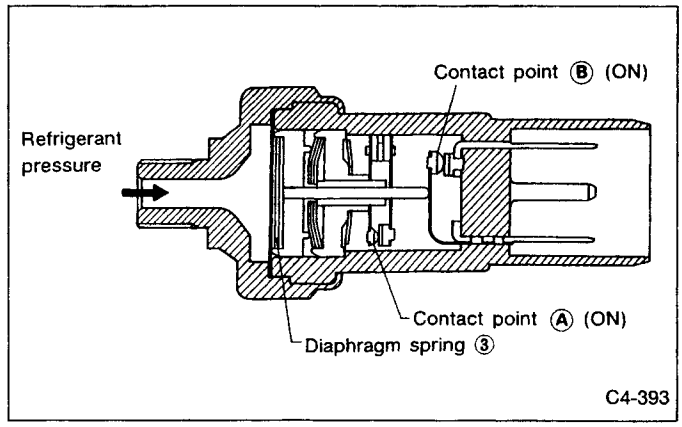

Fig. 14

5. EVAPORATOR ASSEMBLY

The evaporator assembly is mainly composed of an evaporator, expansion valve, and casing.

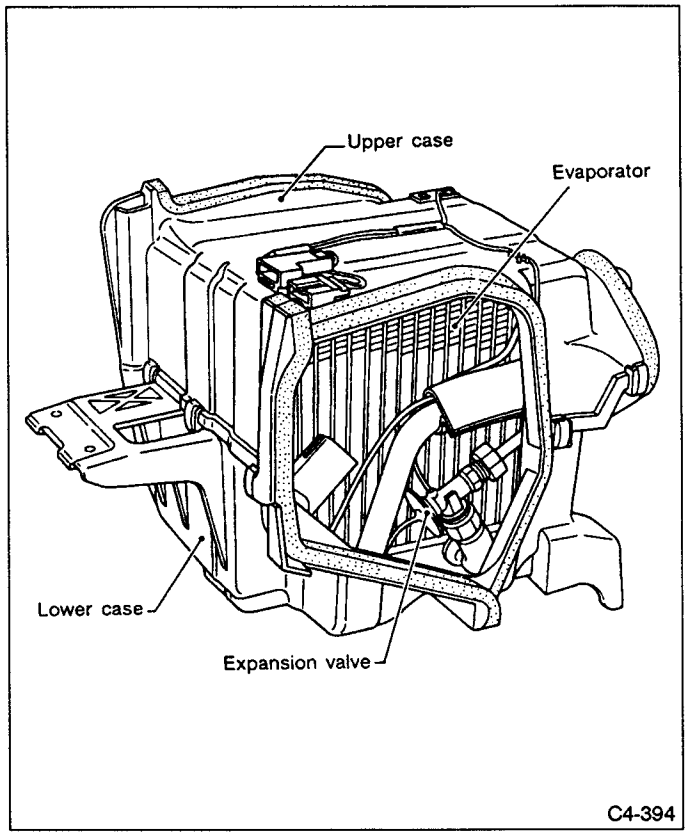

Fig. 33

1) Evaporator

The low pressure and low temperature refrigerant changed into mist in the expansion valve is evaporated in the evaporator, and this evaporation causes the evaporator temperature to drop. The air is delivered by the blower fan, and cooled down as it flows through the evaporator fins. The cool air then blows out of the grille after passing through the heater unit.

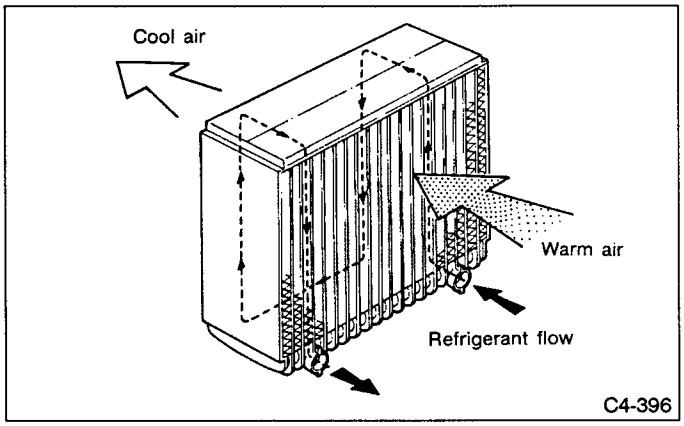

Fig. 34

6. EXPANSION VALVE

The expansion valve is attached to the evaporator inlet. It converts high pressure liquid refrigerant which comes from the liquid tank to misty, low pressure refrigerant, and delivers to the evaporator. Being at low pressure and low temperature, the liquid refrigerant evaporates in the evaporator removing heat from the compartment. It automatically controls the flow rate of refrigerant to obtain the necessary cooling ability required by the fluctuating heat load.

The expansion valve is composed of a sensing bulb with a capillary tube that senses the temperature at the evaporator outlet, an equalizer that transmits the pressure of the refrigerant in the evaporator to the diaphragm and other parts such as the spring, ball and diaphragm.

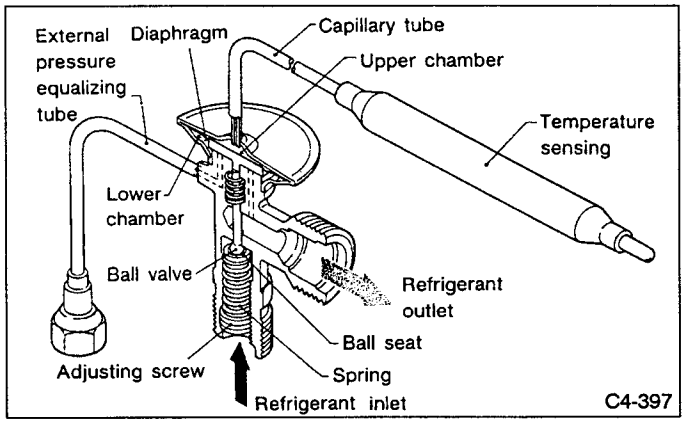

Fig. 35

The operation of the external equalizer type is as follows.

The expansion valve opening is automatically controlled by the functions of three force: the pressure of the temperature-sensing bulb (P_1) containing a liquid or vapor, the pressure at the evaporator outlet (P_2), and the force of the spring (F).

Temperature-sensing bulb pressure (P_1)

..... Forces the diaphragm downward (opens the valve).

Pressure at the evaporator outlet (P_2)

. Forces the diaphragm upward (closes the valve).

Force of the spring (F)

..... Forces the ball upward (closes the valve).

A: Condition of the valve with the compressor in off.

Since the temperature around the evaporator is constant, the pressure in the evaporator is equal to that of the temperature-sensing bulb. Therefore, the force of the spring is greater than these pressures and the pressures are in the following condition:

$P_1 = P_2$

$P_1 < P_2 + F$

That means, the valve is closed with the ball pushed upward.

B: Operation of the valve with the sensing bulb at low temperatures

(When the temperature is low at evaporator outlet)

As the temperature of the compartment decreases, the heat load applied to the evaporator becomes less, and the temperatures at the evaporator outlet, and the sensing bulb drop. Accordingly, the valve tends to close, reducing the amount of refrigerant.

$P_1 < P_2 + F$

The amount of refrigerant is reduced.

C: Operation of valve with the sensing bulb at high temperatures

(When the temperature is high at evaporator outlet)

As the temperature of the compartment rises, the heat load applied to the evaporator becomes greater, and the temperatures at the evaporator outlet, and the sensing bulb increase. Therefore, the valve tends to open, allowing more refrigerant to flow.

$P_1 > P_2 + F$

The amount of refrigerant is increased.

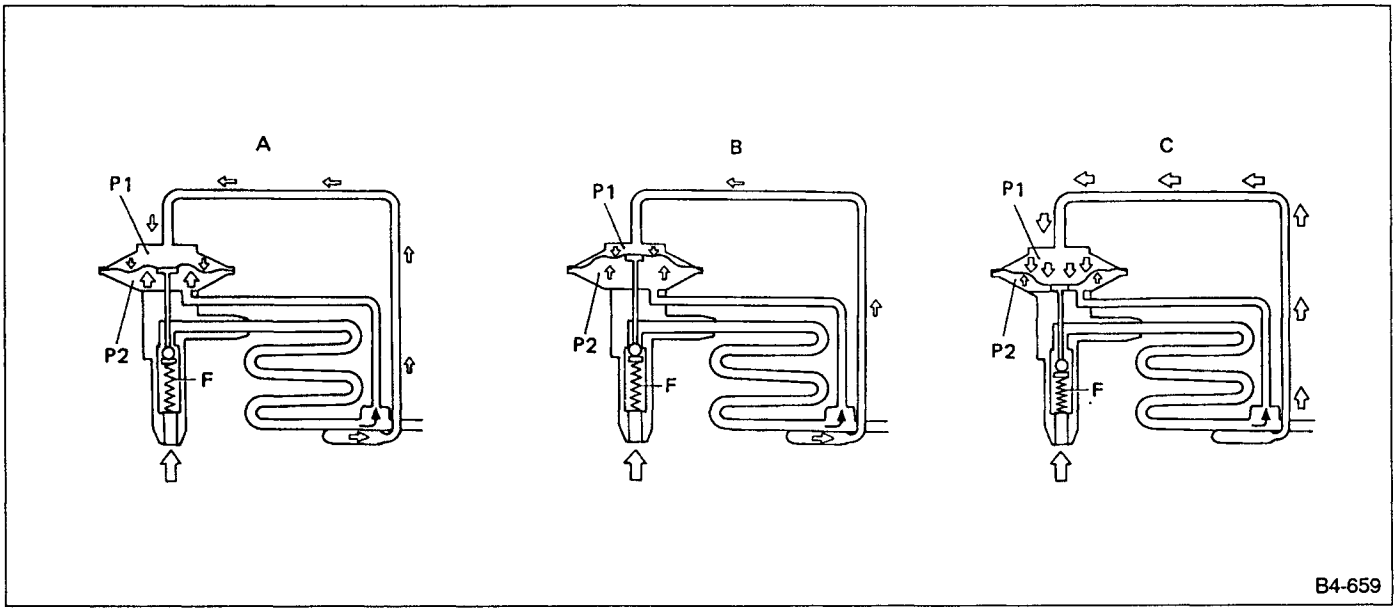

Fig. 36

7. AUTO A/C CONTROL UNIT

The auto A/C control unit is composed of a control panel and auto amplifier.

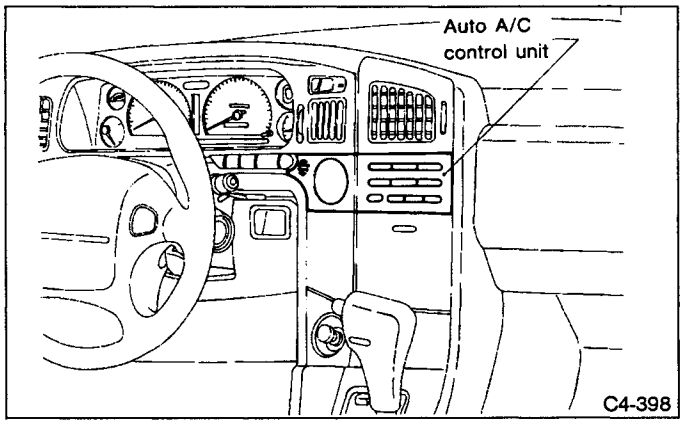

Fig. 37

1) Control panel

The control panel is composed of push-button type switches and a display. An electric signal is sent from an operated switch to the auto amplifier, which is indicated by the switch LED illuminating.

Switch	Operation	Illumination	
		OFF	ON
AUTO, ECON, DEF, VENT, LO, HI, CIRC	OFF	—	Green
	ON	Amber	Amber
OFF, OUT. TEMP	—	—	Green

2) Auto amplifier

The auto amplifier performs computation based on the signals sent from each switch, sensor and engine control unit. It compares the computed results and **P.B.R.** signal, and issues signals to the door motor, fan control amplifier, and compressor solenoid actuator. This method automatically controls the air outlet position, air suction position, air outlet temperature, outlet air quantity and compressor delivery.

In addition, the self-diagnosis function is provided for facilitating trouble diagnosis.

P.B.R. (Potentiometric balance resistor) is a variable resistor which converts air mix door and mode door opening to a voltage.

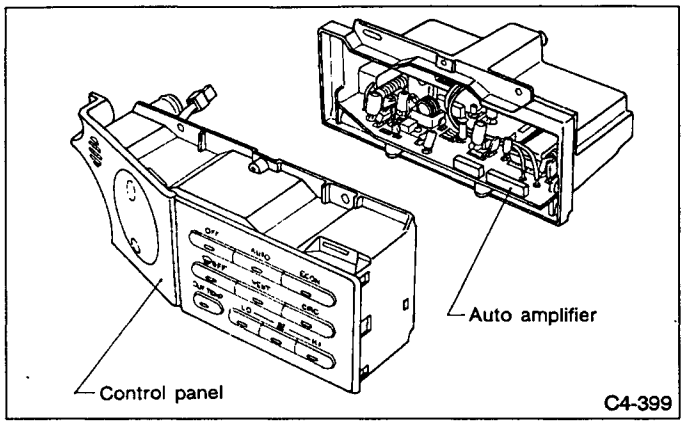

Fig. 38

8. IN-VEHICLE SENSOR

This sensor is installed on the left side of the control panel. It detects the temperature of interior air drawn in by the aspirator and converts the temperature into a resistance value which is then sent to the auto amplifier.

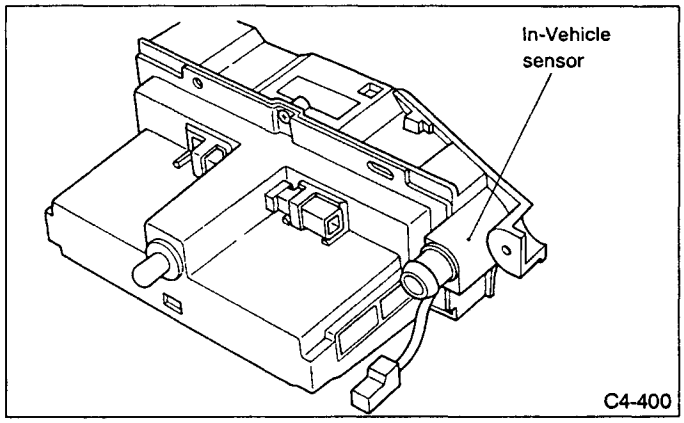

Fig. 39

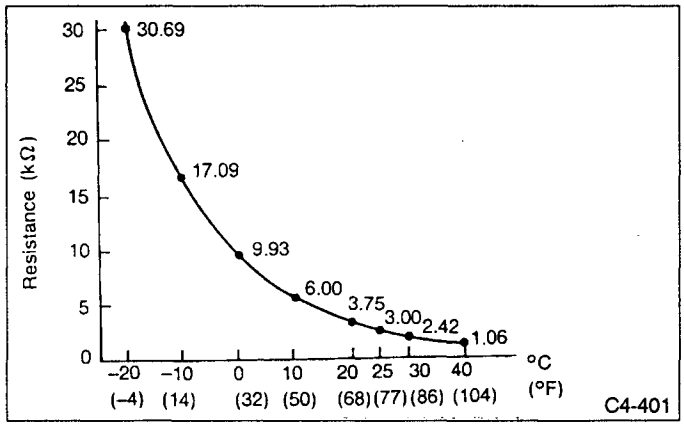

Fig. 40

9. ASPIRATOR

The aspirator continuously draws the vehicle's interior air through the duct and sends the air to the in-vehicle sensor.

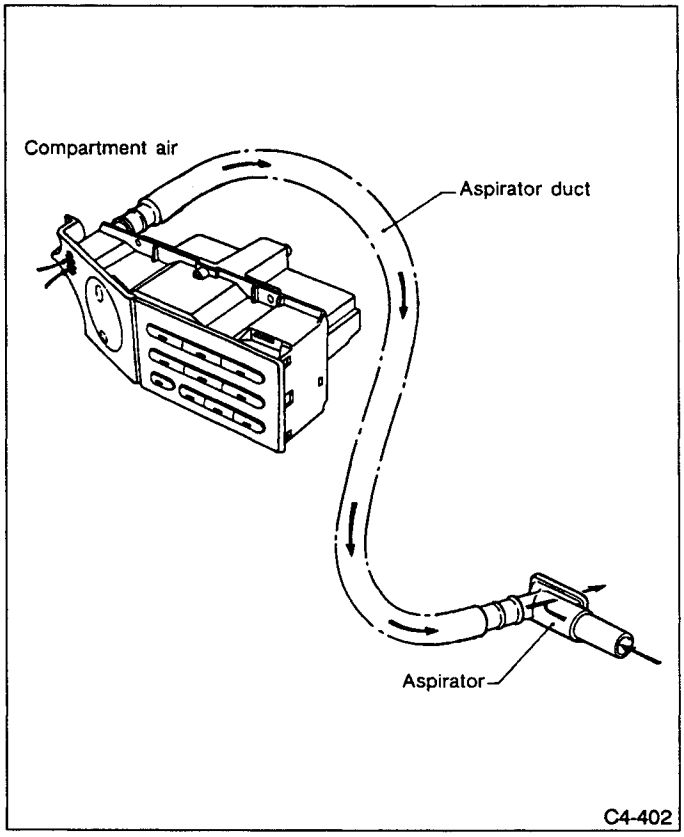

Fig. 41

10. AMBIENT SENSOR

The ambient sensor is installed on the hood lock stay. It detects the temperature of ambient air, and converts the temperature to a resistance value which is sent to the auto amplifier.

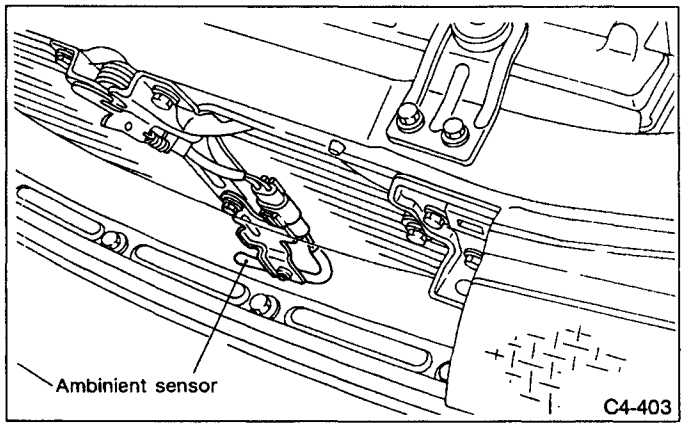

Fig. 42

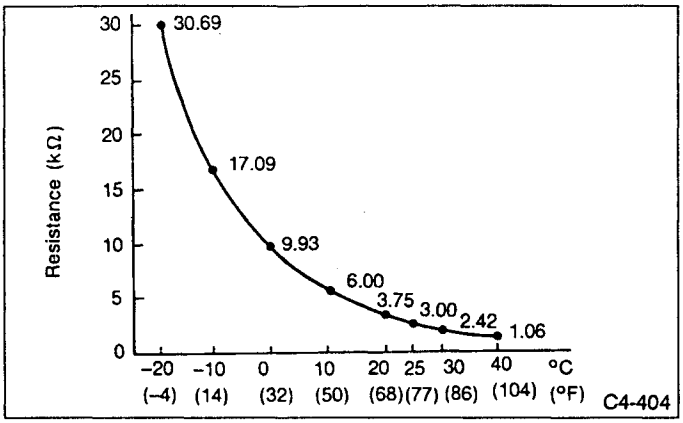

Fig. 43

11. SUNLOAD SENSOR

The sunload sensor detects the amount of solar radiation, and is installed on the upper left side of the instrument panel. The diode converts the solar radiation amount into a current value, which is sent as a voltage signal to the auto amplifier.

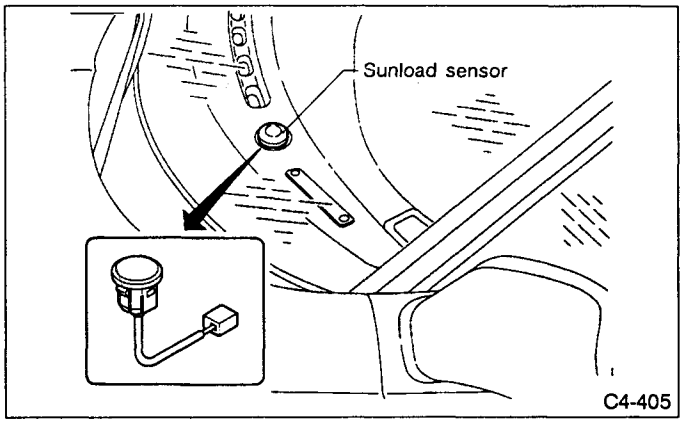

Fig. 44

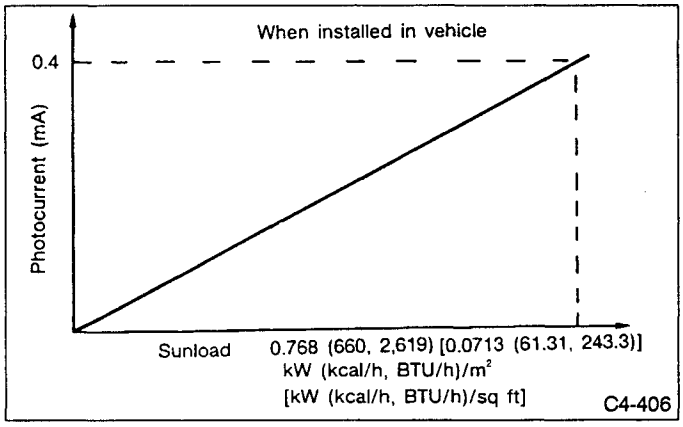

Fig. 45

12. REFRIGERANT TEMPERATURE SENSOR

The refrigerant temperature sensor is installed on the evaporator. It converts the refrigerant temperature into a resistance value which is sent to the auto amplifier.

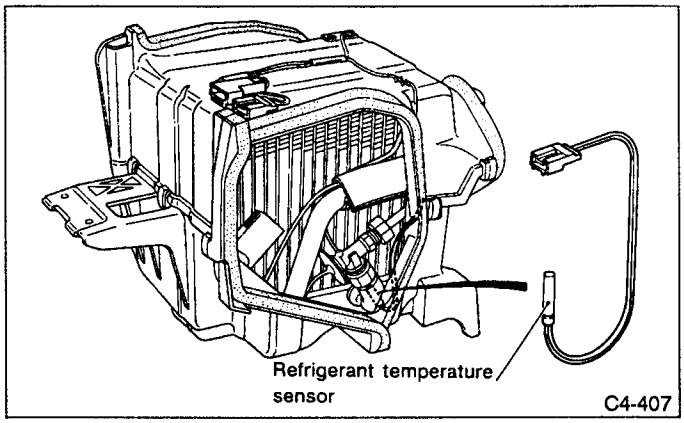

Fig. 46

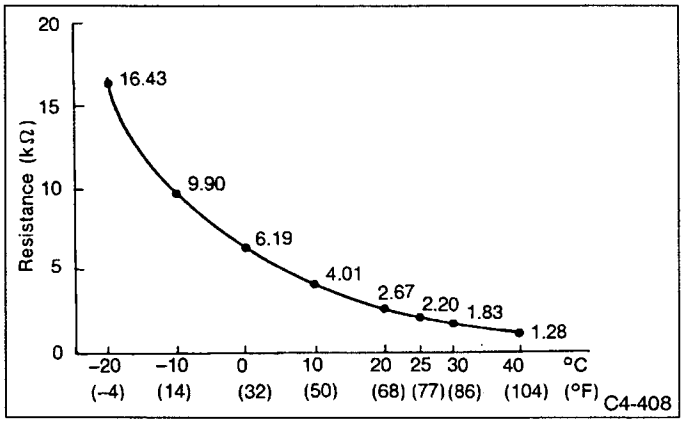

Fig. 47

13. EVAPORATOR SENSOR

The evaporator sensor is installed on the evaporator assembly case (heater unit side). It converts the temperature of air flowing to the heater unit into a resistance value after passing through the evaporator and sends it to the auto amplifier.

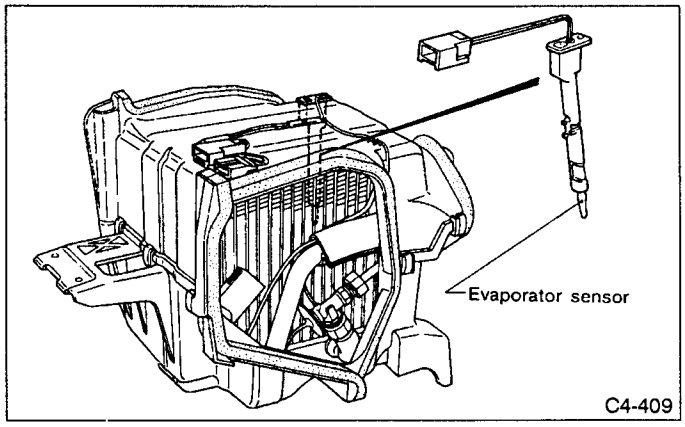

Fig. 48

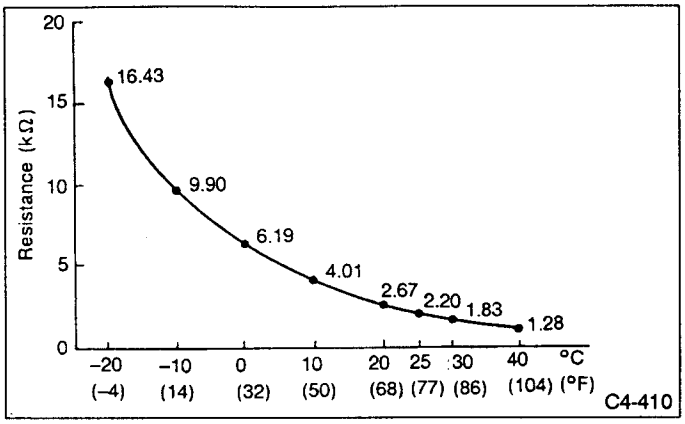

Fig. 49

14. WATER TEMPERATURE SENSOR

The water temperature is installed on the heater core section of the heater unit. It detects the temperature of water flowing to the heater core, and converts the temperature into a resistance value which is sent to the auto amplifier.

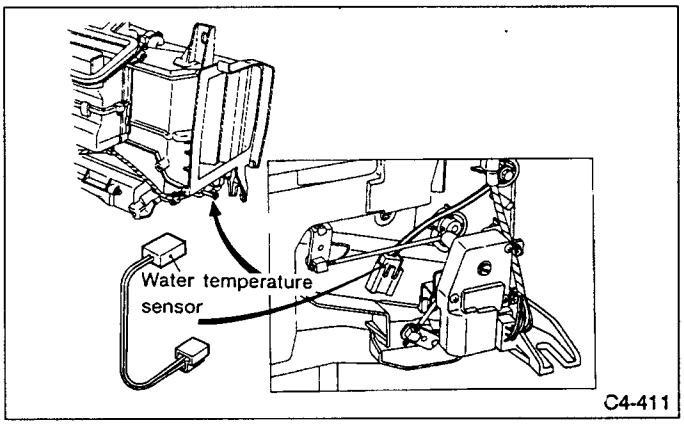

Fig. 50

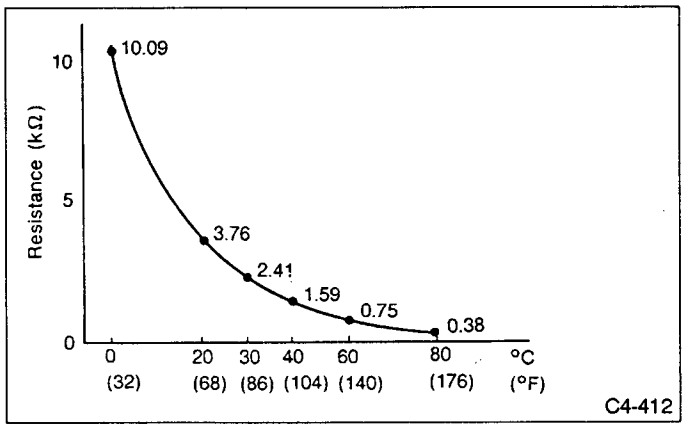

Fig. 51

15. FAN CONTROL AMPLIFIER

The fan control amplifier is installed on the cooling unit. It receives the base current from the auto amplifier, and controls the voltage applied to the fan motor.

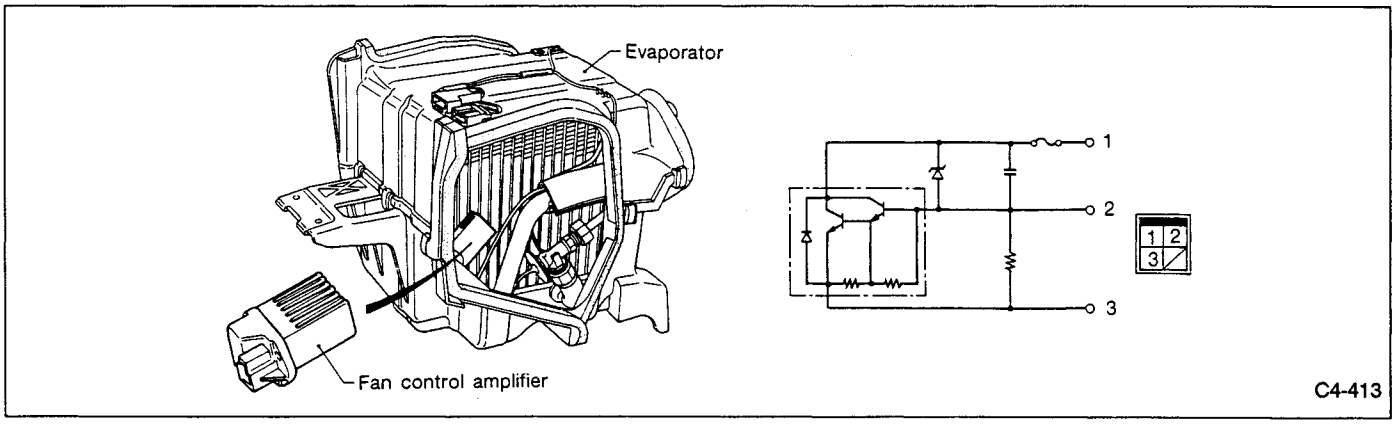

Fig. 52

16. RELAYS

1) Max. HI relay

The MAX HI relay is installed on the blower unit case. It is turned ON and OFF by the signal sent from the auto amplifier. When the MAX. HI relay is turned ON, the fan motor generates maximum air flow.

Normally, the air flow is controlled by the fan control amplifier. Because the fan control amplifier itself causes a small amount of voltage drop, the MAX HI relay is turned ON when generating maximum air flow.

2) OFF relay

The OFF relay is installed on the blower unit. This relay turns ON by the signal sent from the auto amplifier when the control panel switch is pressed. When the OFF relay is ON, the fan motor power supply is connected. When OFF relay is OFF, the fan motor power supply is disconnected.

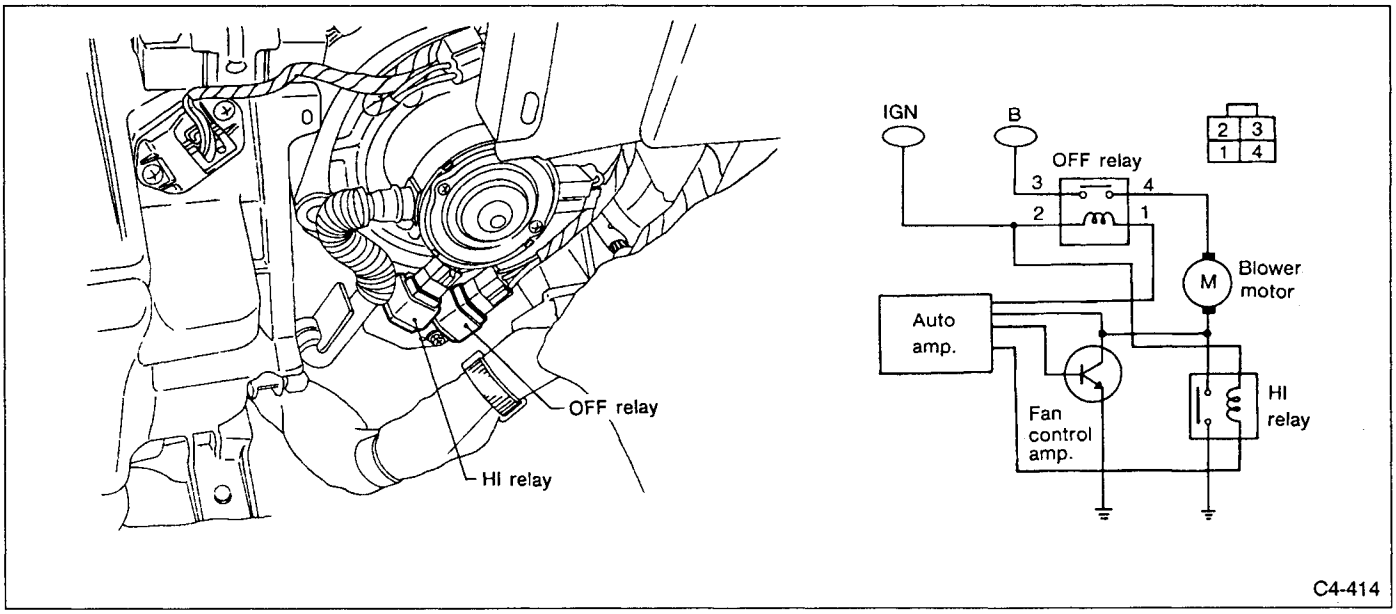

Fig. 53

3) A/C relay
The A/C relay is built into the relay box on the left side of the engine compartment. It connects and disconnects the compressor magnet clutch.
Although this compressor magnet clutch is normally controlled by the AUTO and DEF switches, it is also controlled by abnormal evaporator temperature or refrigerant pressure.

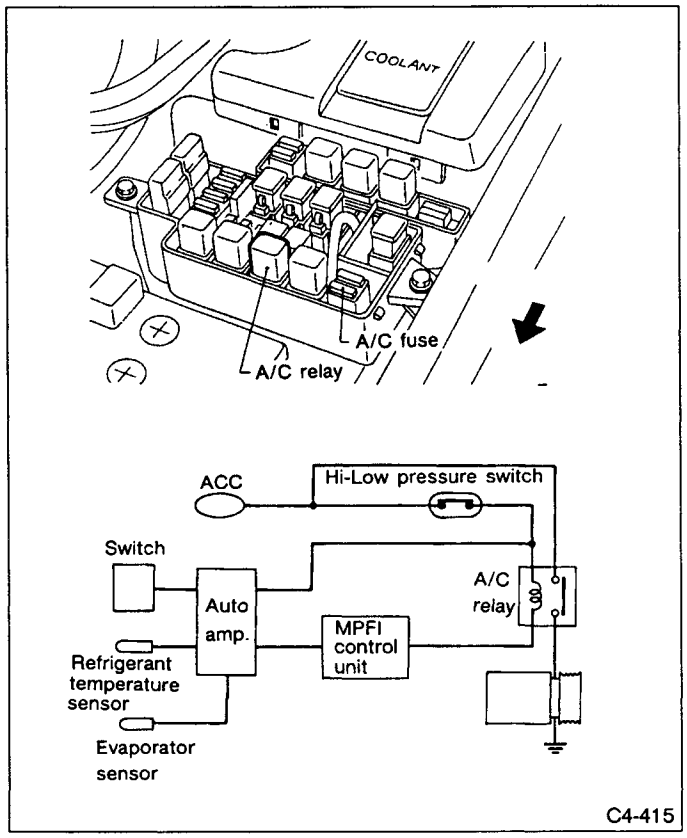

Fig. 54

17. INTAKE DOOR MOTOR

The intake door motor is installed on the right upper part of the blower unit. Operation of this motor is controlled by the signal sent from the auto amplifier. The motor opens and closes the intake door via a rod and link mechanism, thereby controlling the air suction port.

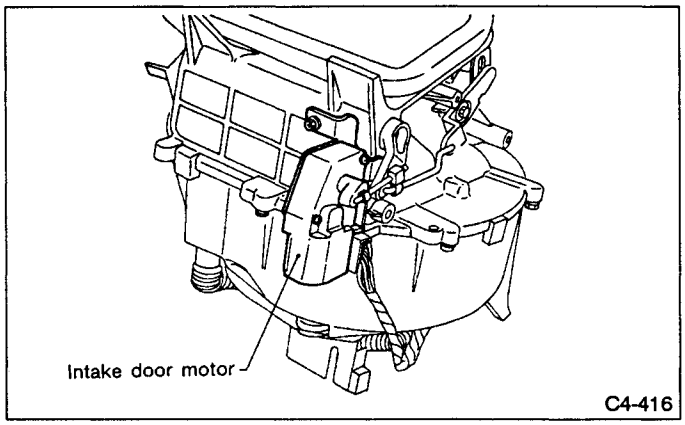

Fig. 55

1) Operation of intake door motor
When the objective intake door position is determined by the auto amplifier, the transistor in the drive section turns ON to operate the motor. The motor can rotate only in one direction, and actuates the intake door via a link mechanism.
The motor continues running until the position detecting contact corresponding to the objective door position is isolated from the ground due to the cut-out of the disc (conductor) linked to the motor.

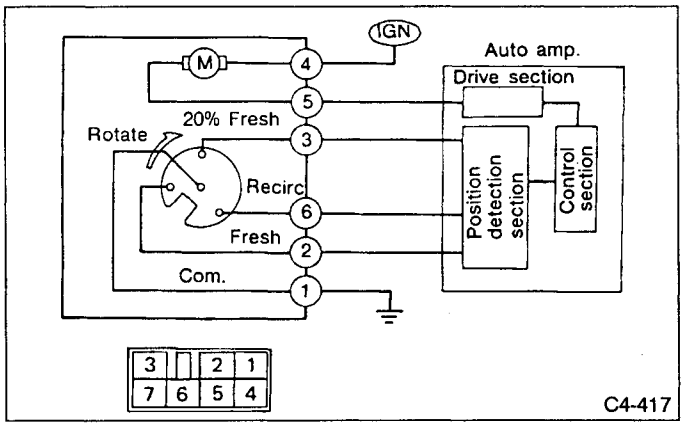

Fig. 56

18. AIR MIX DOOR MOTOR

The air mix door motor is installed on the bottom surface of the heater unit. When it receives a signal from the auto amplifier, it changes the opening of the air mix door via a link and the air mix door lever.
The door motor detects the air mix door position. P.B.R. is built into the motor, and its signal is fed back to the auto amplifier.

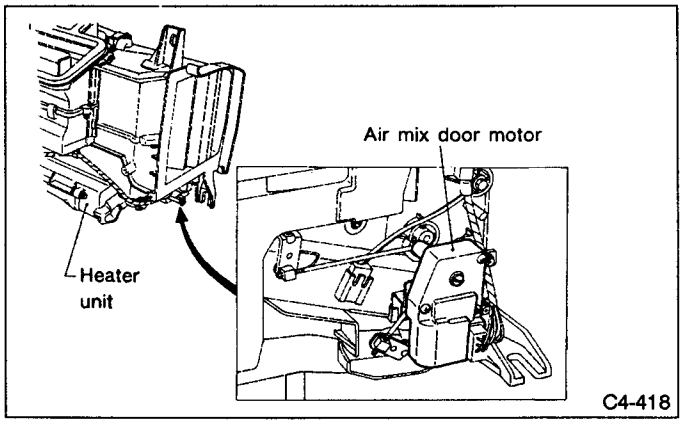

Fig. 57

1) Operation of air mix door motor
The auto amplifier determines the air mix door position. The air mix door motor rotates normally or in reverse direction corresponding to the auto amplifier signal as shown below.
The output shaft and sliding contact are made integral. If the sliding contact exceeds the position of terminal plate Ⓐ or Ⓑ (MAX-HOT or MAX-COLD position), the current is cut off and the motor stops rotating.
If the auto amplifier output signal turns OFF, the motor operation stops irrespective of the position of the sliding contact.

Energizing terminal		Direction of rotation	Remarks
Positive ⊕	Negative ⊖		
①	②	CCW	MAX HOT → MAX COLD
②	①	CW	MAX COLD → MAX HOT

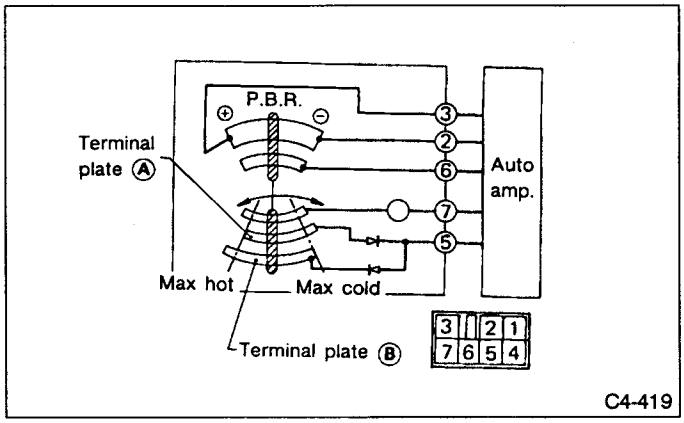

Fig. 58

2) P.B.R. (Potentiometric Balance Resister)
The potentiometric balance resister is built into the printed board in the air mix door motor. This resister detects the air mix door position corresponding to the output shaft rotation as a ratio of variable terminal voltage VM to reference voltage VDD, and feeds the signal back to the auto amplifier.

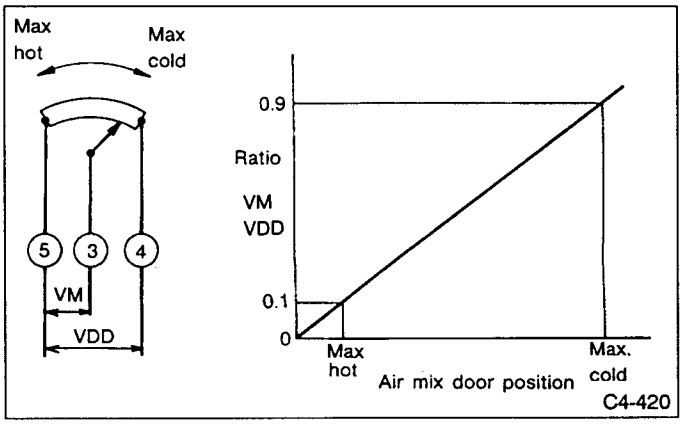

Fig. 59

19. MODE DOOR MOTOR

The mode door motor is installed on the left side of the heater unit, and is controlled by the signal sent from the auto amplifier. This motor actuates the defroster door, vent door and heat door via linkage mechanisms so as to provide optimum air circulation.

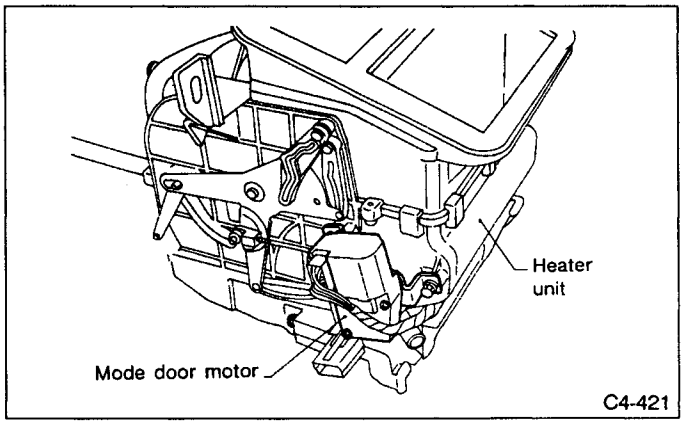

Fig. 60

1) Operation of mode door motor

The auto amplifier determines the mode door position. The mode door motor rotates normally or in reverse direction corresponding to the auto amplifier signal as shown below.

The output shaft and sliding contact are made integral. If the sliding contact exceeds the position of terminal plate Ⓐ or Ⓑ (DEF or VENT position), the current is cut off and the motor stops rotating.

If the auto amplifier output signal turns OFF, the motor operation stops irrespective of the position of the sliding contact.

Energizing terminal		Direction of rotation	Remarks
Positive ⊕	Negative ⊖		
①	②	CCW	VENT → DEF
②	①	CW	DEF → VENT

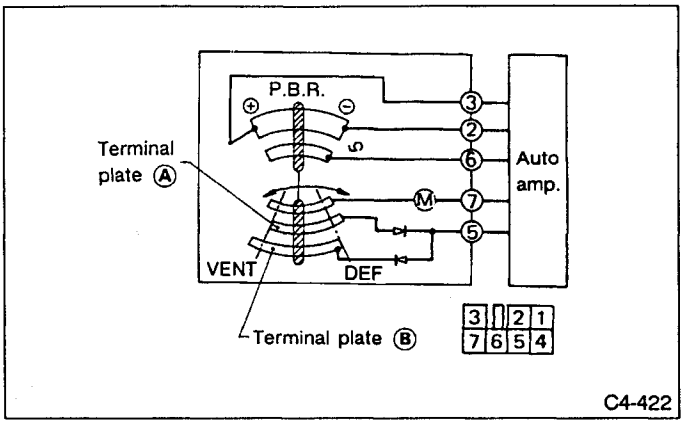

Fig. 61

2) P.B.R. (Potentiometric Balance Resister)

The potentiometric balance resister is built into the printed board in the mode door motor. This resister detects the mode door position corresponding to the output shaft rotation as a ratio of variable terminal voltage VM to reference voltage V_{DD}, and feeds the signal back to the auto amplifier.

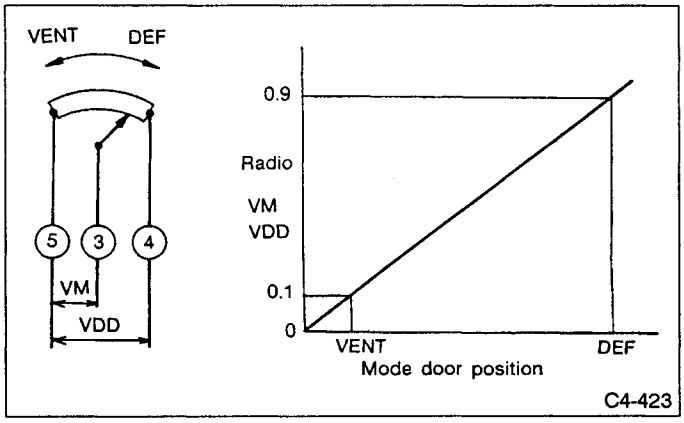

Fig. 62

5. Automatic Climate Control System

A: FEATURES

1. ELECTRONICALLY CONTROLLED VARIABLE DELIVERY COMPRESSOR

1) During the initial "cool-down" stage, air conditioning is maximized to quickly bring the compartment to a comfortable range.
2) During low ambient temperatures, compressor delivery is electronically controlled to effectively dehumidify the compartment.
3) Compressor delivery is controlled to provide power-saving when air conditioning is not required.
4) To maintain smooth engine operation when the A/C switch is turned OFF, the compressor clutch is turned OFF after compressor delivery is minimized.
5) When the engine coolant temperature is high, compressor delivery is decreased with the A/C system in operation to decrease the coolant temperature and thus protect the engine.

2. AUTOMATIC COMPARTMENT TEMPERATURE CONTROL

The air mix door is automatically controlled to maintain an optimum compartment temperature regardless of the ambient temperature, sunload or the number of occupants.

3. AUTOMATIC SELECTION OF AIR OUTLET

The VENT, BILEVEL and HEAT mode doors are automatically selected corresponding to the outlet air temperature. Natural compartment ventilation can be achieved by simply pressing the new VENT switch.

4. HEATER START CONTROL

To prevent cool air from discharging into the passenger compartment during starts in cold weather, the air flow rate is controlled between OFF and AUTO until the heater water temperature increases. In this case, the air outlet is controlled to change from DEF to AUTO through DEF/HEAT in the AUTO mode.

5. COOLER START CONTROL

The cooler start control function controls the outlet air quantity between OFF and AUTO levels until the evaporator cools down. This prevents blowing warm air into the compartment when starting the air conditioner during hot weather. (In AUTO mode operation)

6. SUN LOAD CORRECTION

The photo diode is adopted in the sun load sensor. This provides accurate detection of sun load and ensures proper correction of interior temperatures.

B: SYSTEM CONTROL

Type of automatic control	Input unit	Output unit
Room temperature control	AUTO switch, ECON switch, temperature adjustment switch, in-vehicle sensor, ambient sensor, sun load sensor, evaporator sensor	Air mix door actuating motor
Air flow rate control	AUTO switch, ECON switch, temperature adjustment switch, DEF switch, in-vehicle sensor, ambient sensor, sun load sensor, water temperature sensor, evaporator sensor, fan switch	Blower fan motor, fan control amplifier, HI relay
Mode door control	AUTO switch, ECON switch, temperature adjustment switch, DEF switch, in-vehicle sensor, ambient sensor, sun load sensor, evaporator sensor, water temperature sensor	Mode door actuating motor
Intake door control	AUTO switch, ECON switch, temperature adjustment switch, DEF switch, CIRC switch, in-vehicle sensor, evaporator sensor, ambient sensor, sun load sensor, VENT switch	Intake door actuating motor
Compressor control	AUTO switch, ECON switch, temperature adjustment switch, DEF switch, CIRC switch, in-vehicle sensor, ambient sensor, sun load sensor, evaporator sensor, refrigerant temperature sensor, VENT switch, ECU signal (Engine unit)	Solenoid actuator, compressor ON signal (output to engine control unit)

C: SYSTEM LAYOUT

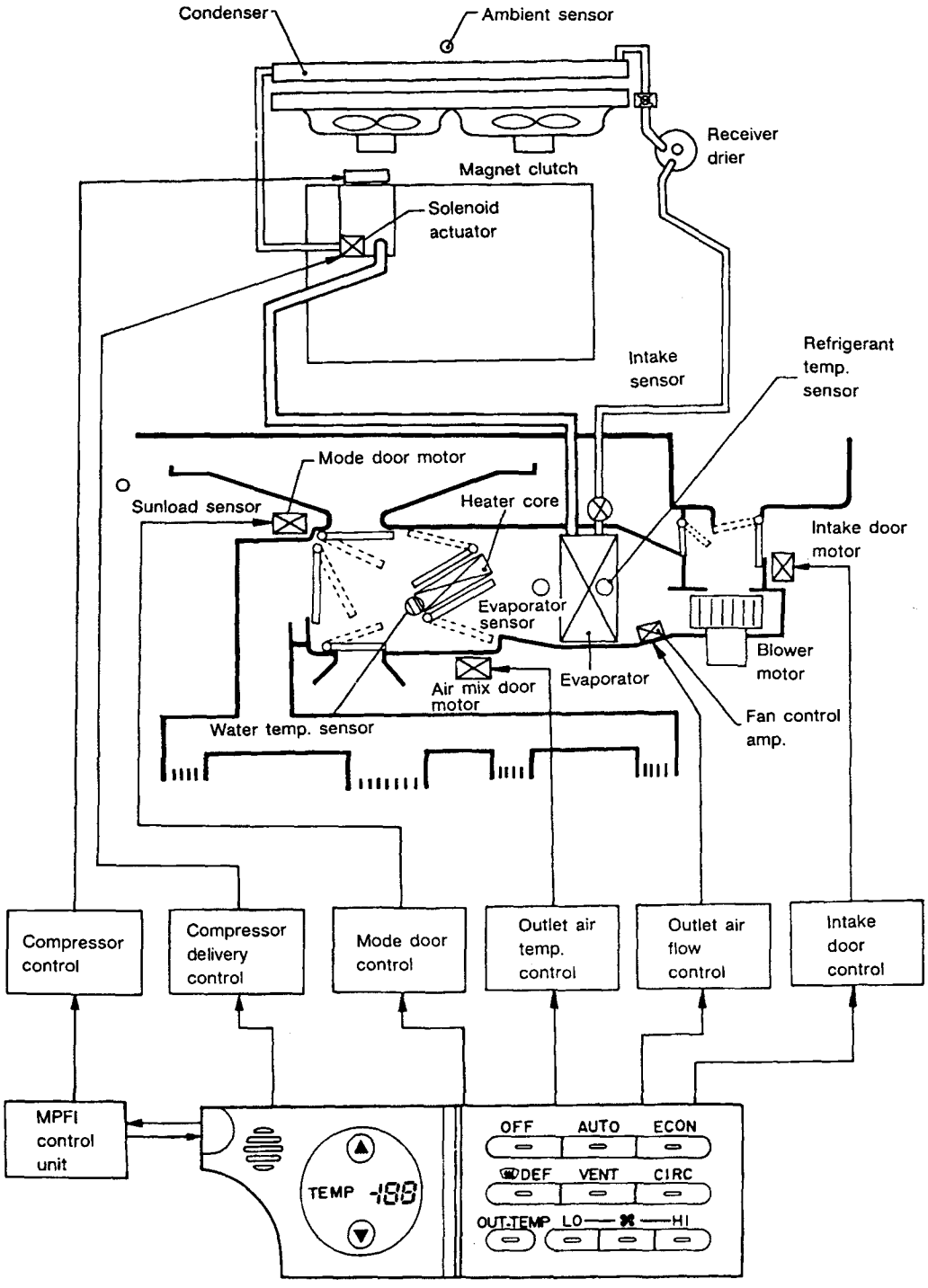

Fig. 63

C4-424

D: COMPONENT LAYOUT

1. ENGINE COMPARTMENT

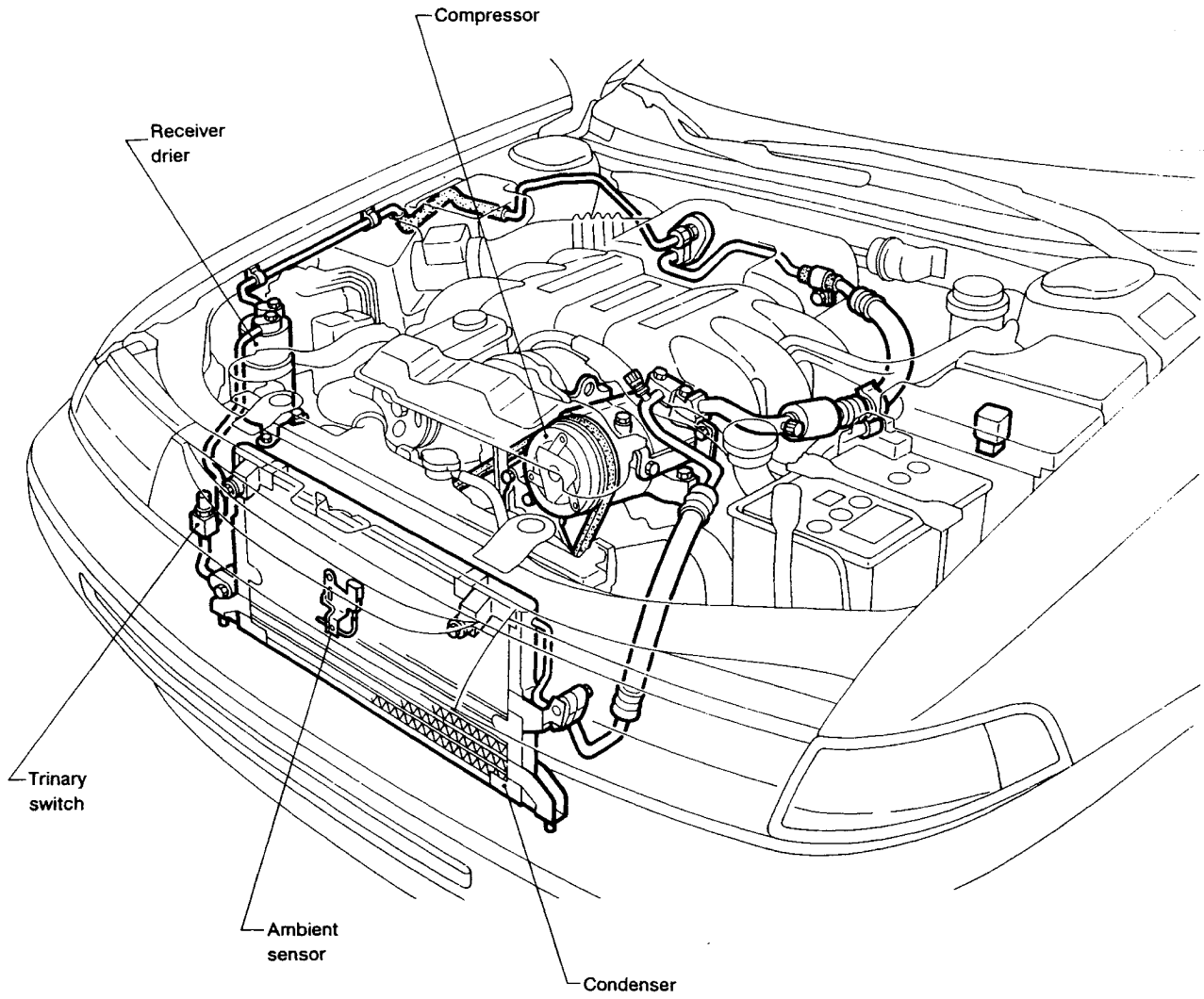

C4-1017

Fig. 15

2. PASSENGER COMPARTMENT

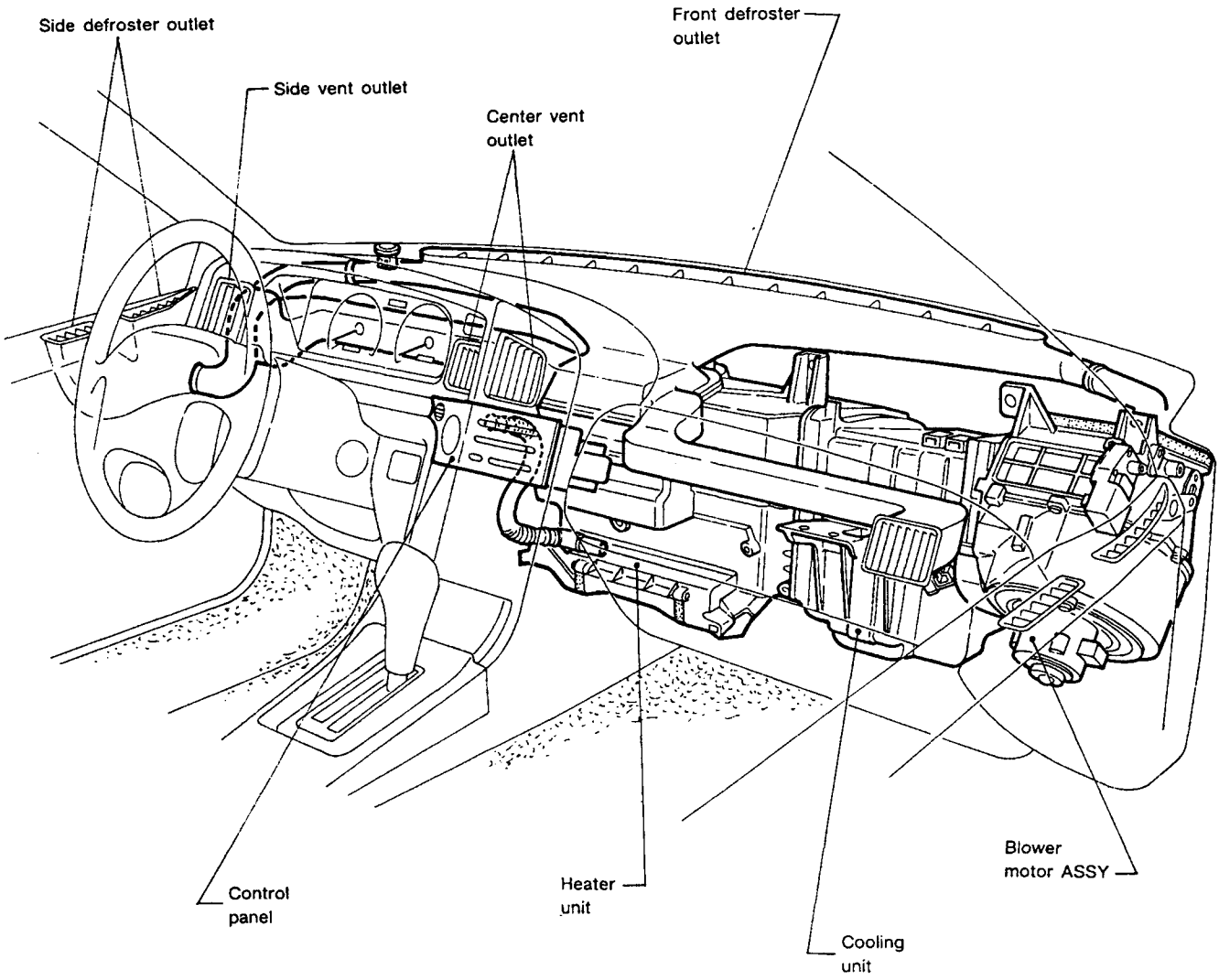

C4-426

Fig. 65

E: SYSTEM FLOW

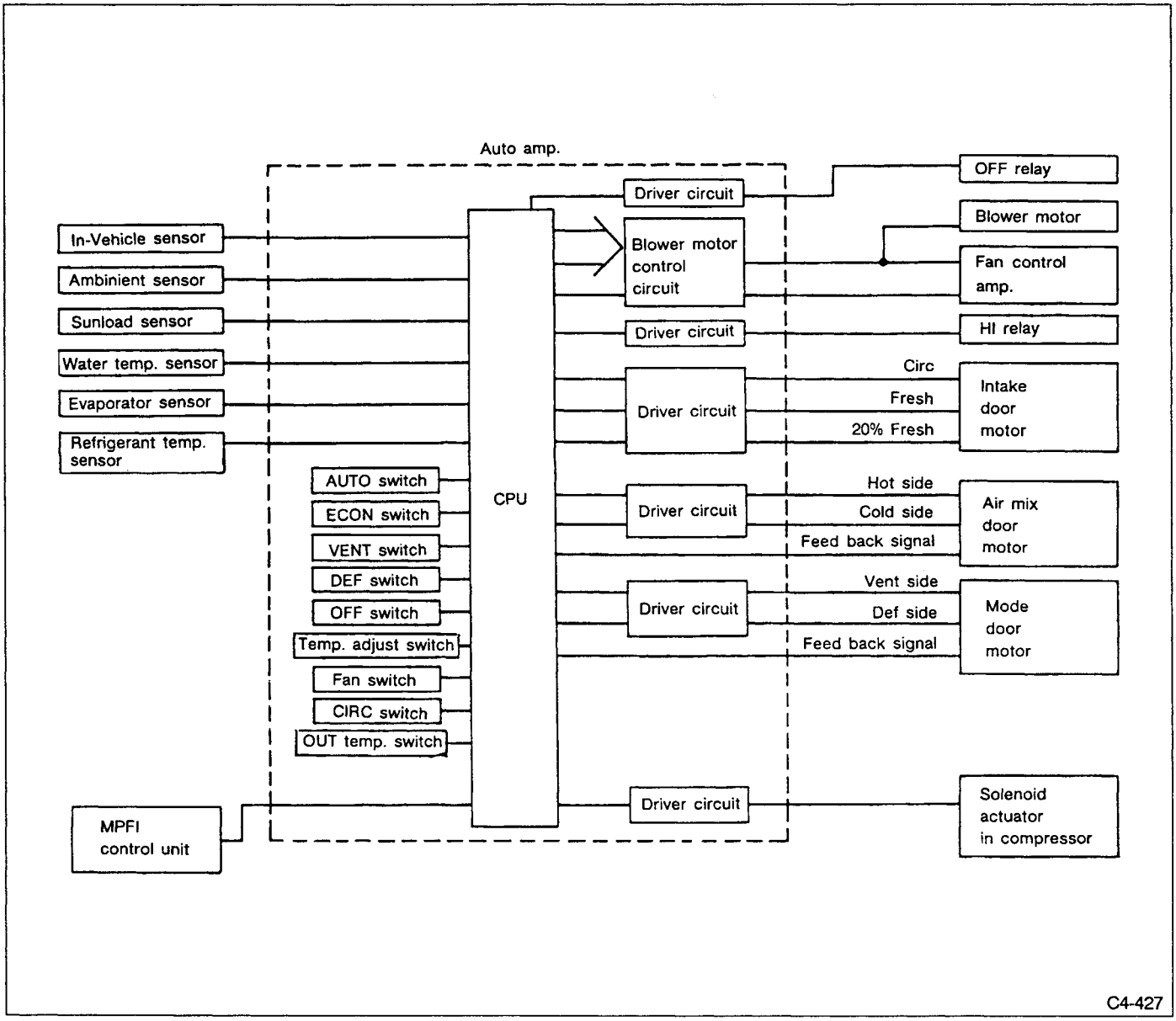

Fig. 66

F: CONTROL SYSTEM

1. AIR MIX DOOR CONTROL (Automatic temperature control)

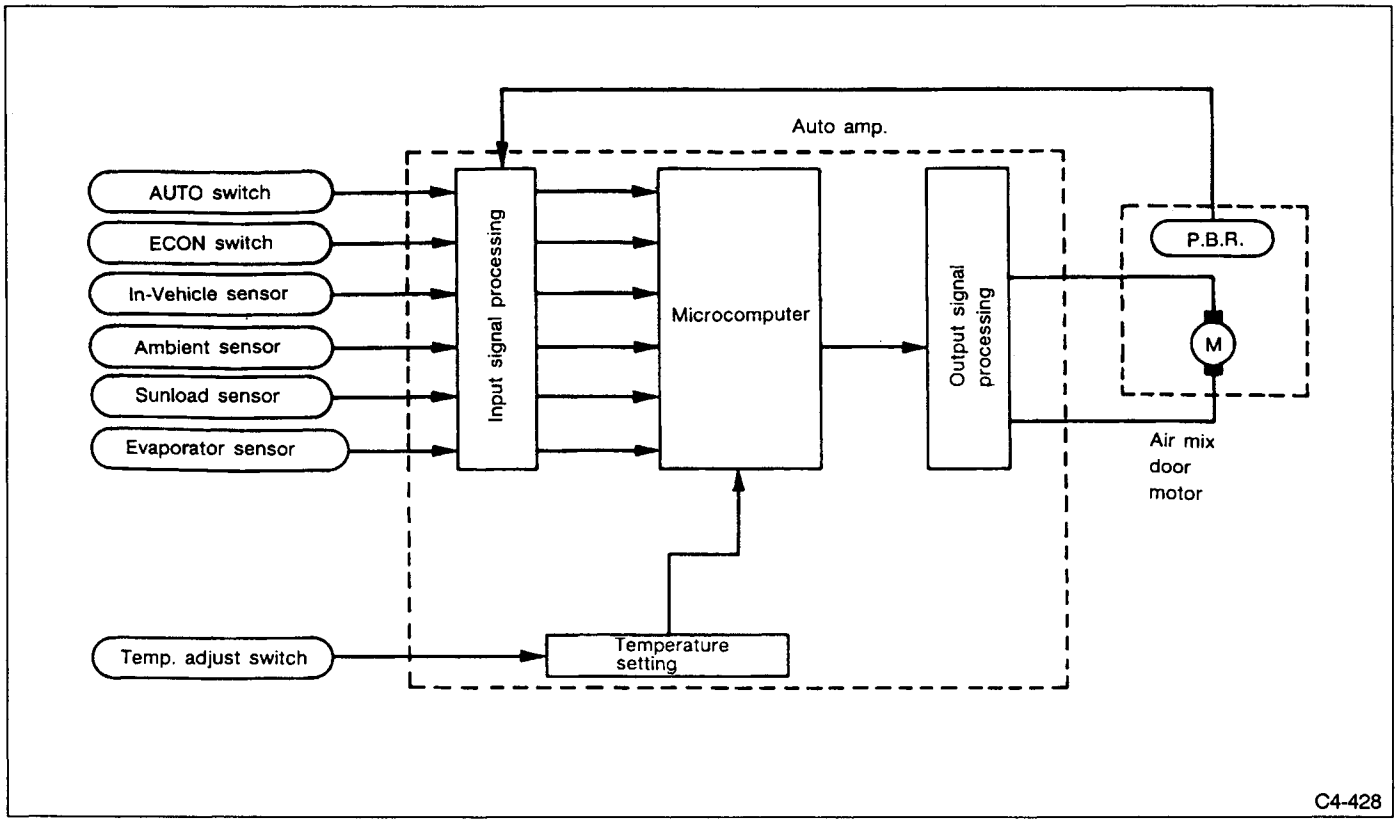

Fig. 67

When the temperature adjustment switch on the control panel is pressed to set a specific temperature, the auto amplifier performs computation based on various input sensor signals, and obtains the overall signal T. Further, it compares the predetermined air mix door opening and P.B.R. signal with respect to this overall signal T, and determines whether the air mix door opening is appropriate.
If the air mix door opening is not appropriate, the air mix door moves toward the heat or cool side so that the appropriate door opening can be obtained.

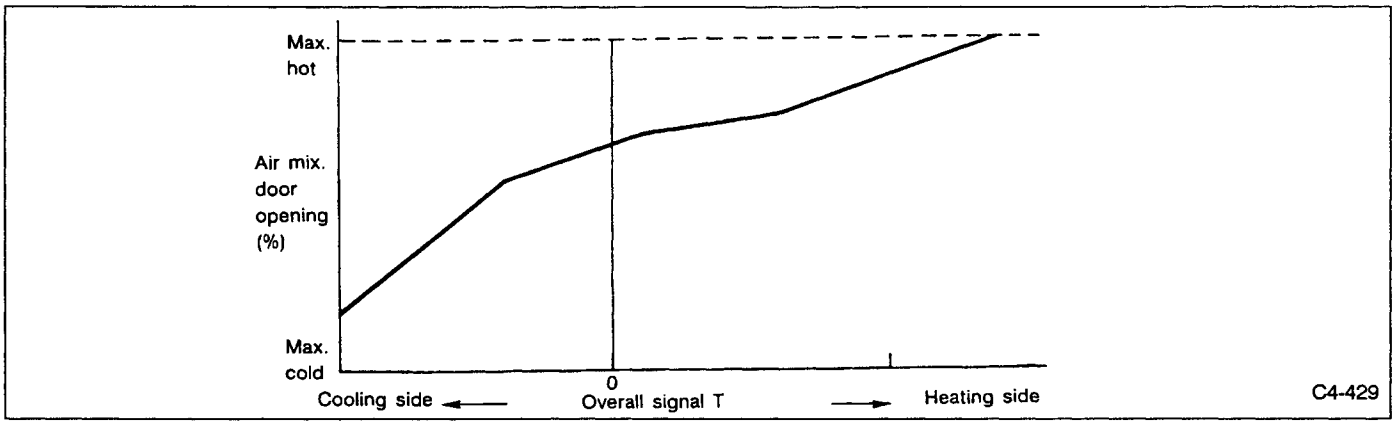
Max.
hot
Air mix.
door
opening
(%)
Max.
cold
0
Cooling side
Overall signal T
Heating side
C4-429

Fig. 68

2. FAN SPEED CONTROL

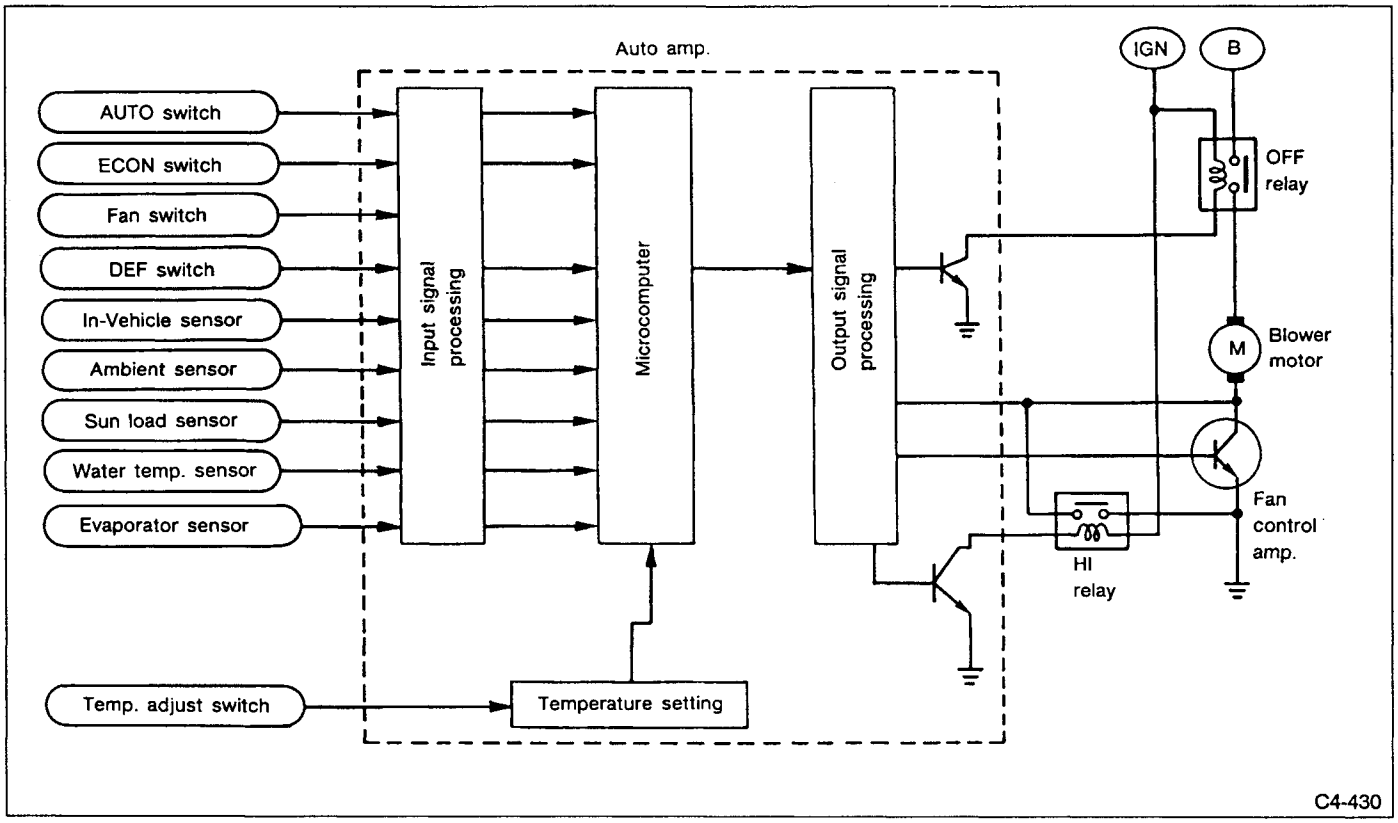

Fig. 69

1) Ordinary automatic air flow rate control
The auto amplifier varies the base voltage of the fan control amplifier corresponding to the overall signal T, thus steplessly controlling the fan motor speed.
The LO voltage varies with the air outlet position as shown below.

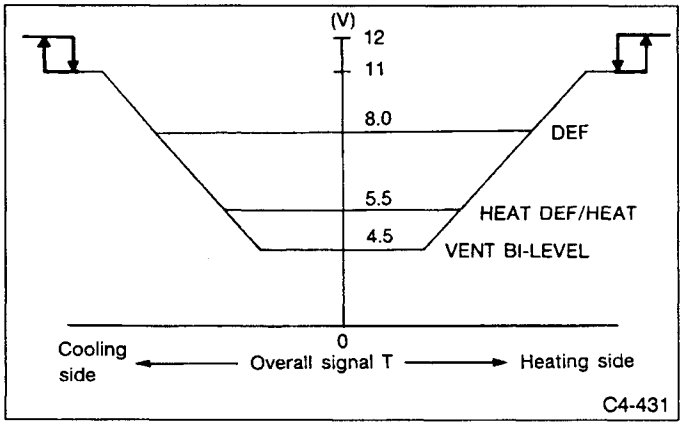

Fig. 70

Air outlet position	Air flow LO voltage
VENT, BI-LEVEL	4.5V
HEAT, DEF/HEAT	5.5V
DEF	8.0V

2) Heater start control
(1) The heater start control is performed corresponding to the air outlet position. (This control is not performed when VENT switch or DEF switch is selected.)
The heater start control changes the air outlet and warm-up air flow rate.
(2) If the water temperature is below 30°C (86°F), DEF position and zero air flow are selected.
(3) If the water temperature is greater than 30°C (86°F), DEF/HEAT position is selected and the air flow rate is linearly increased from LO to AUTO level.
If the blower motor voltage is greater than 7 volts, the air outlet will change to the HEAT position.

AUTO switch	ON		
Water temperature	Less than 30°C (86°F)	Over 30°C (86°F)	
Blower motor voltage	0V	Below 7V	Over 7V
Air outlet	DEF	DEF/HEAT	HEAT

The DEF/HEAT mode door position is only set in case of heater start control.

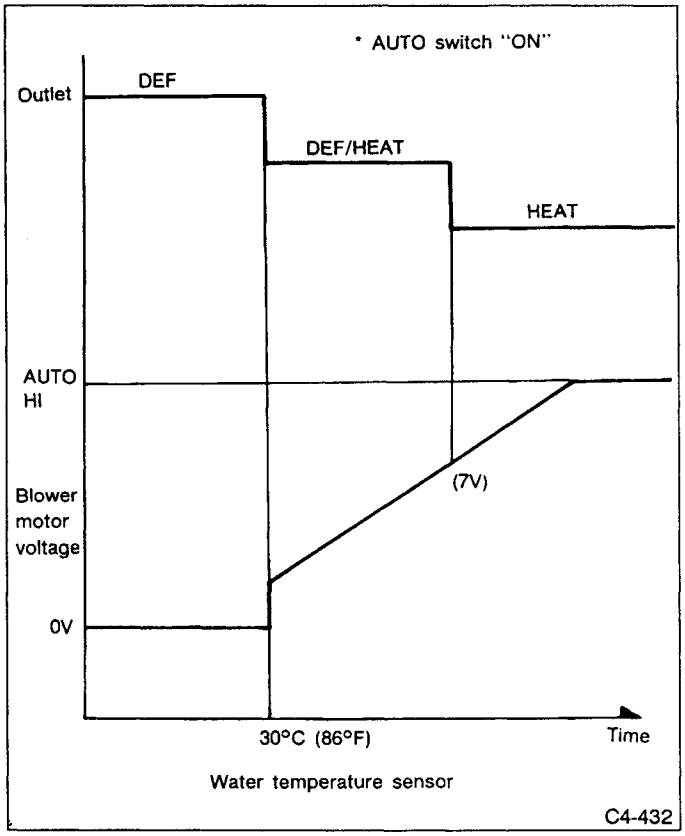

Fig. 71

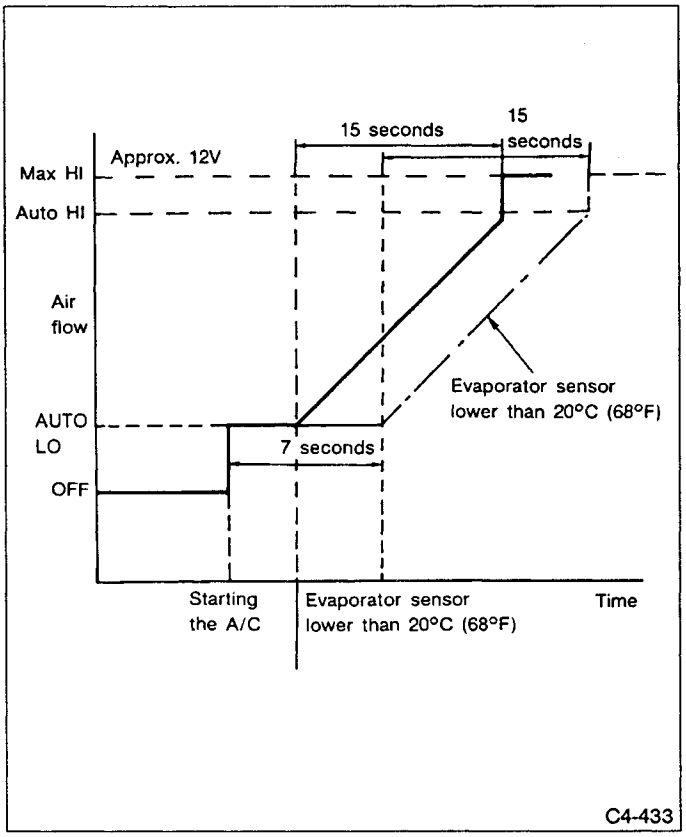

Fig. 72

3) Cooler start control

If the temperature detected by the intake sensor is greater than 20°C (68°F) when starting the air conditioner, the auto amplifier performs cooler start control. The air flow is set at AUTO LO level when the intake sensor detected temperature is higher than 20°C (68°F). If the temperature is lower than 20°C (68°F), the air flow is increased to AUTO HI level from AUTO LO in 15 seconds.

Even if the intake sensor detected temperature is now lower than 20°C (68°F), setting air flow at the AUTO LO level is canceled seven seconds after the air conditioner starts, and it turns AUTO HI level in the subsequent 15 seconds.

This control is performed when the fan is turned ON irrespective of the compressor magnet clutch being ON or OFF.

3. MODE DOOR CONTROL

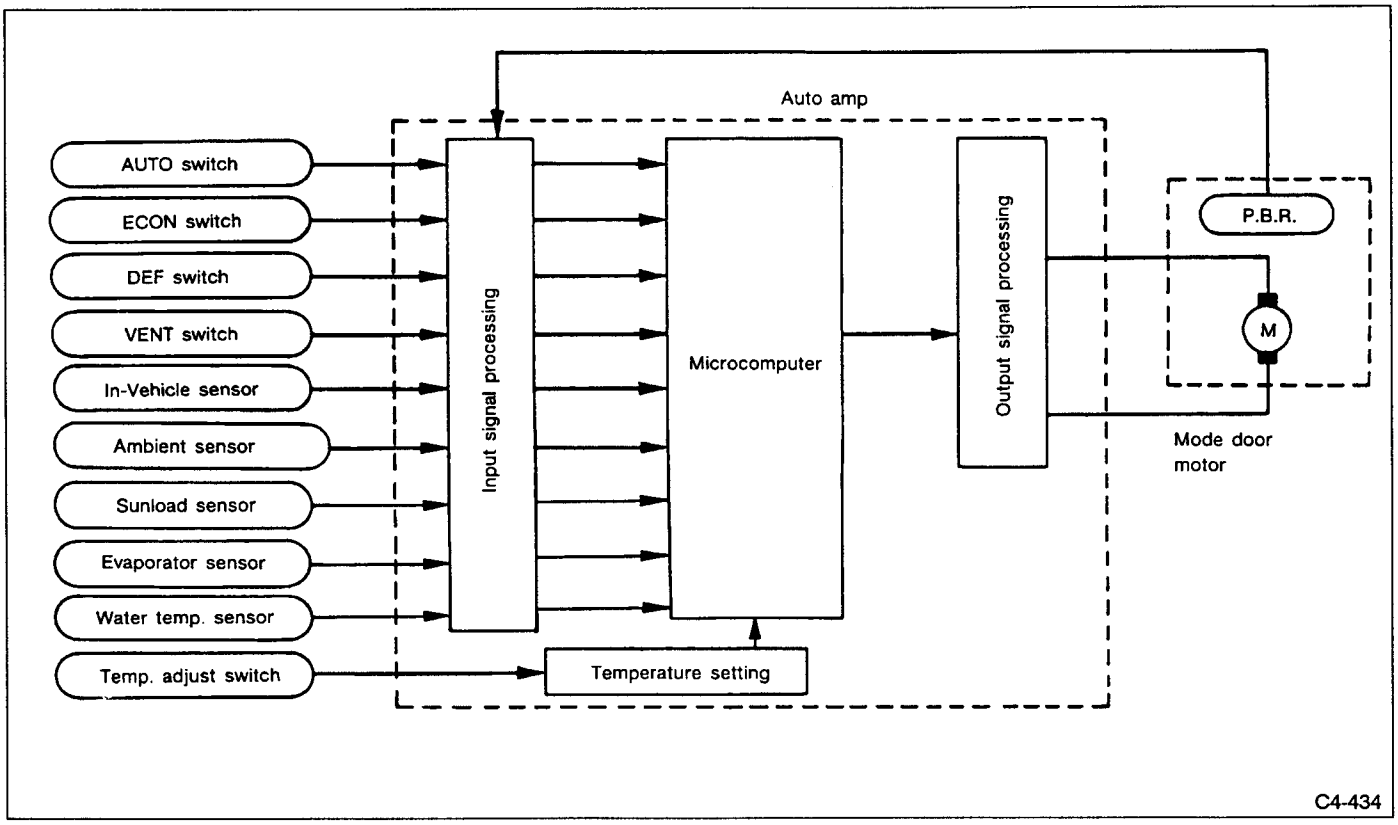

Fig. 73

When the AUTO switch on the control panel is pressed, the switch signal is sent into the auto amplifier. The auto amplifier microcomputer computes the outlet air temperature based on the evaporator sensor signal and air mix door opening signal (computed from the temperature setting signal and various sensor signals). It also compares the computed result with the outlet port selection criterion, and drives the mode door actuating motor to select the air outlet from among the VENT, BI-LEVEL and HEAT modes.

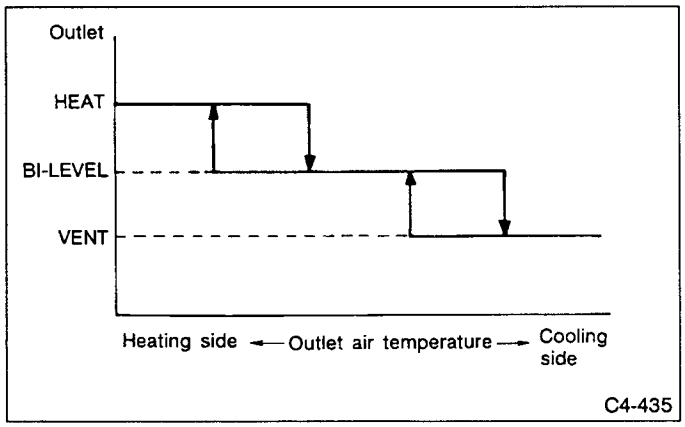

Fig. 74

4. INTAKE DOOR CONTROL
(Automatic suction port control)

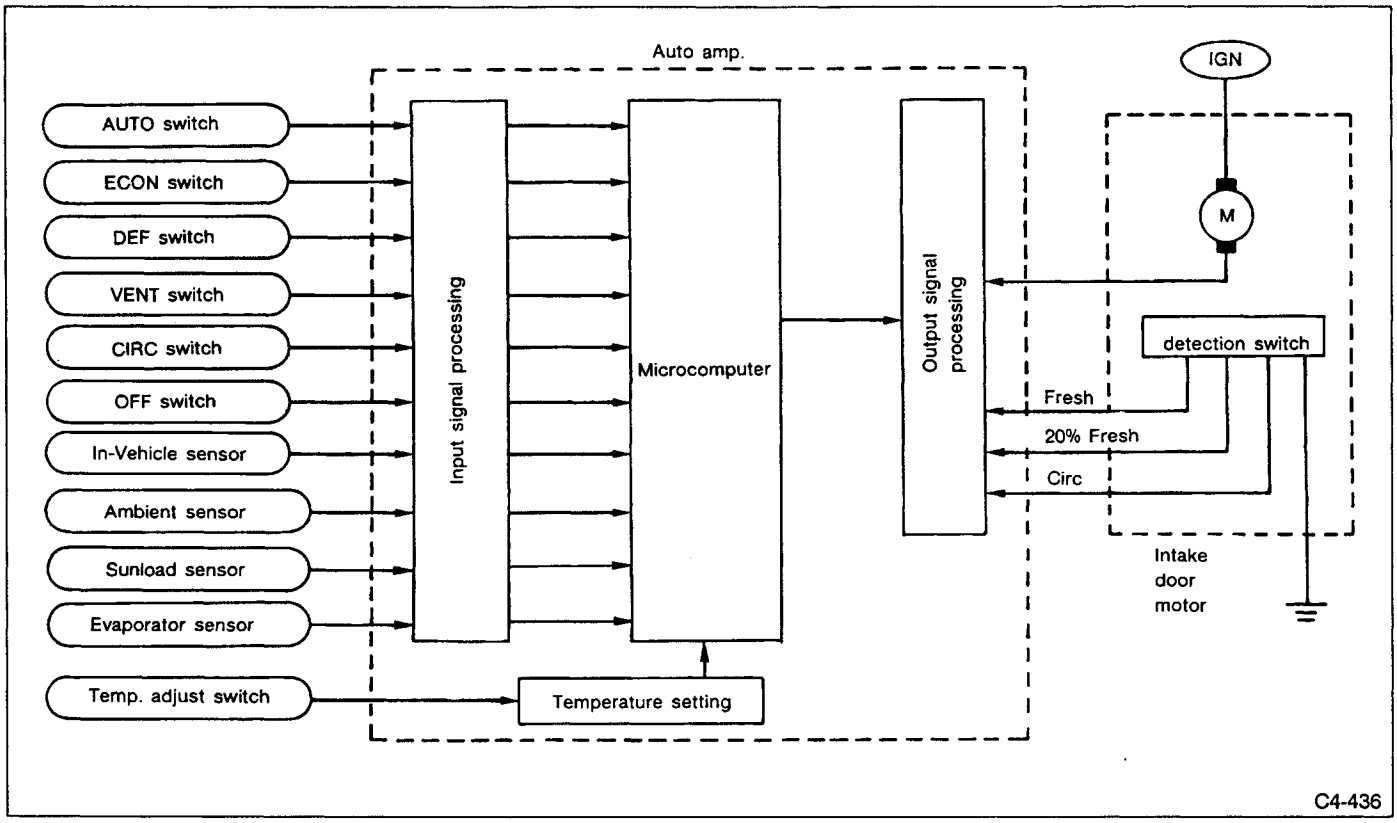

Fig. 75

When the CIRC switch is OFF (LED OFF) and the compressor magnet clutch is OFF, the intake door is normally set in the FRESH position. When the compressor magnet clutch is ON, the intake door is selected among FRESH, 20% FRESH, and RECIRC positions corresponding to the overall signal T and ambient temperature.

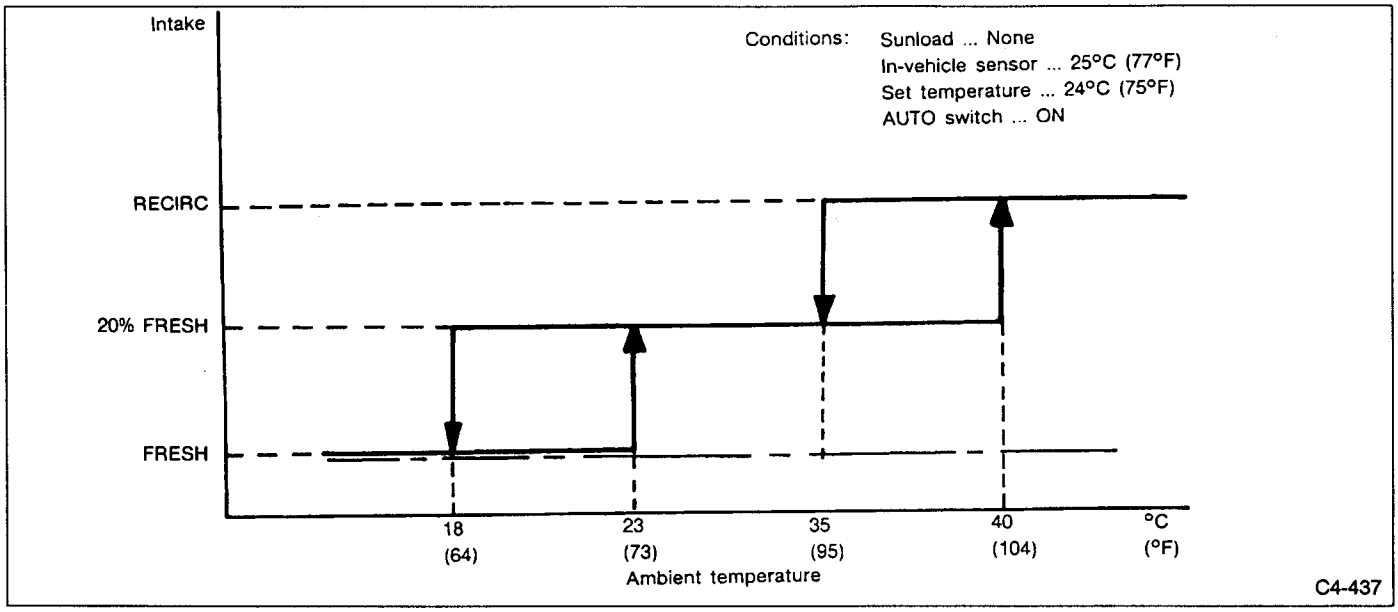
Intake
Conditions: Sunload ... None
In-vehicle sensor ... 25°C (77°F)
Set temperature ... 24°C (75°F)
AUTO switch ... ON
RECIRC
20% FRESH
FRESH
18
(64)
23
(73)
35
(95)
40
(104)
°C
(°F)
Ambient temperature
C4-437

Fig. 76

5. COMPRESSOR CONTROL

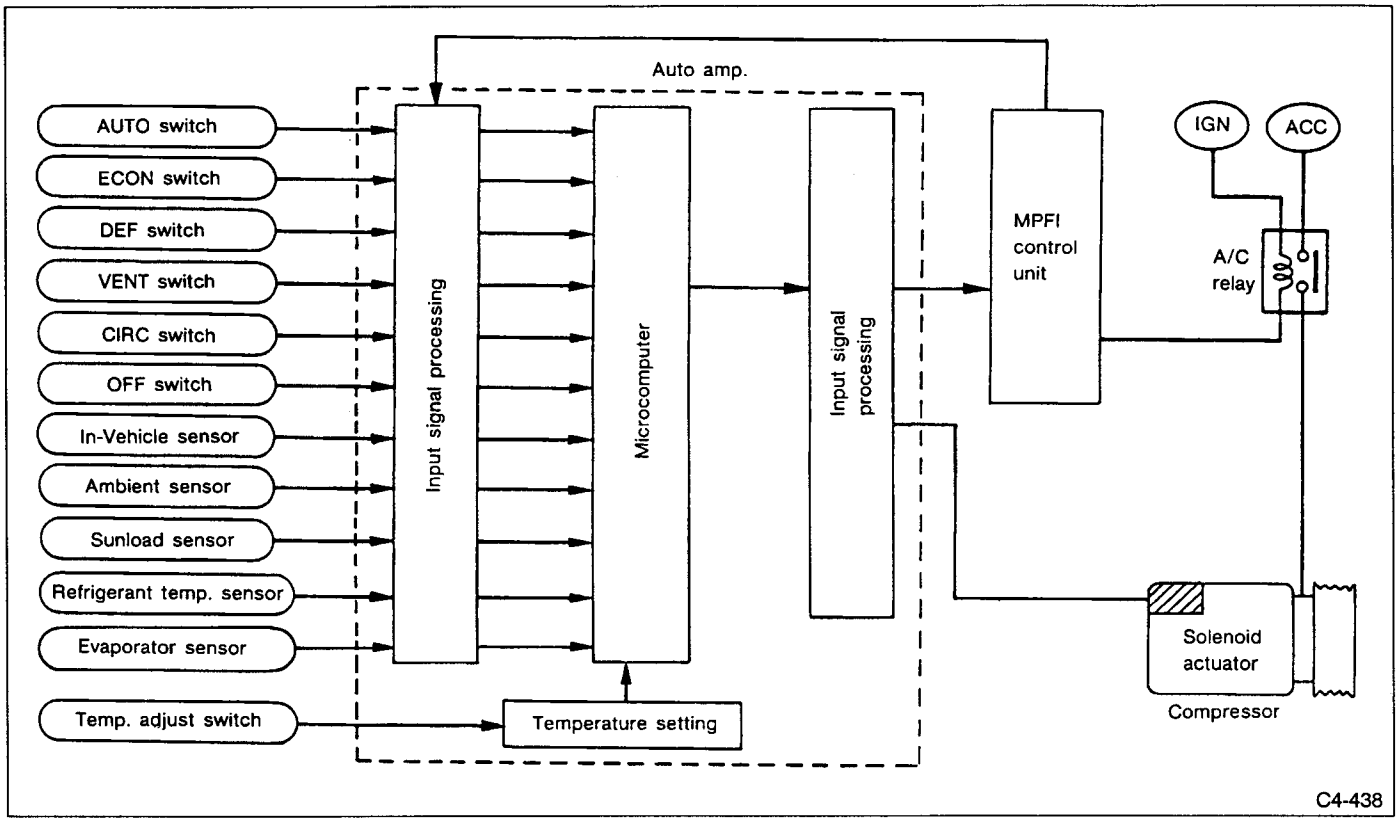

Fig. 77

1) Automatic control of compressor

The compressor operation mode is controlled as shown below corresponding to the control panel switches and ambient temperature levels.

Switch \ Ambient temperature	Zone A	Zone B	Zone C
AUTO switch	• Ordinary control • Quick cool down control	Low temperature defrosting control	OFF
ECON switch	OFF	OFF	OFF
DEF switch	Ordinary control	Low temperature defrosting control	OFF

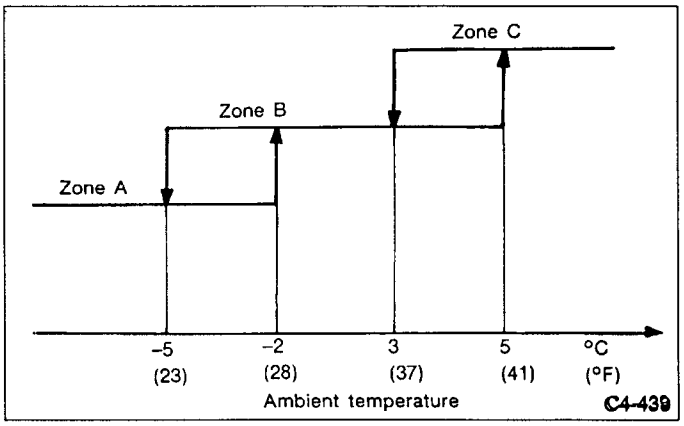

Fig. 78

2) Ordinary control
(When AUTO switch or DEF switch is ON)
The compressor delivery is changed so that the evaporator blow-out air temperature is maintained at 3°C (37°F).

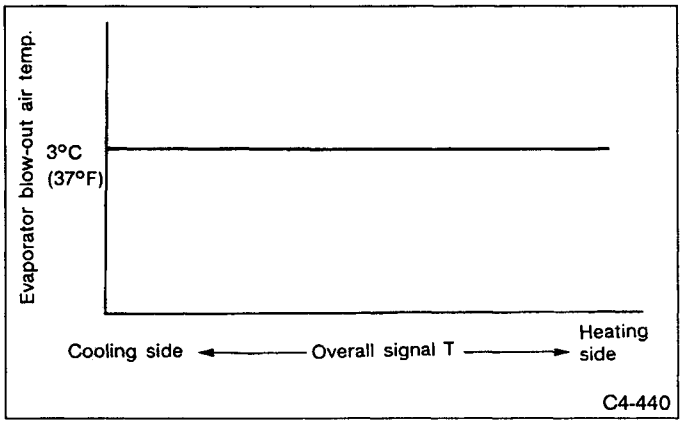

Fig. 79

Evaporator protection against freezing
The compressor magnet clutch is turned OFF depending on the air temperature detected by the evaporator intake sensor.

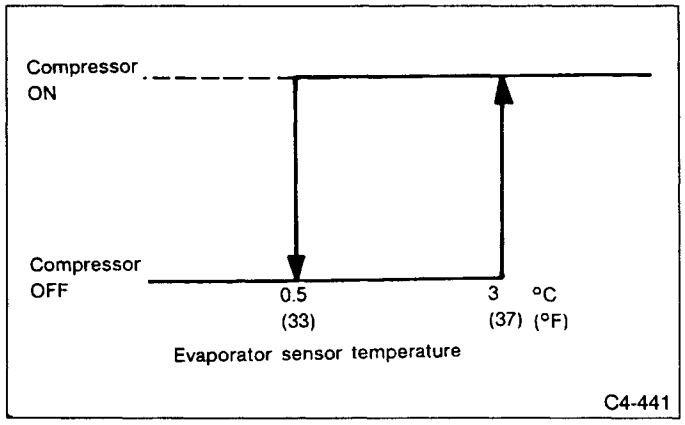

Fig. 80

3) Quick cool-down control [When AUTO switch is ON]
If the auto amplifier decides from the overall signal T that maximum cooling capacity is required, it then maximizes the compressor delivery up to a certain moment.
If the auto amplifier decides that maximum cooling capacity is not needed, it then changes the compressor delivery to the variable control zone.

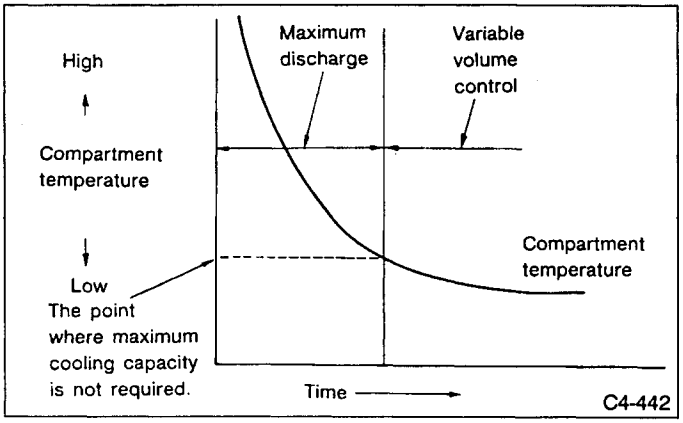

Fig. 81

If the evaporator outlet air temperature is lower than 3°C (37°F) for more than five minutes, the compressor changes from maximum delivery mode to variable delivery mode.

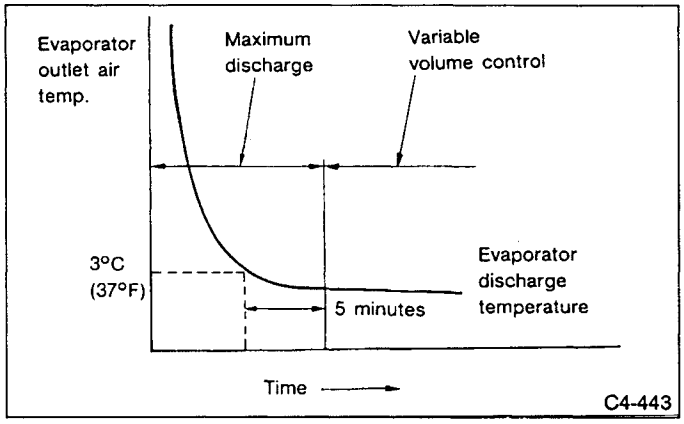

Fig. 82

4) Low temperature defrosting control
[When AUTO switch or DEF switch is ON]
The compressor delivery is varied corresponding to the ambient temperature so that the evaporator outlet air temperature can be kept within the range of 1 — 3°C (34 — 37°F). When the CIRC switch is OFF, the temperature is detected by the refrigerant temperature sensor.

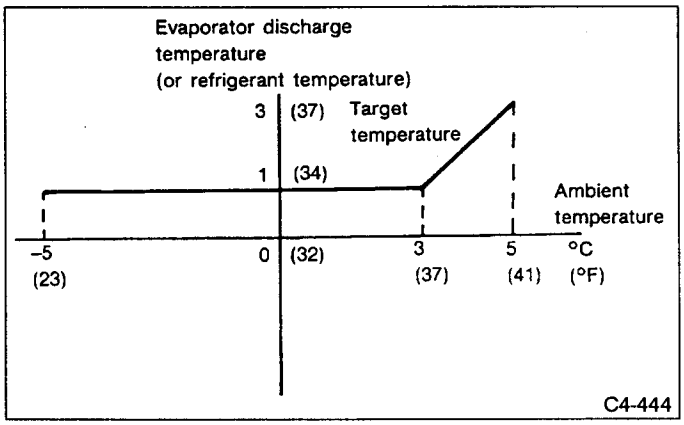

Fig. 83

Evaporator protection against freezing
[When AUTO switch or DEF switch is ON and CIRC switch is ON (RECIRC)]
The compressor magnet clutch is turned OFF depending on the temperature detected by the evaporator sensor.

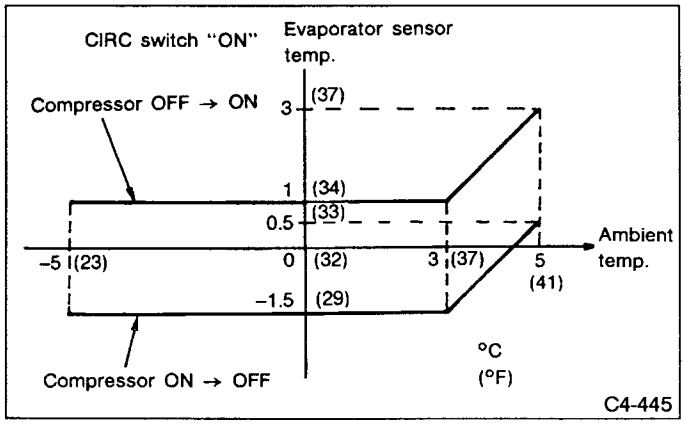

Fig. 84

[When AUTO switch or DEF switch is ON and CIRC switch is OFF (AUTO)]
The compressor is turned OFF depending on the temperature detected by the refrigerant temperature sensor.

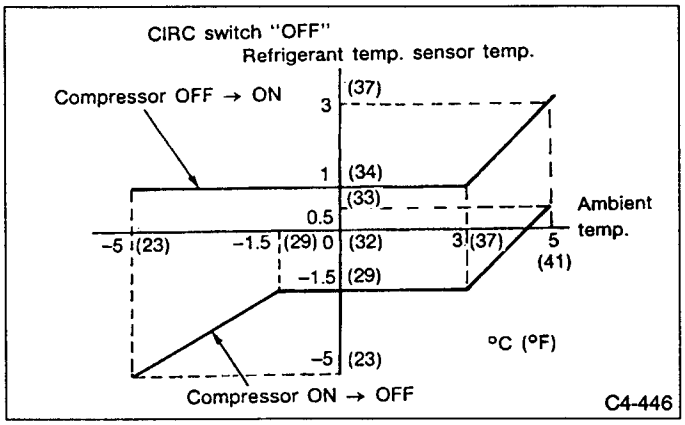

Fig. 85

5) Control by engine control unit (MPFI unit) signal
The engine control unit issues a compressor delivery reduction demanding signal (MPFI unit signal) to the auto amplifier. The auto amplifier, when receiving this signal, controls the solenoid actuator current as shown below.

MPFI signal	Solenoid actuator current
A	Ordinary temperature control
B	0.3(A)
C	0.45(A)
D	0.6(A)
E (Compressor OFF signal)	0(A)
Fault	0.6(A)

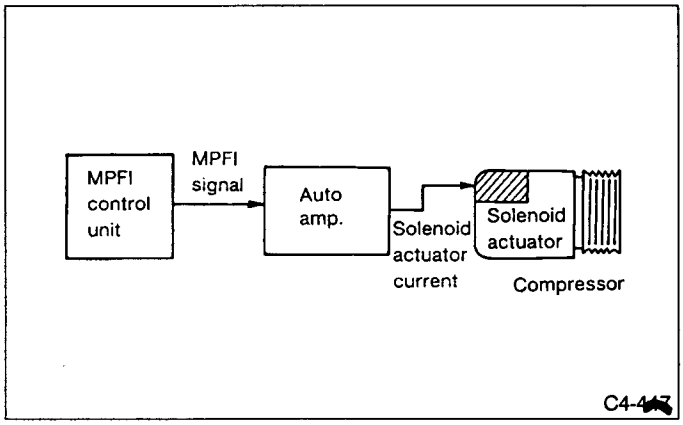

Fig. 86

The engine control unit (MPFI unit) issues the MPFI signal as mentioned above to the auto amplifier.

(1) When engine water temperature is abnormally high
If the engine water temperature rises abnormally, the MPFI unit issues signal A, B, C, D, or E depending on the engine water temperature.
(2) When compressor is turned OFF
When the compressor is turned OFF by the switch operation, the MPFI unit issues signal D (solenoid actuator current 0.6A) for approx. seven seconds before turning OFF.

These control items (1) and (2) are not performed by the auto amplifier.

6) Compressor protection in case of air conditioner trouble
If a trouble occurs in the air conditioner system and if, for example, no air blow is generated, then, the compressor is turned OFF depending on the temperature detected by the refrigerant temperature sensor.

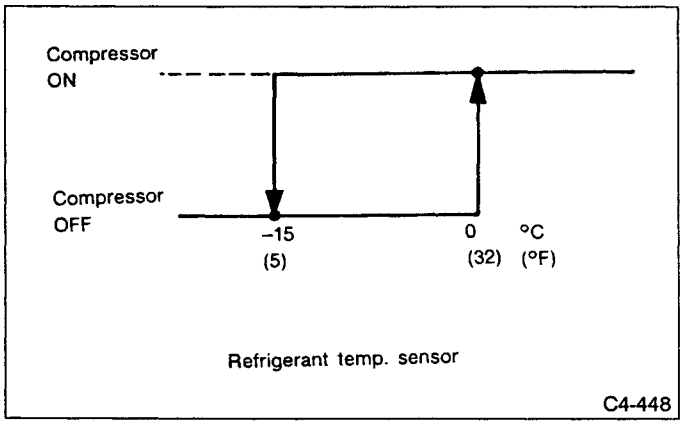

Fig. 87

7) Full-throttle control
When the throttle opening is maximum, the engine control unit (MPFI unit) turns the air conditioner relay OFF for a period of up to twenty seconds, thereby turning OFF the compressor.

This control is not performed by the auto amplifier.

6. AUTOMATIC CONTROL OF AMBIENT TEMPERATURE CORRECTION

The temperature data obtained by the ambient sensor is sent to the auto amplifier as the ambient temperature. Even if the ambient sensor measurement is influenced by the radiator heat and a sudden abnormal rise in temperature is measured, the auto amplifier will not directly respond to such a temperature rise; it only responds slowly owing to this correction function.

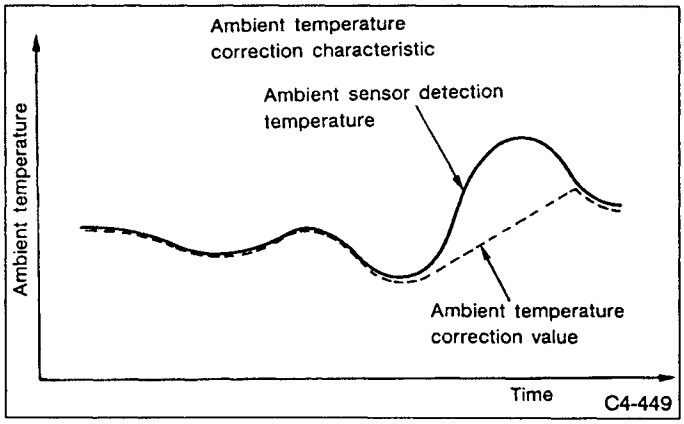

Fig. 88

7. COOLING FAN CONTROL

Electric cooling fans are adopted for cooling the radiator and condenser, and fan speed is controlled in three steps, HI, MED, and LO to reduce fan noise.

Fan speed	Power consumed
LO : 1,600 rpm	115W
MED : 1,950 rpm	145W
HI : 2,300 rpm	175W

This control is not performed by the auto amplifier.

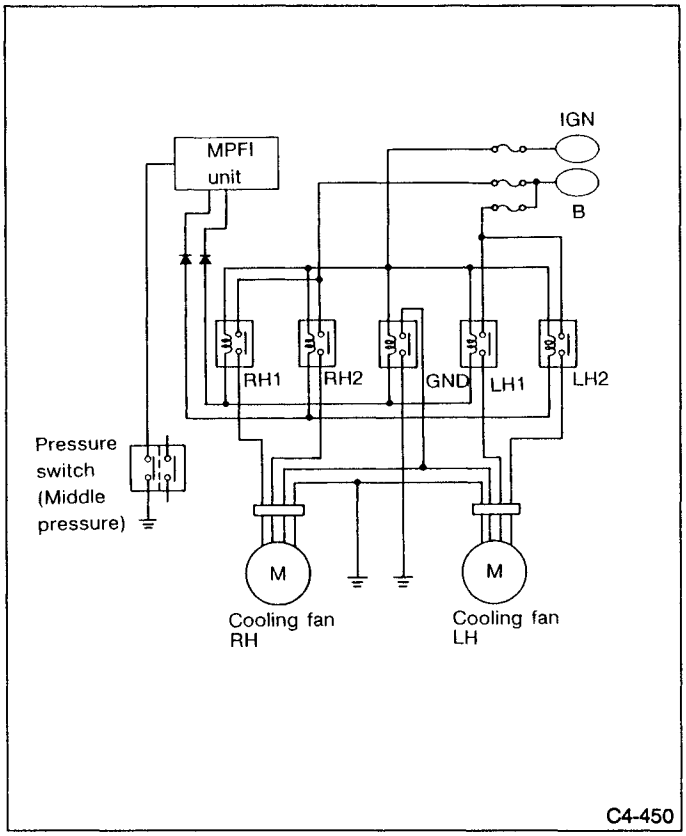

Fig. 89

	Input signal				Output signal		Cooling fan operation status	
	Compressor signal	Vehicle speed X: 6 (10) 12 (20) MPH (km/h)	Engine water temperature X: 192 (89) 203 (95) °F (°C)	Air conditioner intermediate pressure switch X: 1,275 ± 147 (13 ± 1.5) 1,569 ± 127 (16 ± 1.3) kPa (kg/cm²)	MPFI unit signal Terminal ①	 Terminal ②	Main (RH)	Sub. (LH)
1	ON	X	X	X	ON	—	Low	Low
2				O	—	ON	Medium	Medium
3			O	X	—	ON	Medium	Medium
4				O	ON	ON	High	High
5		O	X	X	ON	—	Low	Low
6				O	ON	ON	High	HIgh
7			O	X	ON	ON	High	High
8				O	ON	ON	High	High
9	OFF	X	X		—	—	Off	Off
10			O		ON	—	Low	Low
11		O	X		—	—	Off	Off
12			O		—	ON	Medium	Medium

8. SET TEMPERATURE CORRECTION

When heating or cooling the compartment, and if the occupant does not feel comfortable at the preset temperature, he can then adjust the compartment temperature in three steps depending on the ambient temperature measured by the ambient sensor.

(1) Set to step 4 in the self-diagnosis mode. (Ref. to T400.)

(2) Press the UP or DOWN switch to change the correction.

Switch operation	Display	Ambient temperature correction
Press UP switch	10	• When ambient temperature is low, compartment temperature is increased above the standard level. • When ambient temperature is high, compartment temperature is decreased below the standard level.
—	05	Standard (No correction is made)
Press DOWN switch	00	• When ambient temperature is low, compartment temperature is decreased below the standard level. • When ambient temperature is high, compartment temperature is increased above the standard level.

When the battery is removed, the correction is set at the standard status with a display of "05". Verify the previous correction in advance with the display showing step 4 in the self-diagnosis mode.

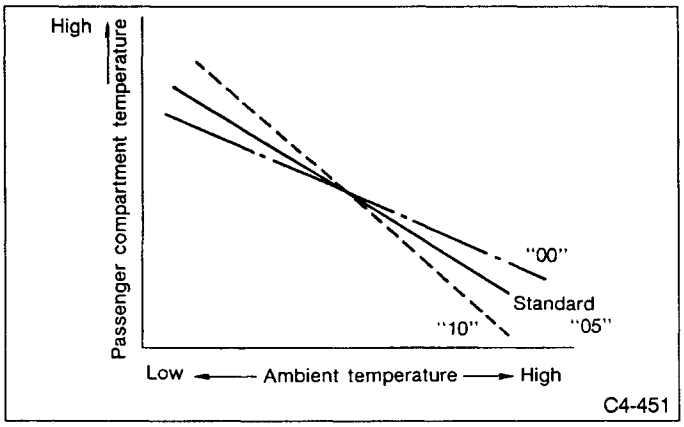

Fig. 90

9. SWITCHING BETWEEN °C AND °F

Switching is made by connecting or disconnecting a connector.

(Under A pillar lower trim driver side: B33)

- connecting — °F
- disconnecting — °C

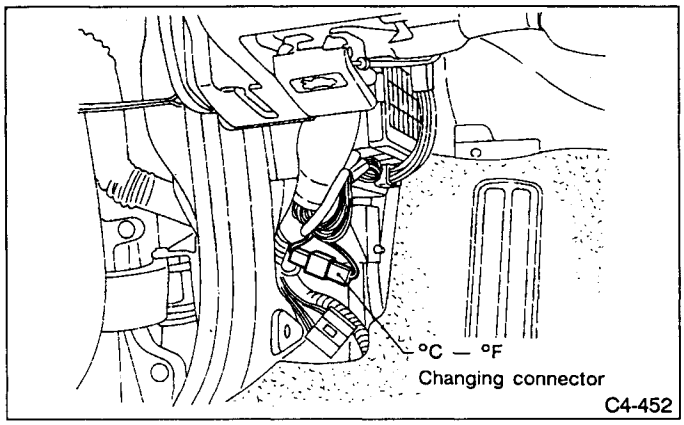

Fig. 91

S SPECIFICATIONS

Item			Specifications
Type of air conditioning			Reheat air-mix. type
Cooling capacity (IMACA)			5.117 kW (4,400 kcal/h, 17,459 BTU/h)
Mass air flow rate			460 m^3/h (16,243 cu ft/h)
Refrigerant			R134a (CH_2FCF_3) 0.65 kg (1.43 lb)
Compressor		Type	Variable displacement wobble plate
		Discharge	Max. 167 cm^3 (10.19 cu in)/rev
		Max. permissible speed	8,400 rpm
		Compressor oil	ZXL100PG 150 cm^3 (9.15 cu in)
Magnet clutch		Type	Dry single-disc type
		Power consumption	Less than 45W
		Type of belt	V-Ribed 4PK
		Pulley dia. (effective dia.)	120 mm (4.72 in)
		Pulley ratio	1.11
Condenser		Type	Multi-flow (Corrugated fin)
		Core face area	0.161 m^2 (1.73 sq ft)
		Core thickness	18.7 mm (0.736 in)
Receiver drier		Effective inner capacity	290 cm^3 (17.70 cu in)
		Desiccant	Zeolite 100 g (3.53 oz)
Expansion valve		Type	External equalizing
Evaporator		Type	Laminated
		Dimensions (W x H x T)	224 x 235 x 74 mm (8.82 x 9.25 x 2.91 in)
Heater unit		Heating capacity	4.768 kW (4,100 kcal/h, 16,269 BTU/h)
		Heater core size (Height x Length x Width x Thickness)	192.4 x 152.0 x 25.0 x 1.8 mm (7.57 x 5.98 x 0.984 x 0.071 in)
Blower fan		Fan type	Sirocco fan
		Outer diameter x width	150 x 65 mm (5.91 x 2.56 in)
		Power consumption	250W at 12.5V
Fan control (Main fan)		Motor type	Magnet
		Power consumption	175W at 12V
		Fan outer diameter x blade	320 mm (12.60 in) x 4
Fan control (Sub fan)		Motor type	Magnet
		Power consumption	175W at 12V
		Fan outer diameter x blade	320 mm (12.60 in) x 5
Compressor relief valve operating pressure		kPa (kg/cm^2, psi)	3,629 ± 363 (37 ± 3.7, 526 ± 53)
Trinary switch (Pressure switch)	Low-pressure operating pressure kPa (kg/cm^2, psi)	ON → OFF	118 ± 20 (1.2 ± 0.2, 17.1 ± 2.8)
		OFF → ON	127 ± 29 (1.3 ± 0.3, 18 ± 4)
	High-pressure operating pressure kPa (kg/cm^2, psi)	ON → OFF	2,648 ± 196 (27 ± 2, 384 ± 28)
		OFF → ON	$1,471^{+196}_{-98}$ ($15^{+2.0}_{-1.0}$, 213^{+28}_{-14})
	Intermediate-pressure switch operating pressure (fan control) kPa (kg/cm^2, psi)	OFF → ON	1,569 ± 127 (16 ± 1.3, 228 ± 18)
		ON → OFF	1,275 ± 147 (13 ± 1.5, 185 ± 21)
Sensors	In-vehicle sensor	Resistance	3 kΩ at 25°C (77°F)
	Ambient sensor	Resistance	3 kΩ at 25°C (77°F)
	Water temperature sensor	Resistance	3 kΩ at 25°C (77°F)
	Evaporator sensor	Resistance	6.194 kΩ at 0°C (32°F)
	Refrigerant temperature sensor	Resistance	6.194 kΩ at 0°C (32°F)
	Sunload sensor	Current measuring type	Photo diode; 0.4 mA at 660 kcal/m^2h
Control components	Auto amplifier		With microcomputer incorporated
	Air mix door motor	Power consumption	1.2W at 12V
	Mode door motor	Power consumption	1.2W at 12V
	Intake door motor	Power consumption	1.2W at 12V

C COMPONENT PARTS

1. Air Conditioning System

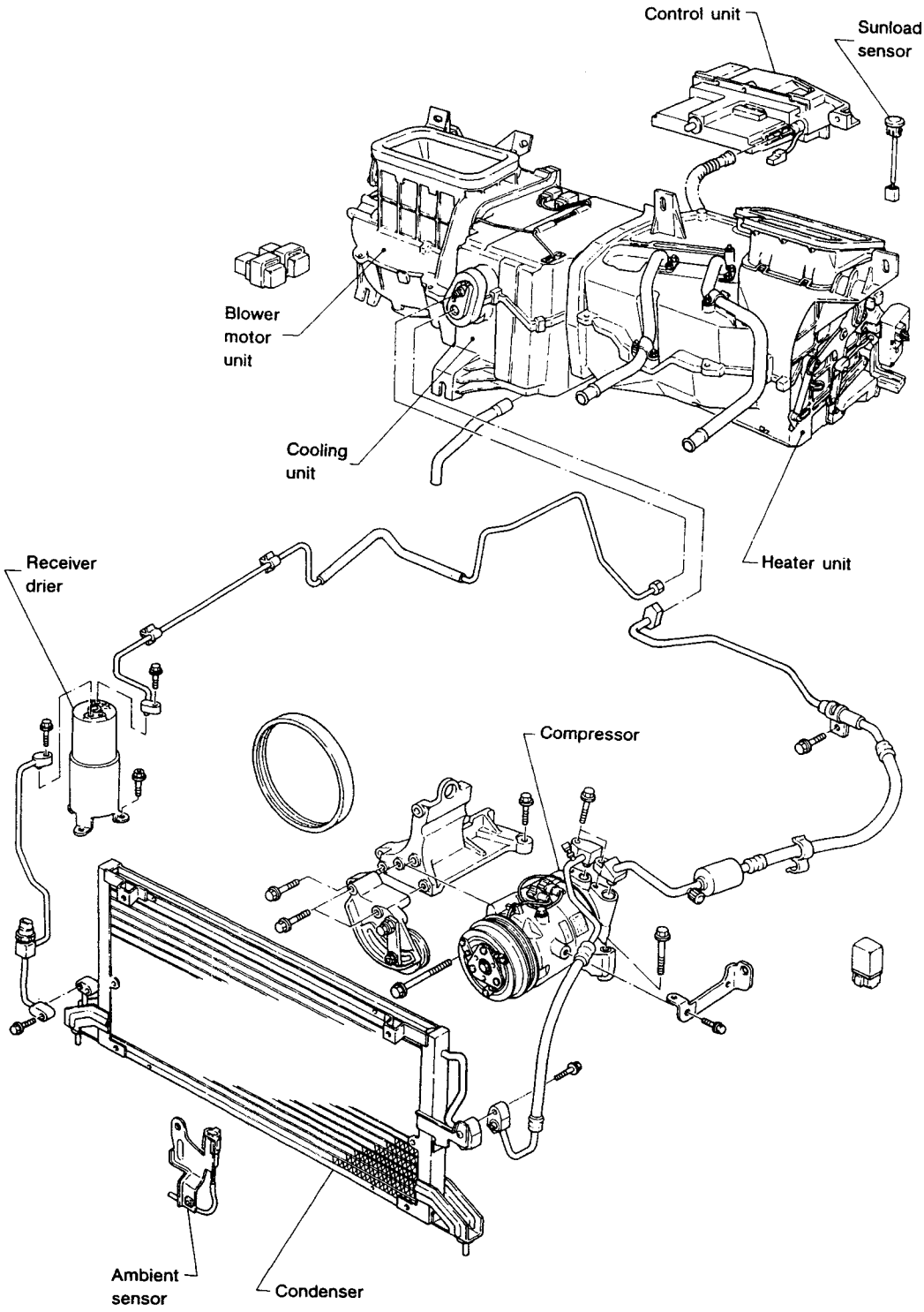

C4-1018

Fig. 16

W SERVICE PROCEDURE

1. Safety Precautions

1. R134a AIR CONDITIONING SYSTEM

Component parts of the cooling system, refrigerant, compressor oil, and other parts are not the same for the R134a system and the older R12 system. Do not interchange parts or liquid.

Vehicles with R134a air conditioning systems, use only R134a parts that are indicated on a label attached to the vehicle. Before performing any maintenance, verify the type of air conditioning system installed in the vehicle.

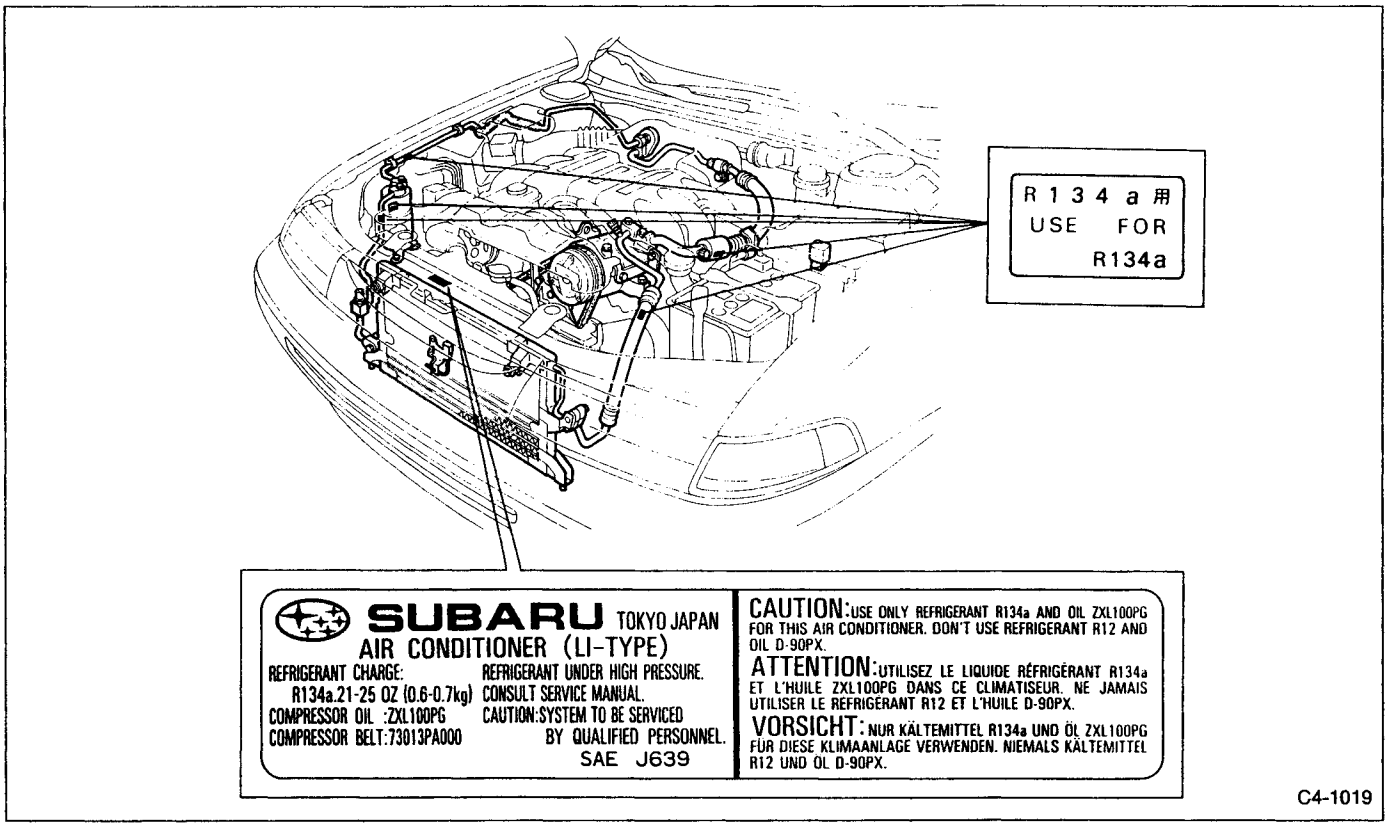

Fig. 17

2. COMPRESSOR OIL

Do not use any compressor oil that is not specifically designated for the R134a air conditioning system; only use ZXL100PG. Also, do not use R134a compressor oil in the R12 air conditioning system. If compression oils are mixed, poor lubrication will result and the compressor itself may be damaged.

Because R134a compressor oil is very hygroscopic (easily absorbs moisture), when parts of the air conditioning system are being removed, quickly install a blind plug to prevent contact with the outside air. Also, always make sure that the service container for compressor oil is tightly closed except when in use. Store compressor oil in a tightly closed container.

3. REFRIGERANT

Do not put R12 refrigerant into a R134a air conditioning system. Also, do not put R134a refrigerant into a R12 air conditioning system. If the wrong refrigerant is used, poor lubrication will result and the compressor itself may be destroyed.

4. HANDLING OF REFRIGERANT

Because refrigerant boils at approx. –30°C (–22°F) at sea level, it is cold enough to give you severe frostbite. Always wear goggles to protect your eyes and gloves to protect your hands. Also, even under the pressures normally found in R-12 containers, refrigerant will boil with the addition of heat. This could raise the pressure inside the container to a dangerous level.

Never expose a can of R134a to direct sunlight, or to temperatures over 40°C (104°F). One more thing to remember about R134a is that when it is exposed to an open flame or to hot metal, it forms phosgene, a deadly gas. Do not discharge R134a into the atmosphere on purpose. Always read and follow the precautions on the R134a bottle.

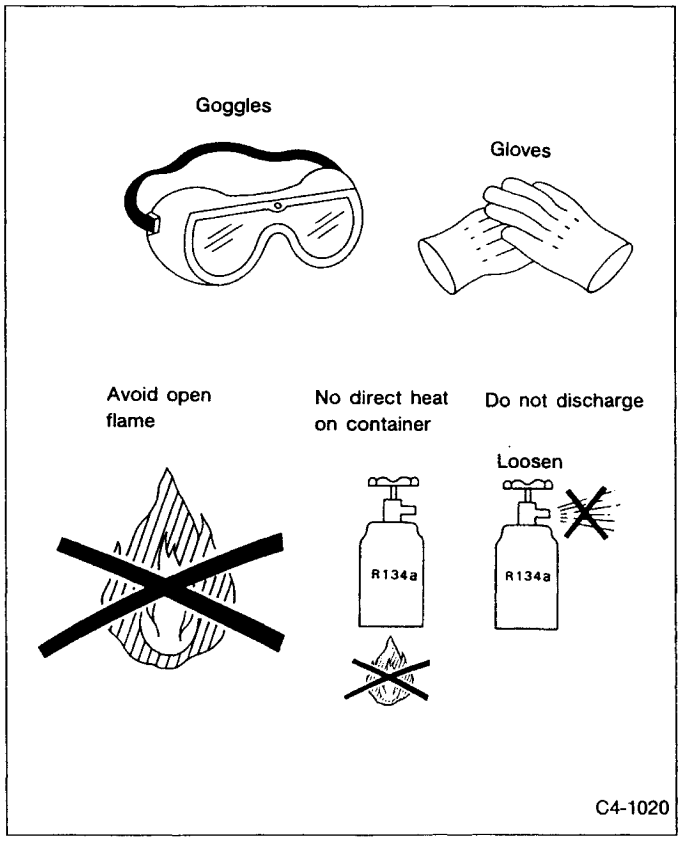

Fig. 18

2. Basic Information

1) The combination of moisture and refrigerant forms acid, therefore, moisture should not be allowed to enter the refrigerant.

2) Refrigerant oil readily absorbs moisture, therefore, keep refrigerant oil containers tightly capped.

3) The process of evacuating the system is performed to remove small amounts of moisture. This is accomplished by lowering the pressure inside the system, which allows the moisture to boil off, in much the same way that a pot of water will boil away to nothing given enough time. The evacuation process does not suck the moisture out of the system.

4) A minimum level of vacuum must be reached to satisfactorily evacuate the system. This minimum level of vacuum depends on the temperature inside the system. The chart below shows the level of vacuum required to boil water at various temperatures.

Additionally, the vacuum level shown on a gauge will read approx. 4 kPa (25 mmHg, 1 inHg) less for each 1000 ft. above sea level, due to the decrease in atmospheric pressure at altitude.

Vacuum level required to boil water (at sea level)

Temperature °C (°F)	Vacuum kPa (mmHg, inHg)
1.7 (35)	100.9 (757, 29.8)
7.2 (45)	100.6 (754, 29.7)
12.8 (55)	99.9 (749, 29.5)
18.3 (65)	99.2 (744, 29.3)
23.9 (75)	98.5 (739, 29.1)
29.4 (85)	97.2 (729, 28.7)
35 (95)	95.8 (719, 28.3)

3. Tools and Equipment

The following section provides information about the tools and equipment that will be necessary to properly service the air conditioning system.
Since equipment may vary slightly depending on the manufacturer, it is important to always read and follow the manufacturer's instructions.

When working on vehicles with the R134a system, only use R134a specified tools and parts. Do not mix with R12 tools and parts. If R134a and R12 refrigerant or compressor oil is mixed, poor lubrication will result and the compressor itself may be destroyed.

In order to help prevent mixing R134a and R12 parts and liquid, the tool and screw type and the type of service valves used are different. The gas leak detectors for the R134a and R12 systems must also not be interchanged.

	R134a	R12
Tool & screw type	Millimeter size	Inch size
Valve type	Quick joint type	Screw-in type

Tools and Equipment	Description
WRENCHES Various **WRENCHES** will be required to service any air conditioning system. A 7 to 40 N·m (0.7 to 4.1 kg-m, 5 to 30 ft-lb) torque wrench with various crowfoot wrenches will be needed. Open end or flare nut wrenches will be needed for back-up on the tube and hose fittings.	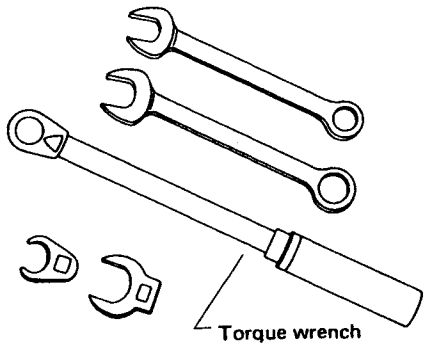 B4-669-1 *Fig. 19*
APPLICATOR BOTTLE A small **APPLICATOR BOTTLE** is recommended to apply refrigerant oil to the various parts. They can be obtained at a hardware or drug store.	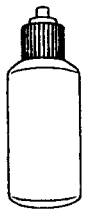 B4-669-2 *Fig. 20*
MANIFOLD GAUGE SET A **MANIFOLD GAUGE SET** (with hoses) can be obtained from either a commercial refrigeration supply house or from an auto shop equipment supplier.	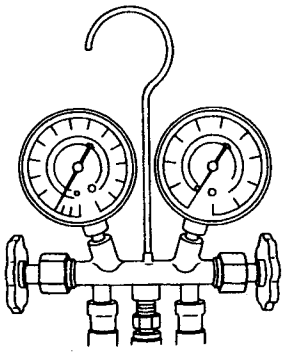 B4-669-3 *Fig. 21*

Tools and Equipment	Description
REFRIGERANT RECOVERY SYSTEM **REFRIGERANT RECOVERY SYSTEM** recycles refrigerant rather than discharging it into atmosphere. Must be U.L. Approved. Kent Moore ACR-4 or equivalent is recommended.	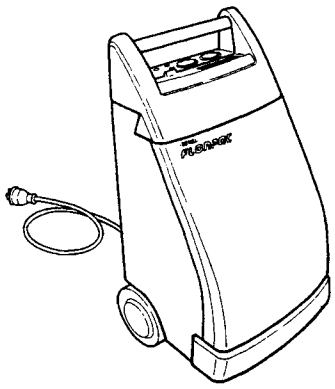 C4-617 *Fig. 22*
SYRINGE A graduated plastic **SYRINGE** will be needed to add oil back into the system. The syringe can be found at a pharmacy or drug store.	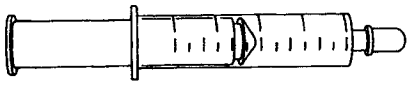 B4-669-6 *Fig. 23*
VACUUM PUMP A **VACUUM PUMP** (in good working condition) is necessary, and may be obtained from either a commercial refrigeration supply house or an automotive equipment supplier. Included with Kent Moore ACR-4.	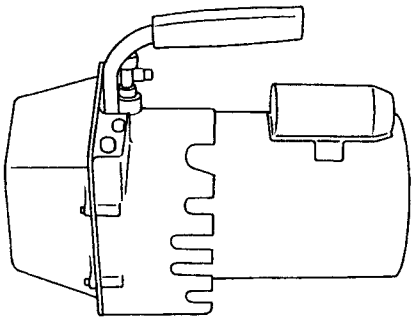 B4-670-1 *Fig. 24*

THERMOMETERS

Pocket **THERMOMETERS** are available from either industrial hardware store or commercial refrigeration supply houses.

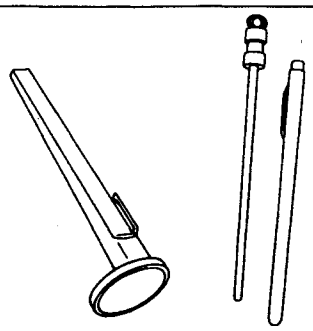

B4-670-3

Fig. 26

ELECTRONIC LEAK DETECTOR

An **ELECTRONIC LEAK DETECTOR** can be obtained from either a specialty tool supply or an air conditioning equipment supplier.

Must be capable of detecting R-134a Refrigerant.

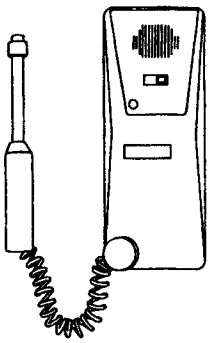

B4-670-4

Fig. 27

WEIGHT SCALE

A **WEIGHT SCALE** such as an electronic charging scale or a bathroom scale with digital display will be needed if a 13.6 kg (30 lb) refrigerant container is used.

Included with Kent Moore ACR-4.

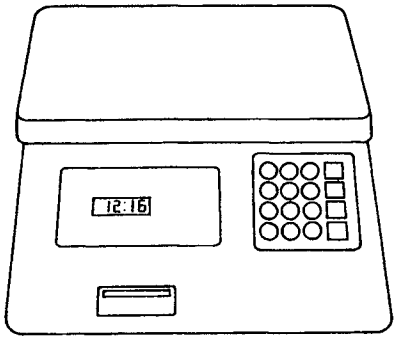

B4-670-5

Fig. 28

4. O-ring Connections

1. GENERAL

The following points should be kept in mind when assembling O-ring connections:

1) Avoid unnecessary handling and contact of O-rings with your hands, since even clean fingers contain body acids, which can contaminate the O-ring surface.

2) Do not handle O-rings with gloves, shop towels, etc., since lint particles may cling to the O-ring, possibly causing a leak upon assembly.

3) Always lubricate O-rings before assembly to allow the O-ring to seat itself properly.

4) Be certain to use torque wrenches when tightening O-ring fittings, because overtightening can not only damage the O-ring, but it can distort the tube end as well.

2. REMOVE PROTECTIVE SEALS

Just prior to making the connection, remove the protective seals.

If for any reason you have to stop before making a connection, recap the tube, component or fitting.

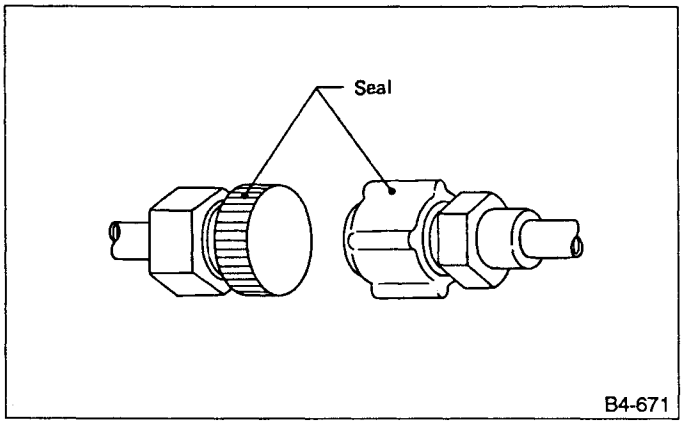

Fig. 104

Visually inspect the O-ring surface, the O-ring mating surface, the threads and the connection points. If a defective part is found, replace it.

The O-ring must sit square against the tube bead. If necessary, slide the O-ring into proper position **with clean hands.**

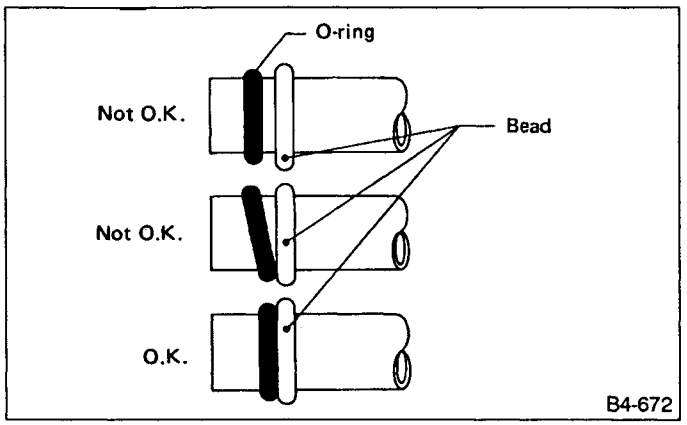

Fig. 105

3. LUBRICATE THE COMPONENTS

For lubrication of the components, use only refrigerant oil as described in the appropriate service manual. Apply oil from an oil squirt gun or other closed container. Do not use your finger to spread the oil over the O-ring.

Apply a small amount of refrigerant oil to the top and sides of the O-ring. The area covered by oil should include the O-ring and the tube bead.

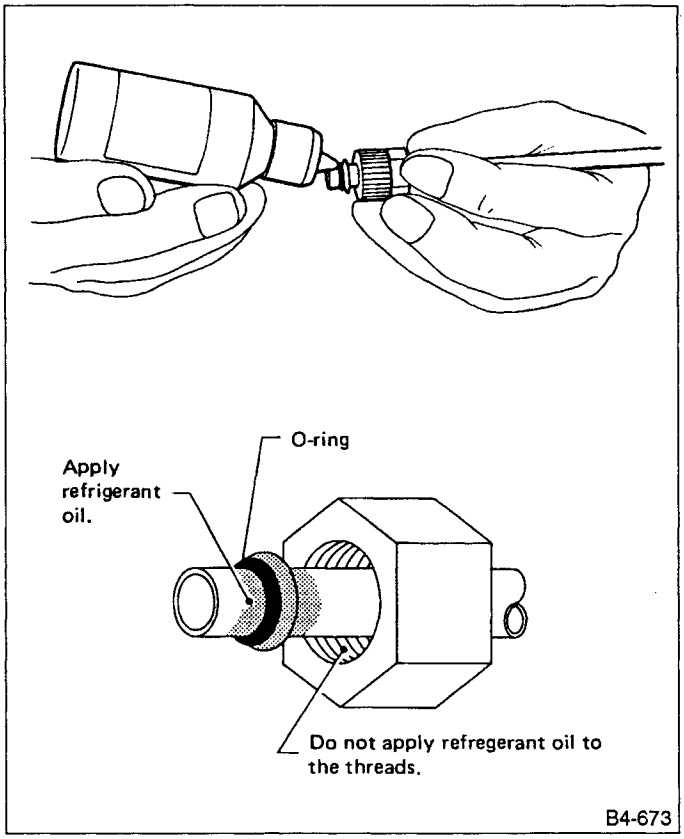

Fig. 106

4. MAKE THE CONNECTION

Carefully align the tube/O-ring assembly with the mating component.

Insert the tube/O-ring into the receiving component until the O-ring is fully seated.

Once the O-ring is fully seated, start the nut **by hand** and tighten **by hand** until snug.

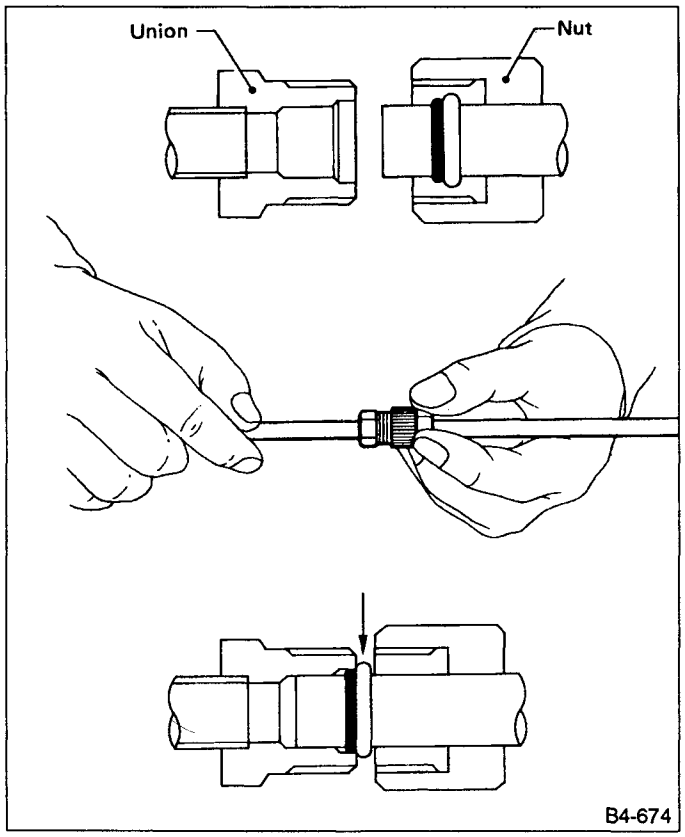

Fig. 107

5. TORQUE THE FITTING

Using a back-up wrench in conjunction with a calibrated torque wrench, torque the connection to the midrange of the specification.

After completion of torquing, use a clean shop towel to remove any excess oil from the connection or any oil that may have dripped on the vehicle body or other parts.

If a leak is suspected after torquing, do not retighten or retorque the connection. Instead, disassemble the connection, remove the O-ring, and inspect the O-ring, threads, joints and seating surfaces.

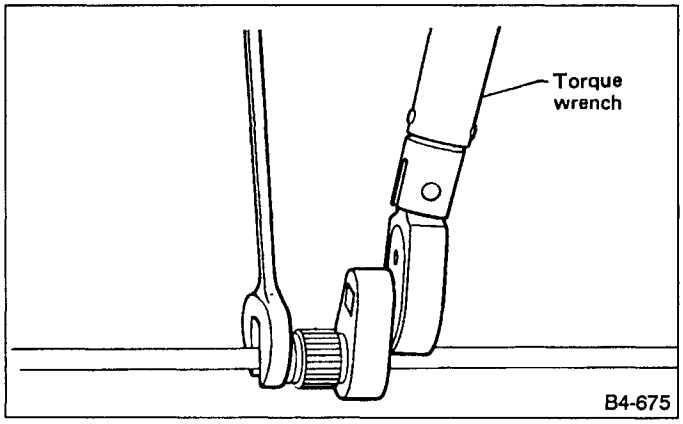

Fig. 108

5. Refrigerant Service Procedure

1. WORK FLOW

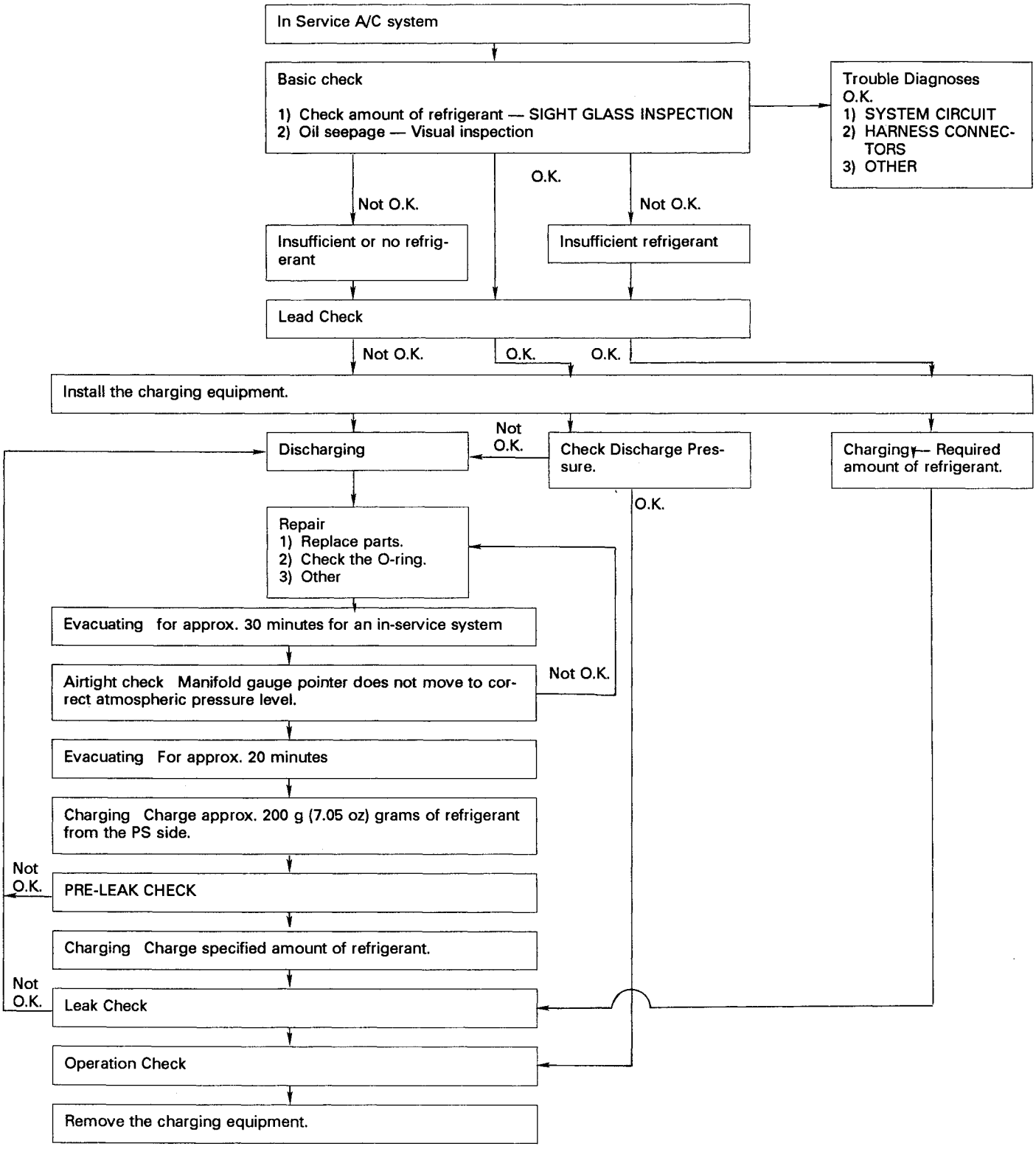

6. Discharge the System

The following points should be kept in mind when discharging the system.

1) Be certain that goggles and gloves are worn.

2) Connect refrigerant recovery system to gauge manifold to recycle refrigerant from the system.

1. CONNECTING THE MANIFOLD GAUGE SET

1) Close the high and low side manifold valves

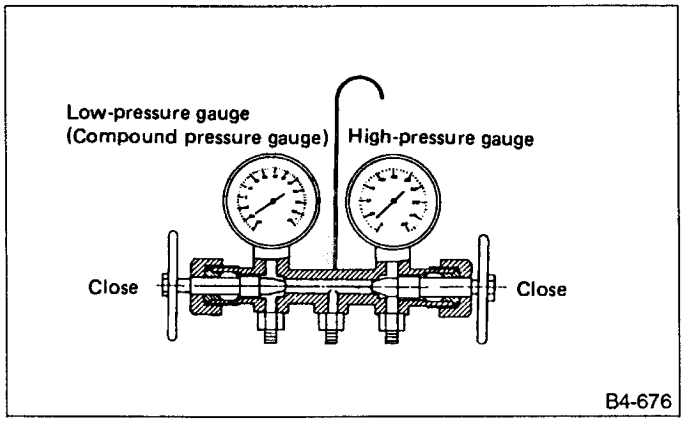

Fig. 109

2) Attach the high- and low-pressure manifolds to the high and low services port on the vehicle.

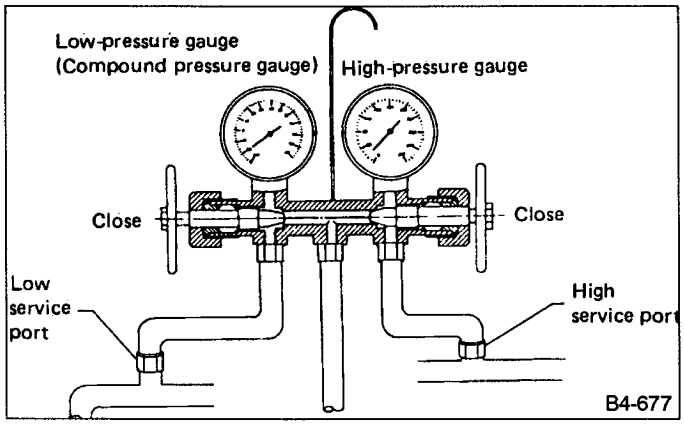

Fig. 110

2. PREPARE FOR DISCHARGING

Connect center manifold hose to refrigerant recovery system to recycle refrigerant.

7. Evacuating and Charging

The following points should be kept in mind when evacuating and charging with a manifold gauge set:
1) Be certain that goggles and gloves are worn.
2) If bulk refrigerant [13.6 kg (30 lb) canister] is used, be certain to weigh the charge amount carefully, using the correct equipment, to avoid overcharging the system.
3) The charging procedure described in this section begins by charging **liquid refrigerant into the high- pressure side of the system with the engine off.** The procedure is completed by charging refrigerant **vapor** into the low-pressure side of the system with the engine running.

Never open the high-pressure manifold valve when the engine is running.

1. CONNECT THE GAUGE SET

1) Close the high- and low-pressure manifold valves

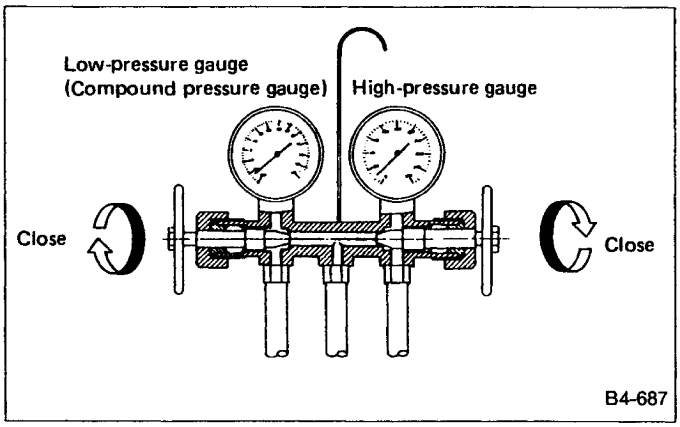

Fig. 29

2) Attach the low-pressure manifold hose to the low- pressure service port on the vehicle. Check the low- pressure gauge. If more than 68.6 kPa (0.70 kg / cm^2, 10.0 psi) is indicated, discharge the system prior to charging.
3) Attach the high-pressure manifold hose to the high-pressure service port on the vehicle.
4) Connect the center hose from the manifold to the vacuum pump.
5) Turn on the vacuum pump.
6) Slowly open the low-pressure manifold valve.
7) When the low-pressure gauge reaches approximately 66.43 kPa (498.3 mmHg, 19.62 inHg), slowly open the high-pressure manifold valve.

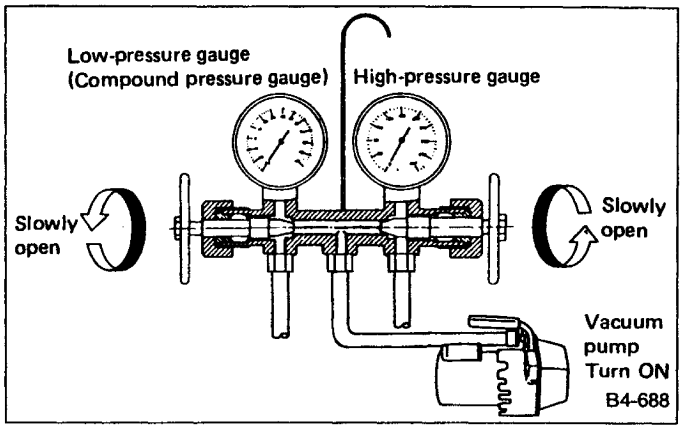

Fig. 30

8) Maintain a minimum vacuum level of 100.56 kPa (754.4 mmHg, 29.70 inHg) for a minimum of 15 minutes on a new system or 30 minutes for an in-service system.

The gauge will read 4 kPa (25 mmHg, 1 inHg) less for every 304.8 m (1,000 ft) above sea level.

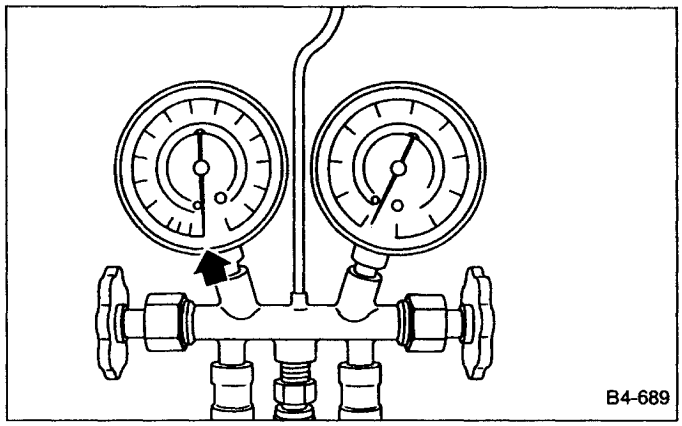

Fig. 31

2. PERFORM A VACUUM LEAK TEST

1) After 15 minutes (or more) of evacuation, close the high-pressure manifold valve.
2) Close the low-pressure manifold valve.
3) Turn off the vacuum pump.
IF the vacuum level has changed more than 4 kPa (25 mmHg, 1 inHg), perform an R134a leak test.
IF the vacuum reading is about the same as noted in step 2-4), continue on to step 2-6).

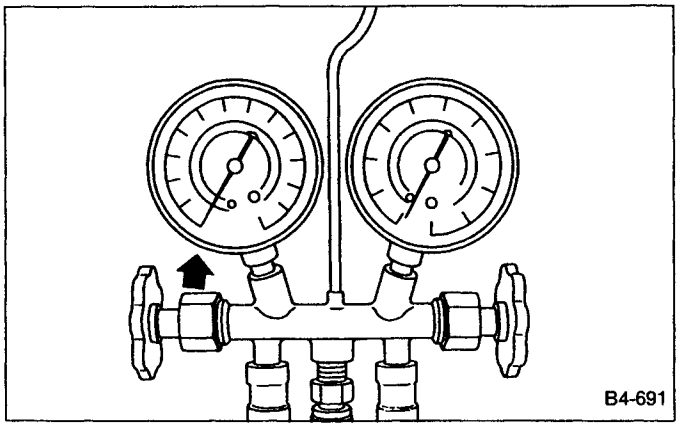

Fig. 32

6) Carefully attach the can tap to the refrigerant can by following the can tap manufacturer's instructions.
7) Disconnect the center manifold hose from the vacuum pump and connect the hose to the tap valve.

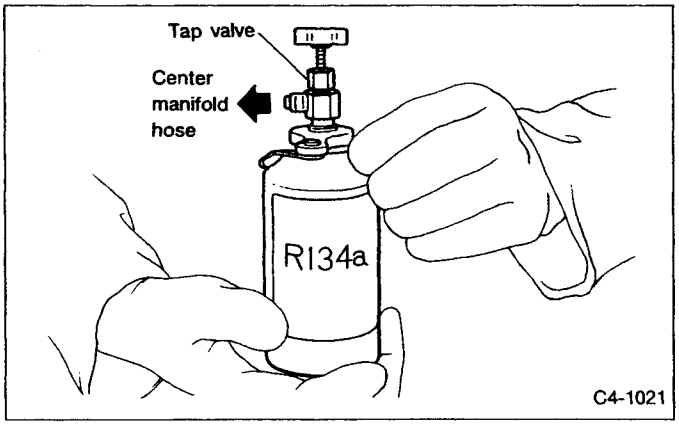

Fig. 33

8) If a 13.6 kg (30 lb) container of refrigerant is used a weight scale will be needed. This scale is to determine the amount of refrigerant that is used.
Connect the center hose from the manifold to the valve. Place the 13.6 kg (30 lb) container on the scale, valve end down.

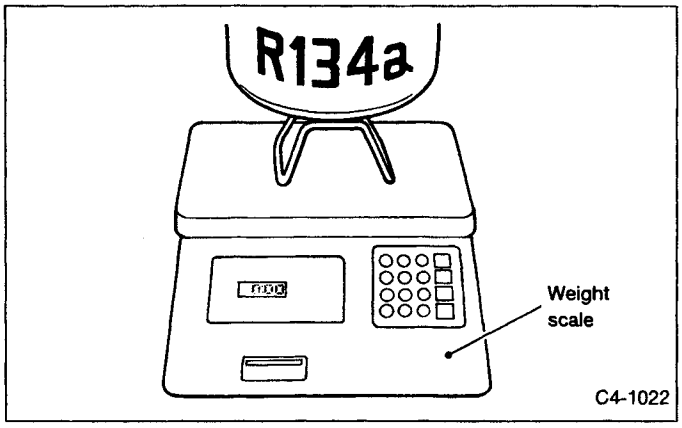

Fig. 34

3. PURGE THE CENTER HOSE

1) Verify that all three hose connections are tight at the manifold gauge set.
2) Open the valve on the R134a source.

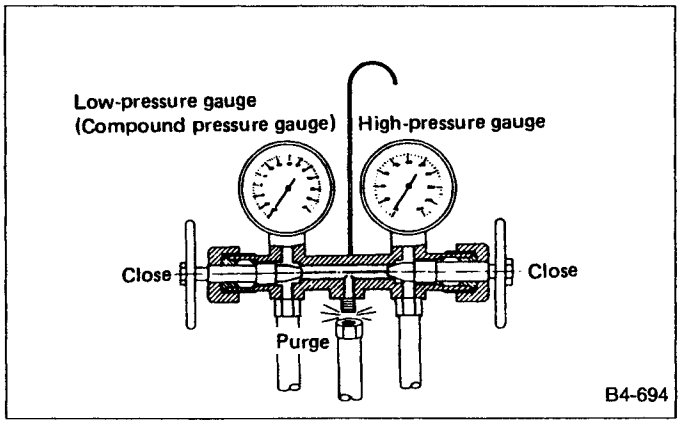

Fig. 35

4. INITIAL CHARGING THROUGH THE HIGH SIDE

1) Connect a tachometer to the engine.
2) **With the engine off**, start charging by slowly opening the high-pressure manifold valve.

The initial charge rate can be increased by immersing the can in lukewarm [below 38°C (100°F)] water for a short time.

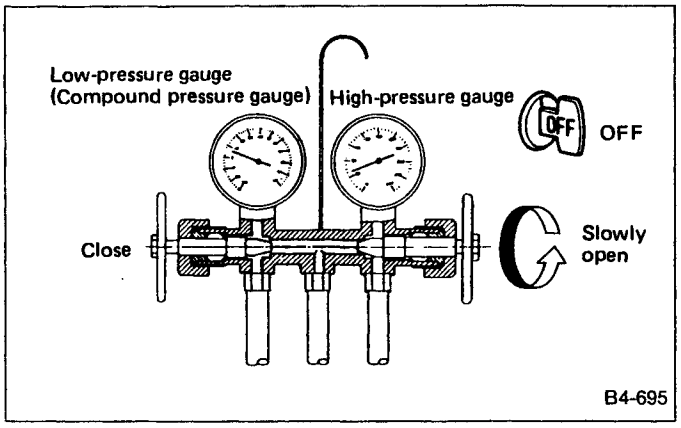

Fig. 36

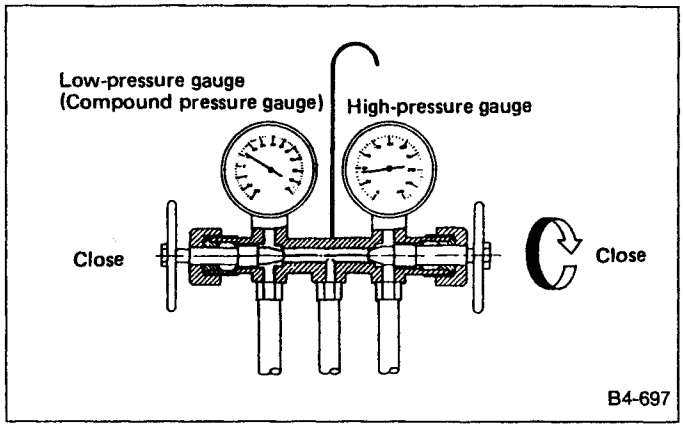

Fig. 38

5. CHECK THE GAUGE READINGS

When both the high- and low-pressure gauge readings are about equal, or the R134a source is empty, or the system has been filled to specifications, close the high- pressure manifold valve.

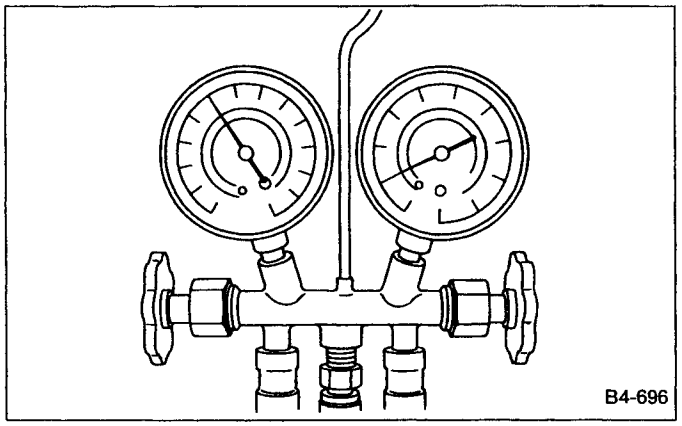

Fig. 37

6. ADD ADDITIONAL CANS

If the R134a source is exhausted, first close the high- pressure manifold valve, second, close the can tap valve, then slowly purge the refrigerant from the service hose by loosening the fitting at the can tap.

7. COMPLETE CHARGING THROUGH THE LOW SIDE

1) Verify that the high-pressure manifold valve is closed (should have already been closed).
2) Verify that the low-pressure manifold valve is closed (should have already been closed).
3) With the OFF switch on and the windows rolled down, start the engine and run at engine speed.
4) Set the temperature controls on max cold and set the blower speed on the highest setting.
5) Alternately press the AUTO and ECON switches several times at intervals of more than 10 seconds to prevent initial compressor damage due to "load shock." Finish this operation with the AUTO switch in the ON position.
6) Raise engine speed to approximately 1,500 rpm.

8. CHARGE THE SYSTEM

1) With the refrigerant source connected and the service hose purged, slowly open the low-pressure manifold valve, while checking the low-pressure gauge reading.

The refrigerant source must be positioned for vapor (valve up).

2) Keep the low side pressure below 276 kPa (2.81 kg/cm^2, 40 psi) by using the low-pressure manifold valve to regulate the flow of refrigerant into the system.

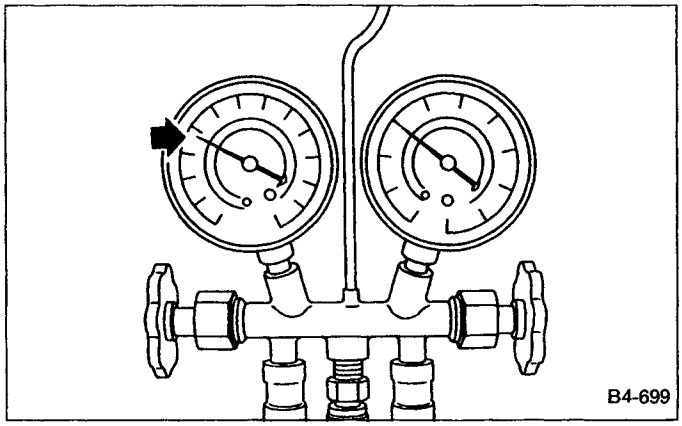

Fig. 39

3) When the system is fully charged, close the low- pressure manifold valve.
4) Close the valve at the refrigerant source.

Refrigerant capacity Unit: kg (lb)

Refrigerant	Minimum	Maximum
R134a	0.6 (1.3)	0.7 (1.5)

9. COMPLETE ALL SYSTEM CHECKS

1) Evaluate the system performance (refer to performance testing section).
2) Perform leak detection test.

Always perform leak checking in an environment free of refrigerant pollution.
Do not disconnect the high- or low-pressure hoses from the vehicle before leak checking.

10. DISCONNECT THE MANIFOLD GAUGE SET

1) Remove the high- or low-pressure hoses from the service ports and install the service port caps.

8. Leak Testing

The following points should be kept in mind when conducting a refrigerant leak test.
1) The air conditioning system to be tested must have an adequate refrigerant charge to begin with.
2) The area where the leak test is conducted must be free of wind and drafts, with still air being the ideal condition.
3) The atmosphere where the leak test is conducted must be free of refrigerant contamination.
4) Operate the air conditioning system for approx. 10 minutes, then turn the engine off an begin the leak test.
5) Refrigerant gas is heavier than air, therefore always hold the probe below the connection being tested.
6) When checking for a leak along a length of hose or tube, the leak detector probe must be moved slowly, approx. 25 mm (1 in) per second making sure probe does not come in contact with the component being tested.
7) When checking for a leak at a certain point, the leak detector probe must be held at that point for at least 5 seconds.

1. CHECK THE SYSTEM PRESSURE

1) With gauges connected to the air conditioning system, operate the air conditioning and confirm that the high side pressure is above 690 kPa (7.03 kg/cm^2, 100 psi). If not, evacuate and charge the system before leak checking (refer to evacuation and charging sections).

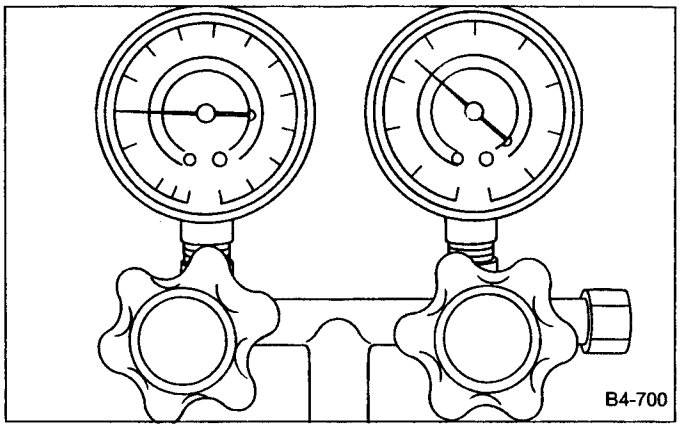

Fig. 40

2. CLEAN CONNECTIONS BEFORE TESTING

Before testing, use a clean shop towel to wipe off refrigerant oil, dirt, or foreign material from all of the connections and components to be tested.

Since refrigerant oil absorbs refrigerant, excess oil on or near a connection may falsely signal a leak.

3. CALIBRATE LEAK DETECTOR

Refer to the manufacturer's instructions for the particular type of detector used and calibrate the instrument.

Always make sure that the probe tip filter is clean and free of contamination.

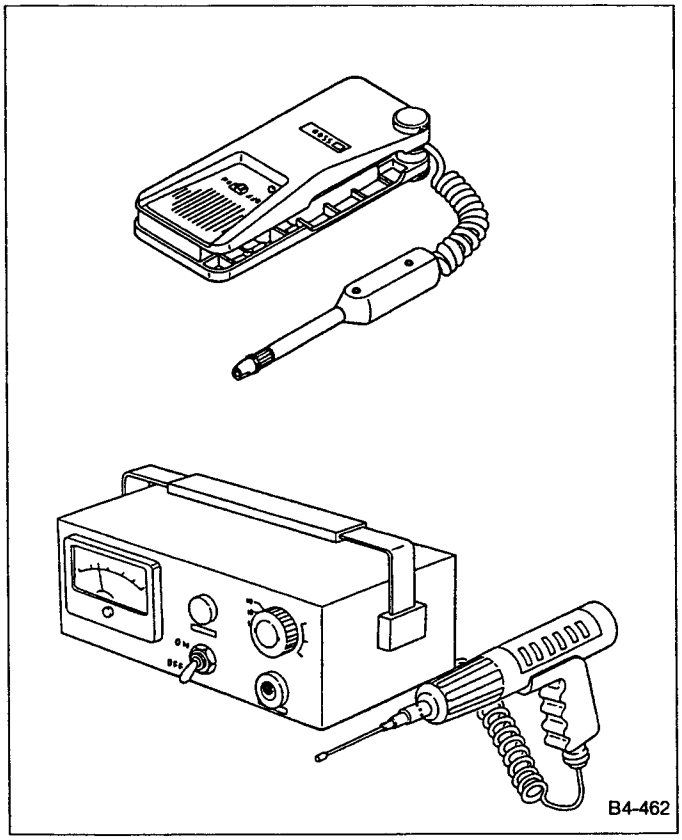

Fig. 41

9. Compressor Oil

1. COMPRESSOR OIL

1) Replenish compressor oil if any of the following arise:
   (1) Excessive refrigerant leaks
   (2) Compressor replacement
   (3) Evaporator replacement

Compressor oil replenishment quantity

Unit: mℓ (US fl oz, Imp fl oz)

Item		Replenishment amount	Remarks
Compressor replacement		70 (2.4, 2.5)	Drain oil completely from new compressor and replenish compressor oil by amount indicated at left.
Evaporator replacement		70 (2.4, 2.5)	
Receiver dryer replacement		—	Replenishment is not necessary.
Condenser replacement	Oil does not appear to leak.	—	Replenishment is not necessary.
	Oil leaks from condenser in large quantities.	50 (1.7, 1.8)	
Flexible hose/ pipe replacement	Oil does not appear to leak.	—	Replenishment is not necessary.
	Oil leaks in large quantities.	50 (1.7, 1.8)	
Refrigerant leaks	Oil does not appear to leak.	—	Replenishment is not necessary.
	Oil leaks in large quantities.	50 (1.7, 1.8)	

2) Compressor oil replenishment procedures
   (1) Measure required amount of compressor oil using volumetric cylinder.
   (2) Remove plug from upper side of compressor and pour compressor oil into plug hole.
   (3) Tighten plug.

Processes that require the containers or systems holding compressor oil to remain open should be completed quickly because R134a compressor oil easily absorbs moisture.

Tightening torque: N·m (kg-m, ft-lb)
Plug
8 — 12 (0.8 — 1.2, 5.8 — 8.7)

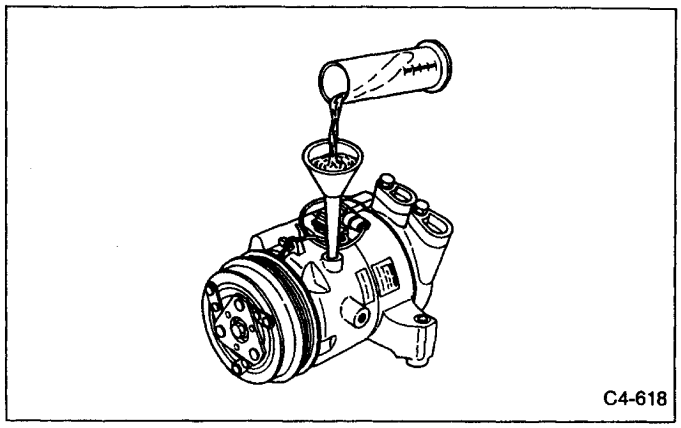

Fig. 42

2. COMPRESSOR REPLACEMENT

1) Before replacing compressor, return compressor oil that circulates along with refrigerant through the cycle to compressor.
(Compressor "oil-return" operation)
   (1) Open all doors.
   (2) Start and run engine at 800 — 1,500 rpm.
   (3) Set TEMP switch to 18°C (65°F) [max cold].
   (4) Turn DEF switch "ON".
   (5) Set FAN switch to "HI".
   After setting all switches as outlined above, continue to run engine for approximately 20 minutes.
2) If "oil-return" operation cannot be completed (due to seized or broken compressor), replace old compressor with new one, perform "oil-return" operation. Then, remove new compressor and drain excess oil.
To drain compressor oil, remove plug from upper side of compressor and turn compressor upside down to drain oil completely. Measure specified amount of oil using volumetric cylinder and pour into compressor through plug hole. Tighten plug.

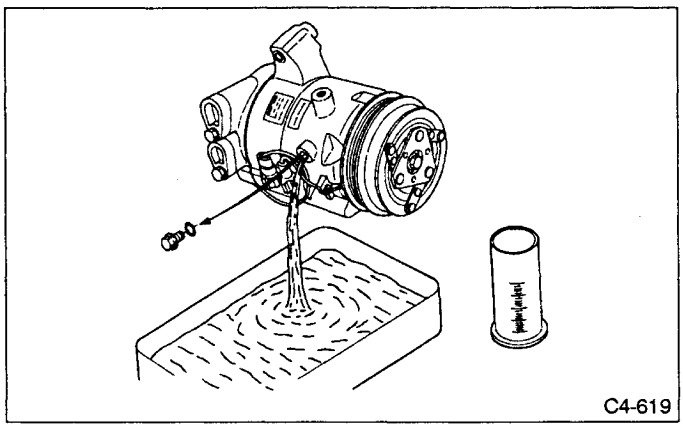

Fig. 127

10. Cooling Unit

A: REMOVAL

1) Recover refrigerant.
2) Disconnect high- and low-pressure hoses.

Plug high- and low-pressure hoses and evaporator connections immediately after disconnecting piping to prevent entry of dirt, dust, water, etc.

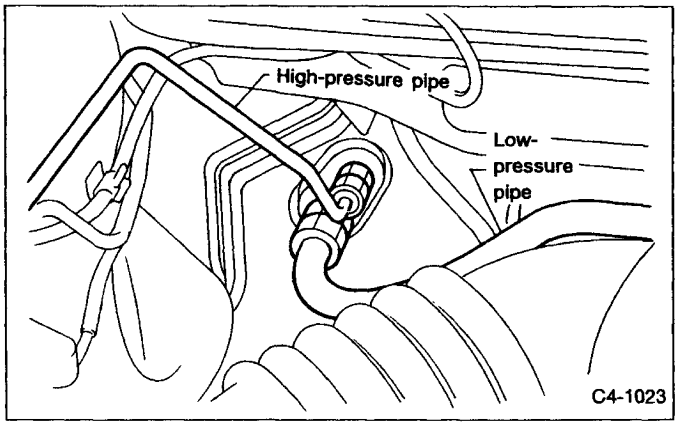

Fig. 43

3) Remove glove box.
4) Remove time control unit from instrument member.
5) Disconnect fan control amplifier connector.

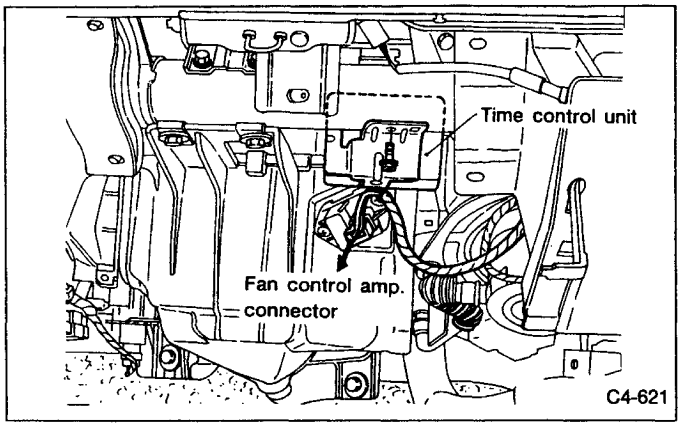

Fig. 44

6) Disconnect drain hose.
7) Remove cooling unit attaching bolts.
8) Extract cooling unit.
9) Disconnect sensor harness connector.

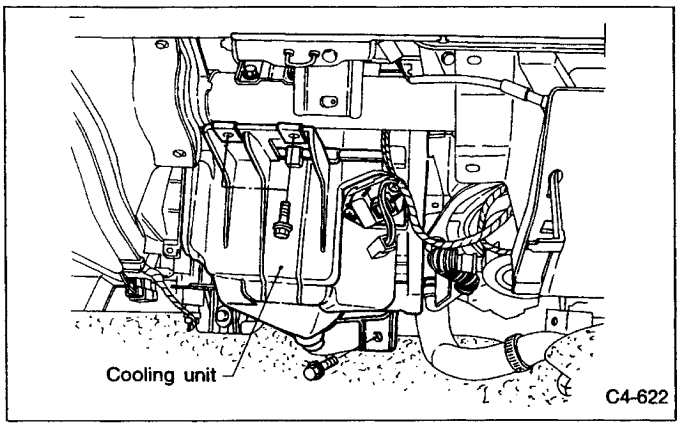

Fig. 45

B: INSTALLATION

1) To install, reverse removal procedures.

Replace O-ring (used with piping) with new one, and apply a coat of compressor oil before installing.

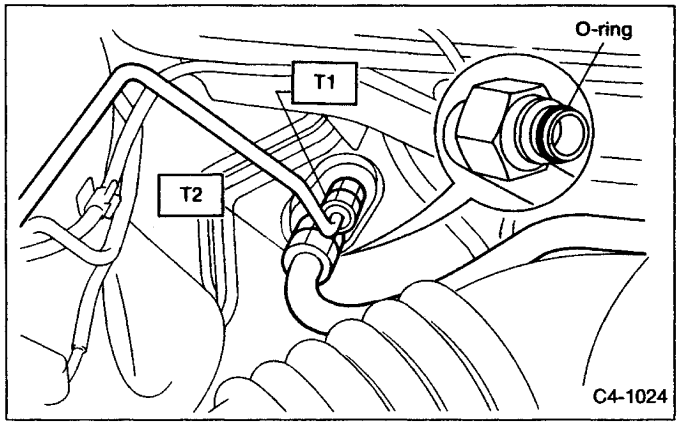

Fig. 46

Tightening torque: N·m (kg-m, ft-lb)
T1: 10 — 20 (1.0 — 2.0, 7 — 14)
T2: 25 — 34 (2.5 — 3.5, 18 — 25)

C: DISASSEMBLY

1) Remove refrigerant temperature and evaporator sensors.
2) Unfasten clamps, and separate upper and lower cases.

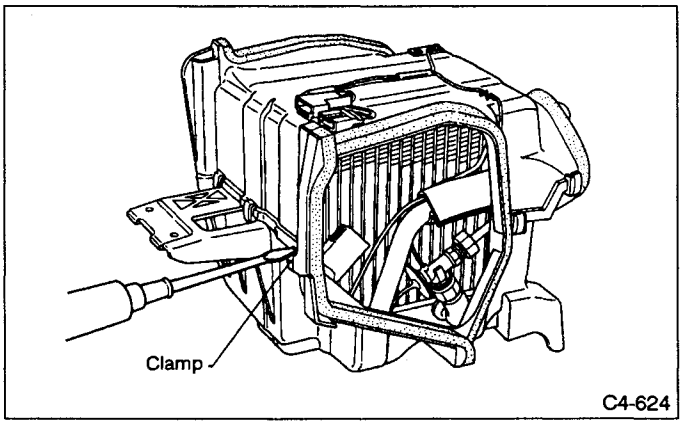

Fig. 132

Check whether the evaporator fins are clogged. If they are, clean them with compressed air. Check parts that have been removed for cracks or scratches and if necessary, repair or replace them.

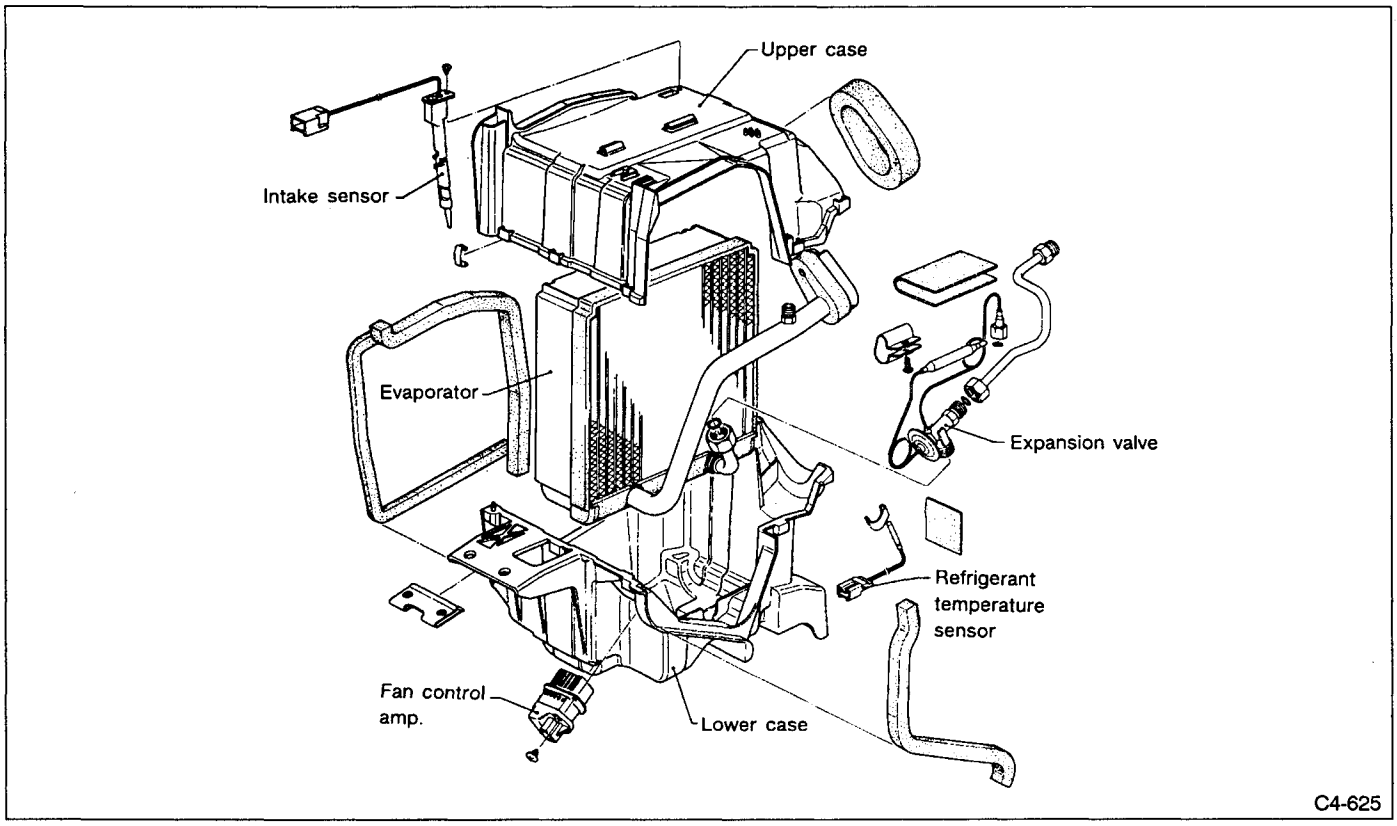

Fig. 133

D: ASSEMBLY

1) Install expansion valve on evaporator.
2) Connect hose to expansion valve.
Replace old O-ring with new one, and apply a coat of compressor oil to it before installing.
3) Secure expansion valve temperature-sensing tube to evaporator hose.

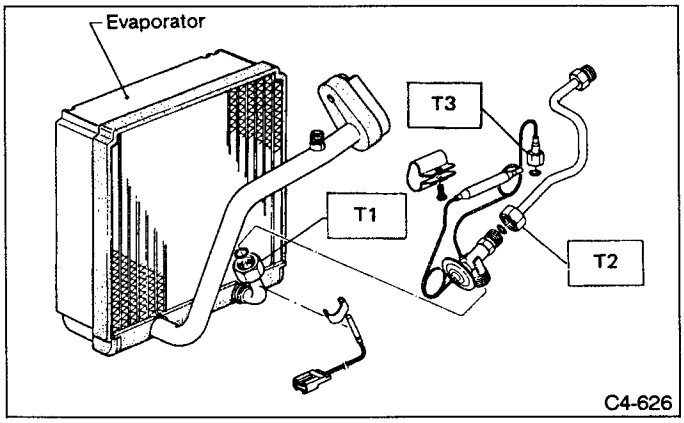

Fig. 134

Tightening torque: N•m (kg-m, ft-lb)
T1: 15 — 25 (1.5 — 2.5, 11 — 18)
T2: 10 — 20 (1.0 — 2.0, 7 — 14)
T3: 7 — 13 (0.7 — 1.3, 5.1 — 9.4)

4) Wrap insulator around expansion valve temperature-sensing tube.
5) Install upper and lower cases on evaporator.
6) Set refrigerant temperature sensor in position, and wrap insulator around sensor.

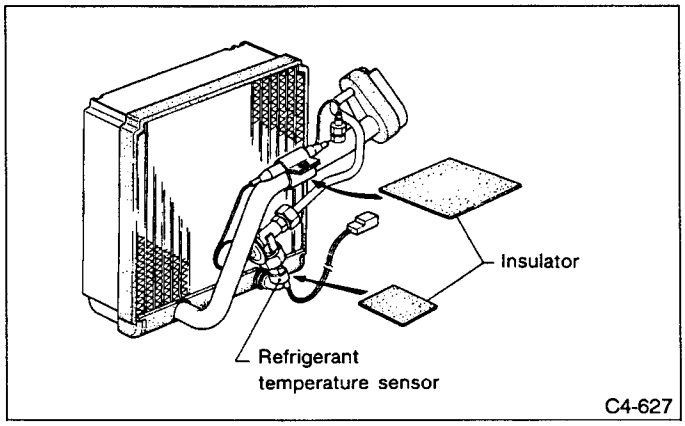

Fig. 135

7) Install evaporator sensor.

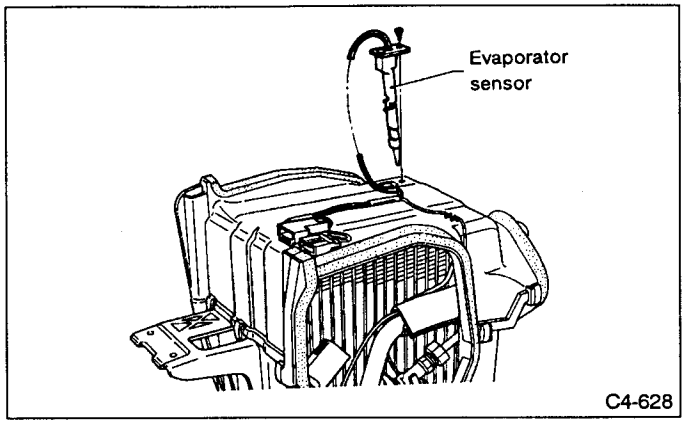

Fig. 136

11. Heater Unit

A: REMOVAL

1) Remove heater hoses (inlet, outlet) in engine compartment.
Drain as much coolant from heater unit as possible, and plug disconnected hose with cloth.
2) Remove instrument panel from body.
3) Remove steering support beam.
4) Disconnect door motor joint connectors (mode, air mix door, sensor) from heater unit.
5) Remove aspirator hose.
6) Remove evaporator.
7) Remove heater unit.

B: INSTALLATION

Installation is in the reverse order of removal.

12. Blower Motor Assembly

A: REMOVAL

1) Remove glove box.
2) Remove glove box support bracket.
3) Disconnect blower motor harness connector.
4) Remove motor cool hose.
5) Remove blower motor mounting screw.
6) Remove blower motor assembly.

B: INSTALLATION

Installation is in the reverse order of removal.

13. Control Unit

A: REMOVAL AND INSTALLATION

1) Remove meter visor. [Ref. to 6-2.]
2) Remove center grille.

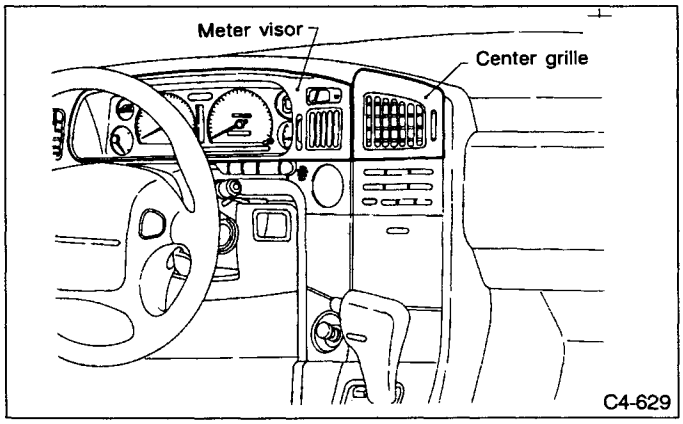

Fig. 137

3) Remove control unit attaching screws.
4) Remove aspirator duct.
5) Disconnect control unit harness connector.
6) Remove control unit.

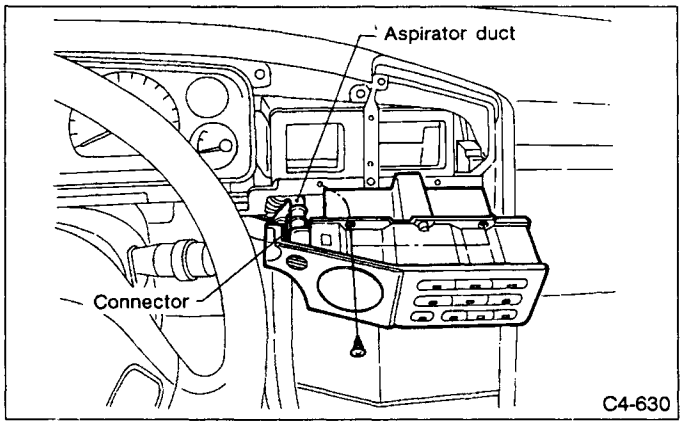

Fig. 138

7) To install, reverse removal procedures.

B: DISASSEMBLY AND ASSEMBLY

1) Remove screws.
2) Disconnect harness connector.

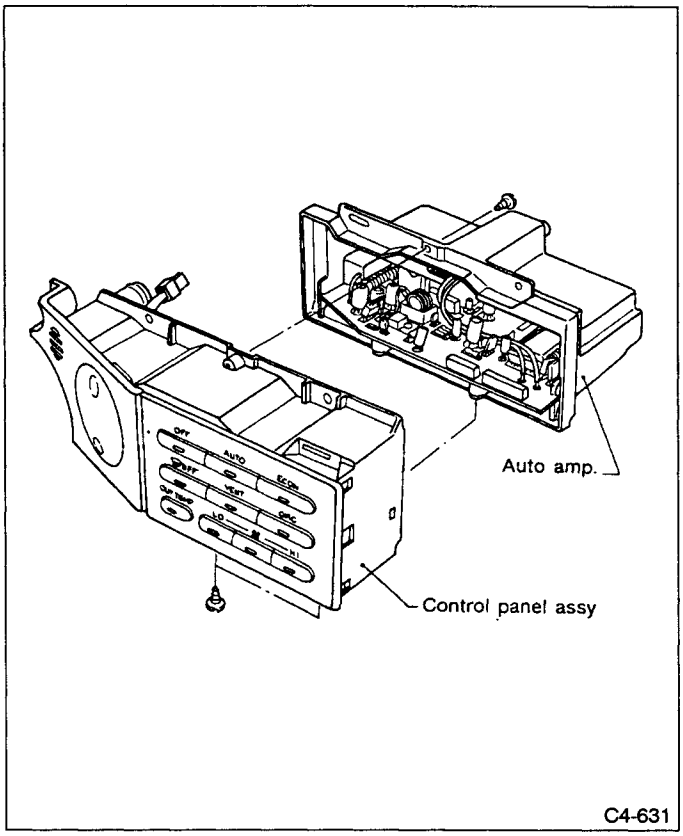

Fig. 139

3) To reassemble, reverse disassembly procedures.

14. Compressor

A: REMOVAL

1) Recover refrigerant.
2) Remove belt cover.

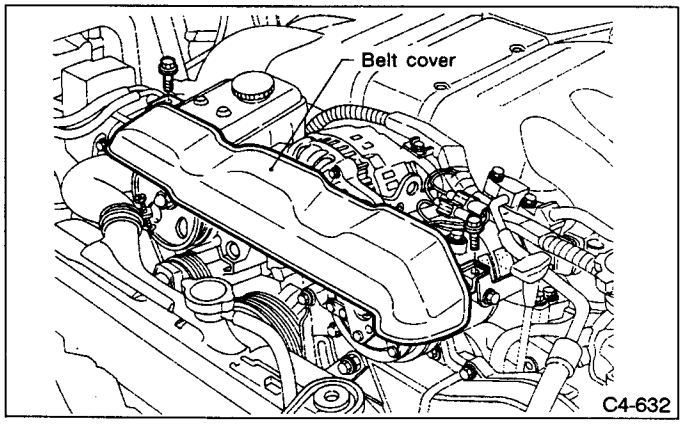

Fig. 140

3) Remove alternator belt.
4) Remove compressor belt.

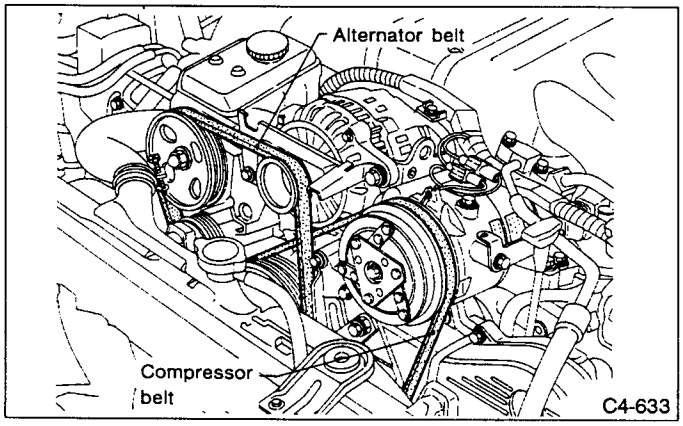

Fig. 141

5) Disconnect low- and high-pressure hoses from compressor.

Plug low- and high-pressure hoses and compressor connections immediately after disconnecting piping to prevent entry of dirt, dust, water, etc.

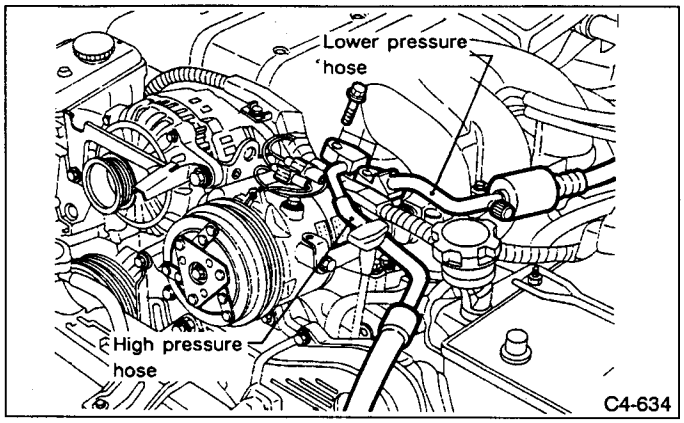

Fig. 142

6) Disconnect alternator harness connector.
7) Remove belt cover bracket and alternator.
8) Disconnect compressor harness connector.

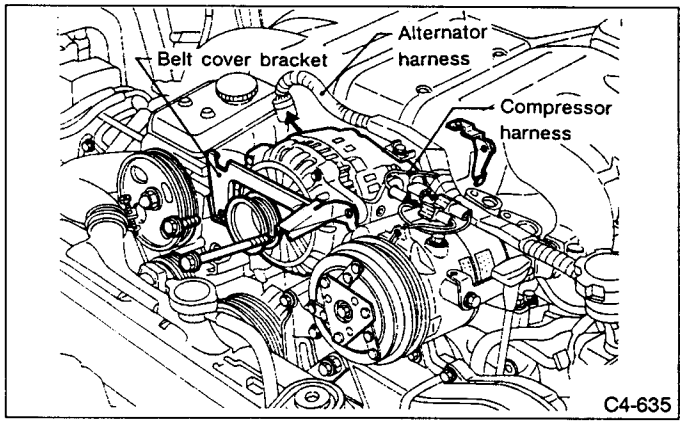

Fig. 143

9) Remove idler pulley assembly.

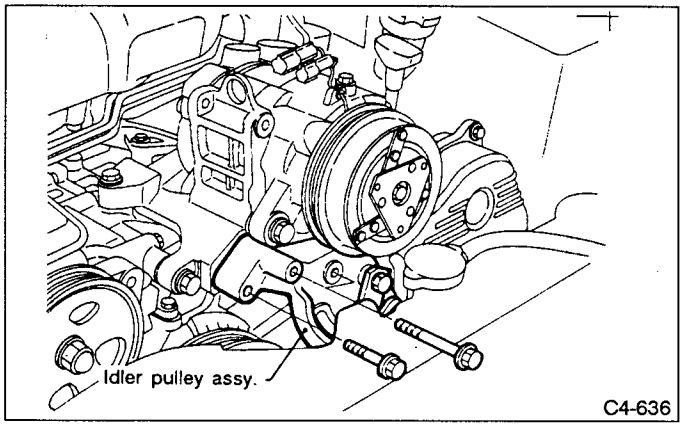

Fig. 144

10) Remove compressor sub-bracket.
11) Remove compressor attaching bolts.

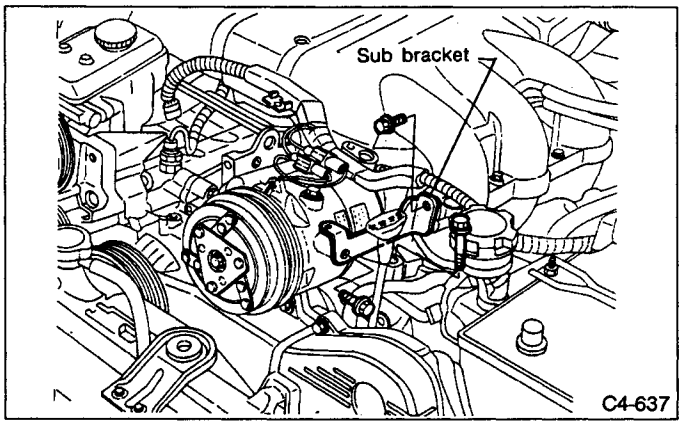

Fig. 145

12) Remove compressor bracket attaching bolts.

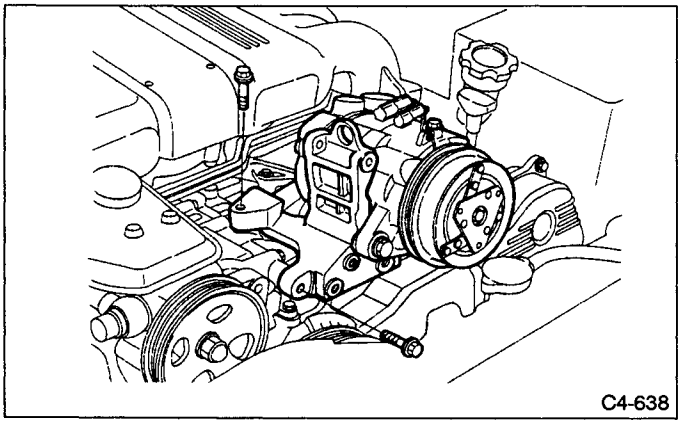

Fig. 146

13) Remove compressor from bracket.

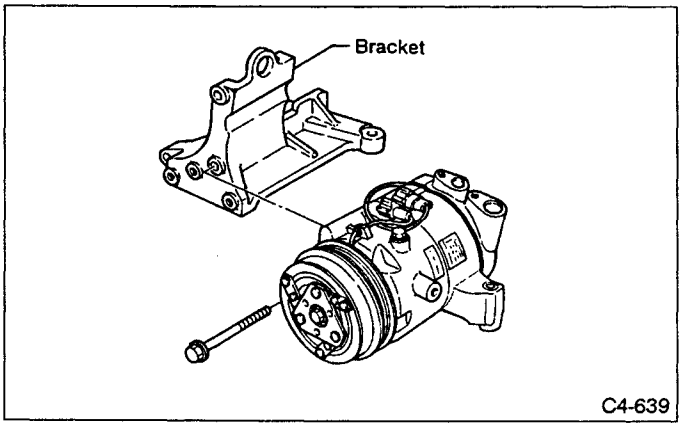

Fig. 147

B: INSTALLATION

1) To install, reverse removal procedures.

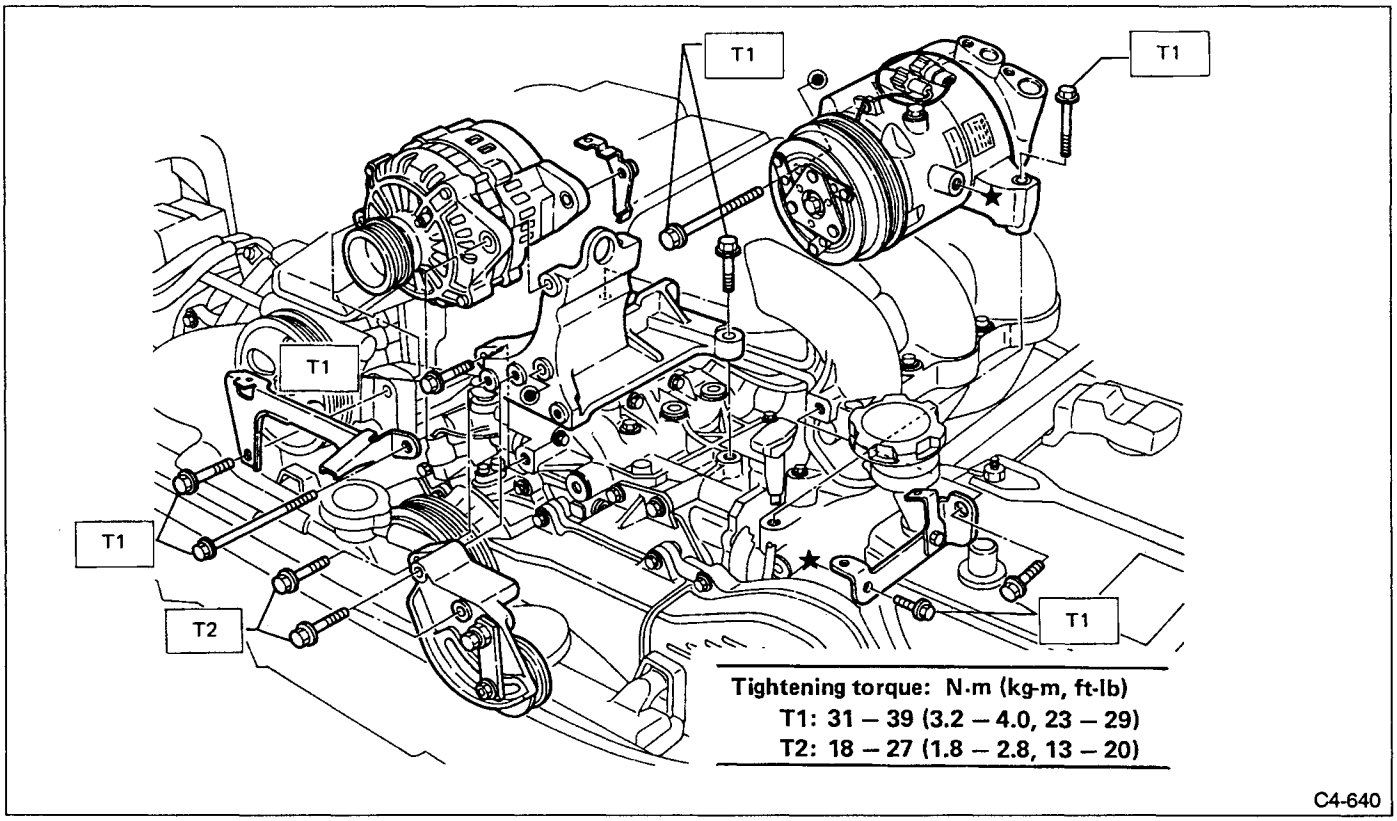

Fig. 148

2) Connect low- and high-pressure hoses to compressor.

Replace O-rings with new ones, and apply a coat of compressor oil to them before installing.

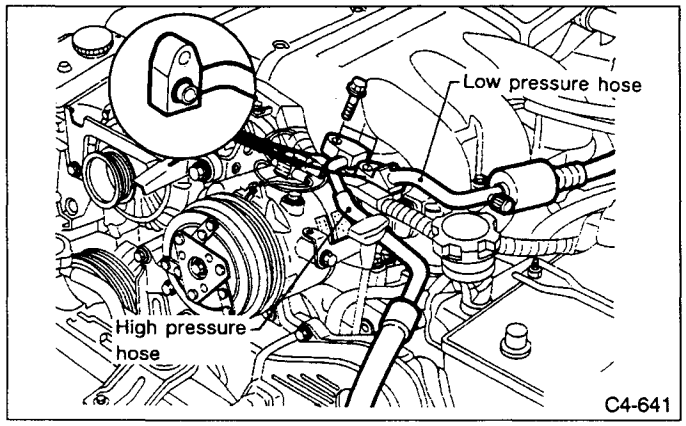

Fig. 149

Tightening torque: N·m (kg-m, ft-lb)
Hose attaching bolts
10 — 20 (1.0 — 2.0, 7 — 14)

3) After adjusting compressor belt tension, tighten lock bolt and lock nut securely.

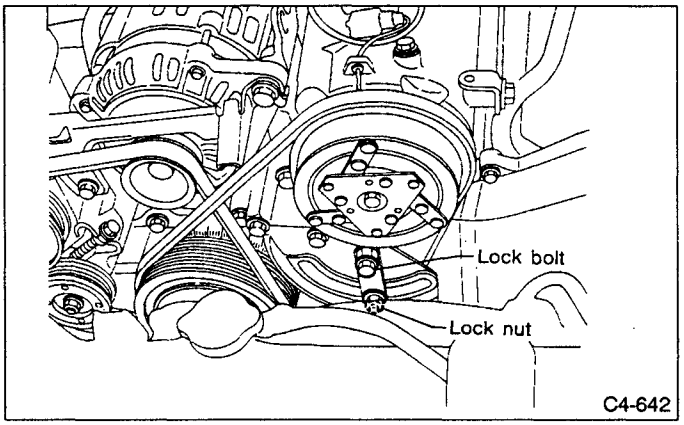

Fig. 150

Tightening torque: N·m (kg-m, ft-lb)
Lock bolt and lock nut
18 — 27 (1.8 — 2.8, 13 — 20)

4) After adjusting alternator belt tension, tighten idler pulley lock nut securely.

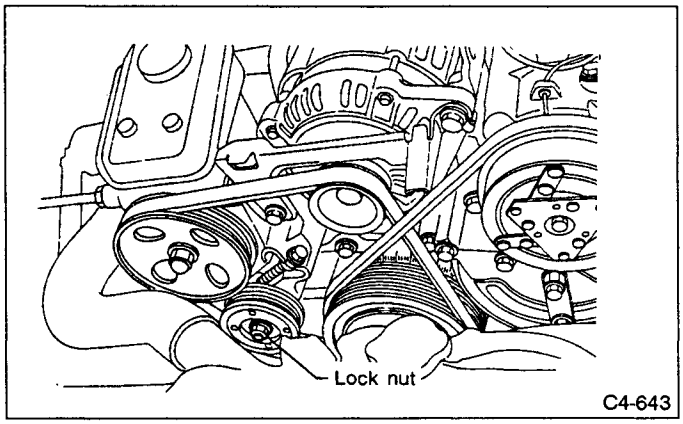

Fig. 151

Tightening torque: N•m (kg-m, ft-lb)
Lock nut:
18 — 27 (1.8 — 2.8, 13 — 20)

Pulley arrangement	Belt tension			
	Gauge		Belt tension [with 98 N (10 kg, 22 lb) force]	
	A	B	A	B
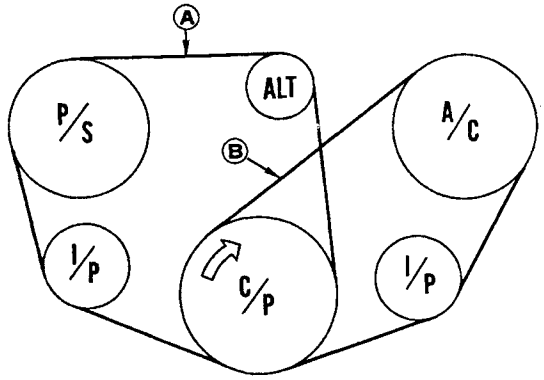 C1-037				
New belt	637 — 785 N (65 — 80 kg, 143 — 176 lb)	637 — 736 N (65 — 75 kg, 143 — 165 lb)	4.0 — 5.0 mm (0.157 — 0.197 in)	6.0 — 7.0 mm (0.236 — 0.276 in)
Existing belt	392 — 588 N (40 — 60 kg, 88 — 132 lb)	343 — 441 N (35 — 45 kg, 77 — 99 lb)	5.0 — 6.0 mm (0.197 — 0.236 in)	7.0 — 8.0 mm (0.276 — 0.315 in)

Fig. 152

C/P : Crankshaft pulley
ALT : Alternator pulley
P/S : Power steering oil pump pulley
A/C : Air conditioner compressor pulley
I/P : Idler pulley
When replacing belts with new ones, adjust tensions to specification and then readjust to the same specification after running engine for 5 minutes.

15. Condenser

A: REMOVAL

1) Remove front grille.
2) Remove belt cover.
3) Disconnect radiator fan harness connectors (main and sub).
4) Remove upper radiator bracket.

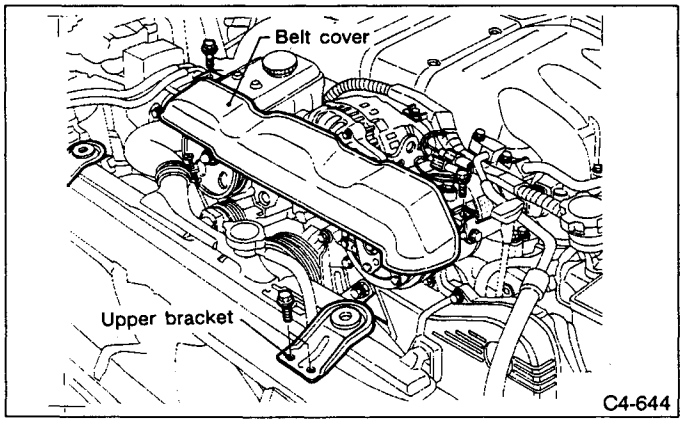

Fig. 153

5) Disconnect high-pressure hose from condenser.
Plug high-pressure hose and condenser connections immediately after disconnecting piping to prevent dirt, dust, water, etc.

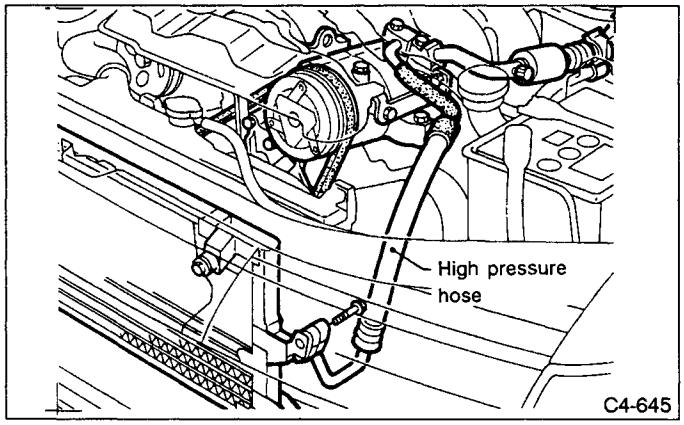

Fig. 154

6) Remove main and sub radiator fans. Remove water hose located under radiator fan shroud.

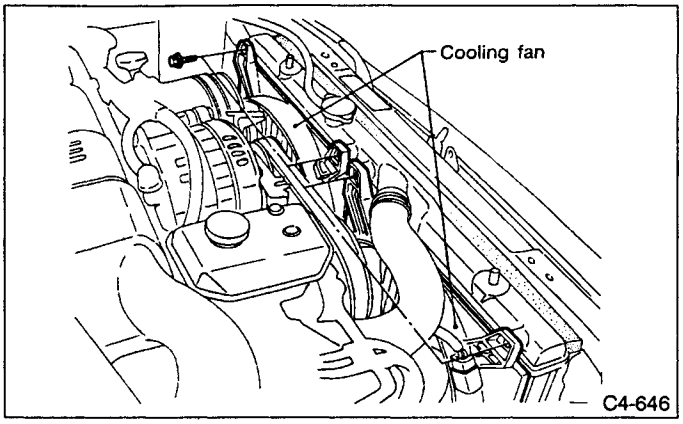

Fig. 155

7) Move canister aside.
8) Disconnect trinary switch harness connector.
9) Disconnect receiver dryer-to-condenser high pressure hose.
Plug high-pressure hose, receiver dryer and condenser connections immediately after disconnecting hoses to prevent entry of dirt, dust, water, etc.

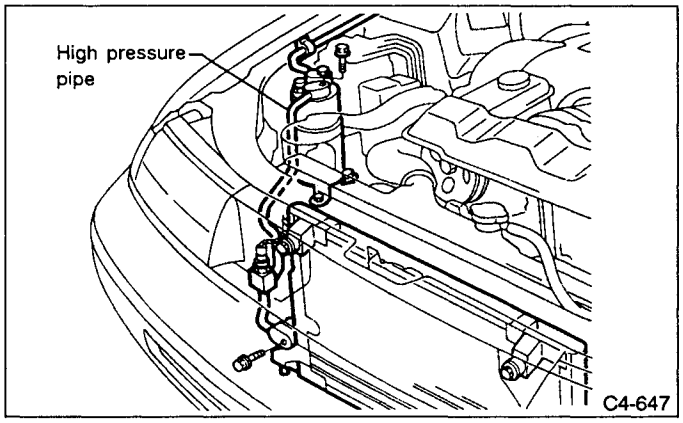

Fig. 156

10) Lift up vehicle.
11) Remove under cover.
12) Remove both side bolts securing oil cooler with condenser.

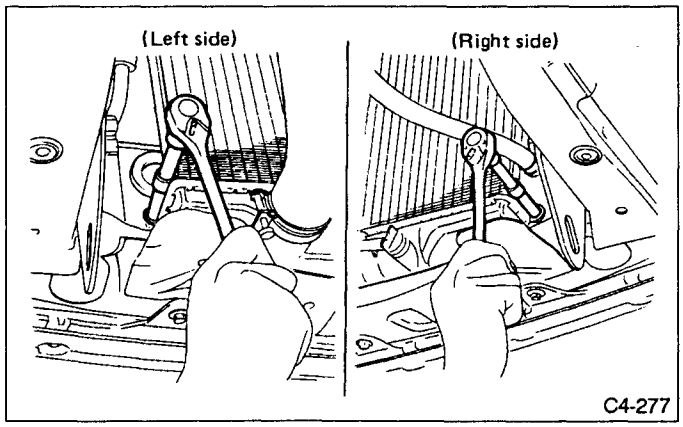

Fig. 157

13) Let down vehicle.
14) Move radiator toward engine, and remove condenser from gap between radiator and radiator panel.

B: INSTALLATION

1) To install, reverse removal procedures.
a. Make sure guide pin on upper condenser bracket is securely inserted into hole in radiator panel.
b. Replace old O-ring (used with piping) with new one, and apply a coat of compressor oil to it before installing.

C: INSPECTION

1) Make sure the condenser fins are free from dust and insects. If the fins are clogged, clean by blowing air or water through them.
To prevent dust and water from getting into the condenser, this work must be done when the condenser is installed in an actual vehicle.
2) Check the condenser to see if it shows any sign of oil seepage. Should oil ooze or gas leak from the condenser replace it with a new one.

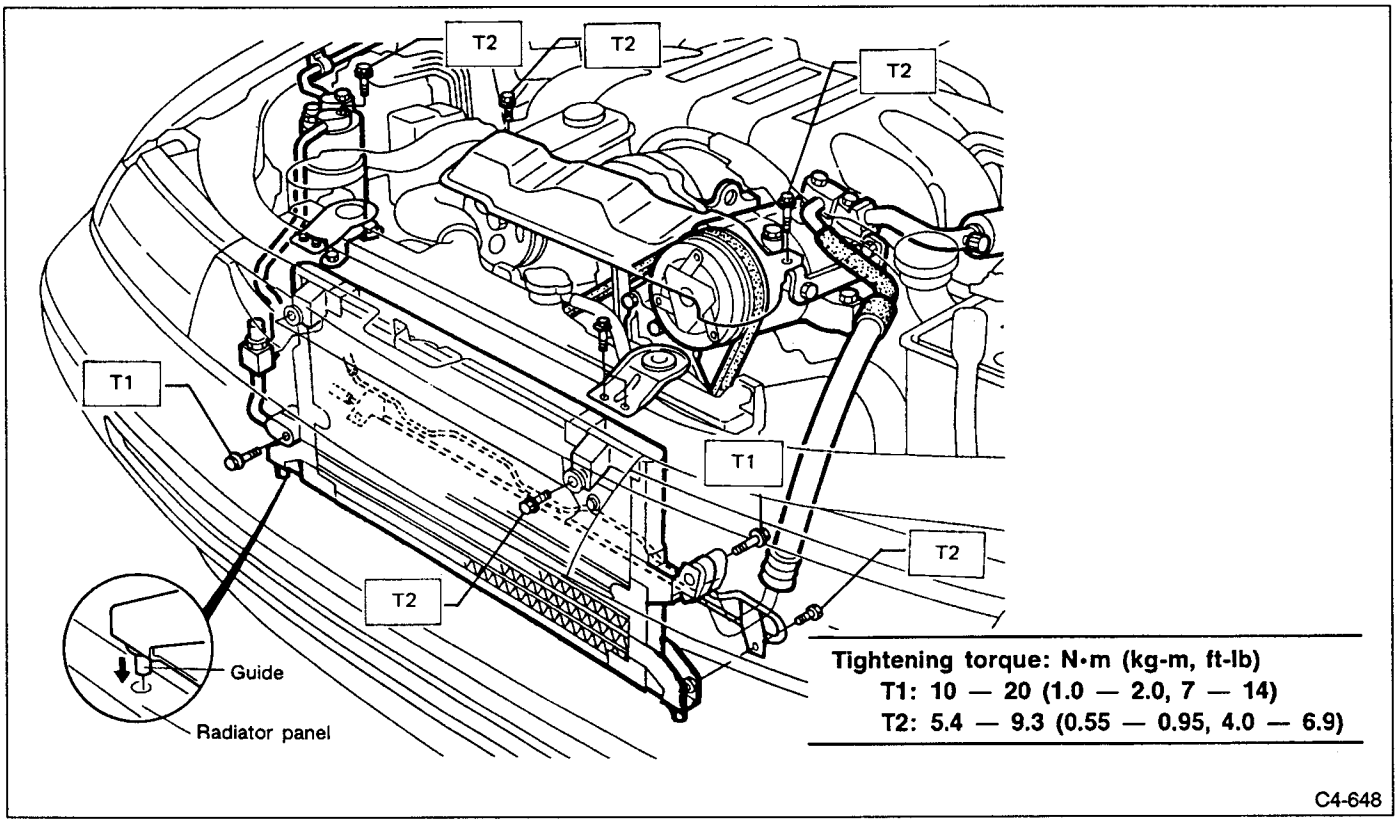

Fig. 158

16. Receiver Drier

A: REMOVAL AND INSTALLATION

1) Recover refrigerant.
2) Remove high-pressure hose attaching bolts.

Plug high-pressure hose and receiver drier connections immediately after disconnecting piping to prevent entry of dirt, dust, water, etc.

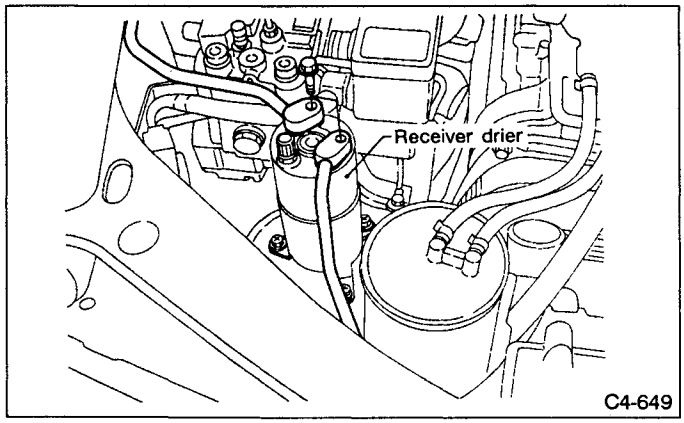

Fig. 159

3) Remove receiver drier bracket attaching bolts.

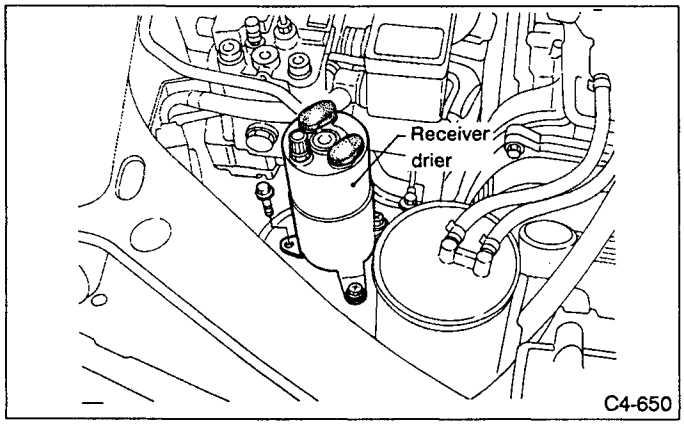

Fig. 160

4) Separate bracket from receiver dryer.

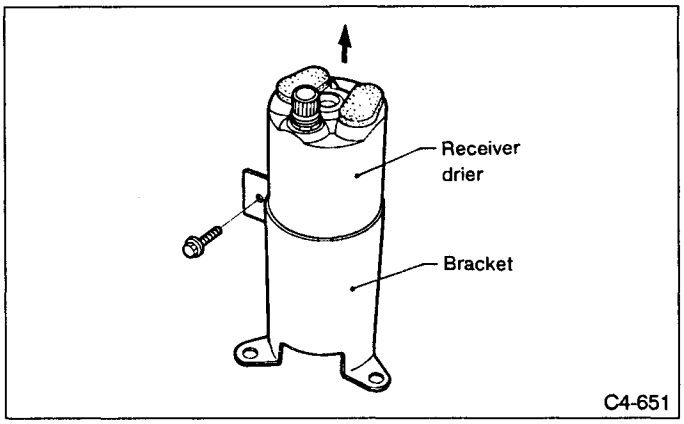

Fig. 161

5) To install, reverse removal procedures.

Replace old O-ring (used with piping) with new one, and apply a coat of compressor oil to it before installing.

Tightening torque: N•m (kg-m, ft-lb)
Pipe attaching bolts
5.4 — 9.3 (0.55 — 0.95, 4.0 — 6.9)
Mounting bolts
5.4 — 9.3 (0.55 — 0.95, 4.0 — 6.9)

17. Trinary Switch

A: REMOVAL AND INSTALLATION

1) Recover refrigerant.
2) Move canister.
3) Disconnect trinary switch.
4) Disconnect receiver dryer-to-condenser high- pressure hose.

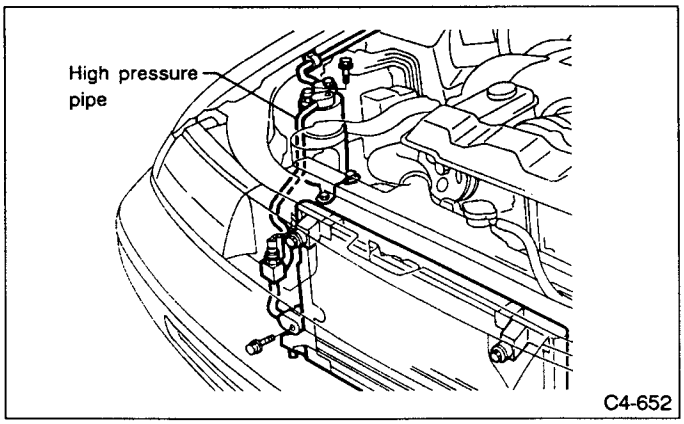

Fig. 162

5) Remove trinary switch from high-pressure hose.

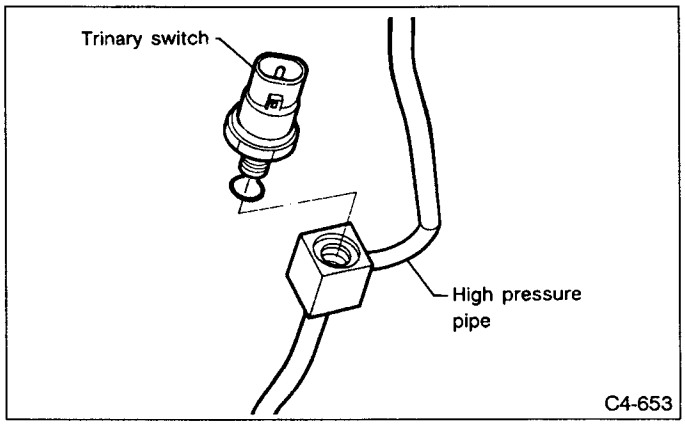

Fig. 163

6) To install, reverse removal procedures.
Replace old trinary switch and O-ring (used with piping) with new ones, and apply a coat of engine to them before installing.

Tightening torque: N·m (kg-m, ft-lb)
Trinary switch
11 — 14 (1.1 — 1.4, 8 — 10)
Pipe attaching bolt
5.4 — 9.3 (0.55 — 0.95, 4.0 — 6.9)

B: INSPECTION

1) Remove cap from high-pressure line service valve, and connect gauge manifold to service valve.
2) Disconnect pressure switch harness connector, and check pressure switch for proper ON-OFF operation. Use a circuit tester.

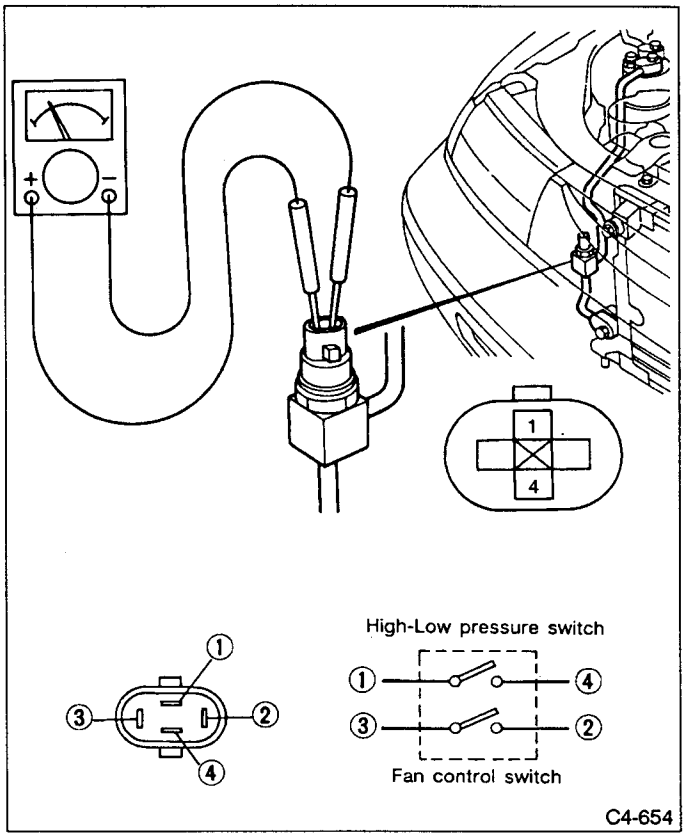

Fig. 164

1. High and low pressure switch

Terminal	Operation	High pressure side line-pressure kPa (kg/cm², psi)
③ — ④	Turns OFF	Increasing to 2,648± 196 (27± 2, 384± 28)
		Decreasing to 137± 20 (1.4± 0.2, 20± 2.8)
	Turns ON	Increasing to 147± 29 (1.5± 0.3, 21± 4)
		Decreasing to $1{,}471^{+196}_{-98}$ ($15^{+2.0}_{-1.0}$, 213^{+28}_{-14})

2. Fan control switch

Terminal	Operation	High pressure side line-pressure kPa (kg/cm², psi)
① — ②	Turns ON	Increasing to 1,569± 127 (16± 1.3, 228± 18)
	Turns OFF	Decreasing to 1,275± 147 (13± 1.5, 185± 21)

C: REMOVAL AND INSTALLATION

1. HIGH-PRESSURE HOSE

1) Recover refrigerant.
2) Remove high-pressure hose attaching bolts on compressor and condenser sides.

Plug high-pressure hose, compressor and condenser connections immediately after disconnecting piping to prevent entry of dirt, dust, water, etc.

3) To install, reverse removal procedures.

Replace old O-ring (used with piping) with new one, and apply a coat of compressor oil to it before installing.

2. LOW-PRESSURE HOSE

1) Recover refrigerant.
2) Remove throttle body cover.
3) Remove air intake duct.
4) Remove ignition harness clip.
5) Remove low-pressure hose clip attaching screw.
6) Remove low-pressure hose attaching bolts on compressor and evaporator sides.

Plug low-pressure hose, compressor and evaporator hose connections immediately after disconnecting piping to prevent entry of dirt, dust, water, etc.

18. Pipe and Hose

A: REMOVAL AND INSTALLATION

1. HIGH-PRESSURE HOSE

1) Recover refrigerant.
2) Remove high-pressure hose attaching bolts on compressor and condenser sides.

Plug high-pressure hose, compressor and condenser connections immediately after disconnecting piping to prevent entry of dirt, dust, water, etc.

3) To install, reverse removal procedures.

Replace old O-ring (used with piping) with new one, and apply a coat of compressor oil to it before installing.

2. LOW-PRESSURE HOSE

1) Recover refrigerant.
2) Remove throttle body cover.
3) Remove air intake duct.
4) Remove ignition harness clip.
5) Remove low-pressure hose clip attaching screw.
6) Remove low-pressure hose attaching bolts on compressor and evaporator sides.

Plug low-pressure hose, compressor and evaporator hose connections immediately after disconnecting piping to prevent entry of dirt, dust, water, etc.

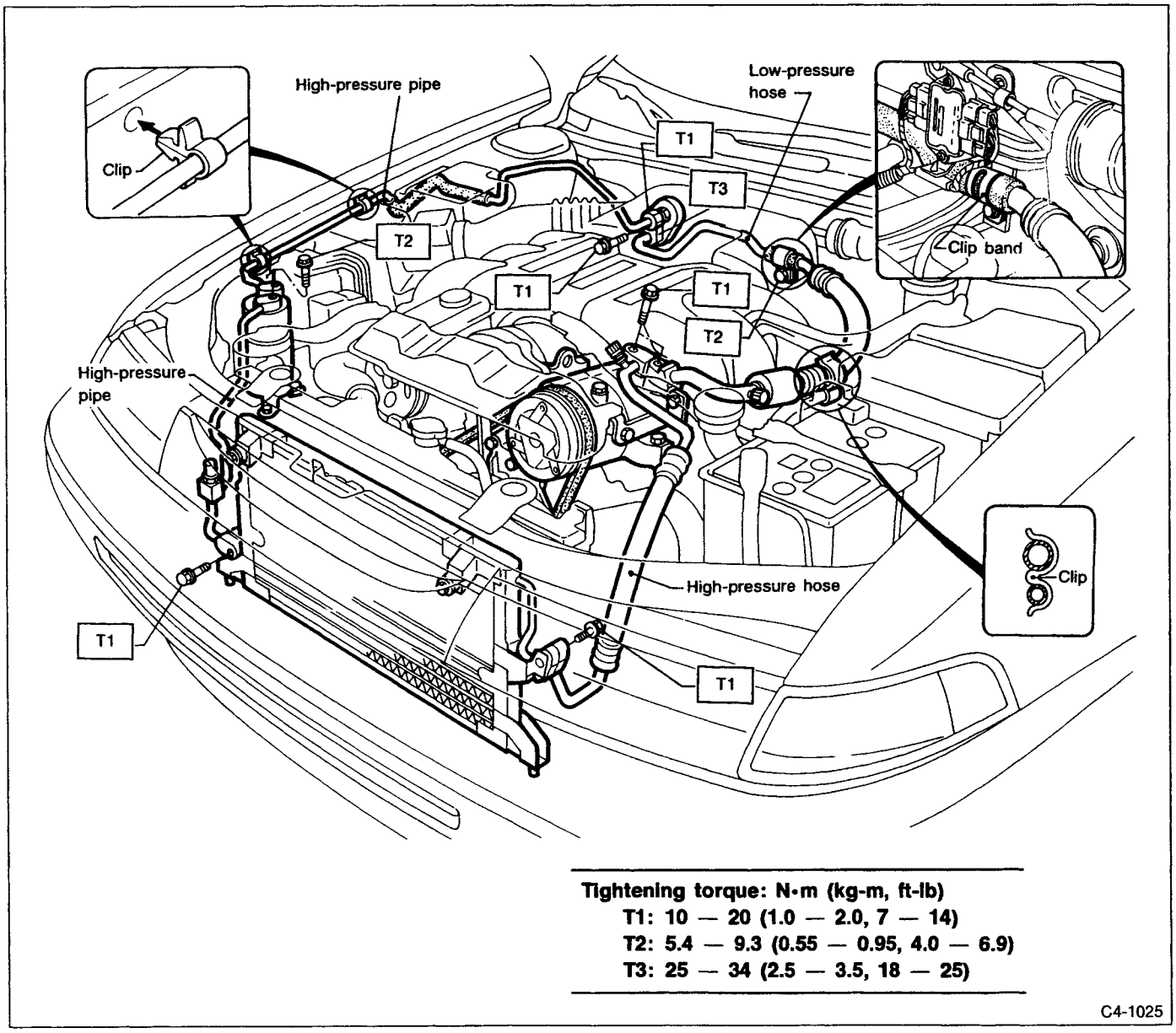

Tightening torque: N·m (kg-m, ft-lb)
T1: 10 — 20 (1.0 — 2.0, 7 — 14)
T2: 5.4 — 9.3 (0.55 — 0.95, 4.0 — 6.9)
T3: 25 — 34 (2.5 — 3.5, 18 — 25)

C4-1025

Fig. 47

19. Relay and Fuse

Relays used with A/C system are located as shown in figure below.

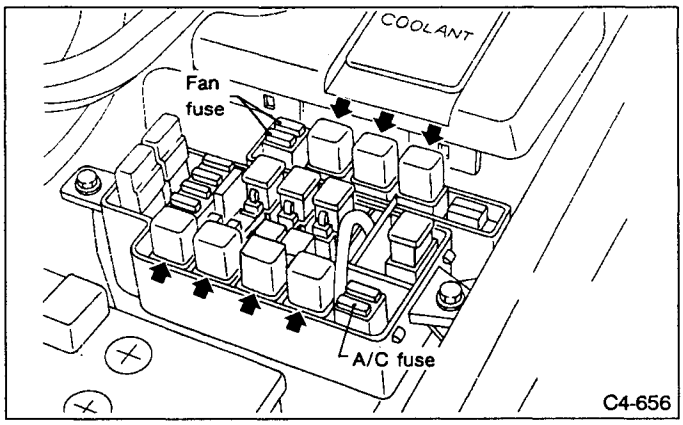

Fig. 166

6) OFF relay and Hi relay.

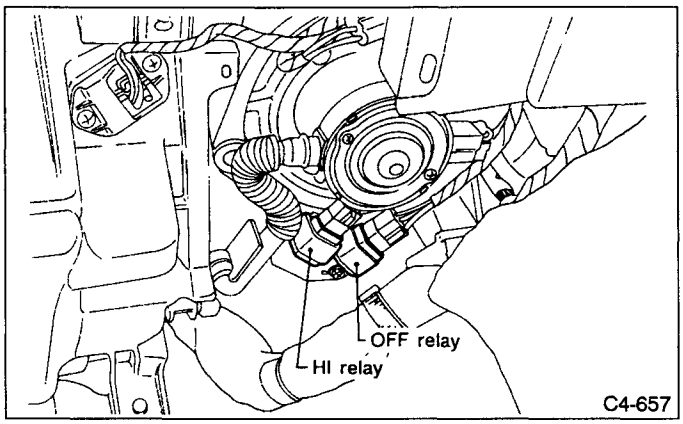

Fig. 167

A: INSPECTION

Check conduction with a circuit tester (ohm range) according to the following table.

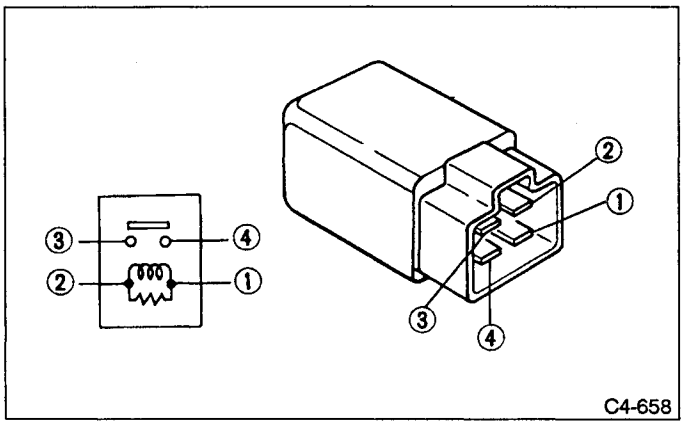

Fig. 168

Specified resistance:
No. 1 — No. 2/100Ω
No. 3 — No. 4/1MΩ min.

Replace relays which do not meet above specifications.

T TROUBLESHOOTING

1. Precautions

1) Never connect the battery in reverse polarity.
- The Auto A/C control unit will be destroyed instantly.

2) Do not disconnect the battery terminals while the engine is running.
- A large counter electro motive force will be generated in the alternator, and this voltage may damage electronic parts such as Auto amp. (Auto A/C control unit)

3) Before disconnecting the connectors of each sensor and the Auto amp., be sure to turn off the ignition switch.
- Otherwise, the Auto amp. may be damaged.

4) Every Auto A/C-related part is a precision part. Do not drop them.

2. Pre-inspection

Before troubleshooting check the following items.

1. POWER SUPPLY

1) Measure battery voltage and specific gravity of electrolyte.

Standard voltage: 12V
Specific gravity: Above 1.260

2) Check the condition of the fuses for A/C. heater and other fuses.
3) Check the condition of the harnesses and harness connectors connection.

2. REFRIGERANT LINE

1) Check contact for refrigerant line.
2) Check amount of refrigerant.
Refer to the Sight Glass Inspection.

3. CONTROL LINKAGE

1) Check state of mode door control rod and linkage.
2) Check state of air mix door control rod and linkage.
3) Check state of intake door control rod and linkage.

3. Troubleshooting Chart for Self-diagnosis System

A: BASIC TROUBLESHOOTING PROCEDURE

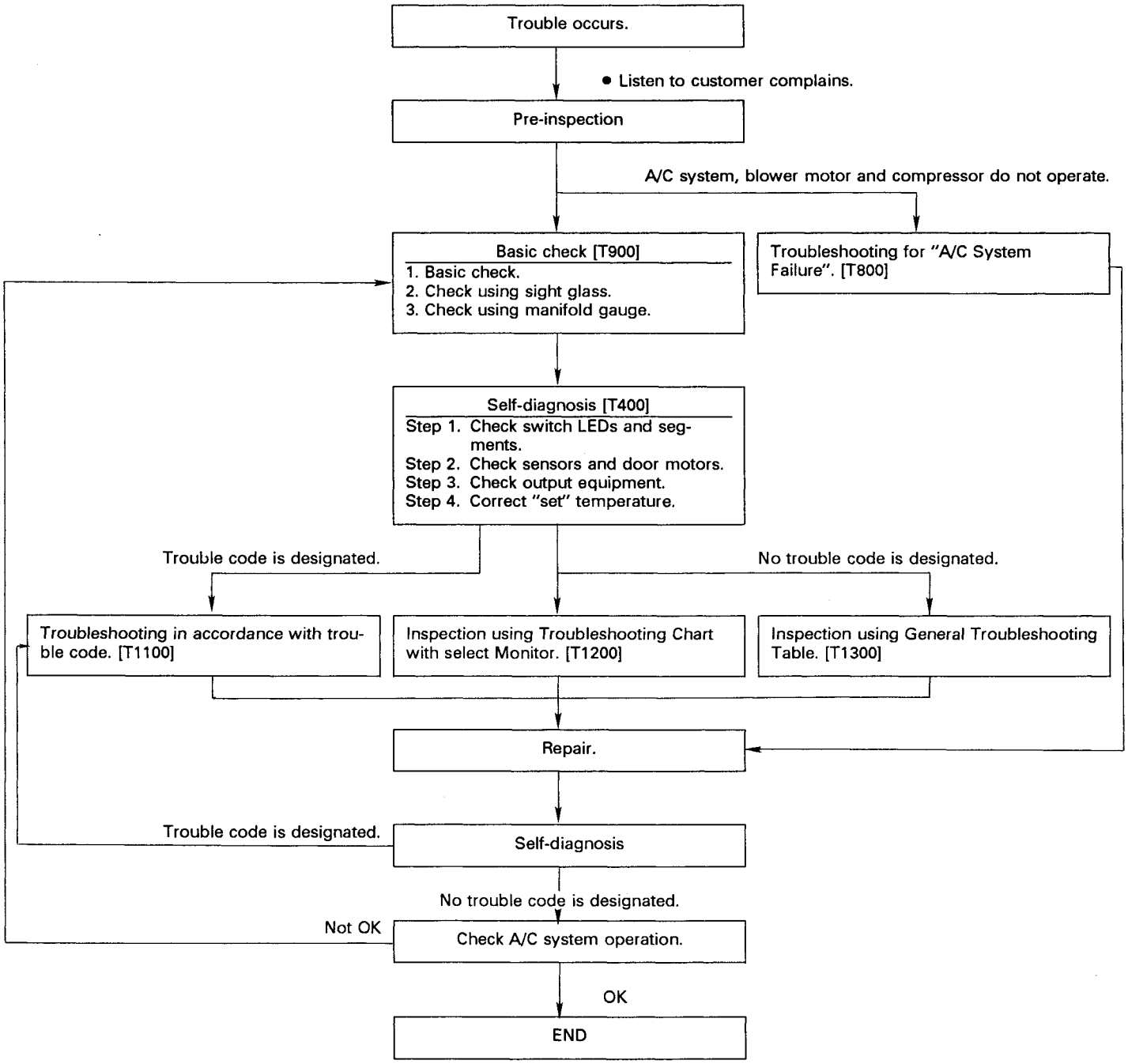

4. Self-diagnosis System

A: GENERAL

1. The self-diagnosis system checks the condition of various switch LEDs, set-temperature display segments (STEP 1), sensors (STEP 2) and output equipment (STEP 3). It also sends predetermined control output signals to check the operation of the blower fan motor and mode door motors.
2. The compartment set temperature can be corrected in 3 steps to meet passenger's preference while the air conditioning system or heating unit is operating. (STEP 4)

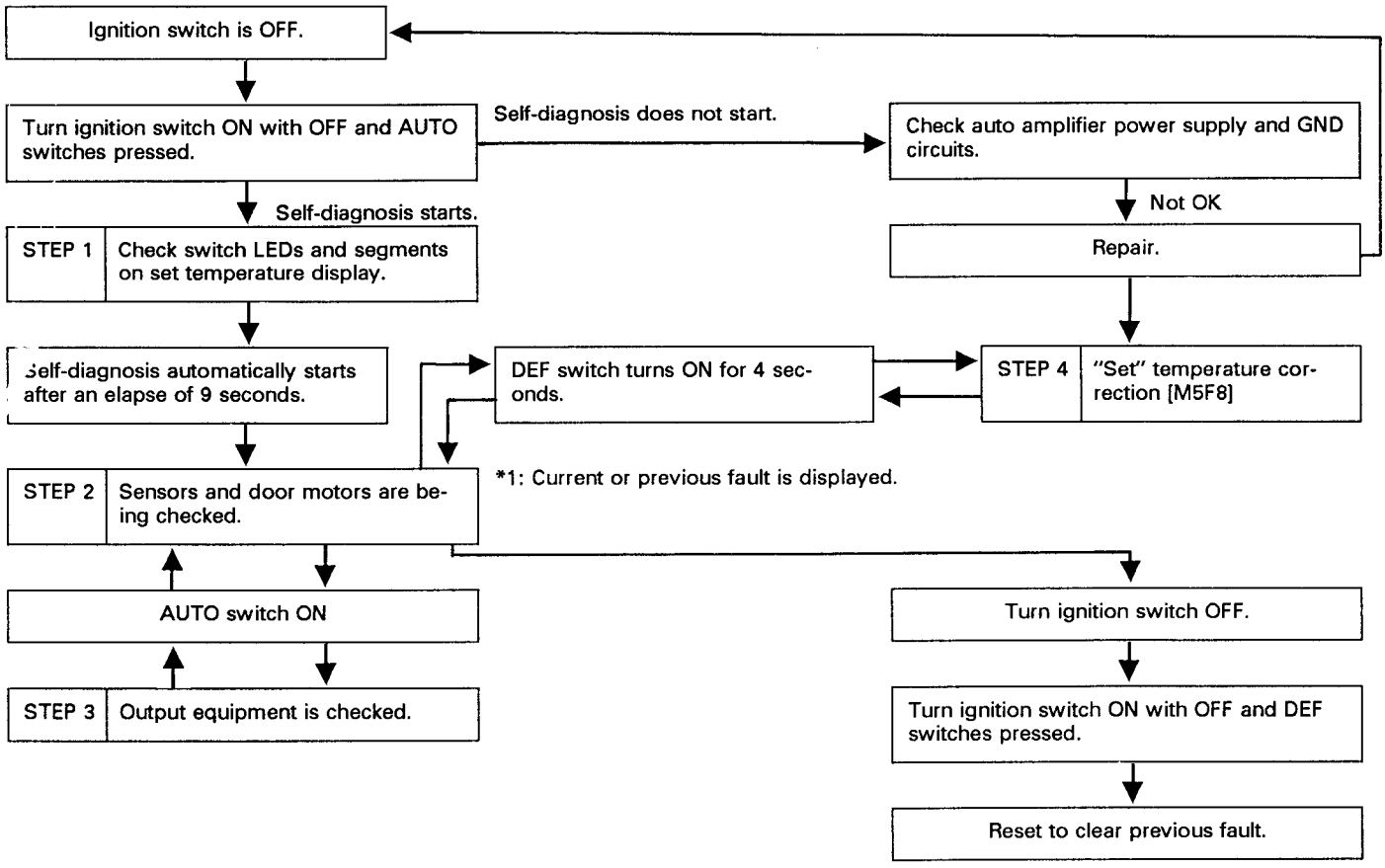

*1: Current fault ... A problem which is currently occurring
*2: Previous fault ... Stored in auto amplifier memory.
(Auto amplifier stores in memory up to 16 previous faults (such as poor connector contact, etc.).

B: FUNCTION

1. HOW TO START THE SELF-DIAGNOSIS

Start engine.

↓

Warm up engine.

↓

- Ignition switch is OFF.
- Engine water temperature is 40°C (104°F) or more.
- Direct 100W light to sunload sensor.

↓

- START

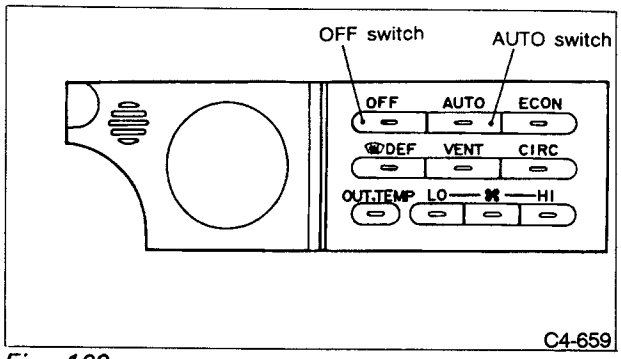

Fig. 169

START

With ON with OFF and AUTO switches pressed, turn ignition switch ON.

→ Self-diagnosis does not start.

→ Check auto amplifier power supply and GND circuits.

↓

- STEP-1

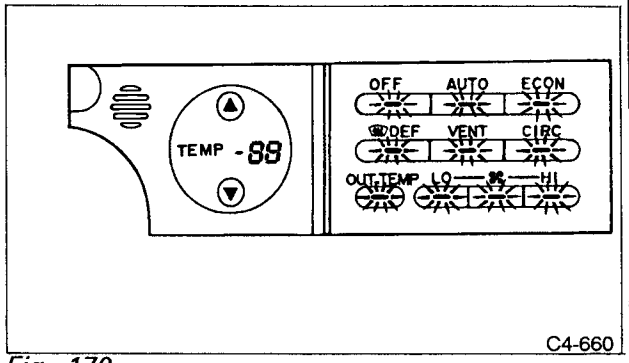

Fig. 170

STEP 1

- Check whether all switch LEDs turn ON.*1
- Check whether all segments on set temperature display turn ON.

→ Not OK

→ Faulty control panel (incl. auto amplifier)

↓ OK

Elapse of 9 seconds

*1: Amber LED turns ON first, then after approx. 4 seconds, green LED turns ON.

↓

To be continued.

↓

With OFF and OUT. TEMP switches, only green LED turns ON.

• STEP-2

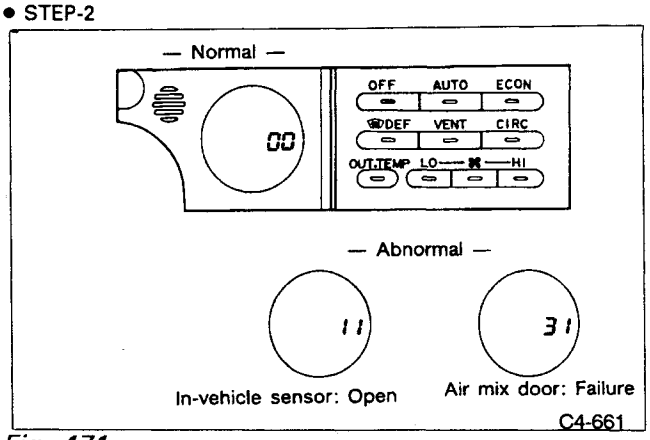

Fig. 171

STEP 2
Check segments "00" in set temperature display.

"00" does not appear.

Display presentation	Fault	Remarks
11.21	In-vehicle sensor	Open or shorted
12.22	Ambient sensor	Open or shorted
⑬.23*2	Sunload sensor	Open or shorted
14.24	Evaporator sensor	Open or shorted
15.25	Refrigerant temperature sensor	Open or shorted
16.26	Water temperature sensor	Open or shorted
31	Air mix door (PBR)	Faulty
32	Mode door (PBR)	Faulty
㉝	Mix door motor	Faulty engine
㉞	Mode door motor	Faulty engine
㉟	Intake door motor	Faulty engine

*2: Judged as "open" if light is not directed to sunload sensor.
*3: Circled figures refer to a fault which is currently occurring.

"00" appears.

AUTO SWITCH ON.

STEP 3
Check output equipment operation.

Each time DEF switch is pressed, operation step advances.

Operation step	①	②	③	④	⑤
"Set" temperature display	41	42	43	44	45
Outlet port	Defroster	Heat	Bi-level	Vent	Vent
Suction port	Fresh/ Recirc	Fresh	Fresh	Fresh	Recirc
Air mix door	Max. hot	Max. hot	50%	Max. cold	Max. cold
Blower motor (V)	5	7	11	12 (Max. Hi)	12 (Max. Hi)
Compressor	ON	ON	OFF	OFF	ON
Compressor solenoid current (A)	0	0.65	0	0	0

OK

Turn ignition switch OFF.

Not OK

Repair.

Set DEF switch ON more than 4 seconds.

STEP 4
"Set" temperature correction

Press UP or DOWN switch.

Display presentation	Ambient temperature correction
10	• Compartment temperature is set toward hot side with respect to standard position when ambient temperatures are low. • Compartment temperature is set toward cold side with respect to standard position when ambient temperatures are high.
05	• Standard position
00	• Compartment temperature is set toward cold side in relation to standard position when ambient temperatures are low. • Compartment temperature is set toward hot side in relation to standard position when ambient temperatures are high.

Turn ignition switch OFF.

2. CLEAR MEMORY

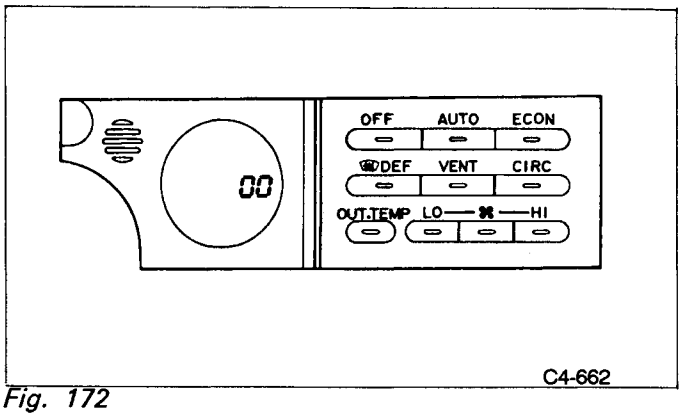

Fig. 172

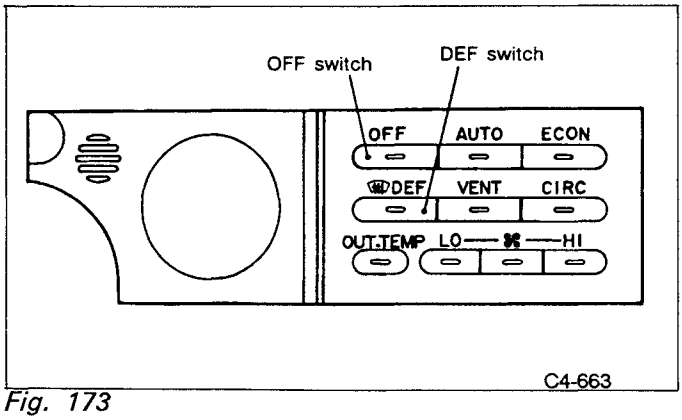

Fig. 173

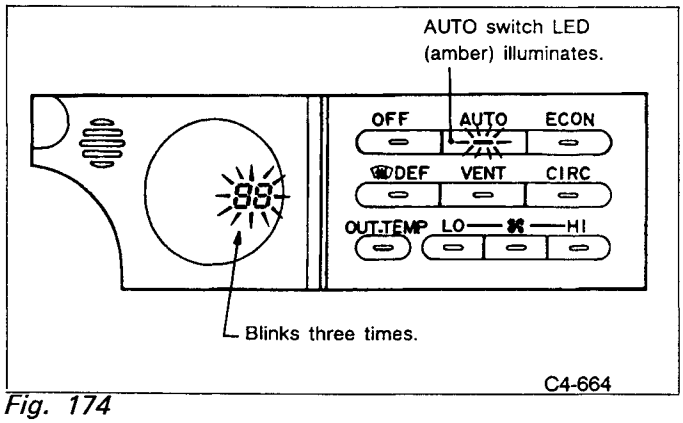

Fig. 174

Set system to "STEP 2" in self-diagnosis mode.

↓

Turn ignition switch OFF.

↓

Turn ignition switch ON with OFF and DEF switches pressed.

↓

AUTO switch LED (amber) and "88" ("set" temperature display) flashes three times.

↓

Previous faults stored in memory are cleared and system returns to initial state.

↓

Turn ignition switch OFF.

5. Output Modes of Select Monitor

1. FUNCTION MODE

Applicable cartridge of select monitor: No. 498348500

MODE	Abbr.	Contents	Unit	Contents of display
F00	—	System identification	—	—
F01	Tset	"Set" temperature	deg °C (°F)	Monitors "Set" temperature
F02	To	Total signal	deg °C (°F)	Monitors total signal determined by auto amplifier in relation to "set" temperature and signals sent from in-vehicle sensor, ambient sensor, evaporator sensor, and sunload sensor.
F03	Troom	Compartment temperature	deg °C (°F)	Monitors compartment temperature determined by auto amplifier in relation to in-vehicle sensor.
F04	Tamb	Ambient temperature	deg °C (°F)	Monitors ambient temperature determined by auto amplifier in relation to signal sent from ambient sensor.
F05	Tevp	Rear-of-evaporator temperature	deg °C (°F)	Monitors cool air temperature determined by auto amplifier in relation to signal sent from evaporator sensor.
F06	Qsun	Sunload	kcal	Monitors sunload determined by auto amplifier in relation to signal sent from sunload sensor.
F07	Tsun	Sunload sensor correction temperature	deg °C (°F)	Monitors total signal correction value in relation to sunlight received.
F08	Tref	Refrigerant temperature	deg °C (°F)	Monitors refrigerant temperature determined by auto amplifier in relation to signal sent from refrigerant temperature sensor.
F09	Tw	Heater core temperature	deg °C (°F)	Monitors water temperature at lower section of heater core which is determined by auto amplifier in relation to signal sent from water temperature sensor.
F10	AMRset	Air mix door target value	%	Monitors air mix door target opening determined by total signal (T).
F11	AMRpot	Actual air mix door opening	%	Monitors actual air mix door opening controlled by its motor P.B.R. in relation to target opening.
F12	MODEset	Target outlet value	%	Monitors target outlet value determined from both air mix door target value and temperature at rear of evaporator.
F13	MODEpot	Actual outlet opening	%	Monitors actual outlet opening.
F14	BLW	Blower level (V)	V	Monitors blower air discharge controlled by auto amplifier.
F15	Intak	Intake position	—	Monitors air suction port position.
F16	Isol	Solenoid current output	A	Monitors solenoid current output which is sent from auto amplifier to control variable compressor.
F17	EGI to A/C	Variable compressor control signal	%	Monitors "duty" signal which is sent from MPFI unit to control variable compressor.
FA0	SW	Switch input	—	Monitors switch input.
FB0	DIAG.	Faulty input-output	—	Monitors sensor and door operation.

2. ON-OFF SIGNAL LIST

MODE	LED No.	Display	LED "ON" requirement
FA0	1	UP	UP switch ON
	3	OFF	OFF switch ON
	3	DEF	DEF switch ON
	4	VENT	VENT switch ON
	4	AUTO	AUTO switch ON
	5	REC	CIRC switch ON
	5	ECON	ECON switch ON
	6	DOWN	DOWN switch ON
	7	OUT.TEMP	OUT.TEMP switch ON
	8	LOW	FAN (LOW) switch ON
	9	MED	FAN (MED) switch ON
	10	HI	FAN (HI) switch ON
	OFF	SWITCH OFF	No switch operation required.

While switch is pressed, the corresponding display and LED flash.

3. INPUT-OUTPUT FAULT DATA

Mode	Display Cord	Display	Content	
FB0	00	—	Normal	
	11	ROM.S O	IN-VEHICLE SENSOR	OPEN
	21	ROM.S S		SHORT
	12	AMB.S O	AMBIENT SENSOR	OPEN
	22	AMB.S S		SHORT
	13	SUN.S O	SUNLOAD SENSOR	OPEN
	23	SUN.S S		SHORT
	14	EVP.S O	EVAPORATOR SENSOR	OPEN
	24	EVP.S S		SHORT
	15	REF.S O	REFRIGERANT TEMPERATURE SENSOR	OPEN
	25	REF.S S		SHORT
	16	WTR.S O	WATER TEMPERATURE SENSOR	OPEN
	26	WTR.S S		SHORT
	31	AM.PO F	AIR MIX DOOR P.B.R.	FAULT
	32	MD.PO F	MODE DOOR P.B.R.	FAULT
	33	AM.AC F	AIR MIX DOOR MOTOR	FAULT
	34	MD.AC F	MODE DOOR MOTOR	FAULT
	35	FD.AC F	INTAKE DOOR MOTOR	FAULT

6. Schematic

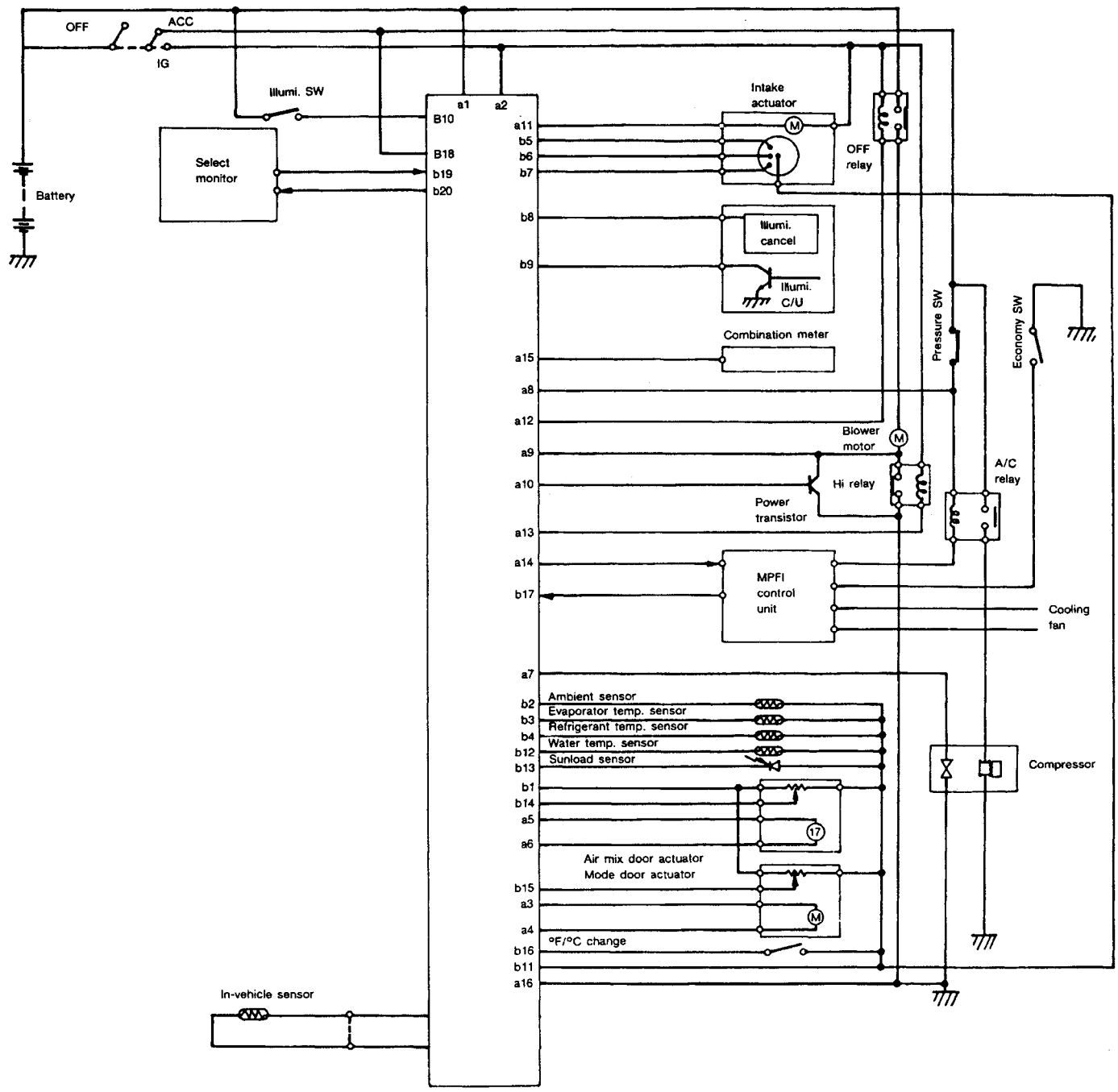

C4-665

Fig. 175

7. Control Unit (Auto Amp.) I/O Signal

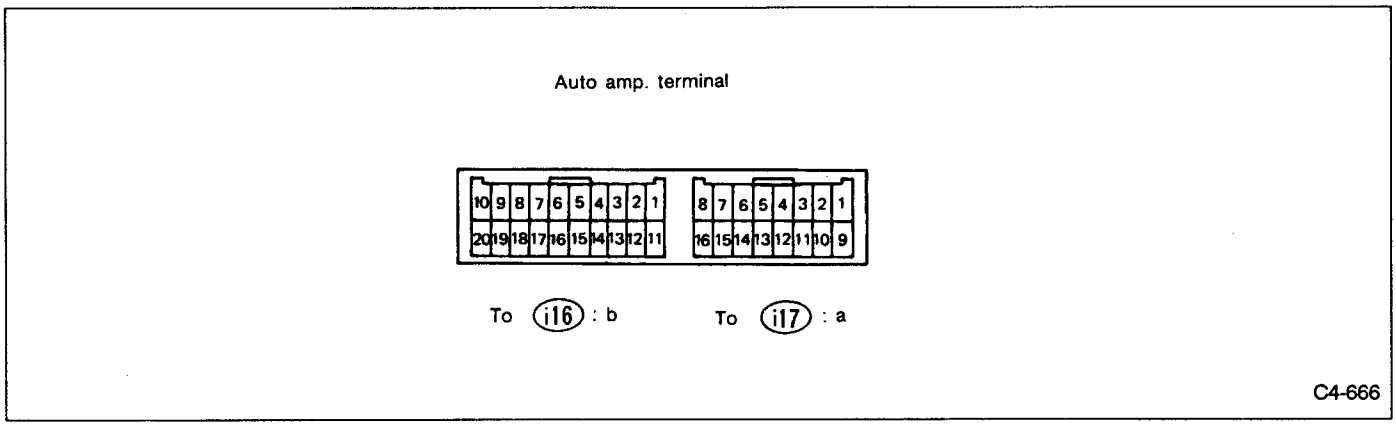

Fig. 176

Content	Connector No.	Terminal No.	Signal (V)
BATT voltage (Memory back-up)	i17	a1-body	BATT voltage 13 — 14 (engine running)
IGN power supply	i17	a2-body	Battery voltage (ignition switch ON) 13 — 14 (engine running)
ACC power supply (OFF: ignition in START or diagnosis system reset)	i16	b18-body	BATT voltage 0 (engine cranking); BATT voltage during engine starts
Sensor standard voltage	i16	b1-body	0 (ignition switch ON) — 5V
Auto amplifier ground circuit	i17	a16-body	0 (ignition switch ON) — circuit constantly grounded
Sensor ground circuit	i16	b11-body	0 (ignition switch ON) — continuity exists
In-vehicle sensor	—	—	Approx. 5 (ignition switch ON and sensors disconnected)
Ambient sensor	i16	b2-b11	
Evaporator sensor	i16	b3-b11	
Refrigerant temperature	i16	b4-b11	
Water temperature sensor	i16	b12-b11	
Sunload sensor	i16	b13-b11	
Air mix door motor	i17	a5-a6	BATT voltage (AUTO mode) positive ⊕ at terminal "a5" and negative ⊖ at "a6" [temperature set at 18°C (65°F)]; negative ⊖ at terminal "a5" and positive ⊕ at "a6" [temperature set at 32°C (85°F)]
Air mix door motor P.B.R.	i16	b14-b11	Approx. 0.5 [temperature set at 18°C (85°F) in AUTO mode] Approx. 4.5 [temperature set at 32°C (85°F)]
Mode door motor	i17	a3-a4	BATT voltage (ignition switch ON in MANUAL mode); positive ⊕ at terminal "a3" and negative ⊖ at "a4" (VENT); negative ⊖ at "a3" and positive ⊕ at "a4" (DEF)
Mode door motor P.B.R.	i16	b15-b11	BATT voltage (ignition switch ON in MANUAL mode) Approx. 4.5 (VENT); approx. 0.5 (DEF)
Mode door FRS voltage	i16	b7-b11	BATT voltage (DEF switch ON)
Mode door REC voltage	i16	b5-b11	BATT voltage (CIRC switch ON)
OFF relay	i17	a12-body	BATT voltage (ignition switch ON)
HI relay	i17	a13-body	
A/C relay	i17	a14-body	BATT voltage (ignition and A/C switches ON) 0 (A/C switch OFF)
Illumination control signal	i16	b10-body	BATT voltage (ignition and lighting switches ON)
°F/°C select signal	i16	b16-b11	°C is shown (select switch ON) °F is shown (select switch SHORT)

8. Troubleshooting for A/C System Failure

A: A/C AND/OR SELF-DIAGNOSIS SYSTEMS DO NOT OPERATE.

CONTENTS OF DIAGNOSIS:
- Faulty auto amplifier
- Faulty harness connector
- Faulty connector

TROUBLE SYMPTOM:
- "Set" temperature is not indicated on display, switch LEDs are faulty and switches do not operate.
- Self-diagnosis system does not operate.

1 Check auto amplifier power circuit. — Not OK → Faulty fuse or harness

↓ OK

2 Check auto amplifier ground circuit. — Not OK → Faulty harness

↓ OK

Faulty auto amplifier (replace and recheck)

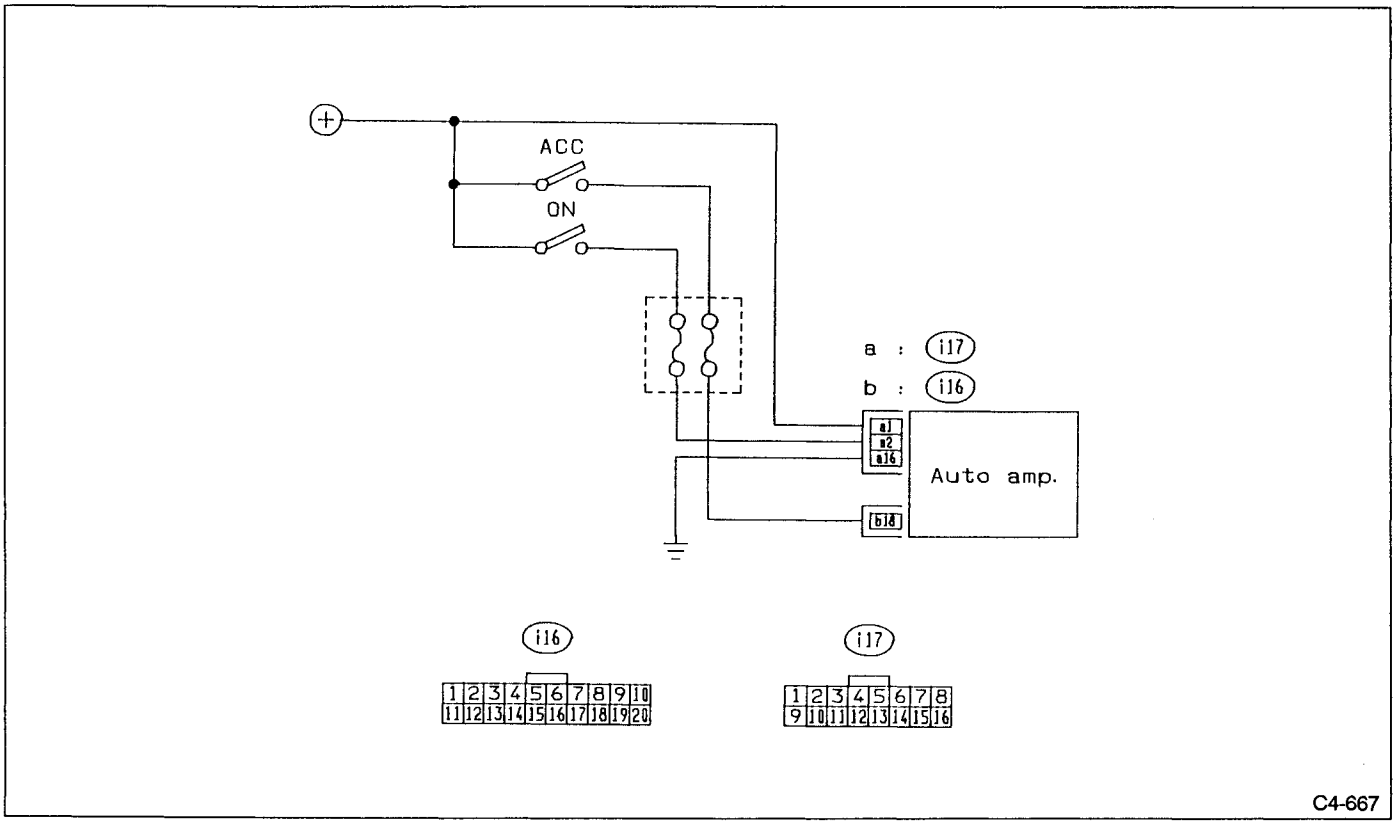

Fig. 177

1. CHECK VOLTAGE BETWEEN AUTO AMP. AND BODY

1) Measure voltage between Auto amp. connector terminals and body.

Connector & Terminal/Specified voltage:
Ignition switch
OFF (i17) No. 1 ⊕ — Body/Approx. 12 V
ACC (i17) No. 18 ⊕ — Body/Approx. 12 V
ON (i16) No. 2 ⊕ — Body/Approx. 12 V

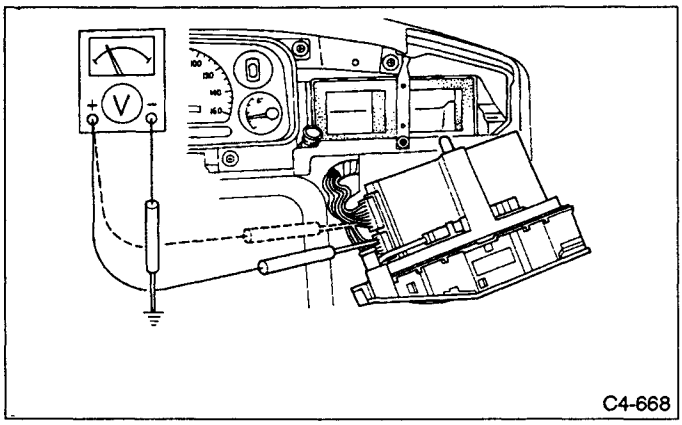

Fig. 178

2. CHECK GROUNDING CIRCUIT

1) Disconnect Auto amp. connector.
2) Check continuity between Auto amp. connector terminal and body.

Connector & Terminal/Specified resistance:
(i16) No. 16 — Body/0 Ω

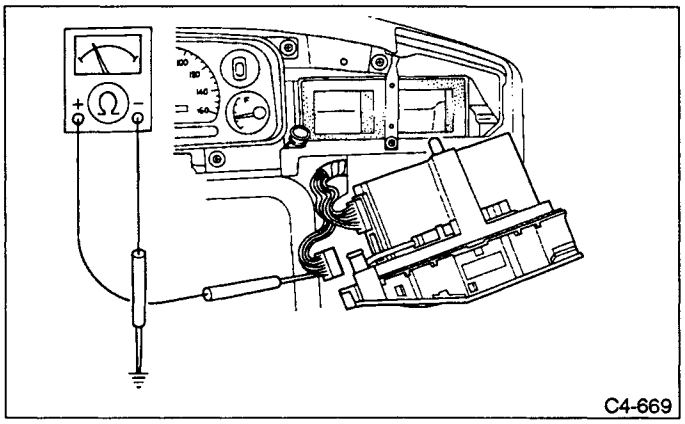

Fig. 179

B: BLOWER MOTOR DOES NOT ROTATE IN "HI" ONLY OR AT ALL.

CONTENTS OF DIAGNOSIS:
Burned-out fuse, or faulty harness, OFF relay, blower motor, auto amplifier or HI relay

TROUBLE SYMPTOM:
- Blower motor does not rotate.
- Blower motor does not rotate in "HI".

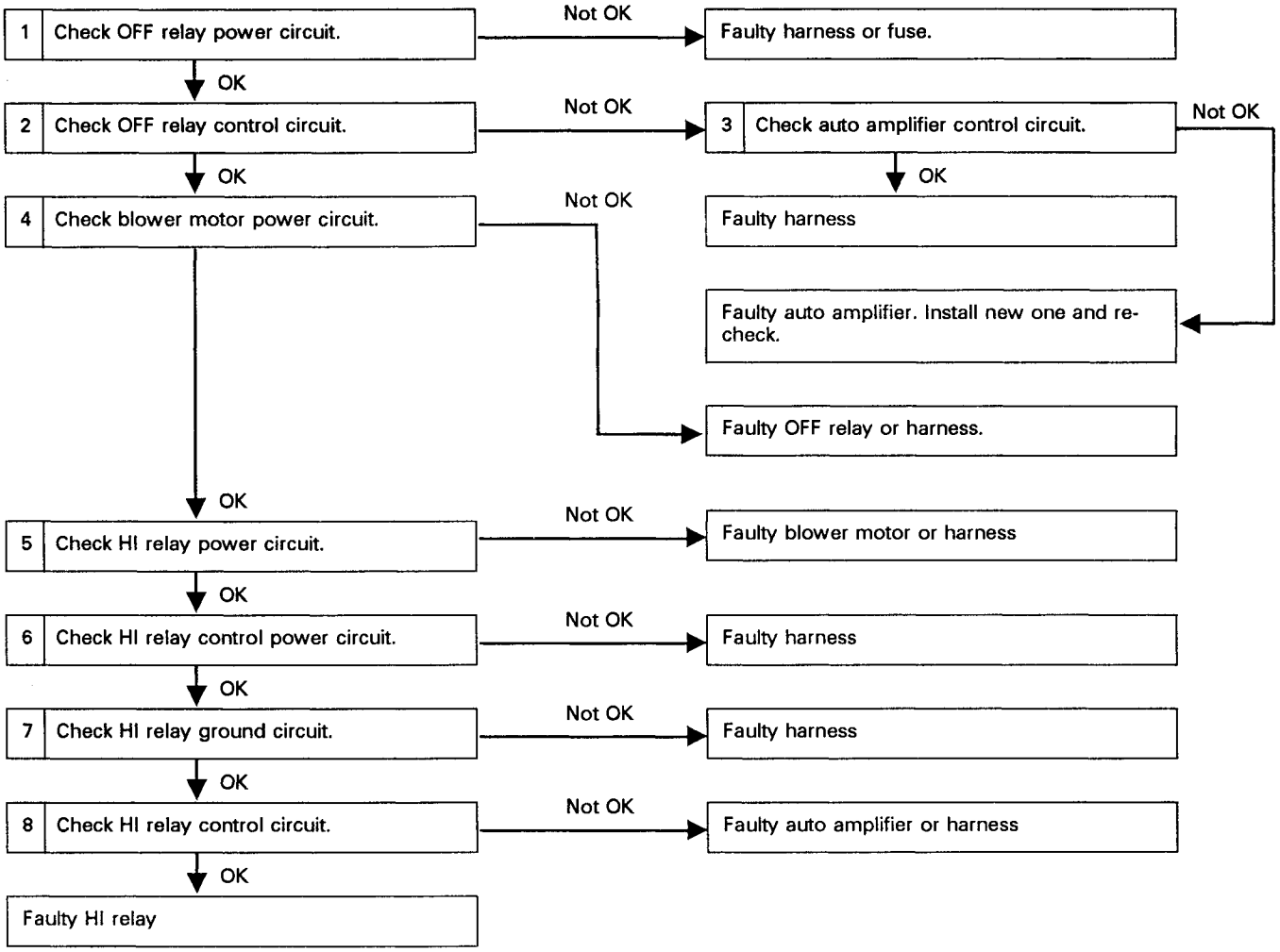

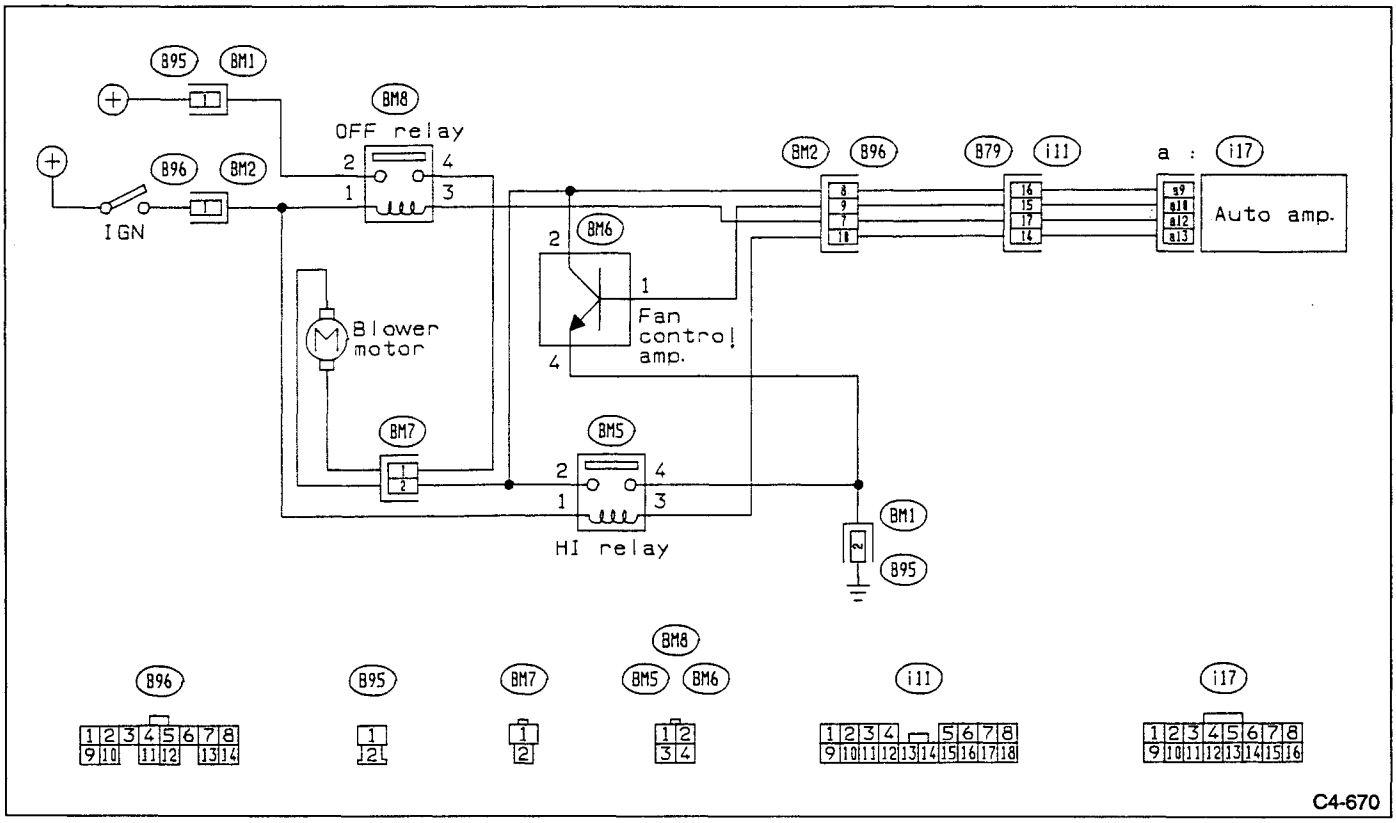
B95
BM1
BM8
OFF relay
B96
BM2
IGN
Blower motor
BM7
BM6
Fan control amp.
BM5
HI relay
BM1
B95
BM2
B96
B79
i11
a :
i17
Auto amp.
B96
B95
BM7
BM8
BM5
BM6
i11
i17
C4-670

Fig. 180

1. CHECK OFF RELAY POWER CIRCUIT.

1) Measure voltage between OFF relay connector terminals and body.

Connector & Terminal/Specified voltage:
Ignition switch OFF (BM8) No. 2 — Body/Approx. 12 V
ON (BM8) No. 1 — Body/Approx. 12 V

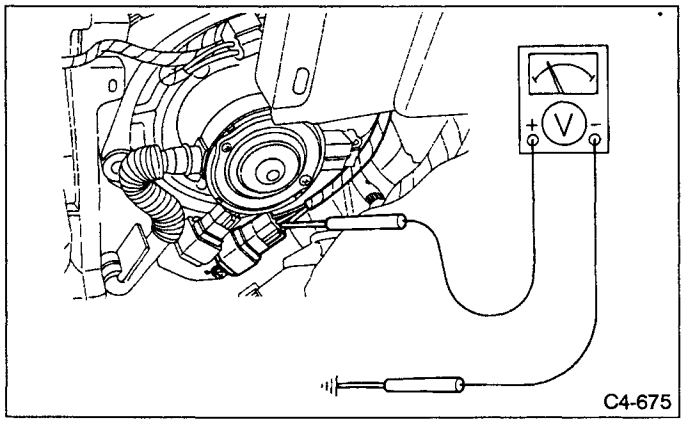

Fig. 181

2. CHECK OFF RELAY CONTROL CIRCUIT.

1) Turn the ignition switch to "ON".
2) Measure voltage between OFF relay connector terminals and body.

Connector & Terminal/Specified voltage:
OFF switch ON
(BM8) No. 3 — Body/Approx. 12 V
AUTO switch ON
FAN switch HI
(BM8) No. 3 — Body/Approx. 1 V max.

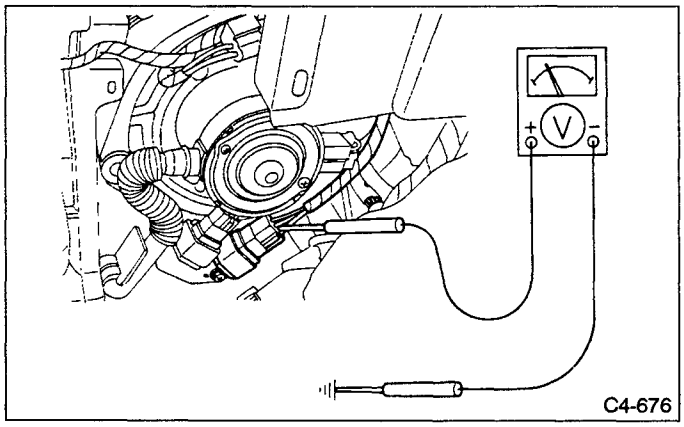

Fig. 182

3. CHECK AUTO AMPLIFIER CONTROL CIRCUIT.

1) Turn the ignition switch to "ON".
2) Measure voltage between AUTO amp. connector terminals and body.

Connector & Terminal/Specified voltage:
OFF switch ON
(i17) No. 12 — Body/Approx. 12 V
AUTO switch ON
FAN switch HI
(i17) No. 12 — Body/Approx. 1 V max.

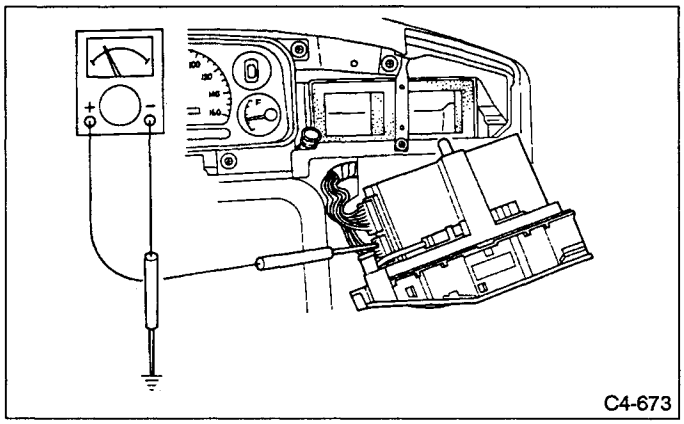

Fig. 183

4. CHECK BLOWER MOTOR POWER CIRCUIT.

1) Disconnect blower motor connector.
2) Turn the ignition switch to "ON".
3) Measure voltage between blower motor connector terminal and body.

Connector & Terminal/Specified voltage:
AUTO switch ON
FAN switch HI
(BM7) No. 1 — Body/Approx. 12 V

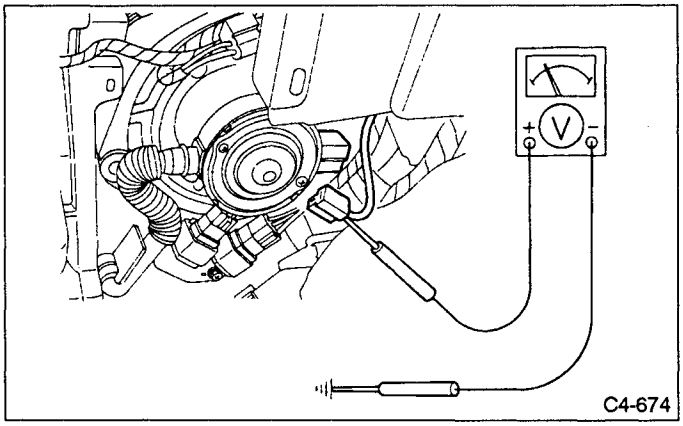

Fig. 184

5. CHECK HI RELAY POWER CIRCUIT.

1) Disconnect fan control amp. connector.
2) Turn the ignition switch to "ON".
3) Measure voltage between HI relay connector terminal and body.

Connector & Terminal/Specified voltage:
AUTO switch ON
FAN switch Low or Med
(BM5) No. 2 — Body/Approx. 12 V

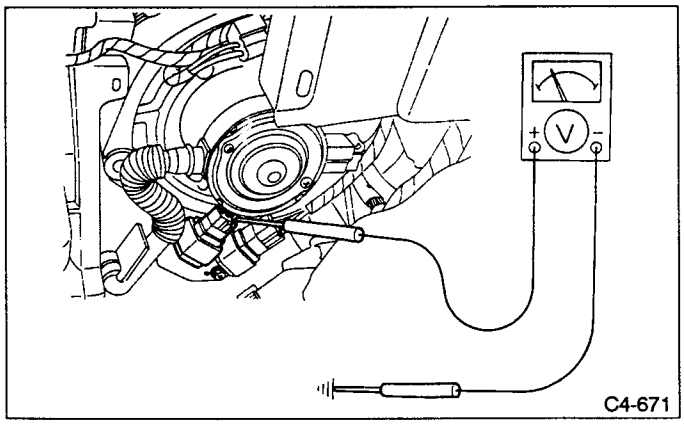

Fig. 185

6. CHECK HI RELAY CONTROL POWER CIRCUIT.

1) Turn the ignition switch to "ON".
2) Measure voltage between HI relay connector terminal and body.

Connector & Terminal/Specified voltage:
(BM5) No. 1 — Body/Approx. 12 V

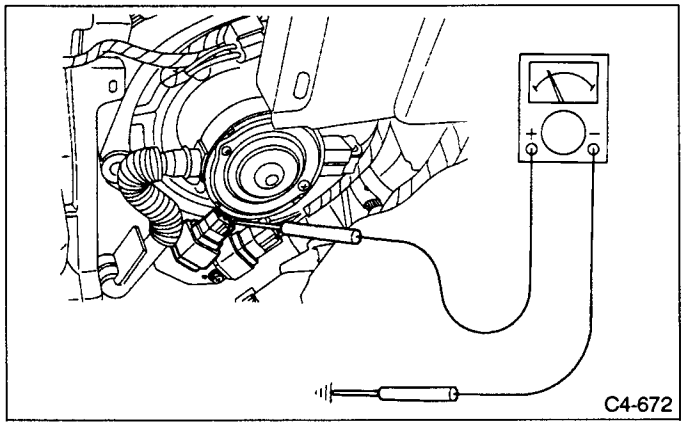

Fig. 186

7. CHECK HI RELAY GROUND CIRCUIT.

1) Disconnect HI relay connector.
2) Measure resistance between HI relay connector and body.

Connector & Terminal/Specified resistance:
(BM5) No. 4 — Body/0 Ω

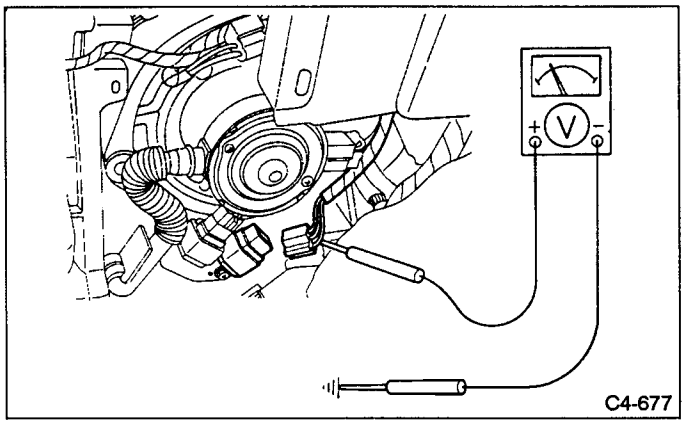

Fig. 187

8. CHECK HI RELAY CONTROL CIRCUIT.

1) Connect HI relay connector.
2) Turn the ignition switch to "ON".
3) Measure voltage between HI relay connector terminal and body.

Connector & Terminal/Specified voltage:
AUTO switch ON
FAN switch HI
(BM5) No. 3 — Body/1 V max.
FAN switch Lo•Med
(BM5) No. 3 — Body/Approx. 12 V

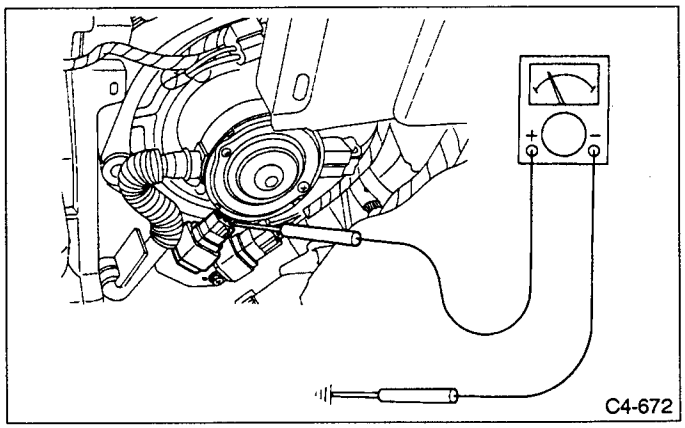

Fig. 188

C: BLOWER MOTOR ROTATES IN "HI" ONLY.

CONTENTS OF DIAGNOSIS:
Faulty harness, fan control amplifier or auto amplifier

TROUBLE SYMPTOM:
Blower motor rotates in "HI" but not in "LO" and "MED".

1	Check fan control amplifier power circuit.	Not OK	Faulty harness
	↓ OK		
2	Check fan control amplifier control voltage.	Not OK	Faulty auto amplifier or harness
	↓ OK		
3	Check fan control amplifier ground circuit.	Not OK	Faulty harness
	↓ OK		
	Faulty fan control amplifier		

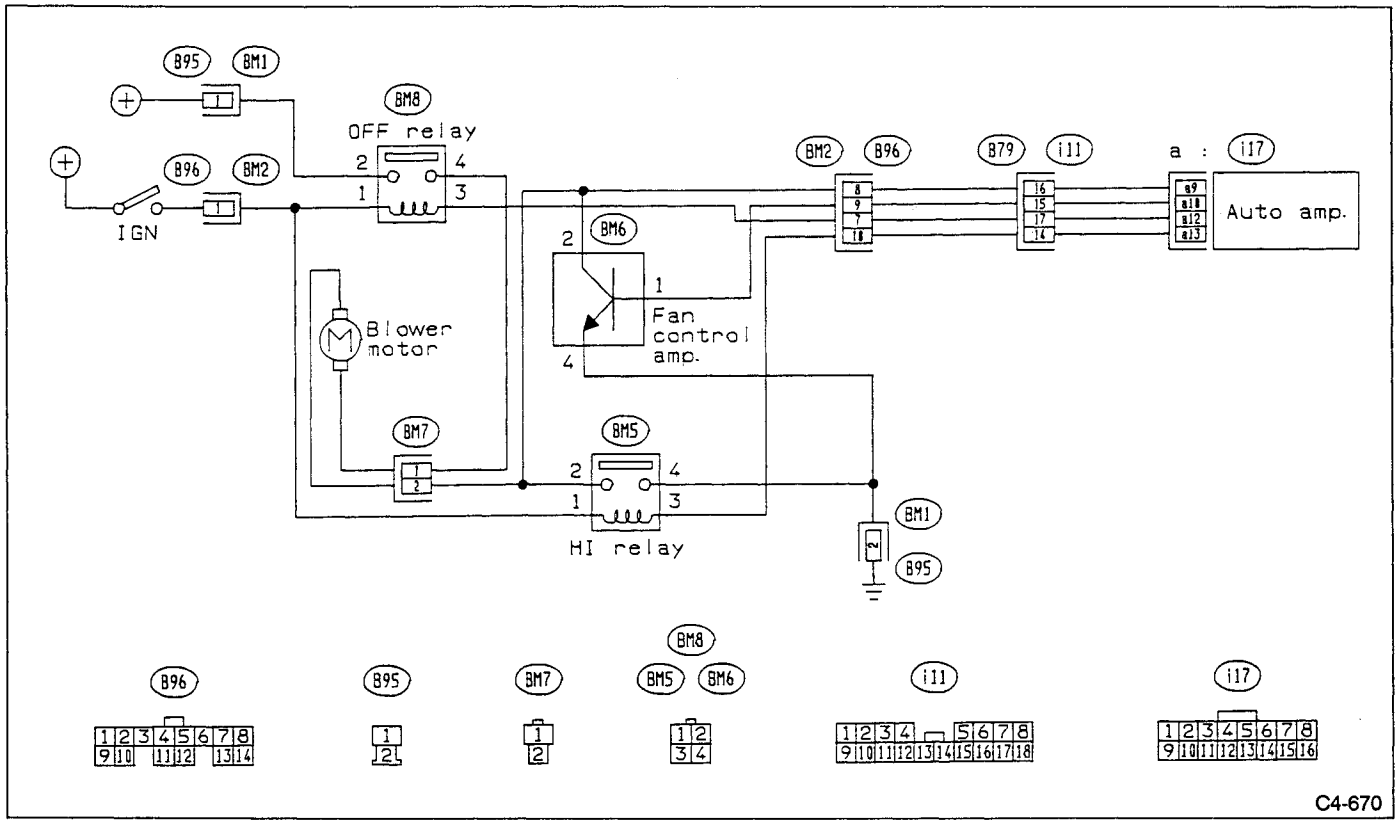

Fig. 189

1. CHECK FAN CONTROL AMPLIFIER POWER CIRCUIT.

1) Remove the glove box.
2) Disconnect fan control amp. connector.
3) Turn the ignition switch to "ON".
4) Measure voltage between fan control amp. connector and body.

Connector & Terminal/Specified voltage:
AUTO switch ON
FAN switch HI
(BM6) No. 2 — Body/1 V max.
FAN switch Low•Med
(BM6) No. 2 — Body/Approx. 12 V

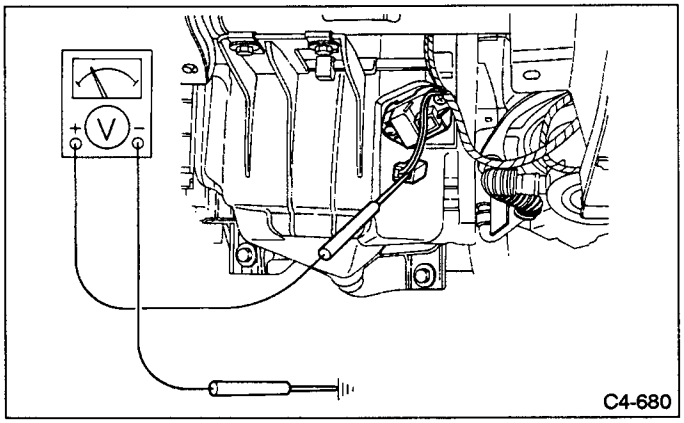

Fig. 190

2. CHECK FAN CONTROL AMPLIFIER CONTROL VOLTAGE.

1) Connect fan control amp. connector.
2) Turn the ignition switch to "ON".
3) Measure voltage between fan control amp. connector terminal and body.

Connector & Terminal/Specified voltage:
AUTO switch ON
FAN switch HI
(BM6) No. 1 — Body/Approx. 0 V
FAN switch Low•Med
(BM6) No. 1 — Body/Approx. 1.0 — 2.0 V

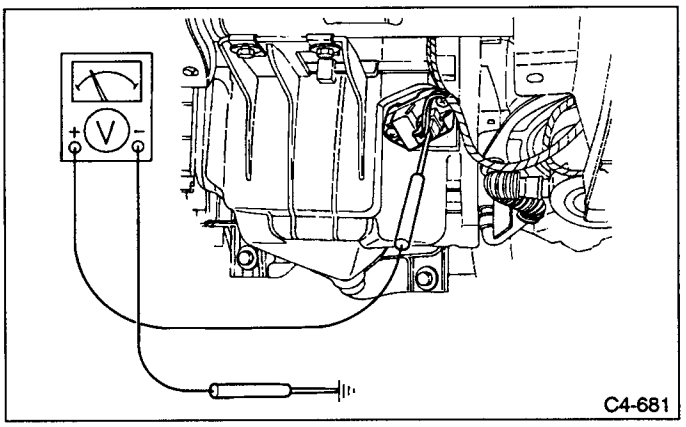

Fig. 191

3. CHECK FAN CONTROL AMPLIFIER GROUND CIRCUIT.

1) Disconnect fan control amp. connector.
2) Measure resistance between fan control amp. connector terminal and body.

Connector & Terminal/Specified resistance:
(BM6) No. 4 — Body/0 Ω

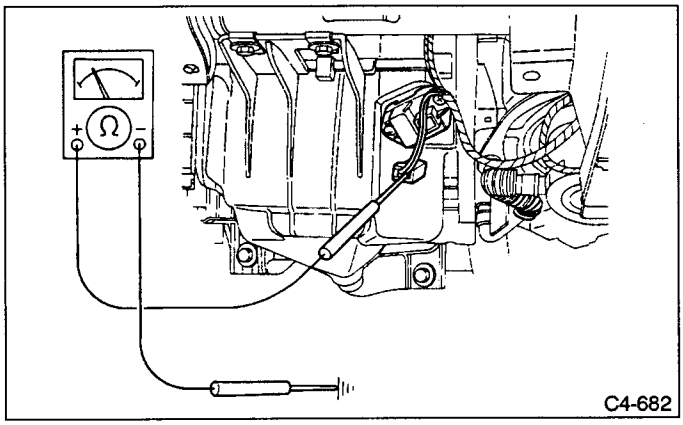

Fig. 192

D: BLOWER MOTOR SPEED DOES NOT CHANGE.

CONTENTS OF DIAGNOSIS:
Faulty auto amplifier, fan control amplifier or HI relay

TROUBLE SYMPTOM:
Blower motor speed does not change but is constant.

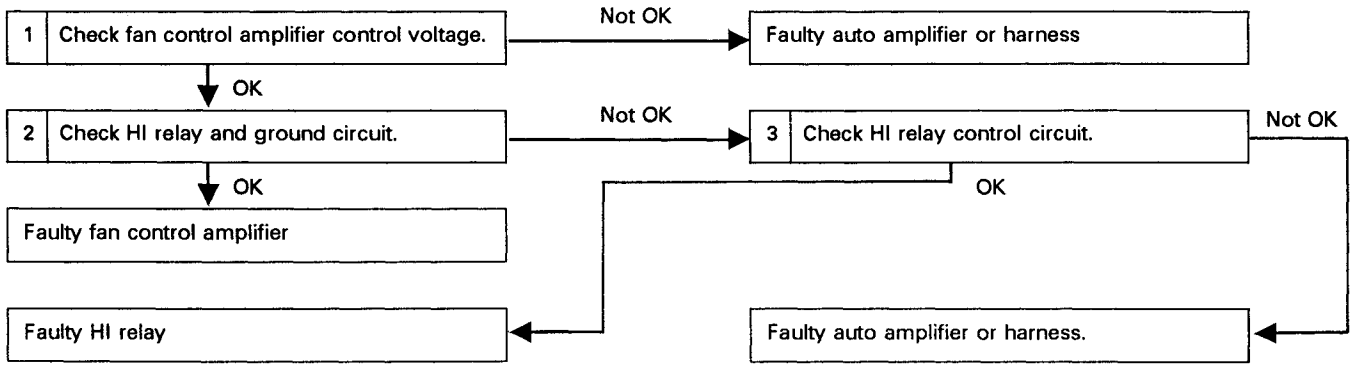

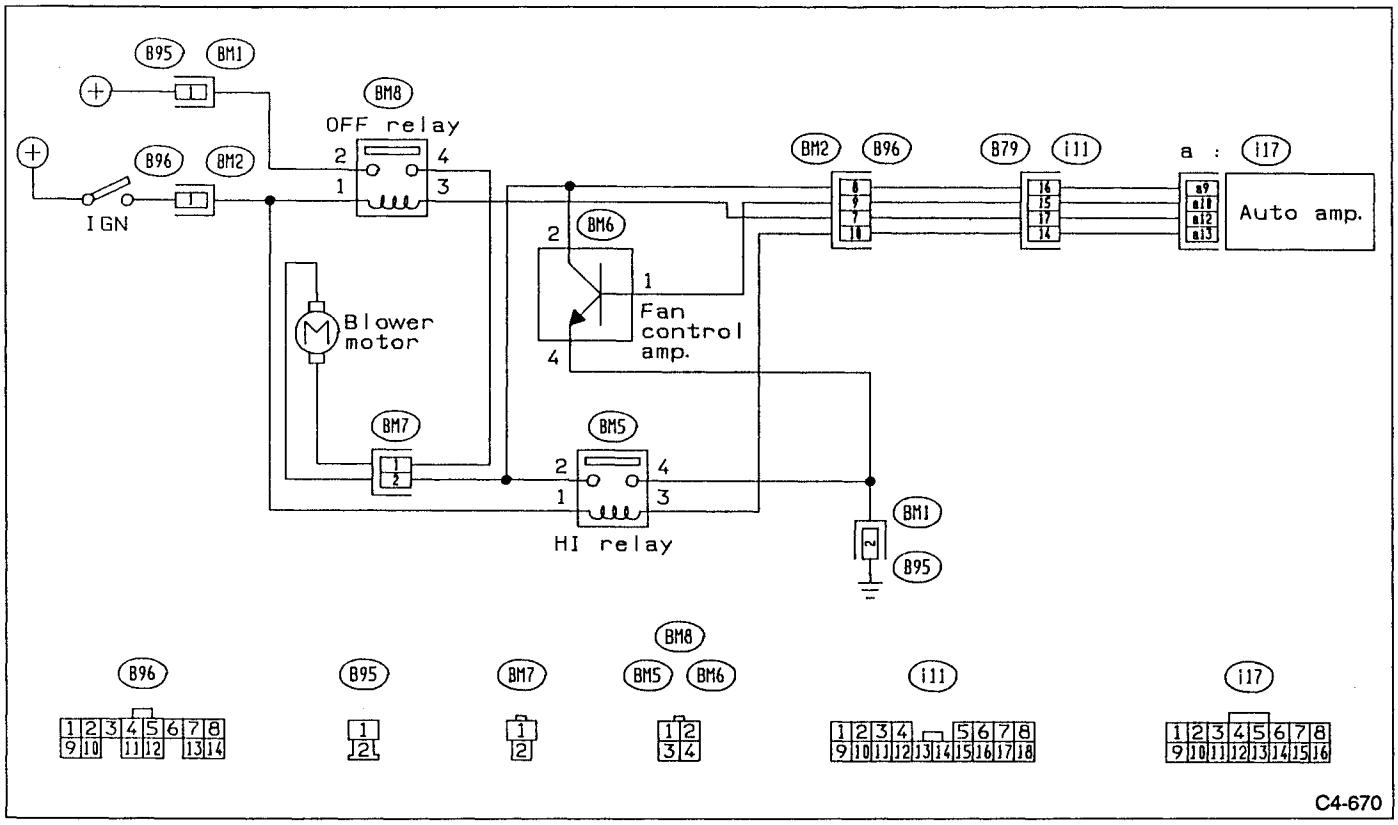

Fig. 193

1. CHECK FAN CONTROL AMPLIFIER CONTROL VOLTAGE.

1) Remove the glove box.
2) Turn the ignition switch to "ON".
3) Measure voltage between fan control amp. connector terminal and body.

Connector & Terminal/Specified voltage:
AUTO switch ON
FAN switch Low•Med
(BM6) No. 1 — Body/Approx. 1.0 — 2.0 V

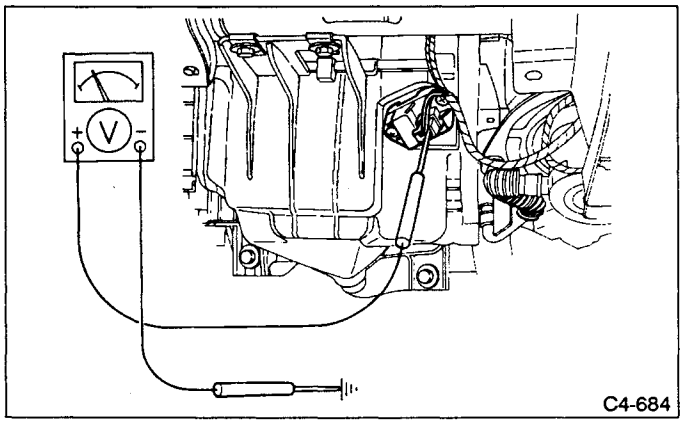

Fig. 194

2. CHECK HI RELAY OPERATION AND GROUND CIRCUIT.

1) Disconnect fan control amp. connector.
2) Turn the ignition switch to "ON".
3) Measure voltage between HI relay connector terminal and body.

Connector & Terminal/Specified voltage:
AUTO switch ON
FAN switch HI
(BM5) No. 2 — Body/Approx. 0 V
FAN switch Low•Med
(BM5) No. 2 — Body/Approx. 12 V

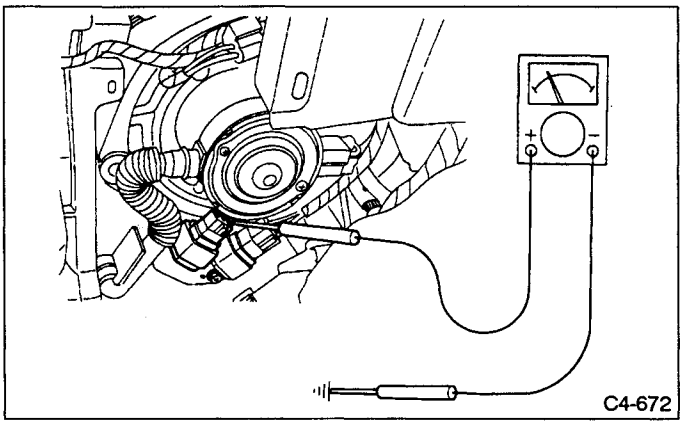

Fig. 195

3. CHECK HI RELAY CONTROL CIRCUIT.

1) Turn the ignition switch to "ON".
2) Measure voltage between HI relay connector terminal and body.

Connector & Terminal/Specified voltage:
AUTO switch ON
FAN switch HI
(BM5) No. 3 — Body/Approx. 1 V max.
FAN switch Low•Med
(BM5) No. 3 — Body/Approx. 12 V

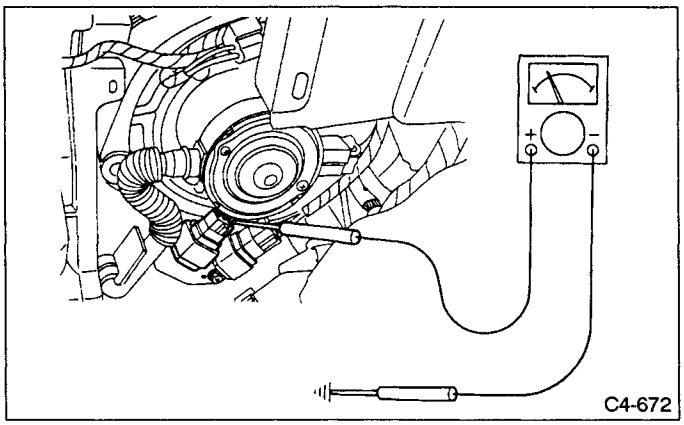

Fig. 196

E: COMPARTMENT TEMPERATURE DOES NOT CHANGE FROM "SET" TEMPERATURE OR AIR CONDITIONING SYSTEM DOES NOT RESPOND QUICKLY.

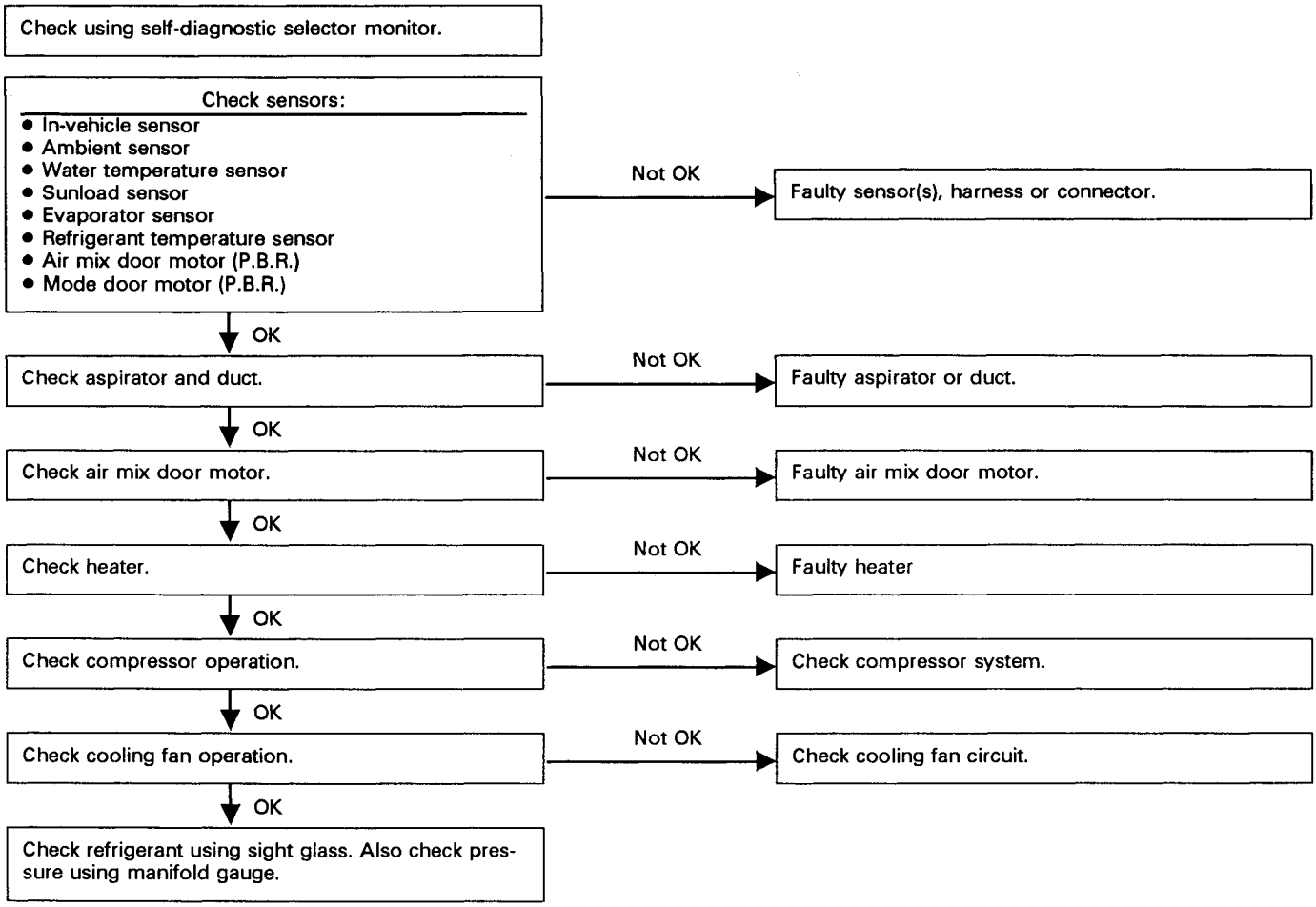

F: MAGNET CLUTCH DOES NOT TURN ON OR OFF.

CONTENTS OF DIAGNOSIS:
Faulty fuse, harness, pressure switch, air conditioner relay, sensor or MPFI unit, or insufficient refrigerant level

TROUBLE SYMPTOM:
- Magnet clutch does not engage.
- Magnet clutch does not disengage.

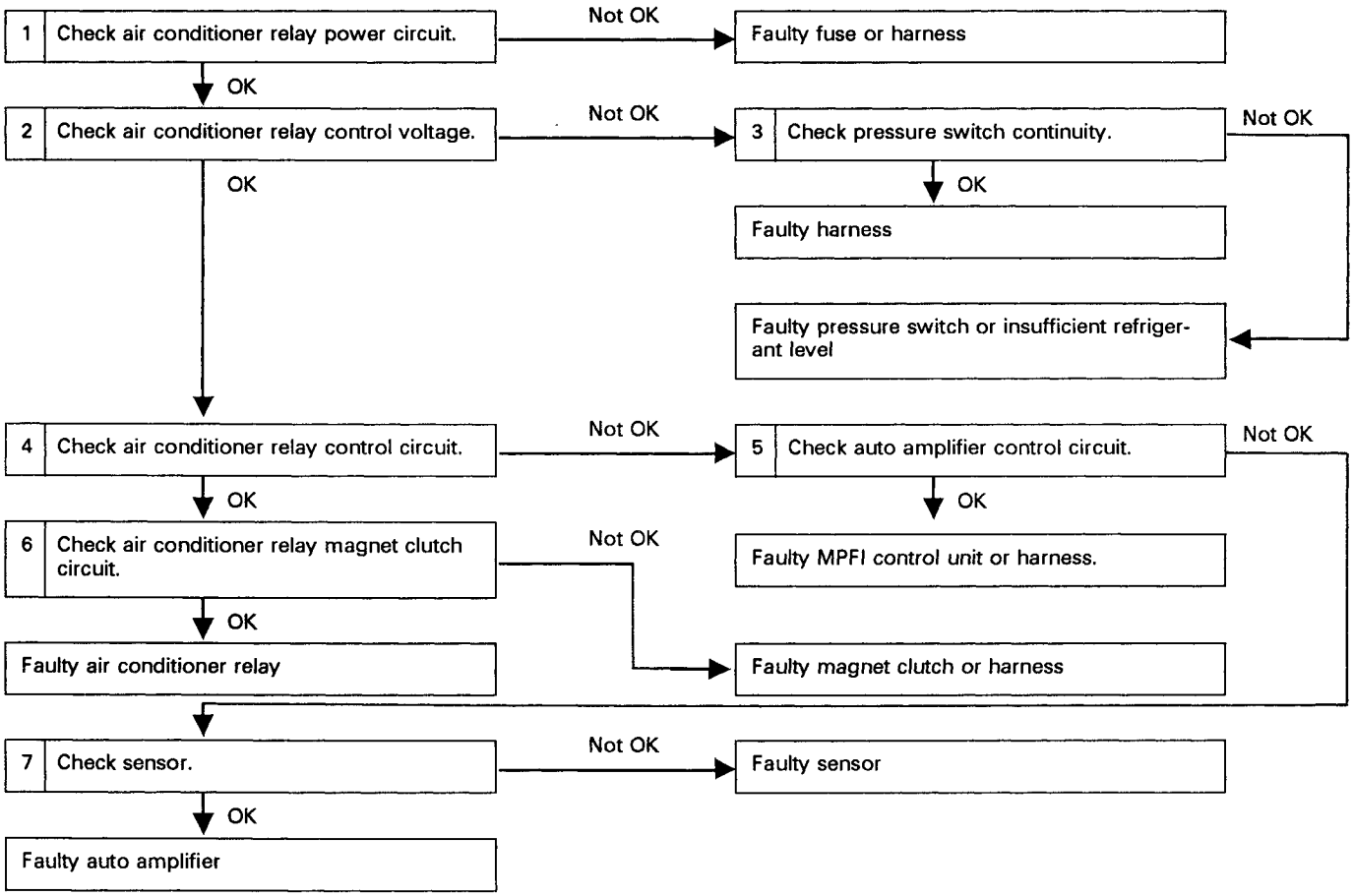

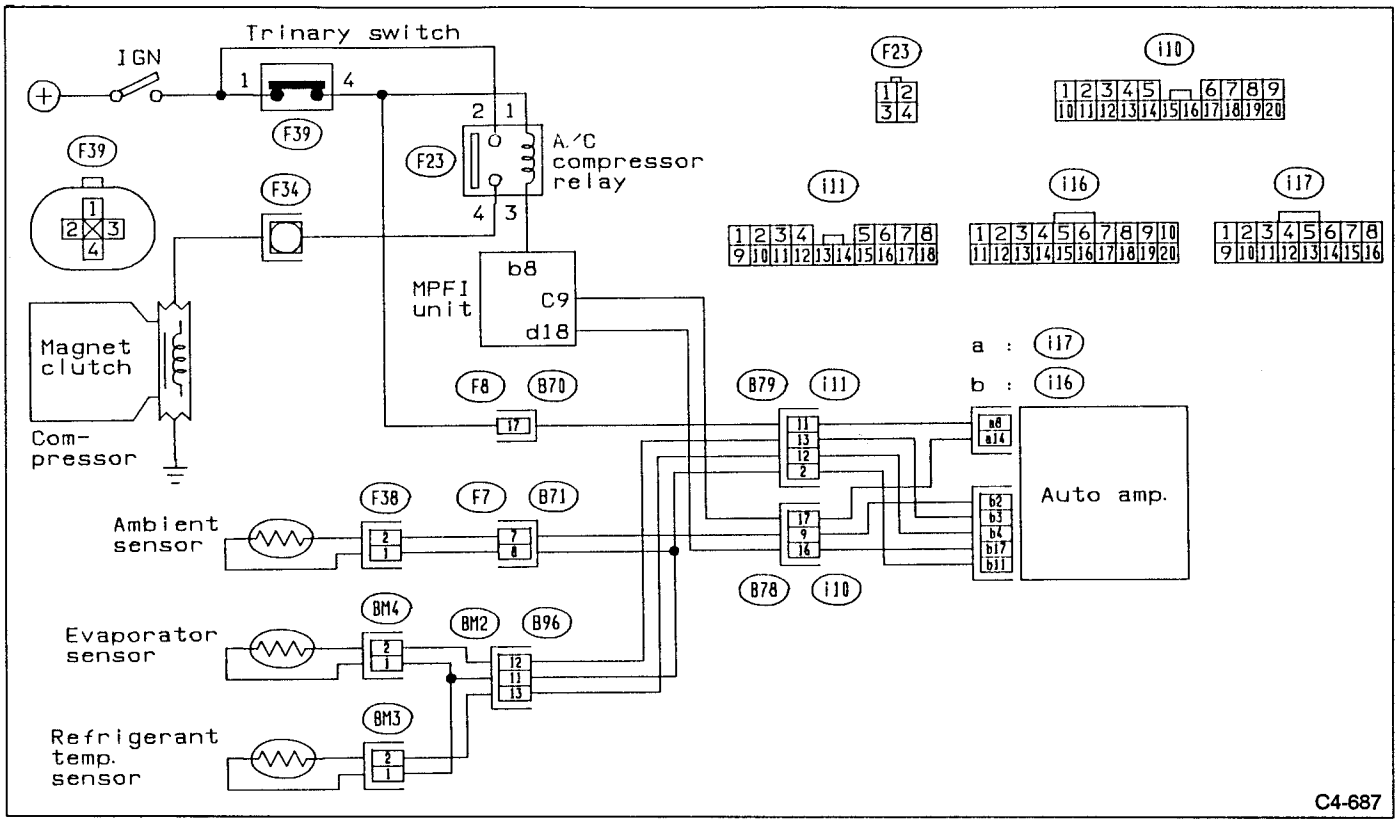
Trinary switch
IGN
F39
F23
A/C compressor relay
F34
MPFI unit
b8
C9
d18
Magnet clutch
Com-pressor
F8
B70
i17
B79
i11
a : i17
b : i16
Auto amp.
F38
F7
B71
Ambient sensor
B78
i10
BM4
BM2
B96
Evaporator sensor
BM3
Refrigerant temp. sensor
i10
i11
i16
i17
C4-687

Fig. 197

1. CHECK AIR CONDITIONER RELAY POWER CIRCUIT.

1) Remove A/C relay.
2) Turn the ignition switch to "ON".
3) Measure voltage between A/C relay connector terminal and body.

Connector & Terminal/Specified voltage:
(F23) No. 2 — Body/Approx. 12 V

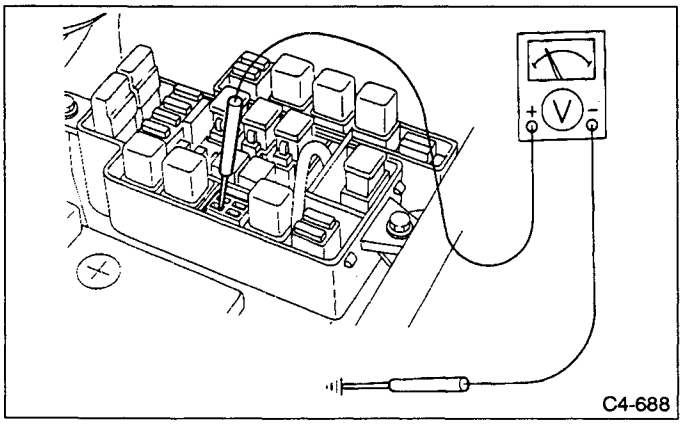

Fig. 198

2. CHECK AIR CONDITIONER RELAY CONTROL VOLTAGE.

1) Turn the ignition switch to "ON".
2) Measure voltage between A/C relay connector terminal and body.

Connector & Terminal/Specified voltage:
(F23) No. 1 — Body/Approx. 12 V

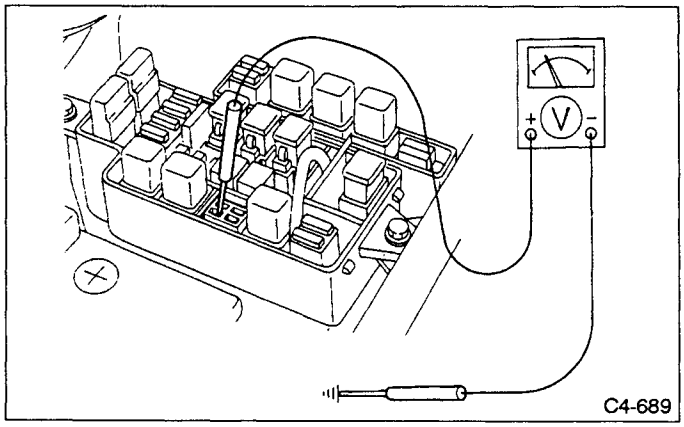

Fig. 199

3. CHECK PRESSURE SWITCH CONTINUITY.

1) Disconnect pressure switch connector.
2) Measure resistance between pressure switch terminals.

Connector & Terminal/Specified resistance:
No. 1 — No. 4/0 Ω

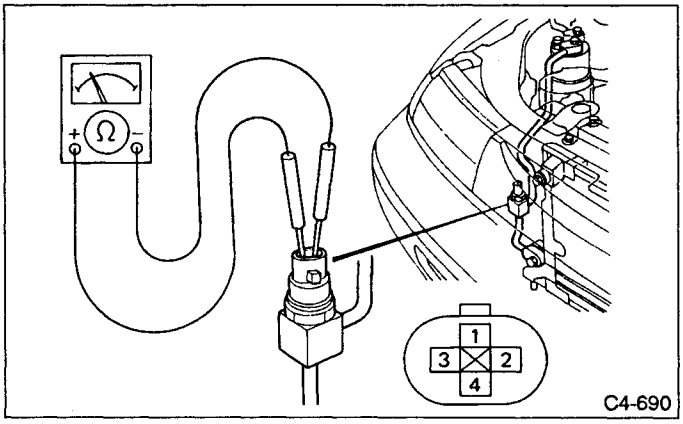

Fig. 200

4. CHECK AIR CONDITIONER RELAY CONTROL CIRCUIT.

1) Turn the ignition switch to "ON".
2) Measure voltage between A/C relay connector terminal and body.

Connector & Terminal/Specified voltage:
OFF switch ON
(F23) No. 3 — Body/Approx. 12 V
DEF switch ON
(F23) No. 3 — Body/1 V max.

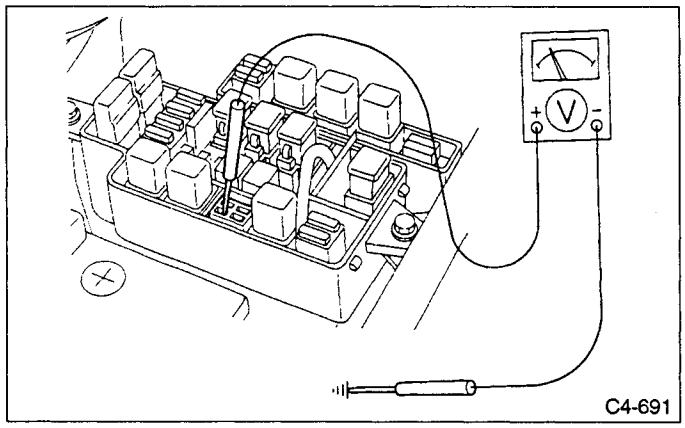

Fig. 201

5. CHECK AUTO AMPLIFIER CONTROL CIRCUIT.

1) Turn the ignition switch to "ON".
2) Measure voltage between and body.

Connector & Terminal/Specified voltage:
OFF switch ON
(i17) No. 14 — Body/Approx. 0 V
DEF switch ON
(i17) No. 14 — Body/Approx. 12 V

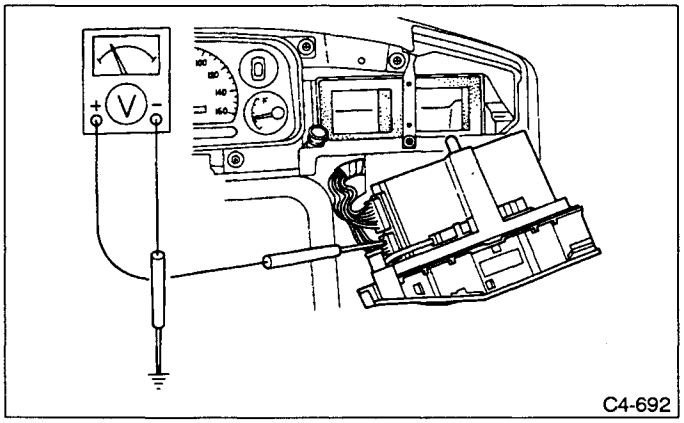

Fig. 202

6. CHECK AIR CONDITIONER RELAY MAGNET CLUTCH.

1) Remove A/C relay.
2) Measure resistance between A/C relay connector terminal and body.

Connector & Terminal/Specified resistance:
(F23) No. 4 — Body/Approx. 7.3 Ω

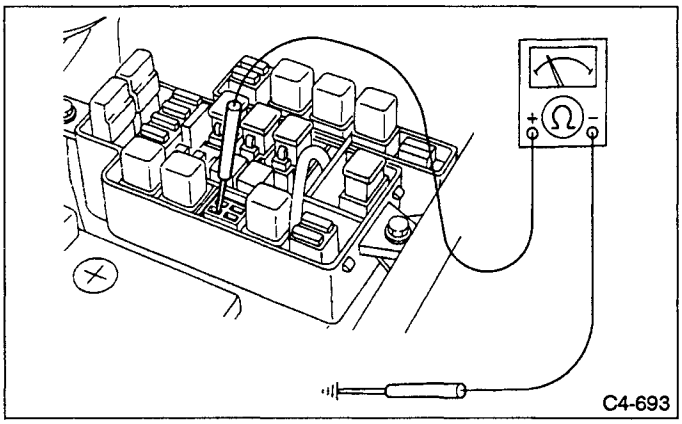

Fig. 203

7. CHECK SENSOR.

• Check sensor using self-diagnosis function "STEP [2]".

Sensors to check	Standard value
Ambient sensor	Ensure sensors and related circuits operate properly.
Evaporator sensor	
Refrigerant temperature	

G: COMPARTMENT IS NOT COOL (MAGNET CLUTCH ON).

CONTENTS OF DIAGNOSIS:
Faulty harness, solenoid actuator, auto amplifier or air mix door system.

TROUBLE SYMPTOM:
Compartment does not become cool.

1 Check solenoid actuator control current.
- Not OK → Check pressure using manifold gauge.
- OK ↓

2 Check air mix door.
- Not OK → Faulty air mix door system or auto amplifier
- OK ↓

Check pressure using manifold gauge.

3 Check solenoid actuator resistance.
- Not OK → Faulty solenoid actuator
- OK ↓

Faulty auto amplifier or harness

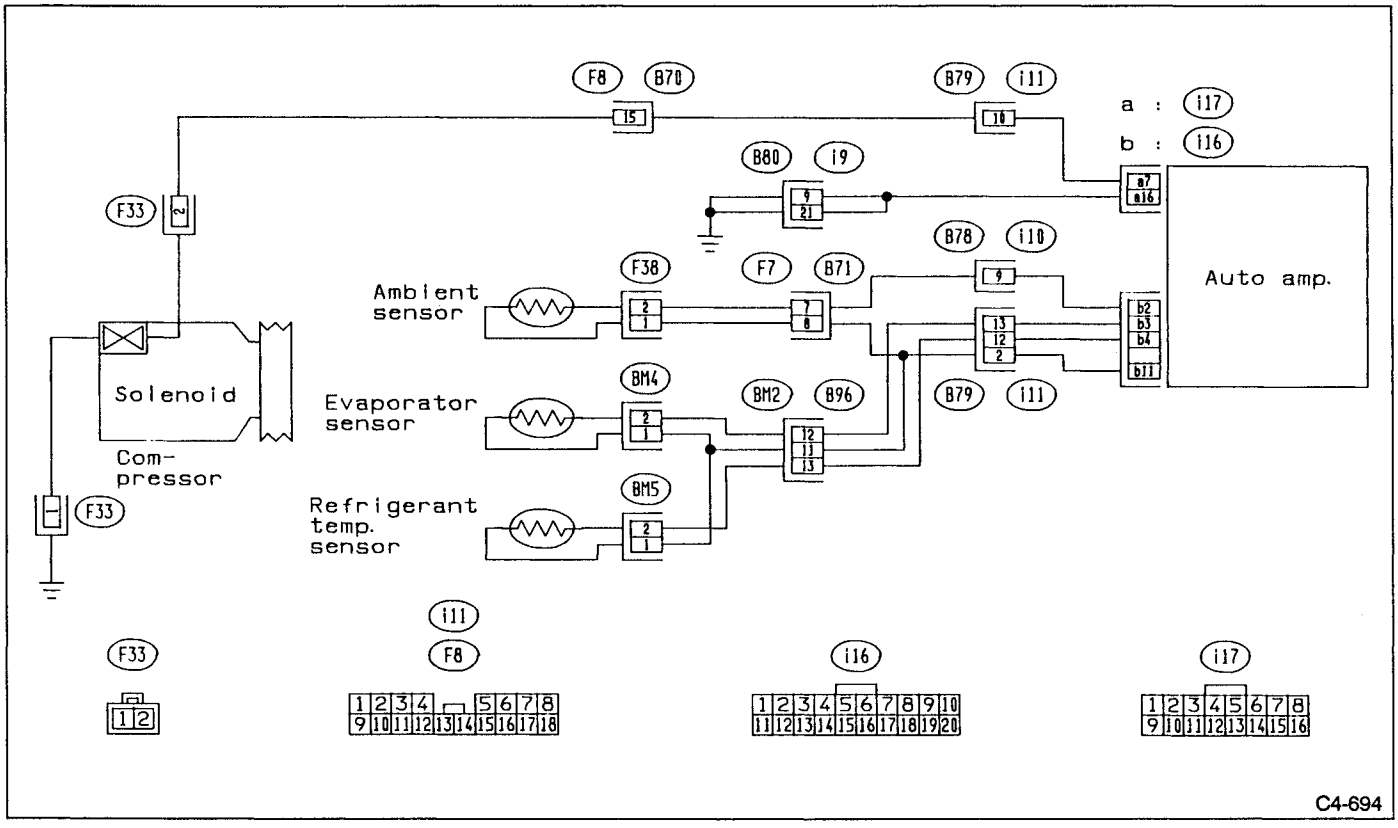

Fig. 204

1. CHECK SOLENOID VALVE CONTROL CURRENT.

1) Set to self-diagnostic function "STEP [3]".
2) Disconnect solenoid actuator.
3) Measure ampere between solenoid actuator connector terminal and body harness connector.

Connector & Terminal/Specified ampere:
(F23) No. 2 ⊕ (Body harness) — No. 2 ⊖ (Solenoid)/
Display 41 0 A
Display 42 0.65 A

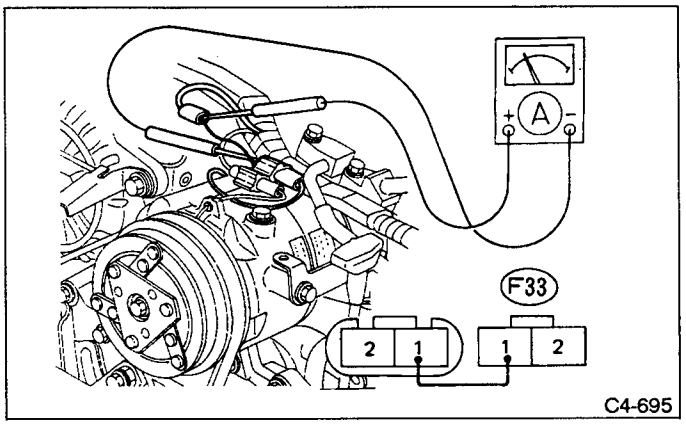

Fig. 205

2. CHECK AIR MIX DOOR.

1) Set to self-diagnosis function "STEP [3]".
2) Visually inspect link movement to check air mix door position.

Specified position:
Display 42 Max. hot
Display 43 50%
Display 44 Max. cold

3. CHECK SOLENOID ACTUATOR RESISTANCE.

1) Remove solenoid actuator connector.
2) Measure resistance between solenoid actuator connector terminals.

Connector & Terminal/Specified resistance:
No. 2 — No. 1/Approx. 6 — 11 Ω

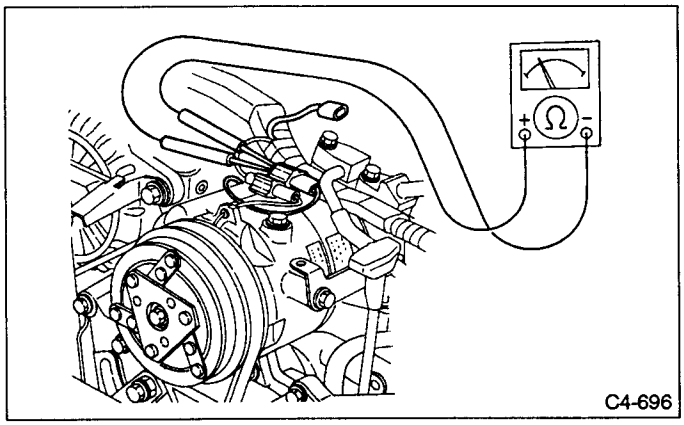

Fig. 206

H: MAGNET CLUTCH CYCLES ON AND OFF CONTINUALLY.

CONTENTS OF DIAGNOSIS:
Faulty solenoid actuator, sensor, harness or auto amplifier

TROUBLE SYMPTOM:
Magnet clutch cycles ON and OFF when ambient temperatures are higher than 10°C (50°F).

Magnet clutch can sometimes turn ON and OFF even when ambient temperatures are lower than approximately 10°C (50°F). This indicates that freeze- protection function is operating and is not a problem.

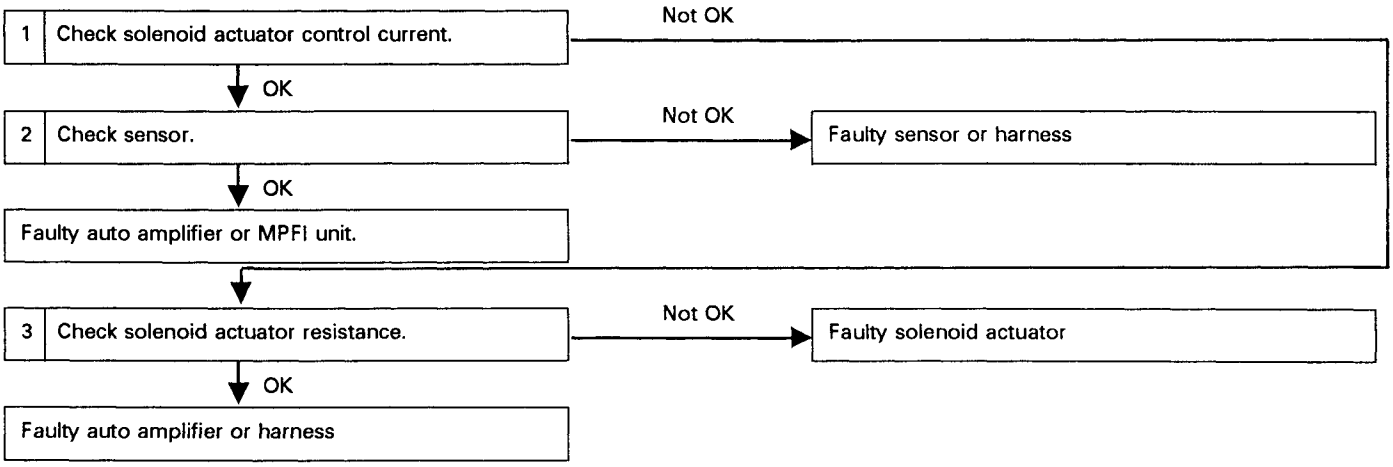

1. CHECK SOLENOID VALVE CONTROL CURRENT.

1) Set to self-diagnosis function "STEP [3]".
2) Disconnect solenoid actuator.
3) Measure ampere between solenoid actuator connector terminal and body harness connector.

Specified ampere:
(F33) No. 2 ⊕ (Body harness) — No. 2 (Solenoid actuator)/Display 41 0 A
Display 42 0.65 A

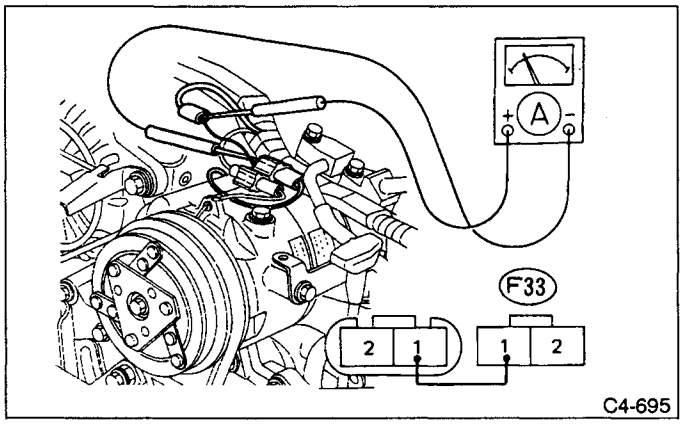

Fig. 207

2. CHECK SENSORS.

- Use self-diagnosis function "STEP [2]".

Sensors to check	Standard value
Ambient sensor	Ensure sensors and their circuits are in good condition.
Evaporator sensor	
Refrigerant temperature sensor	

3. CHECK SOLENOID VALVE ACTUATOR RESISTANCE.

1) Disconnect solenoid valve actuator connector.
2) Measure resistance between solenoid valve connector terminals.

Connector & Terminal/Specified resistance:
No. 2 — No. 1/Approx. 6 — 11 Ω

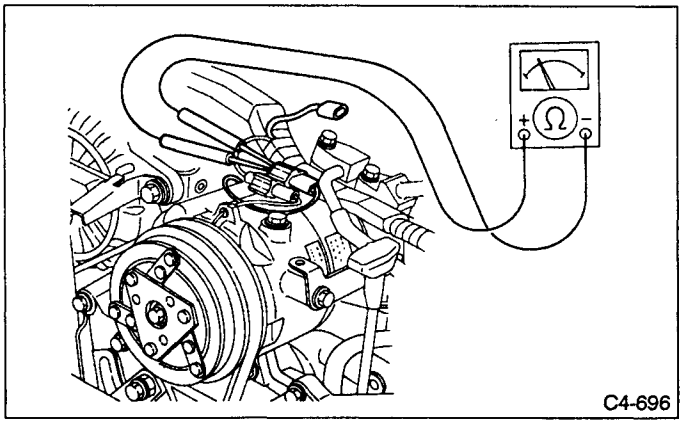

Fig. 208

9. Basic Check

Start and warm up engine completely.

1. BASIC CHECK

1) Inspection using switches.

No.	Point to check	Switch operation	Judgement standard
1	OFF switch	① OFF switch "ON"	① LED on panel and "set" temperature display go out. • Air flow → OFF • Outlet → HEAT • Inlet → FRESH • Compressor → OFF
2	AUTO switch	① AUTO switch "ON" ② Temp. control switch 18°C (65°F) (Max. Cold)	① AUTO switch LED illuminates. ② • Outlet air → Cool • Air flow → HI (AUTO) • Outlet → VENT • Inlet → AUTO • Compressor → AUTO
		TEMP control switch is gradually set from 18°C (65°F) to 32°C (85°F).	③ Air and air outlet mode change as follows: • Outlet air: cool → hot • Air flow: AUTO • Outlet: VENT → BILEVEL → HEAT • Inlet: AUTO
		④ Temp. control switch 32°C (85°F) (Max. Hot)	④ Outlet air → Hot • Air flow → HI (AUTO) • Outlet → HEAT • Inlet → FRESH (AUTO) • Compressor → AUTO
3	ECON switch	① ECON switch "ON" ② Temp. control switch 18 — 32°C (65 — 85°F)	① ECON switch LED illuminates. ② • Outlet air temperature • Air flow AUTO control • Outlet • Inlet → FRESH • Compressor OFF
4	DEF switch	① DEF switch "ON" ② Temp. control switch 18 — 32°C (65 — 85°F)	① DEF switch LED illuminates. ② • Outlet air temperature AUTO control • Air flow • Outlet → DEF • Inlet → FRESH • Compressor → ON
5	VENT switch	① VENT switch "ON"	① VENT switch LED illuminates and "set" temperature display goes out. • Outlet air → Ambient temperature • Air flow → ME (7.5 V) • Outlet → VENT • Inlet → FRESH • Compressor → OFF
6	CIRC switch	① CIRC switch "ON"	① CIRC switch LED illuminates. • Inlet: Set to "RECIRC" for 10 minutes, then to "FRESH". (CIRC switch lamp goes out.)
7	FAN switch	① FAN switch "ON" ② LO switch "ON" ③ MED switch "ON" ④ HI switch "ON"	① LED corresponding to switch pressed illuminates. ② Air flow → LO ③ Air flow → ME ④ Air flow → HI
8	OUT-TEMP switch	① OUT-TEMP switch "ON"	① Ambient temperature flashes on "set" temperature display, and "set" temperature appears.

2) Compressor operation inspection

No.	Point to check	Switch operation	Judgement standard	Remarks
1	Compressor	① DEF switch "ON" ② ECON switch "ON" ③ DEF switch "ON"	① Compressor ON ② Compressor OFF ③ Compressor ON	Compressor turns OFF several seconds after ECON switch is turned ON.

3) Illumination control inspection

No.	Point to check	Switch operation	Judgement standard	Remarks
1	Illumination switch	Lighting switch "ON"	① Illumination lamp illuminates and both switch lamp and "set" temperature display dim. • Switch lamps: OFF → Green lamp illuminates. ON → Amber lamp illuminates.	Green lamps remain on although OFF and OUT-TEMP switches are ON.

2. INSPECTION USING SIGHT GLASS

When high-pressure line is greater than 588 kPa (6 kg/cm², 85 psi) observe sight glass to check refrigerant amount.

Correct amount of refrigerant cannot be judged if the line pressure is less than 588 kPa (6 kg/cm², 85 psi) since air bubbles flow through system.

Item to check	Adequate	Insufficient	Almost in refrigerant	Too much refrigerant
State in sight glass	CLEAR Air bubbles sometimes appear when engine speed is increased or decreased 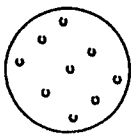	FOAMY Or BUBBLY Air bubbles always appear. 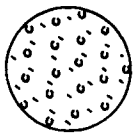	FROSTY Frost-like appears. 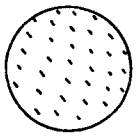	NO FOAM NO air bubbles appear. 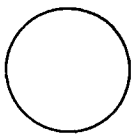
Temperature of high and low pressure lines	High-pressure side is hot while low-pressure side is cold. (A big temperature difference between high and low-pressure side.)	High-pressure side is warm and low-pressure side is slightly cold. (Not so big temperature difference between high and low-pressure side.)	There is almost no temperature difference between high and low- pressure side.	High-pressure side is hot and low-pressure side is slightly warm. (Slight temperature difference between and low pressure side.)
Pressure of system	Both pressures on high and low-pressure sides are normal.	Both pressures on high and low-pressure sides are slightly low.	High-pressure side is abnormally low.	Both pressures on high and low-pressure sides are abnormally high.

Fig. 209 B4-712

3. INSPECTION USING MANIFOLD GAUGE

Standard pressure:
High-pressure side
Approx. 1,275 — 1,471 kPa (13 — 15 kg/cm², 185 — 213 psi)
Low-pressure side
Approx. 196 kPa (2 kg/cm², 28 psi)

Connect manifold gauge and read pressure gauge indication.

Vehicle conditions:

Windows ..... Open
Engine speed ..... 1,500 — 1,700 rpm
Blower fan speed ..... HI
Inlet ..... FRESH
"Set" temperature display ..... 18°C (65°F)

10. Trouble Diagnosis for Abnormal Pressure

Whenever abnormal pressure in the high and/or low sides of the system is noted. Diagnosis must be conducted by using a gauge manifold. The thick-line zone on the gauge scale (see illustrations) shown in the following table refers to the standard (normal) pressure.

Gauge indication	Refrigerant cycle	Probable cause	Corrective action
Both high- and low-pressure sides are too high. 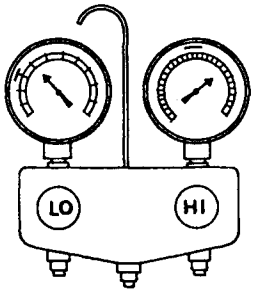 B4-713 *Fig. 210*	Pressure is reduced soon after water is splashed on condenser. No air bubbles appear in sight glass when pressure is reduced.	Excessive refrigerant charge in refrigeration cycle	Reduce refrigerant until specified pressure is obtained.
	Air suction by radiator or condenser fan is insufficient.	Insufficient condenser cooling performance ↓ 1) Condenser fin is clogged. 2) Improper rotation of radiator fan or condenser fan	• Clean condenser. • Check and repair cooling fan as necessary.
	• Low-pressure pipe is not cold. • When compressor is stopped, high-pressure value quickly drops by approximately 196 kPa (2 kg/cm^2, 28 psi). It will then decrease gradually thereafter.	Poor heat exchange in condenser (After compressor operation stops, high pressure decreases too slowly.) ↓ Air in refrigeration cycle	Evacuate repeatedly and recharge system.
	Engine tends to overheat.	Engine cooling systems malfunction.	Check and repair each engine cooling system.
	• Area near low-pressure pipe connection and service valves are considerably cold as compared with area near expansion valve outlet or evaporator. • Parts are sometimes covered with frost.	• Excessive liquid refrigerant on low-pressure side • Excessive refrigerant discharge flow • Expansion valve is open a little compared with the specification. ↓ 1)Improper thermal valve installation 2)Improper expansion valve adjustment	Replace expansion valve.
High-pressure side is too high and low-pressure side is too low. 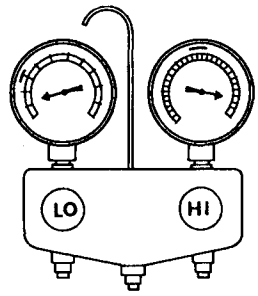 B4-714 *Fig. 211*	Upper side of condenser and high-pressure side are hot, however, receiver drier is not so hot.	High-pressure hose or parts located between compressor and condenser are clogged or crushed.	• Check and repair or replace malfunctioning parts. • Check compressor oil for contamination.

Gauge indication	Refrigerant cycle	Probable cause	Corrective action
High-pressure side is too low and low-pressure side is too high. 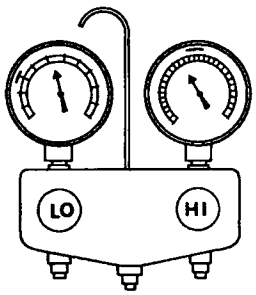 B4-715 *Fig. 212*	High- and low-pressure sides become equal soon after compressor operation stops.	Compressor pressure operation is improper. ↓ Damaged inside packings for compressor	Replace compressor.
	No temperature difference between high and low- pressure sides	Compressor discharge capacity does not change. (Compressor stroke is set at maximum.)	Replace compressor.
Both high- and low-pressure sides are too low. 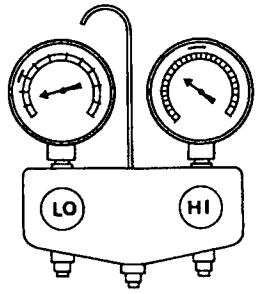 B4-716 *Fig. 213*	• There is a big temperature difference between receiver drier outlet and inlet. Outlet temperature is extremely low. • Receiver drier inlet and expansion valve are frosted.	Receiver drier inside is clogged a little.	• Replace receiver drier • Check compressor oil for contamination.
	• Temperature of expansion valve inlet is extremely low as compared with areas near receiver drier. • Expansion valve inlet may be frosted. • Temperature difference occurs somewhere in high-pressure side.	High-pressure pipe located between receiver drier and expansion valve is clogged.	• Check and repair malfunctioning parts. • Check compressor oil for contamination.
Both high and low-pressure sides are too low. 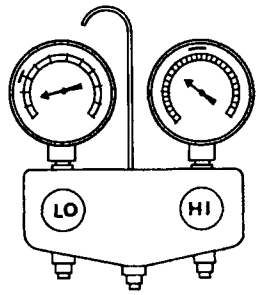 B4-716 *Fig. 214*	There is a big temperature difference between expansion valve inlet and outlet while the valve itself is frosted.	Expansion valve becomes closed a little compared with the specification. ↓ 1) Improper expansion valve adjustment 2) Malfunctioning thermal valve 3) Outlet and inlet may be clogged	• Remove foreign particles by using compressed air. • Check compressor oil for contamination.
	Area near low-pressure pipe connection and service valve are extremely cold as compared with area near expansion valve outlet and evaporator.	Low-pressure hose is clogged or crushed.	• Check and repair malfunctioning parts. • Check compressor oil for contamination.
	Air flow volume is not enough or low.	Evaporator is frozen ↓ Compressor discharge capacity does not change. (Compressor stroke is set at maximum length.)	Replace compressor.

Gauge indication	Refrigerant cycle	Probable cause	Corrective action
Low-pressure side sometimes becomes negative. 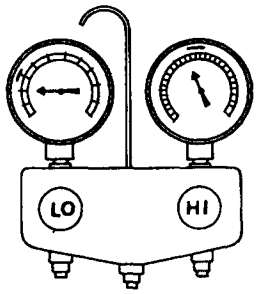 B4-718 *Fig. 215*	• Air conditioning system does not function and does not cyclically cool the compartment air. • The system constantly function for a certain period of time after compressor is stopped and restarted.	Refrigerant does not discharge cyclically. ↓ Moisture is frozen at expansion valve outlet and inlet. ↓ Water is mixed in refrigeration cycle.	• Drain water from refrigerant cycle or replace refrigerant. • Replace receiver drier.
Low-pressure side becomes negative. 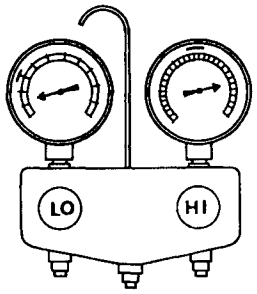 B4-719 *Fig. 216*	Receiver drier or front/rear side of expansion valve's pipe is frosted or dewed.	High-pressure side is closed and refrigerant does not flow. ↓ Expansion valve or receiver drier is frosted.	After the system is left at rest, start again in order to confirm whether or not problem is caused by water or foreign particles. • If the problem is due to water, drain water from refrigeration cycle or replace refrigerant. • If it is due to foreign particles, remove expansion valve and remove it with dry and compressed air. • If either oil the above method cannot correct the problem, replace expansion valve. • Replace receiver drier. • Check compressor oil for contamination.

11. Troubleshooting Chart with Trouble Cord

A: TROUBLE CODE (11/21) — Check in-vehicle sensor circuit.

CONTENT OF DIAGNOSIS:
11: Open circuit
21: Short circuit

TROUBLE SYMPTOM:
Fan speed, outlet and inlet ports do not change when AUTO or ECON switch is ON.

1 Check in-vehicle sensor. — Not OK → Replace in-vehicle sensor.

↓ OK

2 Check input signals for in-vehicle sensor. — Not OK → Repair harness. (Replace auto amplifier.)

↓ OK

Repair Auto amplifier terminal poor contact. (Replace auto amplifier.)

- Replace and recheck.

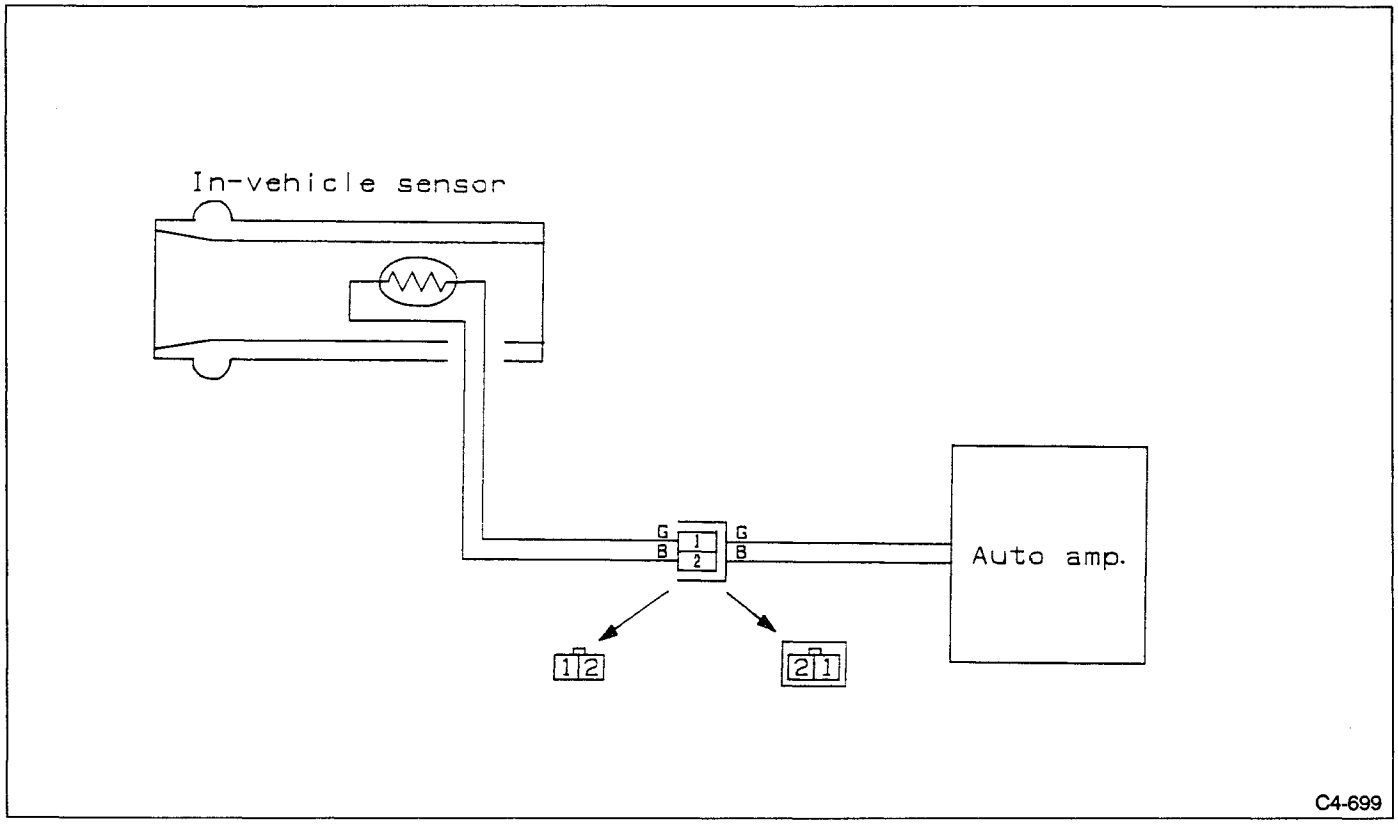

Fig. 217

1. CHECK IN-VEHICLE SENSOR.

1) Remove auto amplifier.
2) Disconnect in-vehicle sensor connector.
3) Check circuit continuity for in-vehicle sensor.
4) Measure resistance using the table below.

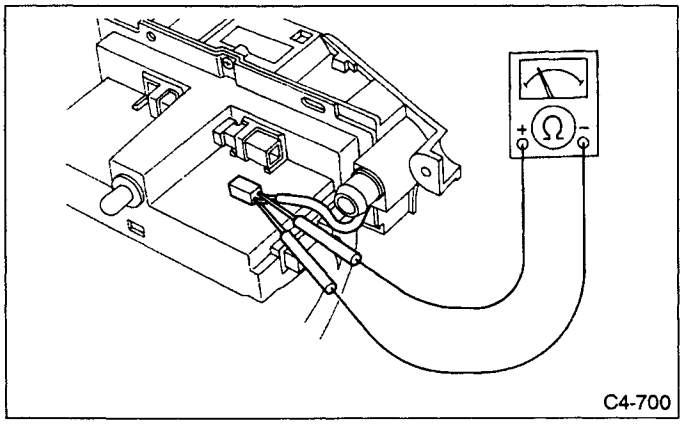

Fig. 218

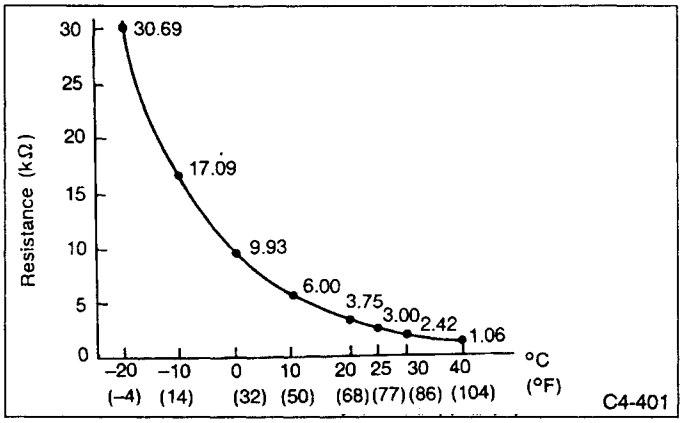

Fig. 219

2. CHECK INPUT SIGNALS FOR IN-VEHICLE SENSOR.

1) Remove auto amplifier.
2) Turn ignition switch ON.
3) Measure voltage between in-vehicle sensor connector and body.

Connector & Terminal/Specified voltage:
No. 1 — Body/Approx. 5 V

4) Measure voltage between in-vehicle sensor connector.

Connector & Terminal/Specified voltage:
No. 1 — No. 2/Approx. 5 V

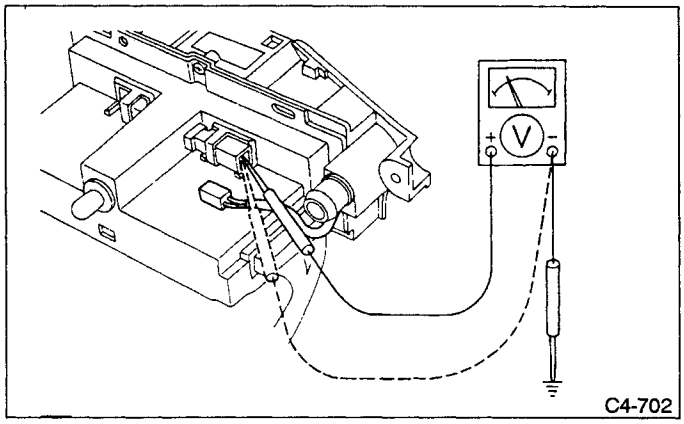

Fig. 220

B: TROUBLE CODE (12/22) — Check ambient sensor circuit.

CONTENT OF DIAGNOSIS:
12: Open circuit
22: Short circuit

TROUBLE SYMPTOM:
Fan speed, outlets and inlets are not switched when AUTO or ECON switch is ON.

1 Check ambient sensor.
- Not OK → Replace ambient sensor.
- OK ↓

2 Check input signals for ambient sensor.
- OK → Repair auto amplifier terminal poor contact. (Replace auto amplifier.)
- Not OK ↓

3 Check output signals for auto amplifier.
- Not OK → Replace and recheck.
- OK ↓

Repair harness.

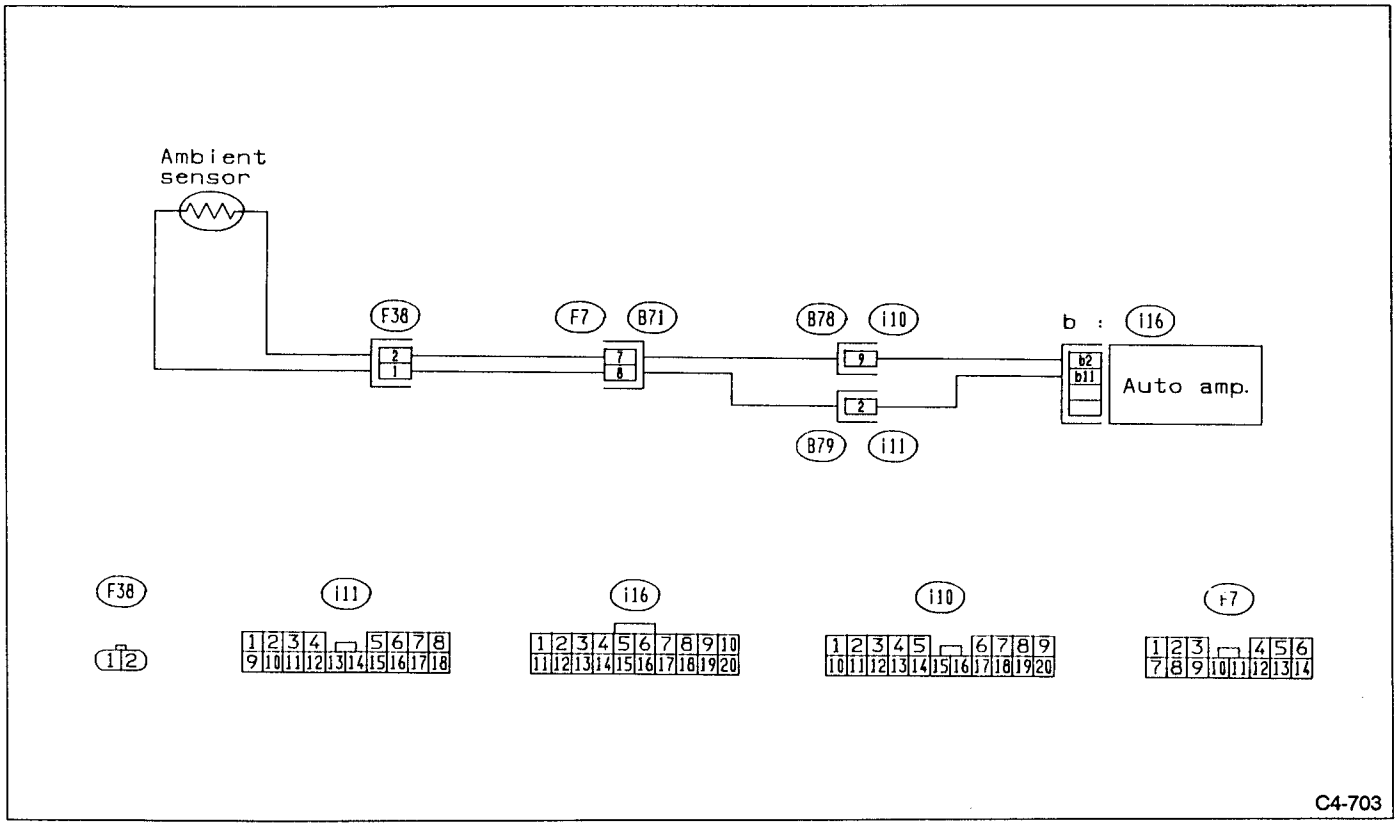

Fig. 221

1. CHECK AMBIENT SENSOR.

1) Disconnect ambient sensor connector.
2) Measure resistance using the table below.

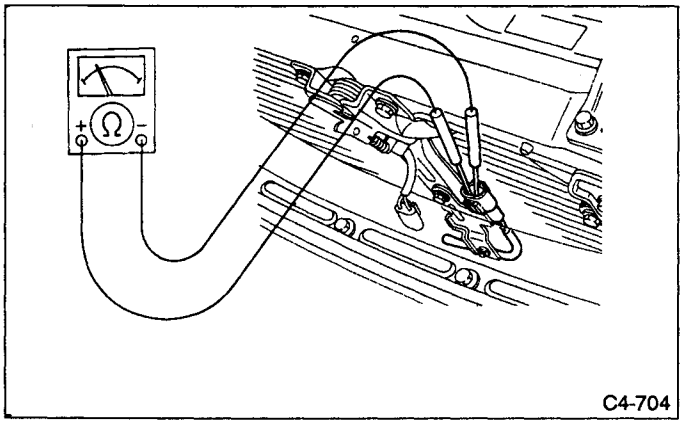

Fig. 222

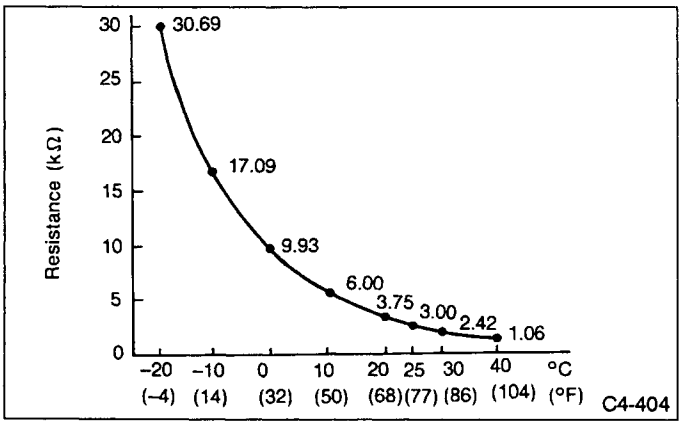

Fig. 223

2. CHECK INPUT SIGNALS FOR AUTO AMPLIFIER.

1) Turn ignition ON.
2) Measure voltage between ambient sensor connector and body.

Connector & Terminal/Specified voltage:
(F38) No. 2 — Body/Approx. 5 V

3) Measure voltage between ambient sensor connector.

Connector & Terminal/Specified voltage:
(F38) No. 1 — 2/Approx. 5 V

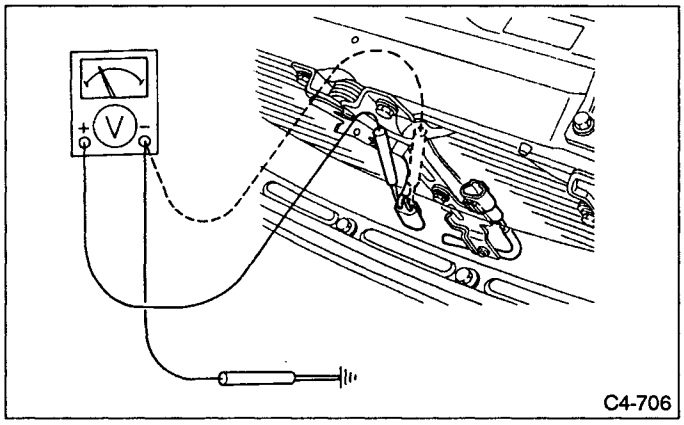

Fig. 224

3. CHECK OUTPUT SIGNALS FOR AUTO AMPLIFIER.

1) Remove auto amplifier.
2) Disconnect ambient sensor connector.
3) Turn ignition switch ON.
4) Measure voltage for auto amplifier.

Connector & Terminal/Specified voltage:
(i16) No. 2 — No. 11/Approx. 5 V

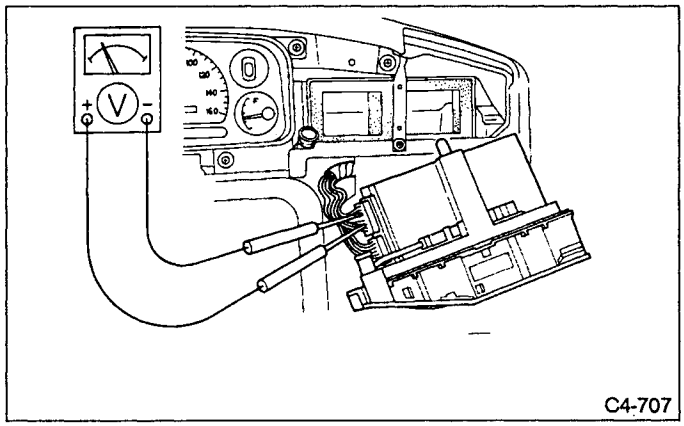

Fig. 225

C: TROUBLE CODE (13/23) — Check sunload sensor circuit.

CONTENT OF DIAGNOSIS:
13: Open circuit
23: Short circuit

TROUBLE SYMPTOM:
No sunlight is identified to control system toward "HEAT" side.

1	Check output signals for auto amplifier.	Not OK	Repair auto amplifier terminal poor contact. (Replace auto amplifier.)
	▼ OK		
2	Check input signals for auto amplifier.	Not OK	• Replace and recheck. Repair harness or replace sunload sensor.

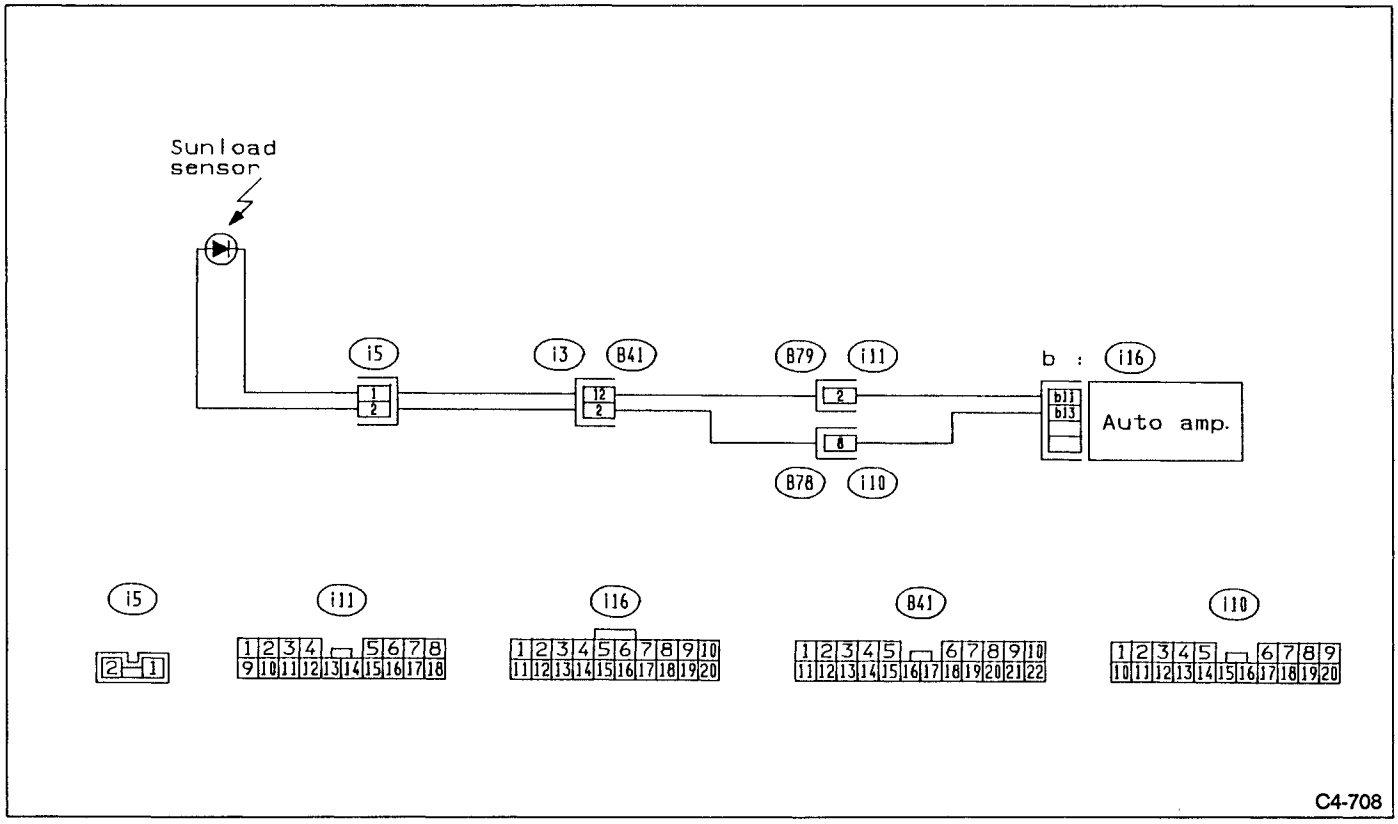

Fig. 226

1. CHECK OUTPUT SIGNALS FOR AUTO AMPLIFIER.

1) Remove auto amplifier.
2) Place cover on sunload sensor to block sunlight.
3) Turn ignition switch ON.
4) Measure voltage between auto amplifier connector.

Connector & Terminal/Specified voltage:
(i16) 13 — 11/Approx. 5 V

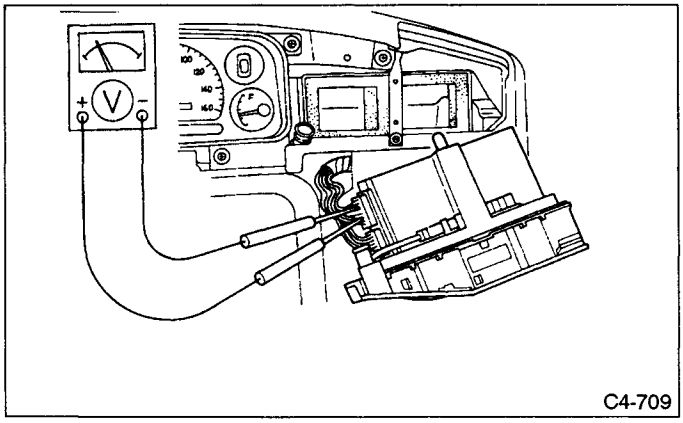

Fig. 227

2. CHECK INPUT SIGNALS FOR AUTO AMPLIFIER.

1) Remove cover from sunload sensor, allowing sunlight to hit sunload sensor.
2) Measure voltage between auto amplifier connector.

Connector & Terminal/Specified voltage:
(i16) 13 — 11/Approx. 2.94 V

If sunlight is slight, move lit 100 watt electric bulb toward sunload sensor to ensure voltage changes.

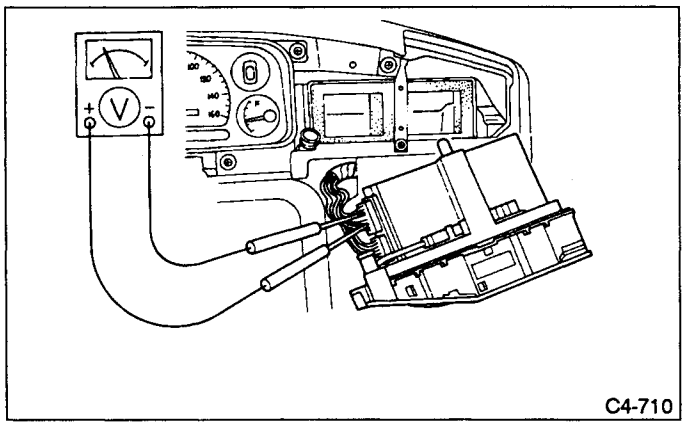

Fig. 228

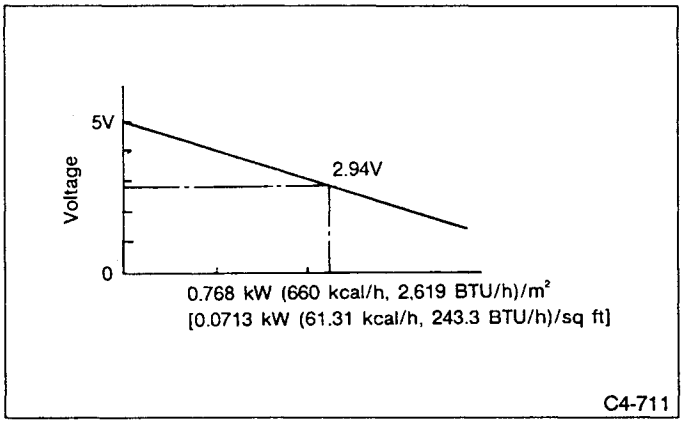

Fig. 229

D: TROUBLE CODE (14/24) — Check intake sensor circuit.

CONTENT OF DIAGNOSIS:
14: Open circuit
24: Short circuit

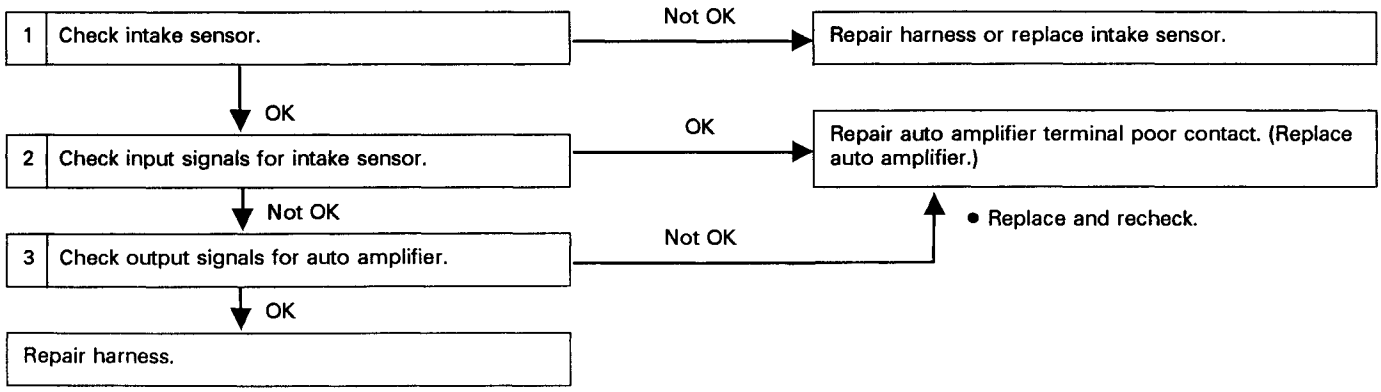

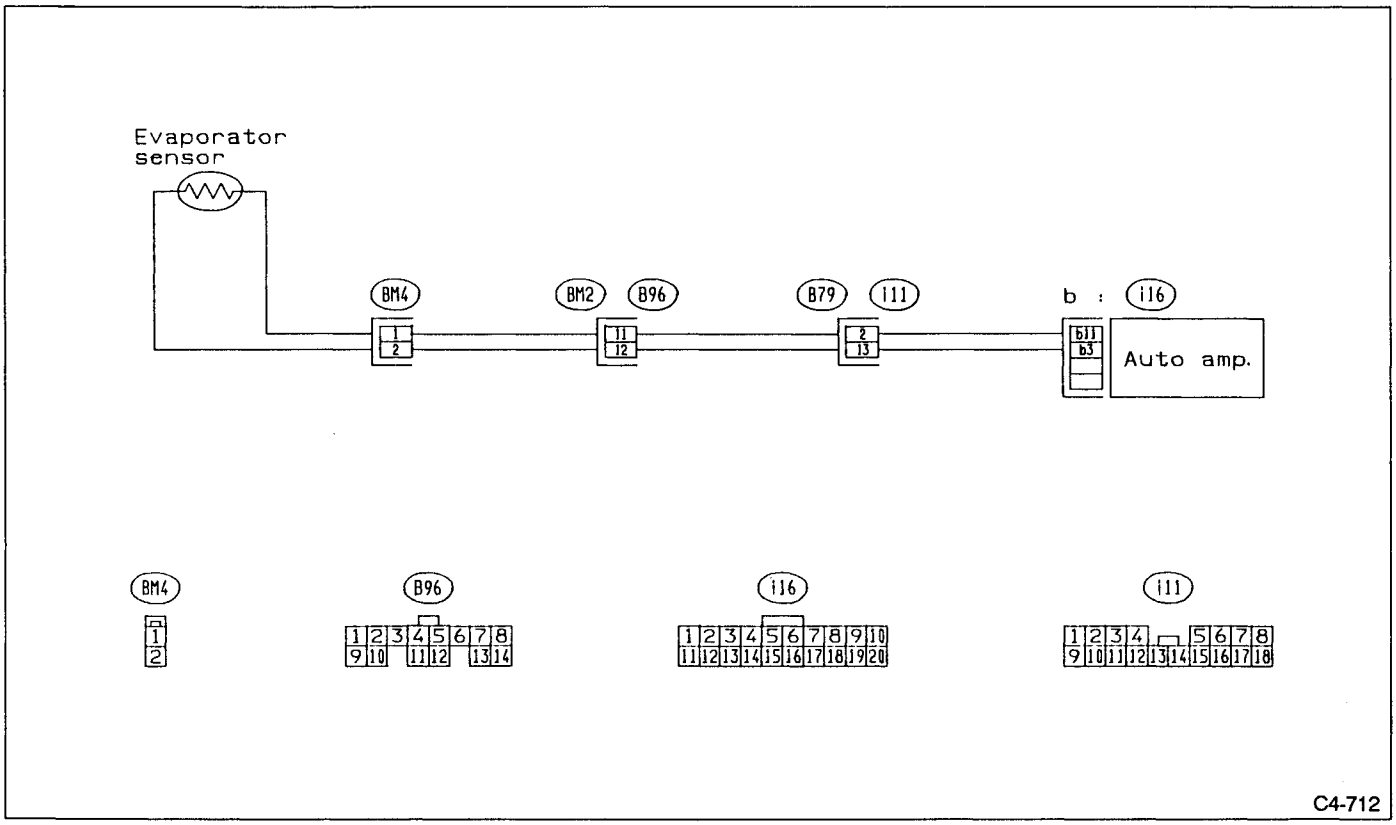

Fig. 230

1. CHECK EVAPORATOR SENSOR.

1) Remove glove box.
2) Disconnect connector (BM2).
3) Measure resistance using the table below.

Connector & Terminal:
(BM2) No. 11 — No. 12

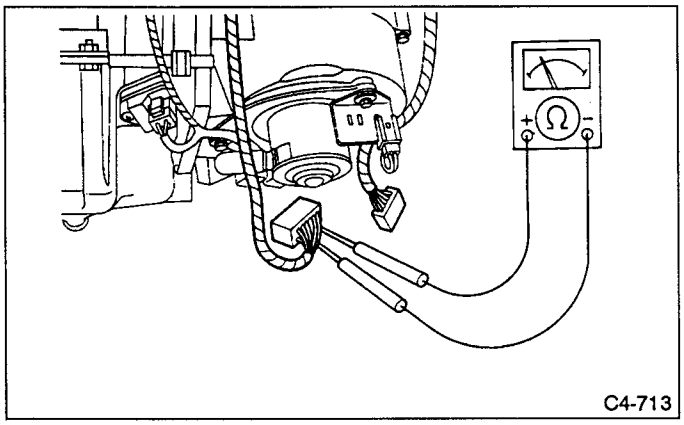

Fig. 231

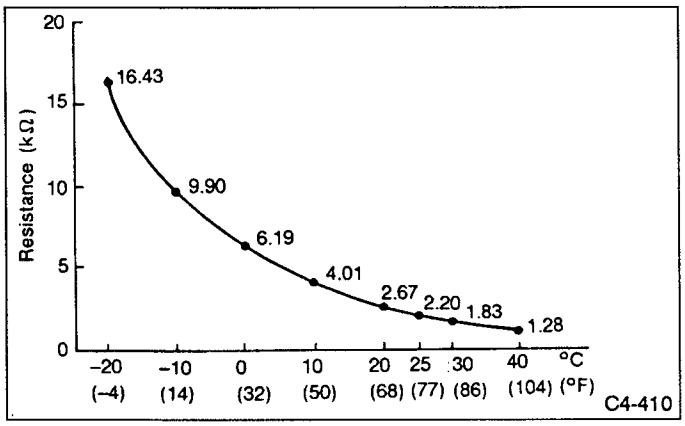

Fig. 232

2. CHECK INPUT SIGNALS FOR INTAKE SENSOR.

1) Turn ignition switch to "ON".
2) Measure voltage between connector (B96) and body.

Connector & Terminal/Specified voltage:
(B96) No. 12 — Body/Approx. 5 V

3) Measure voltage between connector (B96).

Connector & Terminal/Specified voltage:
(B96) No. 12 — 11/Approx. 5 V

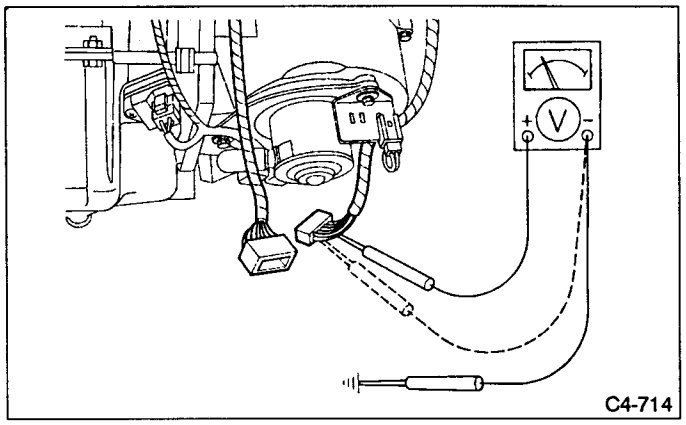

Fig. 233

3. CHECK OUTPUT SIGNALS FOR AUTO AMPLIFIER.

1) Remove auto amplifier.
2) Turn ignition switch to "ON".
3) Measure voltage between auto amplifier connector.

Connector & Terminal/Specified voltage:
(i16) No. 3 — 11/Approx. 5 V

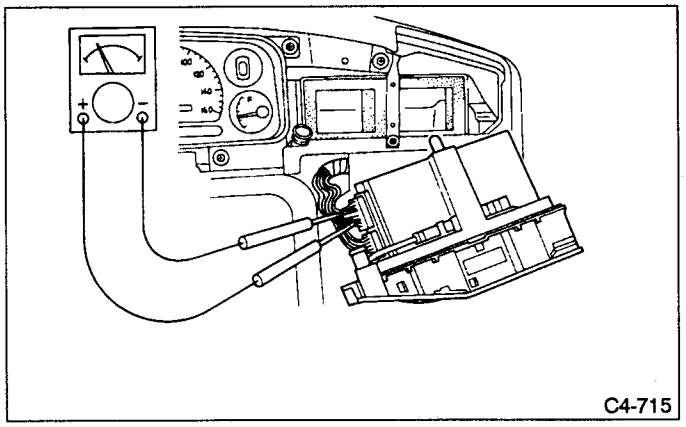

Fig. 234

E: TROUBLE CODE (15/25) — Check evaporator temperature sensor circuit.

CONTENT OF DIAGNOSIS:
15: Open circuit
25: Short circuit

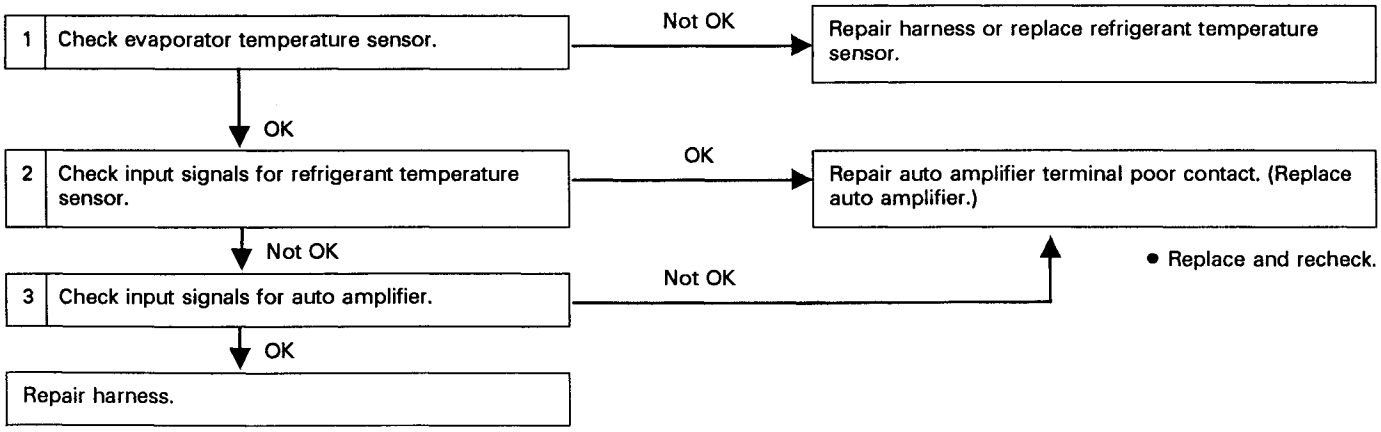

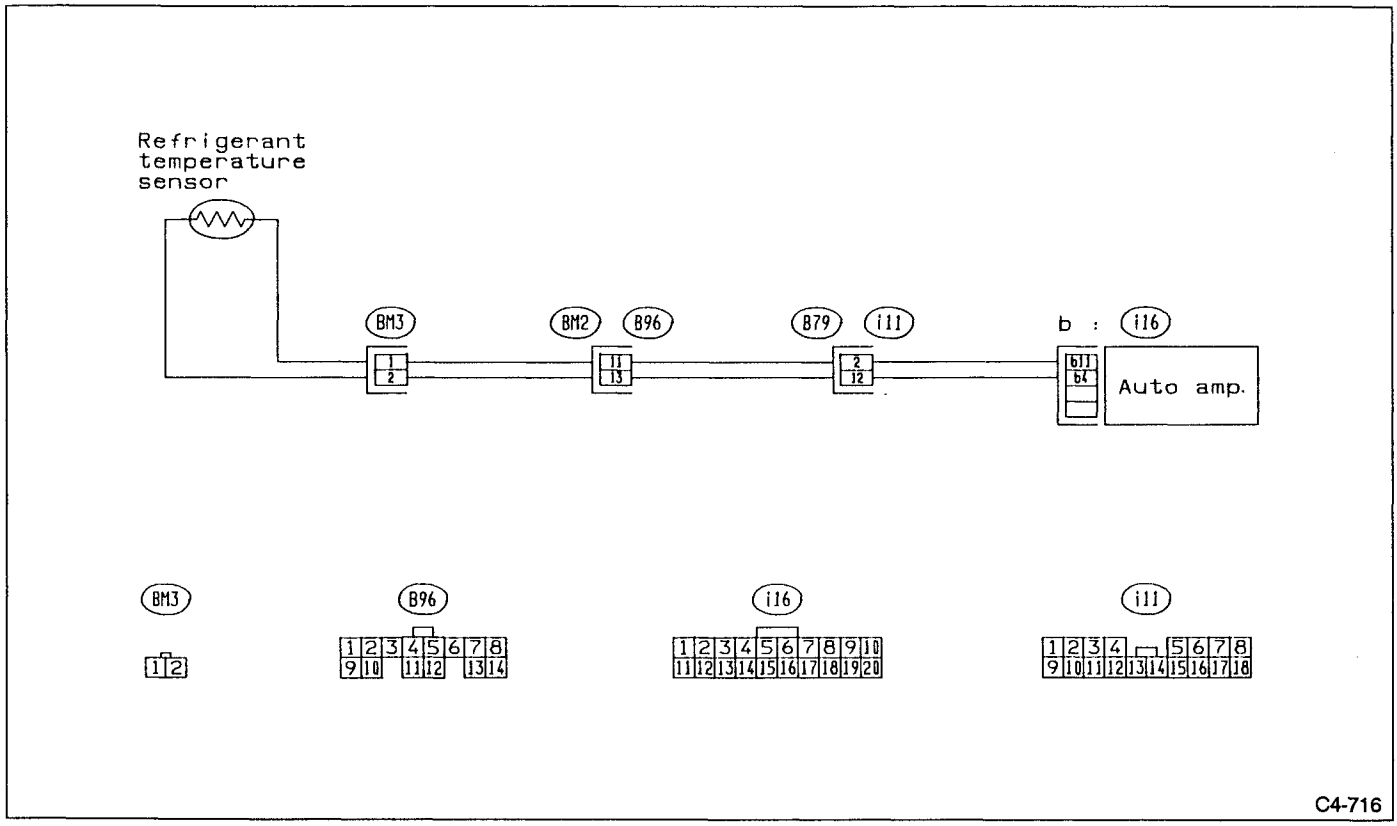

Fig. 235

1. CHECK EVAPORATOR TEMPERATURE SENSOR.

1) Remove glove box.
2) Disconnect connector (BM2).
3) Turn ignition switch to "ON".
4) Measure resistance using the table below.

Connector & Terminal:
(BM2) No. 11 — No. 13

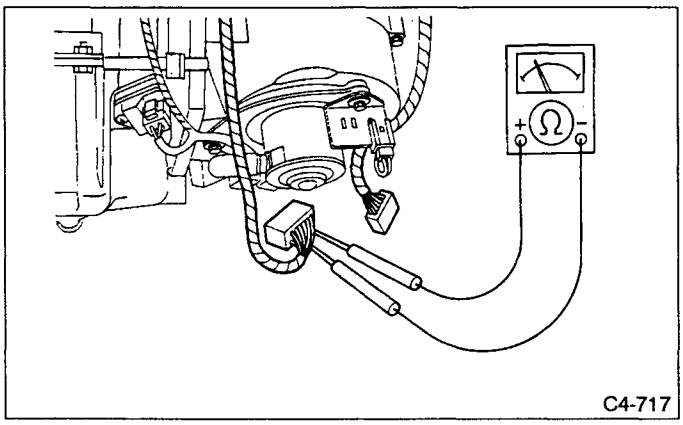

Fig. 236

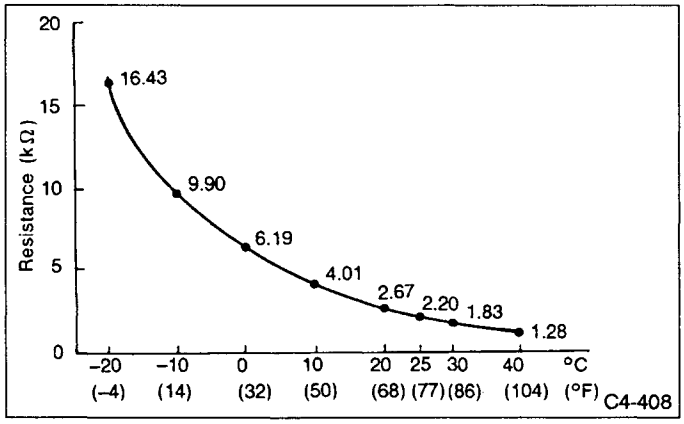

Fig. 237

2. CHECK INPUT SIGNALS FOR EVAPORATOR SENSOR.

1) Turn ignition switch to "ON".
2) Measure voltage between connector (B96) and body.

Connector & Terminal/Specified voltage:
(B96) No. 13 — Body/Approx. 5 V

3) Measure voltage between connector (B96).

Connector & Terminal/Specified voltage:
(B96) No. 13 — No. 11/Approx. 5 V

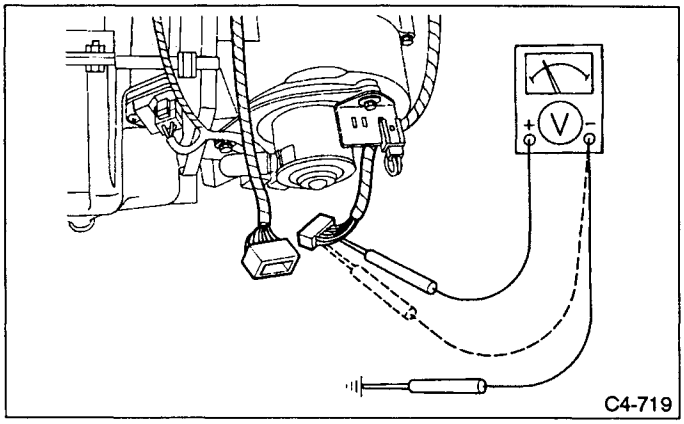

Fig. 238

3. CHECK INPUT SIGNALS FOR AUTO AMPLIFIER.

1) Remove auto amplifier.
2) Turn ignition switch to "ON".
3) Measure voltage between auto amplifier connector.

Connector & Terminal/Specified voltage:
(i16) No. 4 — 11/Approx. 5 V

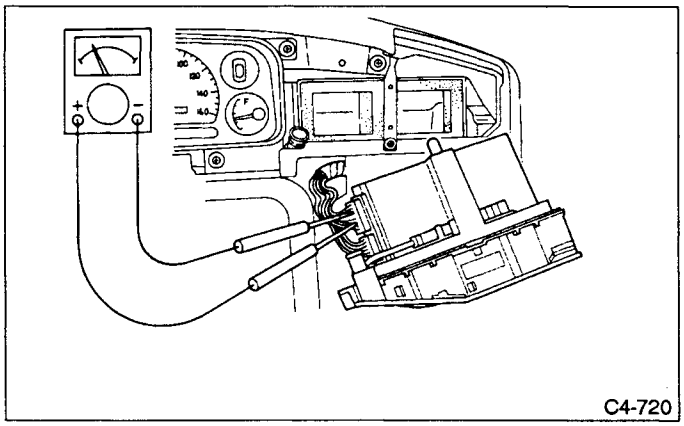

Fig. 239

F: TROUBLE CODE (16/26) — Check water temperature sensor circuit.

CONTENT OF DIAGNOSIS:
16: Open circuit
26: Short circuit

1 Check water temperature sensor.
→ Not OK → Replace water temperature sensor.
↓ OK

2 Check input signals for water temperature sensor.
→ OK → Repair auto amplifier terminal poor contact. (Replace auto amplifier.)
↓ Not OK

3 Check output signals for auto amplifier.
→ Not OK → • Replace and recheck.
↓ OK

Repair harness.

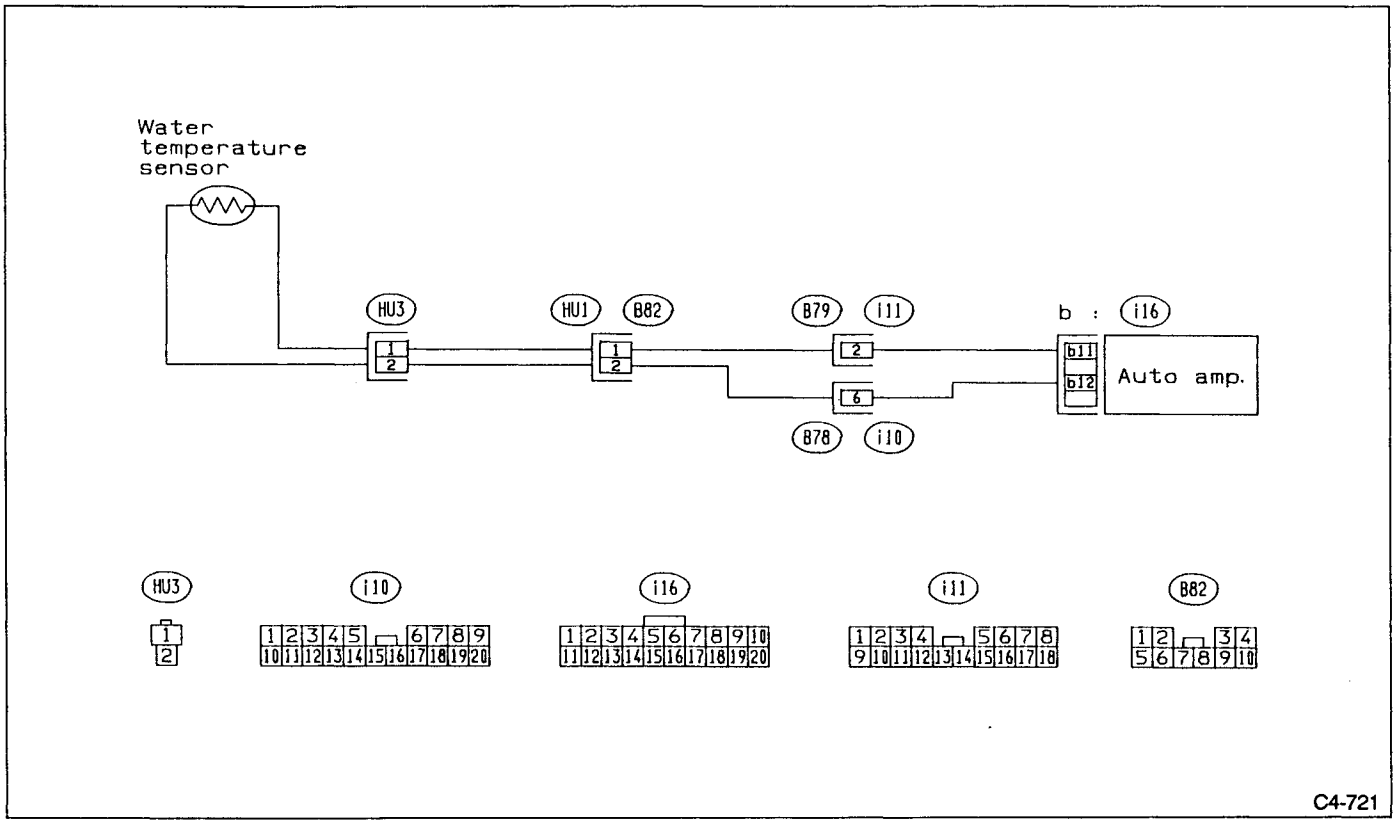

Fig. 240

1. CHECK WATER TEMPERATURE SENSOR.

1) Remove glove box.
2) Disconnect water temperature sensor connector (HU3).
3) Measure resistance using the table below.

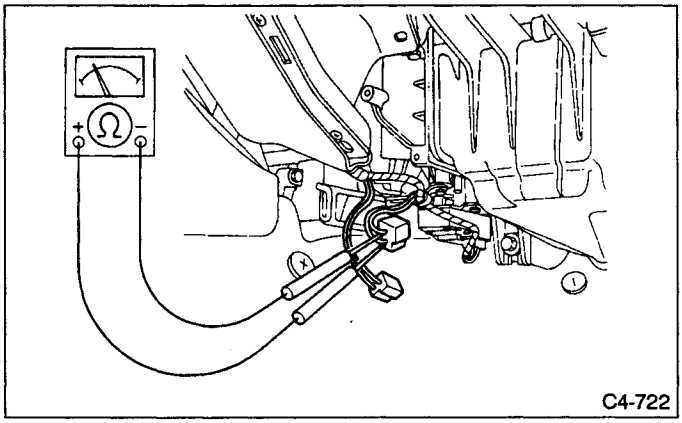

Fig. 241

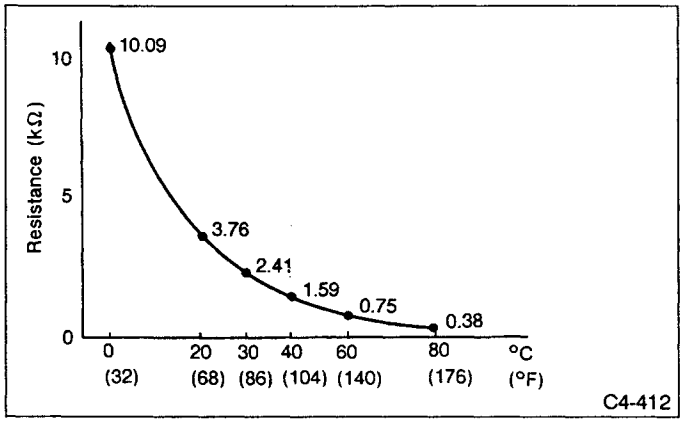

Fig. 242

2. CHECK INPUT SIGNALS FOR WATER TEMPERATURE SENSOR.

1) Turn ignition switch to "ON".
2) Measure voltage between connector (HU3) and body.

Connector & Terminal/Specified voltage:
(HU3) No. 2 — Body/Approx. 5 V

3) Measure voltage between water temperature connector.

Connector & Terminal/Specified voltage:
(HU3) No. 1 — 2/Approx. 5 V

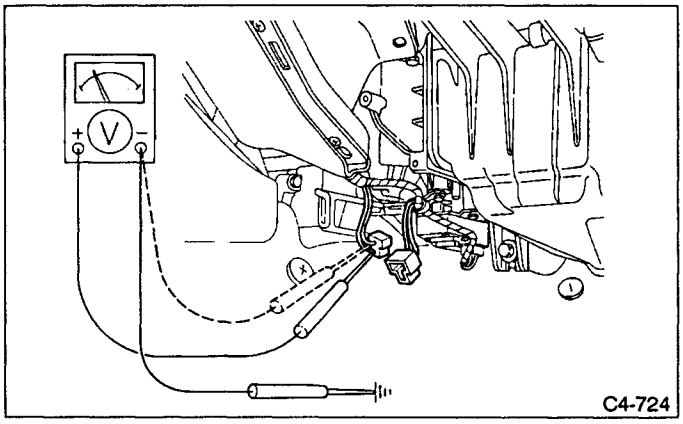

Fig. 243

3. CHECK OUTPUT SIGNALS FOR AUTO AMPLIFIER.

1) Remove auto amplifier.
2) Disconnect water temperature sensor connector.
3) Turn ignition switch to "ON".
4) Measure voltage between auto amplifier connector.

Connector & Terminal/Specified voltage:
(i16) No. 12 — No. 11/Approx. 5 V

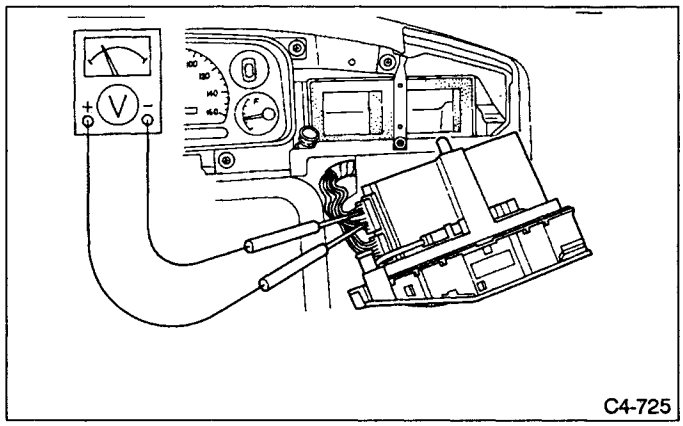

Fig. 244

G: TROUBLE CODE (31) — Check air mix door circuit.

CONTENT OF DIAGNOSIS:
31: Shorted P.B.R. circuit

TROUBLE SYMPTOM:
Outlet air temperature does not change. (Compartment temperature cannot be controlled to "set" value.

(P.B.R.: Potentio Balance Resistor)

1 Check P.B.R. circuit.
- OK → Check trouble cord 33.
- Not OK ↓

2 Check output signals for auto amplifier.
- Not OK → Repair auto amplifier terminal poor contact. (Replace auto amplifier.)
- OK ↓

3 Check harness connector between auto amplifier and air mix door.
- Not OK → Repair harness.
- OK ↓

Replace air mix door motor.

• Replace and recheck.

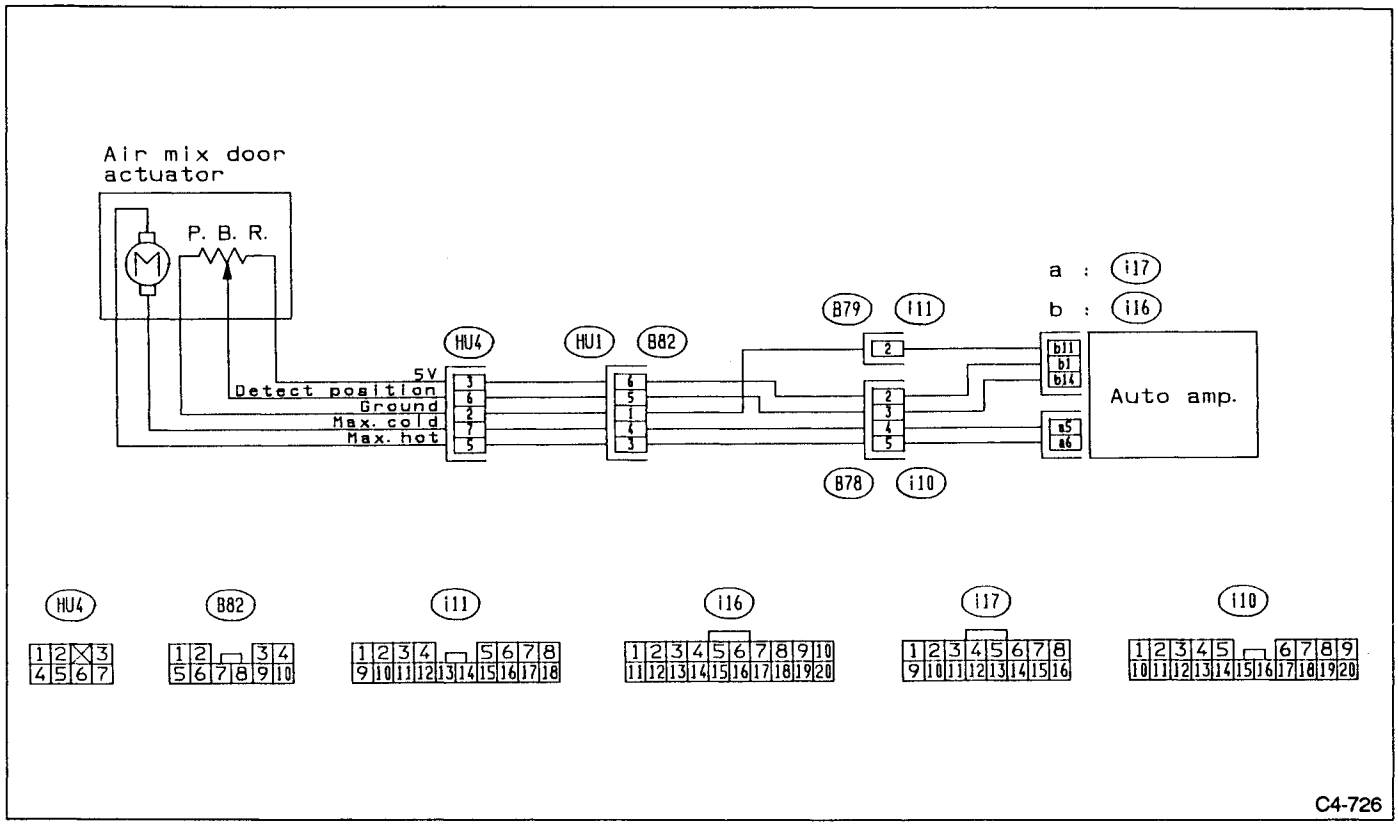

Fig. 245

1. CHECK P.B.R. CIRCUIT.

1) Remove auto amplifier.
2) Set to self-diagnosis mode "step [3]".
3) Measure voltage between auto amplifier connector.

Connector & Terminal/Specified voltage:
(i16) No. 14 — No. 11/
Display shows 44•45 (Full cold) Approx. 0.5 V
41•42 (Full hot) Approx. 4.5 V
43 (50%) Approx. 2.5 V

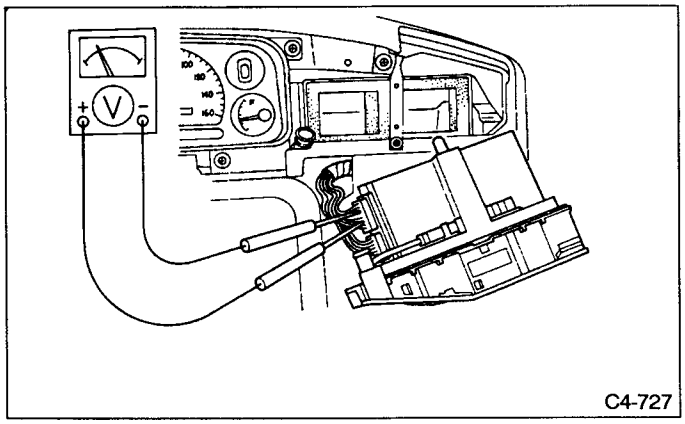

Fig. 246

2. CHECK OUTPUT SIGNALS FOR AUTO AMPLIFIER.

1) Disconnect air mix door connector.
2) Turn ignition switch to "ON".
3) Measure voltage between auto amplifier connector.

Connector & Terminal/Specified voltage:
(i16) No. 1 — No. 11/Approx. 5 V

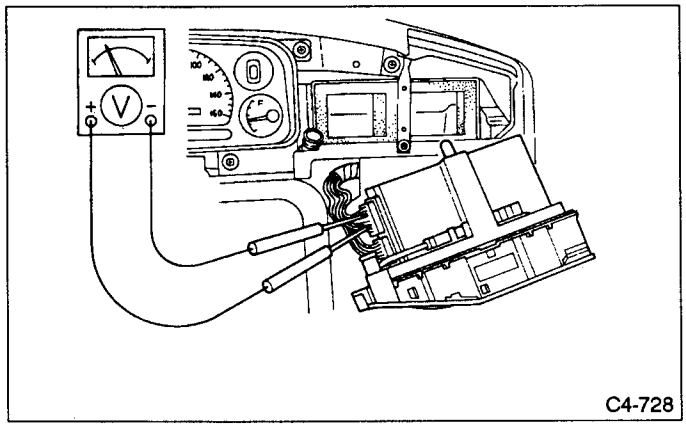

Fig. 247

3. CHECK HARNESS CONNECTOR BETWEEN AUTO AMPLIFIER AND AIR MIX DOOR.

1) Disconnect auto amplifier and air mix door motor connector.
2) Measure resistance between auto amplifier and air mix door motor connector.

Connector & Terminal/Specified resistance:
(i16) No. 1 — (HU4) No. 3/0 Ω
(i16) No. 14 — (HU4) No. 6/0 Ω
(i16) No. 11 — (HU4) No. 2/0 Ω

3) Measure resistance between auto amplifier connector and body.

Connector & Terminal/Specified resistance:
(i16) No. 1 — Body/1 MΩ min.
(i16) No. 11 — Body/1 MΩ min.
(i16) No. 14 — Body/1 MΩ min.

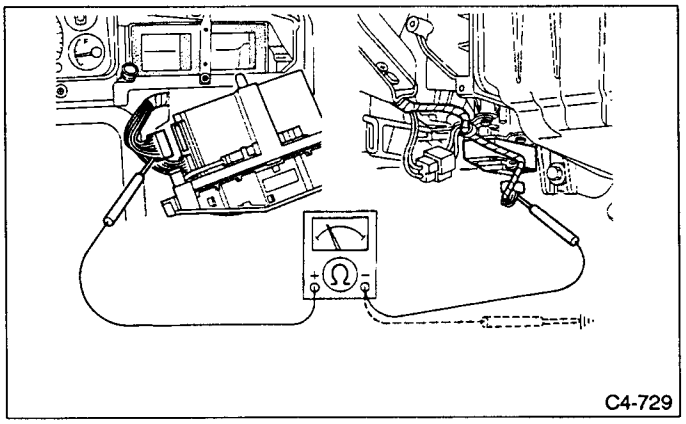

Fig. 248

H: TROUBLE CODE (33) — Check air mix door circuit.

CONTENT OF DIAGNOSIS:
33: Faulty air mix door motor

TROUBLE SYMPTOM:
Outlet air temperature does not change. (Compartment temperature cannot be controlled to "set" value.)

1 Check output signals for auto amplifier.
- Not OK → Repair auto amplifier connector poor contact. (Replace auto amplifier.)
  - • Replace and recheck.
- OK ↓

2 Check harness connector between auto amplifier and air mix door motor.
- Not OK → Repair harness.
- OK ↓

Replace air mix door motor.

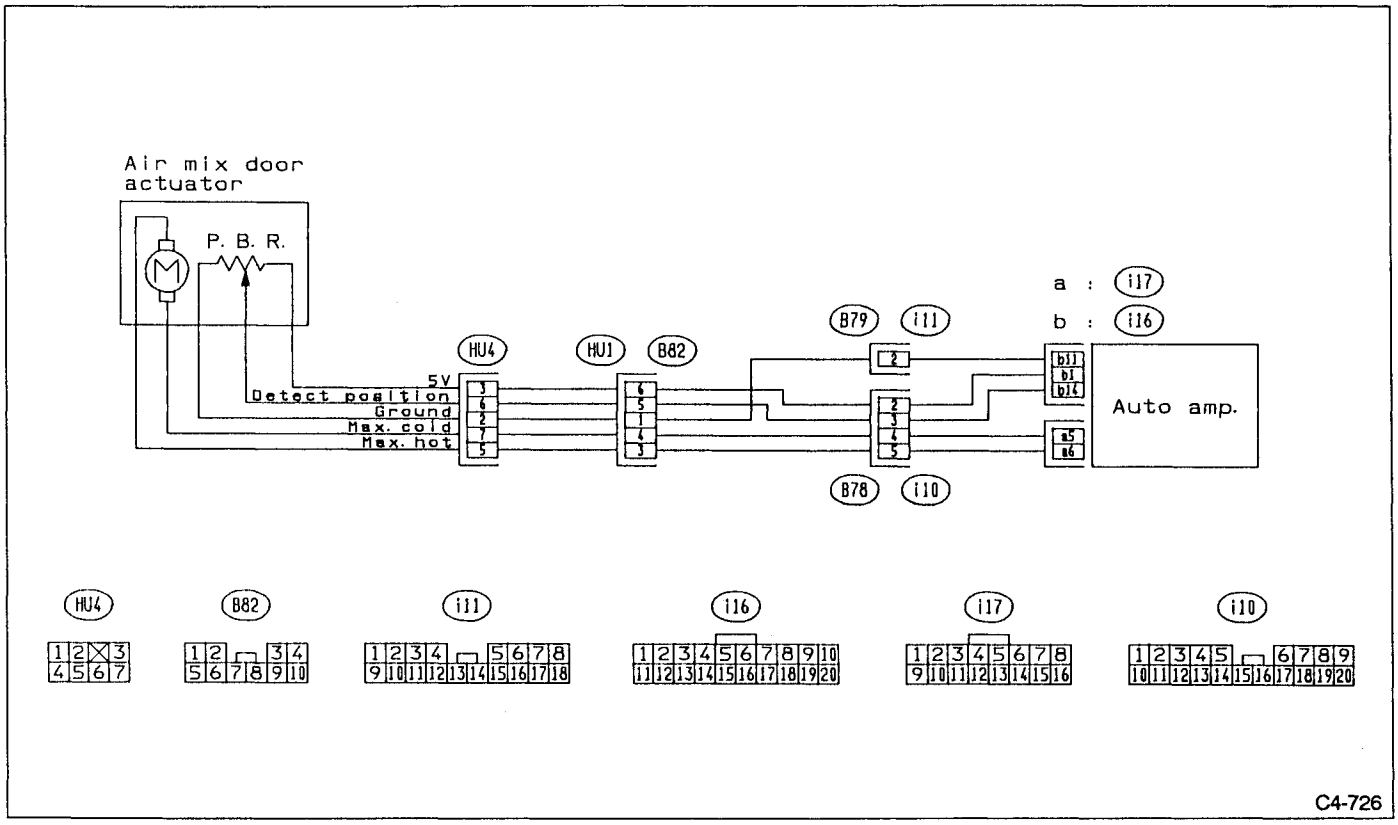

Fig. 249

1. CHECK OUTPUT SIGNALS FOR AUTO AMPLIFIER.

1) Remove auto amplifier.
2) Set to self-diagnosis mode "STEP [3]".
3) Measure voltage between auto amplifier connector.

Connector & Terminal/Specified voltage:
(i17) No. 6 ⊕ — No. 5 ⊖
Display shows 45 → 41/Approx. 10 V
(i17) No. 5 ⊕ — No. 6 ⊖
Display shows 42 → 44/Approx. 10 V

a. Voltage is produced only when air mix door is operating.
b. Since auto amplifier cyclically produces an output of approximately 10 volts, analog circuit tester pointer deflects between 0 and 5 volts.

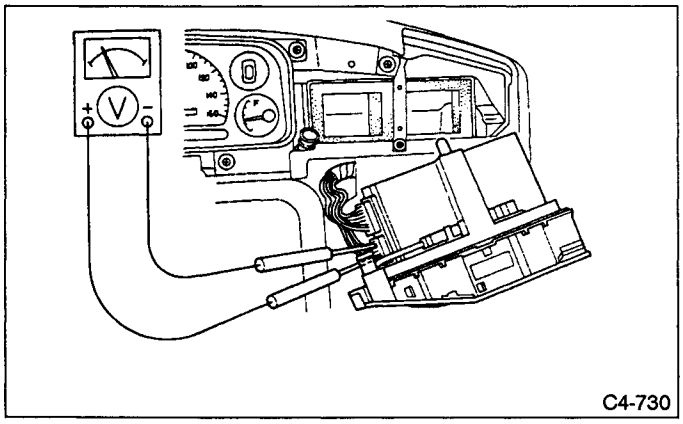

Fig. 250

2. CHECK HARNESS CONNECTOR BETWEEN AUTO AMPLIFIER AND AIR MIX DOOR MOTOR.

1) Disconnect auto amplifier and air mix door connector.
2) Measure resistance between auto amplifier and air mix door connector.

Connector & Terminal/Specified resistance:
(i17) No. 6 — (HU4) No. 5/0 Ω
(i17) No. 5 — (HU4) No. 7/0 Ω

3) Measure resistance between auto amplifier connector and body.

Connector & Terminal/Specified resistance:
(i17) No. 6 — Body/1 MΩ min.
(i17) No. 5 — Body/1 MΩ min.

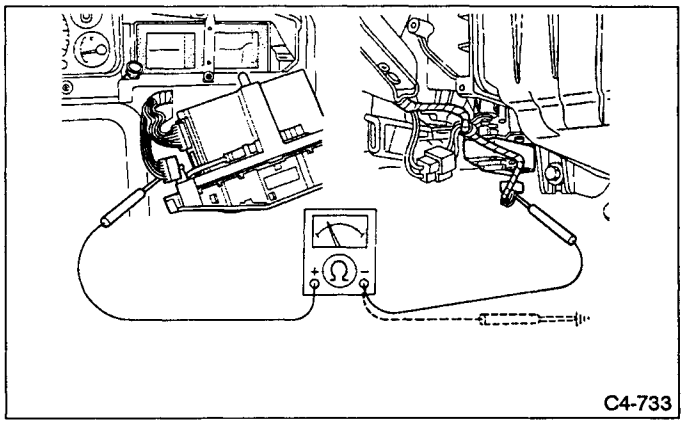

Fig. 251

I: TROUBLE CODE (32) — Check mode door motor circuit.

CONTENT OF DIAGNOSIS:
32: Open or shorted P.B.R. circuit

TROUBLE SYMPTOM:
Mode door does not change.

(P.B.R.: Potentio Balance Resistor)

1 Check P.B.R. circuit in mode door motor.
- OK → Check trouble cord 34.
- Not OK ↓

2 Check output signals for auto amplifier.
- Not OK → Repair auto amplifier terminal poor contact. (Replace auto amplifier.)
- OK ↓

3 Check harness connector between auto amplifier and mode door motor.
- Not OK → Repair harness.
- OK ↓

Replace mode door motor.

• Replace and recheck.

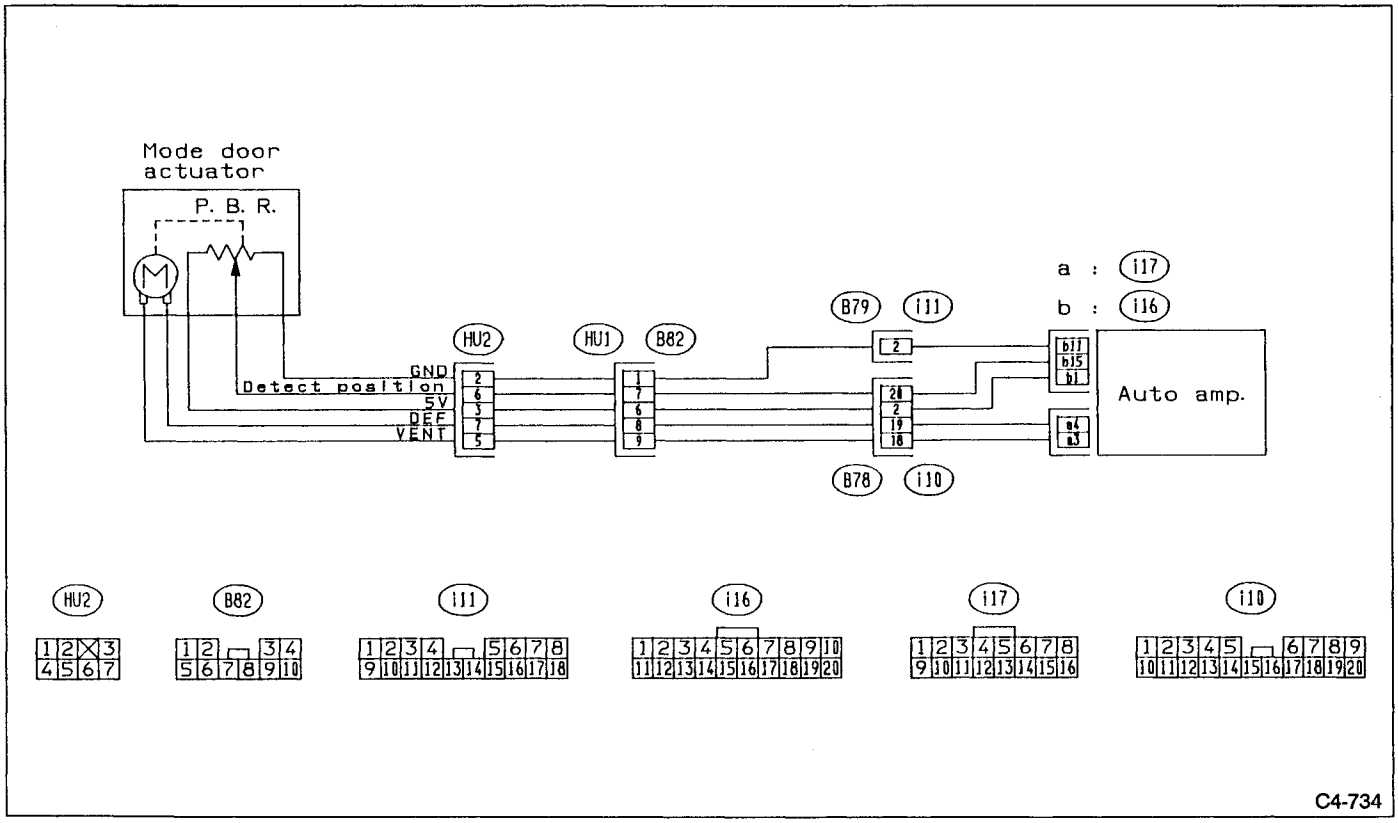

Fig. 252

1. CHECK P.B.R. CIRCUIT.

1) Remove auto amplifier.
2) Set to self-diagnosis mode "STEP [3]".
3) Measure voltage between auto amplifier connector.

Connector & Terminal/Specified voltage:
(i16) No. 15 — No. 11/
Display shows 41 (DEF) Approx. 0.5 V
44 (VENT) Approx. 4.5 V

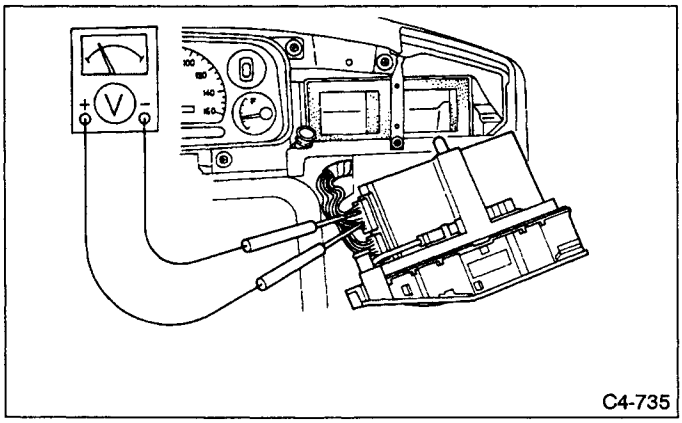

Fig. 253

2. CHECK OUTPUT SIGNALS FOR AUTO AMPLIFIER.

1) Disconnect mode door motor connector.
2) Turn ignition switch to "ON".
3) Measure voltage between auto amplifier connector.

Connector & Terminal/Specified voltage:
(i16) No. 1 — No. 11/Approx. 5 V

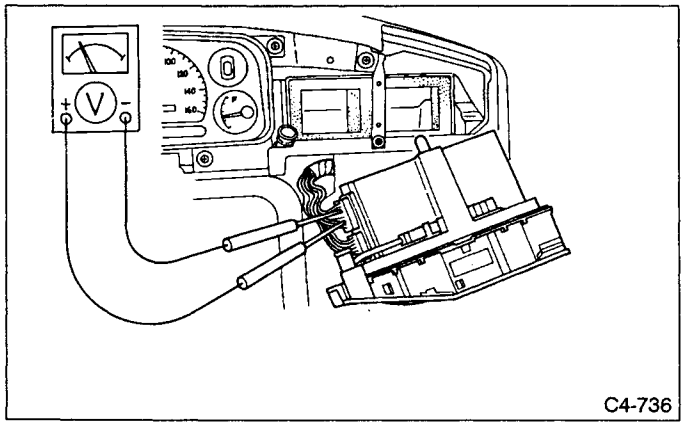

Fig. 254

3. CHECK HARNESS CONNECTOR BETWEEN AUTO AMPLIFIER AND MODE DOOR MOTOR.

1) Disconnect auto amplifier and mode door motor connector.
2) Measure resistance between auto amplifier and mode door motor connector.

Connector & Terminal/Specified resistance:
(i16) No. 1 — (HU2) No. 3/0 Ω
(i16) No. 15 — (HU2) No. 6/0 Ω
(i16) No. 11 — (HU2) No. 2/0 Ω

3) Measure resistance between auto amplifier connector and body.

Connector & Terminal/Specified resistance:
(i16) No. B1 — Body/1 MΩ min.
(i16) No. B15 — Body/1 MΩ min.
(i16) No. B11 — Body/1 MΩ min.

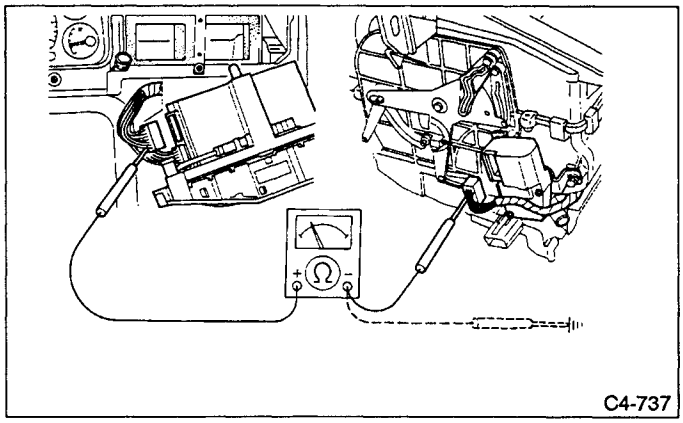

Fig. 255

J: TROUBLE CODE (34) — Check mode door motor circuit.

CONTENT OF DIAGNOSIS:
34: Faulty mode door motor

TROUBLE SYMPTOM:
Mode door does not change.

1 Check output signals for auto amplifier.
- Not OK → Repair auto amplifier terminal poor contact. (Replace auto amplifier.)
- OK ↓

2 Check harness connector between auto amplifier and mode door motor.
- Not OK → Repair harness.
- OK ↓

Replace mode door motor.

• Replace and recheck.

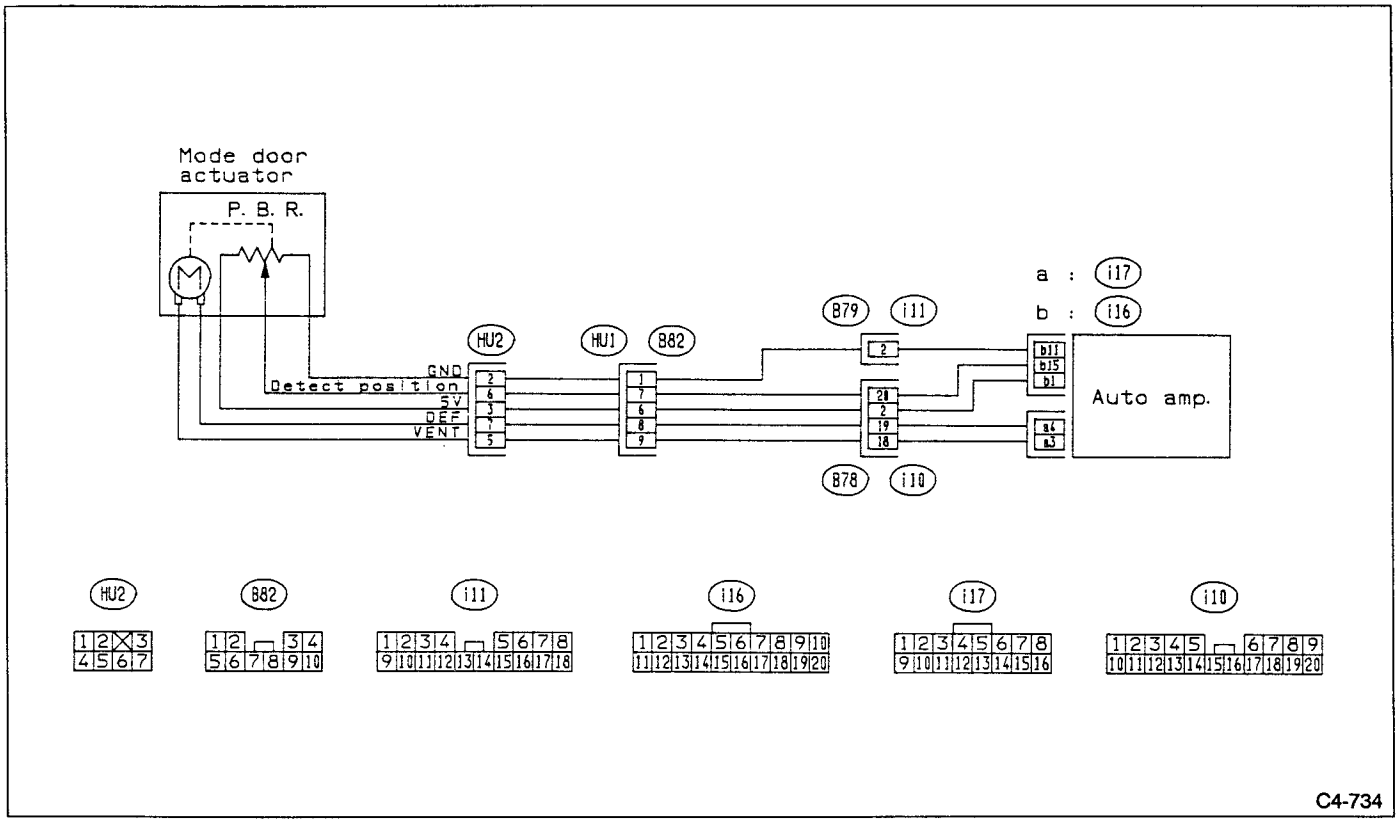

Fig. 256

1. CHECK OUTPUT SIGNALS FOR AUTO AMPLIFIER.

1) Remove auto amplifier.
2) Set to self-diagnosis mode "STEP [3]".
3) Measure voltage between auto amplifier connector.

Connector & Terminal/Specified voltage:
(i17) No. 3 ⊕ — No. 4 ⊖
Display shows 41 → 44/Approx. 10 V
(i17) No. 4 ⊕ — No. 3 ⊖
Display shows 45 → 41/Approx. 10 V

a. Output voltage is produced only when mode door motor is operating.
b. Since auto amplifier cyclically produces an output of approximately 10 volts, analog circuit tester pointer deflects between 0 and 5 volts.

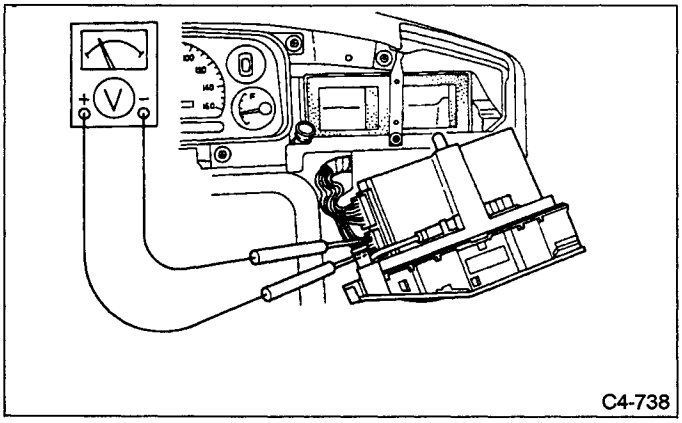

Fig. 257

2. CHECK HARNESS CONNECTOR BETWEEN AUTO AMPLIFIER AND MODE DOOR MOTOR.

1) Disconnect auto amplifier and mode door motor connector.
2) Measure resistance between auto amplifier and mode door motor connector.

Connector & Terminal/Specified resistance:
(i17) No. 3 — (HU2) No. 5/0 Ω
(i17) No. 4 — (HU2) No. 7/0 Ω

3) Measure resistance between auto amplifier connector and body.

Connector & Terminal/Specified resistance:
(i17) No. 3 — Body/1 MΩ min.
(i17) No. 4 — Body/1 MΩ min.

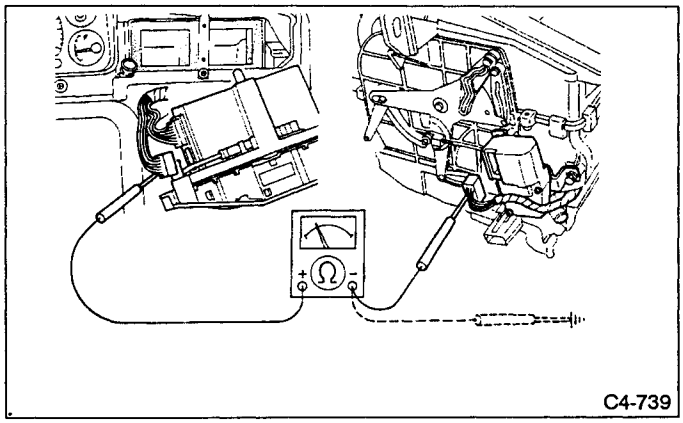

Fig. 258

K: TROUBLE CODE (35) — Check intake door motor circuit.

CONTENT OF DIAGNOSIS:
35: Open or short circuit

TROUBLE SYMPTOM:
Inlet is not switched among FRESH, 20% FRESH and RECIRC.

1	Check voltage at intake door motor's power terminal.	Not OK	Replace fuse or repair harness.
2	Check intake door motor.	Not OK	Repair auto amplifier terminal poor contact. (Replace auto amplifier.)
3	Check harness connector between auto amplifier and intake door motor.	Not OK	Repair harness.

OK

Replace intake door motor.

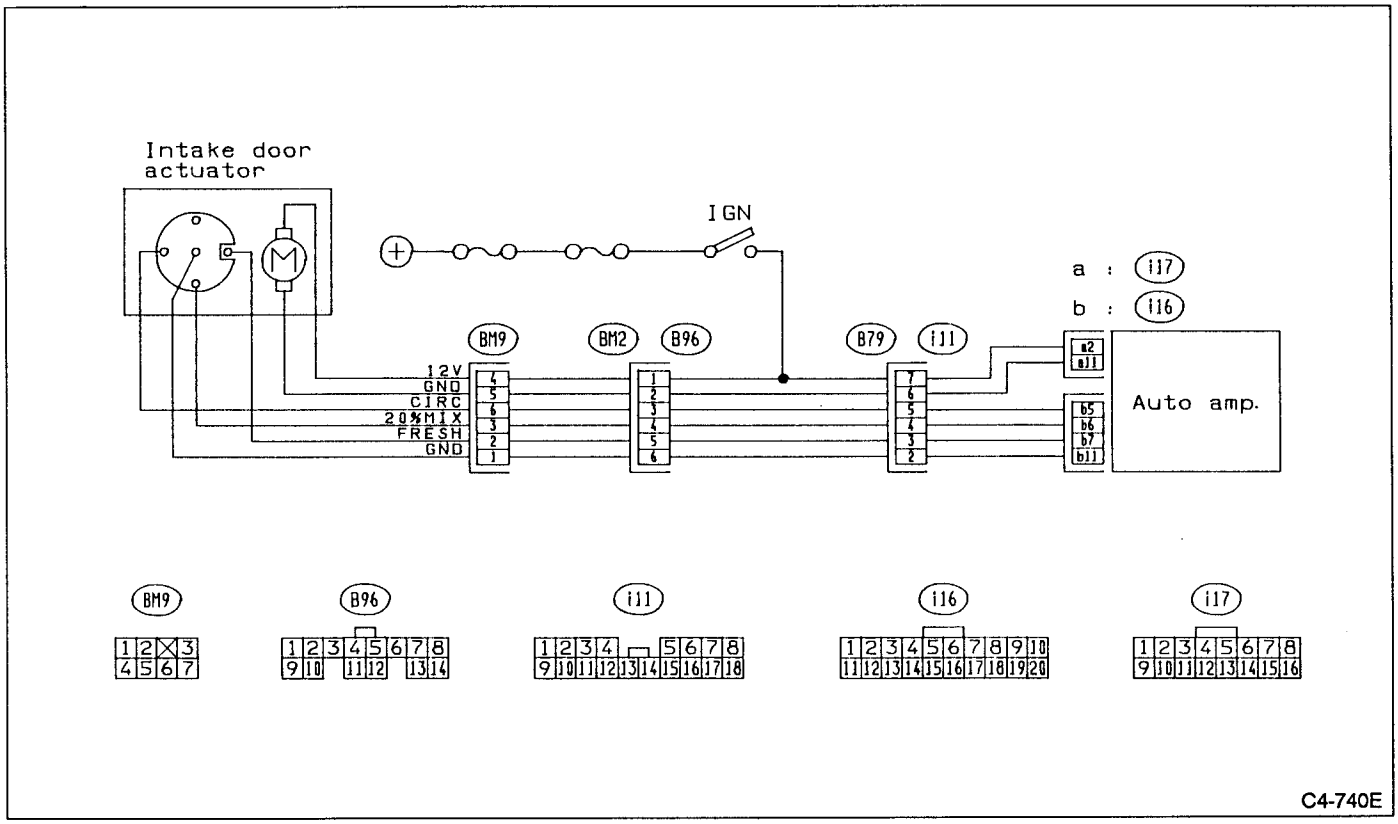

Fig. 259

1. CHECK VOLTAGE AT INTAKE DOOR MOTOR'S POWER TERMINAL.

1) Remove glove box.
2) Disconnect intake door motor connector.
3) Turn ignition switch to "ON".
4) Measure voltage between intake door motor connector and body.

Connector & Terminal/Specified voltage:
(BM9) No. 4 — Body/Battery voltage

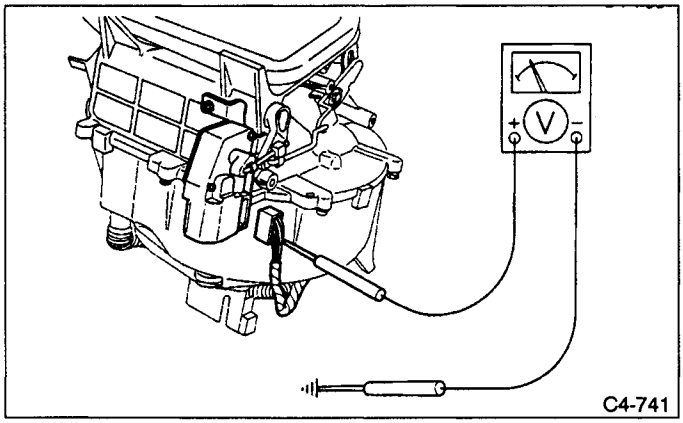

Fig. 260

2. CHECK INTAKE DOOR MOTOR.

1) Remove auto amplifier.
2) Set to self-diagnosis mode "STEP [3]".
3) Measure voltage between auto amplifier and body.

Connector & Terminal/Specified voltage:
(i16) No. 5 — Body/
Display shows 45 (RECIRC) Approx. 5 V
EXCEPT 45 Approx. 0 V
(i16) No. 6 — Body/
Display shows 41 (20% FRESH) Approx. 5 V
EXCEPT 41 Approx. 0 V
(i16) No. 7 — Body/
Display shows 42•43•44 (FRESH) Approx. 5 V
EXCEPT 42•43•44 Approx. 0 V

Measure voltage 10 seconds after setting system to "STEP [3]".

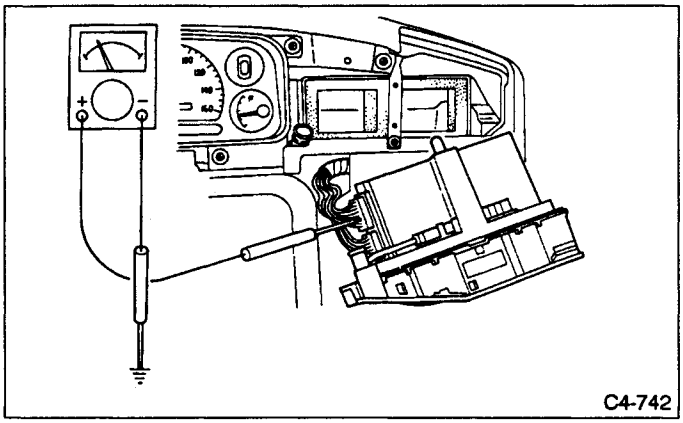

Fig. 261

3. CHECK HARNESS CONNECTOR BETWEEN AUTO AMPLIFIER.

1) Disconnect auto amplifier and intake door motor connector.
2) Measure resistance between auto amplifier and intake door motor connector.

Connector & Terminal/Specified voltage:
(i16) 5 — (BM9) 6/0 Ω
(i16) 6 — (BM9) 3/0 Ω
(i16) 7 — (BM9) 2/0 Ω
(i16) 11 — (BM9) 1/0 Ω

3) Measure resistance between auto amplifier connector and body.

Connector & Terminal/Specified resistance:
(i16) 5 — Body/1 MΩ min.
(i16) 6 — Body/1 MΩ min.
(i16) 7 — Body/1 MΩ min.
(i16) 11 — Body/1 MΩ min.

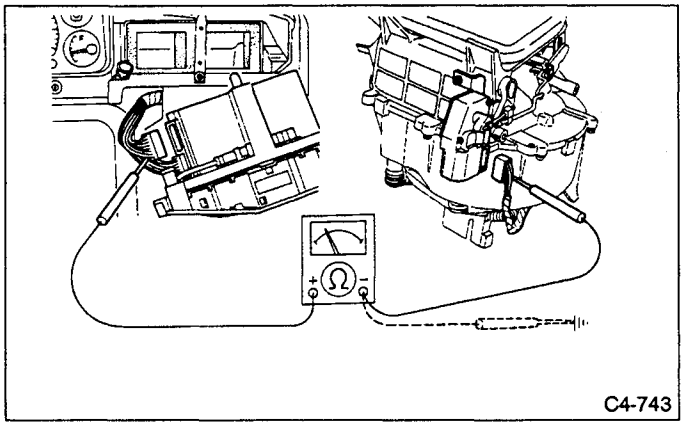

Fig. 262

12. Troubleshooting Chart with Select Monitor

BASIC TROUBLESHOOTING CHART

1. PROCEDURE FOR SELECT MONITOR

Connect select monitor to connector (B35).

Applicable cartridge of select monitor: No. 498348500

1) Turn ignition switch to "ON".
2) Turn select monitor power to "ON".

SELECT ERS: 0	SYSTEM A/C: 1

Pressing "1" and "ENT" will convert display to reed.

YEAR	(F00) 1991

Pressing "↑" will convert display to reed.

T set	(F01) 75 deg F

A: MODE 00 — AUTO AIR CONDITIONER —

- Probable cause (item outside "specified date")

Error 1	Failure to communicate. (Communication method cannot be verified after power is ON.)	• Check for poor connector contact, open circuit, etc. • Use of improper cartridge
Error 2	Failure of auto amplifier to identify communication	Improper cartridge selection

B: MODE 01 — "Set" temperature (T set) —

CONDITION:
- Engine warming up after starting
- "Set" temperature continually switching from 18 to 32°C (65°F to 85°F) after operating A/C system in AUTO mode.

SPECIFICATION DATA:
Value determined by auto amplifier is indicated on monitor display.

- Probable cause (item outside "specified date")

1	"Set" temperature is not displayed.	→ Faulty auto amplifier → Replace.

C: MODE 02 — Total signal (To) —

CONDITION:
- Engine warming up completely after starting
- A/C system operating in AUTO mode.

SPECIFICATION DATA:
Check displayed values to ensure air flow, inlet and outlet are controlled as indicated on "To" control graph.

- "To" refers to apparently controlled value.
  "Set" temperature 18°C (65°F) (MAX COLD) → 68 deg F is indicated.
  "Set" temperature 32°C (85°F) (MAX HOT) → 69 deg F is indicated.

Improper blower air discharge	→ Check fan control amplifier. → Check auto amplifier.
Improper inlet setting FRESH/RECIRC	→ Check intake door motor and linkage. → Check auto amplifier.
Improper outlet setting • VENT BI/LEVEL • HEAT	→ Check air mix door motor and linkage. → Check auto amplifier.

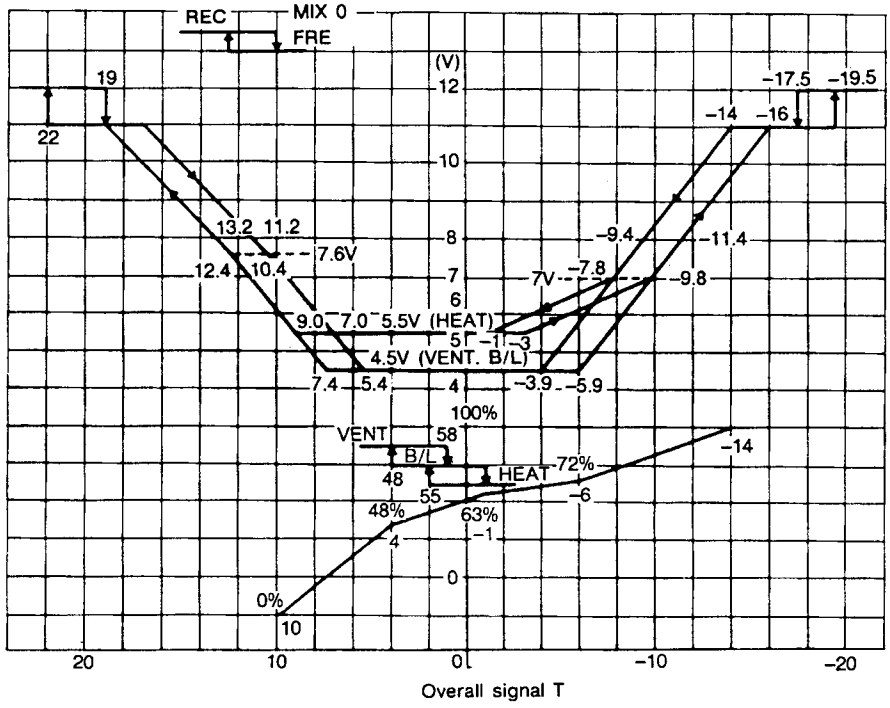
REC
MIX 0
FRE
(V)
12
10
8
7
6
5
4
0
19
22
13.2 11.2
7.6V
12.4 10.4
9.0 7.0 5.5V (HEAT)
4.5V (VENT. B/L)
7.4 5.4
-17.5 -19.5
-14 -16
-9.4
-11.4
7V -7.8
-9.8
-1 -3
-3.9 -5.9
100%
VENT
58
B/L
48
HEAT
72%
-14
55
-6
48%
63%
-1
4
0%
10
20
10
0
-10
-20
Overall signal T
C4-744

Fig. 263

D: MODE 03 — In-vehicle sensor (T room) —

CONDITION:
- Engine warmed up completely
- System operating in AUTO mode

SPECIFICATION DATA:
Temperature close to areas around in-vehicle sensor should be indicated.

- Probable cause (item outside "specified date")

Indication: Open circuit — 20 deg F
Shorted circuit 117 deg F

Check duct between aspirator and in-vehicle sensor. → OK → Check as per trouble codes 11 and 21.

E: MODE 04 — Ambient sensor (T amb) —

CONDITION:
- Engine warmed up completely
- System operating in AUTO mode

SPECIFICATION DATA:
Temperature close to front bumper at ambient sensor should be indicated.

- Probable cause (item outside "specified date")

Indication: — 20 deg F (open circuit)
117 deg F (shorted circuit)

Check ambient sensor for accumulation of mud, snow, etc. → OK → Check as per trouble codes 12 and 22.

F: MODE 05 — Evaporator sensor (T evp) —

CONDITION:
- Engine warmed up completely after starting
- A/C system operating in AUTO mode and compartment temperature set to 18°C (65°F) [FULL COOL]
- Press OFF switch.

SPECIFICATION DATA:
When A/C system is OFF, evaporator sensor temperature close to ambient temperature should be indicated.

- Probable cause (item outside "specified date")

1	Check compressor operation.	Not OK →	Check magnet clutch circuit.
↓ OK			
2	Check refrigerant gas amount.	Not OK →	Repair leaks and replenish refrigerant.
↓ OK			
3	Check as per trouble codes 14 and 24.		

Indication: – 20 deg F (open circuit)
117 deg F (shorted circuit)

G: MODE 06 — Sunload sensor (Q sun) —

CONDITION:
- Engine warmed up completely after starting
- After operating A/C system in AUTO mode, place vehicle in the sun.

SPECIFICATION DATA:
Sensor operation differs according to weather and the season.

- Probable cause (item outside "specified date")

Check as per trouble codes 13 and 23.

Indication: 0 kcal (open circuit)
1,262 kcal (shorted circuit)
- **If sunload sensor is checked indoors or in dark places, "0" kcal will be indicated. To check sunload sensor in such adverse conditions, use a lighted 100 watt bulb and move it close to the sensor.**

H: MODE 07 — Sunload sensor correction temperature (T sun) --

CONDITION:
- Engine warmed up completely after starts.
- After operating A/C system in AUTO mode, move vehicle to place in direct sunlight.
- Turn ignition switch from OFF to ON.
- Monitor trouble codes F06 and F07.

SPECIFICATION DATA:
"F06" value multiplied by 0.0083 is indicated.

T sun (F07)
(F06 x 0.0083) deg F

- Probable cause (item outside "specified date")

Check as per trouble codes 13 and 23.

Indication: 0 deg F (open circuit)
13.77 deg F (short circuit)

I: MODE 08 — Refrigerant temperature sensor (T ref) —

CONDITION:
- Engine warmed up completely after starting
- After operating A/C system in AUTO mode, set compartment temperature to 18°C (65°F) (MAX COLD) on display.

SPECIFICATION DATA:
Approximately 2.8°C (37°F) is indicated in MAX COLD (with intake sensor circuit open).

Indication: – 20 deg F (open circuit)
117 deg F (shorted circuit)

- Probable cause (item outside "specified date")

1	Check compressor operation.	Not OK →	Check magnet clutch circuit.
↓ OK			
2	Check refrigerant amount.	Not OK →	Repair leaks.
↓ OK			
3	Check as per trouble codes 15 and 25.		

J: MODE 09 — Water temperature sensor (TW) —

CONDITION:
- Engine warmed up completely after starting
- A/C system operating in AUTO mode

SPECIFICATION DATA:
Value slightly lower than engine coolant temperature is indicated as temperature is measured at lower section of heater core.

Indication: – 18 deg F (open circuit)
216 deg F (shorted circuit)

- Probable cause (item outside "specified date")

Check as per trouble codes 16 and 26.

K: MODE 10 — Air mix door target position (AMR set) —

CONDITION:
- Engine warmed up completely after starting
- After operating A/C system in AUTO mode, switch compartment "set" temperature from 18 to 32°C (65 to 85°F).

SPECIFICATION DATA:
Indication changes correspondingly with compartment temperature setting from 18°C (65°F) (0%) to 32°C (85°F) (100%).

⟨Reference⟩
- Air mix door target position is apparent value determined by target outlet air temperature.
- Determine mix door target position, taking into account actual air mix door data "F11".

- Probable cause (item outside "specified date")

Data at 18°C (65°F) (MAX COLD) and/or 32°C (85°F) (MAX HOT) are faulty.	→ Check sensors using self-diagnosis function.

L: MODE 11 — Actual air mix door position (AMR P) —

CONDITION:
- Engine warmed up completely after starting
- After operating A/C system in AUTO mode, switch compartment "set" temperature from 18 to 32°C (65 to 85°F).

SPECIFICATION DATA:
Indication changes correspondingly with compartment temperature setting from 0% to 100%.

- Probable cause (item outside "specified date")

1	Check air mix door motor linkage.	Not OK →	Repair.
	↓ OK		
2	Check as per trouble codes 31 and 33.	Not OK →	Repair or replace.

M: MODE 12 — Mode door target value (MODE set) —

CONDITION:
- Start engine.
- Press VENT switch.
- Press DEF switch.

SPECIFICATION DATA:
- MODE set: 100% (mode door in VENT)
- MODE set: 0% (mode door in DEF)

- Probable cause (item outside "specified date")

Check actual mode door "F13" and outlet positions.

(Reference
- Check to determine mode door target value in relation to actual mode door position using mode function "F13". If target value is outside specification data, auto amplifier may be faulty.

N: MODE 13 — Actual mode door position (MODE pot) —

CONDITION:
- Start engine.
- Press VENT switch.
- Press DEF switch.

SPECIFICATION DATA:
- MODE pot: 100% (mode door in VENT)
- MODE pot: 0% (mode door in DEF)

- Probable cause (item outside "specified date")

1	Check as per trouble codes 32 and 34.	→ Repair harness/connector or replace mode door motor.

↓ OK

Check and repair mode door motor linkage.

O: MODE 14 — Blower motor level (BLW) —

CONDITION:
- Engine warmed up sufficiently
- While A/C system is in AUTO mode, manually change blower fan speed from LO to ME and then to HI using FAN switch.

SPECIFICATION DATA:
- BLW: 4.0 V (FAN switch in LO)
- BLW: 7.5 V (FAN switch in ME)
- BLW: 12.5 V (FAN switch in HI)

- Probable cause (item outside "specified date")

1	Measure voltage between blower motor terminals at blower motor. LO: approx. 4 V ME: approx. 7.5 V HI: approx. 12 V	→ See "Blower Motor Diagnosis" under "Troubleshooting Guide by Fault".

↓ OK

Faulty auto amplifier or control panel switch

P: MODE 15 — Intake door position (Intake) —

CONDITION:
- Self-diagnosis mode "STEP [3]" set to check output equipment.
- Temperature set to 41 - 45 on control panel display using DEF switch.

SPECIFICATION DATA:

Control panel display	Select monitor display
41	20% FRESH
42, 43, 44	FRESH
45	RECIRC

- Probable cause (item outside "specified date")

Check as per trouble code 35.

Q: MODE 16 — Solenoid actuator current output (I sol) —

CONDITION:
- Self-diagnosis mode "STEP [3]" set to check output equipment.
- Temperature set to 41 - 45 on control panel display using DEF switch.

SPECIFICATION DATA:

Control panel display	Select monitor display
41, 43, 44, 45	0.00 A
42	0.65 A

- Probable cause (item outside "specified date")

Install new auto amplifier and recheck.
→ Not OK → Faulty solenoid actuator or harness.
↓ OK
Faulty auto amplifier

R: MODE 17 — Variable compressor control signal (EGI to A/C) —

CONDITION:
- Engine warmed up completely
- A/C system operating in AUTO mode

SPECIFICATION DATA:
Value outside 225% should be indicated.

- Probable cause (item outside "specified date")

"255%" is indicated.
↓
Install new auto amplifier and recheck.
→ Not OK → Install new MPFI unit and recheck.
→ Not OK → Faulty harness
↓ OK
Faulty auto amplifier
OK ↓
Faulty MPFI unit

13. Troubleshooting Guide by Fault

	1	2	3	4	5	6	7	8	9	10	11	12	13
	A/C system does not operate when ignition switch is ON.	Fuse blows very soon.	Mode before preset is not stored in memory.	Indication is not displayed.	Illumination does not dim.	Blower motor rotates erroneously or does not rotate.	Intake-recirc is not switched.	Outlets are not switched.	Compartment temperature does not increase. (Hot air is not discharged)	Compartment temperature does not decrease. (Cool air is not discharged)	Compartment temperature is not controlled to set value.	System responds to temperature setting too slow.	Condenser fan does not rotate when air conditioner is ON.
Fuse	○	○	○	○	○	○							
Harness and connector	○	○	○	○	○	○	○	○	○	○			
GND (ground)	○		○	○		○							
Auto amplifier	○		○	○	○	○	○	○	○	○	○		
Air mix door motor (including P.B.R.)									○	○	○	○	
Mode door motor (including P.B.R. and linkage)								○					
Intake door motor (including linkage)							○						
Blower motor						○							
Fan control amplifier						○							
HI relay						○							
OFF relay						○							
A/C relay										○			
Magnet clutch										○			
Cooling fan motors (main and sub)													○
Fan relays (main and sub)													○
Sensors (in-vehicle, ambient, water temperature, refrigerant, intake and sunload)											○	○	
In-vehicle sensor duct (aspirator)											○		

SUBARU

SVX

1992

Precaution for Supplemental Restraint System "Airbag"
The Supplemental Restraint System "Airbag" helps to reduce the risk or severity of injury to the driver in a frontal collision.
The Supplemental Restraint System consists of an airbag module (located in the center of the steering wheel), sensors, a control unit, warning light, wiring harness and spiral cable.
Information necessary to service the safety is included in the "5-5. SUPPLEMENTAL RESTRAINT SYSTEM" of this Service Manual.
WARNING:
- To avoid rendering the Airbag system inoperative, which could lead to personal injury or death in the event of a severe frontal collision, all maintenance must be performed by an authorized SUBARU dealer.
- Improper maintenance, including incorrect removal and installation of the Airbag system, can lead to personal injury caused by unintentional activation of the Airbag system.
- All Airbag system electrical wiring harnesses and connectors are covered with yellow outer insulation. Do not use electrical test equipment on any circuit related to the Supplemental Restraint System "Airbag".

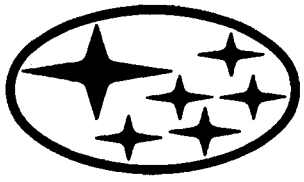

	Page
M MECHANISM AND FUNCTION	2
1. Body Construction	2
2. Cross-sectional Structure of Body	3
3. Steering Support Beam	5
4. Quietness	6
5. Plastic and Resin-molded Outer Parts	8
6. Painting	9
7. Rust Prevention	11
8. Sunroof	38
9. Ventilation	46
S SERVICE DATA	48
1. Body Datum Points	48
2. Datum Dimensions	55
3. Datum Points and Dimensions Concerning On-Board Aiming Adjustment	62
4 Rear Quarter Brace Welding	63
C COMPONENT PARTS	64
1. Body Construction	64
2. Front Hood and Hood Lock	65
3. Trunk Lid, Trunk Lid Opener, Fuel Flap and Fuel Flap Opener	66
4. Front Bumper	67
5. Rear Bumper	68
6. Body Parts	69
7. Outer Accessories	71
8. Sunroof	74
W SERVICE PROCEDURE	75
1. Hood	75
2. Trunk Lid (including trunk lid opener)	78
3. Repair Instructions for Trunk Lid	81
4. Fuel Flap (including fuel flap opener)	91
5. Front Bumper AIRBAG	93
6. Rear Bumper	95
7. Side Garnish	97
8. Coating Method for PP Bumper and Side Garnish	100
9. Repair Instructions for Colored PP Bumper and Side Garnish	102
10. Rear Quarter Garnish	106
11. Front Fender AIRBAG	106
12. Mud Guard and Front Arch Protector AIRBAG	107
13. Cowl Panel	109
14. Front Grille	110
15. Under Cover	110
16. Side Splash Board	110
17. Ornament	110
18. Rear View Mirror	111
19. Sunroof	111
T TROUBLESHOOTING	116
1. Sunroof	116

M MECHANISM AND FUNCTION

1. Body Construction

The vehicle body is of monocoque construction with high rigidity.

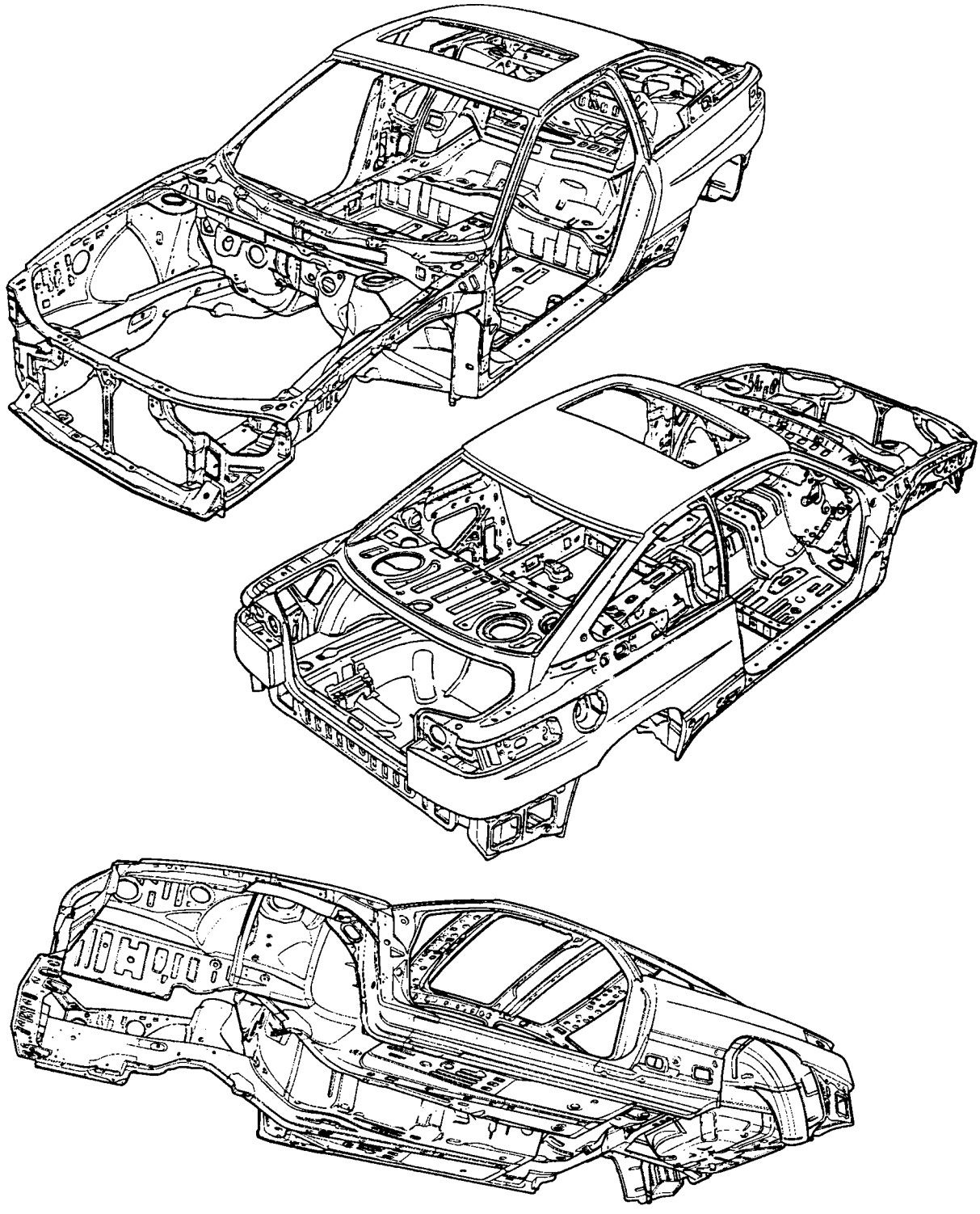

C5-495

Fig. 1

2. Cross-sectional Structure of Body

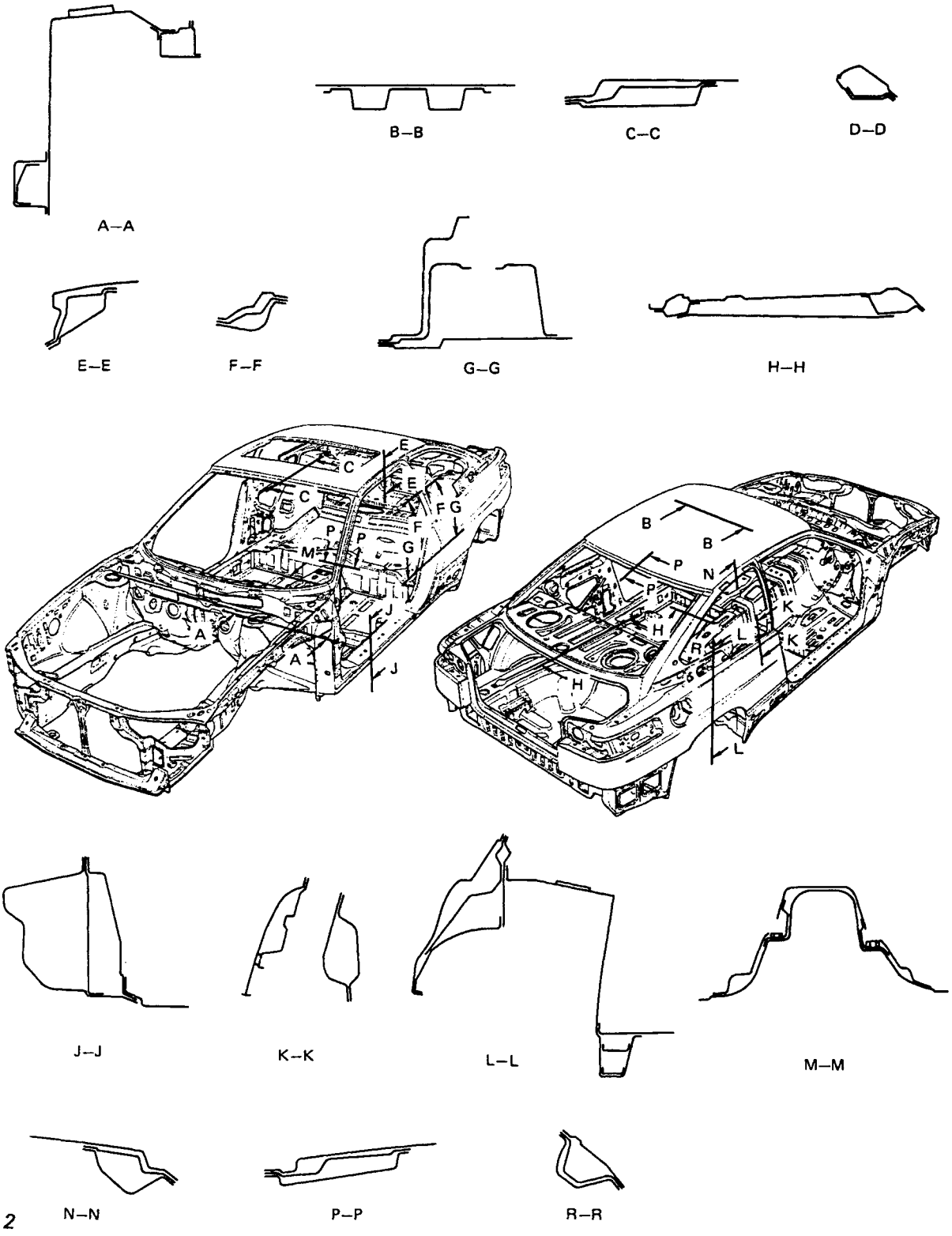

Fig. 2

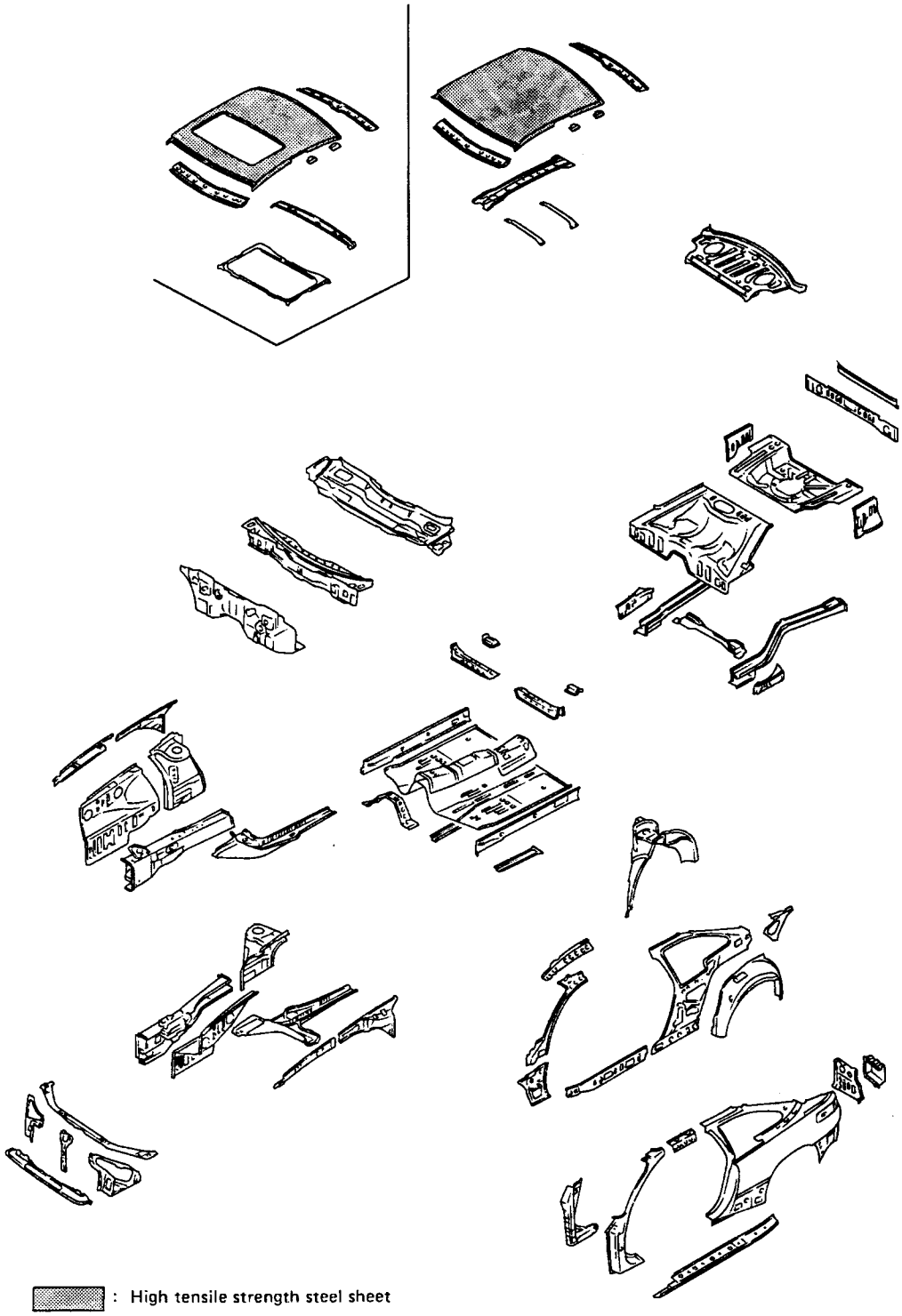

C5-497

Fig. 3

3. Steering Support Beam

A steering support beam is provided between the left and right front pillars to reinforce the steering column. It also minimizes vibration and steering column extension in a collision.

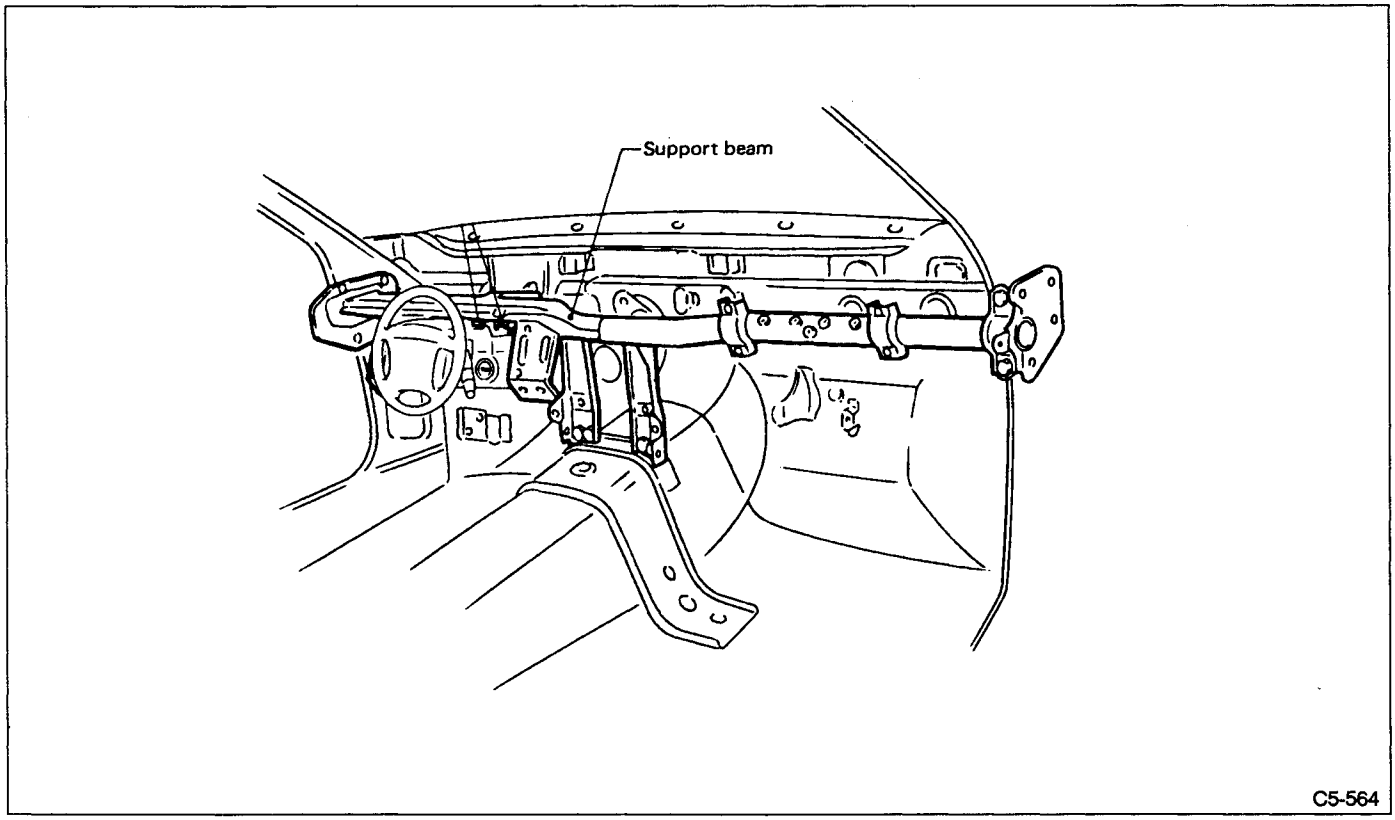

Fig. 4

4. Quietness

Silencers, dual-wall panels, sound-absorbing materials, etc. are utilized in conjunction with a high-rigidity and vibration/noise-proof body structure in order to provide a quiet passenger compartment.

1) Dual-wall toeboard

The toeboard is a dual-wall design consisting of an asphalt sheet placed between two steel panels to reduce the transmission of noise and vibration from the engine compartment to the passenger compartment.

A foam asphalt sheet provides a good contact surface with steel panels. This increases the dampening effect.

2) Silencers over the floor area

Silencers minimize the transmission of noise/vibration into the passenger compartment.

An asphalt sheet covered with a resin layer is located on the floors in the spare tire stowage and front passenger seat, significantly reducing the transmission of noise and vibration.

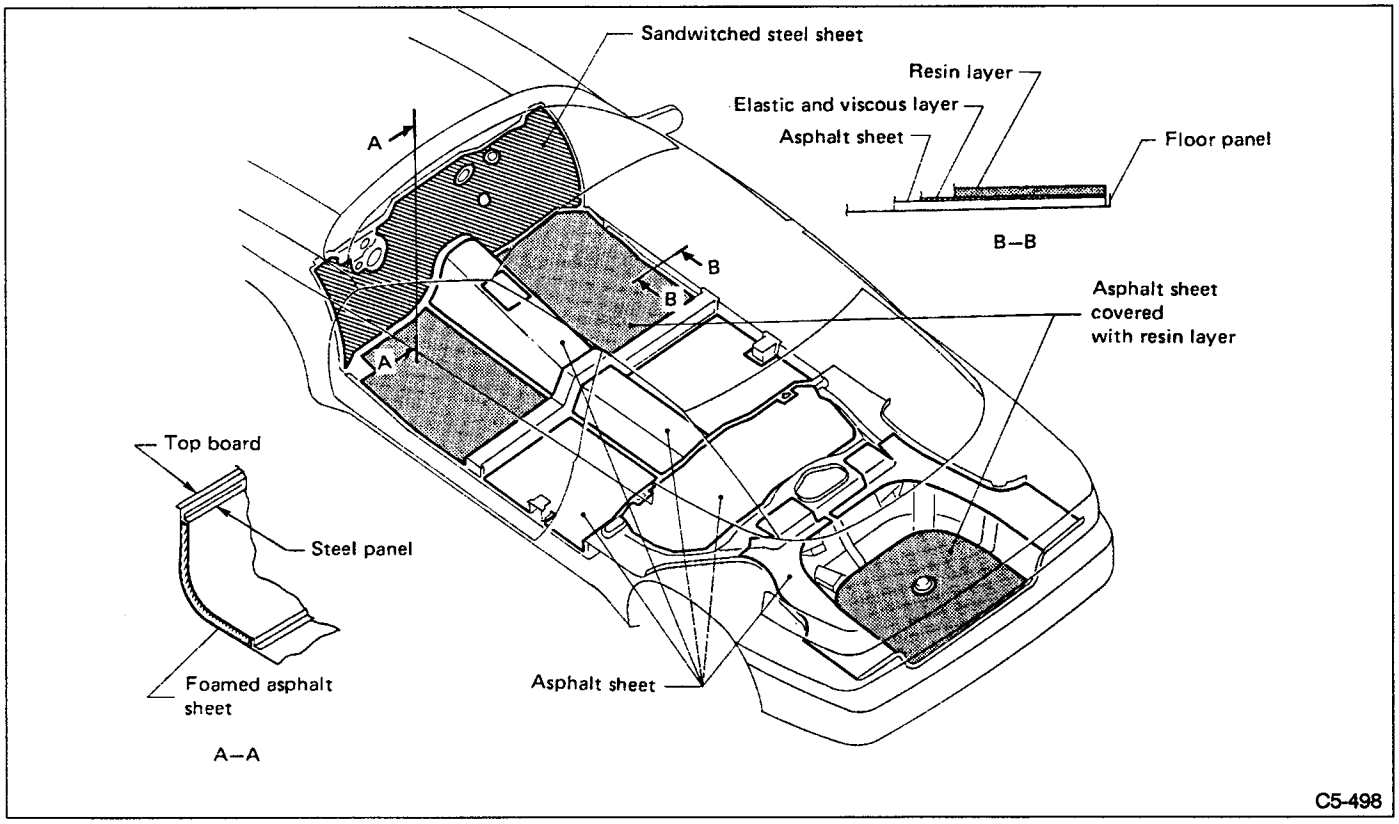

Fig. 5

Note: The asphalt sheet silencer without the resin layer is available as a replacement part to facilitate servicing.

3) Sound-absorbing materials
Insulators are installed in the engine hood, toe-board, roof, lower front pillers, rear bulkhead, etc. to increase the sound-absorbing effect.

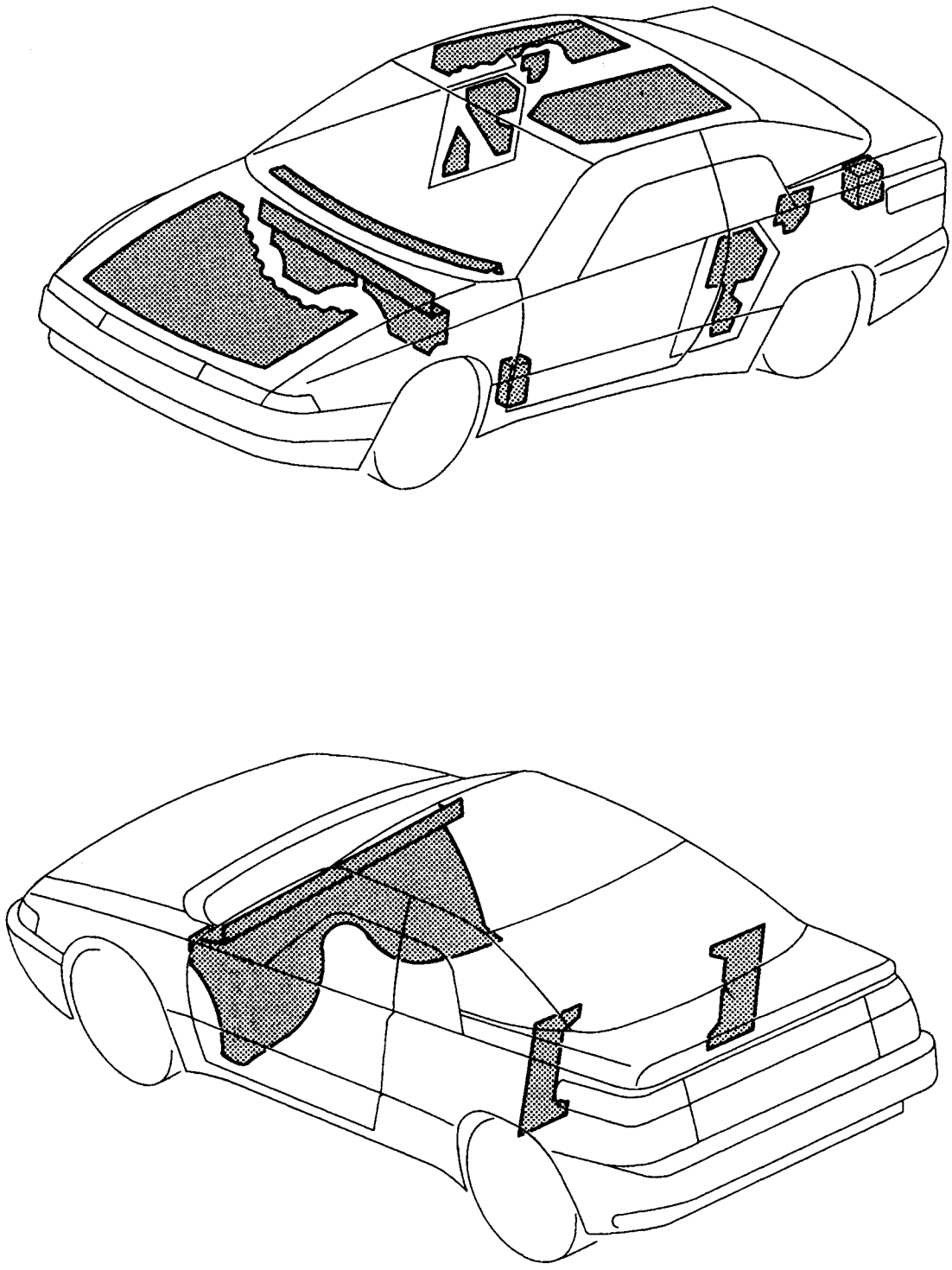

C5-499

Fig. 6

5. Plastic and Resin-molded Outer Parts

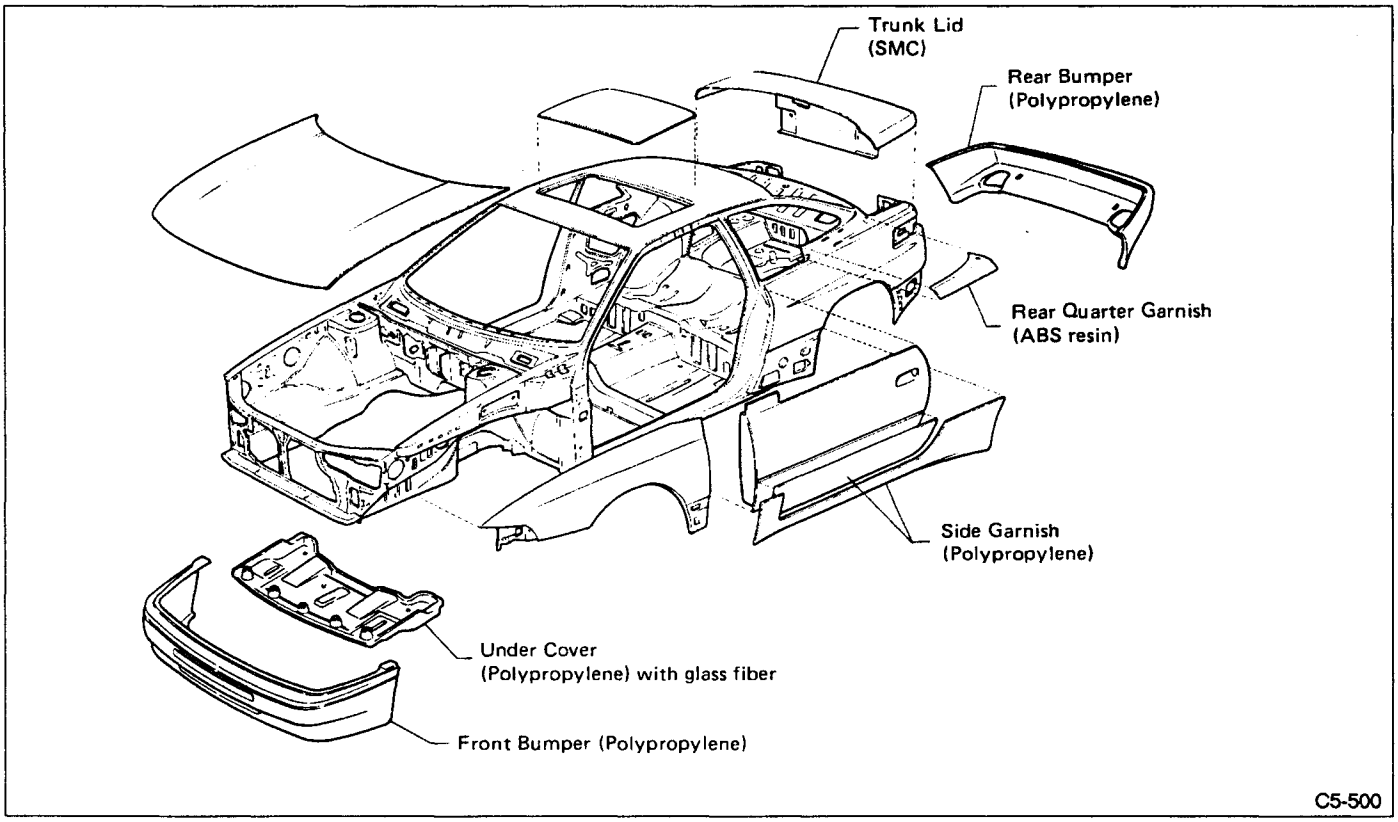

Fig. 7

6. Painting

Specification

Color name	Color code
White Mica	167
Silver Metallic	149
Black Mica	135
Dark Red Mica	165
Peacock Blue Metallic	169

Paint film structure

Paint film structure, after surfacing the steel sheet, is composed of electrocoated paint, intermediate paint and top coat paint.

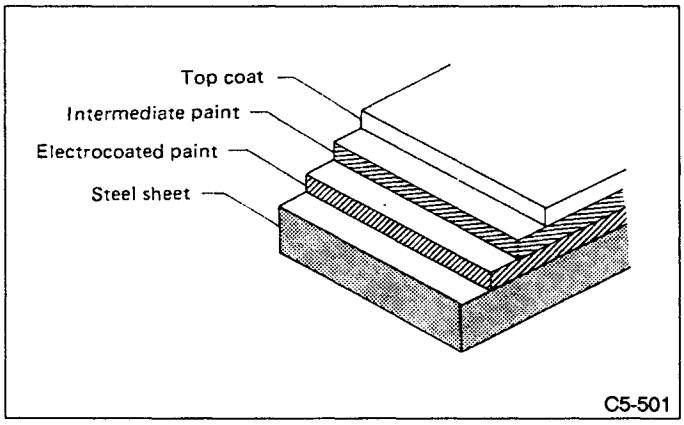

Fig. 8

Depending on the finish color, the following four kinds of paint are used for the top coat.

1) Solid finish....black color (roof)

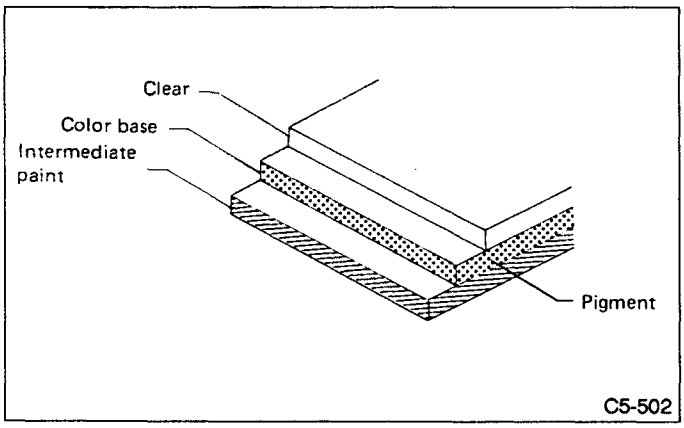

Fig. 9

2) Metallic finish... silver and peacock blue color

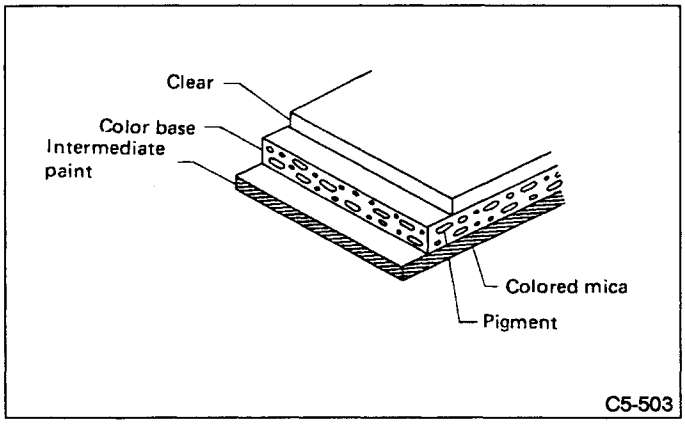

Fig. 10

3) Mica finish....black and dark red color

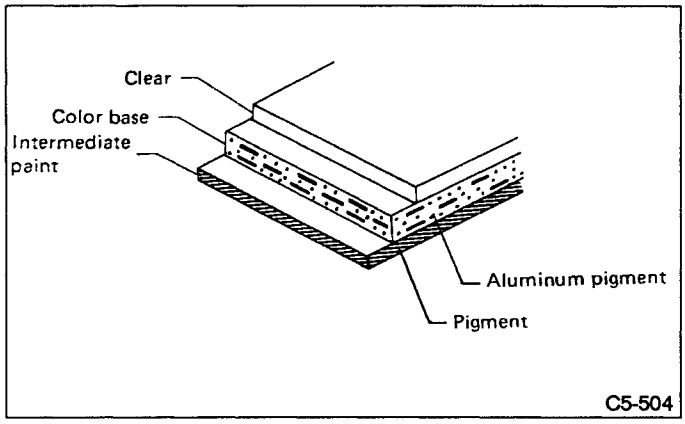

Fig. 11

4) Mica finish....white color

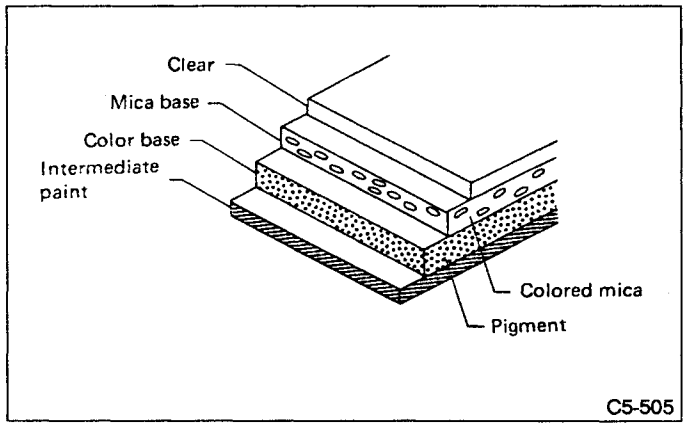

Fig. 12

The color finish of the white mica paint is affected by the color of the base layer. For convenience in checking the color during the body servicing, an area is provided where the mica base and clear layers are not applied.

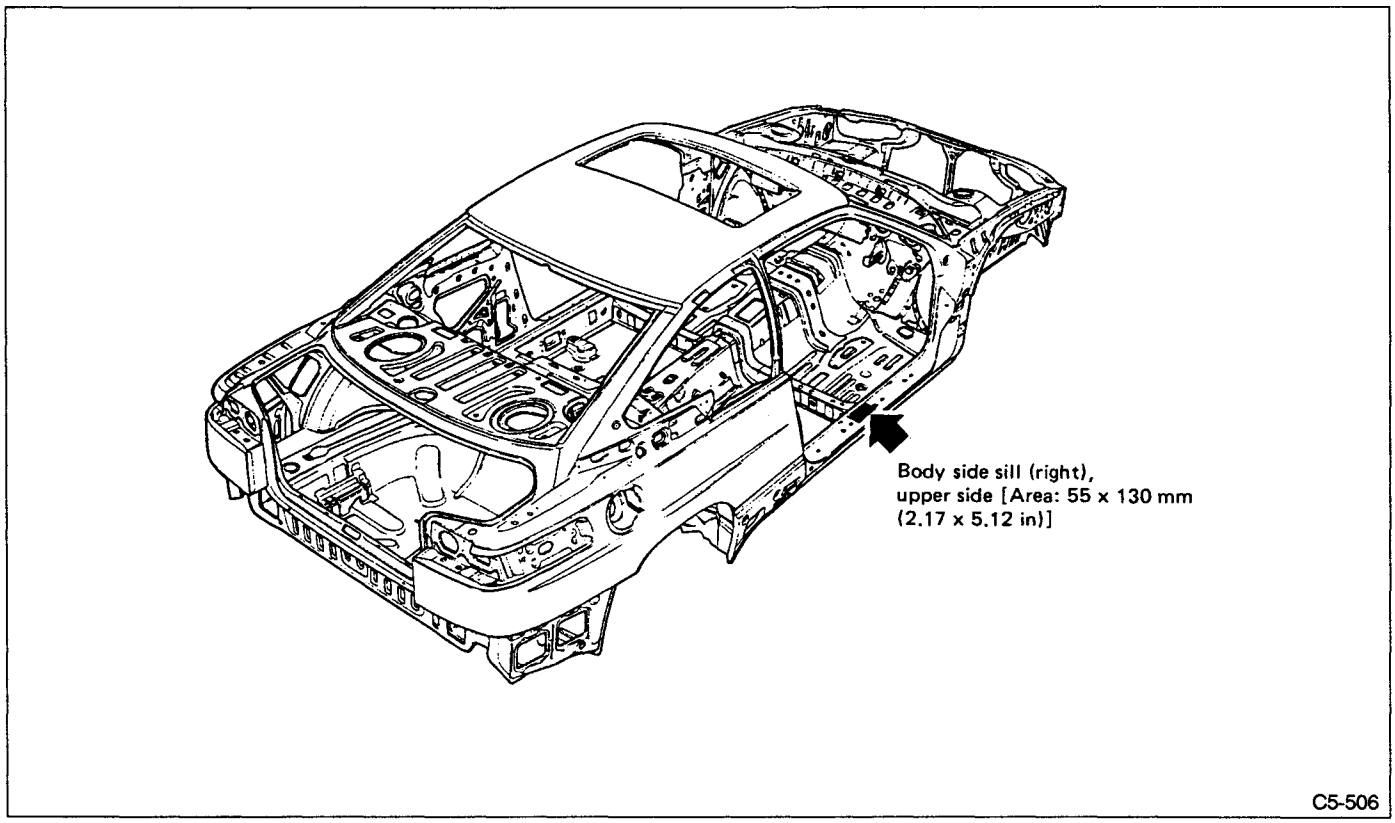

Fig. 13

7. Rust Prevention

The following items are utilized where necessary to protect the body against corrosion.

1. Panel Arrangement

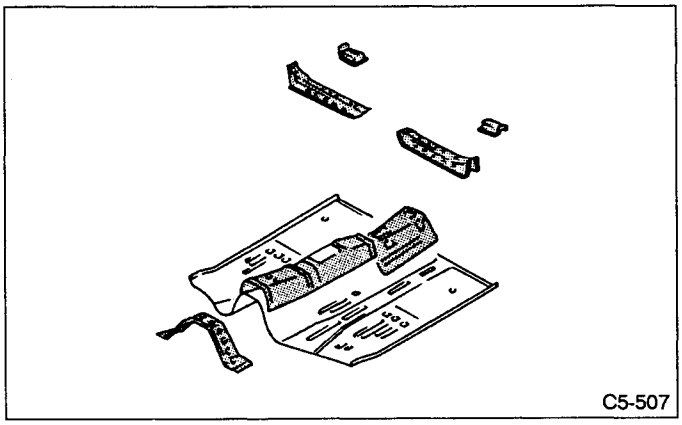

Fig. 14

2. Galvanized Sheet Metal Application

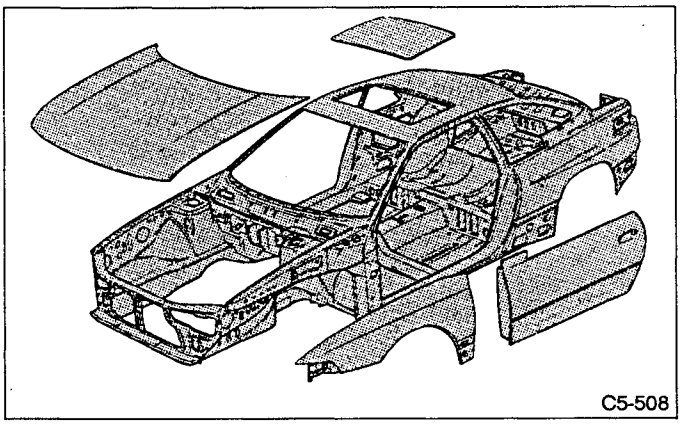

Fig. 15

3. Cation Electrocoating

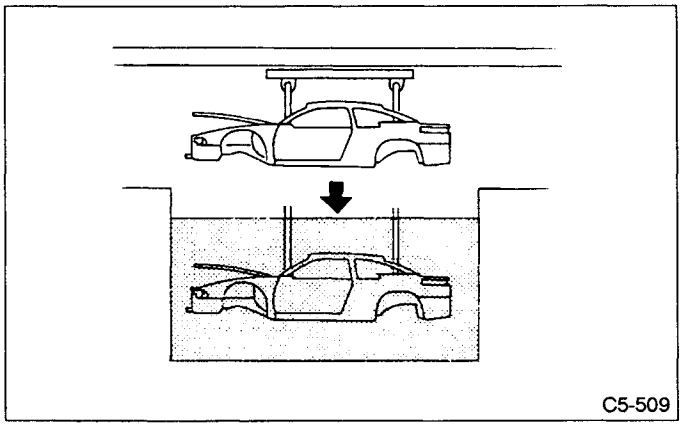

Fig. 16

4. Sealer and Adhesive Application

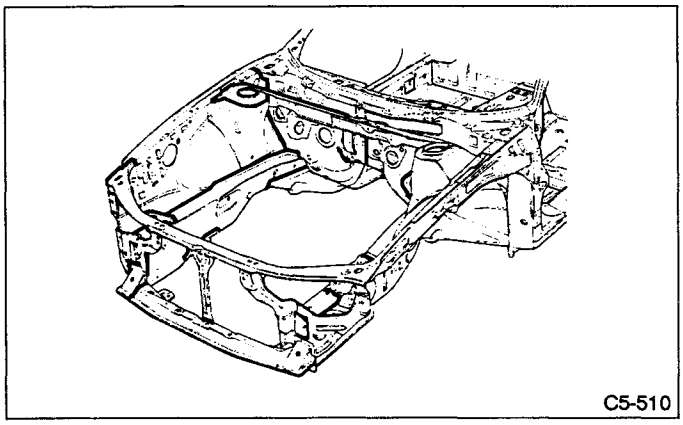

Fig. 17

5. Polyvinyl Chloride (PVC) Application (Uses new material.)

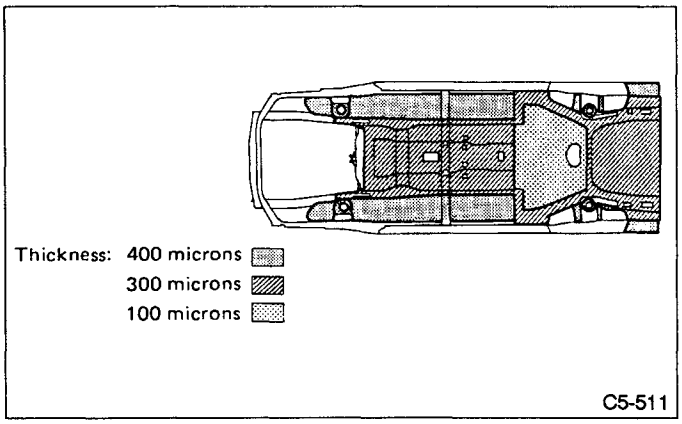

Fig. 18

6. Anti Chipping Coat (ACC) Application (Uses new material.)

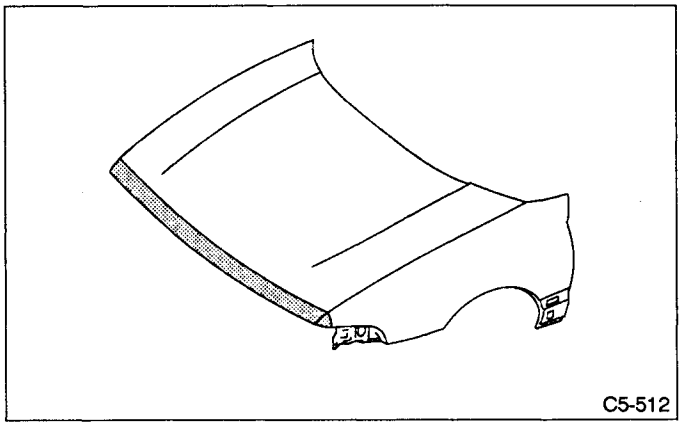

Fig. 19

7. Hot Wax Application

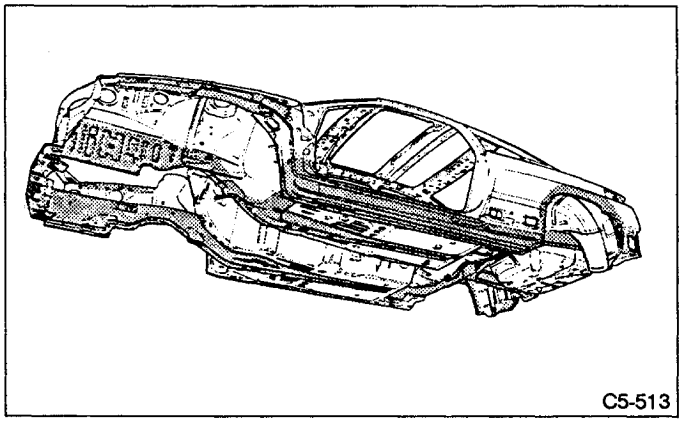

Fig. 20

M MECHANISM AND FUNCTION

7. Rust Prevention

8. Rustproof Parts

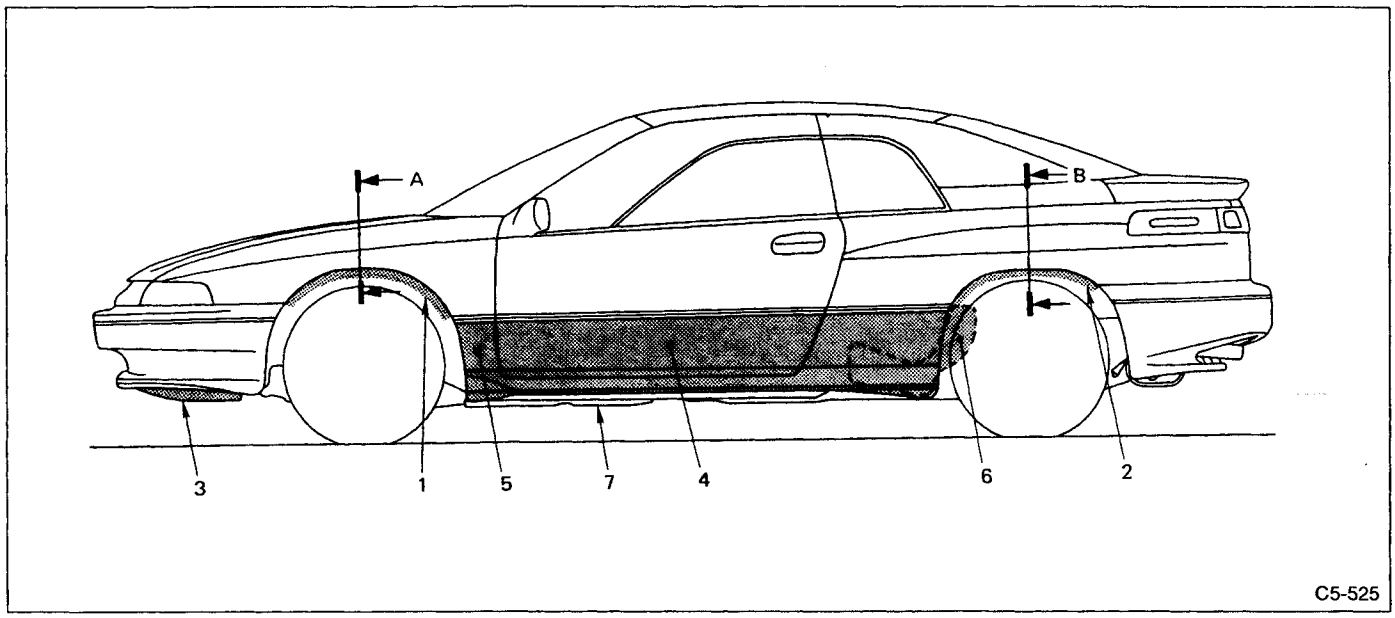

Fig. 1

No.	Applied section	Anti-rust material	Remarks
1	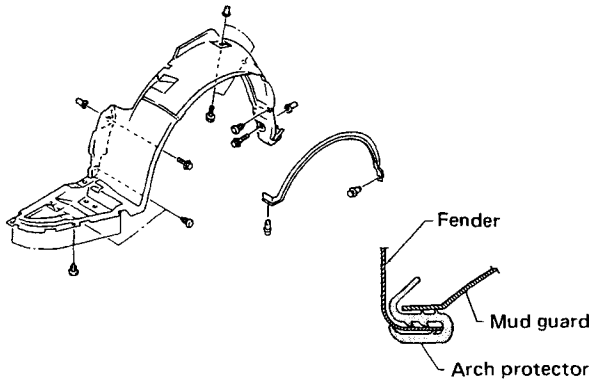	Rubber (arch protector) Polyethylene (mud guard)	—

No.	Applied section	Anti-rust material	Remarks
2	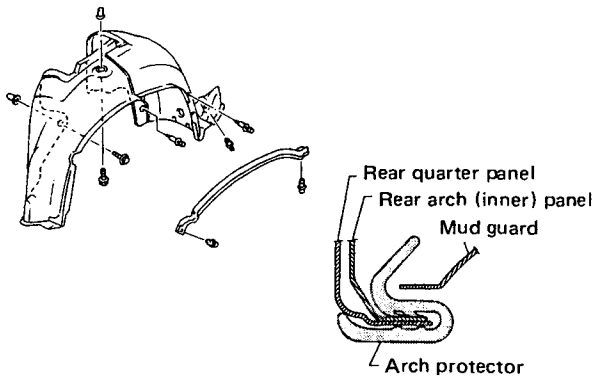 C5-526-2	Rubber (arch protector) Polyethylene (mud guard)	—
3	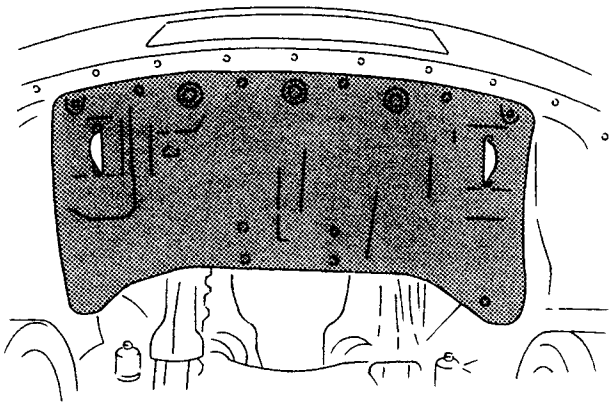 C5-526-3	Polyethylene with glass fiber	—
4	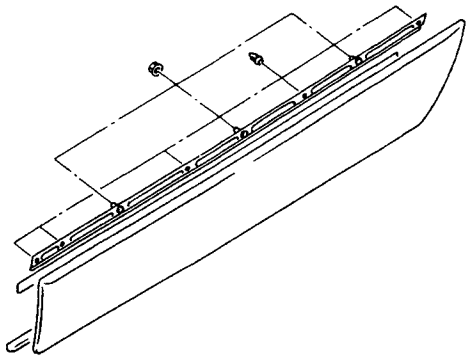 C5-526-8	Polypropylene	—

No.	Applied section	Anti-rust material	Remarks
5	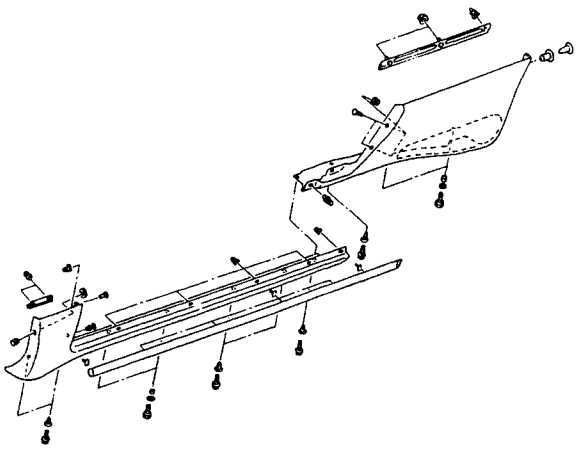 C5-526-9	Polypropylene	—
6	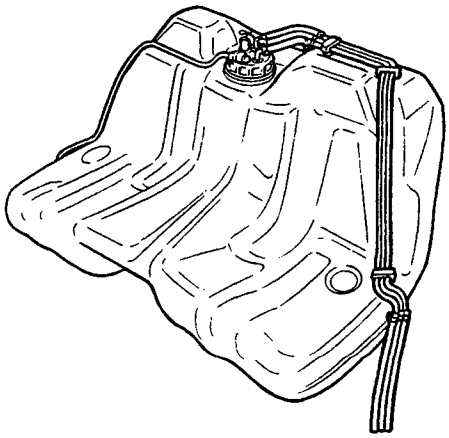 C5-526-6	Multi-layer plastic	—

No.	Applied section	Anti-rust material	Remarks
7	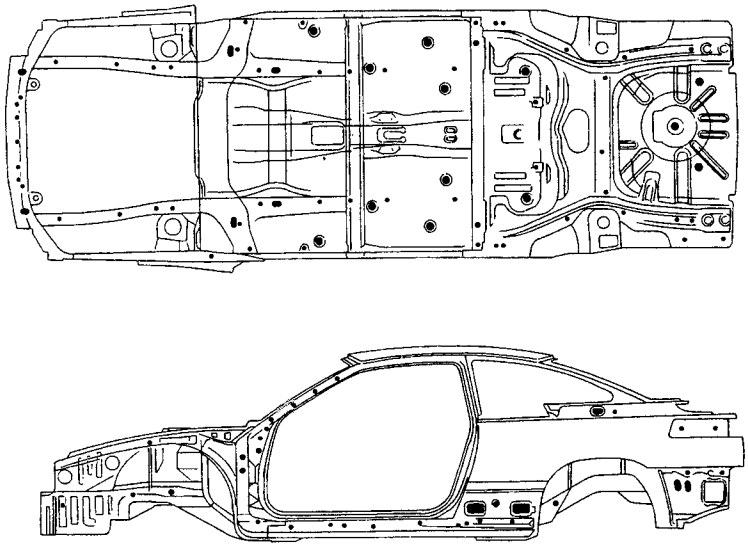 C5-526-7	Nylon (Plug) Polypropylene (Hot melting plug)	—

Fig. 2

9. Anti-rust Wax Application

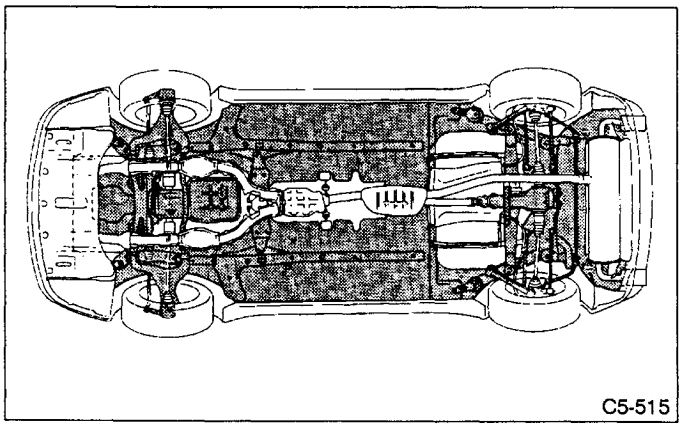

Fig. 22

1. Panel Arrangement

Members are installed on the passenger compartment side of the floor panels to prevent rust formation on the lapped portions.

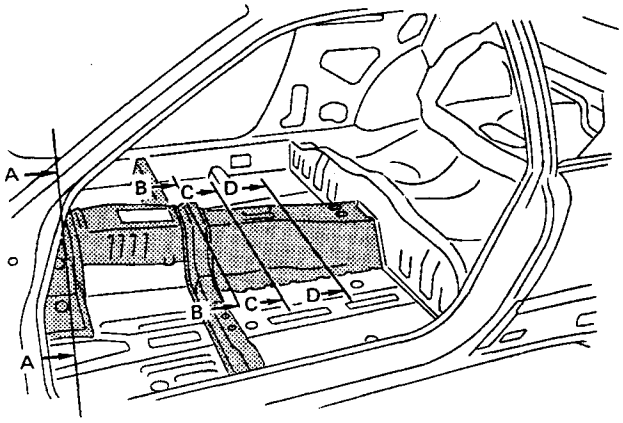

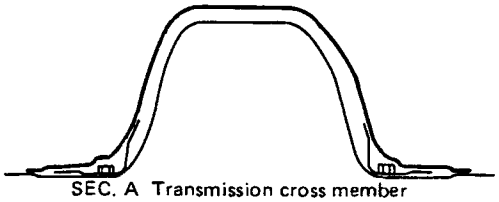

SEC. A Transmission cross member locating portion

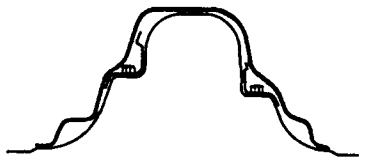

SEC. C Center bearing locating portion

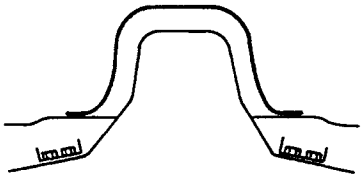

SEC. B Muffler hanger locating portion



SEC. D Front seat locating portion

C5-516

Fig. 23

2. Galvanized Sheet Metal Application

Galvanized sheet metal is used for all body sheet metal parts.

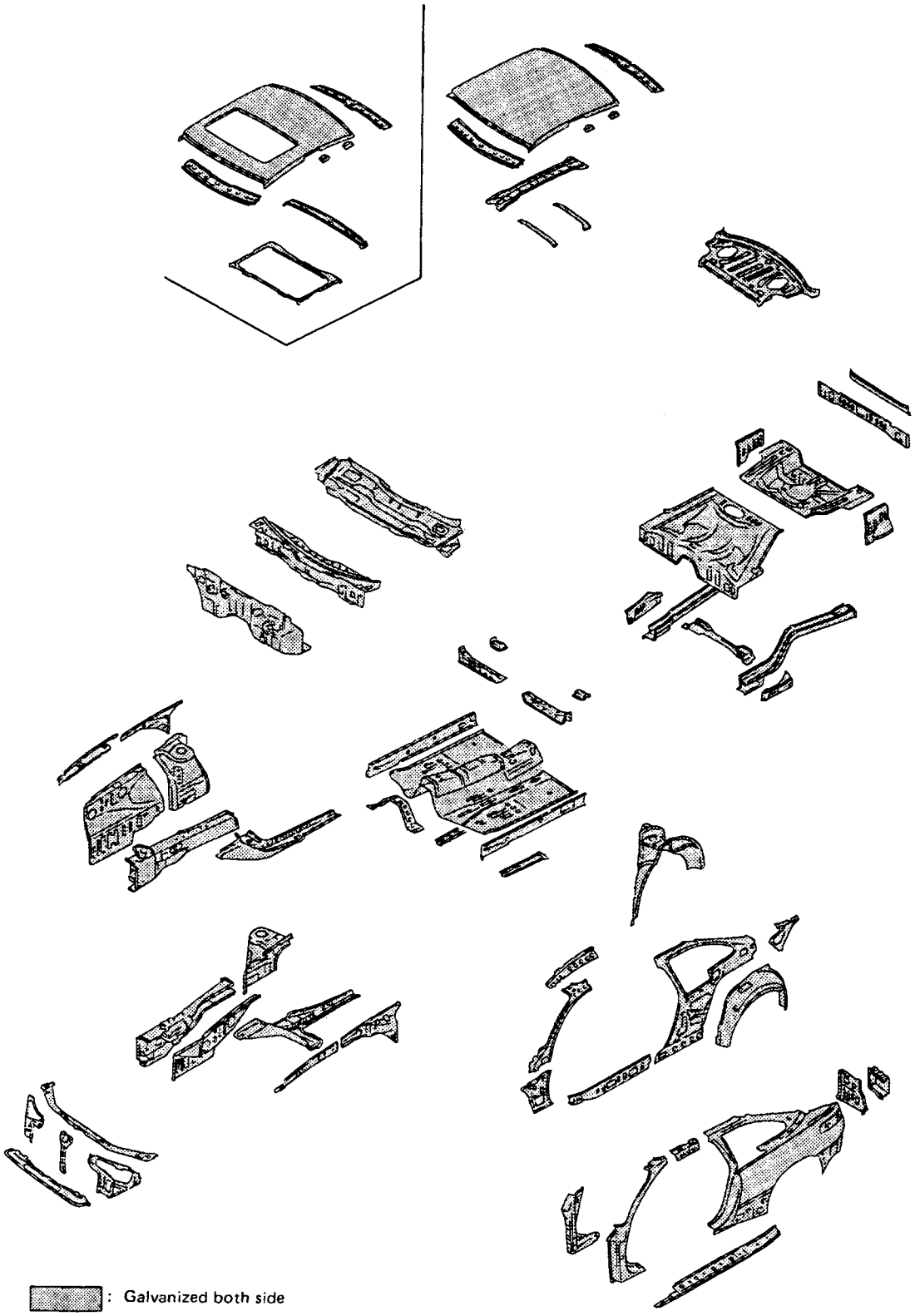

C5-517

Fig. 24 : Galvanized both side

4. Sealer and Adhesive Application

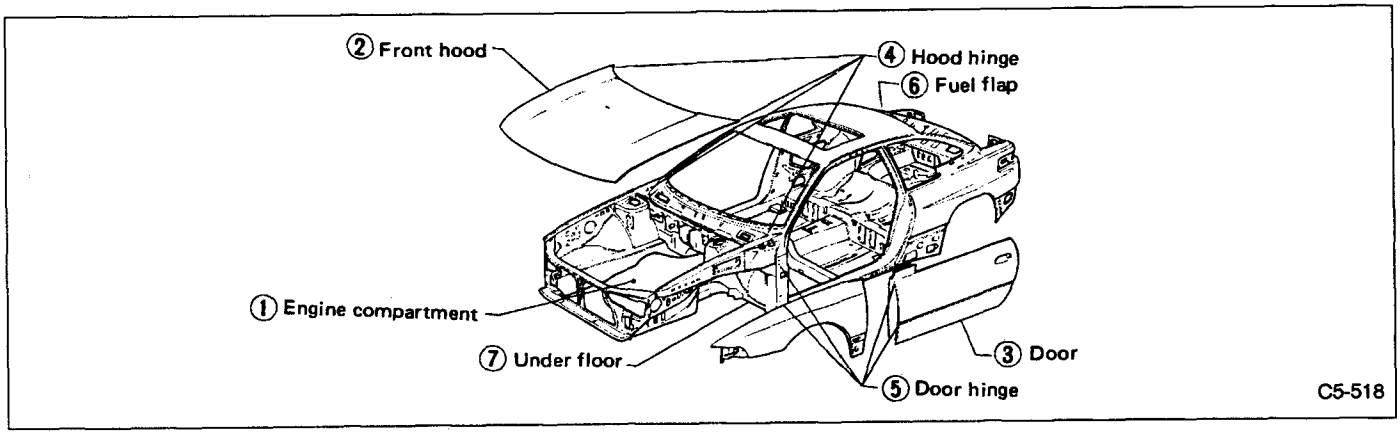

Fig. 25

No.	Applied section	Anti-rust material	Remarks
1	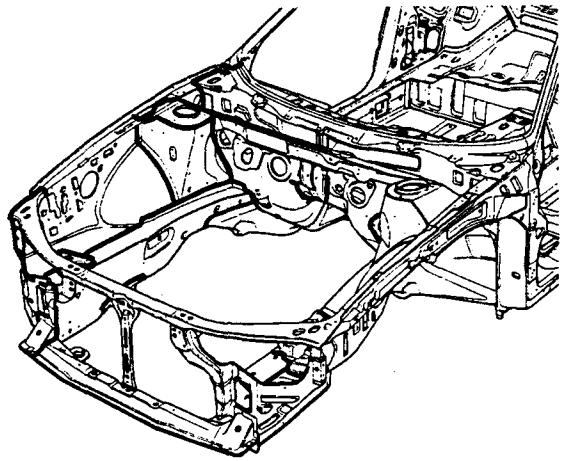 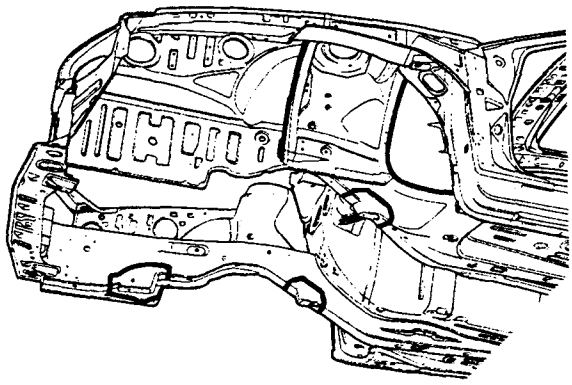 C5-519-1	Sealer	—

No.	Applied section	Anti-rust material	Remarks
2	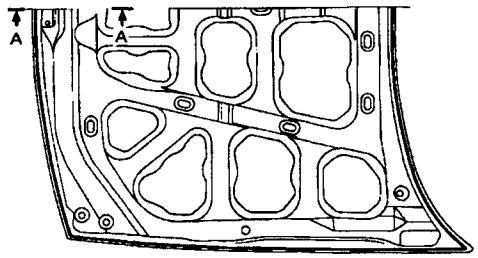 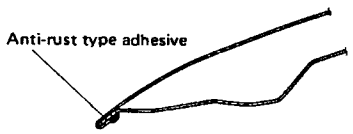 Sec. A C5-519-2	Sealer Adhesive	—
3	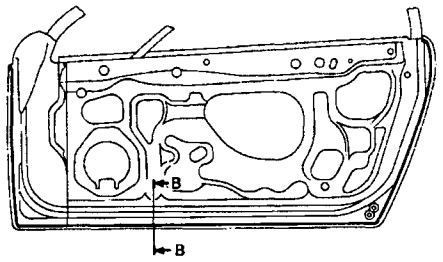 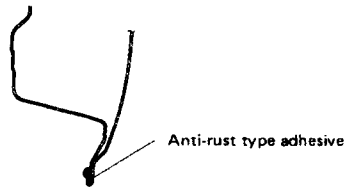 Sec. B C5-519-3	Sealer Adhesive	—
4	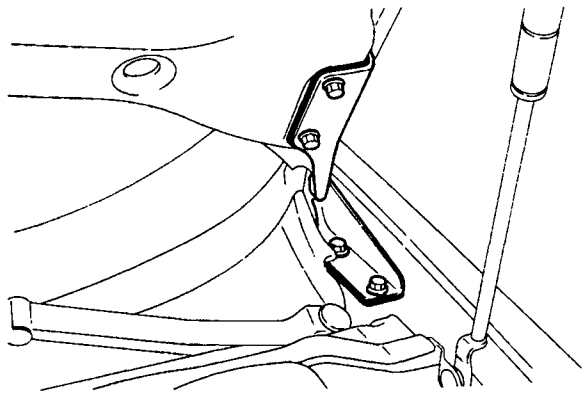 C5-519-4	Sealer	—

No.	Applied section	Anti-rust material	Remarks
5	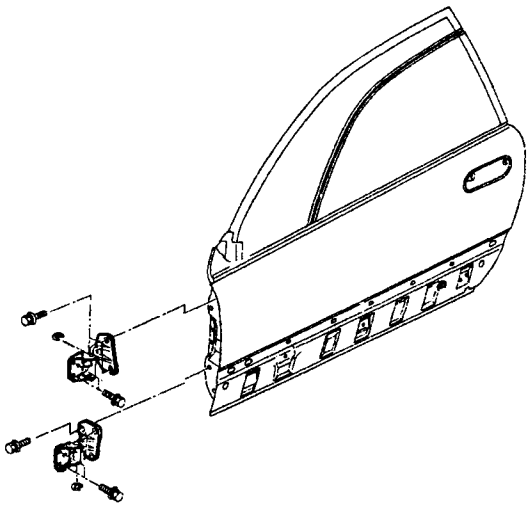 C5-519-5	Sealer	—
6	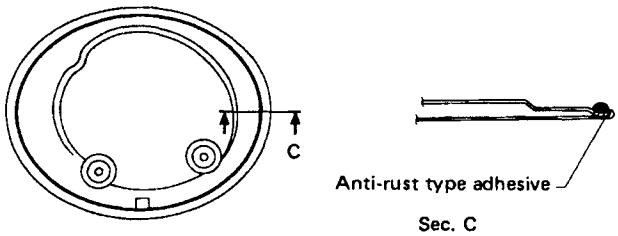 C5-519-6	Sealer Adhesive	—
7	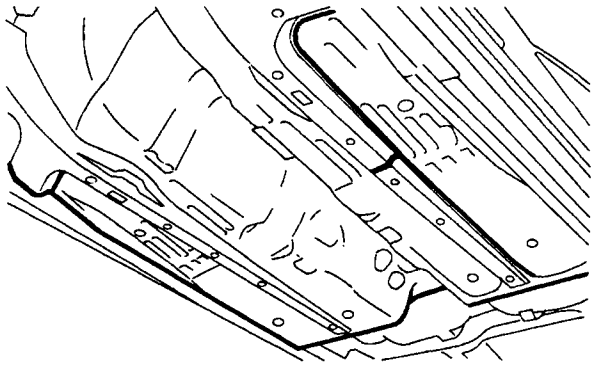 C5-519-7	Sealer	—

5. Polyvinyl Chloride (PVC) Application
(Uses new material.)

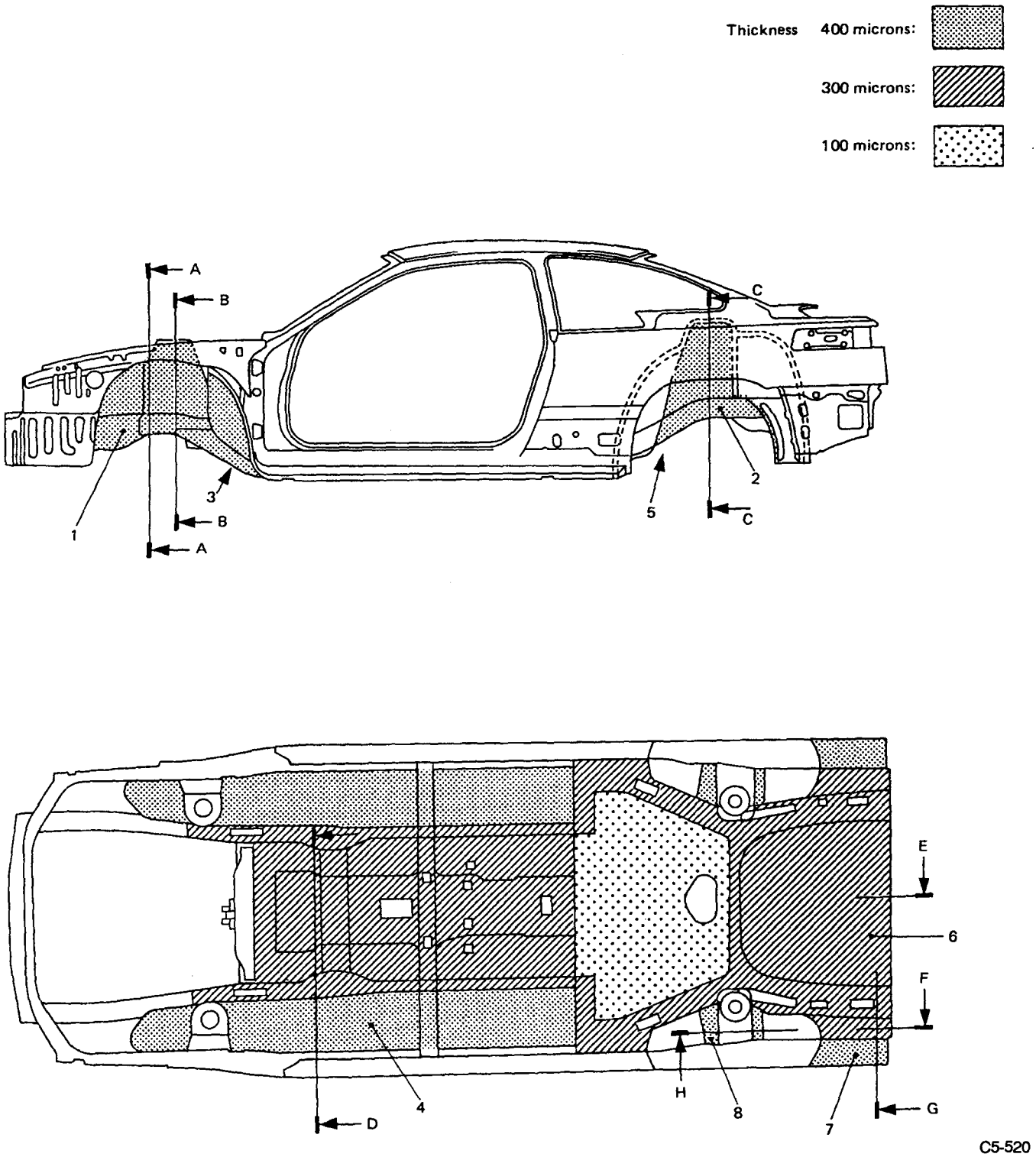

Fig. 26

No.	Cross sectional view	Applied section	Thickness	Remarks
1	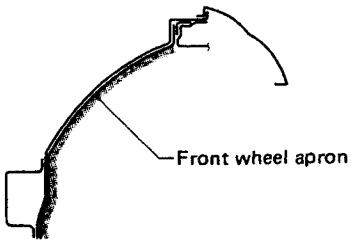 Sec. A 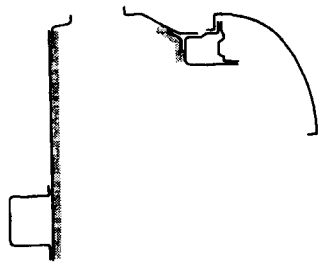 Sec. B C5-521-1	Front wheel house	Over 400 microns	—
2	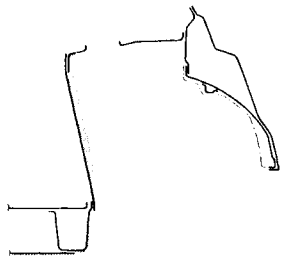 Sec. C C5-521-2	Rear wheel house	Over 400 microns	—
3	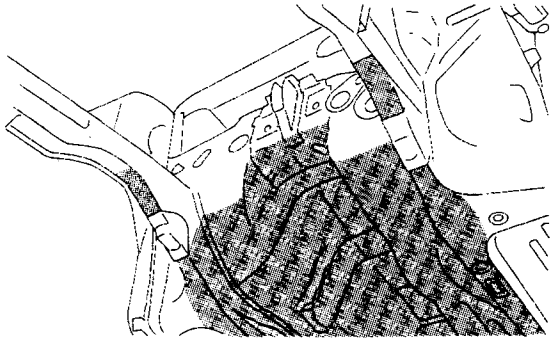 C5-521-3	Toe-board	O0ver 300 microns	—

No.	Cross sectional view	Applied section	Thickness	Remarks
4	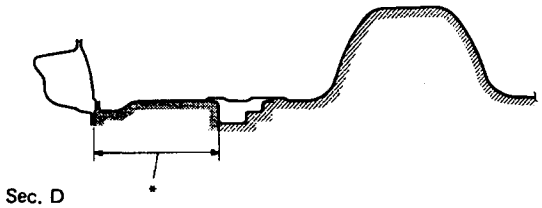 C5-521-4	Front floor	Over 300 microns *: Over 400 microns	—
5	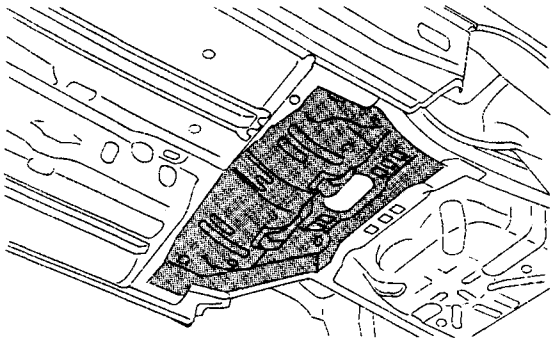 C5-521-5	Rear floor pan (front)	Over 100 microns	—
6	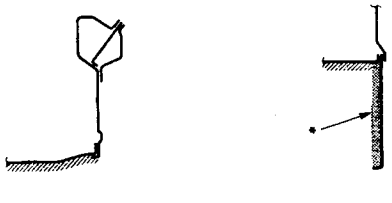 C5-521-6	Rear floor pan (rear)	Over 300 microns *: Over 400 microns	—
7	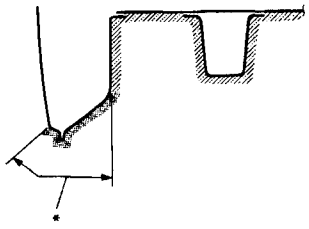 C5-521-7	Side rear floor	Over 300 microns *: Over 400 microns	—
8	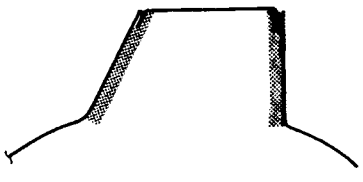 C5-521-8	Rear suspension bracket	Over 400 microns	—

6. Anti Chipping Coat (ACC) Application (Uses new material.)

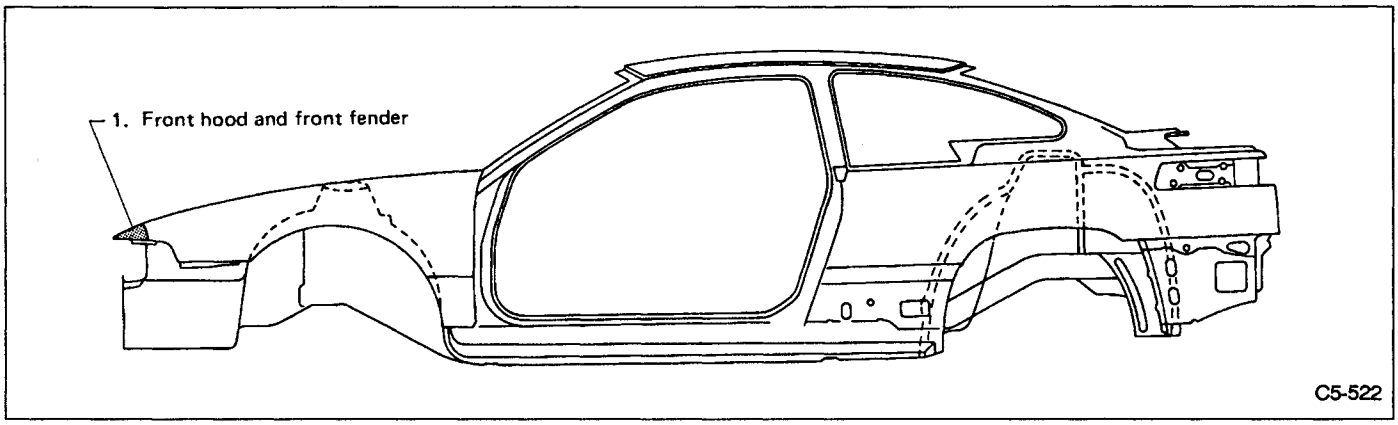

Fig. 27

Unit: mm (in)

No.	Cross sectional view	Applied section	Thickness	Remarks
1	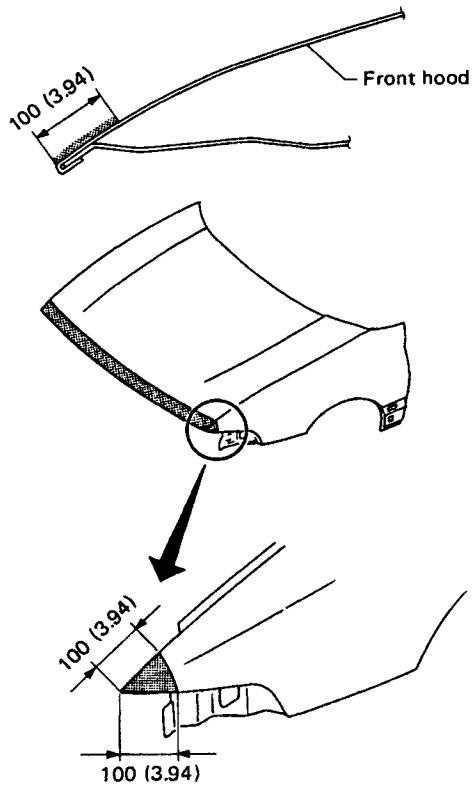	Front section of front hood Front section of front fender	10 microns	—

Fig. 28

7. Hot Wax Application

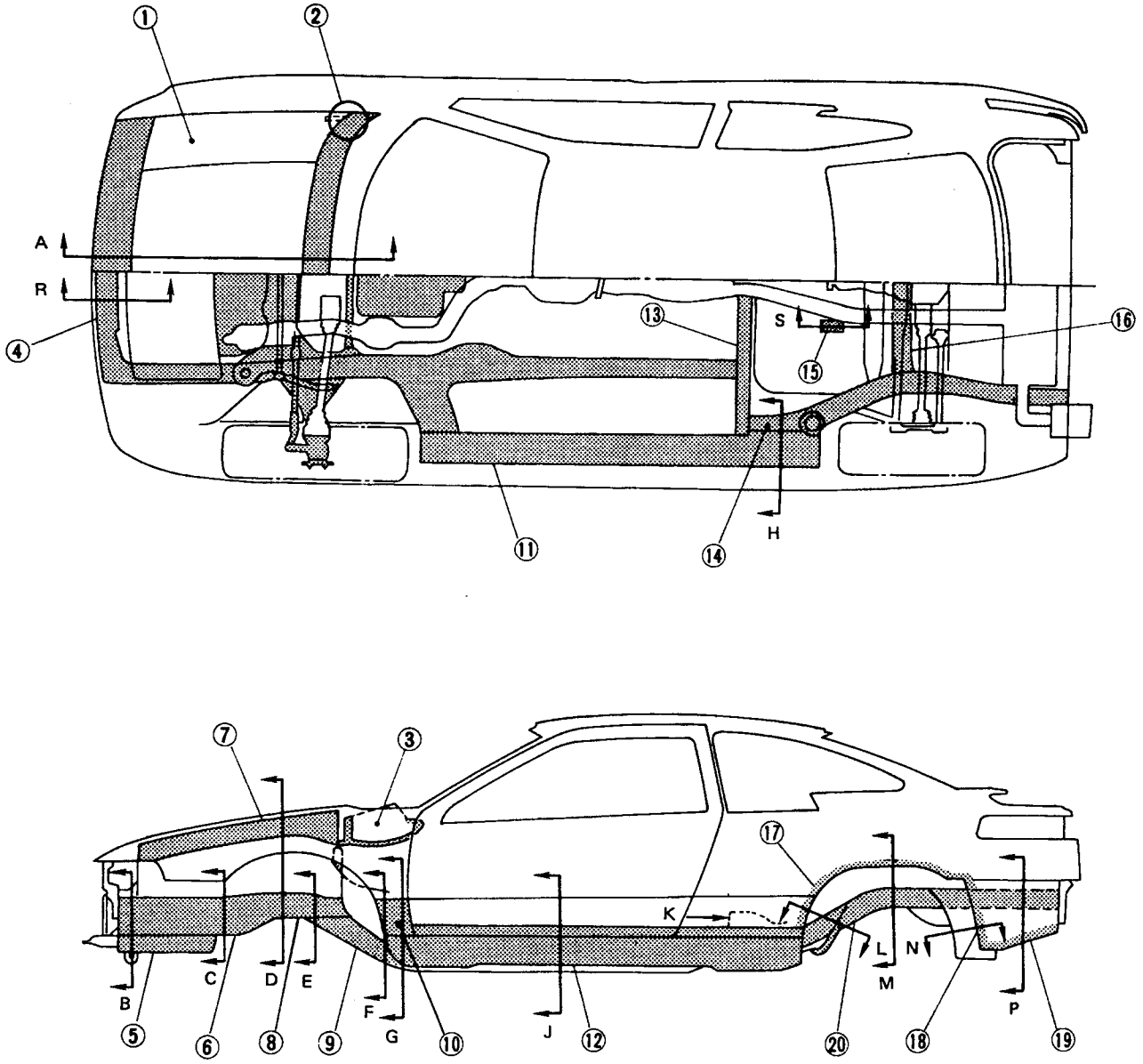

C5-523

Fig. 29

No.	Cross sectional view	Applied section	Thickness	Remarks
1	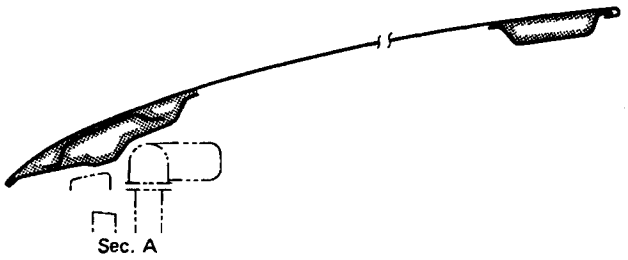 C5-524-1	Rear and front end section of front hood	Over 20 microns (Dry condition)	—
2	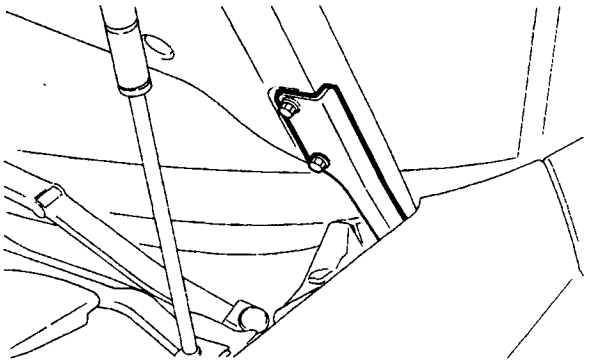 C5-524-2	Front hood hinge	Over 20 microns (Dry condition)	—
3	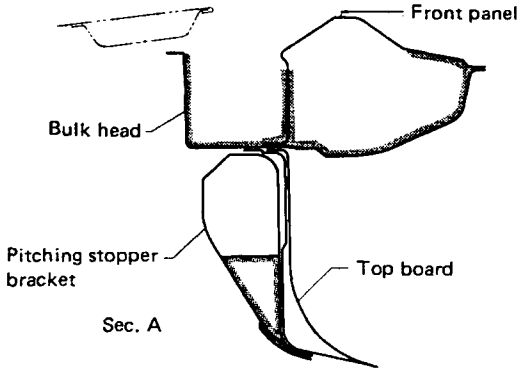 C5-524-3	Bulkhead (inside of duct) Lower section of pitching stopper bracket	Over 20 microns (Dry condition)	—
4	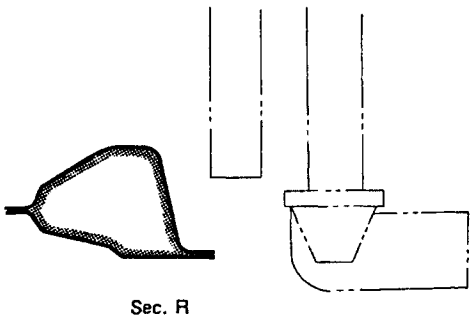 C5-524-4	Frame (radiator panel LWR)	Over 20 microns (Dry condition)	—

No.	Cross sectional view	Applied section	Thickness	Remarks
5	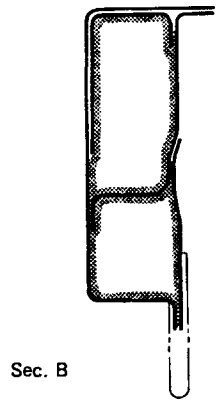 C5-524-5	Front side frame (front)	Over 20 microns (Dry condition)	—
6	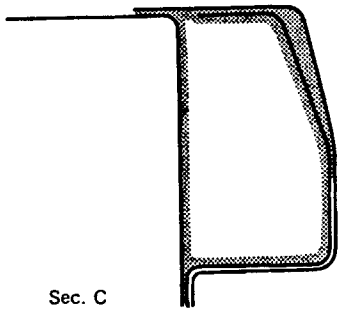 C5-524-6	Front side frame (front)	Over 20 microns (Dry condition)	—
7	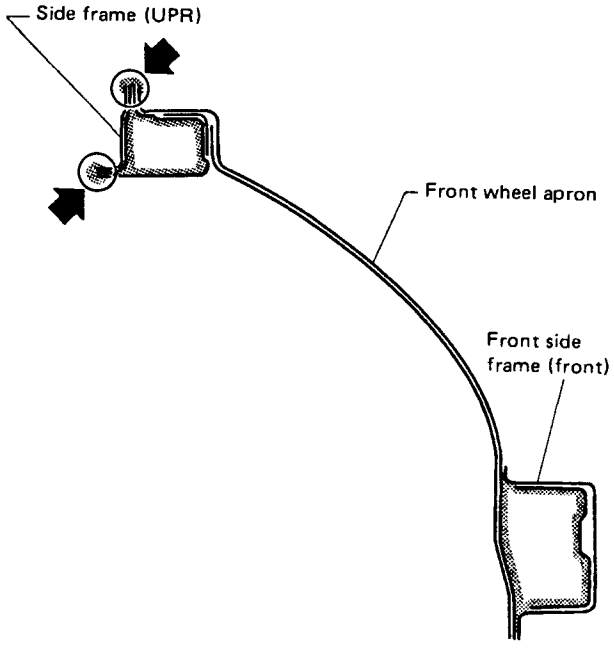 C5-524-7	Front side frame (front) Front and rear side frame (UPR) End of flange	Over 20 microns (Dry condition)	Apply wax to the flanged end of front and rear side frames.

Unit: mm (in)

No.	Cross sectional view	Applied section	Thickness	Remarks
8	– 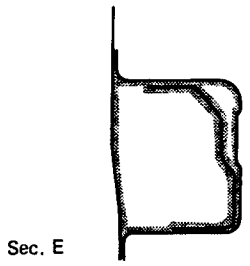 Sec. E C5-524-8	Front side frame (front)	Over 20 microns (Dry condition)	—
9	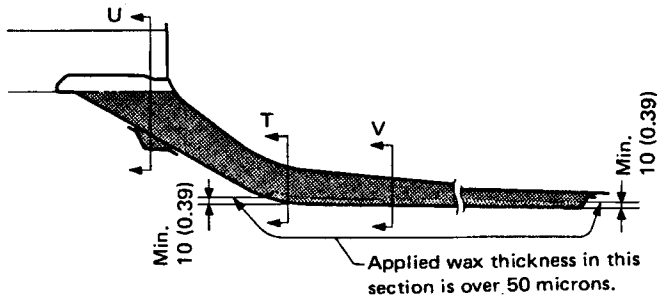 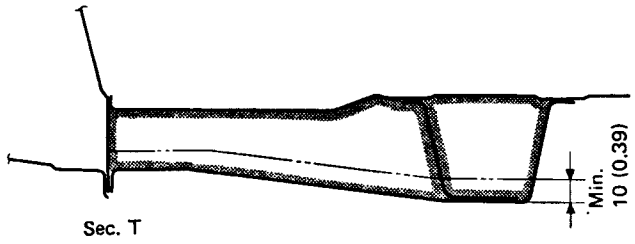 Sec. T 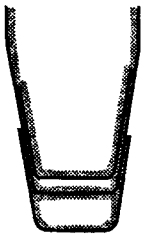 Sec. U 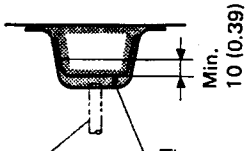 Sec. V C5-524-9	Front side frame (rear)	Over 20 microns (Dry condition) Over 50 microns (Dry condition)	—

Unit: mm (in)

No.	Cross sectional view	Applied section	Thickness	Remarks
10	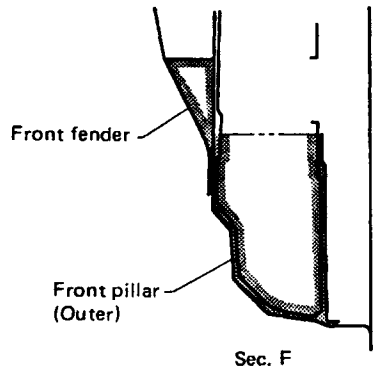 C5-524-10	Rear section of front fender Lower section of front pillar	Over 20 microns (Dry condition)	—
11	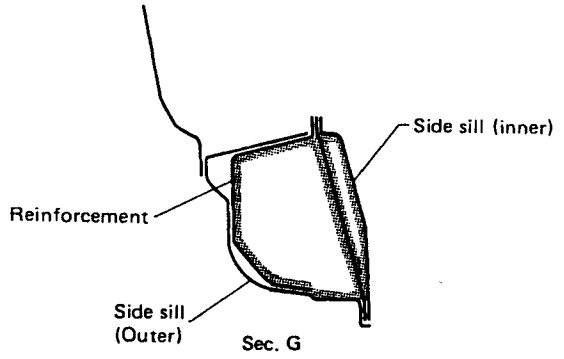 C5-524-11	Side sill	Over 20 microns (Dry condition)	—
12	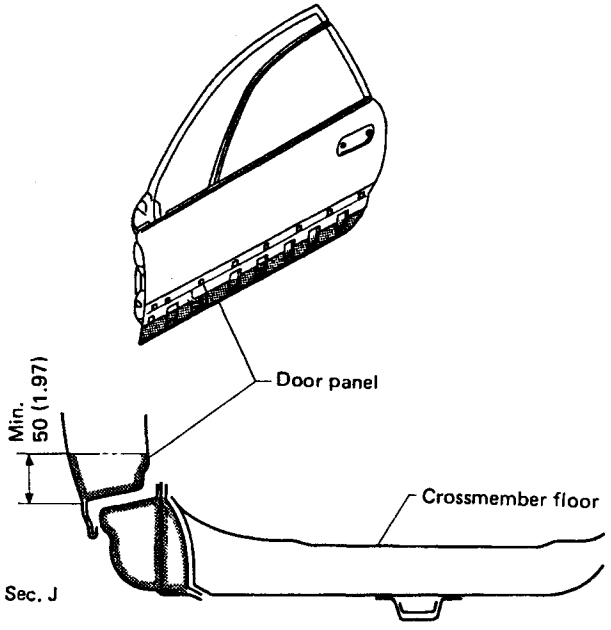 C5-524-12	Inner section of door Side sill	Over 20 microns (Dry condition)	—

Unit: mm (in)

No.	Cross sectional view	Applied section	Thickness	Remarks
13	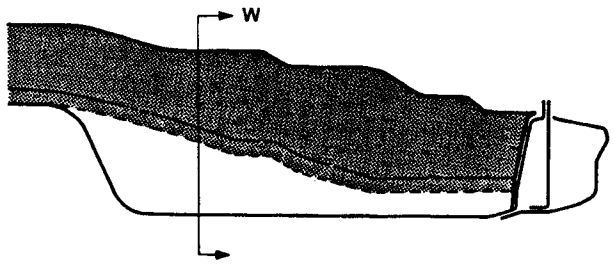 View K 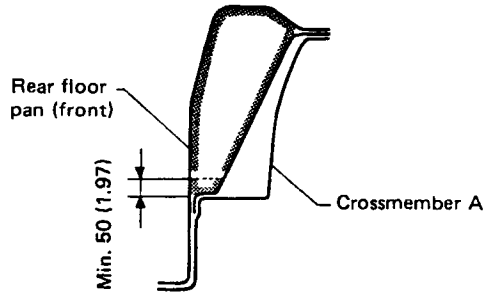 Sec. W C5-524-13	Crossmember A	Over 20 microns (Dry condition) Over 50 microns (Dry condition)	—
14	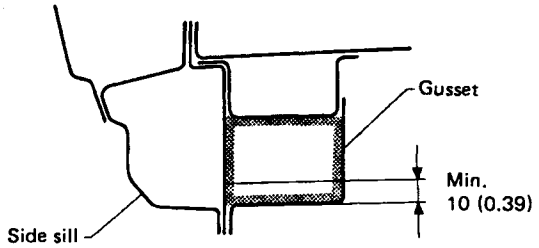 Sec. H C5-524-14	Inside of gusset	Over 20 microns (Dry condition) Over 50 microns (Dry condition)	—
15	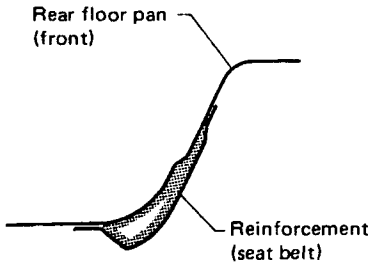 Sec. S C5-524-15	Inside of reinforcement	Over 20 microns (Dry condition)	—

Unit: mm (in)

No.	Cross sectional view	Applied section	Thickness	Remarks
16	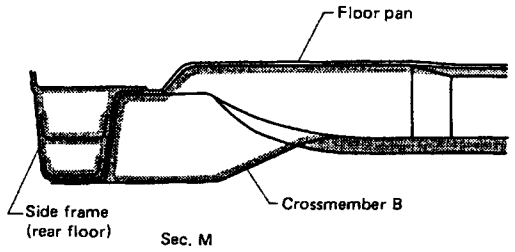 C5-524-16	Crossmember B Side frame (rear floor)	Over 20 microns (Dry condition)	—
17	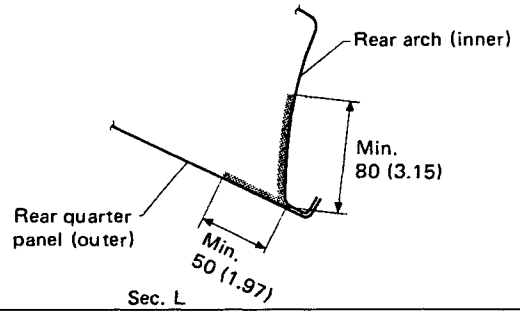 C5-524-17	Inside of rear quarter panel	Over 20 microns (Dry condition)	—
18	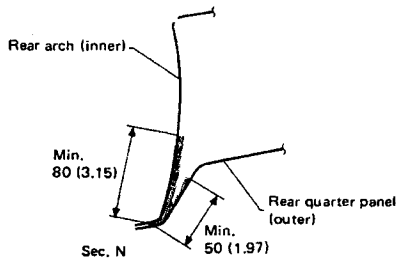 C5-524-18	Inside of rear quarter panel (Area adjoining side bumper)	Over 20 microns (Dry condition)	—
19	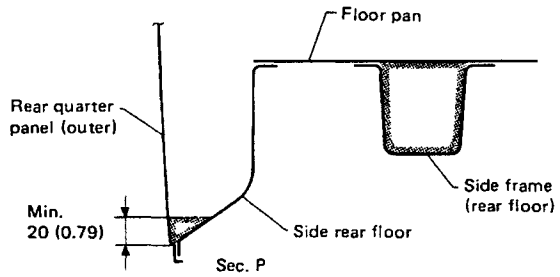 C5-524-19	Lower section of rear quarter panel	Over 20 microns (Dry condition)	—
20	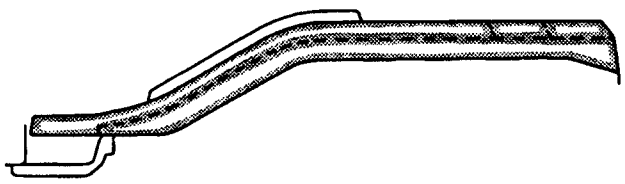 C5-524-20	Side frame (rear floor)	Over 20 microns (Dry condition)	—

Fig. 30

8. Rustproof Parts

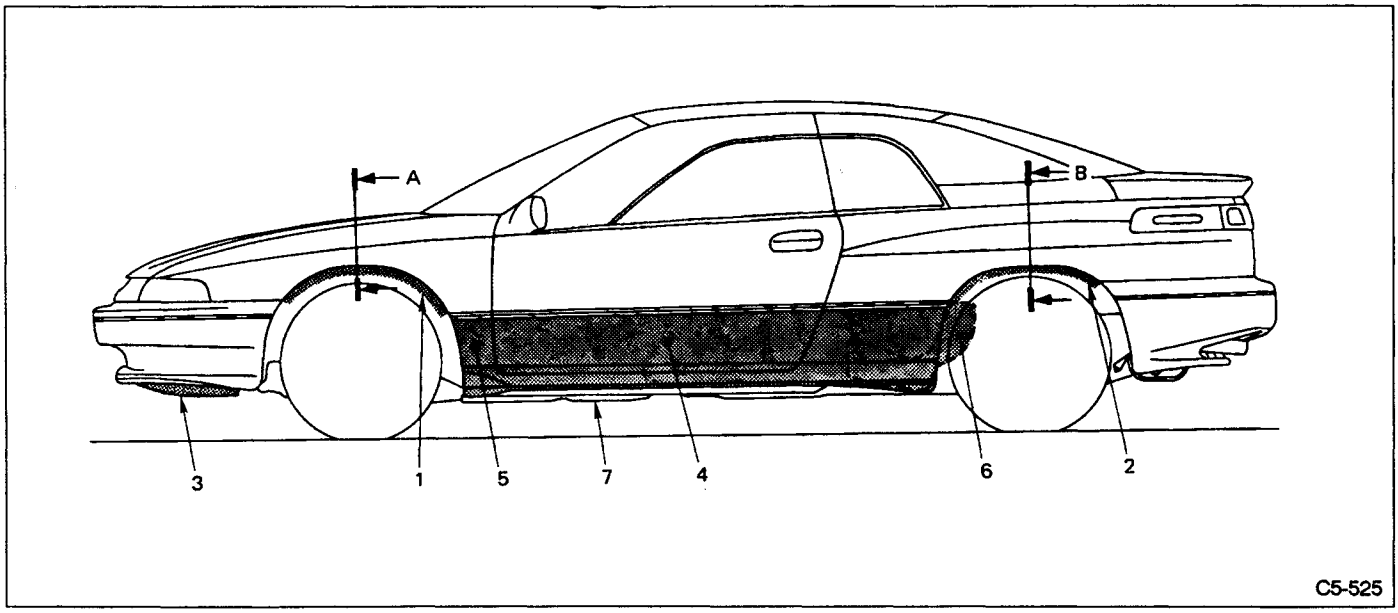

Fig. 31

No.	Applied section	Anti-rust material	Remarks
1	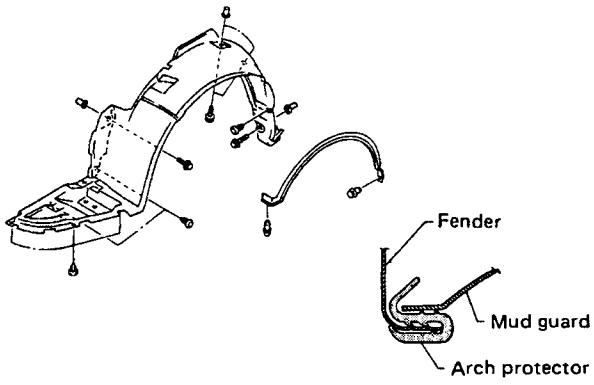	Rubber (arch protector) Polyethylene (mud guard)	—
2	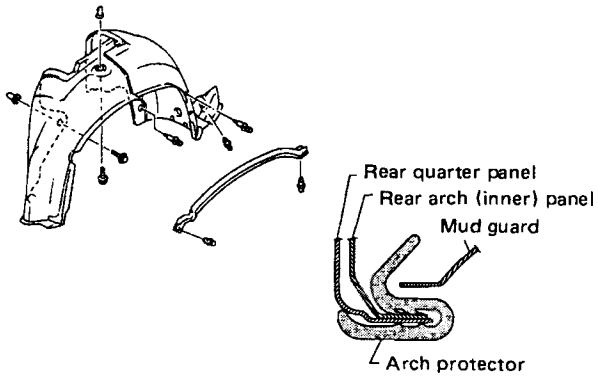	Rubber (arch protector) Polyethylene (mud guard)	—

No.	Applied section	Anti-rust material	Remarks
3	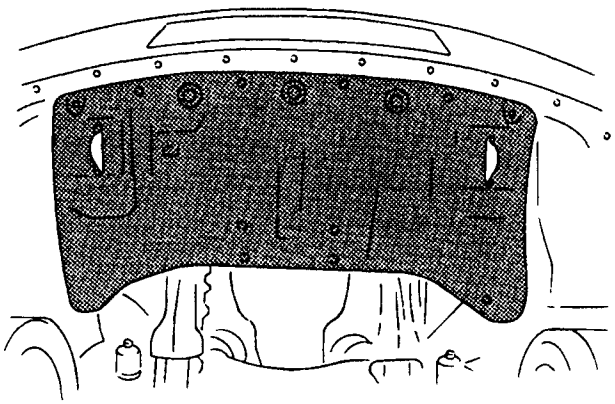 C5-526-3	Polyethylene with glass fiber	—
4	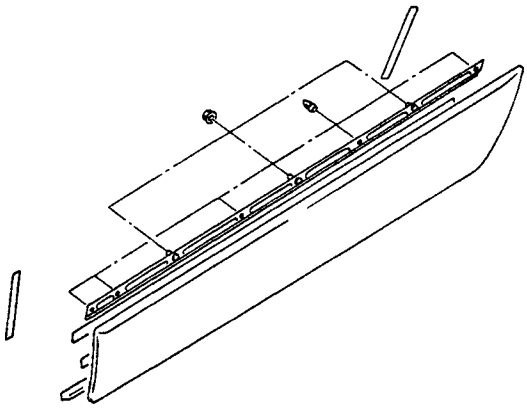 C5-526-4	Polypropylene	—
5	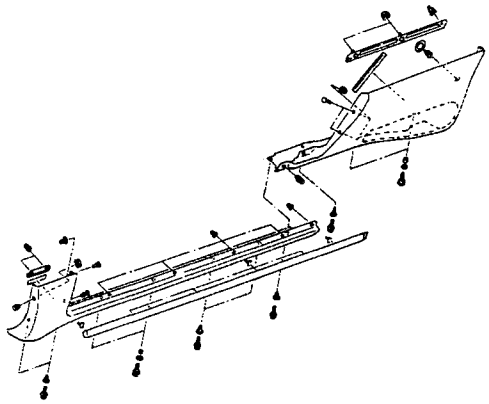 C5-526-5	Polypropylene	—

No.	Applied section	Anti-rust material	Remarks
6	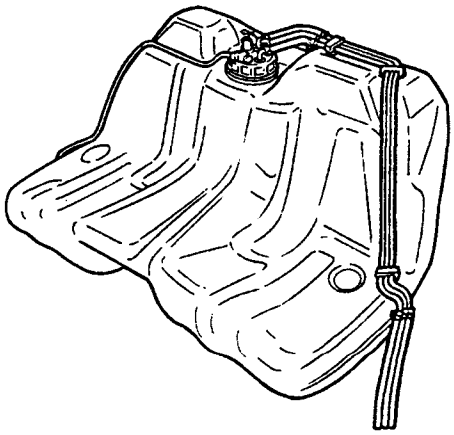 C5-526-6	Multi-layer plastic	—
7	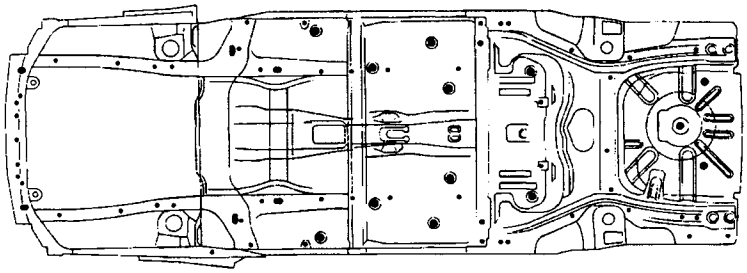 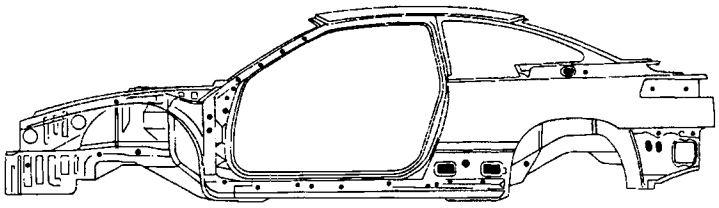 C5-526-7	Nylon (Plug) Polypropylene (Hot melting plug)	—

Fig. 32

9. Anti-rust Wax Application

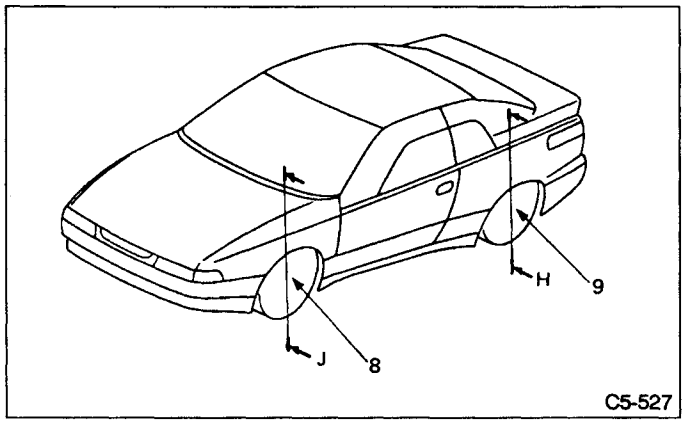

Fig. 33

Sections excluded from wax application:

- Brake disc rotors
- Wheels and tires
- Label affixed to the rear side of rear differential
  (A slight spray of wax mist is allowable)
- O_2 sensor
- Exhaust pipe and muffler
  (A slight spray of wax mist is allowable)
- Axle shaft and propeller shaft

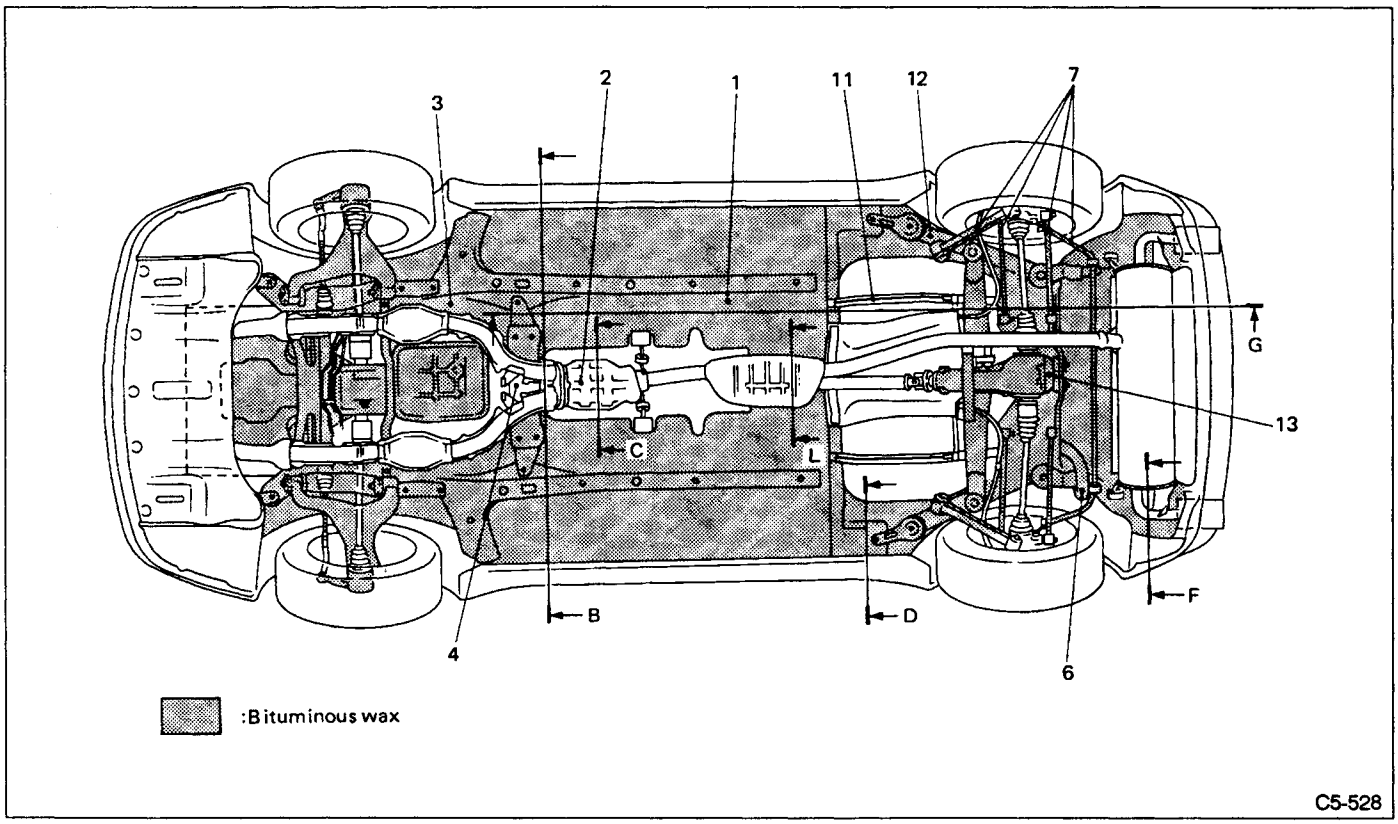

Fig. 34

Unit: mm (in)

No.	Applied section	Thickness	Remarks
1	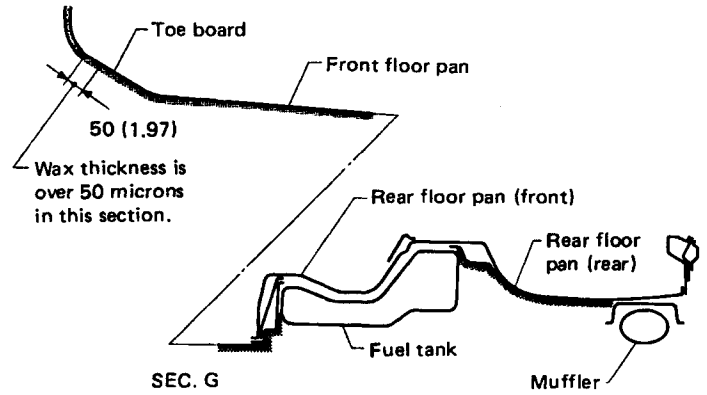 SEC. G C5-529-1	Over 300 microns (Dry condition)	—
2	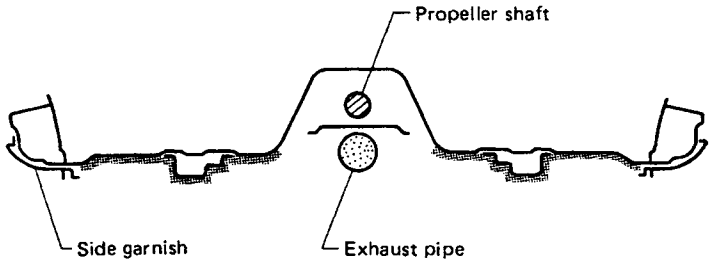 SEC. B 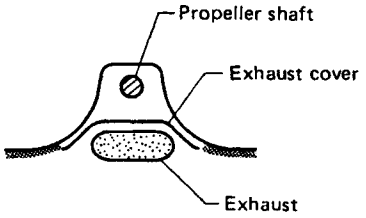 SEC. C 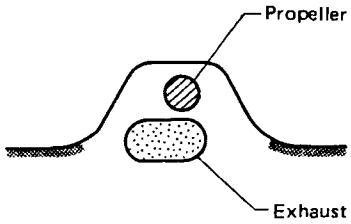 SEC. L C5-529-2	Over 300 microns (Dry condition)	Wax mist may settle onto exhaust pipe. Wax is not applied to the propeller shaft.

No.	Applied section	Thickness	Remarks
3	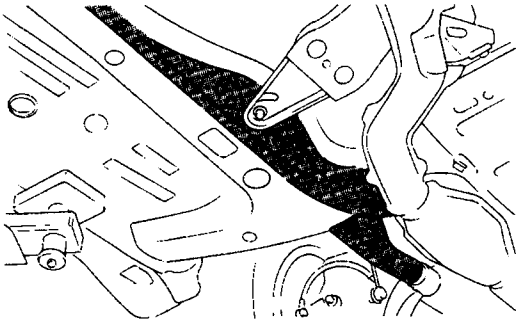 C5-529-3	Over 300 microns (Dry condition)	—
4	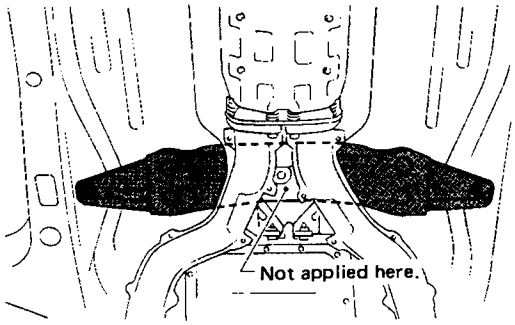 C5-529-4	Over 300 microns (Dry condition)	Do not apply wax to crossmember above exhaust pipes.
5	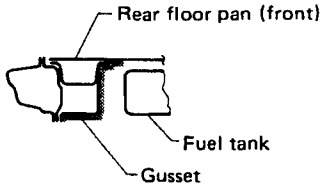 SEC. D 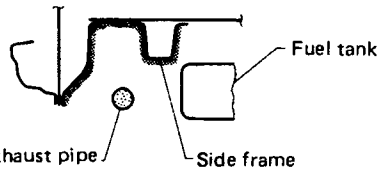 SEC. F C5-529-5	Over 300 microns (Dry condition)	—
6	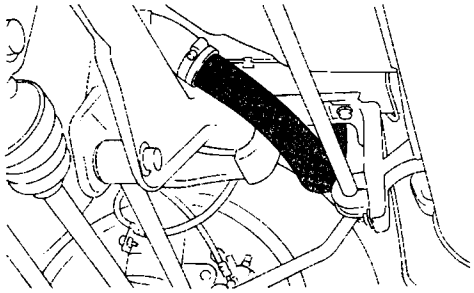 C5-529-6	Over 300 microns (Dry condition)	—

No.	Applied section	Thickness	Remarks
7	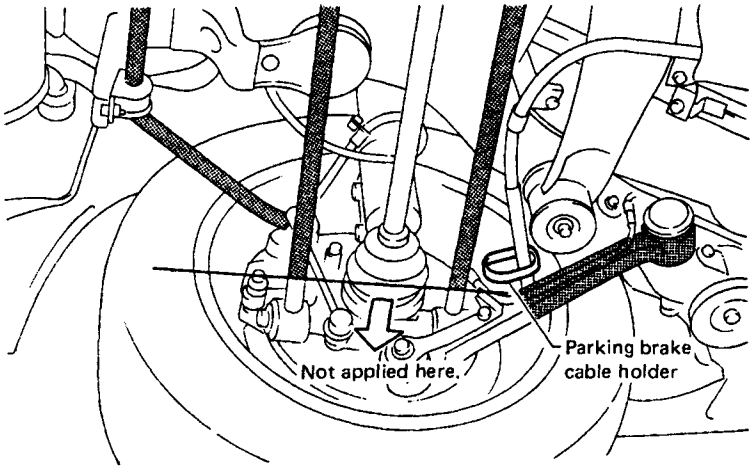 C5-529-7	Over 50 microns (Dry condition) Over 300 microns (Dry condition)	Wax is not applied to the components inside the tires because there is the possibility that wax mist may contaminate brake rotors and wheels.
8	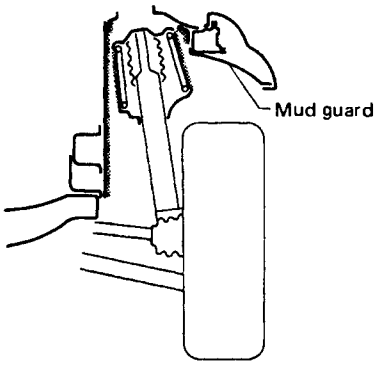 SEC. J 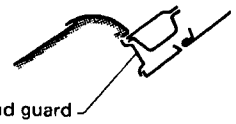 SEC. K C5-529-8	Over 150 microns (Dry condition) Over 50 microns (Dry condition)	—

No.	Applied section	Thickness	Remarks
9	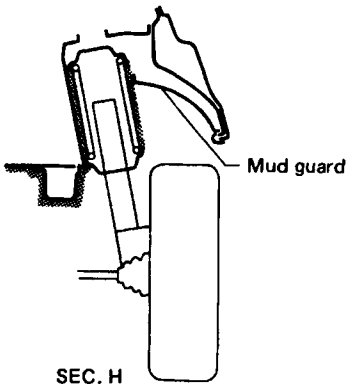 SEC. H C5-529-9	Over 150 microns (Dry condition) Over 50 microns (Dry condition)	—
10	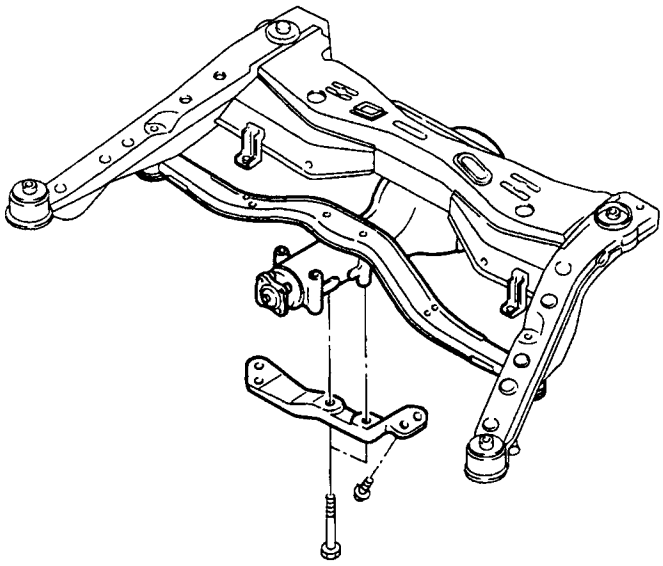 C5-529-10	Over 300 microns (Dry condition)	Apply masking to the entire filler and drain holes.
11	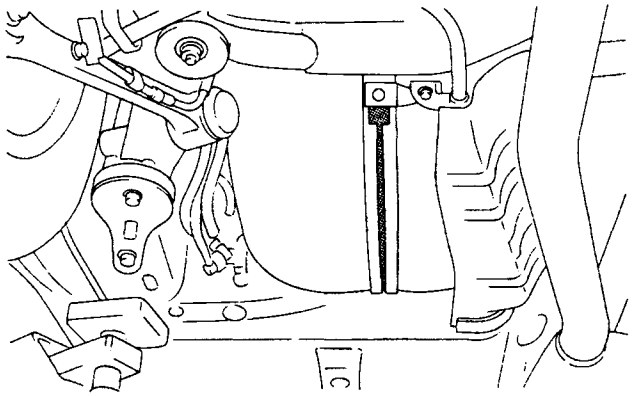 C5-529-11	Over 300 microns (Dry condition)	Apply wax to the metal portion of band.

No.	Applied section	Thickness	Remarks
12	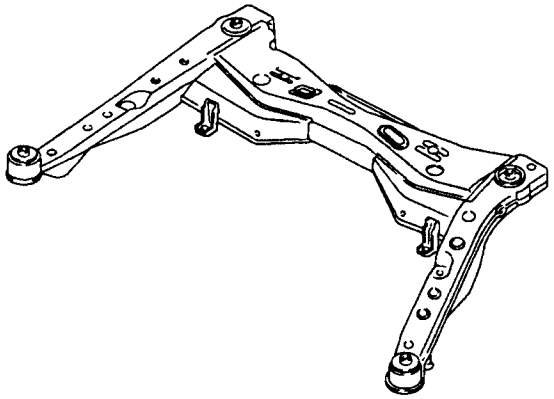 C5-529-12	Over 300 microns (Dry condition)	—
13	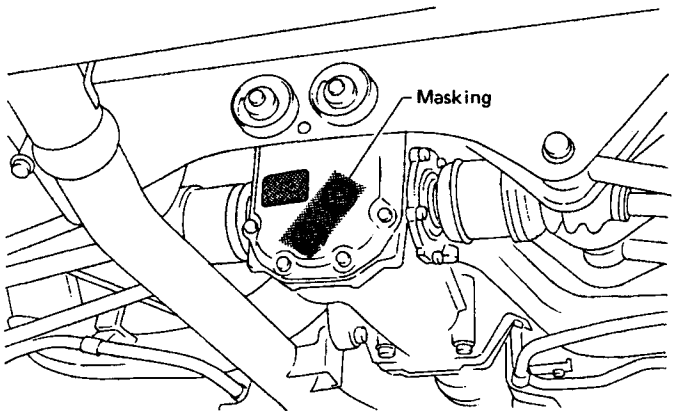 C5-529-13	—	Tape must be removed at pre-delivery inspection.

Fig. 35

8. Sunroof

The sunroof has two operating mechanisms. One raises the rear of the slide panel for ventilation and the other fully opens the panel.

The sunroof also has the following features:

- Use of the outer slide type provides the sunroof function despite the small size of the roof.
- The reduced thickness of the roof provides extra overhead clearance in the passenger compartment.
- Die-cast aluminum is used for roof components, thus reducing weight.
- Sheet metal components are copper-plated for rust-proofing.

Operation (Operating time)	When opened: Fully closed → tilted up → Pause after tilt-up → Slides to rear in tilted-up mode → Fully open (Fully closed → 0.5 — 1.5 sec → Pause after tilt-up → 5.0 — 6.0 sec → Fully open) When closed: Fully open → Slides to front in tilted-up mode → Pause with 150 mm (5.91 in) open → From tilt-up to tilt-down while sliding → Fully closed (Fully open → 2.5 — 3.5 sec → Pause with 150 mm (5.91 in) open → 3.0 — 4.0 sec → Fully closed)
Sliding length of sunroof panel	
Effective opening dimensions	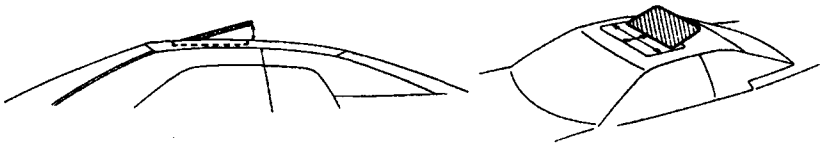
Amount of sunroof tilt	C5-530

Fig. 36

Tilt-up Mechanism

〈Operation〉

- The lower panel installed with the outer panel is secured to the lifter.
- When the "OPEN" switch is pressed, the slider is pulled back by the motor.
- The slider guide pin moves along the guide hole to tilt the rear of the lifter up.
- When the "OPEN" switch is pressed again, the slider is pulled back further. Since the slider guide pin is located at the rear end of the lifter guide hole, the lifter and slider move back as a unit to open the sunroof.

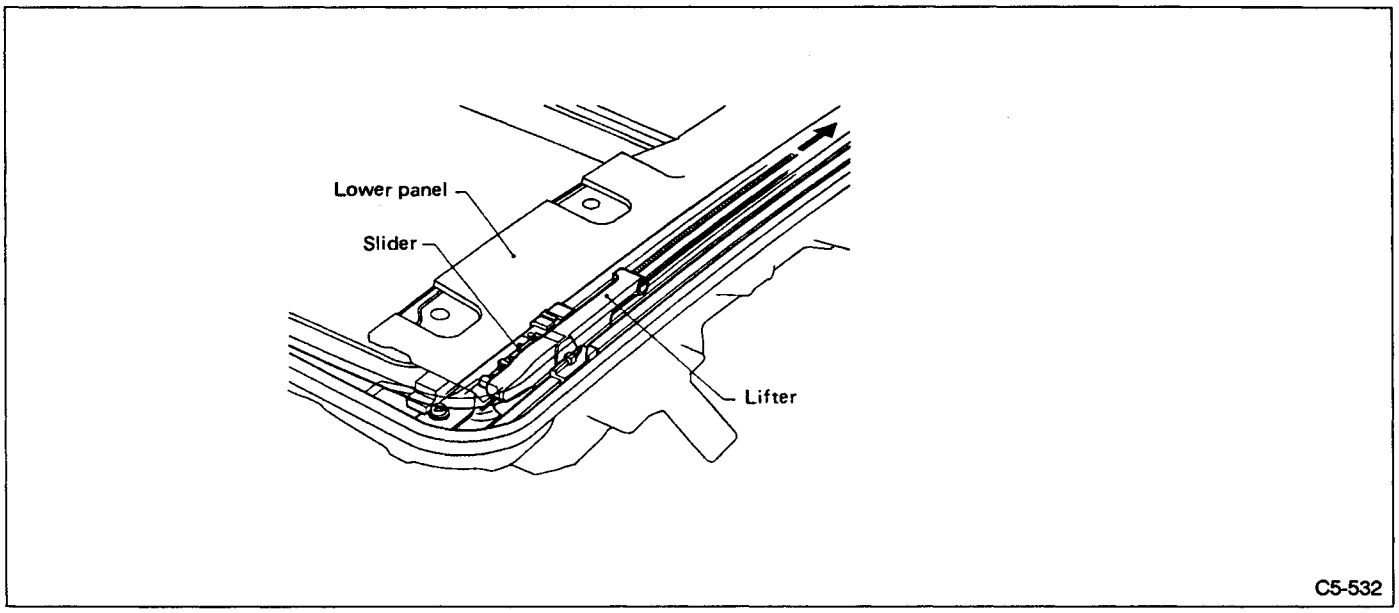

Fig. 37

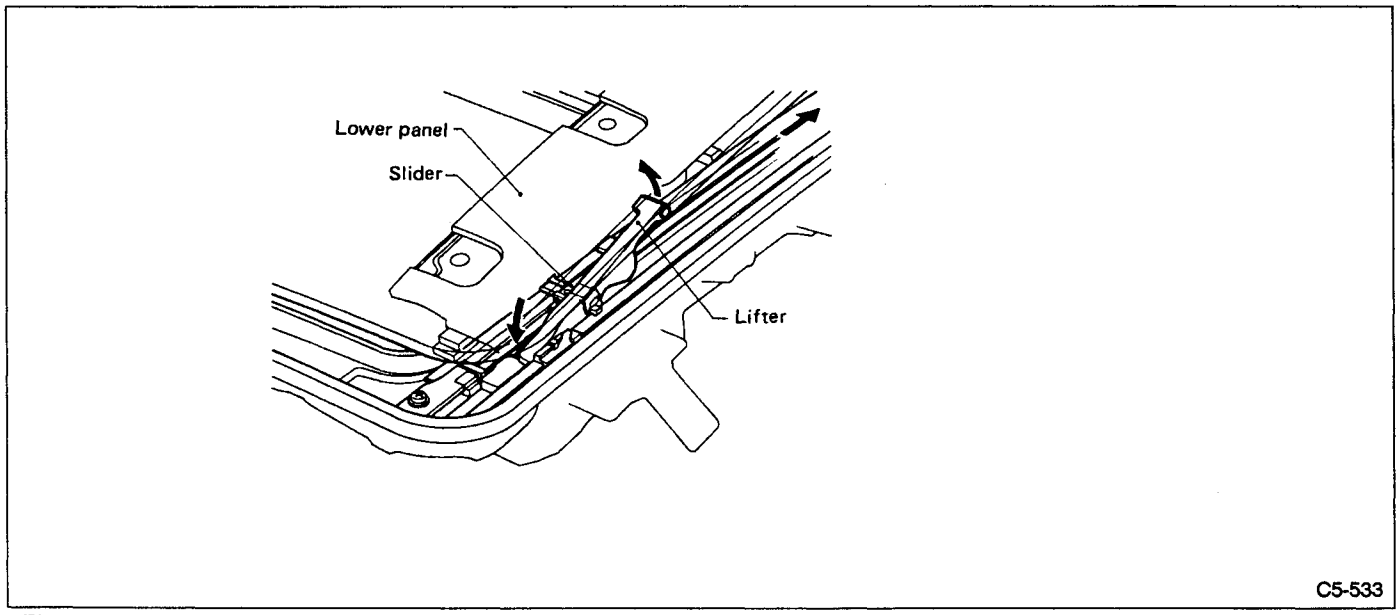

Fig. 38

Sunroof motor

〈Construction〉

The sunroof motor consists essentially of a motor, timing gear and limit switch. The timing gear is provided with a pinion gear cam mechanism, and the limit switch turns the relay on or off according to the tilt-up position of the slide panel.

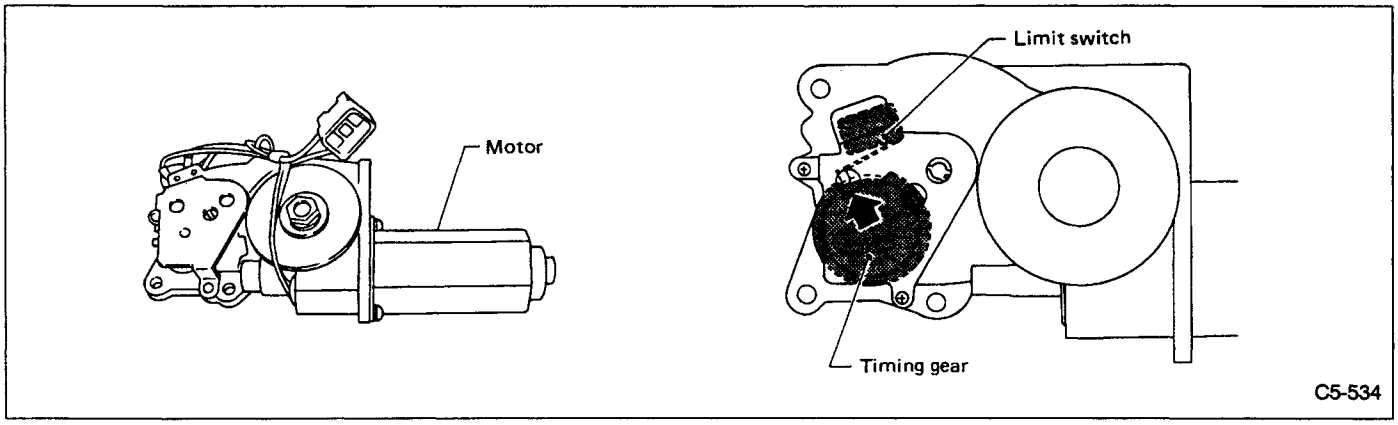

Fig. 39

Limit switch
This switch closes or opens according to the tilt-up position of the slide panel. It also activates when the slide panel reaches the 150 mm (5.91 in) open position.

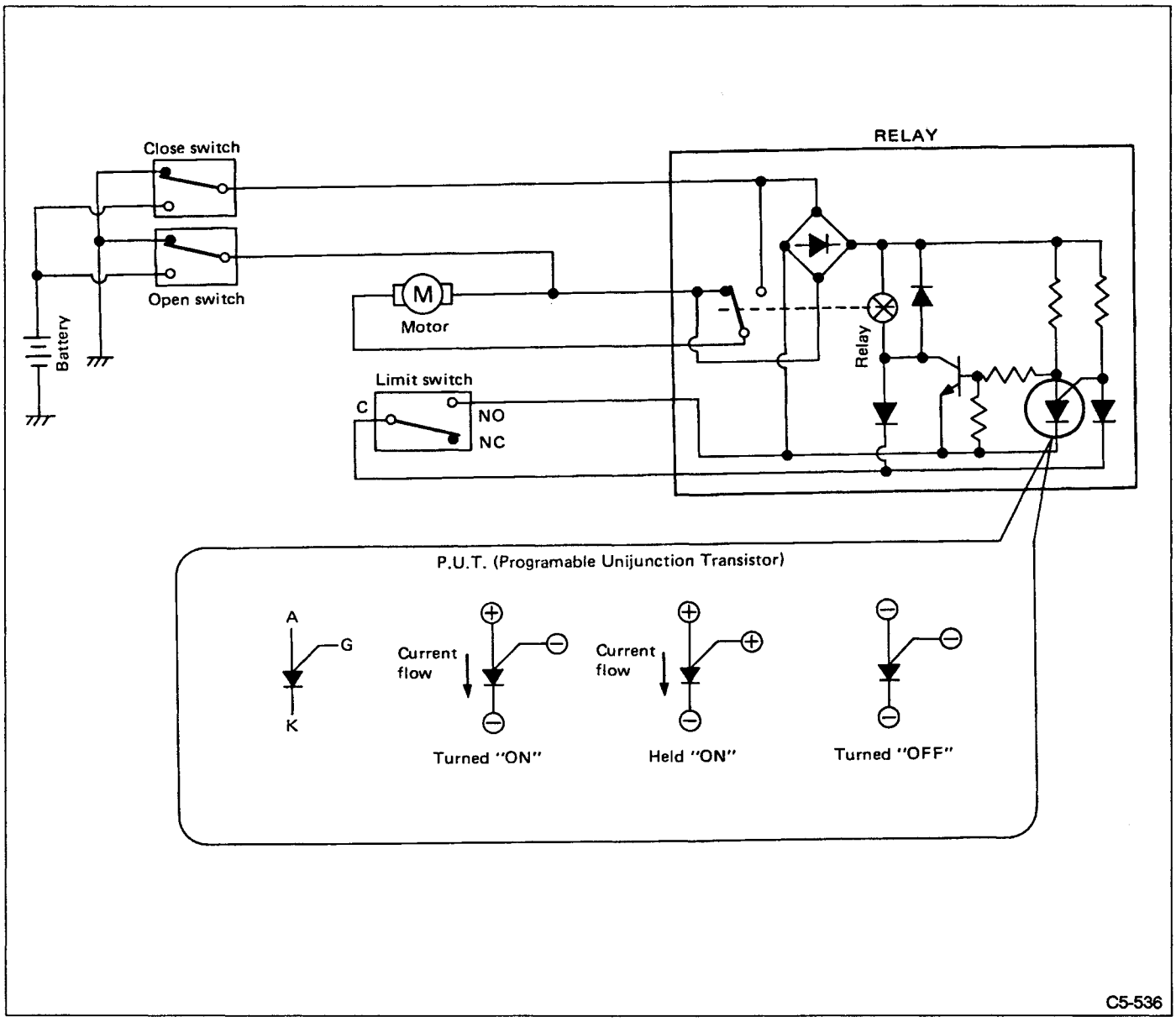

Fig. 40

System operation

The slide panel continuously opens while the "OPEN" switch is pressed, and stops at the specified tilt-up position. When the switch is released and pressed again, the slide panel continues to move to the fully open position.

The slide panel continuously closes while the "CLOSE" switch is pressed, and stops at approximately the 150 mm (5.91 in) open position. When the switch is released and pressed again, the slide panel continues to move to the fully closed position.

Open operation

When the "OPEN" switch is pressed, current flows to activate the transistor and relay so that the motor rotates in the direction that opens the slide panel. (The P.U.T. is held "OFF")

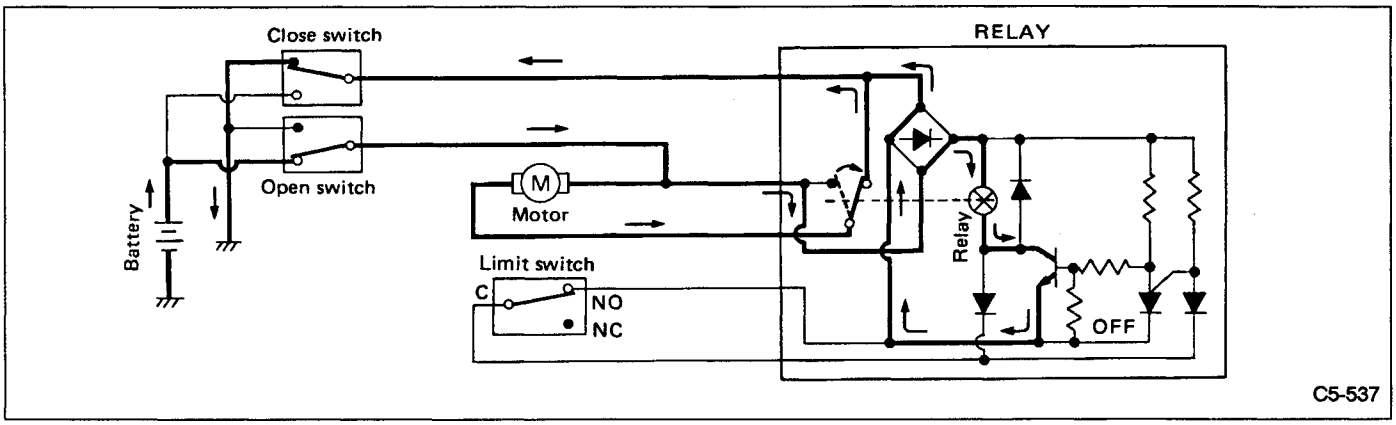

Fig. 41

The limit switch turns from "ON" to "OFF" so that the P.U.T. turns ON. This turns the transistor and relay off, and the motor will then stop.

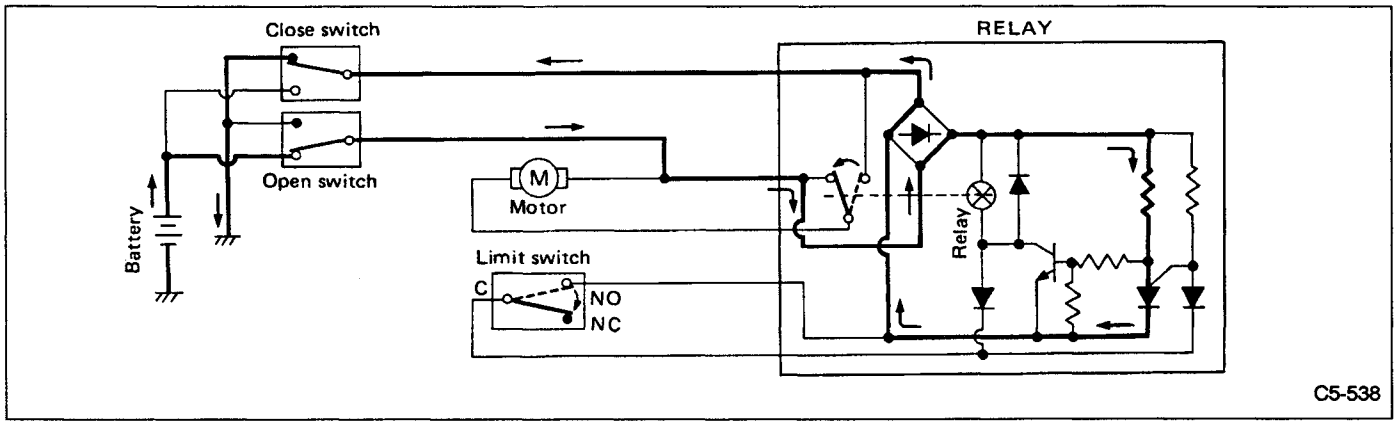

Fig. 42

When the "OPEN" switch is released, the P.U.T. turns OFF. The circuit is then held in a stand-by mode for ready operation.

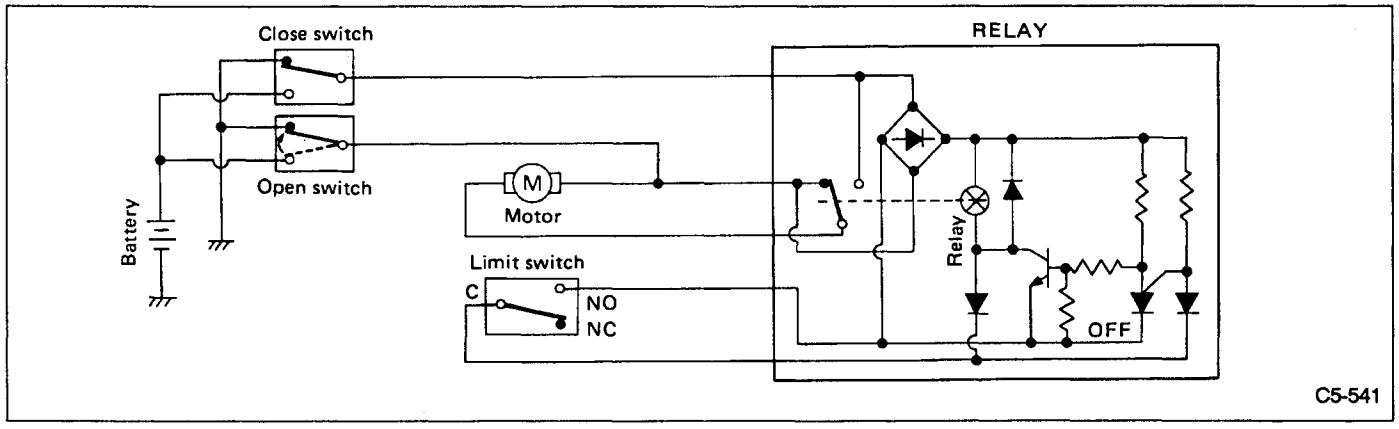

Fig. 43

When the "OPEN" switch is pressed again, the transistor and relay turn ON (the P.U.T. held OFF). The motor will then rotate in the direction that opens the slide panel fully.

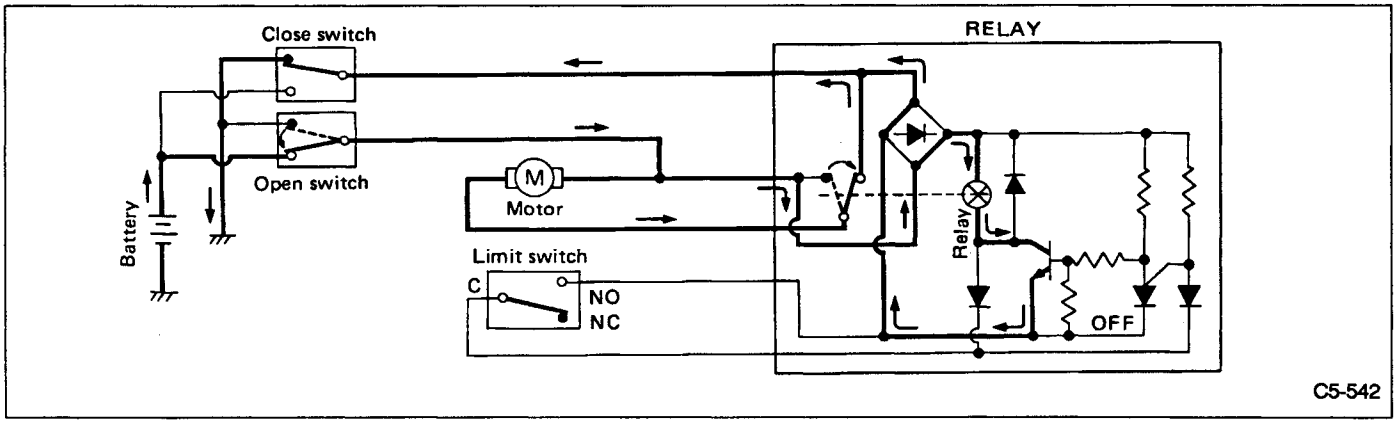

Fig. 44

Closed operation

When the "CLOSE" switch is pressed, current flows to turn the transistor and relay ON (the P.U.T. is held OFF), the motor rotates in the direction that closes the slide panel.

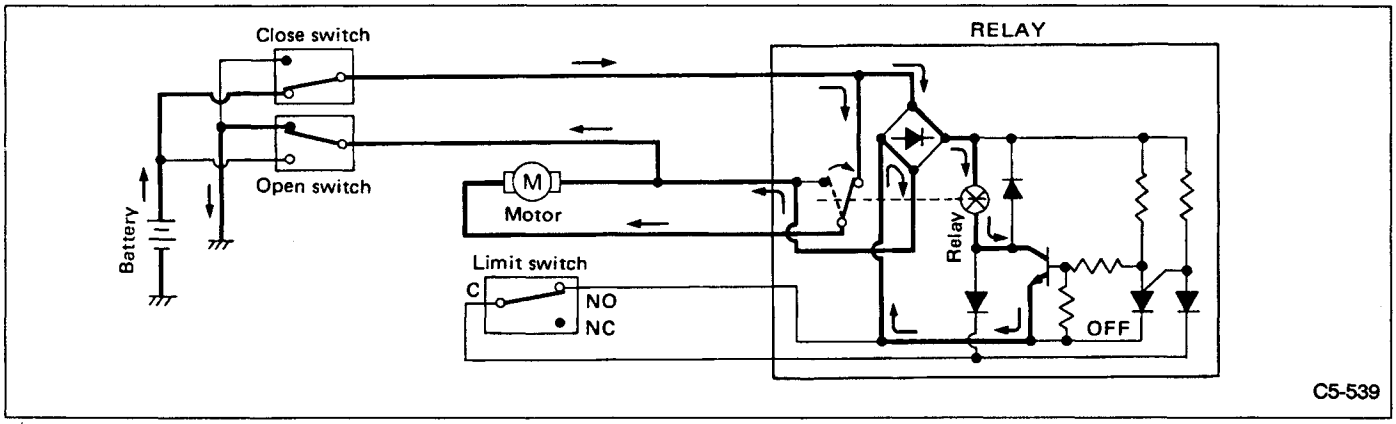

Fig. 45

The limit switch turns from ON to OFF, the P.U.T. turns ON), and the motor will stop.

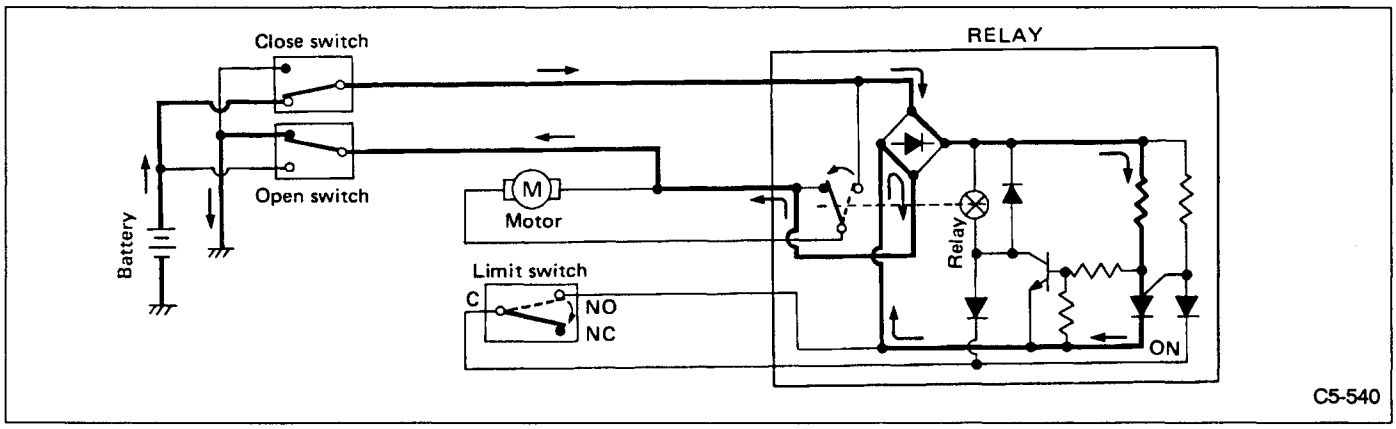

Fig. 46

When the "CLOSE" switch is released, the P.U.T. turns OFF, holding the circuit in a stand-by mode for ready operation.

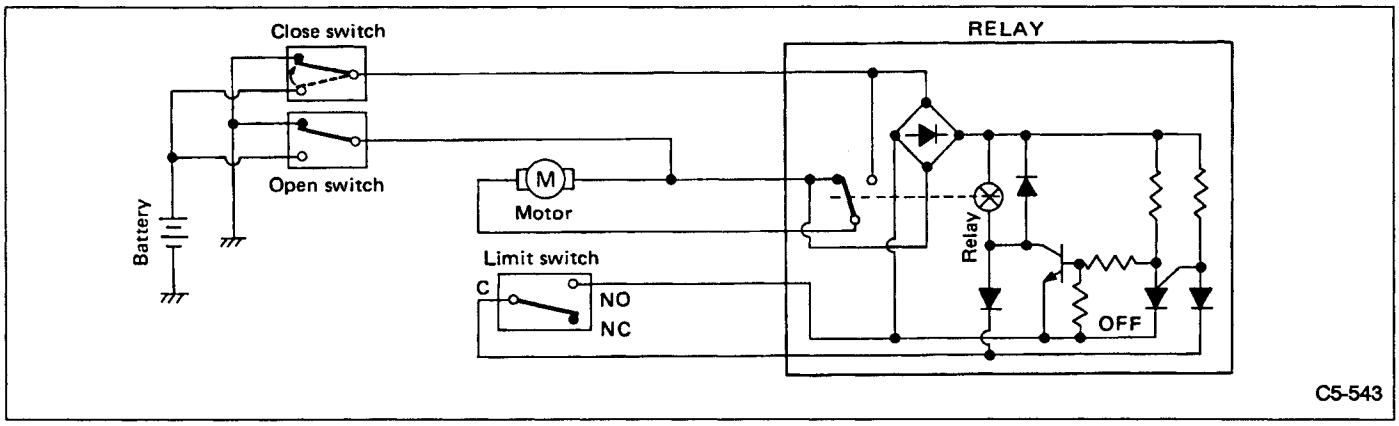

Fig. 47

When the "CLOSE" switch is pressed again, the transistor and relay turn ON. The motor will then rotate in the direction that closes the slide panel fully. (In this case, the slide panel does not stop at the tilt-up position.)

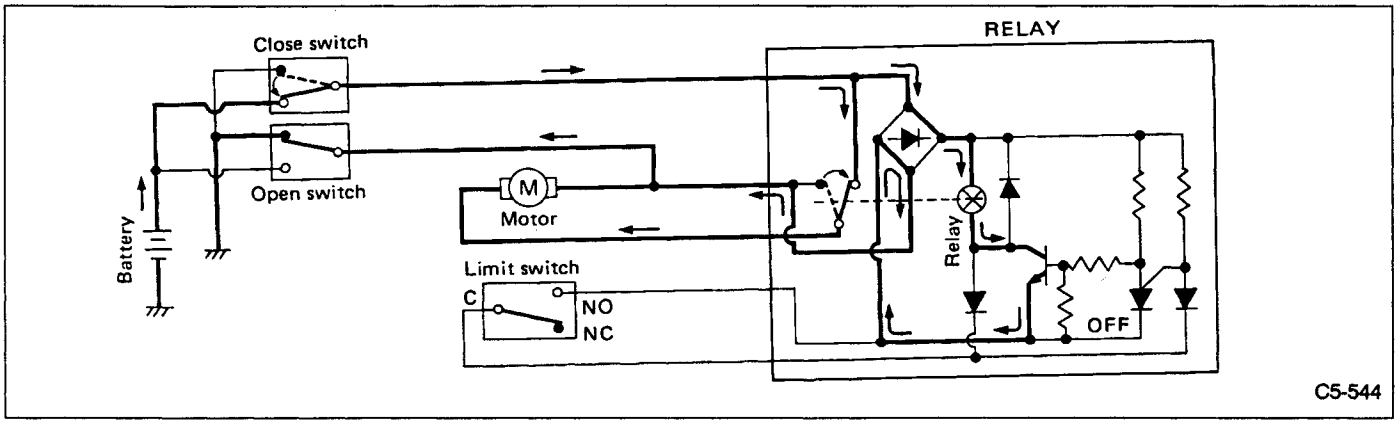

Fig. 48

Drain tube layout

The front drain tube is routed to the inner side of the front wheel arch through the front pillar. The rear drain tube is routed to the back of the rear bumper through the side rail and rear pillar.

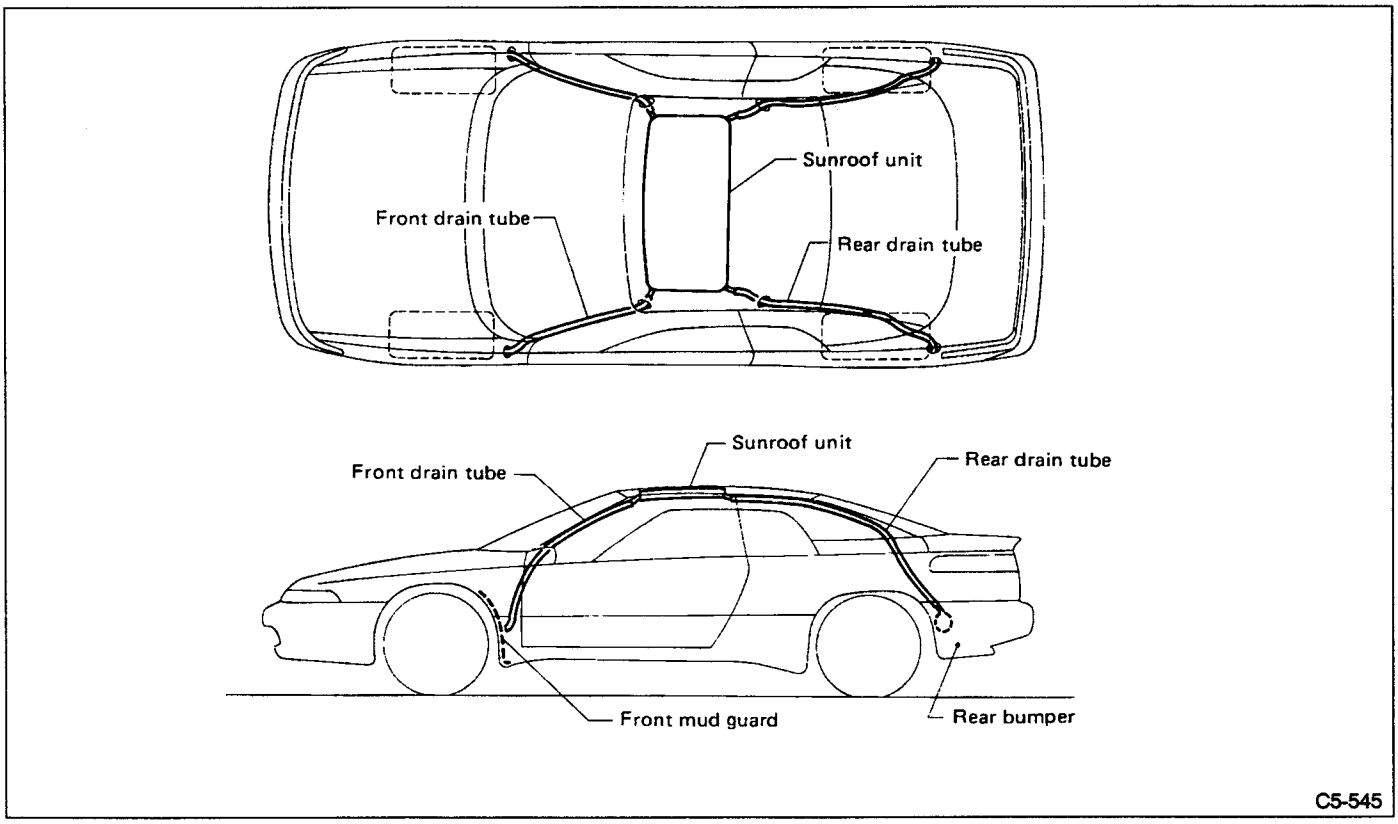

Fig. 49

9. Ventilation

Fresh air flows through the cowl panel into the passenger compartment via the air conditioning system.

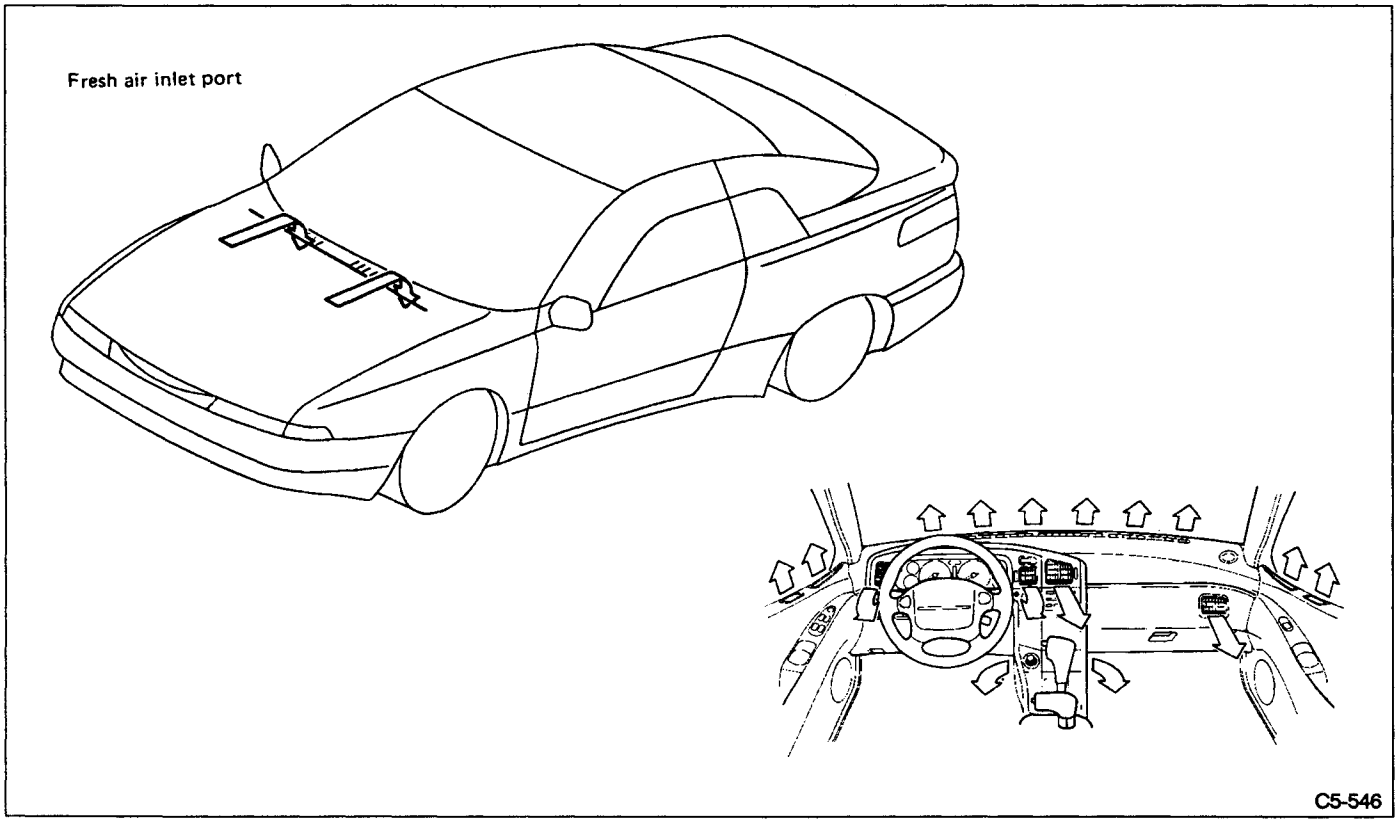

Fig. 50

Air outlet ports are located on the rear quarter panels near the back of the rear bumper where high vacuum pressure develops while driving.

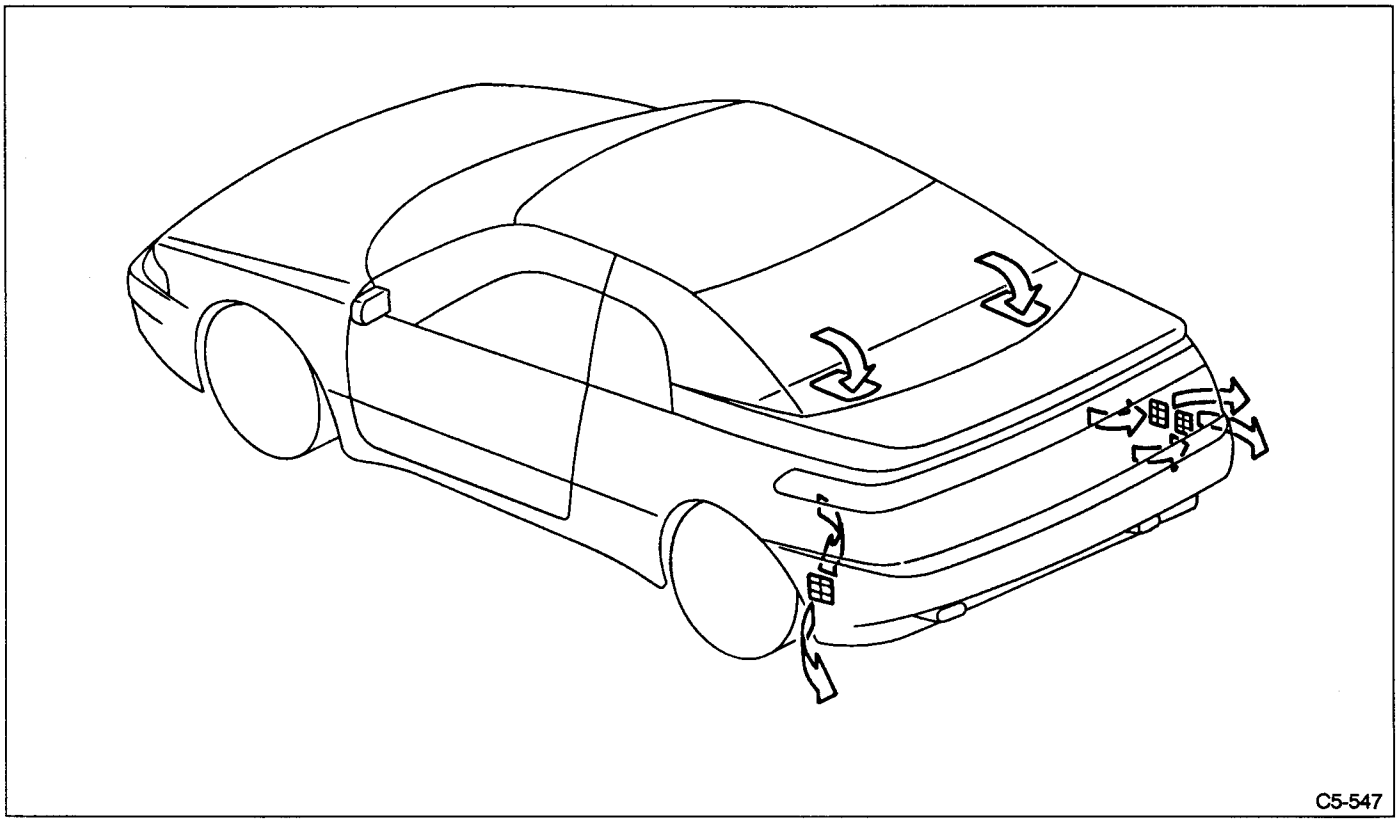

Fig. 51

S SERVICE DATA

1. Body Datum Points

Various master repair locations are established as datum points used during body repairs. In addition, guide holes, locators and indents are provided to facilitate panel replacement and achieve alignment accuracy.

Left and right datum points are all symmetrical to each other.

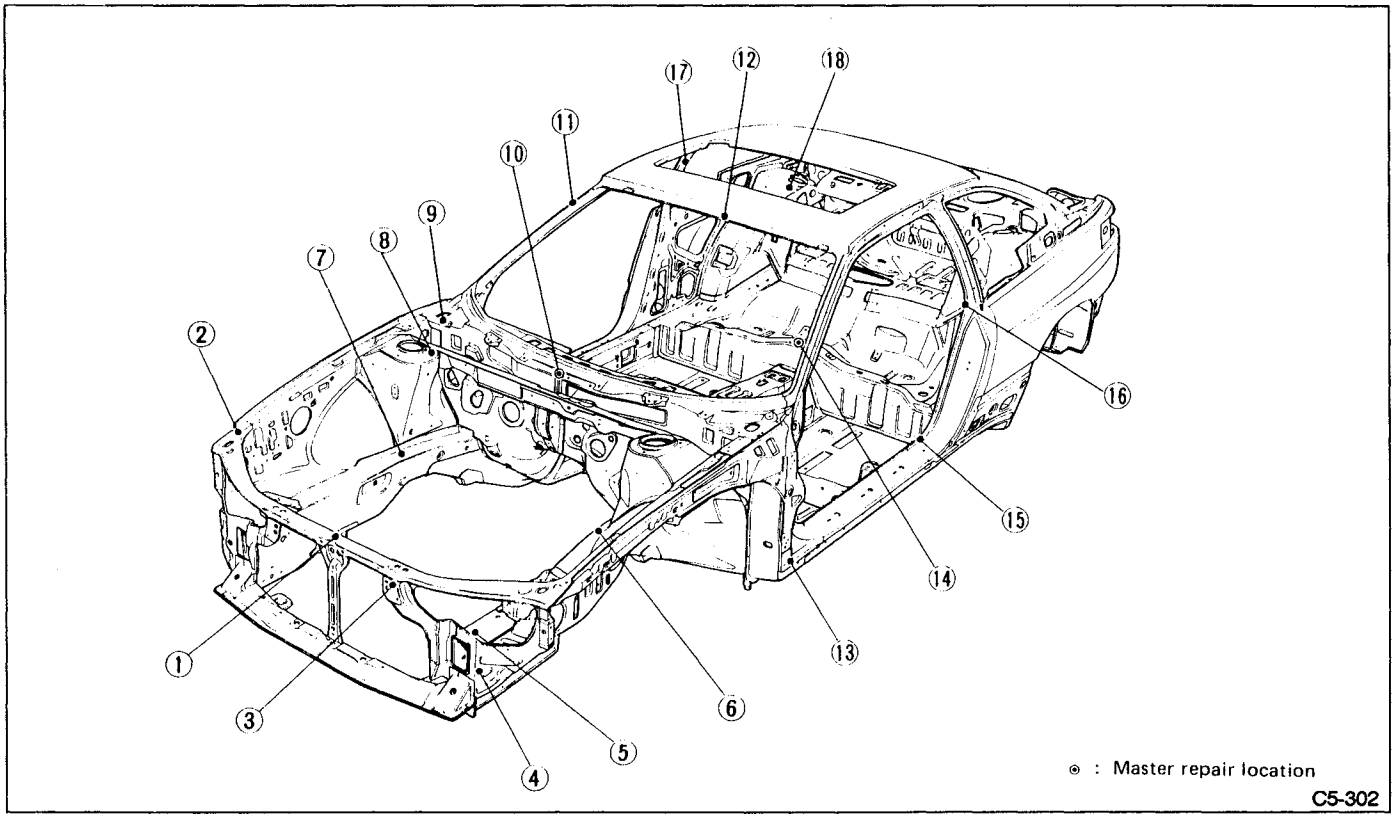

Fig. 52

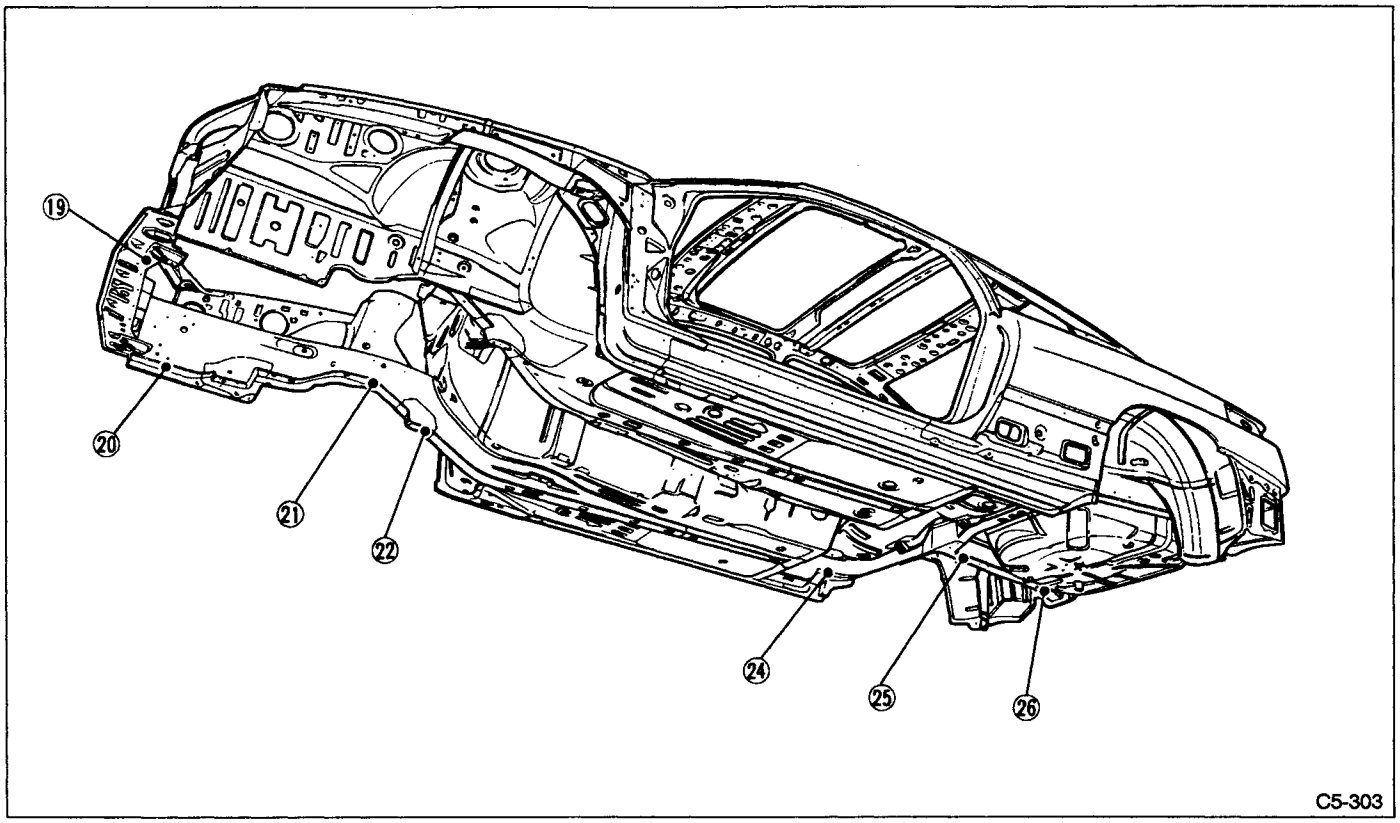

Fig. 53

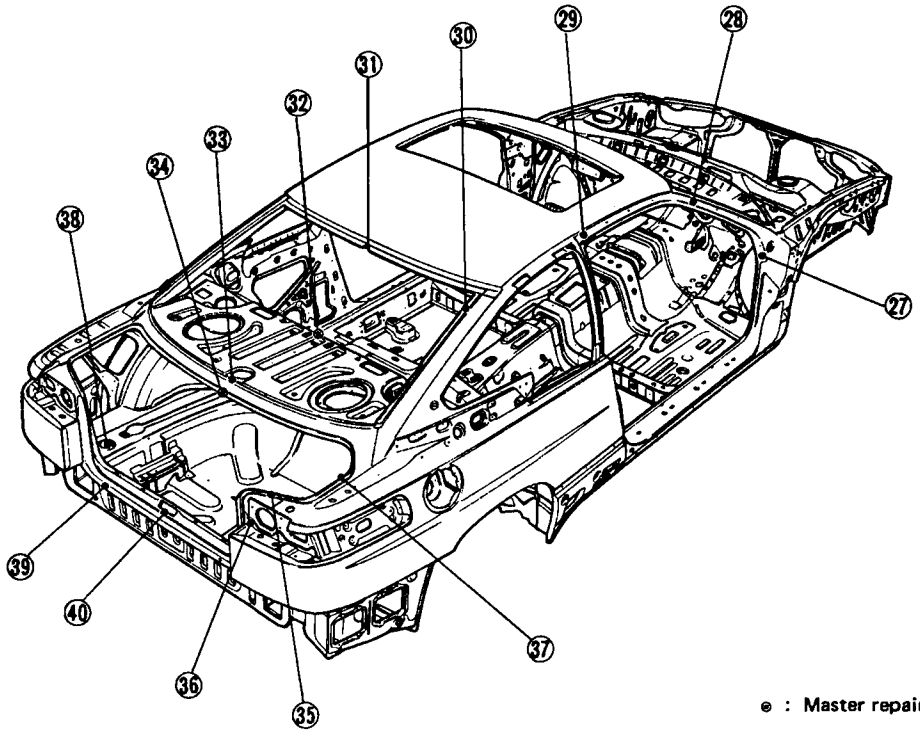

Fig. 54

① Radiator panel (UPR) repair location hole 5 mm (0.20 in) dia. (Located in center of vehicle)
② Fender attaching bolt hole M6 (Symmetrical)
③ Head light attaching bolt hole M6 (Symmetrical)
④ Radiator panel side gauge hole 20 mm (0.79 in) dia. (Symmetrical)
⑤ Front bumper mounting hole
Right side 13 x 16 mm (0.51 x 0.63 in) dia.
Left side 13 mm (0.51 in) dia.
⑥ Fuse box attaching bolt hole M6
⑦ Air cleaner attaching bolt hole M8
⑧ Front strut mounting hole 11.5 mm (0.453 in) dia. (Symmetrical)
⑨ Hood hinge attaching bolt hole M6 (Symmetrical)
⑩ Cowl panel mounting hole 8 mm (0.31 in) dia. (Located in center of vehicle)
⑪ Front pillar (outer) repair locater (Symmetrical)
⑫ Roof panel repair locater (Located in center of vehicle)
⑬ Fender attaching bolt hole M6 (Symmetrical)
⑭ Floor mat mounting hole 8 mm (0.31 in) dia. (Located in center of vehicle)
⑮ Rear quarter panel (outer) cutout portion (Symmetrical)
⑯ Rear quarter panel (outer) repair locater (Symmetrical)
⑰ Wiring harness attaching clip hole 7 mm (0.28 in) dia. (Symmetrical)
⑱ Rear strut mounting hole 10 mm (0.39 in) dia. (Symmetrical)
⑲ Frame (radiator panel LWR) gauge hole 20 mm (0.79 in) dia. (Symmetrical)
⑳ Front side frame gauge hole 20 mm (0.79 in) dia. (Symmetrical)
㉑ Front side frame gauge hole 20 mm (0.79 in) dia. (Symmetrical)
㉒ Bracket (front suspension rear) gauge hole 10 mm (0.39 in) dia. (Symmetrical)
㉓ Rear side frame gauge hole 20 mm (0.79 in) dia. (Symmetrical)
㉔ Sub frame attaching bolt hole M12 (Symmetrical)
㉕ Sub frame attaching bolt hole M12 (Symmetrical)
㉖ Side frame (rear floor) gauge hole 30 mm (1.18 in) dia. (Symmetrical)
㉗ Weatherstrip attaching clip hole 5.2 mm (0.205 in) dia. (Symmetrical)
㉘ Retainer attaching bolt hole M6 (Symmetrical)
㉙ Retainer attaching bolt hole M6 (Symmetrical)
㉚ Rear quarter panel (outer) repair locater (Symmetrical)
㉛ Roof panel repair locater (Located in center of vehicle)
㉜ Rear shelf trim attaching clip hole 8 mm (0.31 in) dia. (Located in center of vehicle)
㉝ Rear shelf air bleeder hole 5 mm (0.20 in) dia. (Located in center of vehicle)
㉞ Reinforcement (rear panel) repair locater (Located in center of vehicle)
㉟ Rear quarter panel (outer) flange graded portion (Symmetrical)

㊱ Rear combination light mounting hole 10 mm (0.39 in) dia. (Symmetrical)
㊲ Rear quarter panel (outer) flange graded portion (Symmetrical)
㊳ Rear bumper mounting hole 45 mm (1.77 in) dia. (Symmetrical)
㊴ Rear skirt frame gauge hole 15 mm (0.59 in) dia. (Symmetrical)
㊵ Reinforcement (Striker) gauge hole 6 mm (0.24 in) dia. (Symmetrical)

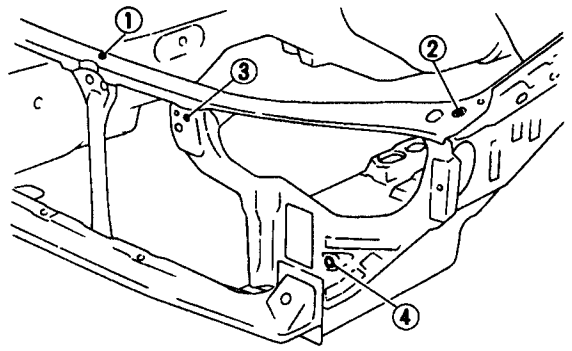

C5-305

Fig. 55

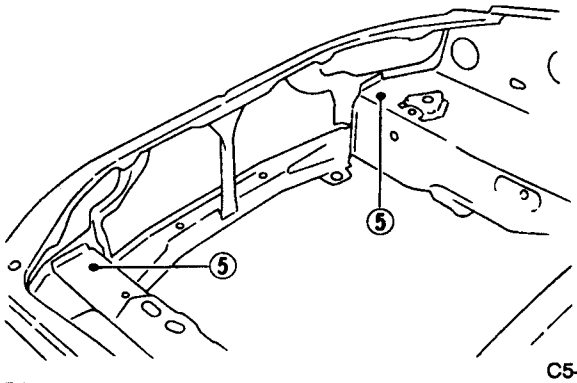

C5-306

Fig. 56

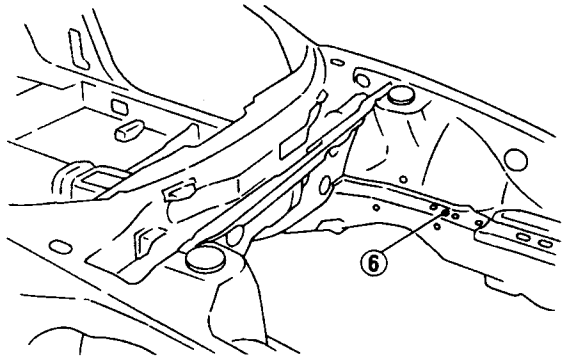

C5-307

Fig. 57

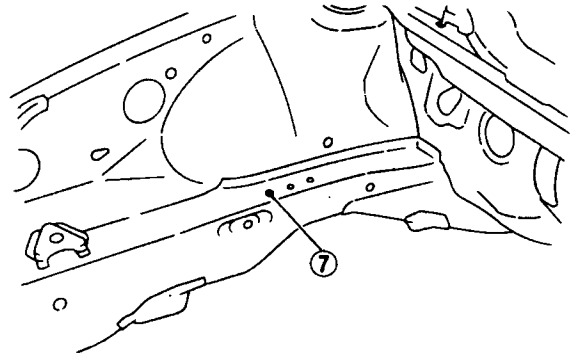

C5-308

Fig. 58

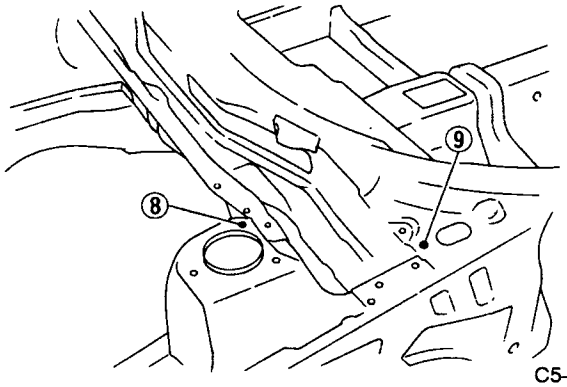

C5-309

Fig. 59

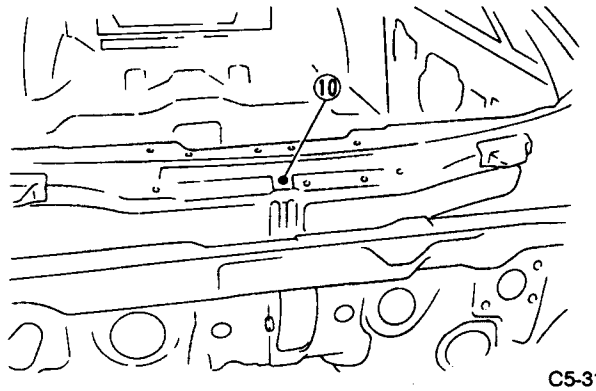

C5-310

Fig. 60

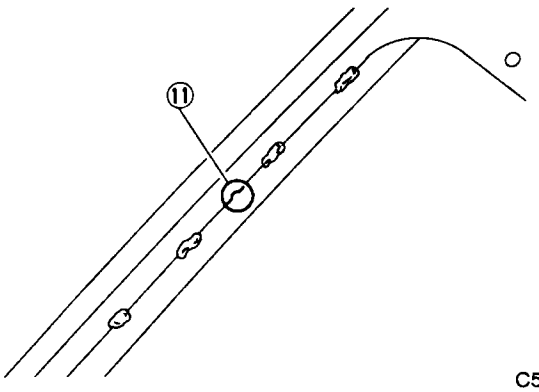

C5-311

Fig. 61

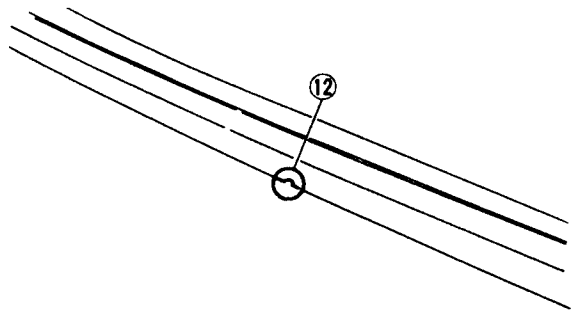

C5-312

Fig. 62

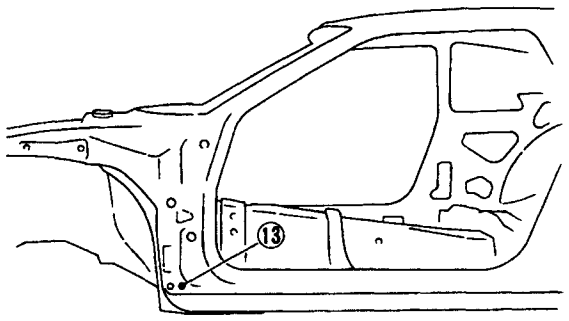

C5-313

Fig. 63

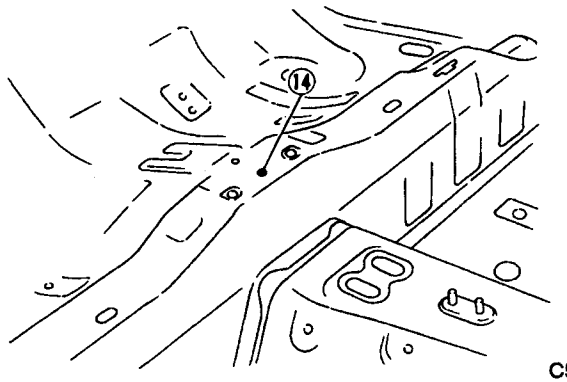

C5-314

Fig. 64

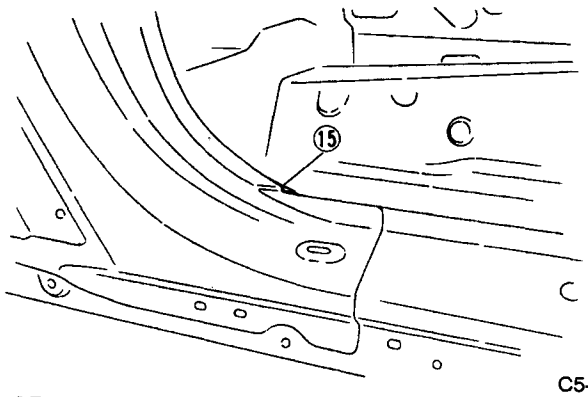

C5-315

Fig. 65

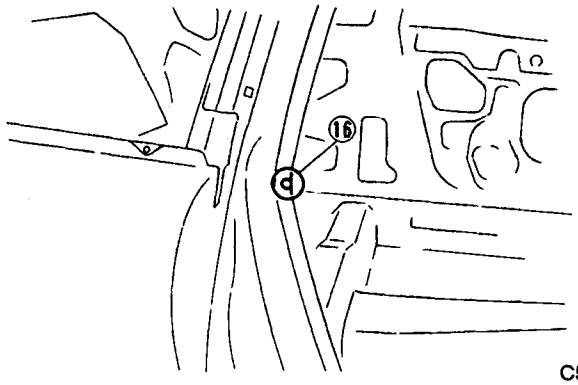

C5-316

Fig. 66

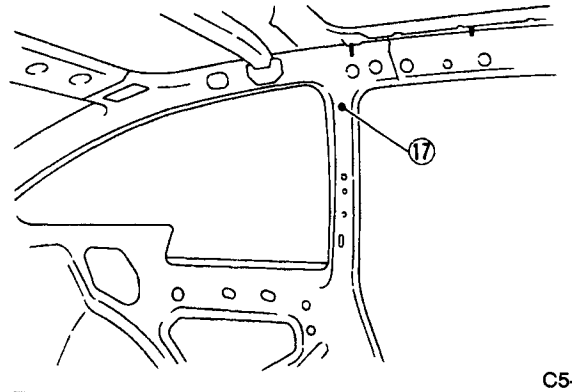

C5-317

Fig. 67

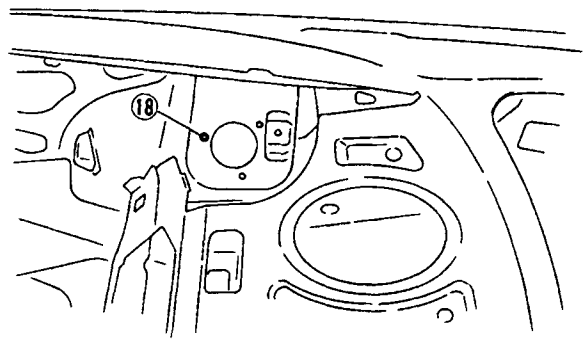

C5-318

Fig. 68

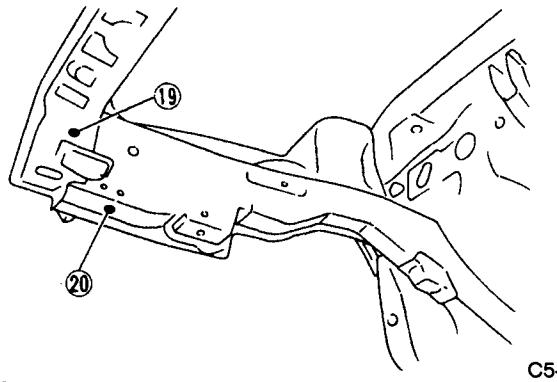

C5-319

Fig. 69

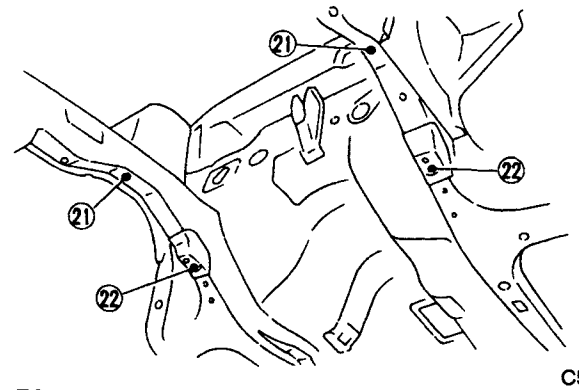

C5-320

Fig. 70

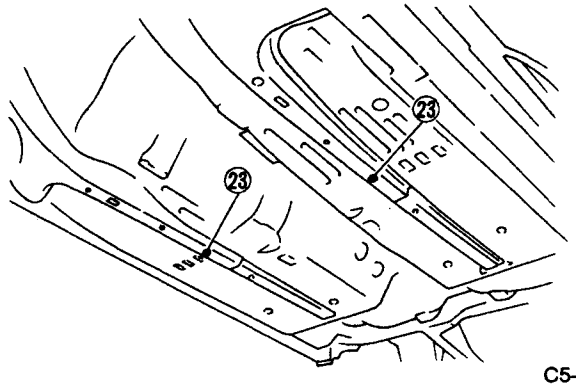

C5-321

Fig. 71

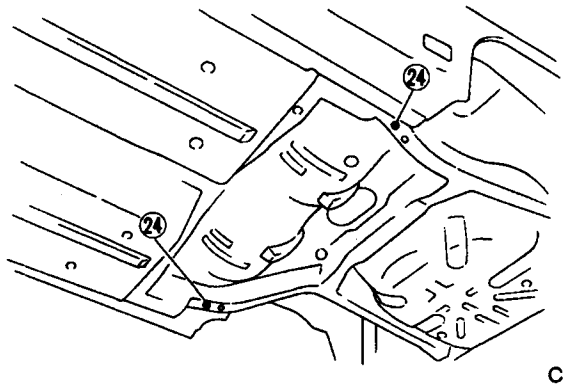

C5-322

Fig. 72

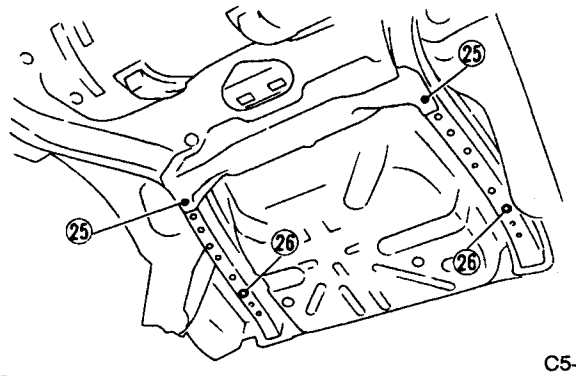

C5-323

Fig. 73

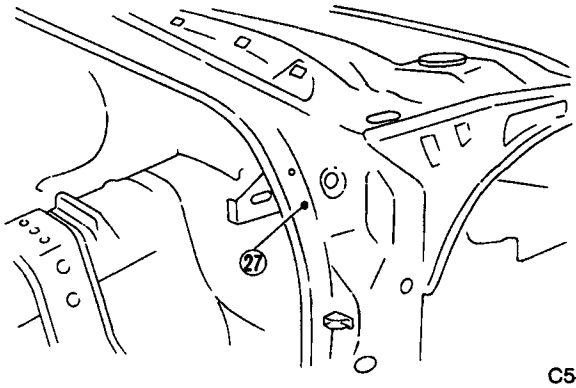

C5-324

Fig. 74

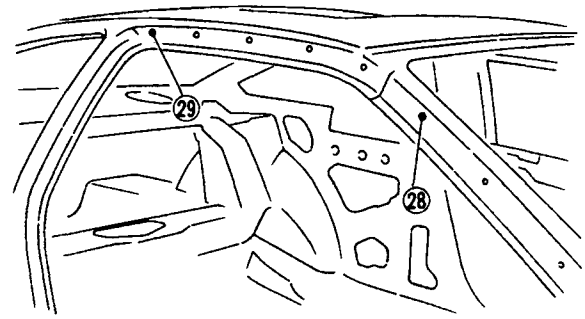

C5-325

Fig. 75

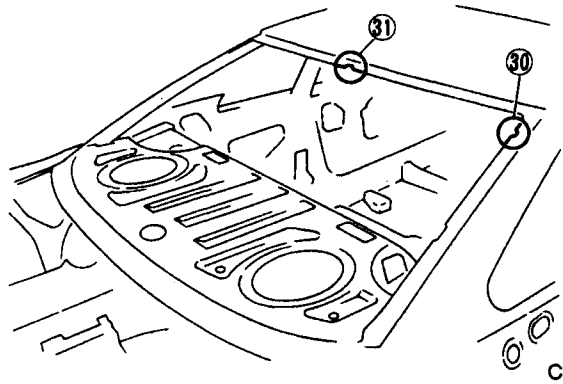

C5-326

Fig. 76

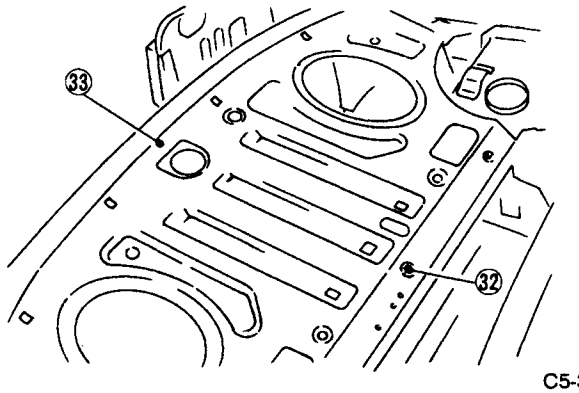

C5-327

Fig. 77

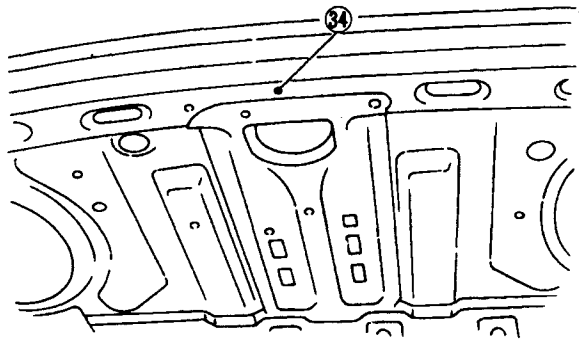

C5-328

Fig. 78

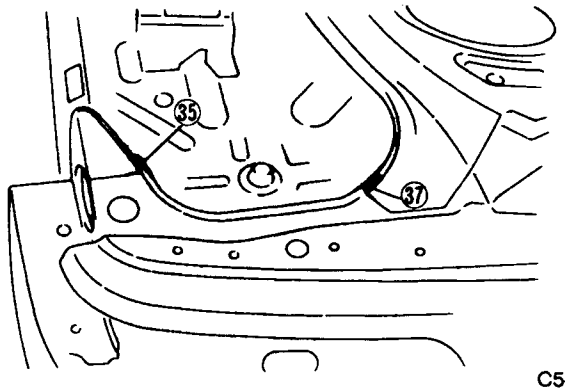

C5-329

Fig. 79

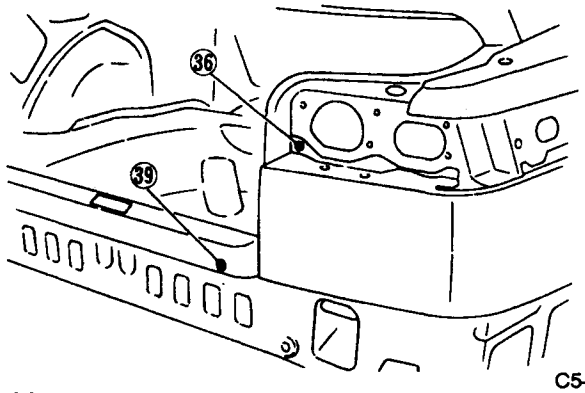

C5-337

Fig. 80

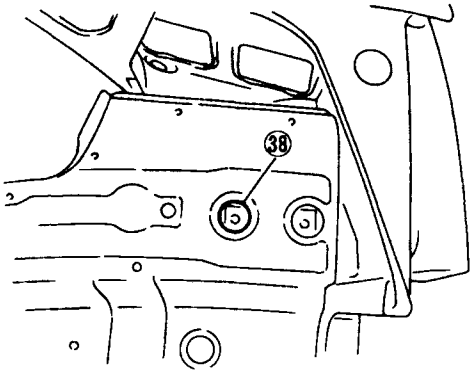

C5-338

Fig. 81

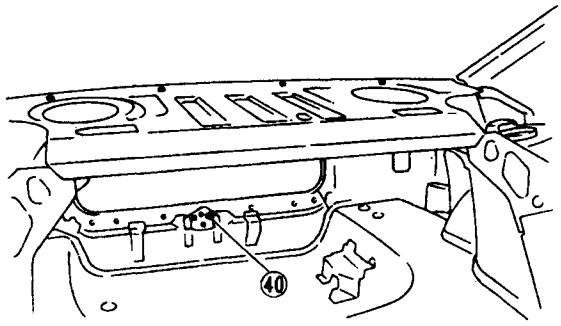

C5-339

Fig. 82

2. Datum Dimensions

Use a tram tracking gauge to measure all dimensions. If a measuring tape is used, be extremely careful because it tends to deflect or twist, which results in a false reading.

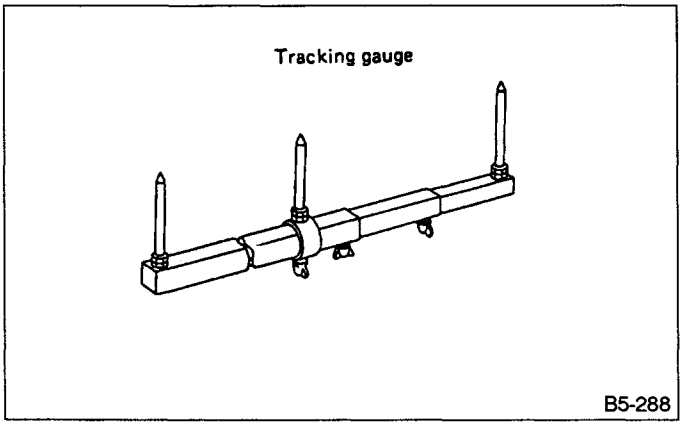

B5-288

Fig. 83

1. FRONT STRUCTURE

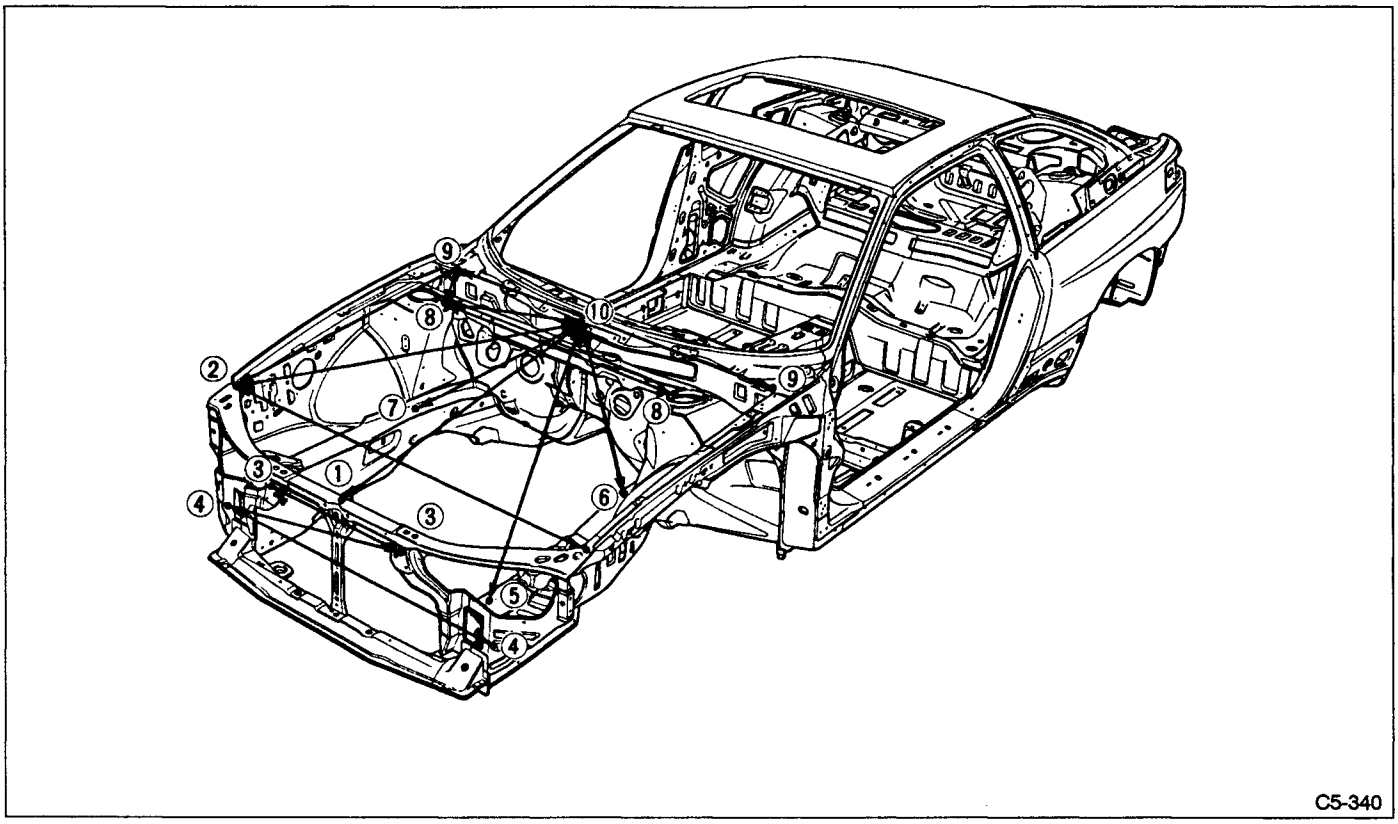

Fig. 84

Unit: mm (in)

③R	—	③L	: 510 (20.08)	⑩	—	⑥	: 790 (31.10)
④R	—	④L	: 1,066 (41.97)	⑩	—	⑦	: 696 (27.40)
③R ③L	— —	④L ④R	: 352 (13.86)	⑩ ⑩	— —	⑧L ⑧R	: 490 (19.29)
②R	—	②L	: 1,354 (53.31)	⑧R ⑧L	— —	⑨R ⑨L	: 295 (11.61)
⑧R	—	⑧L	: 946 (37.24)				
⑨R	—	⑨L	: 1,338 (52.68)				
⑩	—	①	: 1,048 (41.26)	②R ②L	— —	⑨R ⑨L	: 968 (38.11)
⑩ ⑩	— —	②L ②R	: 1,109 (43.66)				
⑩	—	⑤	: 1,120 (44.09)				

A suffix character "R" or "L" refers to the right or the left.

All dimensions refer to the distance between the centers of holes measured in a straight line.

2. CENTER STRUCTURE

a. Each dimension indicates a projected dimension between hole centers.
b. All dimensions refer to the distance between the center of holes.

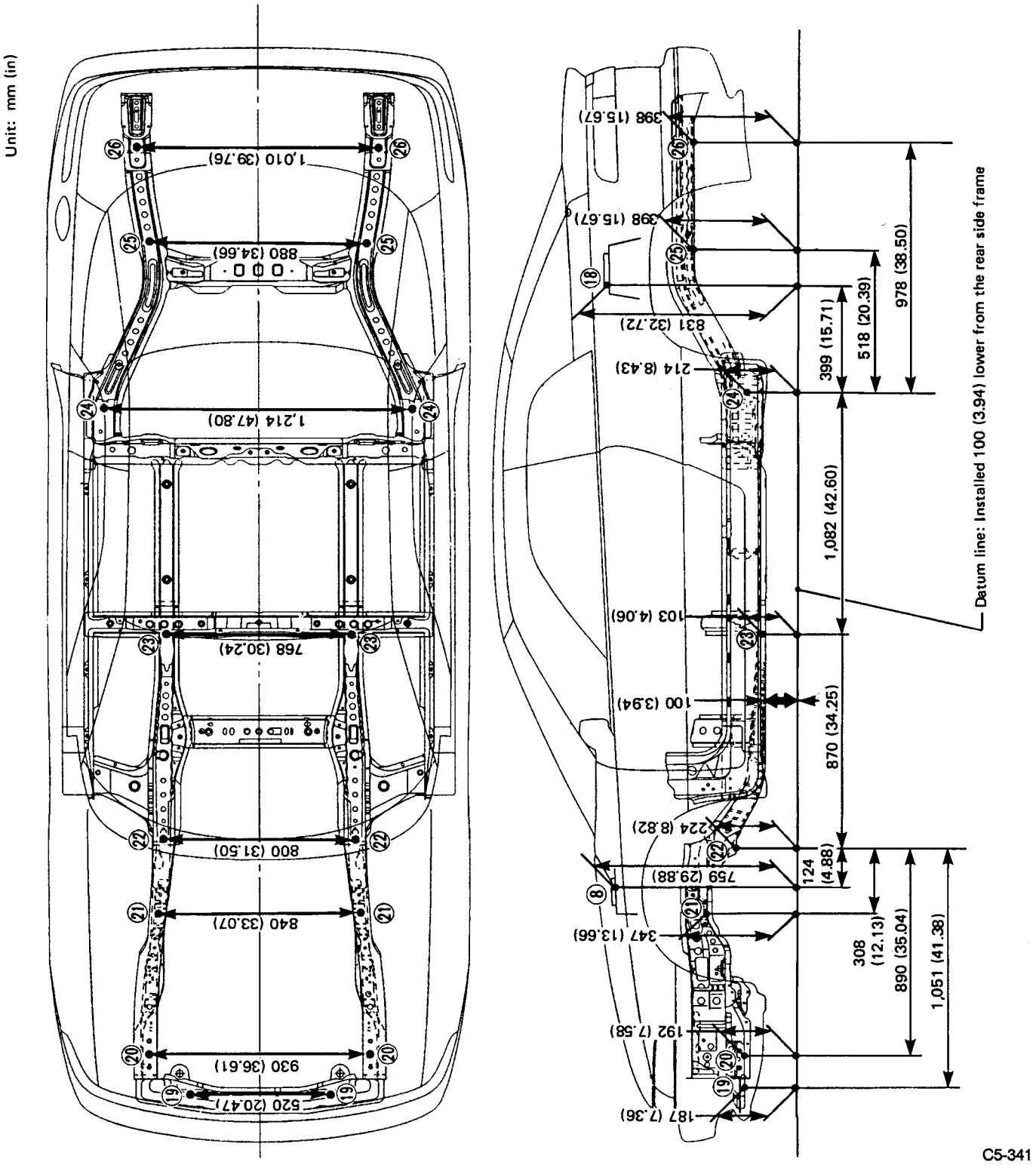

Fig. 85

All dimensions refer to the distance between the centers of holes when measured in a straight line.

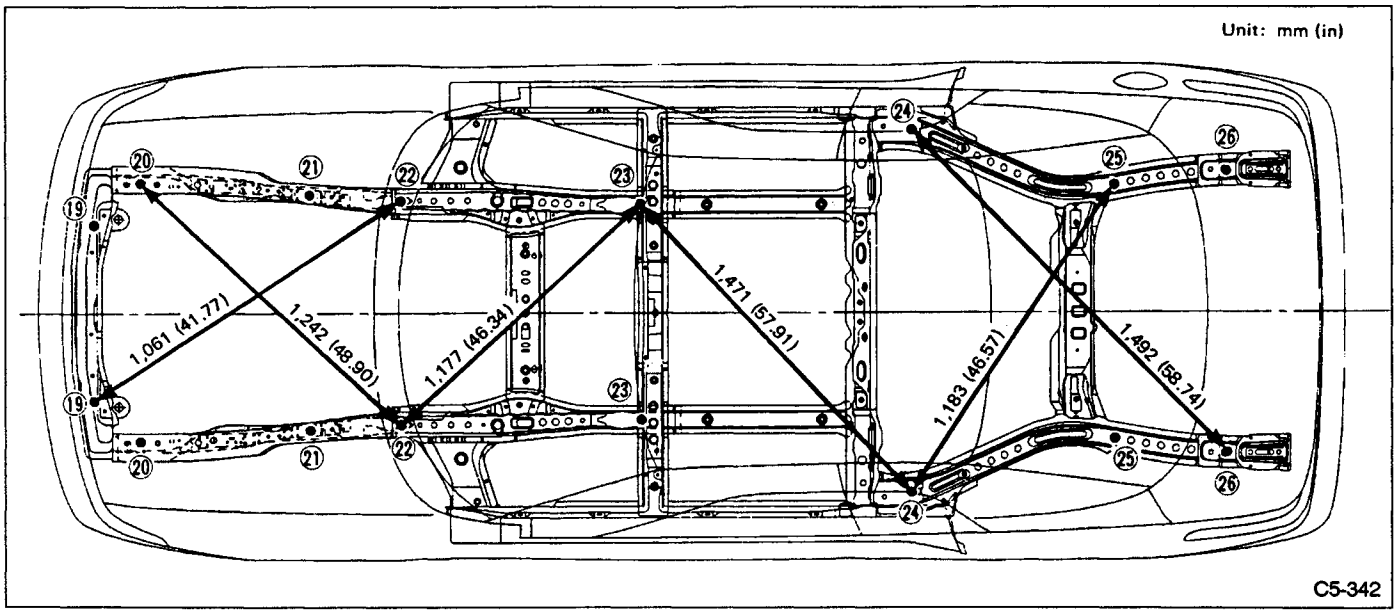

Fig. 86

3. DOORS

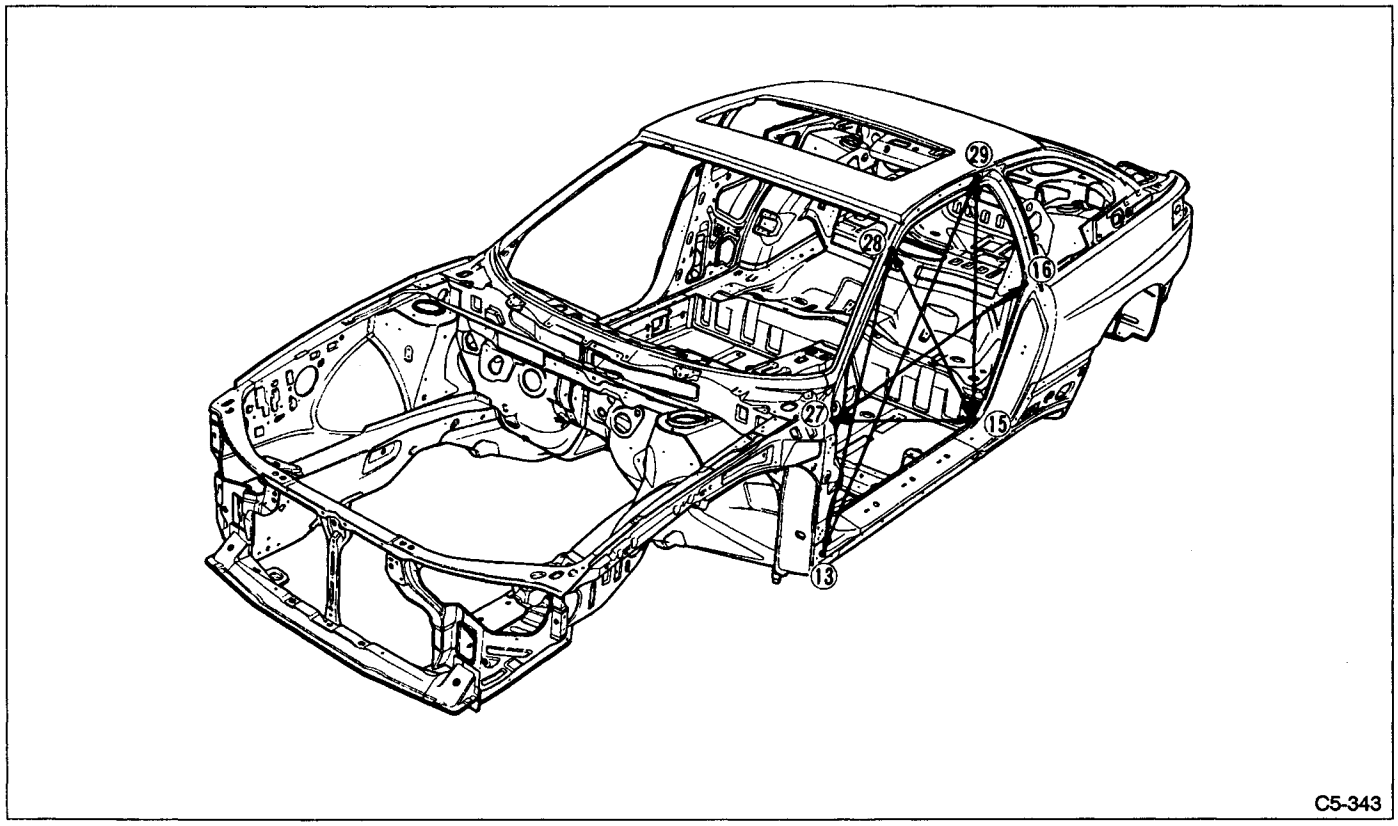

Fig. 87

Unit: mm (in)

㉗	—	⑯	: 1,228 (48.35)	⑮	—	㉘	: 981 (38.62)
㉗	—	⑮	: 1,079 (42.48)	⑮	—	㉙	: 913 (35.94)
⑬	—	㉘	: 996 (39.21)				
⑬	—	㉙	: 1,575 (62.01)				

All dimensions refer to the distance between the centers of holes when measured in a straight line.

4. FRONT WINDSHIELD AND REAR WINDOW

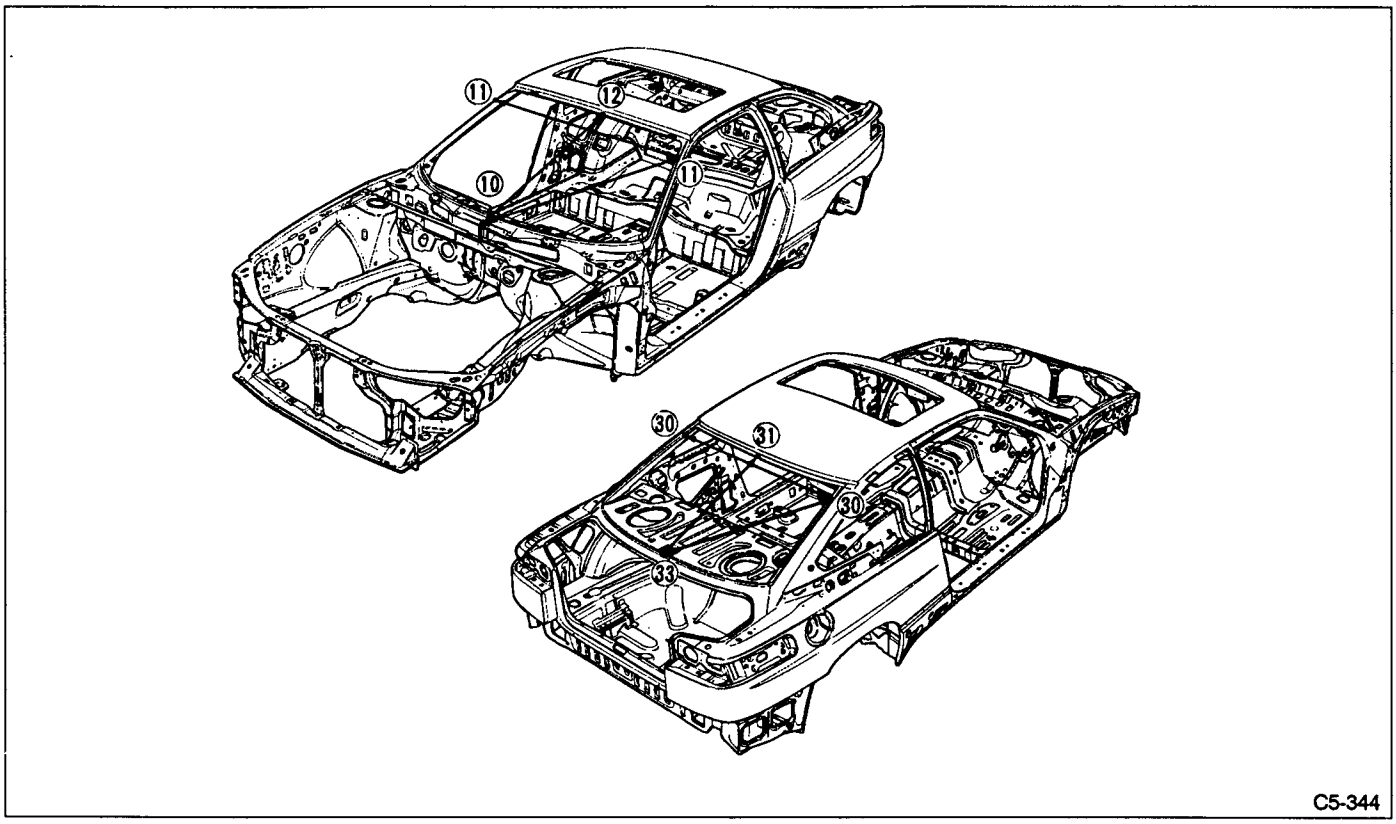

Fig. 88

Unit: mm (in)

Front Windshield		Rear Window	
⑩ — ⑫	: 896 (35.28)	㉛ — ㉝	: 745 (29.33)
⑩ — ⑪$_L$ ⑩ — ⑪$_R$	: 1,004 (39.53)	㉝ — ㉚$_L$ ㉝ — ㉚$_R$	: 866 (34.09)
⑪$_R$ — ⑪$_L$	: 1,134 (44.65)	㉚$_R$ — ㉚$_L$	: 1,002 (39.45)

a. All dimensions refer to the distance between the centers of holes when measured in a straight line.
b. A suffix character "R" or "L" refers to the right or the left.

5. TRUNK LID

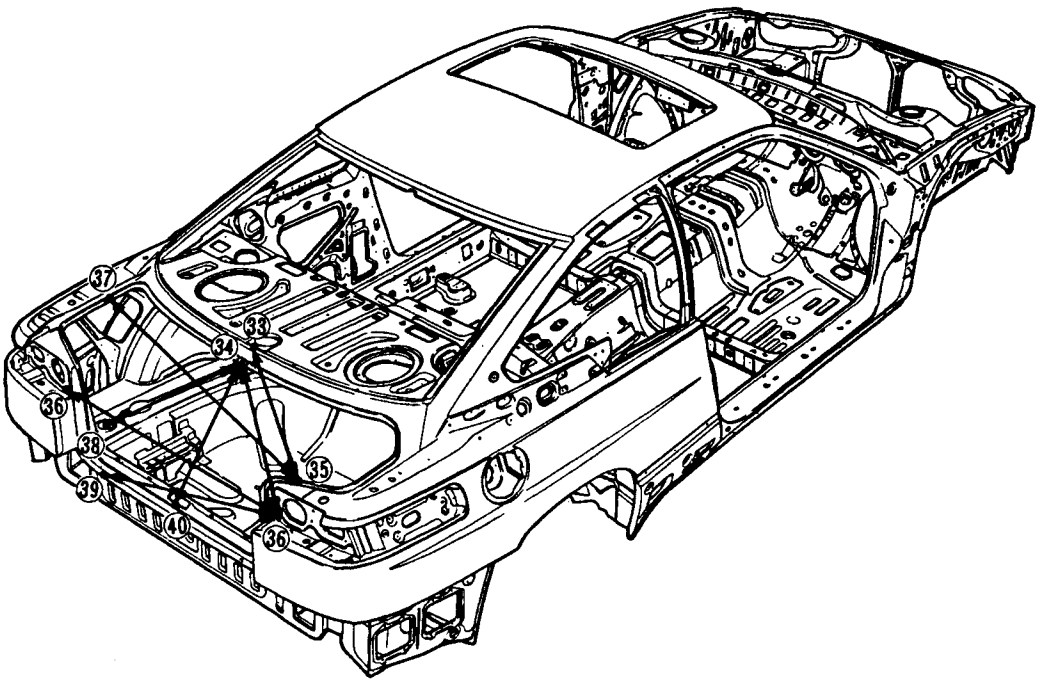

C5-345

Fig. 89

Unit: mm (in)

㉝ — ㉟R ㉝ — ㉟L	: 606 (23.86)	㉞ — ㊳R ㉞ — ㊳L	: 668 (26.30)
㉟R — ㊲L ㉟L — ㊲R	: 1,172 (46.14)	㉞ — ㊱R ㉞ — ㊱L	: 572 (22.52)
㊱R — ㊱L	: 900 (35.43)	㉞ — ㊵	: 494 (19.45)
㊱R — ㊴L ㊱L — ㊴R	: 786 (30.94)		

All dimensions refer to the distance between the centers of holes when measured in a straight line.

6. COMPARTMENT

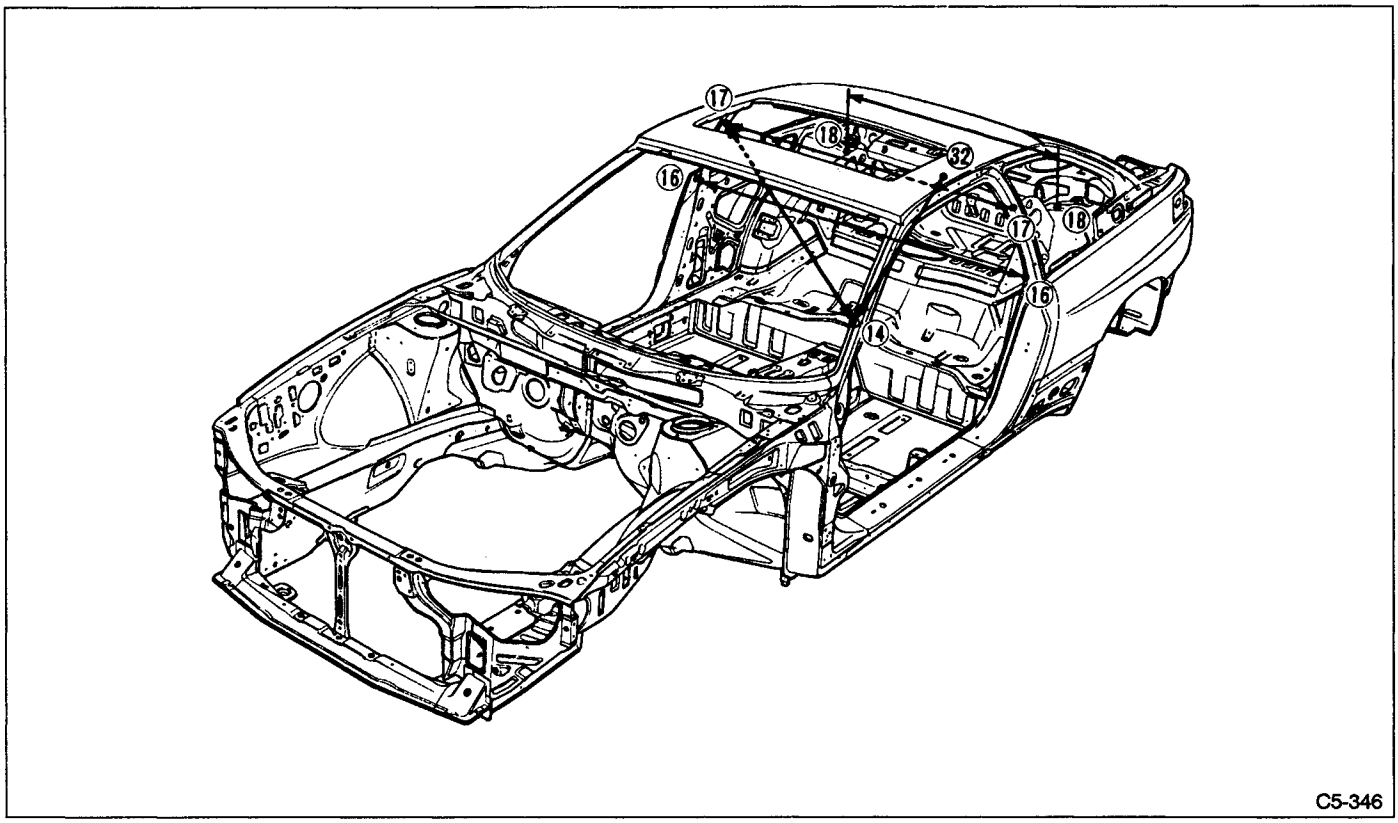

Fig. 90

Unit: mm (in)

⑯R	—	⑯L	: 1,464 (57.64)	⑭	—	⑰R	: 945 (37.20)
⑰R	—	⑰L	: 1,138 (44.80)	⑭	—	⑰L	
⑱R	—	⑱L	: 1,056 (41.57)	⑭	—	㉜	: 856 (33.70)

a. All distance refer to the distance between the centers of holes when measured in a straight line.
b. A suffix character "R" or "L" refers to the right or the left.

3. Datum Points and Dimensions Concerning On-Board Aiming Adjustment

If headlamp aiming is misaligned due to damaged body panel, repair headlamp mating surface using body and headlamp datum points as a guide.

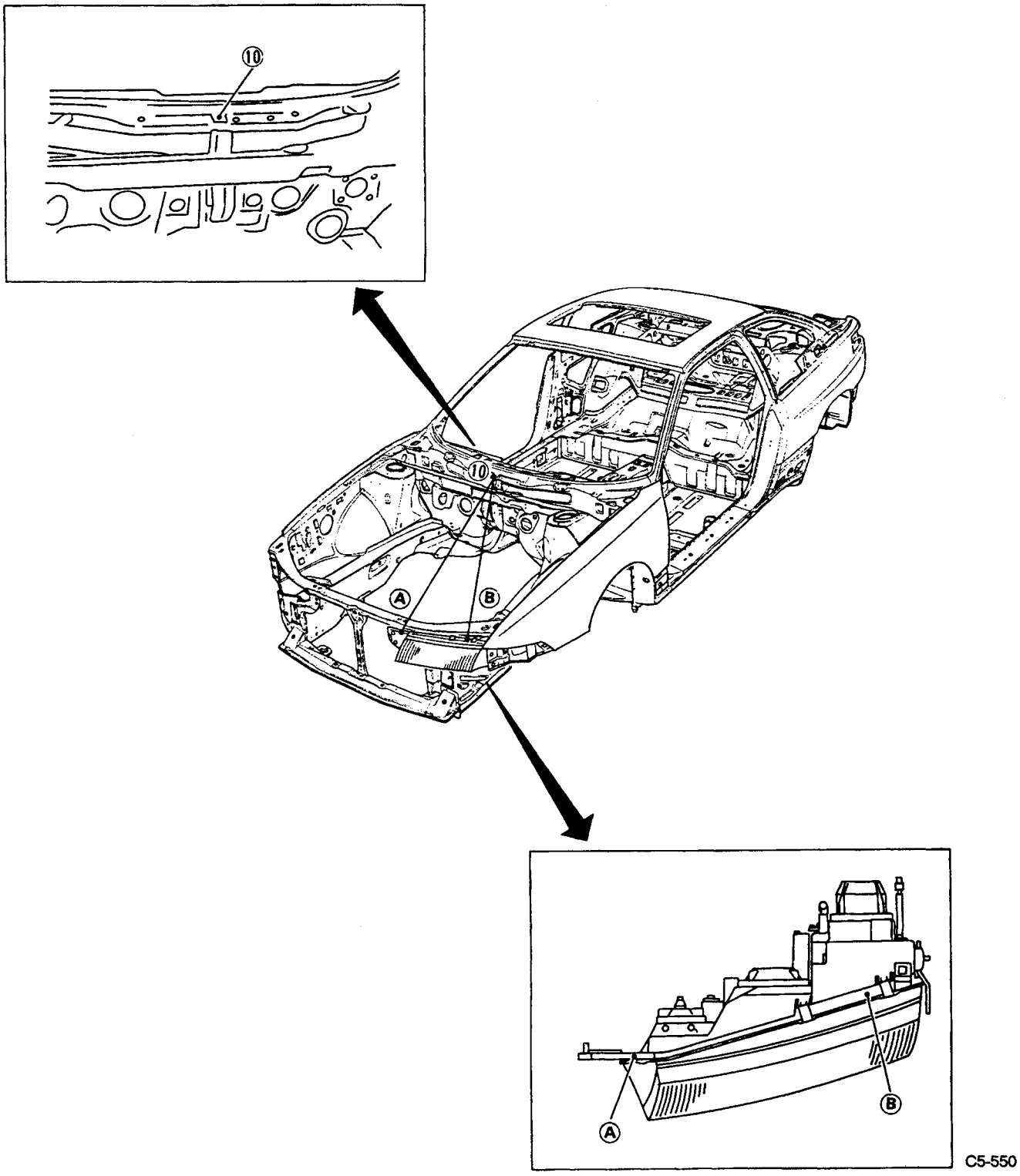

C5-550

Fig. 91

a. A suffix character "R" or "L" refers to the right or the left.
b. All dimensions refer to the distance between the centers of holes measured in a straight line.

4. Rear Quarter Brace Welding

When joining outer rear quarter panel and rear skirt extension by using brace-weld method, make sure both parts are new. If either of the parts is old, they cannot be properly jointed by brace welding method. In this case, use spot or plug-weld method.

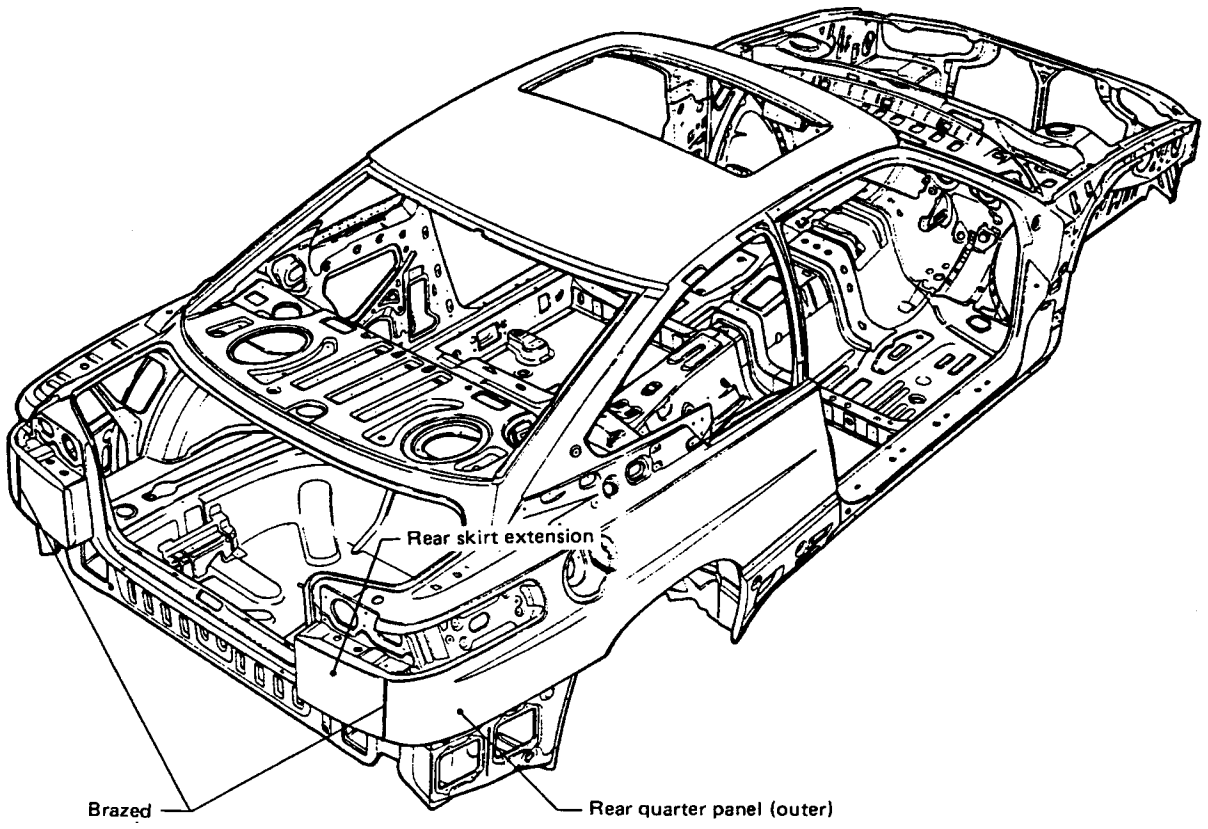

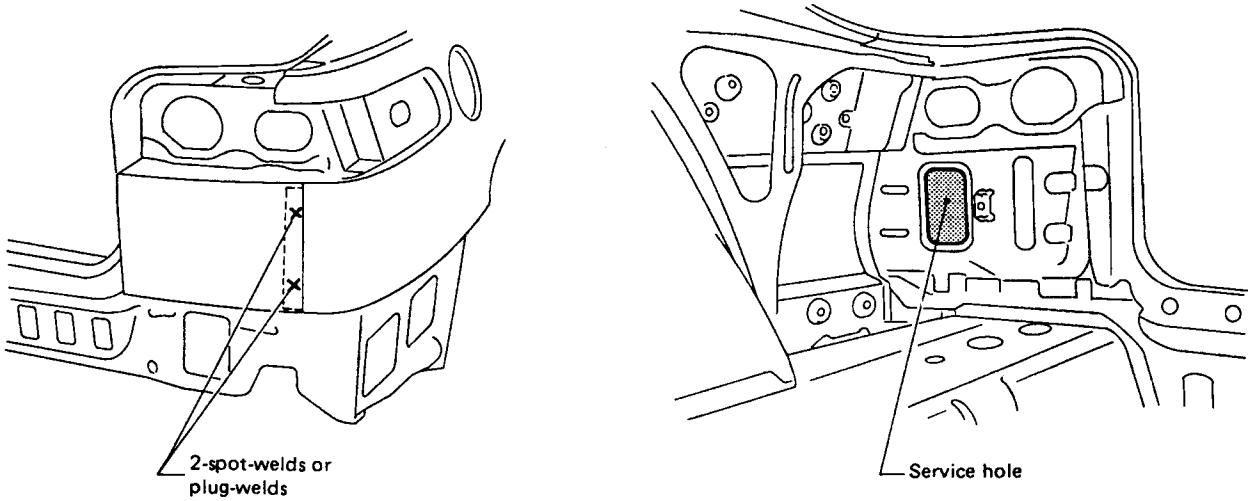

Fig. 92

C COMPONENT PARTS

1. Body Construction

1 Front rail COMPL.
2 Roof panel
3 Roof panel (sunroof)
4 Rear rail COMPL.
5 Front roof brace
6 Rear roof brace
7 Brace (sunroof)
8 Frame (sunroof)
9 Center brace
10 Carrier bracket
11 Frame (radiator panel LWR)
12 Hood lock stay
13 Radiator side panel
14 Frame (UPR)
15 Front wheel apron
16 Rear side frame (UPR)
17 Front side frame (UPR)
18 Front suspension bracket
19 Front side frame (Front)
20 Front side frame (Rear)
21 Toe board
22 Front panel
23 Front bulkhead
24 Steering support beam
25 Bracket (Rear crossmember)
26 Front floor frame
27 Front side sill (INNER)
28 Front floor
29 Front floor reinforcement
30 Reinforcement (parking brake)
31 Crossmember (front floor)
32 Front seat bracket (side)
33 Crossmember B
34 Rear side sill (INNER)
35 Rear side frame
36 Rear floor pan (Front)
37 Rear floor pan (Rear)
38 Rear floor side
39 Center rear skirt
40 Rear skirt frame
41 Rear panel
42 Front pillar (inner, LWR)
43 Front pillar (inner, UPR)
44 Side rail (inner)
45 Side sill reinforcement
46 Rear quarter panel (inner)
47 Rear arch (inner)
48 Hinge bracket
49 Rear suspension bracket
50 Front pillar reinforcement (LWR)
51 Front pillar (outer)
52 Side rail (outer)
53 Rear quarter panel (outer)
54 Side sill (outer)
55 Rear quarter end
56 Rear quarter extension

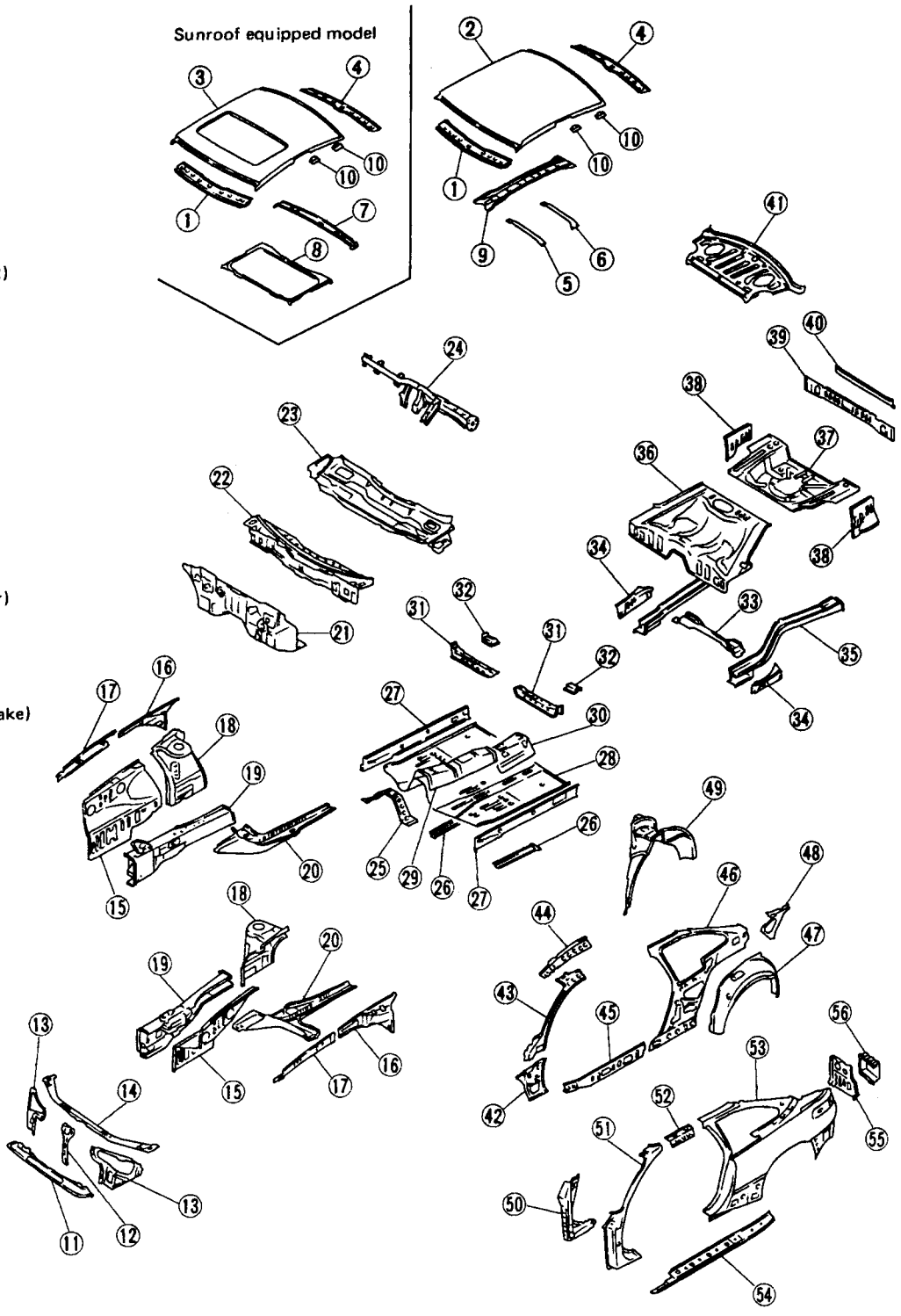

Fig. 93

2. Front Hood and Hood Lock

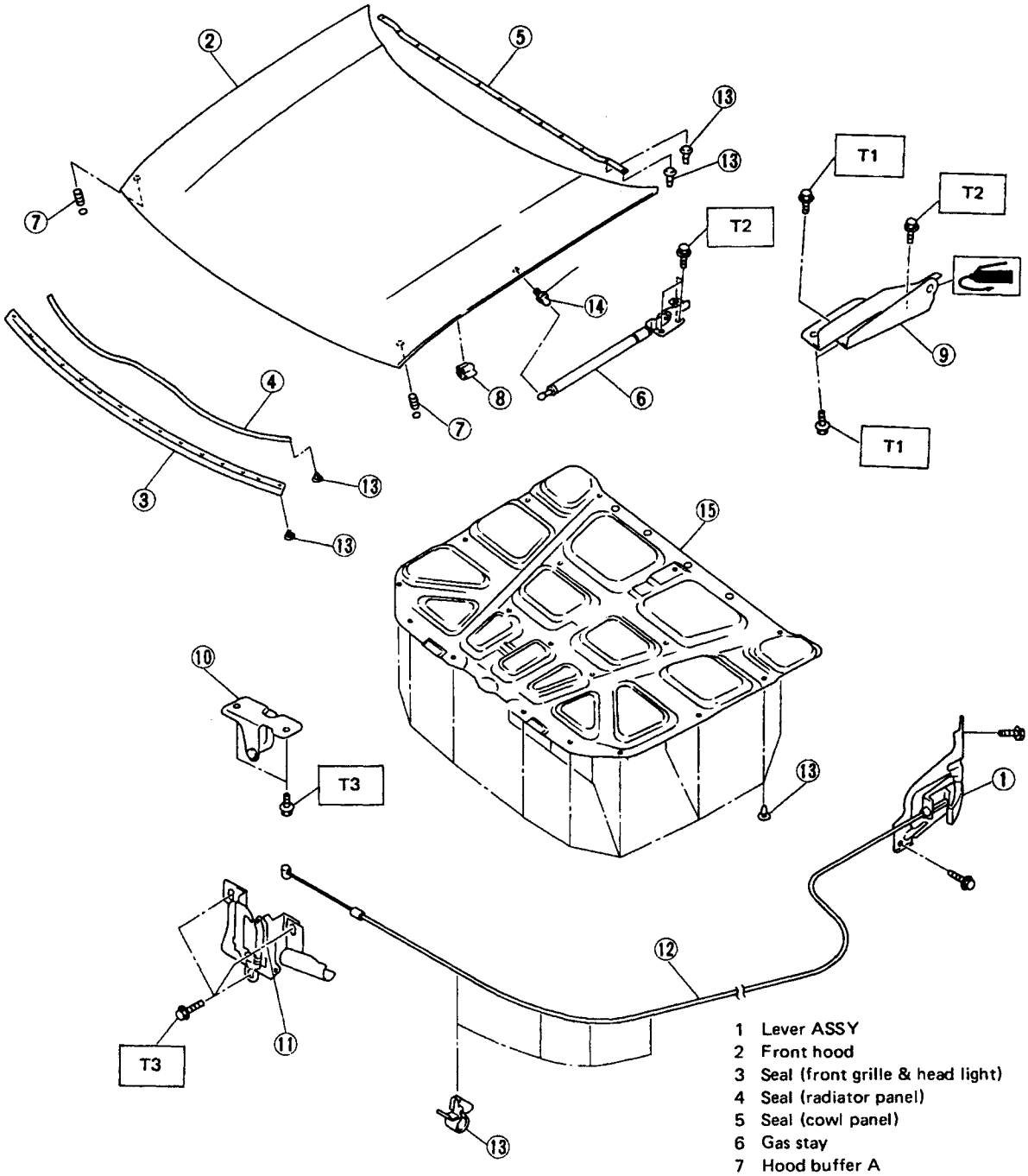

1 Lever ASSY
2 Front hood
3 Seal (front grille & head light)
4 Seal (radiator panel)
5 Seal (cowl panel)
6 Gas stay
7 Hood buffer A
8 Buffer B
9 Hinge
10 Striker
11 Hood lock ASSY
12 Cable
13 Clip
14 Stud bolt
15 Insulator

Tightening torque: N·m (kg-m, ft-lb)
T1: 13 – 23 (1.3 – 2.3, 9 – 17)
T2: 5.4 – 9.3 (0.55 – 0.95, 4.0 – 6.9)
T3: 23 – 42 (2.3 – 4.3, 17 – 31)
T4: 10 – 18 (1.0 – 1.8, 7 – 13)

Fig. 94

3. Trunk Lid, Trunk Lid Opener, Fuel Flap and Fuel Flap Opener

1 Fuel flap
2 Hinge
3 Hinge stopper
4 Spring
5 Striker
6 Saucer
7 Drain pipe
8 Rear drain grommet
9 Fuel look holder
10 Cover
11 Pull handle ASSY
12 Knob (trunk lid)
13 Knob (fuel flap)
14 Cable ASSY
15 Trunk lid
16 Trunk lid lock ASSY
17 Cover A
18 Striker
19 Hinge
20 Gas stay
21 Key cylinder
22 Buffer
23 Weatherstrip
24 Clip
25 Clip
26 Screw grommet

Tightening torque: N·m (kg-m, ft-lb)
T1: 5.4 – 9.3 (0.55 – 0.95, 4.0 – 6.9)
T2: 13 – 23 (1.3 – 2.3, 9 – 17)

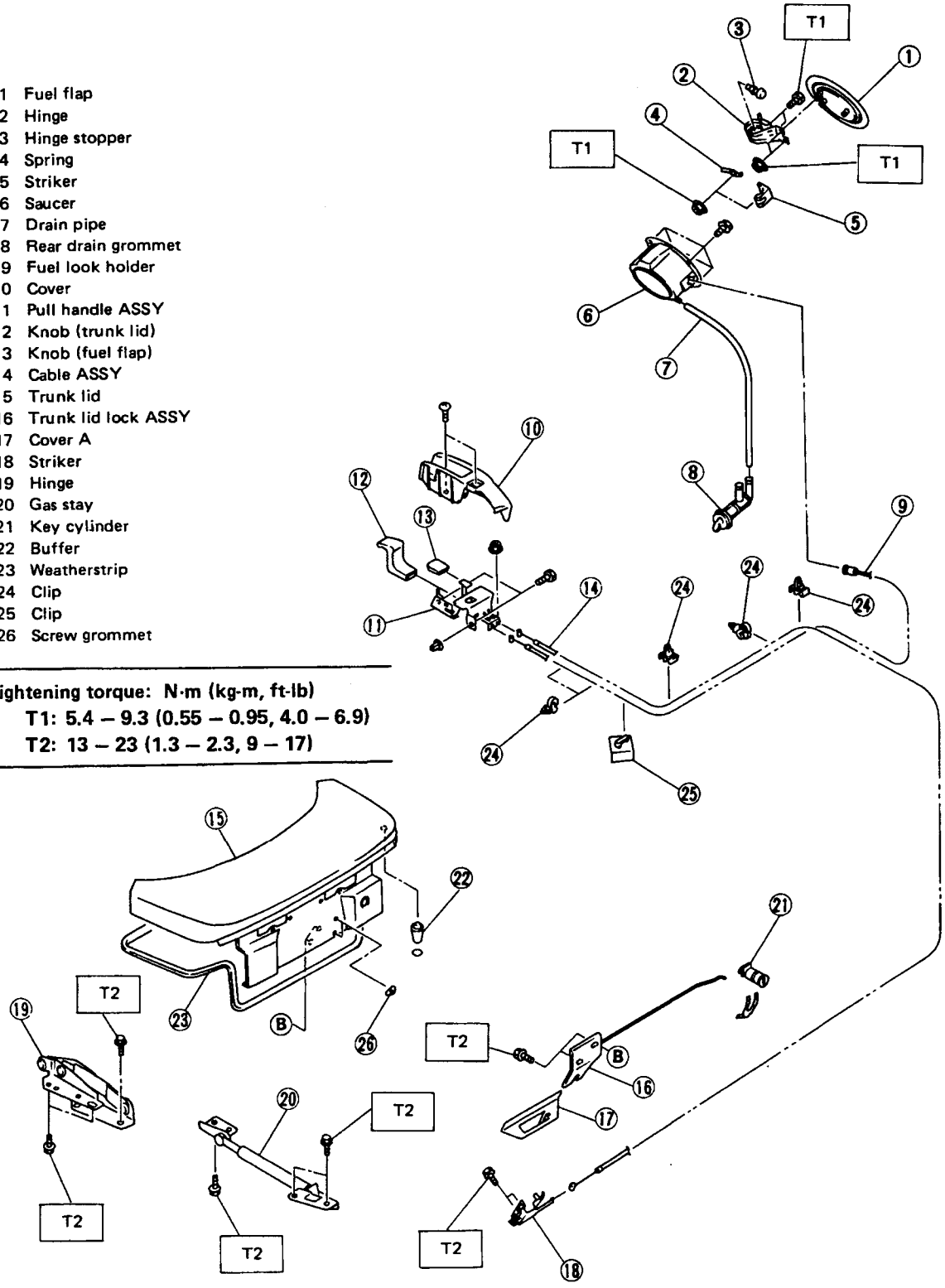

Fig. 95

4. Front Bumper

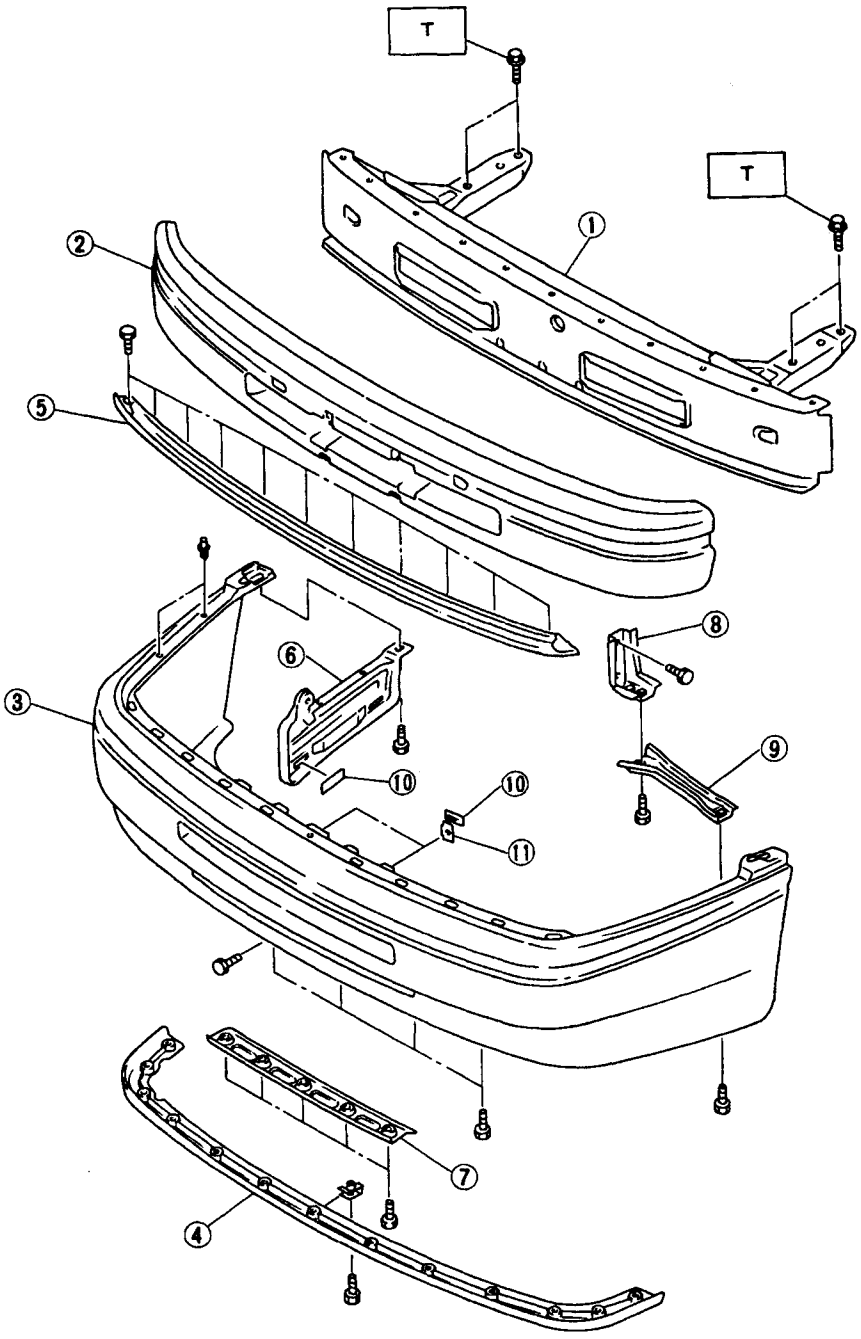

1 Front beam
2 Energy absorbing foam
3 Bumper face
4 Front skirt (LWR)
5 Holder (UPR)
6 Side bracket
7 Holder (LWR)
8 Side stay bracket
9 Side stay
10 Clip
11 Net plate

Tightening torque: N·m (kg-m, ft-lb)
T: 69 – 118 (7.0 – 12.0, 51 – 87)

C5-130

Fig. 96

C COMPONENT PARTS

5. Rear Bumper

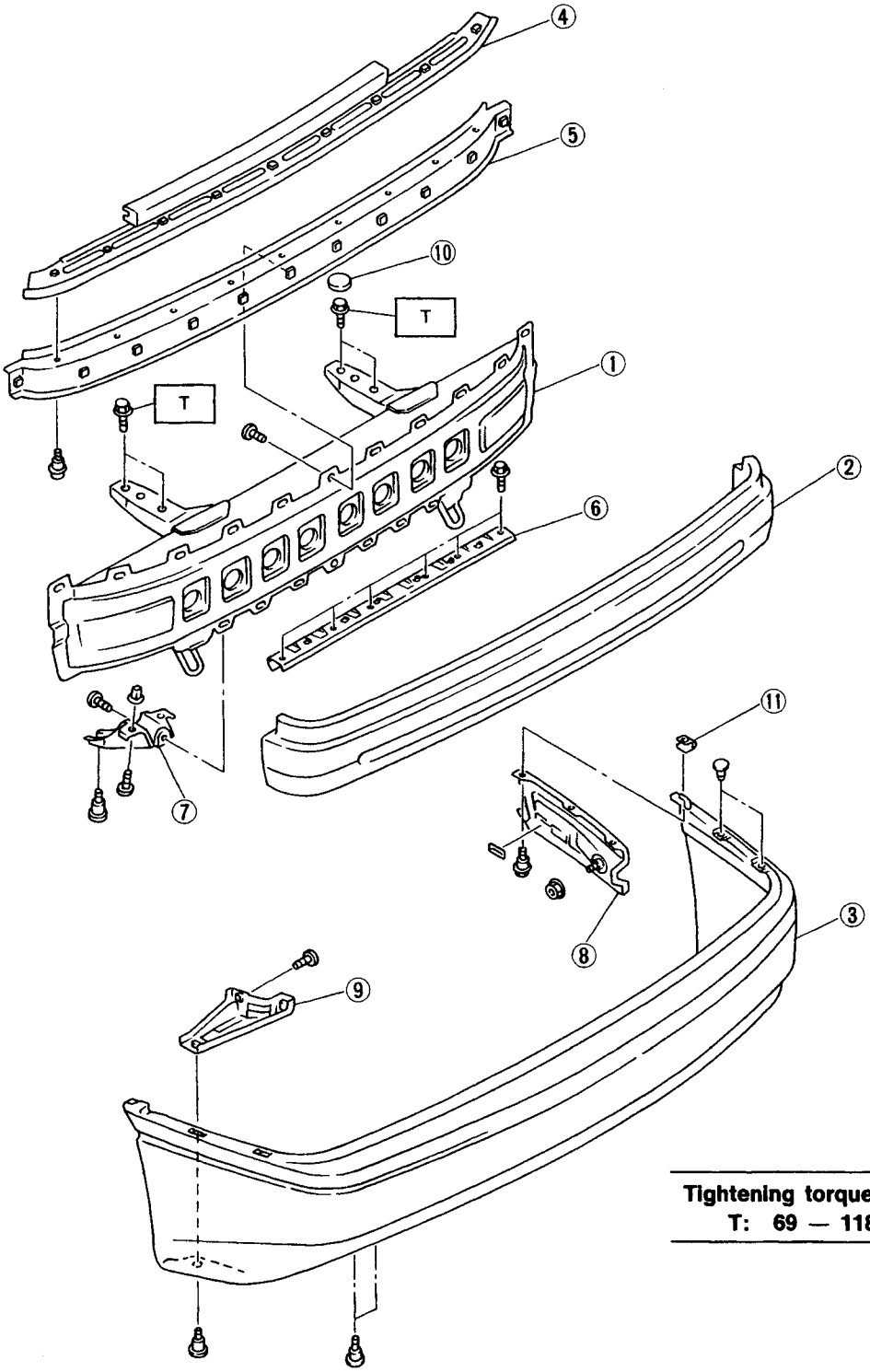

1 Rear beam
2 Energy absorbing foam
3 Bumper face
4 Holder (UPR)
5 Joint (holder UPR)
6 Holder (LWR)
7 Bracket (LWR)
8 Side bracket
9 Bracket (side LWR)
10 Cap
11 J-net

Tightening torque: N·m (kg-m, ft-lb)
T: 69 — 118 (7.0 — 12.0, 51 — 87)

C5-659

Fig. 3

6. Body Parts

1 Front mud guard
2 Front arch protector
3 Rear mud guard
4 Rear arch protector
5 Under cover
6 Front fender
7 Stay

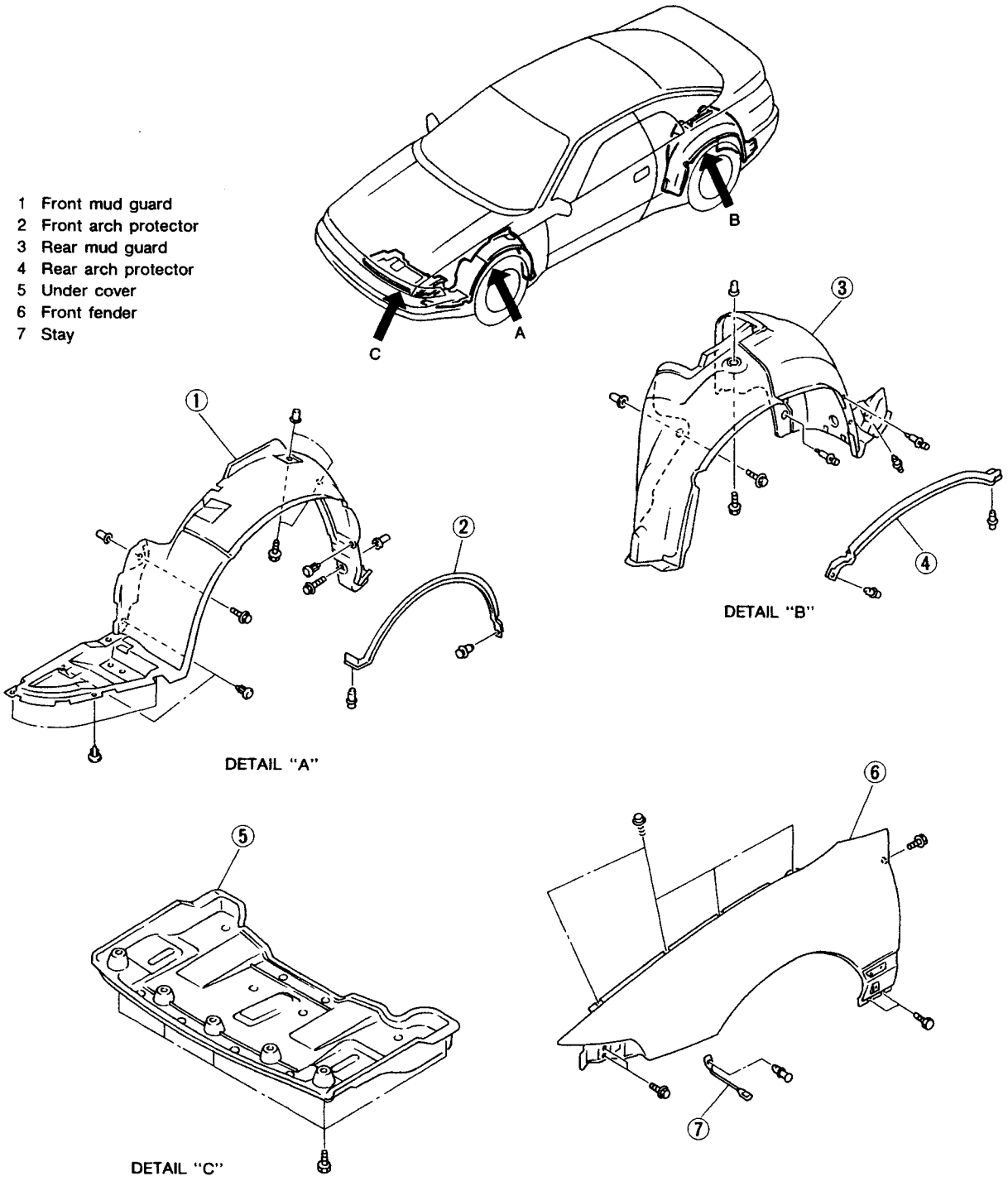

C5-660

Fig. 4

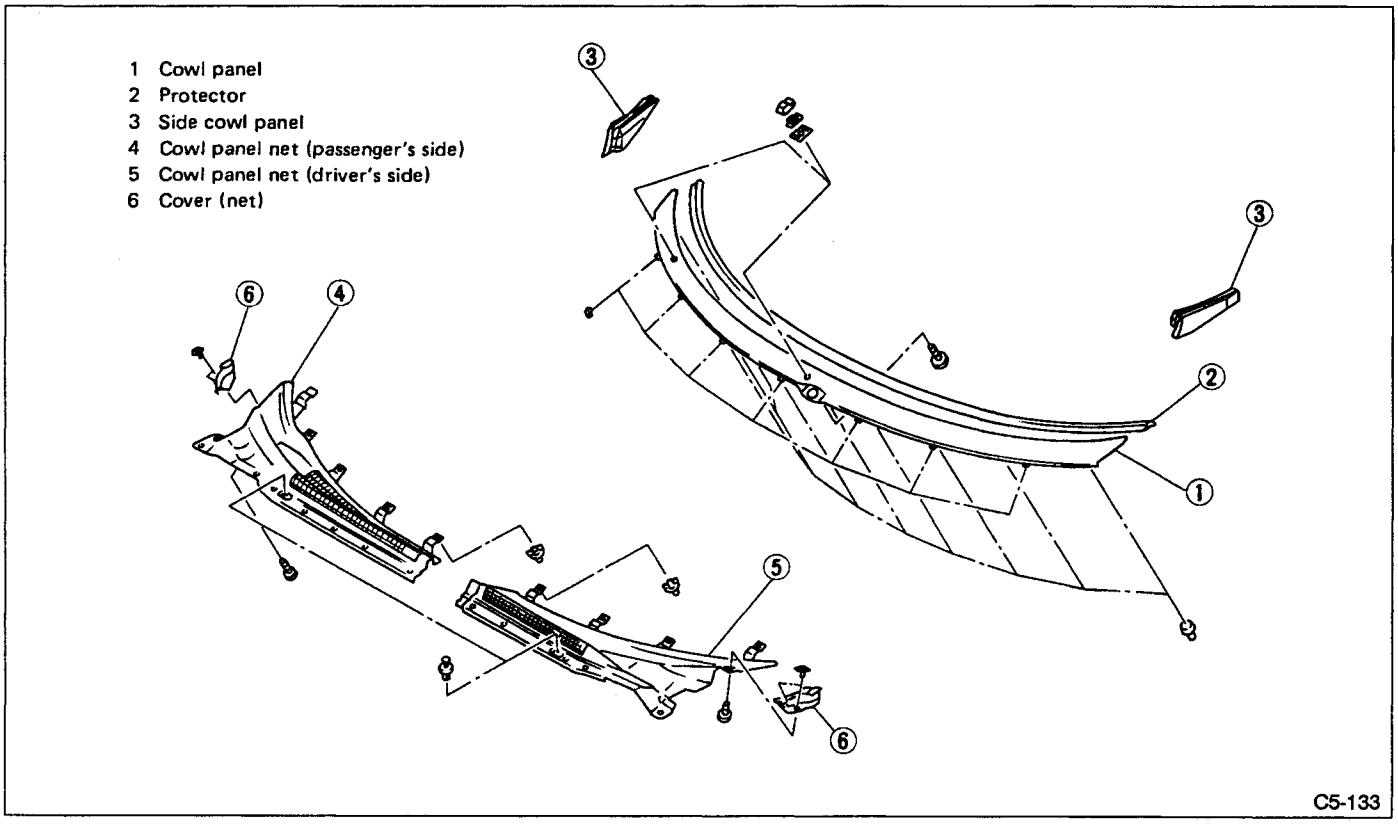
1 Cowl panel
2 Protector
3 Side cowl panel
4 Cowl panel net (passenger's side)
5 Cowl panel net (driver's side)
6 Cover (net)
C5-133

Fig. 99

7. Outer Accessories

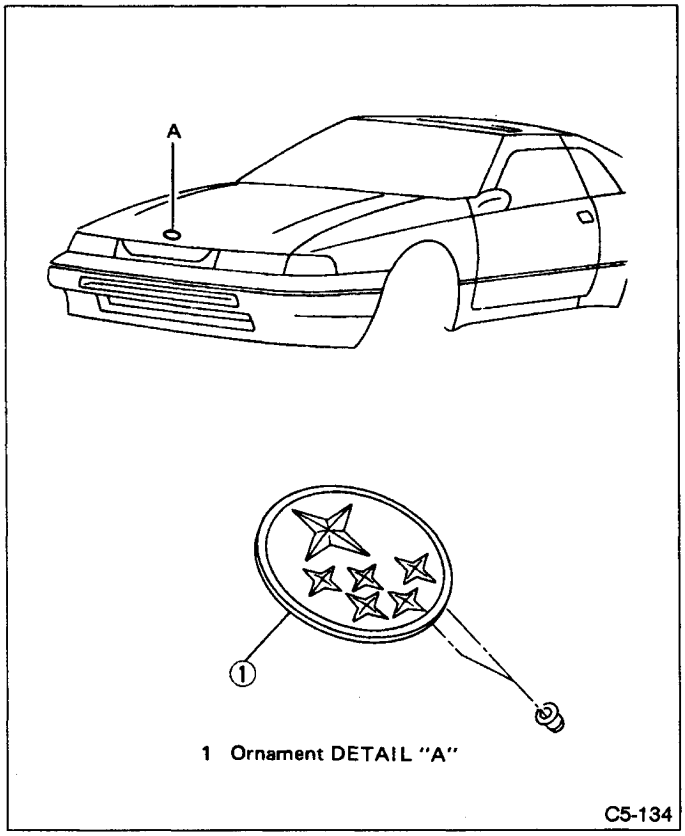

Fig. 100

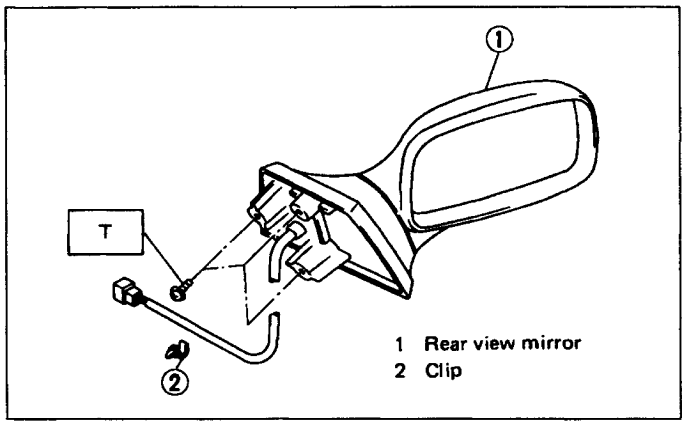

Fig. 101

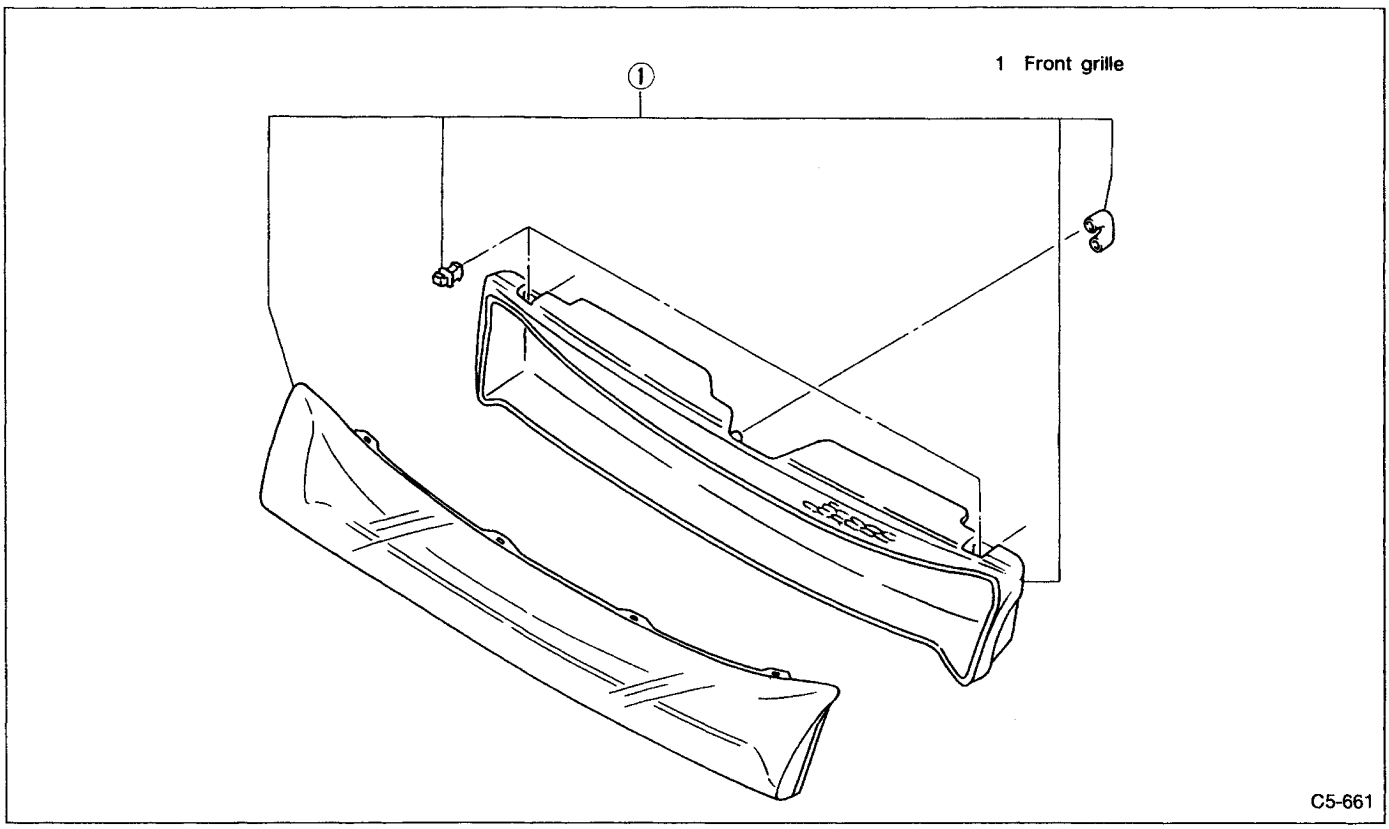

Fig. 5

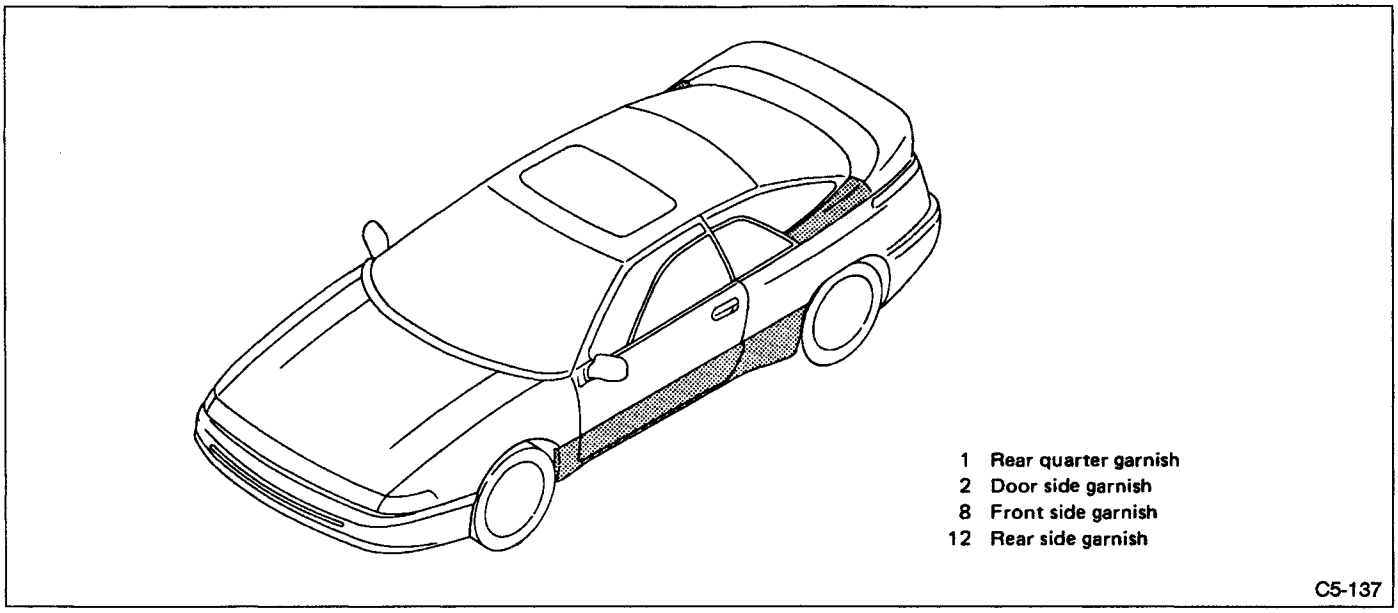
1 Rear quarter garnish
2 Door side garnish
8 Front side garnish
12 Rear side garnish
C5-137

Fig. 103

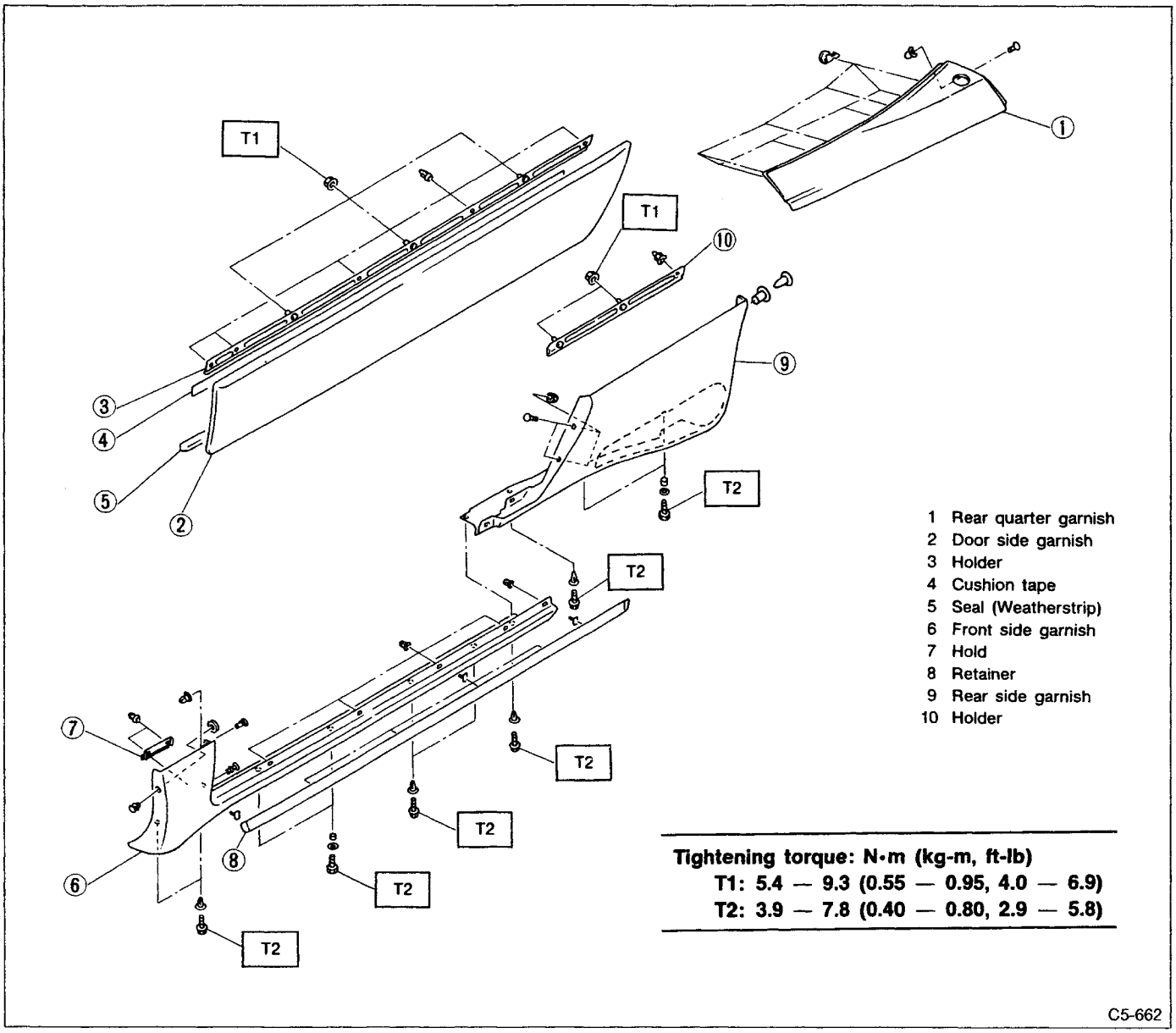
T1
T1
T2
T2
T2
T2
T2
T2
1 Rear quarter garnish
2 Door side garnish
3 Holder
4 Cushion tape
5 Seal (Weatherstrip)
6 Front side garnish
7 Hold
8 Retainer
9 Rear side garnish
10 Holder
Tightening torque: N·m (kg-m, ft-lb)
T1: 5.4 — 9.3 (0.55 — 0.95, 4.0 — 6.9)
T2: 3.9 — 7.8 (0.40 — 0.80, 2.9 — 5.8)
C5-662

Fig. 6

8. Sunroof

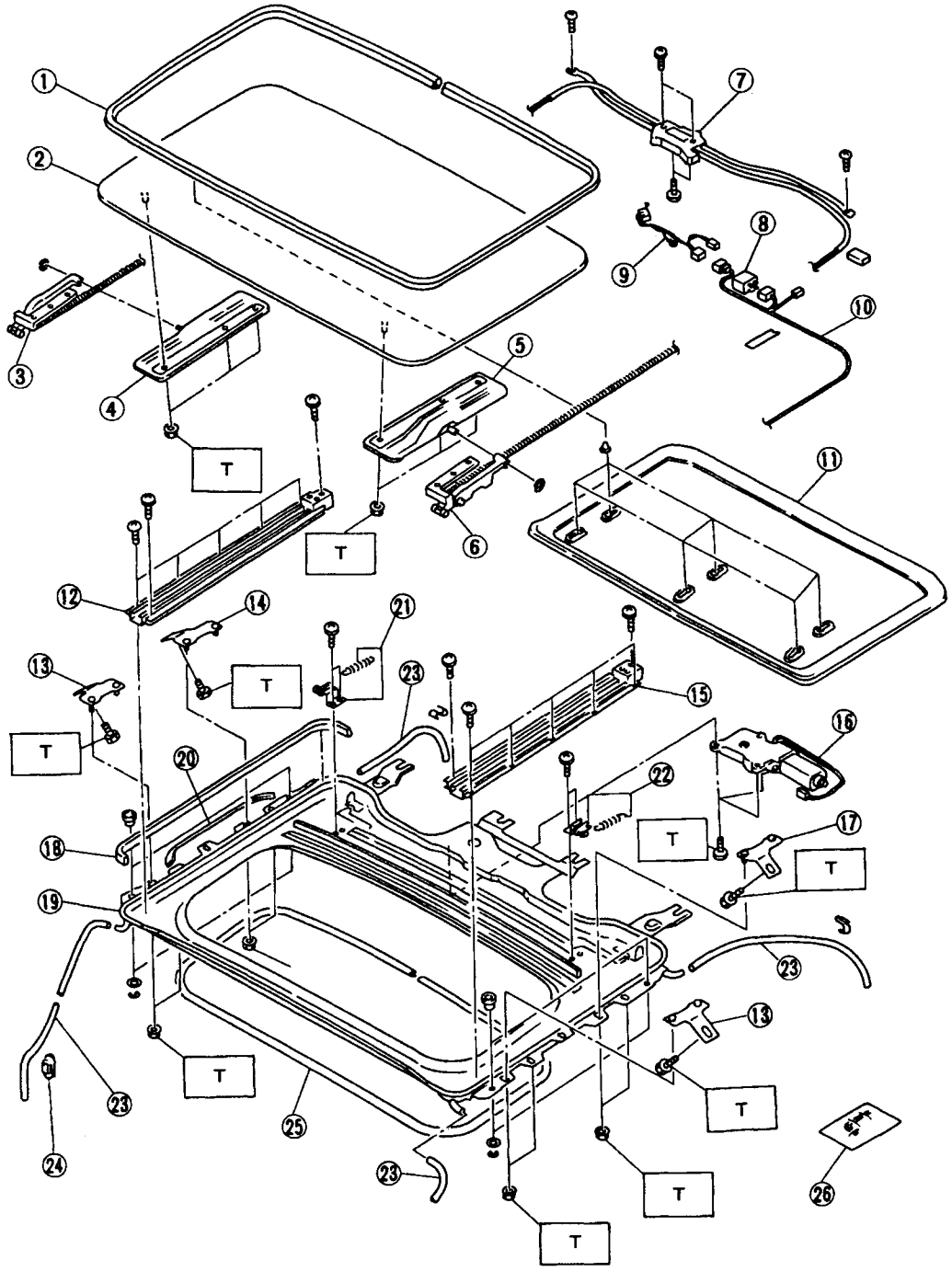

1 Weatherstrip
2 Sunroof panel
3 Rear guide ASSY
4 Lower panel
5 Lower panel
6 Rear guide ASSY
7 Drive unit
8 Relay
9 Harness
10 Harness
11 Sunroof trim
12 Guide rail
13 Set bracket
14 Set bracket (RH)
15 Guide rail
16 Motor ASSY
17 Set bracket (LH)
18 Sealed tape
19 Frame ASSY
20 Sealed cushion
21 Shutting ASSY (RH)
22 Shutting ASSY (LH)
23 Drain tube
24 Grommet
25 Garnish
26 Handle

Tightening torque: N·m (kg-m, ft-lb)
T: 5.4 – 9.3 (0.55 – 0.95, 4.0 – 6.9)

C5-139

Fig. 105

W SERVICE PROCEDURE

1. Hood

The hood lock has a dual locking design which consists of a main lock and a safety lock mechanism. When the release knob located at the front pillar on the driver's side is pulled back, the main lock is released through the cable attached to the knob.
The safety lock can be released by pushing the lever protruding above the front grill while opening the hood.

A: REMOVAL

1. HOOD PANEL

1) Open front hood, and remove washer hose.
2) Remove studs which hold gas stays to hood.

Be careful because hood drops under its own weight when gas stays are removed.

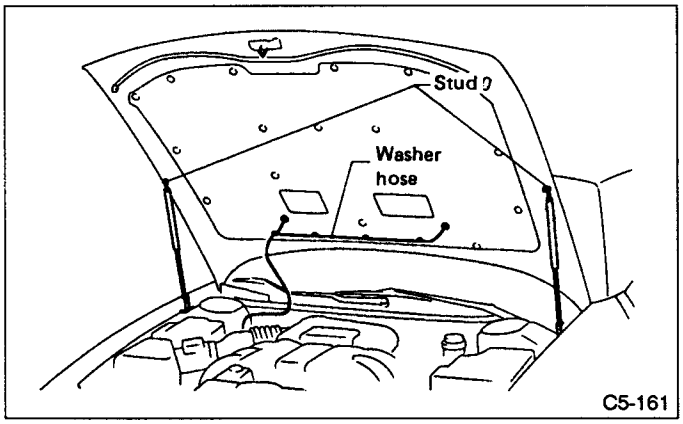

Fig. 106

3) Remove hood attaching bolts from hinge, and detach hood from hinges.

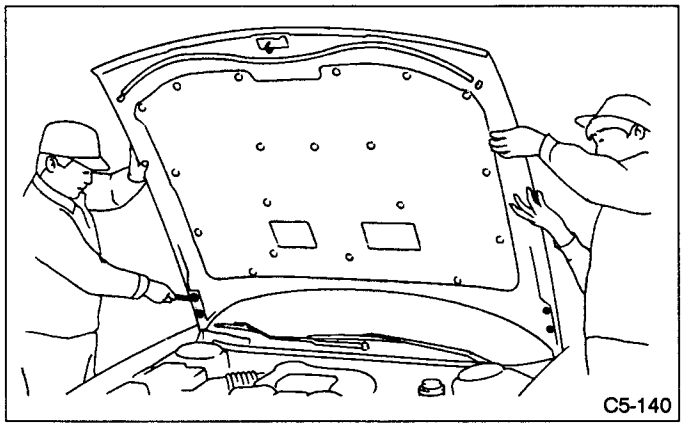

Fig. 107

Have an assistant support front hood while removing bolts.

2. HOOD LOCK ASSY

1) Open front hood and remove front grille.
2) Remove bolts which secure lock ASSY to radiator panel, and remove lock ASSY.

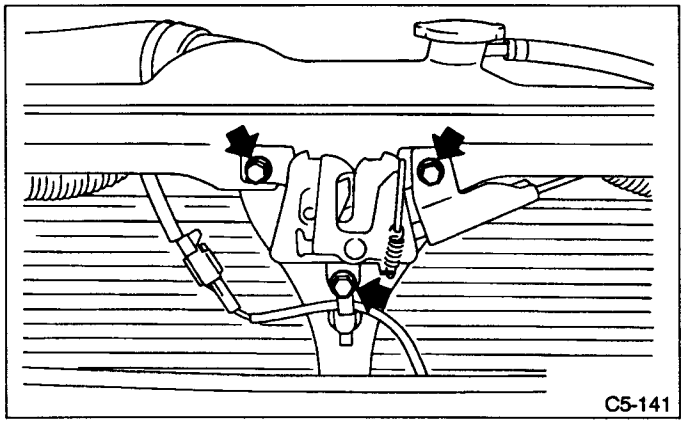

Fig. 108

3) Disconnect release cable from lock ASSY.

3. RELEASE CABLE

1) Open front hood and remove front grille.
2) Remove lock ASSY and disconnect release. Cable from lock ASSY.

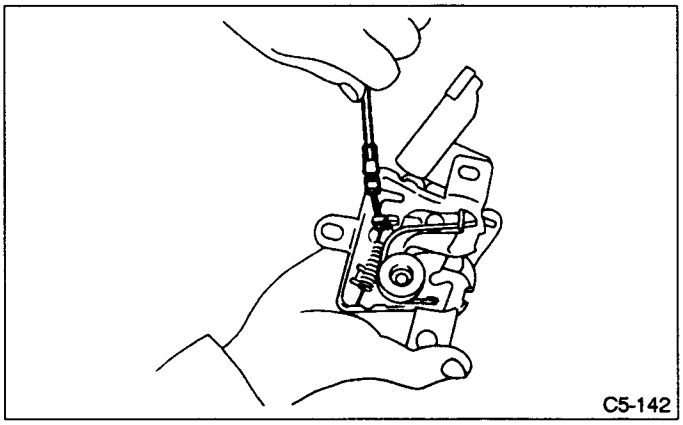

Fig. 109

3) Remove cable clip from engine compartment.

4) Remove trim panel on driver's side.

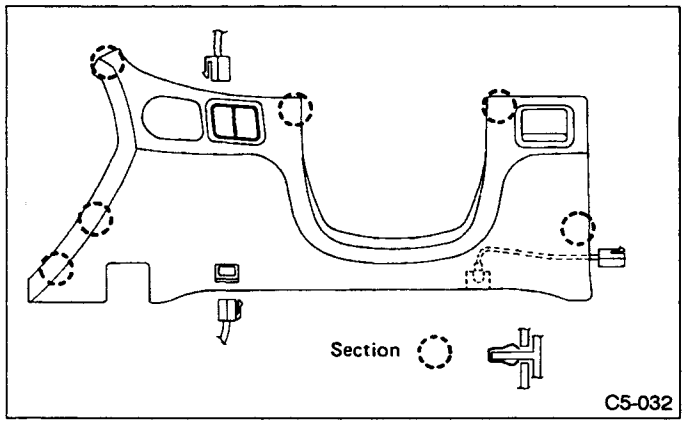

Fig. 110

5) Disconnect release cable from lever Assy.

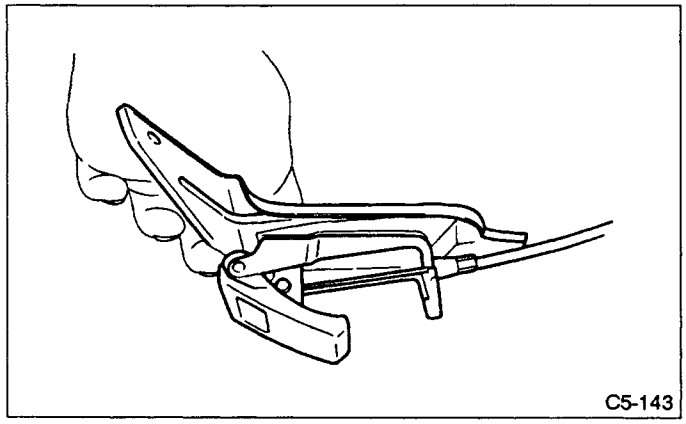

Fig. 111

6) Remove mud guard.
7) Remove clip from harness bracket and pull out.
Release cable.
Be careful not to bend or break cable.

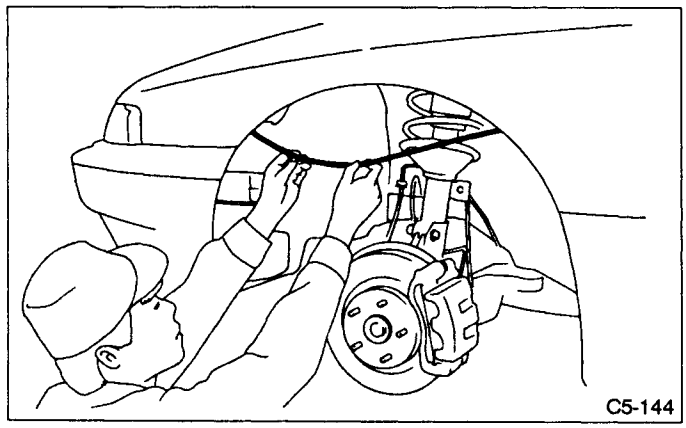

Fig. 112

4. INSULATOR

1) Open front hood, and remove attaching clips and washer hose.

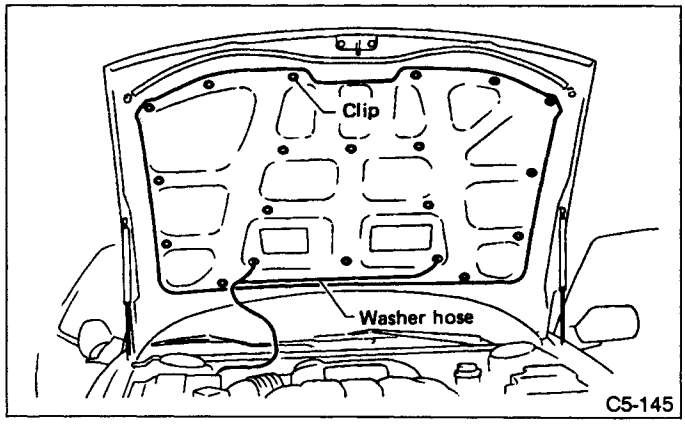

Fig. 113

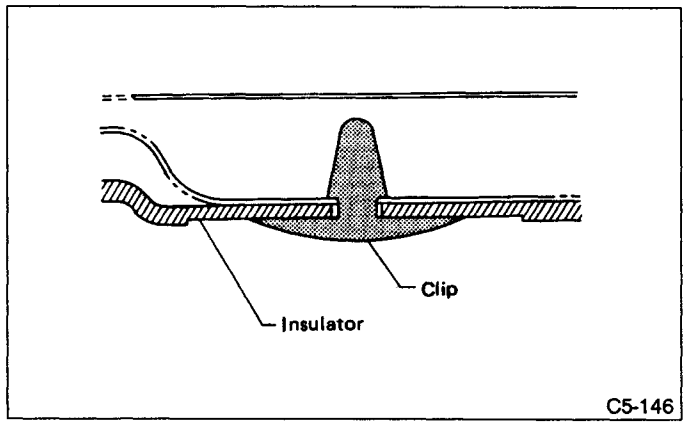

Fig. 114

2) Remove insulator from front hood.

5. GAS STAYS

1) Open front hood.
2) Remove studs which hold gas stays to hood.
3) Remove bolts which hold gas stays.
Be careful because hood drops under its own weight when gas stays are removed.

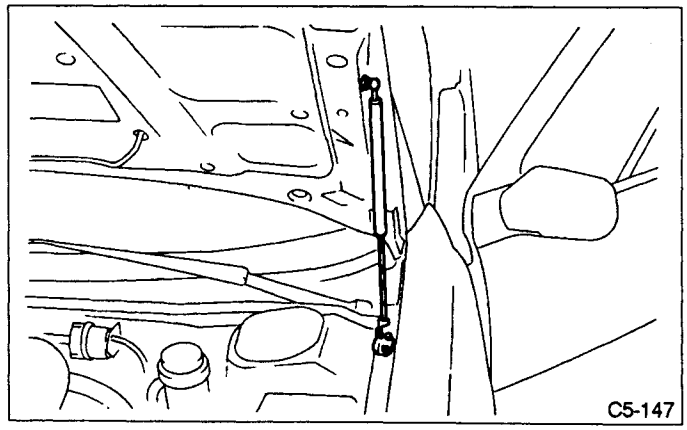

Fig. 115

B: POINTS TO CHECK

1) Check striker for bending or abnormal wear.
2) Check safety lever for improper movement.
3) Check other levers and spring for rust formation and unsmooth movement.

C: INSTALLATION

Installation is in the reverse order of removal.

a. Align the center of striker with lock during installation. Make sure safety lever is properly caught by striker under the hood's own weight.
b. Route hood lock release cable and hold with clips.
c. After installing release cable, ensure it operates smoothly.
d. Apply grease to sliding surfaces of parts.

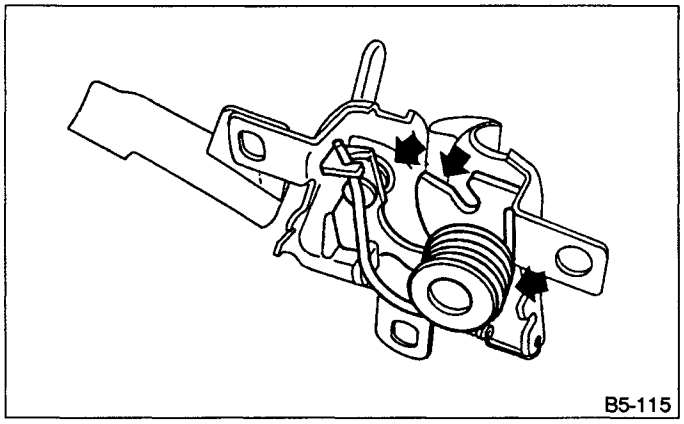

Fig. 116

D: ADJUSTMENT

a. Adjust hood fitting by removing gas stay.
b. Adjust hood in fore-aft and left-right directions within range of hinge bolt mounting hole.
c. Adjust height of hood end center position within range of hood lock assembly bolt mounting long hole.
d. Adjust height of right and left ends of hood by rotating buffer.

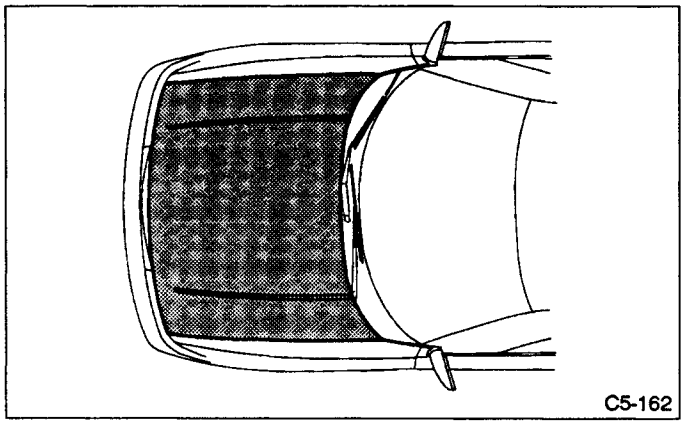

Fig. 117

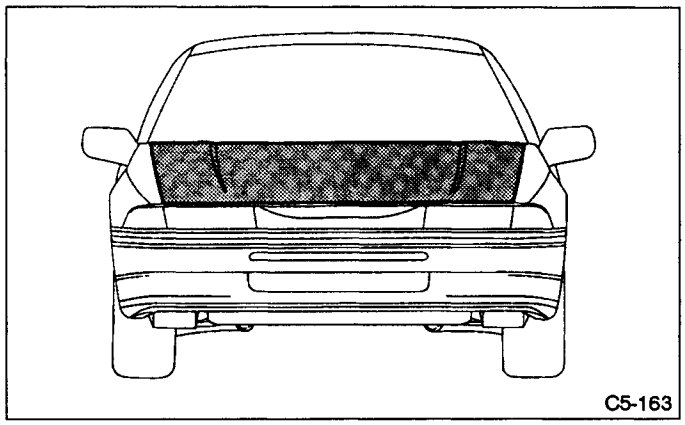

Fig. 118

2. Trunk Lid

A: REMOVAL

1. TRUNK LID

1) Open trunk lid. Disconnect connector and remove harness holder from hinge.

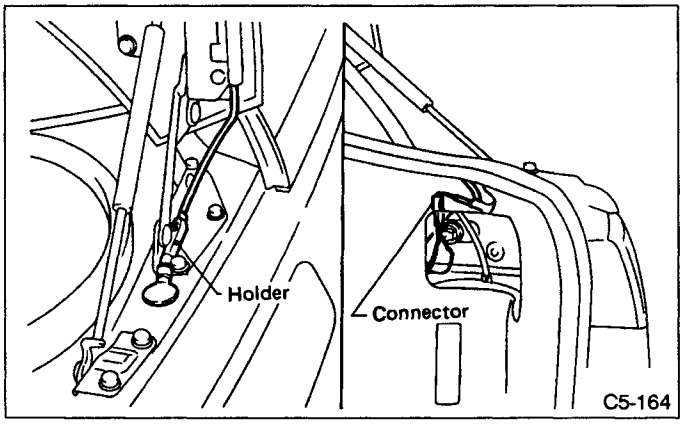

Fig. 119

2) Remove gas stays from trunk lid.
Be careful because trunk lid drops under its own weight when gas stays are removed.

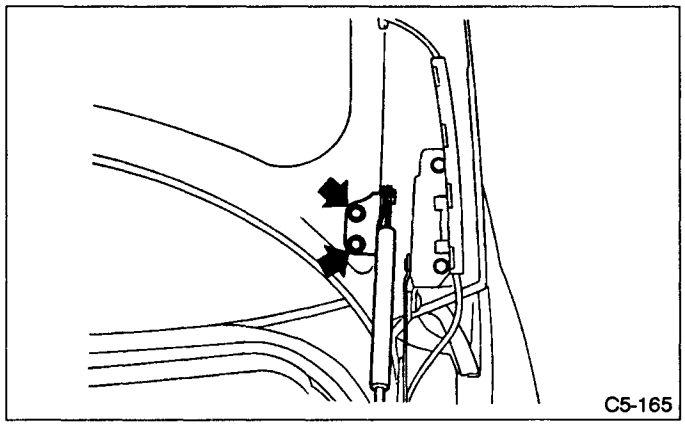

Fig. 120

3) Remove hinge from trunk lid.

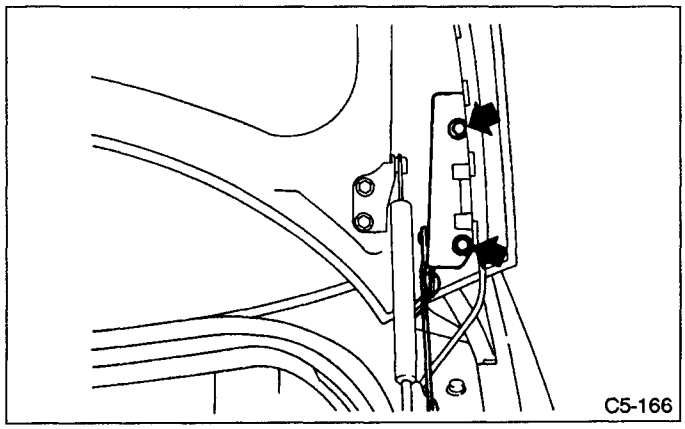

Fig. 121

4) Remove harness holder from hinge.

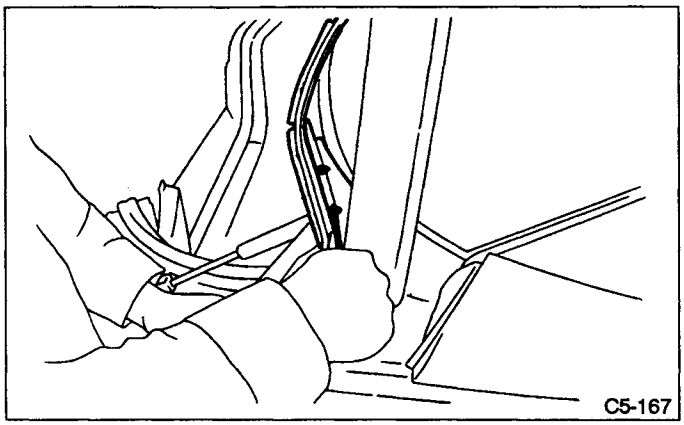

Fig. 122

2. GAS STAYS

1) Open trunk lid. Remove gas stays mounting bolts.
Be careful because trunk lid drops under its own weight when gas stays are removed.

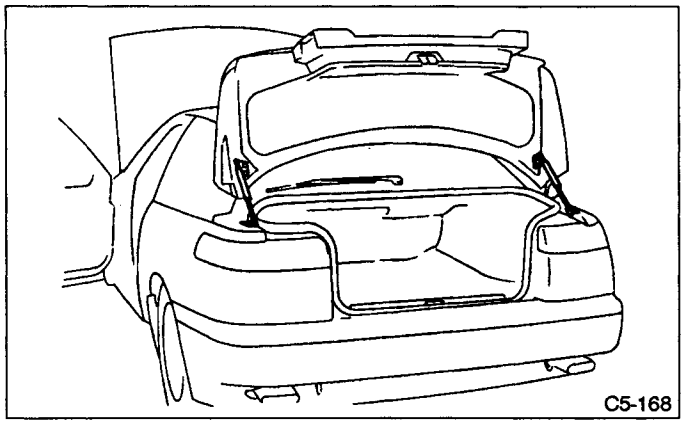

Fig. 123

3. TRUNK LID LOCK ASSEMBLY AND KEY CYLINDER

1) Open trunk lid and remove trunk lid trim.

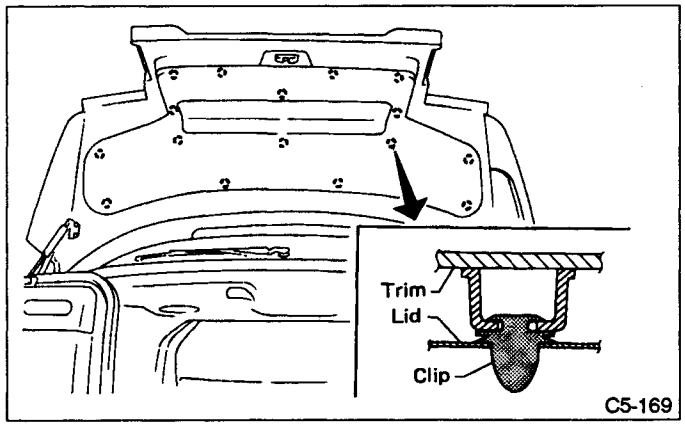

Fig. 124

2) Remove cover. Pull out cover while prying up portion indicated by "→" mark using standard-tip screwdriver.

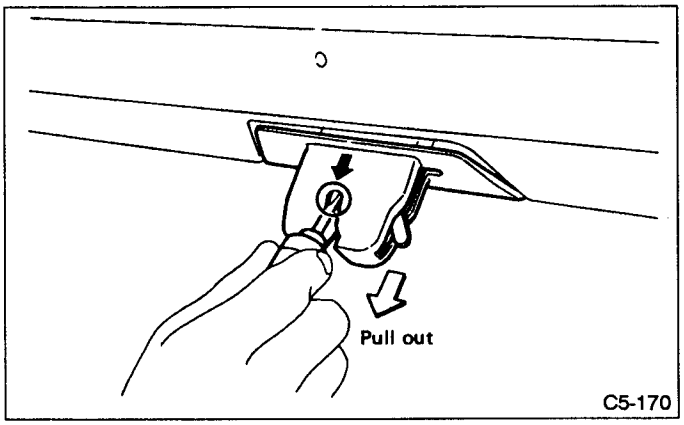

Fig. 125

3) Disconnect rod from rod holder and remove nuts which hold lock ASSY.
4) Remove clip and detach key cylinder from trunk lid.

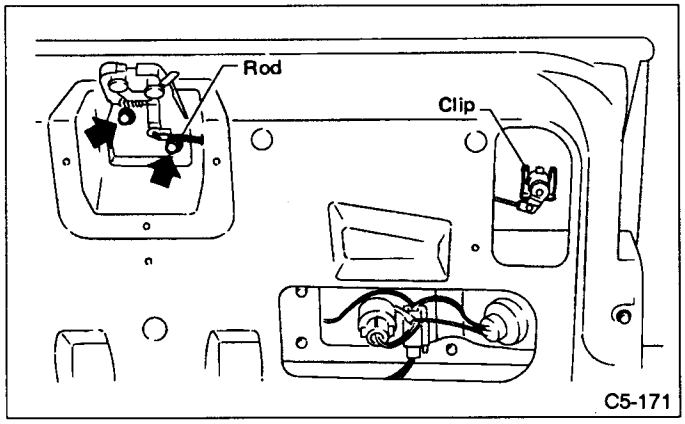

Fig. 126

4. TRUNK LID OPENER

1) Remove trunk trims.

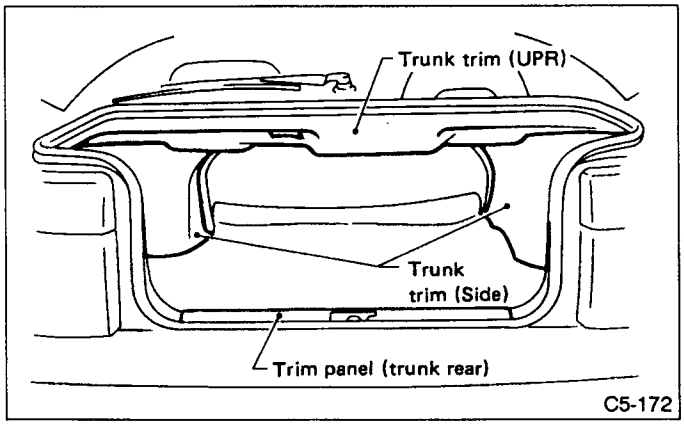

Fig. 127

2) Disconnect cable from striker.

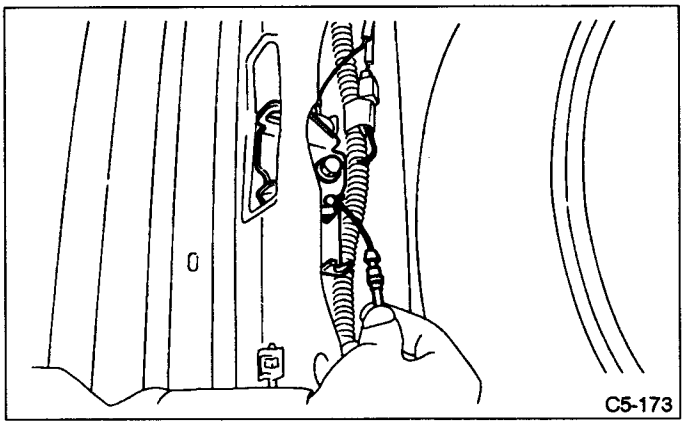

Fig. 128

3) Remove cable from clips.
4) Remove driver's seat, rear seat cushion, rear quarter trim and side sill cover (UPR).

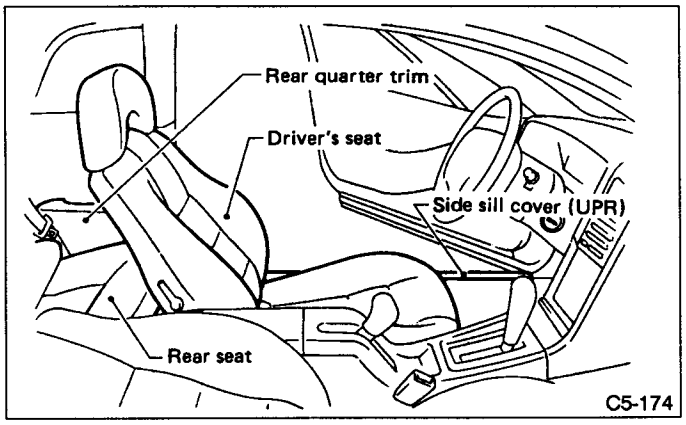

Fig. 129

5) Draw trunk lid knob out by holding its base portion to prevent bending or by hooking lower portion of knob using tool as shown.
Pay attention to prevent grease from getting on knob.

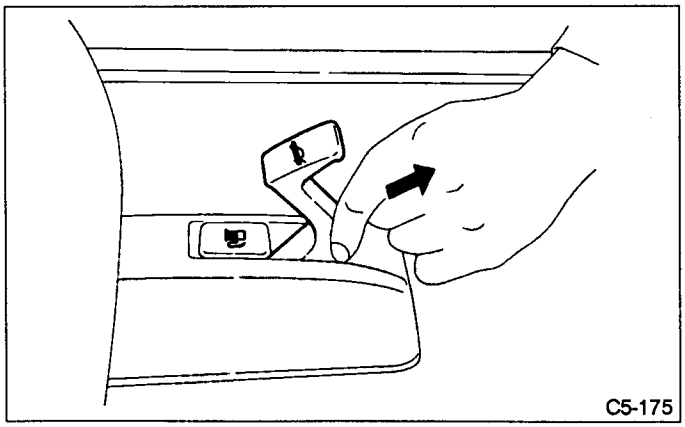

Fig. 130

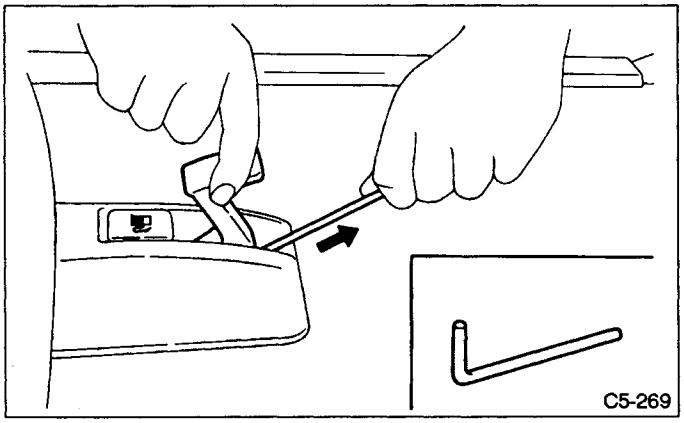

Fig. 131

6) Remove fuel flap knob by pushing it out.
Prevent grease from getting on knob.

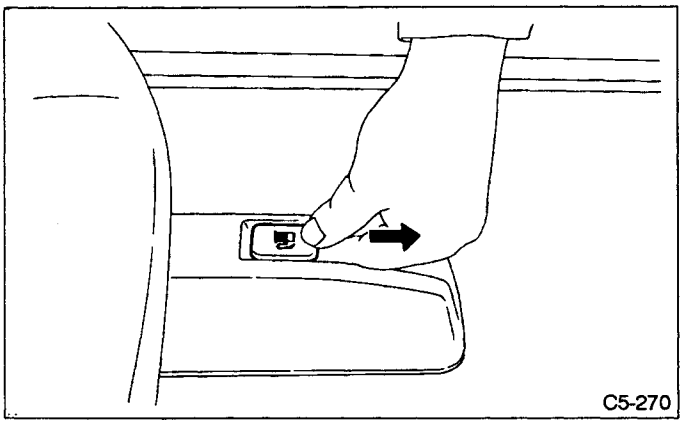

Fig. 132

7) Unhook side face of opener cover from pawls using tool as illustrated, and remove opener cover.

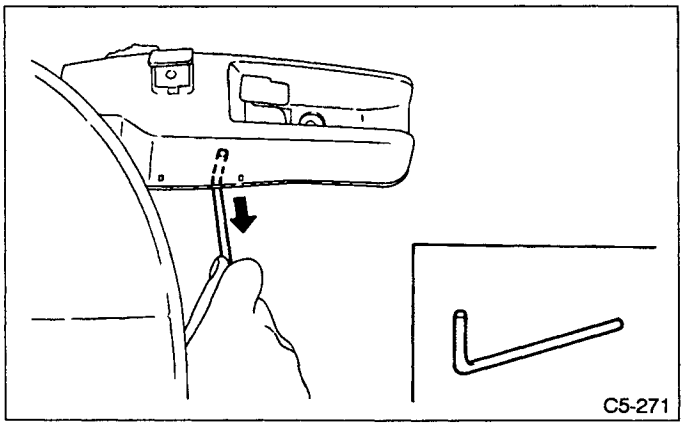

Fig. 133

8) Remove side sill cover (LWR).

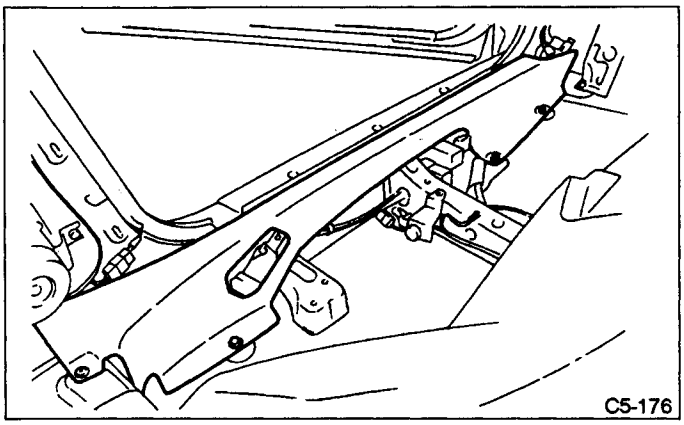

Fig. 134

9) Detach pull handle ASSY by removing screws and nut, and then disconnect cable.
10) Remove cable from clips and take it out.

B: INSTALLATION

Installation is in the reverse order of removal.
a. When installing cover to pull handle assembly, observe the following:
- **Engage pull handle assembly pawls firmly.**

b. After installing opener cable, ensure it moves smoothly.
c. Apply a coat of grease to the rotary section of hinges and contact surfaces of torsion bars.
d. Apply grease to sliding surfaces of lock ASSY and striker.

C: ADJUSTMENT

1. TRUNK LID

1) Adjust fitting of trunk lid by removing gas stay.
2) To adjust left-right lid positioning, loosen bolts which hold trunk lid to hinges.
3) To adjust up-down lid alignment, place washer(s) between trunk lid and hinges or move trunk lock ASSY up or down.

3. Repair Instructions for Trunk Lid

1. GENERAL PRECAUTIONS DURING REPAIR

1) Protectors
(1) When performing repairs, be sure to wear goggles, respirator, and gloves. Also wear working clothes, working cap and safety shoes.
(2) When sanding with sander, be sure to wear respirator and goggles.
(3) When handling resin, hardener, putty, acetone and other solvents, and glass mat, be sure to wear rubber gloves.
2) Working environment
(1) Always pay attention to provide adequate ventilation.
(2) Polyester resin, hardener, putty and solvents are combustible materials. Be sure to keep fire away from work area.
(3) Keep combustible substances apart from working site because resin generates heat when hardening. After completing work, put remaining resin (combined with hardener) in water-filled can, and dispose of after making sure that it has cooled down sufficiently.

2. HOW TO USE MATERIALS (POLYESTER RESIN, HARDENER, GLASS MAT

1) Prepare polyester resin and hardener as per directions using only the amounts specified. Note that these materials will deteriorate when exposed to air for a long time. Use within three months after unsealing.
☆2) Store resin, hardener, putty and solvents in a location where temperatures will not rise above 30°C (86°F).
3) Stir polyester resin well before using.
4) When unsealing polyester resin, hardener or solvent can, pay attention to avoid splashing.
☆5) Never attempt to mix metal material (such as cobalt), acid or alkali with hardener.
6) Mix polyester resin and hardener only by amount needed.
7) Be sure to store acetone and other solvents in sealed containers.
8) Pay attention to keep resin or hardener from getting on working clothes. Wipe thoroughly with acetone or other solvent, then wash with soap, if a spill occurs.
If resin, hardener or solvent gets into eye, flush with clean running water for about 15 minutes, then consult eye doctor.
9) The hardening rate of polyester resin largely varies with ambient temperature. Be sure to mix specified amount of hardener according to ambient temperature. Error in mixing amount may result in failure in hardening or too fast a rate of hardening.
10) Never add more than 3% hardener to polyester resin.
11) Immediately clean any tool used for mixing resin and hardener using acetone or other solvent before substances harden.
12) Wash any hardener container with water after use.
☆13) Never throw away resin into an ordinary garbage can. Be sure to dump resin in a location free from any combustible matter.

Pay special attention to the following points and items with ☆ mark.
a. Place "NO FIRE" or "NO SMOKING" signs around work site.
b. Never store large amounts of hardener by large amount. (Hardener is an organic peroxide, and extremely combustible.)
c. Never mix metal material with resin and hardener.

(Reference)
Relationship between changes in added amount (volume %) of hardener and usable time of polyester resin is shown below.
Example: Polyester resin: PS-660 (Hitachi-Kasei)
Hardener: Parmelic (Nihon-Yushi)

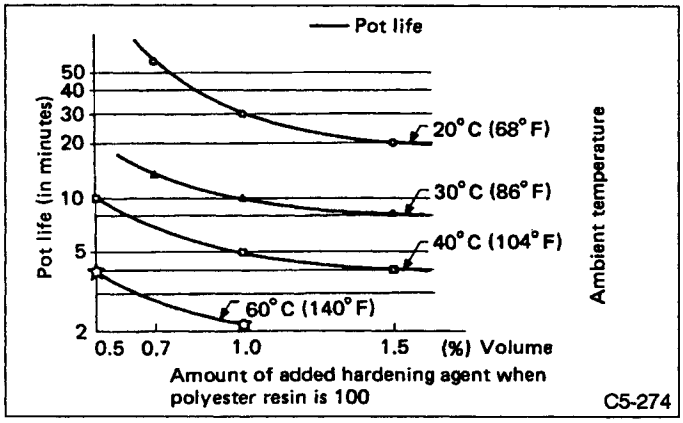

Fig. 135

3. REPAIR PROCESS

Table below shows recommended selection of process type depending on condition and degree of damage to be repaired. For further details of each repair process, refer to the Repair Method.

A: Hollow on surface
B: Chipped edge of FRP body
C: Crack or hole in FRP body
D: Small dent or minute cracks
E: Small scratches on coated surface (not reaching FRP body)

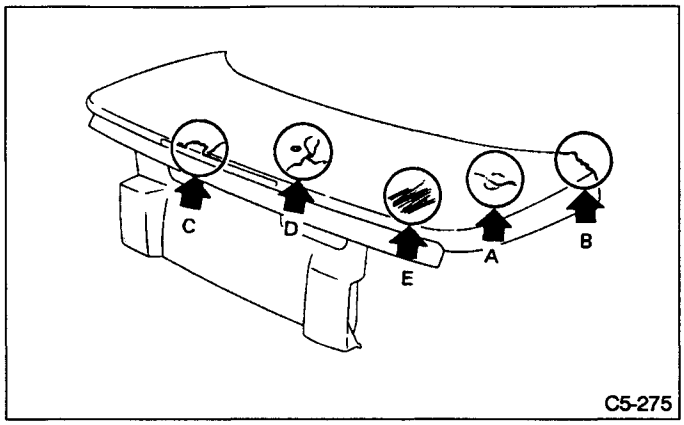

Fig. 136

●: Necessary
▲: To be performed if necessary
—: Unnecessary

	Process No.	Job contents	A	B	C	D	E
Repair process	①	Cutting	—	▲	●	—	—
	②	De-greasing	●	●	●	●	●
	③	Sanding (1)	—	●	●	—	—
	④	Washing (1)	—	●	●	—	—
	⑤	Masking	—	●	●	—	▲
	⑥	Modeling of trunk lid edge	—	—	●	—	—
	⑦	Preparation of reinforcement plate	—	●	●	—	—
	⑧	Installation of reinforcement plate	—	●	●	—	—
	⑨	Drying (1)	—	●	●	—	—
	⑩	Sanding (2)	●	—	●	●	—
	⑪	Washing (2)	●	—	●	●	—
	⑫	Preparation of reinforcement plate and putty filling	●	●	●	●	—
Paint process	⑬	Sanding (3)	●	●	●	●	●
	⑭	Washing (3)	●	●	●	●	●
	⑮	Under-coating	●	●	●	●	●
	⑯	Drying (2)	●	●	●	●	●
	⑰	Sanding (4)	●	●	●	●	●
	⑱	Washing (4)	●	●	●	●	●
	⑲	Finish-coating	●	●	●	●	●
	⑳	Drying (3)	●	●	●	●	●

If FRP body, inner panel or metal fitting mount of trunk lid is broken extensively, replace trunk lid since repair is difficult.

4. REPAIR MATERIALS

Examples of materials to be used during repair are shown below:

Putty ..... Polyester putty "ESTELACK" (Kashu)
Polyester resin ..... Unsaturated polyester resin "PS-660" (Hitachi-Kasei)
Hardener ..... "PARMEK N" (Nihon-Yushi)
Glass fiber ..... Glass mat or glass cloth (Fuji Fiber-glass)

5. REPAIR METHOD

1) Observe usage instructions for repair materials given in manual.
2) If small cracks are found on painted surface, remove paint layer and check if FRP body is cracked.

Process No.	Process name	Job contents
①	Cutting	[Large opening] Cut out hole a little wider than opening to be repaired using a jigsaw. 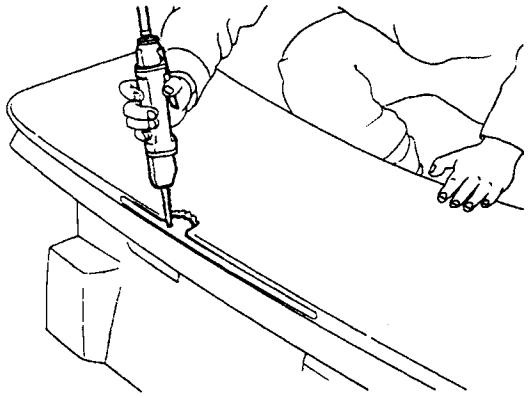 C5-276 *Fig. 137* [Broken edge] Obliquely cut a little inside the broken portion to be repaired. 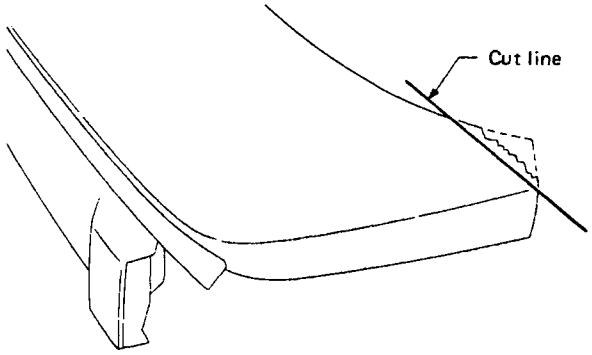 C5-277 *Fig. 138*
②	De-greasing	Using acetone-moistened soft cloth, lightly wipe surface to be repaired. 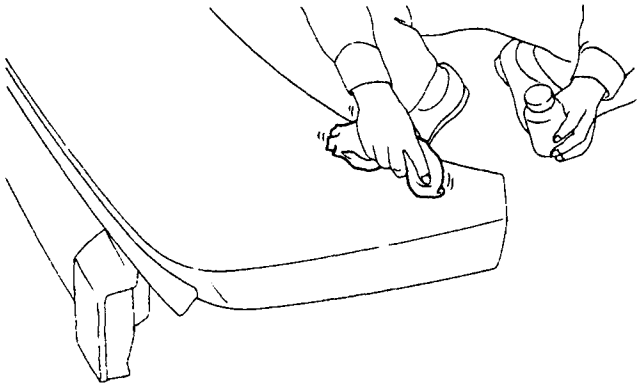 C5-278 *Fig. 139*

Process No.	Process name	Job contents
③	Sanding (1)	[Large opening] After cutting out a hole in process ①, bevel surface of edge of hole about 50 mm (1.97 in). Sand area around beveled surface using coarse No. 24 to 80 sand paper, then finish with fine #240 sand paper. 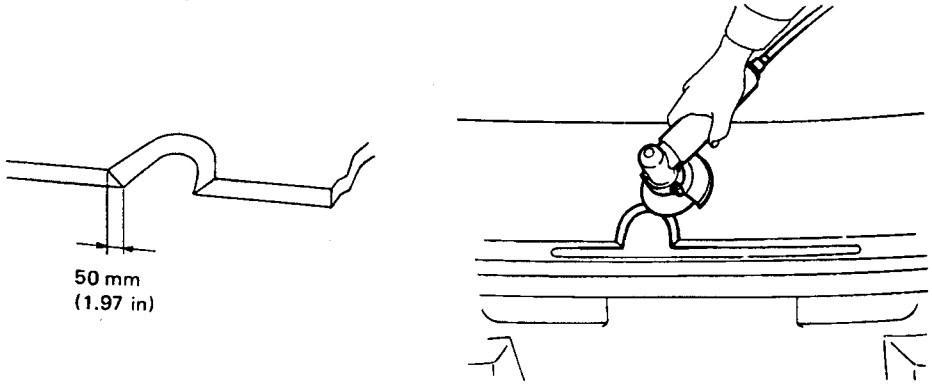 C5-279 *Fig. 140* [Broken edge] Sand area about 50 mm (1.97 in) from broken edge. (Inside surface only) 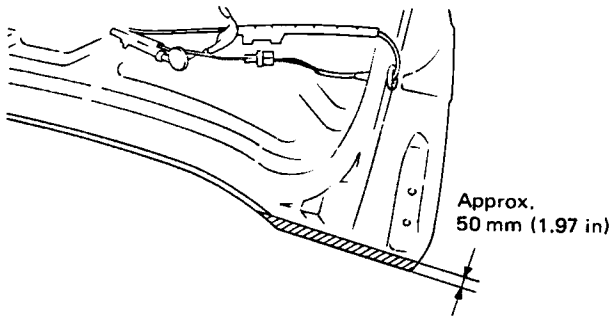 C5-280 *Fig. 141*
④	Washing (1)	Wipe off dirt and dust with dry cloth, and then lightly wipe outer and inner surfaces with acetone.
⑤	Masking	Mask around hole to be repaired. 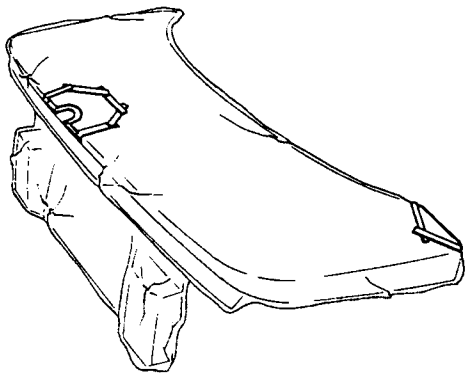 C5-281 *Fig. 142*

Process No.	Process name	Job contents
⑥	Modeling of trunk lid edge	Apply patch plate to unbroken trunk lid, and scribe outline of lid a little larger than broken portion. Scribe area to be overlapped with FRP about 50 mm (1.97 in) larger. 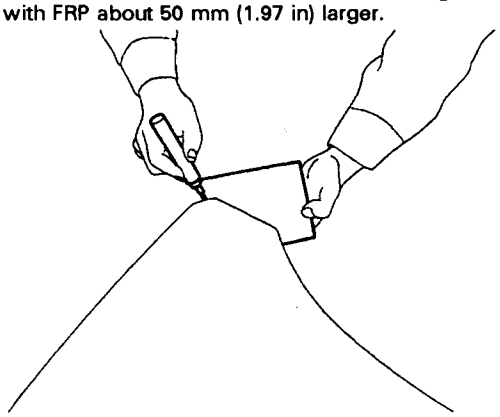 C5-282 *Fig. 143*
⑦	Preparation of reinforcement plate (glass mat impregnated with resin compound)	[Large hole] Cut glass mat piece a little larger than the portion to be repaired. Bore two holes in patch plate to pass thin wire through. To remove patch plate later, attach gummed cloth tape to plate. Put glass mat on patch plate. Mix resin and hardener thoroughly in cup, and apply mixture to glass mat by pressing with roller or spatula so that resin mixture will thoroughly soak into glass mat. Glass mat color will change from white to transparent as resin soaks into mat. 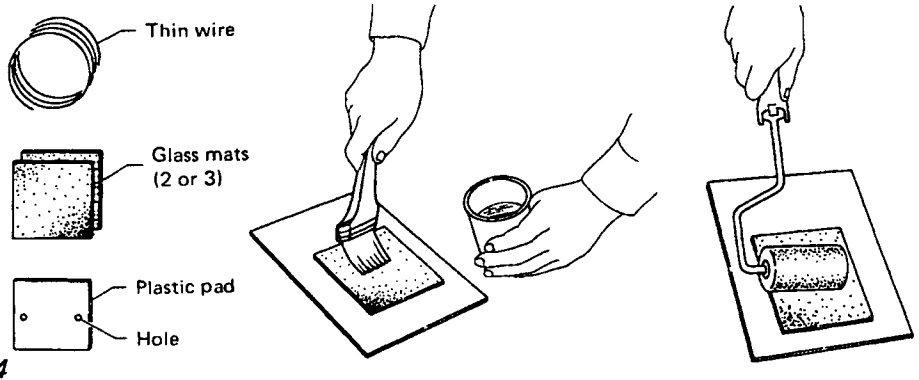 C5-283 *Fig. 144* [Broken edge] Place glass mat cut to size of scribed model on patch plate. Fix glass mat to patch plate using gummed cloth tape so that patch plate can be removed afterward. Impregnate resin mixture into glass mat. 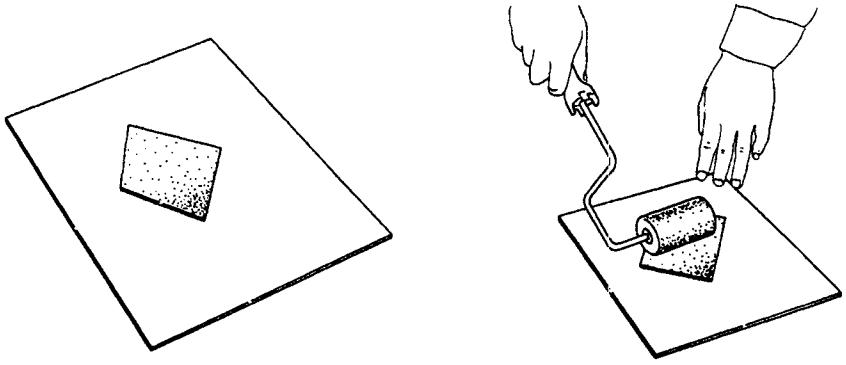 C5-284 *Fig. 145*

Process No.	Process name	Job contents
⑧	Installation of reinforcement plate	[Large hole] Press patch plate and glass mat to rear side, and fix patch plate using paper tape. If unable to reach rear side, use wire and pull out wire to front side and fix. 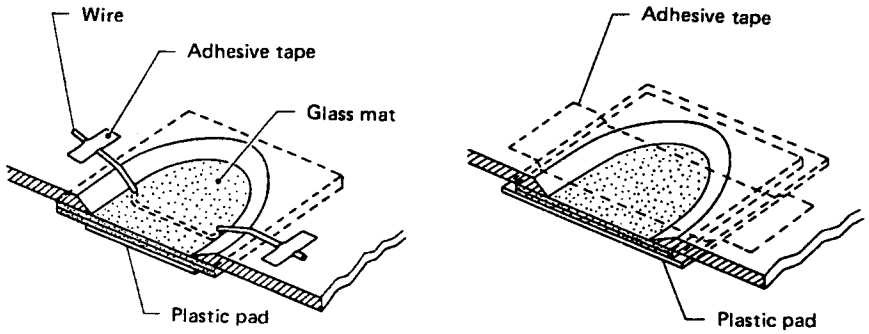 C5-285 *Fig. 146* [Broken edge] Place patch plate and glass mat prepared in ⑦ by giving a little overlap. 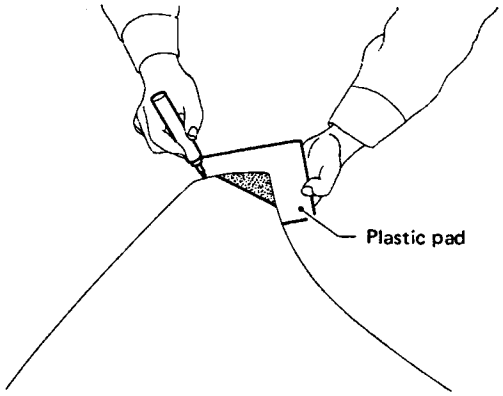 C5-286 *Fig. 147*
⑨	Drying (1)	Heat resin mixture using infrared lamp for thermo hardening. Temperature must be below 80°C (176°F) when using lamp. Mixture will harden in 30 to 45 minutes at 60°C (140°F). 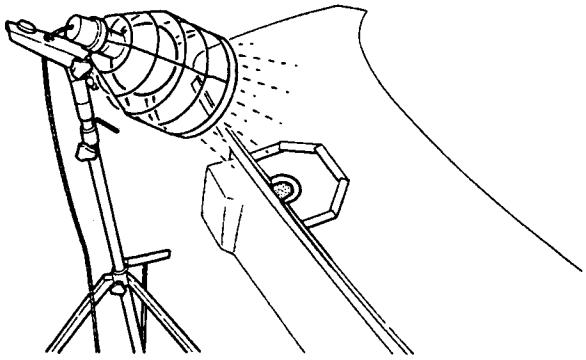 C5-287 *Fig. 148*

Process No.	Process name	Job contents
⑩	Sanding (2)	[Broken edge] After fully hardened, remove patch plate. Sand repaired surface with coarse No. 24 to 120 sand paper. Excessively thick resin at body overlapping portion may impair normal closing of trunk. Reduce resin thickness as necessary using sand paper. 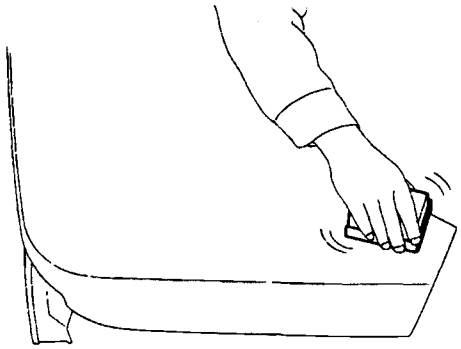 C5-288 *Fig. 149* [Hollow][Dent or minute cracks] Sand with coarse #24 to 120 sand paper. 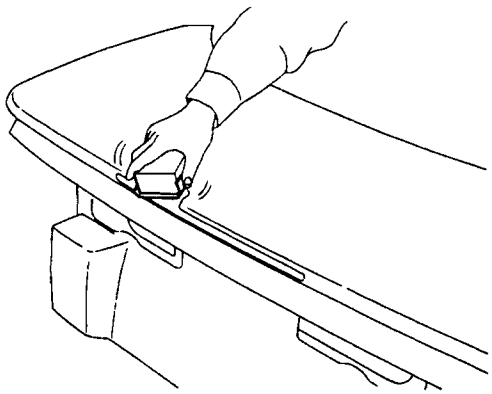 C5-289 *Fig. 150*
⑪	Washing (2)	Same as "Washing (1)"

Process No.	Process name	Job contents
⑫	Preparation of reinforcement plate (glass mat impregnated with resin mixture) and putty filling	[Large hole] Fully impregnate resin into glass mat using roller or spatula in similar manner as process ⑦. Place glass mat on hollowed portion, and press with roller or spatula for complete adhesion while preventing air bubbles from forming. If hollow can be repaired by simply filling with putty, apply putty to hollowed portion with spatula, taking care not to form air bubbles. After applying, harden resin using infrared lamp. Keep temperature below 80°C (176°F) when using lamp. Resin will harden in 30 to 45 minutes at 60°C (140°F). 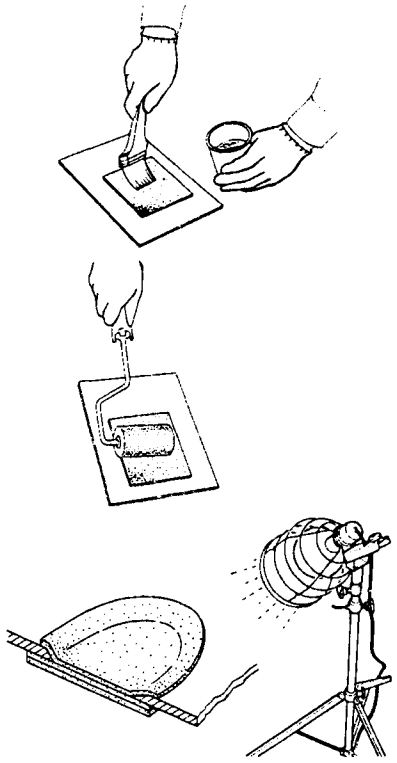 C5-290 *Fig. 151*

Process No.	Process name	Job contents
⑫ continued	Preparation of reinforcement plate (glass mat impregnated with resin mixture) and putty filling	[Broken edge] Apply putty to broken portion of trunk lid and form contour using spatula. Harden resin mixture using infrared lamp. Keep temperature below 80°C (176°F) when using lamp. Resin will harden in 30 to 45 minutes at 60°C (140°F). 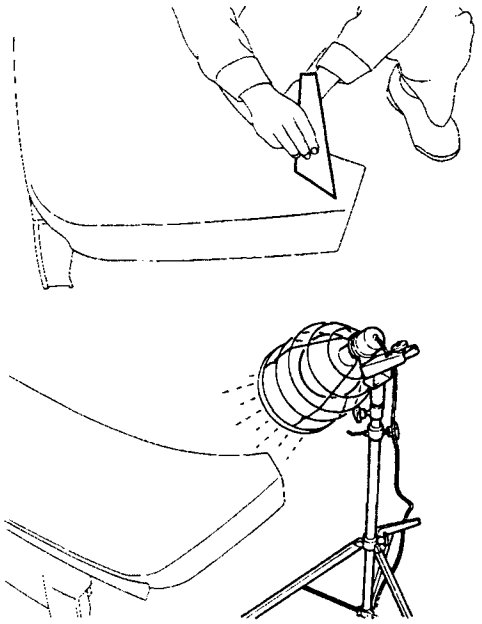 C5-291 *Fig. 152* [Hollow, dent, minute cracks] Apply putty to hollowed portion, dent, or cracked portion. After applying, harden resin using infrared lamp. Keep temperature below 80°C (176°F) when using lamp. Resin will harden in 30 to 45 minutes at 60°C (140°F). 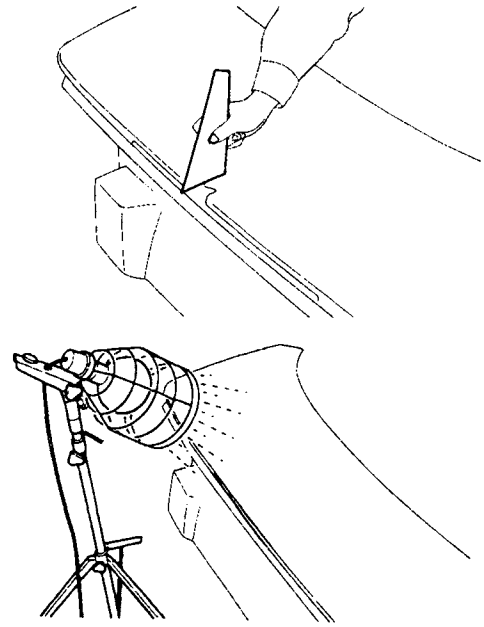 C5-292 *Fig. 153*

Process No.	Process name	Job contents
⑬	Sanding (3)	Sand surface using No. 180 to 320 sand paper, then finish with No. 400 to 500 sand paper.
⑭	Washing (3)	Same as "Washing (1)"
⑮	Undercoating	Perform coating in the same manner as iron plate coating.
⑯	Drying (2)	Bake paint in the same manner as iron plate coating.
⑰	Sanding (4)	After complete hardening of paint, finish surface with No. 400 to 500 sand paper.
⑱	Washing (4)	Same as "Washing (1)"
⑲	Finish coating	Perform coating in the same manner as iron plate coating.
⑳	Drying (3)	Bake paint in the same manner as iron plate coating.

4. Fuel Flap

A: REMOVAL

1. FUEL FLAP

Remove bolts which hold hinge to car body, and detach fuel flap and hinge as a unit.

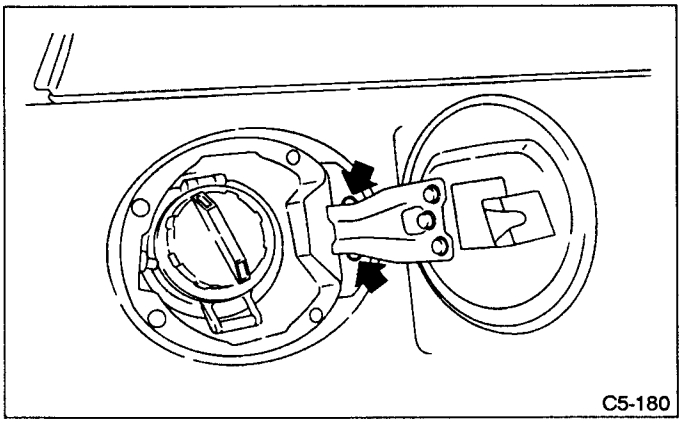

Fig. 154

2. FUEL FLAP OPENER

1) Remove trims.

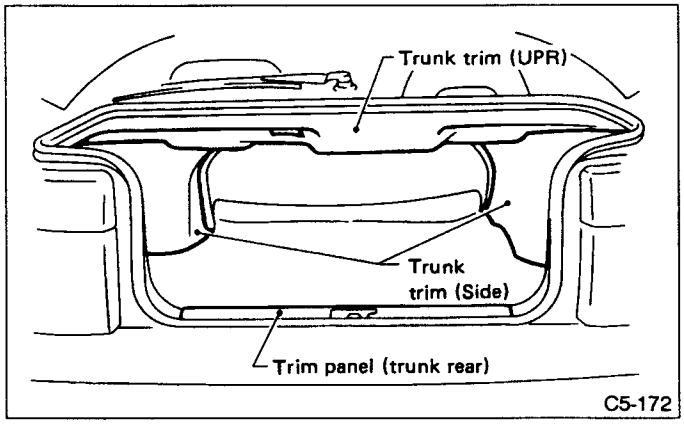

Fig. 155

2) Detach fuel lock holder by turning it.

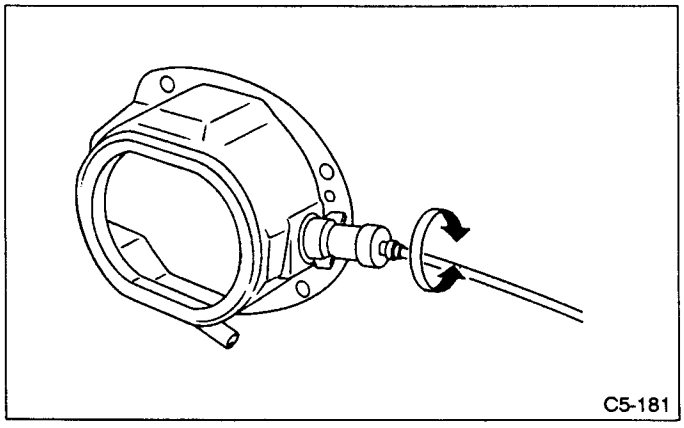

Fig. 156

3) Remove cable from clips.
4) Remove driver's seat, rear seat cushion, rear quarter trim and side sill cover (UPR).

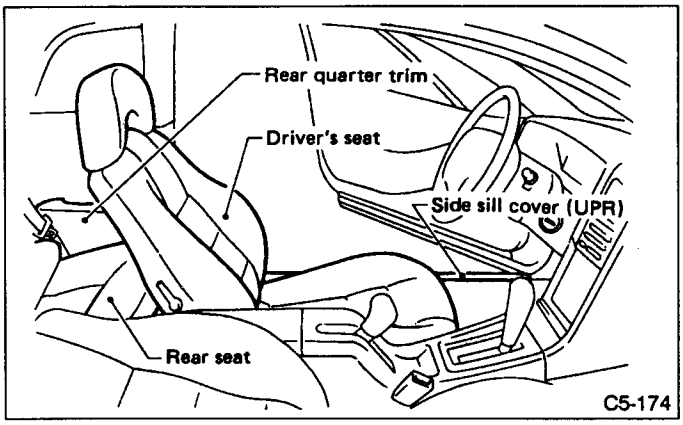

Fig. 157

5) Draw trunk lid knob by holding its root so as to prevent bending.
Or, hook lower portion of knob using tool as illustrated.
Prevent grease from getting on trunk lid knob.

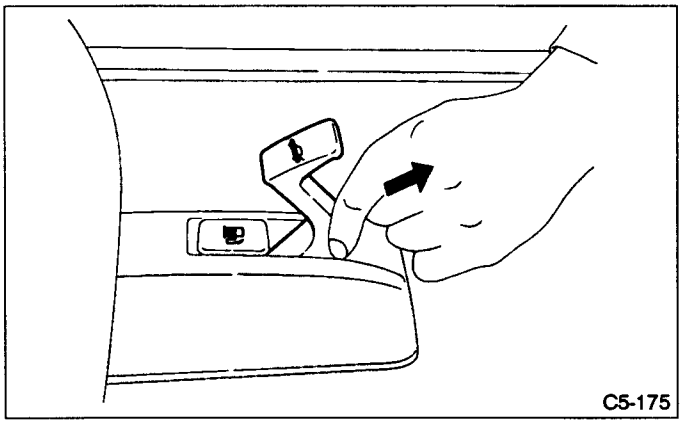

Fig. 158

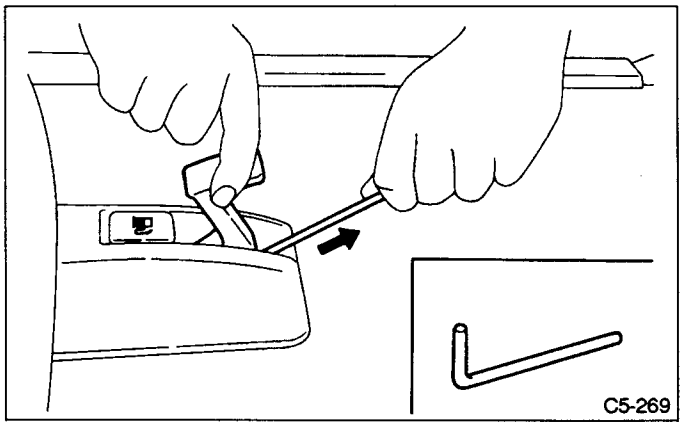

Fig. 159

6) Remove fuel flap knob by pushing out it.
Prevent grease from getting on knob.

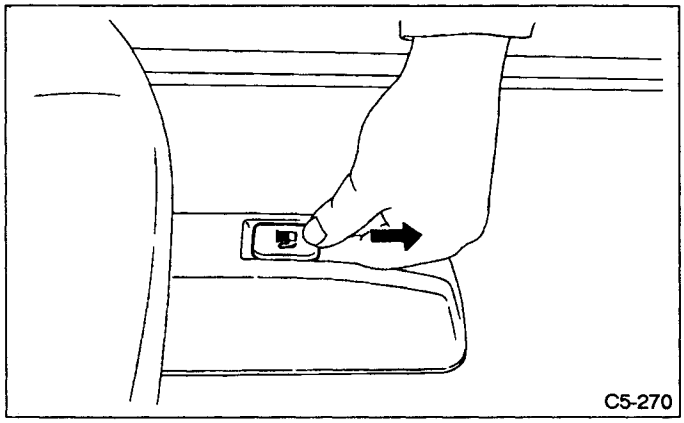

Fig. 160

7) Detach side face of opener cover using tool as illustrated, and remove cover.

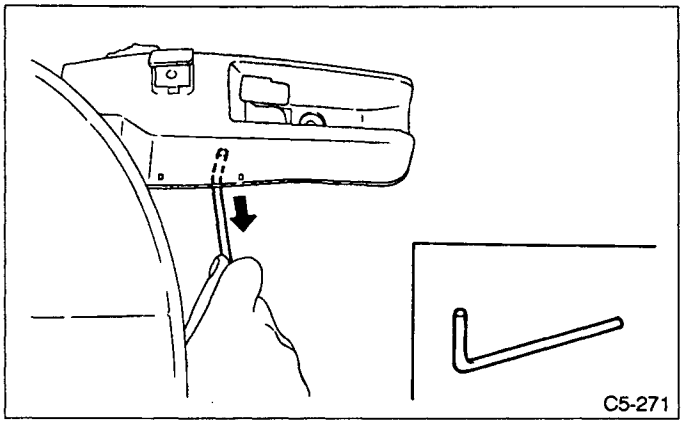

Fig. 161

8) Remove side sill cover (LWR).

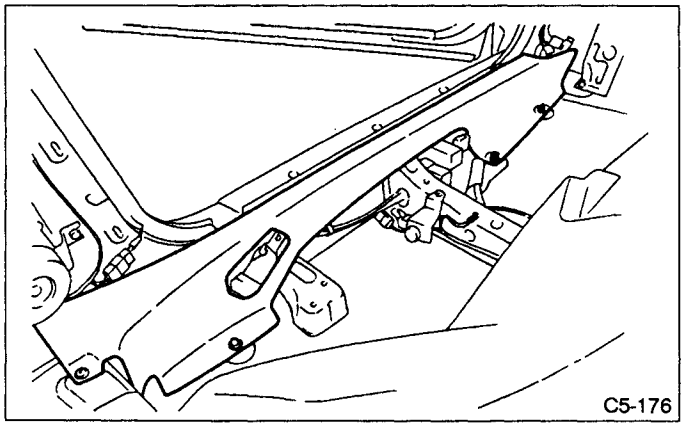

Fig. 162

B: INSTALLATION

Installation is in the reverse order of removal.
a. When installing cover to pull handle assembly, observe the following:
- **Engage pull handle assembly pawls firmly.**

b. Make sure the clearance between fuel flap and car body is equal at all points.
c. After installing opener cable, ensure it moves smoothly.

5. Front Bumper AIRBAG

Supplemental Restraint System "Airbag"

Airbag system wiring harness is routed near the front bumper.

a. All Airbag system wiring harness and connectors are colored yellow. Do not use electrical test equipment on these circuit.

b. Be carefull not to damage Airbag system wiring harness when servicing the front bumper.

A: REMOVAL

1) Lift up the car.
2) Remove under cover.
3) Detach front side of mud guard.

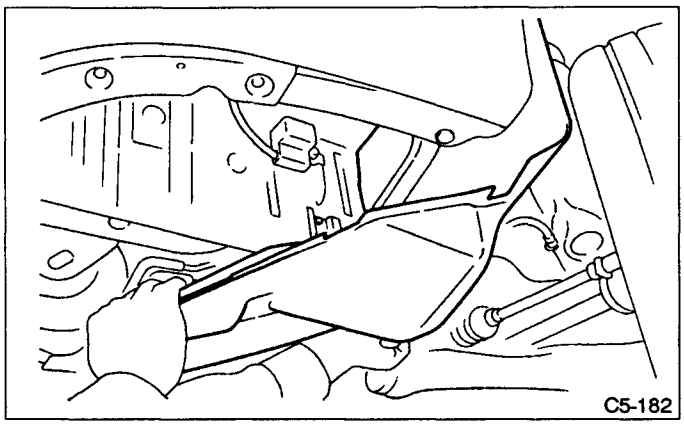

Fig. 163

4) Remove bolt from side of bumper.

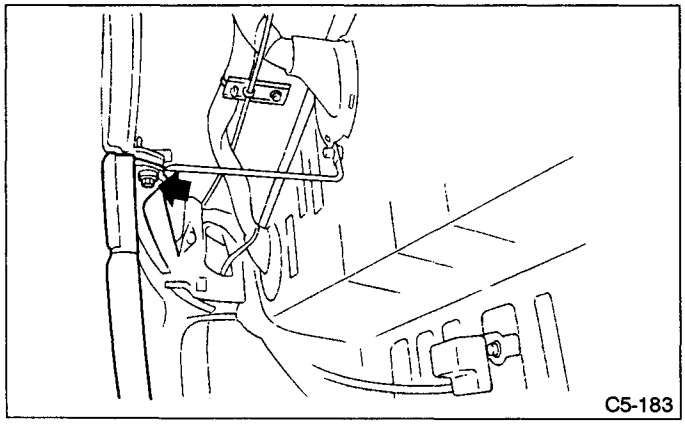

Fig. 164

5) Remove side stay from side stay bracket.

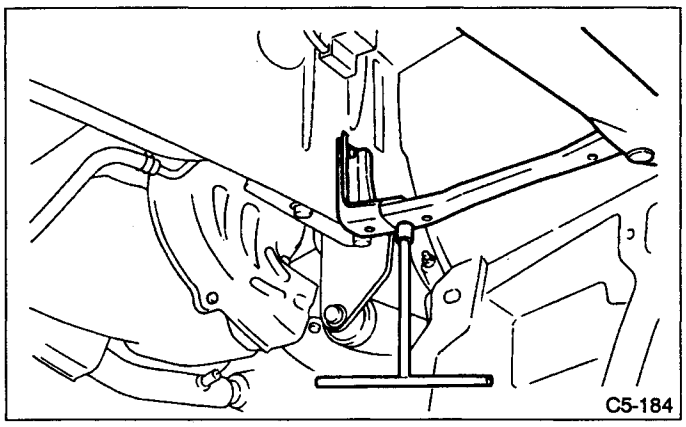

Fig. 165

6) Remove bolts securing lower side of bumper face to body.

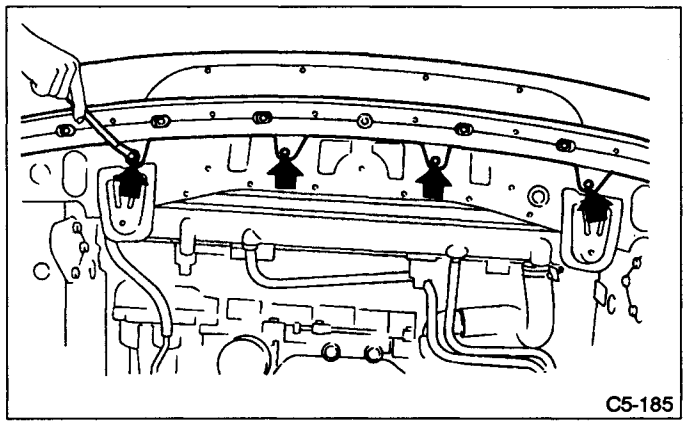

Fig. 166

7) Remove front combination light.
8) Remove bolt from side of bumper.

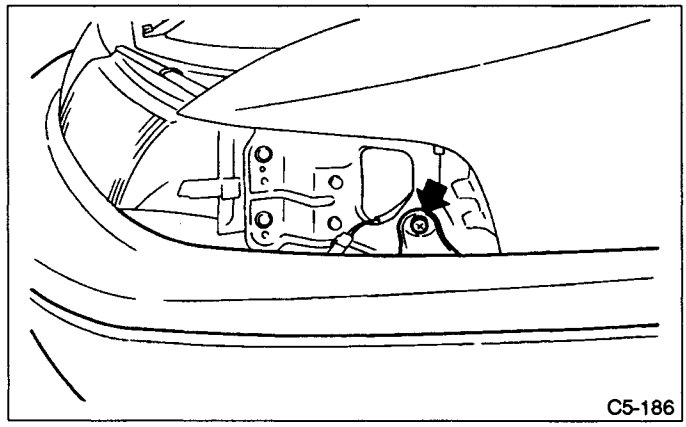

Fig. 167

9) Remove canister from bracket (right side only).
10) Remove bolts (engine compartment side) from bumper stays.

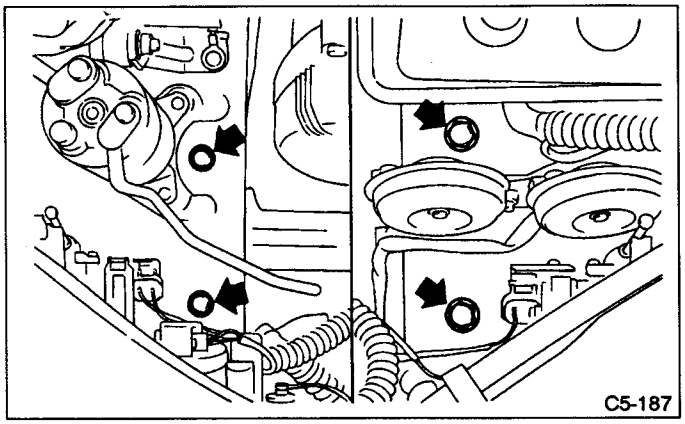

Fig. 168

11) Remove bumper ASSY.

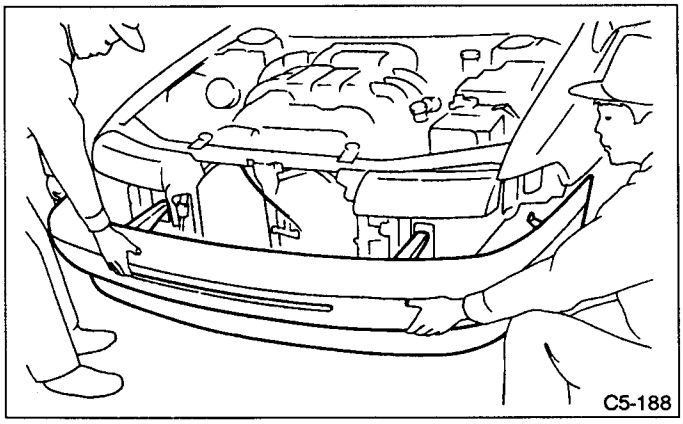

Fig. 169

B: INSTALLATION

To install the front bumper, reverse the above removal procedures.

a. Be extremely careful to prevent scratches on bumper face as it is made of resin.

b. Be careful not to scratch the body when removing or installing the bumper.

c. Pins are provided on body side to facilitate installation of front bumper.

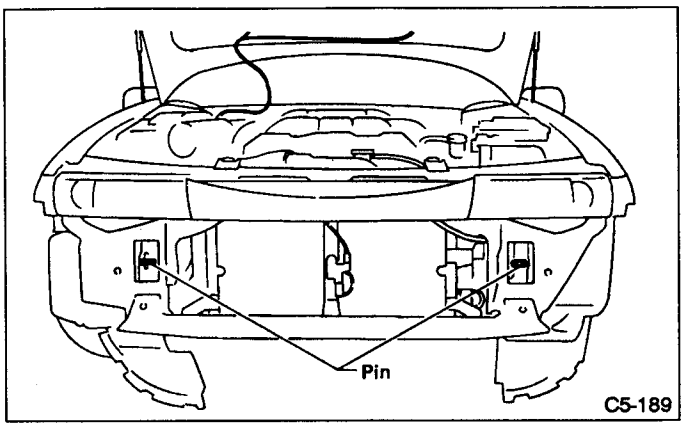

Fig. 170

6. Rear Bumper

A: REMOVAL

1) Lift up the car.
Please balance weights, etc in the trunk compartment.
2) Remove rear side of mud guard.

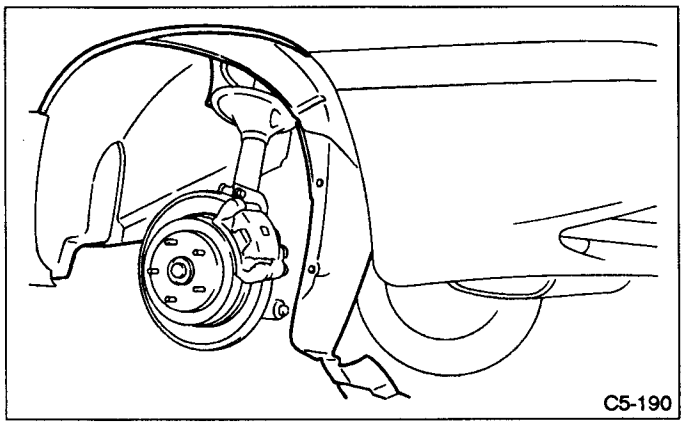

Fig. 171

3) Remove bolt from side of bumper.

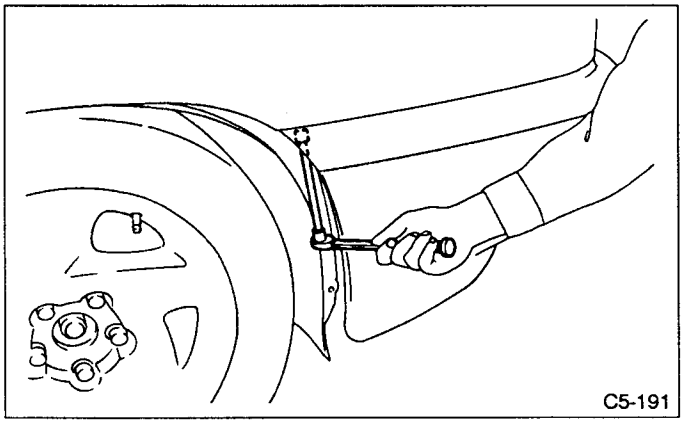

Fig. 172

4) Remove bracket (side LWR) from car body.

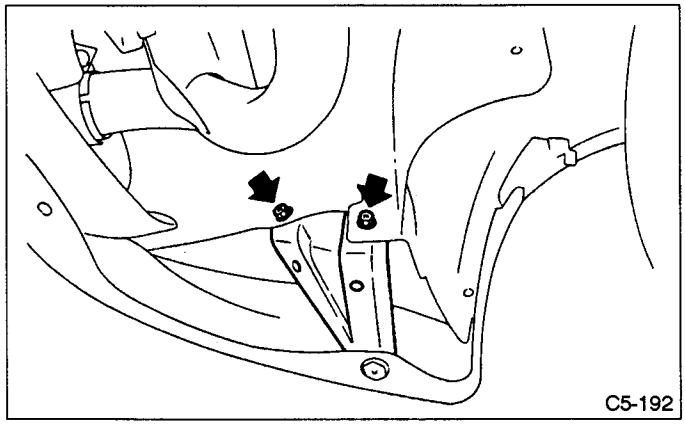

Fig. 173

5) Remove trim panel (trunk rear), and detach rear side of trunk trim (side).

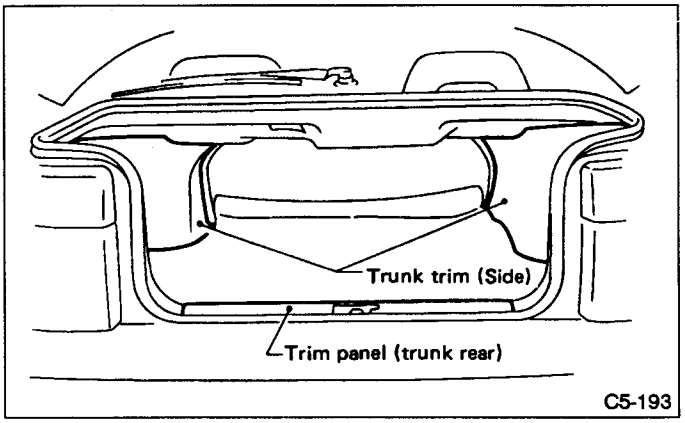

Fig. 174

6) Remove rear wiper washer tank (right side only).
7) Remove nut from side of bumper.

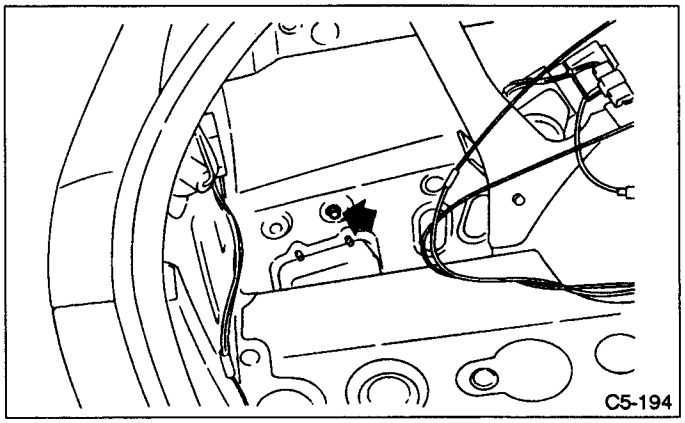

Fig. 175

8) Detach cap and remove bolts from bumper stays.

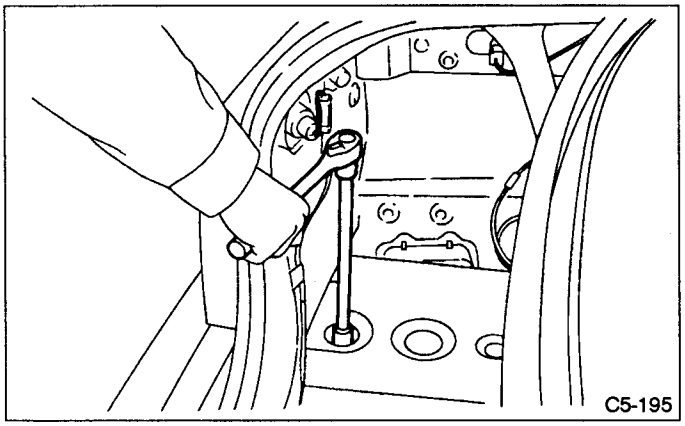

Fig. 176

9) Pull out bumper side mounting bolt from body.

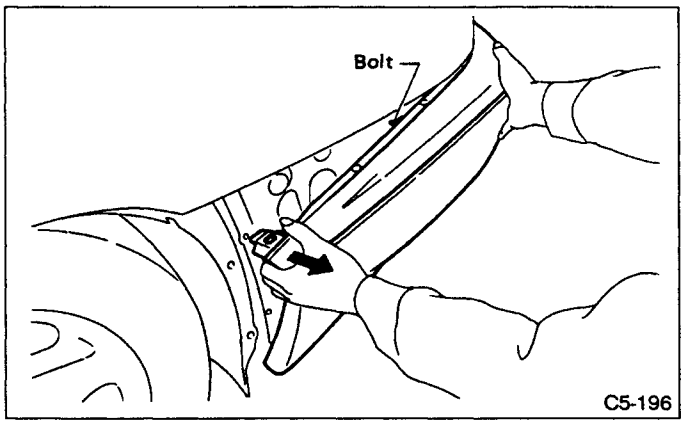

Fig. 177

10) Slightly lift up bumper to disengage hook (provided on top of stay) from body, and take out bumper.

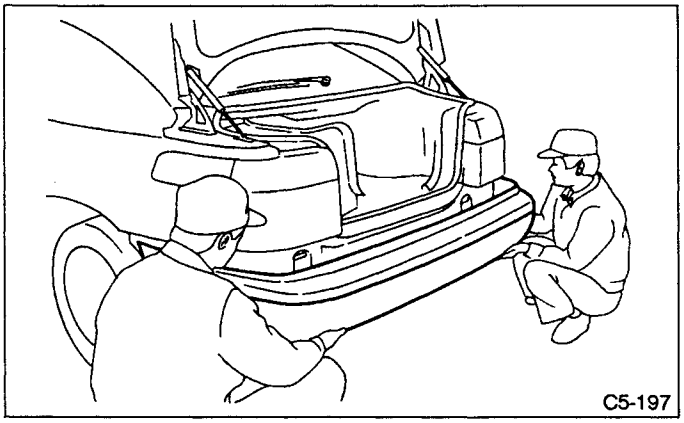

Fig. 178

B: INSTALLATION

To install the rear bumper, reverse the above removal procedures.

a. Be extremely careful to prevent scratches on bumper face as it is made of resin.

b. Be careful not to scratch the body when removing or installing bumper.

c. To facilitate installation of rear bumper, attach hook (located at stay) to body panel.

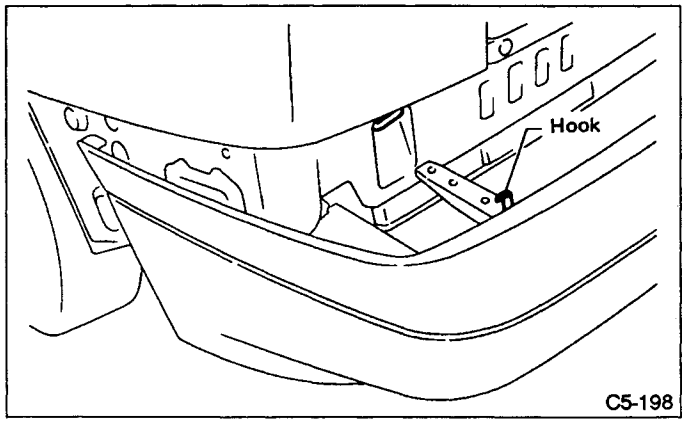

Fig. 179

W SERVICE PROCEDURE

7. Side Garnish

A: REMOVAL

1. DOOR SIDE GARNISH

1) Remove door trim.
2) Remove three nuts.

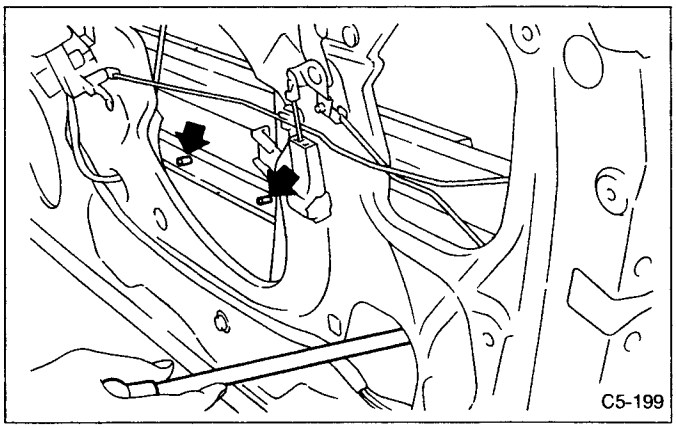

Fig. 7

3) Remove clip by pulling garnish.

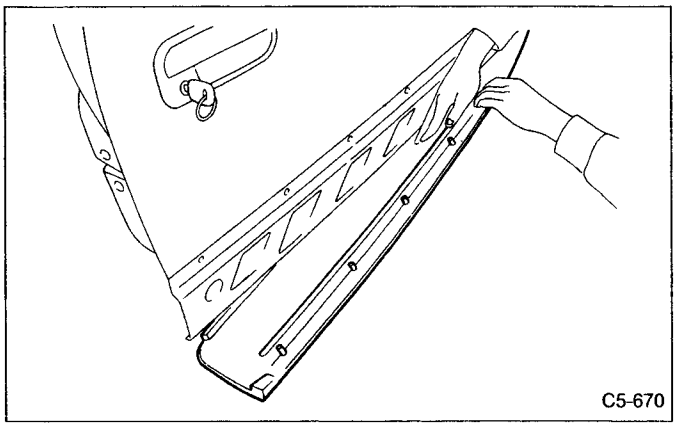

Fig. 8

2. FRONT SIDE GARNISH

1) Remove screws and bolts.

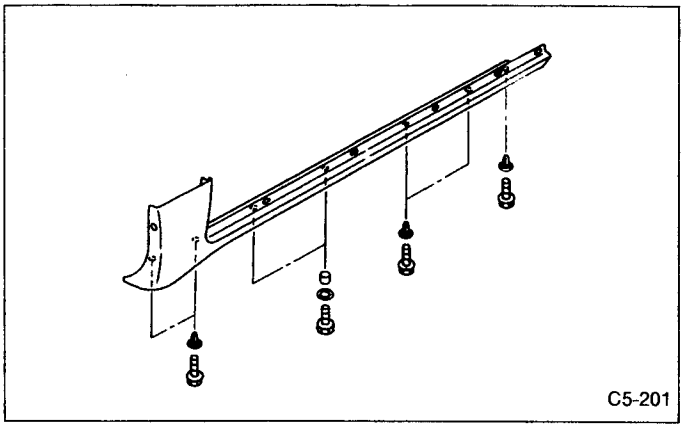

Fig. 9

2) Remove retainer.

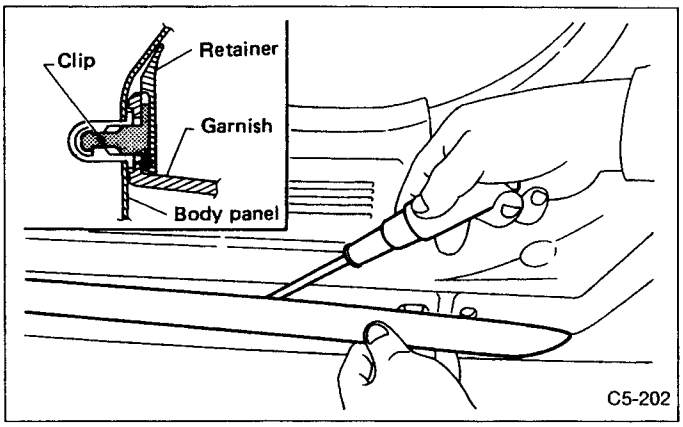

Fig. 10

3) Remove clips.

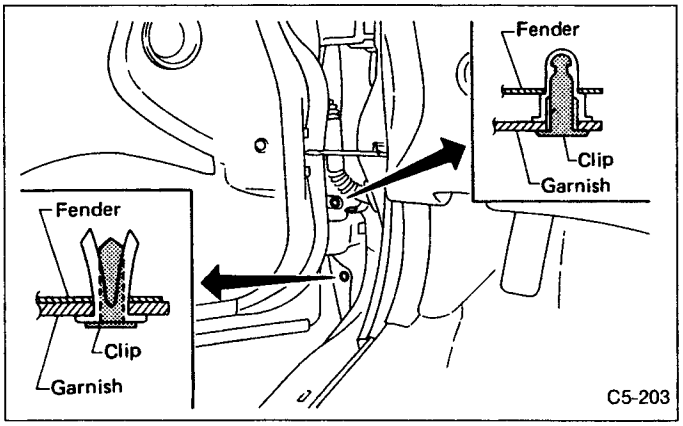

Fig. 11

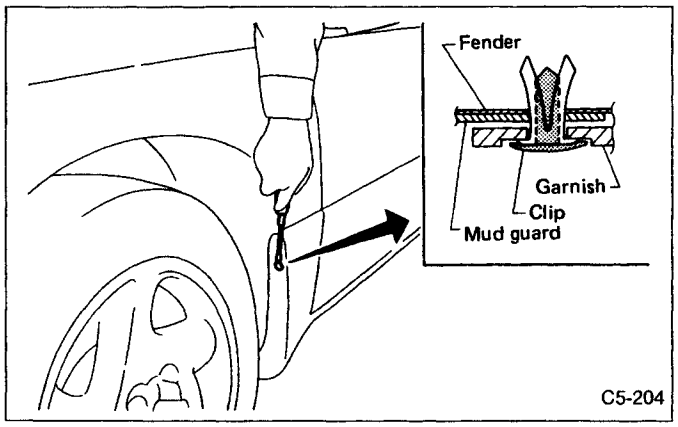

Fig. 12

4) Remove clip by pulling garnish, and then detach garnish.

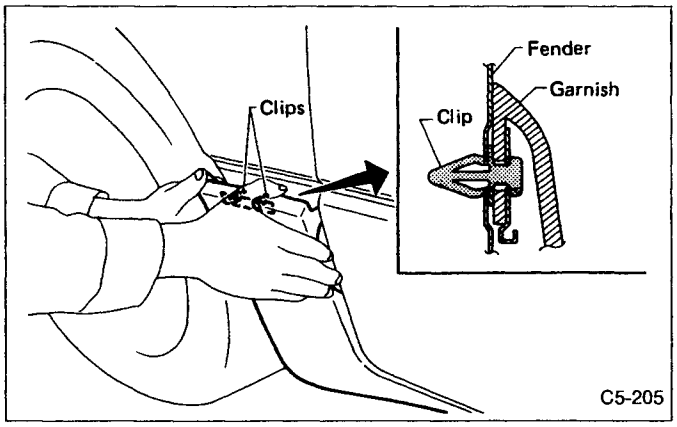

Fig. 13

3. REAR SIDE GARNISH

1) Remove screws and bolts.

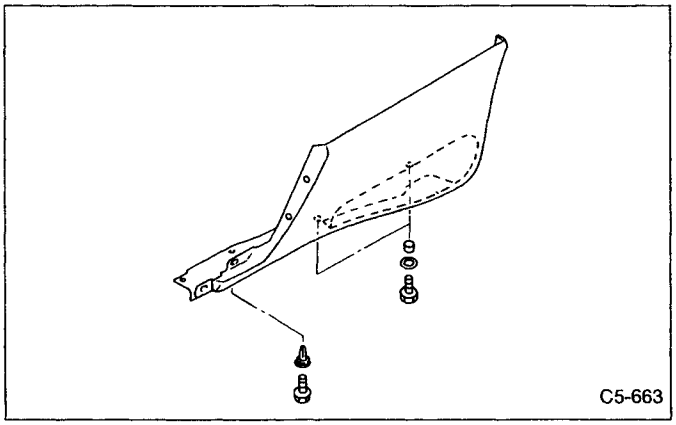

Fig. 14

2) Remove rear quarter trim.
3) Remove motor ASSY for automatic shoulder belt.
4) Remove nuts.

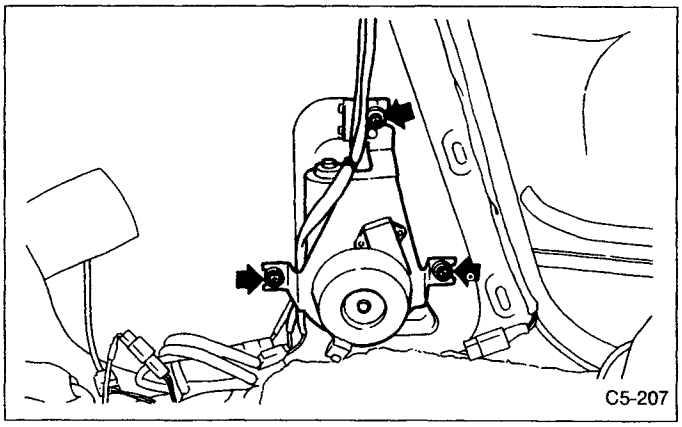

Fig. 15

5) Remove clips.

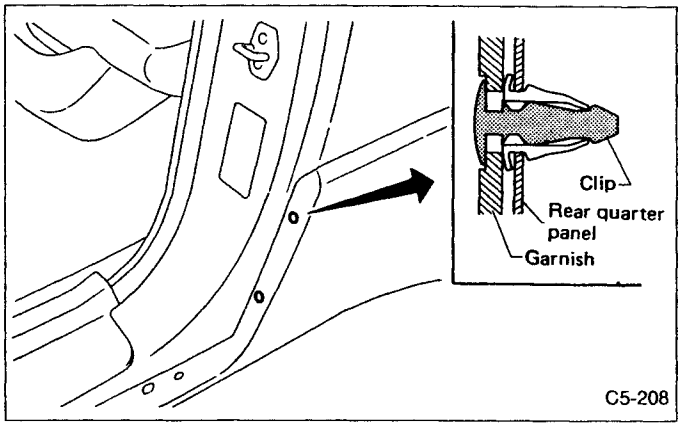

Fig. 16

6) Remove clip by turning it from inside of compartment.

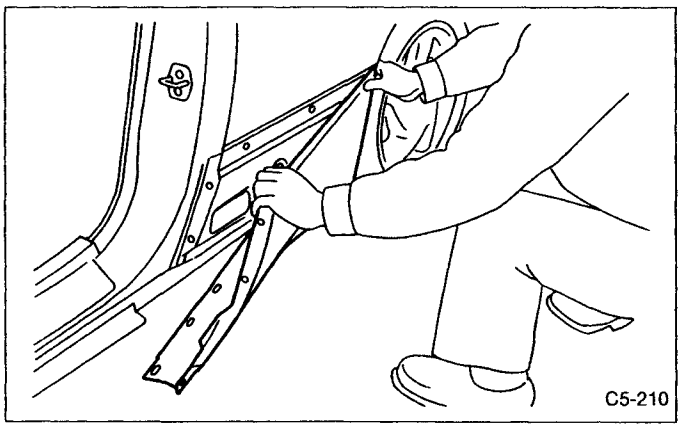

Fig. 17

7) Move garnish rearward, and pull pin out from rear arch, then remove garnish.

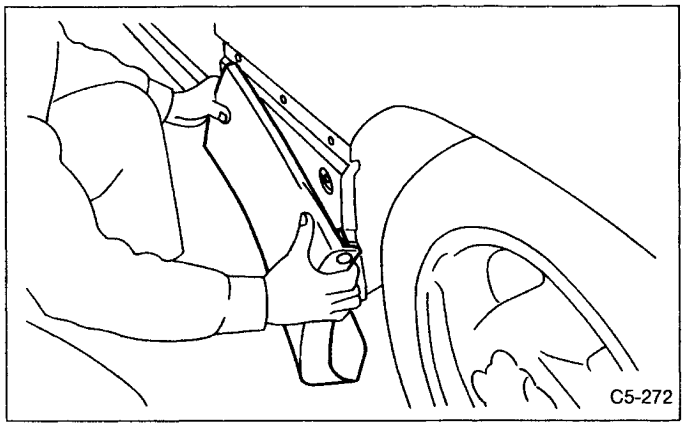

Fig. 18

B: INSTALLATION

Installation is in the reverse order of removal.
Ensure door side garnish is installed as shown in figure below.

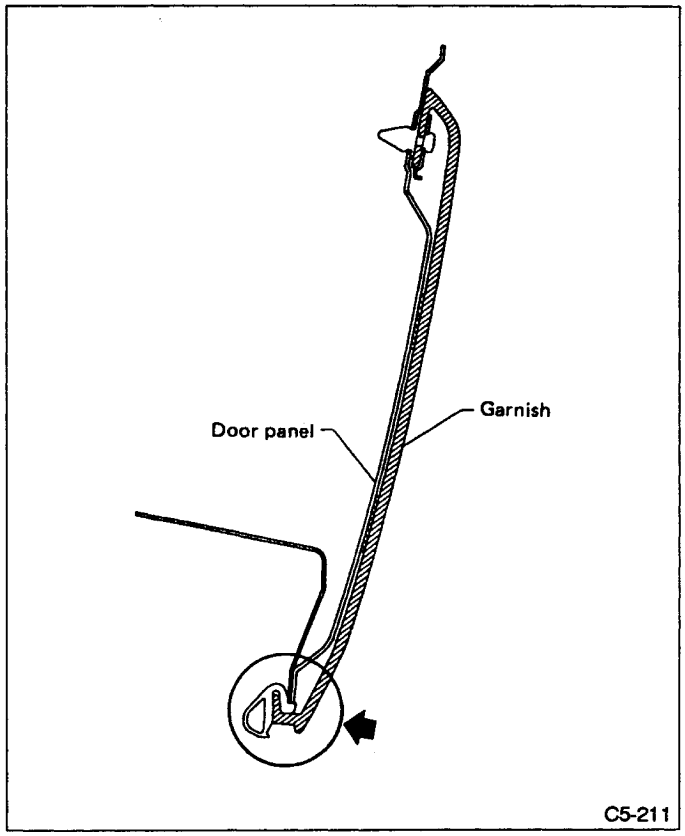

Fig. 193

8. Coating Method for PP Bumper and Side Garnish

PROCESS STEPS

Process No.	Process name	Job contents	
1	Bumper mounting	Set bumper on paint worktable if required. Use paint worktable conforming to inner shape of bumper when possible.	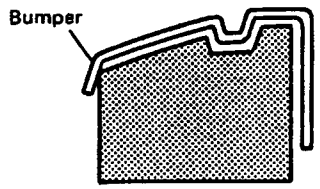 Set bumper section B5-302 *Fig. 194*
2	Masking	Mask specified part (black base) with masking tape. Use masking tape for PP (example, Nichiban No. 533, etc.). For details, see the following figures.	
3	Degreasing, cleaning	Clean all parts to be painted with white gasoline, normal alcohol, etc. to remove dirt, oil, fat, etc.	
4	Primer paint	Apply primer one to all parts to be painted, using air gun. Use primer (clear).	
5	Drying	Dry at normal temperature [10 to 15 min. at 20°C (68°F)]. In half-dried condition, PP primer paint is dissolved by solvent, e.g. thinner, etc. Therefore, if dust or dirt must be removed, use ordinary alcohol, etc.	
6	Top coat paint	Solid color	Metallic color
		Use section (block) paint for top coat. • Paint in use (for each color) Solid paint Hardener PB Thinner T-301 • Mixing ratio: Main agent vs. hardener = 4 : 1 • Viscosity: 10 — 13 sec/20°C (68°F) • Film thickness: 35 — 45μ • Spraying pressure: 245 — 343 kPa (2.5 — 3.5 kg/cm², 36 — 50 psi)	← • Paint in use (for each color) Metallic paint Hardener PB Thinner T-306 • Mixing ratio: Main agent vs. hardener = 10 : 1 • Viscosity: 10 — 13 sec/20°C (68°F) • Film thickness: 15 — 20μ • Spraying pressure: 245 — 343 kPa (2.5 — 3.5 kg/cm², 36 — 50 psi)
7	Drying	Not required.	Dry at normal temperature [10 min. or more at 20°C (68°F)]. In half-dried condition, avoid dust, dirt.
8	Top coat (II)	Not required.	Apply a clear coat to parts with top coat (I), three times, at 5 — 7 minute intervals. • Paint in use Metallic paint Hardener PB Thinner T-301 • Mixing ratio: Clear vs. hardener = 6 : 1 • Viscosity: 14 — 16 sec/20°C (68°F) • Film thickness: 25 — 30μ • Spraying pressure: 245 — 343 kPa (2.5 — 3.5 kg/cm², 36 — 50 psi)
9	Drying	60°C (140°F), 60 min. or 80°C (176°F), 30 min. If higher than 80°C (176°F), PP may be deformed. Keep maximum temperature of 80°C (176°F).	
10	Inspection	Paint check.	
11	Masking removal	Remove masking in process No. 2.	

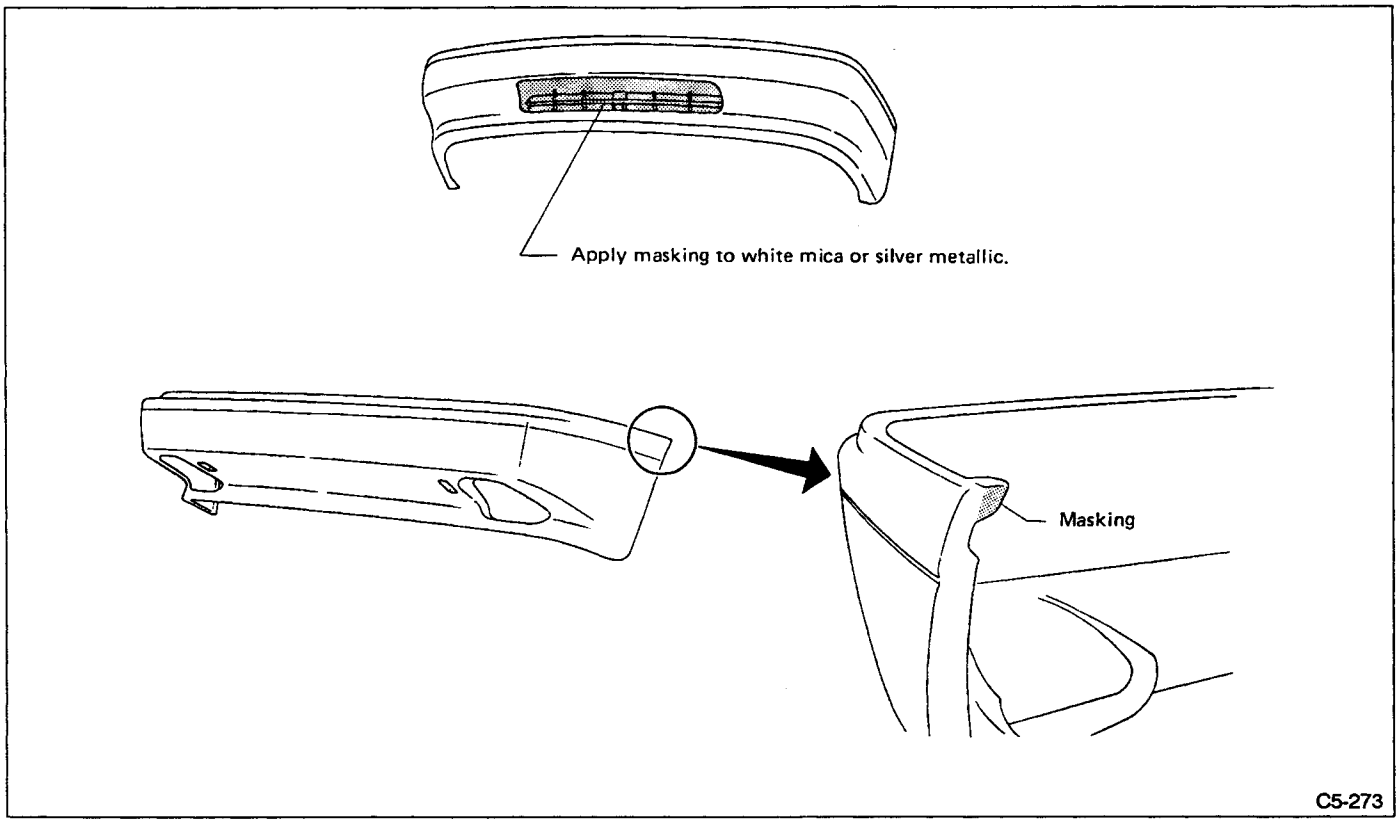
Apply masking to white mica or silver metallic.
Masking
C5-273

Fig. 195

9. Repair Instructions for Colored PP Bumper and Side Garnish

All PP bumpers are provided with a grained surface, and if the surface is damaged, it cannot normally be restored to its former condition. Damage limited to shallow scratches that cause only a change in the lustre of the base material or coating, can be almost fully restored. Before repairing a damaged area, explain this point to the customer and get an understanding about the matter.
Repair methods are outlined below, based on a classification of the extent of damage.

1. MINOR DAMAGE CAUSING ONLY A CHANGE IN THE LUSTRE OF THE BUMPER DUE TO A LIGHT TOUCH

Almost restorable.

<table>
<tr><th>Process No.</th><th>Process name</th><th colspan="2">Job contents</th></tr>
<tr><td>1</td><td>Cleaning</td><td colspan="2">Clean the area to be repaired using water.</td></tr>
<tr><td>2</td><td>Sanding</td><td colspan="2">Grind the repairing area with #500 sandpaper in a "feathering" motion.</td></tr>
<tr><td rowspan="3">3</td><td rowspan="3">Finish</td><td>Resin section</td><td>Coated section</td></tr>
<tr><td>Repeatedly apply wax to the affected area using a soft cloth (such as flannel). Recommended wax: NITTO KASEI Soft 99 TIRE WAX BLACK, or equivalent.</td><td rowspan="2">Perform either the same operation as for the resin section or process No. 18 and subsequent operations in the "(3)" section, depending on the degree and nature of damage.</td></tr>
<tr><td>Polish the waxed area with a clean cloth after 5 to 10 minutes.</td></tr>
</table>

2. DEEP DAMAGE CAUSED BY SCRATCHING FENCES, ETC.

A dent cannot be repaired but a whitened or swelled part can be removed.

<table>
<tr><th>Process No.</th><th>Process name</th><th colspan="2">Job contents</th></tr>
<tr><td>1</td><td>Cleaning</td><td colspan="2">Clean damaged area with water.</td></tr>
<tr><td>2</td><td>Removal of damaged area</td><td colspan="2">Cut off protruding area, if any, due to collision, using a putty knife.</td></tr>
<tr><td>3</td><td>Sanding</td><td colspan="2">Grind the affected area with #100 to #500 sandpaper.</td></tr>
<tr><td rowspan="2">4</td><td rowspan="2">Finish</td><td>Resin section</td><td>Coated section</td></tr>
<tr><td>Same as Process No. 3 in the "(1)" section.</td><td>Perform Process No. 12 and subsequent operations in the "(3)" section.</td></tr>
</table>

3. DEEP DAMAGE SUCH AS A BREAK OR HOLE THAT REQUIRES FILLING

Much of the peripheral grained surface must be sacrificed for repair, and the degree of restoration is not really worth the expense. (The surface, however, will become almost flush with adjacent areas.)

Recommended repair kit: PP Part Repair Kit (NRM)

Process No.	Process name	Job contents
1	Bumper removal	Remove bumper as required.
2	Part removal	Remove parts built into bumper as required.
3	Bumper placement	Place bumper on a paint worktable as required. It is recommended that contour of worktable accommodate internal shape of bumper. 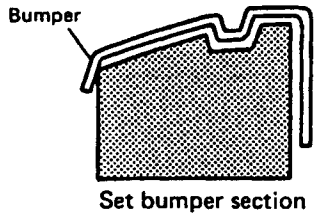 B5-302 *Fig. 196*
4	Surface preparation	Remove dust, oil, etc. from areas to be repaired and surrounding areas, using a suitable solvent (NRM No. 900 Precleno, white gasoline, or alcohol).
5	Cutting	If nature of damage is cracks or holes, cut a guide slit of 20 to 30 mm (0.79 to 1.18 in) in length along the crack or hole up to the bumper's base surface. Then, bevel or "vee-out" the affected area using a knife or grinder. 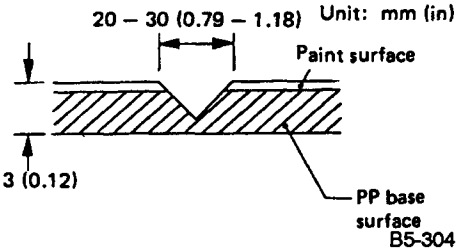 B5-304 *Fig. 197*
6	Sanding (I)	Grind beveled surface with sandpaper (#40 to #60) to smooth finish.
7	Cleaning	Clean the sanded surface with the same solvent as used in Process No. 4.
8	Temporary welding	Grind the side just opposite the beveled area with sandpaper (#40 to #60) and clean using a solvent. Temporarily spot-weld the side, using a PP welding rod and heater gun. 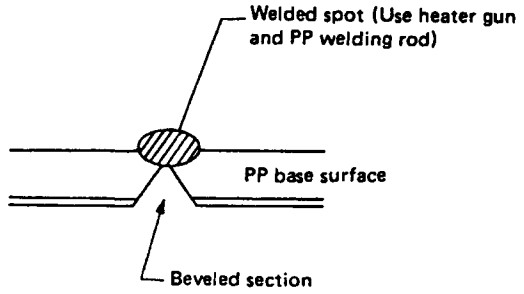 B5-305 *Fig. 198* **a. Do not melt welding rod until it flows out. This results in reduced strength.** **b. Leave the welded spot unattended until it cools completely.**

Process No.	Process name	Job contents
9	Welding	Using a heater gun and PP welding rod, weld the beveled spot while melting the rod and damaged area. 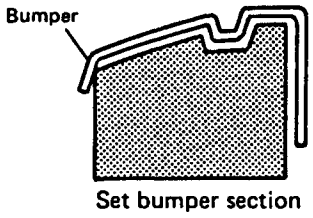 Set bumper section B5-302 *Fig. 199* **a. Melt the sections indicated by hatched area.** **b. Do not melt welding rod until it flows out, in order to provide strength.** **c. Always keep the heater gun 1 to 2 cm (0.4 to 0.8 in) away from the welding spot.** **d. Leave the welded spot unattended until it cools completely.**
10	Sanding (II)	Remove excess part of weld with a putty knife. If a drill or disc wheel is used instead of the knife, operate it at a rate lower than 1,500 rpm and grind the excess part little by little. A higher rpm will cause the PP substrate to melt from the heat. 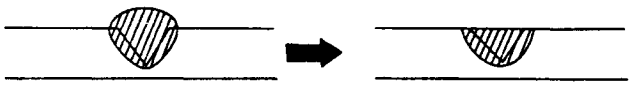 B5-307 *Fig. 200* Sand the welded spot smooth with #240 sandpaper.
11	Masking	Mask the black substrate section (as indicated in the figure), using masking tape. Recommended masking tape: Nichiban No. 533 or equivalent For details, see the figures showing the masking portions.
12	Cleaning/degreasing	Completely clean the entire coated area, using solvent similar to that used in Process No. 4.
13	Primer coating	Apply a coat of primer to the repaired surface and its surrounding areas. Mask these areas, if necessary. Recommended primer: No. 364 PP Primer **Be sure to apply one coat of primer at a spraying pressure of 245 to 343 kPa (2.5 to 3.5 kg/cm^2, 36 to 50 psi) with a spray gun.**
14	Leave unattended	Leave the repaired area unattended at 20°C (68°F) for 10 to 15 minutes until primer is half-dry. **If dirt or dust comes in contact with the coated area, wipe it off with a cloth dampened with alcohol. (Do not use thinner since the coated area tends to melt.)**

Process No.	Process name	Job contents	
15	Primer surfacer coating	Apply a coat of primer surfacer to the repaired area two or three times at an interval of 3 to 5 minutes. Recommended surfacer: • UPS 300 Flex Primer • No. 303 UPS 300 Exclusive hardener • NPS 725 Exclusive Reducer (thinner) • Mixing ratio: 2 : 1 (UPS 300: No. 303) • Viscosity: 12 — 14 sec/20°C (68°F) • Coated film thickness: 40 — 50μ	
16	Drying	Allow the coated surface to dry for 60 minutes at 20°C (68°F) [or 30 minutes at 60°C (140°F)].	
17	Sanding (III)	Sand the coated surface and its surrounding areas using #400 sandpaper and water.	
18	Cleaning/degreasing	Same as Process No. 12.	
19	Top coat (I)	Solid color	Metallic color
		Use a "block" coating method. • Recommended paint: Suncryl (SC) No. 307 Flex Hardener SC Reducer (thinner) • Mixing ratio: 3 : 1 (Suncryl: No. 307) • Viscosity: 11 — 13 sec/20°C (68°F) • Coated film thickness: 40 — 50μ • Spraying thickness: 245 — 343 kPa (2.5 — 3.5 kg/cm^2, 36 — 50 psi)	← ← ← ← • Coated film thickness: 20 — 30μ ←
20	Leave unattended	Not required.	Leave unattended at 20°C (68°F) for at least 10 minutes until the topcoated area is half-dry. **Be careful to keep dust or dirt from coming in contact with the affected area.**
21	Top coat (II)	Not required.	Apply a clear coat three times at an interval of 3 to 5 minutes. • Recommended paint: SC710 Overlay Clear No. 307 Flex Hardener SC Reducer (thinner) • Mixing ratio: 3 : 1 (SC710: No. 307) • Viscosity: 10 — 13 sec/20°C (68°F) • Coated film thickness: 20 — 30μ • Spraying pressure: 245 — 343 kPa (2.5 — 3.5 kg/cm^2, 36 — 50 psi)
22	Drying	Allow the coated surface to dry at 20°C (68°F) for two hours or 60°C (140°F) for 30 minutes. **Do not allow the temperature to exceed 80°C (176°F) since this will deform the PP substrate.**	
23	Inspection	Carefully check the condition of the repaired area.	
24	Masking removal	Remove masking tape applied in Process No. 11 and 13.	
25	Parts installation	Install parts on bumper in reverse order of removal.	
26	Bumper installation	Install bumper.	

10. Rear Quarter Garnish

A: REMOVAL

1) Remove clip at end of garnish.

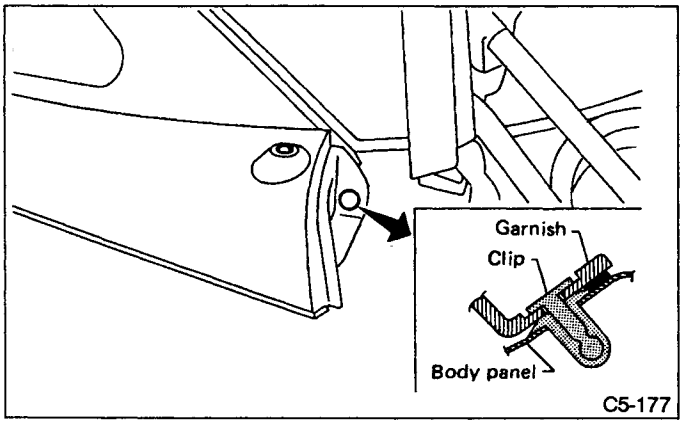

Fig. 201

2) Remove radio antenna holder (LH side only).

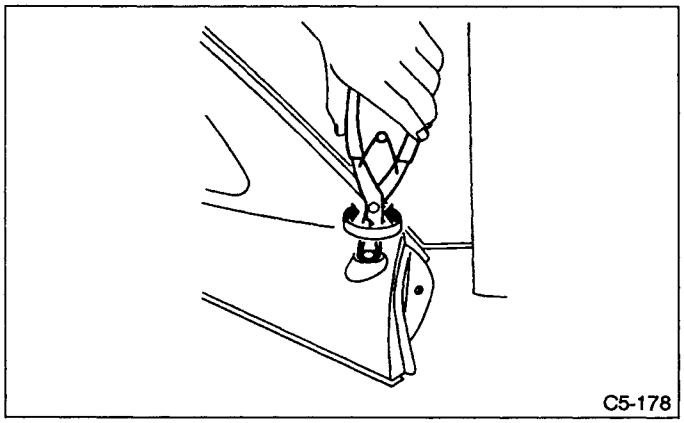

Fig. 202

3) Remove clip by lifting front end of garnish.

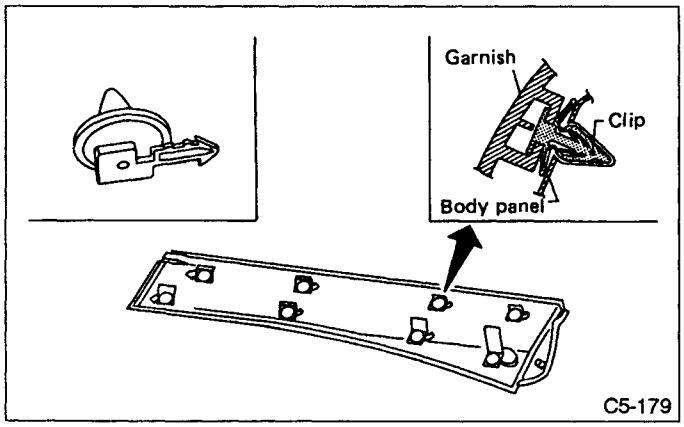

Fig. 203

B: INSTALLATION

Installation is in the reverse order of removal.

11. Front Fender AIRBAG

Supplemental Restraint System "Airbag"

Airbag system wiring harness is routed near the front fender.

a. All Airbag system wiring harness and connectors are colored yellow. Do not use electrical test equipment on these circuit.

b. Be carefull not to damage Airbag system wiring harness when servicing the front fender.

A: REMOVAL

1) Lift up the car.
2) Remove under cover.
3) Remove mud guard.
4) Remove front combination light.
5) Remove bolt securing fender to bumper side.

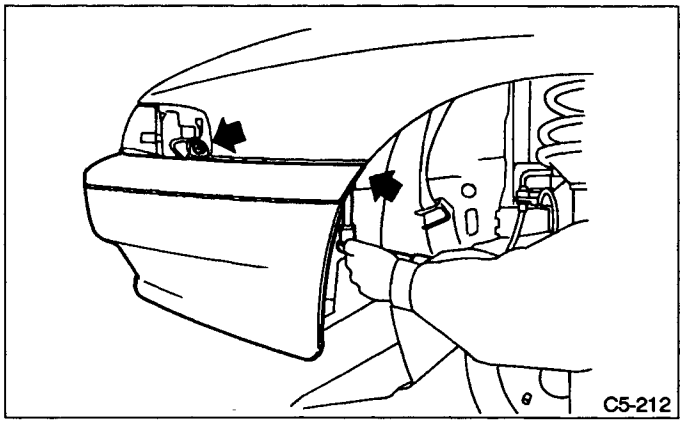

Fig. 204

6) Remove stay from body panel.

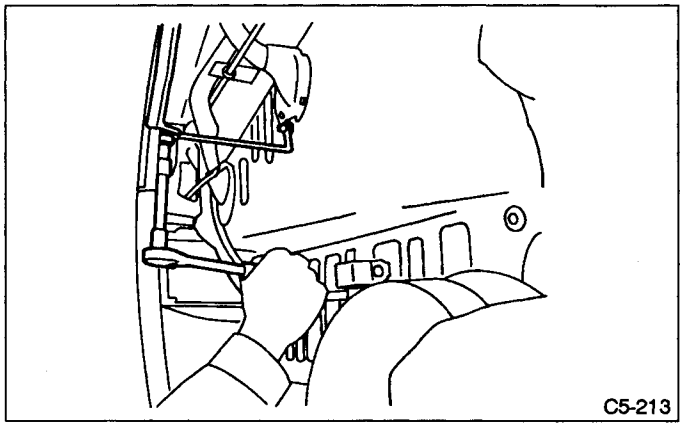

Fig. 205

7) Remove front side garnish.
8) Remove eleven attaching bolts.

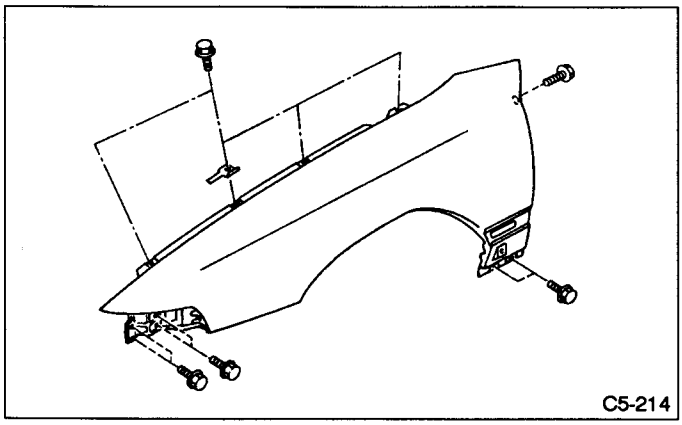

Fig. 206

9) Detach fender.
Be careful not to scratch body panels with fender edges when removing it.

B: INSTALLATION

1) Installation is in the reverse order of removal.
2) Check for alignment of front fender with hood and front door with front fender at all points. Adjust, if necessary.

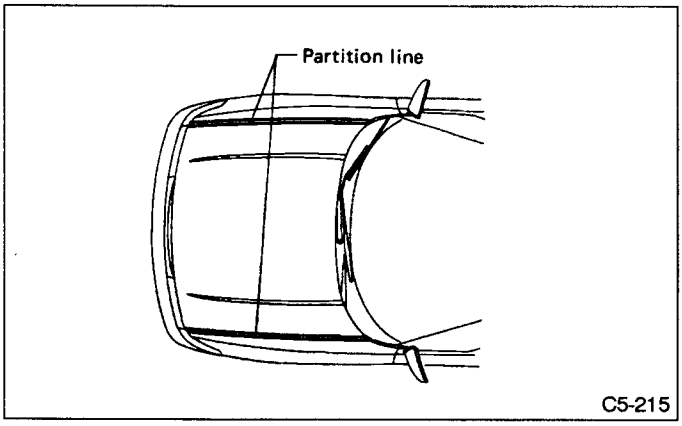

Fig. 207

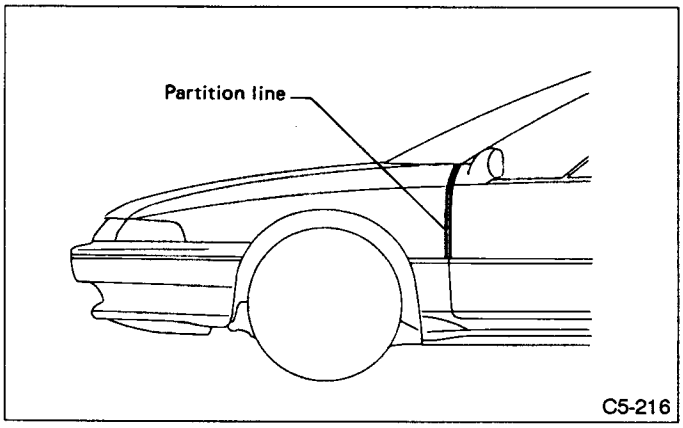

Fig. 208

12. Mud Guard and Front Arch Protector AIRBAG

Supplemental Restraint System "Airbag"
Airbag system wiring harness is routed near the mud guard and front arch protector.
a. All Airbag system wiring harness and connectors are colored yellow. Do not use electrical test equipment on these circuit.
b. Be carefull not to damage Airbag system wiring harness when servicing the mud guard and front arch protector.

A: REMOVAL

1. FRONT SIDE

1) Lift up the car after loosening wheel nuts.
2) Remove tire.
3) Remove under cover.
4) Remove screw rivets, clips and screws.

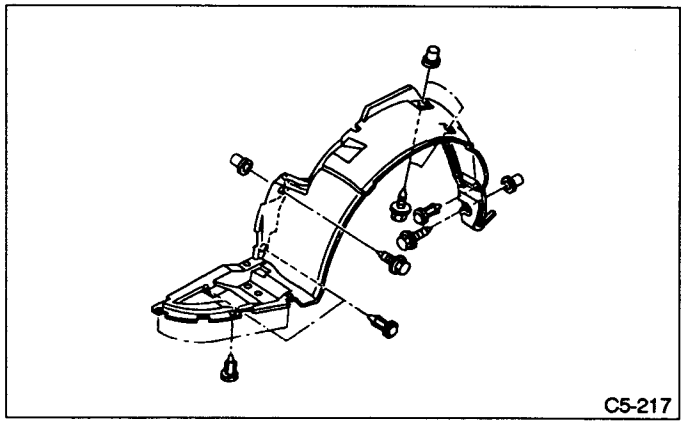

Fig. 209

5) Detach mud guard.
6) Remove bolt securing fender to bumper side.

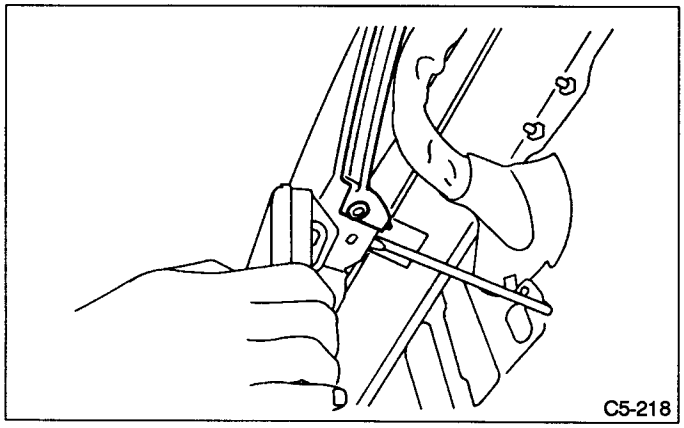

Fig. 210

7) Peel front end of front side garnish. (refer to removal of front garnish.)

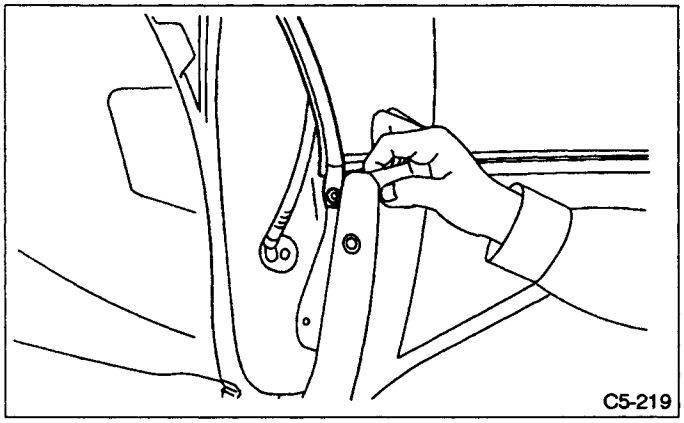

Fig. 211

8) Remove screw and then detach arch protector.

2. REAR SIDE

1) Lift up the car after loosening wheel nuts.
2) Remove tire.
3) Remove screw rivets and screws.

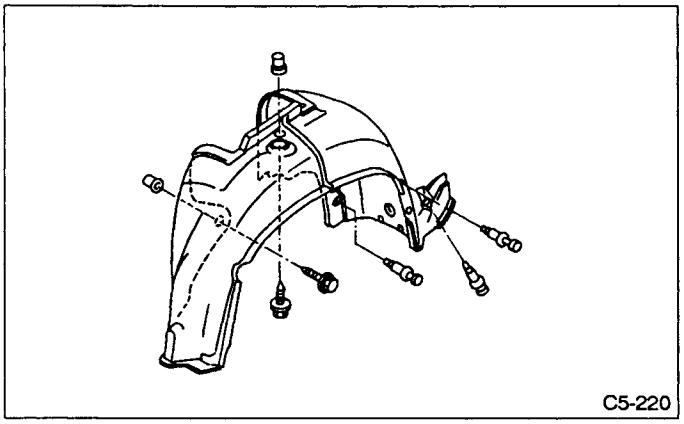

Fig. 212

4) Detach mud guard.
5) Remove bolt securing rear quarter panel and bumper side, then remove clip.

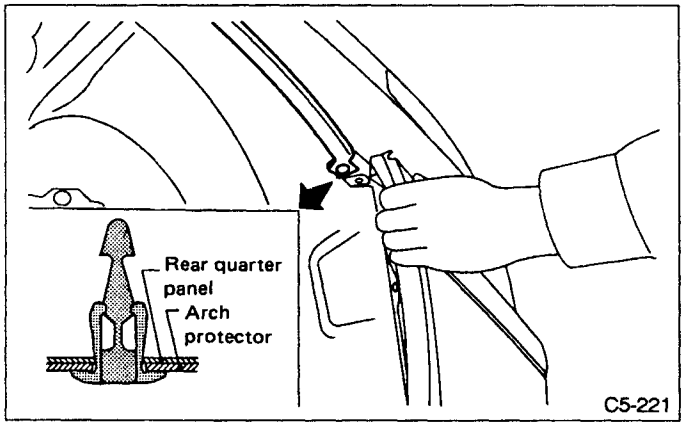

Fig. 213

6) Peel rear end of rear side garnish (refer to removal of rear side garnish), and then remove clip.

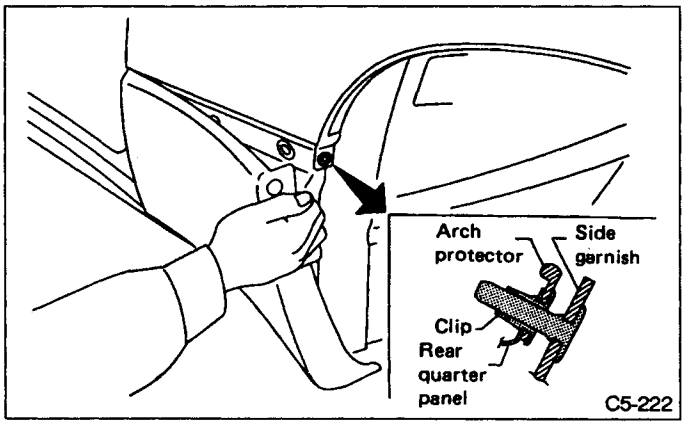

Fig. 214

7) Detach arch protector.

B: INSTALLATION

Installation is in the reverse order of removal.

a. Only use new nuts and clips.

b. Ensure mud guard and arch protector are installed as shown in figure below.

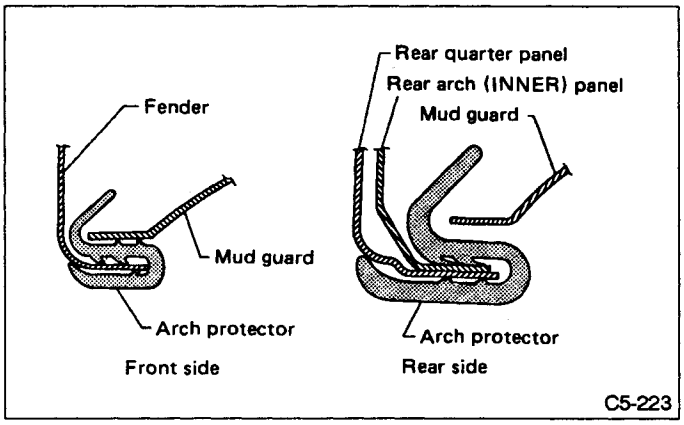

Fig. 215

13. Cowl Panel

A: REMOVAL

1) Open front hood.
2) Pry clips of seal off using a flatbed screwdriver.

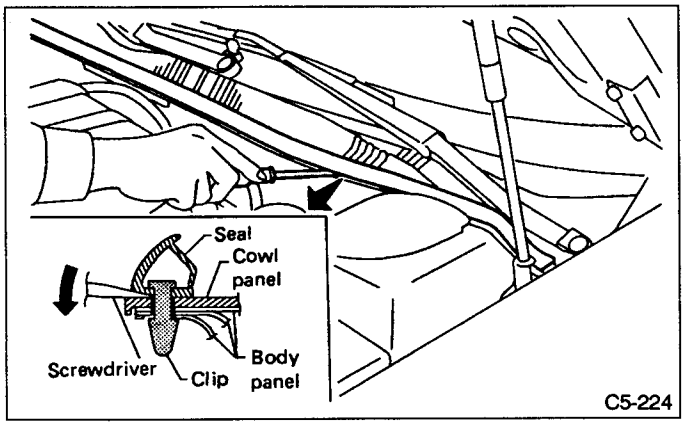

Fig. 216

3) Remove wiper arms.
4) Remove side cowl panel to pry it off using a flatbed screwdriver.
Perform this job by closing hood.

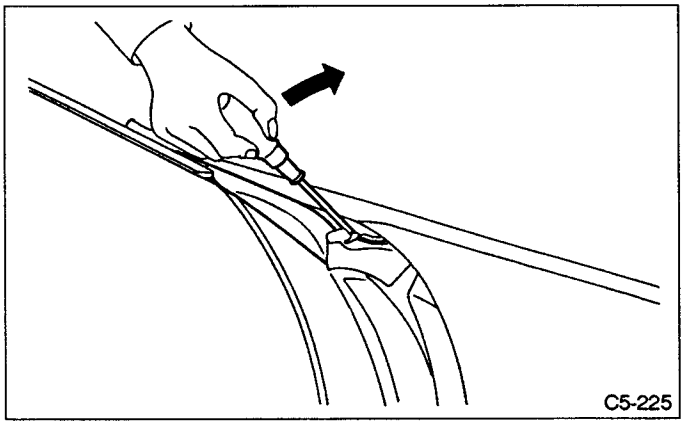

Fig. 217

5) Remove clips by lifting cowl panel.

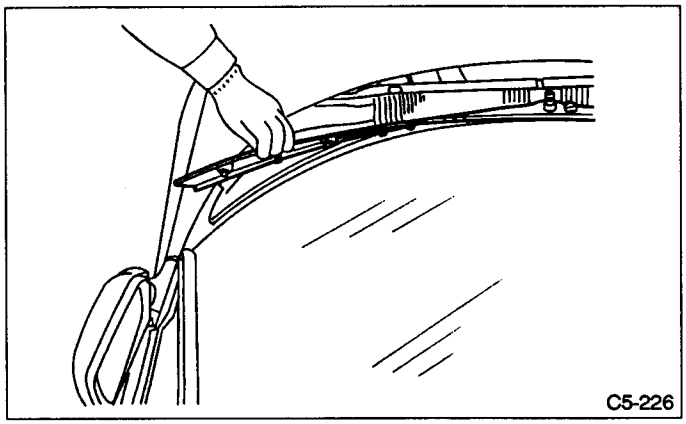

Fig. 218

6) Remove clips.

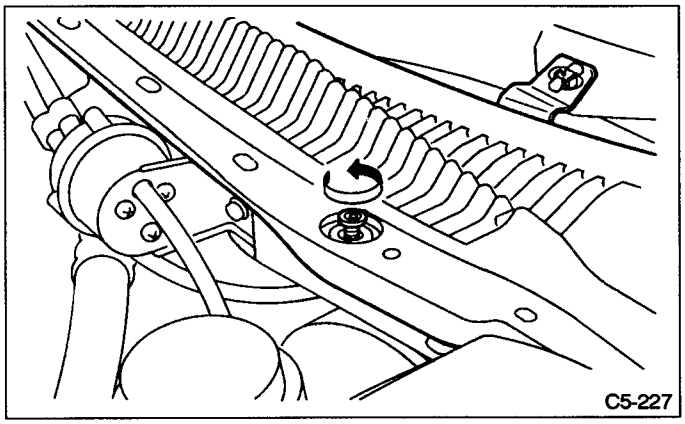

Fig. 219

7) Rotate clip head 90°, and then detach cowl panel net.

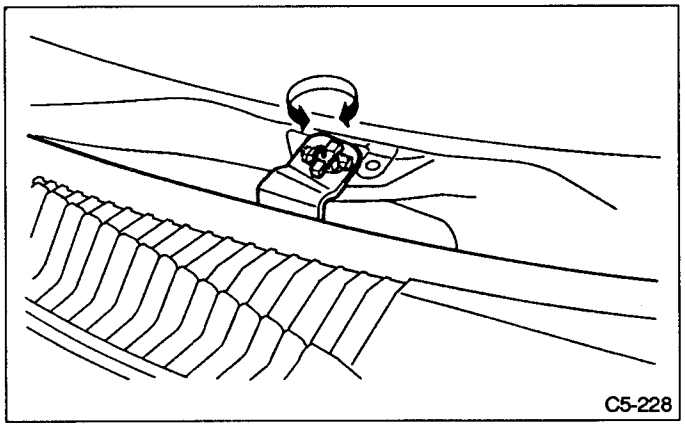

Fig. 220

B: INSTALLATION

Installation is in the reverse order of removal.

14. Front Grille

A: REMOVAL

While lightly pulling grille, pry clips off body using flatbed screwdriver.

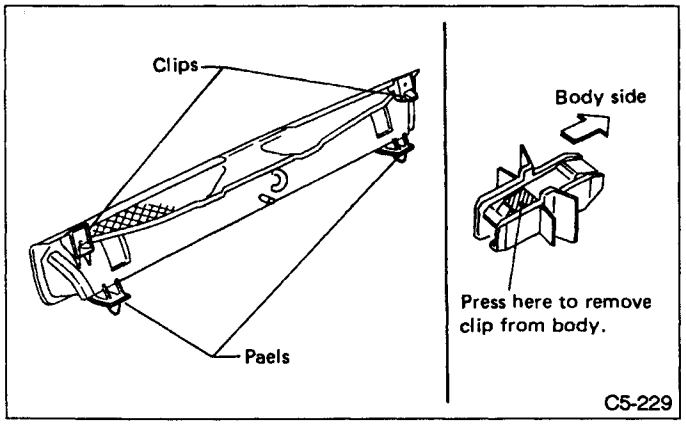

Fig. 221

B: INSTALLATION

1) Insert pawls of grill lower side into holes of body.
2) Push clip into clip hole in body.

15. Under Cover

A: REMOVAL

Lift up the car and remove bolts.

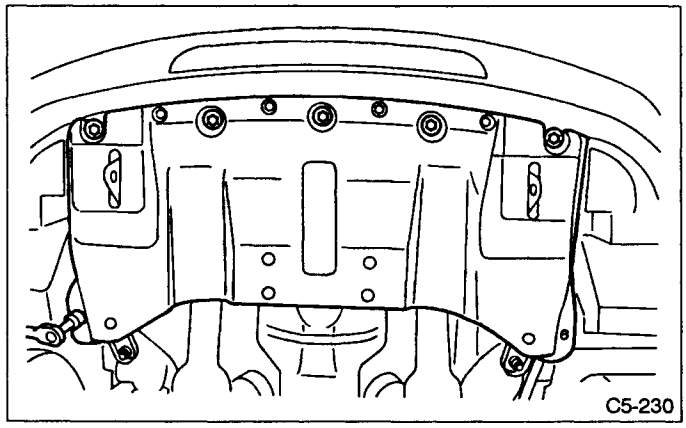

Fig. 222

B: INSTALLATION

Installation is in the reverse order of removal.

16. Side Splash Board

A: REMOVAL

1) Lift up the car and remove wheel.
2) Remove clip, nut and bolt.

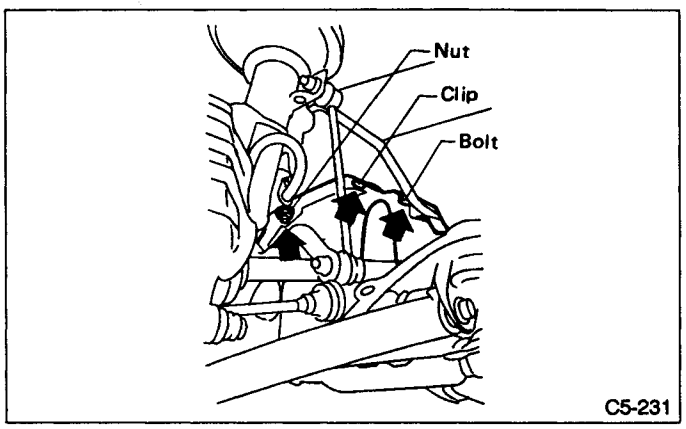

Fig. 223

B: INSTALLATION

Installation is in the reverse order of removal.

17. Ornament

A: REMOVAL

Cut double-sided adhesive tape using thin wire, and pull off ornament from clip.

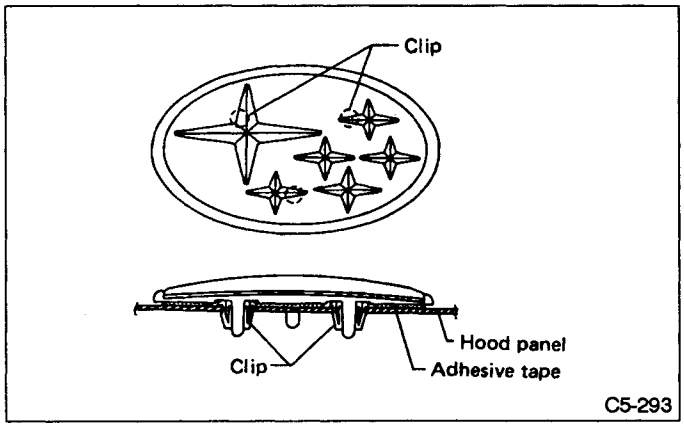

Fig. 224

B: INSTALLATION

Install ornament after de-greasing ornament mounting surface on front hood.

18. Rear View Mirror

A: REMOVAL

1) Remove door trim and disconnect connector.

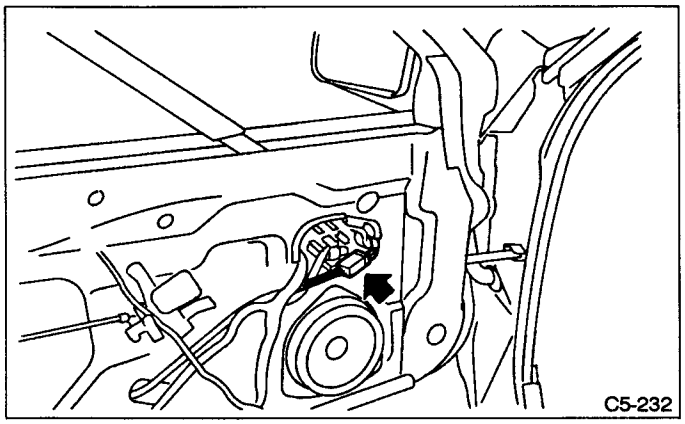

Fig. 225

2) Remove weather-strip from around mirror mounting.

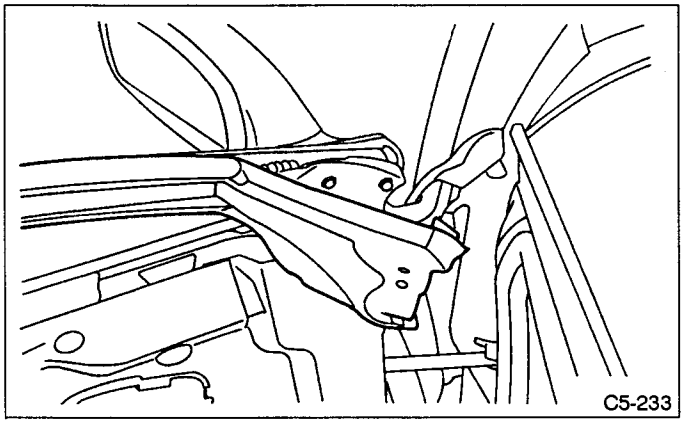

Fig. 226

3) Remove bolts and detach mirror.

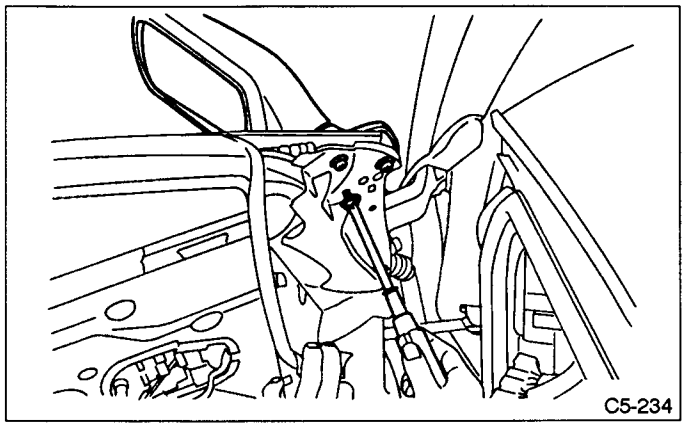

Fig. 227

B: INSTALLATION

Installation is in the reverse order of removal.

19. Sunroof

A: REMOVAL

1. SUNROOF PANEL

1) Open sunroof approx. 1/3.
2) Remove clips attached to front side of sunroof trim by pulling trim from inside of compartment.

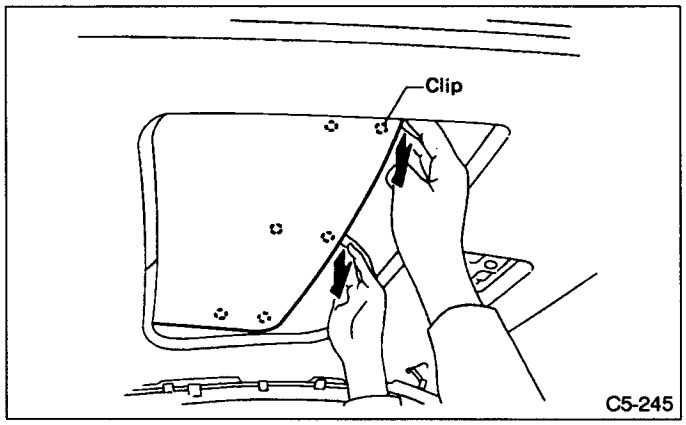

Fig. 228

3) Move trim forward, and detach trim end from holder.

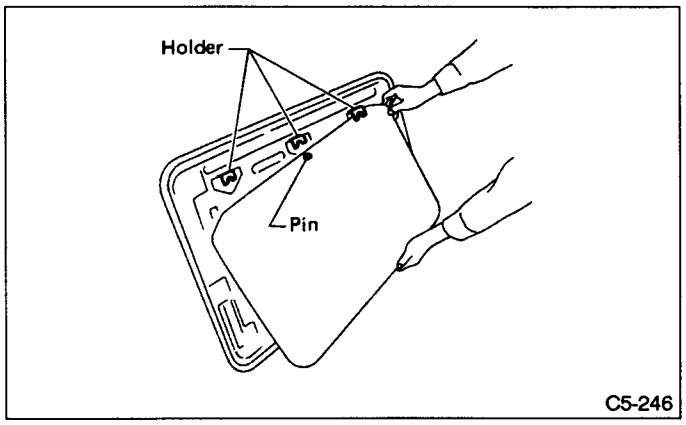

Fig. 229

4) Detach trim.

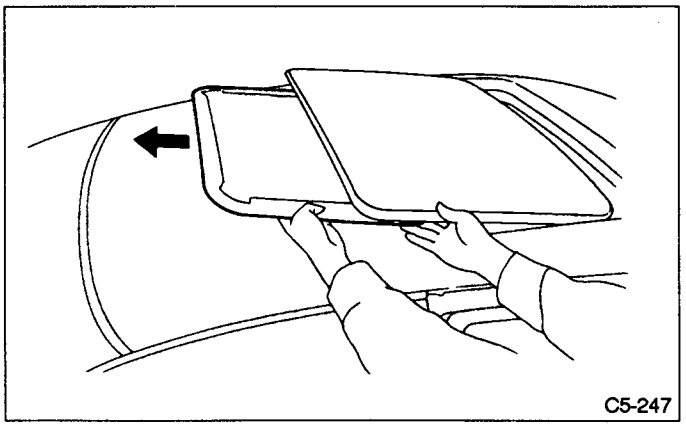

Fig. 230

5) Close sunroof and remove nuts.

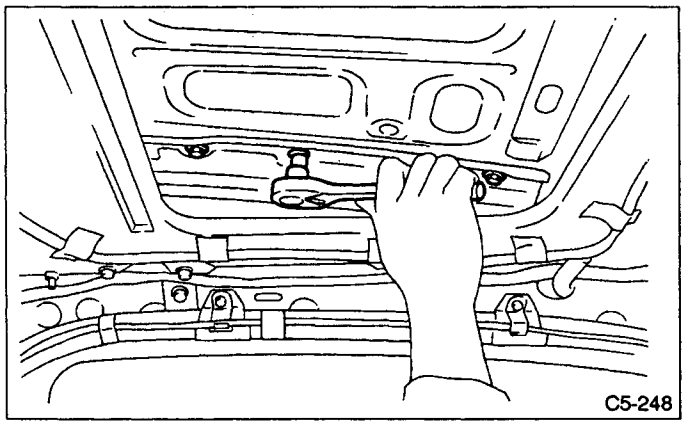

Fig. 231

6) Remove sunroof panel.

2. SUNROOF MOTOR AND RELAY

1) Remove rear quarter trim, pillar trim, roof trim, etc. (Refer to chapter 5-3.)

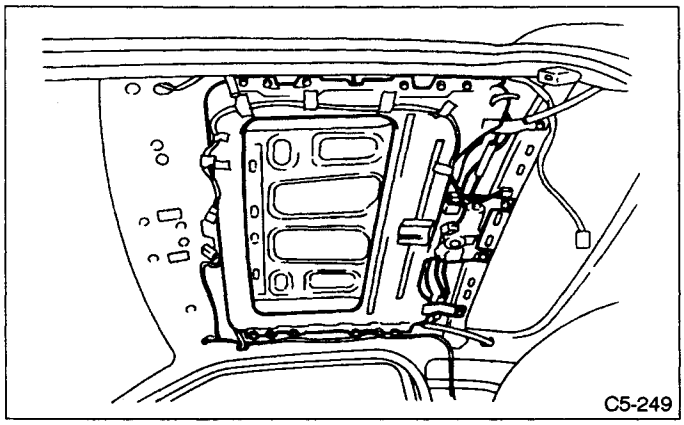

Fig. 232

2) Disconnect connector and remove screws.

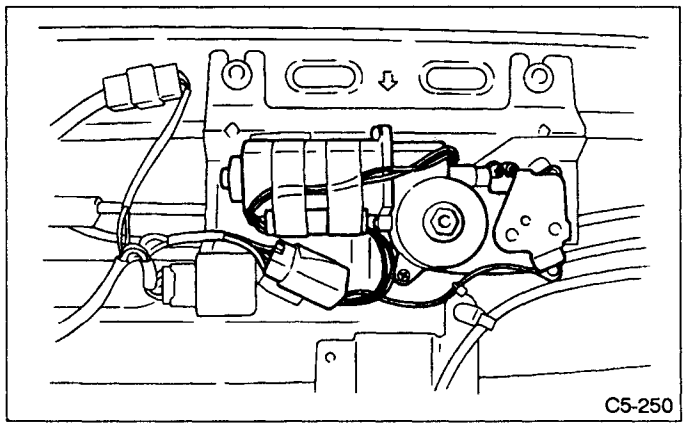

Fig. 233

3) Remove relay by pulling it out.

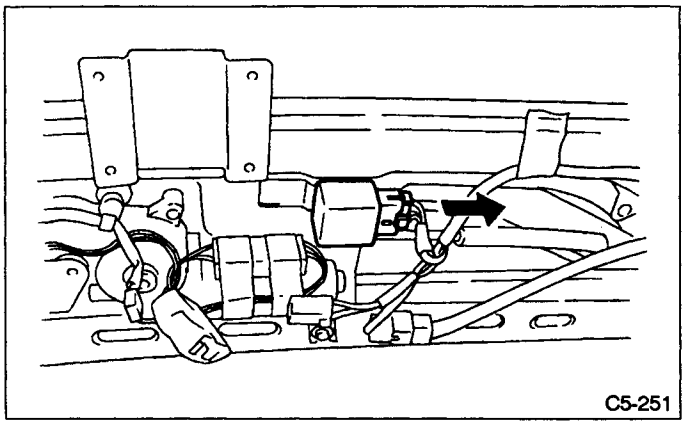

Fig. 234

3. SUNROOF FRAME

1) Remove rear quarter trim, pillar trim, roof trim etc. (Refer to chapter 5-3.)

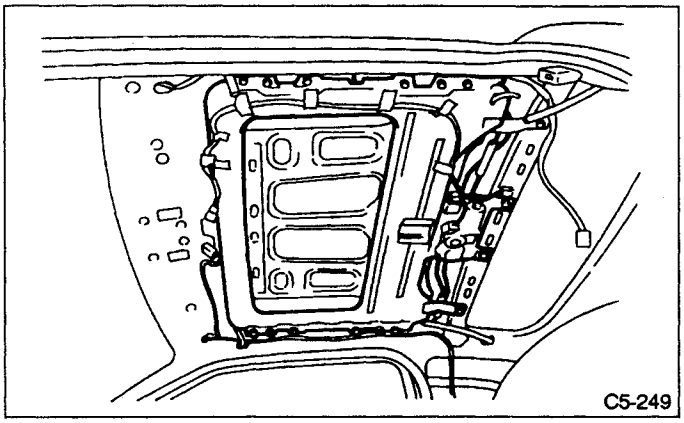

Fig. 235

2) Remove sunroof panel.
3) Disconnect drain tubes.

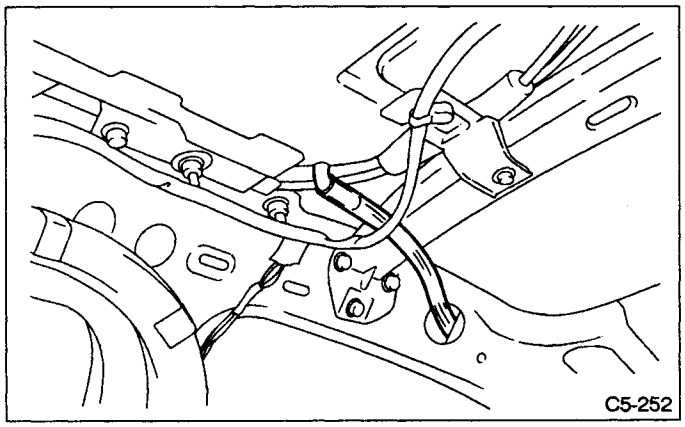

Fig. 236

4) Disconnect connector between body harness and sun roof harness.

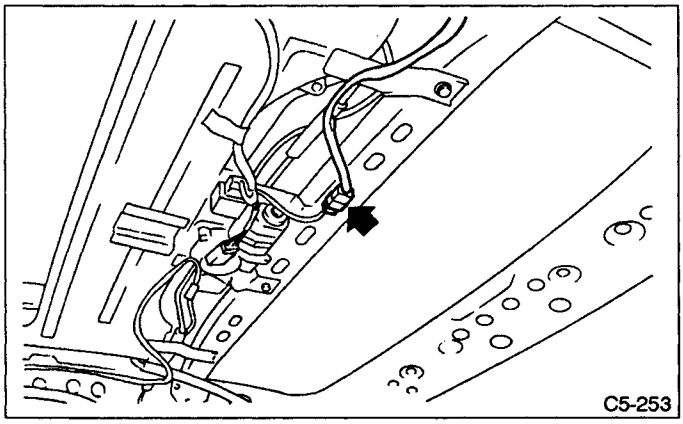

Fig. 237

5) Loosen two mounting bolts near motor. (Do not remove bolts.)

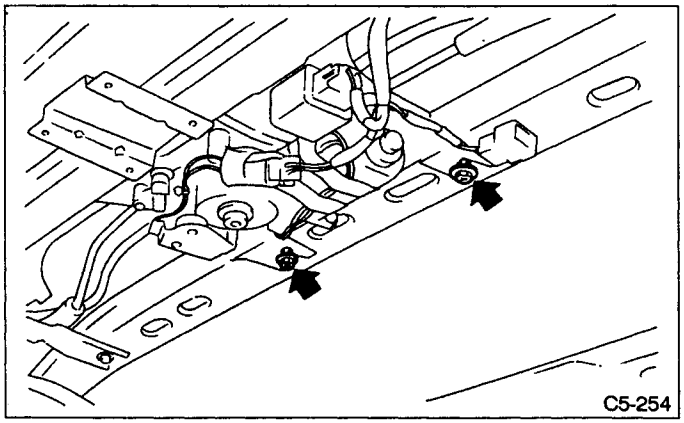

Fig. 238

6) Remove two bolts, eight nuts and four adjusting nuts.

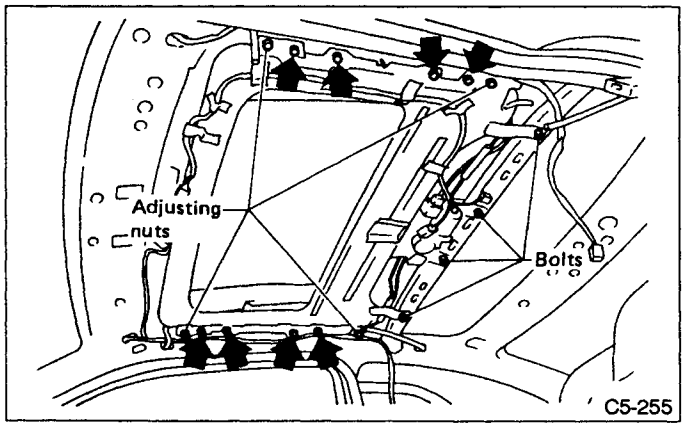

Fig. 239

7) Remove sunroof frame.
8) Loosen set bracket mounting bolt.

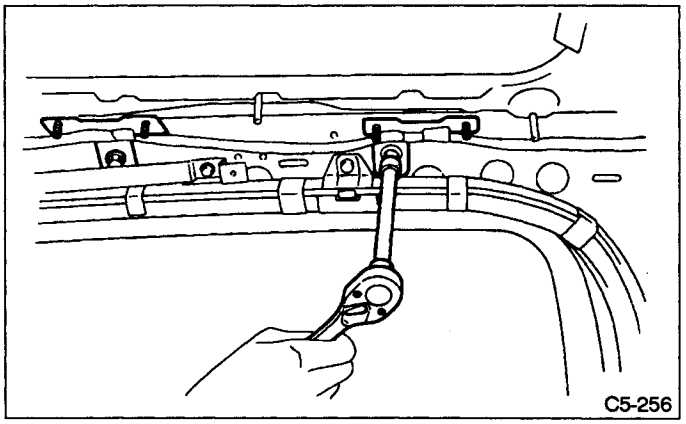

Fig. 240

B: INSTALLATION

1. SUNROOF PANEL, MOTOR AND RELAY

Installation is in the reverse order of removal.
Sun roof trim reference pin must be fitted in holder notch.

2. SUNROOF FRAME

1) Insert frame rear end slit to two bolts fitted temporarily to roof brace.

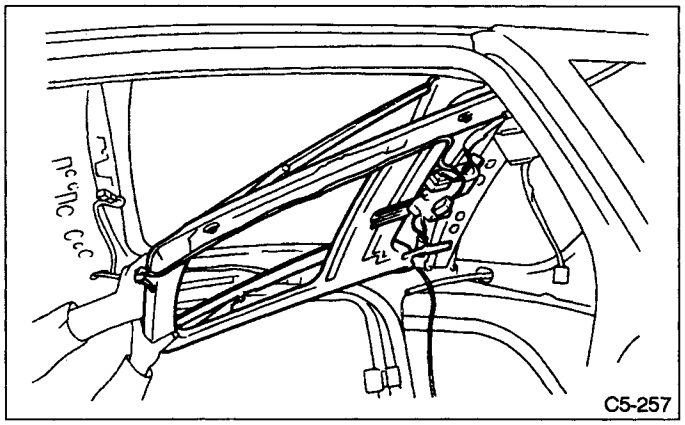

Fig. 241

2) Align frame to reference pin installed on roof.

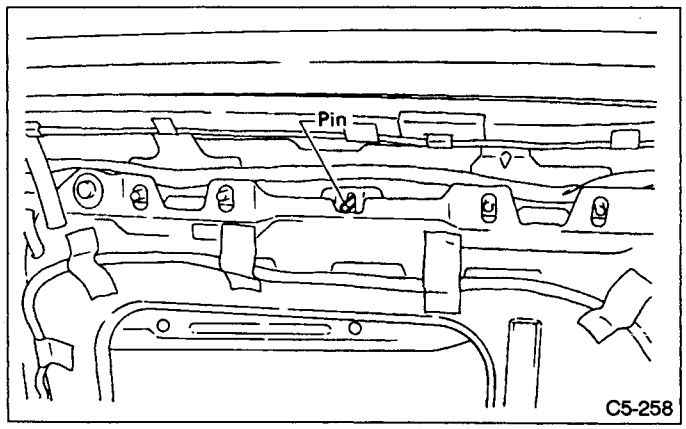

Fig. 242

3) Tighten adjusting nut (that is, set frame at highest position).
Temporarily tighten nuts and bolts.

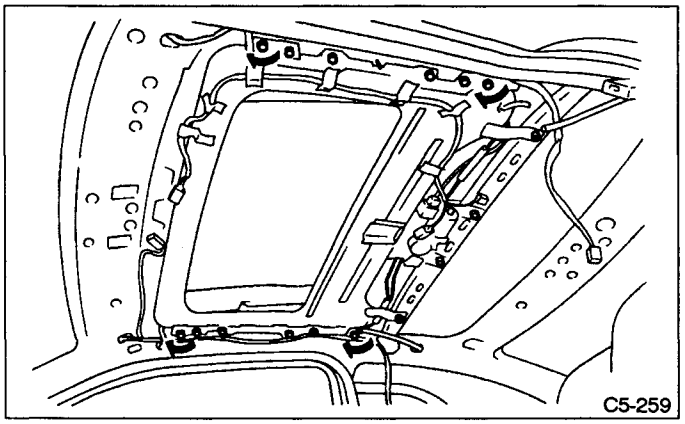

Fig. 243

4) Install sunroof panel.
5) Adjust height by turning adjusting nut.
Also adjust front, rear, right, and left-side partitions.

Partition clearance: 5.9± 0.5 mm (0.232± 0.020 in)

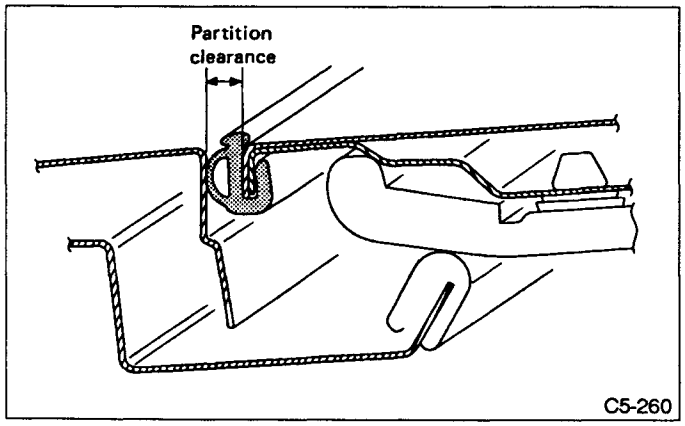

Fig. 244

Difference in height between roof panel and sunroof panel:
0± 1.0 mm (0± 0.039 in)

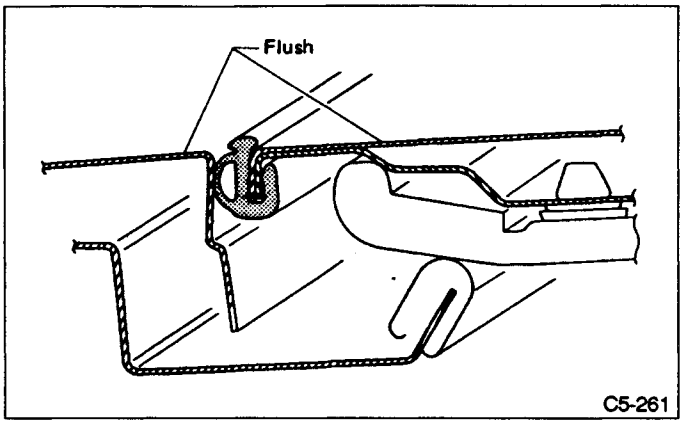

Fig. 245

6) Tighten set bracket mounting bolts.

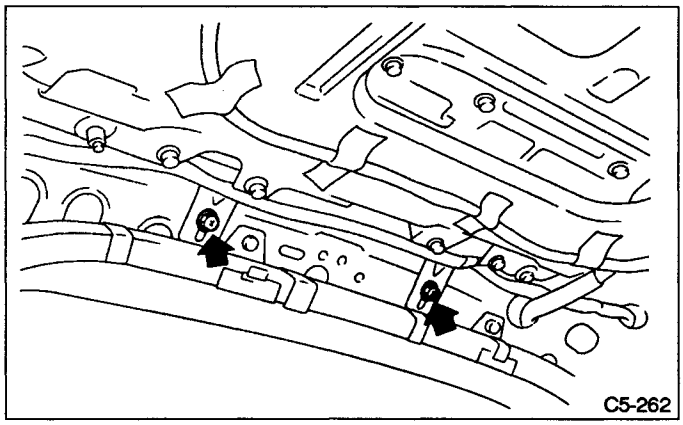

Fig. 246

7) Tighten bolts and nuts.

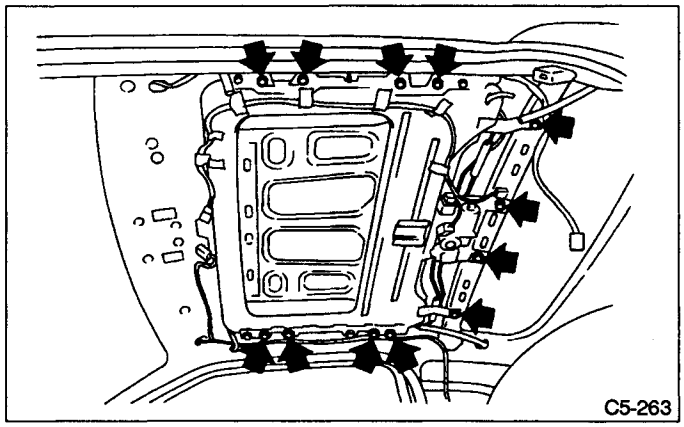

Fig. 247

8) Install drain tubes.
Insert drain tube securely up to bend of drain pipe.

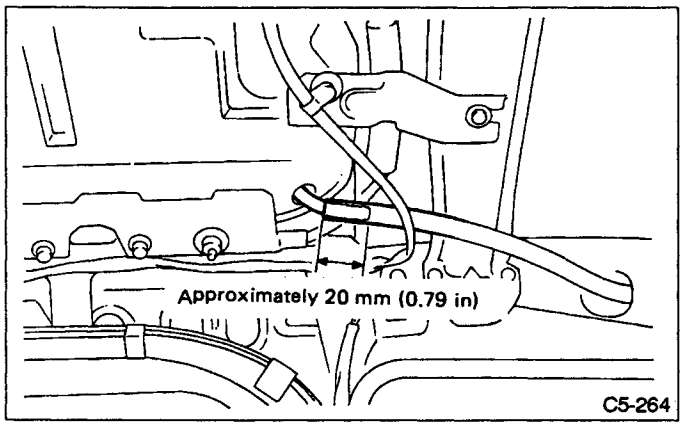

Fig. 248

9) Install roof trim.
10) Install garnish.

Place garnish joint at rear center of body.

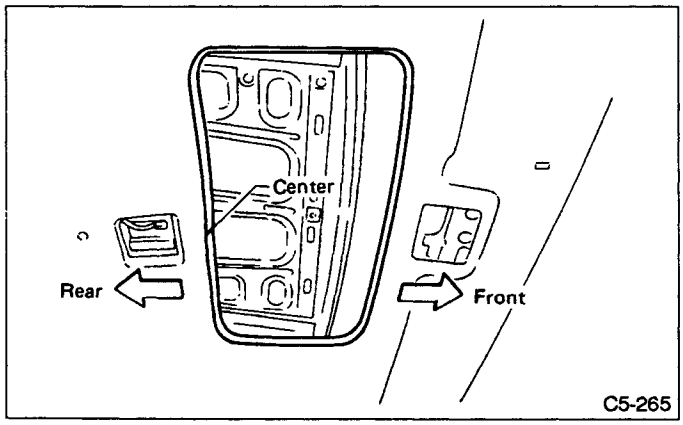

Fig. 249

11) Install sunroof trim, pillar trim, rear quarter trim etc.
12) Check the following items after assembling all parts;

- Garnish must be free from waves.
- When sun roof is fully closed, must be no clearance between garnish and sun roof trim.
- Sun roof must be free from slack and noise when it is fully opened and closed.

T TROUBLESHOOTING

1. Sunroof

Entry of water into compartment	① Check roof panel and sunroof panel for improper or poor sealing. ② Check drain tube for clogging. ③ Check sunroof frame seal and body for improper fit.
Booming noise	① Check sunroof panel and roof panel for improper clearance. ② Check sunroof trim and roof trim for improper clearance.
Abnormal motor noise	① Check motor for looseness. ② Check gears and bearings for wear. ③ Check cable for wear. ④ Check cable pipe for deformities.
Failure of sunroof to operate (Motor operates properly)	① Check guide rail for foreign particles. ② Check guide rail for improper installation. ③ Check parts for mutual interference. ④ Check cable slider for improper clinching. ⑤ Check cable for improper installation. ⑥ Check clutch adjustment nut for improper tightness.
Motor does not rotate or rotates improperly. (Use sunroof wrench to check operation.)	① Check fuse for blowout. ② Check switch for improper function. ③ Check motor for incorrect terminal voltage. ④ Check relay for improper operation. ⑤ Check poor grounding system. ⑥ Check cords for discontinuity and terminals for poor connections. ⑦ Check limit switch for improper operation.

SUBARU

SVX

1992

		Page
M	MECHANISM AND FUNCTION	2
	1. Door	2
	2. Window Glass	7
S	SERVICE DATA	8
	1. Door Alignment	8
C	COMPONENT PARTS	9
	1. Door	9
	2. Rear Quarter Window	12
	3. Window Glass	13
	4. Sealing Parts	15
W	SERVICE PROCEDURE	16
	1. Procedure Chart for Removing and Installing Door and Related Parts	16
	2. Door and Hinge	16
	3. Trim Panel	18
	4. Sealing Cover	18
	5. Checker	19
	6. Inner Remote Assembly	19
	7. Link & Safety Knob	20
	8. Door Latch and Striker	20
	9. Key Lock	21
	10. Outer Handle	21
	11. Stopper	22
	12. Door Sash and Door Window Lower Glass	22
	13. Door Window Regulator	24
	14. Door Weatherstrip	25
	15. Rear Quarter Window Lower Glass	26
	16. Rear Quarter Window Regulator	27
	17. Removal and Installation of Adhesive Type Window Glass	28
	18. Windshield	29
	19. Rear Window Glass	31
	20. Upper Door Glass	31
	21. Rear Quarter Upper Glass	34
	22. Door & Rear Quarter Glass Adjustment	36
T	TROUBLESHOOTING	42
	1. Door Glass and Rear Quarter Glass	42
	2. Door Lock System	43
	3. Power Window	43

M MECHANISM AND FUNCTION

1. Door

A: GENERAL

The door shape is rounded off to improve aerodynamic characteristics and to save energy, and a large window is provided.
The door is equipped with two-piece door windows with a mid-frame. It features a plated steel sheet and wax treatment for high corrosion resistance, enhanced rigidity and safety against side collision due to a side door beam, flush-surface design with small-size window shoulder outer weather strips, and employment of a multiple seal system which prevents rain water and air leaks.

B: MECHANISM

1. WINDOW REGULATOR

As the window glass moves up along the regulator guide rail and reaches a point just before the fully closed position, it encounters resistance caused by weather strips and stabilizer mechanism. This resistance prevents the window from closing completely. To avoid this situation, two push rollers are adopted on both upper and lower sides so that the slider fitted to the glass will only be pushed to one side to ensure correct positioning of the glass (side pushing mechanism).

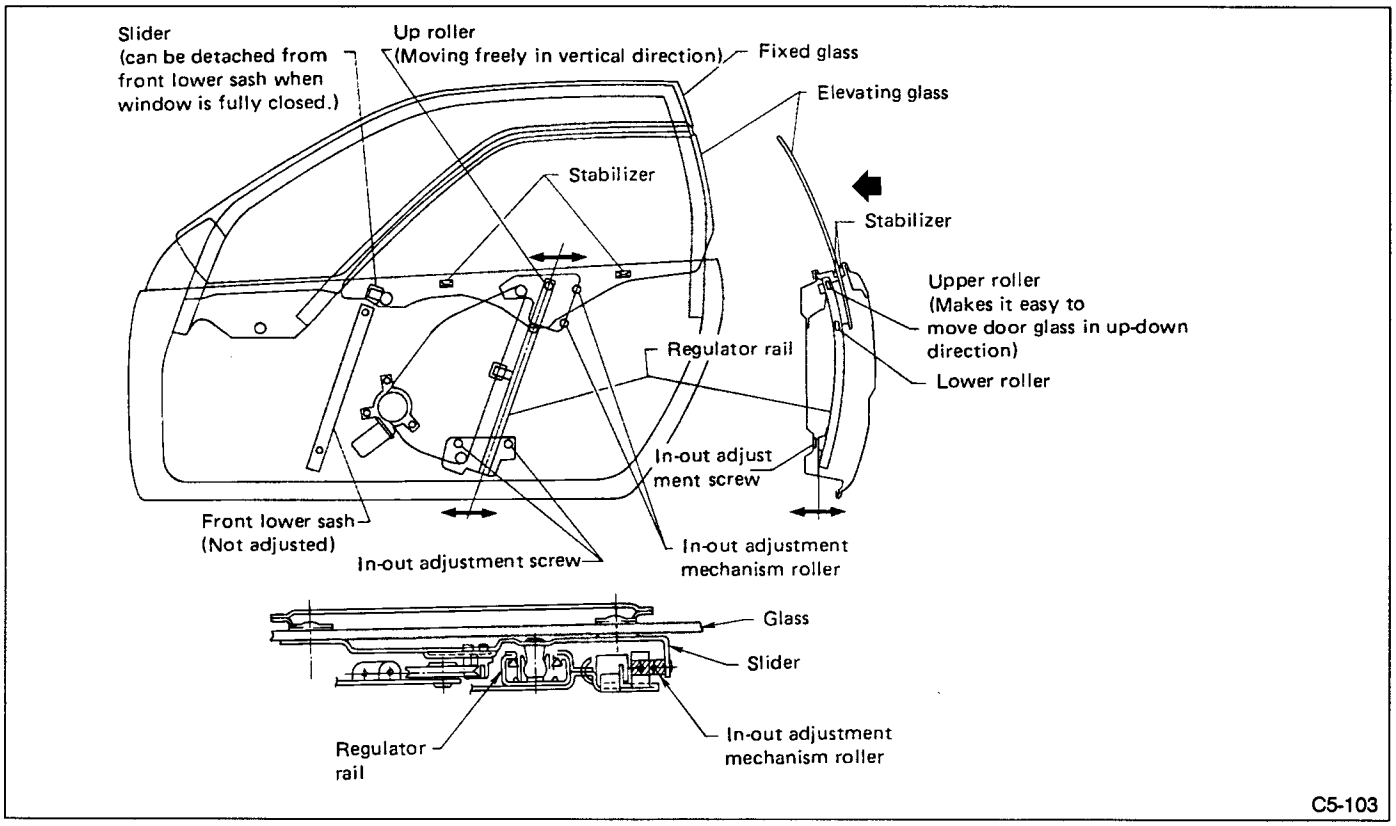

Fig. 1

2. OUTER HANDLE OPERATING RESISTANCE ADJUSTMENT

The operating resistance of the outer handle can be adjusted by changing the length of the rod installed between the latch and outer handle.

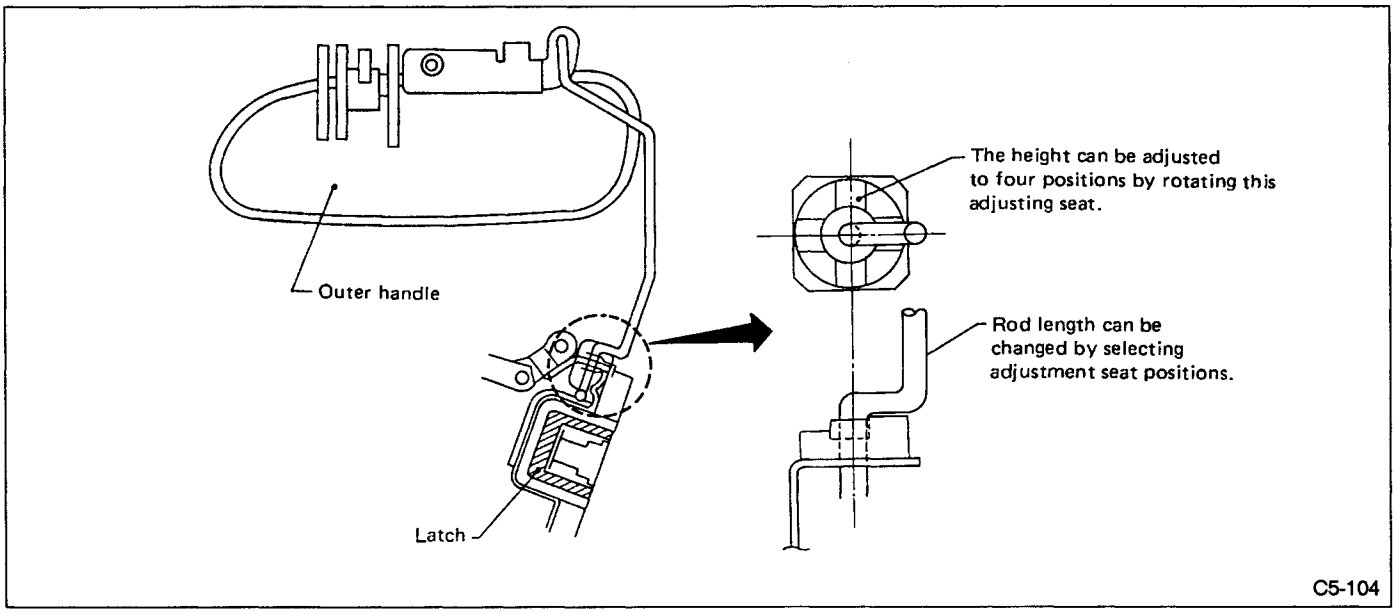

Fig. 2

C: CONSTRUCTION

1. FLUSH SURFACE AND GLASS-TO-GLASS STRUCTURE

The door glass and rear quarter glass are extended and made flush with each other by covering the pillar. Accordingly, the portion above the window shoulder is fully covered with glass.

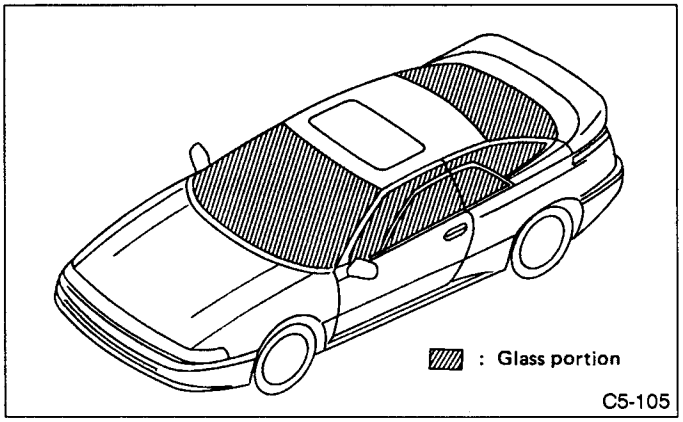

Fig. 3

2. DOOR HINGE

A protruded hinge is adopted so that a wide space will open at the foot portion even when the door opening is comparatively small.

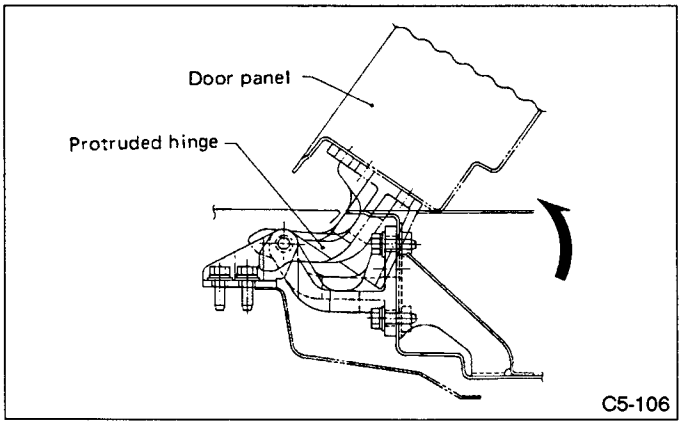

Fig. 4

A three-stage arm checker is used to insure that the door opens and closes in three steps and the checker arm operates with weak friction over the entire opening range of the door. This arrangement allows the door to stop easily in any position and improves the overall ease of door opening and closing.

Opening door hinge degree	1st stage	30°
	2nd stage	40°
	3rd stage	53°

3. DOOR WEATHERSTRIP

A multi-seal weatherstrip is used on each mating surface of the door and body. This weatherstrip effectively reduces the road and wind noises, and prevents water and air leaks.

4. STABILIZER

A light-weight stabilizer is provided for ease of window glass regulating operation.

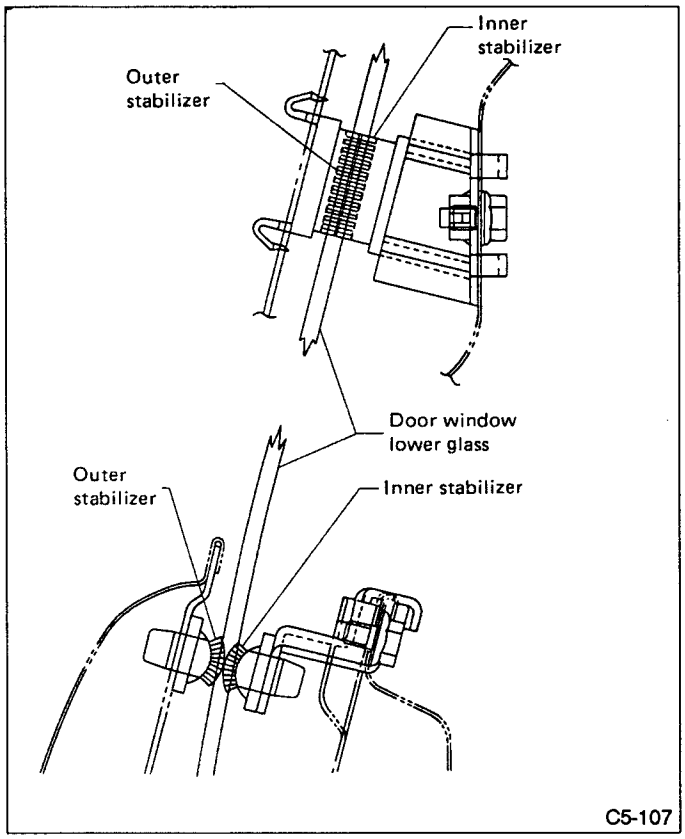

Fig. 5

5. DOOR GLASS

The radius of curvature of the glass is reduced and each pillar is covered by glass so that smooth outline can be obtained at the connection between windshield and door glass, and between roof and door glass. A weatherstrip is used at the portion between the door glass and quarter glass so as to obtain a flush glass surface.

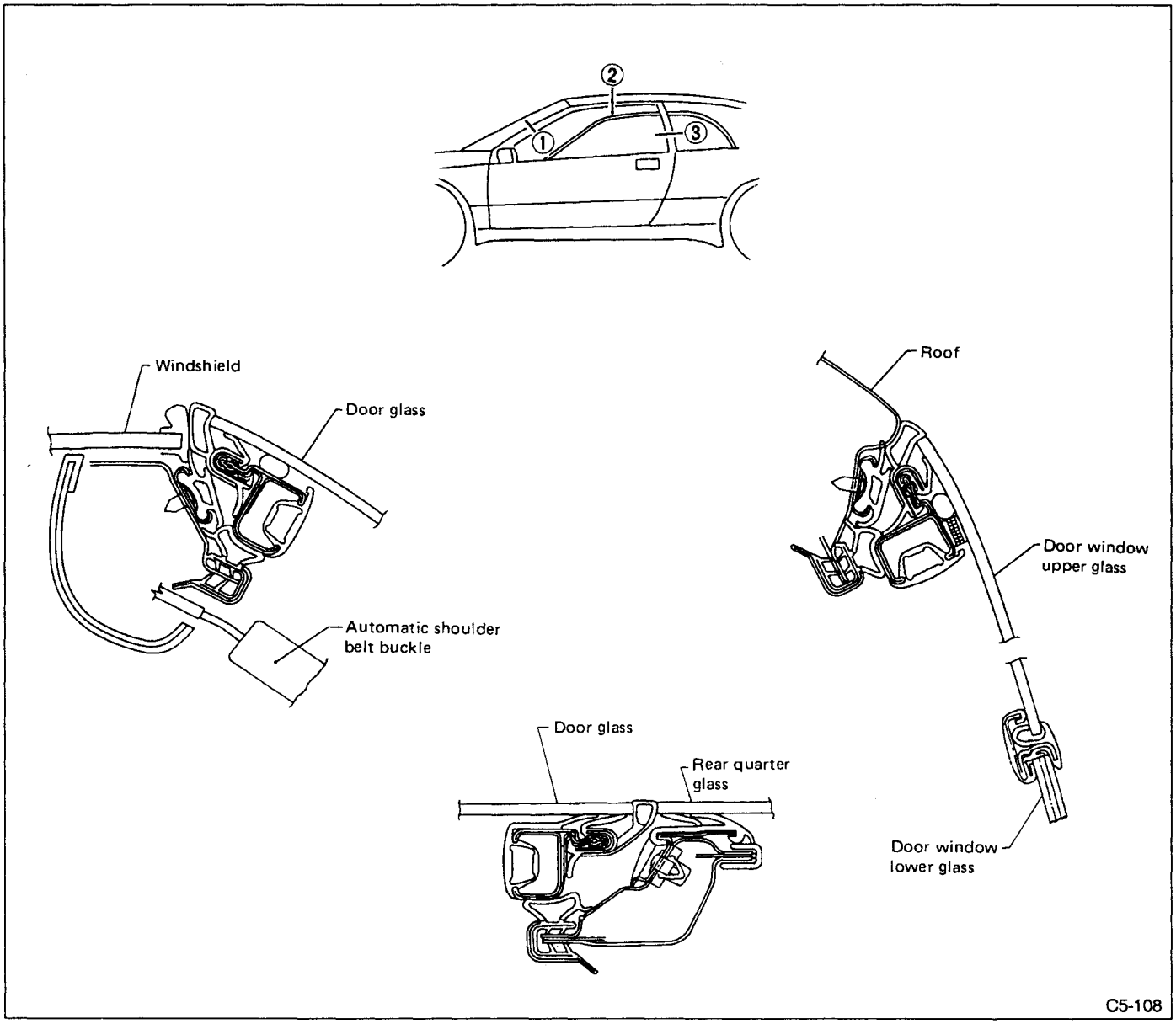

Fig. 6

6. REAR QUARTER GLASS

The glass, clips, dual lock fastener, mid frame, weatherstrip and seal are made integral in the rear quarter glass for improved fitting accuracy.

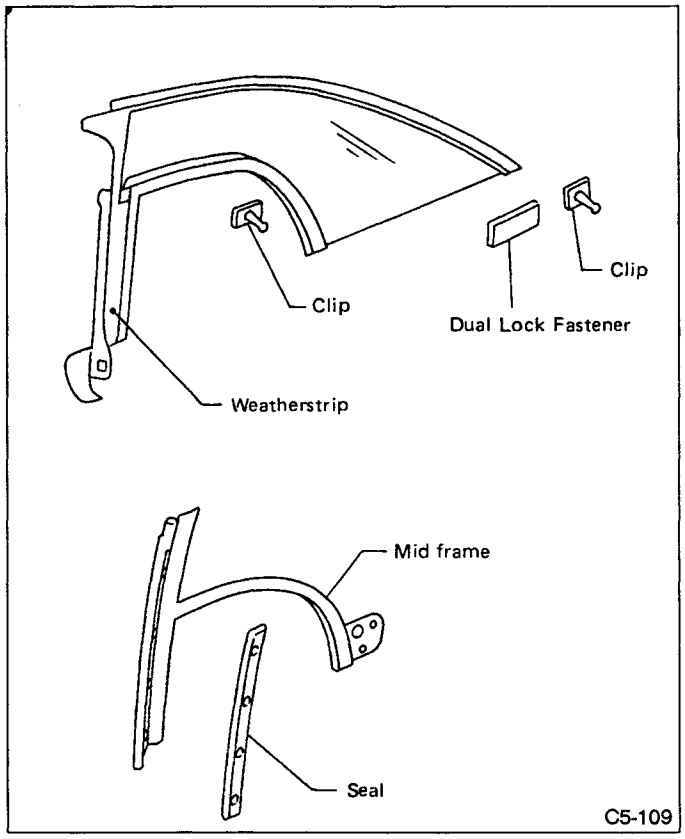

Fig. 7

The curvature of the quarter window glass at the rear pillar portion is reduced so that the rear pillar is covered with glass for a smooth surface at the joint between roof and quarter glass and between quarter glass and rear window.

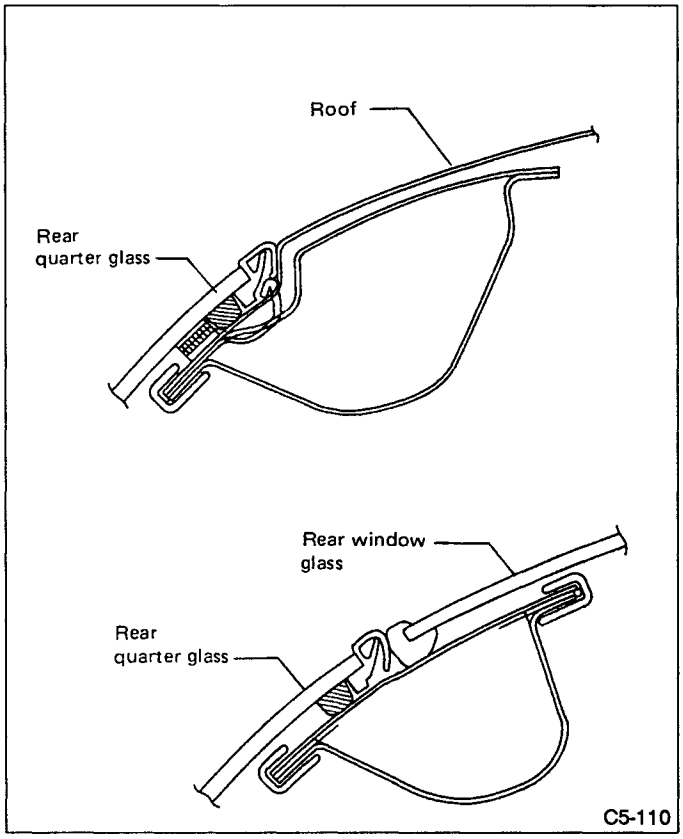

Fig. 8

7. AUTOMATIC DOOR LOCK

Pressing the driver-seat door lock knob (or key plate) permits the locking and unlocking of all doors with one touch.

2. Window Glass

1. WINDSHIELD

The windshield has been reduced to create a smooth and rounded-off vehicle outline as seen from above and from both sides. The windshield is also made flush with the door glass and roof panel to improve aerodynamic characteristics.

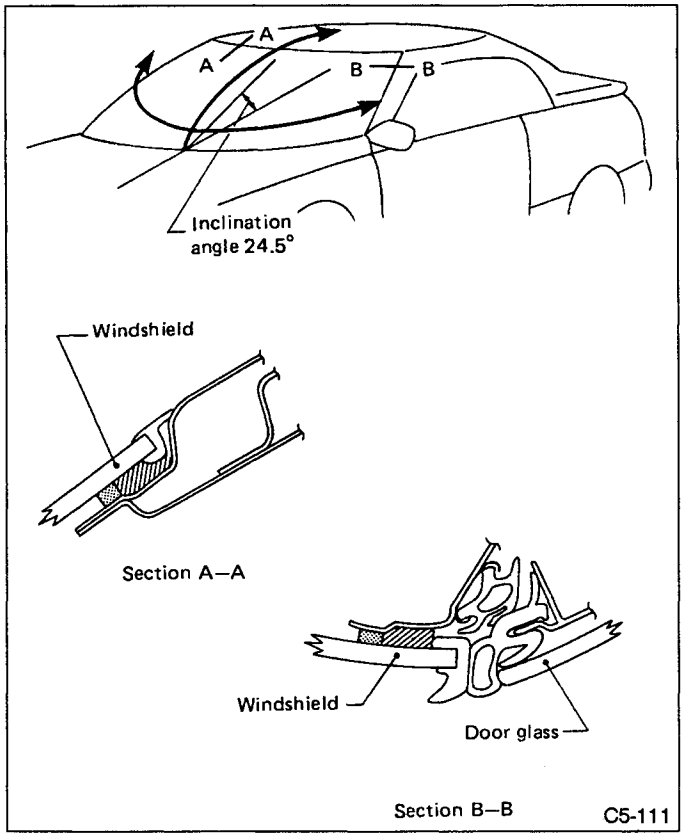

Fig. 9

The windshield is fixed by bonding, and position locating pins are used to ensure positional accuracy. A sufficiently large glass thickness is used to provide greater chipping resistance.

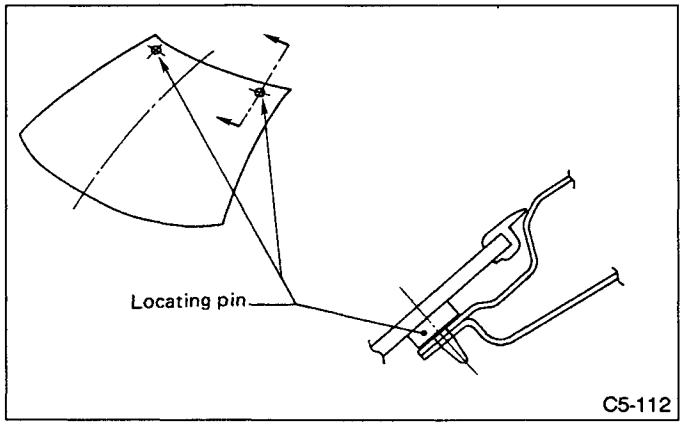

Fig. 10

2. REAR WINDOW GLASS

The rear window glass angle is also reduced, and the roof panel and rear quarter window are made flush to provide a smooth outline with improved aerodynamic characteristics.

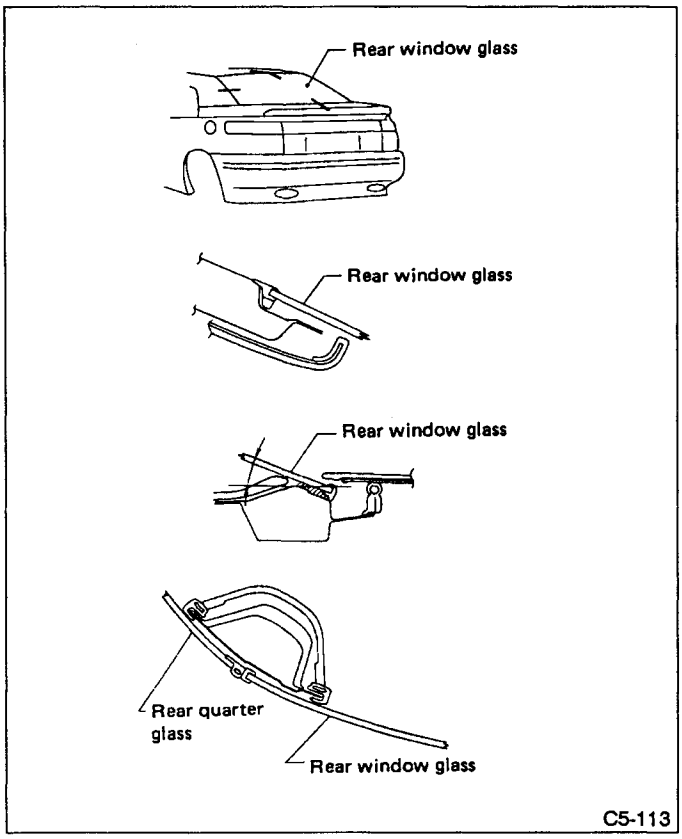

Fig. 11

S SERVICE DATA

1. Door Alignment

Unit: mm (in)

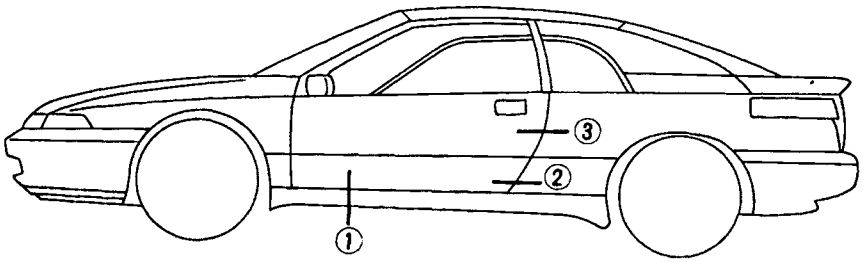

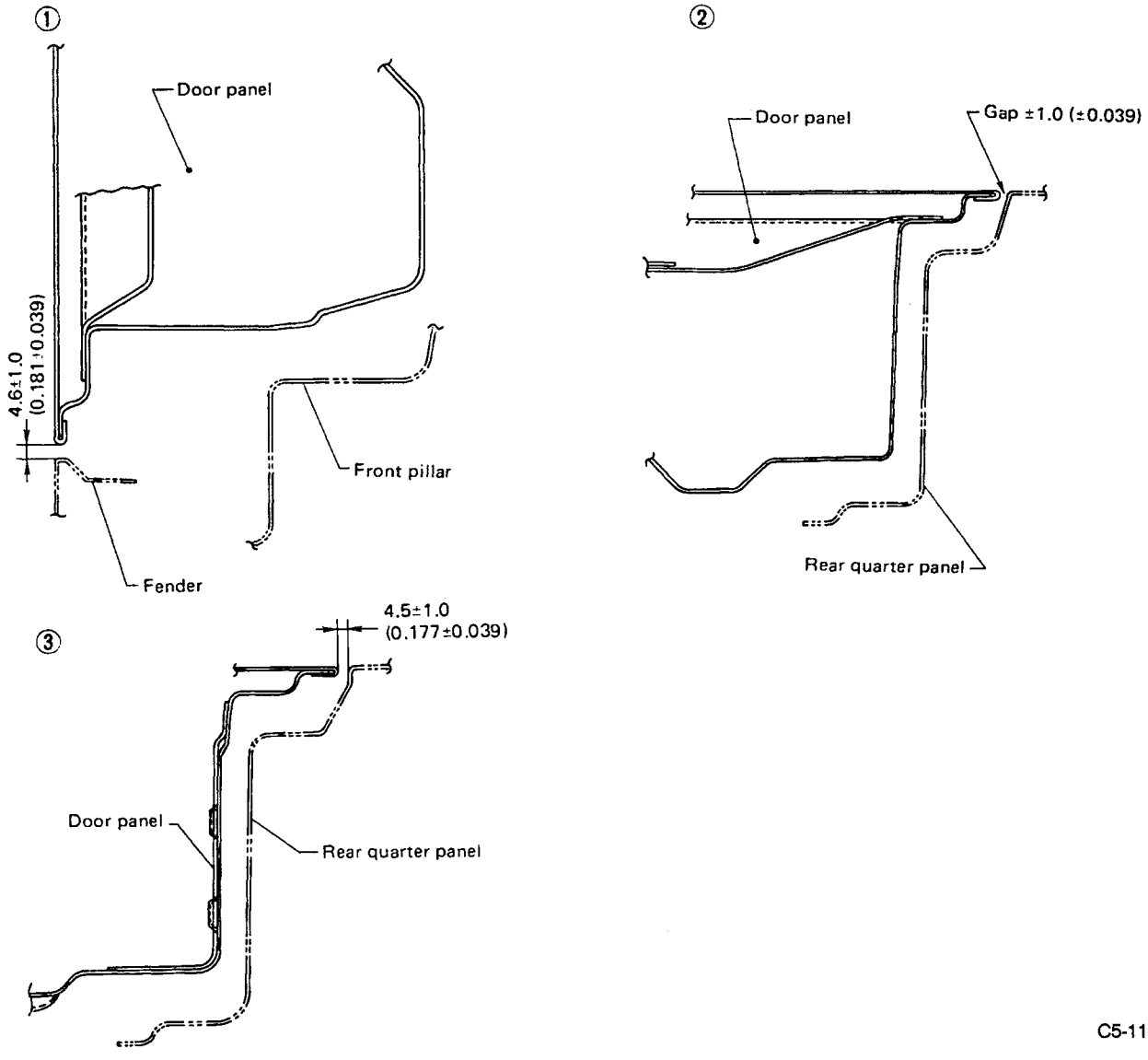

C5-114

Fig. 12

C COMPONENT PARTS

1. Door

1. DOOR PANEL & TRIM

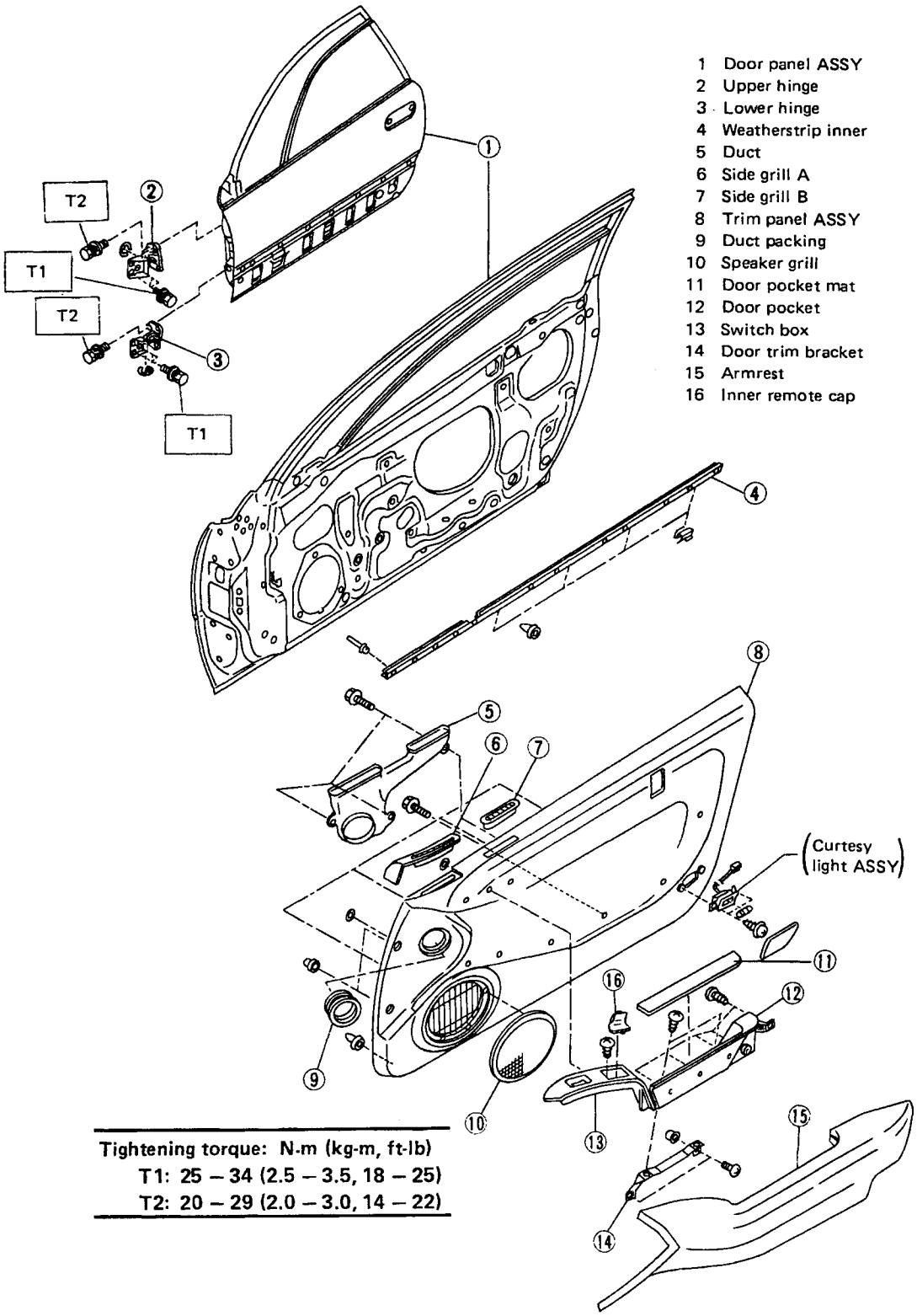

Fig. 13

2. DOOR INNER PARTS

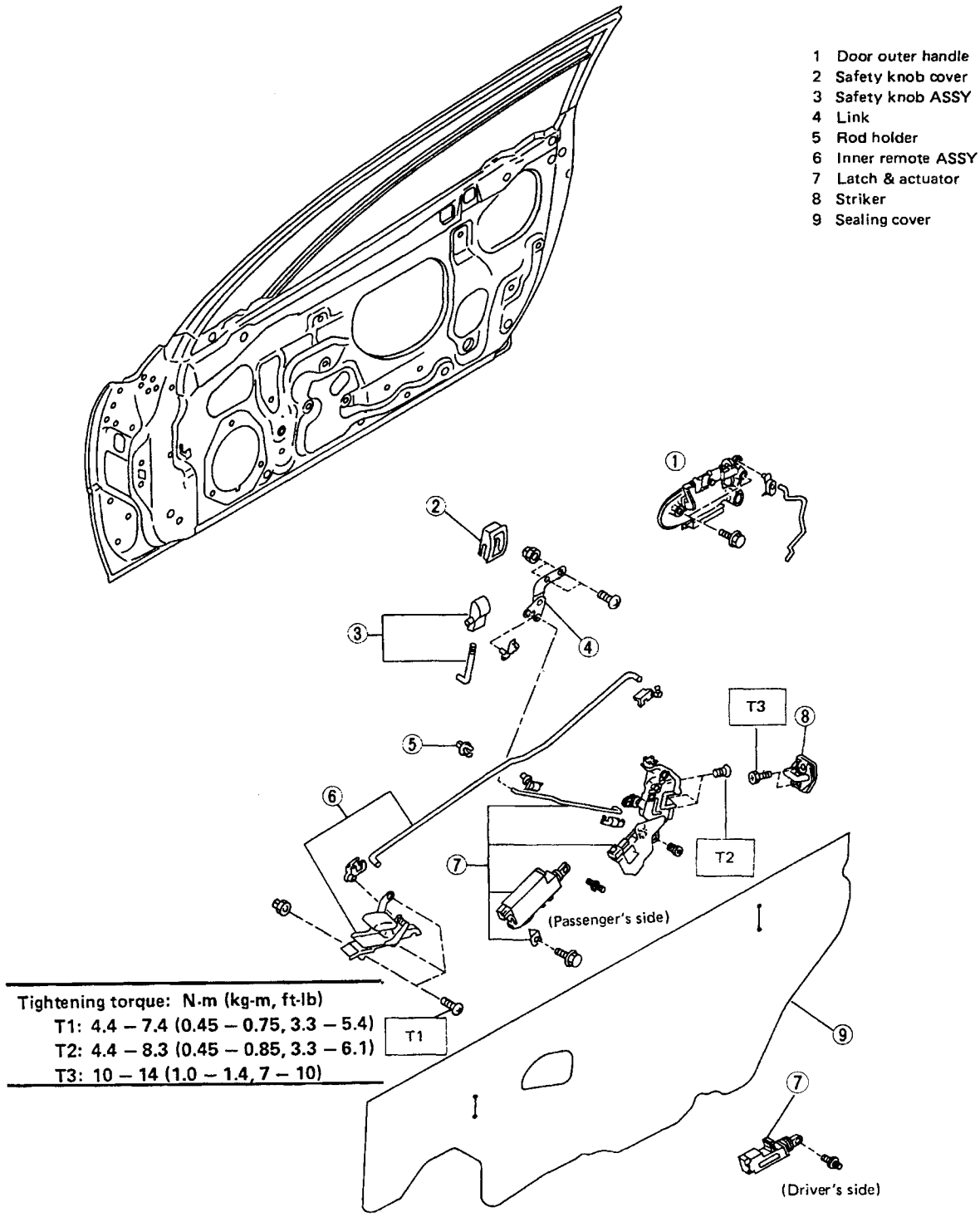

C5-117

Fig. 14

3. DOOR GLASS & REGULATOR

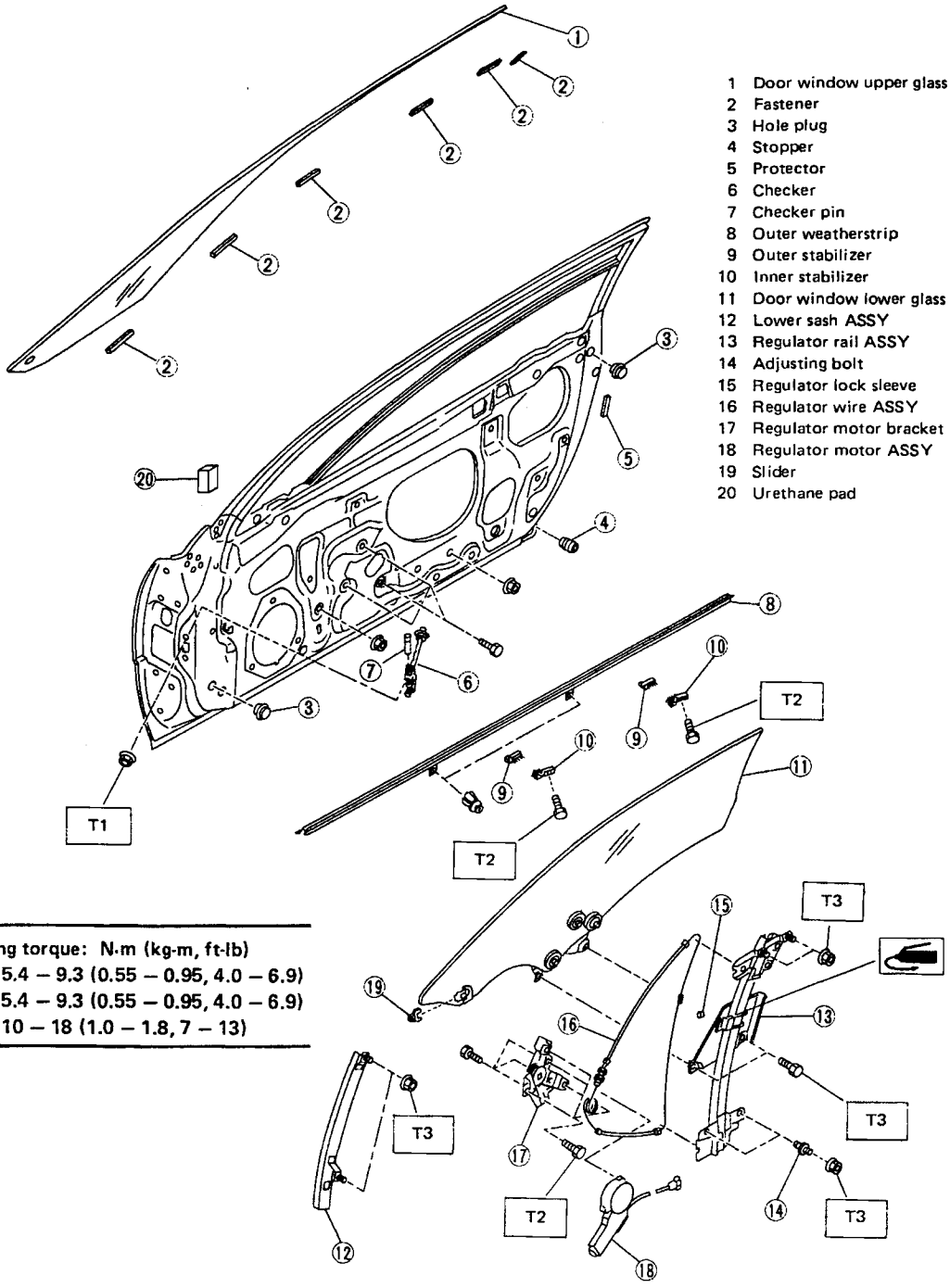

Tightening torque: N·m (kg-m, ft-lb)
T1: 5.4 – 9.3 (0.55 – 0.95, 4.0 – 6.9)
T2: 5.4 – 9.3 (0.55 – 0.95, 4.0 – 6.9)
T3: 10 – 18 (1.0 – 1.8, 7 – 13)

C5-118

Fig. 15

2. Rear Quarter Window

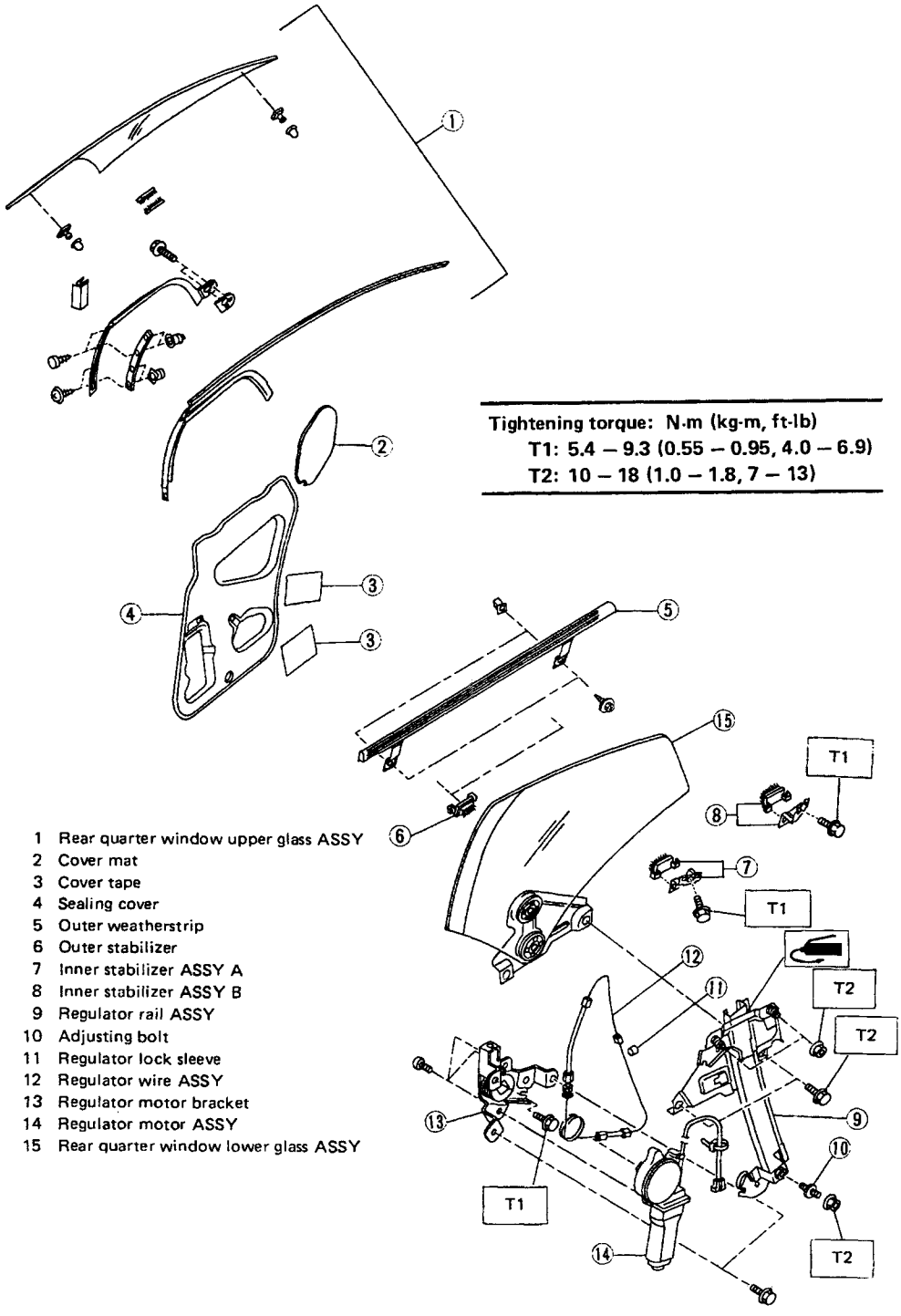

C5-119

Fig. 16

3. Window Glass

1. WINDSHIELD

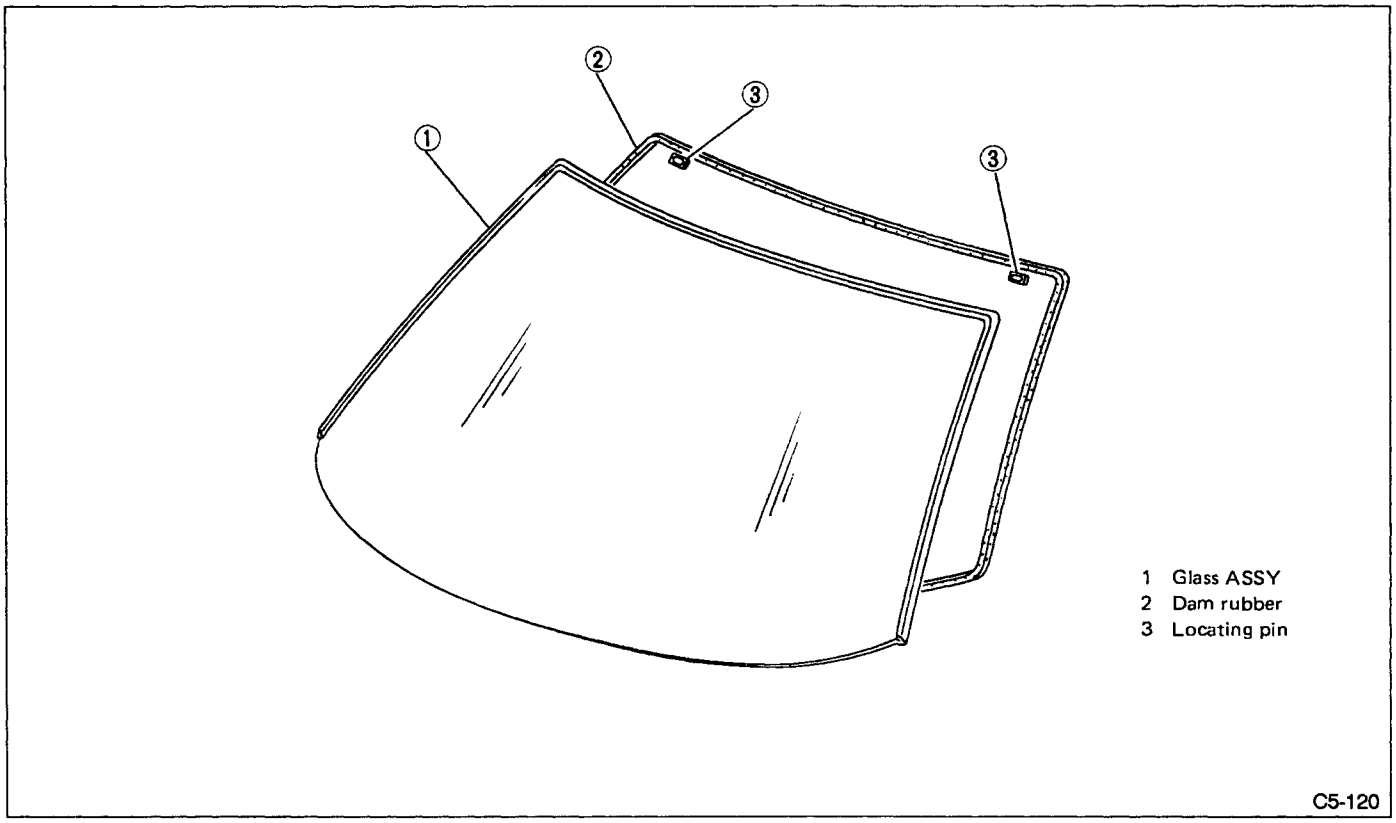

Fig. 17

2. REAR WINDOW GLASS

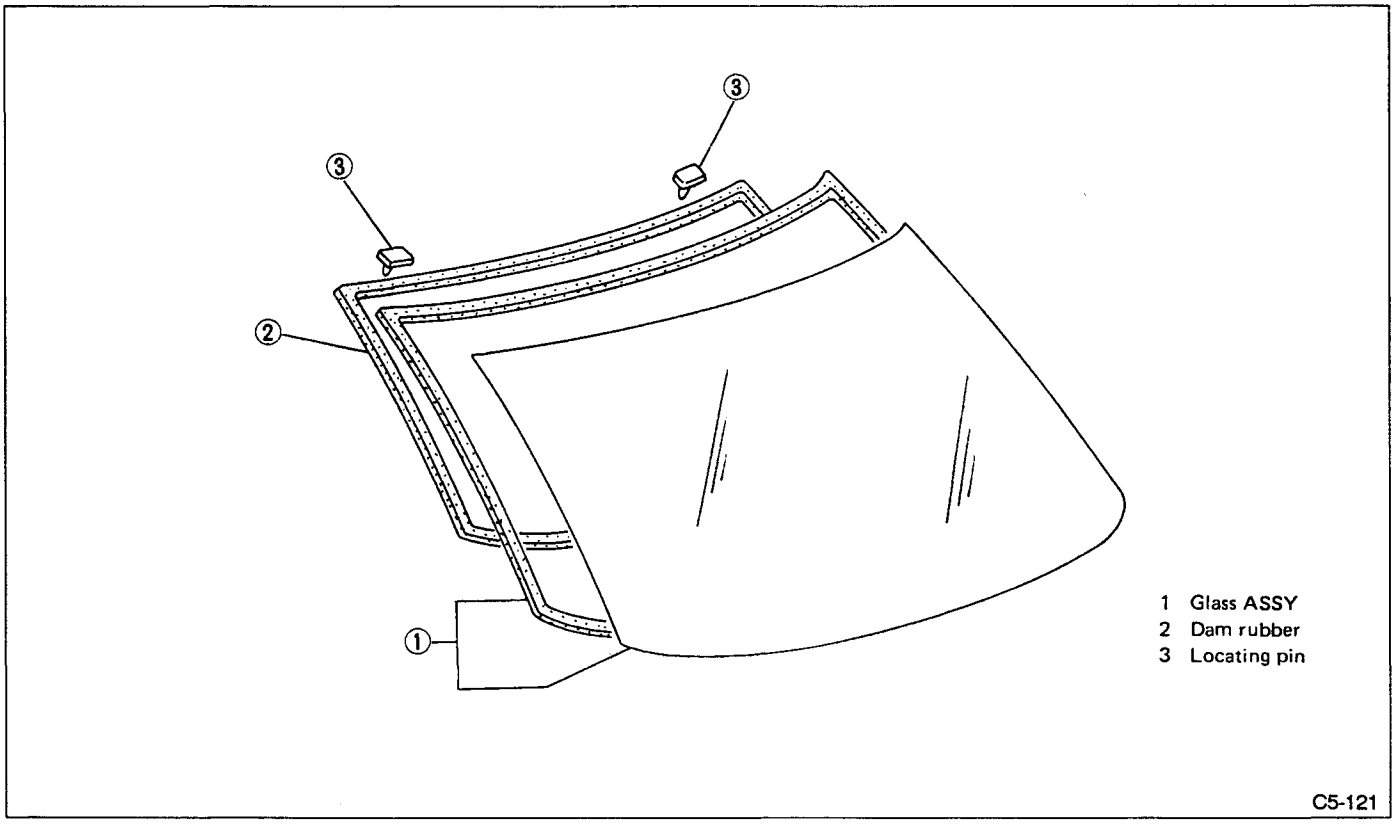

Fig. 18

4. Sealing Parts

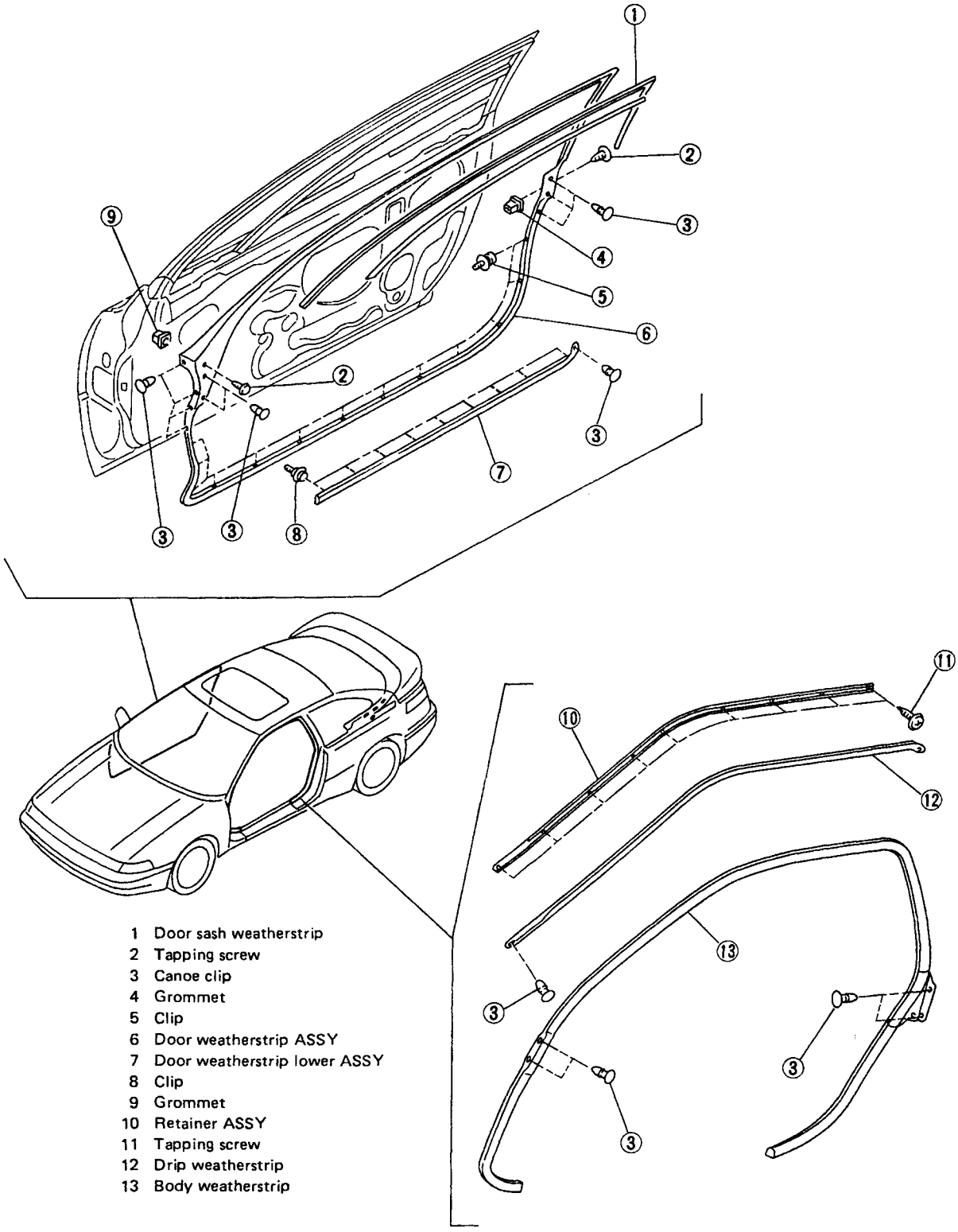

C5-122

Fig. 19

W SERVICE PROCEDURE

1. Procedure Chart for Removing and Installing Door and Related Parts

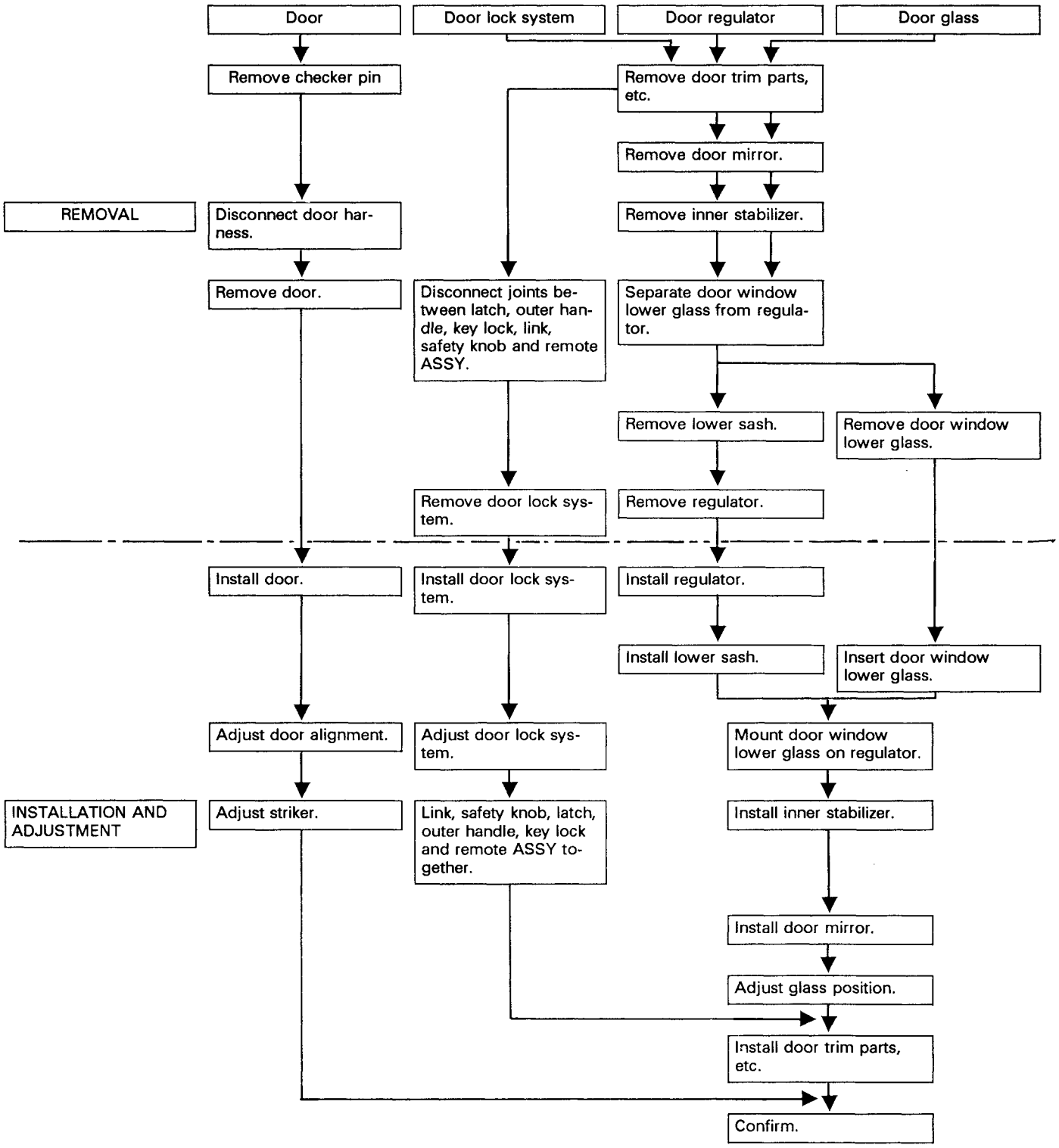

This flowchart shows the main procedures for removing and installing the door and its related parts. For details, refer to the text.

2. Door and Hinge

The method described below involves removing and installing. There is another method of removal and installation in which the front fender is first removed. The hinges may be removed and installed with the front fender removed. But the method of removal and installation is described below and should be performed after removing the door itself.

A: REMOVAL

a. Be sure to use two persons to perform this operation.
b. Be careful not to damage door and body.
1) Open front hood and disconnect battery minus terminal, and then open the door.
2) Place a cloth or a wood block under door to prevent damage, and support it with a jack.

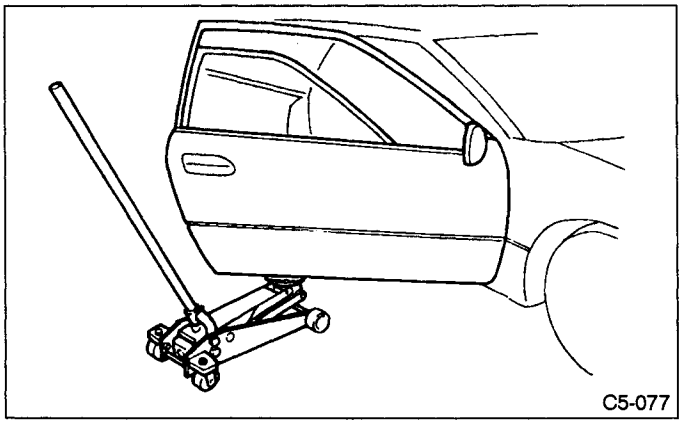

Fig. 20

3) Remove checker pin by driving it upward using a hammer covered with a cloth.

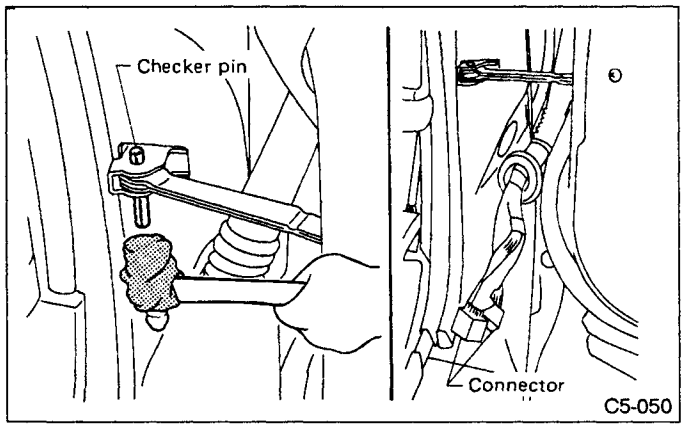

Fig. 21

4) Remove front pillar lower trim and disconnect harness connectors.
5) Remove hinges by loosening mounting bolts (M8) off of door, and remove door from body.

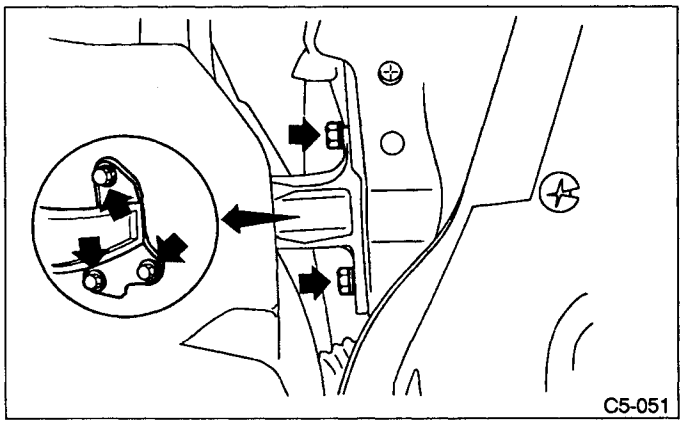

Fig. 22

a. Work carefully to avoid damaging door.
b. Disconnect harness first.

B: INSTALLATION

1) Install door itself to hinges with bolts kept after removal.
2) Connect harness connectors.
3) Install checker pin.
Apply grease to moving parts of door hinges.

C: ADJUSTMENT

1) Using DOOR HINGE WRENCH (925610000), loosen bolts securing upper and lower hinges to body, and adjust fore-and-aft and vertical alignment of door.
2) Loosen screw (which is tightened to specified torque) one complete rotation, and adjust opening/closing direction of door using a hammer covered with a cloth.
Be careful not to damage striker.

Hinge tightening torque (body side):
25 — 34 N•m (2.5 — 3.5 kg-m, 18 — 25 ft-lb)
Hinge tightening torque (door side):
20 — 29 N•m (2.0 — 3.0 kg-m, 14 — 22 ft-lb)
Striker tightening torque:
10 — 14 N•m (1.0 — 1.4 kg-m, 7 — 10 ft-lb)

3. Trim Panel

A: REMOVAL

1) Remove inner remote cap.

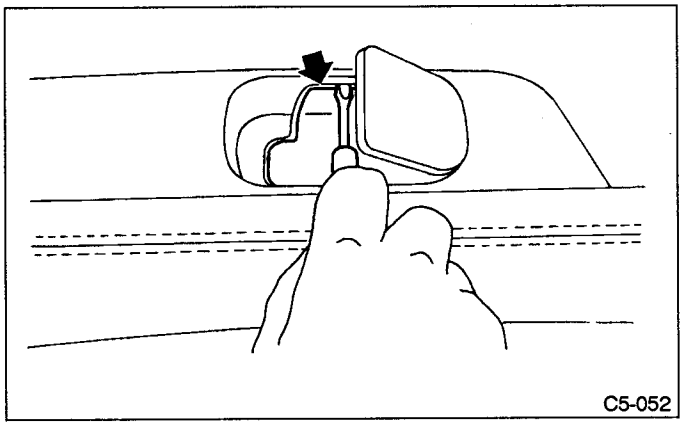

Fig. 23

2) Remove screws securing trim to door panel. (Concerning 2 bolts, peel door pocket mat off.)

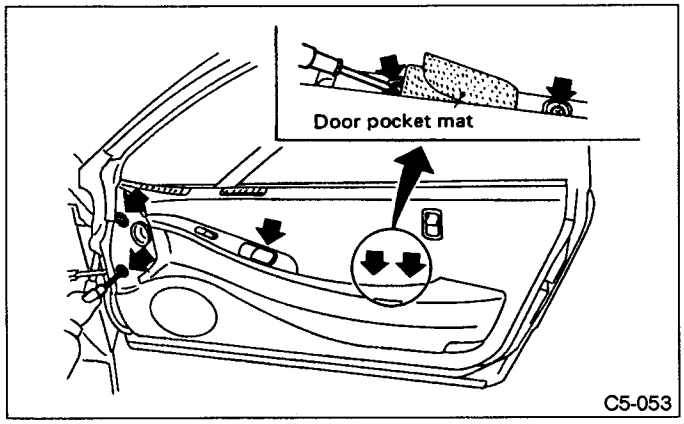

Fig. 24

3) Disengaging square and the other clips from door panel, remove trim panel.

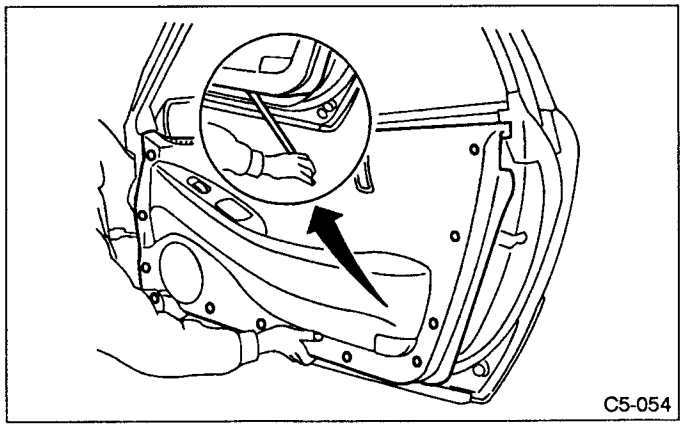

Fig. 25

Be careful not to break clip by applying undue force.

4) Disconnect harness connectors.

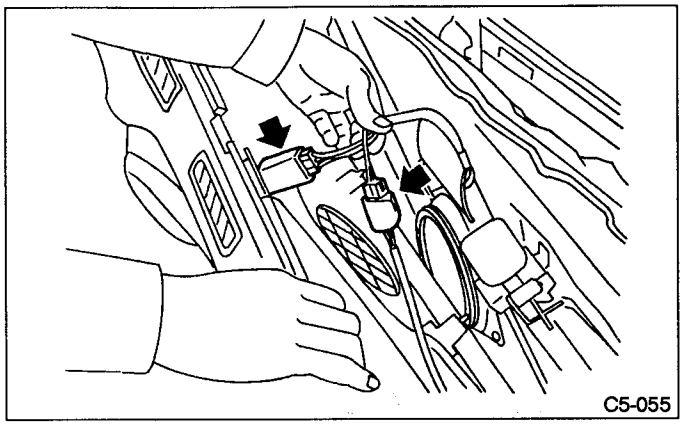

Fig. 26

B: INSTALLATION

Installation is in the reverse order of removal.

4. Sealing Cover

A: REMOVAL

1) Remove trim panel.
2) Remove harness cover tape adhering sealing cover, and remove trim bracket.

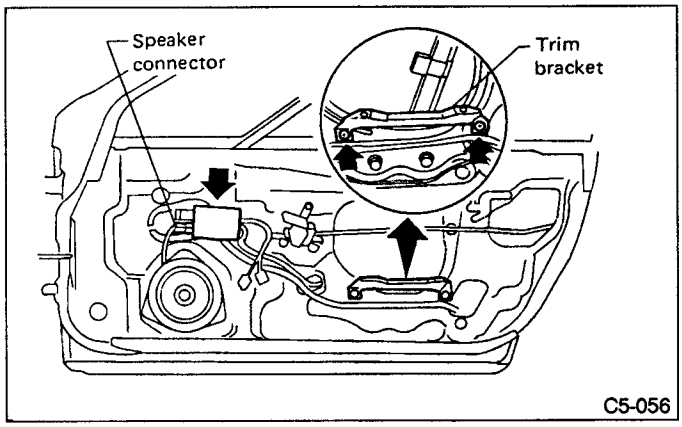

Fig. 27

3) Remove sealing cover and sealer with a spatula.
a. Be careful not to break sealing cover because it may break if sealer is removed forcefully.
b. Detach sealing cover in one quick motion so that sealer is left on the cover side.

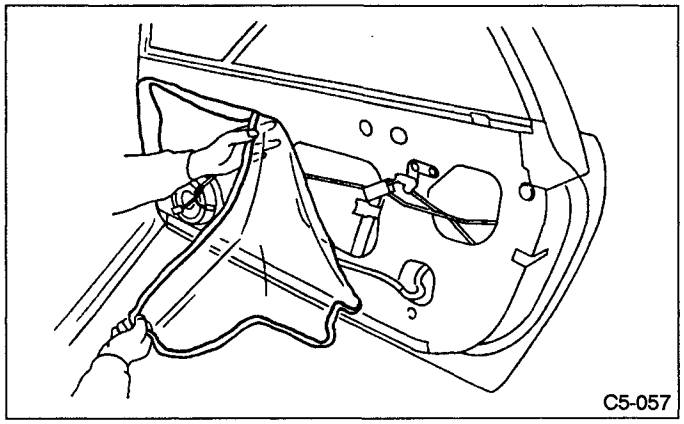

Fig. 28

4) Disconnect speaker connector.

B: INSTALLATION

1) Confirm that sealer is properly applied without breaks. Then install sealing cover.
2) When repairing or replacing sealing cover, use "Cemedine 5430L" as sealer. It may be overlaid on existing sealer.

Any breaks in sealer can cause water leakage or entry of air and dust. Be sure sealer is applied in a continuous line.

5. Checker

A: REMOVAL

1) Remove trim panel.
2) Remove sealing cover.
3) Apply a cloth to door and body to prevent damaging them, and remove checker pin by driving it upward.

Be careful not to damage door and body.

4) Completely close door glass.
5) Loosen two nuts securing checker, and take out checker through access hole in underside.

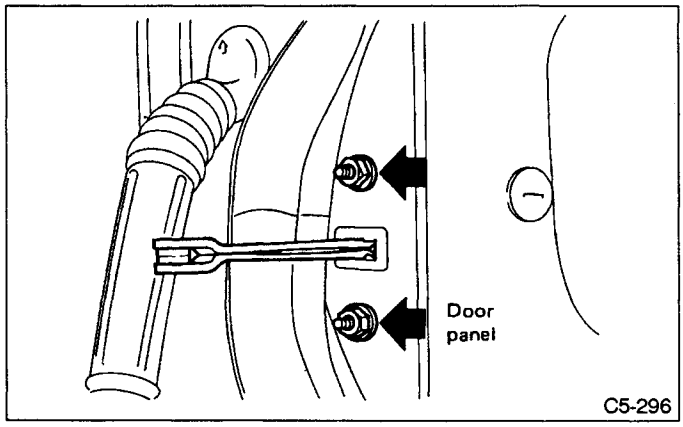

Fig. 29

B: INSTALLATION

Installation should be made in the reverse order of removal.

Tightening torque:
5.4 — 9.3 N•m (0.55 — 0.95 kg-m, 4.0 — 6.9 ft-lb)

6. Inner Remote Assembly

A: REMOVAL

1) Remove trim panel.
2) Remove sealing cover.
3) Disconnect joint between inner remote and latch, and unlatch rod holder.

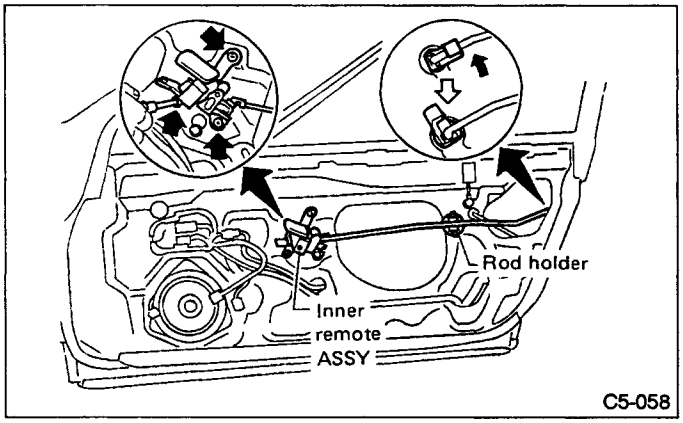

Fig. 30

4) Remove three screws holding remote ASSY.
5) Remove inner remote ASSY.

B: INSTALLATION

1) After passing rod through holder, attach remote ASSY to inner panel.
2) Latch rod holder.

Tightening torque (screw):
4.4 — 8.3 N•m (0.45 — 0.85 kg-m, 3.3 — 6.1 ft-lb)

7. Link & Safety Knob

A: REMOVAL

1) Remove trim panel.
2) Remove sealing cover.
3) Completely close door window glass.
4) Turn rod holder to disconnect joint between link and rod, and remove screws.

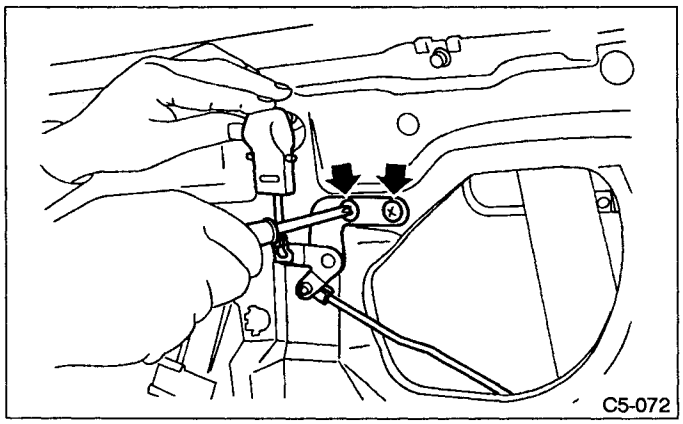

Fig. 31

5) Remove link and safety knob.

B: INSTALLATION

Installation is in the reverse order of removal.

8. Door Latch and Striker

A: REMOVAL

1) Remove trim panel.
2) Remove sealing cover.
3) Completely close door window glass.
4) Remove remote ASSY from latch.
5) Turn rod holder to disconnect joint between key lock ASSY and rod.

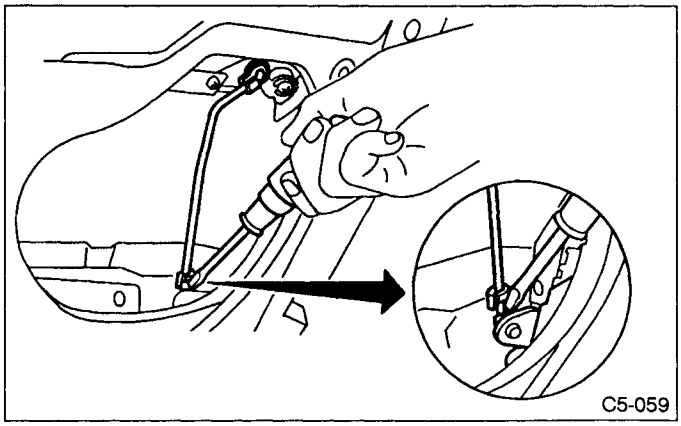

Fig. 32

6) Turn rod holder to disconnect joint between outer handle and rod.
7) Loosen screws securing latch, and remove latch through service hole.

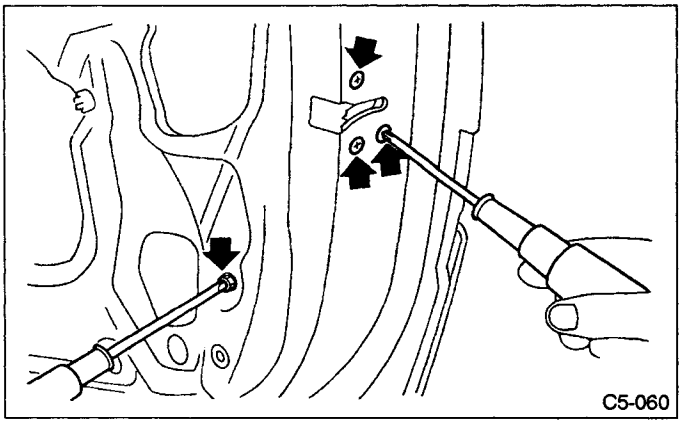

Fig. 33

8) Disconnect harness connectors.

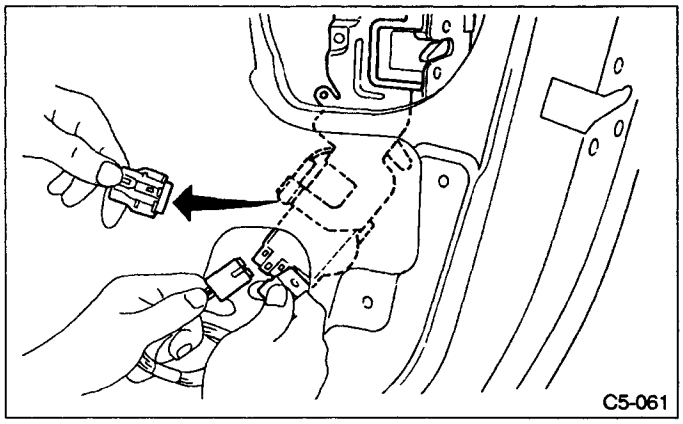

Fig. 34

B: INSPECTION

1) Check operation of each part.
2) Check each sliding part for proper lubrication.

After installation, be sure lock mechanism operates normally.

Latch tightening torque (screw):
4.4 — 8.3 N•m (0.45 — 0.85 kg-m, 3.3 — 6.1 ft-lb)
Striker tightening torque (screw):
10 — 14 N•m (1.0 — 1.4 kg-m, 7 — 10 ft-lb)

C: INSTALLATION

Installation is in the reverse order of removal.
a. Firmly join latch with key cylinder and outer handle.
b. As a general rule, door latch retaining screws are not suitable for further use after removal since they are coated with sealing agent.
1) If retaining screws are removed or loosened, proceed as follows:
2) When old retaining screws are re-used or when new screws are installed, proceed as follows:
(1) Remove traces of seal lock agent from screws and screw holes using sealer remover.
(2) Dry with compressed air.

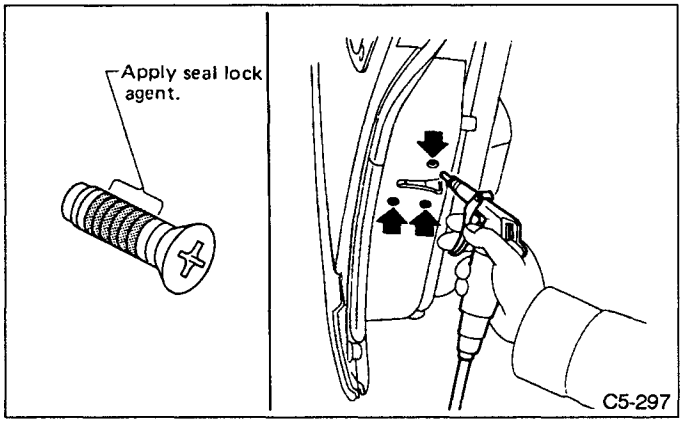

Fig. 35

3) Apply seal lock agent to screw thread area.

Seal lock agent: 0x0x0x0

D: ADJUSTMENT

Adjust striker installation position by loosening screws.

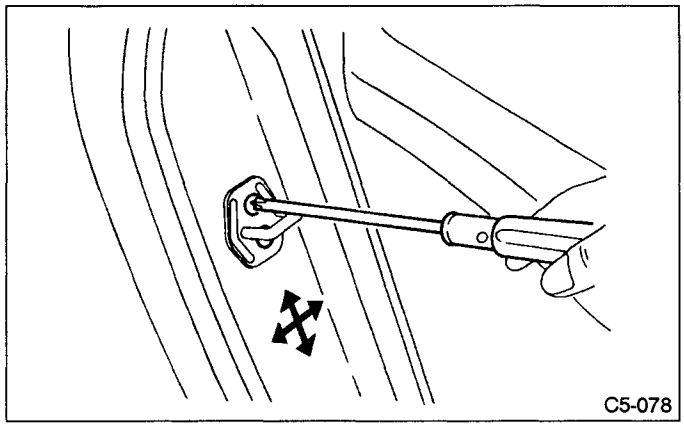

Fig. 36

9. Key Lock

A: REMOVAL

1) Remove trim panel.
2) Remove sealing cover.
3) Completely close door glass.
4) Turn rod holder to disconnect joint, and then loosen spring securing key lock.

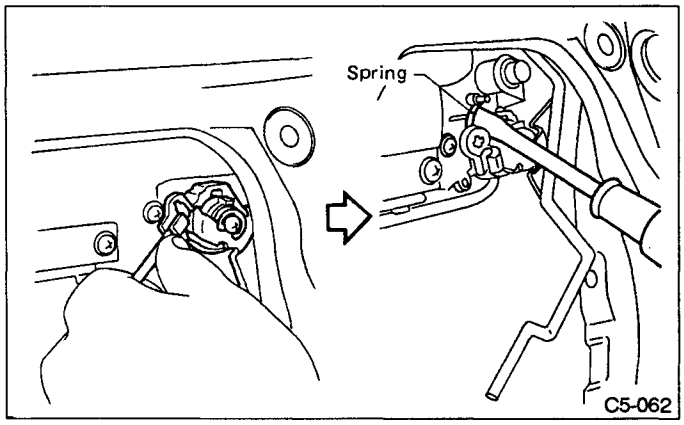

Fig. 37

5) Remove key lock from outer handle.

B: INSTALLATION

Installation is in the reverse order of removal.
Install so that key slot in key lock comes to center of hole in outer handle.

10. Outer Handle

A: REMOVAL

1) Remove trim panel.
2) Remove sealing cover.
3) Completely close door window lower glass. Then detach outer handle and key lock from door latch rod.
4) Remove blind cap covering hole and loosen nut securing outer handle, and then remove bracket from inside.

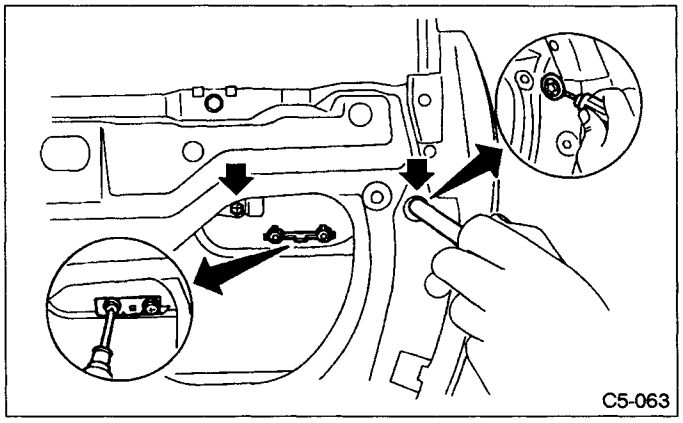

Fig. 38

5) Remove outer handle from outside.

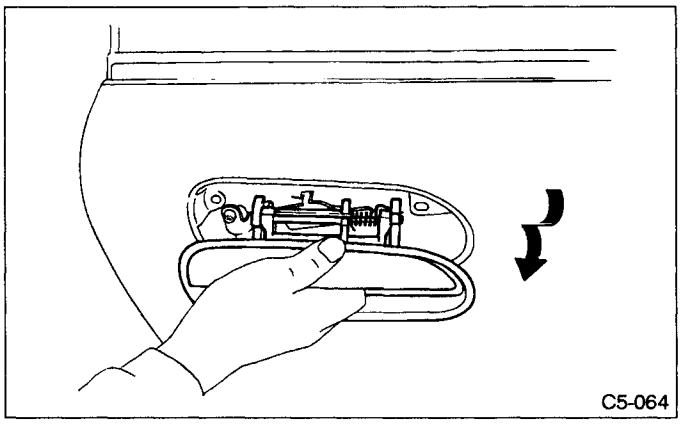

Fig. 39

Be careful not to damage door.

11. Stopper

A: INSTALLATION

Rotate stopper two turns and install it with "bead" section facing upward.

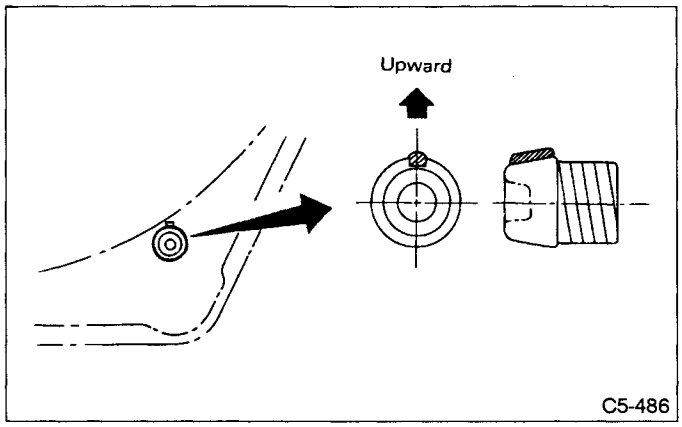

Fig. 40

12. Door Sash & Door Window Lower Glass

A: REMOVAL

1) Remove trim panel.
2) Remove sealing cover.
3) Remove inner remote ASSY
4) Completely close door window glass.
5) Disconnect door mirror harness connector, and remove connector holder covering hole.

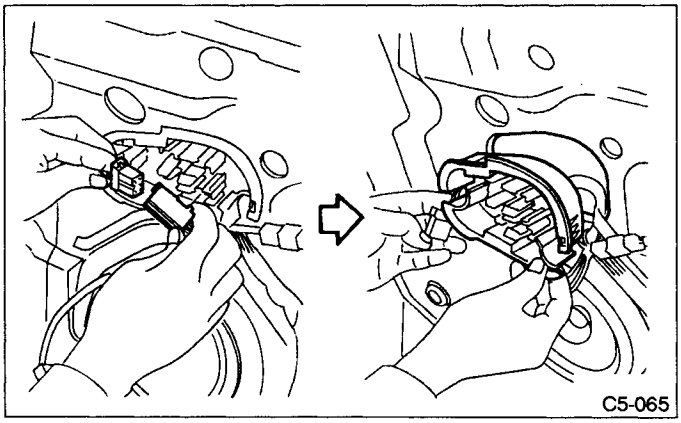

Fig. 41

6) Remove mirror cover screw and clip, and peel the part of mirror cover weatherstrip as illustrated, and then remove mirror.

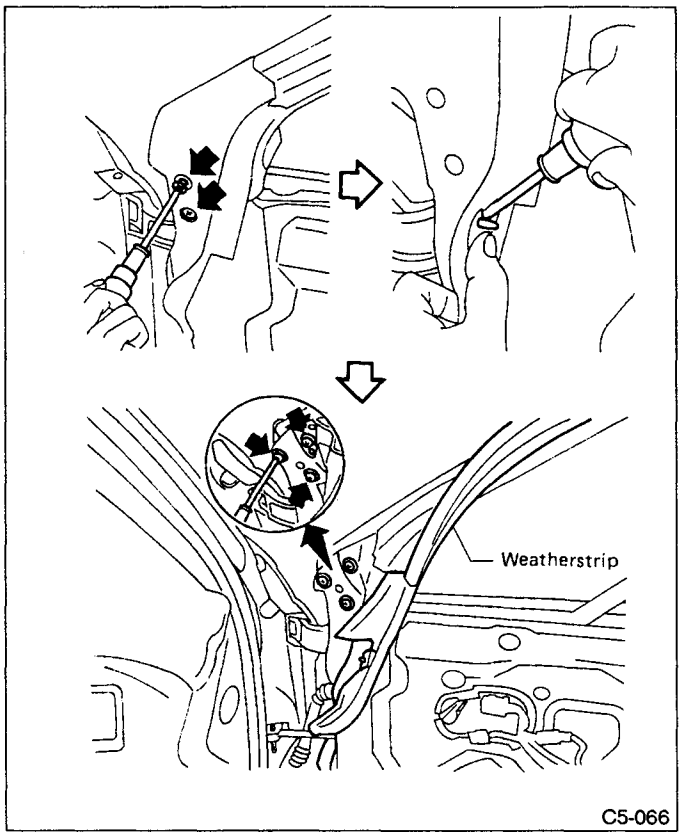

Fig. 42

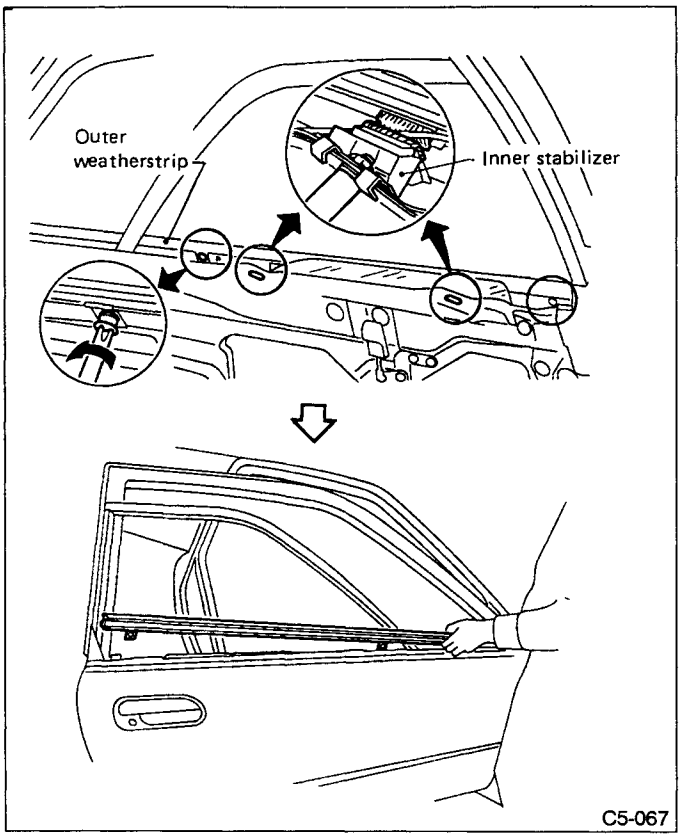

Fig. 43

7) Completely down (open) door window lower glass.
8) Remove inner stabilizer and outer weatherstrip.
9) Move door window lower glass connecting section to center working hole of door panel.

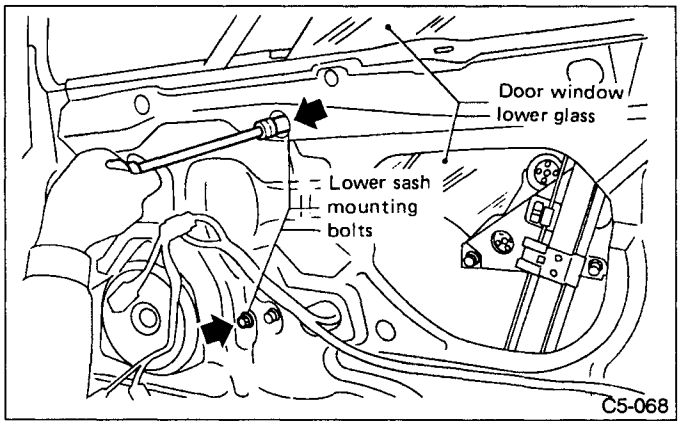

Fig. 44

10) Remove speaker, and then remove lower sash. (Unnecessary for glass removal.)
11) Remove the bolts (which is fixed to regulator rail ASSY), and separate door window lower glass from inside of the door.

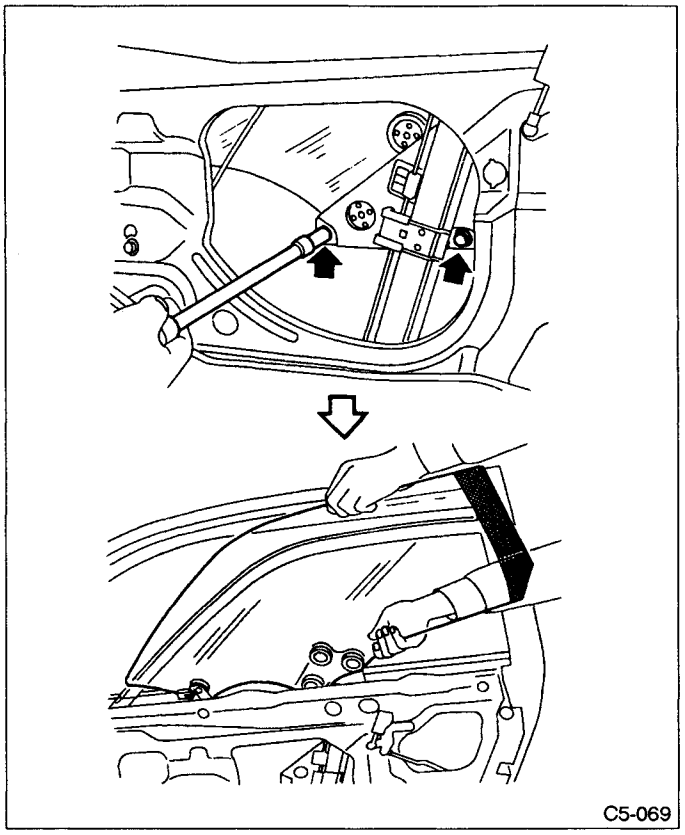

Fig. 45

B: INSTALLATION

Installation is in the reverse order of removal.

Lower sash tightening torque:
5.4 — 9.3 N•m (0.55 — 0.95 kg-m, 4.0 — 6.9 ft-lb)

13. Door Window Regulator

A: REMOVAL

For both doors, removal of the window regulator is not mandatory.

1) Remove trim panel.
2) Remove sealing cover.
3) Remove door window lower glass.
4) Disconnect regulator motor harness connector and regulator wire from clip, and then loosen nuts and remove regulator rail ASSY with regulator motor and wire.

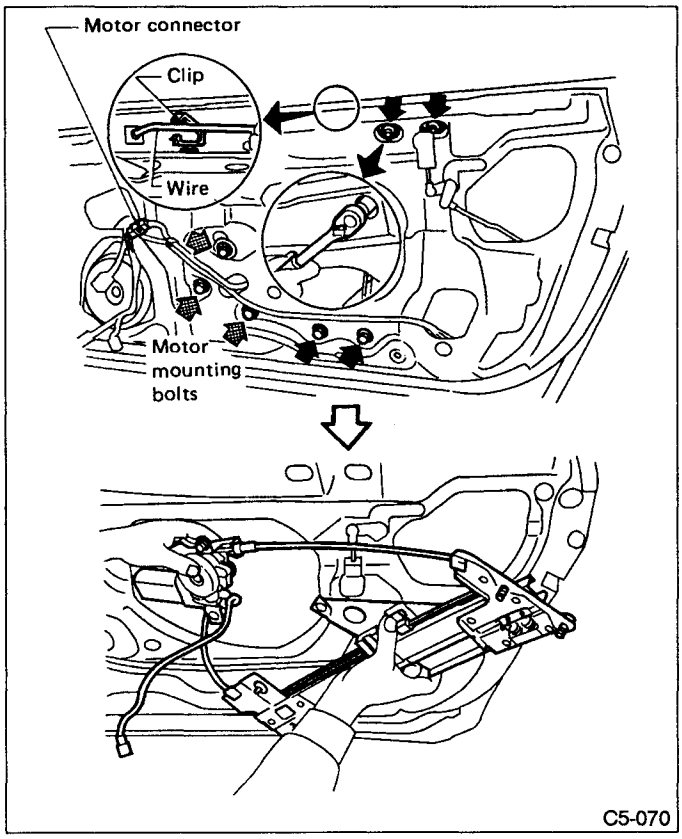

Fig. 46

5) Loosen wire adjusting screw, and unhook claws at the center and both ends of regulator rail ASSY, then separate motor and wire after loosening the wire.

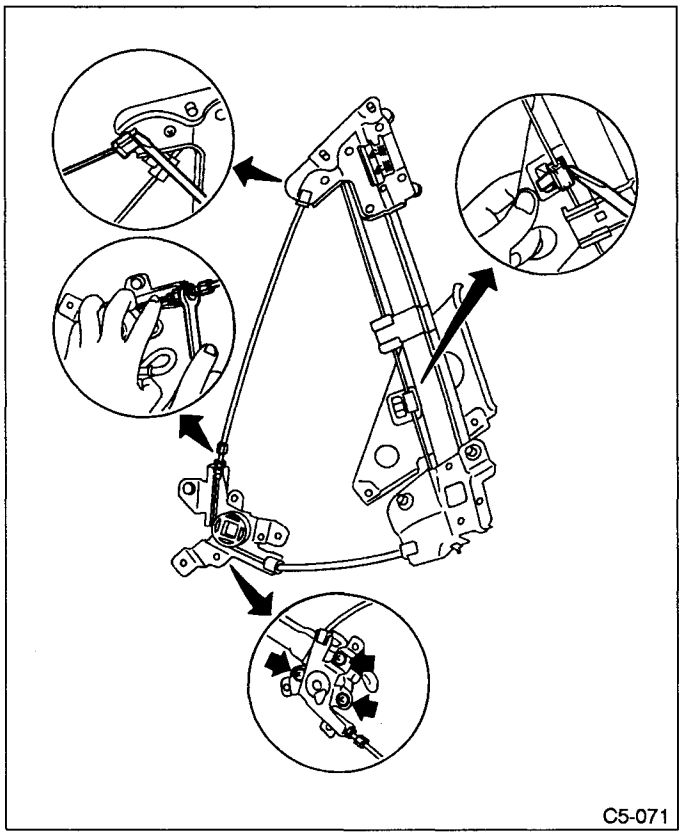

Fig. 47

B: INSTALLATION

Installation is in the reverse order of removal.

Regulator tightening torque:
10 — 18 N•m (1.0 — 1.8 kg-m, 7 — 13 ft-lb)

C: ADJUSTMENT

Using regulator mounting nut, adjust the installation position of regulator, and adjust the door window glass protrusion by turning adjusting screw.

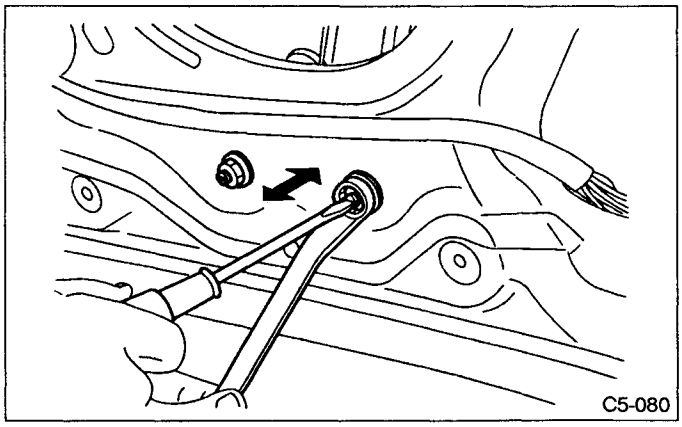

Fig. 48

14. Door Weatherstrip

A: REMOVAL

1) Remove checker pin and detach checker from body and detach weatherstrip from door panel with clip.

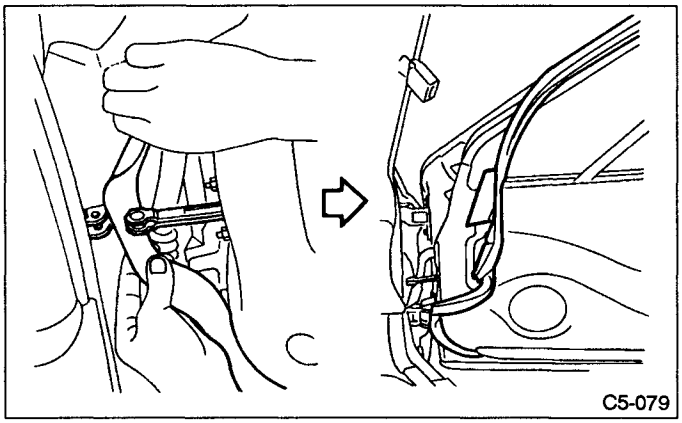

Fig. 49

2) Remove weatherstrip from door panel ditch around door panel.

B: INSTALLATION

Installation is in the reverse order of removal.

Install weatherstrip into door panel ditch firmly.

15. Rear Quarter Window Lower Glass

A: REMOVAL

1) Remove rear quarter trim panel.

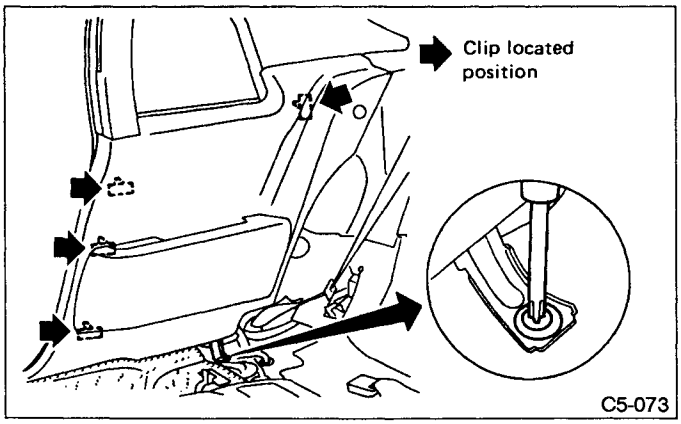

Fig. 50

2) Disconnect regulator motor connector.
3) Remove cover tape, and remove sealing cover with sealing mat.

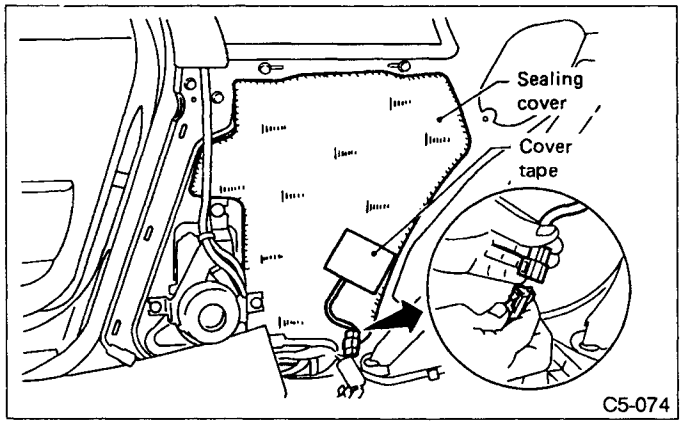

Fig. 51

4) Completely down (open) rear quarter window lower glass.
5) Remove inner stabilizers.
6) Move rear quarter window glass connecting section to center of the working hole.
7) Remove two bolts, and remove rear quarter lower window glass from outside of vehicle.

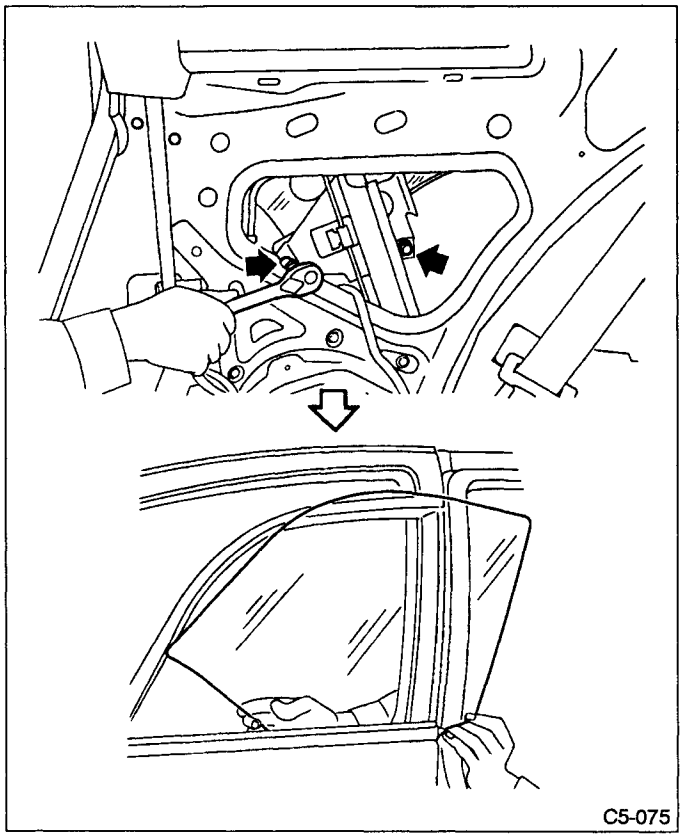

Fig. 52

B: INSTALLATION

Installation is in the reverse order of removal.

16. Rear Quarter Window Regulator

A: REMOVAL

1) Remove rear seat.
2) Remove rear quarter trim panel.
3) Remove sealing cover.
4) Remove rear quarter window lower glass.
5) Remove regulator rail ASSY with regulator motor and wire.

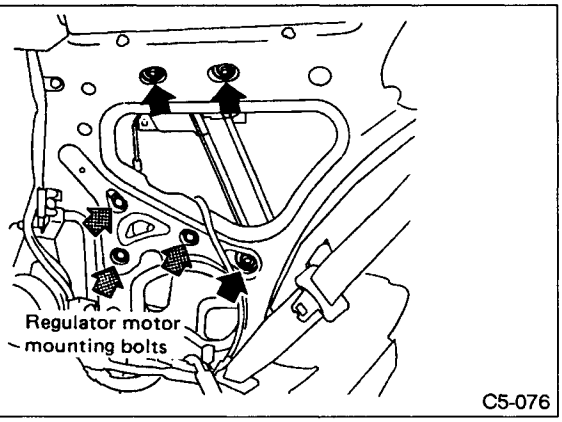

Fig. 53

6) Separate the motor and wire from regulator rail ASSY in the same manner as the door window regulator.

B: INSTALLATION

Installation is in the reverse order of removal.

Regulator tightening torque:
10 — 18 N•m (1.0 — 1.8 kg-m, 7 — 13 ft-lb)

C: ADJUSTMENT

Adjustment method is same as the door window regulator.

17. Removal and Installation of Adhesion Type Window Glass

1. PROCEDURES OF REMOVAL AND INSTALLATION

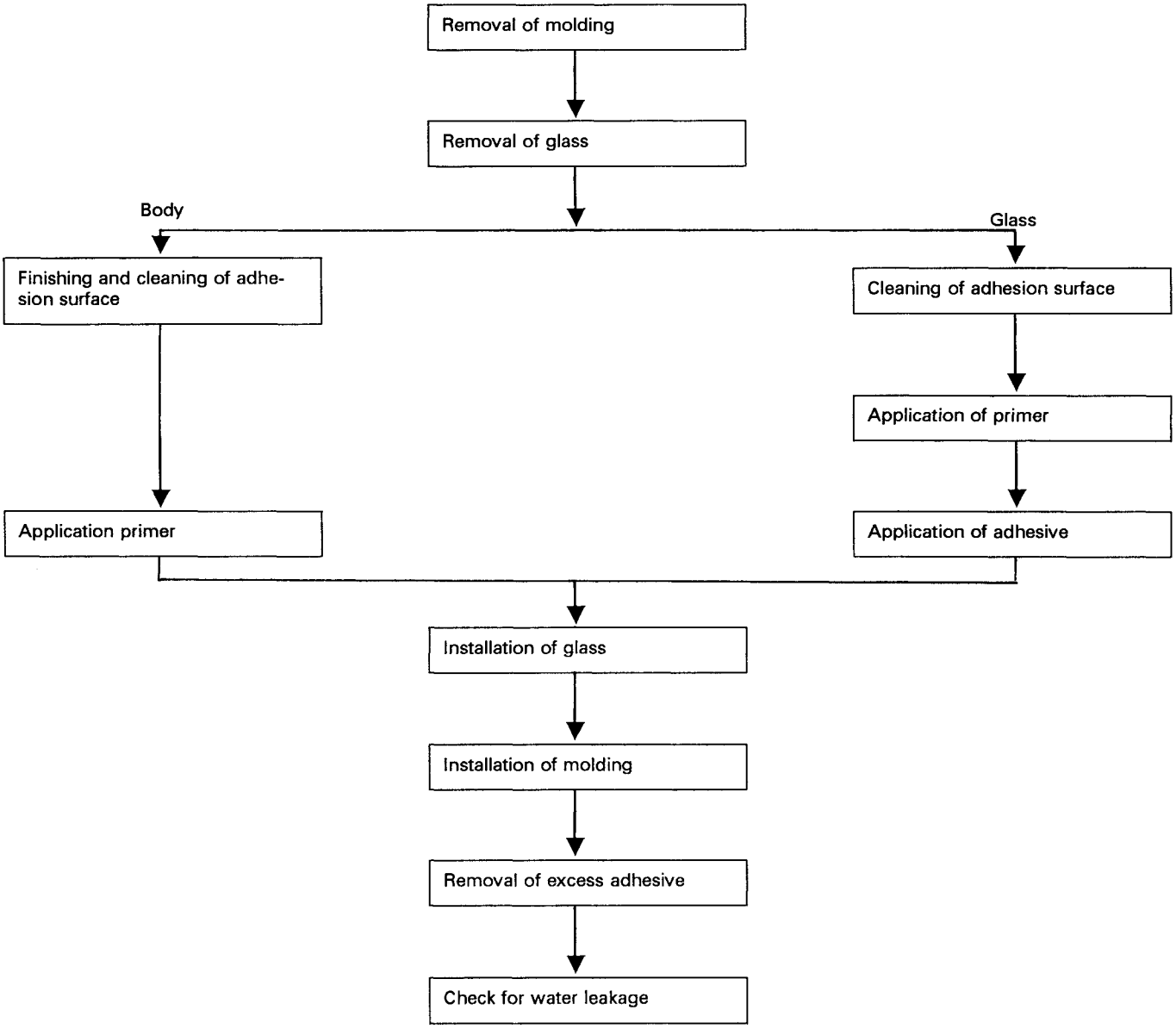

2. MATERIALS REQUIRED FOR APPLICATION

Description	Remarks
Repair adhesive set	
• Cartridge of single-liquid urethane adhesive • Primer for glass and body	Sunstar No. 580 or Essex Chemical Corp's Urethane E Sunstar No. 435-580
Hot knife (or piano wire)	For cutting adhesive agent
Sealant gun	For applying adhesive
Suction cups	For holding glass
Putty knife	For finishing adhesion surface and cutting spacer
Sponge	For applying primer
Gauze or cloth	For cleaning
Alcohol or white gasoline	For cleaning adhesion surface
Tape	For preventing damage to painted surface
Retaining fitting and plate	For installing door upper glass & rear quarter upper glass

18. Windshield

A: REMOVAL

The following procedure for the front windshield can also be applied to other window glass.

1) Remove wiper arm.
2) Remove front fender rubber seal, cowl panel and front pillar cover.
3) Remove molding.
4) Remove glass.
   (1) Put protective tape on body to prevent damage.
   (2) Apply soapy water to the surface of the adhesive agent so the knife blade slides smoothly.
   (3) Remove excess adhesive agent using putty knife.

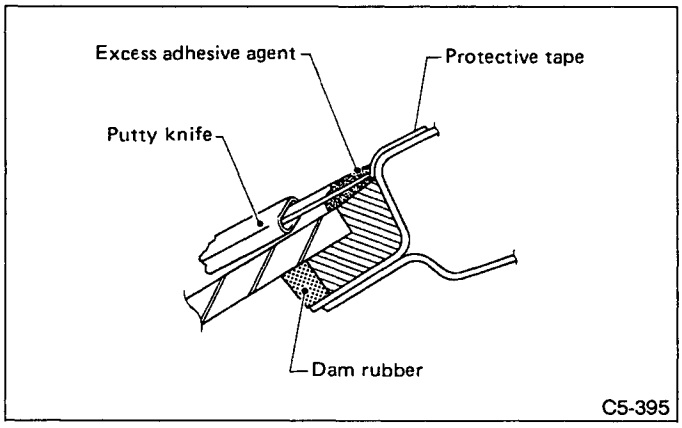

Fig. 54

   (4) Scribe a line on adhesive agent using putting knife (to facilitate movement of putty knife during subsequent operation).

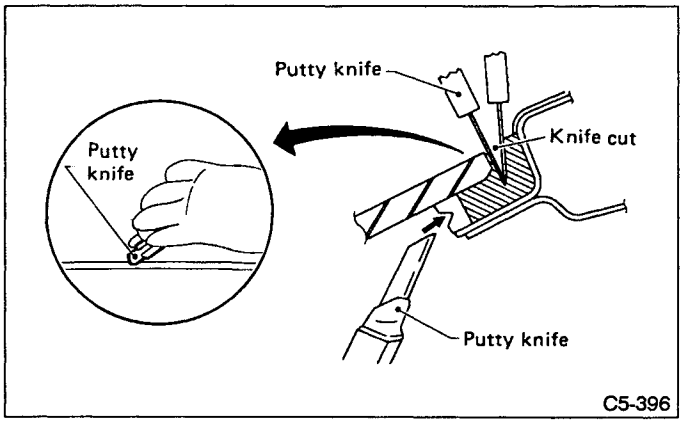

Fig. 55

   (5) Cut off adhesive agent using hot knife and remove windshield.

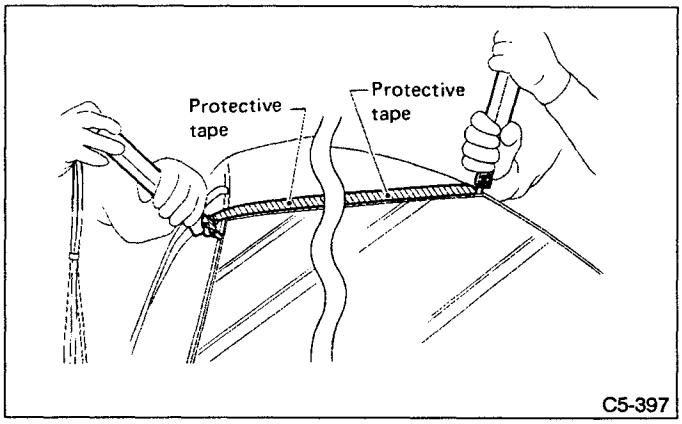

Fig. 56

B: INSTALLATION

1) Scrape adhesive agent until a layer of adhesive agent is equally maintained in 1 — 2 mm (0.04 — 0.08 in) thickness around entire perimeter.

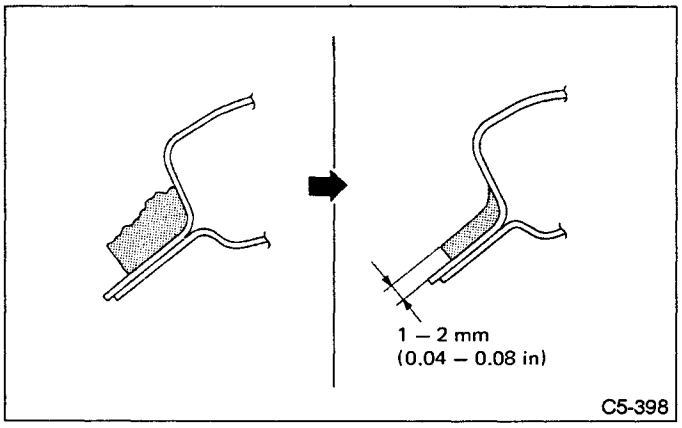

Fig. 57

Take extra care not to cause damage to body paint.

2) Cleaning body surface.
   (1) Thoroughly remove chips, dirt and dust from body surface.

(2) Clean body wall surface and upper surface of layer of adhesive with a solvent such as alcohol or white gasoline.

3) Positioning glass.
(1) Mount glass on body.
(2) Adjust position of glass so that gap between body and glass is uniform on all sides.
(3) Align protrusion of glass and locating pin with body panel.

4) Cleaning glass.
(1) Dismount glass from body.
(2) Clean surface of glass to be adhered with alcohol or white gasoline.

5) Application of primer.
(1) Using a sponge, apply primer to part of glass to be adhered.
(2) Apply primer to part of body to be adhered.

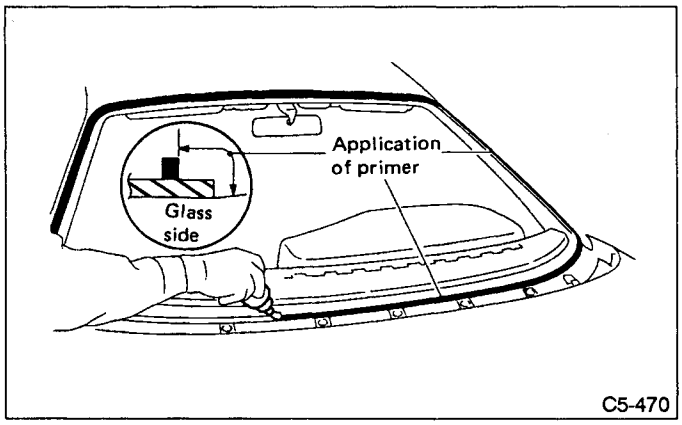

Fig. 58

a. Primer is hard to wipe off of body paint, instrument panel, inner trim, etc. So put masking around these areas for protection.
b. After application, let 1st primer dry spontaneously for about 10 minutes.
c. Do not touch primer-coated surface under any circumstances.

6) Application of adhesive.
(1) Cut nozzle tip of cartridge as shown in figure below.
(2) Open cartridge and put it into a gun with nozzle attached.
(3) Apply adhesive uniformly to all sides of adhesion surface while operating gun along glass end face.

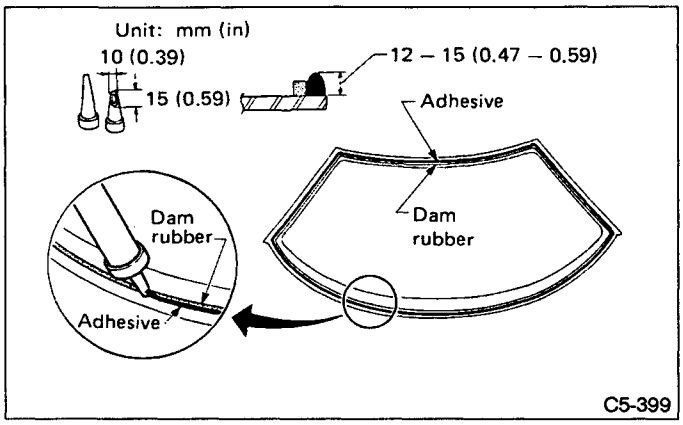

Fig. 59

7) Installation of glass.
(1) Hold glass with rubber suction cups.
(2) Mount glass on body with locating pin and protruded portion aligned.
(3) Stick them fast by pressing all sides lightly.

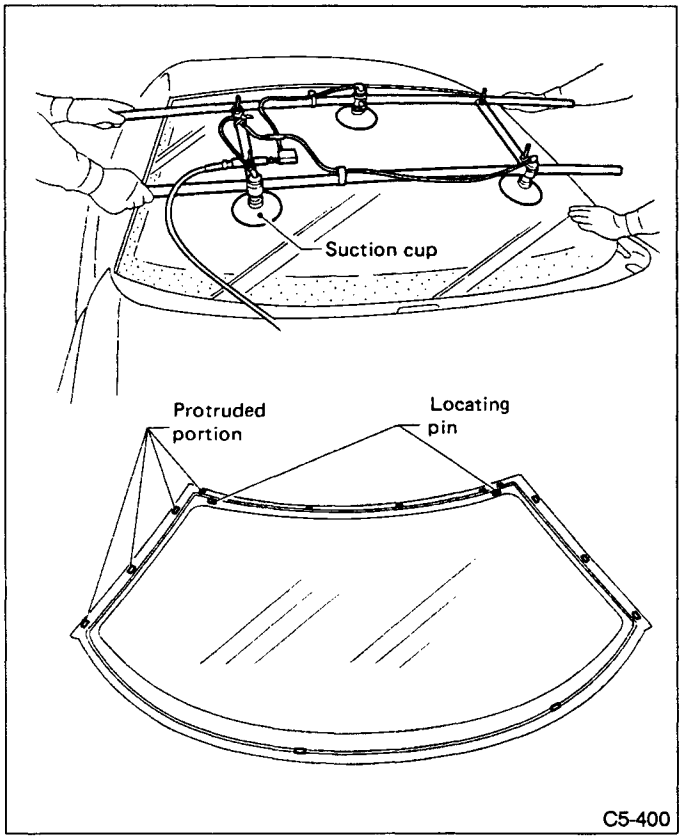

Fig. 60

(4) Press-fit moldings.
(5) Remove overflowing adhesive with a spatula, and clean with alcohol or white gasoline.

8) Water leakage test.
Test for water leakage about one hour after installation.
a. Move vehicle very gently.
b. Do not squirt strong hose stream on vehicle.

9) Spontaneous drying.

After completing all operations, leave vehicle alone for 24 hours.

When delivering vehicle to user, tell him that vehicle should not be subjected to heavy shocks for at least three days.

10) Install cowl panel, fender rubber seal and wiper arm.

19. Rear Window Glass

A: REMOVAL

1) Disconnect connector from rear defogger terminal.
2) Remove weatherstrip located between rear quarter window and rear window and remove glass in same manner as in windshield.

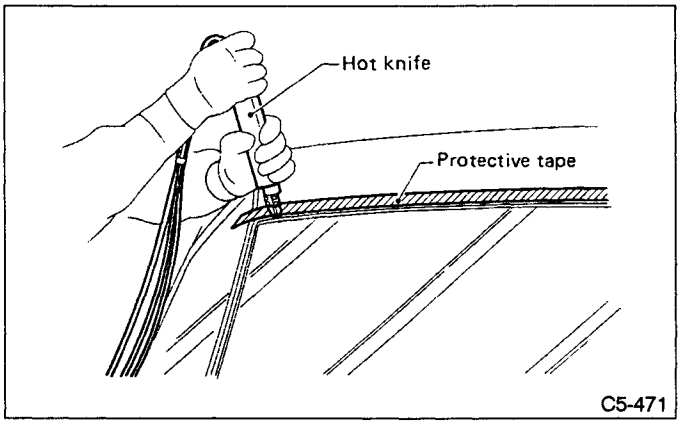

Fig. 61

B: INSTALLATION

1) Install glass and weatherstrip in same manner as in windshield.

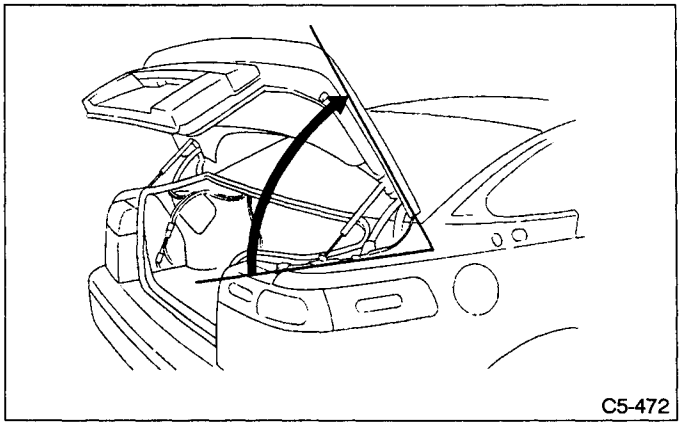

Fig. 62

Install glass with trunk lid opened at approximately 45° (as shown in figure above).

2) After installation, test for water leakage after about one hour, and leave vehicle alone for 24 hours.
3) Make rear defogger connections.

20. Upper Door Glass

A: REMOVAL

1) Cut off mid-frame molding.

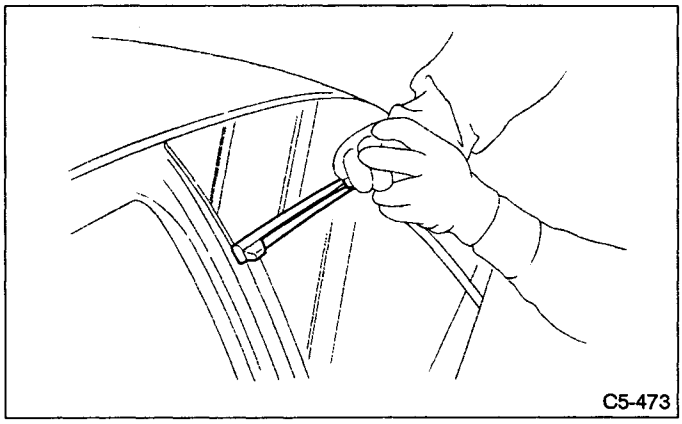

Fig. 63

2) Remove adhesive agent using putty knife and remove upper door glass.

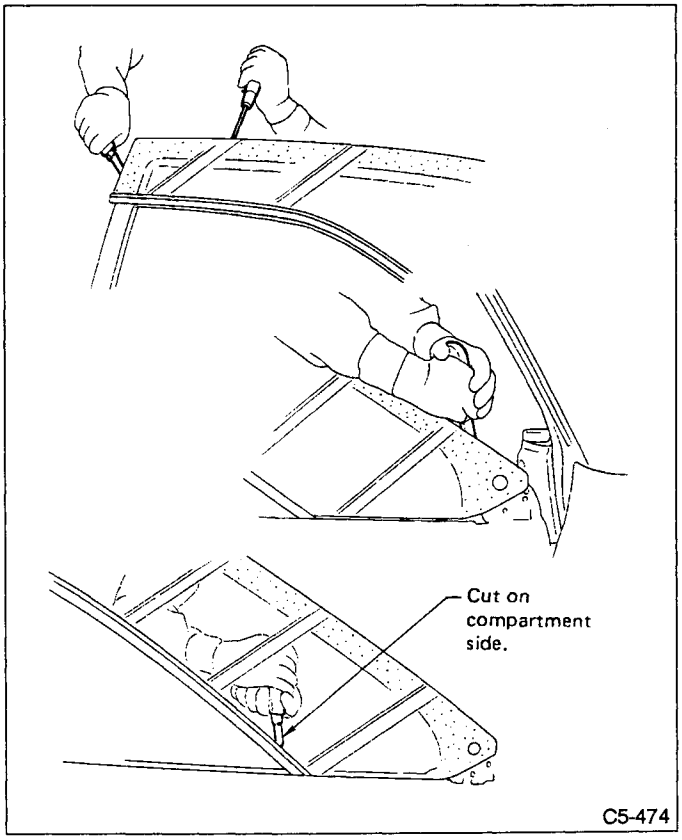

Fig. 64

B: INSTALLATION

1) Finish surface of adhesive layer on door (panel). Using a putty knife, etc., cut layer of adhesive stick firmly to door and finish it into a smooth surface.
Be careful not to damage door finish.
2) Cleaning of door surface.
(1) Remove chips, dirt and dust from door surface.
(2) Clean door wall surface and upper surface of adhesive layer with a solvent such as alcohol or white gasoline.
3) Cleaning glass
(1) Remove dirt and dust from surface of glass to be adhered.
(2) Clean surface of glass to be adhered with alcohol or white gasoline.
4) Application of primer
(1) Using a sponge, apply primer to surface of glass to be adhered.
(2) Apply primer to surface of door to be adhered.
a. If primer has dropped on door finish, it is hard to wipe it off. So protect with masking.
b. Primer must not project from black frame of glass.
c. After applying primer, let it dry spontaneously for about 10 minutes.
5) Mark Velcro(R) positions on door corresponding with Velcro(R) positions on door glass and attach Velcro(R) on door.
Left and right door glass designs are symmetrically opposite. After one glass is properly marked with Velcro(R) positions, invert and place it on the other door glass and mark positions of Velcro(R) to be attached.

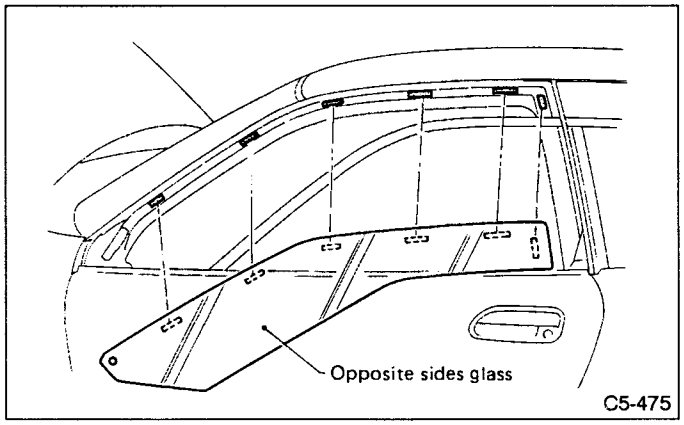

Fig. 65

6) Application of adhesive
(1) Cut nozzle tip as shown in figure below.
(2) Open cartridge and put it into a gun with nozzle attached.
(3) Apply adhesive uniformly to all sides of adhesion surface while operating gun along door end face.

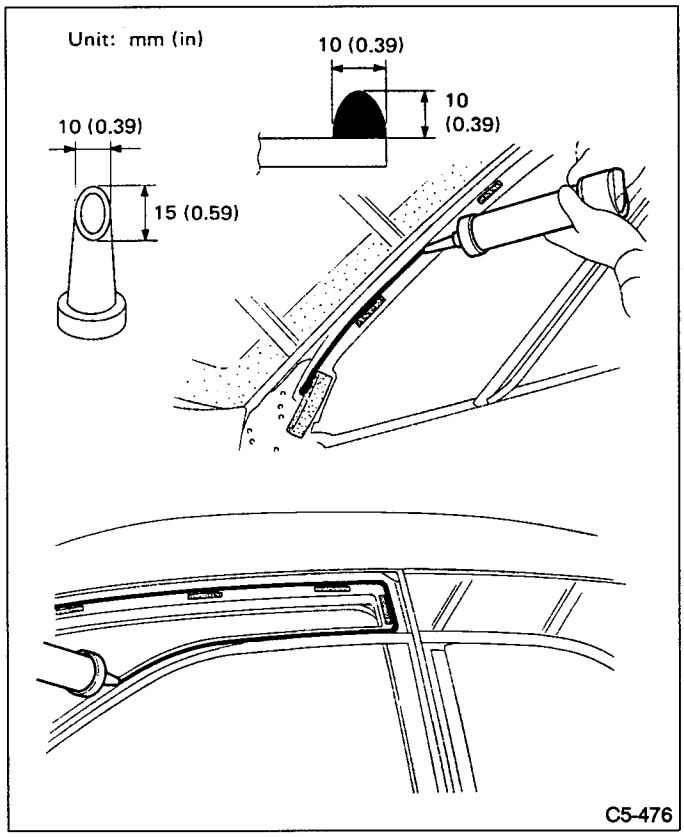

Fig. 66

7) Installation of glass.
(1) Align glass using Velcro(R) positions as a guide, then press glass against door panel.

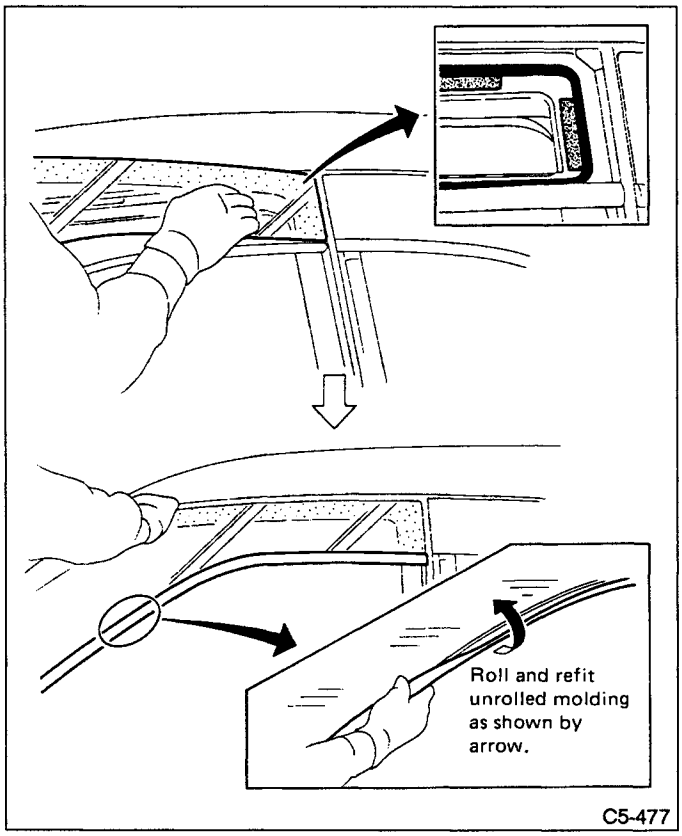

Fig. 67

(2) Move glass in direction of arrow so that middle weatherstrip is 8 mm (0.31 in) wide over entire length.

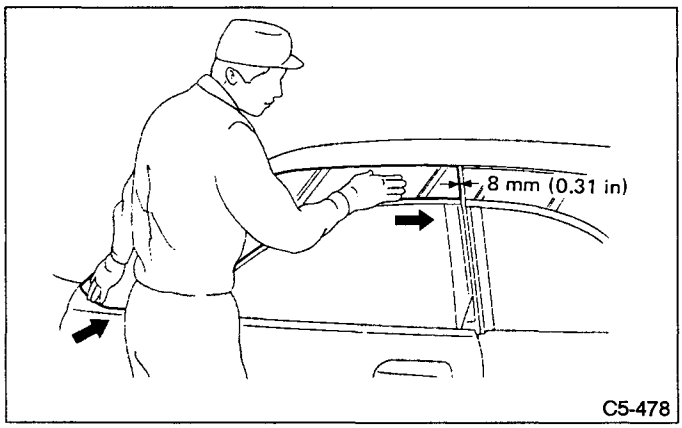

Fig. 68

a. After properly positioning glass, press it against door panel.
b. Working inside compartment, apply adhesive agent along upper side of midframe and on glass (as shown by arrow) using spatula.

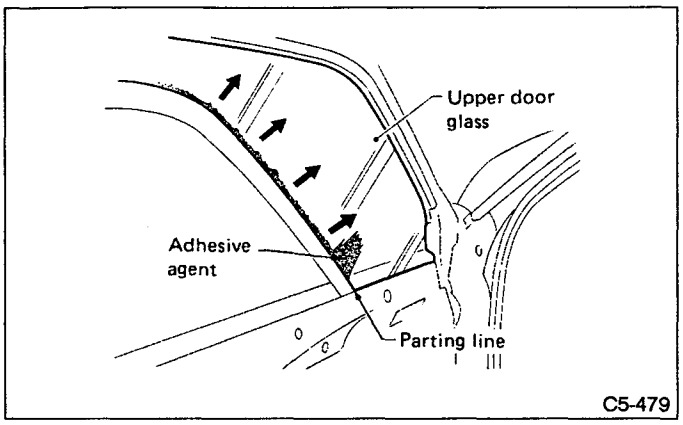

Fig. 69

c. Allow adhesive agent to dry completely, then scrape off.
d. Scribe parting line between midframe and applied adhesive agent using spatula.
8) Hold door glass on midframe using clamping tool and two plastic pads (one attached on outside of compartment and the other on inside).

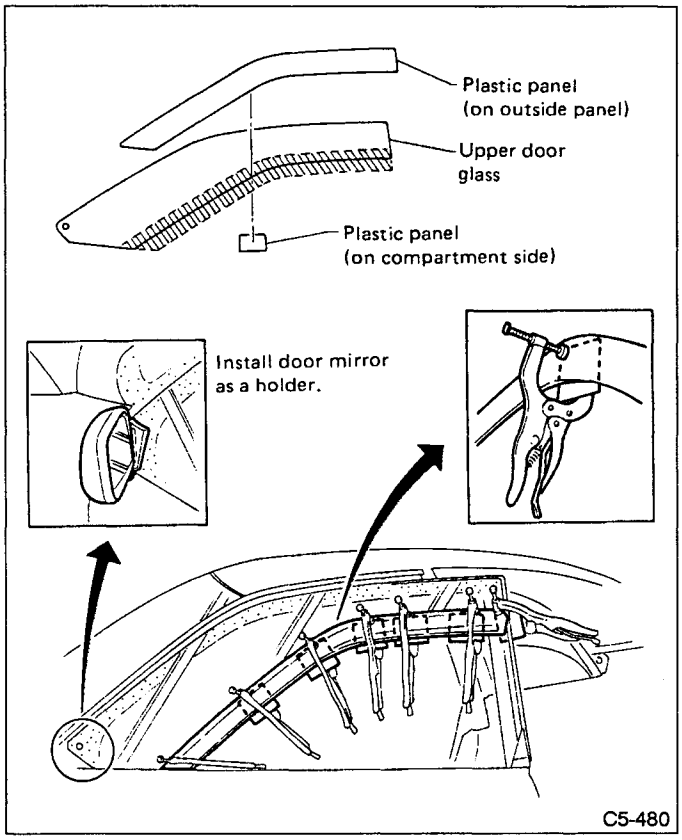

Fig. 70

9) Spontaneous drying.
After completing all operations, leave vehicle alone for 24 hours.
When delivering vehicle to user, tell him that vehicle should not be subjected to heavy shocks for at least three days.

21. Rear Quarter Upper Glass

A: REMOVAL

1) Remove rear quarter garnish.
2) Remove weatherstrip between rear window glass and rear quarter window.
3) Remove screws and clips securing rear quarter upper glass assembly.

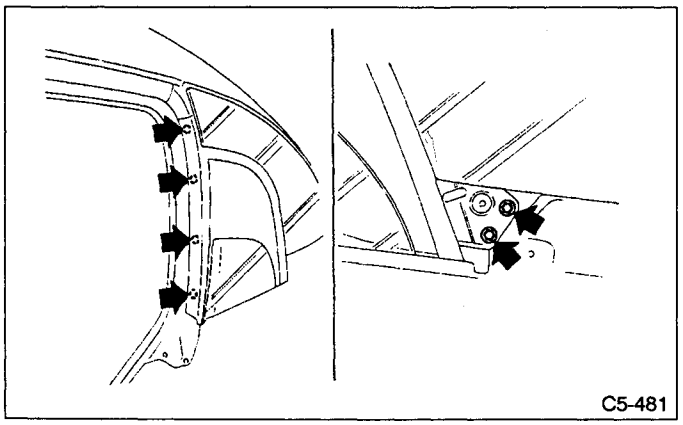

Fig. 71

4) Remove adhesive agent using putty knife, then remove rear quarter upper glass assembly.

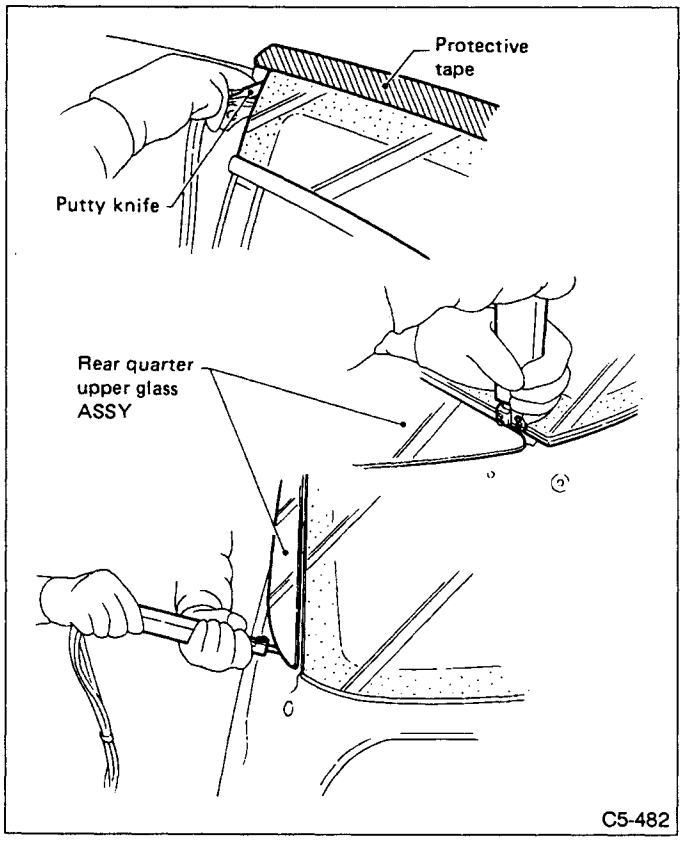

Fig. 72

B: INSTALLATION

1) Finish surface of adhesive layer on body.
Using a putty knife, etc., cut layer of adhesive stick firmly to body and finish it into a smooth surface.
Be careful not to damage body finish
2) Cleaning of body surface.
   (1) Remove chips, dirt and dust from body surface.
   (2) Clean body wall surface and upper surface of adhesive layer with a solvent such as alcohol or white gasoline.
3) Cleaning glass
   (1) Remove dirt and dust from surface of glass to be adhered.
   (2) Clean surface of glass to be adhered with alcohol or white gasoline.
4) Application of primer
   (1) Using a sponge, apply primer to surface of glass to be adhered.

a. If primer has dropped on body finish, it is hard to wipe it off. So protect with masking.
b. Primer must not project from black frame of glass.
c. After applying primer, let it dry spontaneously for about 10 minutes.

5) Attach Velcro(R) to body panel using Velcro(R) positions on glass as a guide.
Determine Velcro(R) positions on the other glass by inverting rear quarter upper glass with Velcro(R) positions already marked.

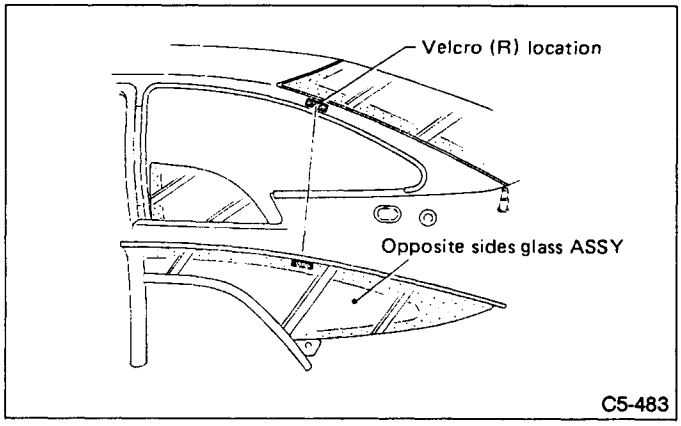

Fig. 73

6) Application of adhesive
(1) Cut nozzle tip as shown in figure below.
(2) Open cartridge and put it into a gun with nozzle attached.
(3) Apply adhesive uniformly to all sides of adhesion surface while operating gun along glass end face.

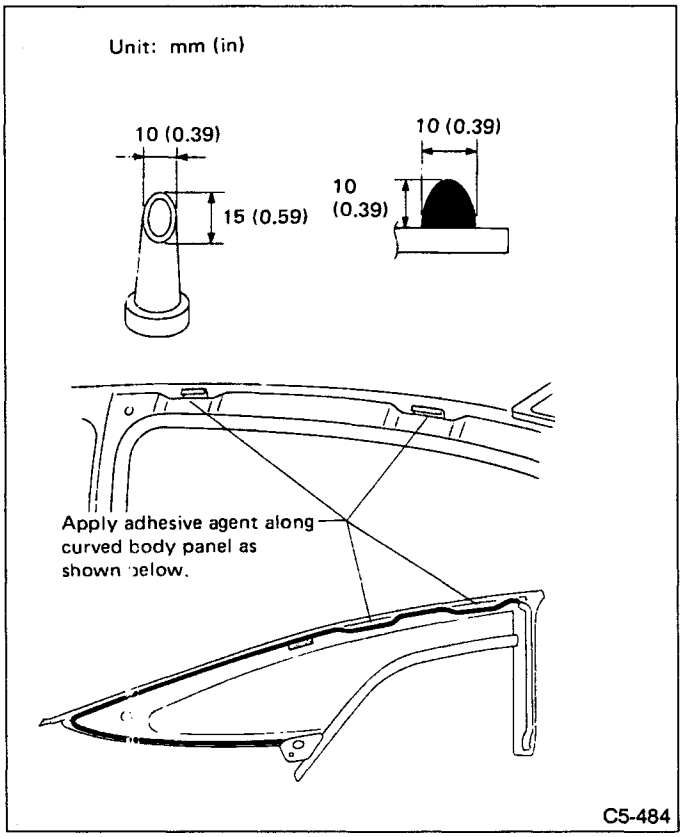

Fig. 74

7) Installation of glass ASSY.
(1) Firmly press glass assembly against body panel while aligning it with body panel at Velcro(R), concave and convex positions.

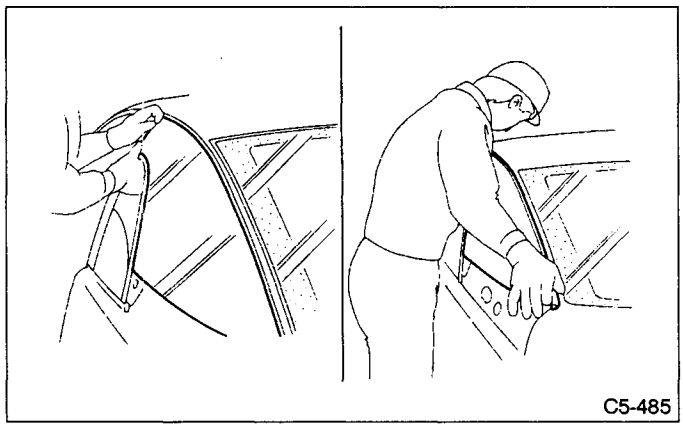

Fig. 75

Ensure that weatherstrip is approximately 8 mm (0.31 in) wide over its entire length, as in upper door glass installation.
(2) Install screws and clips to secure rear quarter upper glass assembly.

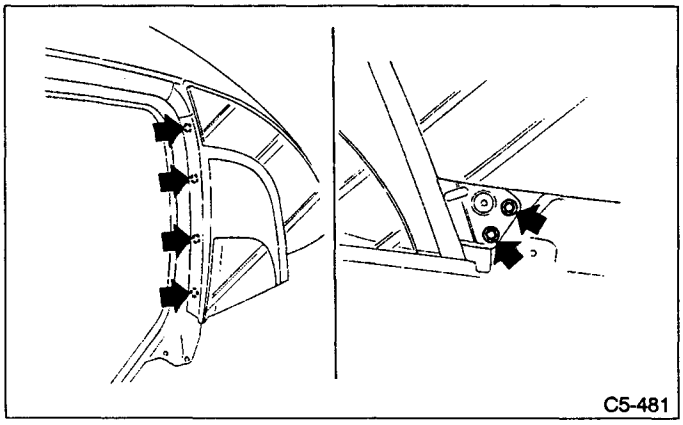

Fig. 76

8) Spontaneous drying.
After completing all operations, leave vehicle alone for 24 hours.
When delivering vehicle to user, tell him that vehicle should not be subjected to heavy shocks for at least three days.

22. Door & Rear Quarter Glass Adjustment

A: PROCEDURE CHART FOR ADJUSTING DOOR & REAR QUARTER LOWER GLASS

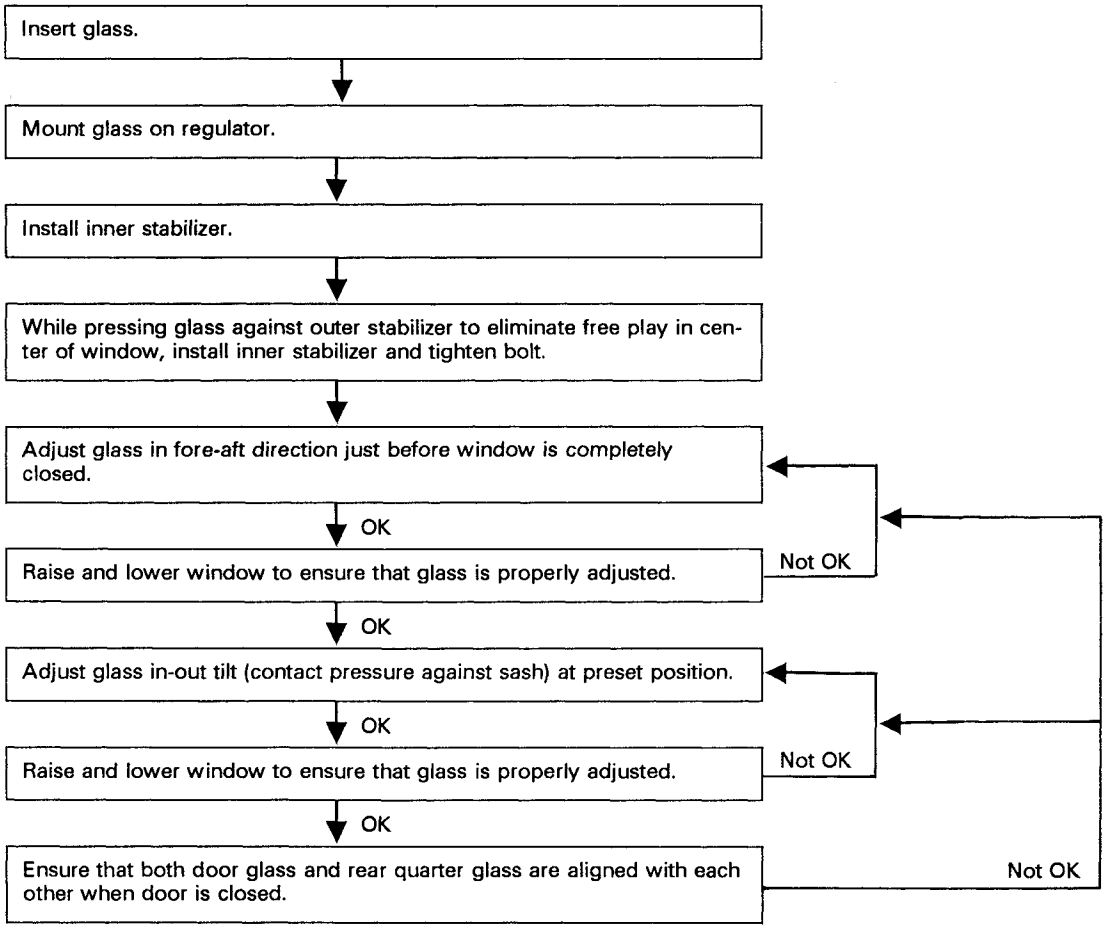

B: ADJUSTMENT POINTS

1. DOOR GLASS

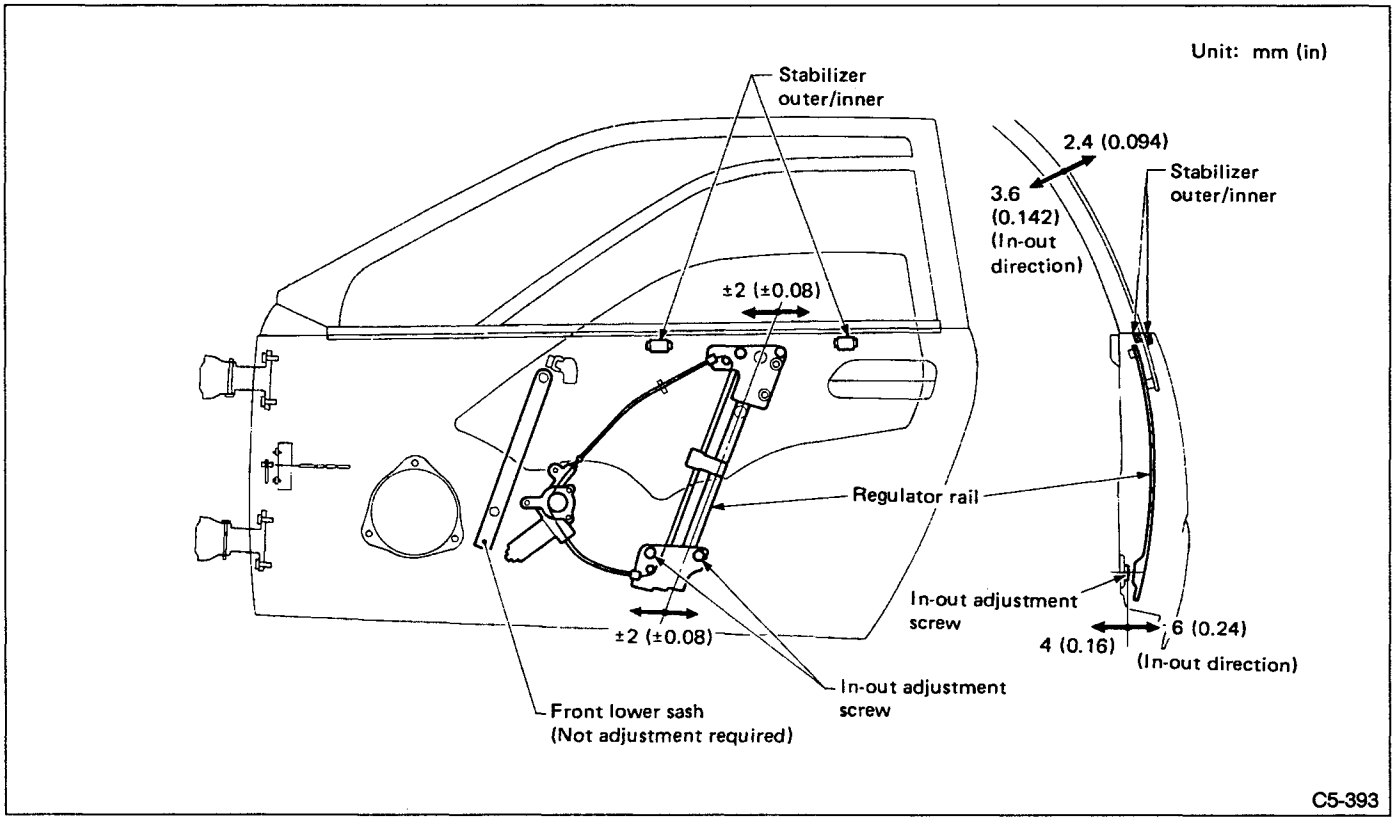

Fig. 77

2. REAR QUARTER GLASS

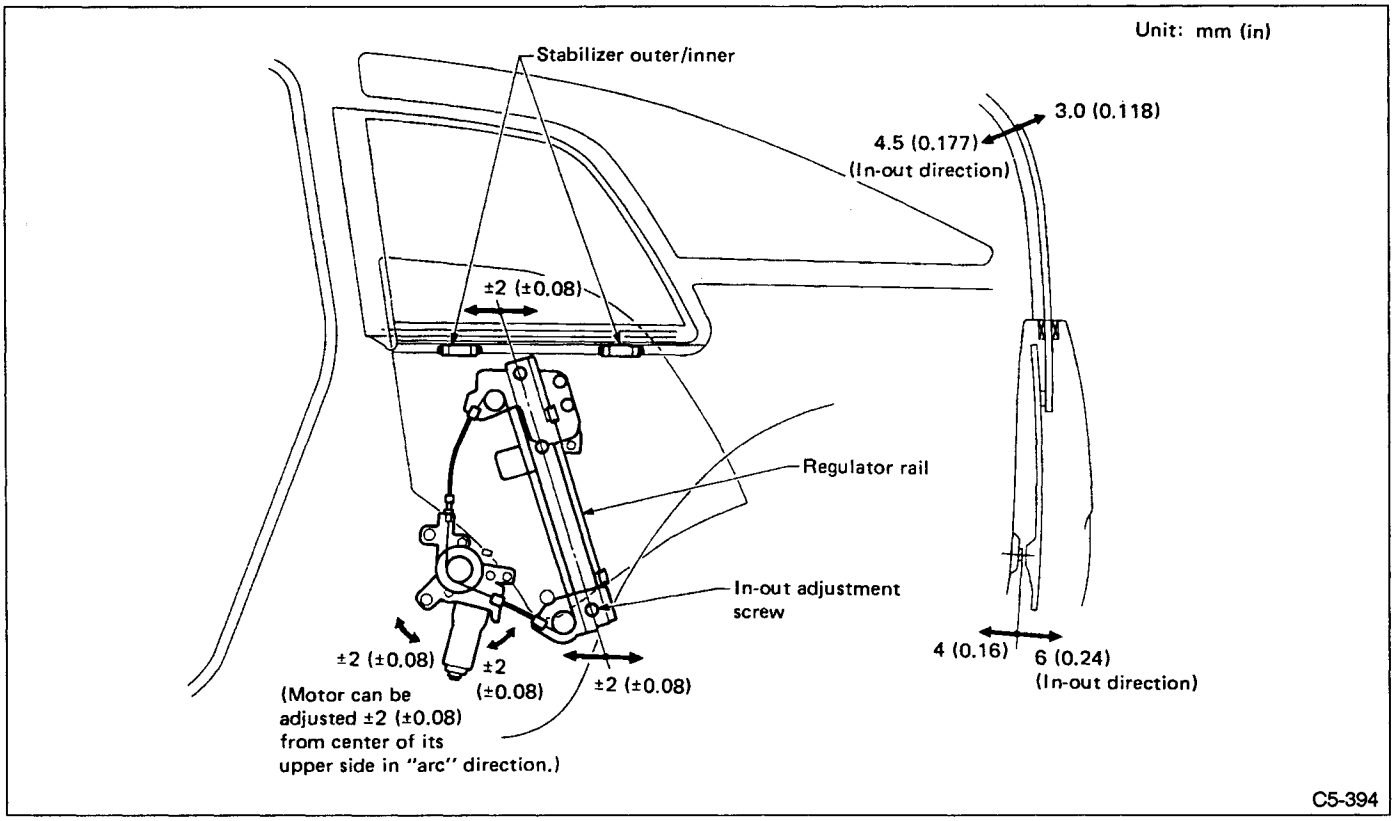

Fig. 78

C: ADJUSTMENT PROCEDURE

1. INNER STABILIZER ADJUSTMENT

1) Set upper edges of door glass and rear quarter glass at half-open position as shown in figure below.

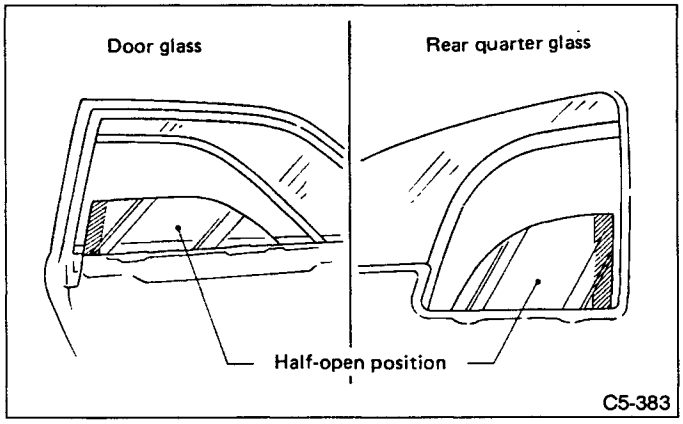

Fig. 79

2) Move inner stabilizer in either direction until glass free play is eliminated, and secure it at that position.

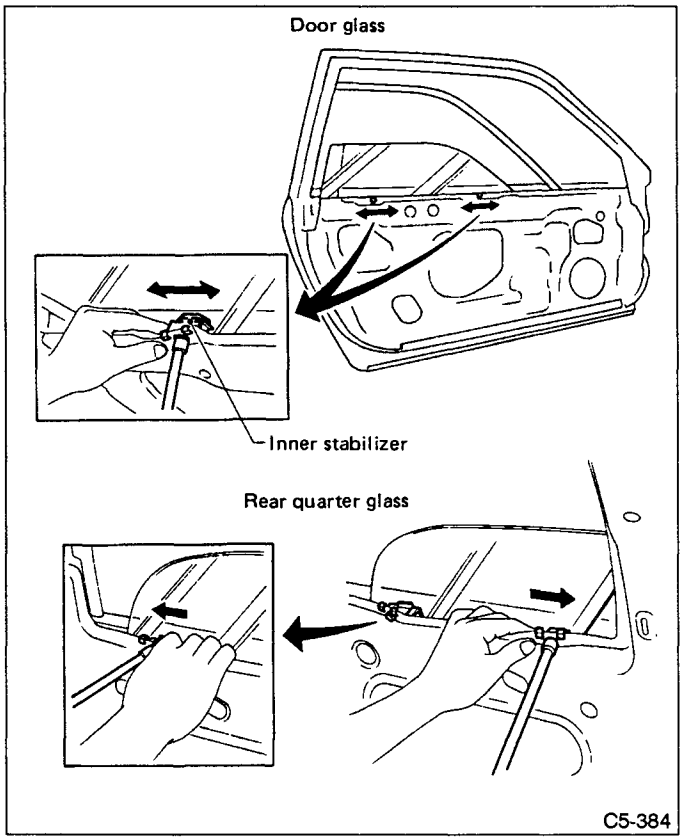

Fig. 80

2. FORE-AFT GLASS ADJUSTMENT

1) Temporarily tighten regulator attaching nut.

a. When new glass is used, temporarily tighten regulator attaching nut at midpoint of oblong hole.

b. When new regulator is used, locate attaching nut at position where old regulator is retained.

2) Set upper edges of door glass and rear quarter glass approximately 5 mm (0.20 in) away from midframe, as shown in figure.

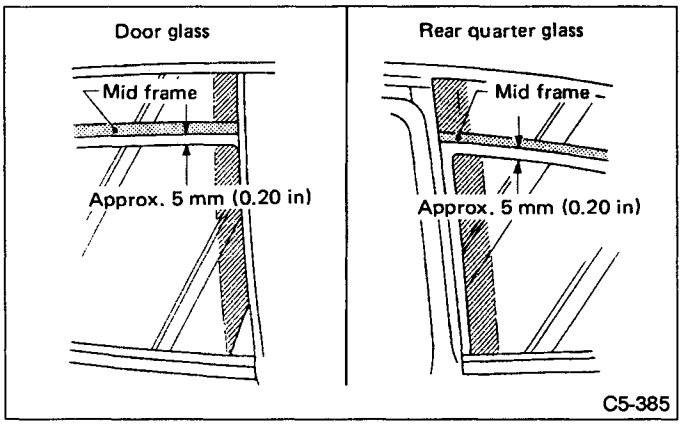

Fig. 81

3) Move lower glass until it is aligned with upper glass as shown in figure.

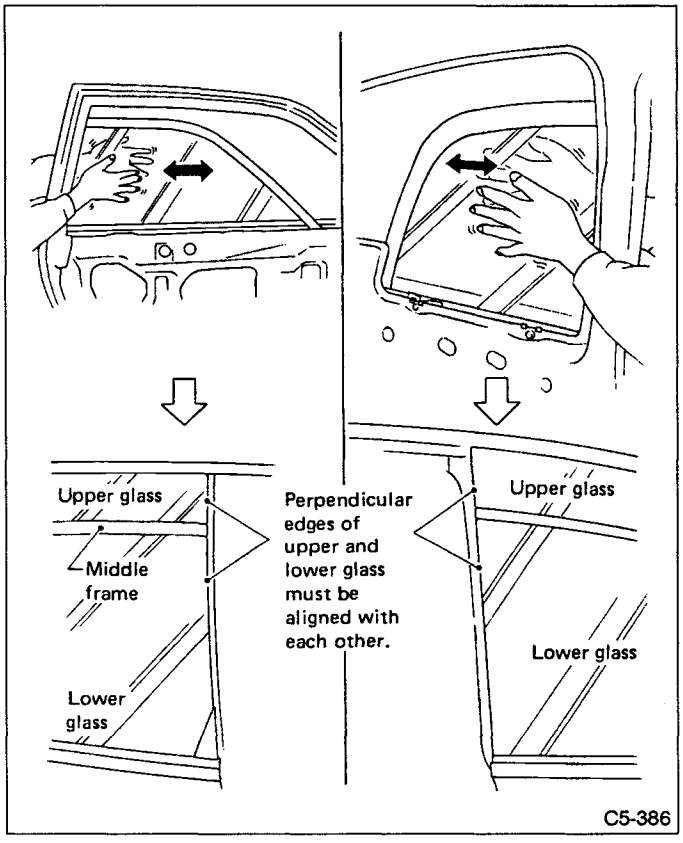

Fig. 82

a. Lower glass can also be aligned with upper glass by moving regulator itself.
b. Raise and lower window to ensure that lower glass is aligned with upper glass. If not aligned, re-adjust.
c. Adjust rear quarter glass using both adjustment nut and regulator motor attaching bolts.

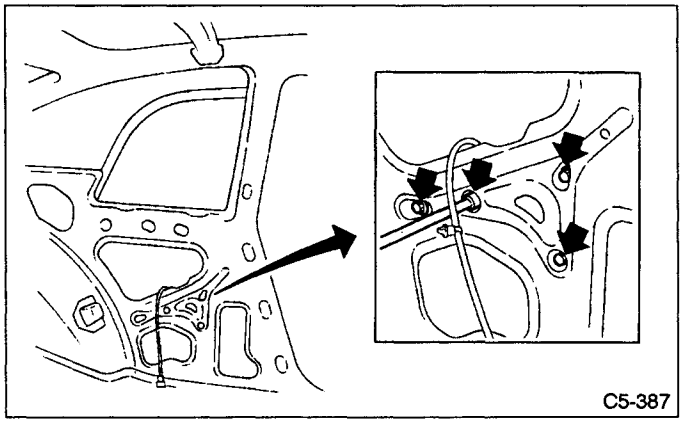

Fig. 83

4) After properly adjusting glass, tighten regulator attaching nuts.

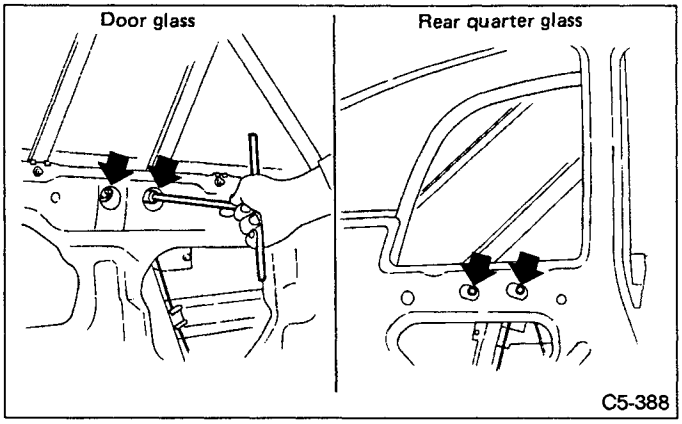

Fig. 84

5) Raise and lower window to re-check that glass is properly aligned.
If glass is out of alignment, re-adjust.

3. IN-OUT TILT ADJUSTMENT

1) Lower window approximately 80 mm (3.15 in) below midframe and adjust glass tilt.

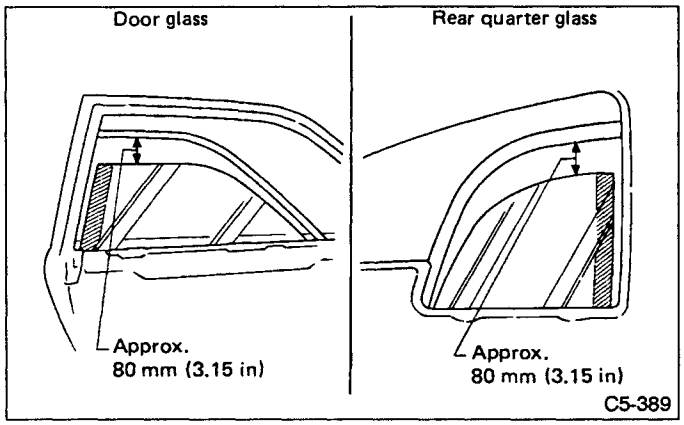

Fig. 85

2) Adjust adjustment screw so that clearance between glass and weatherstrip sash surface is 1.5 mm (0.059 in).

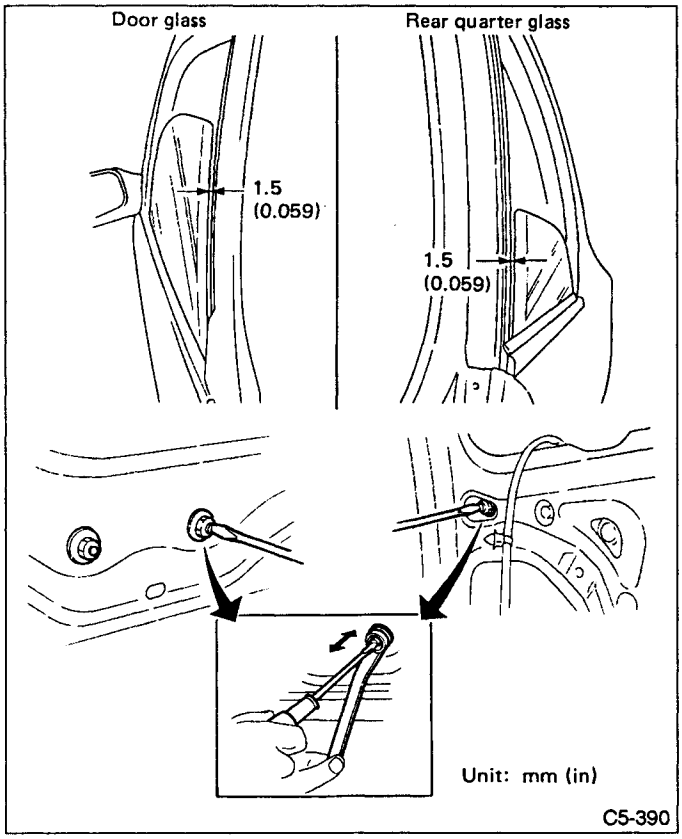

Fig. 86

a. Close window completely to ensure that glass is in contact with weatherstrip sash surface.
b. It is desirable for left and right adjustment screws to be adjusted by the same amount after glass adjustment.

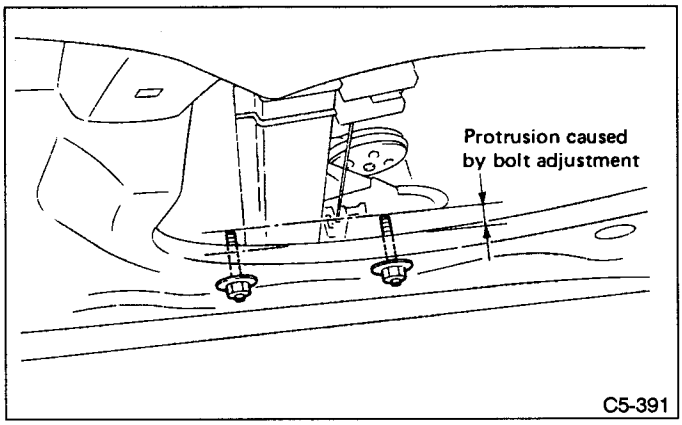

Fig. 87

3) Tighten adjustment nuts.
4) Raise and lower window to re-check that glass is properly adjusted.
If glass is out of alignment, re-adjust.

4. RELATIVE ADJUSTMENT OF DOOR AND REAR QUARTER GLASS

Relative position of door and rear quarter glass is correct if there is 8 mm (0.31 in) clearance at weatherstrip sash.

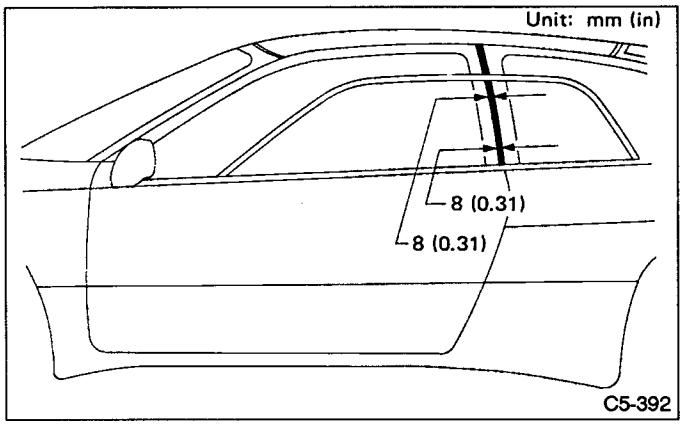

Fig. 88

T TROUBLESHOOTING

1. Door Glass and Rear Quarter Glass

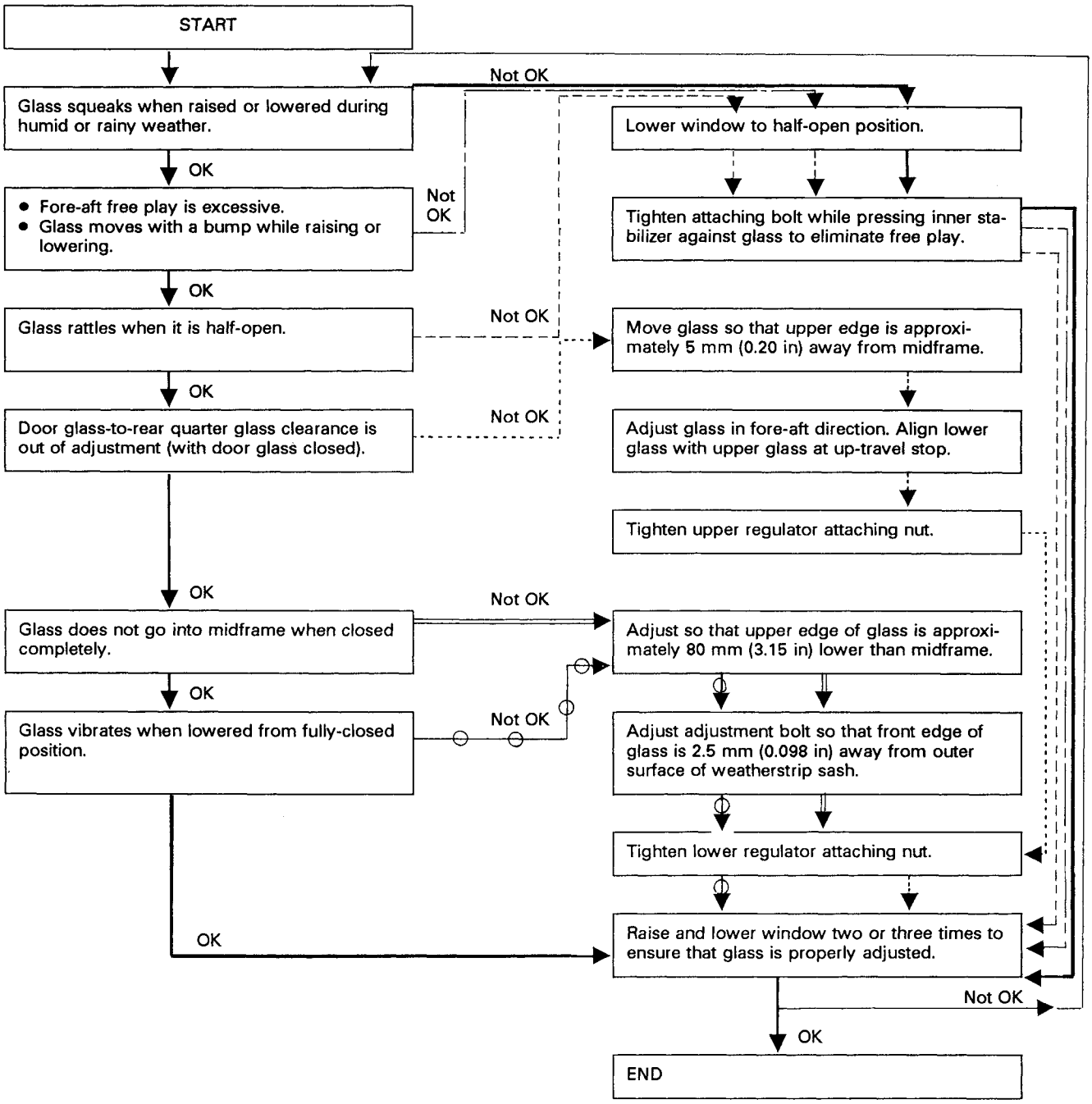

2. Door Lock System

No.	Trouble	Possible cause	Remedy
1	Door cannot be opened by outer handle (Door can be opened by inner handle)	Disconnect outer handle rod.	Connect firmly.
2	Door cannot be opened by inner handle (Door can be opened by outer handle)	Joint of upper rod is disconnected.	Connect firmly. Functionally normal.
3	Door does not open when outer or inner handle is operated with inner lock knob set to unlock position	a. Joint of lower rod is disconnected. b. Lock is not released due to improper adjustment of lower rod.	Connect firmly. Remove rod from latch. Adjust rod so that lock knob is set in "lock" position is locked.
4	Door opens even when inner lock knob is set to lock position	a. Lower rod joint is separated. b. Door is not locked due to improperly adjusted lower rod.	Same as a in No. 3. Same as b in No. 3.
5	Inner handle stops halfway	Contact of upper rod with inner handle mounting case.	Eliminate contact by bending upper rod properly.
6	Door cannot be locked or unlocked by key.	Joint of key lock rod is disconnected.	Connect firmly.
7	Auto door-lock switch does not act when inner lock knob is pushed.	Auto door-lock switch does not act due to improperly adjusted lower rod.	Same as b in No. 3.

3. Power Window

Part conditioned to be in problem / Symptom	Battery	Fuse (10A) No. 15 in fuse box	Power window circuit breaker & power window relay	Power window main switch	Power window sub-switch of each passenger side	Power window motor of driver side	Power window motor of each passenger side	Regulator ASSY of each window	Power supply line of main switch	Ground line	Harness and connector
All of the window does not move.	①	②	③	④					⑤	○	○
The window of driver side does not move.				①		②			③		○
The window of driver side does not move "AUTO" up-down.				①		②			③		○
The window of each passenger side does not move.				①	②		③	④			○
				①	②		③	④			○
				①	②		③	④			○

○: Figures in a circle refer to diagnostic procedures.

SUBARU

SVX

1992

Precaution for Supplemental Restraint System "Airbag"
The Supplemental Restraint System "Airbag" helps to reduce the risk or severity of injury to the driver in a frontal collision.
The Supplemental Restraint System consists of an airbag module (located in the center of the steering wheel), sensors, a control unit, warning light, wiring harness and spiral cable.
Information necessary to service the safety is included in the "5-5. SUPPLEMENTAL RESTRAINT SYSTEM" of this Service Manual.
WARNING:
- To avoid rendering the Airbag system inoperative, which could lead to personal injury or death in the event of a severe frontal collision, all maintenance must be performed by an authorized SUBARU dealer.
- Improper maintenance, including incorrect removal and installation of the Airbag system, can lead to personal injury caused by unintentional activation of the Airbag system.
- All Airbag system electrical wiring harnesses and connectors are covered with yellow outer insulation. Do not use electrical test equipment on any circuit related to the Supplemental Restraint System "Airbag".

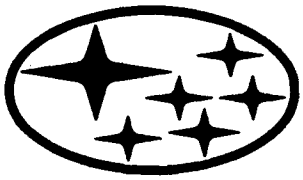

Page

M MECHANISM AND FUNCTION 2
1. Front Seat 2
2. Rear Seat 5
3. Seat Belts 6
C COMPONENT PARTS 9
1. Front Seat [Power type] 9
2. Front Seat [Manual type] 10
3. Rear Seat 11
4. Front Seat Belt 12
5. Rear Seat Belts 13
6. Inner Accessories 14
7. Inner Trim 15
8. Trunk Trim 16
9. Roof Trim & Floor Mat 17
W SERVICE PROCEDURE 18
1. Front Seat 18
2. Rear Seat 19
3. Front Seat Belt 20
4. Front Seat Belt [Manual Lap Belt] Outer Belt Assembly AIRBAG 22
5. Front Seat Belt ELR Assembly AIRBAG 22
6. Rear Seat Belt 23
7. Side Sill Upper Cover 24
8. Rear Quarter Trim 25
9. Side Sill Lower Cover AIRBAG 25
10. Rear Shelf Trim 26
11. Front Pillar Upper Trim 26
12. Rear Pillar Upper Trim 27
13. Roof Trim & Inner Parts 27
14. Floor Mat AIRBAG 29
15. Bulk Side Trim 30
16. Trunk Trim 30
T TROUBLESHOOTING
1. Self-diagnosis System 32
2. Control Unit I/O Signal 36
3. Diagram of Automatic Shoulder Belt System 38
4. Troubleshooting Chart with Trouble Code 40
5. Troubleshooting without Self Diagnosis System 66

M MECHANISM AND FUNCTION

1. Front Seat

A: OUTLINE

The front seat can be adjusted to different positions to suit the driver's physique, and to improve driving comfort.

B: SEAT SLIDING ADJUSTMENT

When the slide adjuster lever is turned, the slide rail lock is released. The front seat can then be moved 229.5 mm (9.04 in) in the fore-and-aft direction [17 positions at a pitch of 13.5 mm (0.531 in)].

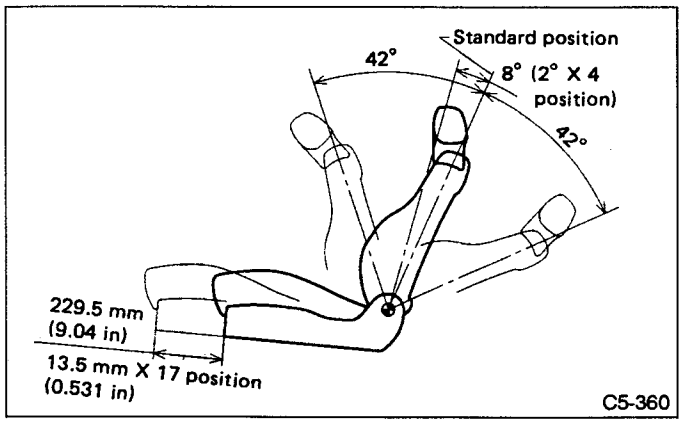

Fig. 1

C: SEAT RECLINING

When the reclining lever is moved up, the reclining hinge lock is released. The seat backrest can be adjusted every 2°, and also folded fully forward.

D: WALK-IN SYSTEM

When getting in or out of rear seat, front passenger seat can be moved to the forward most position as follows: Lift reclining hinge lever or knob to tilt backrest forward. Wire cable connecting reclining hinge will then release slide rail lock so that seat moves forward by helper spring.
When backrest is raised, seat automatically locks in center of seat slide.

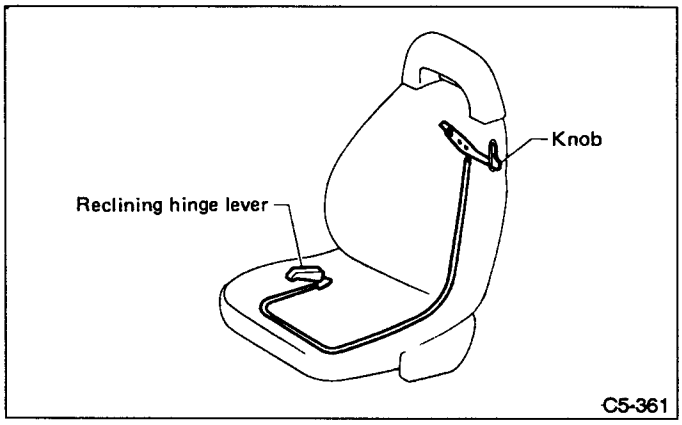

Fig. 2

E: SEAT LIFTER MECHANISM

1. CONSTRUCTION

Two lifter adjustment dials are turned to release lifter brake,allowing seat cushion angle and height to adjust to an optional in position within 35 mm (1.38 in).

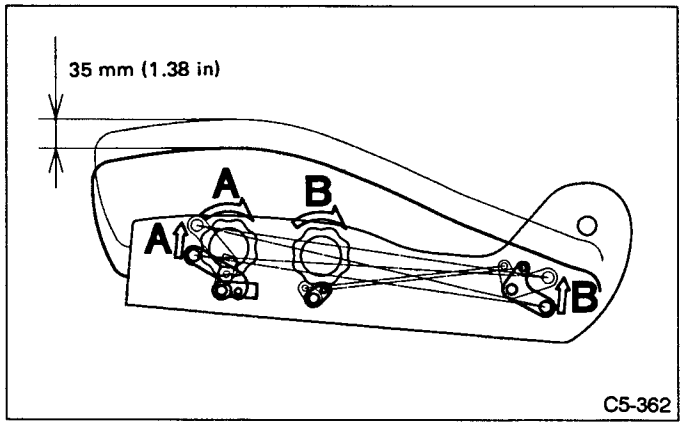

Fig. 3

F: LUMBAR SUPPORT

1. CONSTRUCTION

The lumbar support adjustment lever can set the loin supporting section of the seatback to any of three positions in the fore-and-aft direction.

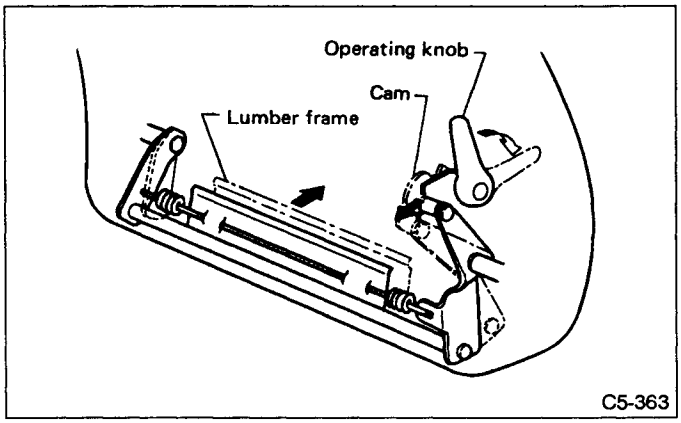

Fig. 4

G: HEADREST FORE-AND-AFT ADJUSTMENT

1. CONSTRUCTION

To adjust the headrest, hold it with both hands. Move it in the fore-and-aft direction and release it at the desired position. The headrest will lock in that position.

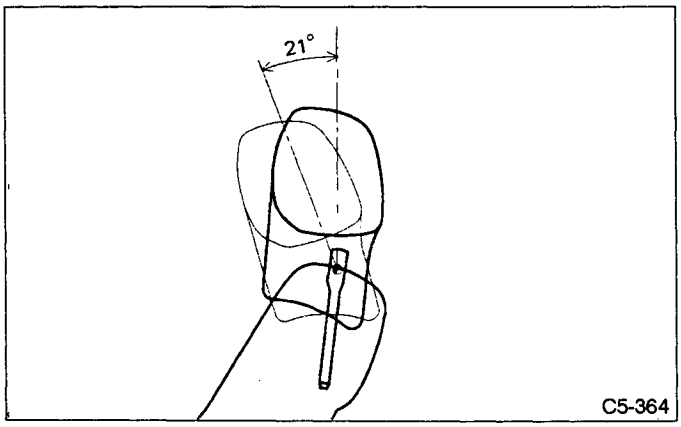

Fig. 5

H: POWER ADJUSTER

1. DESCRIPTION

LS-L grade driver's seat is equipped with power adjustment mechanisms to provide fore-aft, reclining, height or angle adjustment of the seat using corresponding switch as desired.

2. OPERATION

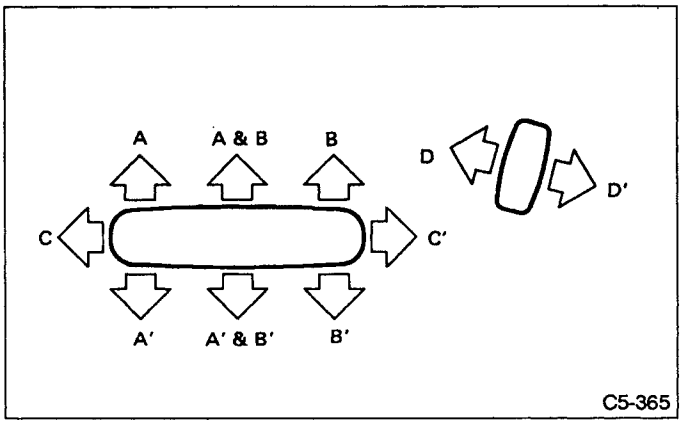

Fig. 6

A: Front lifter adjustment
A & B: Seat height adjustment
B: Rear lifter adjustment
C: Fore-aft adjustment
D: Reclining adjustment

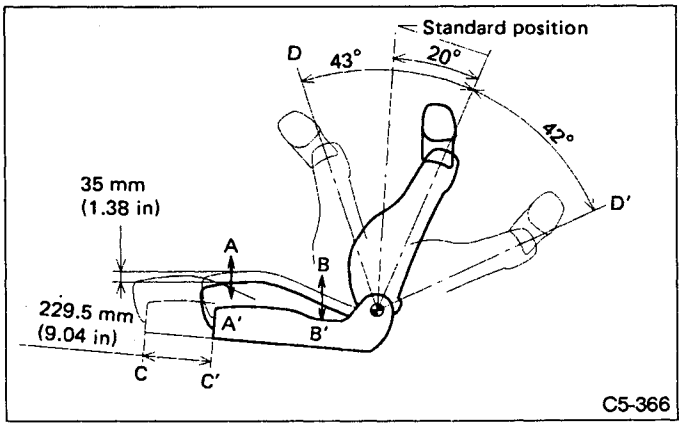

Fig. 7

While adjustment mechanism "D" is operating, all other mechanisms cannot be operated. Adjustment mechanisms "C" and "A" or "B" cannot be operated simultaneously.

3. MECHANISM

Fore-aft adjustment

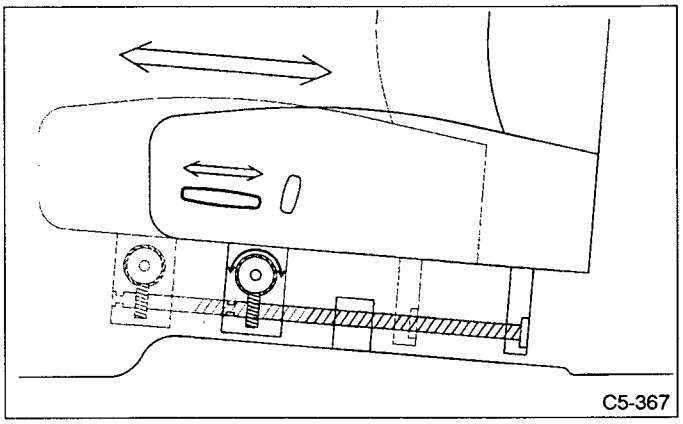

Fig. 8

Front lifter adjustment

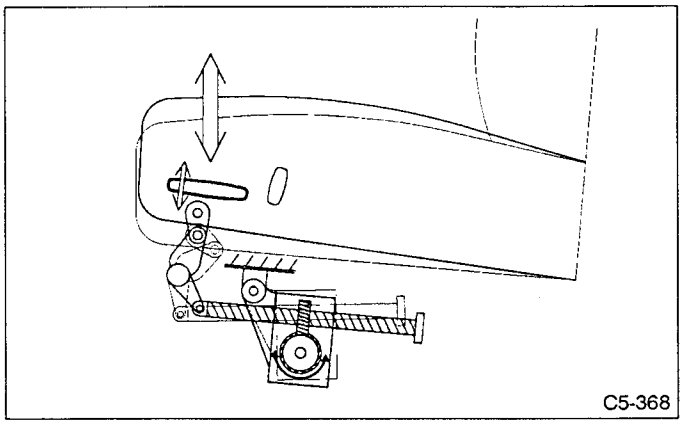

Fig. 9

Rear lifter adjustment

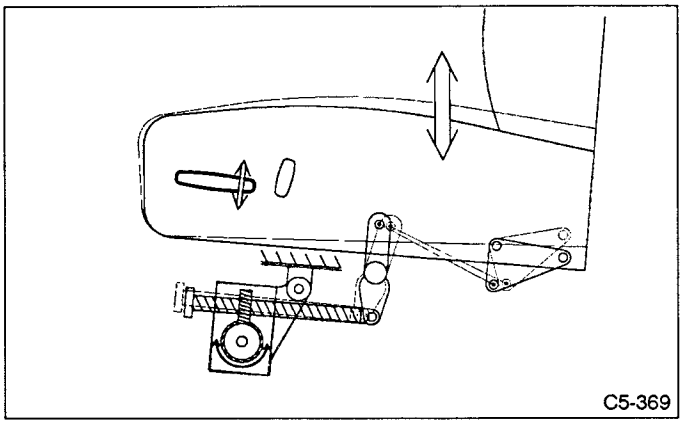

Fig. 10

Reclining adjustment

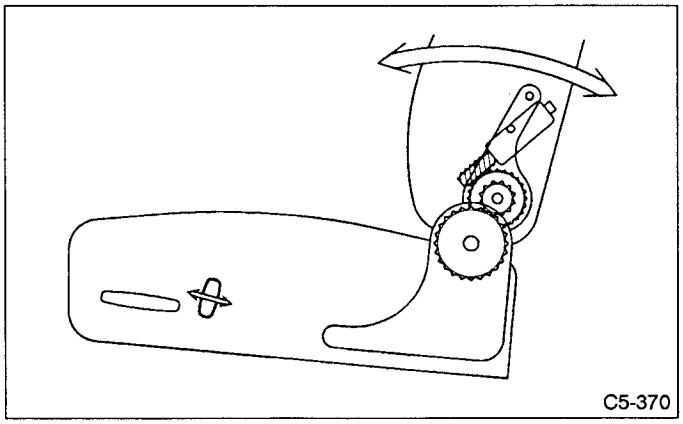

Fig. 11

2. Rear Seat

1. CONSTRUCTION

Rear seat backrest can be folded forward to gain access to trunk compartment, providing good use of space. Backrest is equipped with an interlock. When interlock is activated, backrest "fold-down" is disabled from passenger compartment side.

2. OPERATION

Fold-down

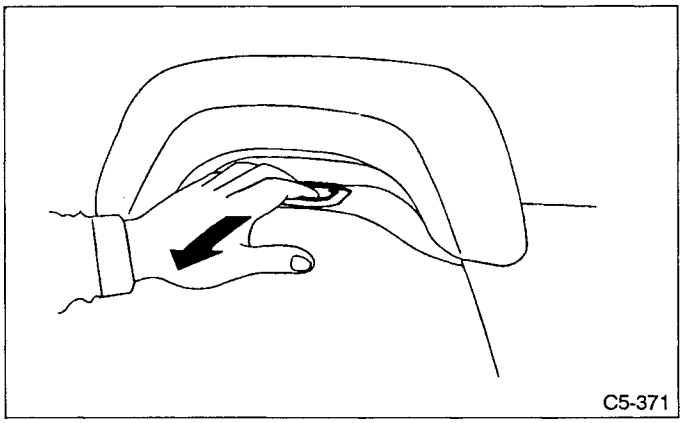

Fig. 12

Interlock

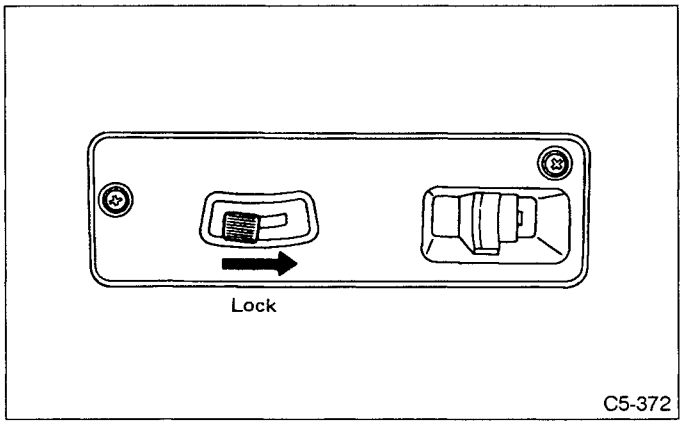

Fig. 13

3. Seat Belts

A: FRONT SEAT BELT

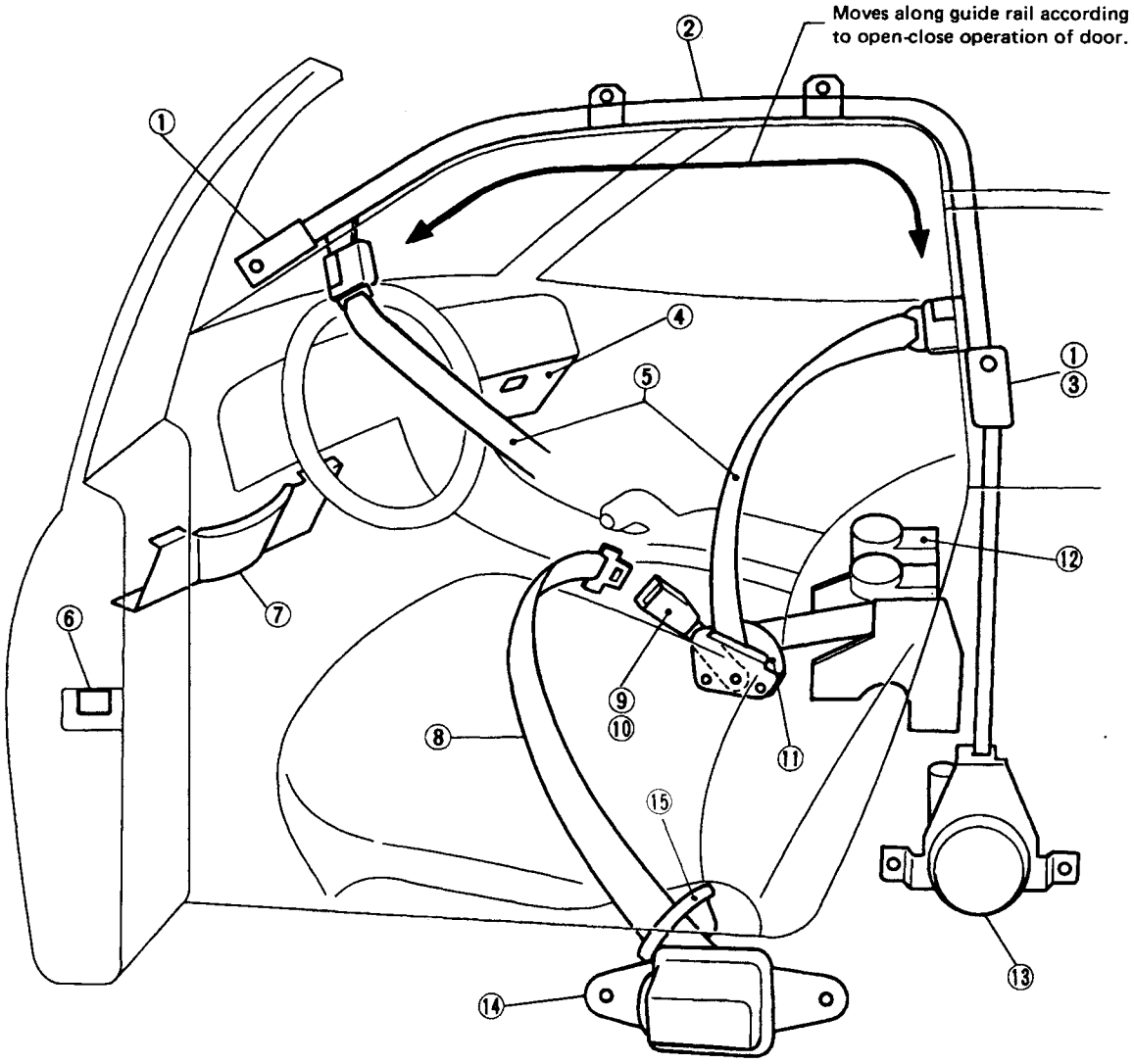

1 Limit switch
2 Guide rail
3 Warning switch
4 Knee panel (passenger)
5 Shoulder belt
6 Door latch switch
7 Knee panel (driver)
8 Lap belt
9 Inner belt ASSY
10 Buckle switch
11 Belt guide
12 ELR ASSY
13 Motor ASSY
14 Outer belt ASSY
13 Motor ASSY
14 Outer belt ASSY
15 Belt holder

C5-373

Fig. 14

1. FEATURES

The front seat is equipped with an automatic shoulder belt system and a manual lap belt.

2. AUTOMATIC SHOULDER BELT SYSTEM

1) Rail & motor ASSY

This system consists of a shoulder anchor, guide rail and motor ASSY.

(1) Shoulder anchor

The shoulder anchor is united with an ERB (Emergency Release Buckle). It is securely latched to the shoulder belt tongue and allows the tongue to move along the guide rail.

(2) Guide rail

The guide rail allows the shoulder anchor to move along the track on the front pillar, side rail and center pillar.

(3) Motor ASSY

The motor ASSY winds or unwinds the wire moving along the guide rail which moves the shoulder anchor.

2) ELR (Emergency Locking Retractor) ASSY

The ELR's used on the driver and passenger seats are combined. They are located on the upper side of the floor tunnel in front of the rear seat cushion. The belts extracted from the ELR's turn at the belt guide and latch on the ERB (Emergency Release Buckle). These belts are used as shoulder belts.

3) Belt guide

Belt guides are secured to slide rails on inner sides of front seats. The belt extracted from the ELR turns at the belt guide and restrains the upper body of the driver or passenger at a fixed position, regardless of physique and seating position.

The shoulder belts fits the occupant when pulled to the center pillar although it appears to be twisted when moved to the front pillar.

3. MANUAL LAP BELT

1) Outer belt ASSY

The belt extracted from the ELR (located in the side sill.) is secured by the belt holder close to the seat hinge cover. It is within easy reach, regardless of the seating position.

The lap belt's ELR is designed to retract into the side sill trim to increase the foot area for the rear seat occupant.

2) Inner belt ASSY

The inner belt ASSY is parallel to the belt guide. Its buckle is secured in a fixed position, regardless of physique and seating position.

4. OTHERS

1) Knee panel

The knee panel is located below the instrument panel. It restrains the lower body of the driver and passenger in a front-end collision.

2) Submarine-preventing material (incorporated in passenger seat cushion)

Unlike the driver's seat, the position of the passenger seat can be optionally selected. (In other words, the passenger is less restrained than the driver.) As a result, the distance between the passenger's knee and knee panel is not constant. For this reason, submarine-preventing material is incorporated in the front edge of the passenger seat cushion to help increase the effect of the knee panel.

5. OPERATION

The automatic shoulder belts (for the driver and passenger) are controlled by a passive belt control unit located under the rear panel.

These belts are operated in response to the open-close operation of the corresponding doors when the ignition switch is ON or OFF.

1) Ignition OFF

With the ignition OFF, the belt anchor can be moved in the forward direction only. In other words, when the ignition switch is turned OFF and door is opened, the belt anchor moves to the front stop and is held in place when the door is closed or opened thereafter. When the door is closed and the ignition switch is turned ON, the belt anchor moves to the rear stop. However, if the ignition switch is turned OFF before the belt anchor reaches rear stop, the anchor belt will stop. The belt anchor moves to the rear stop after the ignition switch is turned ON again.

When ignition switch is turned OFF and door is opened while the belt anchor is moving toward the front stop, the anchor belt will stop. The belt anchor moves to the front stop when the door is opened again.

2) Ignition ON

When the door is closed with the ignition switch ON, the shoulder anchor moves to the final stop of the guide rail at the center pillar and locks.

When the door is opened, the door lock switch is set to "OPEN" so that current flows through relay L1 and motor. This causes the shoulder anchor to move to the front stop. When the shoulder anchor reaches the front stop, the front limit switch is opened so that current stops flowing through the relay and motor.

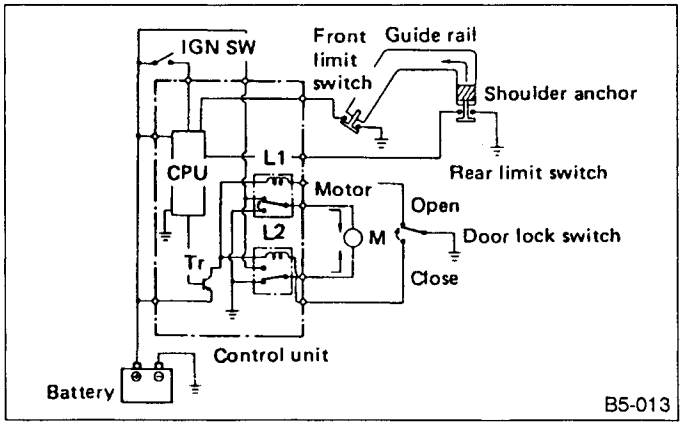

Fig. 15

When the door is closed, the door lock switch is set to "CLOSE" so that current flows through relay L2 and the motor. This causes the shoulder anchor to move to the rear stop. When the shoulder anchor reaches the rear stop, the rear limit switch is opened so that current stops flowing through the relay and motor.

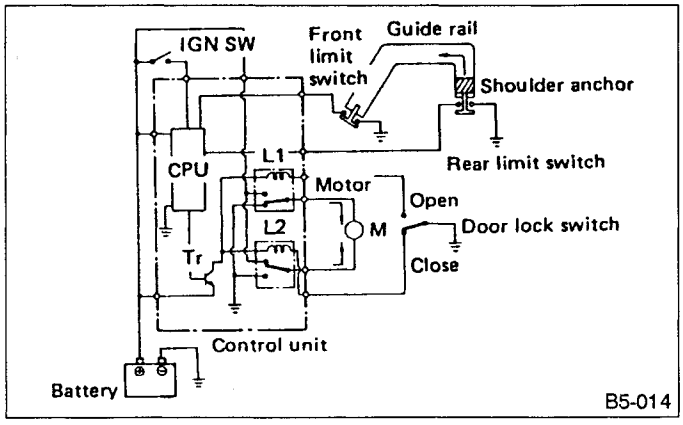

Fig. 16

When the door is closed, while the shoulder anchor is moving toward the front stop after the door is opened, or when the door is opened while it is moving toward the rear stop after the door is closed, the door lock switch changes current flow from relay L1 to relay L2. The shoulder anchor then moves in the direction corresponding with current flow.

It takes approximately two seconds for the shoulder anchor to travel from the front stop to the rear stop, or from the rear stop to the front stop.

6. MOTOR & WIRE PROTECTION CIRCUIT

A circuit breaker and timer protect the automatic shoulder belt system circuit from damage.

If the shoulder anchor is continuously caught during travel for 14±2 seconds, current flow is interrupted. Current flow is resumed by opening or closing the door.

If the motor is overloaded, the circuit breaker activates to immediately interrupt current flow through the motor, protecting it from overheating. When overload is eliminated from the motor, normal operation will automatically resume. However, a timer circuit will usually activate before normal operation resumes.

B: REAR SEAT BELT

OUTLINE

The rear seat is equipped with a three-point type seat belt.

C COMPONENT PARTS

1. Front Seat [Power type]

1 Headrest
2 Backrest ASSY
3 Back garnish
4 Lumbar lever
5 Knob
6 Cushion ASSY
7 Slide & tilt unit
8 Cover
9 Power switch ASSY
10 Slide & tilt knob
11 Belt holder
12 Outer hinge ASSY
13 Inner hinge ASSY
14 Connecting rod
15 Limit switch ASSY

Tightening torque: N·m (kg-m, ft-lb)
T: 42 — 62 (4.3 — 6.3, 31 — 46)

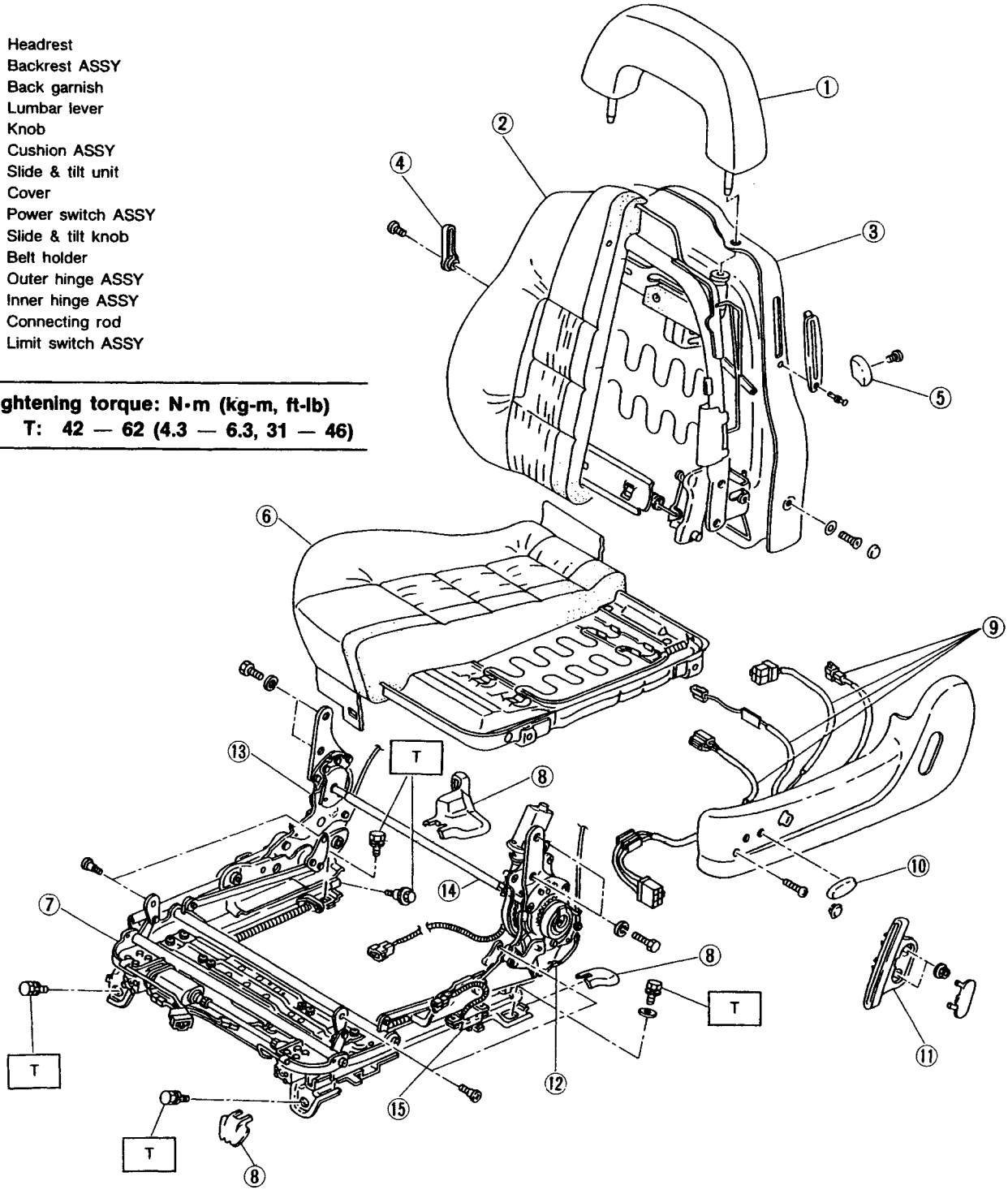

C5-666

Fig. 1

2. Front Seat [Manual type]

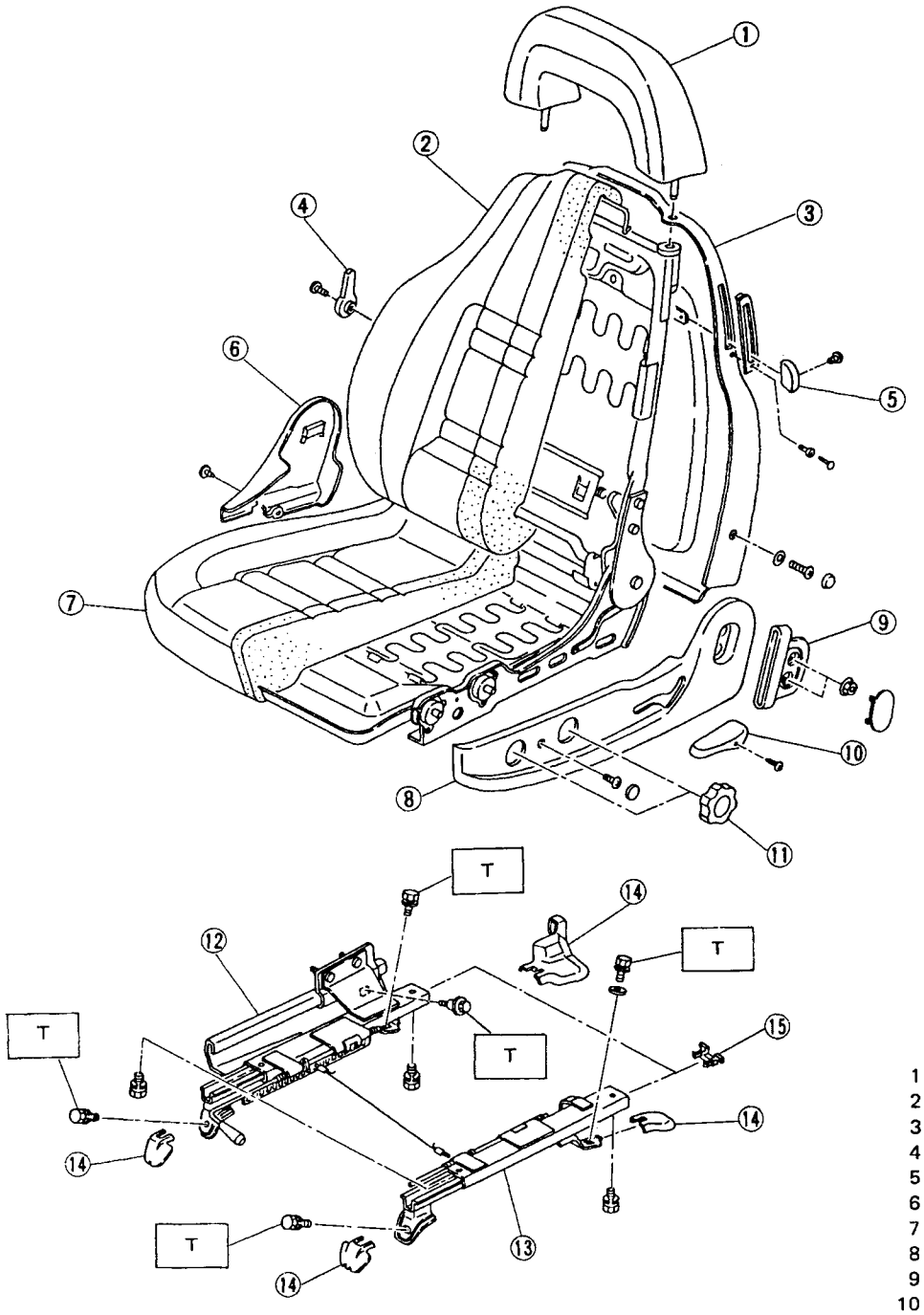

Tightening torque: N·m (kg-m, ft-lb)
T: 42 – 62 (4.3 – 6.3, 31 – 46)

1 Headrest
2 Backrest ASSY
3 Back garnish
4 Lumber lever
5 Knob
6 Hinge cover IN
7 Cushion ASSY
8 Hinge cover OUT
9 Belt holder
10 Hinge knob
11 Tilt dial
12 Slide rail ASSY IN
13 Slide rail ASSY OUT
14 Cover
15 Rail cap

C5-375

Fig. 18

3. Rear Seat

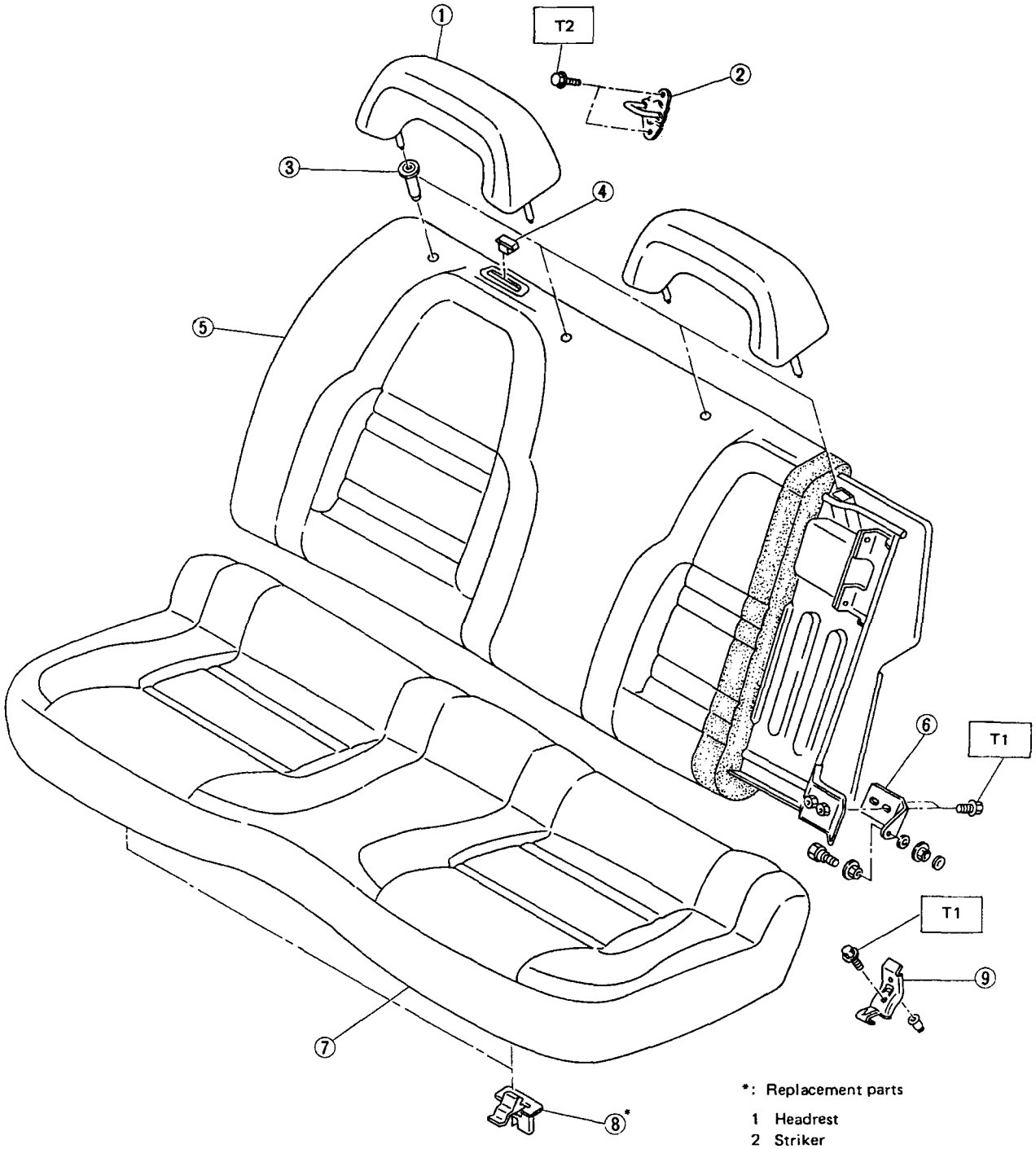

*: Replacement parts

1 Headrest
2 Striker
3 Headrest bush
4 Knob
5 Backrest ASSY
6 Hinge
7 Cushion ASSY
*8 Rear cushion hook
9 BRKT 20G

C5-376

Tightening torque: N·m (kg-m, ft-lb)
T1: 18 – 31 (1.8 – 3.2, 13 – 23)
T2: 7 – 13 (0.7 – 1.3, 5.1 – 9.4)

Fig. 19

4. Front Seat Belt

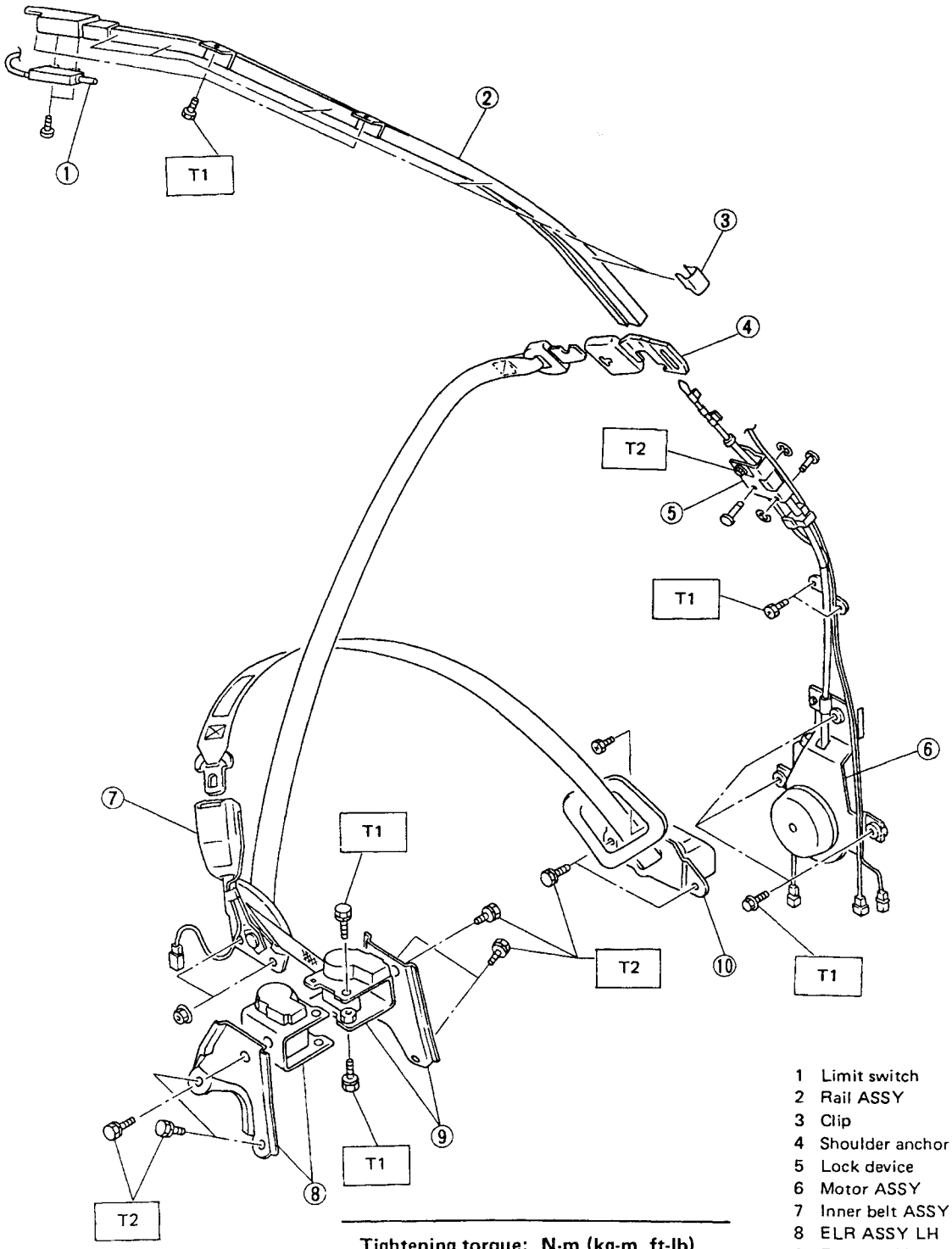

1 Limit switch
2 Rail ASSY
3 Clip
4 Shoulder anchor (ERB)
5 Lock device
6 Motor ASSY
7 Inner belt ASSY
8 ELR ASSY LH
9 ELR ASSY RH
10 Outer belt ASSY

C5-377

Tightening torque: N·m (kg-m, ft-lb)
T1: 10 – 16 (1.0 – 1.6, 7 – 12)
T2: 23 – 49 (2.3 – 5.0, 17 – 36)

Fig. 20

5. Rear Seat Belts

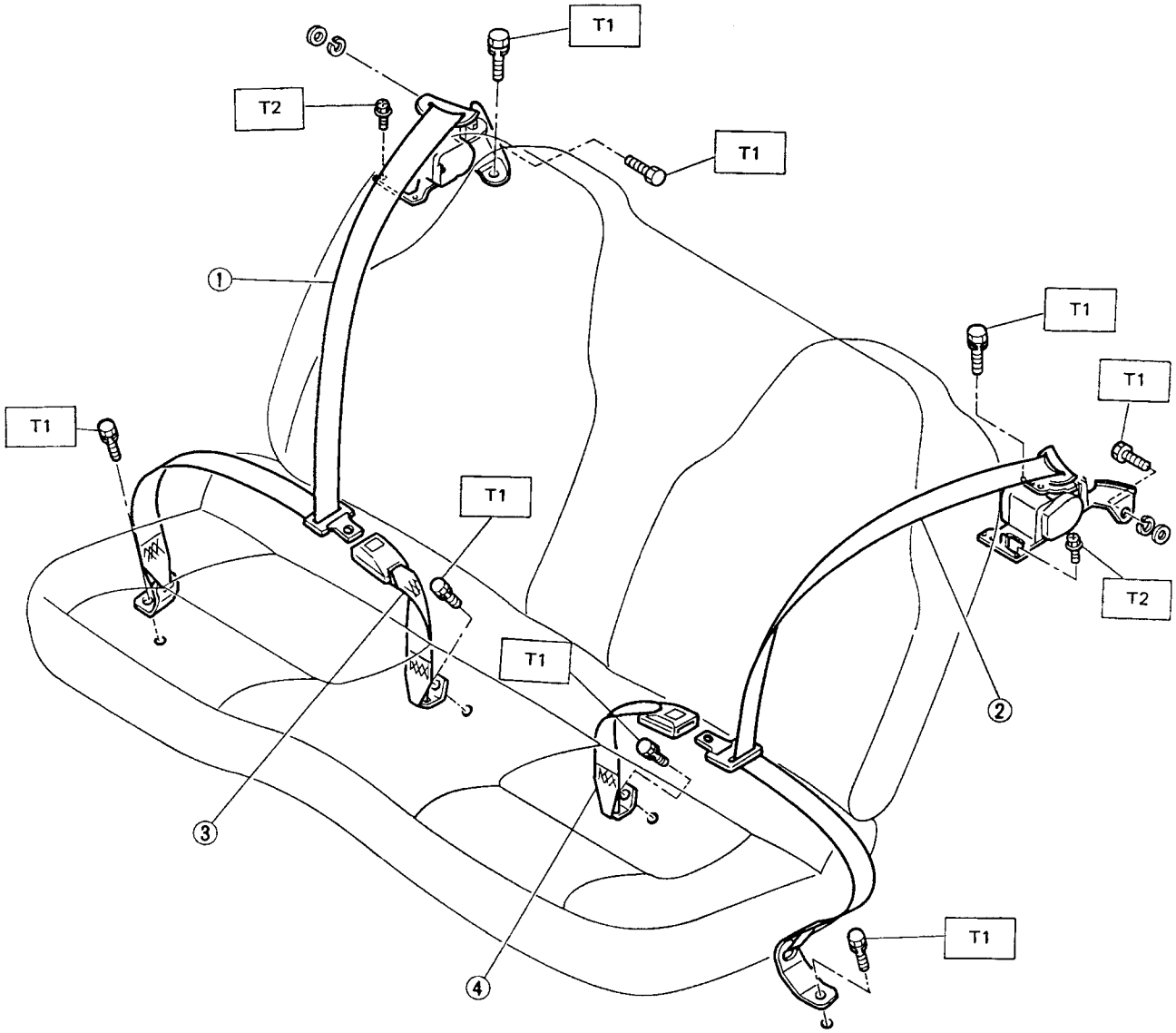

Tightening torque: N·m (kg-m, ft-lb)
T1: 23 – 49 (2.3 – 5.0, 17 – 36)
T2: 5.4 – 9.3 (0.55 – 0.95, 4.0 – 6.9)

1 Outer belt ASSY RH
2 Outer belt ASSY LH
3 Inner belt ASSY RH
4 Inner belt ASSY LH

Fig. 21

6. Inner Accessories

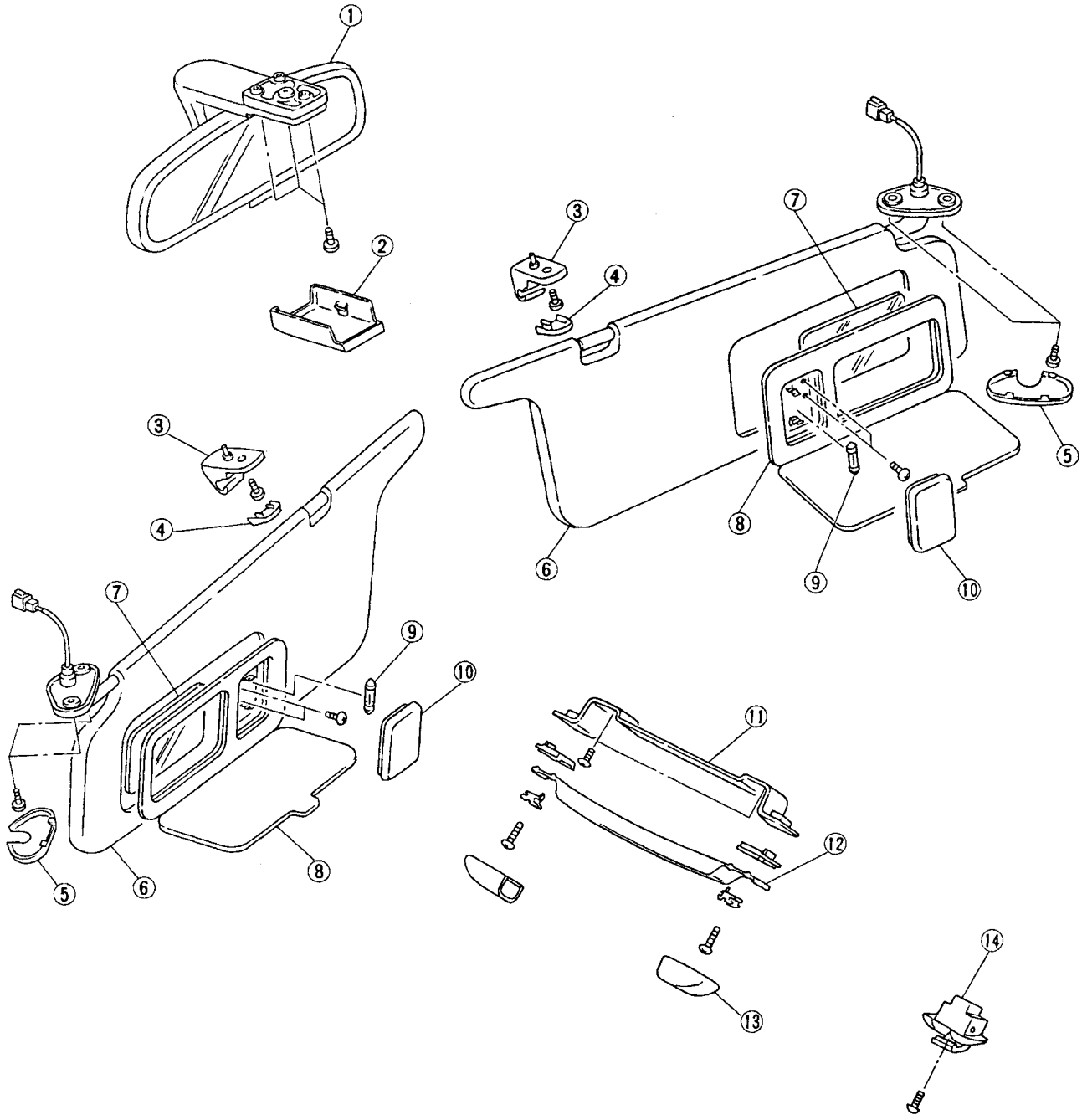

1 Rearview mirror ASSY
2 Rearview mirror cap
3 Hook
4 Hook cap
5 Sunvisor cap
6 Sunvisor ASSY
7 Vanity mirror
8 Vanity mirror flap
9 Bulb
10 Lens
11 Assist rail BRKT
12 Assist rail ASSY
13 Assist rail cap
14 Hanger coat

C5-379

Fig. 22

7. Inner Trim

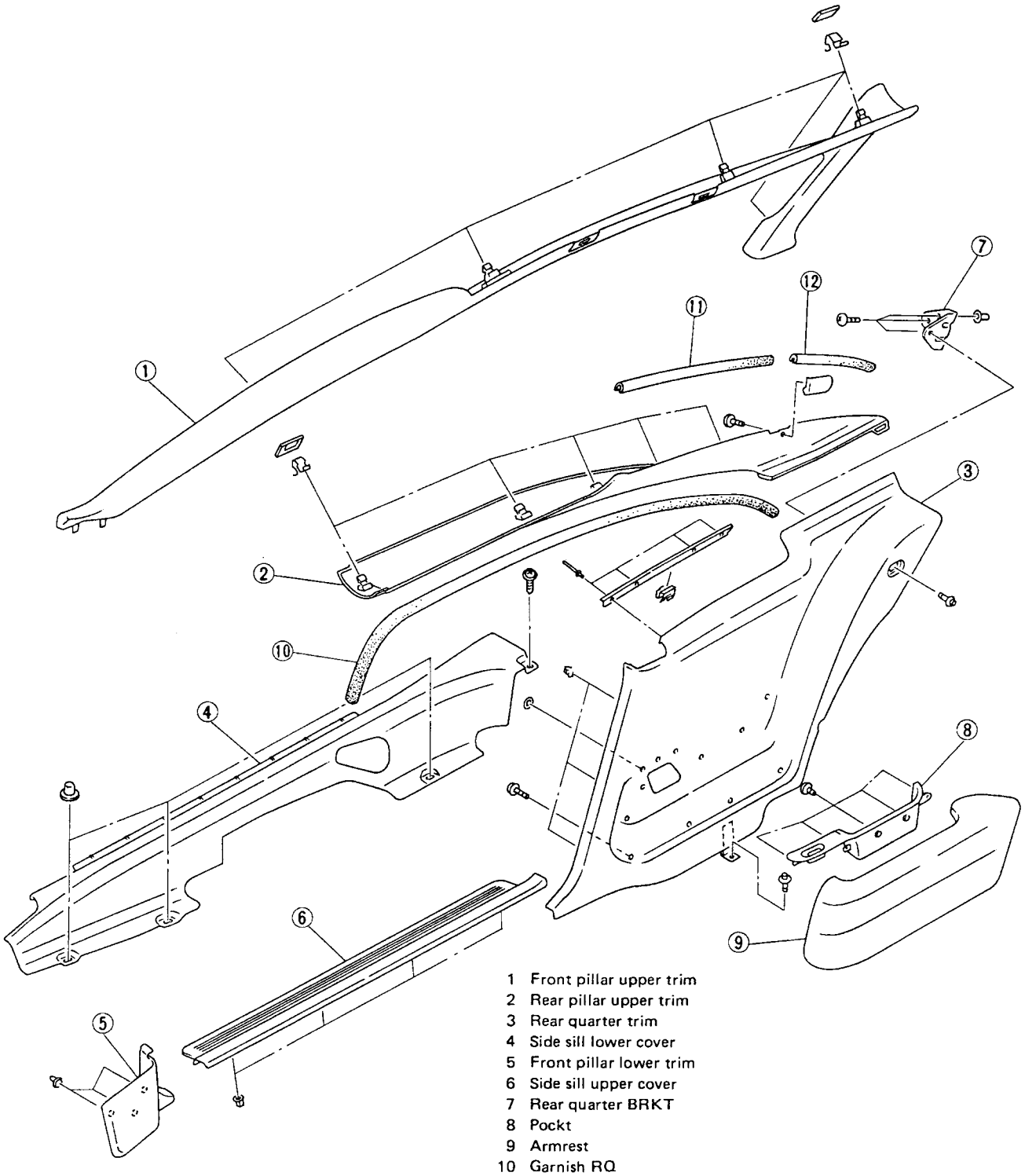

1 Front pillar upper trim
2 Rear pillar upper trim
3 Rear quarter trim
4 Side sill lower cover
5 Front pillar lower trim
6 Side sill upper cover
7 Rear quarter BRKT
8 Pockt
9 Armrest
10 Garnish RQ
11 Garnish R PL UPR
12 Garnish R PL LWR

C5-380

Fig. 23

8. Trunk Trim

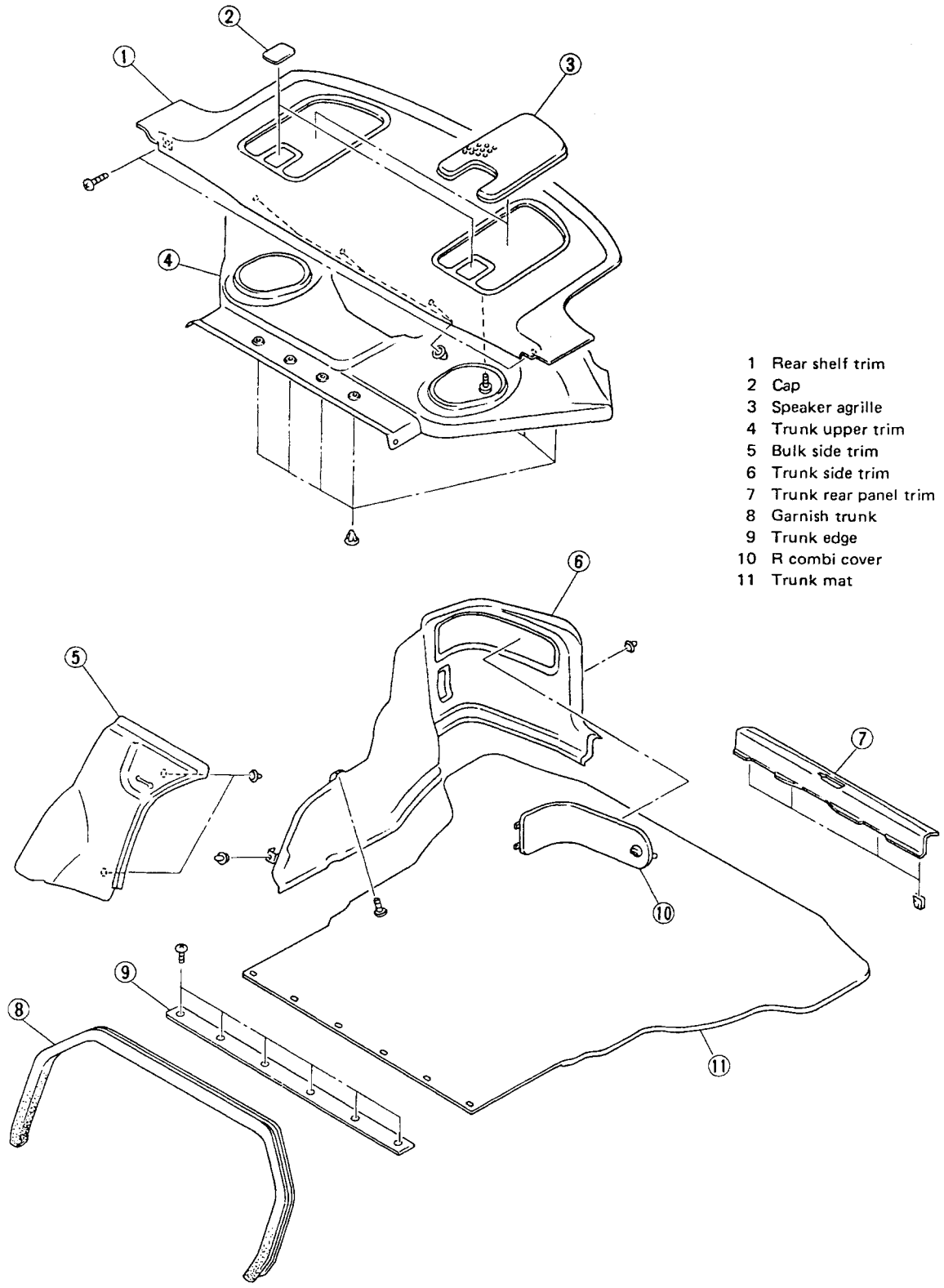

1 Rear shelf trim
2 Cap
3 Speaker agrille
4 Trunk upper trim
5 Bulk side trim
6 Trunk side trim
7 Trunk rear panel trim
8 Garnish trunk
9 Trunk edge
10 R combi cover
11 Trunk mat

C5-381

Fig. 24

9. Roof Trim & Floor Mat

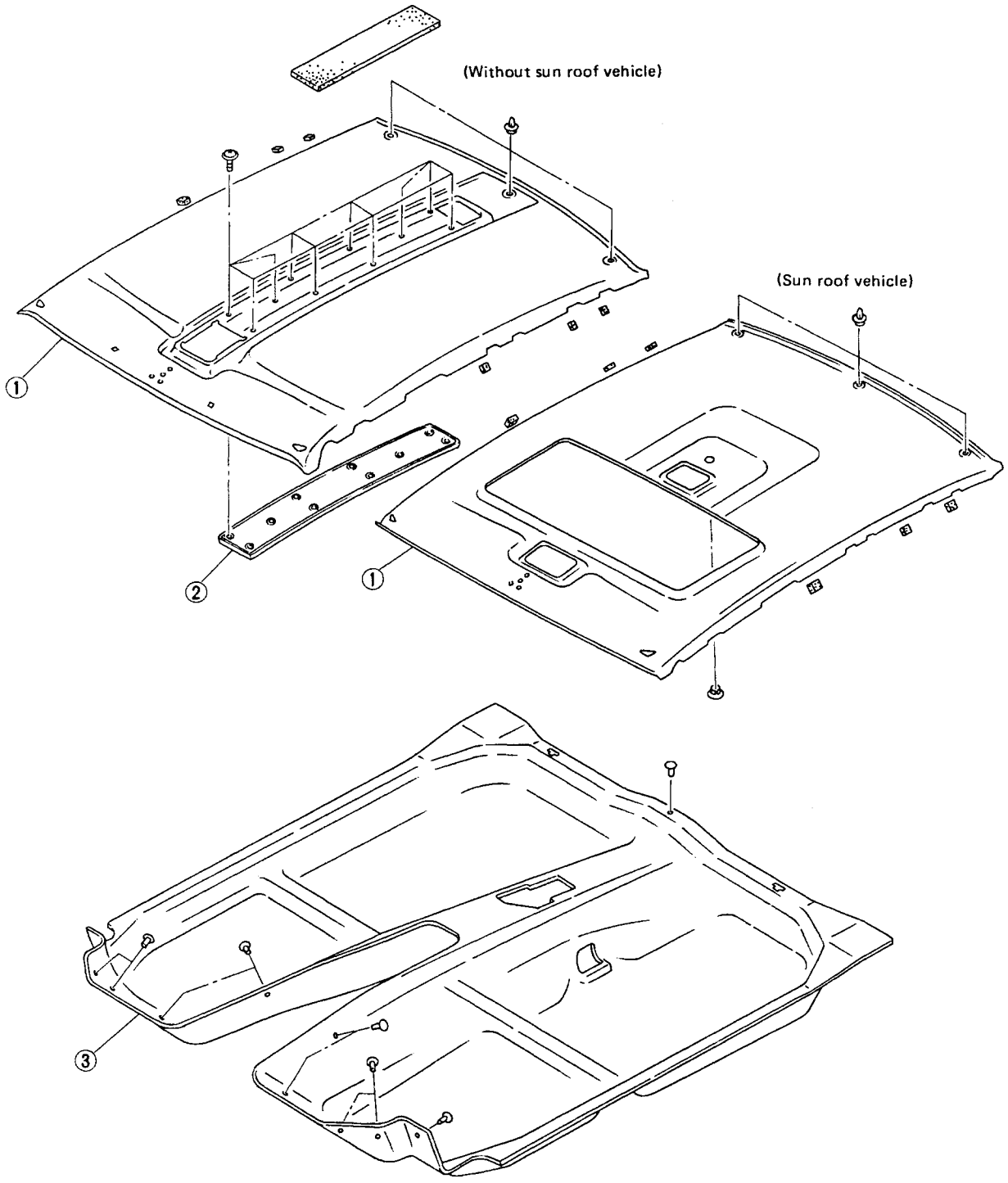

1 Roof trim
2 Center trim
3 Floor mat

C5-382

Fig. 25

W SERVICE PROCEDURE

1. Front Seat

A: REMOVAL

1) Disconnect battery ground cable.
2) Remove headrest from backrest.

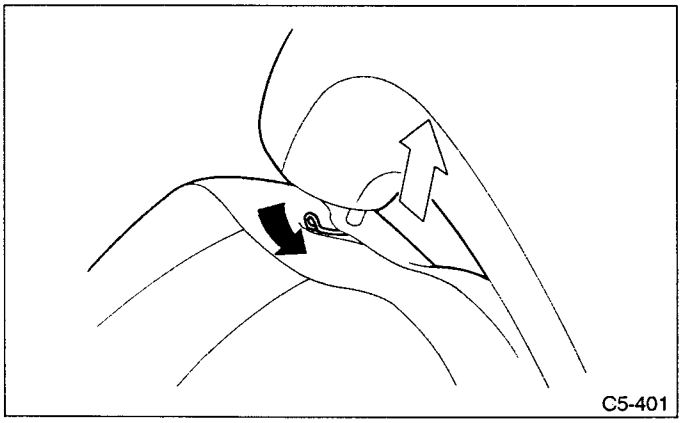

Fig. 26

3) Remove belt holder by expanding it with fingers. Remove ELR belt from belt guide.

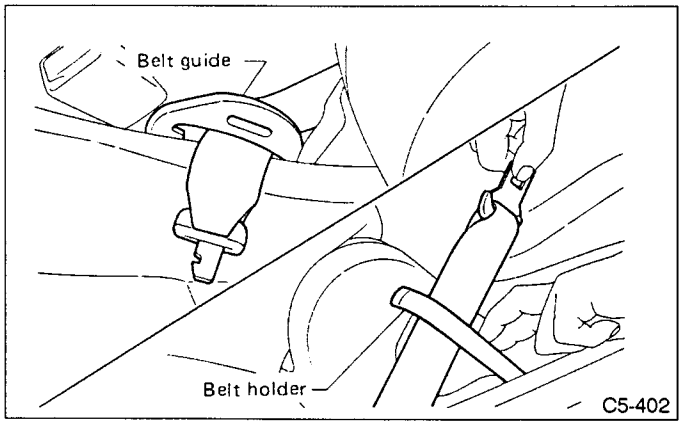

Fig. 27

4) Pull reclining lever back to fold backrest all the way forward. While pulling slide adjuster lever, move seat all the way forward.
5) Disconnect connectors located under driver's seat.
6) Remove bolt cover at rear end of slide rail.
7) Remove bolts securing seat rear.

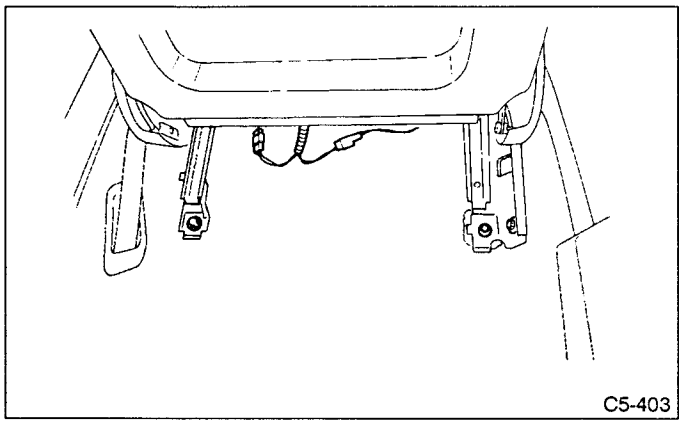

Fig. 28

8) While pulling slide adjuster lever, slide seat all the way back.
9) Remove bolts securing front of seat.

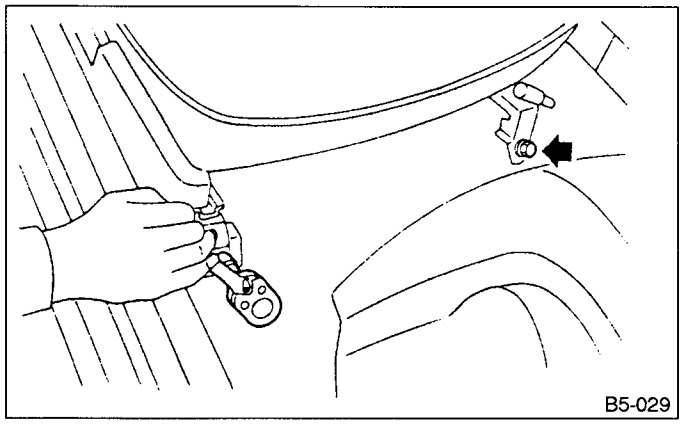

Fig. 29

10) Remove front seat from vehicle.
Be careful not to scratch seat when removing it from vehicle.

B: INSTALLATION

1) Remove headrest.
2) Pull reclining lever back to fold backrest all the way forward. Pull slide adjuster lever and move lower slide rail all the way forward.
Ensure that lock plate pawls are securely inserted into corresponding holes in both slide rail brackets.
3) Carefully set seats in position.
4) Install bolts securing front side of seat to body.
5) While pulling slide adjuster lever, move seat all the way forward.
Ensure that lock plate pawls are securely inserted into corresponding holes in both slide rail brackets.
6) Install bolts which secure rear of seat to body.

7) Install anchor bolt (compartment side) securing seat rear to body. Tighten anchor bolt to secure with seat belt bracket.
8) Install bolt cover on rear end of slide rail.
9) Connect connectors located under driver's seat.
10) While expanding belt holder with fingers, route lap belt tongues into place. Pass ELR belt tongue through hole in belt guide.
11) Install headrest on backrest.

Bolt tightening torque:
42 — 62 N•m (4.3 — 6.3 kg-m, 31 — 46 ft-lb)

a. Tighten bolts in the order designated.
b. After installation, ensure that all functional mechanisms operate properly and lock.

2. Rear Seat

A: REMOVAL

1) Push left and right hooks (A) down.

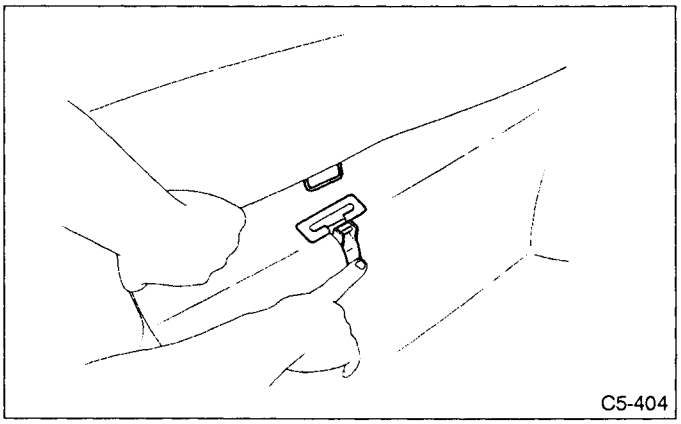

Fig. 30

2) While raising front of seat cushion, push left and right rear ends of cushion down to disconnect hook (B), and remove seat cushion.

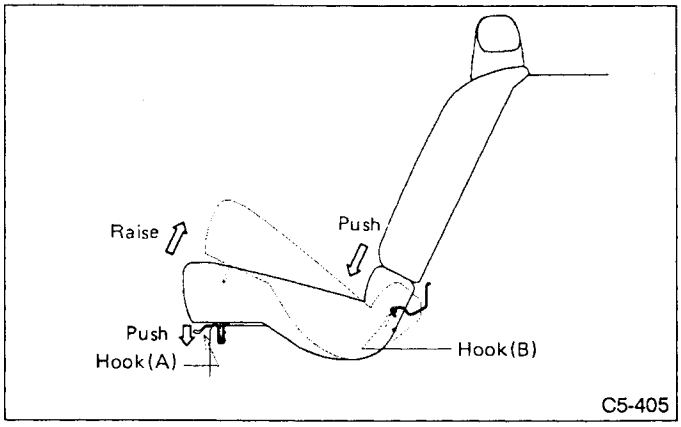

Fig. 31

3) Fold backrest forward to unfasten edge trunk.

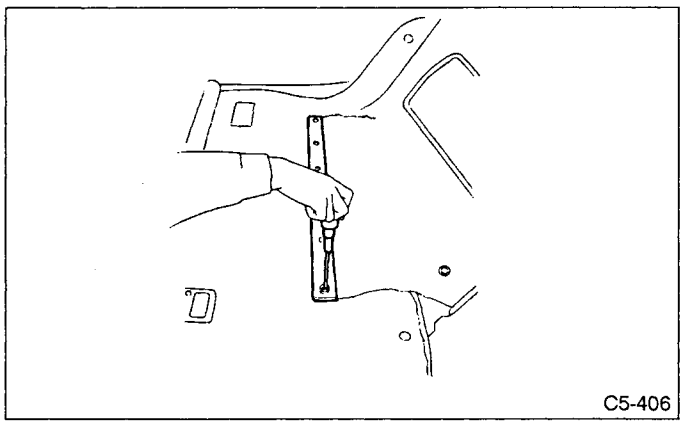

Fig. 32

5) Roll up left and right edges of floor mat at backrest, remove four bolts (two on each side) and remove backrest.

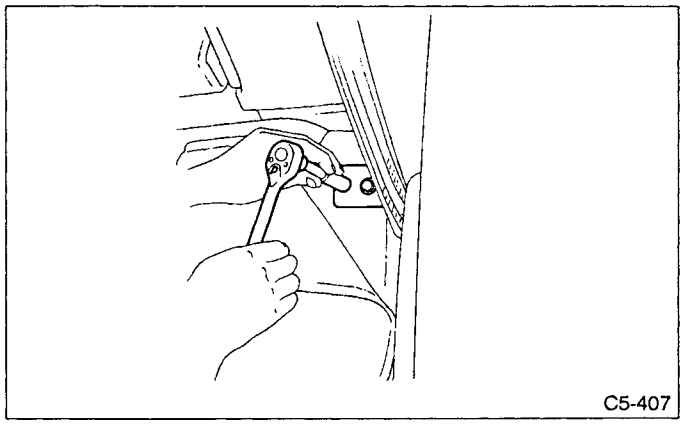

Fig. 33

B: INSTALLATION

1) Install backrest and edge trunk in reverse order of above removal procedures. Backrest should be set perpendicular and outer belt should not be caught during installation.
2) Pass inner belt buckle through slit in seat cushion. While pushing left and right rear ends of seat cushion down, connect to hook (B).
3) Push front end of seat cushion down and lock cushion to hooks (A).
4) Ensure that rear seat belt webbing is not twisted or rolled on seat.

Bolt tightening torque:
18 — 31 N•m (1.8 — 3.2 kg-m, 13 — 23 ft-lb)

3. Front Seat Belt

In case the connector to the automatic shoulder belt has been disconnected for repairs of the automatic shoulder belt or related parts or for repairs of other parts, be sure to disconnect the battery and reset the control unit. If the connector of the automatic shoulder belt control unit or the connector of the front or rear limit switch has been disconnected once during repairs, the control unit can enter the failure mode when the connector is reconnected, making the automatic shoulder belt inoperative.

A: REMOVAL

1) Disconnect battery ground cable.
2) Push emergency release button on the shoulder anchor and remove belt.

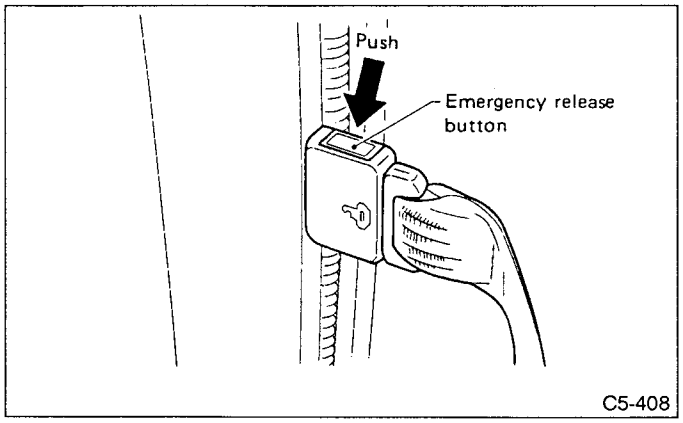

Fig. 34

3) Remove Rear quarter trim ⟨Refer to [W8A0].⟩ and Front pillar upper trim ⟨Refer to [W11A0].⟩
4) Disconnect three connectors at motor.

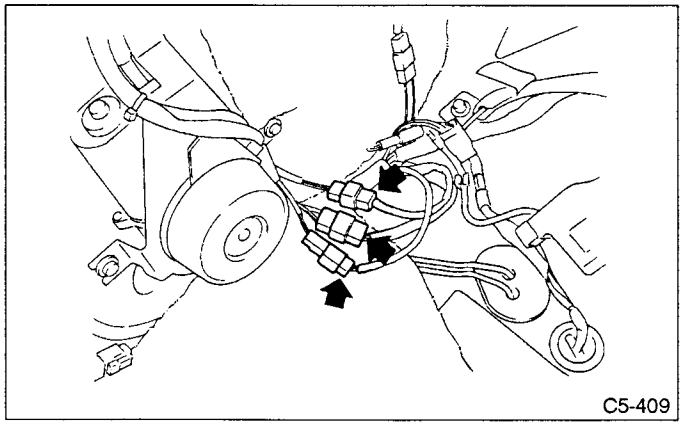

Fig. 35

5) Remove nine bolts (one on left side and eight on right side), loosen anchor bolts, and then remove front seat belt assembly.

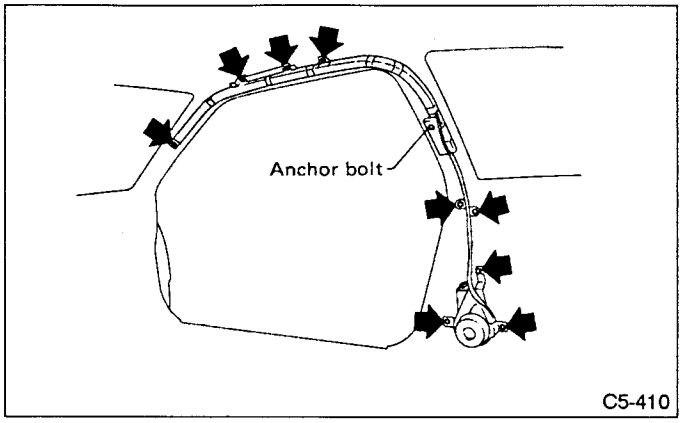

Fig. 36

B: DISASSEMBLY

1. FRONT LIMIT SWITCH

1) Unfasten five clips and tape to free limit switch harness from rail assembly.

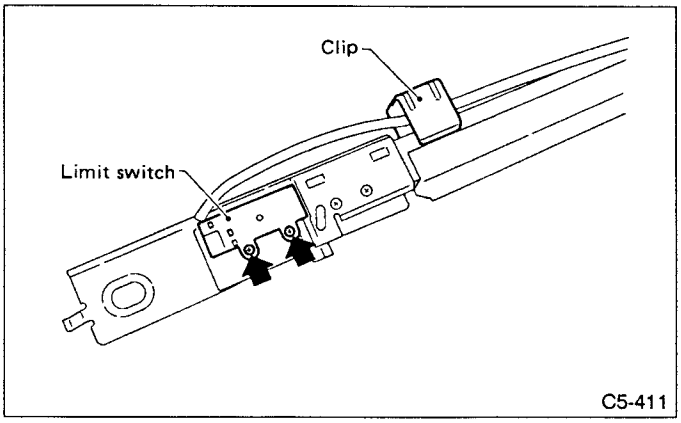

Fig. 37

2) Remove two screws, then limit switch.

2. LOCKING DEVICE (REAR LIMIT SWITCH, WARNING SWITCH)

1) Remove limit switch.
2) Remove E-clip which fixes two pins of rail and tube and pull out pin.
3) Remove tube in the rail.
4) Pull out locking device by sliding.

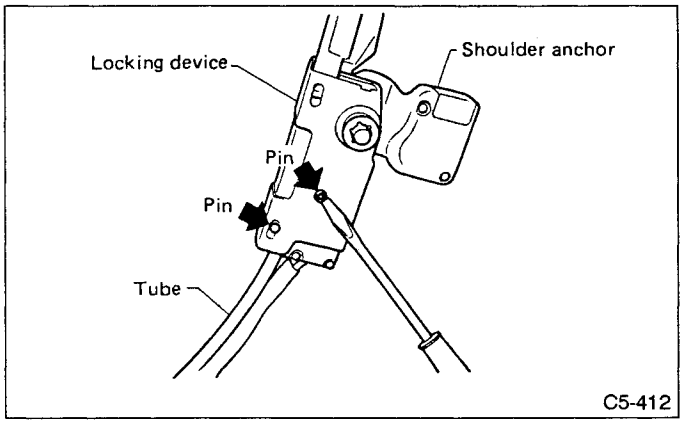

Fig. 38

3. SHOULDER ANCHOR (EMERGENCY RELEASE BUCKLE) & MOTOR ASSY

1) Remove locking device.
2) Remove motor ASSY wire and shoulder anchor as a unit from guide rail.

C: ASSEMBLY

Assembly is in the reverse order of disassembly.

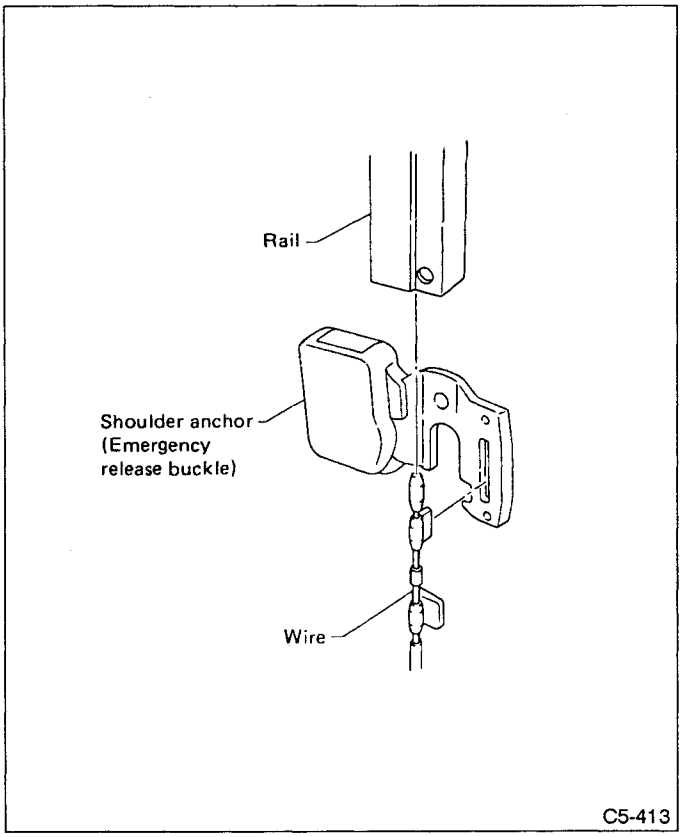

Fig. 39

a. Do not remove grease from wire.
b. Do not bend or twist wire too sharply.

D: INSTALLATION

Installation is in the reverse order of removal.
Use M6 bolts, length 12 mm (0.47 in) (047406120).

E: OPERATION CHECK

Perform operation checks after replacing parts.

1. RAIL & MOTOR ASSY

While latching shoulder belt on shoulder anchor (emergency release buckle), open and close the door to check that shoulder anchor moves smoothly without binding, free play, etc.

2. EMERGENCY RELEASE BUCKLE

Check that tongue properly releases when emergency release button is pressed. Also check that click is heard to indicate proper latching when tongue is inserted into emergency release buckle.

4. Front Seat Belt [Manual Lap Belt] Outer Belt Assembly

Supplemental Restraint System "Airbag"

Airbag system wiring harness is routed near side sill and floor panel.

a. All Airbag system wiring harness and connectors are colored yellow. Do not use electrical test equipment on these circuit.

b. Be careful not to damage Airbag system wiring harness when servicing the Manual lap belt.

A: REMOVAL

1) Disconnect battery ground cable.
2) Remove lap ELR cover.

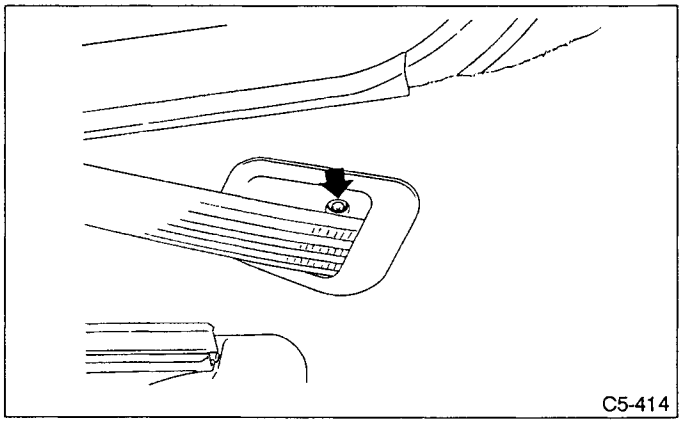

Fig. 40

3) Remove relevant front seat when removing manual lap belt. ⟨Refer to [W1A0].⟩
4) Remove rear quarter trim. ⟨Refer to [W8A0].⟩
5) Remove cover opener from driver's seat side.

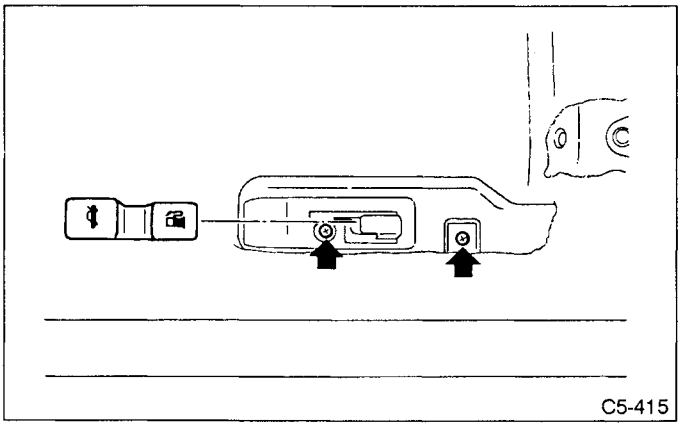

Fig. 41

7) Remove side sill lower cover. ⟨Refer to [W9A0].⟩
8) Roll up floor mat and remove the two bolts.

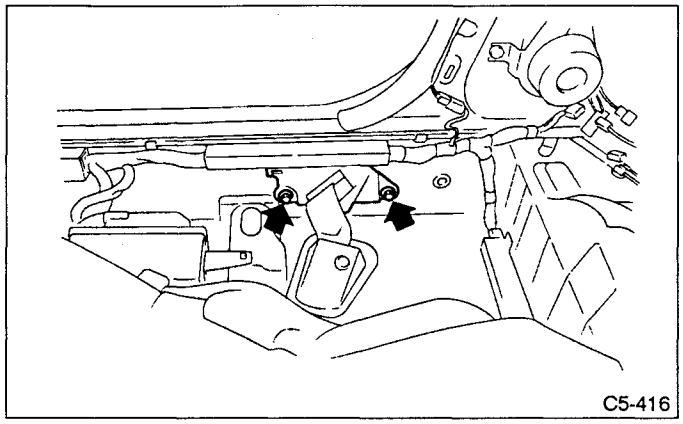

Fig. 42

B: INSTALLATION

Installation is in the reverse order of removal.

5. Front Seat Belt ELR Assembly

Supplemental Restraint System "Airbag"

Airbag system wiring harness is routed near floor panel.

a. All Airbag system wiring harness and connectors are colored yellow. Do not use electrical test equipment on these circuit.

b. Be careful not to damage Airbag system wiring harness when servicing the ELR assembly.

A: REMOVAL

1) Remove front passenger seat. ⟨Refer to [W1A0].⟩
2) Remove console box. ⟨Refer to [5-4].⟩
3) Remove rear seat cushion. ⟨Refer to [W2A0].⟩
4) Remove side sill upper cover from passenger seat side. ⟨Refer to [W7A0].⟩
5) Remove lap ELR cover from passenger seat side. ⟨Refer to [W4A0].⟩
6) Unfasten hooks from rear of floor mat and right side of rear cushion. Discard hooks (on right side of rear cushion) after removal, and replace with new ones.

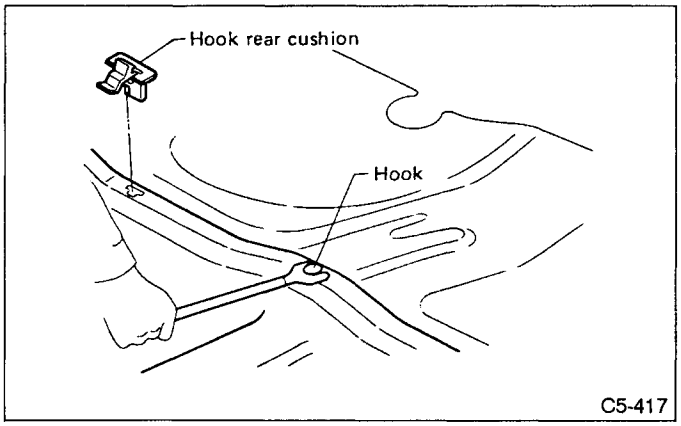

Fig. 43

7) Roll up floor mat, and remove four anchor bolts securing ELR assembly to body.

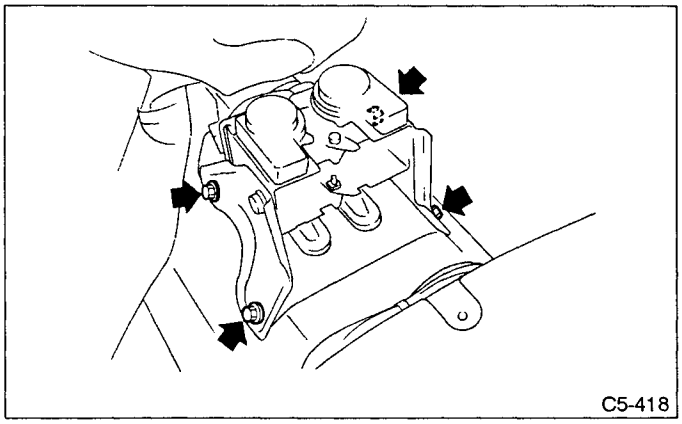

Fig. 44

B: DISASSEMBLY

Remove M6-bolts which mount base of ELR.

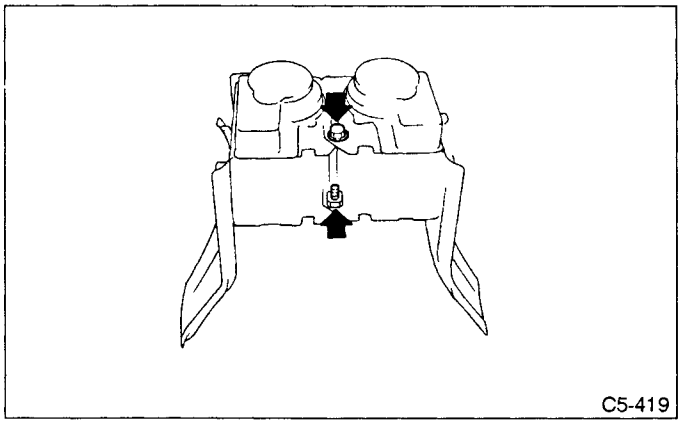

Fig. 45

C: ASSEMBLY

Reverse the removal and disassembly procedures.

D: OPERATION CHECK

Perform operation checks before installing new parts.
1) Align point of ELR ASSY with floor tunnel and temporarily install ELR ASSY. Check that shoulder belt winds and unwinds properly.
2) Gradually tilt ELR ASSY. Check that ELR locks so that belt cannot be withdrawn when ELR is tilted 45° or more in relation to standard installation angle, and that ELR unlocks when it is tilted within 15°.

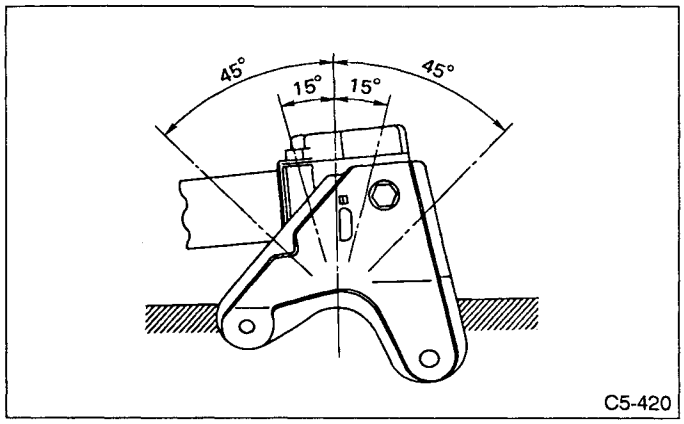

Fig. 46

E: INSTALLATION

Reverse the removal and disassembly procedures.

6. Rear Seat Belt

A: REMOVAL

1. INNER BELT ASSY

1) Remove rear seat cushion. <Refer to [W2A0].>
2) Remove bolts.

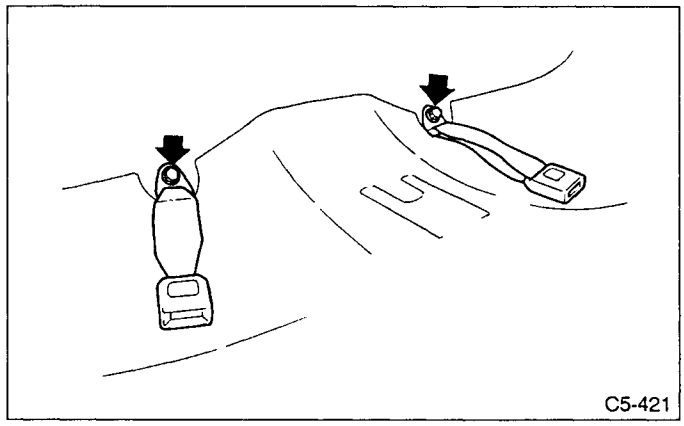

Fig. 47

2. OUTER BELT ASSY

1) Disconnect battery ground cable.
2) Remove rear seat backrest. ⟨Refer to [W2A0].⟩
3) Remove rear shelf trim. ⟨Refer to [W10A0].⟩
4) Remove two bolts from compartment side.

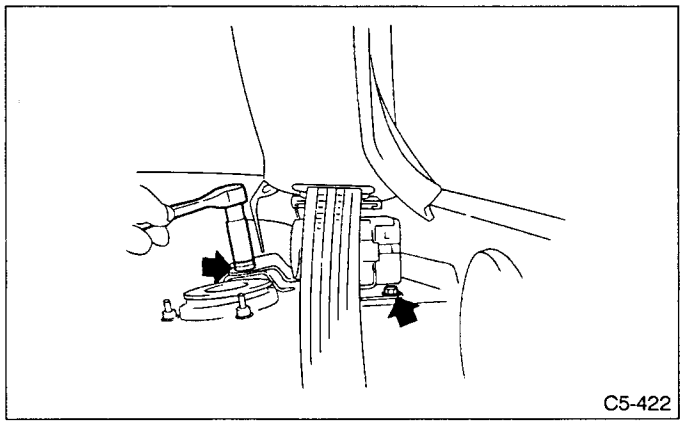

Fig. 48

5) Remove one bolt from lower side of compartment.

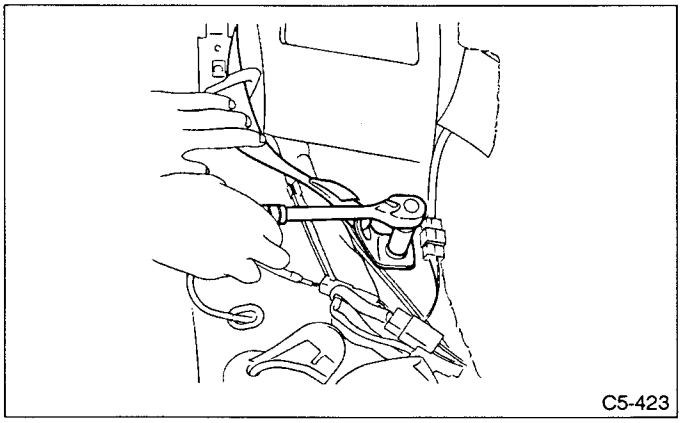

Fig. 49

6) Remove trunk side trim. ⟨Refer to [W16A0].⟩
7) Remove one bolt from trunk compartment side.

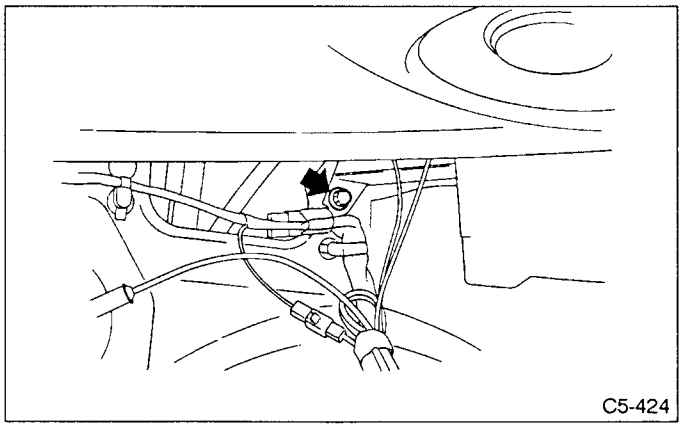

Fig. 50

B: INSTALLATION

Installation is in the reverse order of removal. Ensure that seat belt is properly reeled on and off after installation of ELR.

a. Be extremely careful not to confuse center seat anchor plate with outer seat anchor plate during installation.

b. Ensure that seat belts are free from twisting after installation.

c. Ensure that tongues, buckles and belts are properly placed on seat.

7. Side Sill Upper Cover

A: REMOVAL

Carefully remove four clips, one at a time.

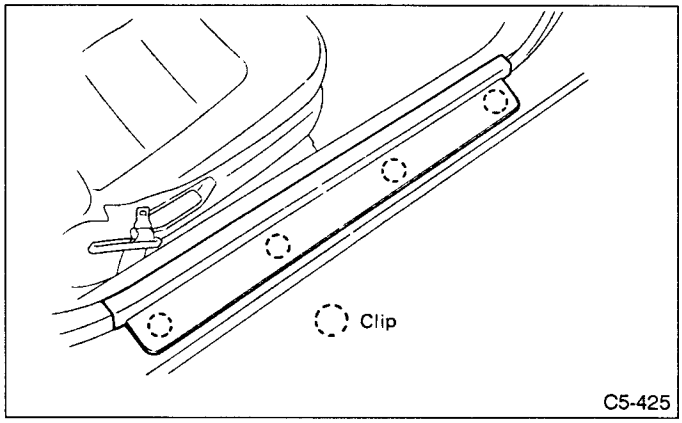

Fig. 51

8. Rear Quarter Trim

A: REMOVAL

1) Disconnect battery ground cable.
2) Remove rear seat cushion. ⟨Refer to [W2A0].⟩
3) Remove side sill upper cover. ⟨Refer to [W7A0].⟩
4) Remove two screws.

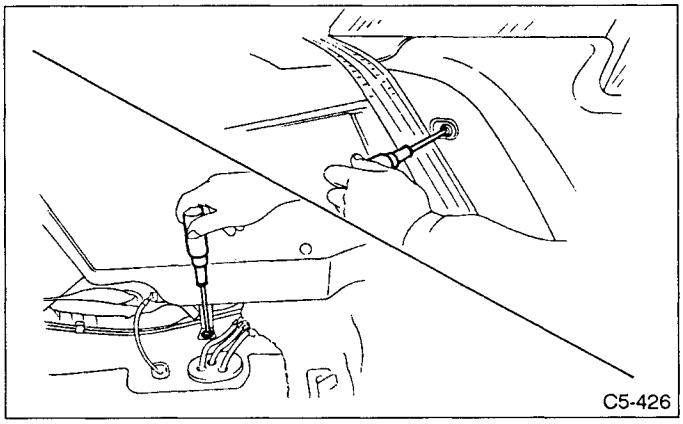

Fig. 52

5) Carefully remove four clips, one at a time. Disconnect power window harness connectors.

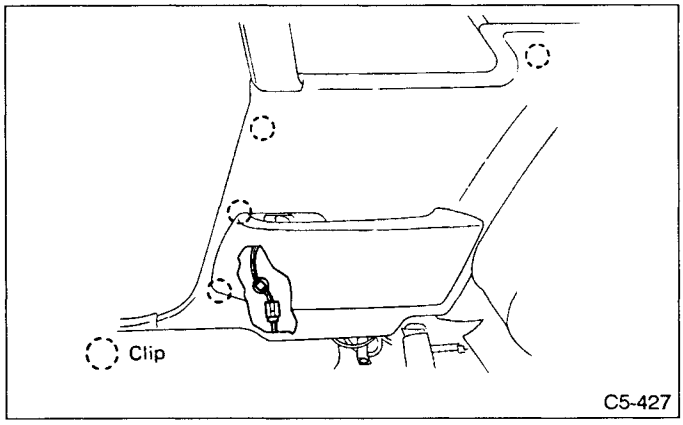

Fig. 53

B: INSTALLATION

Installation is in the reverse order of removal.

9. Side Sill Lower Cover

Supplemental Restraint System "Airbag"

Airbag system wring harness is routed near side sill and floor panel.

a. All airbag system wiring harness and connectors are colored yellow. Do not use electical test equipment on these circuit.

b. Be careful not to damage Airbag system wiring harness when servicing the side sill lower cover.

A: REMOVAL

1) Disconnect battery ground cable.
2) Remove front seat. ⟨Refer to [W1A0].⟩
3) Remove front pillar lower trim. ⟨Refer to [W14A0].⟩
4) Remove rear quarter trim. ⟨Refer to [W8A0].⟩
5) Remove lap ELR cover. ⟨Refer to [W4A0].⟩
6) Remove cover opener from driver's seat side.

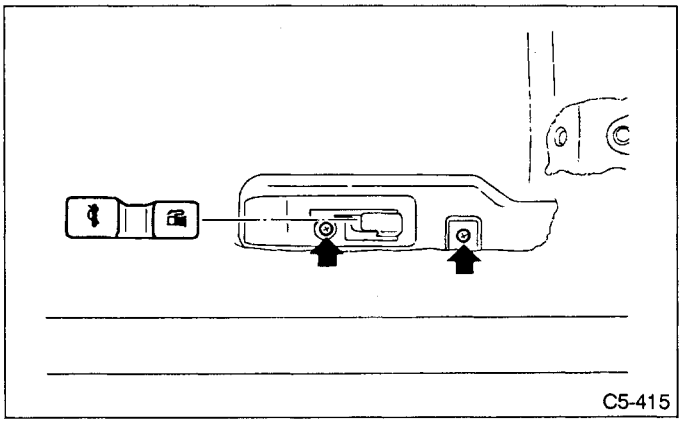

Fig. 54

7) Remove hooks from rear cushion. Discard old hooks and replace with new ones.
8) Remove one screw and three caps.

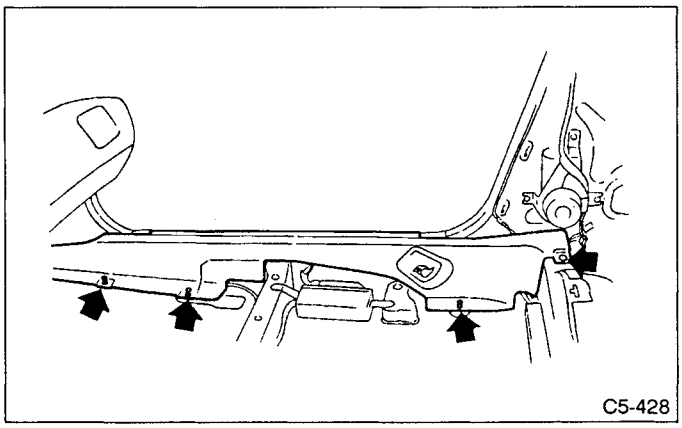

Fig. 55

B: INSTALLATION

Installation is in the reverse order of removal.

10. Rear Shelf Trim

A: REMOVAL

1) Disconnect battery ground cable.
2) Remove rear quarter trim. ⟨Refer to [W8A0].⟩
3) Extract rear wiper base cover.

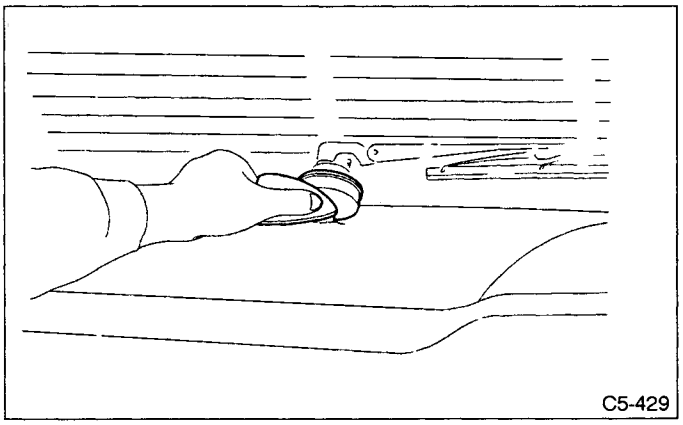

Fig. 56

4) Remove screw from each side of rear shelf trim.

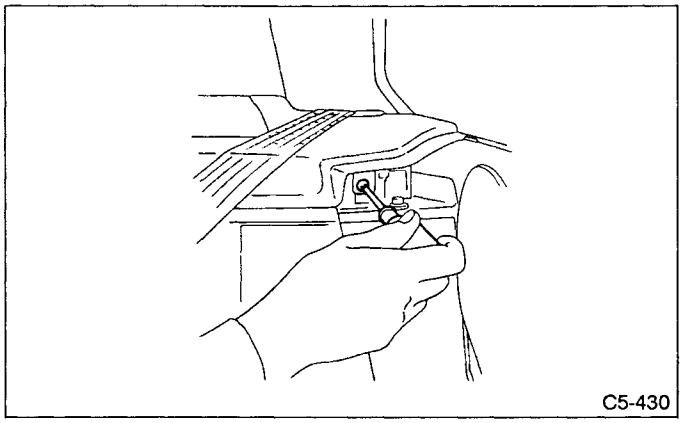

Fig. 57

5) Carefully remove the three clips (one at a time) from front edge of rear shelf trim, move it forward.

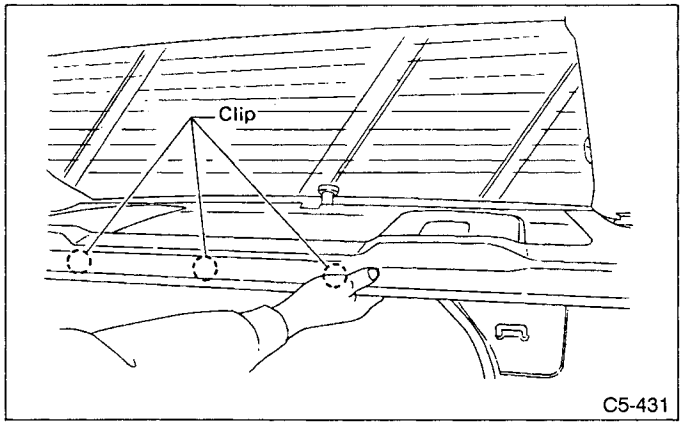

Fig. 58

B: INSTALLATION

Installation is in the reverse order of removal.

11. Front Pillar Upper Trim

A: REMOVAL

1) Remove assist rail grip from front passenger seat side.

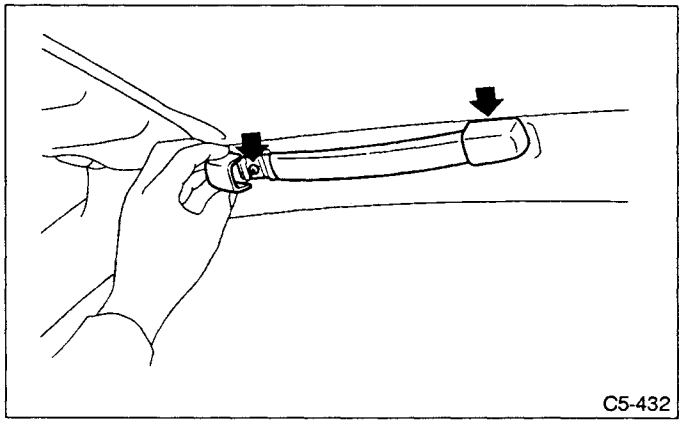

Fig. 59

2) Carefully remove five clips, one at a time.

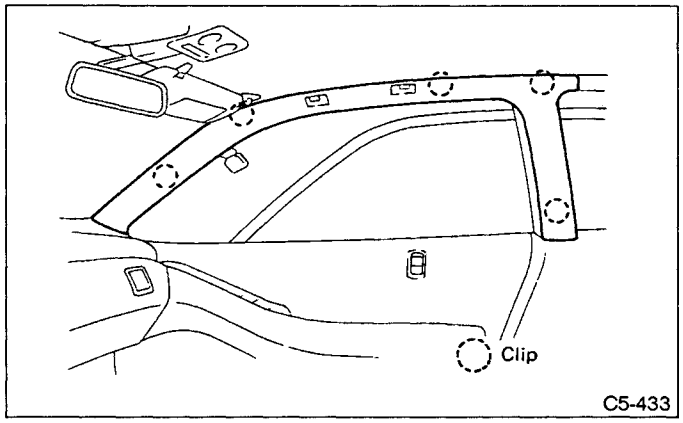

Fig. 60

3) Remove front pillar upper trim by raising its front edge. Be careful not to break pawls.

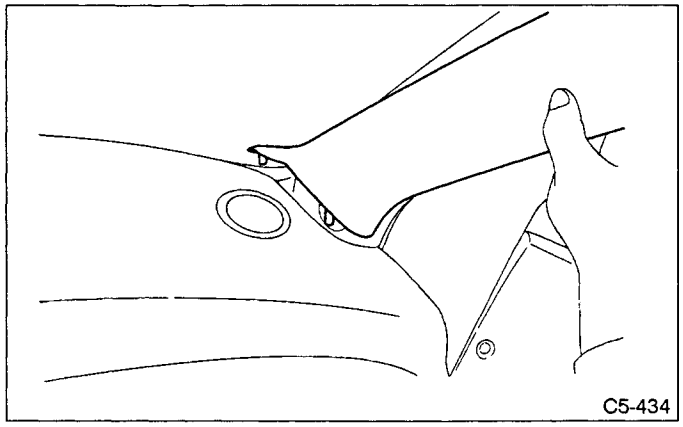

Fig. 61

B: INSTALLATION

Installation is in the reverse order of removal.

12. Rear Pillar Upper Trim

A: REMOVAL

1) Disconnect battery ground cable.
2) Remove front pillar upper trim. ⟨Refer to [W11A0].⟩
3) Remove rear shelf trim. ⟨Refer to [W10A0].⟩
4) Remove coat hanger hook.

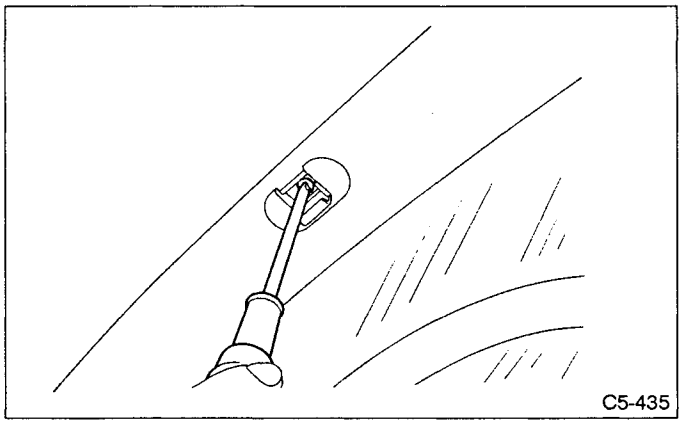

Fig. 62

5) Carefully remove five clips, one at a time.

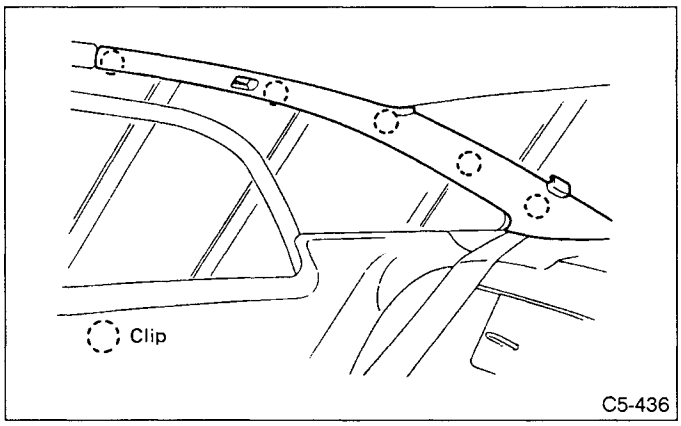

Fig. 63

B: INSTALLATION

Installation is in the reverse order of removal.

13. Roof Trim & Inner Parts

A: REMOVAL

1) Disconnect battery ground cable.
2) Remove front pillar upper trim. ⟨Refer to [W11A0].⟩
3) Remove rear pillar upper trim. ⟨Refer to [W12A0].⟩
4) Remove assist rail bracket.

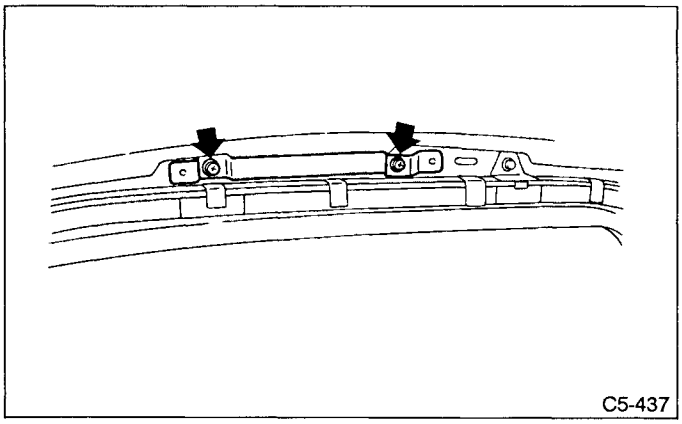

Fig. 64

5) Remove sun visor assembly and sunvisor hook.

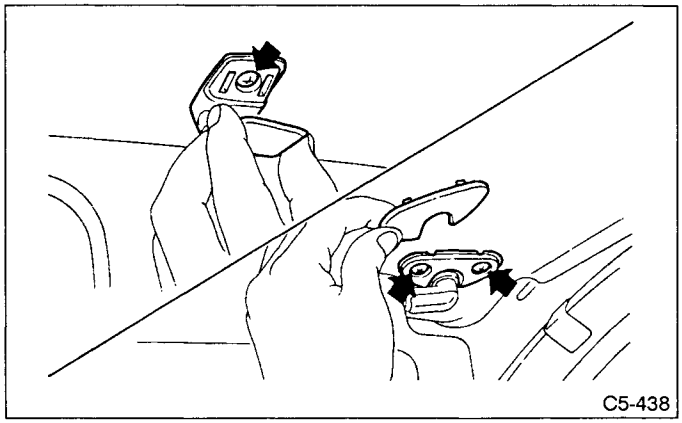

Fig. 65

6) Remove rearview mirror assembly.

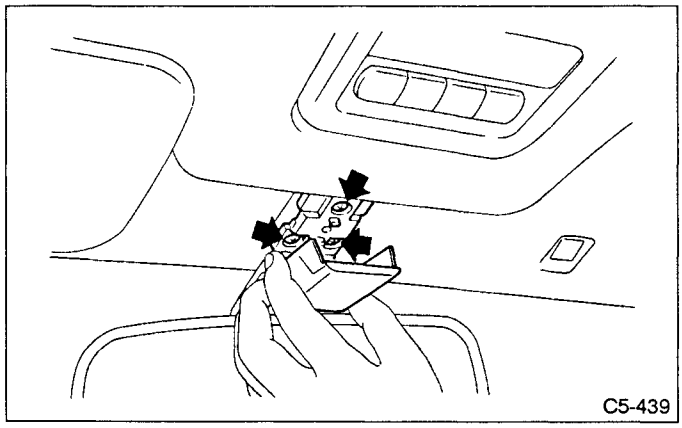

Fig. 66

7) Remove two spotlight lenses to gain access to two screws and connectors. Remove two screws and connectors; remove spotlight assembly.

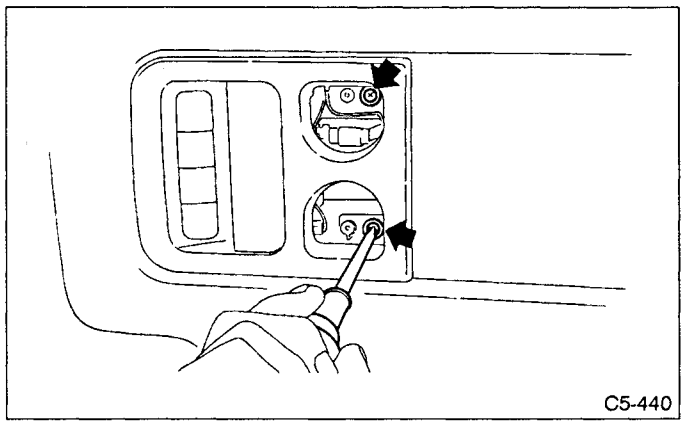

Fig. 67

8) Remove spotlight base.
(without sunroof vehicle)

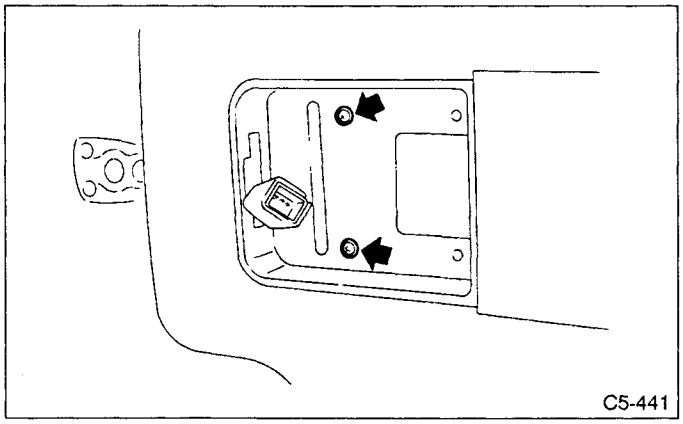

Fig. 68

9) Remove sunroof garnish.
(with sunroof vehicle)

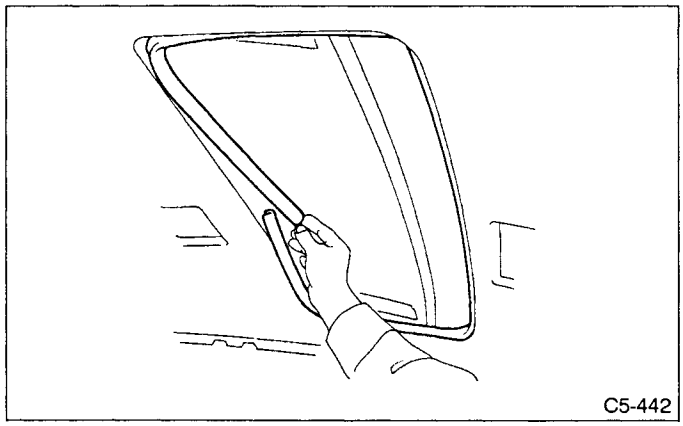

Fig. 69

10) Remove interior light.

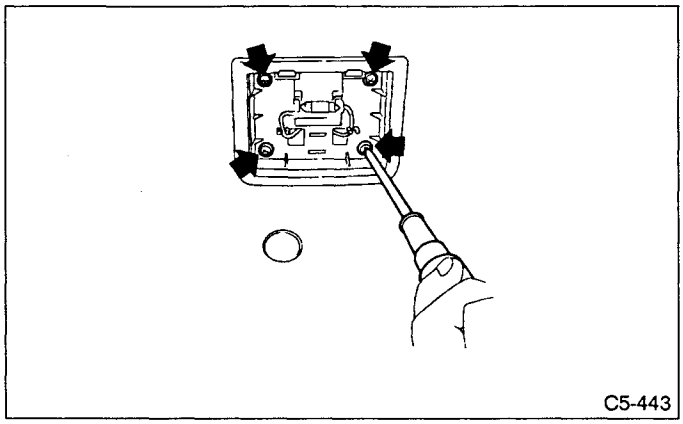

Fig. 70

11) Remove four clips and roof trim.

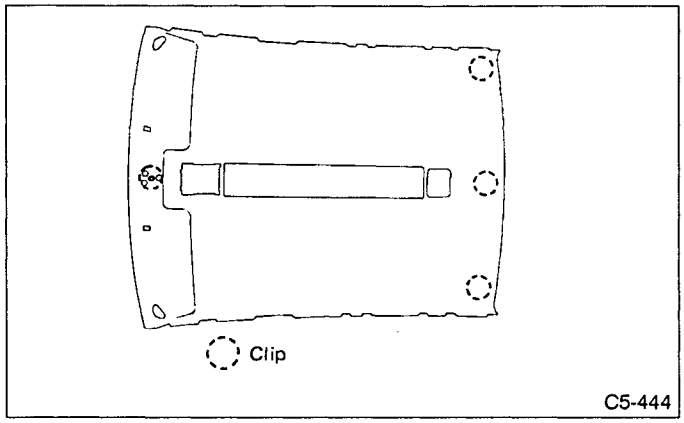

Fig. 71

B: INSTALLATION

Installation is in the reverse order of removal.

14. Floor Mat

Supplemental Restraint System "Airbag"
Airbag system wiring harness is routed near side sill and floor panel.
a. All Airbag system wiring harness and connectors are colored yellow. Do not use electrical test equipment on these circuit.
b. Be careful not to damage Airbag system wiring harness when servicing the floor mat.

A: REMOVAL

1) Disconnect battery ground cable.
2) Remove front seat. ⟨Refer to [W1A0].⟩
3) Remove rear seat cushion. ⟨Refer to [W2A0].⟩
4) Remove console box. ⟨Refer to [5-4].⟩
5) Remove lap ELR cover.

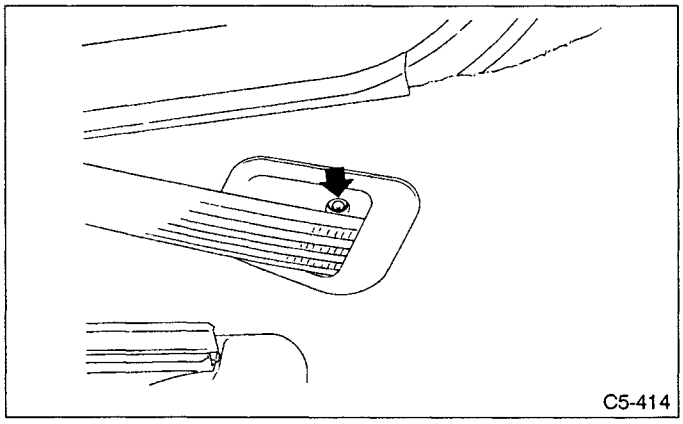

Fig. 72

6) Remove side sill upper cover.

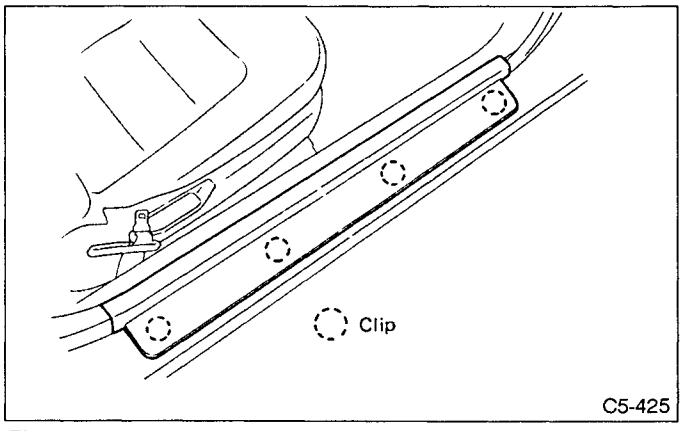

Fig. 73

7) Remove front pillar lower trim.

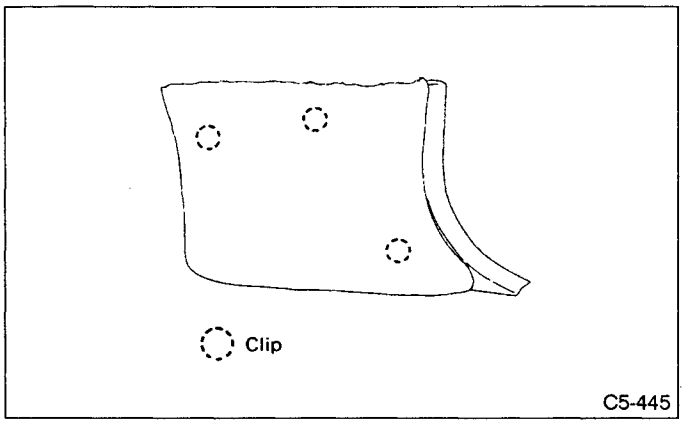

Fig. 74

8) Remove cover opener from driver's seat side.

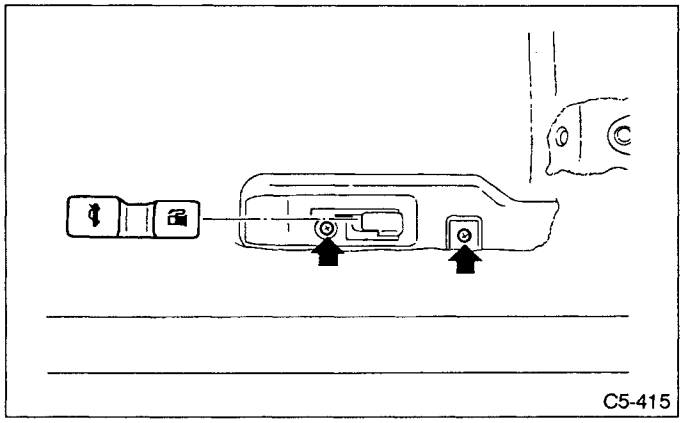

Fig. 75

9) Remove accelerator pedal stopper.

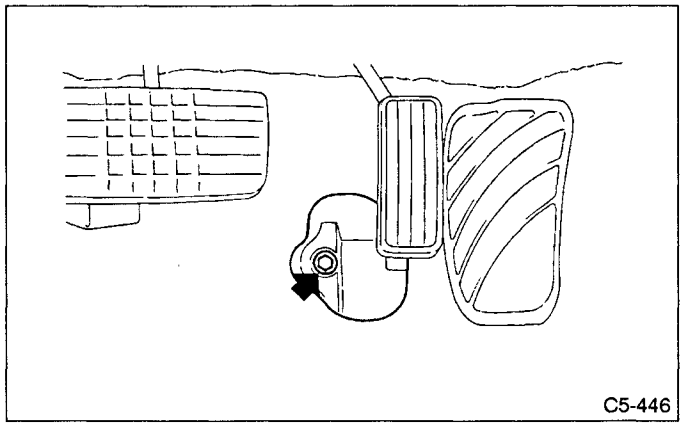

Fig. 76

10) Remove ten clips using puller, and remove floor mat.

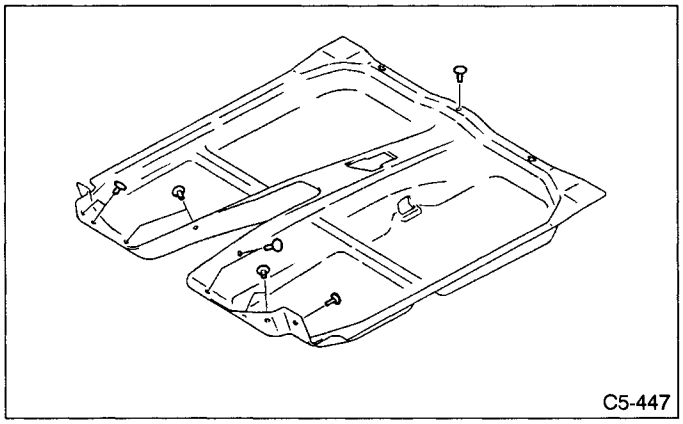

Fig. 77

B: INSTALLATION

1) Before setting floor mat in position, pass power seat harness and connector through hole.

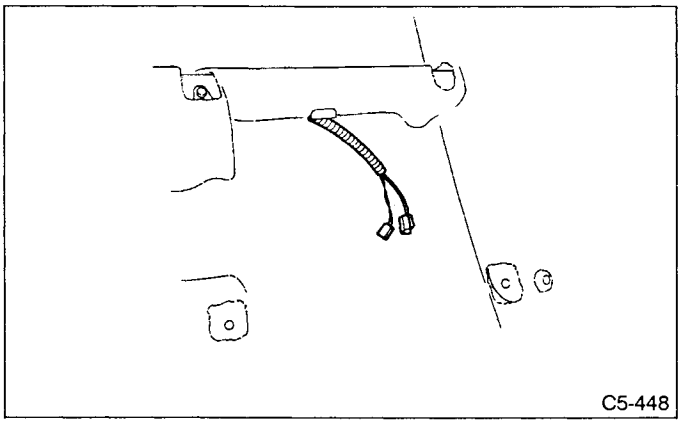

Fig. 78

2) Align edge of floor mat with side sill lower cover.

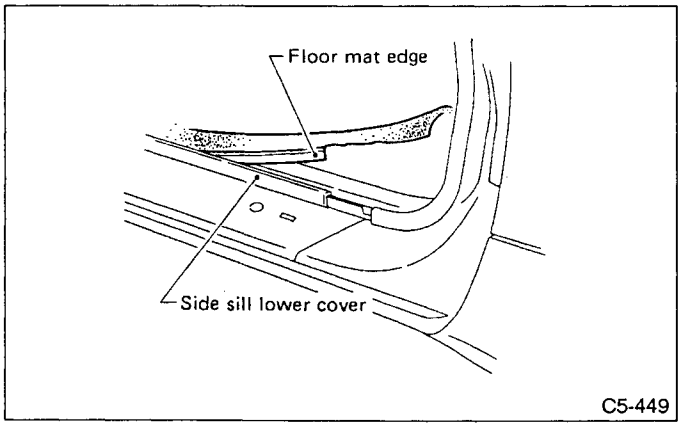

Fig. 79

3) Install remaining parts in reverse order of removal.

15. Bulk Side Trim

A: REMOVAL

Remove trunk garnish and undo two clips.

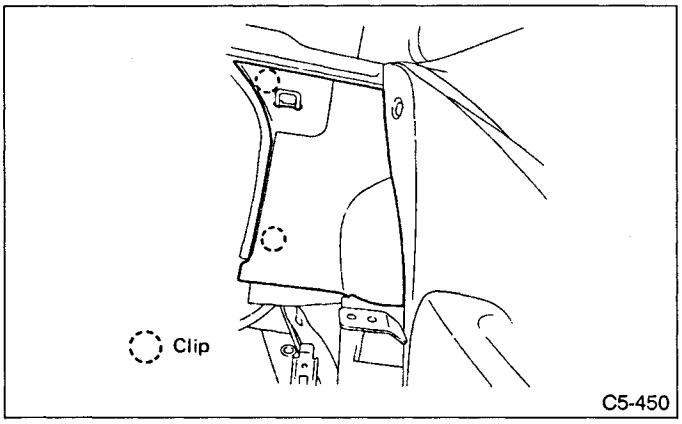

Fig. 80

16. Trunk Trim

A: REMOVAL

1) Remove trunk edge ⟨Refer to [W2A0].⟩ and front two hooks; remove trunk mat.

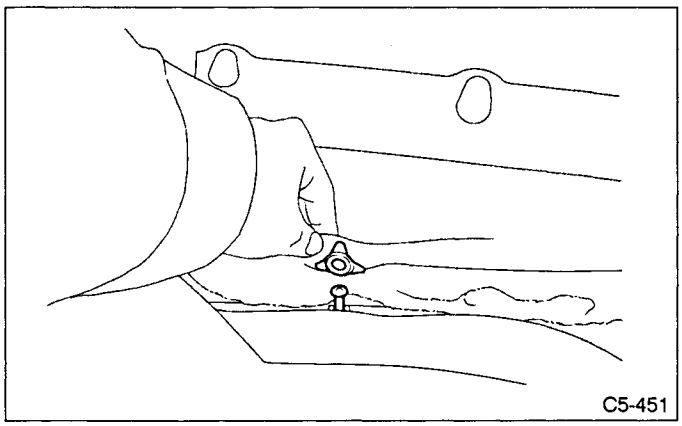

Fig. 81

2) Remove trunk rear panel trim.

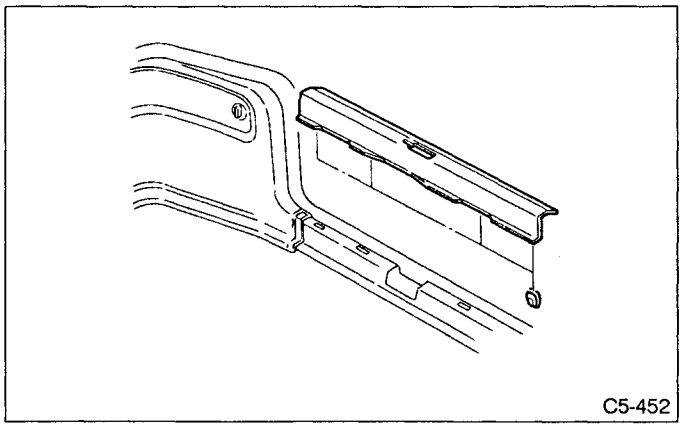

Fig. 82

3) Roll up weatherstrip, remove three clips and trunk side trim.

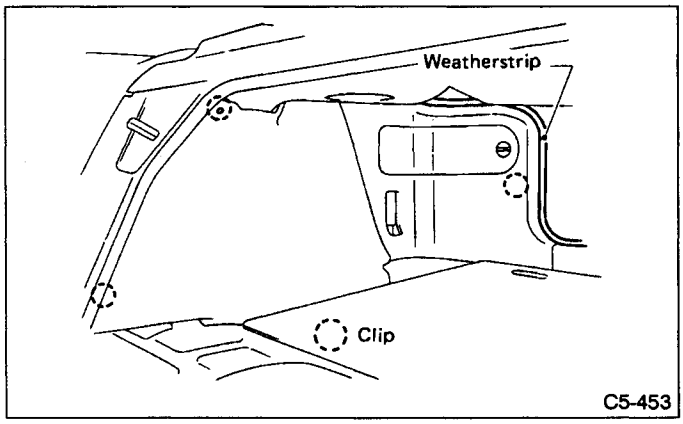

Fig. 83

4) Remove eight clips, then upper trunk trim.

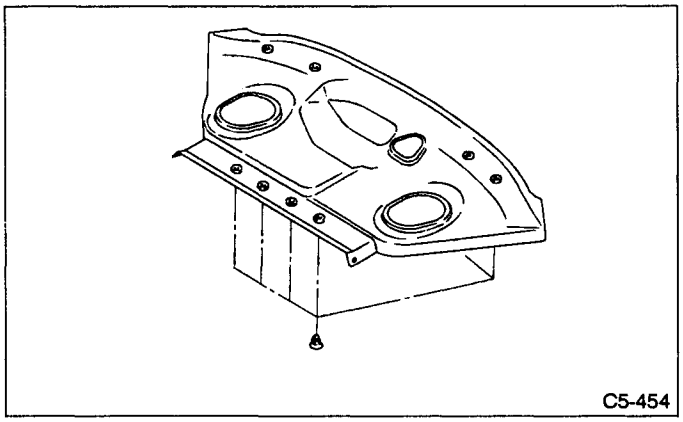

Fig. 84

B: INSTALLATION

Install in reverse order of above removal procedures. Make sure edge of side trunk trim and upper thank trim are fitted in weatherstrip.

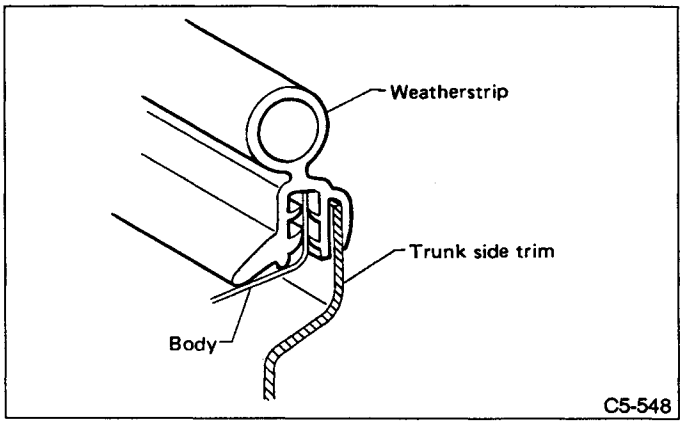

Fig. 85

T TROUBLESHOOTING [Automatic Shoulder Belt]

1. Self-diagnosis System

A: BASIC TROUBLESHOOTING PROCEDURE

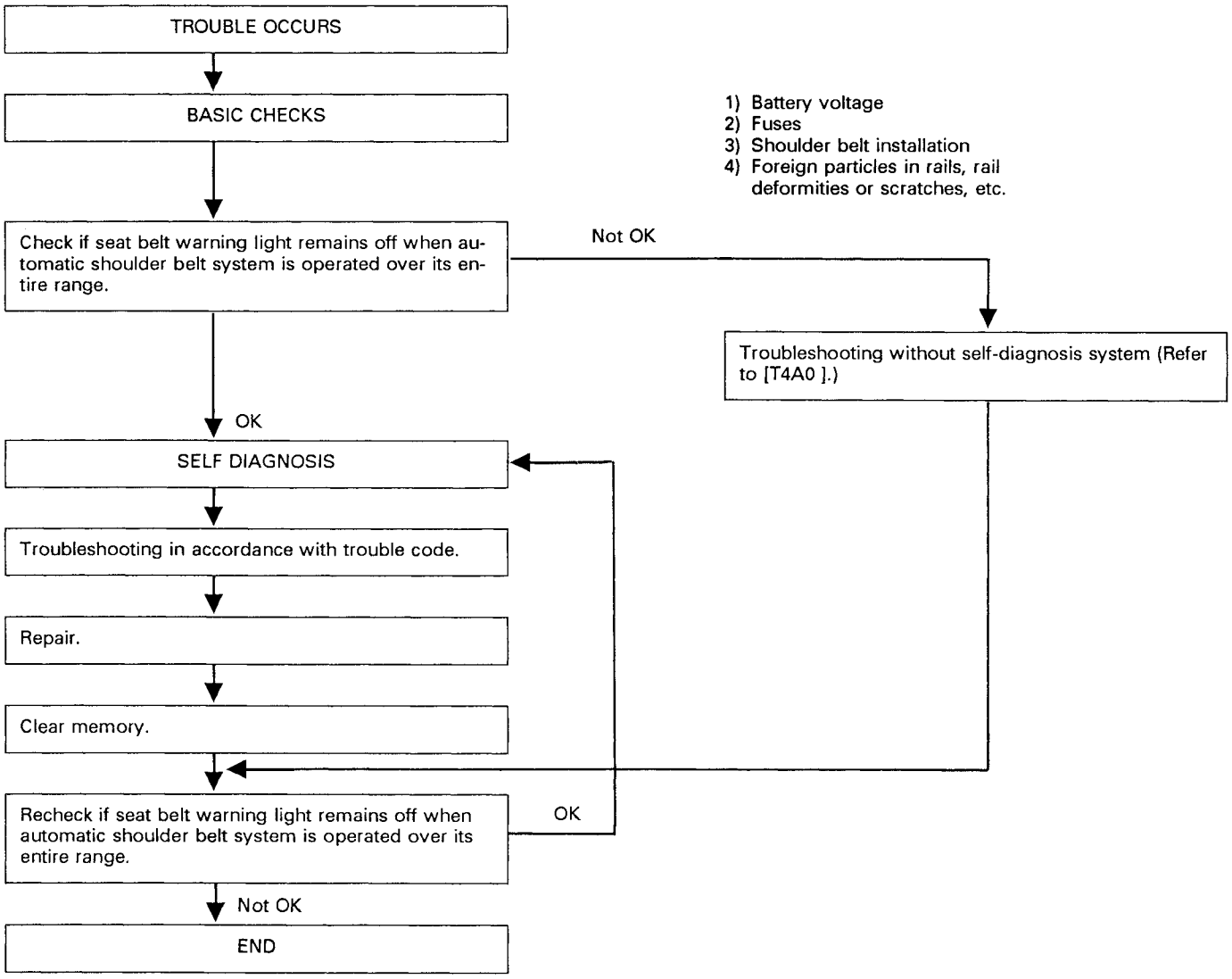

B: SEAT BELT WARNING LIGHT INDICATIONS

If any self-diagnosis item is malfunctioning, the seat belt warning light activates (as shown in Figure 101) immediately after the ignition switch is turned ON.

- Warning light signal is as follows.

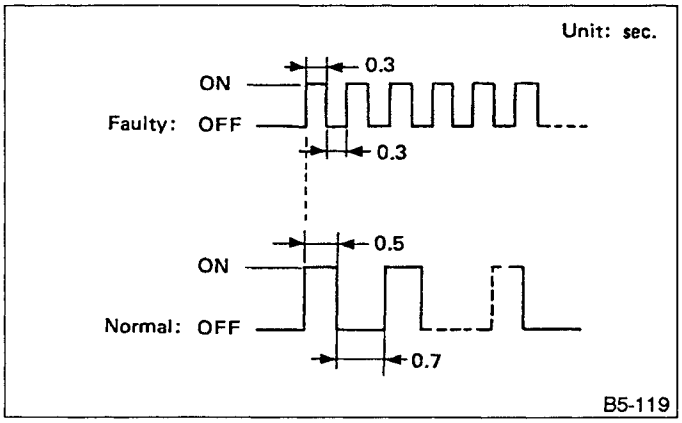

Fig. 86

When the warning light blinks at an interval of 0.3 seconds, conduct a self-diagnosis operation to determine the problem indicated by the trouble code.

*: If either the driver's seat belt or the passenger's seat belt is not fastened after the ignition switch is turned ON, the warning light will remain on after it blinks for 6± 2 seconds.

If any shoulder belt or lap belt (for the driver or front passenger) is unfastened after the ignition switch is turned ON, the buzzer will sound for 6± 2 seconds.

C: SELF-DIAGNOSIS

When the seat belt warning light blinks at abnormal intervals, conduct the self-diagnosis operation as follows:

1) Turn ignition switch ON (with engine OFF).
2) Connect DIAG. terminal to No. 8 terminal of diagnosis connector located below the pillar lower cover LH side.
3) Check in accordance with the trouble code outputted by the seat belt warning light.

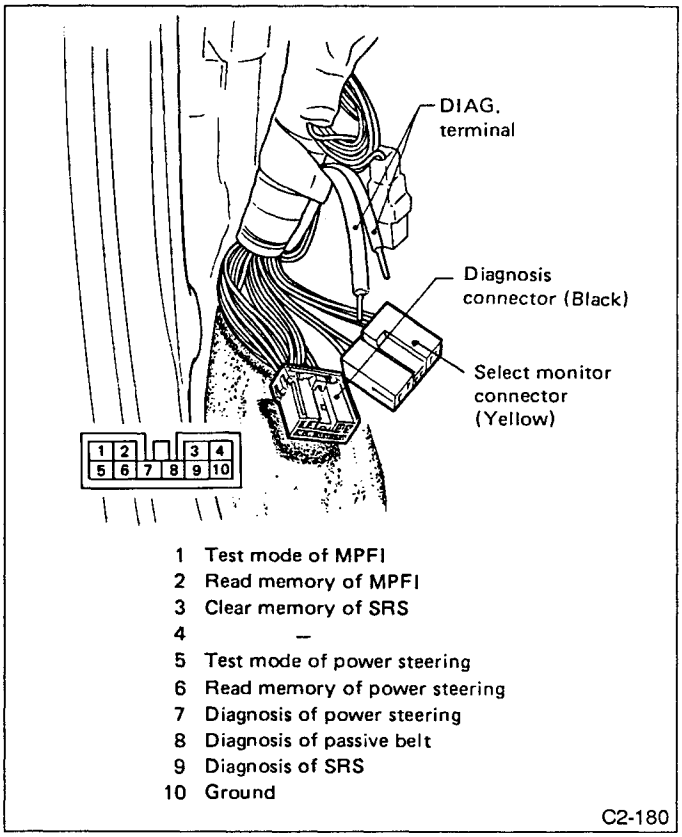

Fig. 87

D: LIST OF TROUBLE CODES

1. TROUBLE CODES

Trouble code	Content of diagnosis
11	Open and closed ends of driver's door latch switch are ON.
12	Open and closed ends of driver's door latch switch are OFF.
13	Front limit switch (on driver's side) remains ON.
14	Rear limit switch (on driver's side) remains ON.
15	Front and rear limit switches (on driver's side) are OFF.
16	Shoulder belt buckle switch and front limit switch (on driver's side) are OFF.
21	Open and closed ends of passenger's door latch switch are ON.
22	Open and closed ends of passenger's door latch switch are OFF.
23	Front limit switch (on passenger's side) remains ON.
24	Rear limit switch (on passenger's side) remains ON.
25	Front and rear limit switches (on passenger's side) are OFF.
26	Shoulder belt buckle switch and front limit switch (on passenger's side) are OFF.
32	Ignition switch is ON with battery power left OFF.

2. HOW TO READ TROUBLE CODES

The seat belt warning light flashes a code corresponding to the faulty parts.
The long segment (1.25 sec on) indicates a "ten", and the short segment (0.30 sec on) indicates a "one".

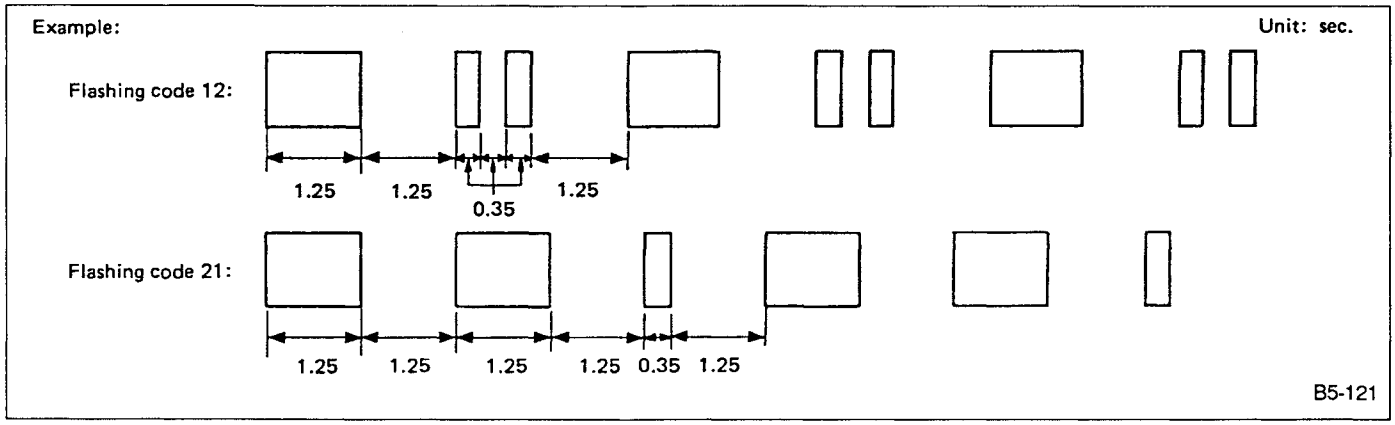

Fig. 88

E: CLEAR MEMORY

Only one trouble code is stored in the memory of this system. If several trouble codes are outputted, only the initial trouble code which is detected by the system is memorized.
After any repairs, the automatic shoulder belt system must be operated over its entire range (with the following fuse removed and with the memory cleared) to check that the seat belt warning light blinks abnormally.

CLEAR MEMORY:
Removal of No. 22 Fuse (Ignition switch OFF)

2. Control Unit I/O Signal

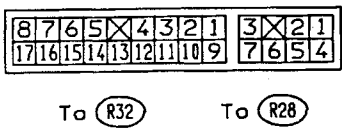

Fig. 89

Contents	Connector No.	Terminal	Signal (V)		
			Ig. SW OFF	Ig. SW ON	
				Engine OFF	Engine ON
Front limit switch (on driver's side)	R32	1	—	10 — 13	—
Shoulder belt buckle switch (on passenger's side)		2	—	10 — 13	—
Shoulder belt buckle switch (on driver's side)		3	—	10 — 13	—
Buzzer (time control unit)		4	—	10 — 13	—
Warning light		5	—	10 — 13	—
Ignition switch		6	0	0	13 — 14
Battery		8	—	—	13 — 14
GND(Ground)		9	—	—	—
Door latch switch (on passenger's side)		10	—	10 — 13	0
Door latch switch (on passenger's side)		11	—	10 — 13	0
Door latch switch (on driver's side)		12	—	10 — 13	0
Rear limit switch (on passenger's side)		13	—	10 — 13	0
Front limit switch (on passenger's side)		14	—	10 — 13	0
Door latch switch (on driver's side)		15	—	10 — 13	0
Seat belt switch (on driver's side)		16	—	10 — 13	0
Rear limit switch (on driver's side)		17	—	10 — 13	0
Motor (LH)	R28	1	—	0	13 — 14
Motor (LH)		2	—	0	13 — 14
SBF-1		3	—	—	13 — 14 (Motor OFF)
Diagnosis connector		4	—	4 — 5	—
GND(Ground)		5	—	—	—
Motor (RH)		6	—	0	13 — 14
Motor (RH)		7	—	0	13 — 14

3. Diagram of Automatic Shoulder Belt System

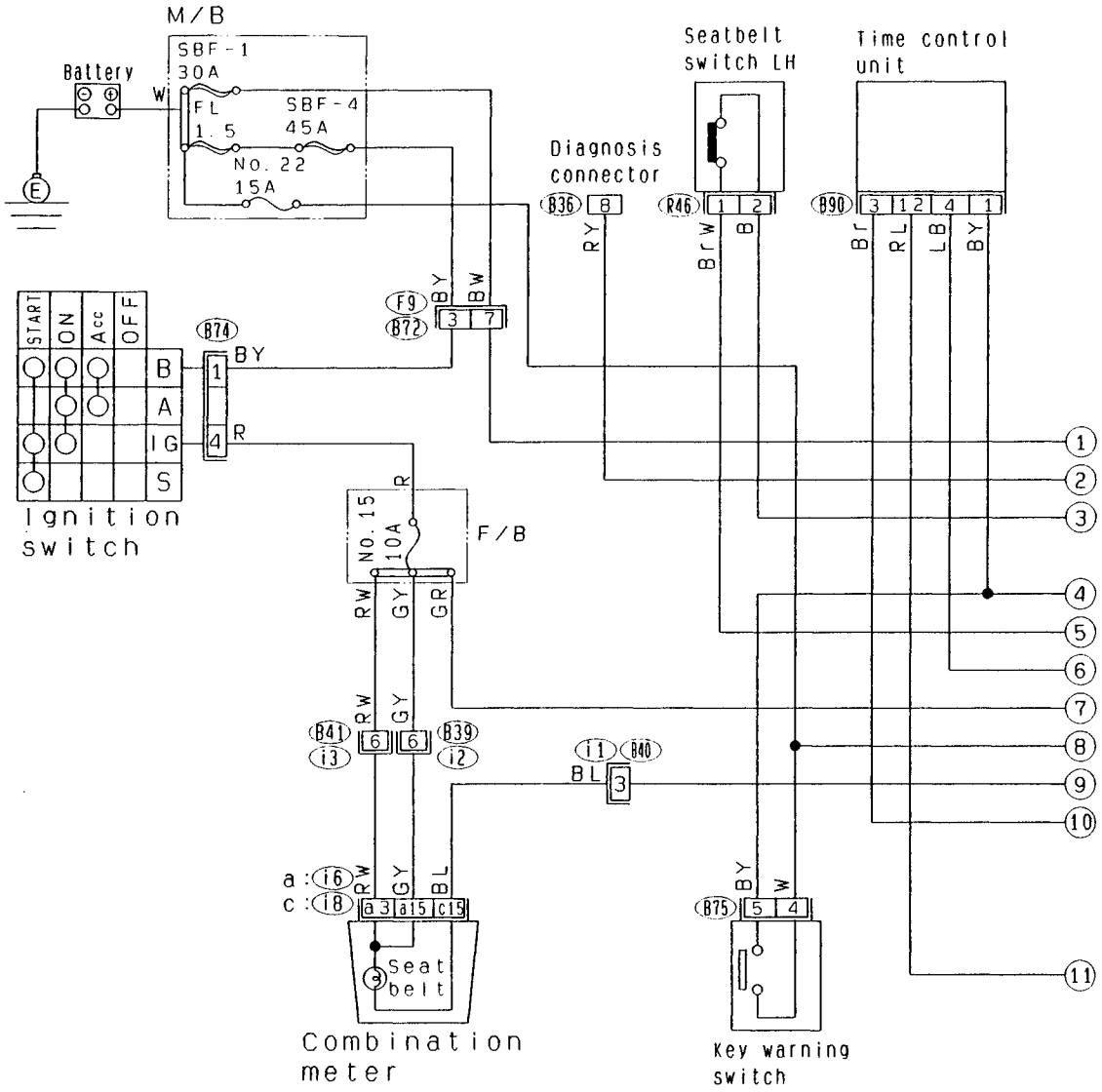

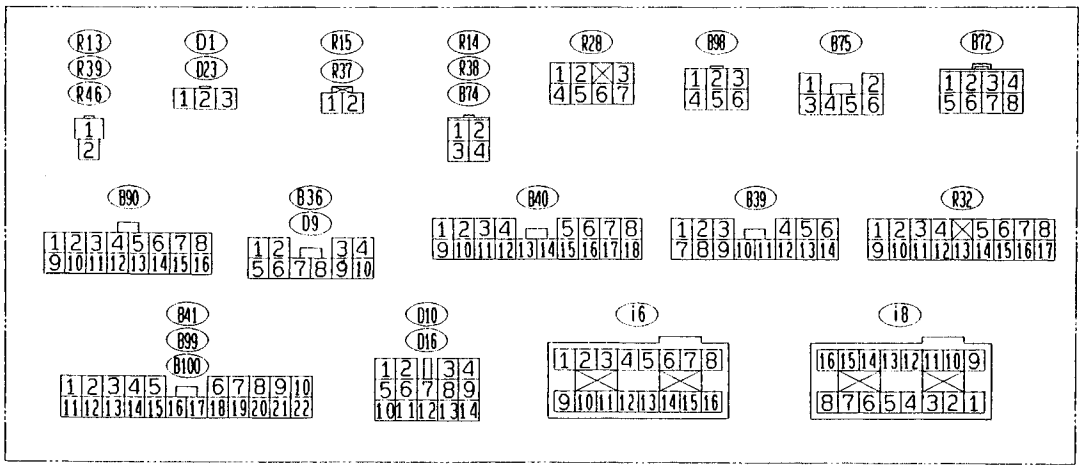

C5-558

Fig. 90

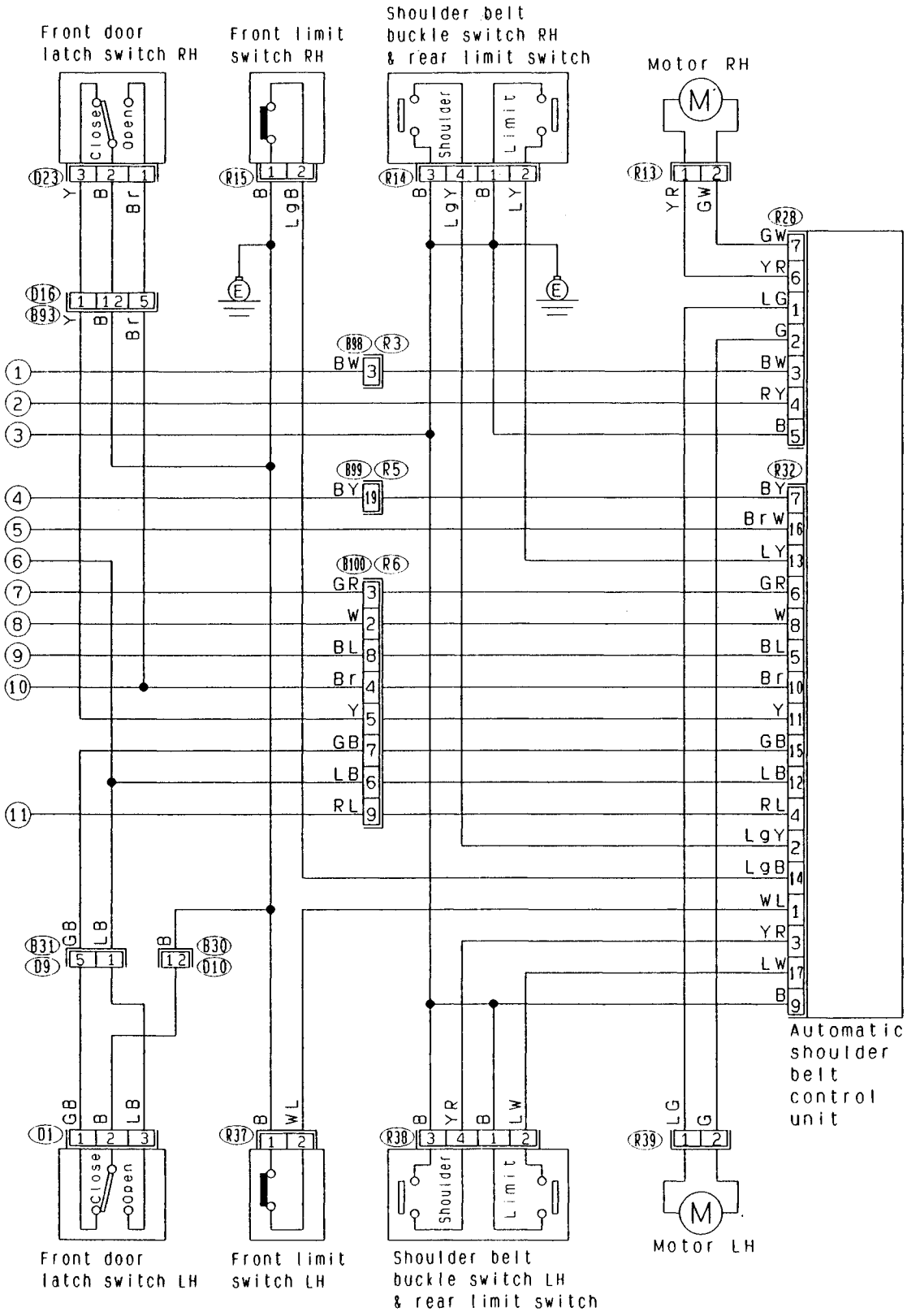
Front door latch switch RH
Front limit switch RH
Shoulder belt buckle switch RH & rear limit switch
Motor RH
Close
Open
Shoulder
Limit
D23
R15
R14
R13
R28
D16
B93
B88
R3
B99
R5
B100
R6
R32
B31
D9
B30
D10
D1
R37
R38
R39
Automatic shoulder belt control unit
Front door latch switch LH
Front limit switch LH
Shoulder belt buckle switch LH & rear limit switch
Motor LH
C5-559

Fig. 91

4. Troubleshooting Chart with Trouble Code

A: TROUBLE CODE 11 — DRIVER'S DOOR LATCH SWITCH REMAINS ON

CONTENTS OF DIAGNOSIS:
- Faulty door latch switch
- Shorted wire harness

TROUBLE SYMPTOM:
- Driver's shoulder anchor is inoperative.

1	Measure signal voltage at control unit.	OK	Repair control unit terminal poor contact. (Replace control unit.)
	▼ Not OK		
2	Check door latch switch.	Not OK	Replace door latch switch.
	▼ OK		
3	Check harness/ connector between control unit and door latch switch.	Not OK	Repair harness/ connector.
	▼ OK		
	Repair control unit terminal poor contact. (Replace control unit.)		

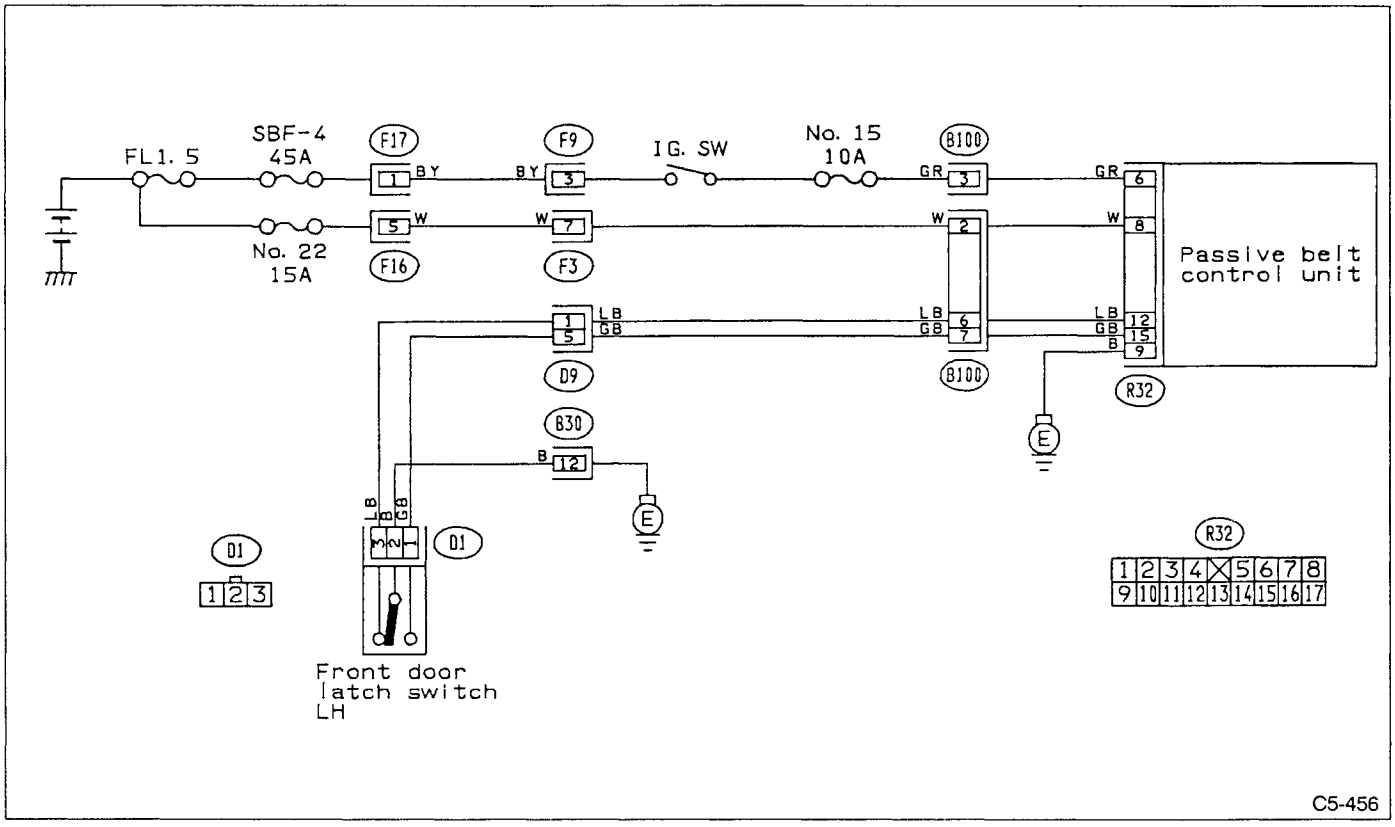

Fig. 92

1. MEASURE SIGNAL VOLTAGE AT CONTROL UNIT

1) Turn ignition switch ON (with engine OFF).
2) Measure signal voltage at control unit connector.

Connector & terminal/Specified voltage:
(R32) No.12 — Body/10 — 13 V (Door closed)
(R32) No.15 — Body/10 — 13 V (Door open)

2. CHECK DOOR LATCH SWITCH

1) Disconnect connector from door latch switch.
2) Measure resistance between terminals of connector receptacle (on switch side).

Connector & terminal/Specified resistance:
(D1) No. 2 — No. 1/1 MΩ min. (Door open)
(D1) No. 2 — No. 3/1 MΩ min. (Door closed)

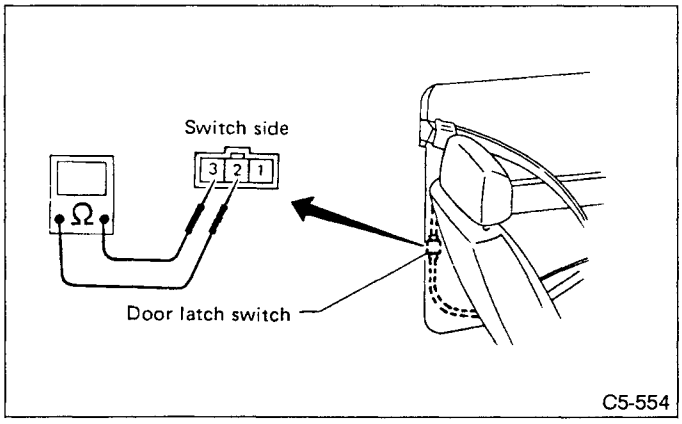

Fig. 93

3. CHECK HARNESS/CONNECTOR BETWEEN CONTROL UNIT AND DOOR LATCH SWITCH

1) Disconnect connector from door latch switch.
2) Disconnect connector from control unit.
3) Measure resistance between control unit connector and body.

Connector & terminal/Specified resistance:
(R32) No. 12 — Body/1 MΩ min.
(R32) No. 15 — Body/1 MΩ min.

B: TROUBLE CODE 12 — DRIVER'S DOOR LATCH SWITCH REMAINS OFF.

CONTENTS OF DIAGNOSIS:
- Faulty door latch switch
- Faulty harness/ connector

TROUBLE SYMPTOM:
- Driver's shoulder anchor is inoperative.
- Key warning chime operates with driver's door closed and with ignition switch OFF.

1 Measure signal voltage at control unit.
- OK → Repair control unit terminal poor contact. (Replace control unit.)
- Not OK ↓

2 Check door latch switch.
- Not OK → Replace door latch switch.
- OK ↓

3 Check harness/ connector between control unit and door latch switch.
- Not OK → Repair harness/ connector.
- OK ↓

Repair control unit terminal poor contact. (Replace control unit.)

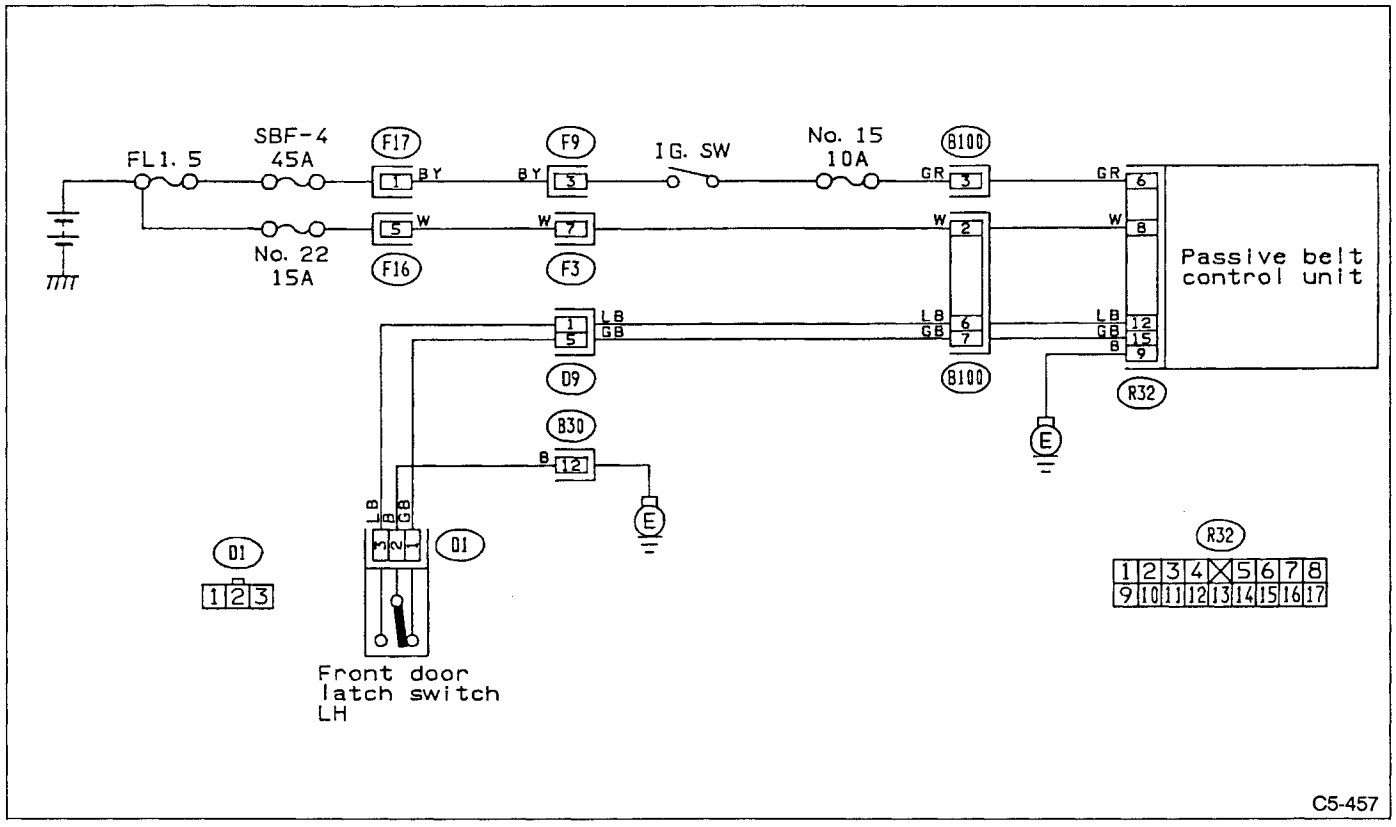

Fig. 94

1. MEASURE SIGNAL VOLTAGE AT CONTROL UNIT

1) Turn ignition switch ON (with engine OFF).
2) Measure signal voltage at control unit connector.

Connector & terminal/Specified voltage:
(R32) No. 12 — Body/0 V (Door open)
(R32) No. 15 — Body/0 V (Door closed)

2. CHECK DOOR LATCH SWITCH

1) Disconnect connector from door latch switch.
2) Measure resistance between terminals of connector receptacle (on switch side).

Connector & terminal/Specified resistance:
(D1) No. 2 — No. 1/1 Ω max. (Door closed)
(D1) No. 2 — No. 3/1 Ω max. (Door open)

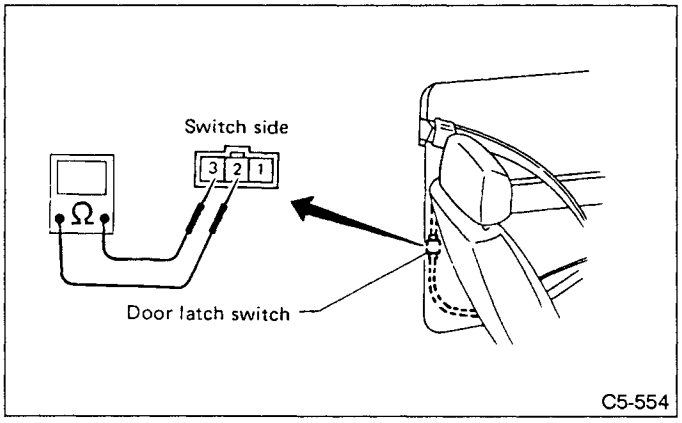

Fig. 95

3. CHECK HARNESS/CONNECTOR BETWEEN CONTROL UNIT AND DOOR LATCH SWITCH

1) Disconnect connector from door latch switch.
2) Disconnect connector from control unit.
3) Measure resistance between control unit connector and door latch switch connector.

Connector & terminal/Specified resistance:
(R32) No. 12 — (D1) No. 3/1 Ω max.
(R32) No. 15 — (D1) No. 1/1 Ω max.
(D1) No. 1 — Body/1 Ω max.

C: TROUBLE CODE 13 — FRONT LIMIT SWITCH (ON DRIVER'S SIDE) REMAINS ON.

CONTENTS OF DIAGNOSIS:
- Faulty front limit switch
- Faulty harness
- Inoperative motor

TROUBLE SYMPTOM:
- Timer activates when anchor reaches front end.
- Anchor stops midway on rail.

If anchor stops midway on rail, check rail for foreign particles. If no foreign particles are noted, proceed to "3. Motor Inspection."

1	Check front limit switch.	Not OK	Replace front limit switch.
	OK ↓		
2	Check front limit switch wire harness.	Not OK	Repair wire harness.
	OK ↓		
3	Check motor.	Not OK	Replace motor.
	OK ↓		
4	Check motor harness.	Not OK	Repair motor harness.
	OK ↓		
	Repair control unit terminal poor contact. (Replace control unit.)		

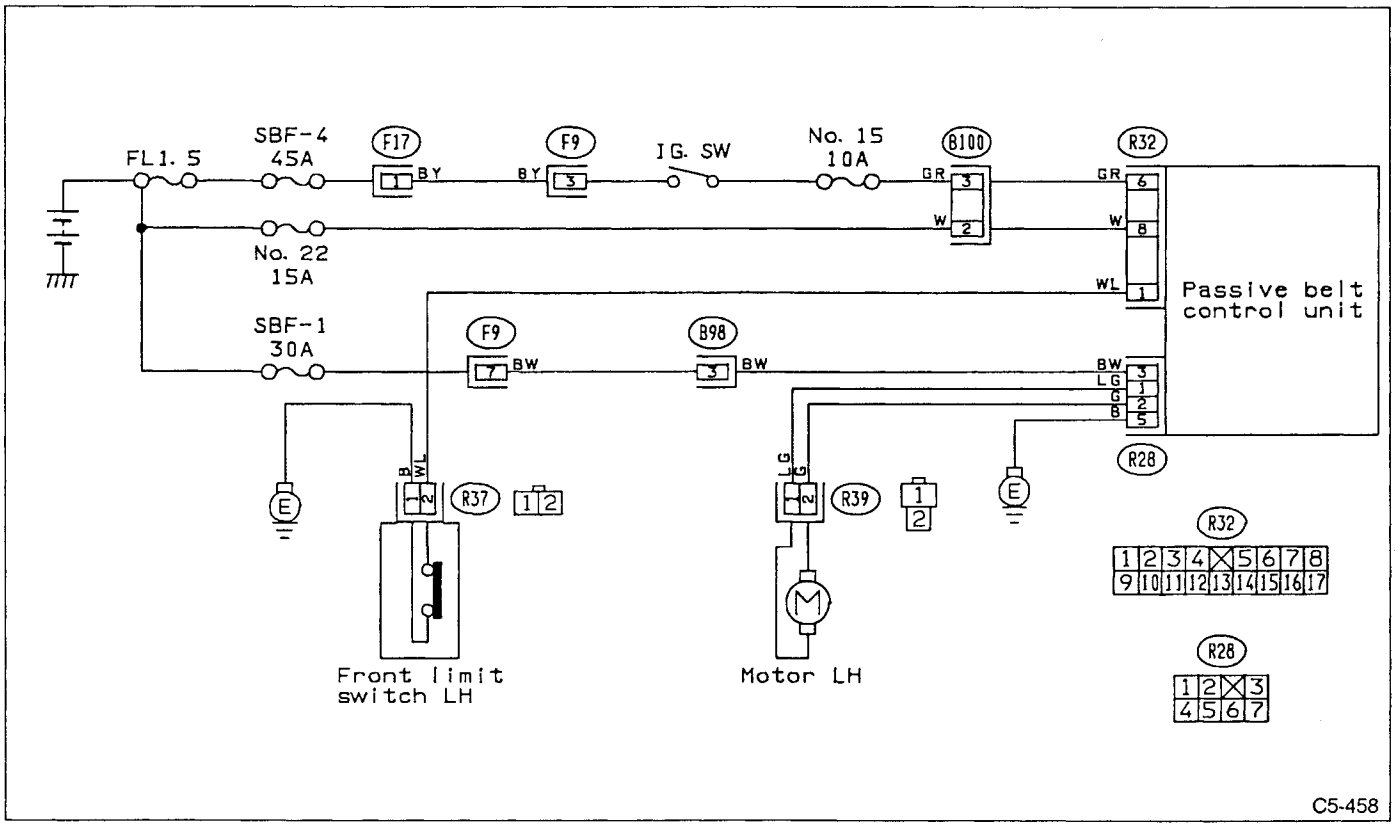

Fig. 96

1. CHECK FRONT LIMIT SWITCH

1) Move shoulder anchor to front end.
2) Disconnect front limit switch connector.
3) Measure resistance between front limit switch's terminals.

Specified resistance:
(R37)1 MΩ min.

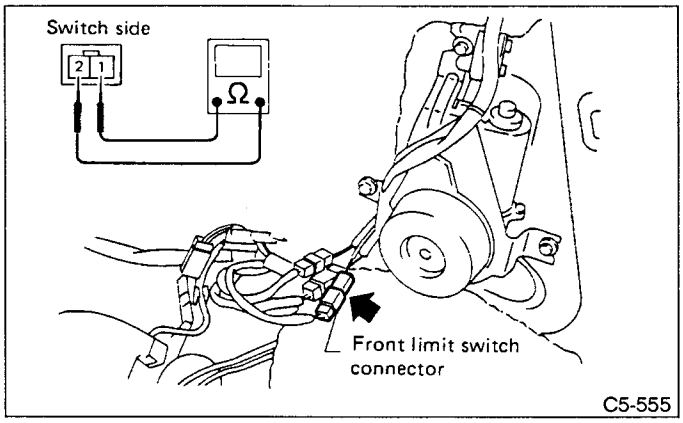

Fig. 97

2. CHECK FRONT LIMIT SWITCH WIRE HARNESS

1) Disconnect two connectors from control unit.
2) Disconnect connector from front limit switch.
3) Measure resistance between front limit switch connector and body.

Connector & terminal/Specified resistance:
(R37) No. 2 — Body/1 MΩ min.

3. CHECK MOTOR

1) Disconnect motor connector and apply 12 volts (DC) to motor terminals.

Terminal & polarity/diagnosis
(R39) No. 1 → +, No. 2 → −/Shoulder anchor moves to rear end.
(R39) No. 1 → −, No. 2 → +/Shoulder anchor moves to front end.

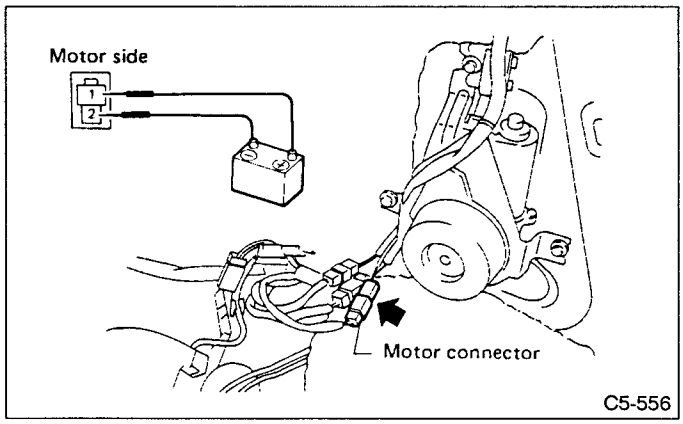

Fig. 98

4. CHECK MOTOR HARNESS

1) Disconnect two connectors from control unit.
2) Disconnect connector from motor.
3) Measure resistance between control unit connector and motor connector, and between control unit connector and body.

Connector & terminal/Specified resistance:
(R28) No. 1 — (R39) No. 1/1 Ω max.— Body/1 MΩ min.
(R28) No. 2 — (R39) No. 2/1 Ω max.— Body/1 MΩ min.
(R28) No. 3 — Body/1 MΩ min.
(R28) No. 5 — Body/1 Ω max.

4) Measure voltage between control unit connector and body.

Connector & terminal/Specified voltage:
(R28) No. 5 — Body/10 — 13 V

D: TROUBLE CODE 14 — REAR LIMIT SWITCH (ON DRIVER'S SIDE) REMAINS ON.

CONTENTS OF DIAGNOSIS:
- Faulty rear limit switch
- Faulty harness
- Inoperative motor

TROUBLE SYMPTOMS:
- Timer activates when anchor reaches rear end.
- Anchor stops midway on rail.

When anchor stops midway on rail, check rail for foreign particles. If no foreign particles are noted, proceed to "3. Motor Inspection."

1 Check rear limit switch.
- Not OK → Replace rear limit switch.
- OK ↓

2 Check rear limit switch wire harness.
- Not OK → Repair wire harness.
- OK ↓

3 Check motor.
- Not OK → Replace motor.
- OK ↓

4 Check motor harness.
- Not OK → Repair motor harness.
- OK ↓

Repair control unit terminal poor contact. (Replace control unit.)

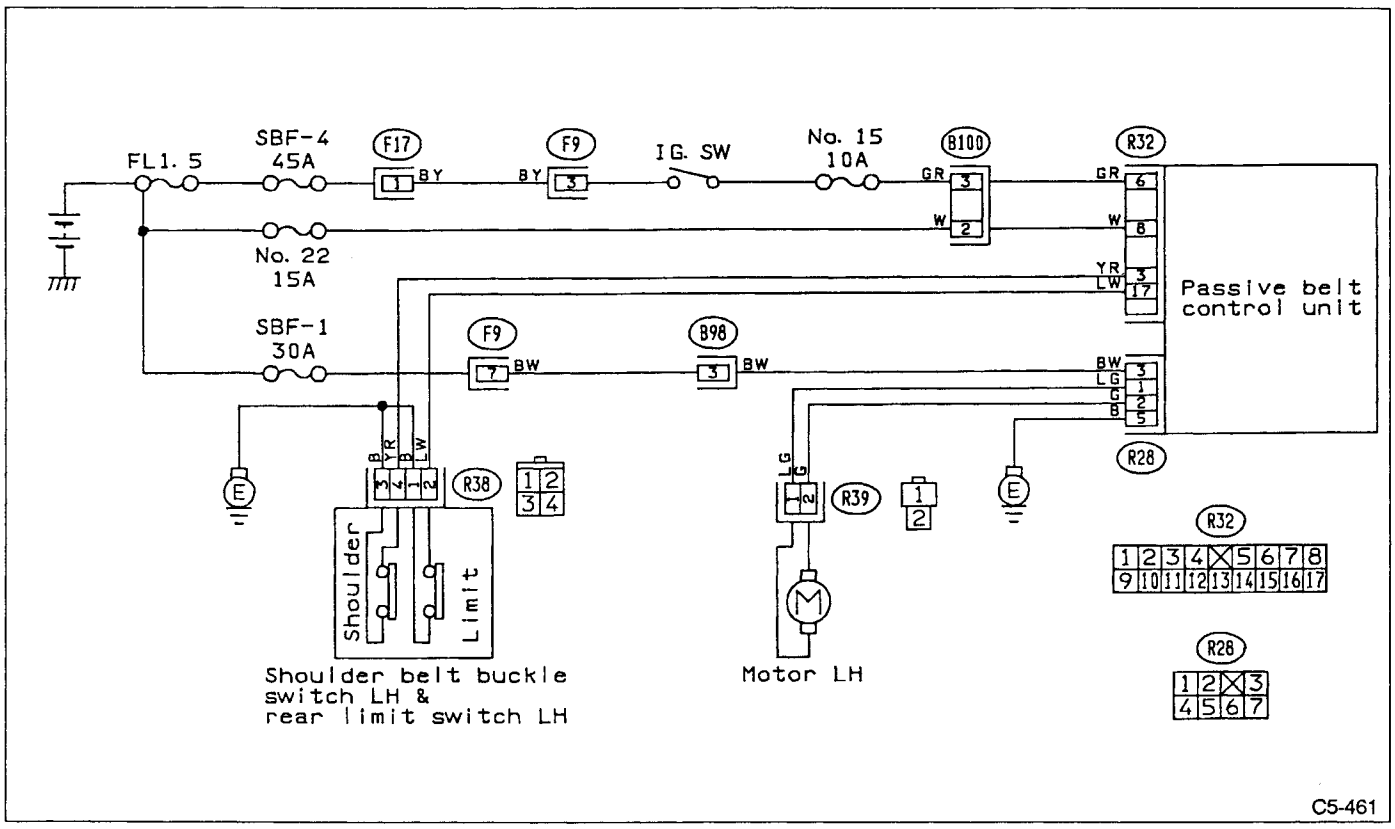

Fig. 99

1. CHECK REAR LIMIT SWITCH

1) Move shoulder anchor to rear end.
2) Disconnect rear limit switch connector.
3) Measure resistance between rear limit switch connector's terminals.

Connector & terminal/Specified resistance:
(R38) No. 1 — No. 2/1 MΩ min.

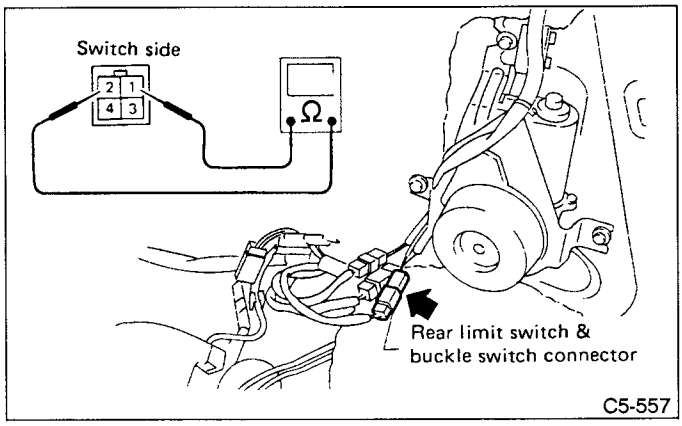

Fig. 100

2. CHECK REAR LIMIT SWITCH WIRE HARNESS

1) Disconnect two connectors from control unit.
2) Disconnect connector from rear limit switch.
3) Measure resistance between rear limit switch connector and body.

Connector & terminal/Specified resistance:
(R38) No. 2 — Body/1 MΩ min.

3. CHECK MOTOR

1) Disconnect motor connector, and apply 12 volts (DC) to motor terminals.

Terminal & polarity/diagnosis
(R39) No. 1 → +, No. 2 → −/Shoulder anchor moves to rear end.
(R39) No. 1 → −, No. 2 → +/Shoulder anchor moves to front end.

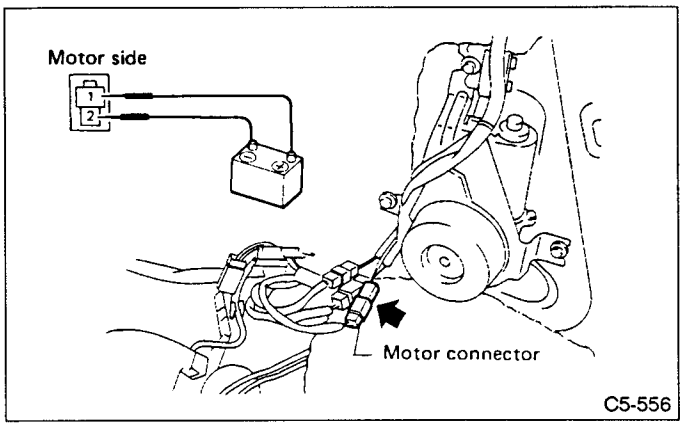

Fig. 101

4. CHECK MOTOR HARNESS

1) Disconnect two connectors from control unit.
2) Disconnect connector from motor.
3) Measure resistance between control unit and motor connector, and between control unit connector and body.

Connector & terminal/Specified resistance:
(R28) No. 1 — (R39) No. 1/1 Ω max.
(R28) No. 1 — Body/1 MΩ min.
(R28) No. 2 — (R39) No. 2/1 Ω max.
(R28) No. 2 — Body/1 MΩ min.
(R28) No. 3 — Body/1 MΩ min.
(R28) No. 5 — Body/1 Ω max.

4) Measure voltage between control unit connector and body.

Connector & terminal/Specified voltage:
(R28) No. 5 — Body/10 — 13 V

E: TROUBLE CODE 15 — FRONT AND REAR LIMIT SWITCHES (ON DRIVER'S SIDE) OFF.

CONTENTS OF DIAGNOSIS:
- Open front and rear switch signal circuits.

TROUBLE SYMPTOM:
- Shoulder anchor does not move in direction of faulty limit switch.

1	Check front and rear limit connectors for proper contact.	Not OK	Connect connectors firmly and recheck.
	OK ▼		
2	Check front and rear limit switches.	Not OK	Replace faulty limit switches.
	OK ▼		
3	Check front and rear limit switch wire harnesses.	Not OK	Repair wire harness.
	OK ▼		
	Repair control unit terminal poor contact. (Replace control unit.)		

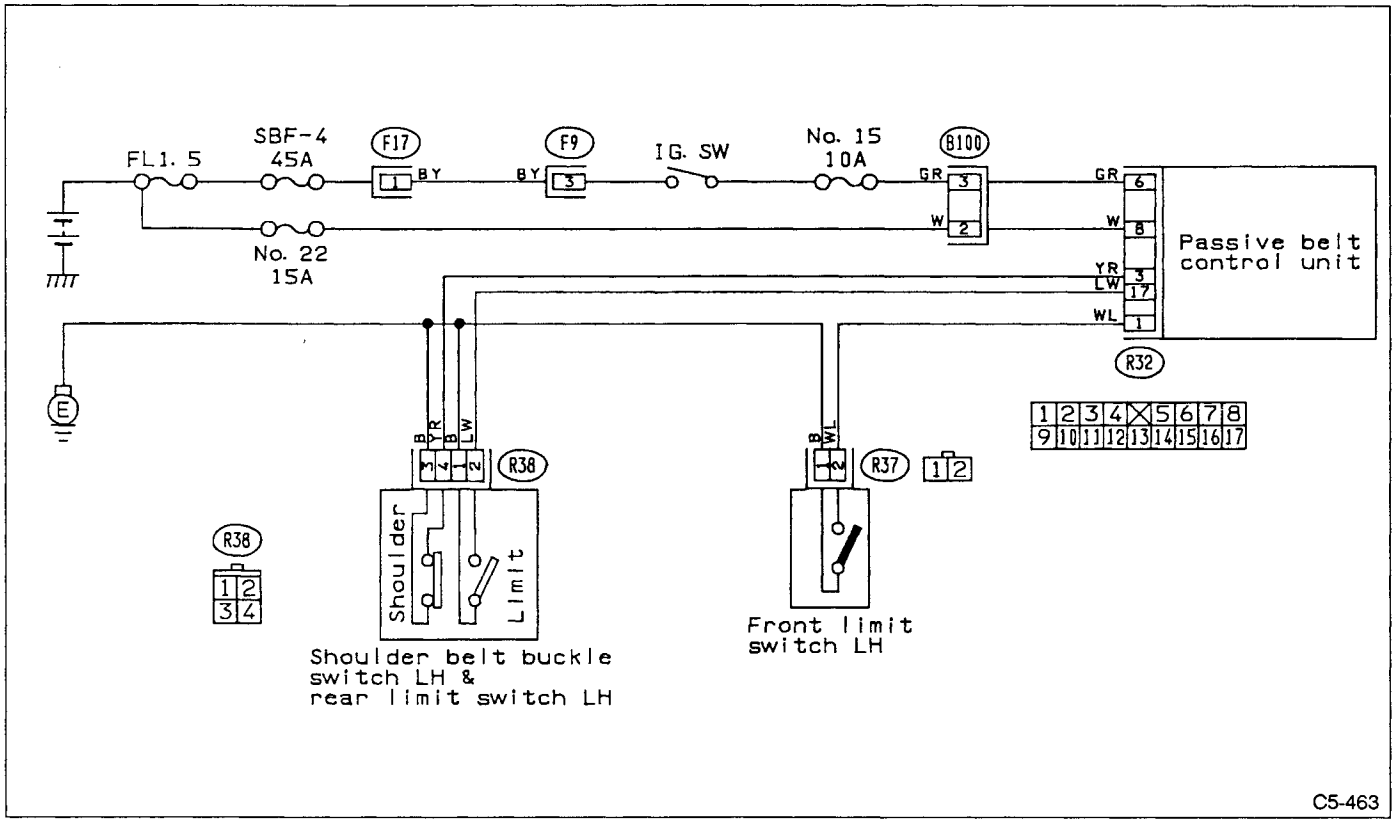

Fig. 102

1. CHECK FRONT AND REAR LIMIT SWITCH CONNECTORS FOR PROPER CONTACT

Visually check connectors or disconnect and reconnect until a click is heard.

2. CHECK FRONT AND REAR LIMIT SWITCHES

1) Front limit switch
   (1) Move shoulder anchor to front end.
   (2) Disconnect front limit switch connector.
   (3) Measure resistance between front limit switch's connector terminals.

Specified resistance:
(R37) 1 MΩ min

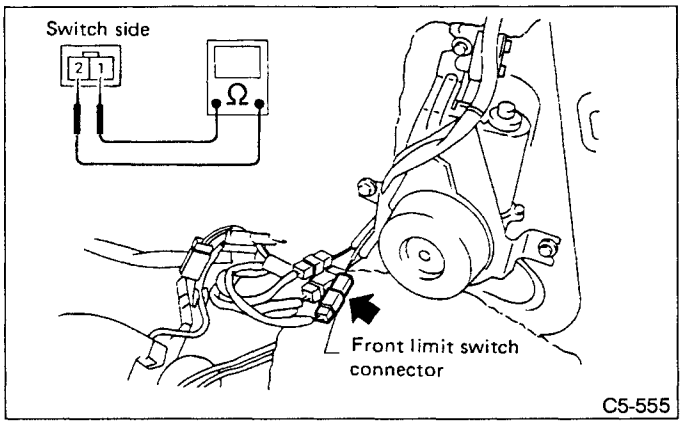

Fig. 103

2) Rear limit switch
   (1) Move shoulder anchor to rear end.
   (2) Disconnect rear limit switch connector.
   (3) Measure resistance between rear limit switch connector's terminals.

Connector & terminal/Specified resistance:
(R38) No. 1 — No. 2/1 MΩ min

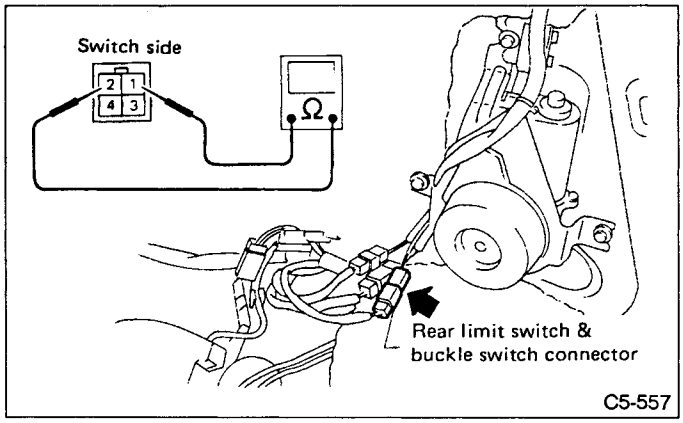

Fig. 104

3. CHECK FRONT AND REAR LIMIT SWITCH WIRE HARNESS

1) Disconnect two connectors from control unit.
2) Disconnect front limit switch connector.
3) Measure resistance between front limit switch connector and control unit connector, and between front limit switch connector and body.

Connector & terminal/Specified resistance:
(R37) No. 2 — (R32) No. 1/1 Ω max.
(R37) No. 1 — Body/1 Ω max.

4) Disconnect rear limit switch connector.
5) Measure resistance between rear limit switch connector and control unit connector, and between rear limit switch connector and body.

Connector & terminal/Specified resistance:
(R38) No. 2 — (R32) No. 17/1 Ω max.
(R38) No. 1 — Body/1 Ω max.

F: TROUBLE CODE 16 — BOTH SHOULDER BELT BUCKLE SWITCH AND FRONT LIMIT SWITCH (ON DRIVER'S SIDE) ARE OFF.

CONTENTS OF DIAGNOSIS:
- Loose or disconnected connector
- Faulty shoulder belt buckle switch
- Faulty wire harness

TROUBLE SYMPTOM:
- Warning light remains off when shoulder belt is fastened. (Shoulder anchor operates properly.)

1	Check shoulder belt buckle switch connection.	Not OK	Connect firmly and recheck.
	▼ OK		
2	Check buckle switch.	Not OK	Replace buckle switch (complete with rear limit switch).
	▼ OK		
3	Check buckle switch wire harness.	Not OK	Repair wire harness.
	▼ OK		
	Repair control unit terminal poor contact. (Replace control unit.)		

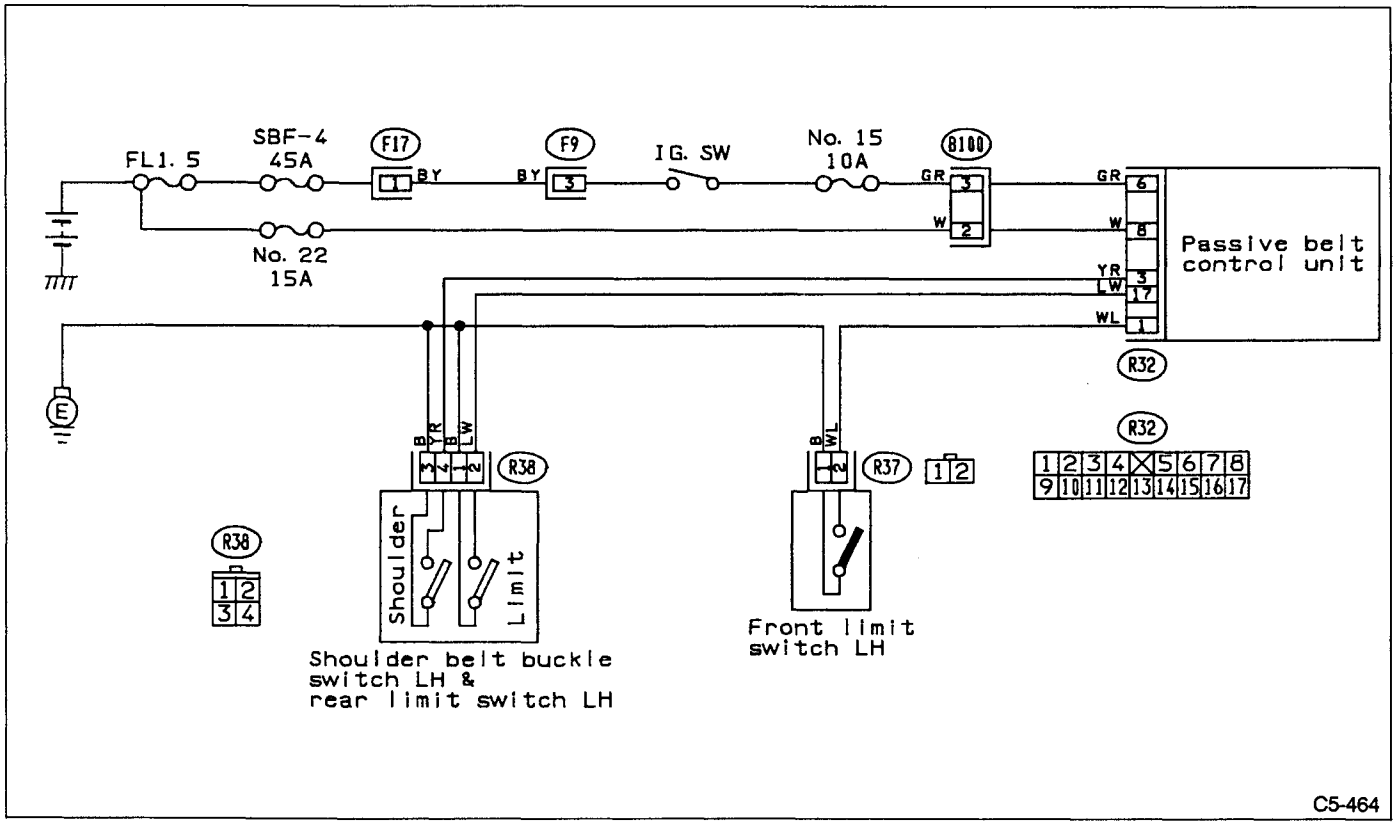

Fig. 105

1. CHECK SHOULDER BELT BUCKLE SWITCH CONNETION

Visually check connectors or disconnect and reconnect until a click is heard.

2. CHECK BUCKLE SWITCH

1) Move shoulder anchor from rear end to midway along rail.
2) Disconnect buckle switch connector.
3) Measure resistance between buckle switch connector's terminals.

Connector & terminal/Specified resistance:
(R38) No. 3 — No. 4/1 Ω max.

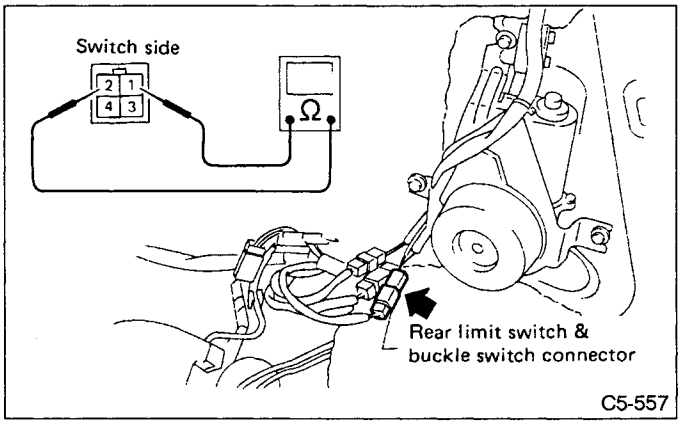

Fig. 106

3. CHECK BUCKLE SWITCH WIRE HARNESS

1) Disconnect two connectors from control unit.
2) Disconnect buckle switch connector.
3) Measure resistance between buckle switch connector and control unit connector, and between buckle switch connector and body.

Connector & terminal/Specified resistance:
(R38) No. 4 — (R32) No. 3/1 Ω max.
(R38) No. 3 — Body/1 Ω max.

G: TROUBLE CODE 21 — DOOR LATCH SWITCH (ON PASSENGER'S SIDE) REMAINS ON.

CONTENTS OF DIAGNOSIS:
- Faulty door latch switch
- Shorted wire harness

TROUBLE SYMPTOM:
- Passenger's shoulder anchor does not operate.

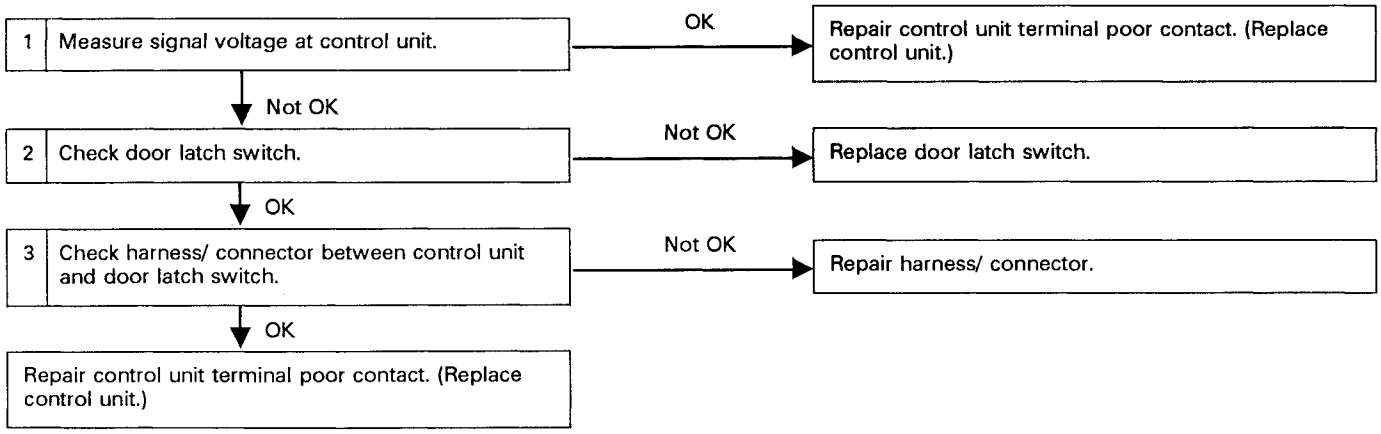

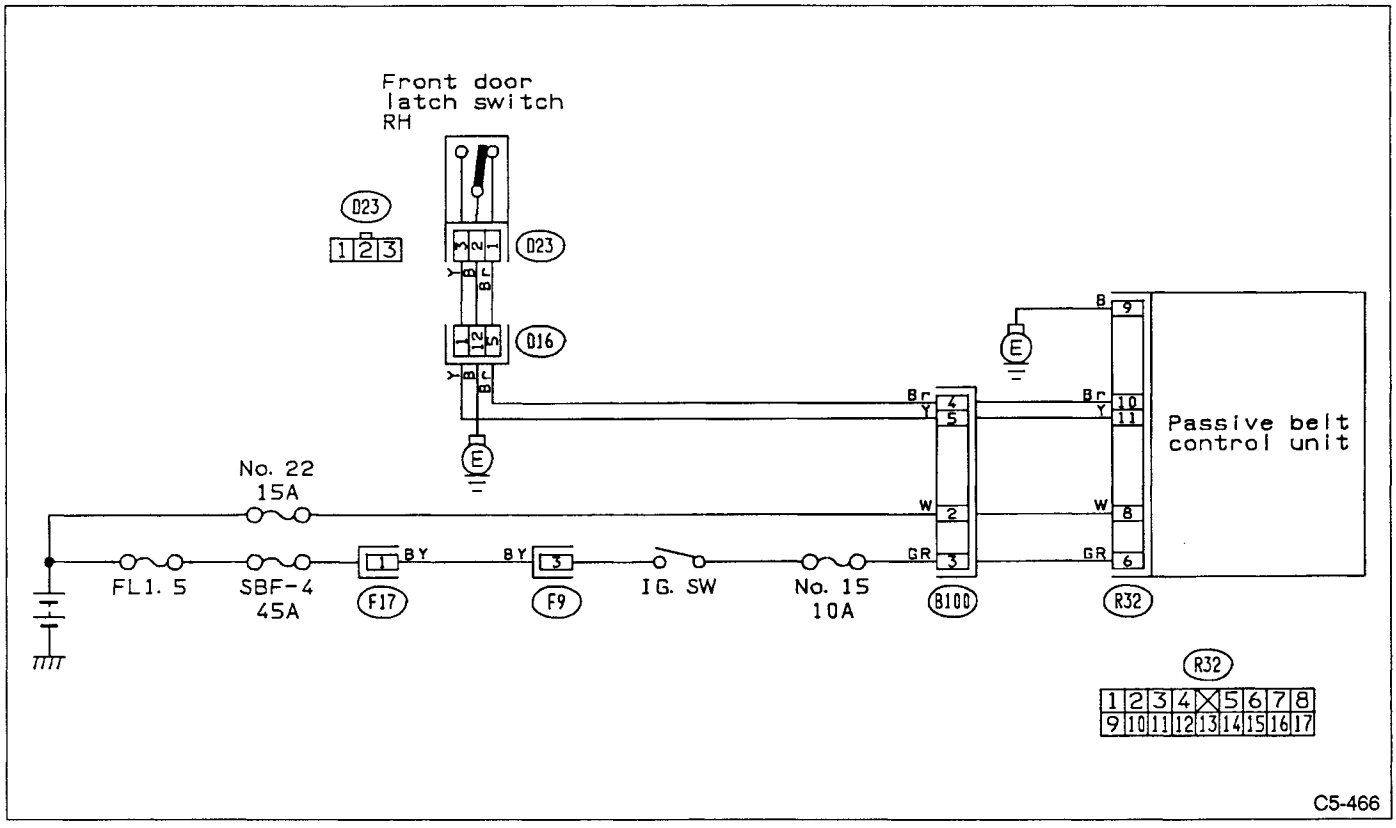

Fig. 107

1. MEASURE SIGNAL VOLTAGE AT CONTROL UNIT

1) Turn ignition switch ON (with engine OFF).
2) Measure signal voltage at control unit connector.

Connector & terminal/Specified voltage:
(R32) No. 10 — Body/10 — 13 V (Door closed)
(R32) No. 11 — Body/10 — 13 V (Door open)

2. CHECK DOOR LATCH SWITCH

1) Disconnect connector from door latch switch.
2) Measure resistance between door latch switch terminals.

Connector & terminal/Specified resistance:
(D23) No. 2 — No. 3/1 MΩ min. (Door open)
(D23) No. 2 — No. 1/1 MΩ min. (Door closed)

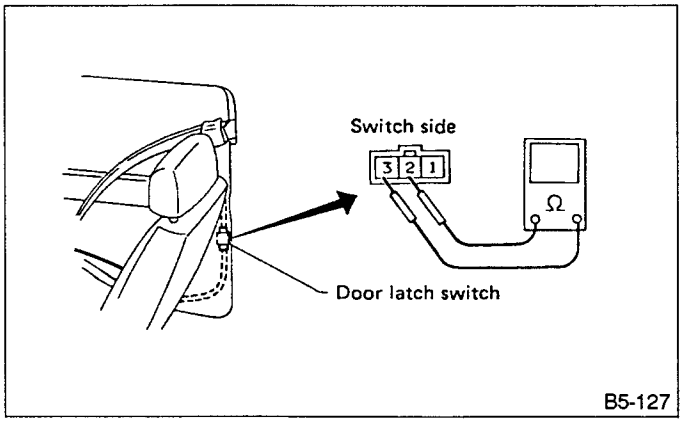

Fig. 108

3. CHECK HARNESS/CONNECTOR BETWEEN CONTROL UNIT AND DOOR LATCH SWITCH

1) Disconnect connector from door latch switch.
2) Disconnect connector from control unit.
3) Measure resistance between control unit connector and body.

Connector & terminal/Specified resistance:
(R32) No. 10 — Body/1 MΩ min.
(R32) No. 11 — Body/1 MΩ min.

H: TROUBLE CODE 22 — DOOR LATCH SWITCH (ON PASSENGER'S SIDE) REMAINS OFF.

CONTENTS OF DIAGNOSIS:
- Faulty door latch switch
- Faulty harness/ connector

TROUBLE SYMPTOM:
- Passenger's shoulder anchor does not operate.

1	Measure signal voltage at control unit.	OK	Repair control unit terminal poor contact. (Replace control unit.)
	▼ Not OK		
2	Check door latch switch.	Not OK	Replace door latch switch.
	▼ OK		
3	Check harness/ connector between control unit and door latch switch.	Not OK	Repair harness/ connector.
	▼ OK		
	Repair control unit terminal poor contact. (Replace control unit.)		

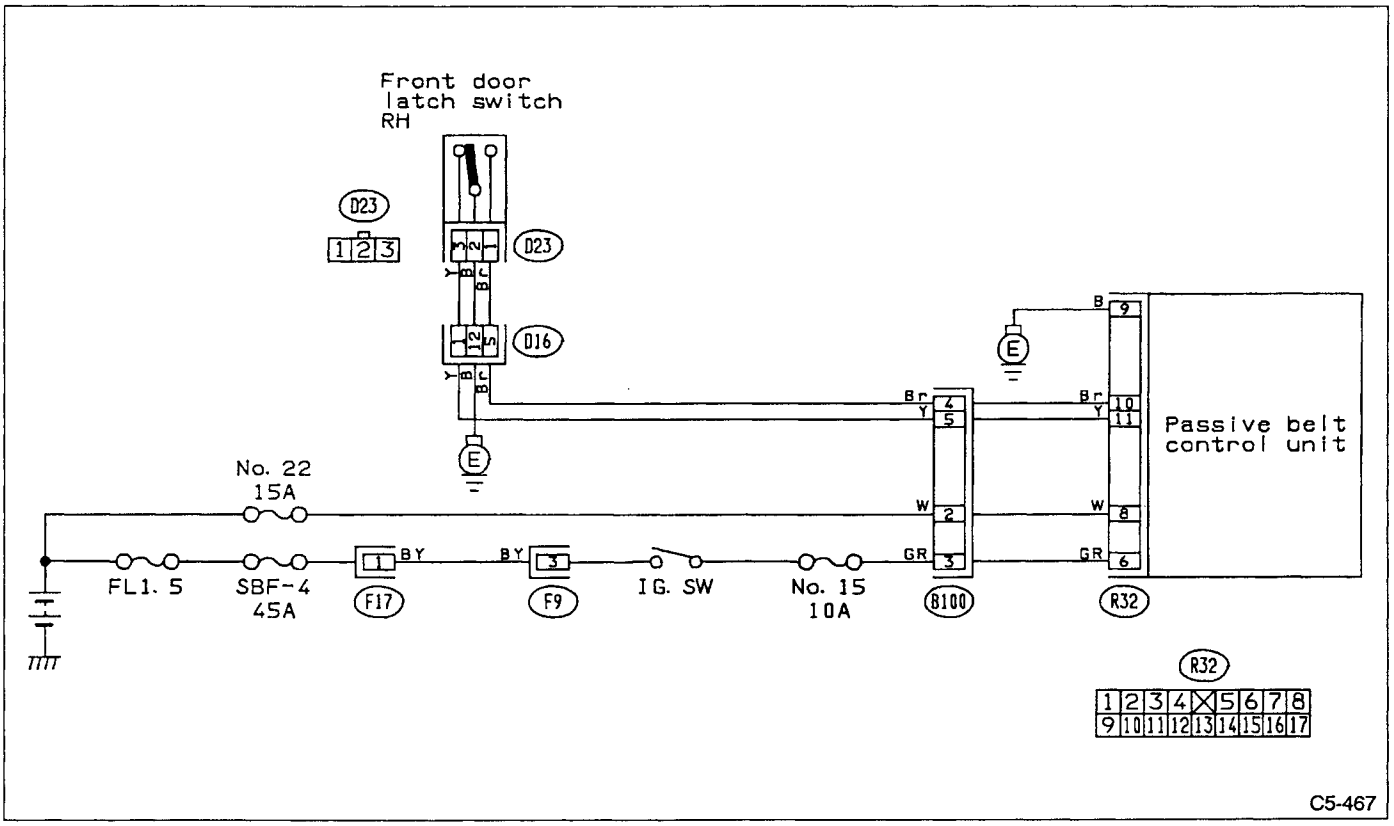

Fig. 109

1. MEASURE SIGNAL VOLTAGE AT CONTROL UNIT

1) Turn ignition switch ON (with engine OFF).
2) Measure signal voltage at control unit connector.

Connector & terminal/Specified voltage:
(R32) No. 10 — Body/0 V (Door open)
(R32) No. 11 — Body/0 V (Door closed)

2. CHECK DOOR LATCH SWITCH

1) Disconnect connector from door latch switch.
2) Measure resistance between door latch switch terminals.

Connector & terminal/Specified resistance:
(D23) No. 2 — No. 3/1 Ω max. (Door closed)
(D23) No. 2 — No. 1/1 Ω max. (Door open)

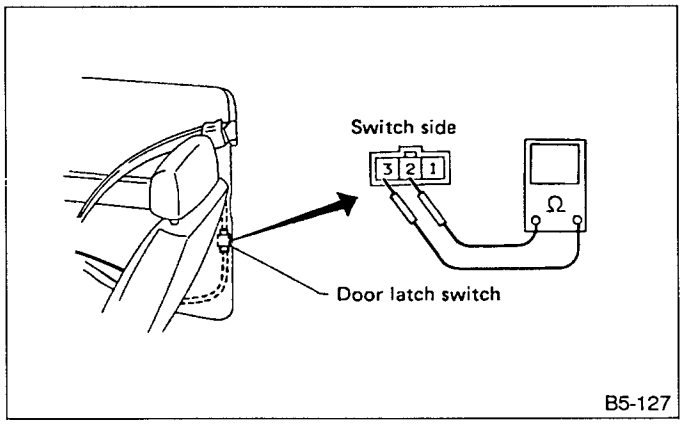

Fig. 110

3. CHECK HARNESS/CONNECTOR BETWEEN CONTROL UNIT AND DOOR LATCH SWITCH

1) Disconnect connector from door latch switch.
2) Disconnect connector from control unit.
3) Measure resistance between control unit connector and door latch switch connector, and between door latch switch connector and body.

Connector & terminal/Specified resistance:
(R32) No. 10 — (D23) No. 1/1 Ω max.
(R32) No. 11 — (D23) No. 3/1 Ω max.
(D23) No. 1 — Body/1 Ω max.

I: TROUBLE CODE 23 — FRONT LIMIT SWITCH (ON PASSENGER'S SIDE) REMAINS ON.

CONTENTS OF DIAGNOSIS:
- Faulty front limit switch
- Faulty harness
- Inoperative motor

TROUBLE SYMPTOMS:
- Timer activates when shoulder anchor reaches front end.
- Shoulder anchor stops midway on rail.

When shoulder anchor stops midway on rail, check rail for foreign particles. If no foreign particles are noted, proceed to "3. Motor Inspection."

1	Check front limit switch.	Not OK →	Replace front limit switch.
↓ OK			
2	Check front limit switch wire harness.	Not OK →	Replace wire harness.
↓ OK			
3	Check motor.	Not OK →	Replace motor.
↓ OK			
4	Check motor harness.	Not OK →	Repair motor harness.
↓ OK			
Repair control unit terminal poor contact. (Replace control unit.)			

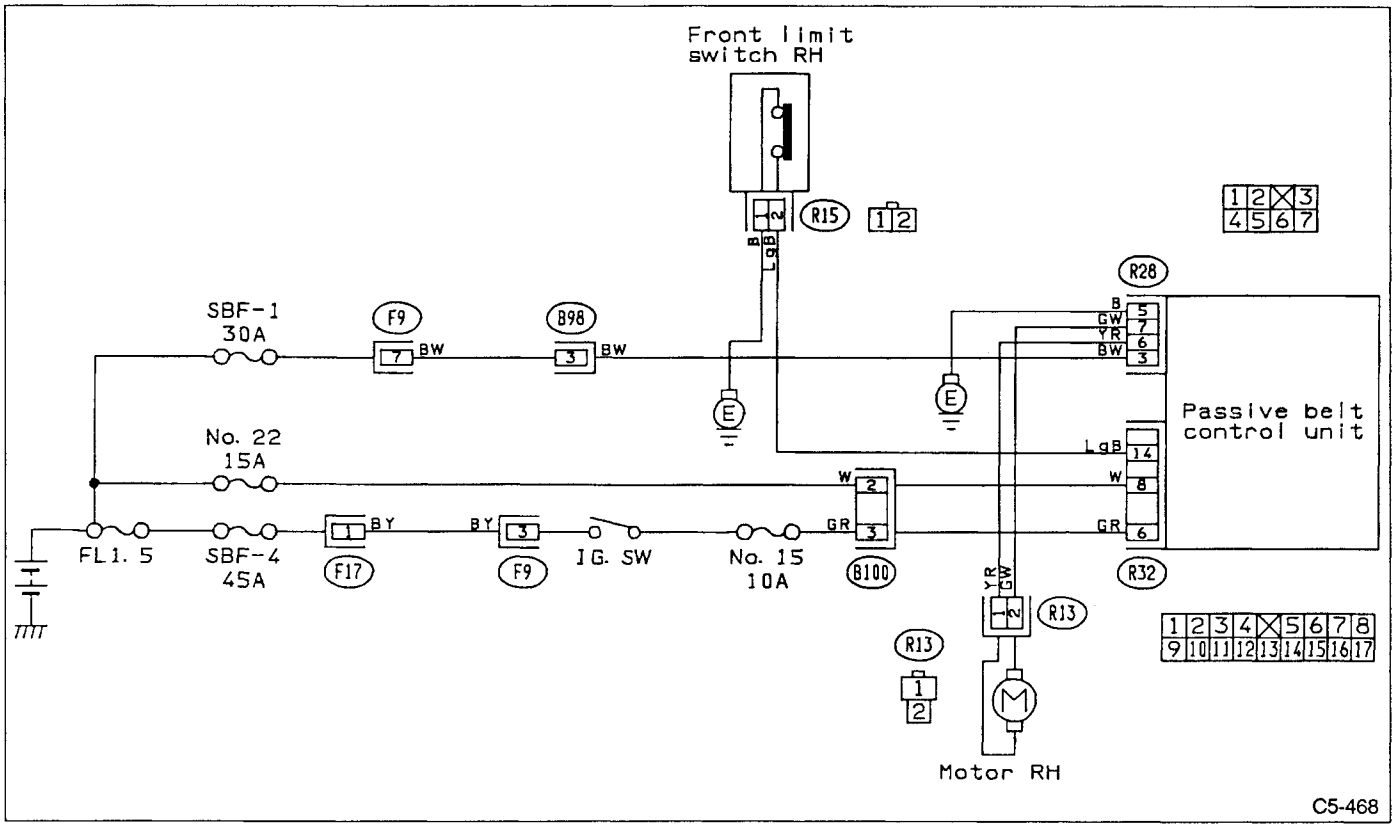

Fig. 111

1. CHECK FRONT LIMIT SWITCH

1) Move shoulder anchor to front end.
2) Disconnect connector from front limit switch.
3) Measure resistance between front limit switch terminals.

Specified resistance:
(R15) 1 MΩ min.

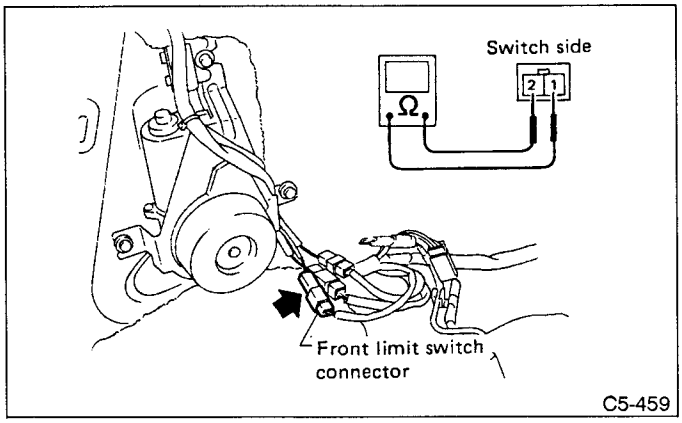

Fig. 112

2. CHECK FRONT LIMIT SWITCH WIRE HARNESS

1) Disconnect two connectors from control unit.
2) Disconnect connector from front limit switch.
3) Measure resistance between front limit switch connector and body.

Connector & terminal/Specified resistance:
(R15) No. 2 — Body/1 MΩ min.

3. CHECK MOTOR

1) Disconnect motor connector and apply 12 volts (DC) to motor terminals.

Terminal & polarity/diagnosis
(R13) No. 1 → +, No. 2 → −/Shoulder anchor moves to rear end.
(R13) No. 1 → −, No. 2 → +/Shoulder anchor moves to front end.

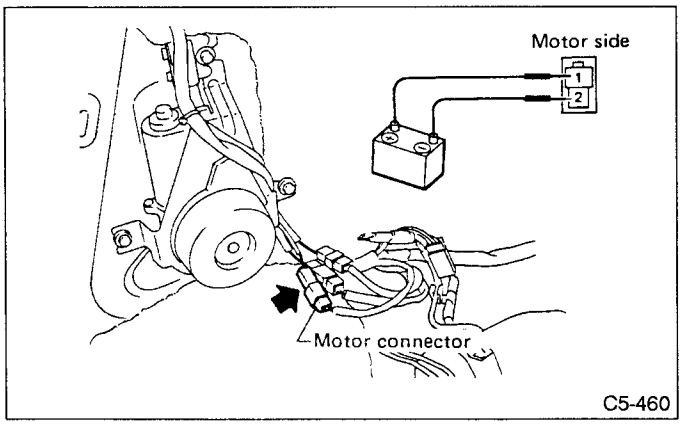

Fig. 113

4. CHECK MOTOR HARNESS

1) Disconnect two connectors from control unit.
2) Disconnect connector from motor.
3) Measure resistance between control unit connector and motor connector, and between control unit connector and body.

Connector & terminal/Specified resistance:
(R28) No. 6 — (R13) No. 1/1 Ω max.
— Body/1 MΩ min.
(R28) No. 7 — (R13) No. 2/1 Ω max.
— Body/1 MΩ min.
(R28) No. 3 — Body/1 MΩ min.
(R28) No. 5 — Body/1 Ω max.

4) Measure voltage between control unit connector and body.

Connector & terminal/Specified voltage:
(R28) No. 5 — Body/10 — 13 V

J: TROUBLE CODE 24 — REAR LIMIT SWITCH (ON PASSENGER'S SIDE) REMAINS ON.

CONTENTS OF DIAGNOSIS:
- Faulty rear limit switch
- Faulty harness
- Inoperative motor

TROUBLE SYMPTOMS:
- Timer activates when shoulder anchor reaches rear end.
- Shoulder anchor stops midway on rail.

When shoulder anchor stops midway on rail, check rail for foreign particles. If no foreign particles are noted, proceed to "3. Motor Inspection."

1 Check rear limit switch. — Not OK → Replace rear limit switch.
↓ OK
2 Check rear limit switch wire harness. — Not OK → Repair wire harness.
↓ OK
3 Check motor. — Not OK → Replace motor.
↓ OK
4 Check motor harness. — Not OK → Repair motor harness.
↓ OK
Repair control unit terminal poor contact. (Replace control unit.)

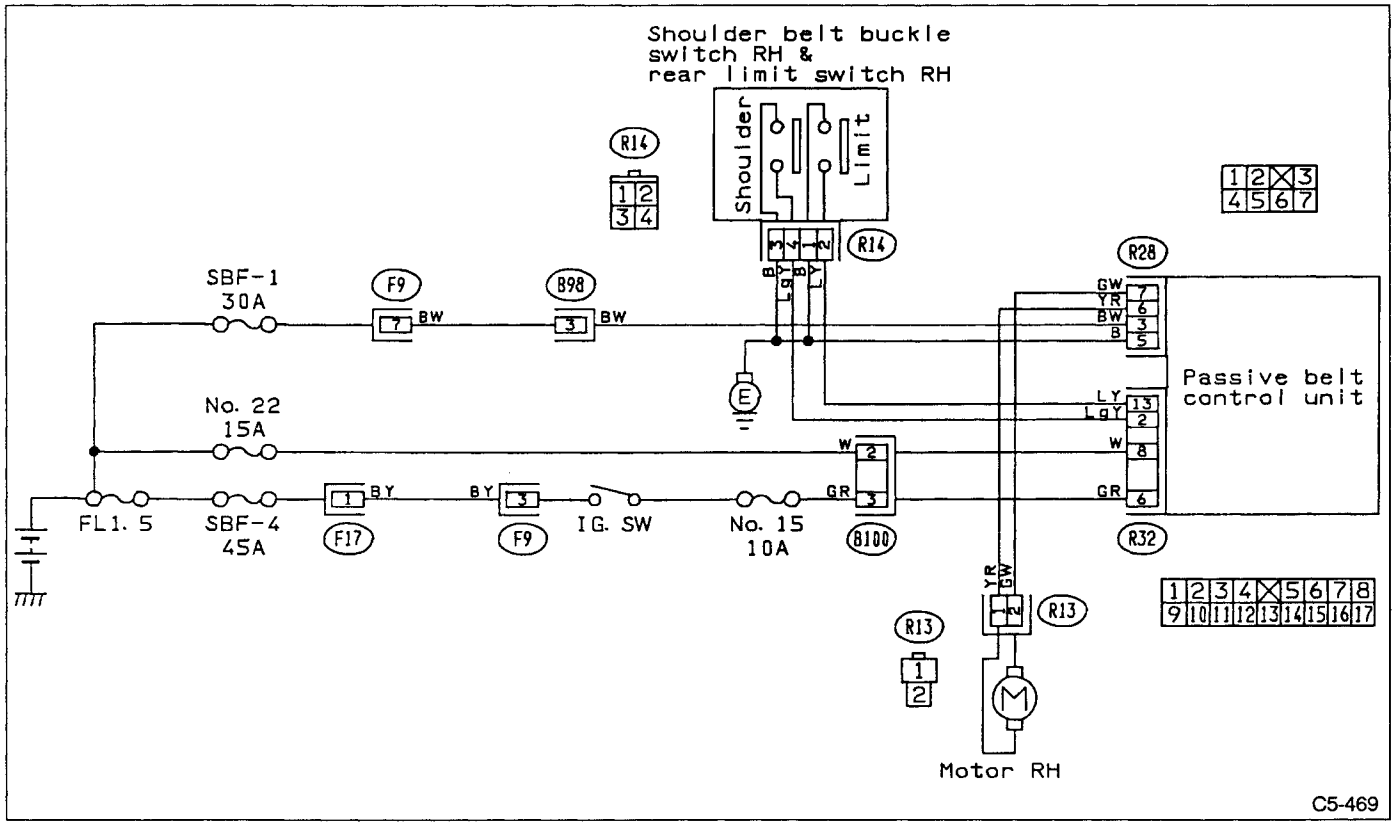

Fig. 114

1. CHECK REAR LIMIT SWITCH

1) Move shoulder anchor to rear end.
2) Disconnect connector from rear limit switch.
3) Measure resistance between rear limit switch connector terminals.

Connector & terminal/Specified resistance:
(R14) No. 1 — No. 2/1 MΩ min.

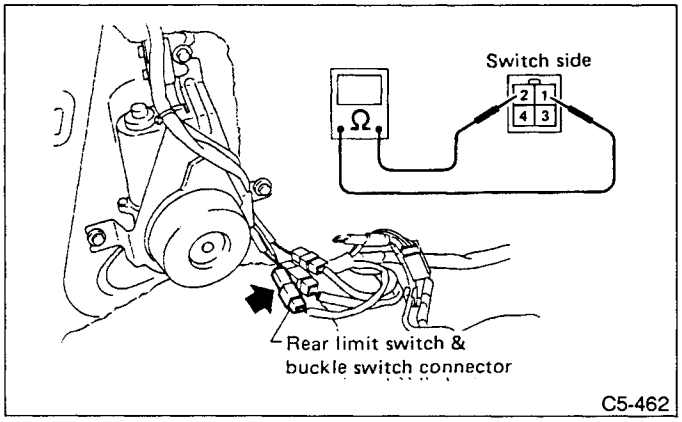

Fig. 115

2. CHECK REAR LIMIT SWITCH WIRE HARNESS

1) Disconnect two connectors from control unit.
2) Disconnect connector from rear limit switch.
3) Measure resistance between rear limit switch connector and body.

Connector & terminal/Specified resistance:
(R14) No. 2 — Body/1 MΩ min.

3. CHECK MOTOR

1) Disconnect motor connector, and apply 12 volts (DC) to motor terminals.

Terminal & polarity/diagnosis
(R13) No. 1 → +, No. 2 → −/Shoulder anchor moves to rear end.
(R13) No. 1 → −, No. 2 → +/Shoulder anchor moves to front end.

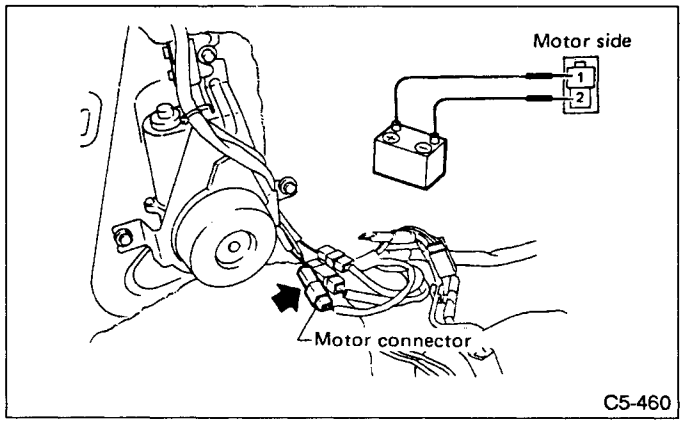

Fig. 116

4. CHECK MOTOR HARNESS

1) Disconnect two connectors from control unit.
2) Disconnect connector from motor.
3) Measure resistance between control unit connector and motor connector, and between control unit connector and body.

Connector & terminal/Specified resistance:
(R28) No. 6 — (R13) No. 1/1 Ω max.
(R28) No. 6 — Body/1 MΩ min.
(R28) No. 7 — (R13) No. 2/1 Ω max.
(R28) No. 7 — Body/1 MΩ min.
(R28) No. 3 — Body/1 MΩ min.
(R28) No. 5 — Body/1 Ω max.

4) Measure voltage between control unit connector and body.

Connector & terminal/Specified voltage:
(R28) No. 5 — Body/10 — 13V

K: TROUBLE CODE 25 — BOTH FRONT AND REAR LIMIT SWITCHES (ON PASSENGER'S SIDE) ARE OFF.

CONTENTS OF DIAGNOSIS:
- Open signal circuits of front and rear limit switches

TROUBLE SYMPTOM:
- Shoulder anchor does not move in direction of faulty limit switch.

1	Check front and rear limit switch connections.	Not OK	Reconnect firmly and recheck.
	OK ▼		
2	Check front and rear limit switches.	Not OK	Replace limit switches.
	OK ▼		
3	Check front and rear limit switch wire harnesses.	Not OK	Repair faulty parts.
	OK ▼		
	Repair control unit terminal poor contact. (Replace control unit.)		

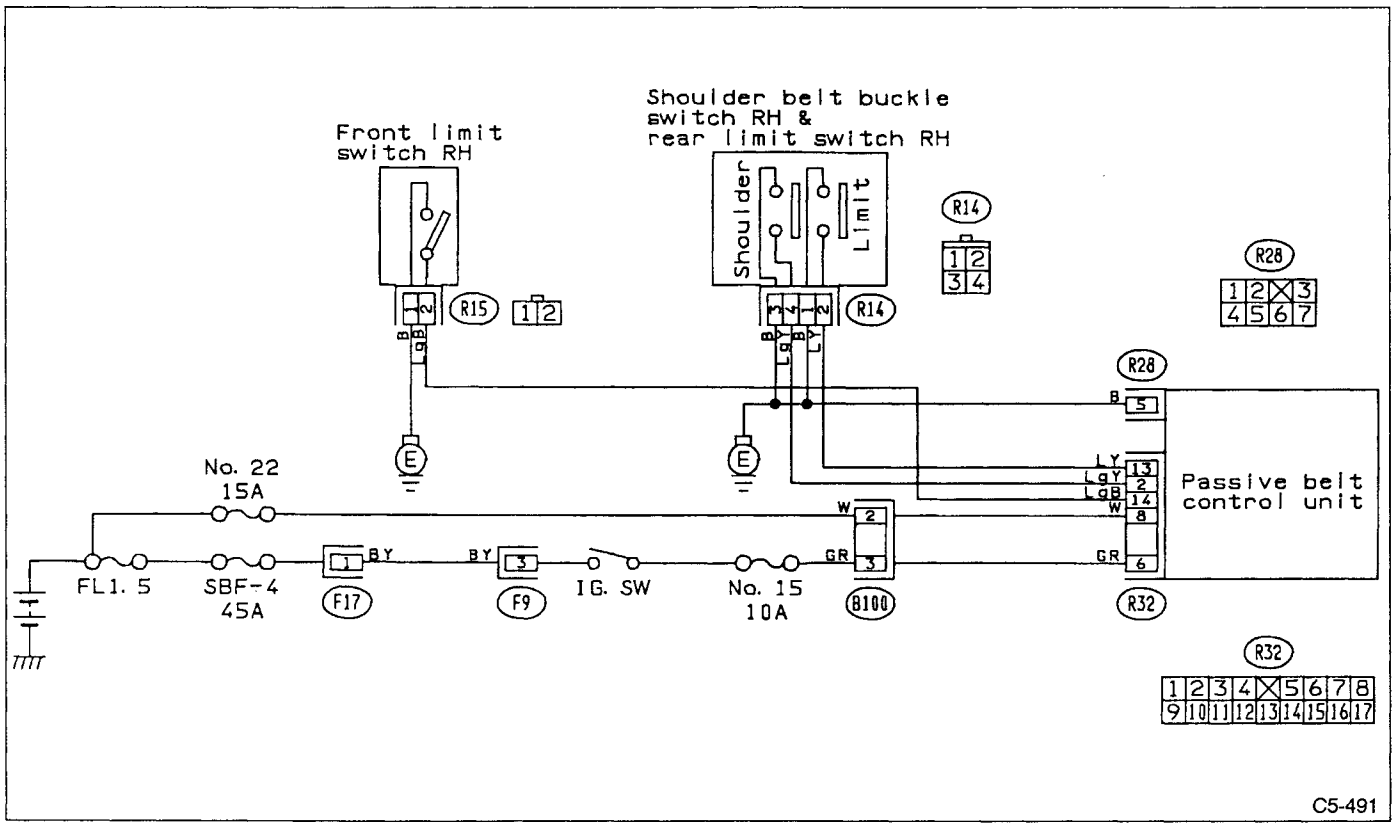

Fig. 117

1. CHECK FRONT AND REAR LIMIT SWITCH CONNECTIONS

Visually check connectors or disconnect and reconnect until a click is heard.

2. CHECK FRONT AND REAR LIMIT SWITCH CONNECTIONS

1) Front limit switch
   (1) Move shoulder anchor to front end.
   (2) Disconnect front limit switch connector.
   (3) Measure resistance between front limit switch connector terminals.

Specified resistance:
(R15) 1 MΩ min

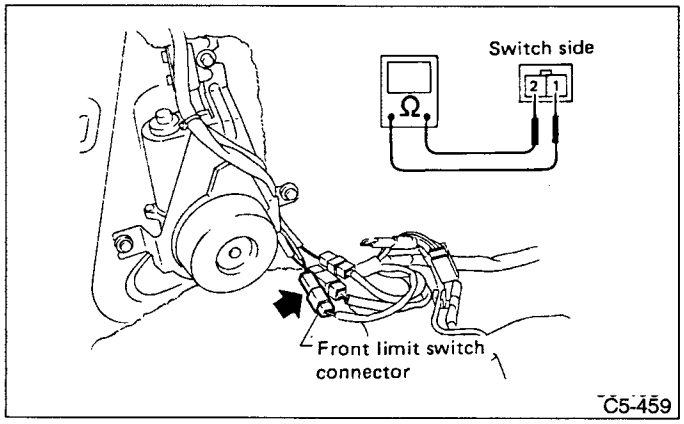

Fig. 118

2) Rear limit switch
   (1) Move shoulder anchor to rear end.
   (2) Disconnect rear limit switch connector.
   (3) Measure resistance between rear limit switch connector terminals.

Connector & terminal/Specified resistance:
(R14) No. 1 — No. 2/1 MΩ min

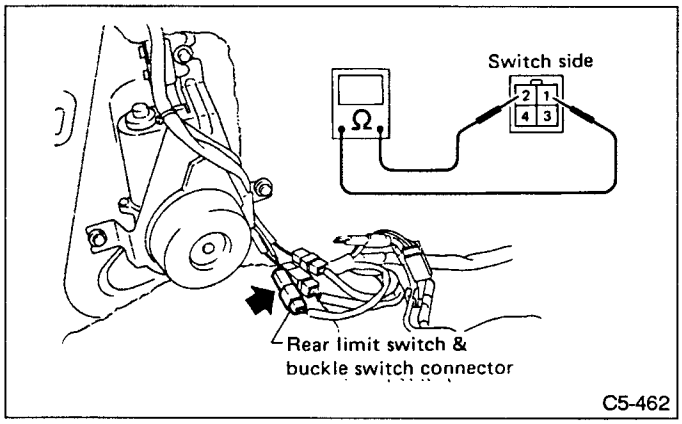

Fig. 119

3. CHECK FRONT AND REAR LIMIT SWITCH WIRE HARNESS

1) Disconnect two connectors from control unit.
2) Disconnect front limit switch connector.
3) Measure resistance between front limit switch connector and control unit connector, and between front limit switch and body.

Connector & terminal/Specified resistance:
(R15) No. 2 — (R32) No. 14/1 Ω max.
(R15) No. 1 — Body/1 Ω max.

4) Disconnect rear limit switch connector.
5) Measure resistance between rear limit switch connector and control unit connector, and between rear limit switch connector and body.

Connector & terminal/Specified resistance:
(R14) No. 2 — (R32) No. 13/1 Ω max.
(R14) No. 1 — Body/1 Ω max.

L: TROUBLE CODE 26 — BOTH SHOULDER BELT BUCKLE SWITCH AND FRONT LIMIT SWITCH (ON PASSENGER'S SIDE) ARE OFF.

CONTENTS OF DIAGNOSIS:
- Loose or disconnected connector
- Faulty shoulder belt buckle switch
- Faulty wire harness

TROUBLE SYMPTOM:
- Warning light remains off when shoulder belt is unfastened.
  (Shoulder anchor operates properly.)

1 Check shoulder belt buckle switch connection. — Not OK → Reconnect firmly and recheck.

OK ↓

2 Check buckle switch. — Not OK → Replace buckle switch (complete with rear limit switch).

OK ↓

3 Check buckle switch wire harness. — Not OK → Repair wire harness.

OK ↓

Repair control unit terminal poor contact. (Replace control unit.)

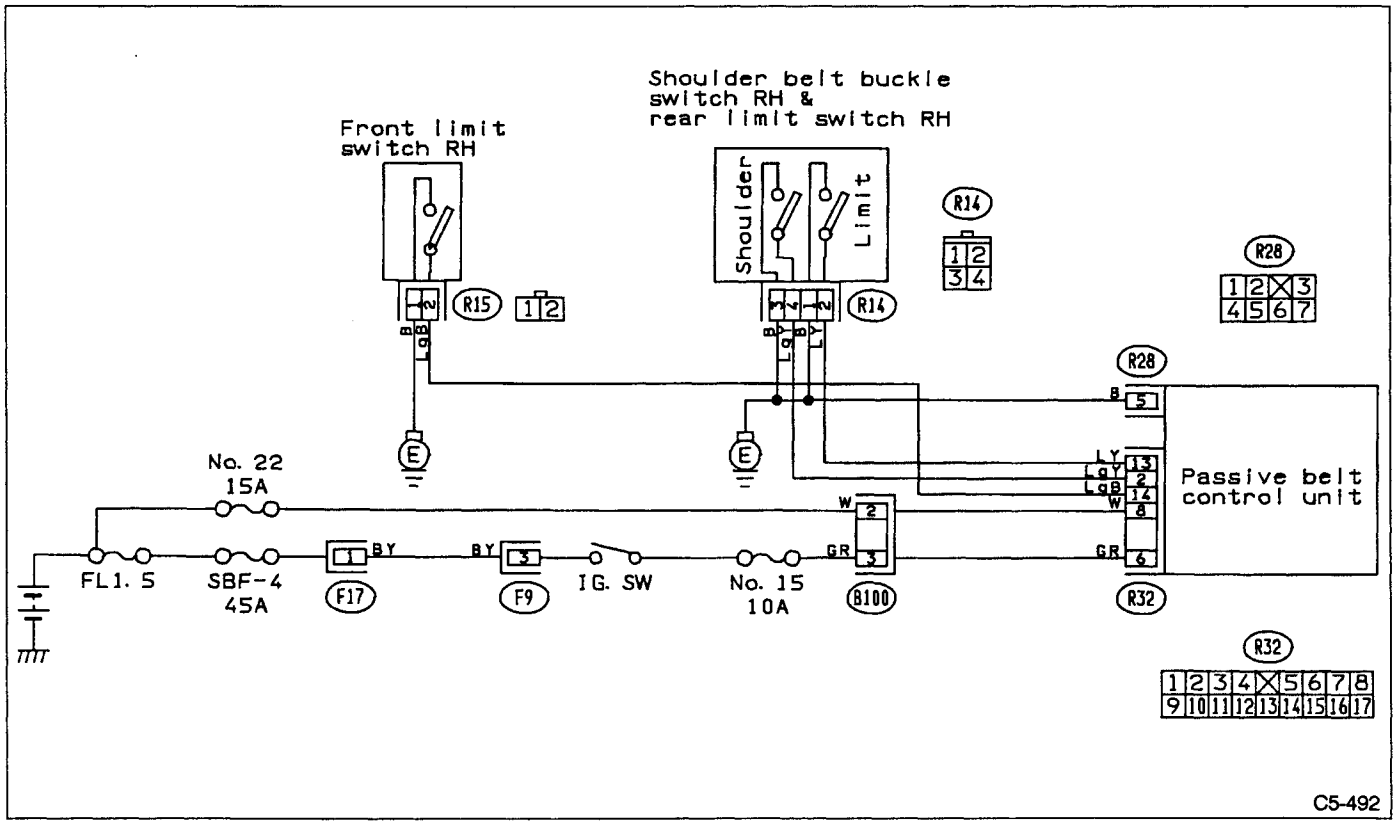

Fig. 120

1. CHECK SHOULDER BELT BUCKLE SWITCH CONNECTION

Visually check connectors, or disconnect and reconnect until a clicks is heard.

2. CHECK BUCKLE SWITCH

1) Move shoulder anchor from rear end to midway along rail.
2) Disconnect buckle switch connector.
3) Measure resistance between buckle switch connector terminals.

Connector & terminal/Specified resistance:
(R14) No. 3 — No. 4/1 Ω max.

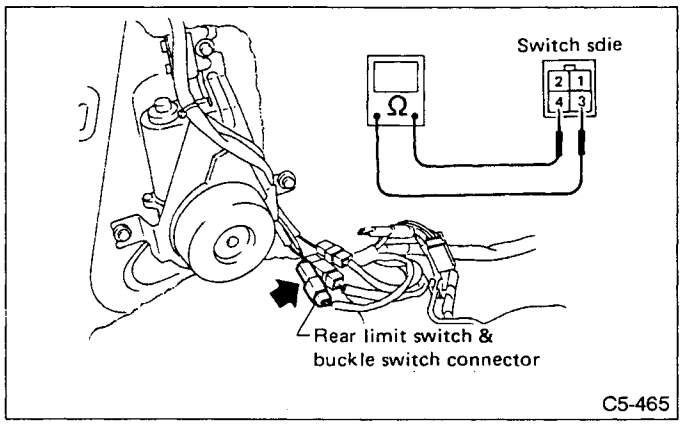

Fig. 121

3. CHECK BUCKLE SWITCH WIRE HARNESS

1) Disconnect two connectors from control unit.
2) Disconnect buckle switch connector.
3) Measure resistance between buckle switch connector and control unit connector, and between buckle switch connector and body.

Connector & terminal/Specified resistance:
(R14) No. 4 — (R32) No. 2/1 Ω max.
(R14) No. 3 — Body/1 Ω max.

M: TROUBLE CODE 32 — IGNITION SWITCH IS ON WITH BATTERY POWER OFF.

CONTENTS OF DIAGNOSIS:
- Shorted or open battery power circuit.
- Burned-out fuse (due to shorted key warning switch circuit)

TROUBLE SYMPTOM:
- Automatic shoulder belt system does not operate.

1	Check battery harness.	Not OK →	Repair battery harness.
	↓ OK		
	Repair control unit terminal poor contact. (Replace control unit.)		

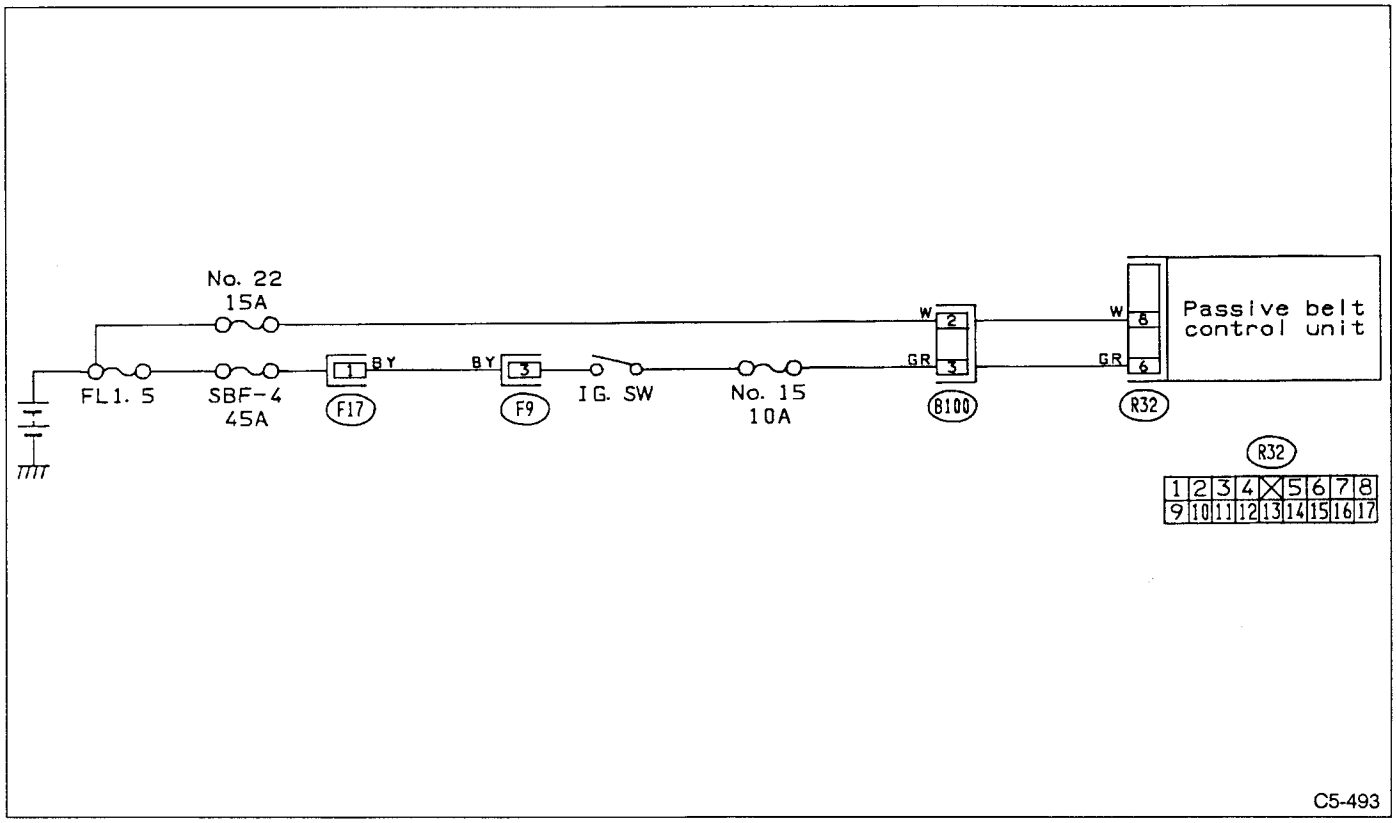

Fig. 122

1. CHECK BATTERY HARNESS

Check battery harness for shortcircuits or discontinuity.
(Refer to [T5B1].)

5. Troubleshooting without Self diagnosis System

A: BASIC TROUBLESHOOTING PROCEDURE

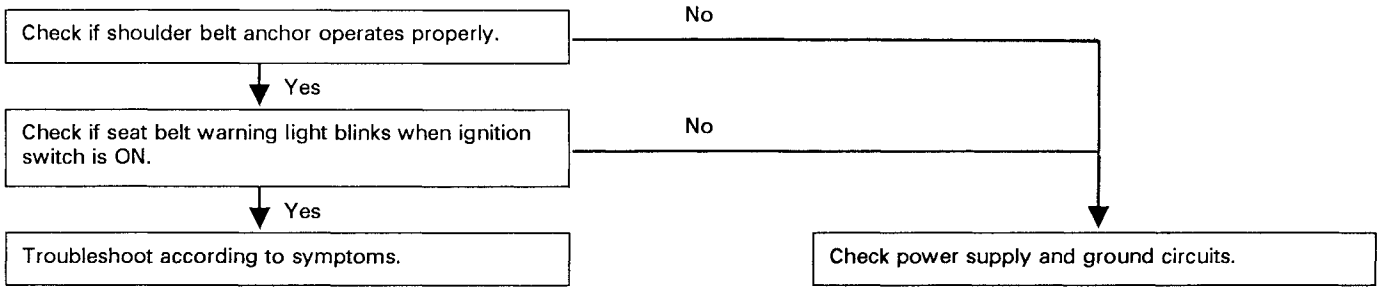

B: POWER SUPPLY AND GROUND CIRCUITS

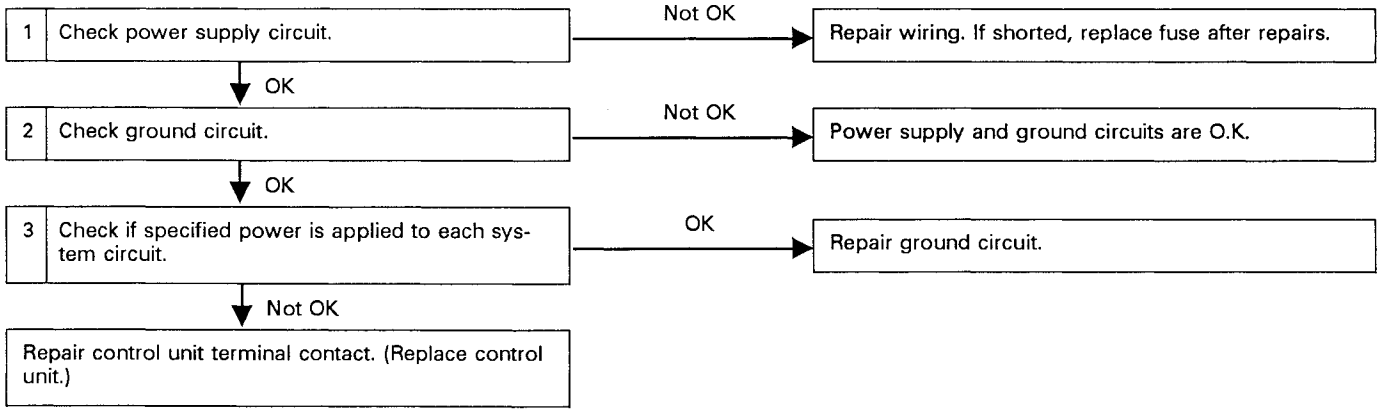

1. CHECK POWER SUPPLY CIRCUIT

1) Disconnect battery ground (−) cable.
2) Disconnect connector from control unit.
3) Measure resistance between control unit connector and fuse, and between control unit connector and body.

Connector & terminal/Specified resistance:
(R32) No. 8 — No. 22 Fuse/1 Ω max.
(R32) No. 8 — Body/1 MΩ min.
(R32) No. 6 — No. 15 Fuse/1 Ω max.
(R32) No. 6 — Body/1 MΩ min.

2. CHECK GROUND CIRCUIT

1) Disconnect connector from control unit.
2) Measure resistance between control unit connector and body.

Connector & terminal/Specified resistance:
(R32) No. 9 — Body/1 Ω max.

3. CHECK IF SPECIFIED VOLTAGE IS APPLIED TO EACH SYSTEM CIRCUIT

1) Check that control unit connector is properly connected.
2) Measure voltage between control unit connector and body.

Connector & terminal/Specified voltage:
(R32) No. 8 — Body/10 — 13 V
(R32) No. 6 — Body/10 — 13 V

C: TROUBLESHOOTING ACCORDING TO SYMPTOM

D	Warning light shows an "unlatch" signal although shoulder belt is properly latched to anchor.
E	Seat belt warning light remains on after ignition switch is turned ON.
F	Seat belt warning light neither blinks nor illuminates after ignition switch is turned ON.
G	Buzzer does not sound under warning conditions.
H	Buzzer continues to sound.
I	"Unlatch" warning is emitted although lap belt is properly latched to buckle.
J	Warning is not emitted when lap belt is unlatched to buckle.

D: WARNING LIGHT SHOWS AN "UNLATCH" SIGNAL ALTHOUGH SHOULDER BELT IS PROPERLY LATCHED TO ANCHOR.

1 Check shoulder belt buckle switch.
- Not OK → Replace shoulder belt buckle switch (complete with rear limit switch).
- OK ↓

2 Check shoulder belt buckle switch harness.
- Not OK → Repair harness.
- OK ↓

Repair control unit terminal poor contact. (Replace control unit)

1. CHECK SHOULDER BELT BUCKLE SWITCH

1) Disconnect shoulder belt buckle switch connector.
2) Latch shoulder belt to anchor and move anchor to rear end.
3) Measure resistance between buckle switch's terminals.

Terminal/Specified resistance:
(R14) No. 3 — No. 4/1 MΩ min.
(R38) No. 3 — No. 4/1 MΩ min.

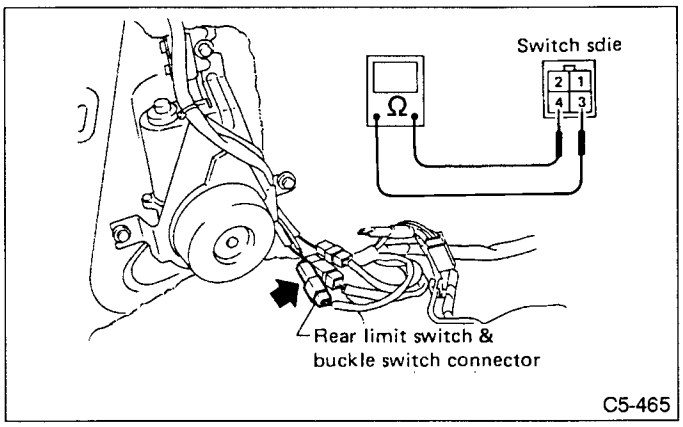

Fig. 123

2. CHECK SHOULDER BELT BUCKLE SWITCH HARNESS

1) Disconnect connector from control unit.
2) Disconnect buckle switch connector.
3) Measure resistance between buckle switch connector and body.

Connector & terminal/Specified resistance:
(R14) No. 4 — Body/1 MΩ min.
(R38) No. 4 — Body/1 MΩ min.

E: SEAT BELT WARNING LIGHT REMAINS ON AFTER IGNITION SWITCH IS TURNED ON.

1) Disconnect connector from control unit.
2) Measure resistance between control unit connector and body.

Connector & terminal/Specified resistance:
(R32) No. 5 — Body/1 MΩ min.

F: SEAT BELT WARNING LIGHT NEITHER BLINKS NOR ILLUMINATES AFTER IGNITION SWITCH IS TURNED ON.

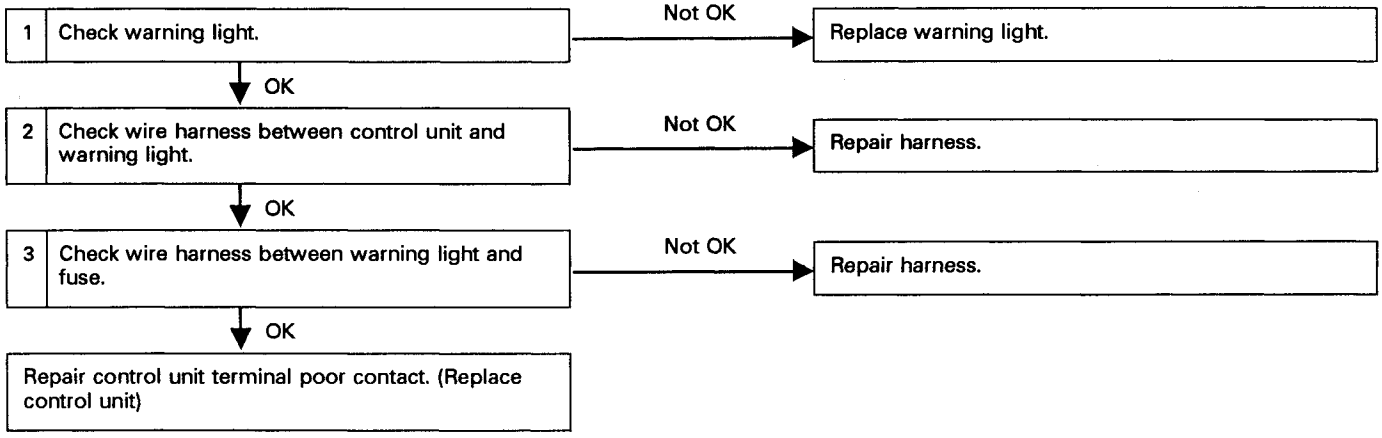

1. CHECK WARNING LIGHT

Remove bulb from rear of meter and check for burned-out bulb.

2. CHECK WIRE HARNESS BETWEEN CONTROL UNIT AND WARNING LIGHT

1) Disconnect combination meter connector.
2) Disconnect control unit connector.
3) Measure resistance between combination meter connector and control unit connector.

Connector & terminal/Specified resistance:
(i8) No. 15 — (R32) No. 5/1 Ω max.

3. CHECK WIRE HARNESS BETWEEN IGNITION SWITCH AND WARNING LIGHT

1) Disconnect combination meter connector.
2) Turn ignition switch ON.
3) Measure resistance between combination meter connector and body, and between combination meter connector and fuse.

Connector & terminal/Specified resistance:
(i6) No. 3 — Body/1 MΩ min.
(i6) No. 15 — Body/1 MΩ min.
(i6) No. 3 — No. 15 Fuse/1 Ω max.
(i6) No. 15 — No. 15 Fuse/1 Ω max.

G: BUZZER DOES NOT SOUND UNDER WARNING CONDITIONS.

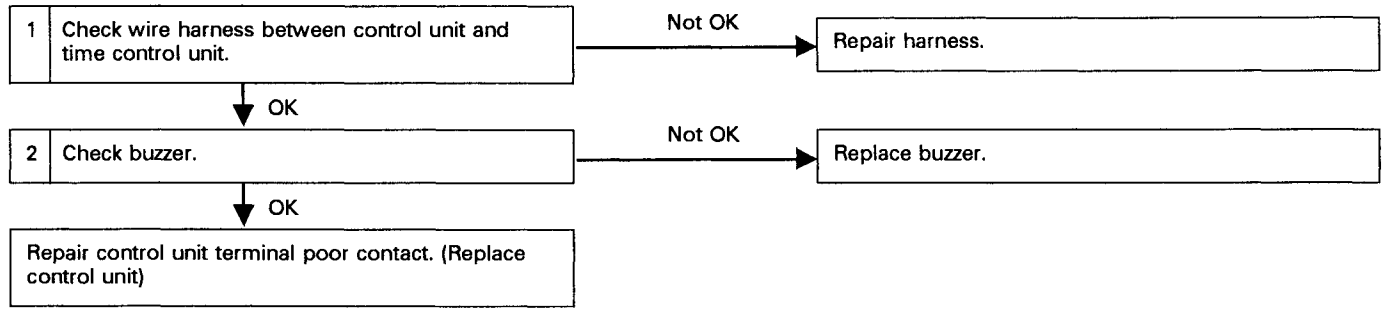

1. CHECKING WIRE HARNESS BETWEEN CONTROL UNIT CONNECTOR AND TIME CONTROL UNIT CONNECTOR

1) Turn ignition switch OFF.
2) Disconnect connector from time control unit.
3) Disconnect connector from control unit.
4) Check continuity between time control unit connector and control unit connector.

Connector & terminal/Specified resistance:
(R32) No. 4 — (B90) No. 12/1 Ω max.
(R32) No. 10 — (B90) No. 3/1 Ω max.
(R32) No. 12 — (B90) No. 4/1 Ω max.

2. CHECKING BUZZER

1) Disconnect connector from control unit.
2) Apply 12 volts (DC) to terminals to check that buzzer sounds.

Terminal/polarity:
(B90) No. 1/+ 12 V
(B90) No. 12/− 12 V

H: BUZZER CONTINUES TO SOUND.

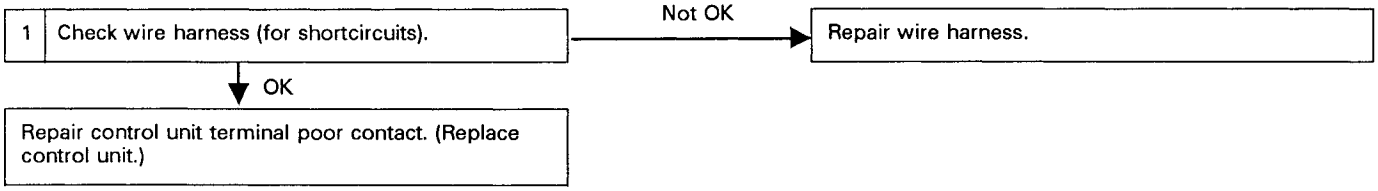

1. CHECK WIRE HARNESS (FOR SHORTCIRCUITS)

1) Disconnect connector from control unit.
2) Measure resistance between control unit connector and body.

Connector & terminal/Specified resistance:
(R32) No. 4 — Body/1 MΩ min.

I: "UNLATCH" WARNING SIGNAL IS EMITTED ALTHOUGH LAP BELT IS PROPERLY LATCHED TO BUCKLE.

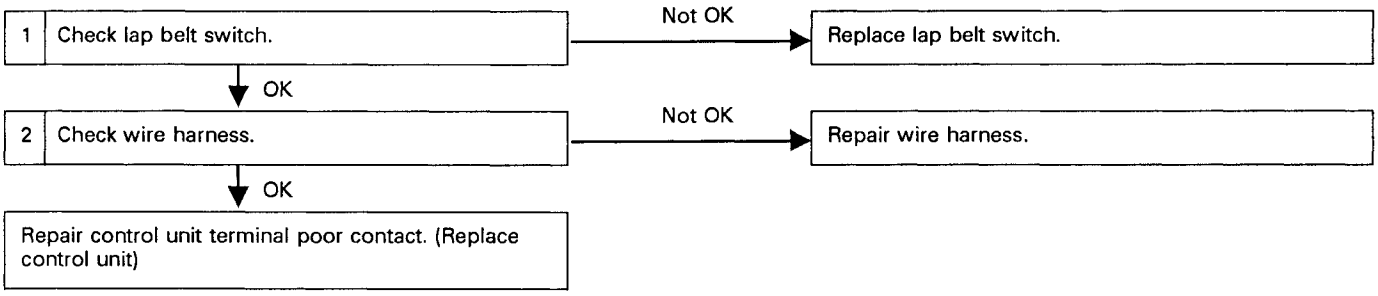

1. CHECKING LAP BELT SWITCH

1) Remove seat and disconnect lap belt switch connector.
2) Disconnect connector from control unit.
3) Latch belt tongue in place.
4) Measure resistance between lap belt switch's terminals.

Specified resistance:
(R46) No. 1 — No. 2/1 MΩ min.

2. CHECKING WIRE HARNESS

1) Remove seat and disconnect lap belt switch connector.
2) Disconnect connector from control unit.
3) Measure resistance between control unit connector and body.

Connector & terminal/Specified resistance:
(R32) No. 16 — body /1MΩ min.

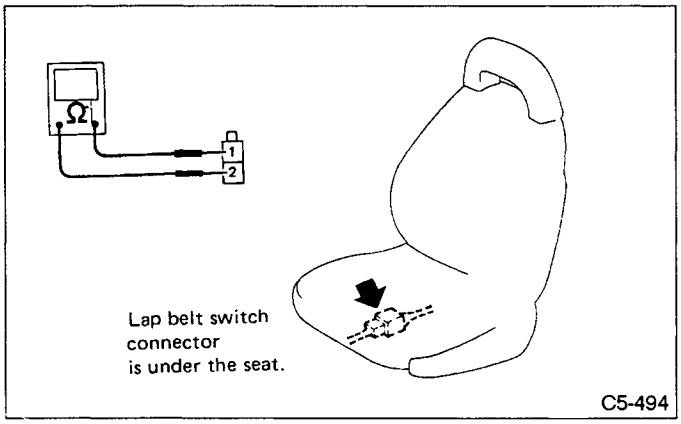

Fig. 124

J: WARNING IS NOT EMITTED WHEN LAP BELT IS UNLATCHED FROM BUCKLE.

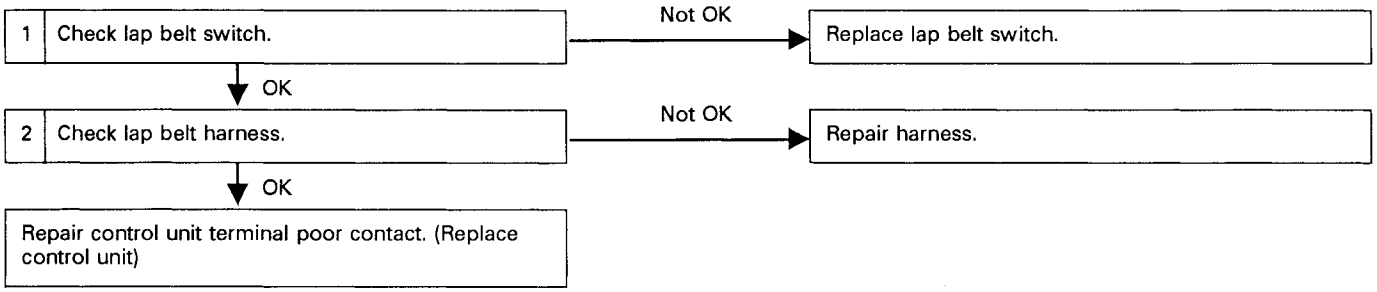

1. CHECK LAP BELT SWITCH

1) Remove seat and disconnect lap belt switch connector.
2) Disconnect connector from control unit.
3) Unlatch belt tongue.
4) Measure resistance between lap belt switch terminals.

Specified resistance:
(R46) 1 Ω max.

2. CHECK LAP BELT HARNESS

1) Remove seat and disconnect lap belt switch connector.
2) Disconnect connector from control unit.
3) Measure resistance between lap belt switch connector and control unit connector.

Connector & terminal/Specified resistance:
(R32) No. 16 — (R46) No. 1 /1 Ω max.

SUBARU

SVX

1992

Precaution for Supplemental Restraint System "Airbag"
The Supplemental Restraint System "Airbag" helps to reduce the risk or severity of injury to the driver in a frontal collision.
The Supplemental Restraint System consists of an airbag module (located in the center of the steering wheel), sensors, a control unit, warning light, wiring harness and spiral cable.
Information necessary to service the safety is included in the "5-5. SUPPLEMENTAL RESTRAINT SYSTEM" of this Service Manual.
WARNING:
- To avoid rendering the Airbag system inoperative, which could lead to personal injury or death in the event of a severe frontal collision, all maintenance must be performed by an authorized SUBARU dealer.
- Improper maintenance, including incorrect removal and installation of the Airbag system, can lead to personal injury caused by unintentional activation of the Airbag system.
- All Airbag system electrical wiring harnesses and connectors are covered with yellow outer insulation. Do not use electrical test equipment on any circuit related to the Supplemental Restraint System "Airbag".



Page

C COMPONENT PARTS 2
1. Console Box 2
2. Instrument Panel 3
W SERVICE PROCEDURE AIRBAG 5
1. Supplemental Restraint System "Airbag" 5
2. Console Box 5
3. Instrument Panel 6

C COMPONENT PARTS

1. Console Box

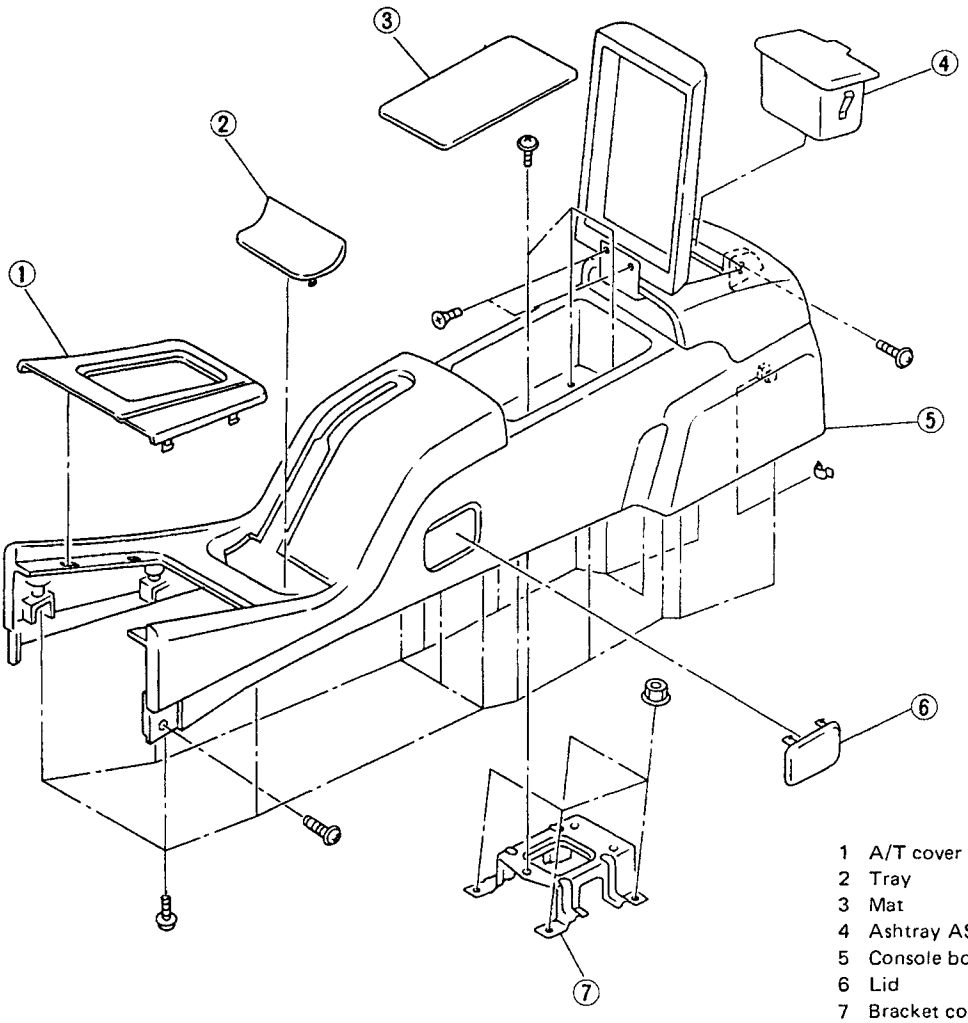

Fig. 1

2. Instrument Panel

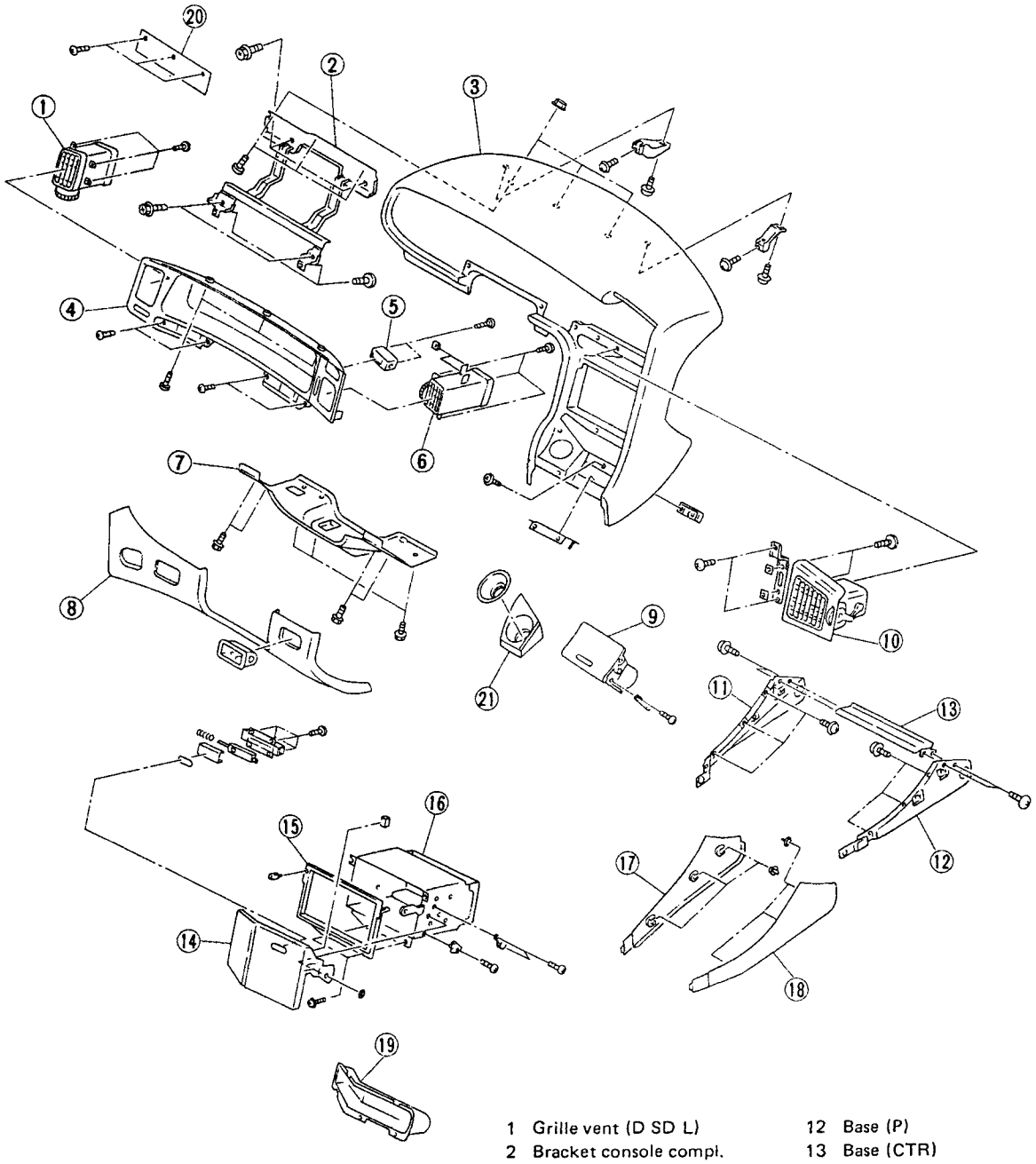

1 Grille vent (D SD L)
2 Bracket console compl.
3 Pad & frame B
4 Visor
5 Clock
6 Grille vent (D CTR)
7 Panel lower cover
8 Cover lower
9 Ashtray ASSY
10 Grille vent (P CTR)
11 Base (D)
12 Base (P)
13 Base (CTR)
14 Cover audio
15 Panel radio
16 Audio holder
17 Console panel (LH)
18 Console panel (RH)
19 Cover audio lid
20 Cover column
21 Panel cigar lighter

C5-102

Fig. 2

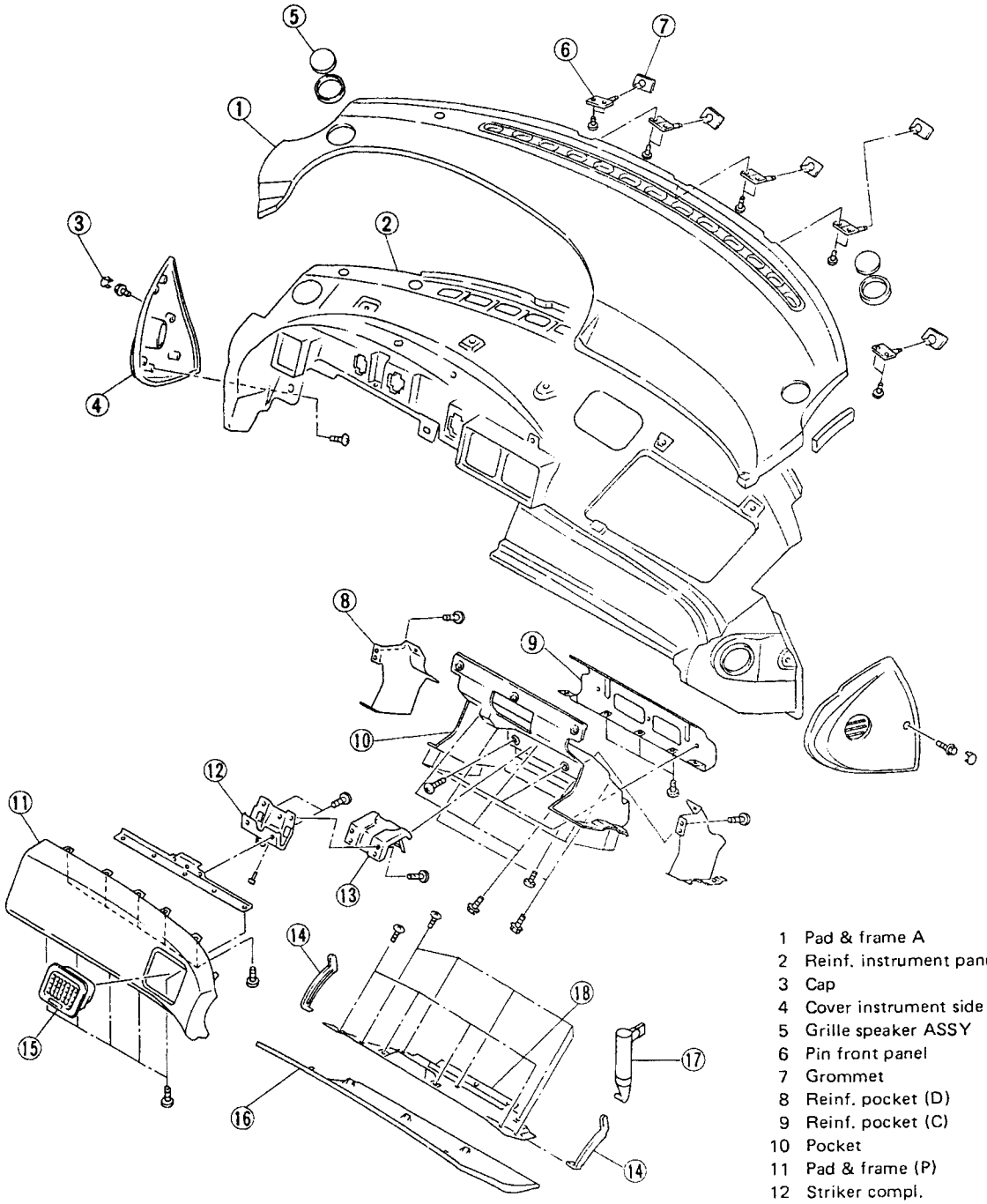

1 Pad & frame A
2 Reinf. instrument panel
3 Cap
4 Cover instrument side
5 Grille speaker ASSY
6 Pin front panel
7 Grommet
8 Reinf. pocket (D)
9 Reinf. pocket (C)
10 Pocket
11 Pad & frame (P)
12 Striker compl.
13 Bracket striker
14 Holder lid
15 Grille vent (P)
16 Lid
17 Damper
18 Panel lid

C5-126

Fig. 3

W SERVICE PROCEDURE AIRBAG

1. Supplemental Restraint System "Airbag"

Airbag warning system is located in the combination meter.

a. All Airbag system wiring harness and connectors are colored yellow. Do not use electrical equipment on these circuit.

b. Be careful not to damage Airbag warning system wiring harness when servicing the combination meter.

2. Console Box

A: REMOVAL

1) Disconnect ground cable from battery.
2) Remove console panel by taking off three clips from both sides.

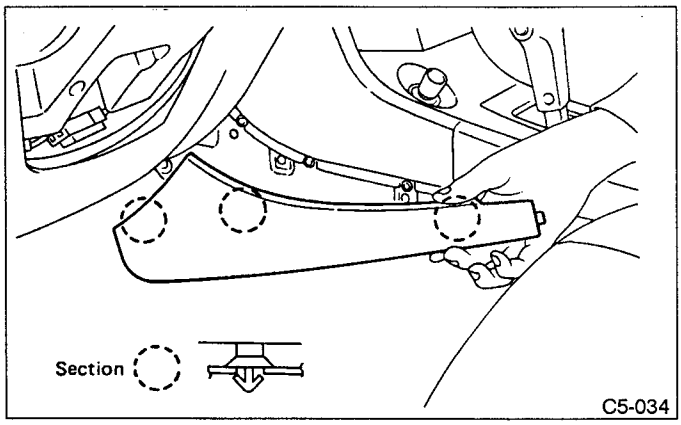

Fig. 4

3) Remove two screws from both the left and right sides.

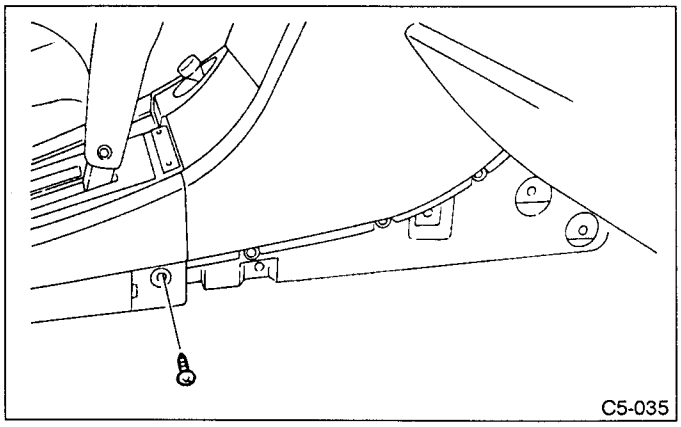

Fig. 5

4) Remove automatic transmission cover, tray and console box mat.

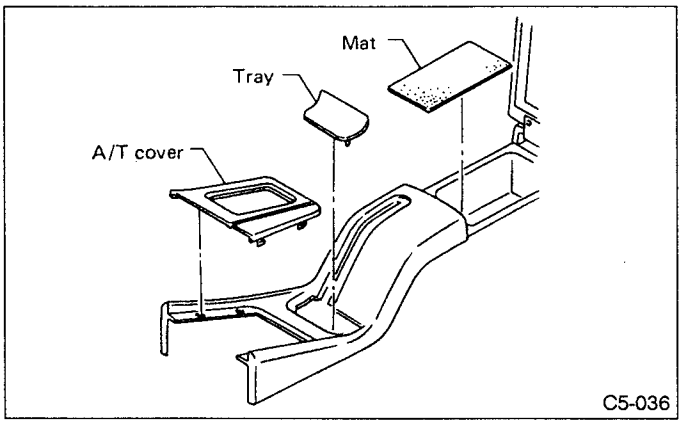

Fig. 6

5) Remove three screws from console box.

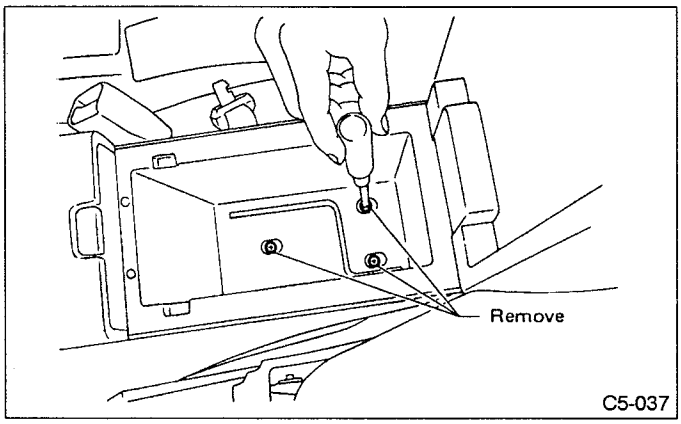

Fig. 7

6) Remove console box by lifting up while slightly pulling it backward.

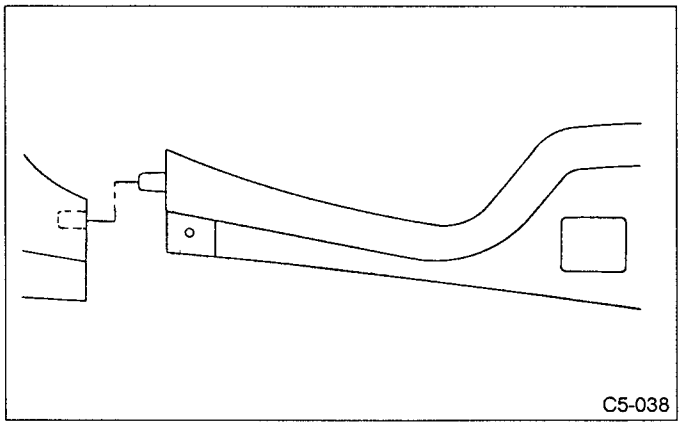

Fig. 8

B: INSTALLATION

1) Installation is in the reverse order of removal.

3. Instrument Panel

A: REMOVAL

CAUTION:
Be sure to hold socket section when disconnecting, not harness.

1) Disconnect ground cable from battery.
2) Remove console box.
3) Remove front pillar upper trim. (Refer to 5-3 [W11A0].)
4) Remove radio grounding wire.

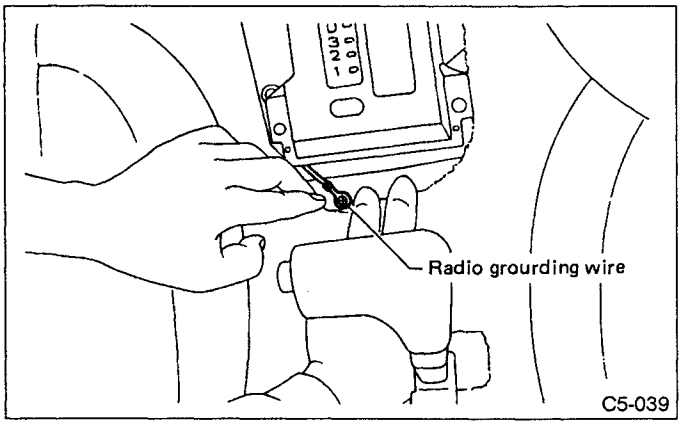

Fig. 9

5) Remove remote controlled rearview mirror switch and internal bolt.
Remove screw rivet located on lower side of lower cover.

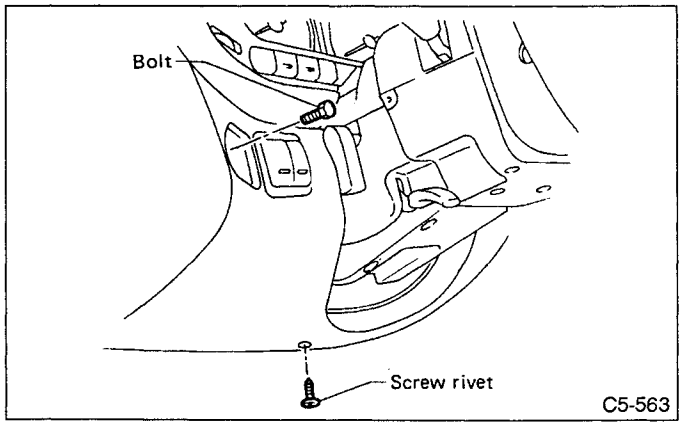

Fig. 10

6) Remove lower cover by removing six clips and three connectors.

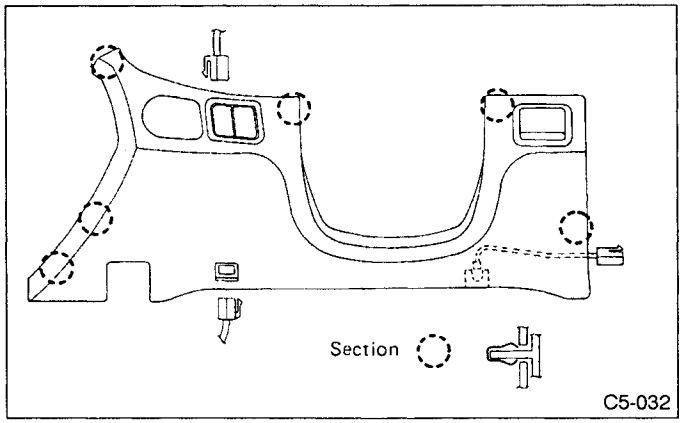

Fig. 11

7) Remove panel lower cover by removing four bolts.

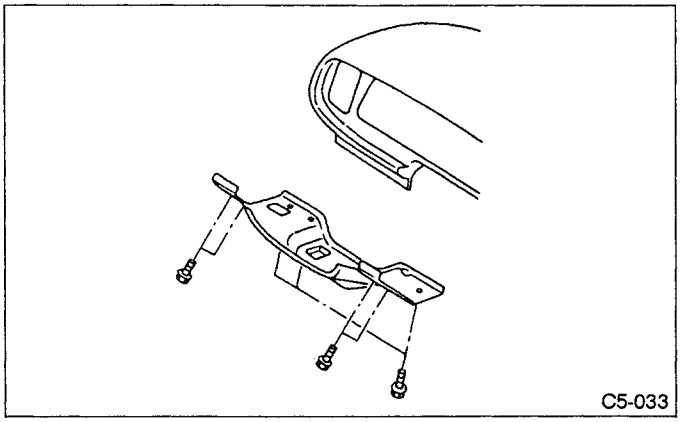

Fig. 12

8) Disconnect airbag connector at harness spool. (Refer to 5-5 [M1B6].)

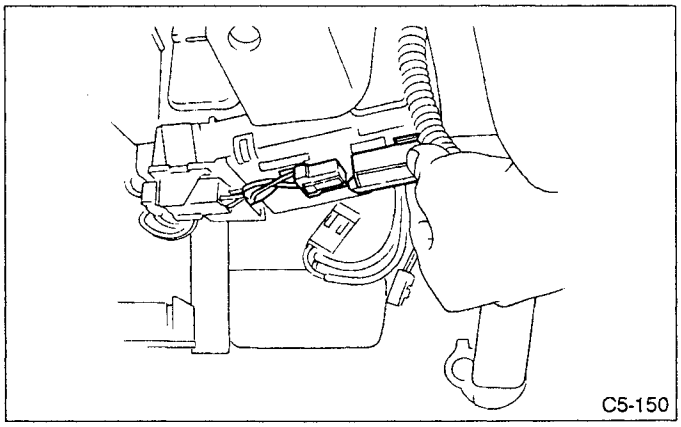

Fig. 13

9) Remove two screws from both the left and right sides.

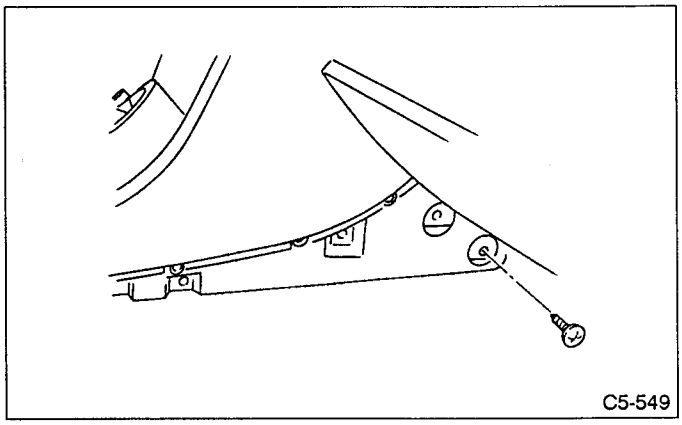

Fig. 14

10) Lower steering column.

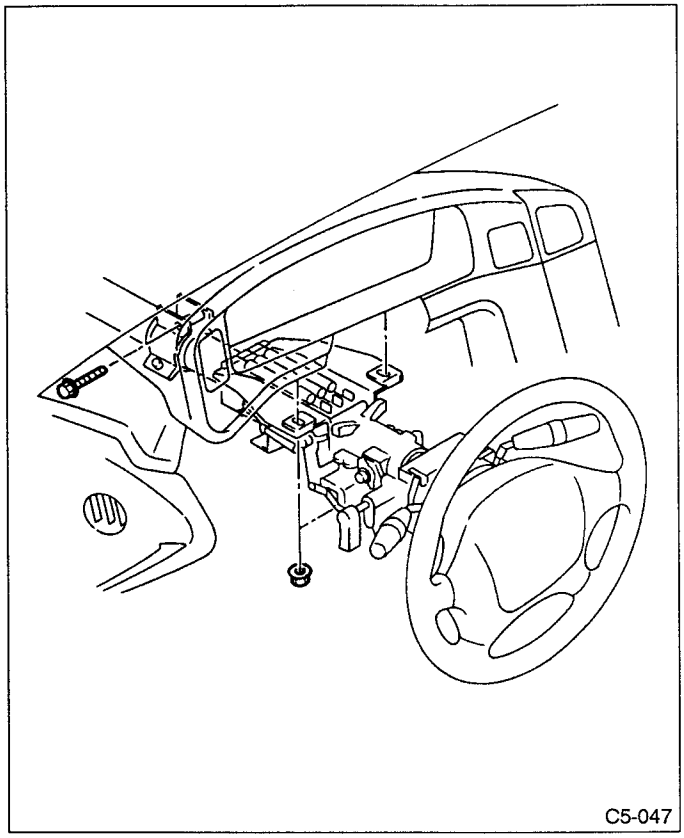

Fig. 15

11) Remove caps from both ends of instrument panel, and remove bolts.

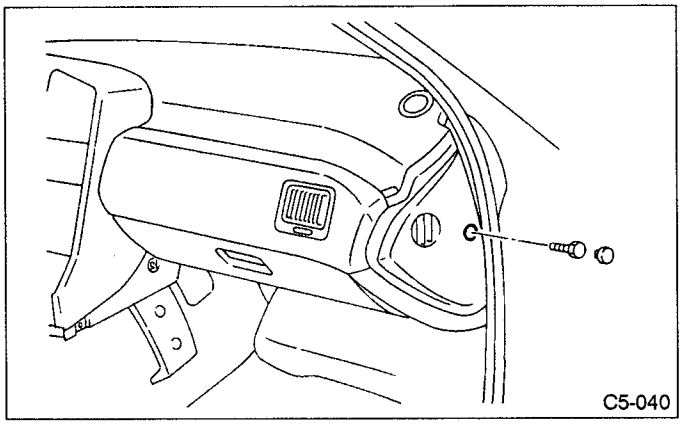

Fig. 16

12) Remove two instrument panel switches by pressing forward .
Disconnect switch connectors.

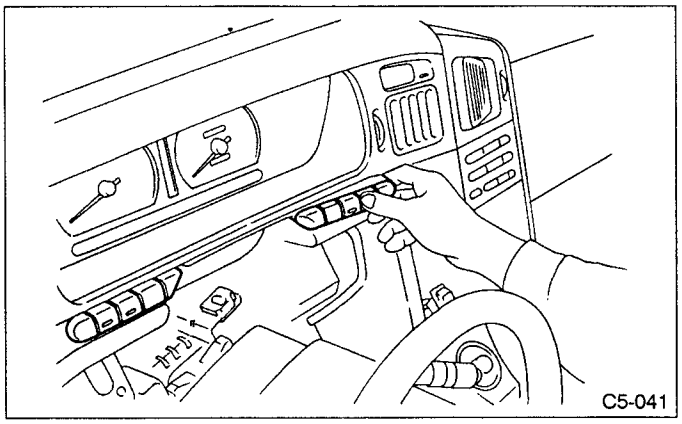

Fig. 17

13) Remove visor by removing seven screws, and disconnect clock connector.

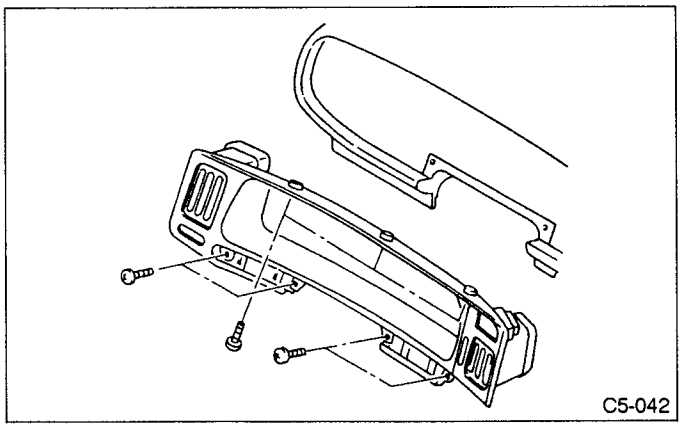

Fig. 18

14) Remove combination meter by removing six screws.

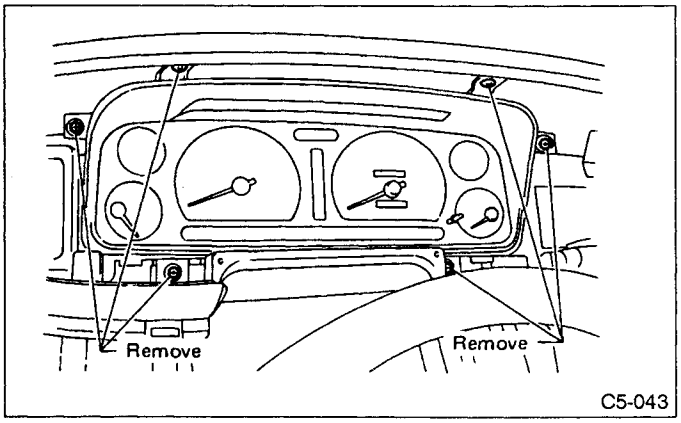

Fig. 19

15) Remove four bolts in meter visor.

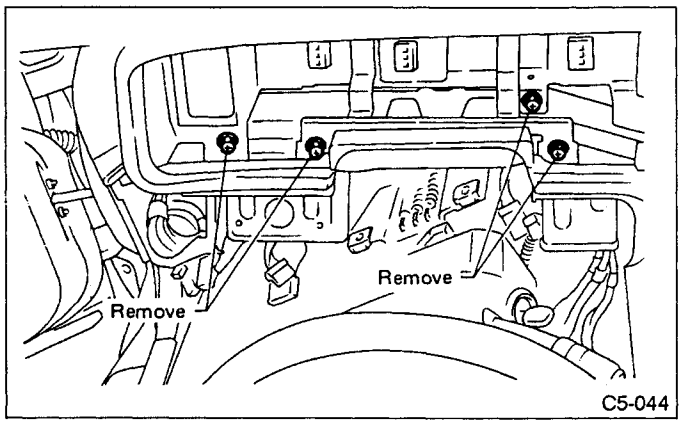

Fig. 20

16) Remove five screws in glove box.

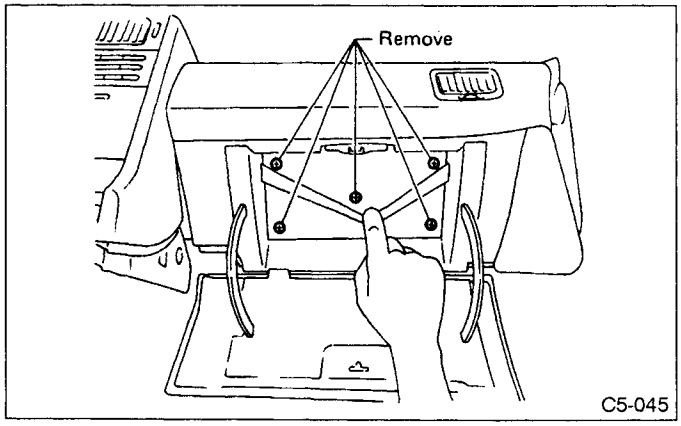

Fig. 21

17) Disconnect instrument harness and body harness at six connectors, and disconnect antenna lead at two places.

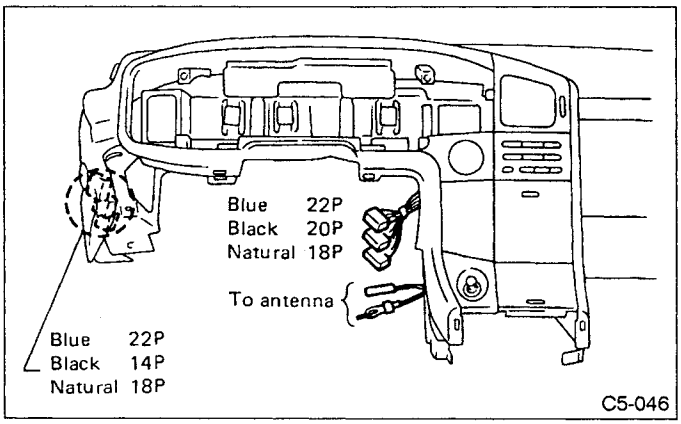

Fig. 22

18) Cover automatic transmission select lever and surrounding portion with cloth to avoid damaging.
19) Remove instrument panel by pulling it forward.

B: INSTALLATION

1) Installation is in the reverse order of removal.
Observe the following:
2) Push instrument panel into position by aligning five pins at the end of instrument panel with corresponding grommets on body side.
CAUTION:
Avoid jamming of any wire harness when installing instrument panel.

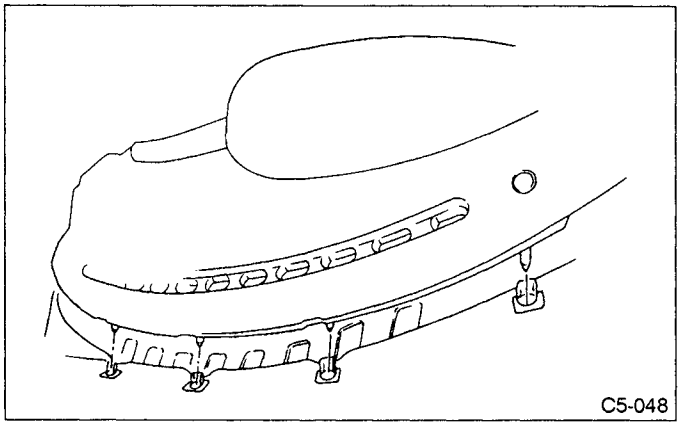

Fig. 23

3) Set clips located at both inside ends of instrument panel onto body side.

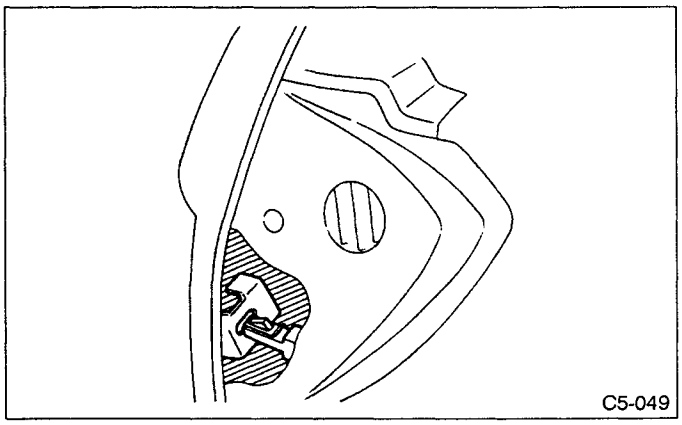

Fig. 24

SUBARU

SVX

FOREWORD

This service manual supplement has been prepared to provide SUBARU service personnel with the necessary information and data for the correct maintenance and repair of the SUBARU SVX SRS Airbag System.
Please study and then utilize this supplement together with 1992 SERVICE MANUAL (Pub No. G301BE) Sections 1 to 6 published already.

When replacement of parts during repair work is needed, be sure to use SUBARU genuine parts.
All information, illustration and specifications contained in this manual are based on the latest product information available at the time of publication approval.

FUJI HEAVY INDUSTRIES LTD.
All rights reserved. This book may not be reproduced or copied, in whole or in part, without the written permission of
FUJI HEAVY INDUSTRIES LTD., TOKYO JAPAN

SUBARU, and are trademarks of FUJI HEAVY INDUSTRIES LTD.

© Copyright 1993 FUJI HEAVY INDUSTRIES LTD.

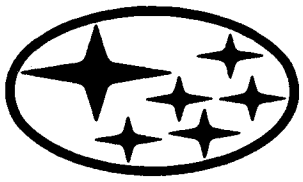

Page
M MECHANISM AND FUNCTION 2
1. SRS Airbag 2
S SPECIFICATIONS AND SERVICE DATA 10
1. Inspection and Replacement Standards 10
C COMPONENT PARTS 12
1. SRS Airbag 12
W SERVICE PROCEDURE 13
1. SRS Airbag 13
T DIAGNOSTICS 24
1. On-board Diagnostic System 24
2. Diagram of SRS Airbag 30
3. Wiring Location 31
4. Test Harnesses 32
5. Airbag Resistor 35
6. Diagnostic Chart with Trouble Code 36

M MECHANISM AND FUNCTION

1. SRS Airbag

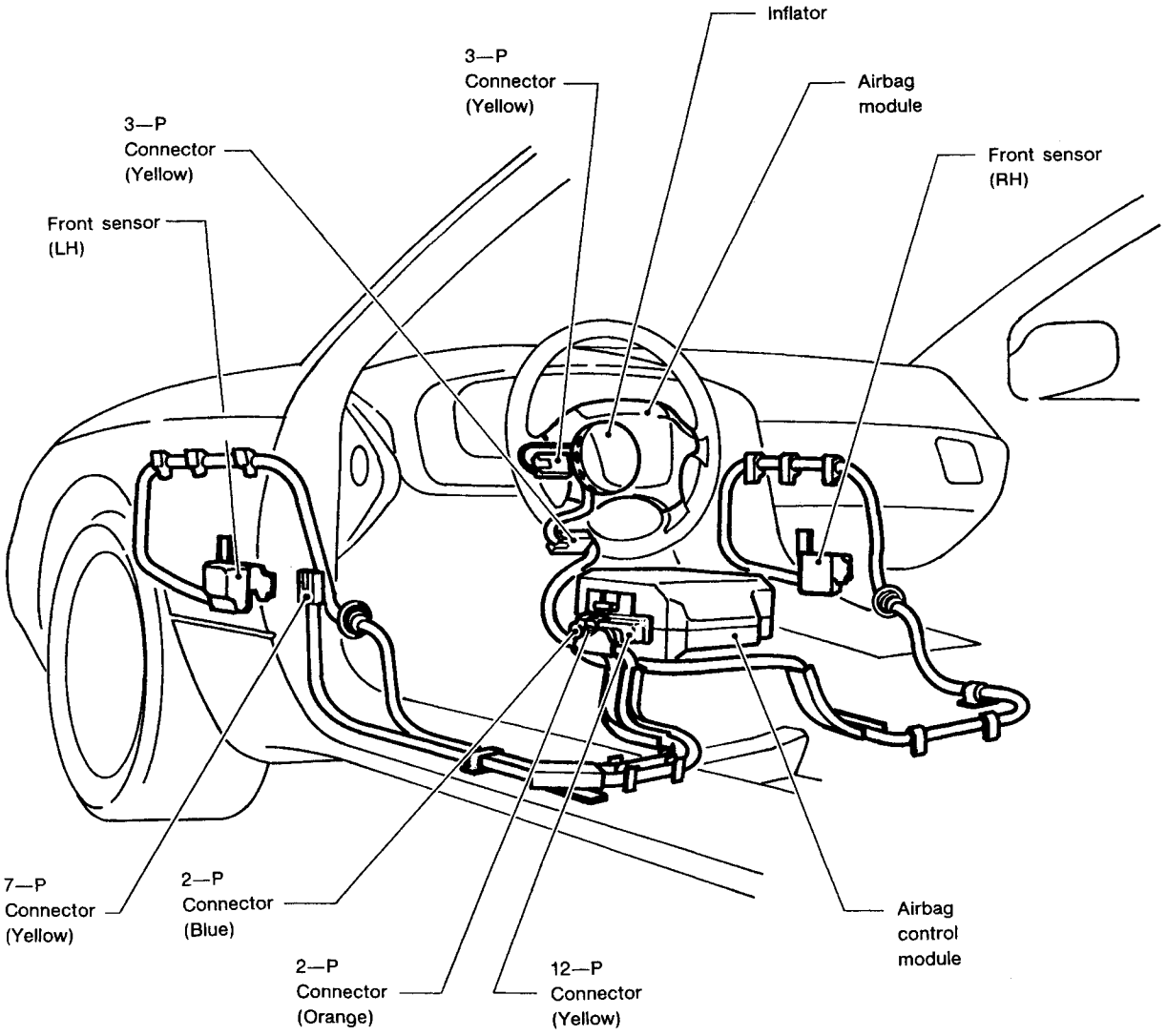

C5-710

Fig. 1

A: OUTLINE

The SRS airbag is provided as an auxiliary driver restraint system to be used in combination with the seat belt. When an impact greater than a set level is applied to the front of the vehicle, the sensor senses it and generates an electrical pulse to inflate the bag in the airbag module, thus preventing the driver's upper body from impacting the steering wheel.

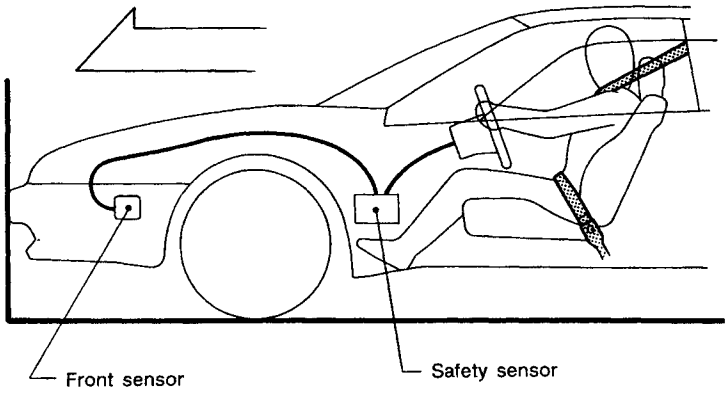

Zero second:
- Collision

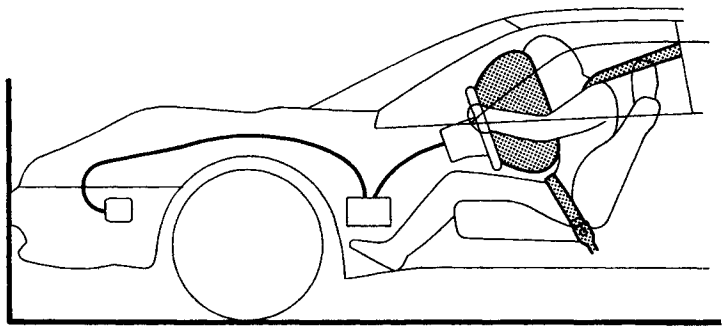

- Front and safety sensors detect a set strength of collision.
- Operation of inflator
- Nitrogen gas is generated.
- The Airbag inflation completes.
- Discharge of gas

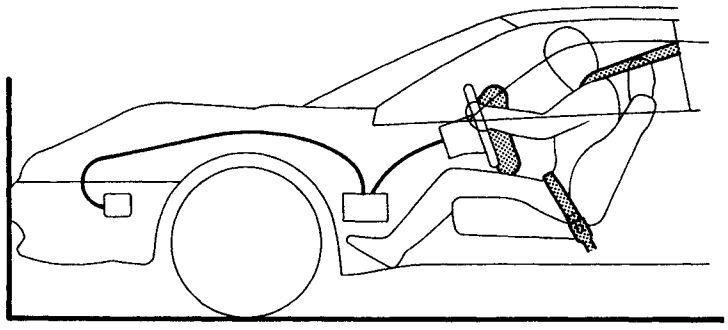

- Completion

C5-652

Fig. 2

B: CONSTRUCTION

The SRS airbag consists of a control module, left and right front sensors, two safety sensors built into the control module, and an airbag module containing an inflator and airbag. The left and right front sensors and two safety sensors are connected in parallel respectively, and the front sensors and safety sensors are connected in series, so that the airbag will inflate if at least one front sensor and at least one safety sensor sense an impact at the same time.

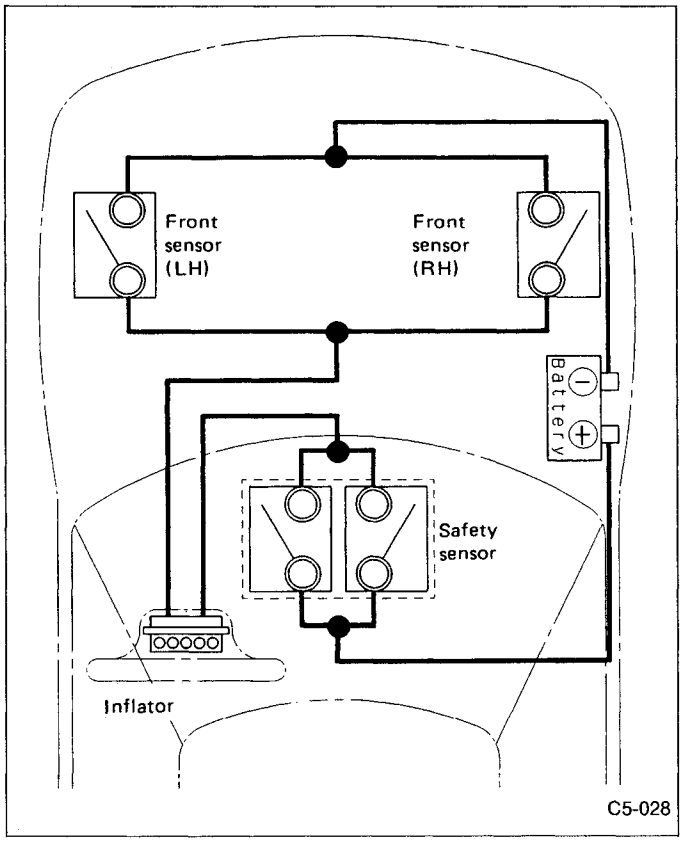

Fig. 3

1. AIRBAG CONTROL MODULE

The airbag control module is installed ahead of the front floor tunnel. It detects the vehicle's deceleration by receiving electrical signals from the sensors and judges whether to fire the airbag. This control module has a built-in on-board diagnostic function. If a trouble occurs inside the system, it lights up the airbag warning light in the combination meter. The trouble data is stored in the control module. A back-up power supply is provided for possible damage to the battery during an accident, and a boosting circuit is built into the control module in case of a battery voltage drop.

2. FRONT SENSOR

One front sensor is installed on both left and right sides ahead of the front wheel apron wall. If the roller-might type sensor-receives a frontal impact exceeding a certain set limit. The roller rotates to turn the switch ON.

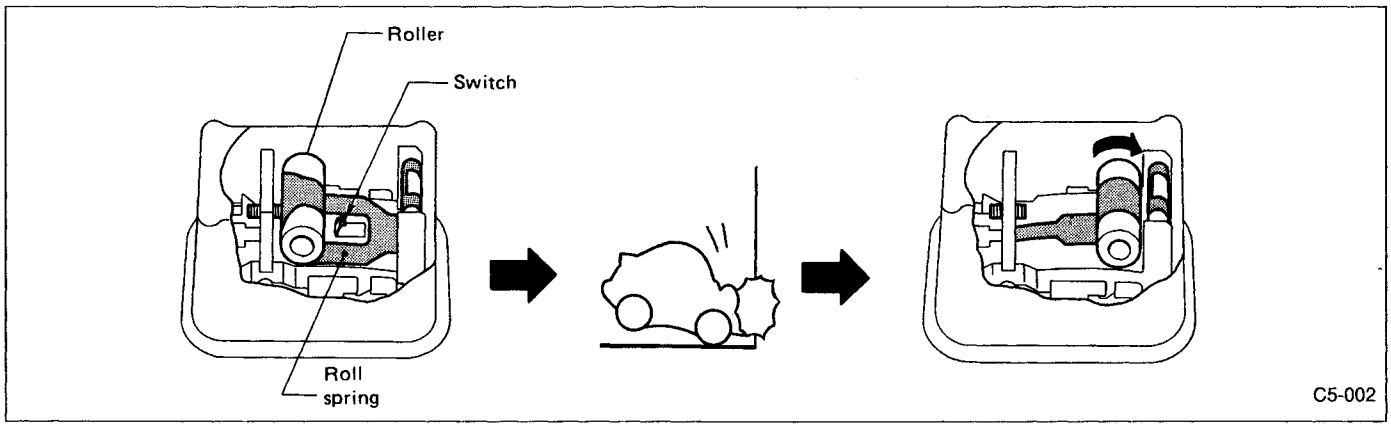

Fig. 4

3. SAFETY SENSOR

Two safety sensors are built into the airbag control module. The construction is similar to that of the front sensors.

4. AIRBAG MODULE

The airbag module is located at the center of the steering wheel, and it contains an airbag and inflator. If a collision occurs, the inflator produces a large volume of nitrogen gas inflating the nylon airbag in a very short time.

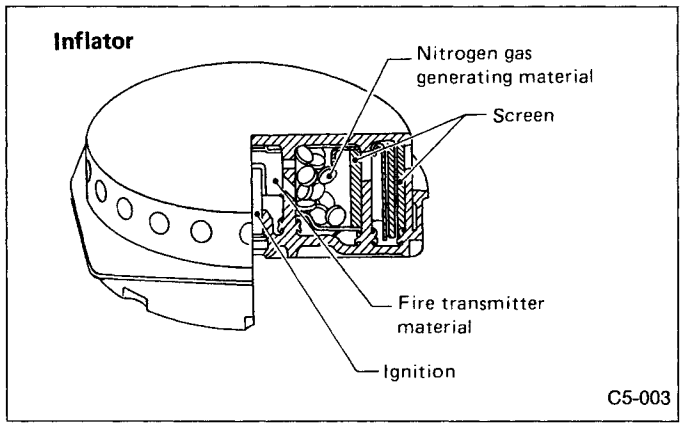

Fig. 5

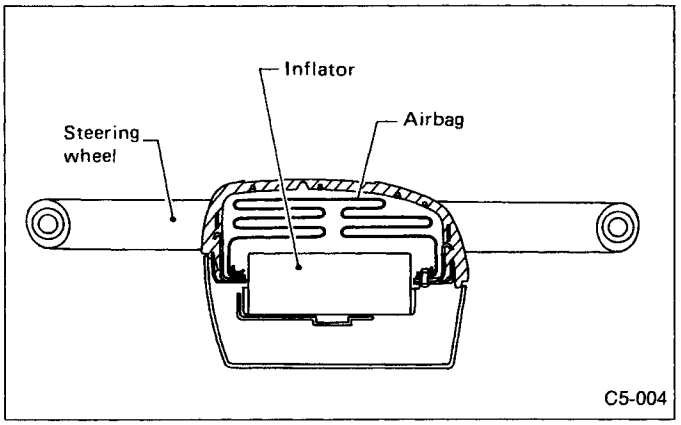

Fig. 6

5. STEERING ROLL CONNECTOR

The steering roll connector is located between the steering column and steering wheel. A flat cable stored in a spiral form transmits the electrical signal from the control module to the steering wheel from the body harness.

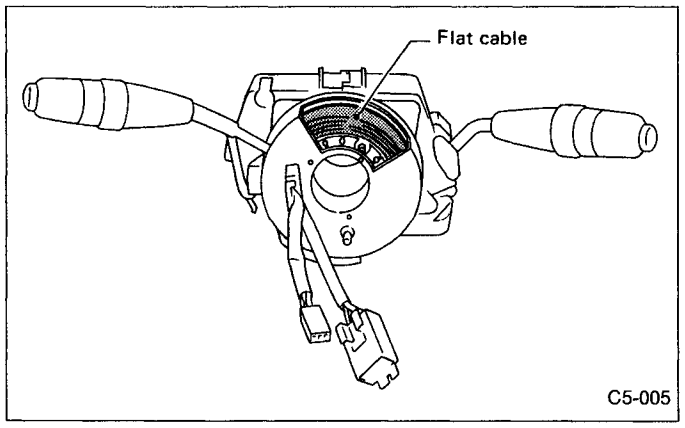

Fig. 7

6. AIRBAG CONNECTOR

The SRS airbag adopts a connector which has a double lock mechanism and coupling error detection mechanism for enhanced reliability. If coupling is incomplete, the airbag warning light comes on in the combination meter.

1) Connector coupled to airbag control module

To disconnect the connector, press wire ① of the control module as illustrated below until the green lever ② tilts up. This unlocks the double lock, then you can pull off the connector while pressing the connector lock.

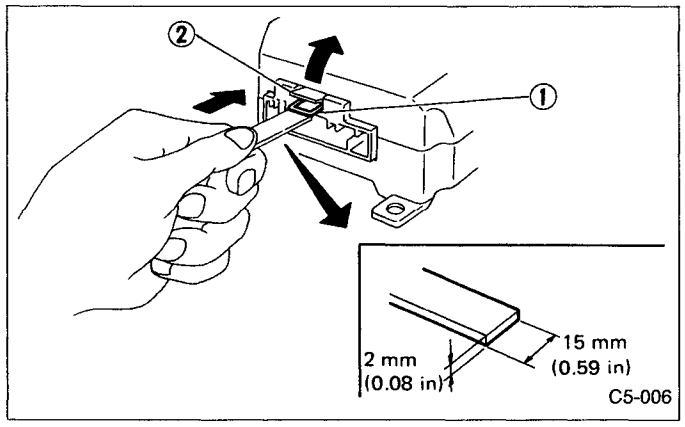

Fig. 8

To couple the connector, insert the three connectors until a "click" is heard, then push in the green lever ② to apply the double lock.

2) Connector between harnesses

To disconnect the connector, press lever ① to pop green lever ② out, this unlocks the double lock system.
Then separate the connector by pulling both sides while holding the connector sections and pressing in lever ①.

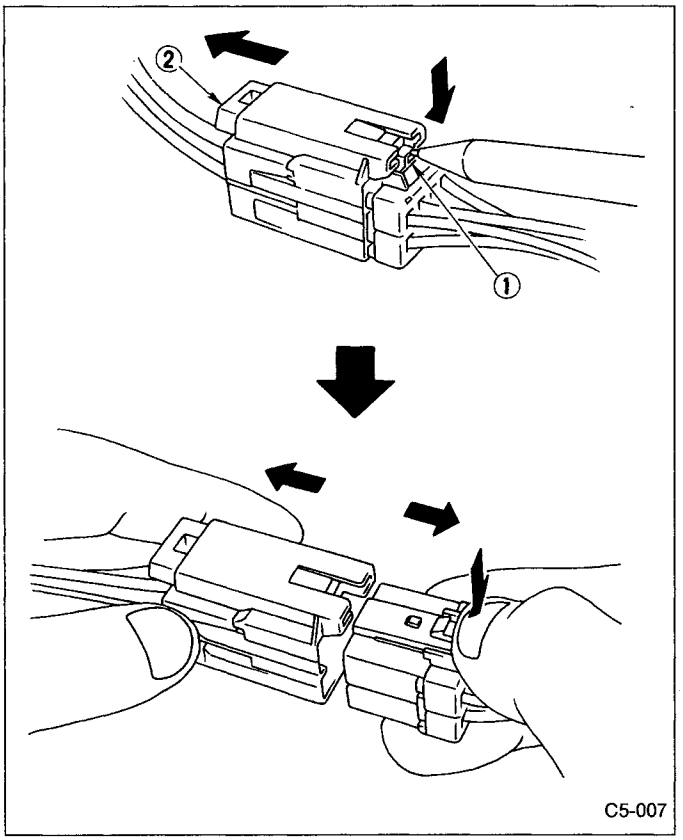

Fig. 9

To couple the connector, insert both connectors until a "click" is heard, then push in the green lever ② until a "click" is heard; this applies the double lock.

7. AIRBAG WARNING LIGHT

The airbag warning light is located inside the combination meter. It illuminates if a poor connection occurs, or if the airbag control module detects an abnormality. When the airbag system is normal, this light goes out approximately eight seconds after turning the ignition switch ON.

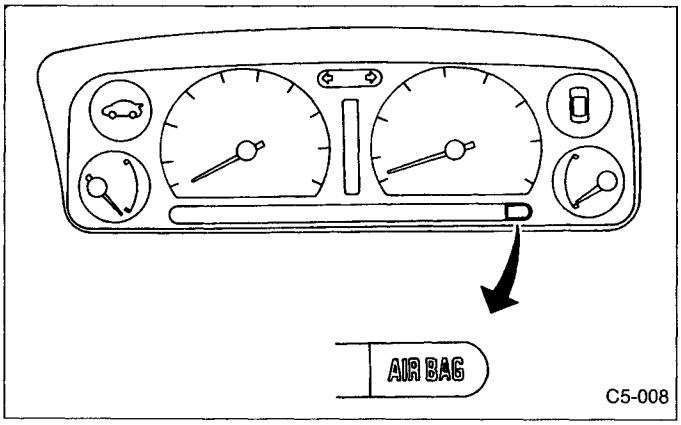

Fig. 10

8. WIRE HARNESS

The wire harness of the SRS airbag is entirely covered with a yellow protective tube, and can easily be identified from harnesses of other systems.

9. WARNING AND CAUTION LABELS

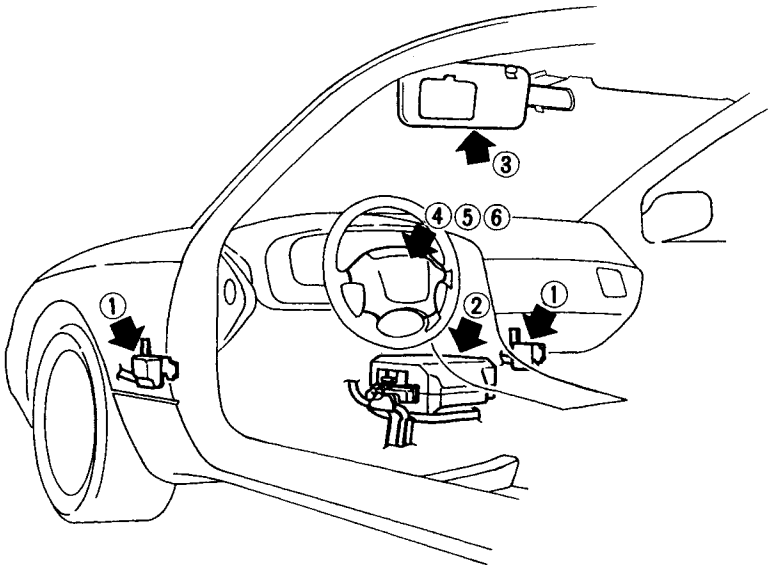

C5-268

①	CAUTION READ SERVICE MANUAL	
②	SRS AIRBAG CONTROL UNIT CAUTION • READ SERVICE MANUAL • NO SERVICEABLE INSIDE • DO NOT DISASSEMBLE OR TAMPER • DO NOT DROP; KEEP DRY • STORE IN CLEAN DRY AREA	Précaution • lisez le manuel d'entretien • aucune pièce interne ne peut être remplacée ou réparée • ne démontez ou altérez pas cette unité de contrôle • n'échappez pas • emmagasinez dans un endroit sec
③	CAUTION: ALWAYS WEAR YOUR SEATBELT • This car is equipped with a driver AIRBAG as a SUPPLEMENTAL RESTRAINT SYSTEM (SRS). • It is designed to SUPPLEMENT THE SEAT BELT. It is not a substitute for the seat belt. • The AIRBAG provides additional protection for the driver in a FRONTAL COLLISION. • It is NOT designed to inflate in most side, rear, or rollover crashes. • The SRS AIRBAG SYSTEM is operational if the "AIRBAG" light, in the instrument panel, illuminates briefly when the ignition key is turned ON. • However, if any of the following conditions occur see your nearest SUBARU dealer immediately. 1. The "AIRBAG" light does not operate when the key is turned ON. 2. The "AIRBAG" light remains lit after the key is first turned ON. 3. The "AIRBAG" light illuminates while driving. 4. The SRS AIRBAG SYSTEM has deployed. • TEN YEARS AFTER THE DATE OF VEHICLE MANUFACTURE AS NOTED ON THE CERTIFICATION PLATE, THE SRS AIRBAG SYSTEM MUST BE INSPECTED BY A SUBARU DEALER. • See your owner's manual for more information about the SRS AIRBAG SYSTEM. PRECAUTION: TOUJOURS BOUCLER VOTRE CEINTURE DE SECURITE • Cette voiture est équipée d'un COUSSIN D'AIR pour le conducteur comme SYSTÈME DE RETENUE SUPPLÉMENTAIRE (SRS). • Il est conçu pour compleménter la CEINTURE DE SÉCURITÉ. Il ne s'agit pas d'un système de remplacement pour la ceinture de sécurité. • Le COUSSIN D'AIR fournit une protection supplémentaire pour le conducteur en cas de COLLISION FRONTALE. • Il n'est pas conçu pour se gonfler dans la plupart des accidents avec impact latéral, arrière ou retournement. • Le SYSTÈME DE COUSSIN D'AIR est opérationnel si le voyant "AIRBAG", dans le tableau de bord, s'illumine brièvement lorsque le contact d'ignition est placé à la position "ON". • Toutefois, consultez immédiatement le concessionnaire SUBARU le plus proche dans l'un des cas suivants; 1. Le voyant "AIRBAG" ne s'allume pas lorsque l'on met le contact. 2. Le voyant "AIRBAG" reste allumé lorsque le contact a été mis. 3. Le voyant "AIRBAG" s'allume pendant la conduite. 4. Le SYSTÈME DE COUSSIN D'AIR s'est déployé. • DIX ANS APRÈS LA DATE DE FABRICATION DU VÉHICULE, NOTÉE SUR LA PLAQUE DE CERTIFICATION, LE SYSTÈME DE COUSSIN D'AIR (SRS) DOIT ÊTRE INSPECTÉ PAR UN CONCESSIONNAIRE SUBARU. • Reportez-vous à votre manuel du conducteur pour de plus amples renseignements sur le SYSTÈME DE COUSSIN D'AIR (SRS).	

Fig. 11

④	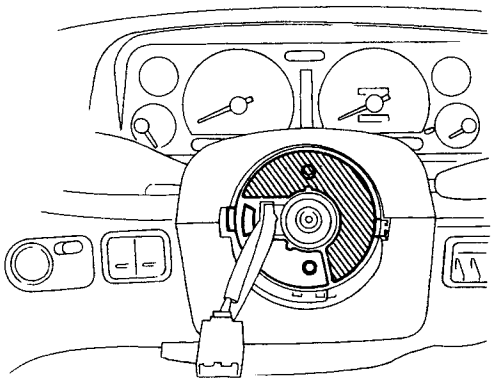 C5-358-1	CAUTION [BEFORE INSTALLING] 1. POINT FRONT WHEELS STRAIGHT AHEAD. 2. ROTATE 2.65 TURNS FROM RIGHT END STOP. 3. ALIGN MATCH-MARKS (CENTER MARKS: ▼ ▲). 4. READ SERVICE MANUAL.
⑤	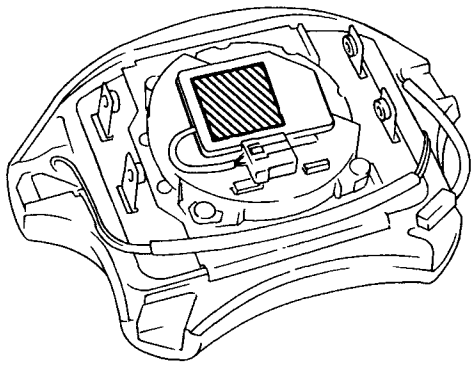 C5-358-2	AIRBAG MODULE 警 告 この部品は分解、修理、他車への取り付けをしないで下さい。 取り扱い・交換・廃棄方法は整備解説書に従って下さい。 WARNING To prevent personal injury. do not dismantle, repair or install in another vehicle. Service or dispose as directed in the service manual. ATTENTION pour éviter tout risque de blessures corporelles: Ne pas démonter, réparer, installer dans un autre véhicule. L'entretenir ou le remplacer comme indiqué dans le manual d'entretien. ACHTUNG Zur Vermeidung von Verletzungen. Nicht zerlegen, reparieren oder in einem anderen Fahrzeug installieren. Wartung und Ausbau wie im Reparaturhandbuch beschrieben.
⑥	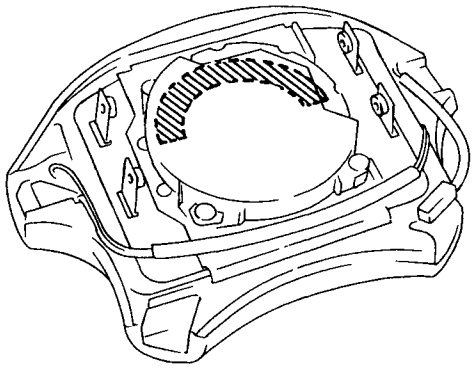 C5-358-3	AIRBAG GAS GENERATOR UT 10225 US-DOT-E-8214 BAM . PT_1 . 0432 BRUTTOGEWICHT 620g. THIS GAS GENERATOR SHOULD ONLY BE INSTALLED IN VEHICLES EQUIPPED WITH AIRBAG SYSTEM AND IS TO BE INSTALLED AND/OR DISASSEMBLED ONLY BY TRAINED PERSONNEL. CONTENTS ARE POISONOUS AND EXTREMELY FLAMMABLE. DO NOT DISMANTLE, INCINERATE, OR BRING INTO CONTACT WITH ELECTRICITY, OR STORE AT TEMPERATURES EXCEEDING 200°F. FIRST AID: IF CONTENTS ARE SWALLOWED, INDUCE VOMITING: FOR EYE CONTACT, FLUSH EYES WITH WATER FOR 15 MIN. IN EVERY CASE GET PROMPT MEDICAL ATTENTION. DER GASGENERATOR DARF NUR FÜR INSASSEN-RÜCKHALTESYSTEME MIT LUFTSACK IN KRAFTFAHRZEUGE MONITIER WERDEN. DIE MONTAGE UND DEMONTAGE DES GASGENERATORS DARF NUR VON DAFÜR GESCHULTEM PERSONALVORGENOMMEN WERDEN. INHALT IST GIFTIG UND ÄUSSERST FEUERGEFÄHRLICH. NICHT ÖFFNEN, VERBREMENEN, ELEKTRISCHEN STROM ANLEGEN ODER BEI GTEMPERATUREN [UBER 200°F LAGERN. ERSTE HILFE: WENN INHALT VERSCHLUCKT WURDE, ERBRECHEN HERHERBEIFÜHREN; BEI AUGENKONTAKT DIE AUGEN 15 MINUTEN MIT WASSER SPÜEN. I JEDEM FALL SICHT SOFORT IN ÄRTZLICHE BEHANDLUNG BEGEBEN. SUBARU DEUTSCHLAND GmbH-DUSSELDORF MORTON INTERNATIONAL, INC. OGDEM, USA DANGER ACHTUNG ATTENTION

Fig. 12

S SPECIFICATIONS AND SERVICE DATA

1. Inspection and Replacement Standards

1. VEHICLES WHICH BECOME INVOLVED IN A COLLISION

If the vehicle equipped with an SRS airbag system is damaged in a collision, the airbag system parts must be checked and replaced in accordance with the following standards:
After faulty parts are replaced, the warning light operation must be checked.
- **When the ignition switch is turned ON, it lights up for 8 seconds and then it goes out for at least 30 seconds.**
- **The trouble code stored in memory must be erased after the check.**

2. AIRBAG MODULE

Inspection standard:
- The vehicle damaged in a collision (regardless of whether or not airbag is deployed).
- The designated trouble code is output during on-board diagnostics. (Refer to "Diagnostics" Section.)

Replacement standard:
- Airbag is deployed.
- The pad surface is scratched or cracked.
- Harness and/or connector is deformed or cracked, their circuits are broken, lead wire is exposed, etc.
- Mounting bracket is cracked or deformed.
- The module surface is fouled with foreign matter (grease, oil, water, cleaning solvent, etc.)
- Airbag module dropped to the floor/ground.
- Airbag module determined as faulty during on-board diagnostics.

3. FRONT SENSOR

Inspection standard:
- Check the front section (Refer to shaded area of vehicle in figure) for damage, regardless of whether or not airbag is deployed.

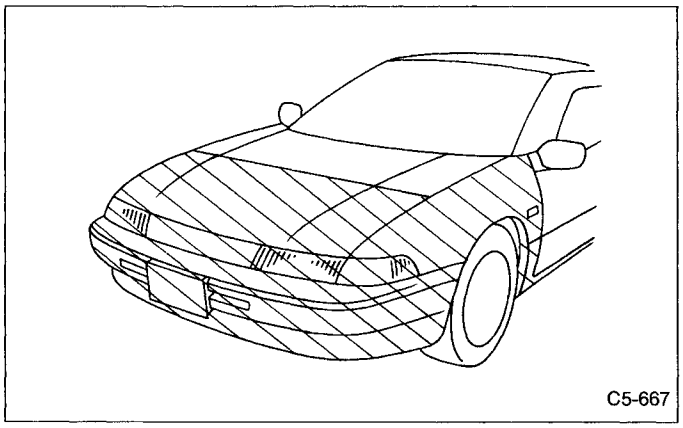

Fig. 13

- Check whether or not the designated trouble code is output during on-board diagnostics. (Refer to "Diagnostics" Section.)

Replacement standard:
- Bracket is deformed.
- Housing is cracked or deformed.
- The label (that identifies the manufacturing number) is peeled or deteriorated.
- Harness circuit is broken, lead wire is exposed, corrugated tube is cracked, etc.
- Front sensor determined as faulty as a result of diagnostics.
- Airbag is deployed.

4. MAIN HARNESS

Inspection standard:
- A vehicle damaged in a collision (regardless of whether or not airbag is deployed).
- The designated trouble code is output during on-board diagnostics. (Refer to "Diagnostics" Section.)

Replacement standard:
- Harness circuit is broken, lead wire is exposed, corrugated tube is cracked, etc.
- Connector is scratched or cracked.
- The designated trouble code is output during on-board diagnostics.

5. AIRBAG CONTROL MODULE

Inspection standard:
- A vehicle damaged in a collision (regardless of whether or not airbag is deployed).
- The designated trouble code is output during on-board diagnostics. (Refer to "Diagnostics" Section.)

Replacement standard:
- Control module is cracked or deformed.
- Mounting bracket is cracked or deformed.
- Connector is scratched or cracked.
- Control module dropped to the floor/ground.
- Control module determined as faulty during diagnostics.

6. COMBINATION SWITCH

Inspection standard:
- A vehicle damaged in a collision (regardless of whether or not airbag is deployed).
- The designated trouble code is output during on-board diagnostics. (Refer to "Diagnostics" Section.)

Replacement standard:
- Combination switch or steering roll connector is deformed or cracked.

7. STEERING WHEEL

Inspection standard:

- A vehicle damaged in a collision (regardless of whether or not airbag is deployed).

Replacement standard:

- Check steering wheel insert for cracks or deformities.

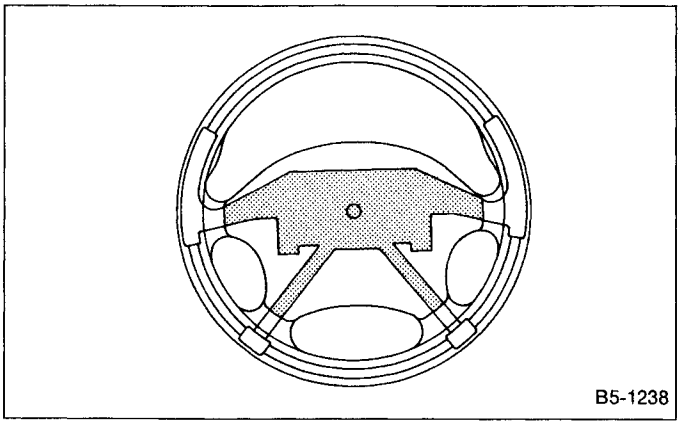

Fig. 14

- Check to ensure that new airbag module is properly installed in steering wheel.
- After installing airbag module, check to ensure that it is free of interference with steering wheel and that clearance between the two is equal at all points.

8. STEERING COLUMN ASSEMBLY

Inspection standard:

- A vehicle damaged in a collision (regardless of whether or not airbag is deployed).

Replacement standard:

- Check steering wheel free play in axial and radial directions:

Specifications:
Axial free play A
Less than ±6 mm (0.24 in)
Radial free play L
Less than ±7 mm (0.28 in)

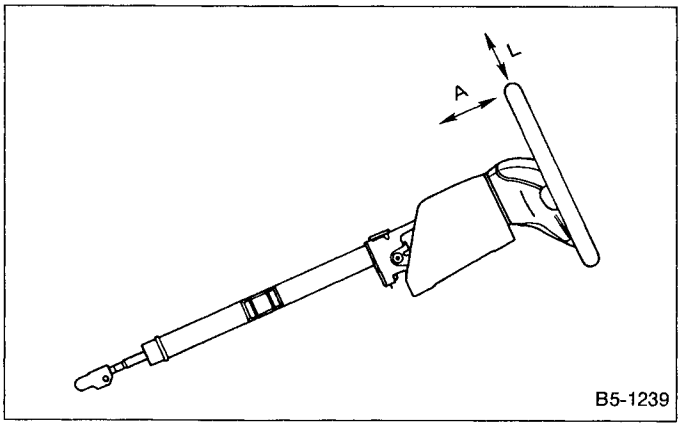

Fig. 15

- Check to ensure that clearance between capsule ① (at steering column) and cutout portion of column bracket ② on steering column upper side is within specifications.

Clearance between capsule and cutout portion of column bracket: L
Less than 0.5 mm (0.020 in)

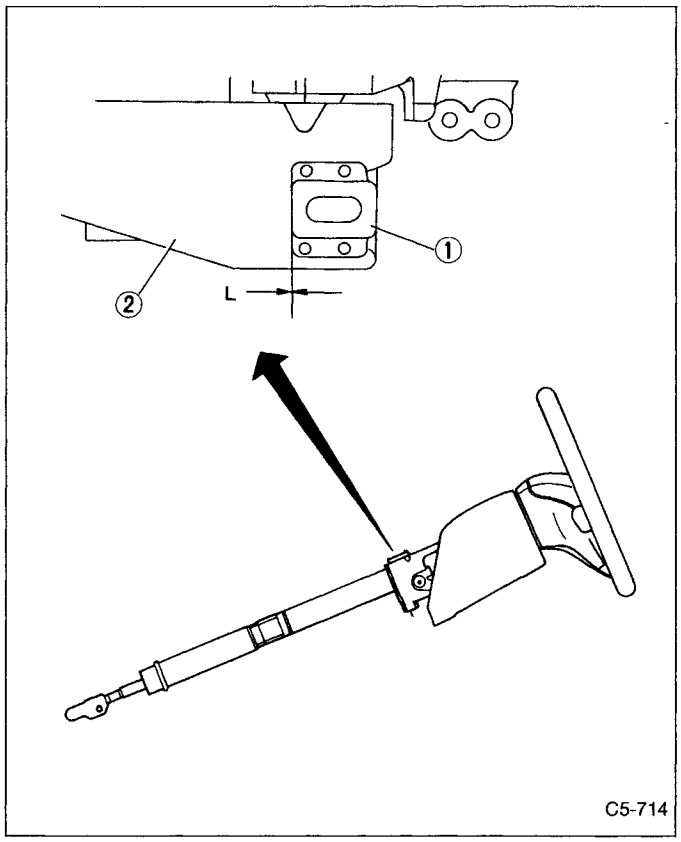

Fig. 16

C COMPONENT PARTS

1. SRS Airbag

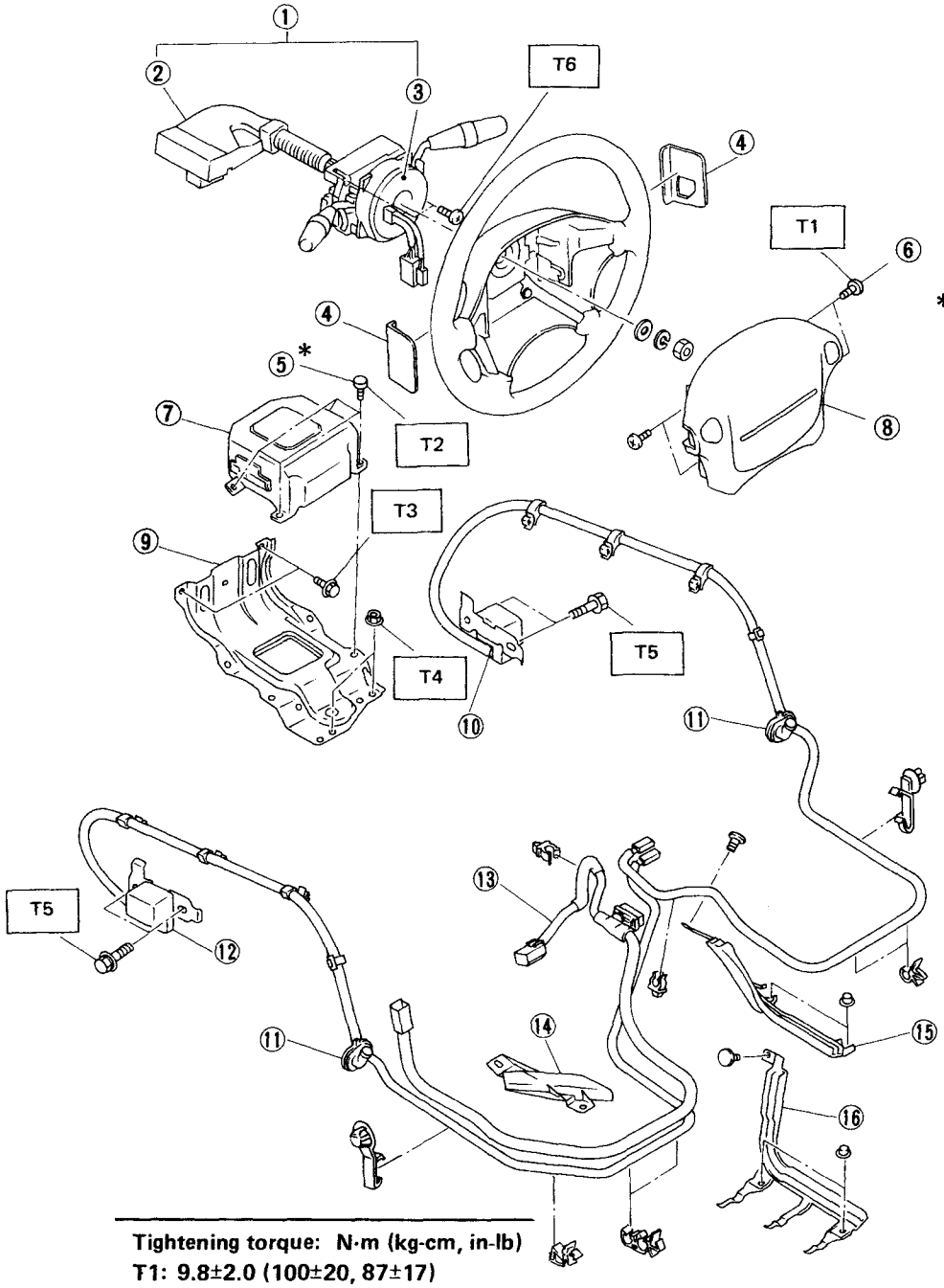

∗ : Replacement parts

1 Combination switch ASSY
2 Harness spool
3 Roll connector
4 Cover
∗5 TORX® bolt
6 TORX® bolt
7 Airbag control module
8 Airbag module ASSY
9 Airbag control module BRKT
10 Front sensor ASSY RH
11 Grommet
12 Front sensor ASSY LH
13 Airbag main harness
14 Protector LH
15 Protector H RH
16 Protector H LH

Tightening torque: N·m (kg-cm, in-lb)
T1: 9.8±2.0 (100±20, 87±17)
T2: 9.8±2.5 (100±25, 87±22)
T3: 9.8±2.5 (100±25, 87±22)
T4: 9.8±2.5 (100±25, 87±22)
T5: 24.5±6.9 (250±70, 217±61)
T6: 2.5±0.5 (25±5, 21.7±4.3)

C5-711

Fig. 17

W SERVICE PROCEDURE

1. SRS Airbag

A: GENERAL PRECAUTIONS

1) If any of the airbag system parts such as sensors, airbag module, control module and harness are damaged or deformed, replace with new genuine parts.

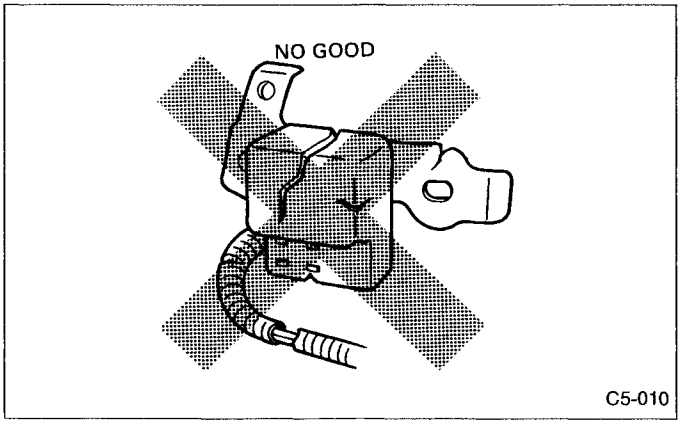

Fig. 18

2) When servicing, be sure to turn the ignition switch "off", disconnect the negative (–) battery terminal then the positive (+) terminal in advance, and wait for more than 20 seconds before starting work.

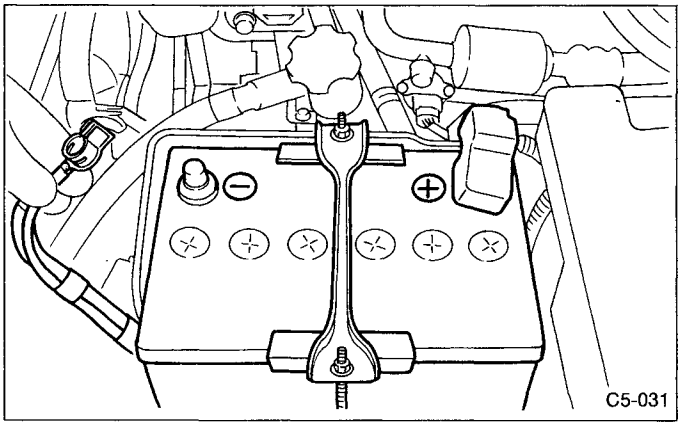

Fig. 19

3) When checking the system, be sure to use a digital circuit tester. Use of an analog circuit tester may cause the airbag to activate erroneously. Do not directly apply the tester probe to any connector terminal of the airbag. When checking, use a test harness.

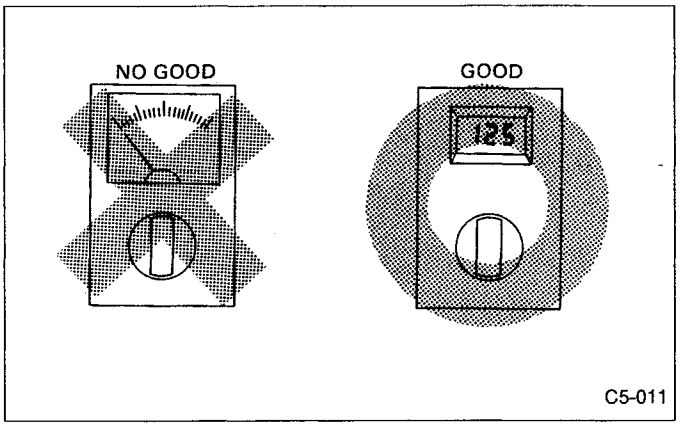

Fig. 20

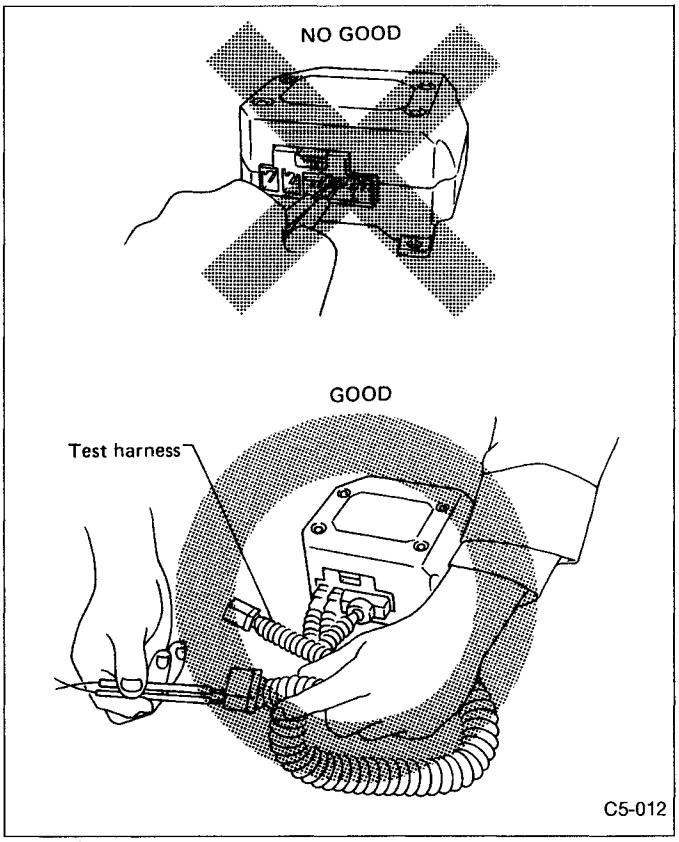

Fig. 21

4) Do not drop the airbag modulator parts, subject it to high temperatures over 90°C (194°F), or apply oil, grease, or water to it; otherwise, the internal parts may be damaged and its reliability greatly lowered.

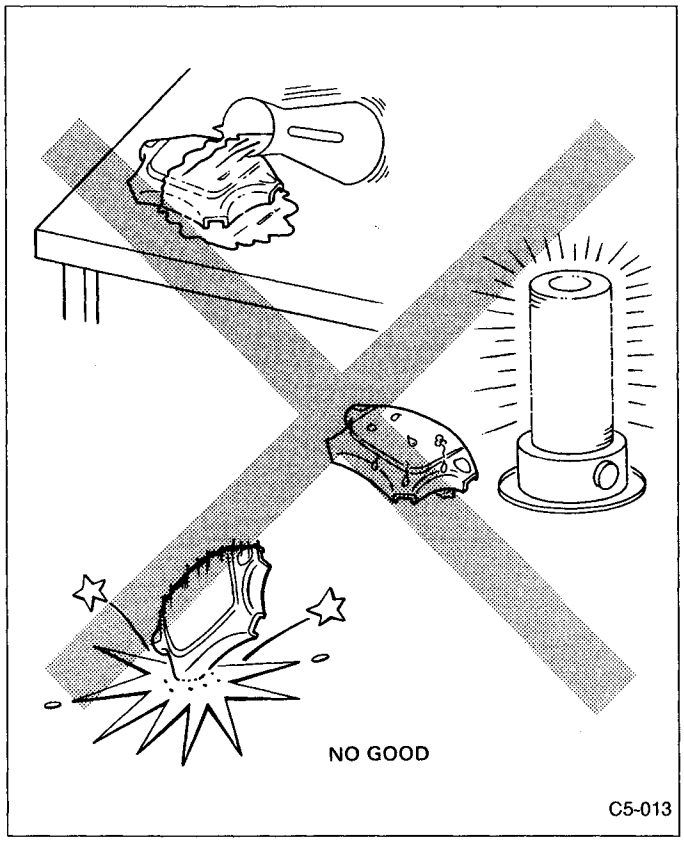

Fig. 22

5) If any damage or open is found on the SRS airbag system wire harness, do not attempt to repair using soldering, etc. Be sure to replace the faulty harness with a new genuine part.

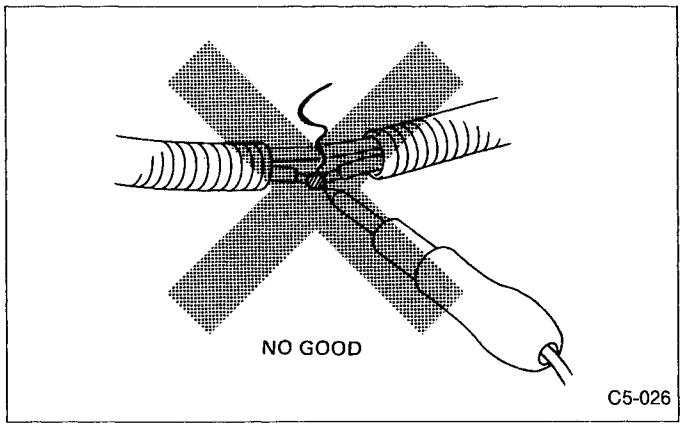

Fig. 23

6) Install the wire harness securely with the specified clips so as to avoid interference or jamming with other parts.

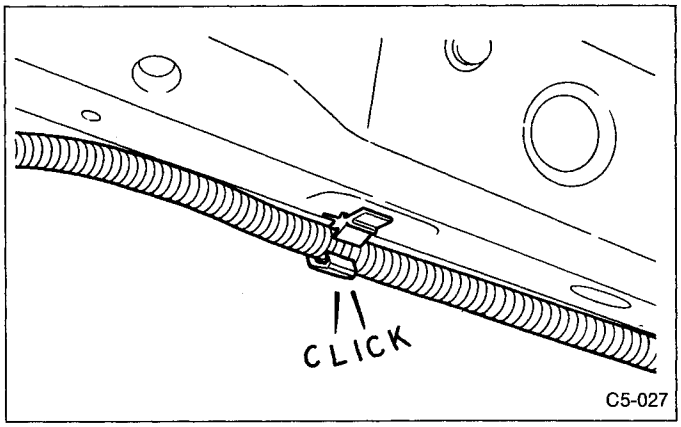

Fig. 24

7) Before connecting the airbag system to ground, make sure that the grounding terminal is free from paint and contamination.

8) Do not allow water or oil to come in contact with the connector terminals. Do not touch the connector terminals.

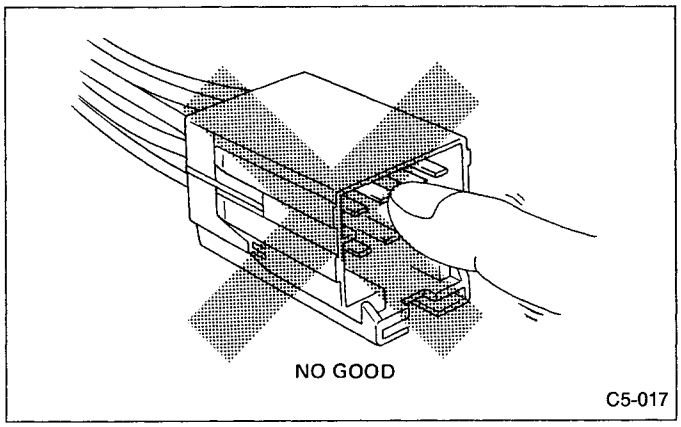

Fig. 25

B: AIRBAG MODULE

1. CAUTION

1) The airbag module must not be disassembled. The airbag module cannot be used again once inflated.

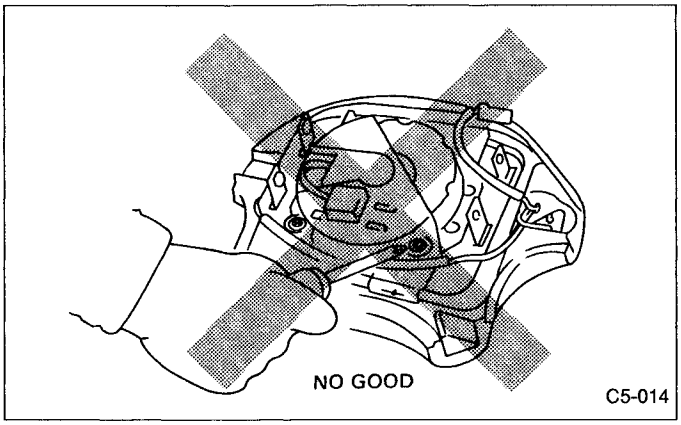

Fig. 26

2) When removing and installing the airbag module, the operator should stand, as much as possible, on the side of the airbag module.

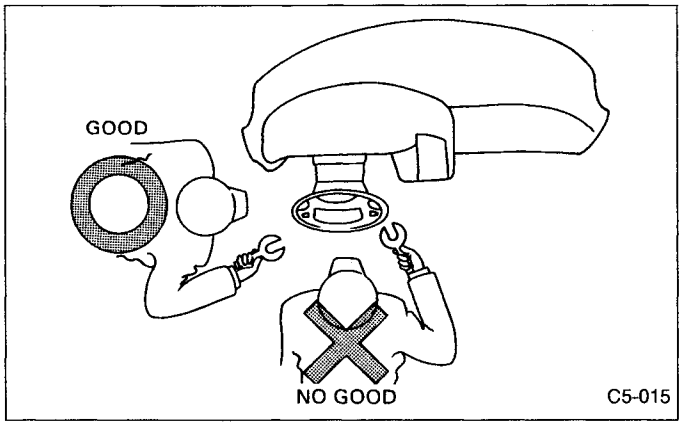

Fig. 27

3) After removal, the airbag module should be kept away from heat and light sources, and stored on a clean, flat surface to prevent from any damage to its lower structure.

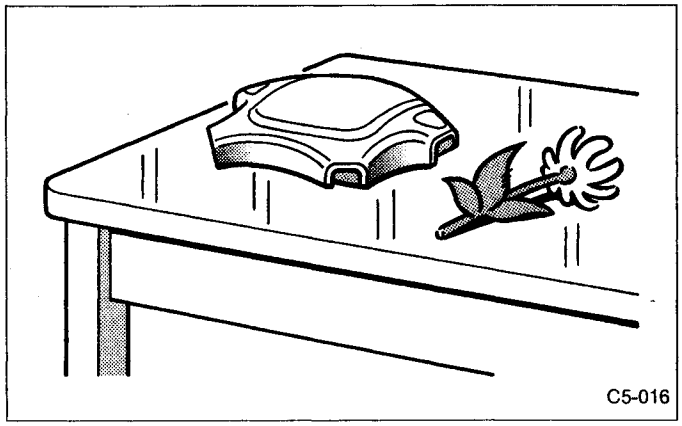

Fig. 28

4) Do not check airbag module continuity with airbag removed from the vehicle body.

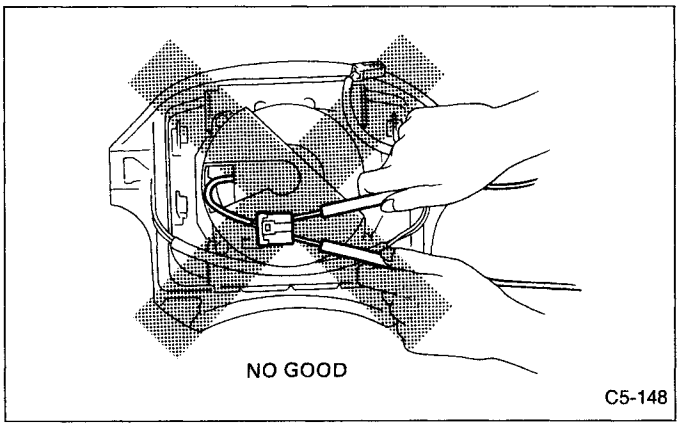

Fig. 29

5) Replace airbag module with a new one, should any of the following conditions develop.

- Pad surface is scratched or cracked.
- Connector harness is damaged.
- Inflator side structure of module is cracked or deformed.
- Module is excessively stained with water, oil, etc.
- Module was accidentally dropped.

6) When storing a removed airbag module, be sure to place it in parallel with floor with the pad facing up. Do not place it against a wall, or place anything on the pad; otherwise, a dangerous condition may be created if the module malfunctions.

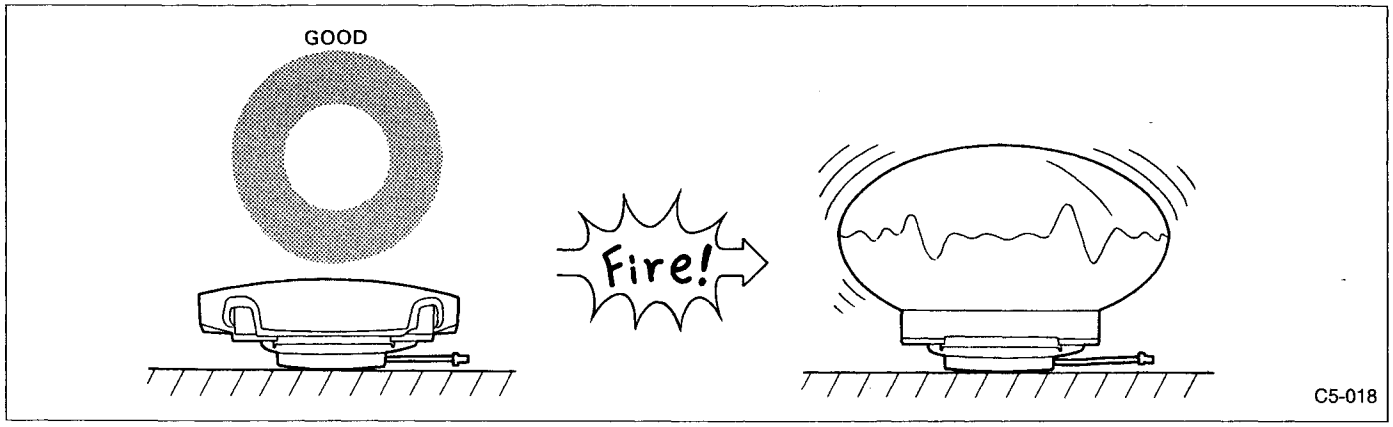

Fig. 30

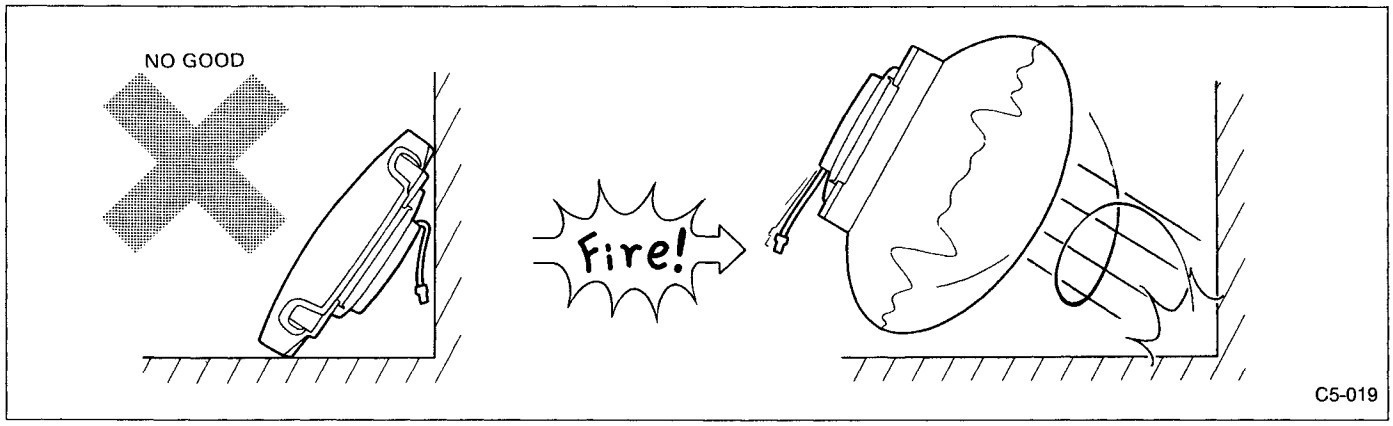

Fig. 31

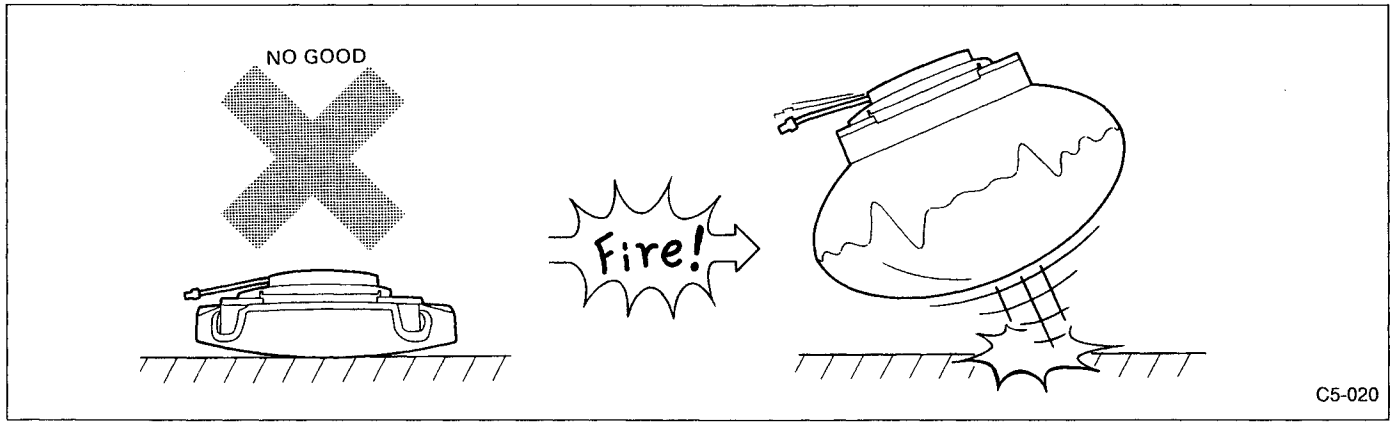

Fig. 32

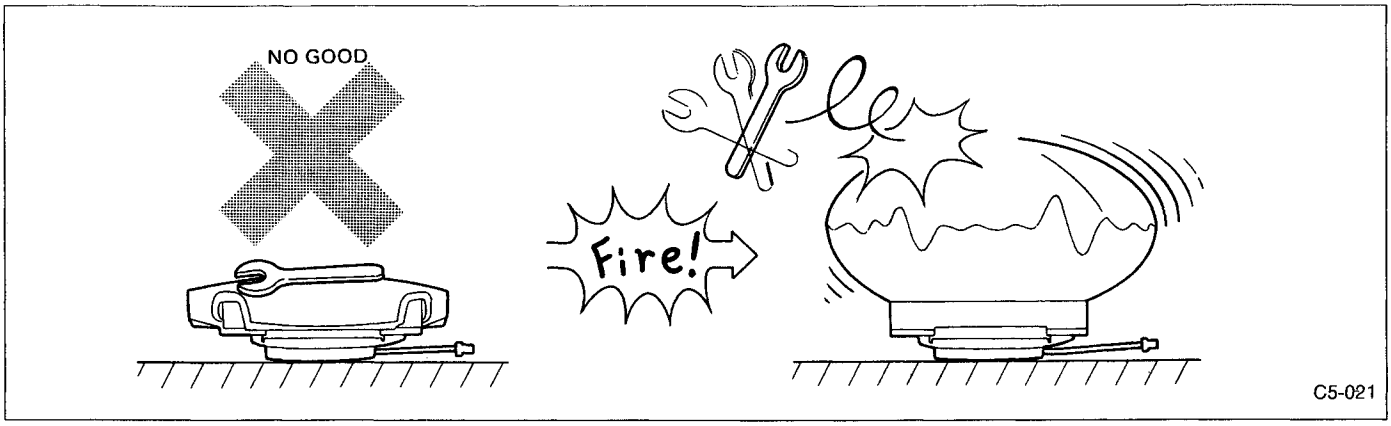

Fig. 33

2. REMOVAL

1) Set front wheels in straight ahead position.
2) Turn ignition switch off.
3) Disconnect ground cable from battery and wait for at least 20 seconds before starting work.
4) Remove covers from both sides of steering wheel. Using TORX® BIT T30 (Tamper resistant type), remove four TORX® bolts.

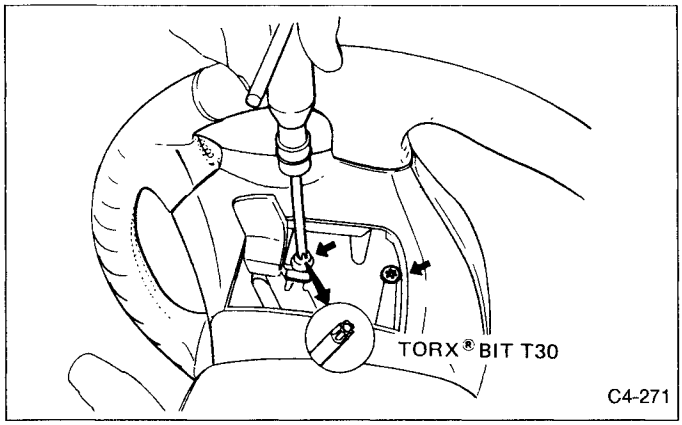

Fig. 34

5) Disconnect airbag and horn connectors on back of airbag module. <Refer to 5-5 [M1B6].>

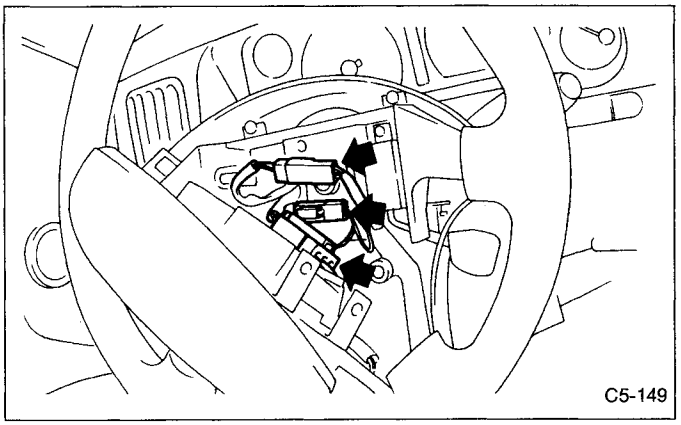

Fig. 35

6) Refer to 5-5 [W1B1] for handling of a removed airbag module.

3. INSTALLATION

First, make sure that ignition switch is off. Installation is in reverse order of removal procedures.
Do not allow harness and connectors to interfere or get caught with other parts.

C: FRONT SENSOR

1. CAUTION

1) If the front end of the vehicle body is damaged by a collision, be sure to check the left and right front sensors, even if the airbag was not inflated. If any damage to the sensor or any deformation of the sensor mount is found, replace with a new genuine part.

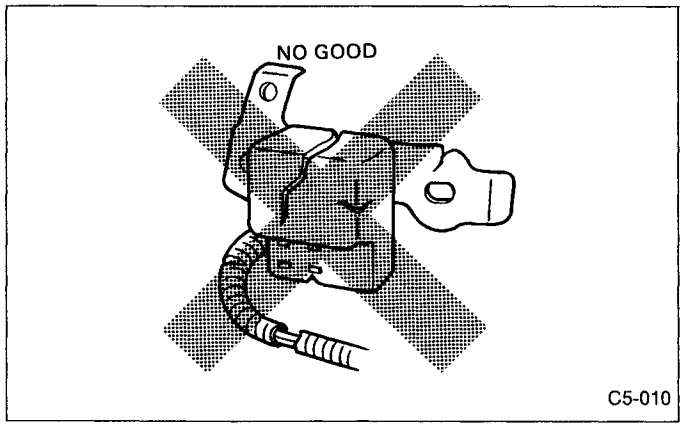

Fig. 36

2) When painting or performing sheet metal work on the front part of vehicle body, including the front wheel apron, front fender and front side frame, take utmost care not to apply dryer heat, painting mist, or the flame of the welding burner directly to the front sensors and wire harness of the airbag system.

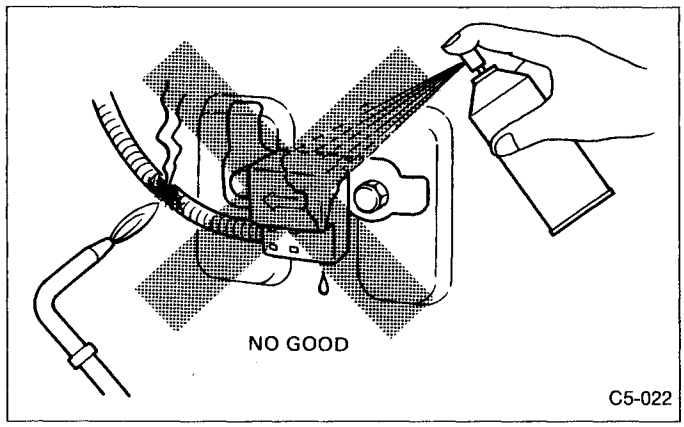

Fig. 37

2. REMOVAL

1) Turn ignition switch off.
2) Disconnect ground cable from battery and wait for at least 20 seconds before starting work.
3) Remove lower cover and lower cover panel. <Refer to 5-4 [W3A0].>
Disconnect airbag connector at harness spool.

Do not reconnect airbag connector at spool until front sensors are securely re-installed.

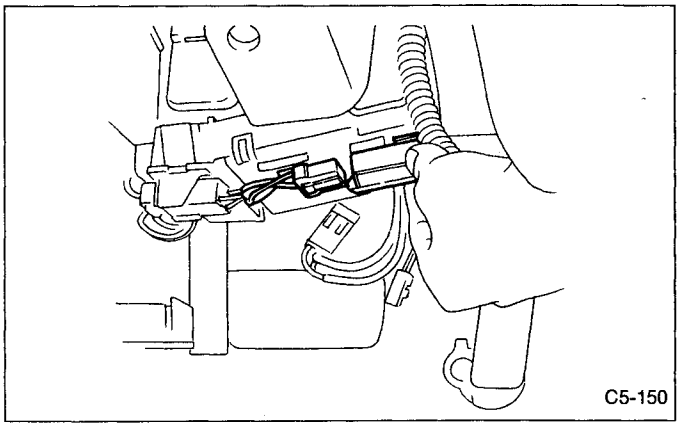

Fig. 38

4) Remove console panel and base on driver seat side. Disconnect 2-pin blue connector (right side front sensor) and 2-pin orange connector (left side front sensor) from airbag control module. <Refer to 5-5 [M1B6].>

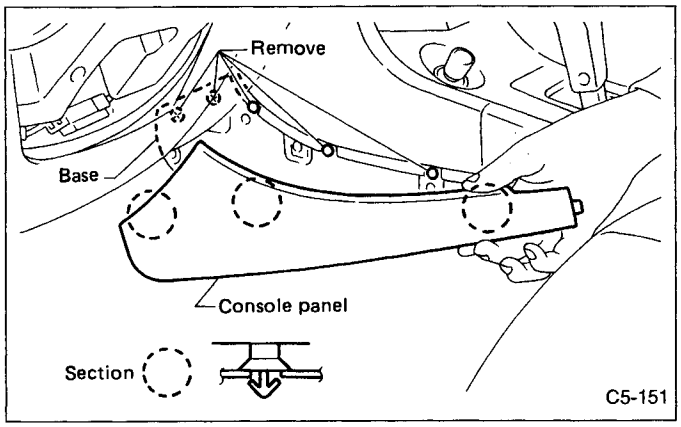

Fig. 39

5) Roll up floor mat and remove side sill lower cover. <Refer to 5-3 [W9A0].> Remove front sensor harness from clip and protector.

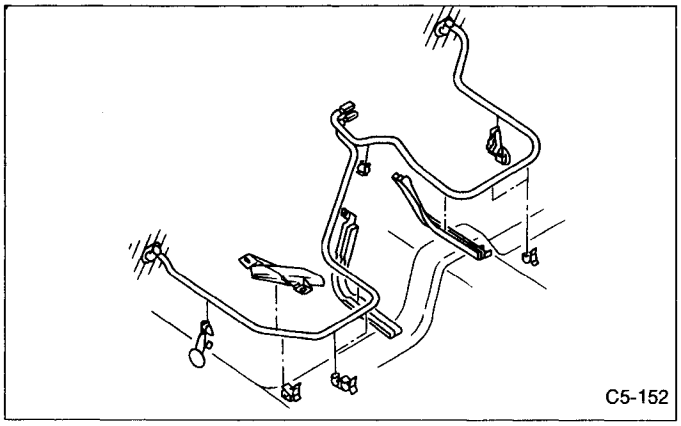

Fig. 40

6) Remove front wheels.
7) Remove front mud guard. <Refer to 5-1 [W12A1].>
8) Remove wiring harness bracket.

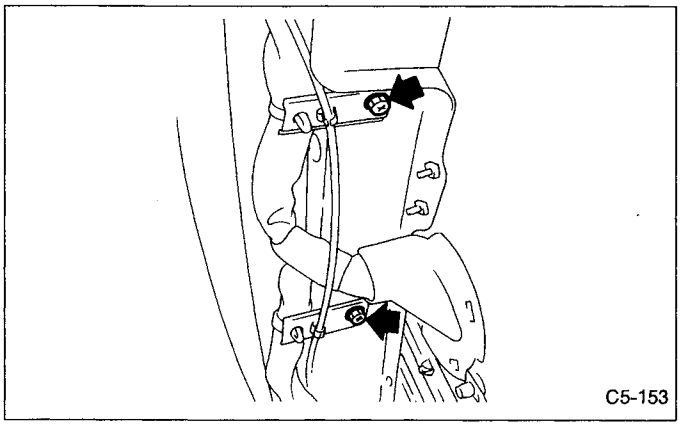

Fig. 41

9) Pry off four clips securing front sensor harness with standard screwdriver.

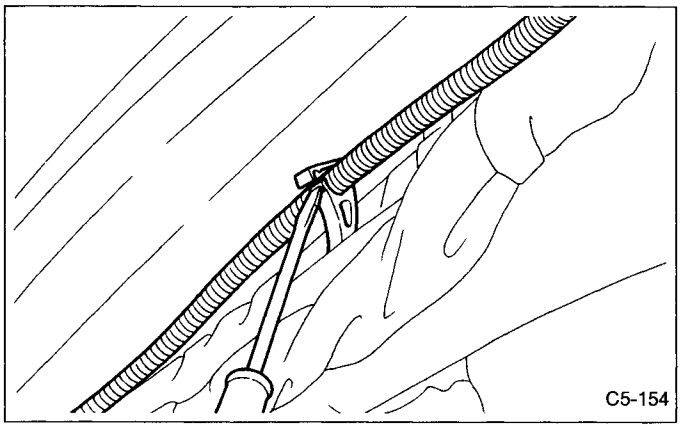

Fig. 42

10) Remove grommet.

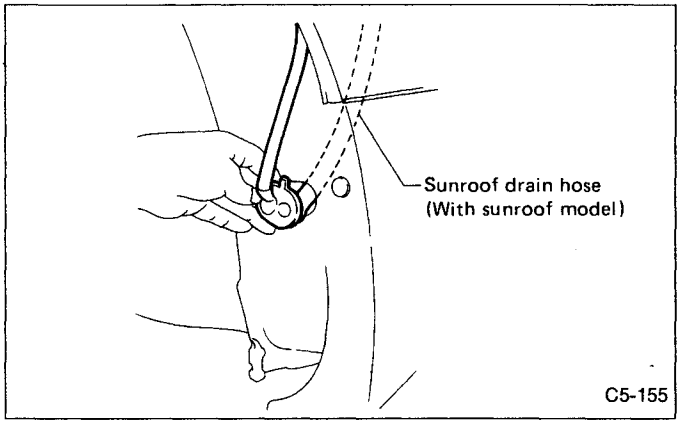

Fig. 43

11) Remove front sensor unit.

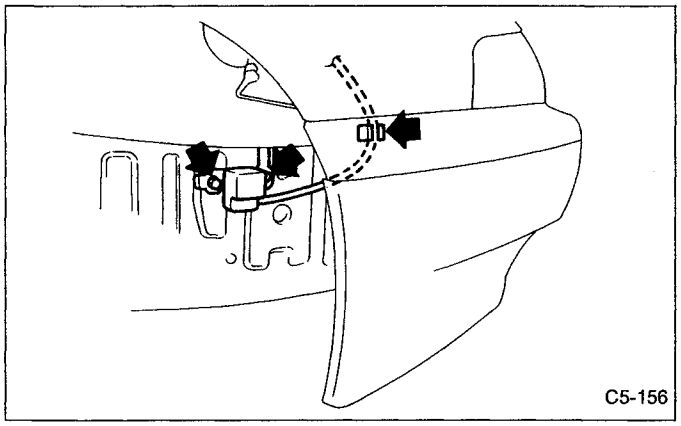

Fig. 44

3. INSTALLATION

Installation is in the reverse order of removal procedures. On models equipped with sunroof, route sunroof drain hose through grommet during grommet installation.

D: MAIN HARNESS

1. REMOVAL

1) Turn ignition switch off.
2) Disconnect ground cable from battery and wait for at least 20 seconds before starting work.
3) Remove lower cover and lower cover panel. <Refer to 5-4 [W3A0].>
Disconnect airbag connector at harness spool.

Do not reconnect airbag connector at spool until front sensors are securely re-installed.

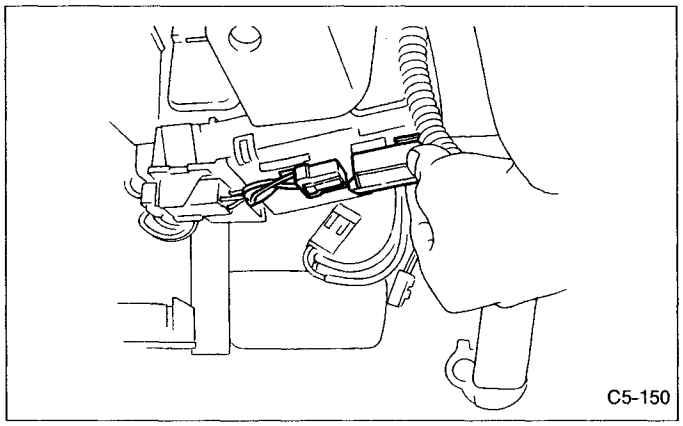

Fig. 45

4) Remove console panel and base on driver seat side. Disconnect 12-pin yellow connector from airbag control module. <Refer to 5-5 [M1B6].>

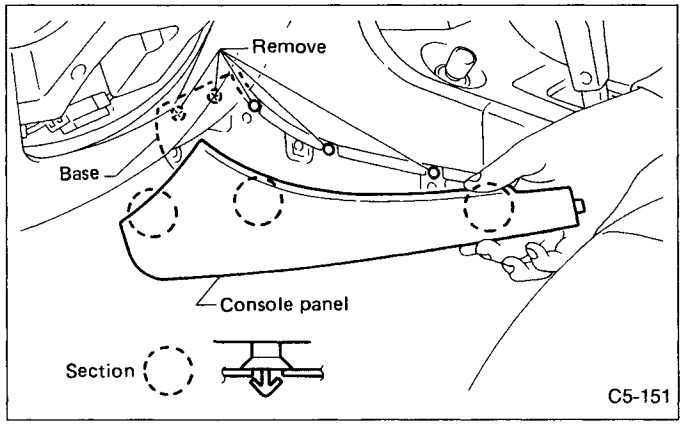

Fig. 46

5) Disconnect body harness connector (B58) from connector (AB1).

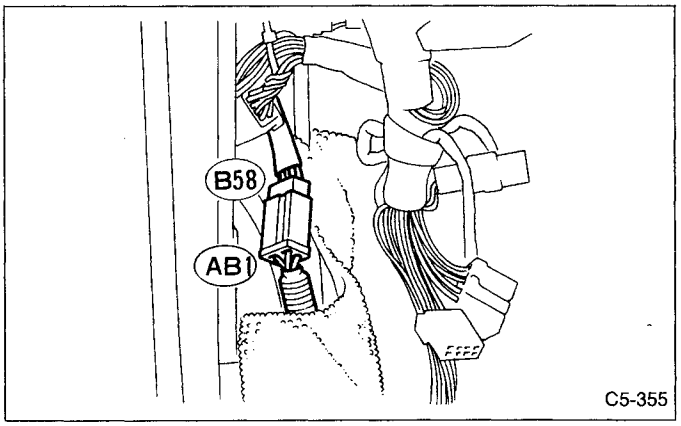

Fig. 47

6) Roll-up floor mat and remove side sill lower cover (LH side). <Refer to 5-3 [W9A0].> Remove main harness from clip and protector.

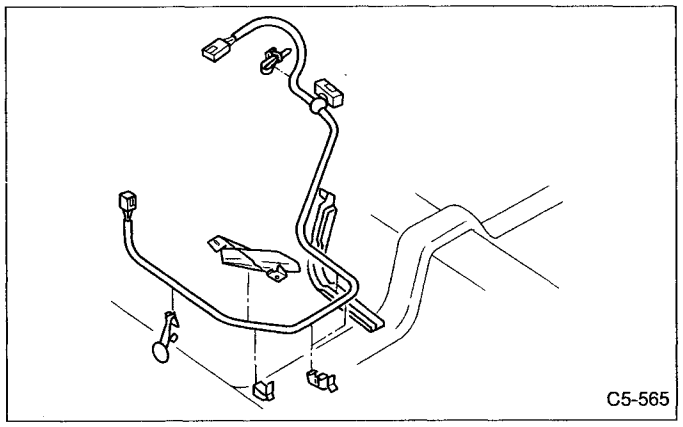

Fig. 48

2. INSTALLATION

Installation is in the reverse order of removal procedures.

E: AIRBAG CONTROL MODULE

1. CAUTION

1) Do not disassemble the airbag control module.

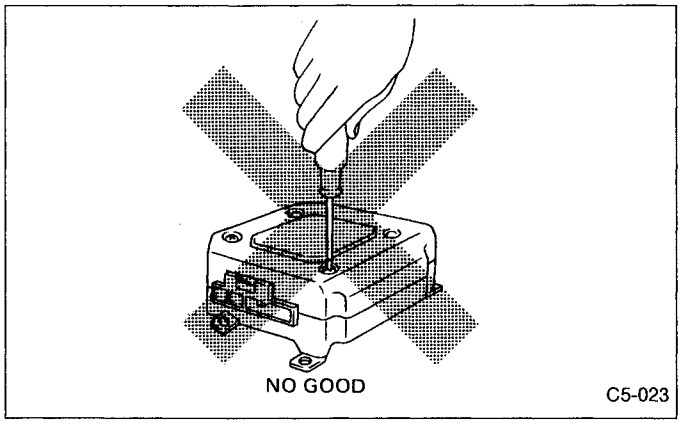

Fig. 49

2) If the airbag control module is deformed, or if water damage is suspected, replace the airbag control module with a new genuine part.

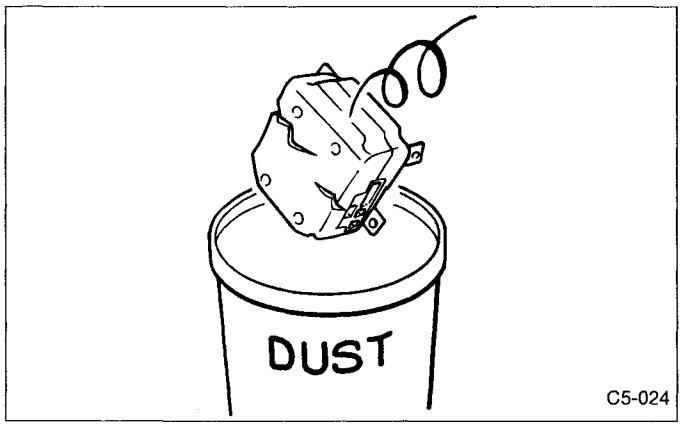

Fig. 50

3) After removal, keep the airbag control module on a dry, clean surface away from heat and light sources, and moisture and dust.

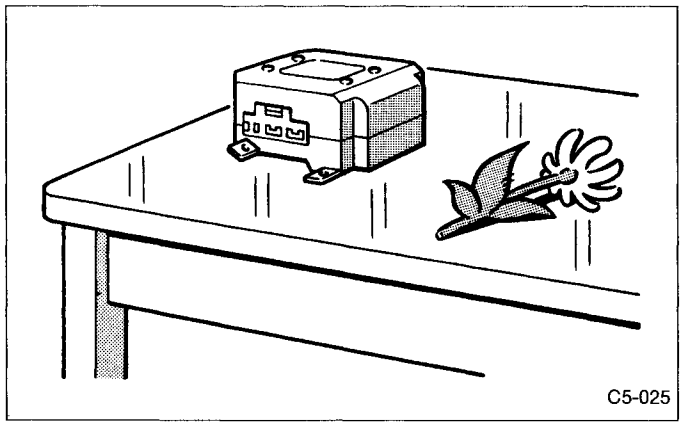

Fig. 51

2. REMOVAL

1) Turn ignition switch off.
2) Disconnect ground cable from battery and wait for at least 20 seconds before starting work.
3) Remove lower cover and lower cover panel. <Refer to 5-4 [W3A0].>
Disconnect airbag connector at harness spool.

Do not reconnect airbag connector at spool until airbag control module is securely re-installed.

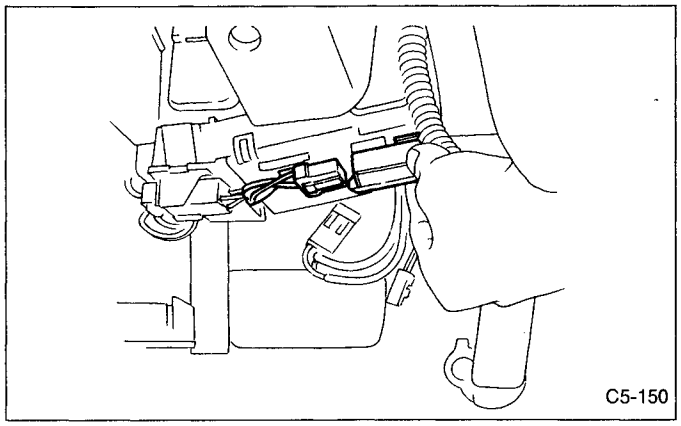

Fig. 52

4) Remove console box and instrument panel. <Refer to 5-4 [W3A0].>
5) Disconnect 12-pin yellow, 2-pin blue and 2-pin orange connectors from airbag control module. <Refer to 5-5 [M1B6].>

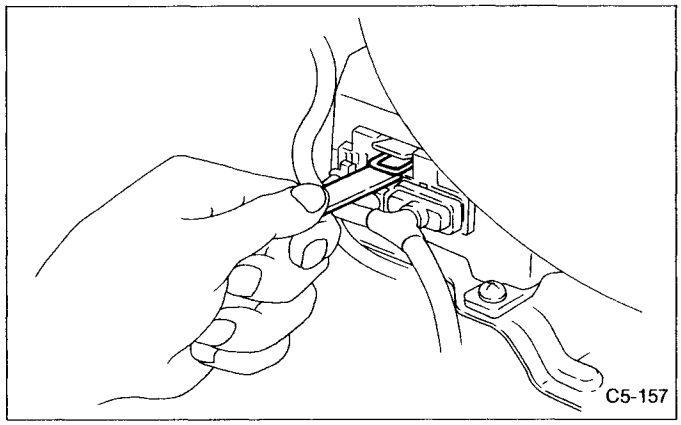

Fig. 53

6) Remove control module from bracket. Using TORX® BIT T30 (Tamper resistant type), remove four TORX® bolts. Discard the old TORX® bolts, and replace with new ones during reassembly.

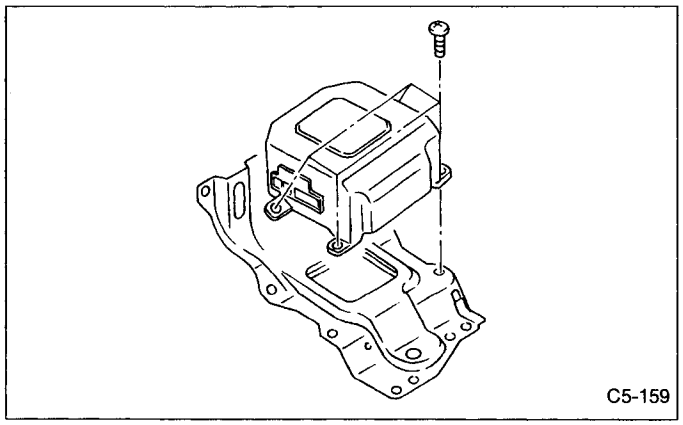

Fig. 54

3. INSTALLATION

Reassemble in the reverse order of the removal procedures. Be sure to fully secure all SRS airbag system connectors during reassembly and confirm that all green double lock mechanisms are engaged.

F: COMBINATION SWITCH ASSY

1. CENTERING ROLL CONNECTOR

Before installing combination switch assembly and steering gearbox, make sure to center roll connector built into combination switch assembly.

1) Make sure that front wheels are positioned straight ahead.

2) Install gearbox, steering shaft and combination switch assembly properly. Turn roll connector pin **clockwise** until it stops.

3) Then, back off roll connector pin approximately 2.65 turns until "CENTER" appears on indicator with "◀" marks aligned.

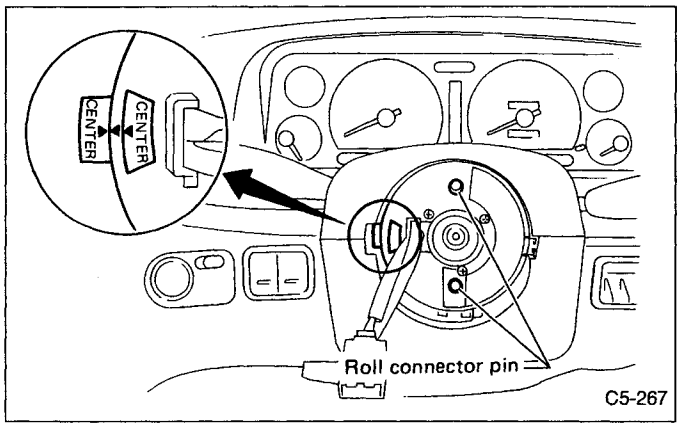

Fig. 55

2. REMOVAL

1) Turn ignition switch off.

2) Disconnect ground cable from battery and wait for at least 20 seconds before starting work.

3) Remove lower cover and lower cover panel <Refer to 5-4 [W3A0].> Disconnect airbag connector at harness spool. Remove harness spool from steering column.

Disconnect combination switch connector (B55) (B56) (B57).

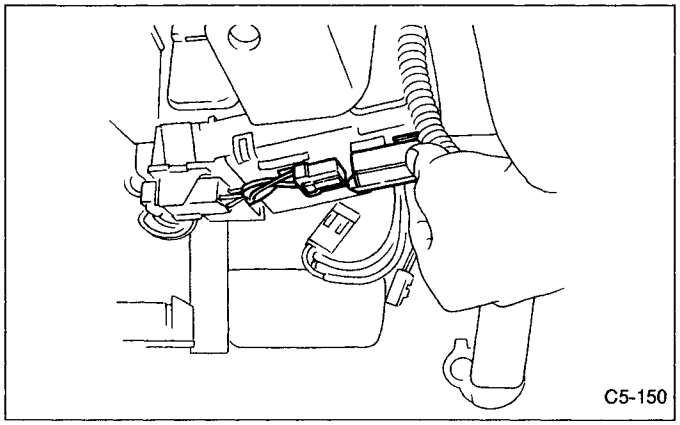

Fig. 56

4) Set front wheels in straight ahead position. Remove covers from both sides of steering wheels. Using TORX® BIT T30 (Tamper resistant type), remove four TORX® bolts.

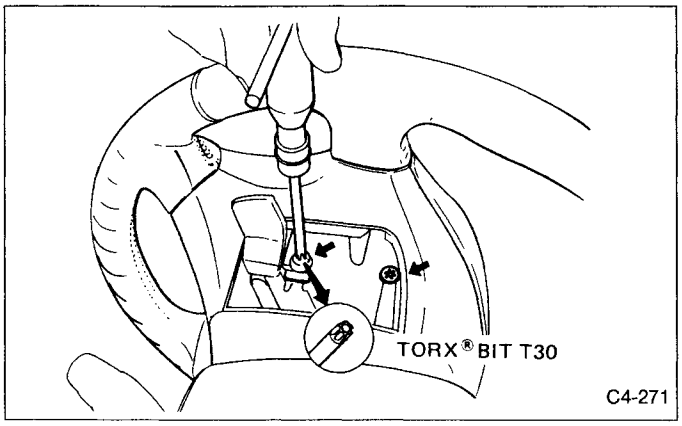

Fig. 57

5) Disconnect airbag connector <Refer to 5-5 [M1B6].> and horn connector on back of airbag module. Remove airbag module, and place it with pad side facing upward. <Refer to 5-5 [W1B1].>

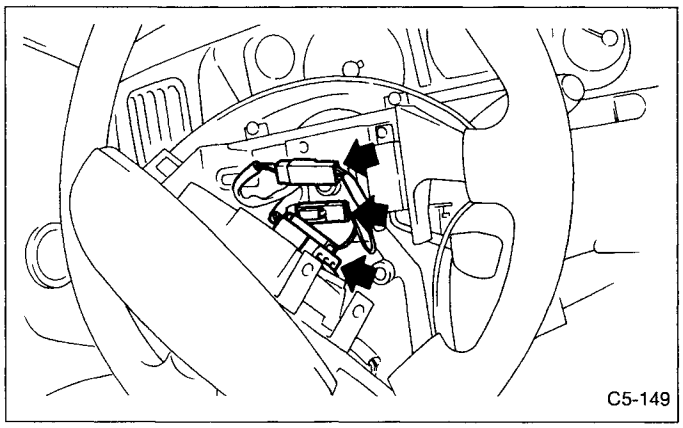

Fig. 58

6) Using steering puller, remove steering wheel.

Do not allow connector to interfere when removing steering wheel.

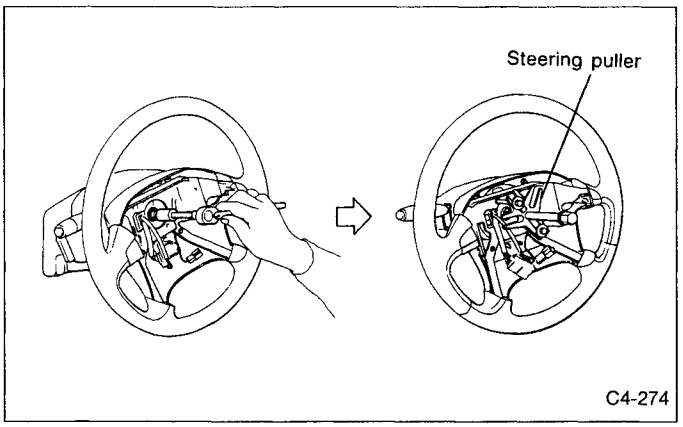

Fig. 59

7) Remove steering column covers. After removing two retaining screws, remove combination switch assembly.

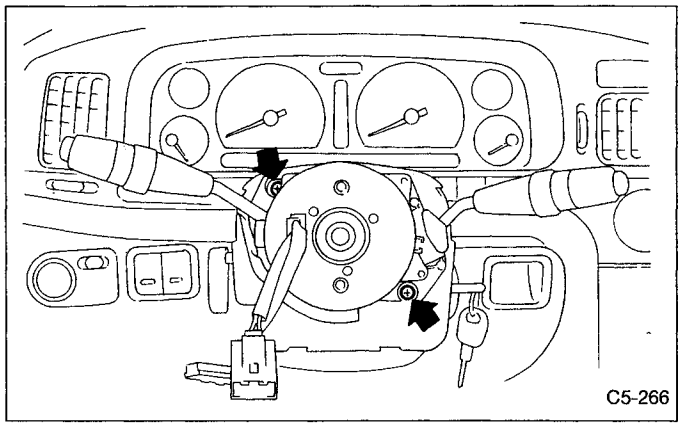

Fig. 60

3. INSTALLATION

1) Before installing combination switch assembly, check to ensure that combination switch is off and front wheels are set in the straight ahead position.

Failure to do this might damage roll connector.

2) Install column cover and center roll connector.

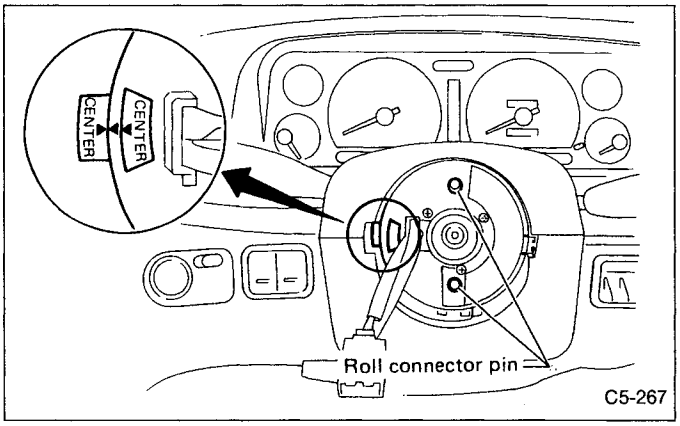

Fig. 61

3) Install steering wheel in neutral position. Carefully insert roll connector pin into hole on steering wheel.

If steering wheel angle requires fine adjustment, adjust tie-rod. <Refer to 4-3 [W3G0].>

4) Install airbag module and lower cover in the reverse order of removal.

T DIAGNOSTICS

1. On-board Diagnostic System

A: PRELIMINARY INSPECTION

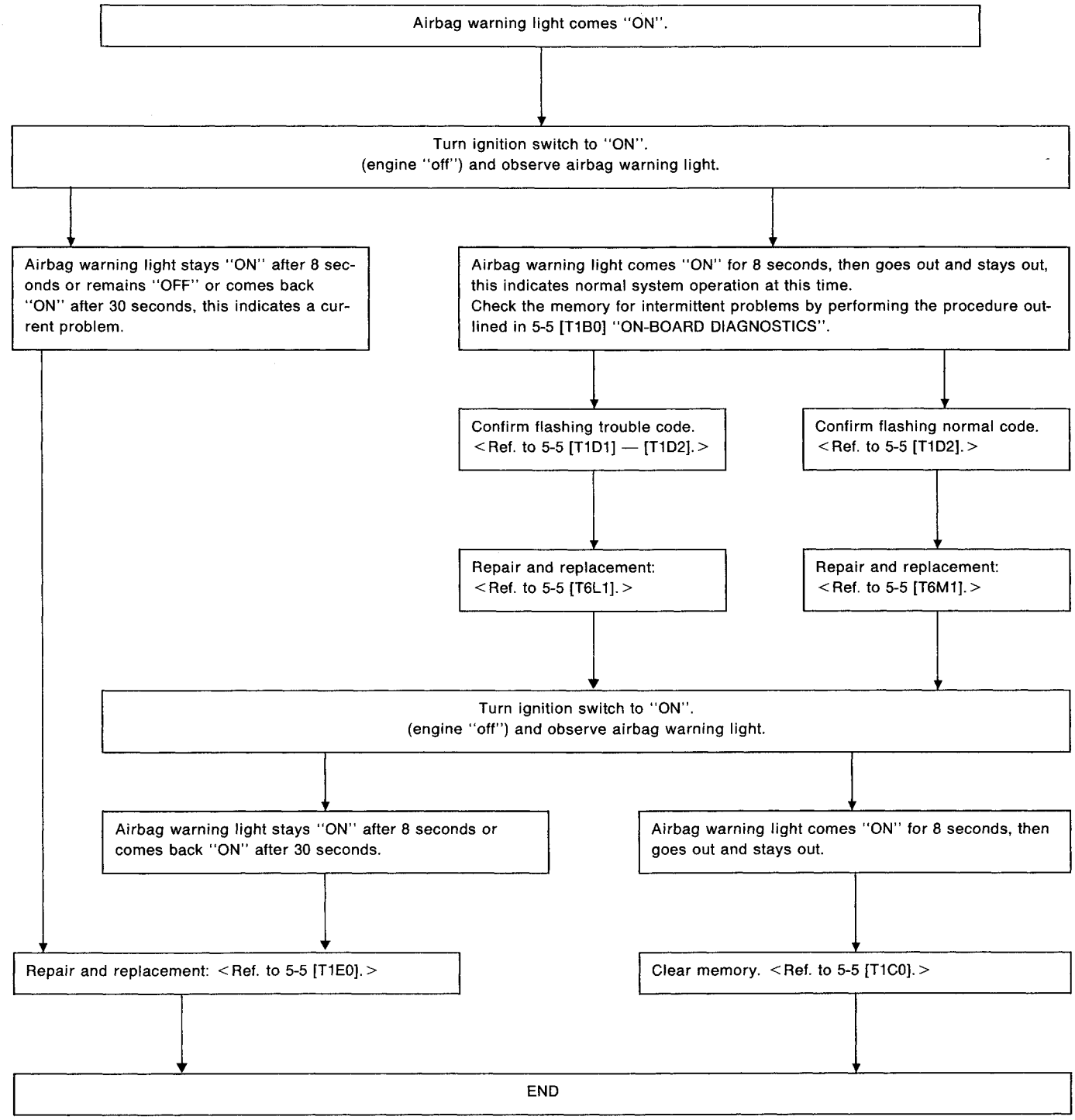

B: ON-BOARD DIAGNOSTICS

When the airbag system is in functioning condition, the airbag warning light will remain on for 8 seconds and go out when the ignition switch is set to ON.
If there is any malfunction, the airbag warning light will either stay on or off continuously. In such cases, perform on-board diagnostics in accordance with the specified procedure to determine trouble codes.
1) Turn ignition switch ON (with engine OFF).
2) Connect DIAG. terminal to No. 9 terminal of diagnosis connector located below pillar lower cover LH side.
3) Check in accordance with the trouble code indicated by the AIRBAG warning light. Record the trouble codes.

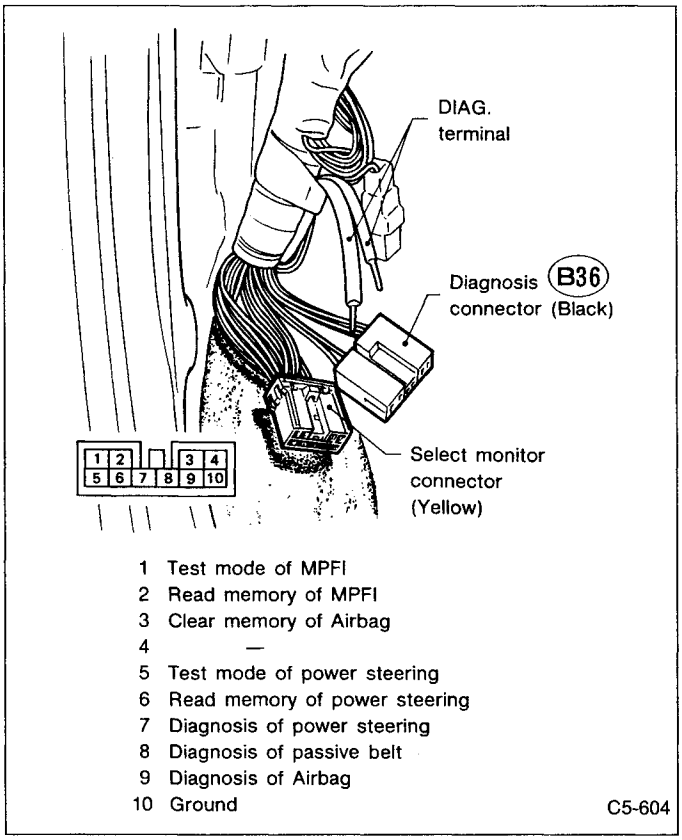

Fig. 62

4) Turn the ignition switch "OFF" and remove the DIAG. terminal from No. 9 terminal of diagnosis connector.

C: CLEAR MEMORY

After eliminating problem as per trouble code, clear memory as follows:
Make sure ignition switch is ON (and engine OFF). Connect one DIAG. terminal on diagnosis connector terminal No. 9. While warning light is flashing, connect the other DIAG. terminal on terminal No. 3 for at least three seconds.
After memory is cleared, normal warning light flashing rate resumes. (Warning light flashes every 0.6 seconds ON-OFF operation). Memory cannot be cleared if any problem exists.

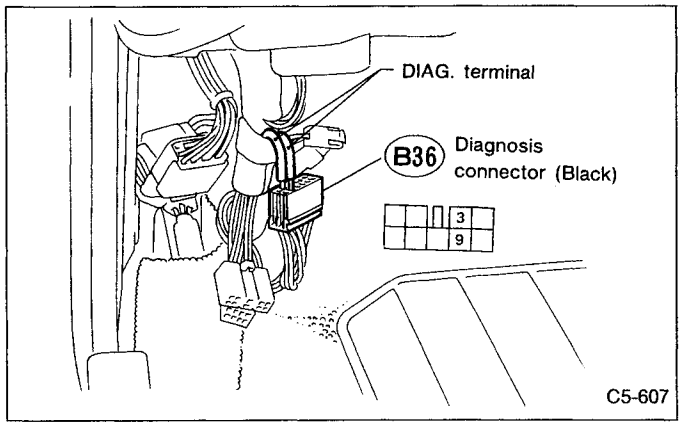

Fig. 63

D: TROUBLE CODES

1. LIST OF TROUBLE CODES

Trouble code		Memory function	Contents of diagnosis
02		Provided.	1) Front sensor harness is shorted. 2) Airbag main harness is shorted. 3) Airbag module harness is shorted. 4) Roll connector is shorted. 5) Airbag control module is faulty.
03		Provided.	1) Front sensor harness circuit is open. 2) Front sensor unit circuit is open.
11		Provided.	1) Airbag control module is faulty. 2) Airbag main harness circuit is open. 3) Fuse No. 8 is blown. 4) Body harness circuit is open.
12		Provided.	1) Airbag main harness circuit is open. 2) Airbag module harness circuit is open. 3) Roll connector circuit is open. 4) Airbag control module is faulty.
13		Provided.	1) Airbag main harness circuit is shorted. 2) Airbag module harness is shorted. 3) Roll connector circuit is shorted. 4) Airbag control module is faulty.
14		Not provided.	1) (AB2) and (AB7) are not connected properly. 2) (AB3) and (AB8) are not connected properly. 3) (AB4), (AB5) and (AB6) are not connected properly to airbag control module.
21		Provided.	Airbag control module is faulty.
23		Provided.	1) Airbag main harness is shorted to power supply. 2) Front sensor harness is shorted to power supply. 3) Airbag module harness is damaged. 4) Roll connector is shorted to power supply. 5) Airbag control module is faulty.
31		Not provided.	1) Airbag control module is faulty. 2) Airbag main harness circuit is open. 3) Fuse No. 16 is blown. 4) Body harness circuit is open.
Airbag warning light remains on.		Not provided.	1) Airbag warning light is faulty. 2) Airbag control module-to-airbag warning light harness circuit is shorted or open. 3) Grounding circuit is faulty. 4) Airbag control module is faulty. 5) (AB1) and (B58) are not connected properly.
Airbag warning light remains off.		Not provided.	1) Fuse No. 15 is blown. 2) Body harness circuit is open. 3) Airbag warning light is faulty. 4) Airbag main harness is faulty. 5) Airbag control module is faulty.
Warning light indicates trouble code, then normal code.	Flashing trouble code	Provided.	Airbag system component parts are faulty.
	Flashing normal code	Not provided.	1) Airbag connector is faulty. 2) Fuse No. 16 is blown. 3) Airbag main harness is faulty. 4) Airbag control module is faulty. 5) Body harness is faulty.

2. HOW TO READ TROUBLE CODE

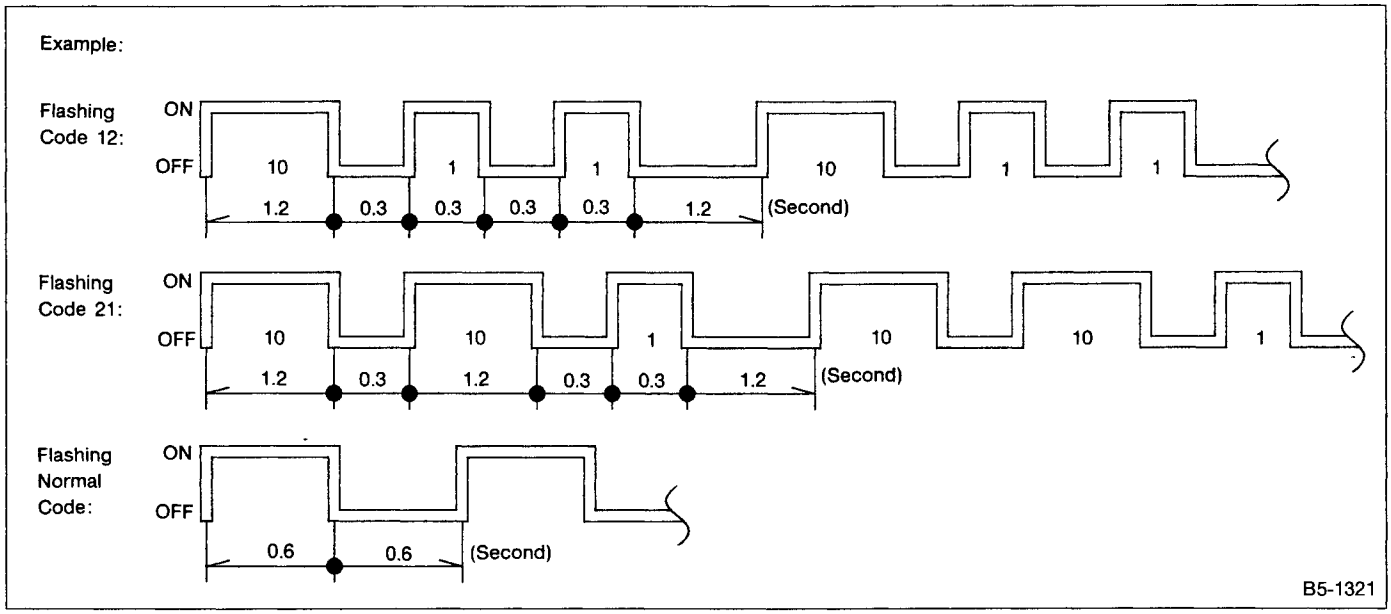

Fig. 64

E: BASIC DIAGNOSTICS PROCEDURE

Airbag warning light stays on after 8 seconds.
1) Perform on-board diagnostics. <Refer to 5-5 [T1B0].>
2) Are trouble codes 02, 12, 13, or 23 indicated? <Refer to 5-5 [T1D1].> Record the trouble codes.
3) If "NO", proceed with diagnostics and repair according to trouble code indicated then perform step 20.
4) If "YES", proceed by turning ignition switch "OFF", disconnecting the battery, and waiting 20 seconds. If codes 12 or 13 are indicated proceed to step 6. If codes 12 or 13 are not indicated proceed to step 5.
5) Remove lower cover and panel and connect test harness C connector (1C) to (AB8) <Refer to 5-4 [W3A0].> with airbag resistor attached to test harness C connector (3C). Turn ignition switch "ON". Does airbag warning light go "OFF" after 8 seconds and remain off for more than 30 seconds? See notes 1) and 2). (Refer to end of chart.) If "YES" proceed to step 6. If "NO" proceed to step 3. 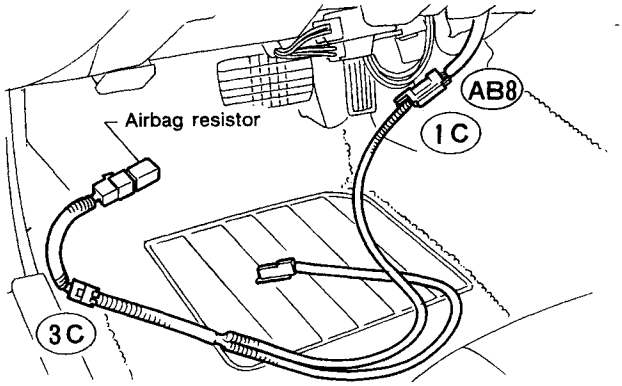   C5-606 *Fig. 65*
6) Remove airbag module and connect test harness C connector (1C) to (AB7). <Refer to 5-5 [W1B2].> Connect airbag resistor to test harness C connector (3C). 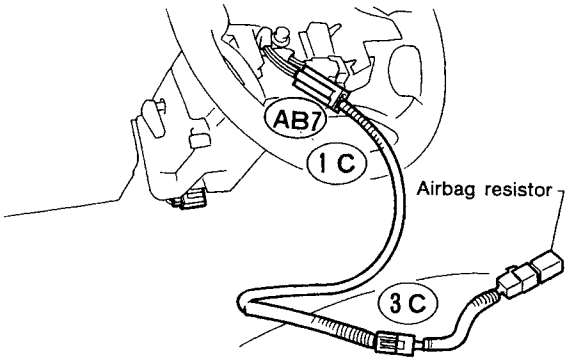   C5-606 *Fig. 66*
7) Reconnect battery cable.
8) Turn ignition switch "ON", does airbag warning light go out after 8 seconds and remain "OFF" for more than 30 seconds? See notes 1) and 2).
9) If "YES", disconnect battery, turn ignition switch "OFF", and wait 20 seconds. Install a new airbag module <Refer to 5-5 [W1B3].> then proceed to step 20.

10) If "NO", connect test harness C connector (1C) to (AB8) <Refer to 5-4 [W3A0].> with airbag resistor attached to test harness C connector (3C).

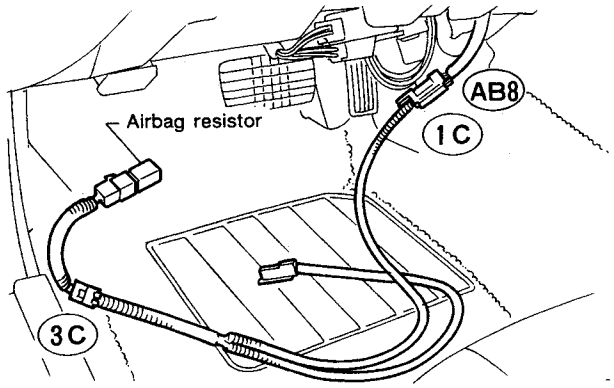

C5-605

Fig. 67

11) Turn ignition switch "ON". Does airbag warning light go "OFF" after 8 seconds and remain off for more than 30 seconds? See notes 1) and 2).

12) If "YES", replace combination switch, <Refer to 5-5 [W1F2].> and proceed to step 16.

13) If "NO", proceed with diagnostics according to trouble code indicated during on-board diagnostics.

14) After repair, reconnect test harness C connector (1C) to (AB7) <Refer to 5-5 [W1B2].> with airbag resistor attached to (3C).

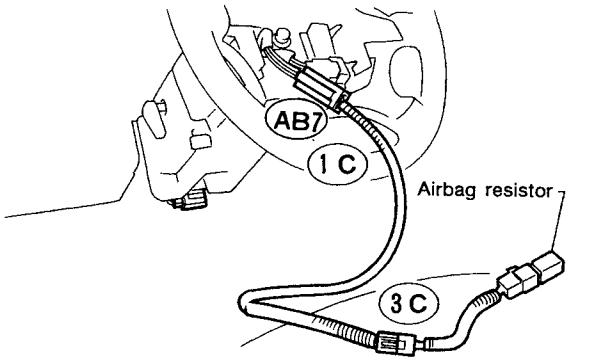

C5-606

Fig. 68

15) Turn ignition switch "ON". Does airbag warning light go "OFF" after 8 seconds and remain off for more than 30 seconds? See notes 1) and 2).

16) If "YES", disconnect battery. Turn ignition switch "OFF", and wait 20 seconds. Install airbag module <Refer to 5-5 [W1B5].> and proceed to step 18.

17) If "NO", replace combination switch, <Refer to 5-5 [W1F2].> and proceed to step 16.

18) Reconnect battery and turn ignition switch "ON". Does airbag warning light go off after 8 seconds and remain off for more than 30 seconds? See notes 1) and 2).

19) If "NO", disconnect battery, turn ignition switch "OFF", replace airbag module <Refer to 5-5 [W1B2].> and repeat step 18.

20) If "YES", perform clear memory procedure. <Refer to 5-5 [T1C0].>

21) If memory cannot be cleared, another trouble code exists. Return to step 1.

NOTES:

1) Always remember to secure the green double locks before turning the ignition switch "ON".

2) In some cases the airbag warning light will go "OFF" after 8 seconds but will turn "ON" again within 30 seconds. In this case continue diagnostics with the basic diagnostics procedures or trouble code procedures.

2. Diagram of SRS Airbag

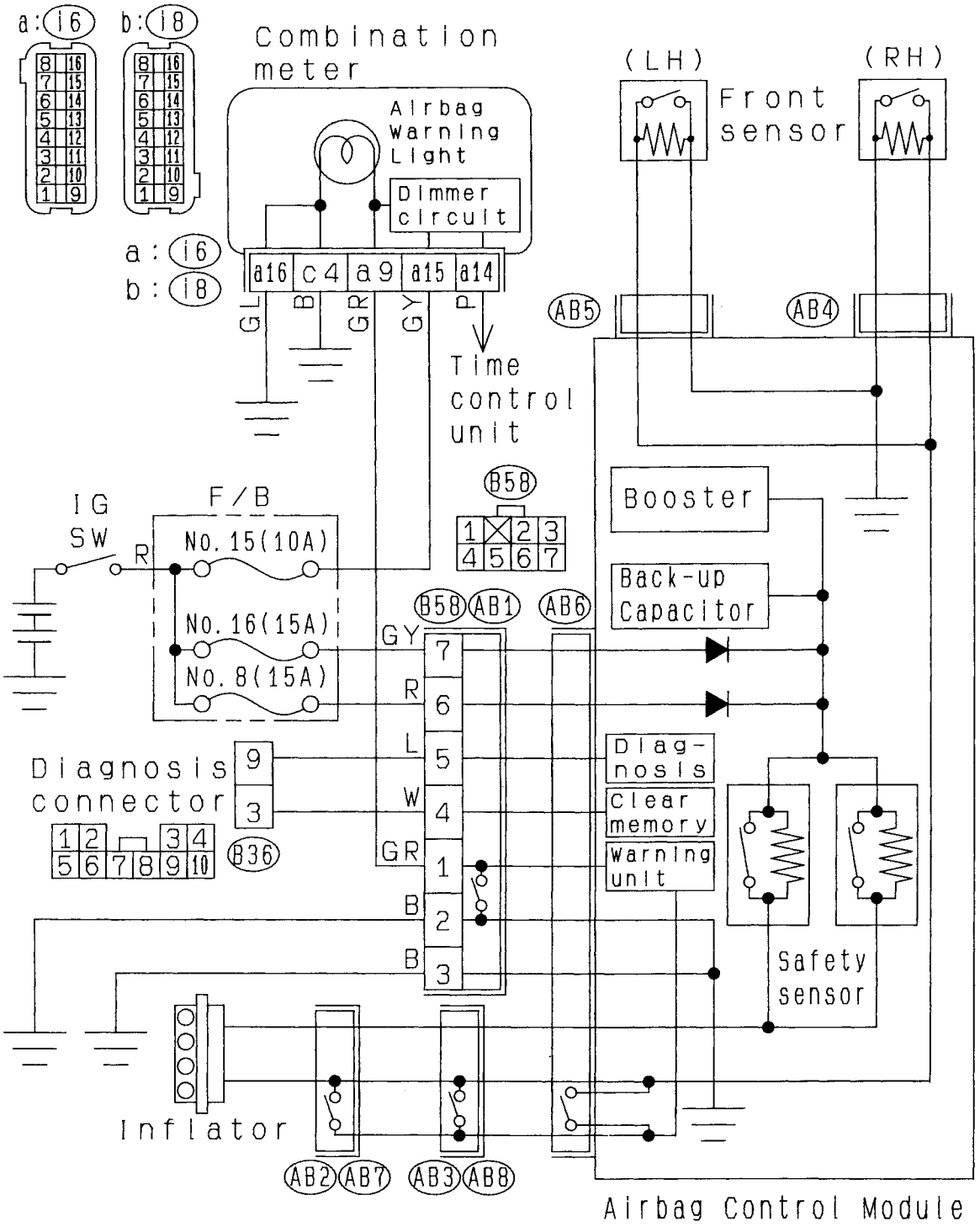

C5-712

Fig. 69

3. Wiring Location

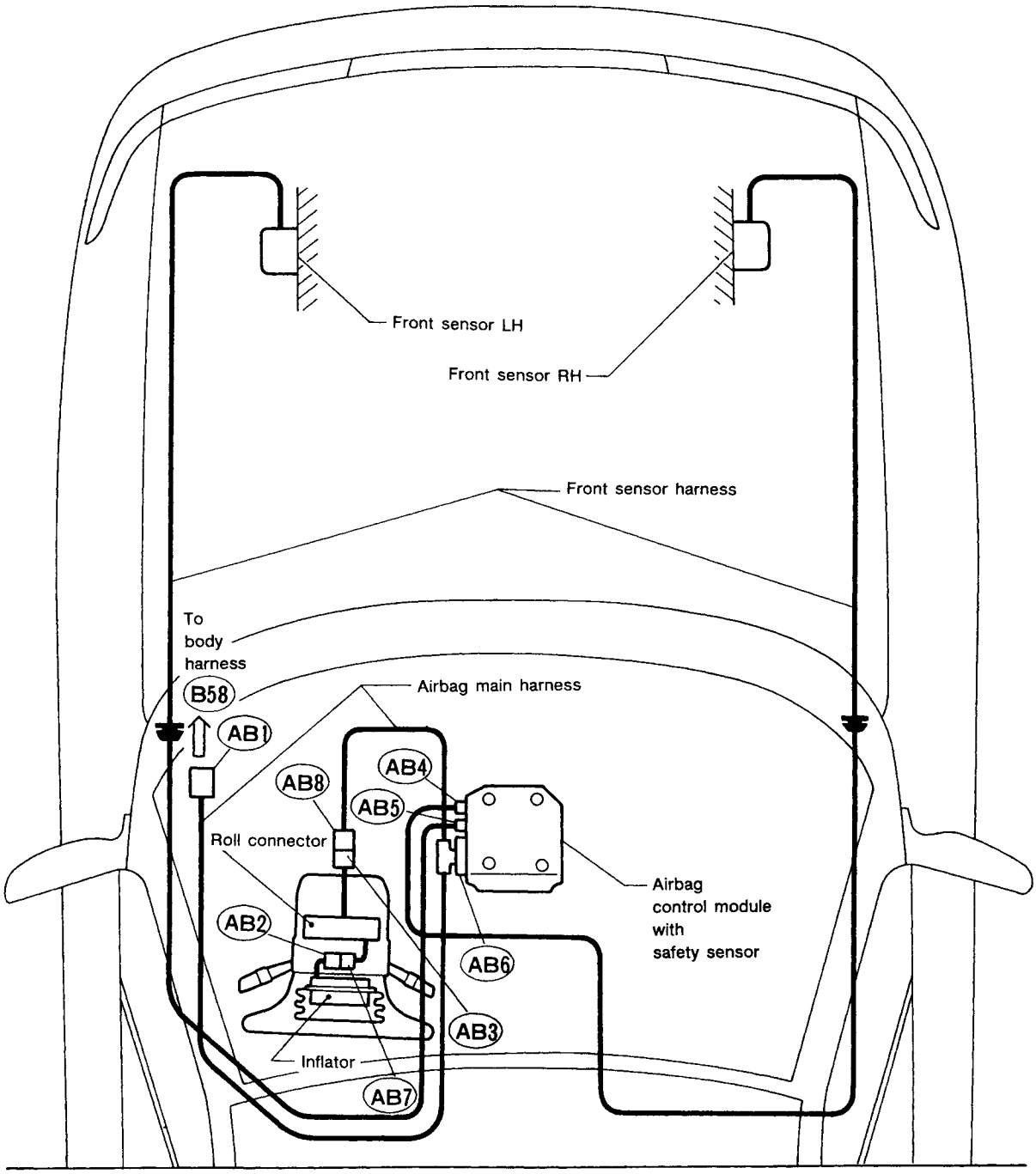

Connector No.	AB1	AB2	AB3	AB4	AB5	AB6	AB7	AB8
Pole	7	3	3	2	2	12	3	3
Color	Yellow	Yellow	Yellow	Blue	Orange	Yellow	Yellow	Yellow
	male	female	female	female	female	female	male	male

C5-730

Fig. 70

4. Test Harnesses

Be sure to use specified test harness A, B or C when measuring voltage, resistance, etc. of AIRBAG system component parts.

A: TEST HARNESS A

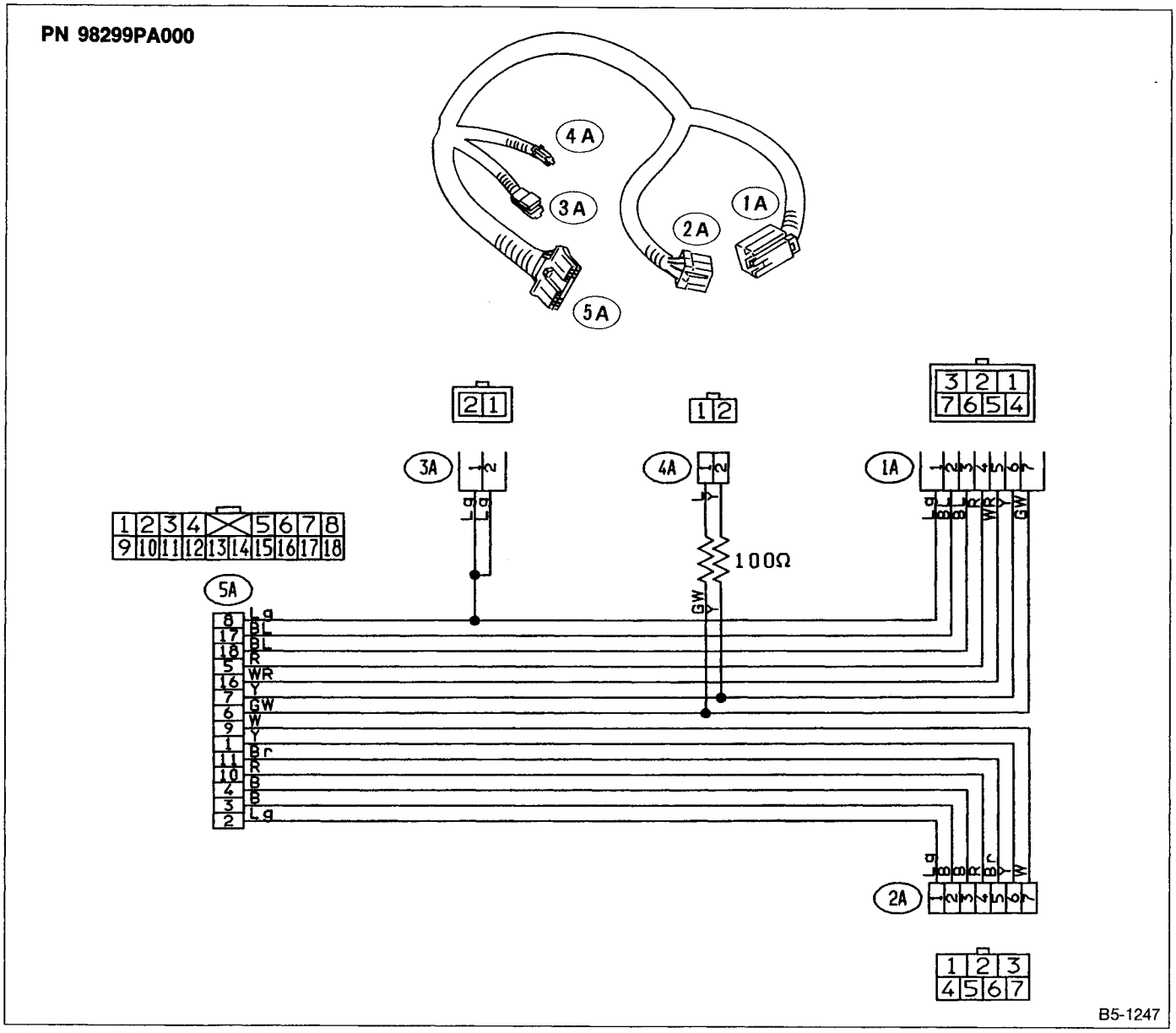

Fig. 71

B: TEST HARNESS B

PN 98299PA010

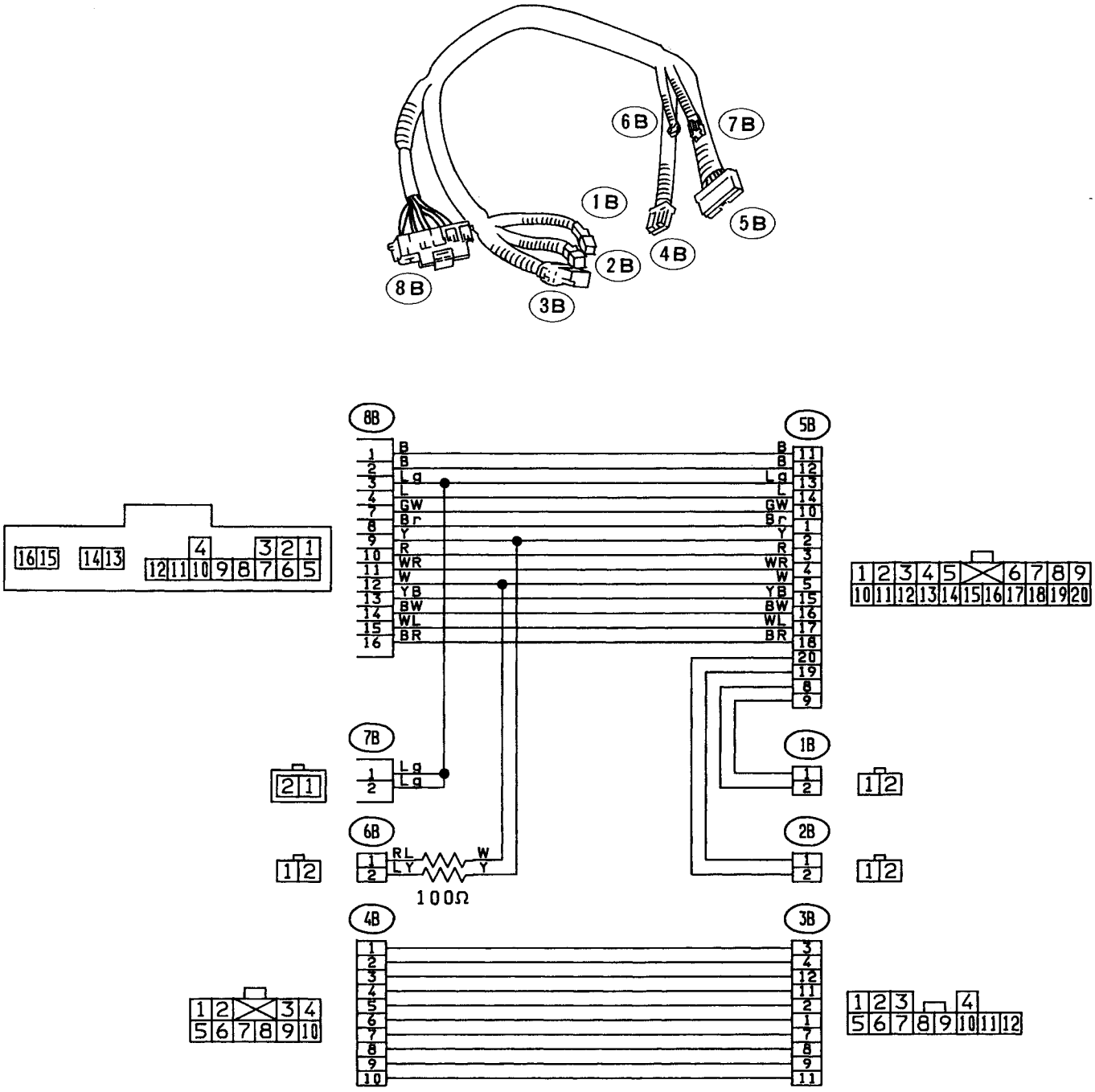

B5-1248

Fig. 72

C: TEST HARNESS C

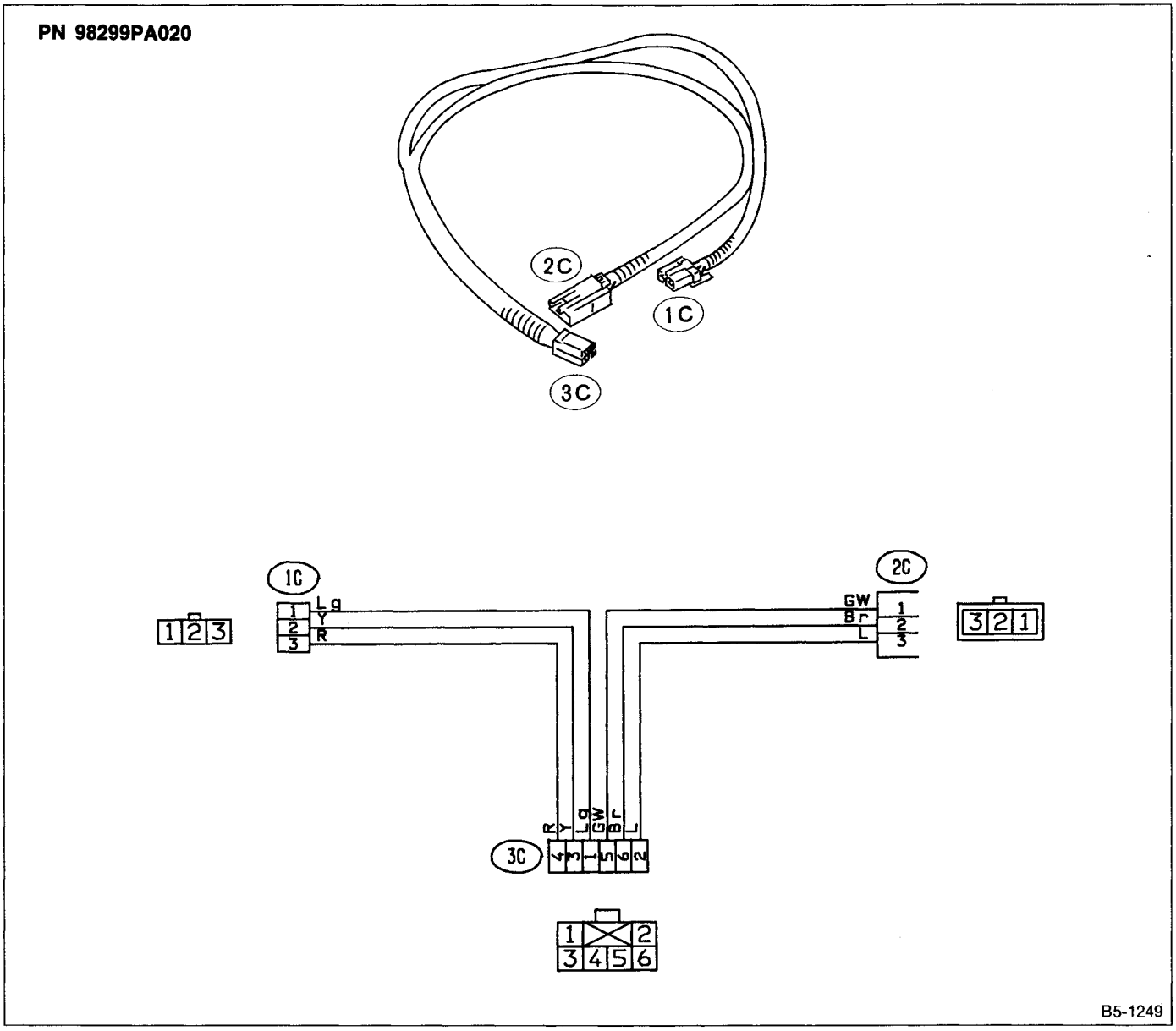

Fig. 73

5. Airbag Resistor

The airbag resistor is used during diagnostics. The airbag resistor has the same resistance as the airbag module and thus provides safety when used instead of the airbag module. It also makes it possible to finish, diagnostics in less time.

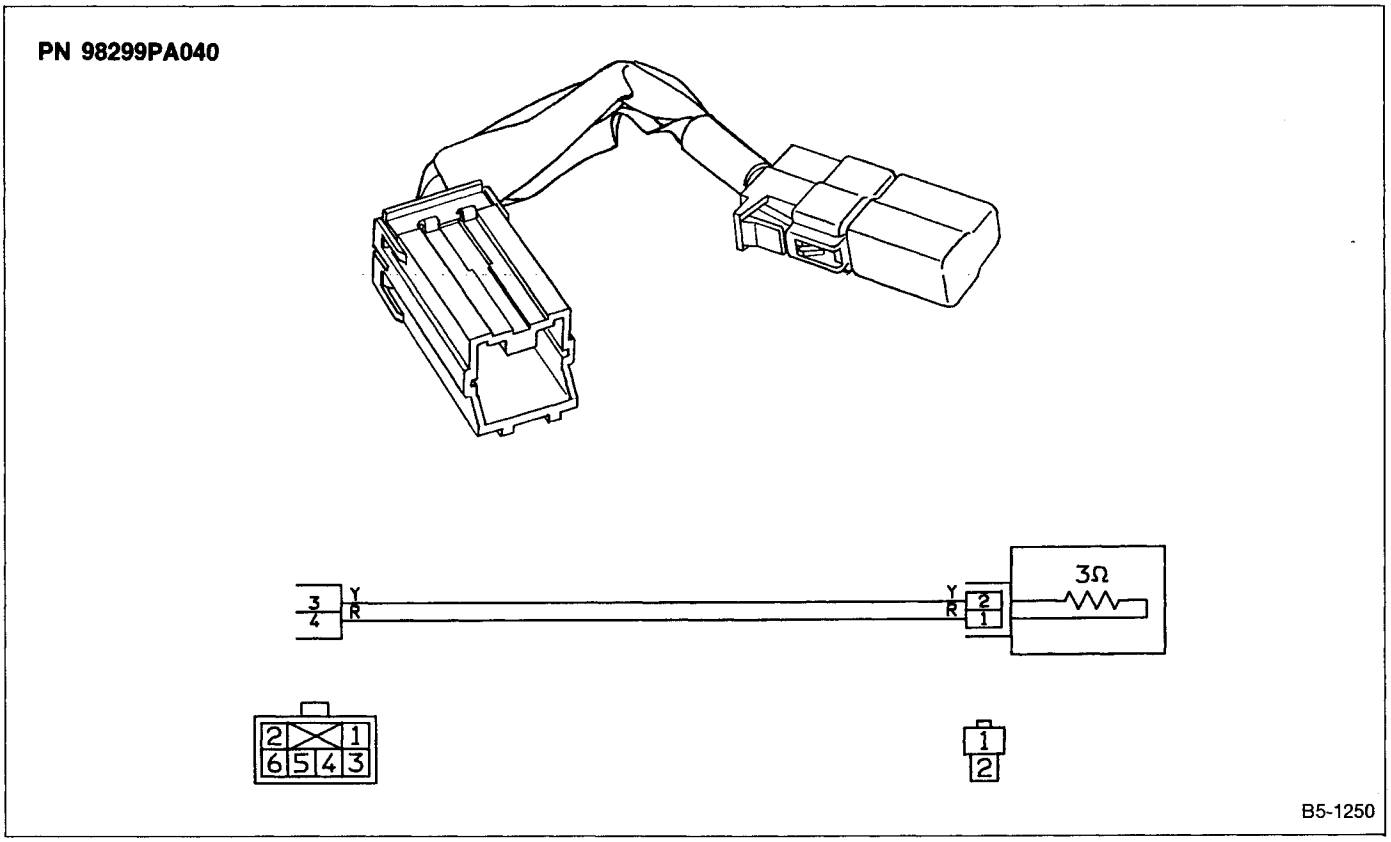

Fig. 74

6. Diagnostic Chart with Trouble Code

A: TROUBLE CODE 02

CONTENTS OF DIAGNOSIS:
- Front sensor harness is shorted.
- Airbag main harness is shorted.
- Airbag module harness is shorted.
- Roll connector is shorted.
- Airbag control module is faulty.

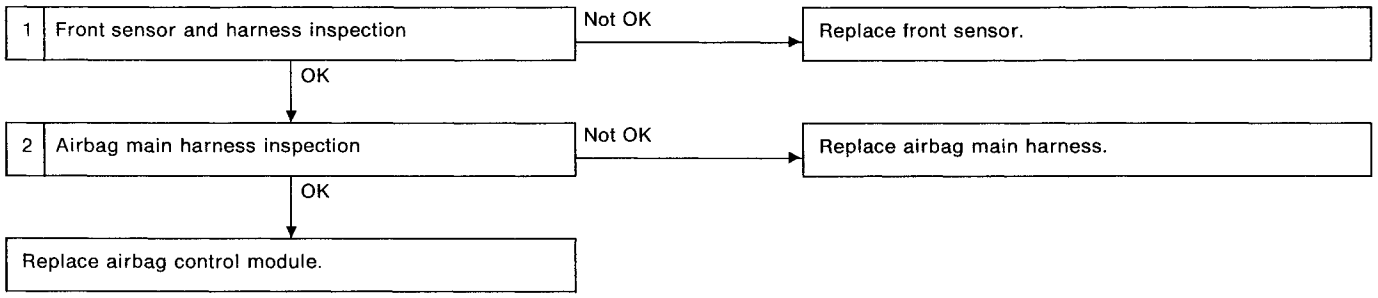

CAUTION:
Before performing diagnostics on airbag system, turn ignition switch "OFF", disconnect battery ground terminal, and then wait at least 20 seconds.

After 20 seconds elapse, remove instrument panel lower cover, and disconnect (AB3) and (AB8).

1. FRONT SENSOR AND HARNESS INSPECTION

1) Disconnect connectors (AB4) and (AB5) from airbag control module. <Refer to 5-5 [W1E2].>
2) Connect connectors (AB4) and (AB5) to connector (8B) of test harness B.

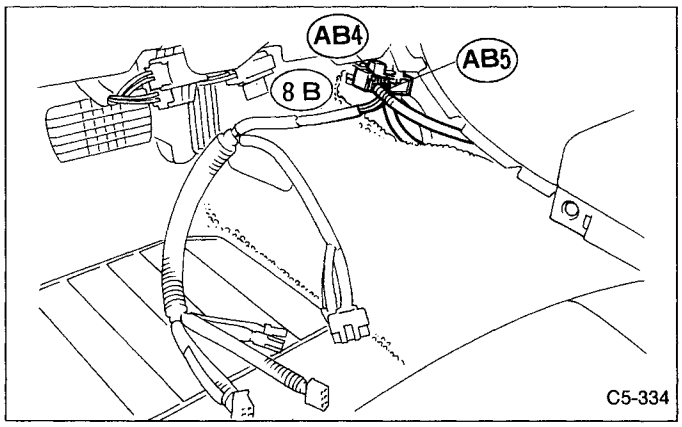

Fig. 75

3) Measure resistance between connector (5B) terminals indicated below.

(5B) Terminals / Specified resistance:
(RH: AB4): No. 17 — No. 18 / 1.4 — 1.6 kΩ
(LH: AB5): No. 15 — No. 16 / 1.4 — 1.6 kΩ

4) Measure resistance between each connector (5B) terminal and ground.

(5B) Terminals / Specified resistance:
(RH: AB4): No. 17 — Body / 1 MΩ, or more
No. 18 — Body / 1 MΩ, or more
(LH: AB5): No. 15 — Body / 1 MΩ, or more
No. 16 — Body / 1 MΩ, or more

2. AIRBAG MAIN HARNESS INSPECTION

1) Disconnect connector (AB6) from airbag control module, and connect (AB6) to test harness B connector (8B).

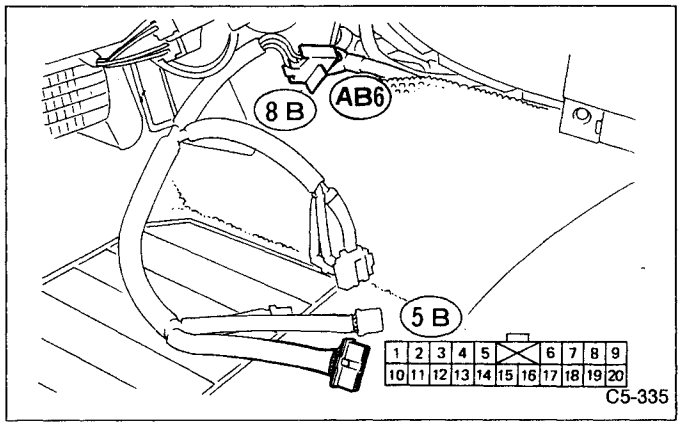

Fig. 76

2) Measure resistance between each (5B) terminal and ground.

(5B) Terminals / Specified resistance:
No. 1 — Body / 1 MΩ, or more
No. 14 — Body / 1 MΩ, or more

B: TROUBLE CODE 03

CONTENTS OF DIAGNOSIS:
- Front sensor harness circuit is open.
- Front sensor unit circuit is open.

1	Front sensor (LH and RH) inspection
	↓
	Identify faulty sensor and replace front sensor.

CAUTION:
Before performing diagnostics on airbag system, turn ignition switch "OFF", disconnect battery ground terminal, and then wait at least 20 seconds.

1. FRONT SENSOR (LH AND RH) INSPECTION

1) Disconnect connectors (AB4) and (AB5) from airbag control module.
2) Connect connectors (AB4) and (AB5) to test harness B connector (8B).

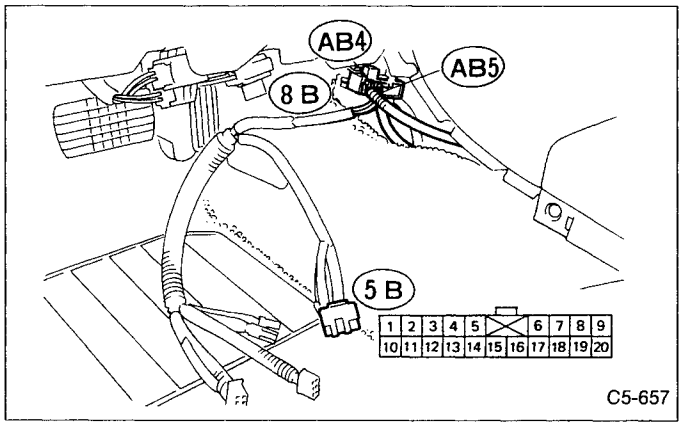

Fig. 77

3) Measure resistance between connector (5B) terminals.

(5B) Terminals / Specified resistance:
(RH: AB4): No. 17 — No. 18 / 1.4 — 1.6 kΩ
(LH: AB5): No. 15 — No. 16 / 1.4 — 1.6 kΩ

C: TROUBLE CODE 11

CONTENTS OF DIAGNOSIS:
- Airbag control module is faulty.
- Airbag main harness circuit is open.
- Fuse No. 8 is blown.
- Body harness circuit is open.

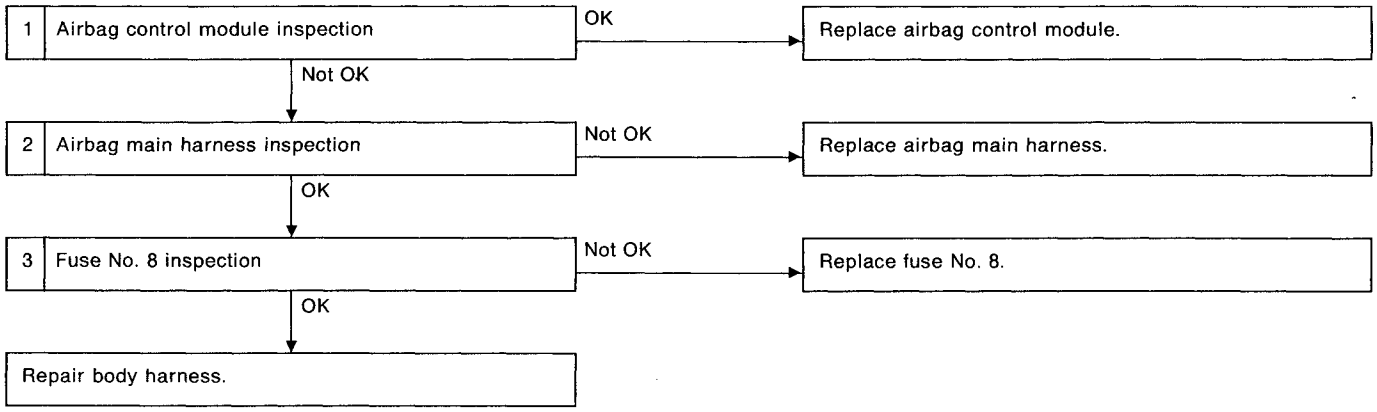

CAUTION:
Before performing diagnostics on airbag system, turn ignition switch "OFF", disconnect battery ground cable, and then wait at least 20 seconds.

After 20 seconds elapse, remove instrument panel lower cover, and disconnect (AB3) and (AB8).

1. AIRBAG CONTROL MODULE INSPECTION

1) Disconnect connector (AB6) from airbag control module <Refer to 5-5 [W1E2].> and connect it to test harness B connector (8B).

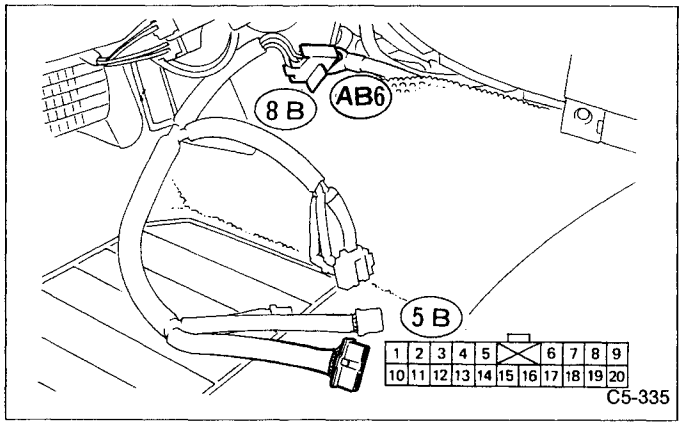

Fig. 78

2) Connect battery ground cable and turn ignition switch "ON". (engine off)

3) Measure voltage across connector (5B) terminal and ground.

(5B) Terminal / Specified voltage:
No. 2 — Body / 10 V, or more

2. AIRBAG MAIN HARNESS INSPECTION

1) Go to step 2) below after performing diagnostics on airbag system as per flowchart under "1. AIRBAG CONTROL MODULE INSPECTION " previously outlined.
2) Turn ignition switch "OFF", disconnect battery ground terminal and then wait at least 20 seconds.
3) Disconnect body harness connector (B58) from connector (AB1) at front lower pillar, and connect connector (AB1) to test harness A connector (2A).

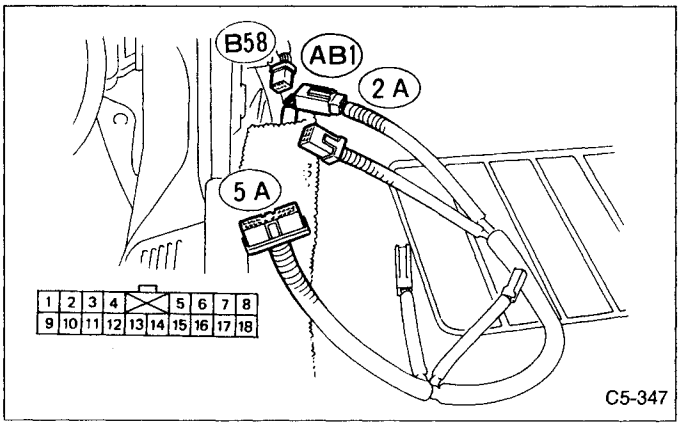

Fig. 79

4) Measure resistance between test harness A connector (5A) terminal and test harness B connector (5B) terminal.

Connector & terminal / Specified resistance:
(5A) No. 1 — (5B) No. 2 / 10 Ω, or less

(5A) Terminal / Specified resistance:
No. 1 — Body / 10 kΩ, or more

(5B) Terminal / Specified resistance:
No. 2 — Body / 10 kΩ, or more

3. FUSE No. 8 INSPECTION

1) Turn ignition switch "OFF", and remove airbag fuse protector.

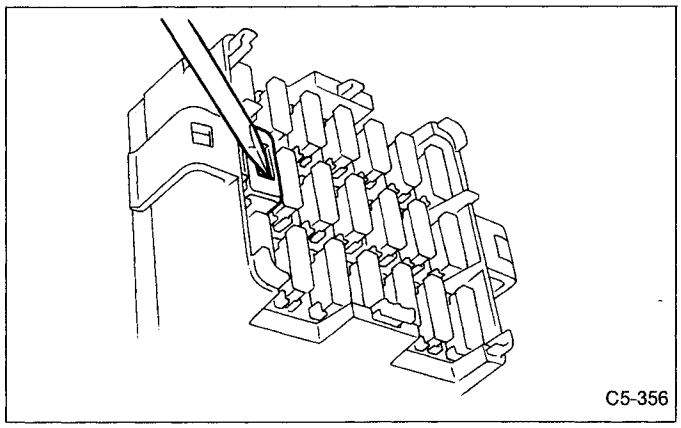

Fig. 80

2) Remove and visually check fuse No. 8.

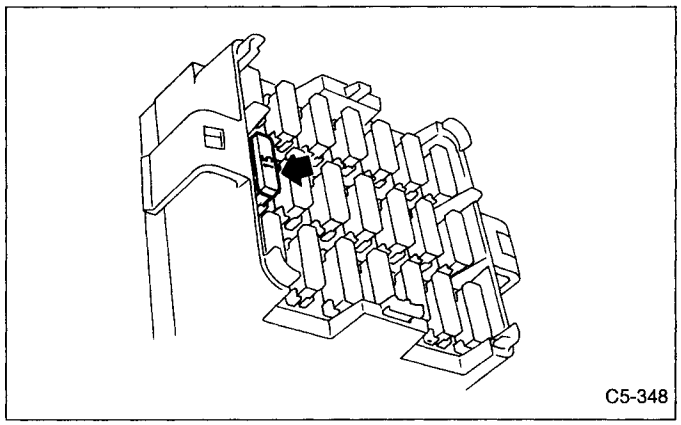

Fig. 81

D: TROUBLE CODE 12

CONTENTS OF DIAGNOSIS:
- Airbag main harness circuit is open.
- Airbag module harness circuit is open.
- Roll connector circuit is open.
- Airbag control module is faulty.

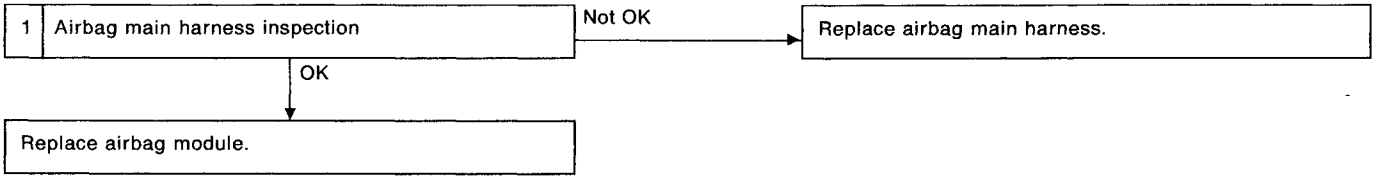

CAUTION:
Before performing diagnostics on airbag system, turn ignition switch "OFF", disconnect battery ground cable, and then wait at least 20 seconds.

1. AIRBAG MAIN HARNESS INSPECTION

1) Remove lower cover and panel <Refer to 5-4 [W3A0].>, and connect connector (AB8) at harness spool to test harness C connector (1C).

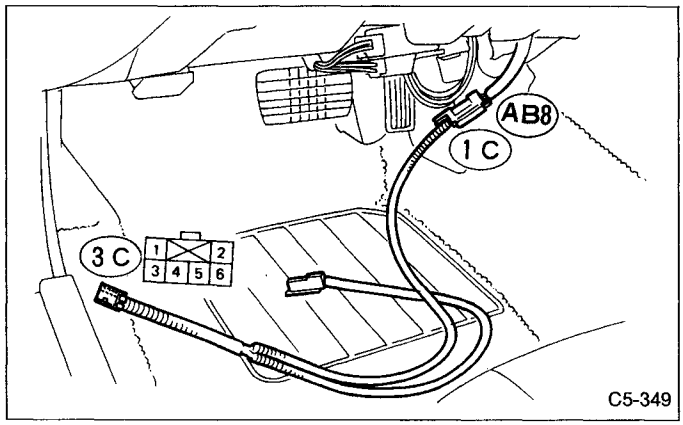

Fig. 82

2) Disconnect connector (AB6) <Refer to 5-5 [W1E2].> from airbag control module, and connect it to test harness B connector (8B) terminal.

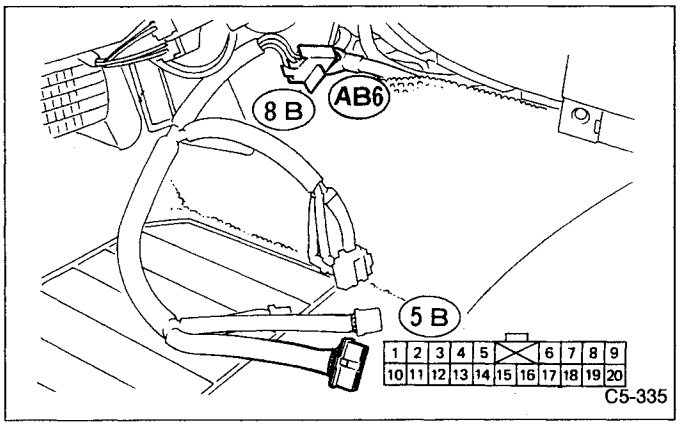

Fig. 83

3) Measure resistance between test harness B connector (5B) and test harness C connector (3C) terminals.

Connector & terminal / Specified resistance:
(5B) No. 14 — (3C) No. 4 / 10 Ω, or less
(5B) No. 1 — (3C) No. 3 / 10 Ω, or less

E: TROUBLE CODE 13

CONTENTS OF DIAGNOSIS:
- Airbag main harness circuit is shorted.
- Airbag module harness is shorted.
- Roll connector circuit is shorted.
- Airbag control module is faulty.

1	Airbag main harness inspection	Not OK	Replace airbag main harness.
	OK		
	Replace airbag control module.		

CAUTION:
Before performing diagnostics on airbag system, turn ignition switch "OFF", disconnect battery ground cable, and then wait at least 20 seconds.

After 20 seconds elapse, remove instrument panel lower cover, and disconnect (AB3) and (AB8).

1. AIRBAG MAIN HARNESS INSPECTION

1) Disconnect connector (AB6) from airbag control module <Refer to 5-5 [W1E2].>, and connect it to test harness B connector (8B).

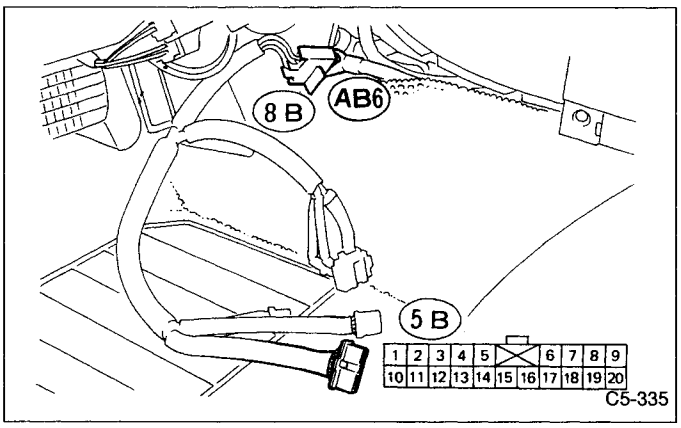

Fig. 84

2) Measure resistance between test harness B connector (5B) terminals.

(5B) Terminals / Specified resistance:
No. 1 — No. 14 / 10 kΩ, or more

F: TROUBLE CODE 14

CONTENTS OF DIAGNOSIS:
- (AB2) and (AB7) are not connected properly.
- (AB3) and (AB8) are not connected properly.
- (AB4), (AB5) and (AB6) are not connected properly to airbag control module.

1	Airbag control module double lock inspection [at connectors (AB4) (AB5) (AB6)]	Not OK	Apply double lock.
	OK		
2	Double lock inspection [for connectors (AB3) and (AB8) at harness spool]	Not OK	Apply double lock.
	OK		
3	Roll connector double lock inspection [at connectors (AB2) and (AB7)]		

CAUTION:
Before performing diagnostics on airbag system, turn ignition switch "OFF", disconnect battery ground cable, and then wait at least 20 seconds.

1. AIRBAG CONTROL MODULE DOUBLE LOCK INSPECTION [AT CONNECTORS (AB4) (AB5) (AB6)]

1) Check double lock of connectors (AB4) (AB5) (AB6) connected to airbag control module. <Refer to 5-5 [W1E2].>

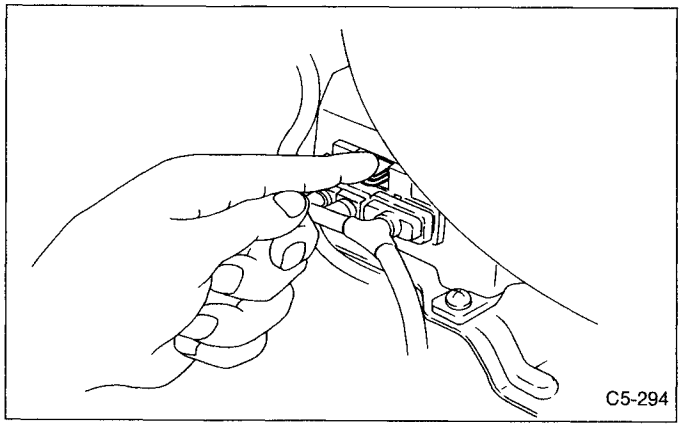

Fig. 85

2. DOUBLE LOCK INSPECTION [FOR CONNECTORS (AB3) AND (AB8) AT HARNESS SPOOL]

1) Remove lower cover and panel. <Refer to 5-4 [W3A0].>
2) Check double lock of connectors (AB3) and (AB8) at harness spool.

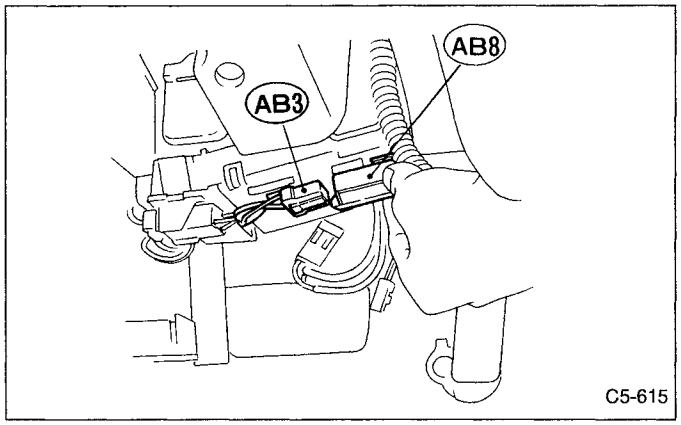

Fig. 86

3. ROLL CONNECTOR DOUBLE LOCK INSPECTION [AT CONNECTORS (AB2) AND (AB7)]

1) Remove airbag module <Refer to 5-5 [W1B2].>, and check double lock at connectors (AB2) and (AB7) at roll connector.

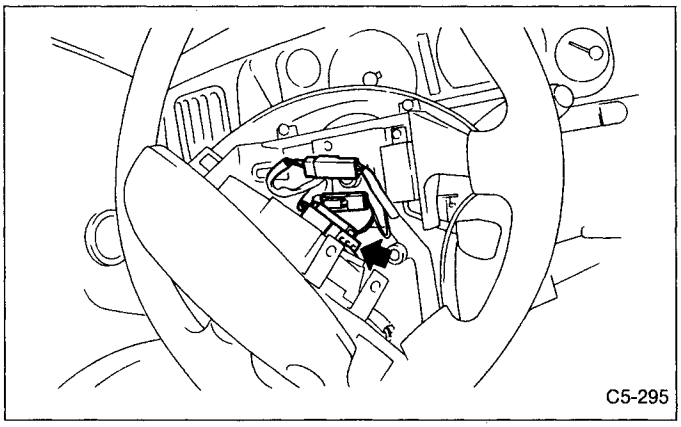

Fig. 87

G: TROUBLE CODE 21

CONTENTS OF DIAGNOSIS:
- Airbag control module is faulty.

Replace airbag control module.

CAUTION:
Before performing diagnostics on airbag system, turn ignition switch "OFF", disconnect battery ground cable, and then wait at least 20 seconds.
<Refer to 5-5 [W1E2].>

H: TROUBLE CODE 23

CONTENTS OF DIAGNOSIS:
- Airbag main harness is shorted to power supply.
- Front sensor harness is shorted to power supply.
- Airbag module harness is damaged.
- Roll connector is shorted to power supply.
- Airbag control module is faulty.

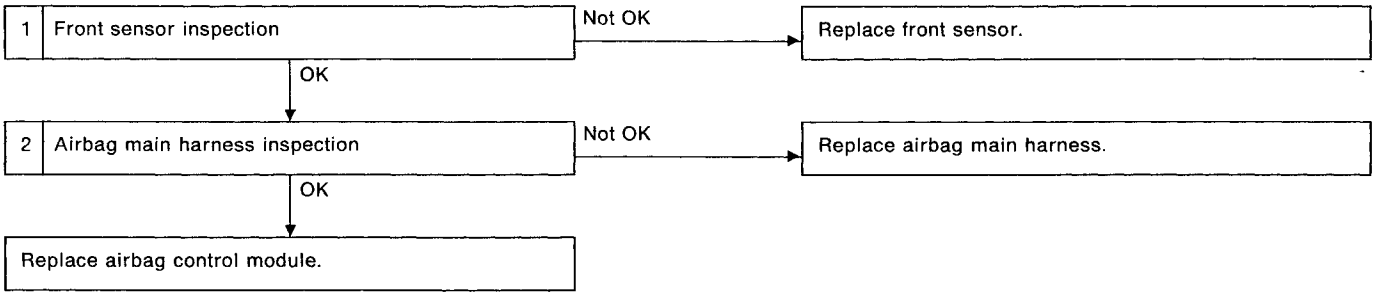

CAUTION:
Before performing diagnostics on airbag system, turn ignition switch "OFF", disconnect battery ground terminal, and then wait at least 20 seconds.

After 20 seconds elapse, remove instrument panel lower cover, and disconnect (AB3) and (AB8).

1. FRONT SENSOR INSPECTION

1) Disconnect connectors (AB4) and (AB5) from airbag control module. <Refer to 5-5 [W1E2].>
2) Connect connectors (AB4) and (AB5) to test harness B connector (8B).

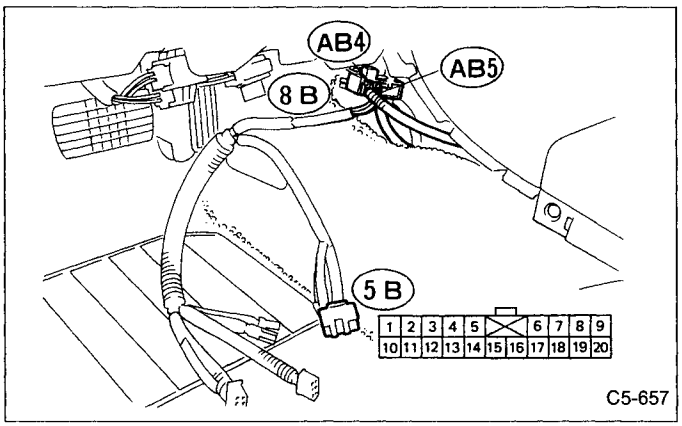

Fig. 88

3) Measure resistance between test harness B connector (5B) terminals.

(5B) Terminals / Specified resistance:
(RH: AB4): No. 17 — No. 18 / 1.4 — 1.6 kΩ
(LH: AB5): No. 15 — No. 16 / 1.4 — 1.6 kΩ

2. AIRBAG MAIN HARNESS INSPECTION

1) Disconnect connector (AB6) from airbag control module <Refer to 5-5 [W1E2].>, and connect it to test harness B connector (8B).

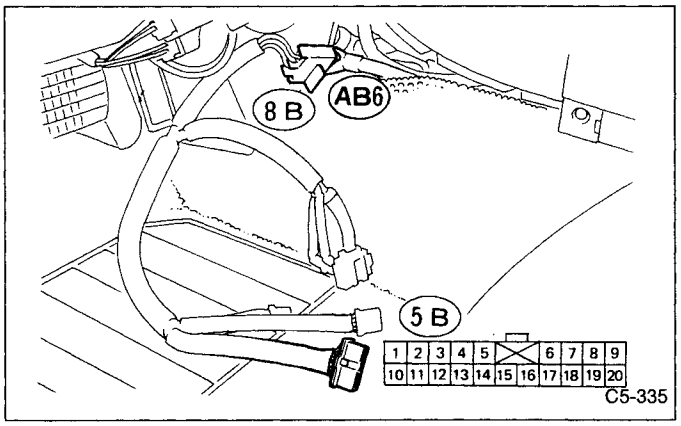

Fig. 89

2) Connect battery ground cable and turn ignition switch "ON" (engine off).
3) Measure voltage across each test harness B connector (5B) terminal and ground.

(5B) Terminals / Specified voltage:
No. 1 — Body / 1 V, or less
No. 14 — Body / 1 V, or less

I: TROUBLE CODE 31

CONTENTS OF DIAGNOSIS:
- Airbag control module is faulty.
- Airbag main harness circuit is open.
- Fuse No. 16 is blown.
- Body harness circuit is open.

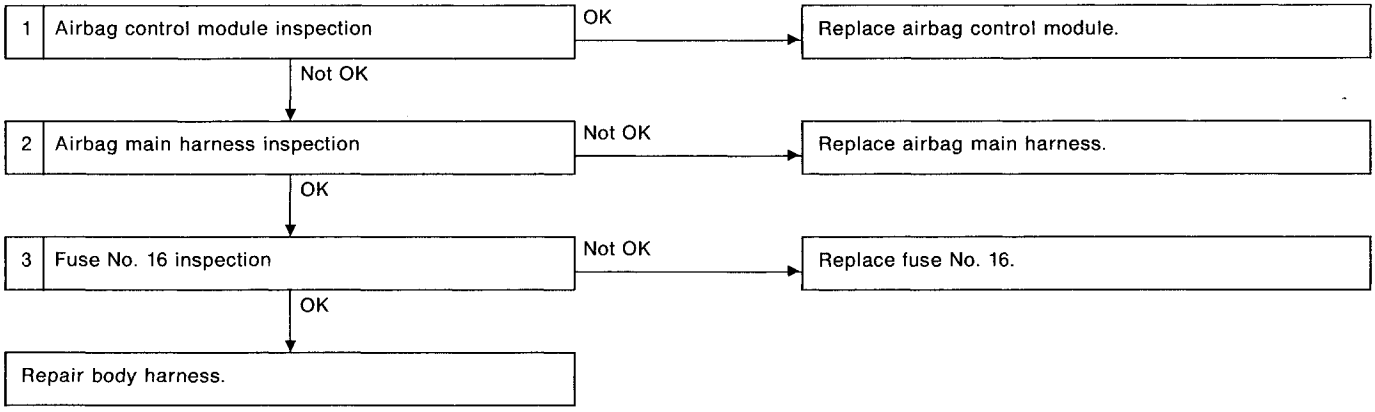

CAUTION:
Before performing diagnostics on airbag system, turn ignition switch "OFF", disconnect battery ground cable, and then wait at least 20 seconds.

After 20 seconds elapse, remove instrument panel lower cover, and disconnect (AB3) and (AB8).

1. AIRBAG CONTROL MODULE INSPECTION

1) Disconnect connector (AB6) from airbag control module <Refer to 5-5 [W1E2].>, and connect it to test harness B connector (8B).

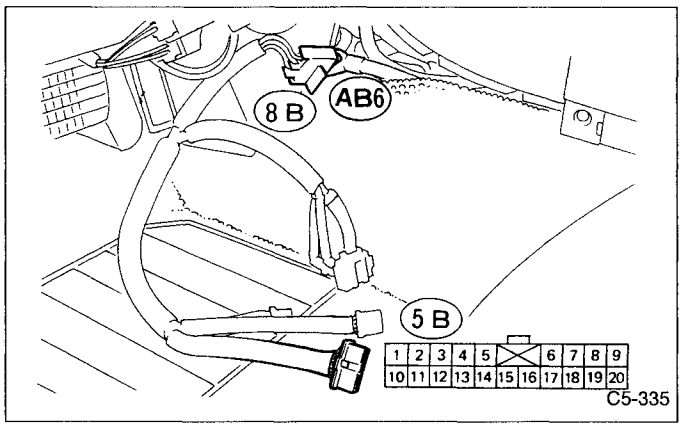

Fig. 90

2) Connect battery ground cable and turn ignition switch "ON" (engine off).
3) Measure voltage across connector (5B) terminal and ground.

(5B) Terminal / Specified voltage:
No. 5 — Body / 10 V, or more

2. AIRBAG MAIN HARNESS INSPECTION

1) Go to step 2) below after performing diagnostics on airbag system as per flowchart under "1. AIRBAG CONTROL MODULE INSPECTION" previously outlined.
2) Turn ignition switch "OFF", disconnect battery ground cable and then wait at least 20 seconds.
3) Disconnect connector (AB1) from body harness connector (B58) at front lower pillar, and connect connector (AB1) to test harness A connector (2A).

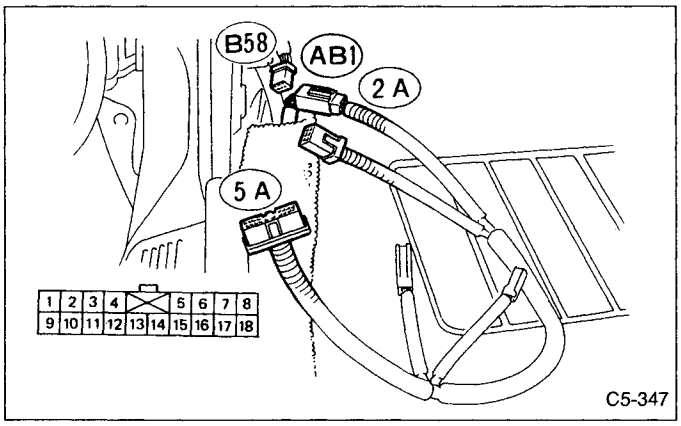

Fig. 91

4) Measure resistance between test harness A connector (5A) and test harness B connector (5B) terminals.

Connector & terminal / Specified resistance:
(5A) No. 9 — (5B) No. 5 / 10 Ω, or less

5) Measure resistance between each terminal of connectors (5A) and (5B) and ground.

(5A) Terminal / Specified resistance:
No. 9 — Body / 10 kΩ, or more

(5B) Terminal / Specified resistance:
No. 5 — Body / 10 kΩ, or more

3. FUSE No. 16 INSPECTION

Make sure ignition switch is turned "OFF", then remove and visually check fuse No. 16.

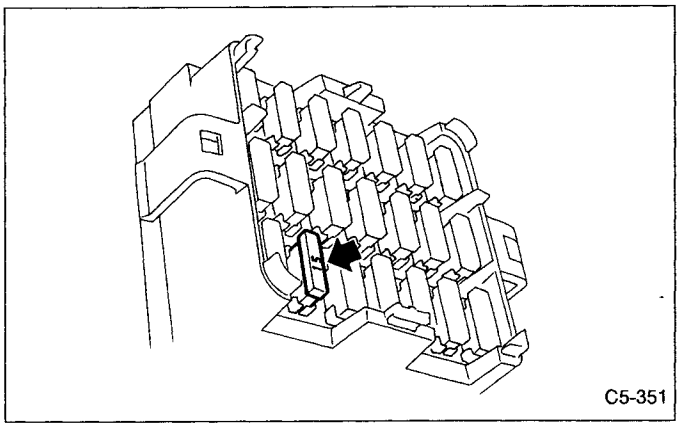

Fig. 92

J: AIRBAG WARNING LIGHT REMAINS ON.

CONTENTS OF DIAGNOSIS:
- Airbag warning light is faulty.
- Airbag control module-to-airbag warning light harness circuit is open or shorted.
- Grounding circuit is faulty.
- Airbag control module is faulty.
- (AB1) and (B58) are not connected properly.

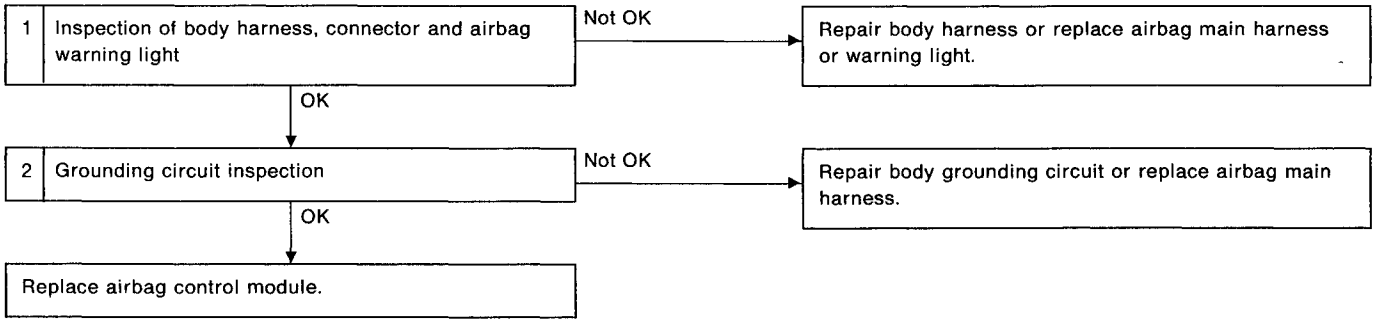

CAUTION:
Before performing diagnostics on airbag system, turn ignition switch "OFF", disconnect battery ground cable, and then wait at least 20 seconds.

1. INSPECTION OF BODY HARNESS, CONNECTOR AND AIRBAG WARNING LIGHT

1) Turn ignition switch "OFF" and connect body harness connector (B58) to test harness A connector (1A).

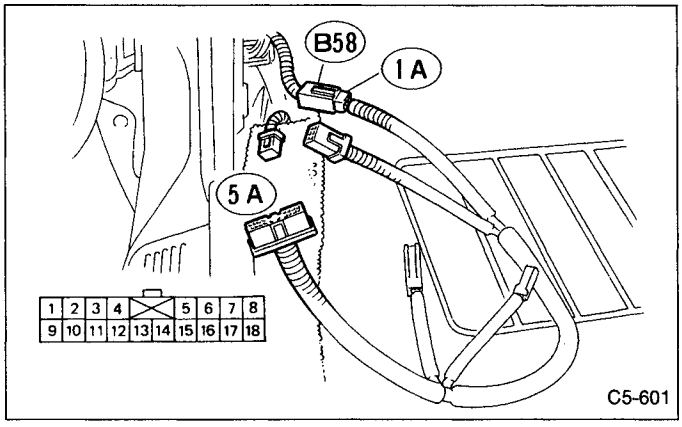

Fig. 93

2) Connect battery ground cable and turn ignition switch "ON," (engine off) and connect connectors (3A) and (4A) to check if warning light goes out. If it does, go to step 3). If it remains on, check body harness and repair if necessary. If body harness is satisfactory, replace warning light. After problem has been eliminated, disconnect connectors (3A) and (4A).

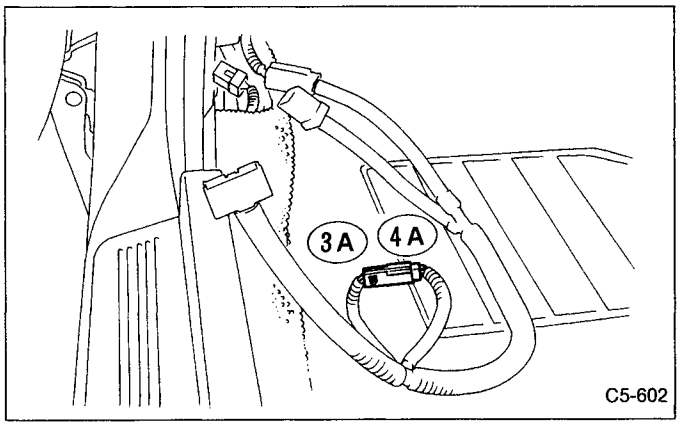

Fig. 94

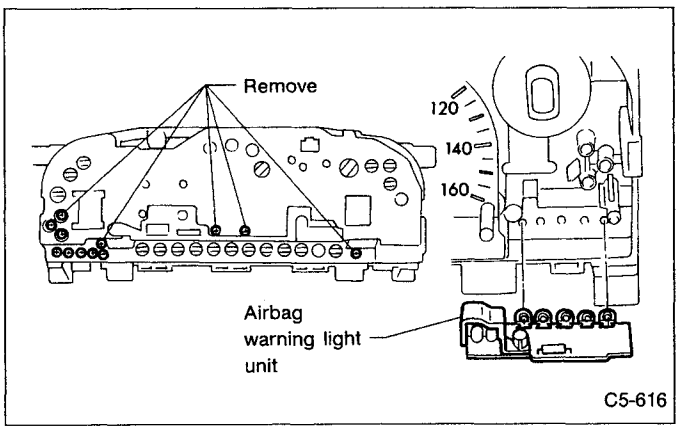

Fig. 95

3) Turn ignition switch "OFF," disconnect battery ground cable and then wait at least 20 seconds, and re-connect connectors (AB1) and (B58).
4) Remove instrument panel lower cover and disconnect (AB3) with (AB8), then disconnect connector (AB6) from airbag control module, and connect it to test harness B connector (8B).

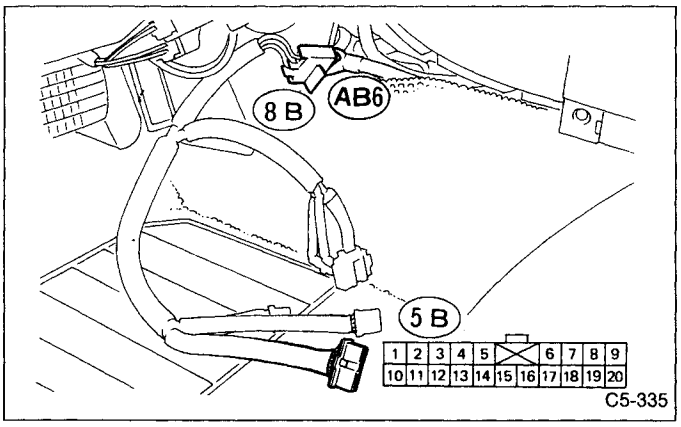

Fig. 96

5) Connect battery ground cable and turn ignition switch "ON," (engine off) and connect connectors (6B) and (7B) to check if warning light goes out. If it does, go to "2. GROUNDING CIRCUIT INSPECTION" below. If it remains on, replace airbag main harness. After problem has been eliminated, disconnect connectors (6B) and (7B).

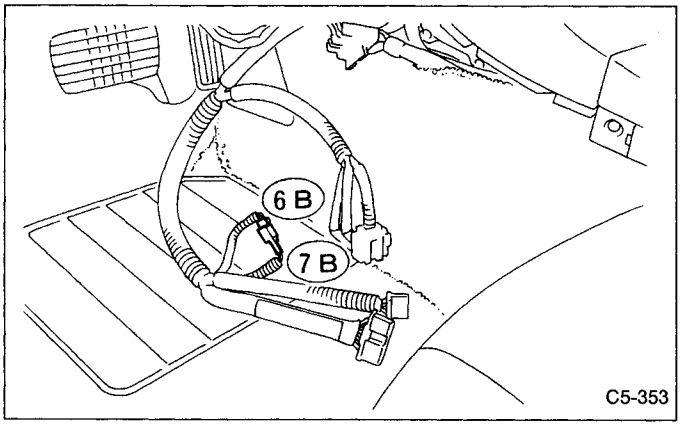

Fig. 97

2. GROUNDING CIRCUIT INSPECTION

1) Turn ignition switch "OFF", disconnect battery ground cable and then wait at least 20 seconds. Disconnect connector (AB1) from body harness connector (B58), and connect connector (B58) to test harness A connector (1A). Measure resistance between connector (5A) terminal and ground.

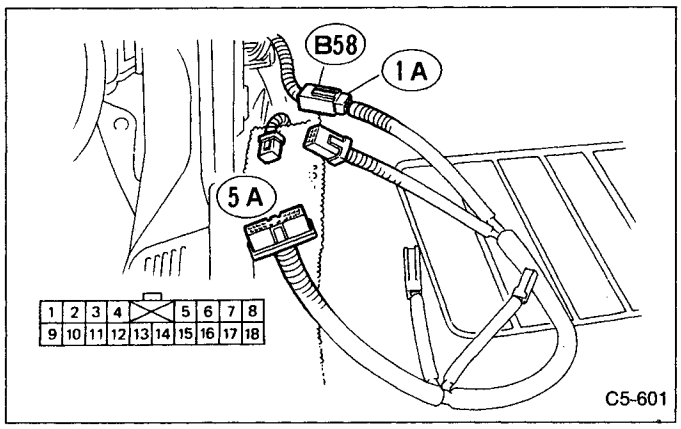

Fig. 98

(5A) Terminal / Specified resistance:
No. 17 — Body / 10 Ω, or less
No. 18 — Body / 10 Ω, or less

If resistance is greater than 10 ohms, body grounding circuit is faulty and should be repaired. If resistance is less than 10 ohms, go to step 2) below.
2) Connect connectors (AB1) and (B58). Disconnect connector (AB6) from airbag control module, and connect it to test harness B connector (8B).

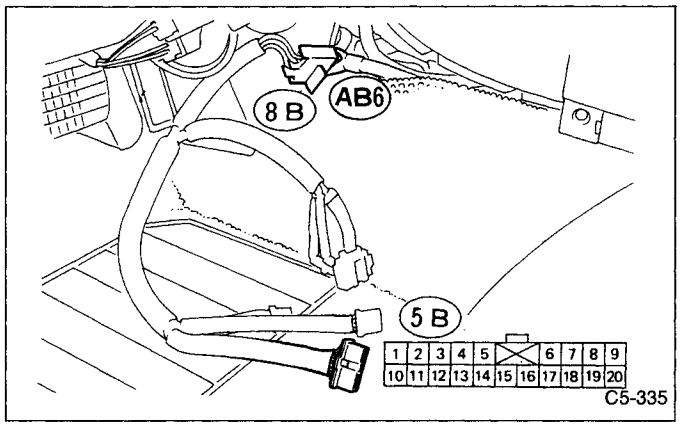

Fig. 99

3) Measure resistance between each test harness B connector (5B) terminal and ground.

(5B) Terminal / Specified resistance:
No. 11 — Body / 10 Ω, or less
No. 12 — Body / 10 Ω, or less

If resistance is greater than 10 ohms, replace airbag main harness.
If resistance is less than 10 ohms, replace airbag control module.

K: AIRBAG WARNING LIGHT REMAINS OFF.

CONTENTS OF DIAGNOSIS:
- Fuse No. 15 is blown.
- Body harness circuit is open.
- Airbag warning light cluster is faulty.
- Airbag main harness is faulty.
- Airbag control module is faulty.

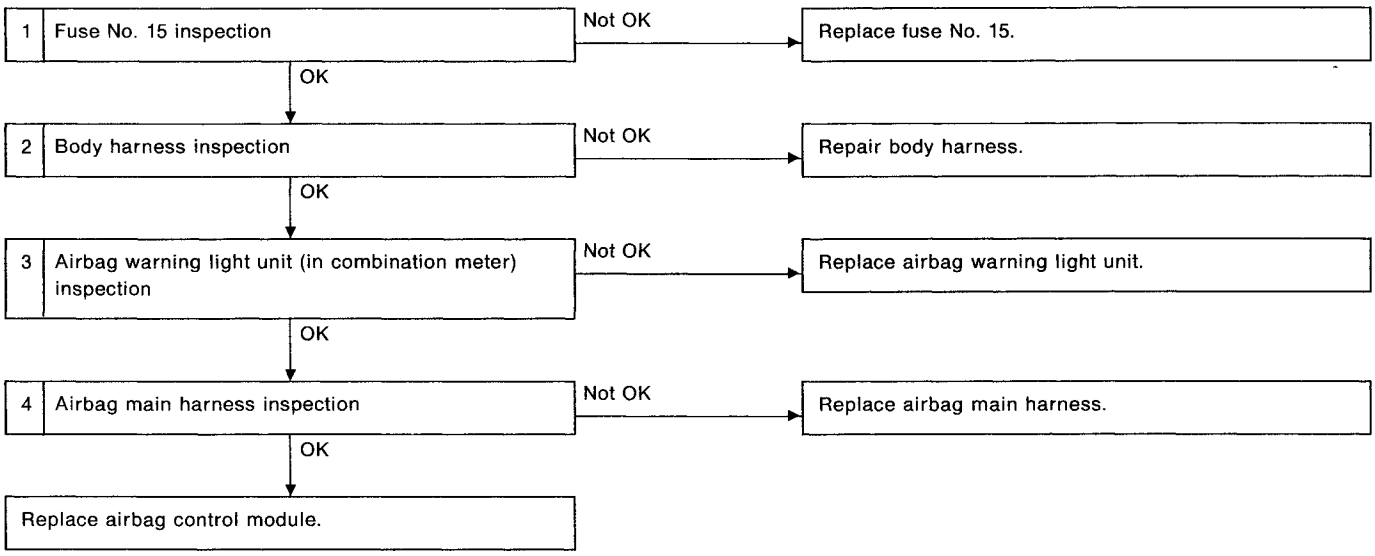

CAUTION:
Before performing diagnostics on airbag system, turn ignition switch "OFF", disconnect battery ground cable, and then wait at least 20 seconds.

1. FUSE No. 15 INSPECTION

1) Remove and visually check fuse No. 15.

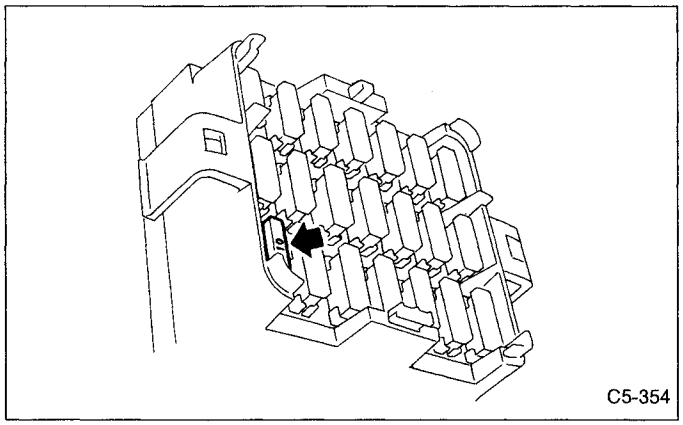

Fig. 100

2) If fuse is blown, replace it with a new one. After connecting battery cable and turning ignition switch "ON" (engine off), if it blows again, proceed to "2. BODY HARNESS INSPECTION".

2. BODY HARNESS INSPECTION

Turn ignition switch "ON" (engine off) to make sure other warning lights (in combination meter) illuminate. If they do not, check body harness.

3. AIRBAG WARNING LIGHT UNIT (IN COMBINATION METER) INSPECTION

1) Turn ignition switch "OFF", disconnect battery ground cable and then wait at least 20 seconds.
2) Disconnect body harness connector (B58) from connector (AB1).

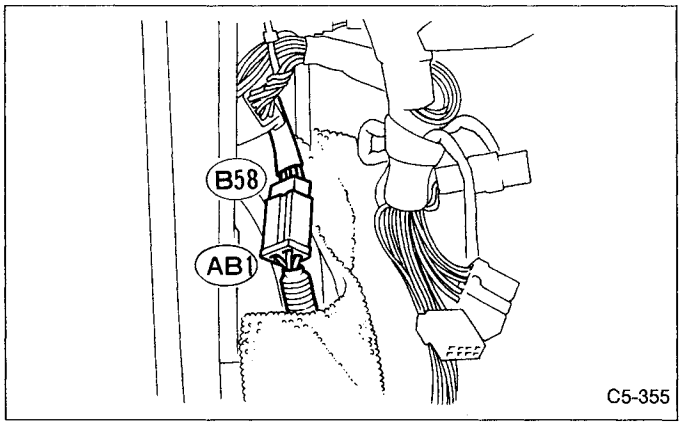

Fig. 101

3) Connect battery ground cable and turn ignition switch "ON" (engine off) to make sure airbag warning light illuminates.
If it does not, replace airbag warning light unit.

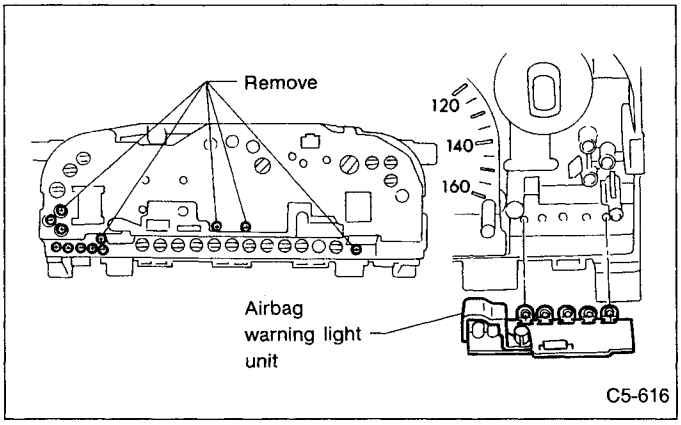

Fig. 102

4. AIRBAG MAIN HARNESS INSPECTION

1) Turn ignition switch "OFF", disconnect battery ground cable and then wait at least 20 seconds.
2) Connect body harness connector (B58) and connector (AB1).
3) Disconnect connectors (AB3) and (AB8) at harness spool. <Refer to 5-5 [W1E2].>

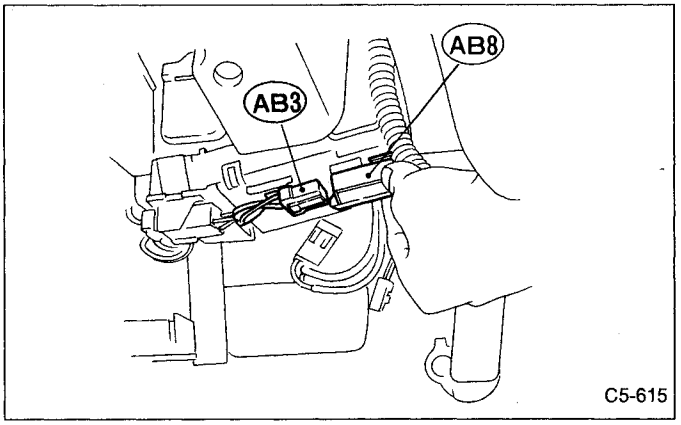

Fig. 103

4) Disconnect connector (AB6) from airbag control module. <Refer to 5-5 [W1E2].>

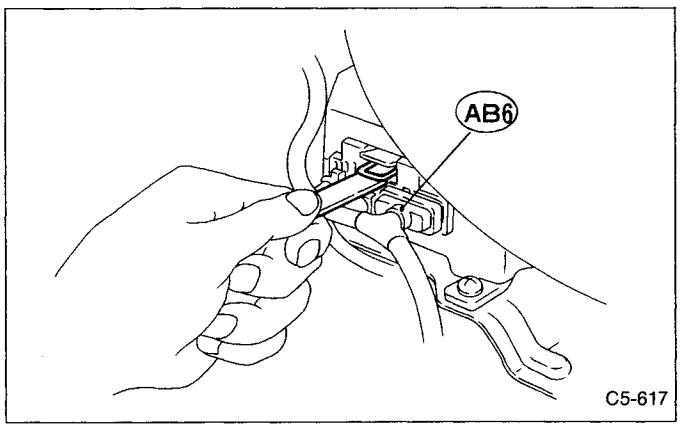

Fig. 104

5) Connect battery ground cable and turn ignition switch "ON" to make sure airbag warning light illuminates.

L: WARNING LIGHT INDICATES TROUBLE CODE, THEN NORMAL CODE.
— FLASHING TROUBLE CODE —

CONTENTS OF DIAGNOSIS:
- Airbag system component parts are faulty.

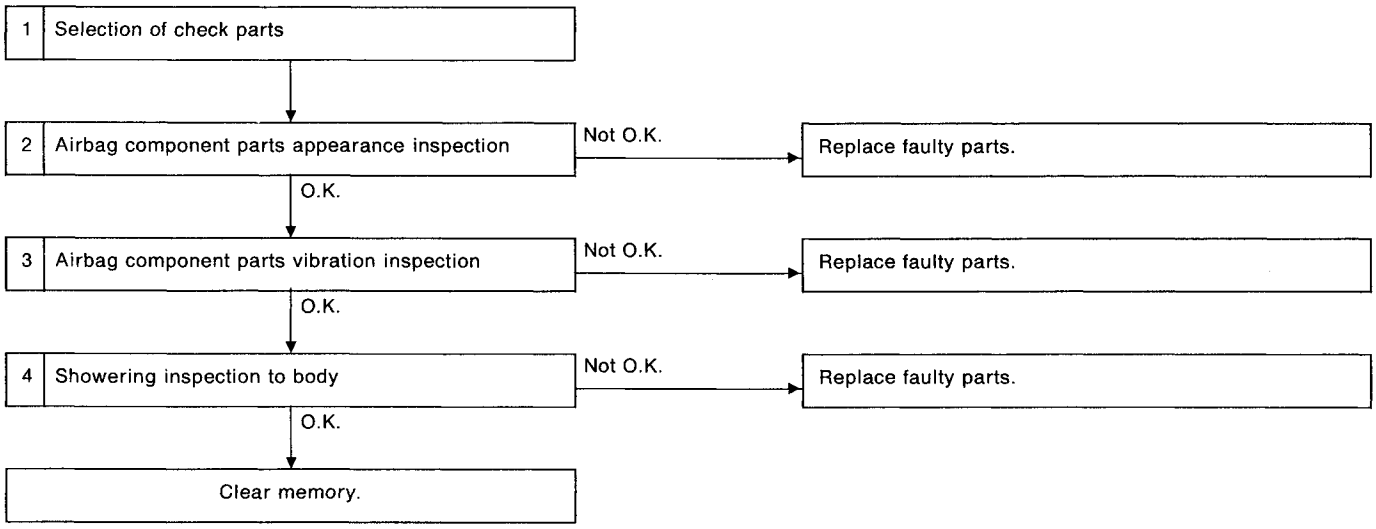

CAUTION:
Before performing diagnostics on airbag system, turn ignition switch "OFF", disconnect battery ground cable, and then wait at least 20 seconds.

1. SELECTION OF CHECK PARTS

1) Conduct on-board diagnostics and call up trouble codes stored in memory. <Ref. to 5-5 [T1B0].>

2) Select trouble code required to check airbag component parts from those listed in table and reproduce symptom.

Trouble codes	Check parts	Refer to 5-5:
02	• Front sensor (RH, LH) • Airbag main harness • Airbag module • Roll connector • Airbag control module	W1C1 W1D1 W1B1 W1F1 W1E1
03	• Front sensor (RH, LH) • Airbag control module	W1C1 W1E1
11	• Fuse No. 8 • Airbag main harness • Airbag control module • Body harness	T6C3 W1D1 W1E1 —
12	• Roll connector • Airbag module • Airbag main harness • Airbag control module	W1F1 W1B1 W1D1 W1E1
13	• Airbag module • Roll connector • Airbag main harness • Airbag control module	W1B1 W1F1 W1D1 W1E1
21	• Airbag control module	W1E1
23	• Airbag main harness • Roll connector • Airbag module • Front sensor (RH, LH) • Airbag control module	W1D1 W1F1 W1B1 W1C1 W1E1

2. AIRBAG COMPONENT PARTS APPEARANCE INSPECTION

1) Conduct appearance inspection on parts selected.

Also check connector terminals, wiring harness, case, etc. for damage.

3. AIRBAG COMPONENT PARTS VIBRATION INSPECTION

1) Gently shake check parts (to determine faults.).

2) To check airbag module or roll connector, turn and tilt steering wheel.

CAUTION:

Do not shake or vibrate airbag control module and front sensor at the same time as erroneous operation may result.

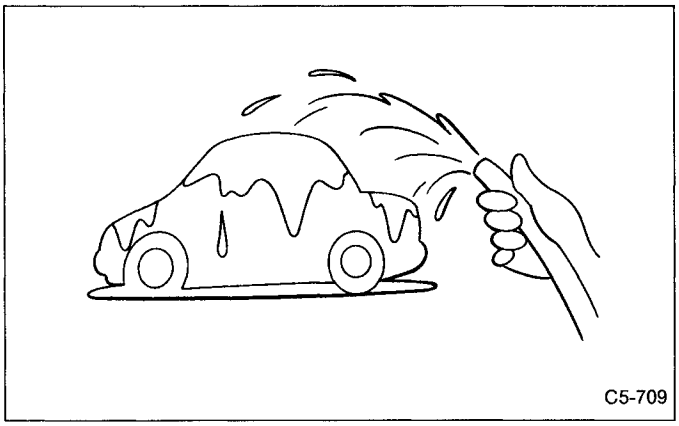

Fig. 105

4. SHOWERING INSPECTION TO BODY

1) Spray water on vehicle body.

CAUTION:

Do not directly spray water on airbag components.

2) Check passenger compartment for traces of leaking.

Also check wiring harnesses as water may leak along them and get airbag component parts wet.

M: WARNING LIGHT INDICATES TROUBLE CODE, THEN NORMAL CODE.
— FLASHING NORMAL CODE —

CONTENTS OF DIAGNOSIS:
- Airbag connector is faulty.
- Fuse No. 16 is blown.
- Airbag main harness is faulty.
- Airbag control module is faulty.
- Body harness is faulty.

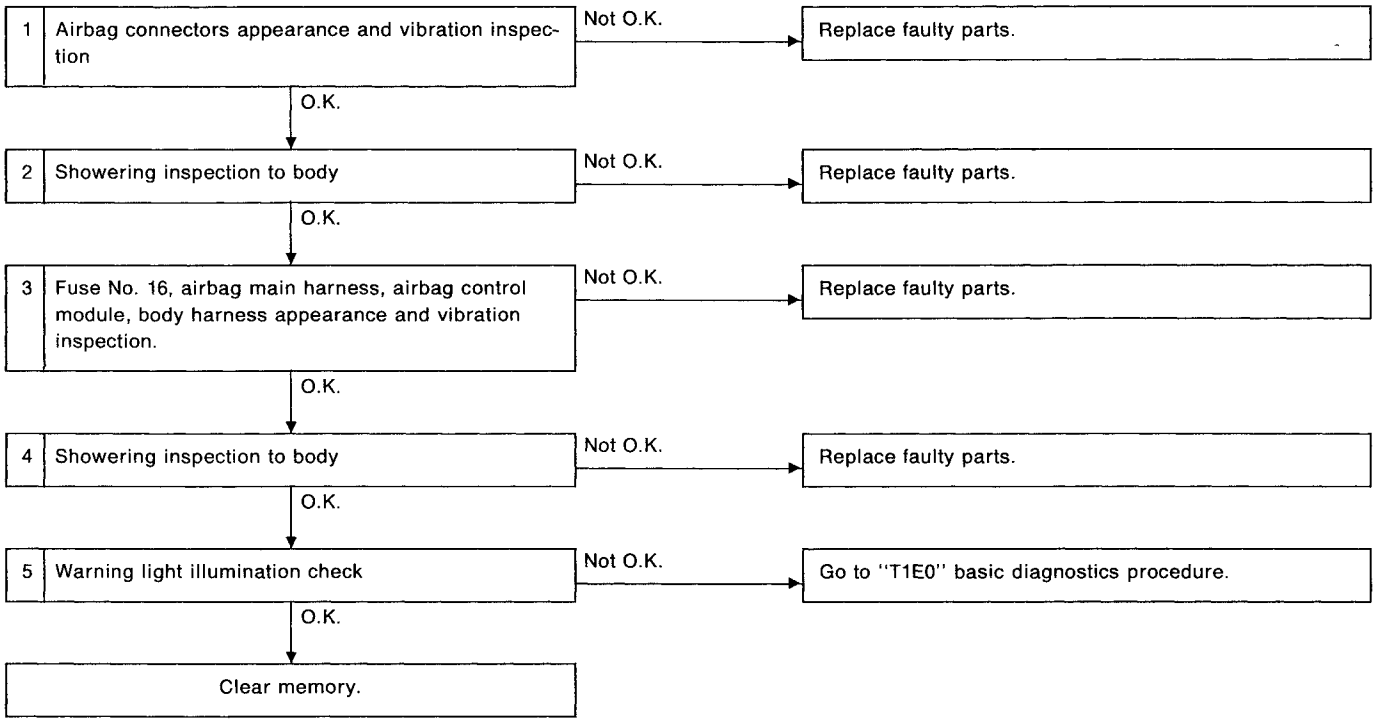

CAUTION:
Before performing diagnostics on airbag system, turn ignition switch "OFF", disconnect battery ground cable, and then wait at least 20 seconds.

1. AIRBAG CONNECTORS APPEARANCE AND VIBRATION INSPECTION

1) Conduct appearance inspection on airbag connectors (AB2 through AB8). <Ref. to 5-5 [T300].>

Check terminals, case and wiring harnesses for damage.

2) Conduct vibration inspection on airbag connectors (AB2 through AB8). <Ref. to 5-5 [T300].>

Gently shake each airbag connector.

2. SHOWERING INSPECTION TO BODY

1) Spray water on vehicle body.

CAUTION:
Do not directly spray water on airbag connectors.

2) Check passenger compartment for traces of leaking.

If leaks are noted, also check wiring harnesses as water may leak along them and wet airbag connectors.

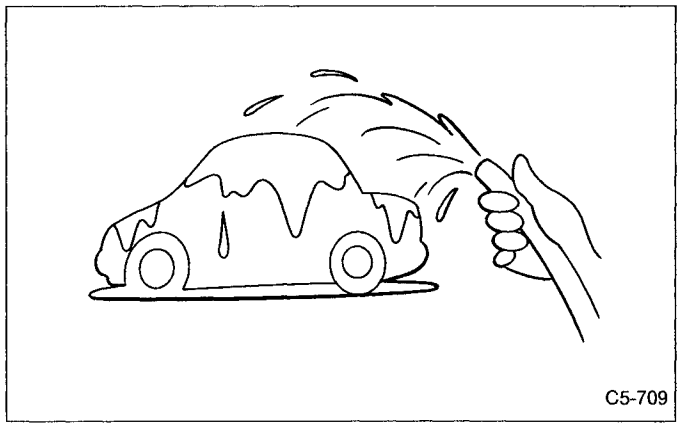

Fig. 106

3. FUSE No. 16, AIRBAG MAIN HARNESS, AIRBAG CONTROL MODULE, BODY HARNESS APPEARANCE AND VIBRATION INSPECTION

1) Conduct appearance inspection on fuse No. 16 <Ref. to 5-5 [T6I3].>, airbag main harness <Ref. to 5-5 [W1D1].>, airbag control module <Ref. to 5-5 [W1E1].> and body harness.

Also check connectors, terminals, wiring harnesses and case for damage.

2) Conduct vibration inspection on fuse No. 16, airbag main harness, airbag control module and body harness.

Gently shake each part.

4. SHOWERING INSPECTION TO BODY

1) Spray water on vehicle body.

CAUTION:
Do not directly spray water on each part.

2) Check passenger compartment for traces of leaking.

If leaks are noted, check wiring harness as water may leak along them and get parts wet.

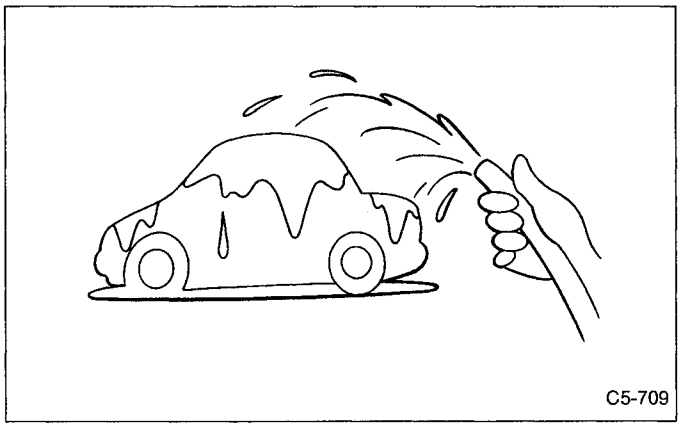

Fig. 107

5. WARNING LIGHT ILLUMINATION CHECK

1) Turn ignition switch "ON" (engine "OFF") and observe airbag warning light.
Airbag warning light comes "ON" for 8 seconds then goes out and stays out.

SUBARU®

SVX

SERVICE MANUAL

FOREWORD

This service manual has been prepared to provide SUBARU service personnel with the necessary information and data for the correct maintenance and repair of SUBARU SVX.
This manual include the procedures for maintenance disassembling, reassembling, inspection and adjustment of components and troubleshooting for guidance of both the fully qualified and the less-experienced mechanics.
Please peruse and utilize this manual fully to ensure complete repair work for satisfying our customers by keeping their vehicle in optimum condition. When replacement of parts during repair work is needed, be sure to use SUBARU genuine parts.
All information, illustration and specifications contained in this manual are based on the latest product information available at the time of publication approval.

FUJI HEAVY INDUSTRIES LTD.

All right reserved. This book may not be reproduced or copied, in whole or in part, without the written permission of
FUJI HEAVY INDUSTRIES LTD., TOKYO JAPAN.

SUBARU, and ⓯ are trademarks of
FUJI HEAVY INDUSTRIES LTD.

© Copyright 1991 FUJI HEAVY INDUSTRIES LTD.

6 ELECTRICAL SECTION

ENGINE ELECTRICAL SYSTEM 6-1
BODY ELECTRICAL SYSTEM 6-2
WIRING DIAGRAM AND TROUBLESHOOTING 6-3

SUBARU

SVX

1992

	Page
M MECHANISM AND FUNCTION	2
1. Alternator	2
2. Ignition Coil	3
3. Spark Plug	3
S SPECIFICATIONS AND SERVICE DATA	4
C COMPONENT PARTS	6
1. Starter	6
2. Alternator	7
W SERVICE PROCEDURE	8
1. Starter	8
2. Alternator	12
3. Ignition Coil	17
4. Spark Plug	18
T TROUBLESHOOTING	21
1. Starter	21
2. Alternator	22

M MECHANISM AND FUNCTION

1. Alternator

The alternator has a built-in regulator which provides the following diagnostic functions:

1) Voltage regulation

The on-off operation of transistor Tr_1 connects and disconnects the field current flow, providing a constant level of output voltage.

2) Diagnosis warning

When any of the following problems occur, the charge lamp illuminates.

a. No voltage generation
   Brush wear exceeds specified wear limits, field coil circuit is broken, etc.

b. Excessive output
   Output voltage is greater than 16 volts (approx.)

c. Terminal B disconnection
   Harness is disconnected from alternator terminal B.

d. Terminal S disconnection
   Harness is disconnected from alternator terminal S. In this case, voltage is slightly greater than specified regulated voltage; however, voltage regulation is still controlled and the battery is prevented from becoming overcharged.

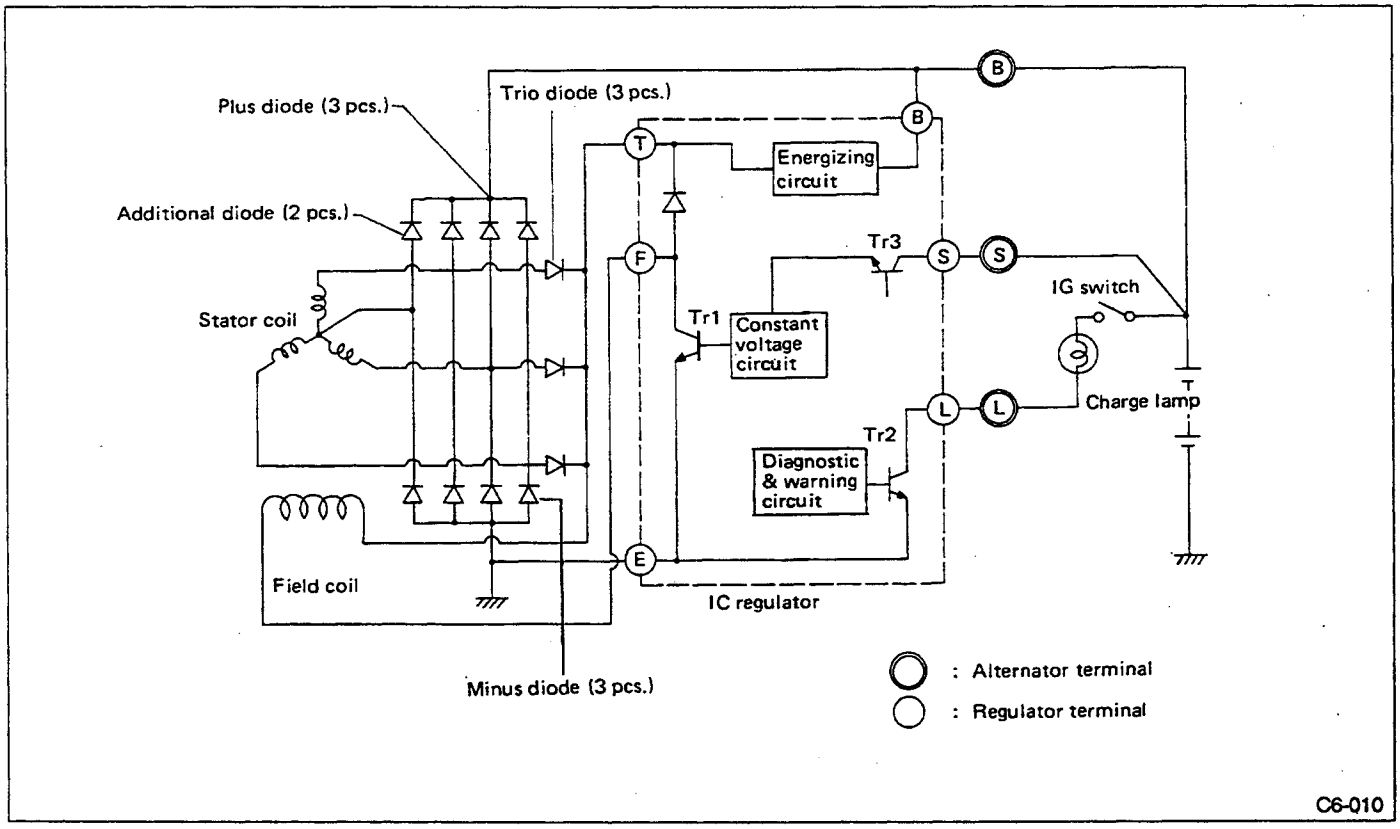

Fig. 1

2. Ignition Coil

One ignition coil is installed for each cylinder (or spark plug).
The secondary terminal of the ignition coil is in contact with the spark plug terminal nut.
Since spark plug cable is not used, secondary voltage drop, leaks, etc. do not occur. The result is high performance reliability.

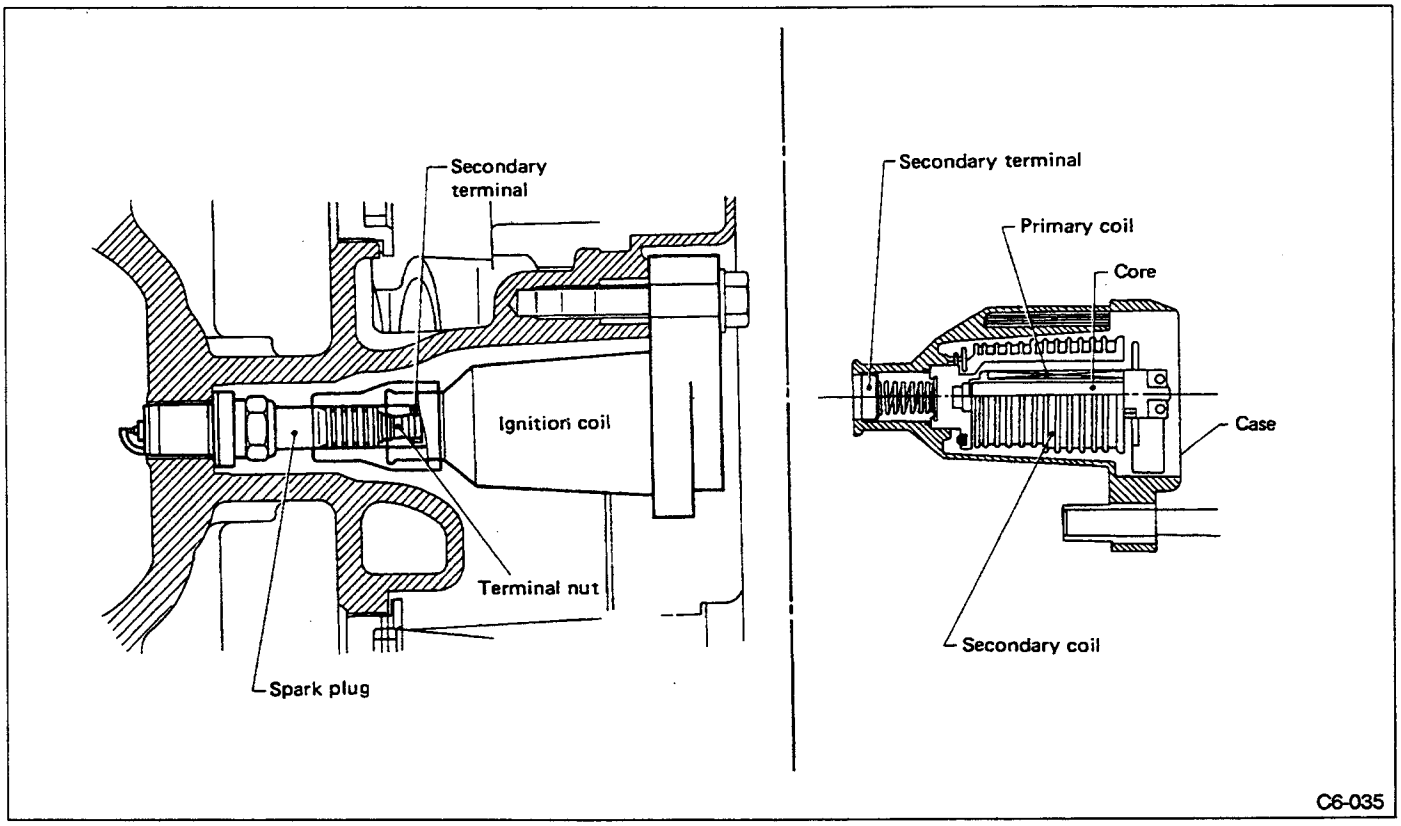

Fig. 2

3. Spark Plug

The spark plug has a platinum tipped type electrode, with 14 mm (0.551 in) threads and 1.0 to 1.1 mm (0.039 to 0.043 in) gap.

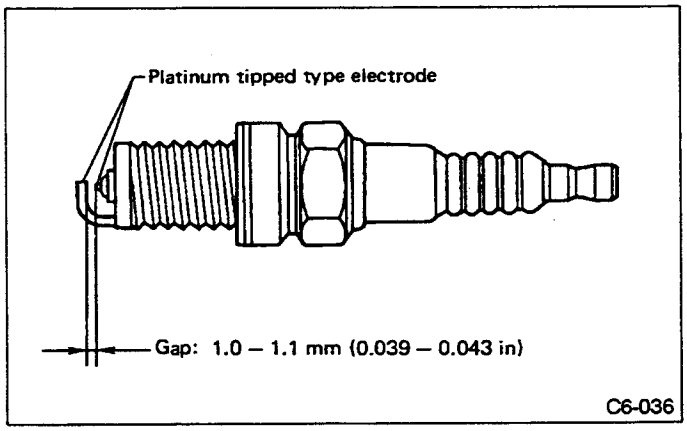

Fig. 3

S SPECIFICATIONS AND SERVICE DATA

A: SPECIFICATIONS

1. STARTER

Type		Reduction type
Model		MIT-75681
Manufacture		MITSUBISHI
Voltage and Output		12V — 1.4 kW
Direction of rotation		Counterclockwise (when observed from pinion)
Number of pinion teeth		9
No-load characteristics	Voltage	11 V
	Current	90 A or less
	Rotating speed	3,000 rpm or more
Load characteristics	Voltage	7.7 V
	Current	300 A or less
	Torque	10 N•m (1.0 kg-m, 7 ft-lb)
	Rotating speed	1,000 rpm or more
Lock characteristics	Voltage	4 V
	Current	980 A or less
	Torque	23 N•m (2.3 kg-m, 17 ft-lb) or more

2. ALTERNATOR

Type	Rotating-field three-phase type, Voltage regulator built-in type
Model	A3T08891
Regulator type	A866X21271
Manufacture	MITSUBISHI
Voltage and Output	12 V — 95 A
Polarity on ground side	Negative
Direction of rotation	Clockwise (when observed from pulley side)
Armature connection	3-phase Y-type
Rectifying system	Full wave rectification by eight self-contained silicone diode
Output current	1,500 rpm — 39 A or more 2,500 rpm — 73 A or more 5,000 rpm — 95 A or more
Regulated voltage	14.2 — 14.8 V [20°C (68°F)]

3. IGNITION COIL

Type	Direct ignition type
Manufacture	DIAMOND
Primary coil resistance	0.68 — 0.83 Ω
Secondary coil resistance	—
Insulation resistance between primary terminal and case	More than 10 MΩ

4. SPARK PLUG

Type and Manufacture		PFR6B -11 PFR6G -11... NGK PK20PR-11 ... NIPPONDENSO
Thread size	mm	14, P = 1.25
Spark gap	mm (in)	1.0 — 1.1 (0.039 — 0.043)

C COMPONENT PARTS

1. Starter

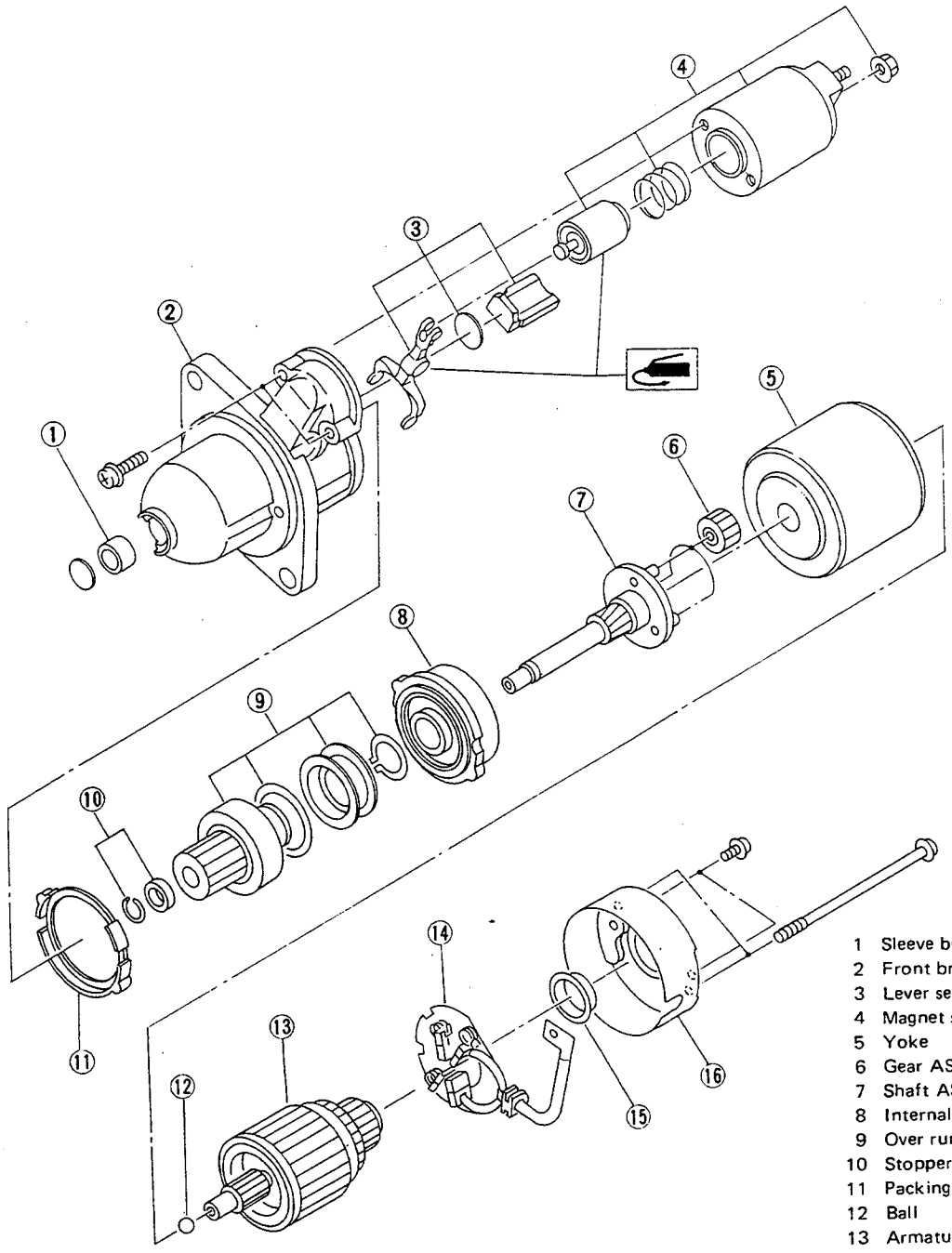

1 Sleeve bearing
2 Front bracket
3 Lever set
4 Magnet switch ASSY
5 Yoke
6 Gear ASSY
7 Shaft ASSY
8 Internal gear ASSY
9 Over running clutch
10 Stopper set
11 Packing
12 Ball
13 Armature
14 Brash holder
15 Bearing
16 Rear bracket

C6-011

Fig. 4

2. Alternator

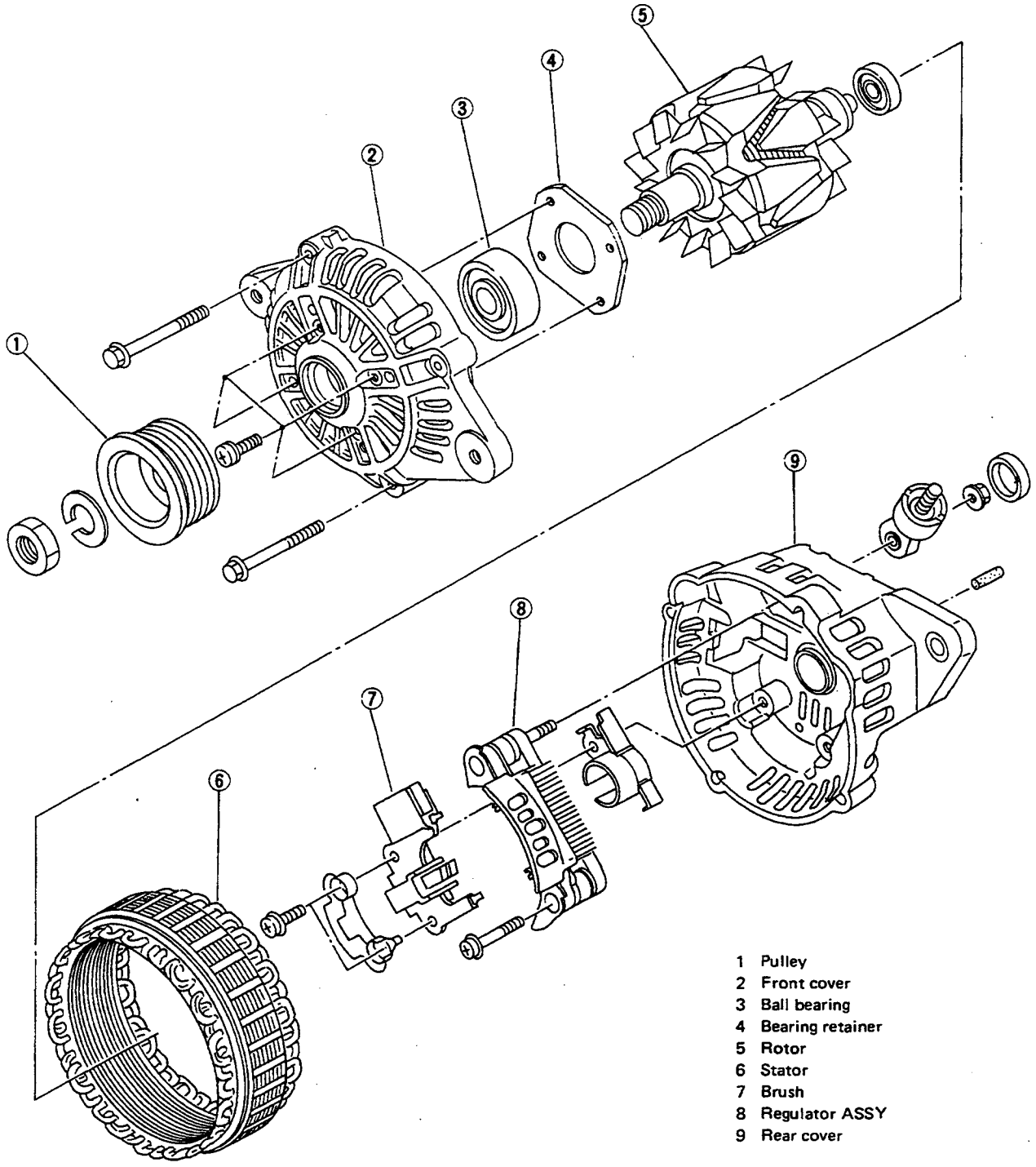

Fig. 5

W SERVICE PROCEDURE

1. Starter

A: TEST

1. SWITCH ASSEMBLY OPERATION

1) Connect terminal S of switch ASSY to positive terminal of battery with a lead wire, and starter body to ground terminal of battery. Pinion should be forced endwise on shaft.

With pinion forced endwise on shaft, starter motor can sometimes rotate because current flows, through pull-in coil, to motor. This is not a problem.

2) Disconnect connector from terminal M, and connect positive terminal of battery and terminal M using a lead wire and ground terminal to starter body.
In this test setup, pinion should return to its original position even when it is pulled out with a screwdriver.

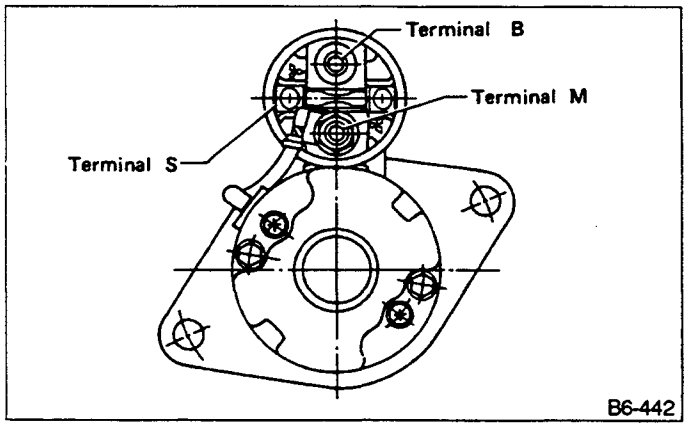

Fig. 6

2. PINION GAP

1) With pinion forced endwise on shaft, as outlined in step 1) above, measure pinion gap.

Pinion gap:
0.5 — 2.0 mm (0.020 — 0.079 in)

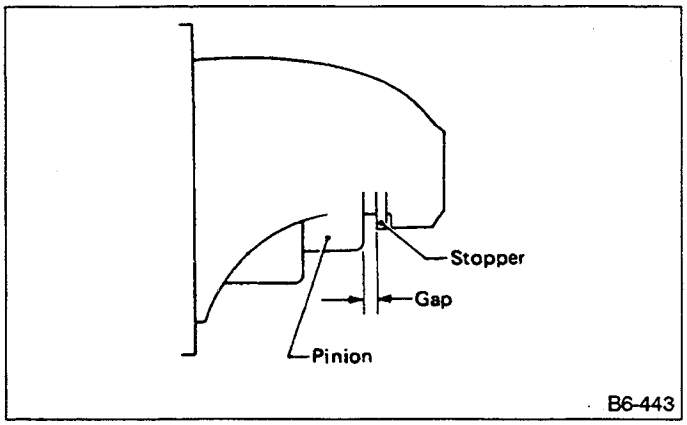

Fig. 7

If motor is running with the pinion forced endwise on the shaft, disconnect connector from terminal M of switch ASSY and connect terminal M to ground terminal (−) of battery with a lead wire. Next, gently push pinion back with your fingertips and measure pinion gap.
2) If pinion gap is outside specified range, remove or add number of adjustment washers used on the mounting surface of switch ASSY until correct pinion gap is obtained.

3. PERFORMANCE TEST

The starter should be submitted to performance tests whenever it has been overhauled, to assure its satisfactory performance when installed on the engine.
Three performance tests, no-load test, load test, and lock test, are presented here; however, if the load test and lock test cannot be performed, carry out at least the no-load test.
For these performance tests, use the circuit shown in figure.

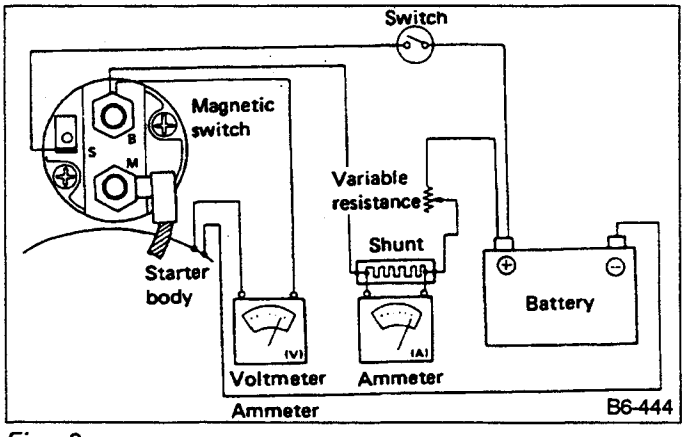

Fig. 8

1) No-load test
With switch on, adjust the variable resistance to obtain 11 V, take the ammeter reading and measure the starter speed. Compare these values with the specifications.

No-load test (Standard):
Voltage/Current
11 V/90 A max
Rotating speed
3,000 rpm/min

2) Load test
Apply the specified braking torque to starter. The condition is satisfactory if the current draw and starter speed are within specifications.

Load test (Standard):
Voltage/Load
7.7 V/10 N•m (1.0 kg-m, 7 ft-lb)
Current/Speed
300 A max/1,000 rpm/min

3) Lock test
With starter stalled, or not rotating, measure the torque developed and current draw when the voltage is adjusted to the specified voltage.

Lock test (Standard):
Voltage/Current
4 V/980 A max
Torque
23 N•m (2.3 kg-m, 17 ft-lb) min

B: DISASSEMBLY

1) Loosen nut which holds terminal M of switch ASSY, and disconnect connector.
2) Remove bolts which hold switch ASSY, and remove switch ASSY, plunger and plunger spring from starter as a unit.

Be careful because pinion gap adjustment washer may sometimes be used on the mounting surface of switch ASSY.

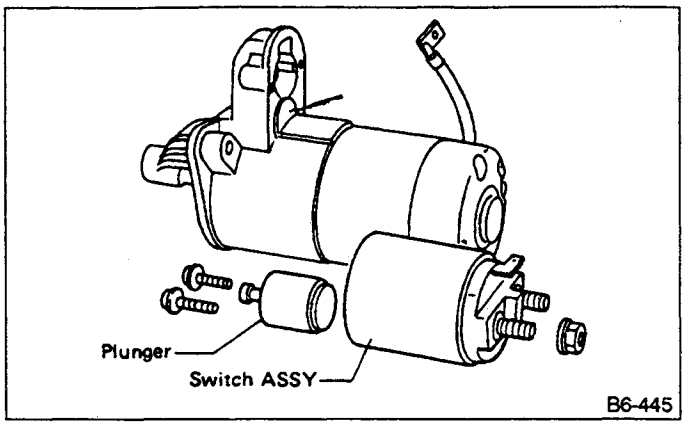

Fig. 9

3) Remove both through-bolts and brush holder screws, and detach rear bracket and brush holder.

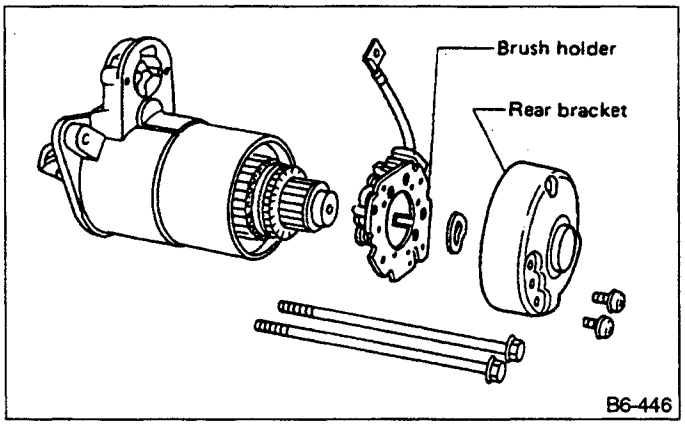

Fig. 10

4) Remove armature and yoke. Ball used as a bearing will then be removed from the end of armature.
Be sure to mark an alignment mark on yoke and front bracket before removing yoke.

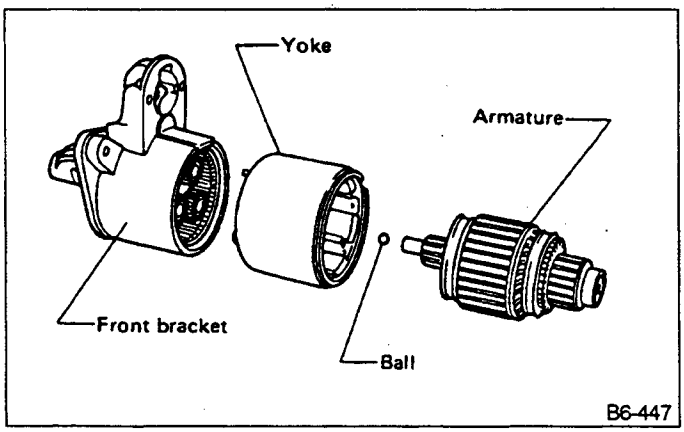

Fig. 11

5) Remove packing A, three planetary gears, packing B and plate.

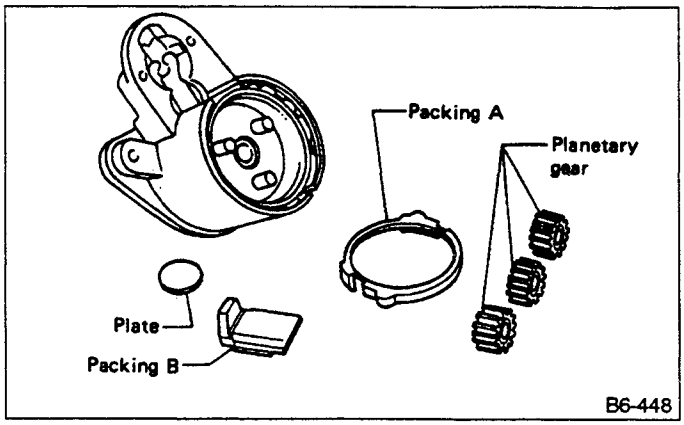

Fig. 12

6) Remove shaft ASSY and overrunning clutch as a unit.

Record the direction of lever before removing.

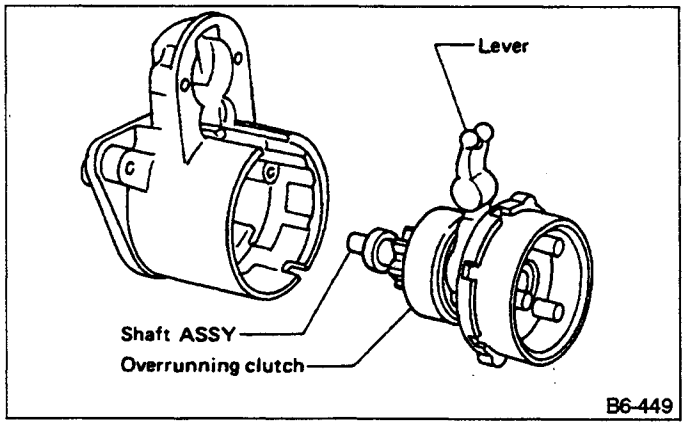

Fig. 13

7) Remove overrunning clutch from shaft ASSY as follows:

(1) Remove stopper from ring by lightly tapping a jig placed on stopper.

(2) Remove ring, stopper and clutch from shaft.

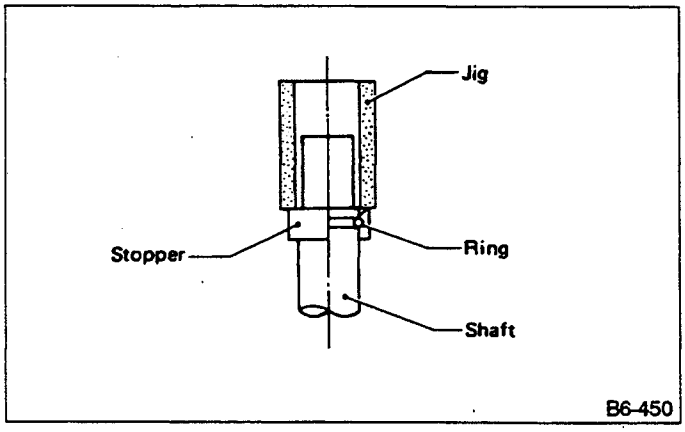

Fig. 14

C: INSPECTION

1. ARMATURE

1) Check commutator for any sign of burns of rough surfaces or stepped wear. If wear is of a minor nature, correct it by using sandpaper.

2) Run-out test

Check the commutator run-out and replace if it exceeds the limit.

Commutator run-out:
Standard
0.05 mm (0.0020 in)
Service limit
Less than 0.10 mm (0.0039 in)

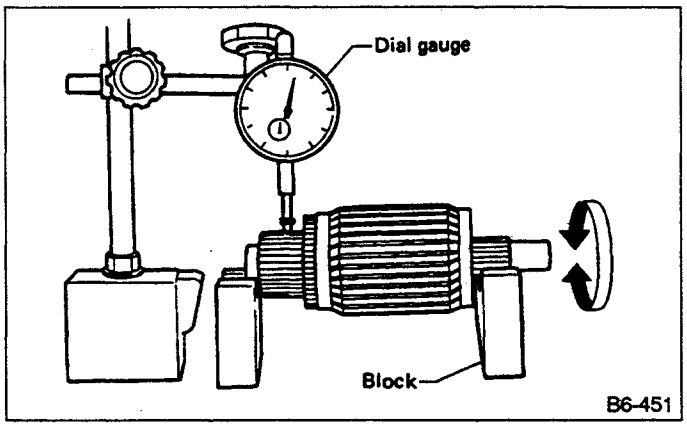

Fig. 15

3) Depth of segment mold

Check the depth of segment mold.

Depth of segment mold
0.5 — 0.8 mm (0.020 — 0.031 in)

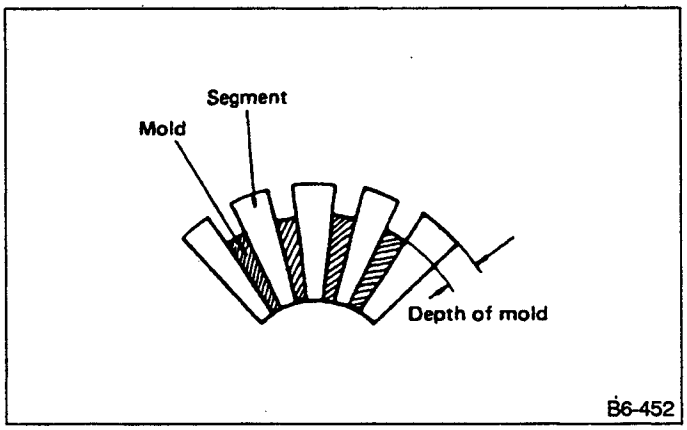

Fig. 16

4) Armature short-circuit test
Check armature for short-circuit by placing it on growler tester. Hold a hacksaw blade against armature core while slowly rotating armature. A short-circuited armature will cause the blade to vibrate and to be attracted to core. If the hacksaw blade is attracted or vibrates, the armature, which is short-circuited, must be replaced or repaired.

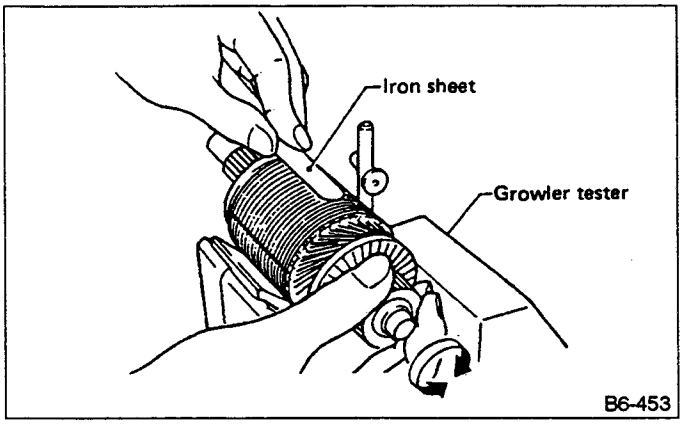

Fig. 17

5) Armature ground test
Using circuit tester, touch one probe to the commutator segment and the other to shaft. There should be no continuity. If there is a continuity, armature is grounded. Replace armature if it is grounded.

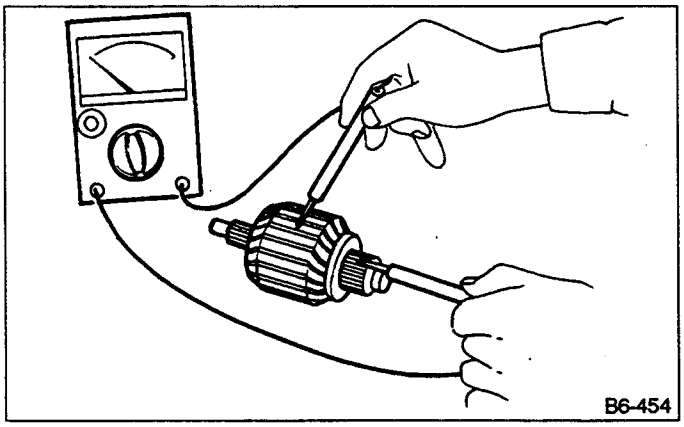

Fig. 18

2. YOKE
Make sure pole is set in position.

3. OVERRUNNING CLUTCH
Inspect teeth of pinion for wear and damage. Replace if it damaged. Rotate pinion in direction of rotation (clockwise). It should rotate smoothly. But in opposite direction, it should be locked.

Do not clean overrunning clutch with oil to prevent grease from flowing out.

4. BRUSH AND BRUSH HOLDER
1) Brush length
Measure the brush length and replace if it exceeds the service limit.
Replace if abnormal wear or cracks are noticed.

Brush length:
Standard **17.0 mm (0.669 in)**
Service limit **11.5 mm (0.453 in)**

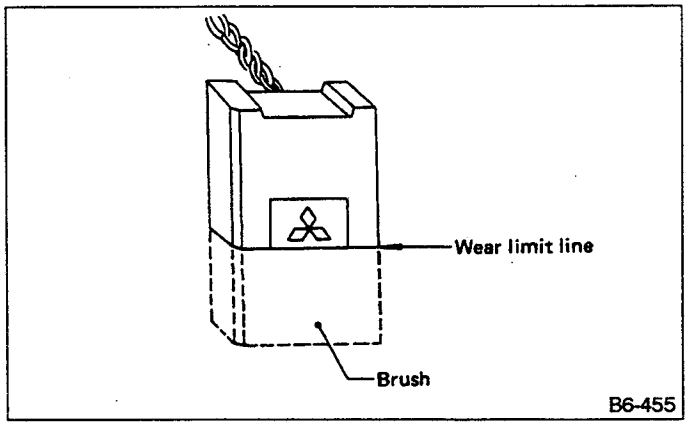

Fig. 19

2) Brush movement
Be sure brush moves smoothly inside brush holder.
3) Insulation resistance of brush holder
Be sure there is no continuity between brush holder and its plate.

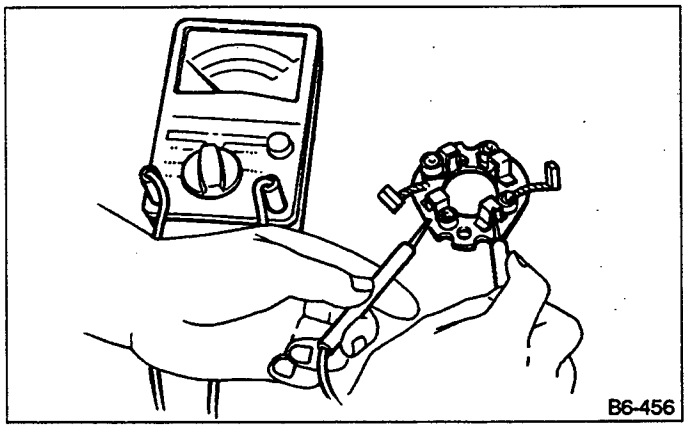

Fig. 20

4) Brush spring force
Measure brush spring force with a spring scale. If it is less than the service limit, replace brush spring.

Brush spring force:
Standard
18.6 N (1.9 kg, 4.2 lb) (when new)
Service limit
6.9 N (0.7 kg, 1.5 lb)

5. SWITCH ASSEMBLY

Be sure there is continuity between terminals S and M, and between terminal S and body ground. Use a circuit tester (set in "ohm").
Also check to be sure there is no continuity between terminal M and B.

Terminal	
S — M	Continuity
S — Body ground	Continuity
M — B	No continuity

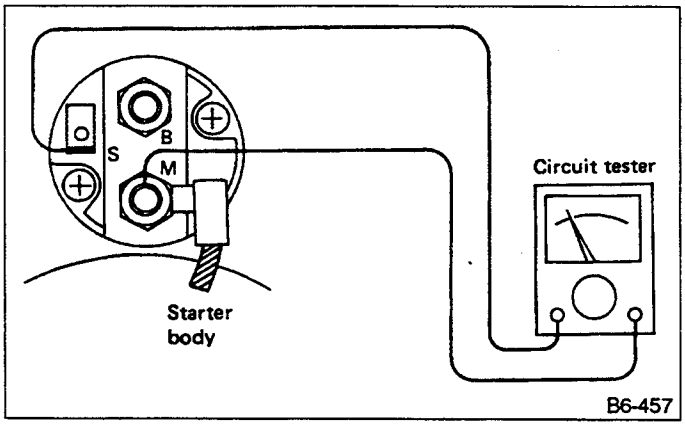

Fig. 21

D: ASSEMBLY

Assembly is in the reverse order of disassembly procedures. Observe the following:
1) Carefully assemble all parts in the order of assembly and occasionally inspect nothing has been overlooked.
2) Apply grease to the following parts during assembly.
- Front bracket sleeve bearing
- Armature shaft gear
- Outer periphery of plunger
- Mating surface of plunger and lever
- Gear shaft splines
- Mating surface of lever and clutch
- Ball at the armature shaft end
- Internal and planetary gears

3) After assembling parts correctly, check to be sure starter operates properly.

2. Alternator

A: DISASSEMBLY

1) Heat the bearing box to 50 to 60°C (122 to 140°F) with a 100 W-soldering iron and remove the four through bolts. Then insert the tip of a flat-head screwdriver into the gap between the stator core and front bracket. Pry then apart to disassemble.

Be careful not to lose the spring fitted in the periphery of the rear bearing.

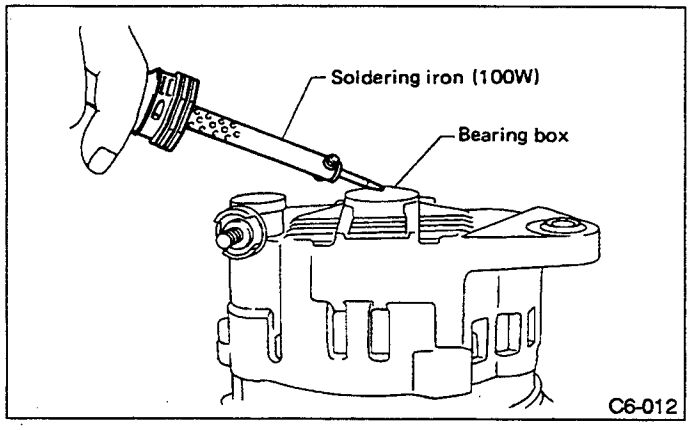

Fig. 22

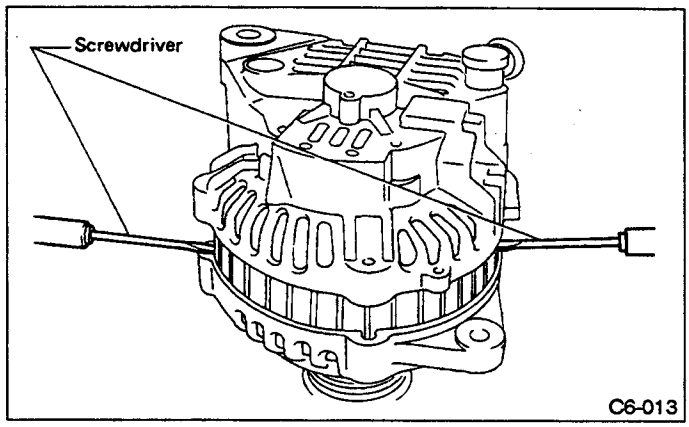

Fig. 23

2) Hold rotor with a vise and remove pully nut.
When holding rotor with vise, insert aluminum plates or wood pieces on the contact surfaces of the vise to prevent rotor from damage.

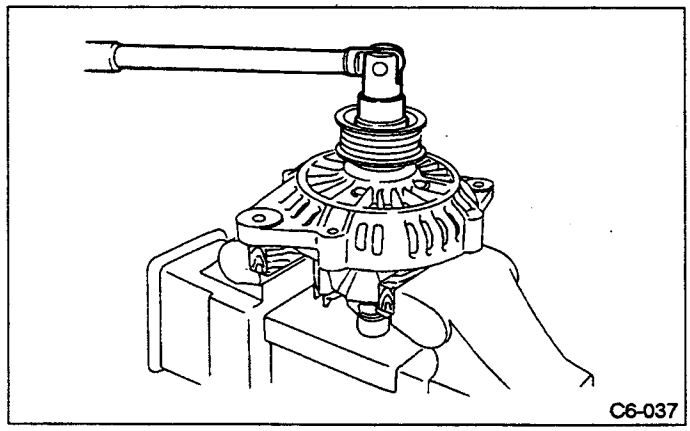

Fig. 24

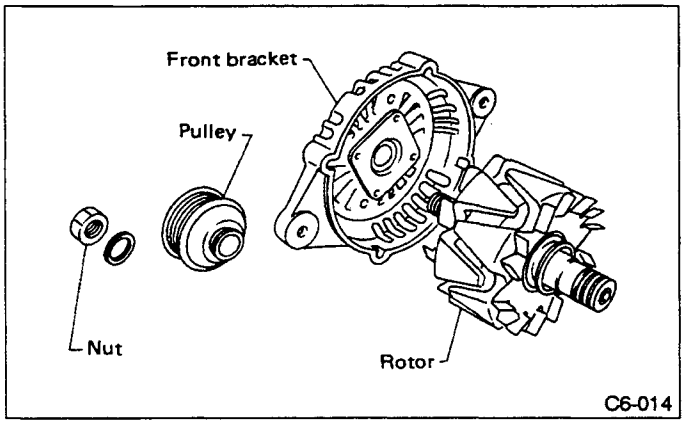

Fig. 25

3) Unsolder connection between rectifier and stator coil to remove stator coil.
Finish the work rapidly (less than three seconds) because the rectifier cannot withstand heat very well.

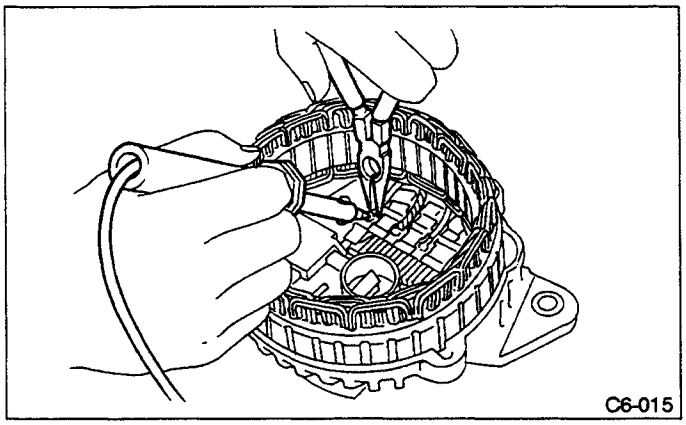

Fig. 26

4) Remove screws which secure IC regulator to rear cover, and unsolder connection between IC regulator and rectifier to remove IC regulator.

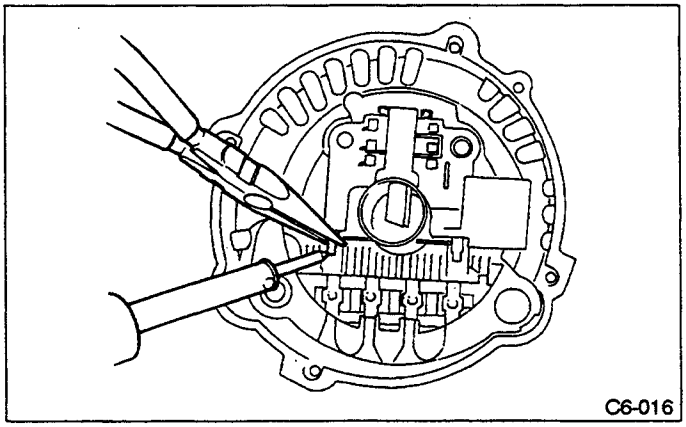

Fig. 27

5) Remove the brushes by unsoldering at the pigtails.

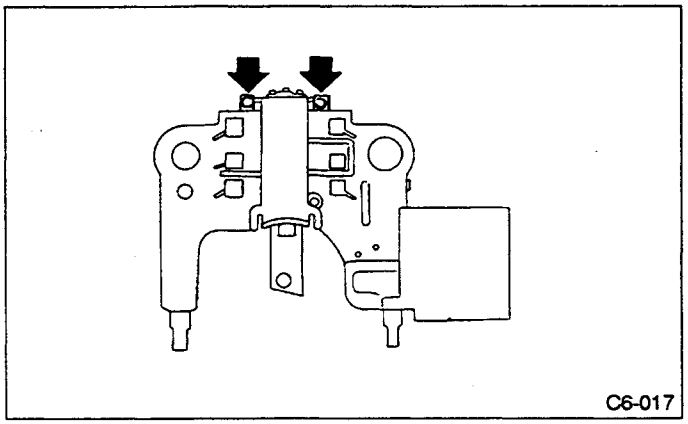

Fig. 28

6) Remove the nut and insulating bushing at terminal B. Remove rectifier.

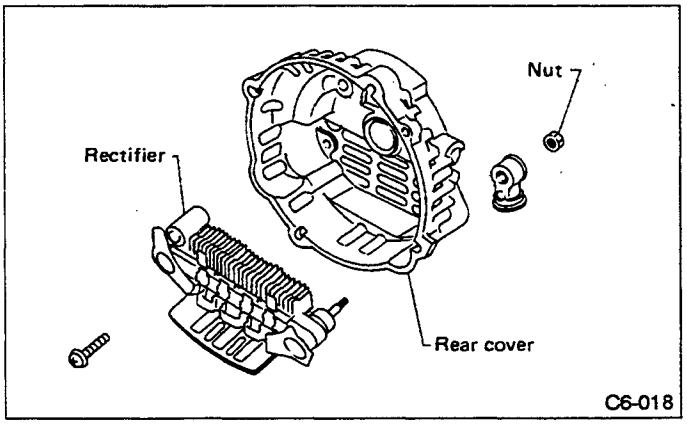

Fig. 29

B: INSPECTION AND REPAIR

1. DIODE

Never use a megger tester (measuring use for high voltage) or any other similar measure for this test; otherwise, the diodes may be damaged.

1) Checking positive diode

Check for continuity between the diode lead and the positive side heat sink. The positive diode is in good condition if continuity exists only in the direction from the diode lead to the heat sink.

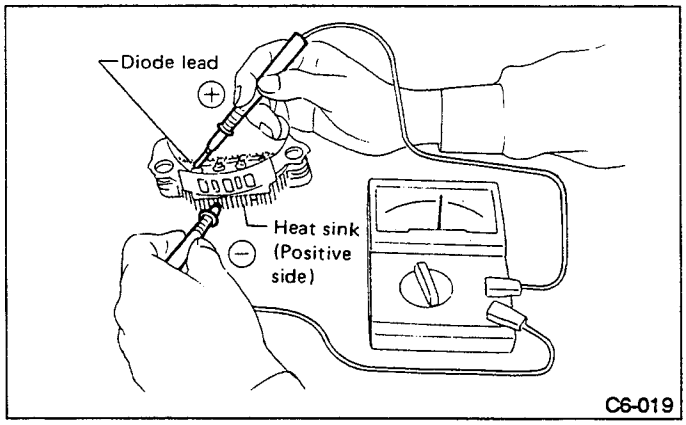

Fig. 30

2) Checking negative diode

Check for continuity between the negative side heat sink and diode lead. The negative diode is in good condition if continuity exists only in the direction from the heat sink to the diode lead.

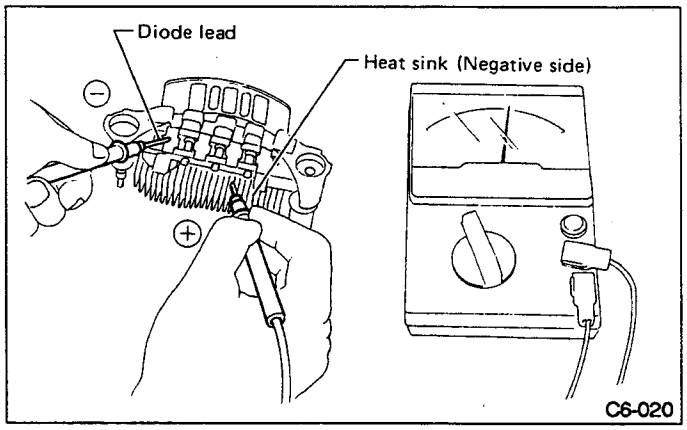

Fig. 31

3) Checking trio diode

Check the trio diode using a circuit tester. It is in good condition if continuity exists only in one direction.

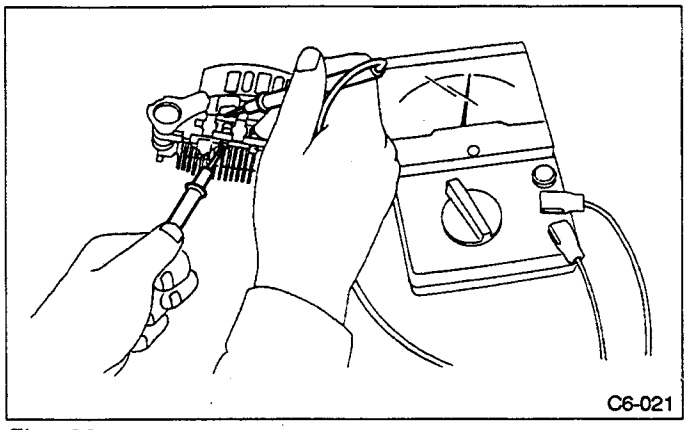

Fig. 32

2. ROTOR

1) Slip ring surface

Inspect slip rings for contamination or any roughness of the sliding surface. Repair slip ring surface using a lathe or sandpaper.

2) Slip ring outer diameter

Measure slip ring outer diameter. If slip ring is worn replace rotor ASSY.

Slip ring outer diameter:
Standard
22.7 mm (0.894 in)
Limit
22.1 mm (0.870 in)

3) Continuity test

Check resistance between slip rings using circuit tester. If the resistance is not within specification, replace rotor ASSY.

Specified resistance:
Approx. 3 Ω

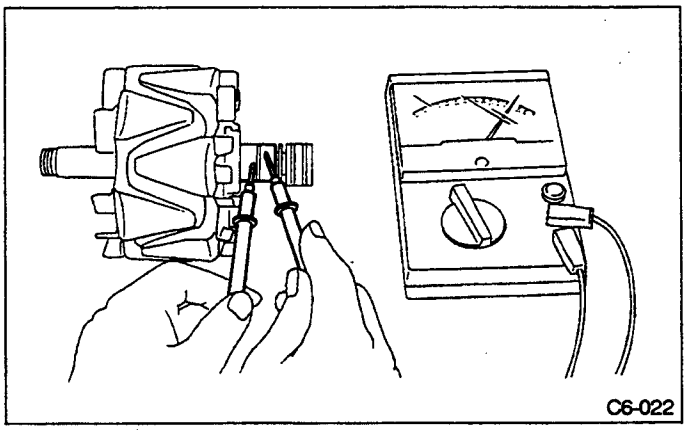

Fig. 33

4) Insulation test
Check continuity between slip ring and rotor core or shaft. If continuity exists, the rotor coil is short-circuited, and so replace rotor ASSY.

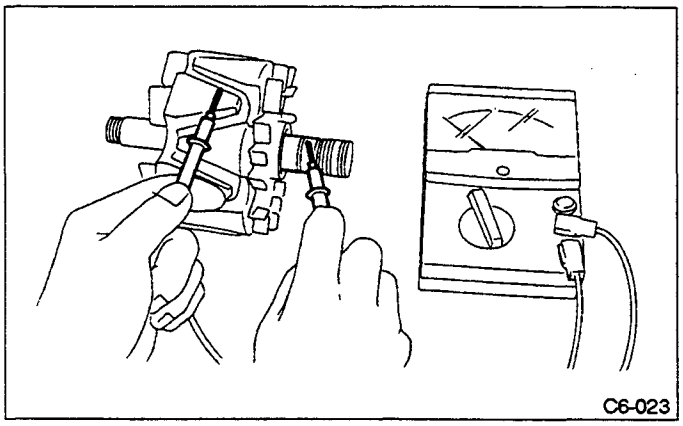

Fig. 34

5) Ball bearing (rear side)
(1) Check rear ball bearing. Replace it if it is noisy of if rotor does not turn smoothly.
(2) The rear bearing can be removed by using common bearing puller.

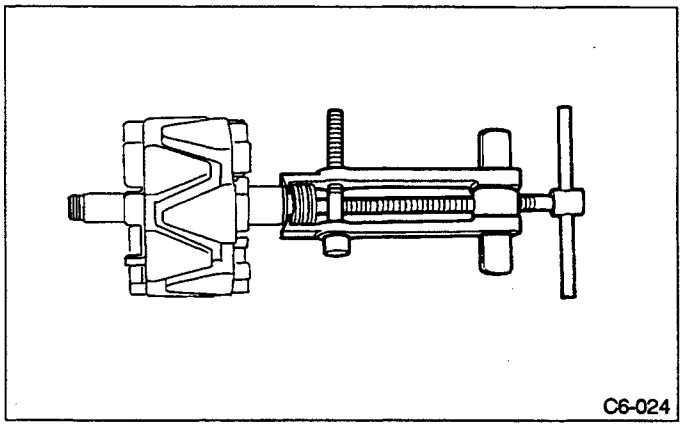

Fig. 35

3. STATOR

1) Continuity test
Inspect stator coil for continuity between each end of the lead wires. If there is no continuity between individual lead wires, the lead wire is broken, and so replace stator ASSY.

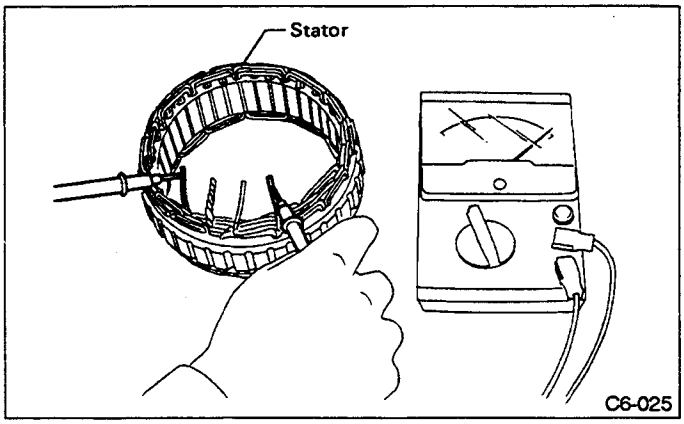

Fig. 36

2) Insulation test
Inspect stator coil for continuity between stator core and each end of the lead wire. If there is continuity, the stator coil is short-circuited, and so replace stator ASSY.

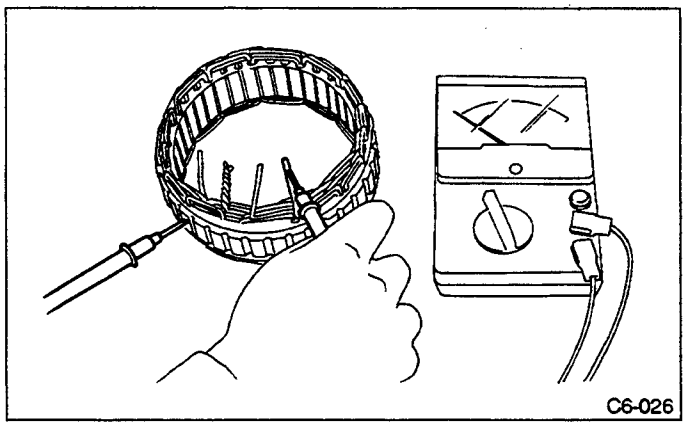

Fig. 37

4. BRUSH

1) Measure the length of each brush. If wear exceeds the wear limit, replace the brush. Each brush has the wear limit mark on it.

Brush length:
Standard
21.5 mm (0.846 in)
Wear limit
8.0 mm (0.315 in)

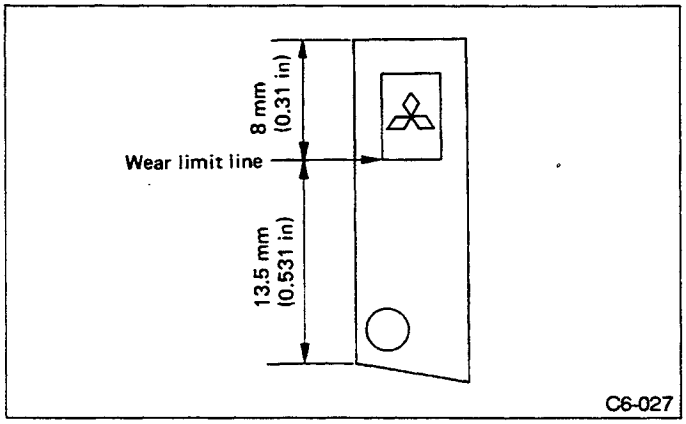

Fig. 38

2) Checking brush spring for proper pressure
Using a spring pressure indicator, push the brush into the brush holder until its tip protrudes 2 mm (0.08 in). Then measure the pressure of the brush spring. If the pressure is less than 1.765 N (180 g, 6.35 oz), replace the brush spring with a new one. The new spring must have a pressure of 3.334 to 4.119 N (340 to 420 g, 11.99 to 14.81 oz).

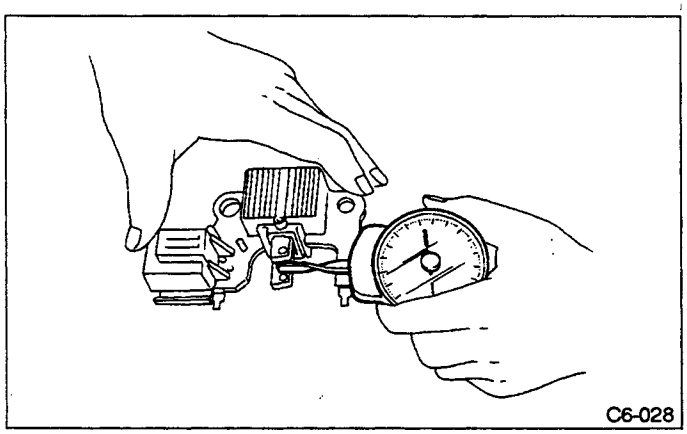

Fig. 39

5. BEARING (front side)

1) Check front ball bearing. If resistance is felt while rotating, or if abnormal noise is heard, replace the ball bearing.
2) Replacing front bearing
   (1) Remove front bearing retainer.
   (2) Closely install a fit jig on the bearing inner race. Press the bearing down out of front bracket with a hand press or vise. A socket wrench can serve as the jig.

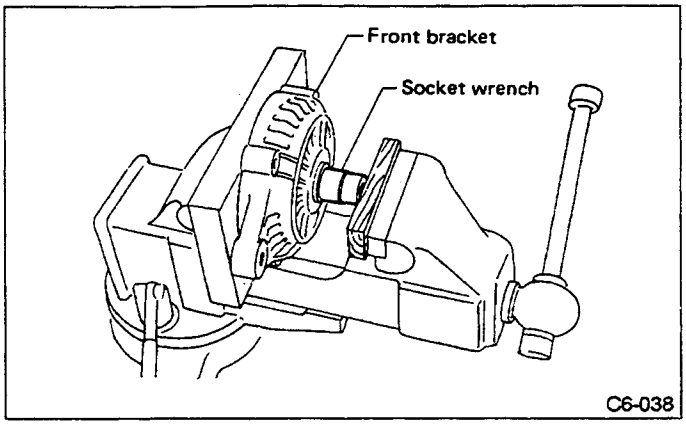

Fig. 40

(3) Set a new bearing and closely install a fit jig on the bearing outer race. Press the bearing down into place with a hand press or vise. A socket wrench can serve as the jig.

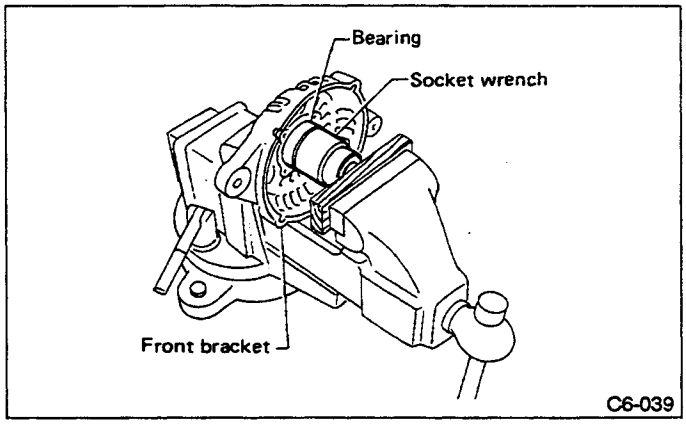

Fig. 41

(4) Install front bearing retainer.

C: ASSEMBLY

To assemble, reverse order of disassembly.
1) The rear bearing has an eccentric groove on its periphery. Fit the lock spring into this groove so that the projecting part is in the deepest portion of the groove. This will reduce spring projection, making reassembly easy. Also, it assures greater locking effect, since the spring will be free from undue force during reassembly. The deepest portion of the groove has chamfered edges for easy identification.

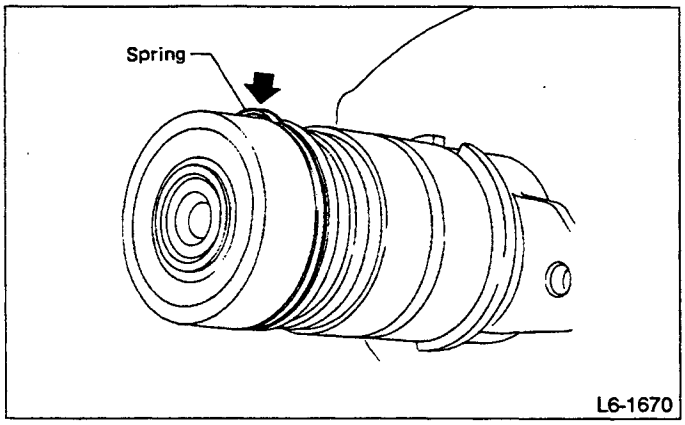

Fig. 42

2) Pulling up brush
Before assembling, press the brush down into the brush holder with your finger and secure in that position by passing a [2 mm (0.08 in) dia. length 4 to 5 cm (1.6 to 2.0 in)] wire through the hole shown in the figure.
Be sure to remove the wire after reassembly.

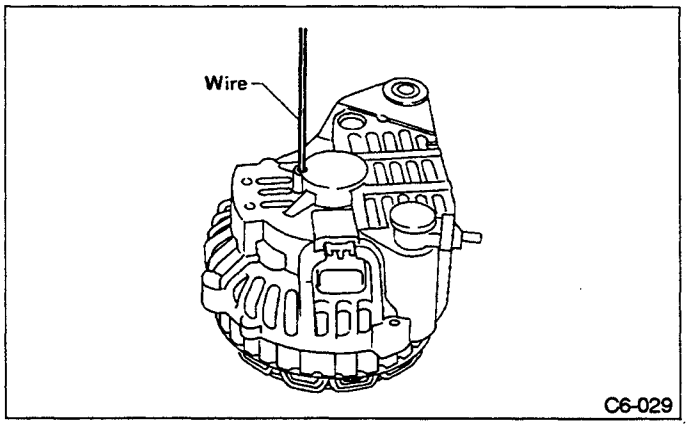

Fig. 43

3) Heat the rear bracket [50 to 60°C (122 to 140°F)] and press the rear bearing into the rear bracket. Then lubricate the rear bracket.
4) After reassembly, turn the pulley by hand to check that the rotor turns smoothly.

3. Ignition Coil

A: REMOVAL AND INSTALLATION

1) Disconnect battery cables from positive and negative terminals.
2) Remove battery.
3) Remove air cleaner case.
4) Disconnect ignition coil harness connector.
5) Loosen bolts which attach ignition coil to cylinder head completely.
Grip the bolt head with pliers and pull. The ignition coil is removed in this procedure.

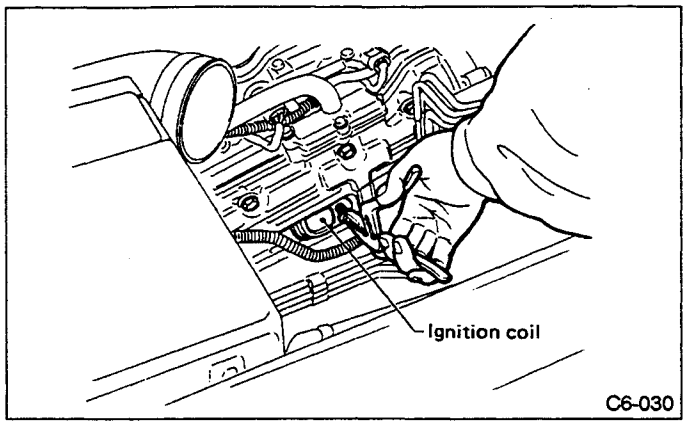

Fig. 44

6) Installation is in the reverse order of removal.

Tightening torque (Ignition Coil):
17.2 — 20.1 N•m (1.75 — 2.05 kg-m,12.7 — 14.8 ft-lb)

Be sure to connect wires to their proper positions. Failure to do so will damage unit.

B: INSPECTION

1. PRIMARY COIL

1) Using accurate tester, measure the primary coil resistance.
If the resistance is extremely low, this indicates the presence of a short-circuit.

Specified resistance:
[Primary side]
0.68 — 0.83 Ω

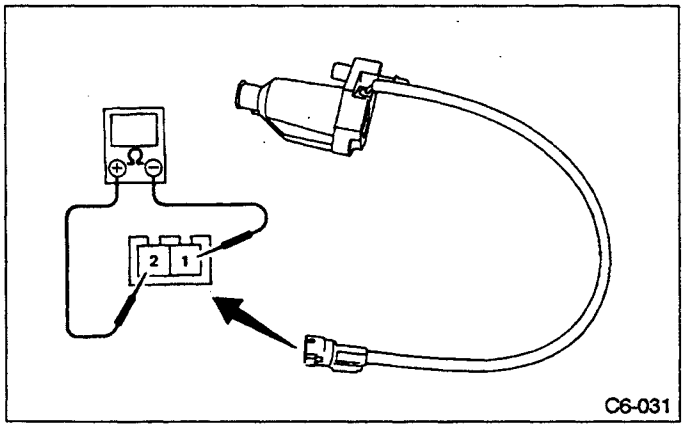

Fig. 45

2. SECONDARY COIL

Since diodes are built into the coil's secondary side, coil's resistance can not be measured. Therefore, inspect secondary side using the method described below.

1) Connect a 12-volt power supply and ammeter in series between primary and secondary terminals of ignition coil, as shown in figure, and measure current value.

Use a digital ammeter since only a very low current flows through terminals.

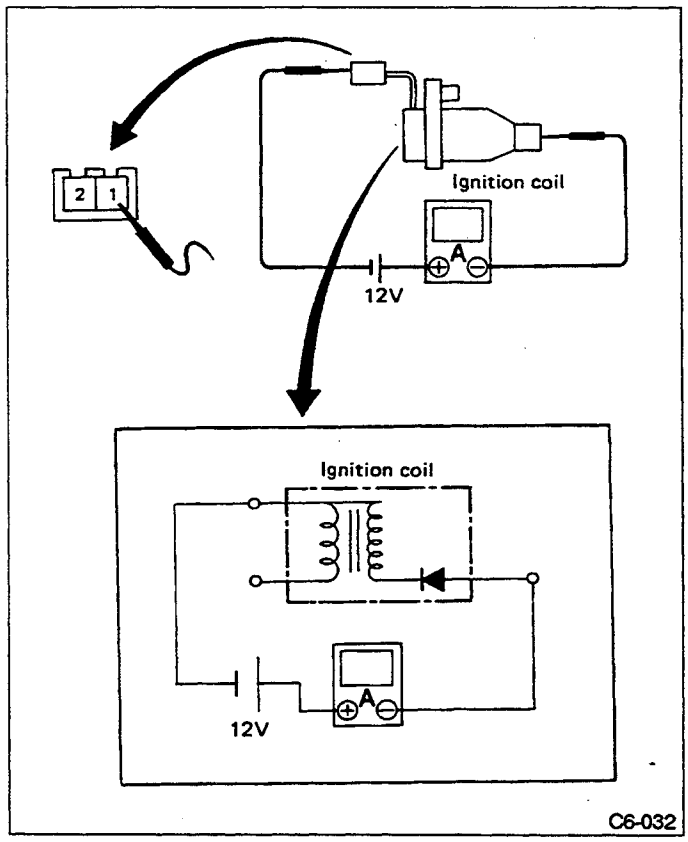

Fig. 46

Specified current value:
Approximately: 0.32 mA

2) If a digital ammeter is not available, use method described below.

(1) Disconnect all fuel injector connectors.

(2) Remove ignition coil to be checked from cylinder head.

(3) Install good spark plug to ignition coil.

(4) Make sure all ignition coil connectors are connected.

(5) Contact metal section of spark plug to cylinder head. Turn ignition switch to "START" to make sure spark occurs between spark plug electrodes.

(6) If spark does not occur, check primary coil condition. If primary coil is satisfactory, secondary coil is faulty.

Before checking secondary coil using "spark" method described above, make sure the other ignition systems are in good condition.

4. Spark Plug

A: REMOVAL AND INSTALLATION

1) Remove ignition coil from cylinder head. 〈Ref. to 3 "Ignition Coil" [W3A0].〉

2) Remove spark plug using spark plug wrench.

3) When installing spark plugs on cylinder head, use spark plug wrench.

Spark plug
NGK:
PFR6B-11, PFR6G-11
NIPPONDENSO:
PK20PR-11

Tightening torque (Spark plug):
20 — 29 N•m (2 — 3 kg-m, 14 — 22 ft-lb)

The above torque should be only applied to new spark plugs without oil on their threads.
In case their threads are lubricated, the torque should be reduced by approximately 1/3 of the specified torque in order to avoid their over-stressing.

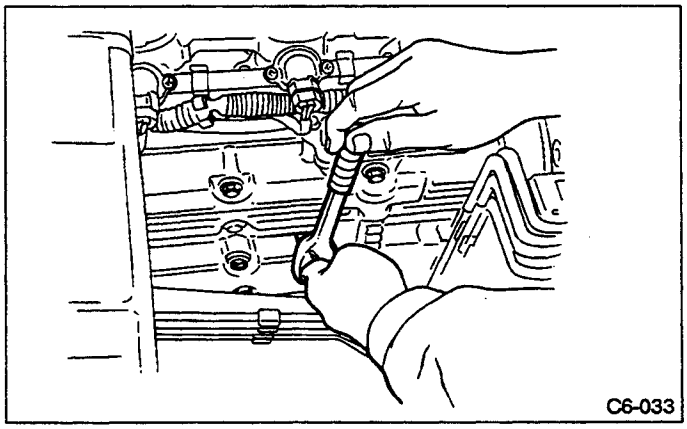

Fig. 47

4) Install ignition coil.

B: INSPECTION

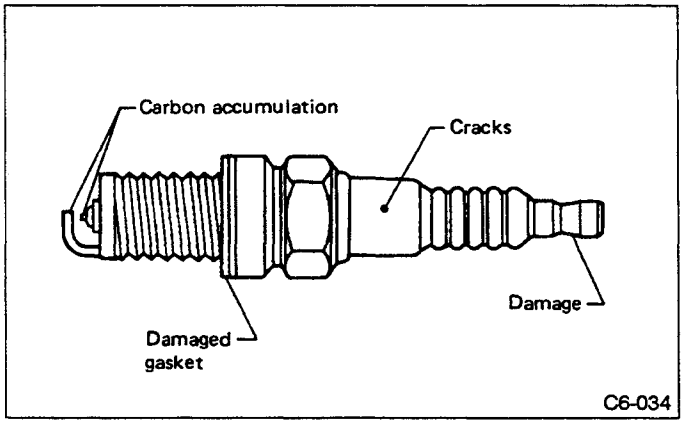

Fig. 48

Check electrode and inner and outer porcelain of plugs, noting the type of deposits.

1) Normal

Brown to grayish-tan deposits indicate correct spark plug heat range.

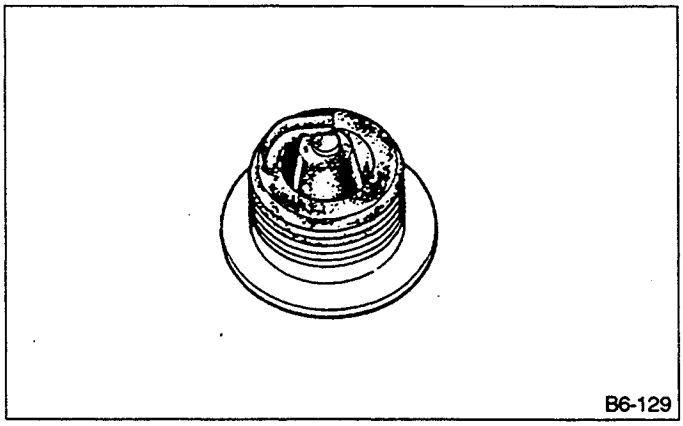

Fig. 49

2) Carbon fouled

Dry fluffy carbon deposits on insulator and electrode are mostly caused by slow speed driving in city, weak ignition, too rich fuel mixture, dirty air cleaner, etc.
It is advisable to replace with plugs having hotter heat range.

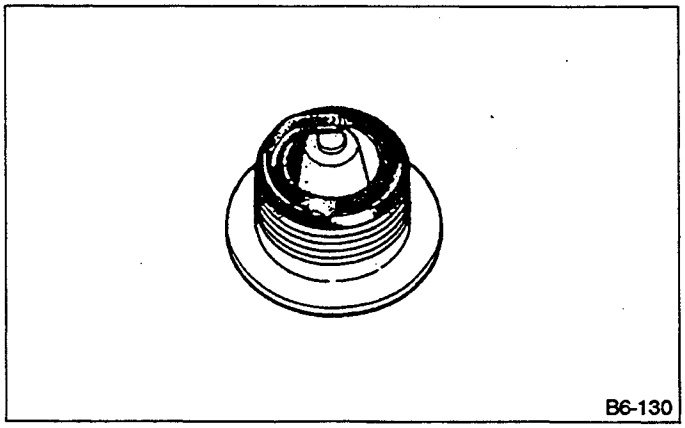

Fig. 50

3) Oil fouled

Wet black deposits show excessive oil entrance into combustion chamber through worn rings and pistons or excessive clearance between valve guides and stems. If same condition remains after repair, use a hotter plug.

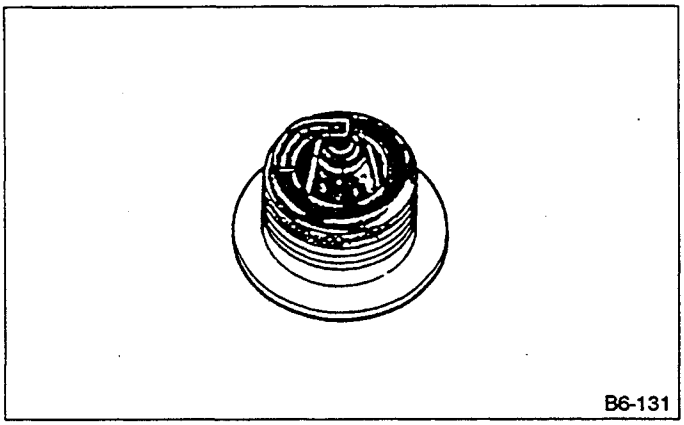

Fig. 51

4) Overheating

White or light gray insulator with black or gray brown spots and bluish burnt electrodes indicate engine overheating. Moreover, the appearance results from incorrect ignition timing, loose spark plugs, wrong selection of fuel, hotter range plug, etc. It is advisable to replace with plugs having colder heat range.

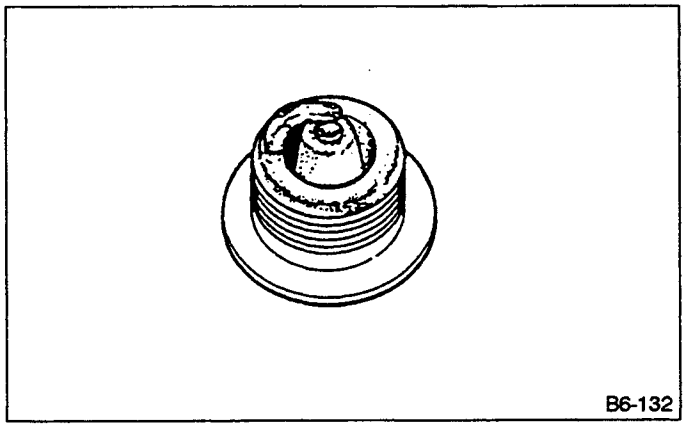

Fig. 52

C: CLEANING AND REGAPPING

Do not clean spark plug or adjust plug gap as this may damage platinum tip of electrode. However, if carbon accumulates excessively on electrodes due to "poor" sparks, use plug cleaner under the following conditions:

Plug cleaner usage condition:
- **Air pressure**
  - **588 kPa (6.0 kg/cm^2, 85 psi) or less**
- **Time required**
  - **20 sec. or less**

Never use wire brush when cleaning.

T TROUBLESHOOTING

1. Starter

Trouble		Probable cause
Starter does not start.	Magnet switch does not operate (no clicks are heard).	Magnet switch poor contact or discontinuity of pull-in coil circuit Improper sliding of magnet switch plunger
	Magnet switch operates (clicks are issued).	Poor contact of magnet switch's main contact point
		Layer short of armature Contaminants on armature commutator High armature mica.
		Improper grounding of yoke field coil
		Insufficient carbon brush length
		Insufficient brush spring pressure
Starter starts but does not crank engine	Failure of pinion gear to engage ring gear	Worn pinion teeth
		Improper sliding of overrunning clutch
		Improper adjustment of stud bolt
	Clutch slippage	Faulty clutch roller spring
Starter starts but engine cranks too slowly.		Poor contact of magnet switch's main contact point
		Layer short of armature
		Discontinuity, burning or wear of armature commutator
		Poor grounding of yoke field coil
		Insufficient brush length
		Insufficient brush spring pressure
		Abnormal brush wear
Starter overruns		Magnet switch coil is a layer short.

2. Alternator

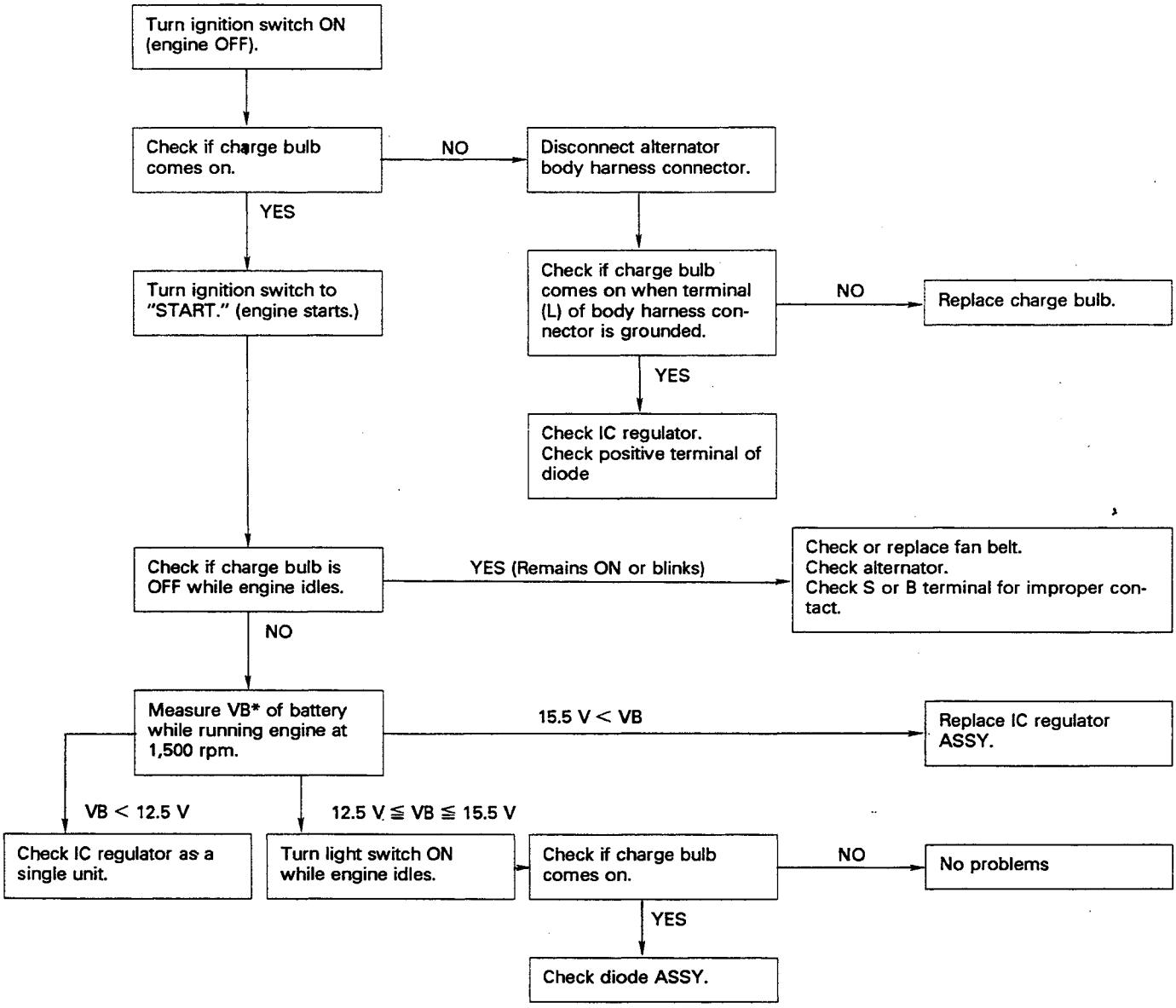

*: Terminal voltage

SUBARU

SVX

1992

Precaution for Supplemental Restraint System "Airbag"
The Supplemental Restraint System "Airbag" helps to reduce the risk or severity of injury to the driver in a frontal collision.
The Supplemental Restraint System consists of an airbag module (located in the center of the steering wheel), sensors, a control unit, warning light, wiring harness and spiral cable.
Information necessary to service the safety is included in the "5-5. SUPPLEMENTAL RESTRAINT SYSTEM" of this Service Manual.
WARNING:
- To avoid rendering the Airbag system inoperative, which could lead to personal injury or death in the event of a severe frontal collision, all maintenance must be performed by an authorized SUBARU dealer.
- Improper maintenance, including incorrect removal and installation of the Airbag system, can lead to personal injury caused by unintentional activation of the Airbag system.
- All Airbag system electrical wiring harnesses and connectors are covered with yellow outer insulation. Do not use electrical test equipment on any circuit related to the Supplemental Restraint System "Airbag".

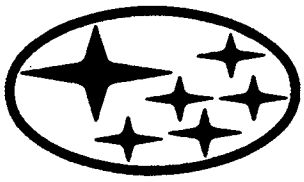

		Page
S	SPECIFICATIONS AND SERVICE DATA	2
W	SERVICE PROCEDURE	4
	1. Audio	4
	2. Combination Meter	5
	3. Cruise Control	9
	4. Front Wiper and Washer	17
	5. Fuel Gauge	18
	6. Fuse	19
	7. Horn Switch	20
	8. Headlight	20
	9. Rear Window Defogger	21
	10. Rear Wiper and Washer	23
	11. Security System	25
	12. Time Control Unit	48
	13. Vehicle Speed Sensor	50
T	TROUBLESHOOTING (For Cruise Control) AIRBAG	52
	1. Self Diagnosis	52
	2. I/O Signal of Cruise Control Unit	55
	3. Basic Troubleshooting Procedure	56
	4. Trouble Chart A	60
	5. Trouble Chart B	64
	6. Trouble Chart C	80

S SPECIFICATIONS AND SERVICE DATA

Battery	Type		75D23L (MF)
	Capacity	Reverse capacity	111 minutes
		Cold cranking ampere	490 ampere
Combination meter	Speedometer		Cross coil type
	Odometer/Tripmeter		Pulse count (stepping motor drive)
	Temperature gauge		Thermistor-cross coil type
	Fuel gauge		Resistance cross coil type
	Tachometer		Electric impulse type
	Turn signal indicator light		12 V — 1.4 W
	Low fuel indicator light		12 V — 3 W
	Charge indicator light		12 V — 1.4 W
	Oil pressure indicator light		12 V — 1.4 W
	A.B.S. warning light		12 V — 1.4 W
	AT oil temp. warning light		12 V — 1.4 W
	Malfunction indicator lamp		12 V — 1.4 W
	High beam indicator light		12 V — 1.4 W
	Door open warning light		12 V — 1.4 W
	Seat belt warning light		12 V — 1.4 W
	Stop lamp warning light		12 V — 1.4 W
	Brake fluid and parking brake warning light		12 V — 1.4 W
	FWD warning light		12 V — 1.4 W
	Steering warning light		12 V — 1.4 W
	Airbag warning light		12 V — 1.12 W
	Meter illumination light		12 V — 3.4 W (x4) 3 W (x2) 1.4 W (x2)
	AT indicator	Power indicator light	12 V — 1.4 W
		Manual indicator light	12 V — 1.4 W
		P · R · N · D · 3 · 2 · 1	12 V — 1.12 W

Headlight	Outer	12 V — 55 W 9006/HB4	
	Inner	12 V — 65 W 9005/HB3	
Fog light		12 V — 55 W H3	
Front turn/parking light		12 V — 27/8 W	
Rear side marker		12 V — 5 W	
Rear combination light	Stop/tail light	12 V — 27/8 W	
	Turn signal light	12 V — 27W	
	Back-up light	12 V — 27 W	
License plate light		12 V — 5 W	
High-mount stop light		12 V — 5 W LED	
Room light		12 V — 8 W	
Spot light		12 V — 8 W	
Trunk room light		12 V — 5 W	
Courtesy light		12 V — 1.4 W	
Glove box light		12 V — 3.4 W	
Ash tray illumination light		12 V — 1.4 W	
Vanity mirror light		12 V — 2 W	
Step light		12 V — 1.4 W	
Front wiper	Speed	Low 50 ± 5 (rpm)	12 V (no load performance characteristics)
		High 75 ± 8 (rpm)	
	Current	Less than 4 A	
Rear wiper	Speed	40 ± 5 (rpm)	
	Current	Less than 2 A	
Horn		12 V — 420 ± 20 Hz	12 V — 350 ± 20 Hz
Cigarette lighter	Current	Less than 10 A	
	Illumination light	12 V — 1.4 W	

W SERVICE PROCEDURE

a. Before disassembling or reassembling parts, always disconnect battery ground cable. When repairing radio, clock, etc. which are provided with memory functions, record memory contents before disconnecting battery ground cable. Otherwise, these contents are cancelled upon disconnection.
b. Reassemble parts in reverse order of disassembly procedure unless otherwise indicated.
c. Adjust parts to specifications contained in this manual if so designated.
d. Connect connectors and hoses securely during reassembly.
e. After reassembly, ensure functional parts operate smoothly.

1. Audio

A: REMOVAL AND INSTALLATION

1. RADIO BODY

1) Lower steering wheel (Tilt adjustment) and move it back (Telescopic adjustment).
2) Remove lower cover.
3) While pushing switch box ASSY (in/out) from rear side of switch, disconnect connector and remove switch box ASSY.
4) Remove screws which secure visor, and remove visor.
Also disconnect clock connector.

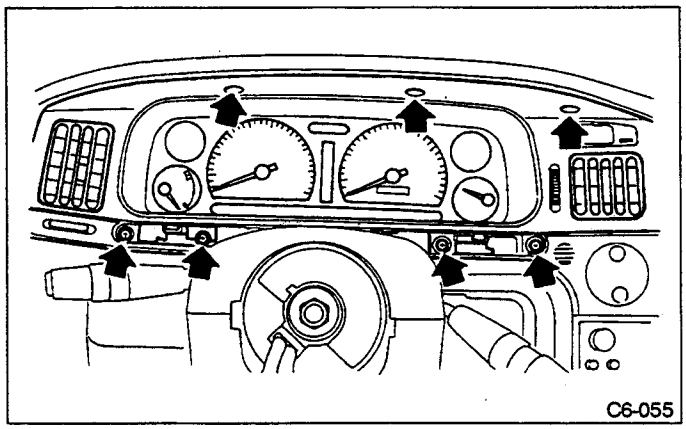

Fig. 1

5) Remove center ventilation grille.
6) Remove auto A/C amplifier.
7) Remove radio inner panel.
Be careful not to damage radio panel (inner).

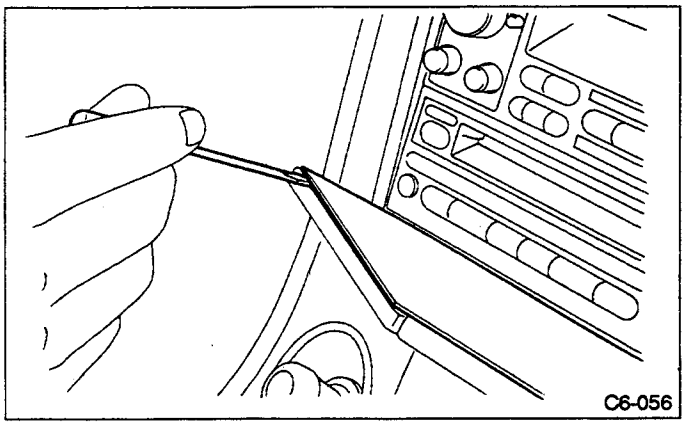

Fig. 2

8) Remove center panel.

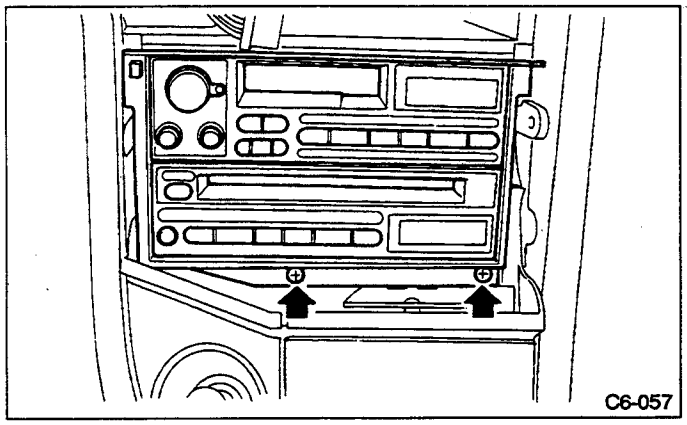

Fig. 3

9) Remove left-hand side cowl panel.
Roll floor carpet and disconnect antenna feeder cables (two places).

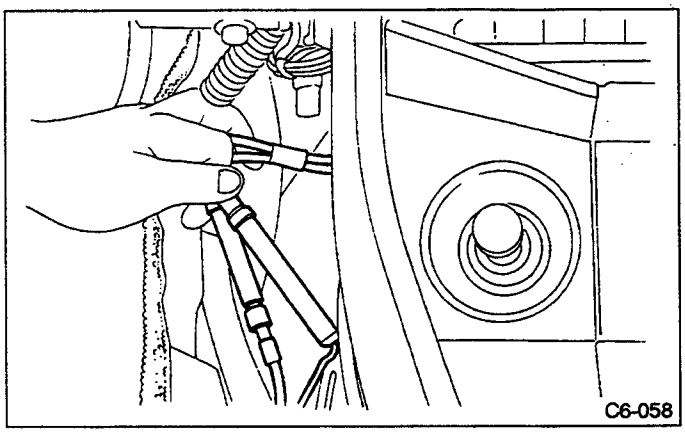

Fig. 4

10) Remove ashtray.
11) Remove screws, close radio panel and remove radio body.

Also disconnect radio connector.

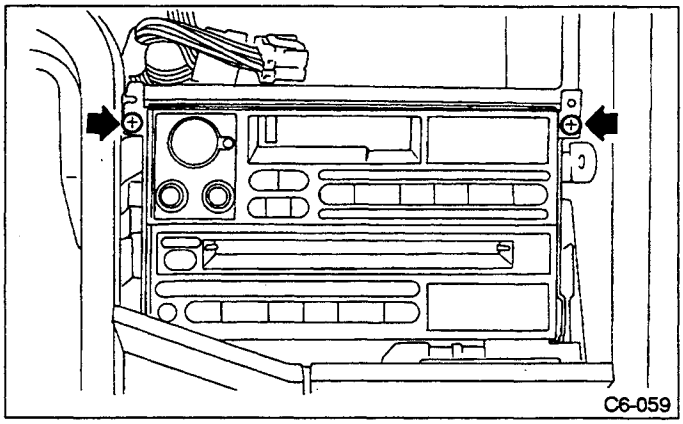

Fig. 5

Installation is in the reverse order of removal.

2. POWER ANTENNA

1) Remove trim panel.
2) Using PLIERS (86399PA000) and ENGINE TOOL (499897100), remove antenna nut.
3) Disconnect antenna feeder and connector.
4) Remove bolt.

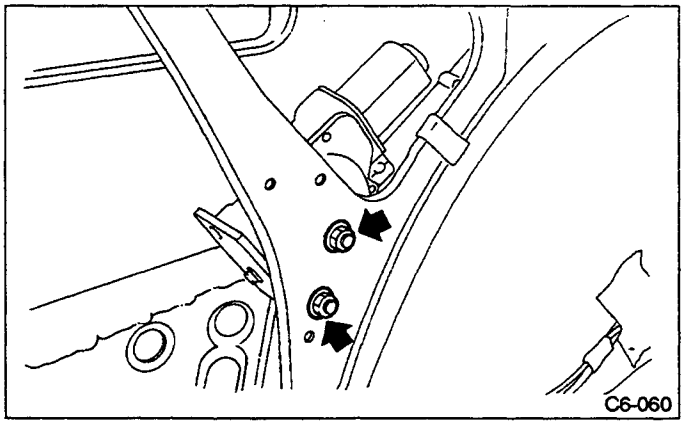

Fig. 6

5) Pull antenna and out from lower side.

Insert drain tube into its original position during installation.

3. FRONT SPEAKER

1) Remove front speaker using a small standard screwdriver.

Be careful not to damage instrument panel.

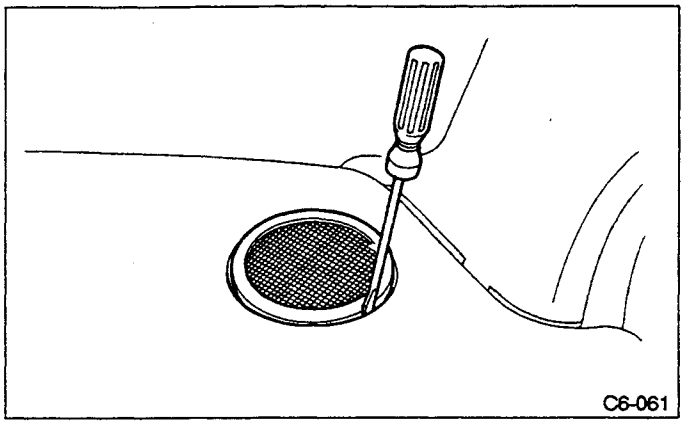

Fig. 7

2) Disconnect connector.

4. DOOR SPEAKER

1) Remove door trim.
2) Remove screws which secure door speaker.
3) Disconnect connector.

5. REAR SPEAKER

1) Remove rear backrest.
2) Remove left and right rear quarter trim panels.
3) Remove rear shelf trim panels.
4) Remove screws which secure rear speakers.
5) Disconnect connector and remove speakers.

2. Combination Meter

A: REMOVAL

1) Move steering wheel down (Tilt adjustment) and pull it back (Telescopic adjustment).
2) Remove lower cover.
3) While pushing switch box ASSY (in/out) from rear side of switch, disconnect connector and remove switch box ASSY.
4) Remove screws which secure visor, and remove visor.

Also disconnect clock connector.

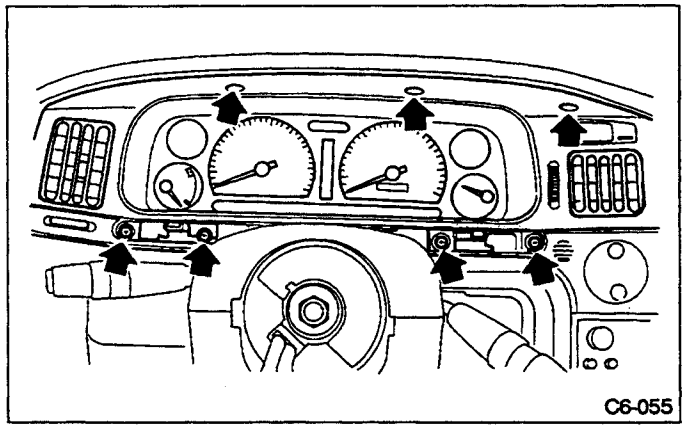

Fig. 8

5) Remove screws which secure combination meter, and pull combination meter out.

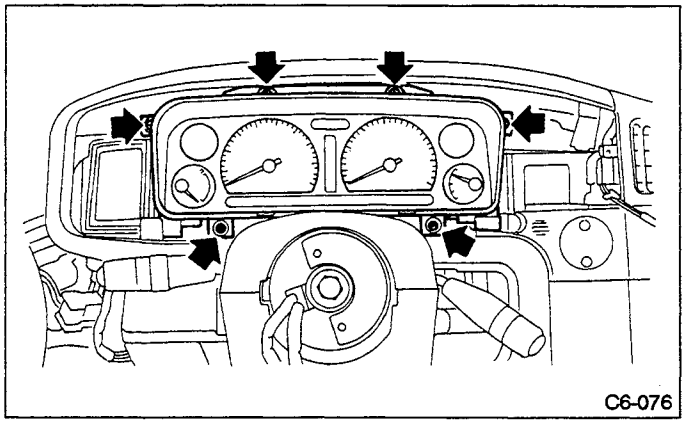

Fig. 9

B: INSTALLATION

1. COMBINATION METER

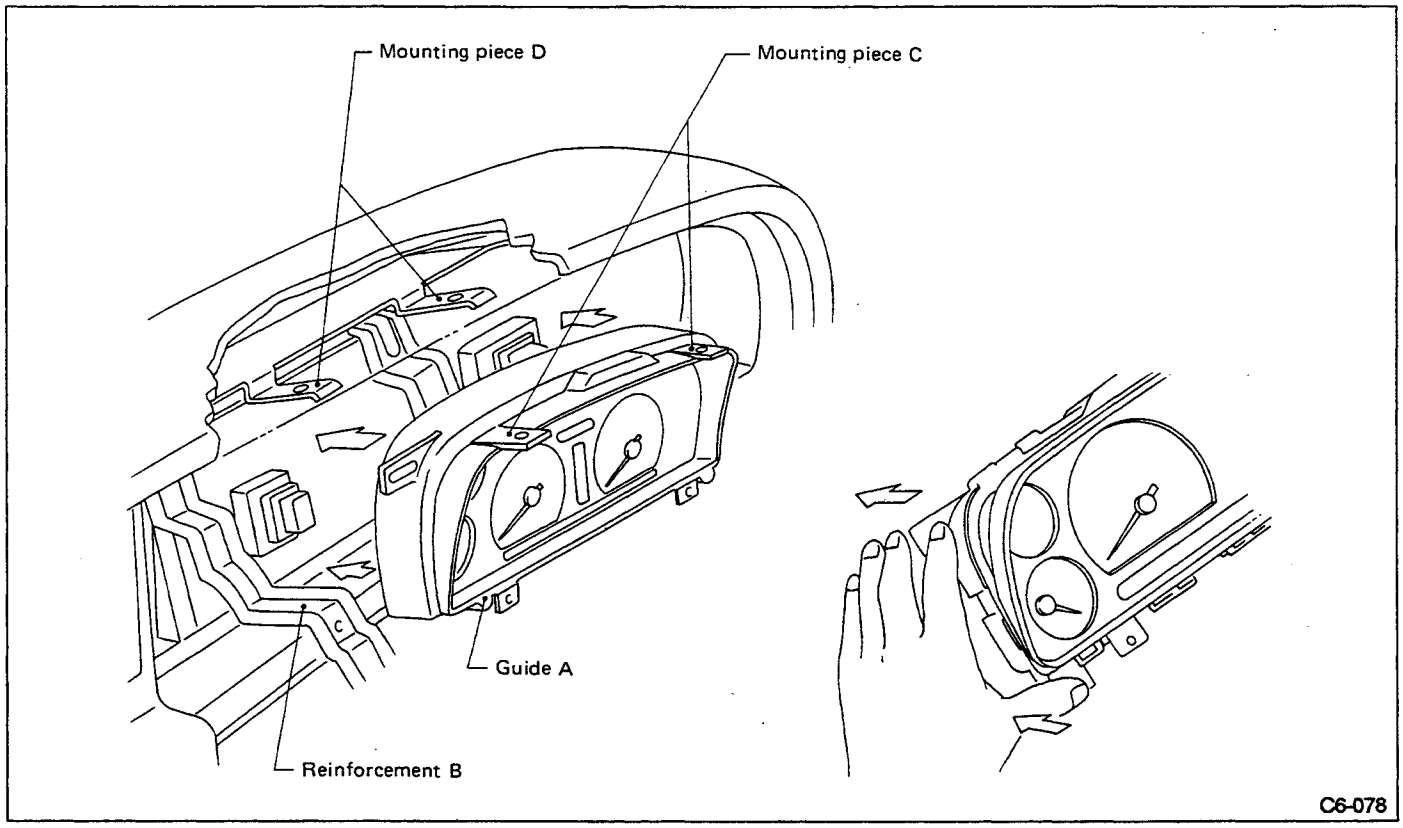

Fig. 10

1) Place combination meter guide A on reinforcement B.
2) Firmly position combination meter mounting piece C on mounting seat D of instrument panel.
3) Carefully set combination meter in position.
4) Secure combination meter using screws.

a. If combination meter is hard to set in position, do not force it in but gently move combination meter up or down or left or right within guide play (range) until it is positioned.
b. A force of less than 118 N (12 kg, 26 lb) is required to push combination meter in position. Force exceeding 118 N (12 kg, 26 lb) may damage it.

C: DISASSEMBLY AND ASSEMBLY

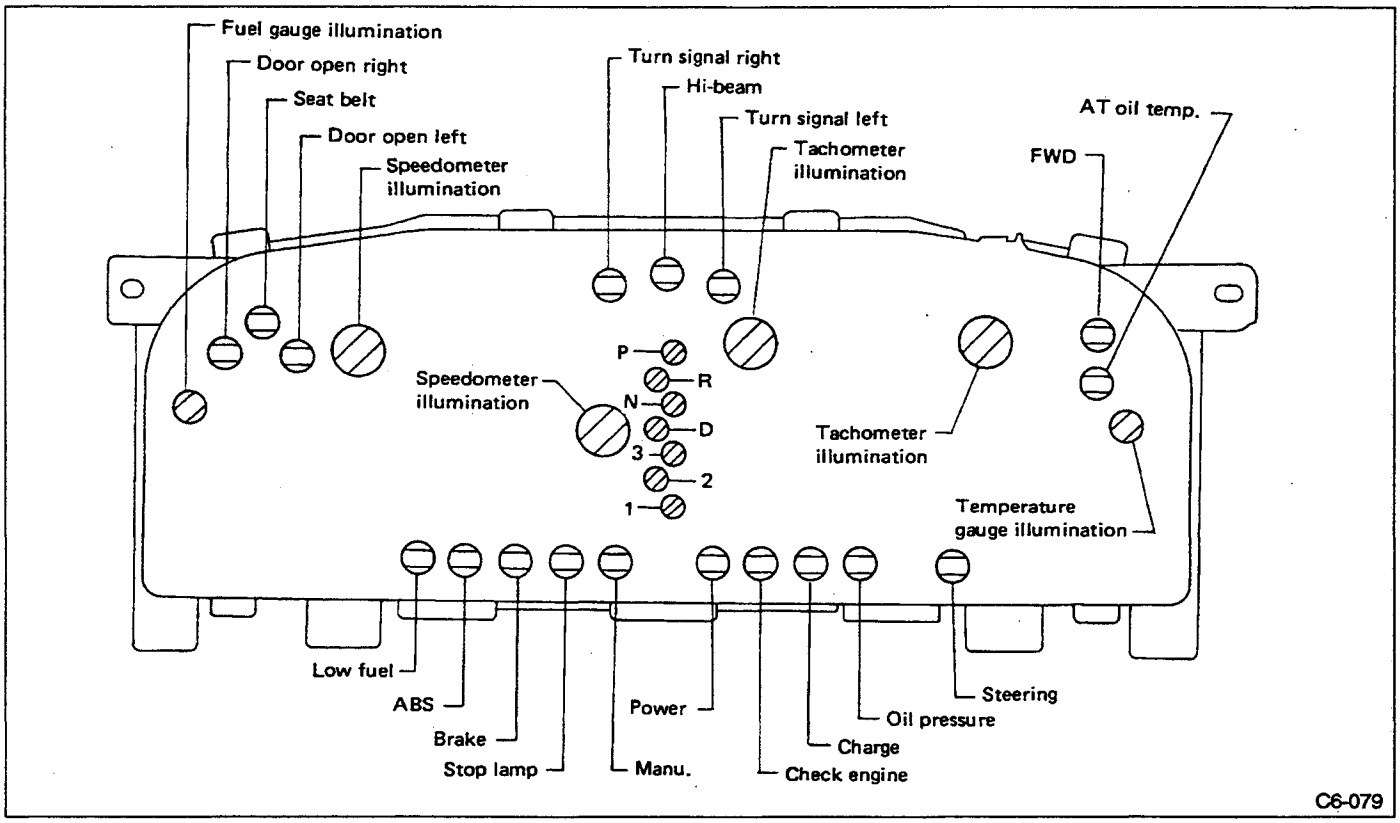

Fig. 11

1. BULB REPLACEMENT

Refer to figure.

2. METER ASSY

1) Remove following parts from combination meter:
   (1) Meter glass
   (2) Screws, and take out window plate.
2) Remove screws, and take out meter, gauge, etc.

Take care not to damage removed speedometer, tachometer etc.

Assembly is in the reverse order of disassembly.

D: INSPECTION

1. SPEEDOMETER

It is normal if the readings of speedometer are within the tolerances shown in the table 1, against the standard indicated speeds on the speedometer tester.

Table 1

Standard indicated speed (km/h or MPH)		20	40	60	80
Reading of speedometer	(km/h)	20 — 24	40 — 45	59.5 — 65	79 — 85
	(MPH)	20 — 23	40 — 43.5	59.5 — 63.5	79.5 — 84

2. TEMPERATURE GAUGE

Temperature gauge is operated by thermometer installed in water pipe.

Since thermometer resistance changes with voltage, voltage regulator is provided to prevent error in gauge indication due to voltage fluctuation.

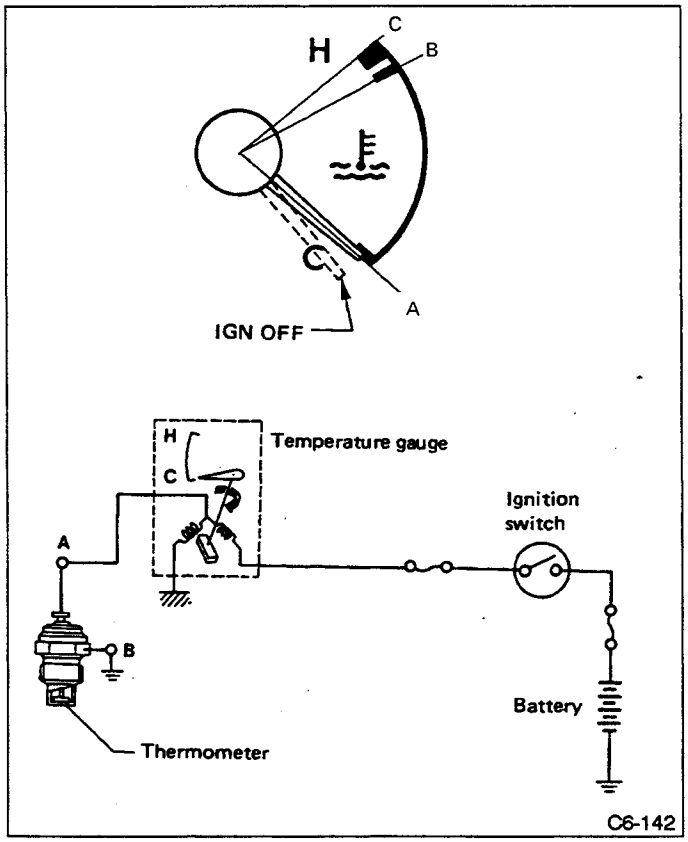

Fig. 12

It is normal if the readings of temperature gauge are within the tolerances of engine coolant temperature as shown in the following table against the standard resistance between point A and B indicated in the wiring diagram when ignition switch is "ON".

	Readings of temperature gauge	Standard resistance
A	50°C (122°F)	180.5 Ω
B	120°C (248°F)	17.9 Ω
C	125°C (257°F)	15.9 Ω

3. FUEL GAUGE

Needle of fuel gauge remains indicating the amount of fuel in fuel tank after turning ignition switch to OFF position.

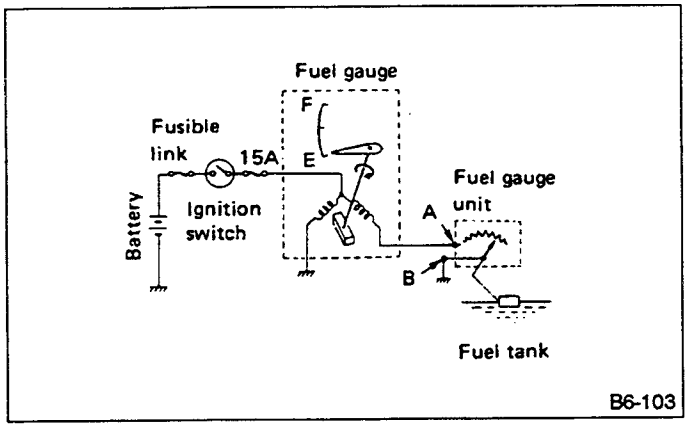

Fig. 13

It is normal if the readings of fuel gauge are within the tolerances of all length between "E" and "F" as shown in the following table, against the standard resistance between point A and B indicated in the wiring diagram when ignition switch "ON".

Reading of fuel gauge	Standard resistance	Tolerance of fuel gauge
E	100 Ω	+ 1/12 to − 1/24 of all length between "E" and "F"
1/2	55 Ω	—
F	10 Ω	+ 1/24 to − 1/12 of all length between "E" and "F"

4. TACHOMETER

It is normal if readings of tachometer are within the tolerances as shown in the following table, against the standard indicated speeds on tachometer tester.

Standard indicated speed (rpm)	1,000	2,000	3,000	4,000	5,000	6,000
Tolerance (rpm) − 30 to 60°C (− 22 to 140°F)	+ 75 − 75	+ 145 − 110	+ 180 − 110	+ 220 − 110	+ 255 − 100	+ 290 − 95

3. Cruise Control

A: SCHEMATIC

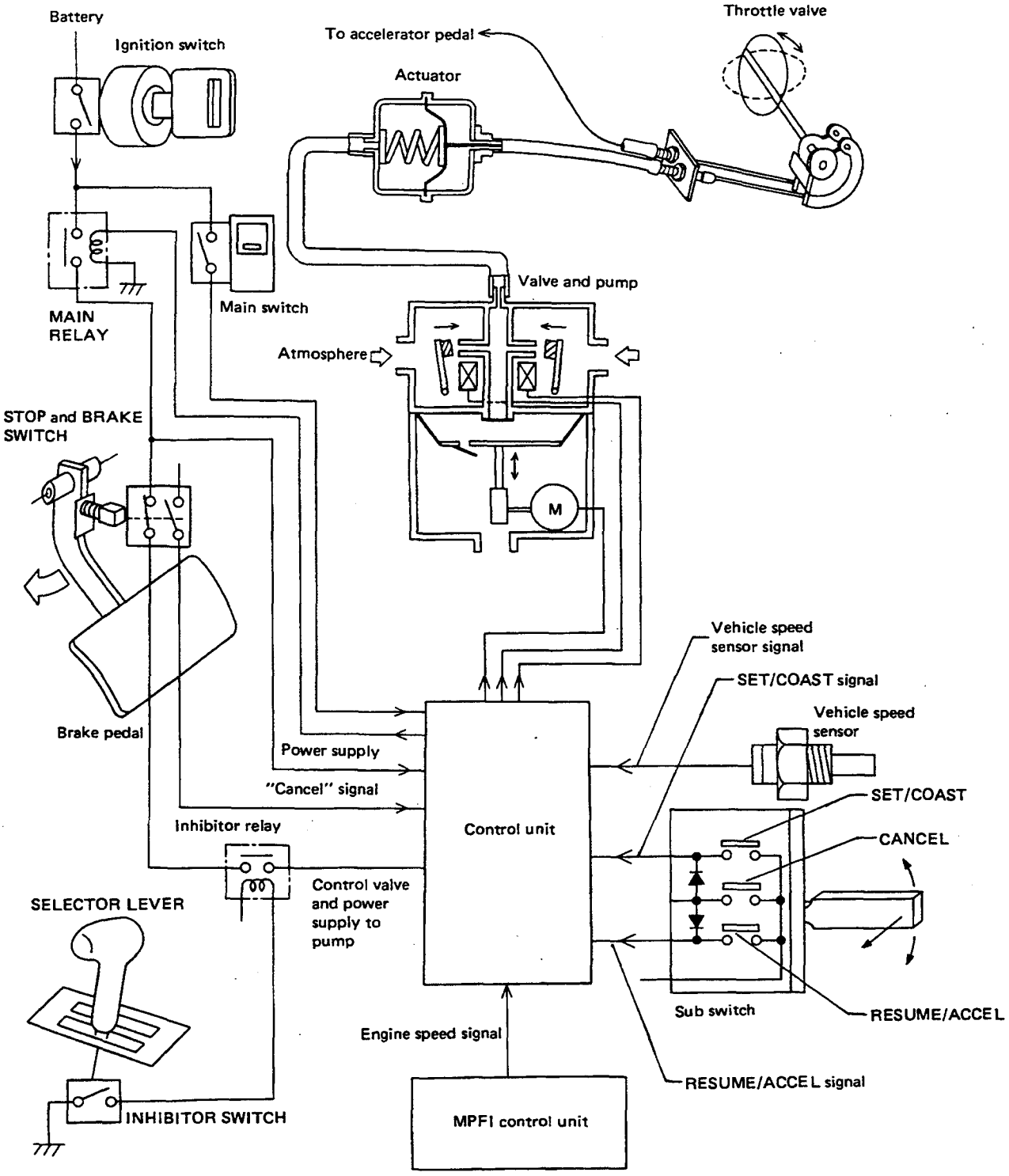

Fig. 14

B: DESCRIPTION

1. CONTROL AND OPERATION

Constant speed control	When actual driving speed is higher than "set" speed, cruise control system intermittently opens vent valve and moves throttle valve toward the close position. This occurs while comparing actual driving speed with "set" speed. When actual driving speed is lower than "set" speed, the system intermittently activates vacuum pump to move throttle valve toward the "open" direction.
"Set" control	When SET/COAST switch is pressed with main switch ON while vehicle is being driven a specifieds greater than 40 km/h (25 MPH), current flows so that vent and safety valves close. This then causes vacuum pump to intermittently activate to set throttle valve at position corresponding with accelerator pedal depression. Thus, vehicle is being driven at constant speed.
Deceleration control	When SET/COASTS switch is turned ON while vehicle is cruising, vent valve intermittently opens, partially closing throttle valve. This causes the vehicle to decelerate. When the switch is turned OFF, vehicle speed is stored in memory and vehicle is constantly driven at that speed.
Acceleration control	When RESUME/ACCEL switch is turned ON while vehicle is cruising, vacuum pump intermittently activates to partially open throttle valve. This causes vehicle to accelerate. When the switch is turned OFF, vehicle speed is stored in memory and vehicle is constantly driven at that speed.
Resume control	When RESUME/ACCEL switch is turned ON after cruise control is released, vehicle speed returns to that speed which was stored in memory just before cruise control was released. However, this occurs only when vehicle is being driven at a speed greater than 30 km/h (19 MPH).
Manual cancel control	When any of the following signals are entered, vent valve and safety valve open to release cruising speed. (1) Stop light switch ON signal (Brake pedal depressed) (2) Brake switch OFF signal (Brake pedal depressed) (3) Cancel switch ON signal (Control lever set to "CANCEL"). (4) Inhibitor switch ON signal (Selector lever set to "N")
Low speed limit control	When vehicle speed drops below 30 km/h (19 MPH), cruise control is automatically cancelled. The memorized speed will also be cleared. Cruise control at speed lower than 40 km/h (25 MPH) cannot be effected.
Release valve control	When vehicle speed increases 10 km/h (6 MPH) greater than memorized speed while vehicle is cruising (downgrade, etc.) actuator's vent valve as well as safety valve are turned OFF (to open to atmospheric pressure) so that vehicle decelerates. When vehicle decelerates within 8 km/h (5 MPH) greater than the memorized speed, vent and safety valve are turned ON (to shut out atmospheric pressure) so that cruise control resumes.
Auto, cancel control	When any of the following signals are entered while vehicle is cruising, actuator's vent valve as well as safety valve are turned OFF (to shut out atmospheric pressure). This cancels cruise control. (a) When vehicle speed drops below low speed limit 30 km/h (19 MPH), (b) When actuator's vent valve, safety valve, vacuum pump motor or harness circuit is shorted, (c) When actuator's vent valve, safety valve, vacuum pump or harness circuit are discontinued, (d) When ON signals are simultaneously emitted from SET/COAST and RESUME/ACCEL switches, or (e) When a vehicle speed signal that implies speed variation of greater than ± 25 km/h (± 16 MPH) per second is entered.

Cruise control unit compares the actual car speed detected by feedback signals from speed sensor incorporated in transmission with the speed set in the memory memorized when set switch was turned on. A signal is then transmitted according to the difference between the two speeds.

This signal is transmitted to solenoid valves of valve ASSY located in engine compartment. The movement of actuator operates throttle valve through accelerator pedal and cable, thereby keeping the car speed constant.

2. SYSTEM CONSTRUCTION

Unit	Name	Function	Set	Cancel	Resume	Coast	Vehicle speed
Output signal (sensors)	Main switch	Supplies battery voltage to control unit after main switch is turned ON (with ignition switch ON).	O	O	O	O	O
	SET/COAST switch	Sends a SET/COAST signal to control unit.	O			O	
	RESUME/ ACCEL switch	Sends a RESUME/ACCEL signal to control unit.			O		
	Brake switch (NC)	Disconnects power supply to control valve and vacuum pump.	O	O			
	Stop light switch (NO)	Stops control unit's function and disconnects power supply to control valve and vacuum pump.	O	O			
	Inhibitor switch (NO)	Disconnects power supply to control valve and vacuum pump.	O	O			
	Set signal						O
	Vehicle speed sensor (in transmission)	Controls vehicle speed.	O	O	O	O	O
Control section	Built-in relay	A safety device to protect system from damage.	O	O	O	O	O
Output signal (actuators)	Vacuum pump motor	Produces vacuum pressure to activate vacuum diaphragm.	O	O	O		O
	Vent valve	Activates when controlling vehicle speed. (Vacuum pressure → Atmospheric pressure)	O	O	O	O	O
	Safety valve	Opens to introduce atmospheric pressure into system if vent valve malfunctions.	O	O	O	O	O

3. FAIL-SAFE FUNCTION

Fail-safe item	Cancel conditions	Operation
Cancels erroneous switch operation	A: • SET/COAST switch ON • RESUME/ACCEL switch ON B: • Brake switch OFF • Stop light switch ON (Brake pedal depressed) • Inhibitor switch ON (Shift lever set to "N")	When signals emitted from A and B groups are simultaneously entered, cruise control and memory speed will be or are cancelled. System resumes after SET/COAST switch is turned ON again.
Cancels erroneous circuit operation	• When control unit stops or erroneously operates. • When variations in vehicle speed signal is greater than 25 km/h/sec (16 MPH/sec). • When relay built into control unit remains ON. • When vacuum motor terminal or vent valve when motor drive circuit or vacuum motor circuit in control unit is shorted.	Cruise control and memory vehicle speed will be or are cancelled. Cruise control resumes after power supply is turned ON using ignition or main switch.
Cancels erroneous vehicle speed	When vehicle speed is at least 10 km/h (6 MPH) greater than memory speed.	Cruise control is interrupted (built-in relay OFF). It resumes (built-in relay ON) when vehicle speed is 8 km/h (5 MPH) less than memory speed.
Cancels abnormal output	When vacuum motor's output remains ON for at least 1 second, due to erroneous operation of control unit.	Cruise control is interrupted (built-in relay OFF). It resumes after ignition switch or main switch is turned OFF and then ON.
Cancels erroneous SET/COAST switch or RESUME/ACCEL switch operation	When SET/COAST switch or RESUME/ ACCEL switch is ON before main switch is turned ON.	Cruise control activates after two switches are turned OFF.

4. PUMP AND VALVE

Pump activated by a signal emitted from control unit produces vacuum pressure to operate actuator.

1) During acceleration

A signal emitted from control unit energizes solenoid to close valve A. This causes motor to move diaphragm in direction F so that valve C closes while valve D opens. As a result, Vacuum pressure applied to section E increases. With this increase in vacuum pressure, actuator moves control cable so that throttle valve opens.

2) During deceleration

A signal emitted from control unit energizes solenoid to open valve A. This causes section E to open to the atmosphere so that actuator moves control cable so that throttle valve closes. The above operation of throttle valve is repeated during acceleration and deceleration so that vacuum produced at section E is controlled to meet vehicle speed.

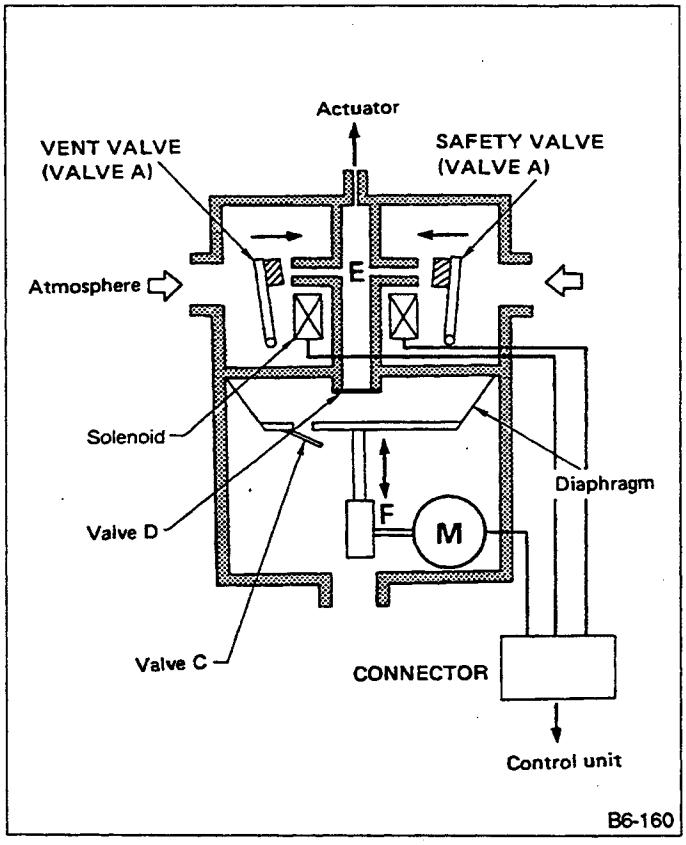

Fig. 15

Signal from control unit and valve operation

		Safety valve	Vacuum motor	Vent valve
System OFF		Open	Stop	Open
System ON	Memory < actual car speed	Close	Stop	Open
	Memory = actual car speed	Close	Stop	Close
	Memory > actual car speed	Close	Rotate	Close

5. ACTUATOR

The diaphragm is operated by vacuum or atmospheric pressure led by each valve, and this diagram movement actuates the wire cable via link ASSY to open or close the throttle valve. With the cruise control set to OFF (system OFF state), no diaphragm operation occurs as the atmospheric pressure is kept inside the actuator.

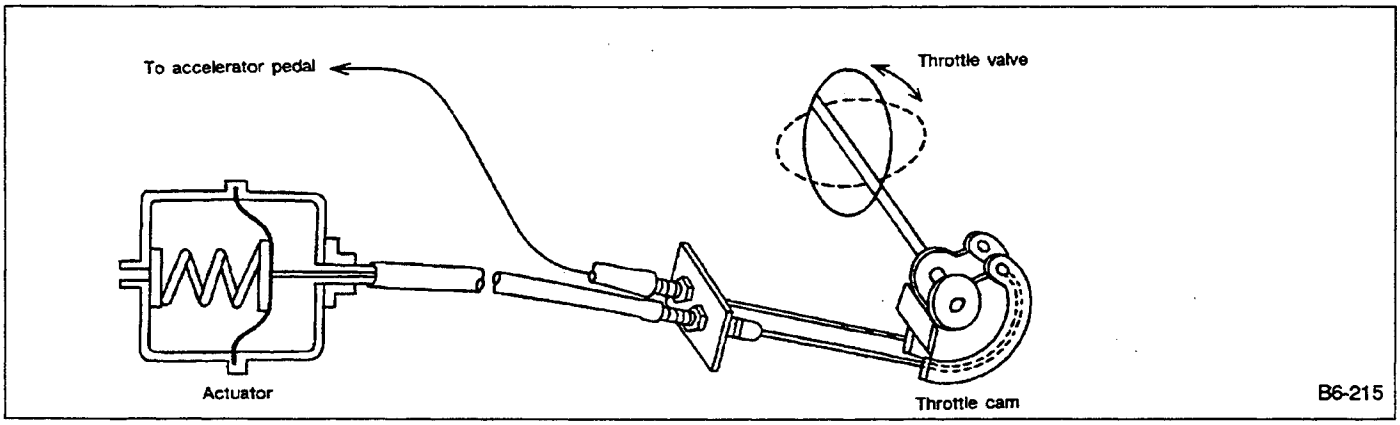

Fig. 16

6. ENGINE THROTTLE

The throttle body is equipped with two throttle cams. One cam is used during acceleration and the other during cruising, in order to open or close the throttle valve. These cams operate independently of each other. In other words, while one cam is operates, the other does not.

C: ADJUSTMENT

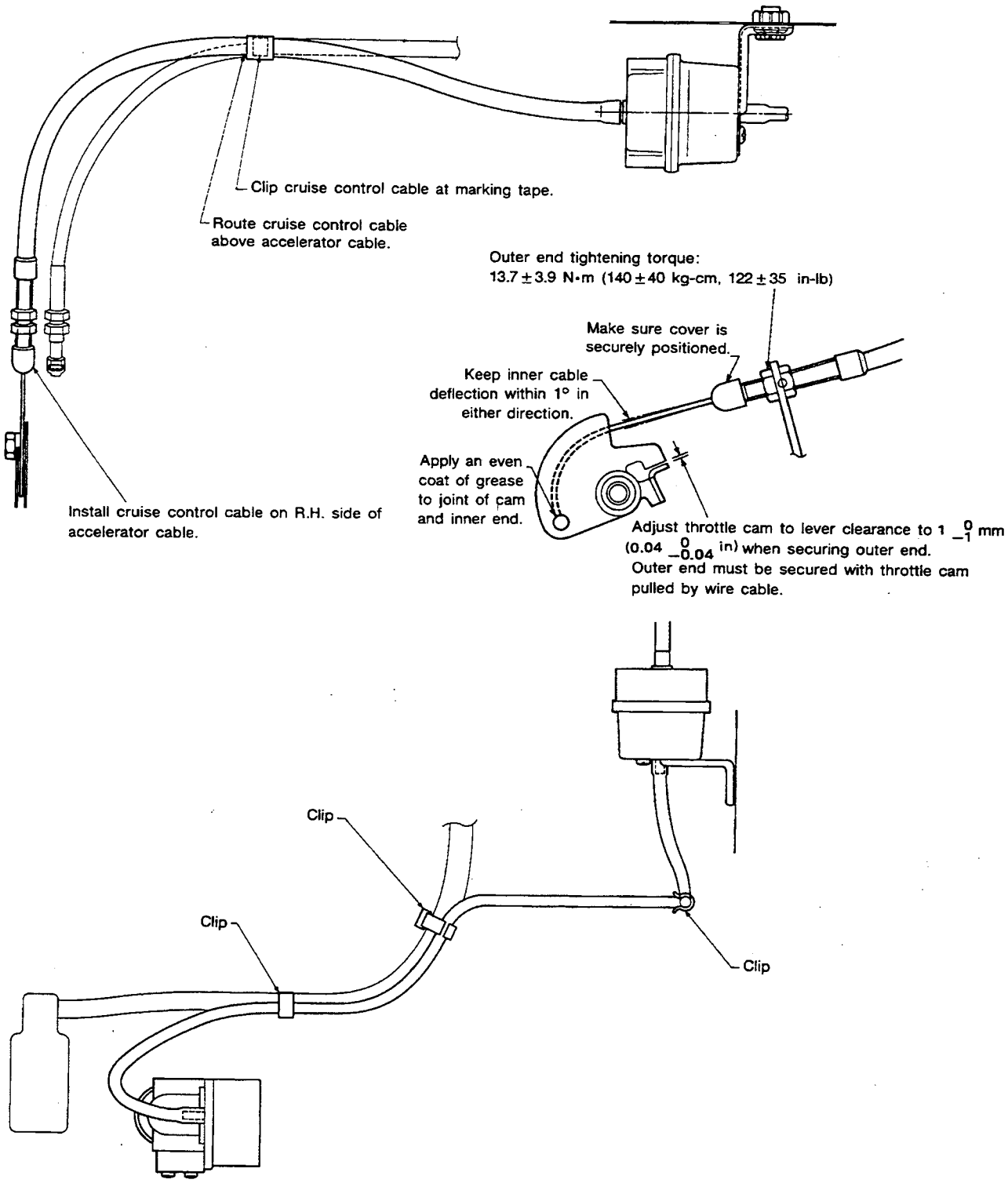

Fig. 17

D: REMOVAL AND INSTALLATION

1. VACUUM PUMP

1) Remove battery.
2) Remove main fuse box securing bolts and move fuse box to the side.
3) Disconnect wiring harness connector and hose.
4) Remove attaching screws, and remove vacuum pump ASSY.

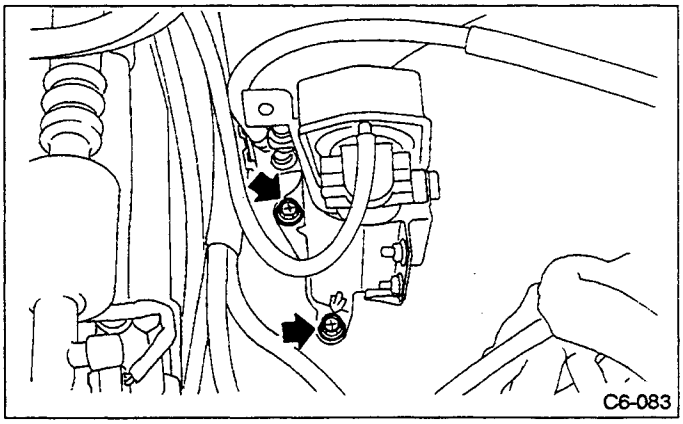

Fig. 18

Fit vacuum pump bracket onto protrusion on lower side of washer tank during installation.
Installation is in the reverse order of removal procedures.
a. Tighten securing nuts and bolts to a torque of 7.4 ± 2.5 N•m (75 ± 25 kg-cm, 65 ± 22 in-lb).
b. Insert connector until it locks.
c. Be careful not to twist or crush rubber hoses.
d. Do not slacken or tighten rubber hoses excessively when routing, maintaining a bend radius of greater than 30 mm (1.18 in).
e. Firmly connect rubber hoses and actuator, maintaining a clearance of less than 2 mm (0.08 in) between them.

2. ACTUATOR

1) Remove collector cover.
2) Remove the nut which secures control cable end to throttle cam, and remove control cable end.
3) Disconnect vacuum hose.
4) Remove clip band from control cable.
5) Remove attaching bolts and actuator ASSY.

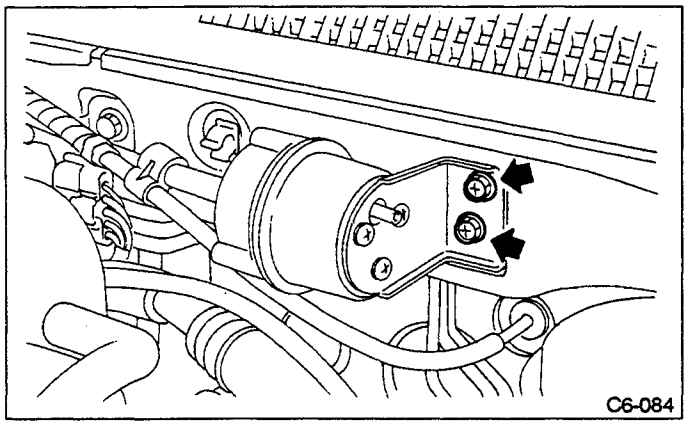

Fig. 19

Installation is in the reverse order of removal procedures.
a. Do not bend cable too sharply as this may degrade cable movement. Be sure to maintain a bending radius of greater than 80 mm (3.15 in).
b. Do not allow inner end of cable to bend or crush during installation as breakage may result.

E: DRIVING TESTS

Conduct road tests by selecting a smooth, flat road or use free rollers as road-test simulation.

1. MAIN SWITCH

1) Turn ignition switch ON.
2) Check that indicator light comes on when main switch is pressed (ON).
3) Check that indicator light goes out when main switch is pressed again (OFF).
4) Turn ignition switch OFF with main switch ON (which is indicated by illumination). Turn ignition switch ON again to ensure that indicator light remains off.

2. SUB SWITCH

1) Check that sub switch is properly set in "SET/COAST", "RESUME/ACCEL" or "CANCEL" mode.
2) Also check that sub switch returns to the original position when released.

3. CONSTANT-SPEED TEST

1) Turn main switch ON.
2) Drive vehicle at speed greater than 40 km/h (25 MPH).
3) Press sub switch to set in "SET/COAST" mode.
4) Ensure that vehicle is maintained at the speed set when sub switch was pressed.

4. ACCELERATION TEST

1) Set vehicle speed at speed greater than 40 km/h (25 MPH).

2) Ensure that vehicle continues to accelerate while holding sub switch in RESUME/ACCEL mode, and that vehicle maintains that optional speed when subswitch is released.

5. DECELERATION TEST

1) Set vehicle speed at optional speed greater than 40 km/h (25 MPH).
2) Ensure that vehicle continues to decelerate while holding sub switch in SET/COAST mode, and that it maintains that optional speed when subswitch is released.

When vehicle speed reaches the lower speed limit of 30 km/h (19 MPH) during deceleration, cruise control will be released.

6. CRUISE CONTROL CANCEL INSPECTION

1) Set vehicle speed at optional speed greater than 40 km/h (25 MPH).
2) Pull CANCEL section of sub-switch.
3) Ensure cruise control is cancelled.

4. Front Wiper and Washer

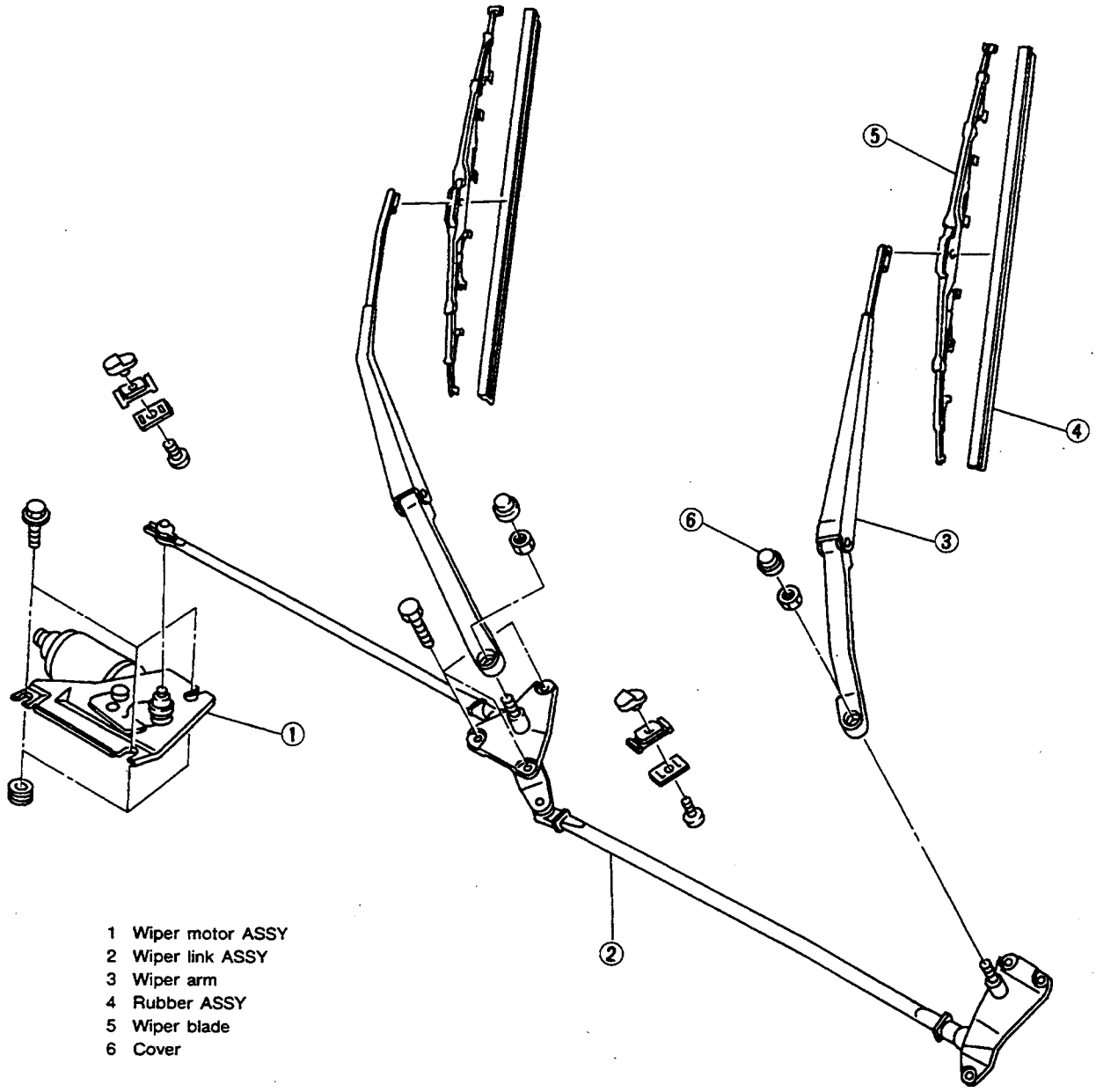

C6-062

Fig. 20

A: ON-CAR SERVICES

1. ADJUSTMENT

1) When wiper switch is in "OFF" position, adjust blades in original position as shown in illustration by changing wiper arm installation.

Be sure to adjust wiper blades after setting wiper select switch to "WINTER" to position them in WINTER position.

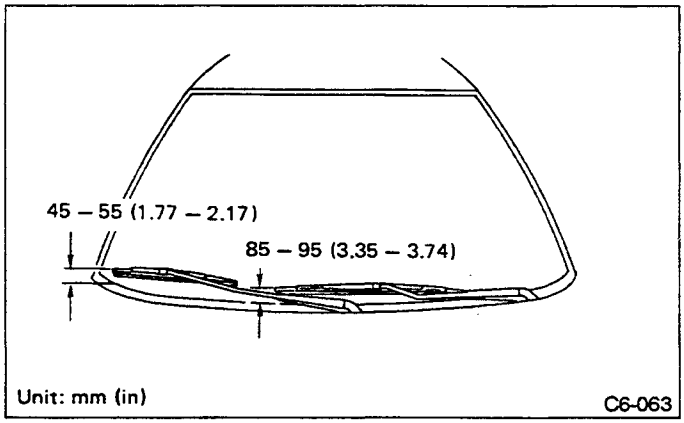

Fig. 21

2) Adjust washer ejecting point on windshield glass as shown in illustration when car stops.

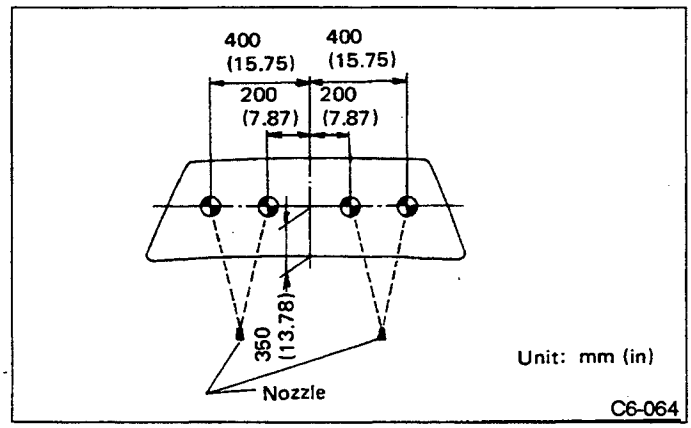

Fig. 22

B: REMOVAL AND INSTALLATION

1. WIPER ARM

1) Open front hood.
2) Remove cap. Remove the nut which secure wiper arm, and remove wiper arm.

2. WIPER MOTOR AND LINK

1) Detach weatherstrip and cowl net. Ref. to [5-1].

Apply silicone oil or soap water to both sides of cowl net to facilitate removal.

2) Remove wiper link from wiper motor.
3) Disconnect electric connector, and remove motor attaching bolts.
4) Remove wiper link ASSY attaching bolts.

Installation is in the reverse order of removal.

3. WASHER TANK

1) Remove cover.
2) Separate washer hoses at joint.
3) Disconnect connector.
4) Remove washer tank attaching bolts.

Installation is in the reverse order of removal.

Before installing washer tank, position locating boss (on lower side of washer tank) in hole on body.

Tightening torque:
4.4 — 7.4 N•m
(45 — 75 kg-cm, 39 — 65 in-lb)

4. NOZZLE

1) Disconnect washer hose from nozzle.
2) Push nozzle clip in direction A. (See Figure below.)
3) Remove nozzle from hood.

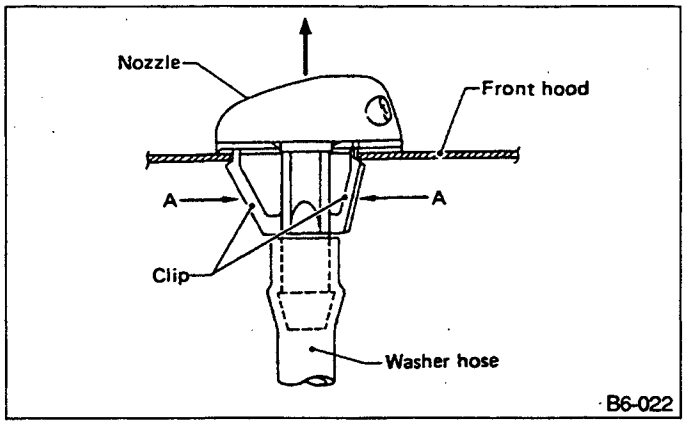

Fig. 23

5. Fuel Gauge

A: DESCRIPTION

1. A low fuel warning thermistor is installed in the main unit.
2. A combination thermistor and thermistor chamber has the function of a "delay" mechanism to prevent erroneous activation of the warning light when fuel is transferred to the sub-chamber for a short period of time.
3. The duration of the "delay" time is approximately 3 - 4 minutes at normal temperatures.
4. The low fuel warning light comes on 3 - 4 minutes after the ignition switch is turned to "ON", even when fuel left in the fuel system is below the warning level of [8.5 liters (9.0 US qt, 7.5 Imp qt)] .

B: INSPECTION

1. FUEL GAUGE UNIT

1) Float position

While moving float, determine point F (upper limit position) where float arm contacts stopper and point E (lower limit position).

2) Standard resistance of fuel gauge unit

When float is at point F (upper limit position) and point E (lower limit position), measure resistance between terminals.

Resistance		MAIN UNIT	SUB UNIT
Normal resistance (Ω)	F	1 — 3	1 — 3
	E	54.1 — 56.1	50.9 — 52.9

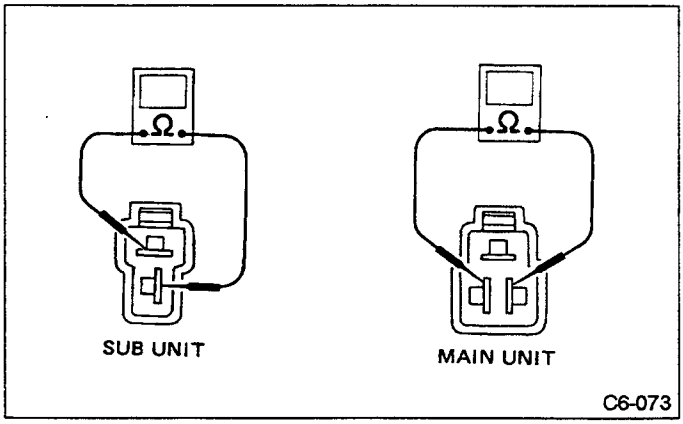

Fig. 24

3) Ensure that resistance gradually changes when float is slowly moved from point F to point E, and vice versa.

4) Low fuel warning sensor (thermistor)

Connect fuel gauge unit and test lamp (12V-3.0W) to battery, and connect terminal (2) to battery and terminal (5) to test lamp, respectively.

Ensure that test lamp remains off when fuel gauge unit is dipped in fuel and comes on when removed from fuel.

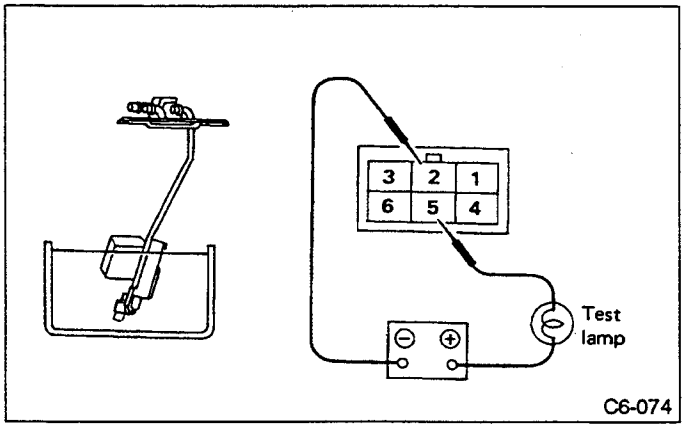

Fig. 25

6. Fuse

1) FUSIBLE LINK (FL)

If current increases beyond specified amperage, fusible metal melts and the circuit is broken, thus protecting cable and electrical equipment from burning.

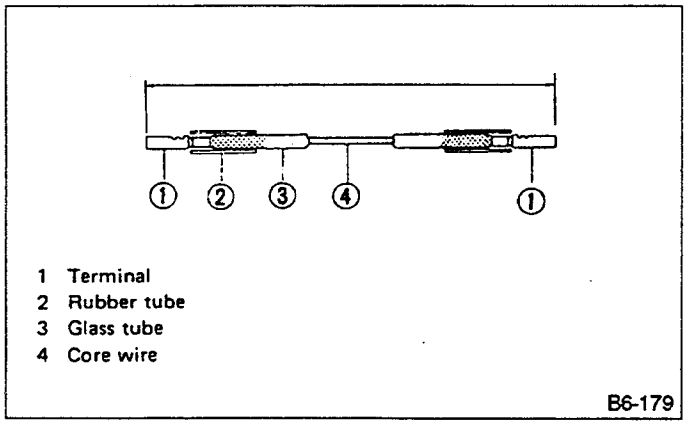

Fig. 26

a. When replacing fusible link, be sure to use one with the specified rating.

b. Blown fusible link is caused by short circuit in the source of electricity circuit or large amperage circuit, so careful check of cause and/or repair is necessary.

No.	Item	Nominal gauge size of conductor
		1.5 mm^2 (0.0023 sq in)
1	Voltage drop	47 mV
		Voltage drop across lug terminals should be less than the above value when a 10 ampere current flows through fusible link at room temperature.
2	Melting characteristics	Fusible link should melt within 15 seconds at a current flow of 200 amperes.

2) FUSE
The connection between each fuse and main electrical units/devices is as shown in the following illustration. (Also refer to the wiring diagram.)

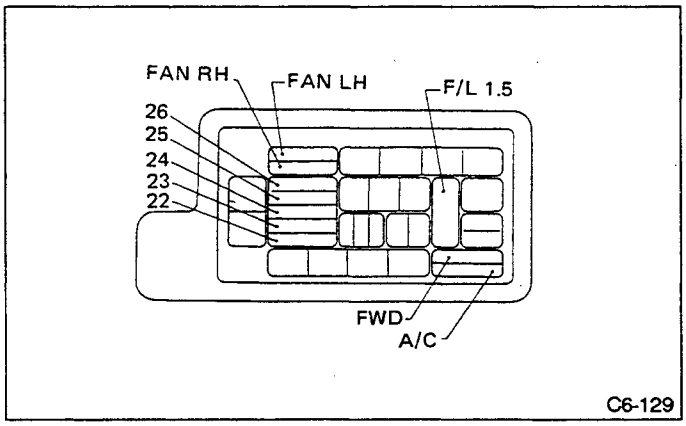

Fig. 27

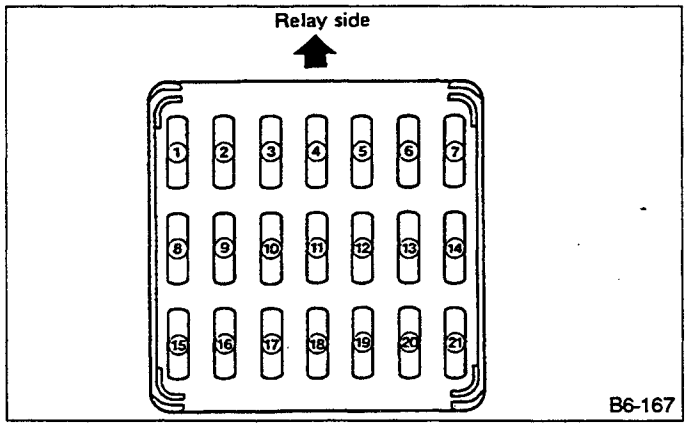

Fig. 28

7. Horn Switch

Before installing new horn switch, remove air bag module. Refer to [5-5 SRS] for removal procedures.

A: REMOVAL AND INSTALLATION

Do not allow current to flow through or scratch air bag module ASSY when removing or installing it.

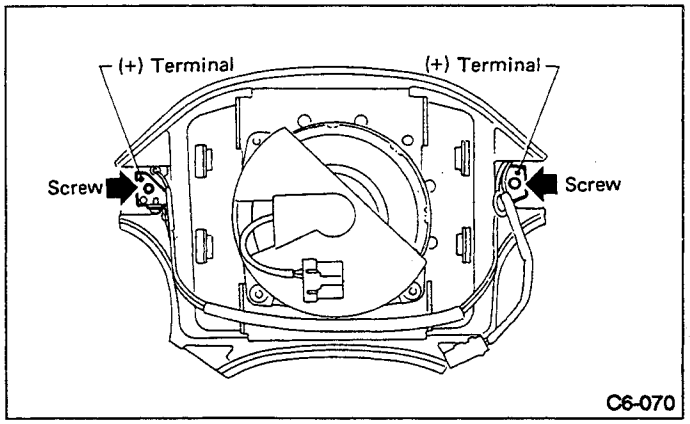

Fig. 29

1) Remove horn harness from clips.
2) Slide and remove horn harness connector from inflator cover.
3) Disconnect positive (+) terminal from horn button.
4) Remove horn button retaining screw.
5) Remove horn button ASSY.
Installation is in the reverse order of removal.

8. Headlight

A: HEADLIGHT AIMING

Before checking the headlight aim:
1) Be sure that the area around the headlights has not sustained any accident damage or other type of deformation.
2) Park the vehicle on level ground.
3) Check the tires for correct inflation pressure.
4) Make certain that the vehicle's gas tank is full and that someone is seated in the driver's seat.

5) Bounce the vehicle several times to normalize the suspension.

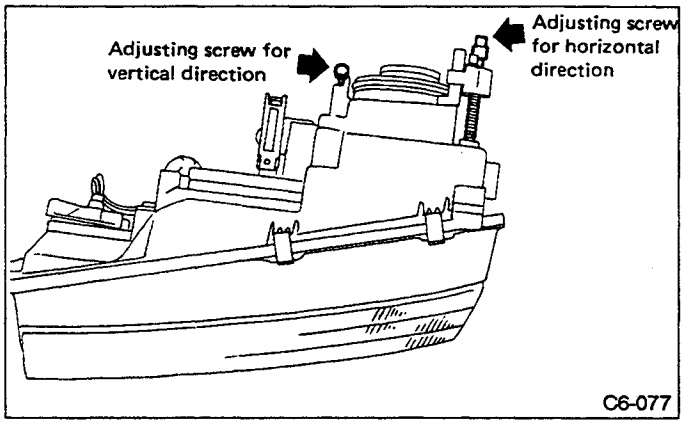

Fig. 30

1. Look at the beam angle gauge (vertical movement). The bubble on the gauge should not deviate from the center of the gauge by more than two marks on the gauge's upward or downward scale.

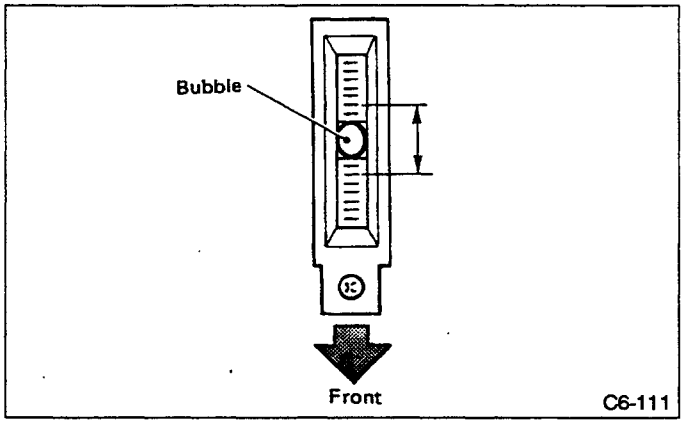

Fig. 31

2. Look at the beam angle gauge (horizontal movement). The black mark should not deviate from the center of the gauge by more than one mark on either side of the gauge.

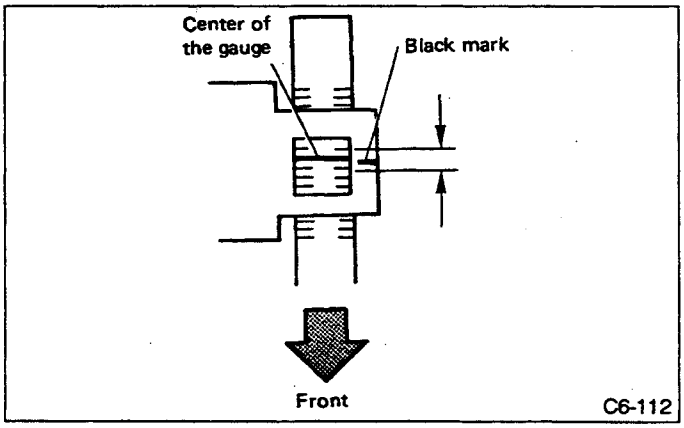

Fig. 32

a. Adjust vertical aim first, then horizontal aim.
b. If headlight location is slightly shifted due to body deformity, etc., repair surface to be mated with headlight. ⟨Refer to [5-1].⟩

9. Rear Window Defogger

A: INSPECTION

1. HEAT WIRES

1) Start the engine so that battery is being charged.
2) Turn defogger switch ON.
3) Check each heat wire at its center position for discontinuity by setting direct-current voltmeter.
Normal indication is about 6 volts.

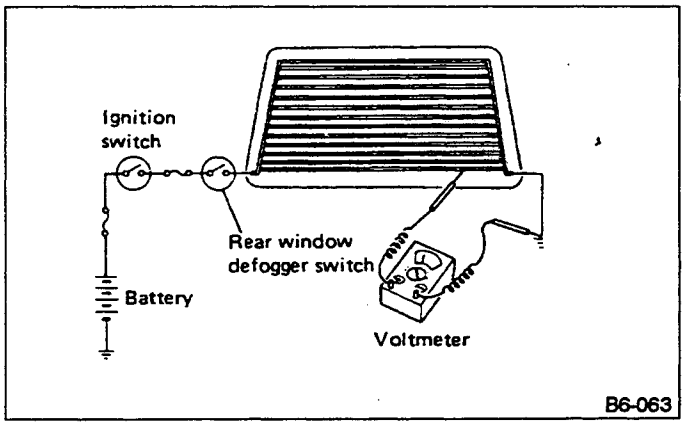

Fig. 33

When measuring voltage, wind a piece of tin foil around the tip of the negative probe and press the foil against the wire with your finger.

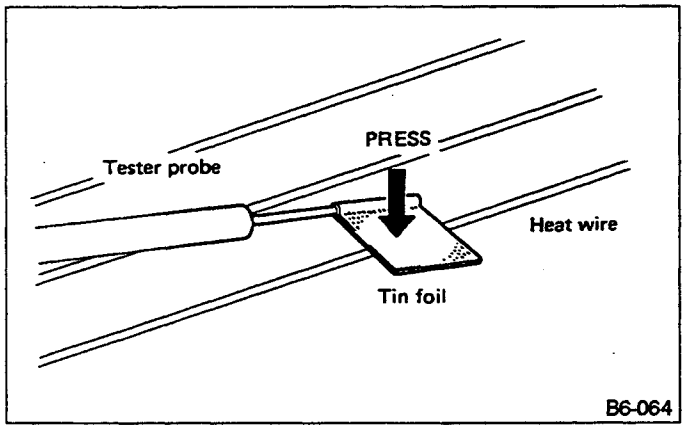

Fig. 34

4) When tester indicates 12 volts when its probe reaches point "A", a broken circuit occurs between point "A" and the negative terminal. Slowly move tester probe toward the negative terminal while contacting it on heat wire to locate point where tester indication changes abruptly (0 volts). This is the point where a broken circuit occurs.

When tester indicates 0 volts when its probe reaches point "A", a broken circuit occurs between point "A" and the positive terminal. Locate a point where tester indication changes abruptly (12 volts) while slowly moving tester probe toward the positive terminal.

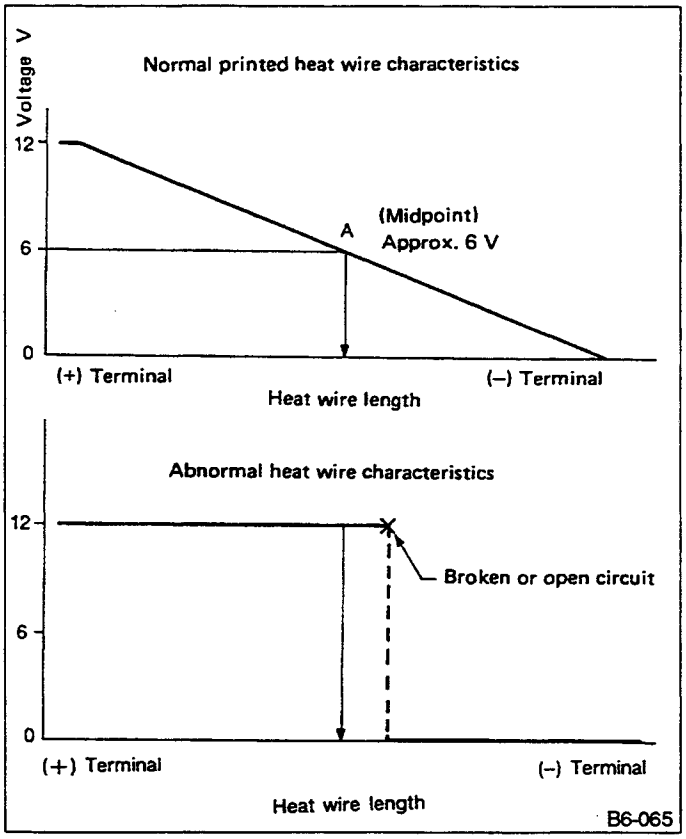

Fig. 35

B: REPAIR

1) Clean broken wire and its surrounding area.
2) Cut off slit on (used) thin film by 0.5 mm (0.020 in) width and 10 mm (0.39 in) length.
3) Place the slit on glass along the broken wire, and deposit conductive silver composition (DUPONT No. 4817) on the broken portion.
4) Dry out the deposited portion.
5) Inspect the repaired wire for continuity.

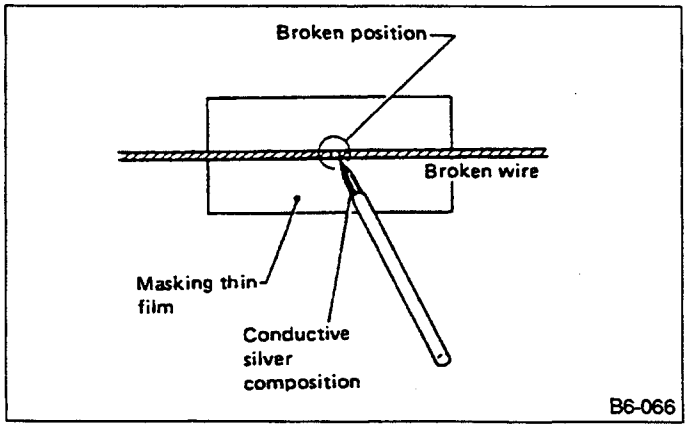

Fig. 36

10. Rear Wiper and Washer

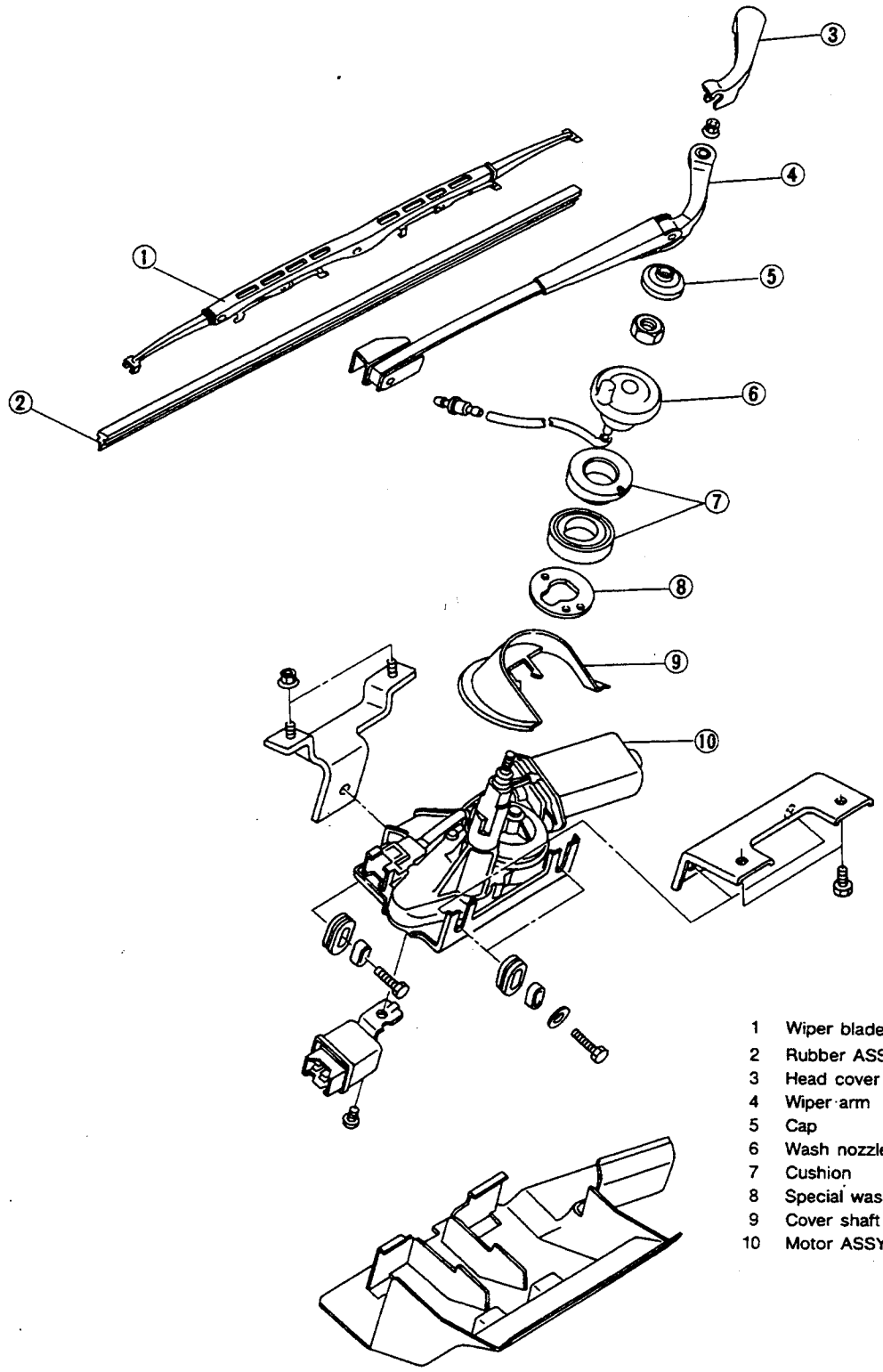

Fig. 37

A: ON-CAR SERVICES

1. ADJUSTMENT

1) Adjust wiper blade in original position as shown in the illustration by changing wiper arm installation.

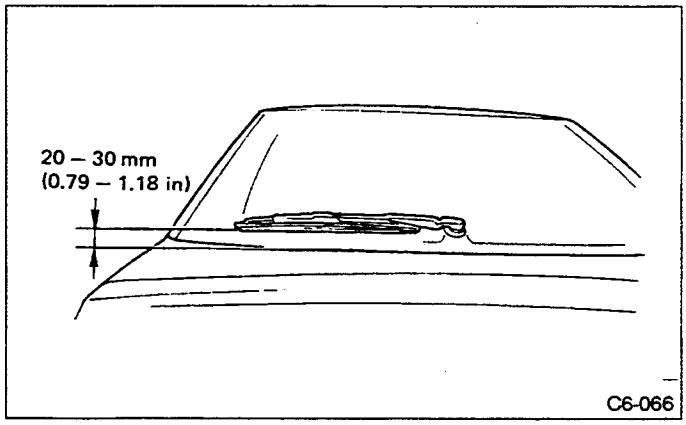

Fig. 38

2) Adjust washer ejecting point on rear gate window as shown in the illustration when the car stops.

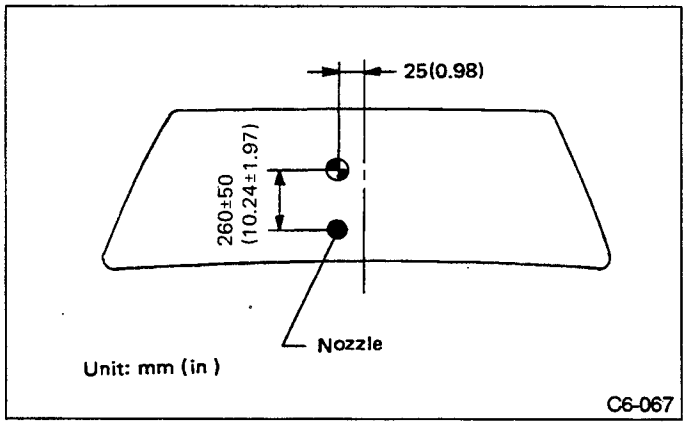

Fig. 39

B: REMOVAL AND INSTALLATION

1. WIPER ARM

1) Remove head cover.
2) Remove nut and wiper arm.

2. WIPER MOTOR

1) Remove cap and special nut.

Be careful not to strike service tool against nozzle during removal.

2) Remove rear gate trim. Ref. to [5-3].
3) Disconnect connector (Motor & relay).
4) Separate washer hoses at joint.
5) Remove attaching screws and take out wiper motor ASSY.

Be careful not to damage O-ring when removing wiper motor ASSY.

3. WASHER TANK

1) Remove rear quarter trim. Ref. to [5-3].
2) Disconnect washer hose and motor connector.
3) Remove attaching bolts.

W SERVICE PROCEDURE

11. Security System

A: SCHEMATIC

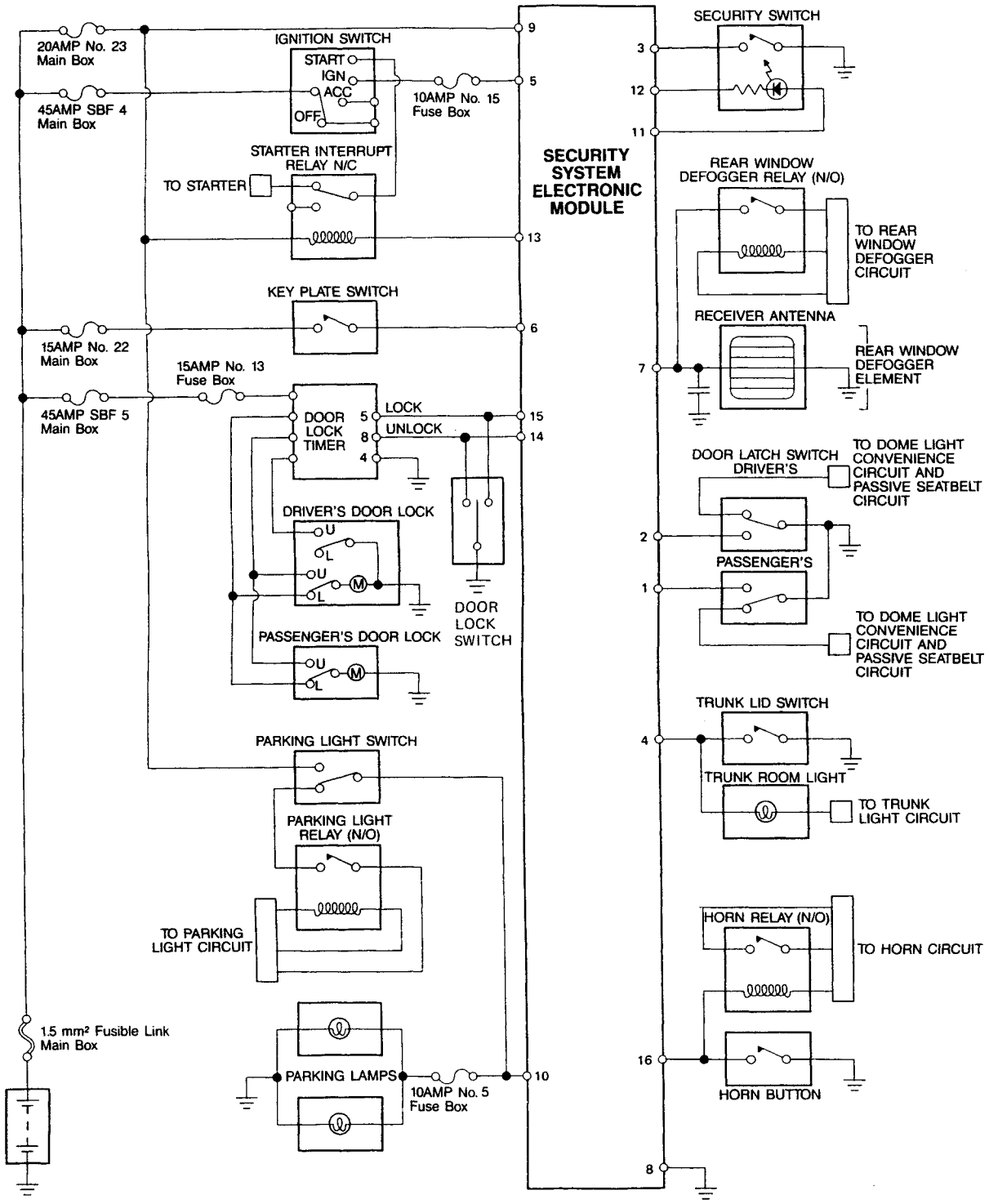

C6-206

Fig. 1

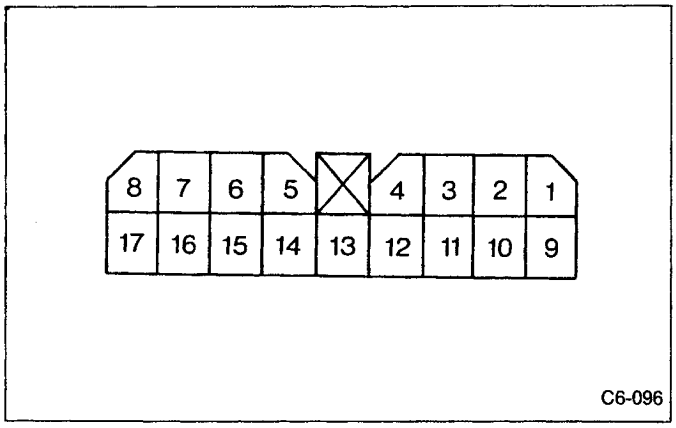

Fig. 2

PIN	FUNCTION
1	PASSENGER DOOR LATCH SWITCH
2	DRIVERS DOOR LATCH SWITCH
3	SECURITY SWITCH
4	TRUNK LID SWITCH
5	IGNITION
6	KEY PLATE SWITCH
7	RECEIVER ANTENNA
8	GROUND
9	+12 VOLTS
10	PARKING LIGHT
11	LED + (INDICATOR)
12	LED – (INDICATOR)
13	STARTER
14	UNLOCK-DOOR LOCK ACTUATOR
15	LOCK-DOOR LOCK ACTUATOR
16	HORN
17	OPEN

1. FUNCTION AND OPERATION

(1) The security system monitors the dome and trunk light circuits to sense unauthorized entry into the vehicle. The system senses impacts to the vehicle resulting from possible suspicious activity. The system will sound the horn and flash the parking lights if entry or impact is detected. When actively armed, the system will disable the starter. The starter circuit is deactivated through a relay which interrupts the circuit.

(2) The remove transmitter arms or disarms the system. The remote arm and disarm also provides driver convenience of locking and unlocking the doors. The security system communicates with the door lock timer unit to lock and unlock the doors. When disarming, the system turns the on dome light illuminating the interior for entering the vehicle in the dark.

1) Passive Arming

The system arms automatically 27 seconds after the dome light dims off. If a door or the trunk is opened within the 27 second exit delay, the system waits until all doors and trunk are closed to begin a new 27 second cycle.

The doors will not lock automatically when the system arms.

2) Passive Disarming

The system can be disarmed by turning the ignition switch to the ON position. When a door is opened the parking lights flash and a clicking noise is heard counting down the 17 second entry delay before the alarm sound.

3) Active Arming

The system arms/disarms when the remote transmitter button is pressed. Along with the arm/disarm signal, the doors lock/unlock. The doors and trunk must be closed securely and the parking lights switched OFF for the system to arm.

4) Active Disarming

The system disarms when the remote transmitter button is pressed. The transmitter also disarms the system for passively armed. The doors automatically unlock with the disarm signal.

5) Alarm Activation

The alarm sounds if the doors or trunk are opened after the system is armed. A sudden shock such as breaking a window or not disarming the system before the end of the 17 second entry delay also sets off the alarm.

6) Alarm

The alarm sounds for 2 minutes. The system rearms if all sensors are returned to a normal state. If the sensors are not returned to a normal state, the alarm continues to sound in 2 minute cycles to a total of 10 minutes.

7) Starter Interrupt

Withe the system actively armed, the system disables the starter circuit. The starter will not operate unless the system is disarmed actively.

The system must be disarmed with the remote transmitter if armed with the remote transmitter for the engine to start.

8) Emergency By-Pass

If the remote transmitter is lost or broken the starter interrupt can be by-passed allowing the engine to start. The following procedure must be used to activate the emergency by-pass.

1. Enter the vehicle.

The alarm will sound as the door is opened.

2. Securely close the door.
Do not change the position of the Security Switch or leave the doors or trunk open, otherwise the alarm will sound for 10 minutes before the engine can be started.
3. Turn on the parking lights.
The alarm will sound for two minutes.
4. Start the engine by turning the ignition switch.
5. Turn off the parking light switch.

9) Red Indicator Light
The red indicator light signals the status of the system. Under normal conditions the light will flash approximately every two seconds. If an intrusion has been sensed and the alarm was activated the indicator light will flash a code showing the type of intrusion as follows:

Number of Flashes	Point of Intrusion
2	Door
4	Shock Sensor Activated
5	Use of non-authorized remote transmitter.
8	Ignition tampering

10) Panic Mode
The security system will automatically sound the alarm if the remote transmitter button is held down for more than 3 seconds. To deactivate the panic mode hold the button for 8 seconds or turn the ignition switch to the on position.

11) Warn-Away
Minor impacts or shocks to the vehicle will cause the system to sound the horn as a warning. If 3 minor shocks are sensed within 7 seconds then the alarm will sound a normal 2 minute alarm cycle.

12) Horn Signal
The horn provides feedback for the driver that the system responded to the remote transmitter. The horn will sound a single tone when armed and two tones when disarmed. A third tone will sound indicating the alarm was activated.

2. STARTER INTERRUPT RELAY
The relay, activated by a signal from the electronic control unit, interrupts the starter circuit keeping the starter from operating.

1) Passive Arming: The starter circuit functions normally. The system will not activate the starter interrupt relay if passively armed.

2) Active Arming: The system interrupts the starter circuit if actively armed. The electronic control unit grounds the coil side of the relay, opening the relay switch contacts, interrupting the starter circuit.

3. REMOTE TRANSMITTER
The remote transmitter is a hand-held device which transmits a radio signal to the system providing an arm or disarm command. The signal also locks or unlocks the doors.

C: SHOCK SENSOR ADJUSTMENT

The system shock sensor is preset and requires no additional adjustments unless requested by the consumer. The adjustment screw for the shock sensor is located in the end of the electronic control unit. The sensor sensitivity can be fine tuned changing the level of impact required to set off the alarm. To reduce sensitivity turn the screw counter-clockwise. Increase sensitivity by turning the screw clockwise.

D: PROTECTIVE FUSE

A 1 amp fuse is located in the end of the electronic control unit near the shock sensor adjustment screw. The fuse protects the circuit board from power serges or shorts. To replace the fuse place a screwdriver in the end of the fuse holder and turn counter-clockwise. The fuse and holder rotates outward.

Do not change the position of the shock sensor adjustment.

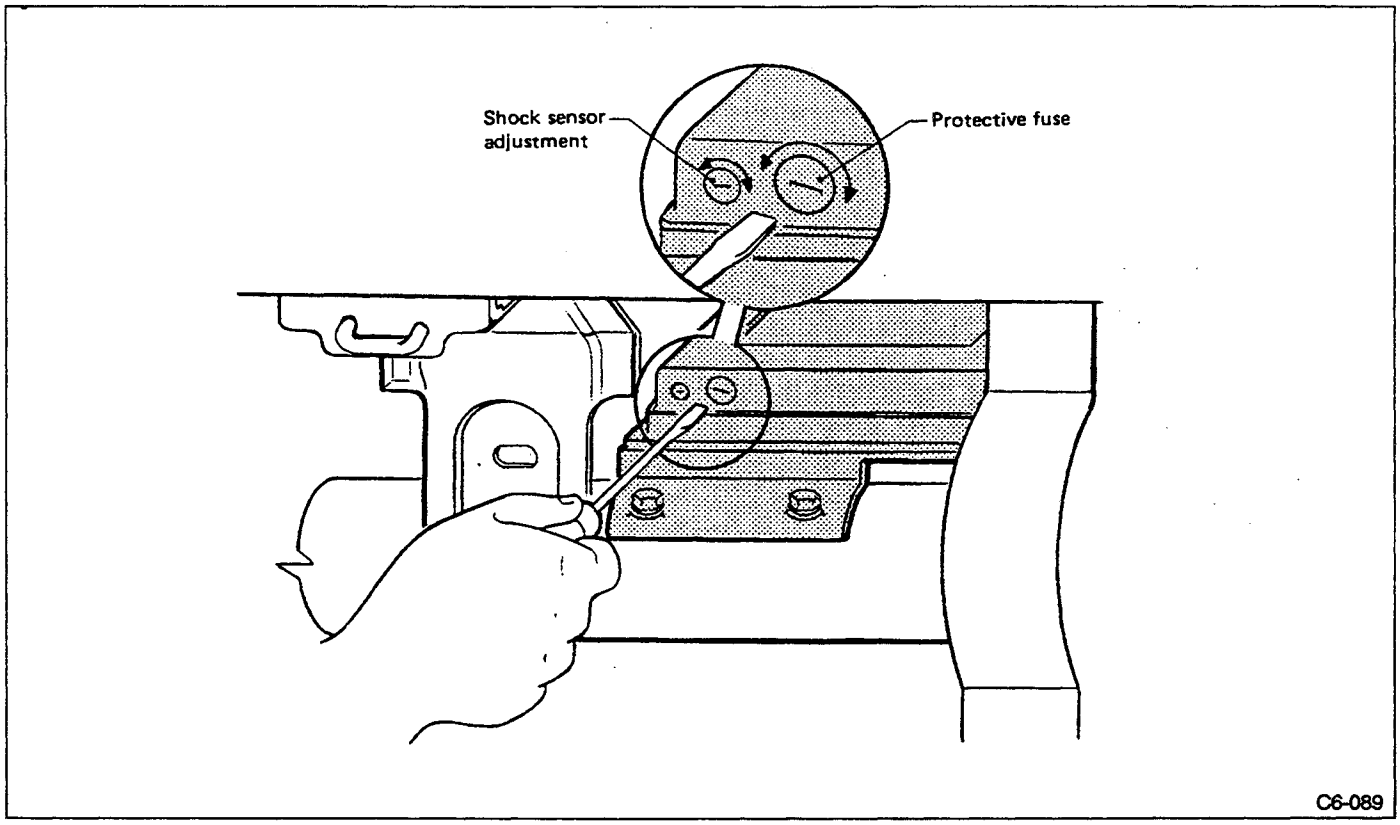

Fig. 42

E: REMOVAL AND INSTALLATION

1. ELECTRONIC CONTROL MODULE

1) Remove glove box door and inner panel.
2) Remove glove box door switch assembly and brace.
3) Remove the two attaching bolts from the electronic control module bracket.
4) Gently pull the electronic control unit away from inside the dash. Disconnect the connector from the back of the control unit.

Reprogram the remote transmitter code to the electronic control unit whenever the connector or battery has been disconnected.

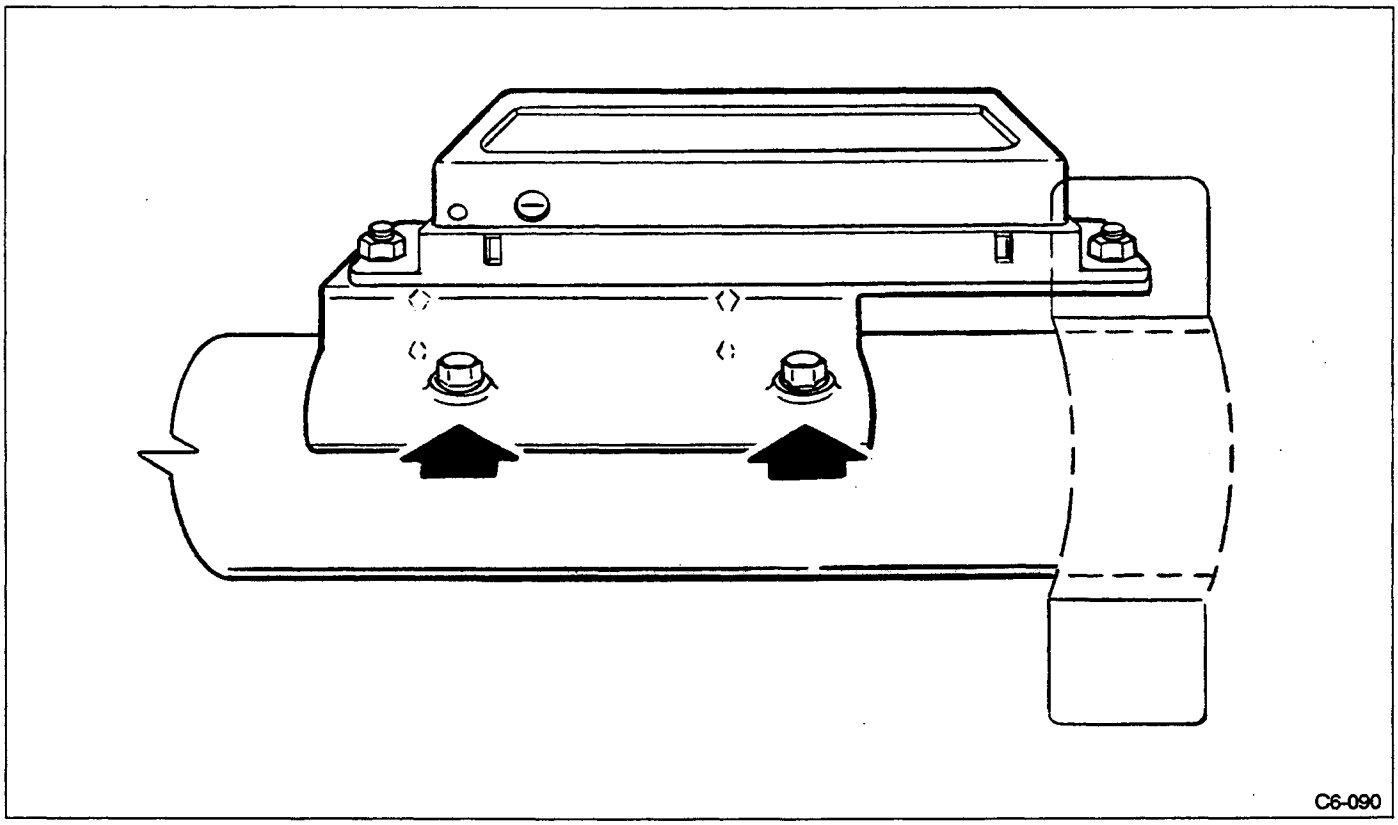

Fig. 43

2. STARTER INTERRUPT RELAY

1) Disconnect the connector from the bottom of the relay.
2) Remove the attaching bolt.

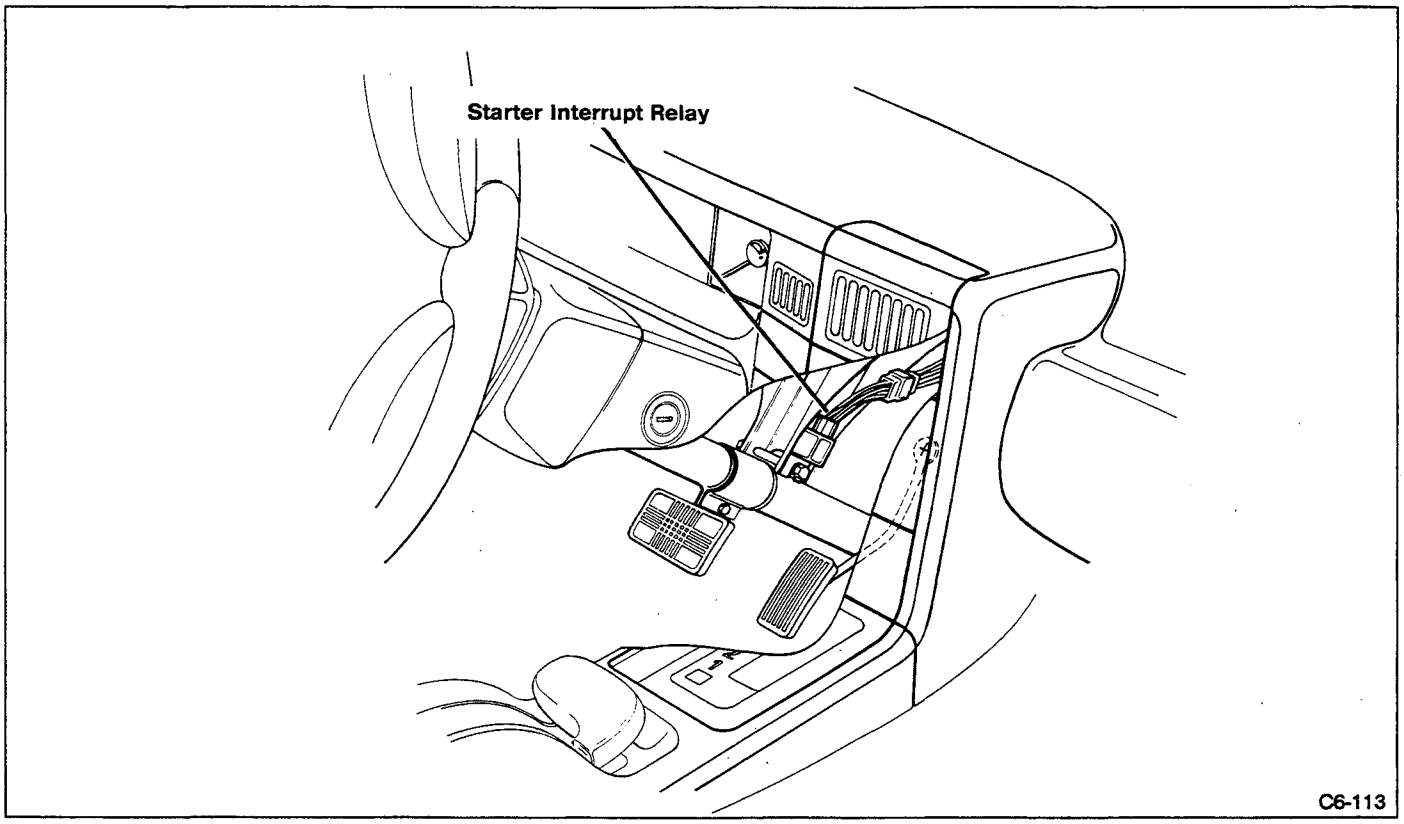

Fig. 44

3. REMOTE TRANSMITTER BATTERIES

1) Remove the four screws from the back of the remote transmitter housing.
2) Turn the remote transmitter over and gently lift off the top cover.

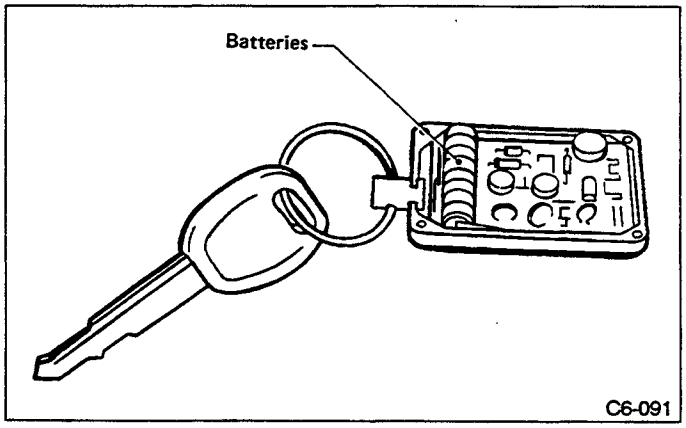

Fig. 45

4. PROGRAMMING THE REMOTE TRANSMITTER CODES

The remote transmitter codes must be reprogrammed whenever the battery or wiring connector for the electronic control unit has been disconnected. The electronic control unit clicks and the parking lights flash as a signal the transmitter codes need to be reprogrammed.

Press the button on each remote transmitter twice and one more time on one of the transmitters: a total of five (5) times. The electronic control unit must receive five transmitter codes for the system to operate.

F: FUNCTION TESTS

1. PASSIVE ARMING

1) Cycle the ignition ON to OFF. Exit the vehicle.
2) Securely close all doors and trunk lid.
3) The system should automatically arm 27 seconds after the dome light dimes out.
4) Open a door. The system should sound the alarm 17 seconds after the door was opened. The system will click and flash the parking lights during the 17 second entry delay.
5) Allow the system to passively arm once again. Open the trunk lid. The alarm should sound immediately, (press the remote transmitter button to stop the alarm).

6) Allow the system to passively arm once again. Open the door and turn the ignition on. The system should not sound the alarm after 17 seconds.

2. ACTIVE ARMING

1) Securely close all doors and trunk lid.
2) Actively arm the system by pressing the button on the remote transmitter. The system should arm and lock the doors. The arming is signaled by a single flash of the parking lights and a tone from the horn.
3) Open a door by unlocking with the key. The alarm should sound immediately when the door is opened.
4) Attempt to start the engine. The engine should not start.
5) Disarm the system by pressing the button on the remote transmitter. The alarm should stop sounding.
6) Actively arm the system once again.
7) Open the trunk lid by unlocking with the key. The alarm should sound immediately when the trunk is opened. Stop the alarm by pressing the remote transmitter button.
8) Roll down the driver's door window.
9) Securely close all doors.
10) Actively arm the system once again by pressing the remote transmitter button.
11) Reach through the open driver's door window and press the main switch OFF. The alarm should sound immediately when the main switch is pressed OFF.
12) Disarm the system and stop the alarm by pressing the remote transmitter button.

3. SHOCK SENSOR

1) Unlatch the hood.
2) Arm the system.
3) Open the hood by 102 mm (4 in). Let the hood fall freely. The alarm should sound when the hood closes.
4) Stop the alarm by pressing the remote transmitter button.

4. SECURITY SWITCH

1) Turn the ignition ON.
2) Press the Security Switch OFF. Turn OFF the ignition. The indicator light should remain ON - no flashing.
3) Press the remote transmitter button. The system should lock the doors but not arm.
4) Unlock a door with the key and open. The alarm should not sound.

5. EMERGENCY BY-PASS

1) Actively arm the system by pressing the remote transmitter button.
2) Open a door by unlocking with the key. The alarm should sound as soon and the door is opened.
3) Enter and securely close the door.
4) Turn the parking lights on.
5) Wait for the system to complete the two (2) minute alarm cycle.
6) Attempt to start the engine. The engine should start.

6. PANIC MODE

1) Securely close all doors and trunk lid.
2) Continuously press the remote transmitter button for more than 3 seconds. The alarm should begin to sound after 3 seconds.
3) Continuously press the remote transmitter button for more than 8 seconds to turn off the panic mode alarm.

G: COMPONENT LOCATIONS

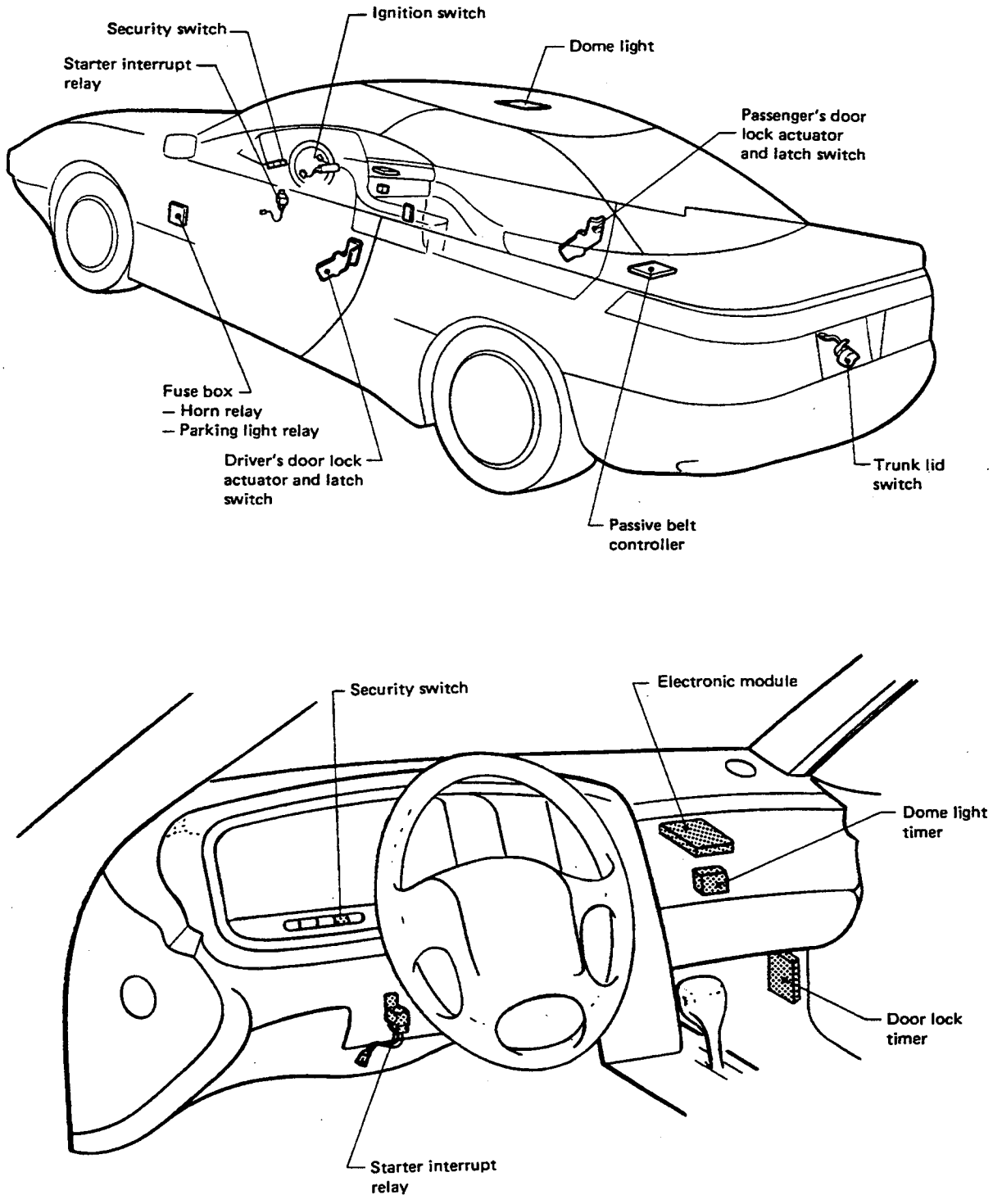

Fig. 46

H: SECURITY SYSTEM WIRING DIAGRAM

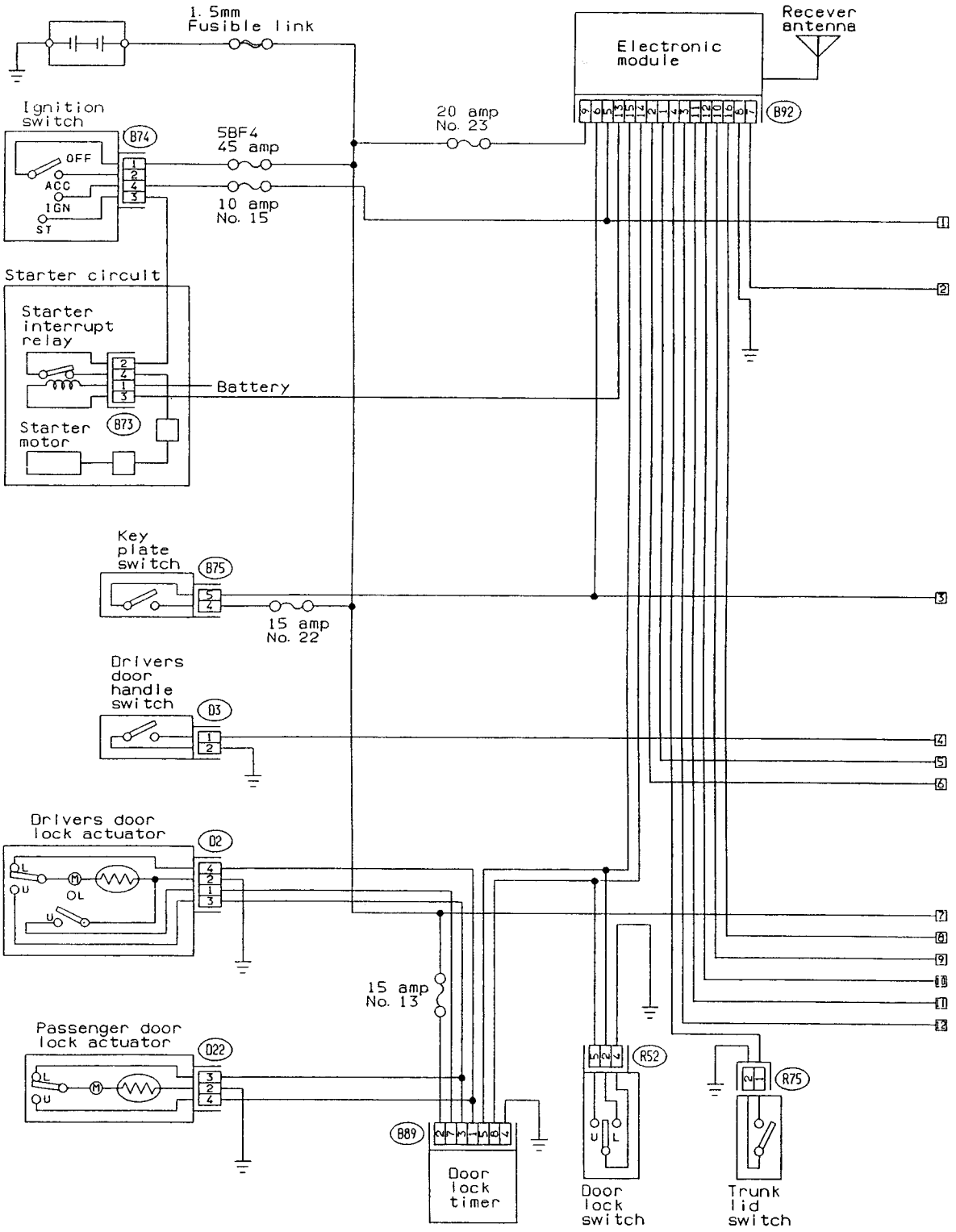

C6-207

Fig. 3

Continued on next page

H: SECURITY SYSTEM WIRING DIAGRAM (CONTINUED)

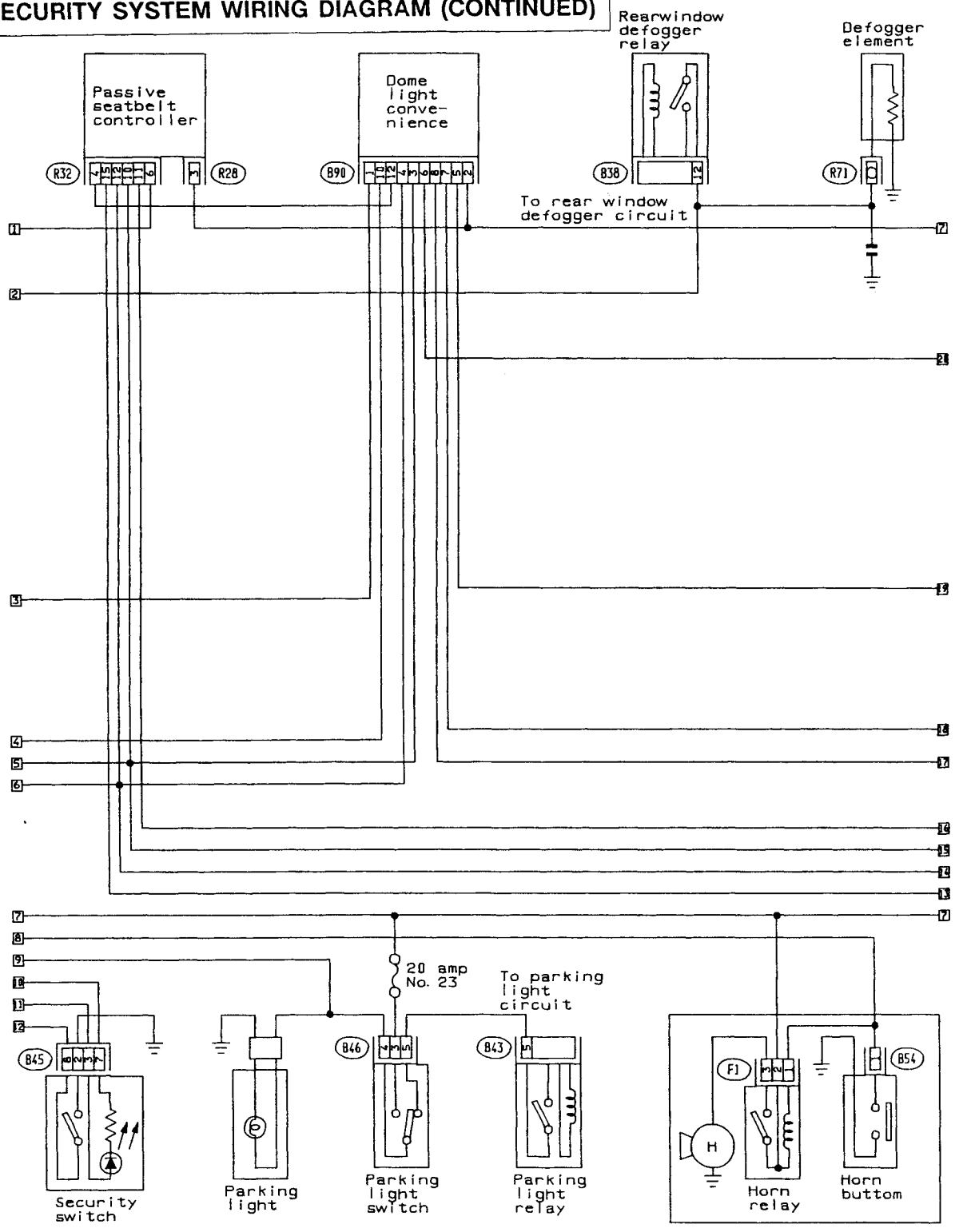

Fig. 4

Continued on next page

H: SECURITY SYSTEM WIRING DIAGRAM (CONTINUED)

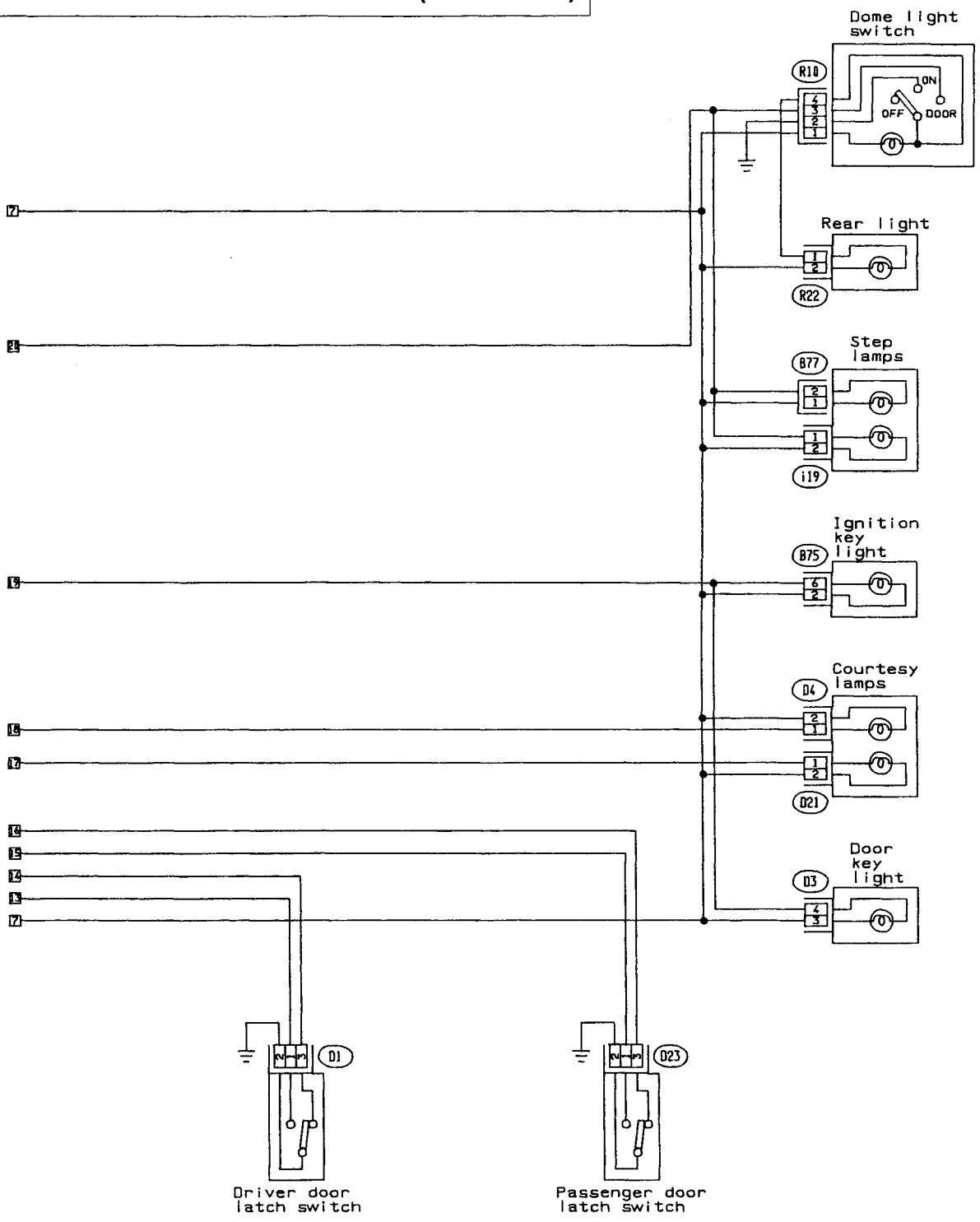

C6-095

Continued on next page

SECURITY SYSTEM CONNECTOR IDENTIFICATION

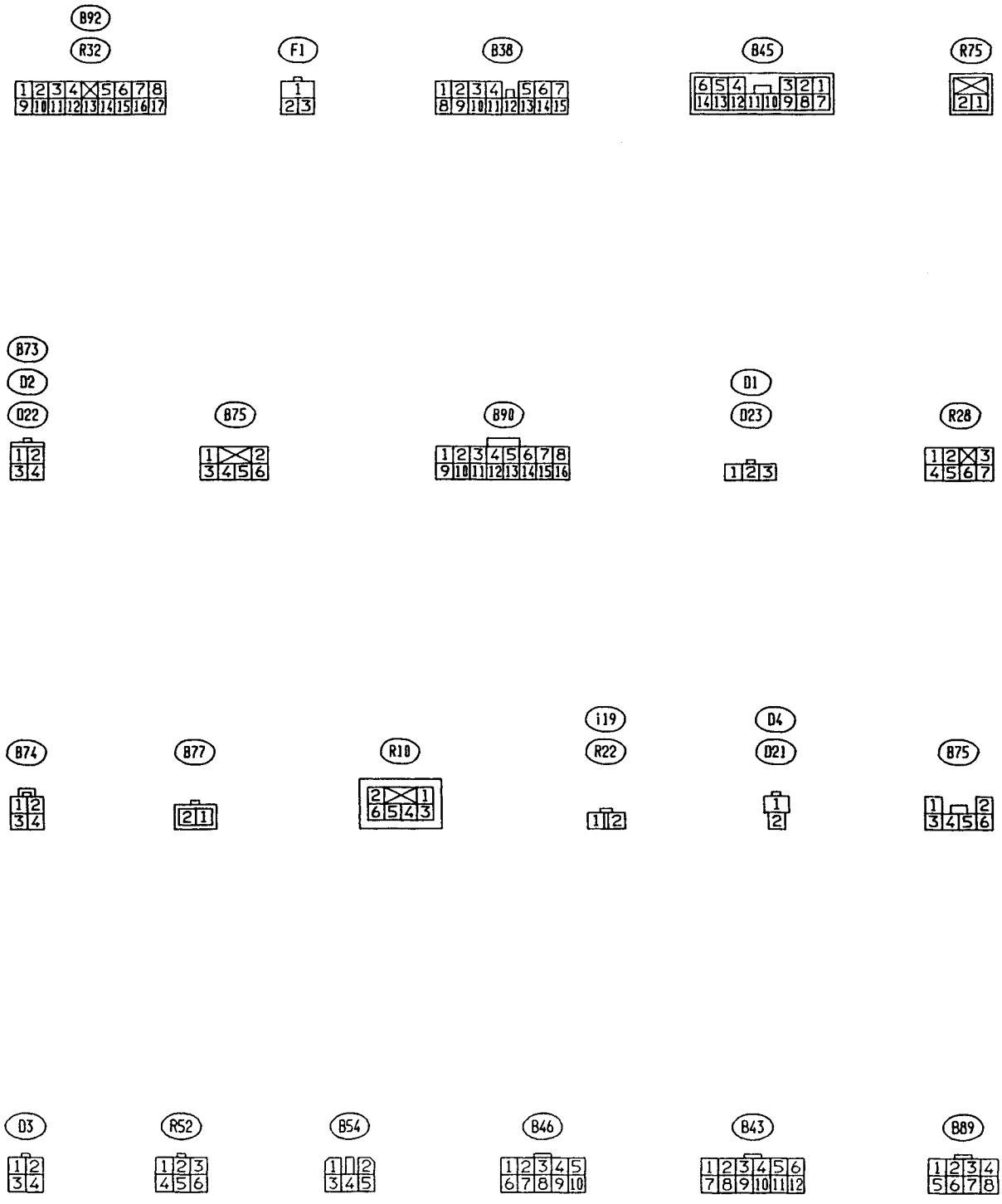

C6-208

Fig. 6

I: SENSORS AND SWITCHES

1. STARTER INTERRUPT RELAY AND CONNECTOR ADAPTOR

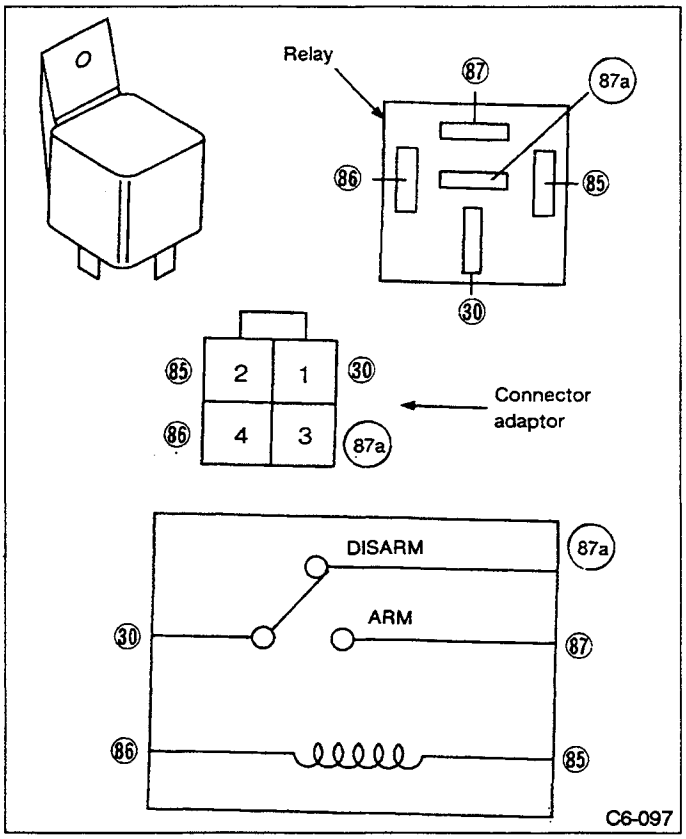

Fig. 51

PIN	ARM	DIS. ARM
85	+ 12V	+ 12V
86	EARTH	OPEN
87a	OPEN	•
30	•	•
87	•	OPEN

2. KEY PLATE SWITCH

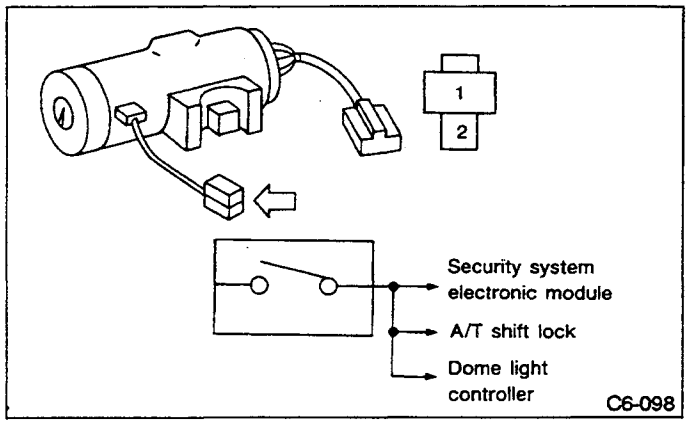

Fig. 52

PIN	KEY IN	KEY OUT
1	+ 12V	+ 12V
2	+ 12V	OPEN

3. IGNITION SWITCH

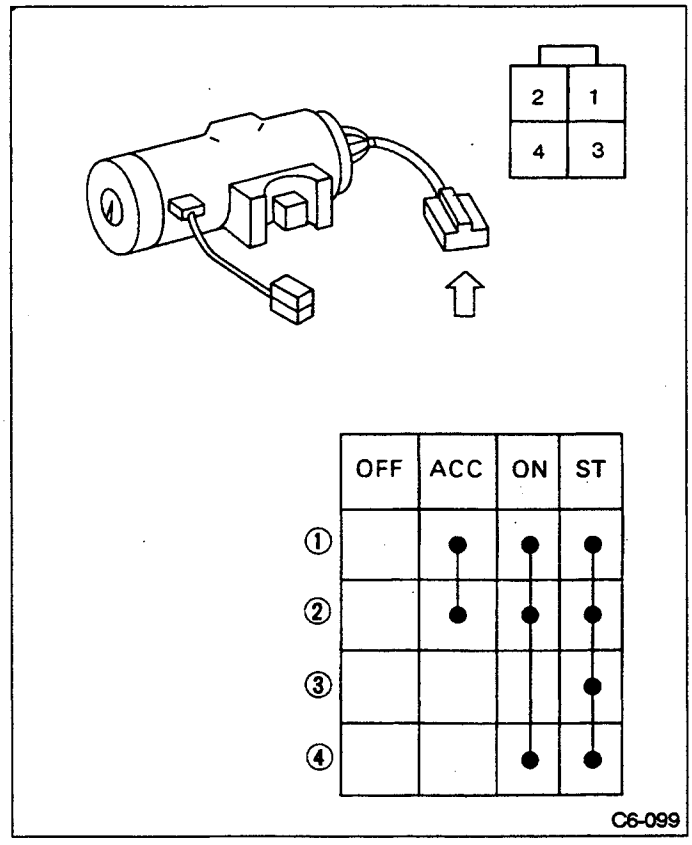

Fig. 53

PIN	OFF	ACC	ON	ST
1	+ 12V	+ 12V	+ 12V	+ 12V
2	OPEN	+ 12V	+ 12V	+ 12V
3	OPEN	OPEN	OPEN	+ 12V
4	OPEN	OPEN	+ 12V	+ 12V

4. HORN BUTTON

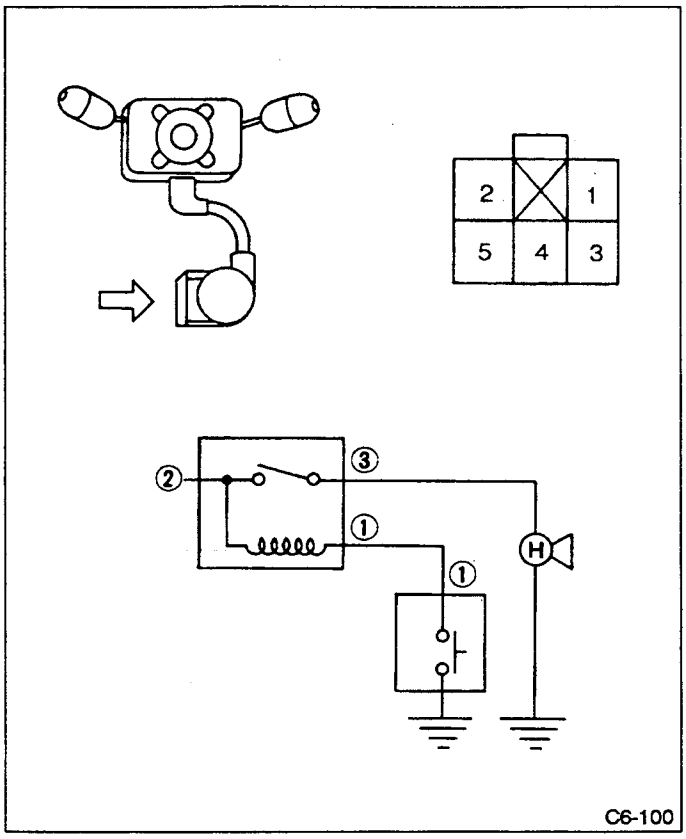

Fig. 54

PIN	HORN ON	HORN OFF	ALARM ON
1	EARTH	+ 12V	EARTH
2	+ 12V	+ 12V	+ 12V
3	+ 12V	OPEN	+ 12V
4	N/A	N/A	N/A
5	N/A	N/A	N/A

5. SECURITY SWITCH

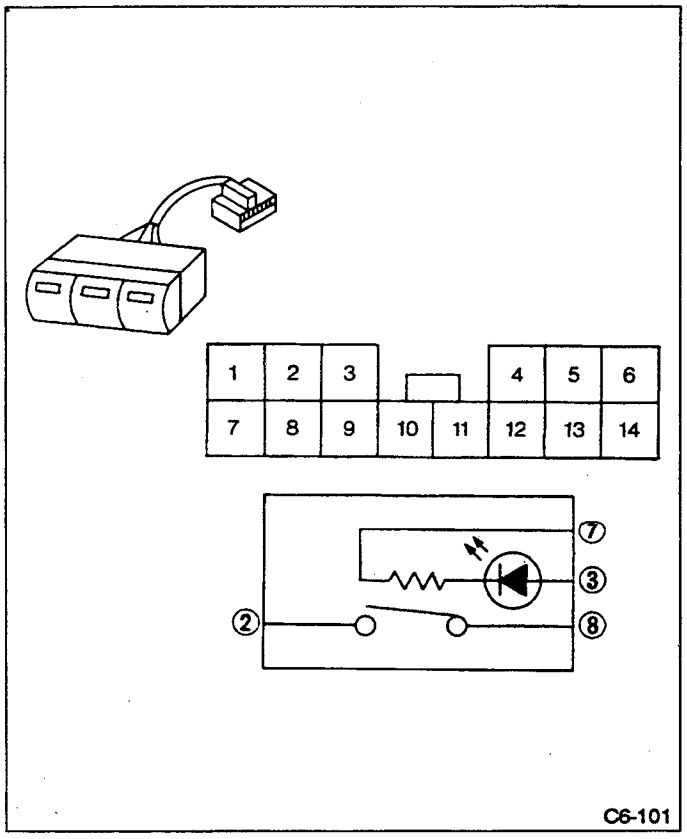

Fig. 55

PIN	SYSTEM ON	SYSTEM OFF
2	EARTH	EARTH
8	EARTH	OPEN
7	LED CONTROL	
3	LED CONTROL	

6. DOME LIGHT SWITCH

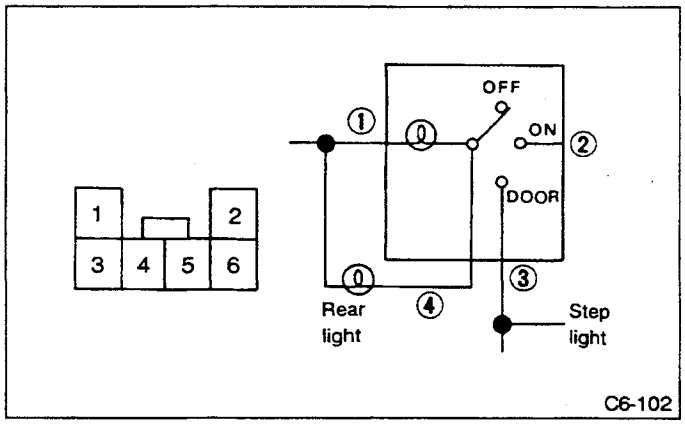

Fig. 56

PIN	OFF	ON	DOOR
1	+ 12V	+ 12V	+ 12V
2	EARTH	EARTH	EARTH
3	TIMER	TIMER	TIMER
4	OPEN	EARTH	TIMER
5			
6			

7. TRUNK LID SWITCH

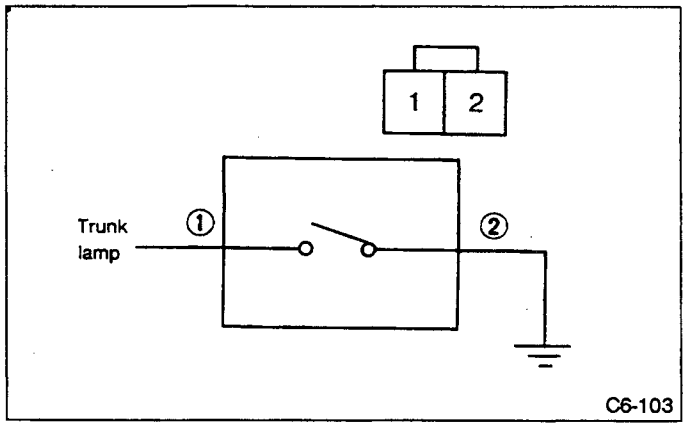

Fig. 57

PIN	TRUNK OPEN	TRUNK CLOSED
1	EARTH	OPEN
2	N/A	N/A

8. DOOR HANDLE SWITCH

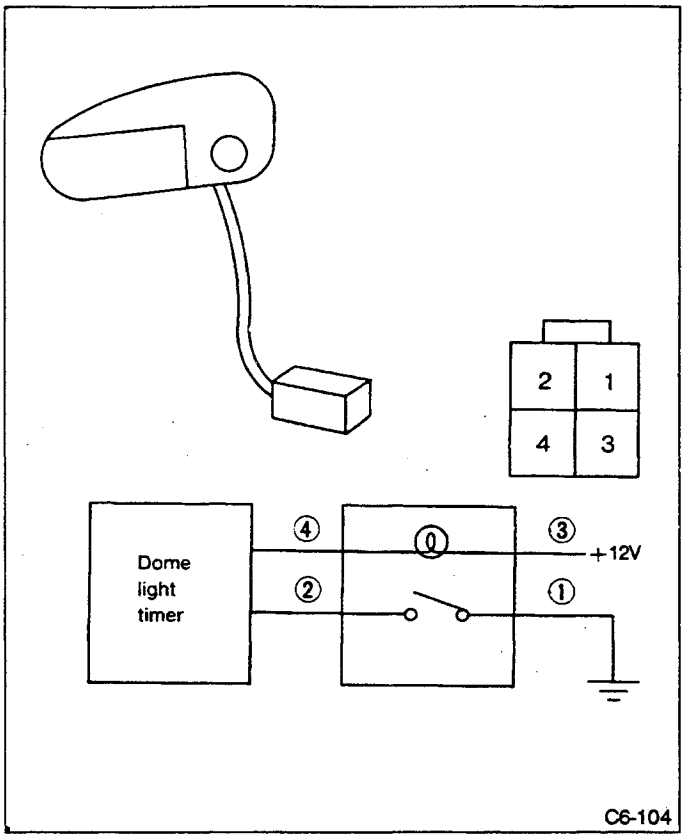

Fig. 58

PIN	HANDLE NEUTRAL	HANDLE UP
1	OPEN	EARTH
2	TIMER	
3	+ 12V KEY LIGHT	
4	TIMER	

9. DRIVERS DOOR LOCK ACTUATOR

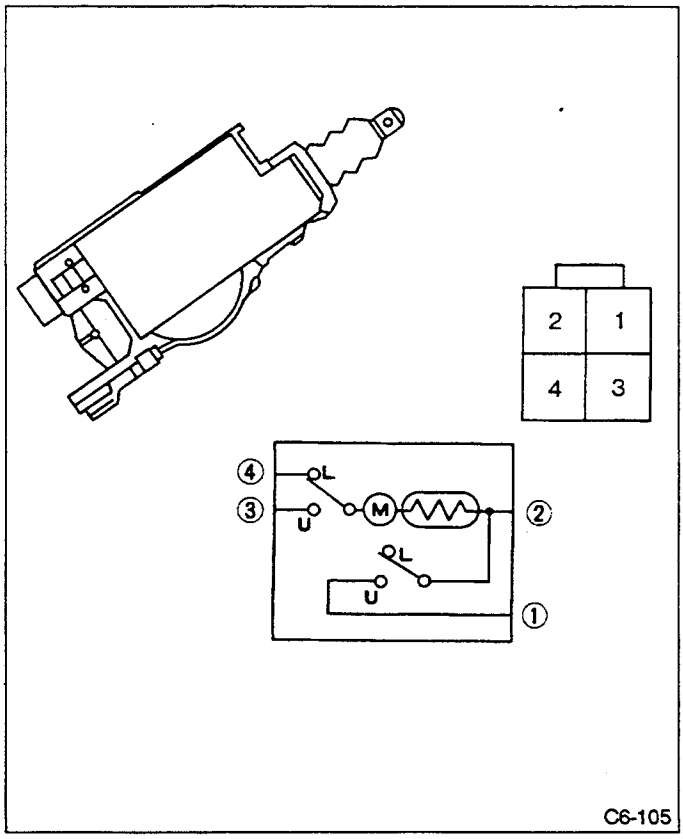

Fig. 59

PIN	LOCK	UNLOCK
1	OPEN	EARTH
2	EARTH	EARTH
3	EARTH	+ 12V
4	+ 12V	EARTH

10. PASSENGERS DOOR LOCK ACTUATOR

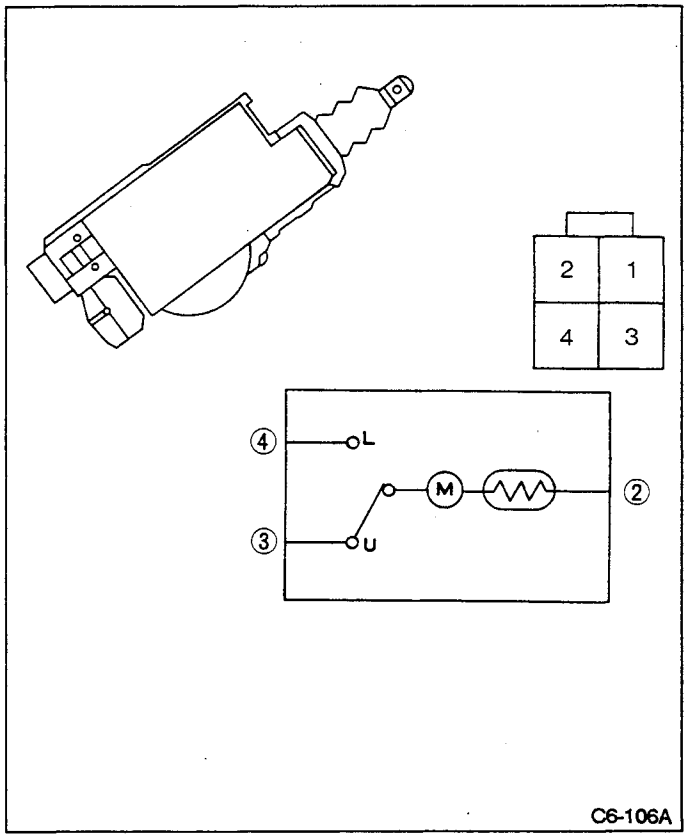

Fig. 60

PIN	LOCK	UNLOCK
1	OPEN	OPEN
2	EARTH	EARTH
3	+ 12V	EARTH
4	EARTH	+ 12V

11. DOOR LATCH SWITCHES

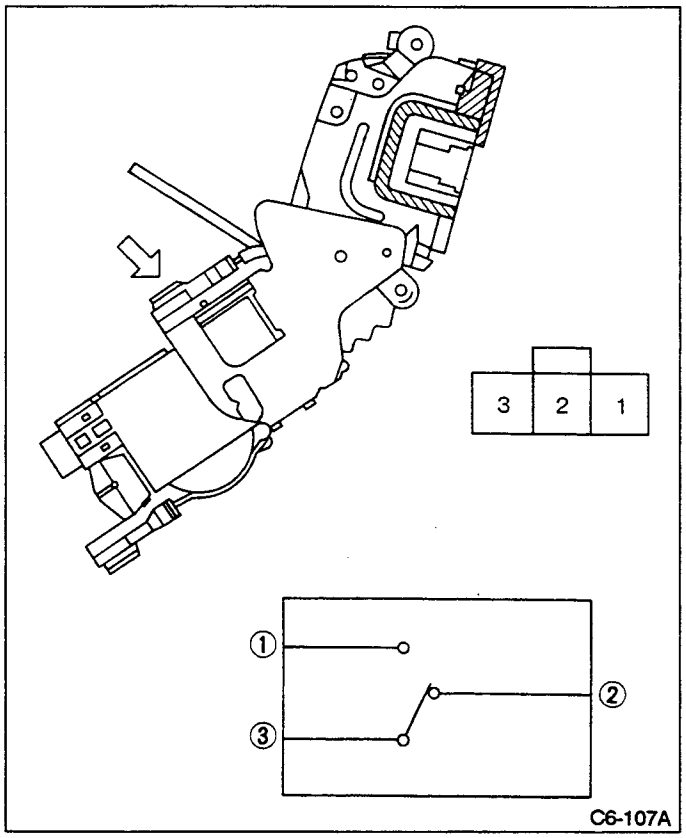

Fig. 61

DRIVERS			PASSENGERS		
PIN	LOCK	UNLOCK	PIN	LOCK	UNLOCK
1	EARTH	OPEN	1	OPEN	EARTH
2	EARTH	EARTH	2	EARTH	EARTH
3	OPEN	EARTH	3	EARTH	OPEN

12. HORN AND PARKING LIGHT RELAYS

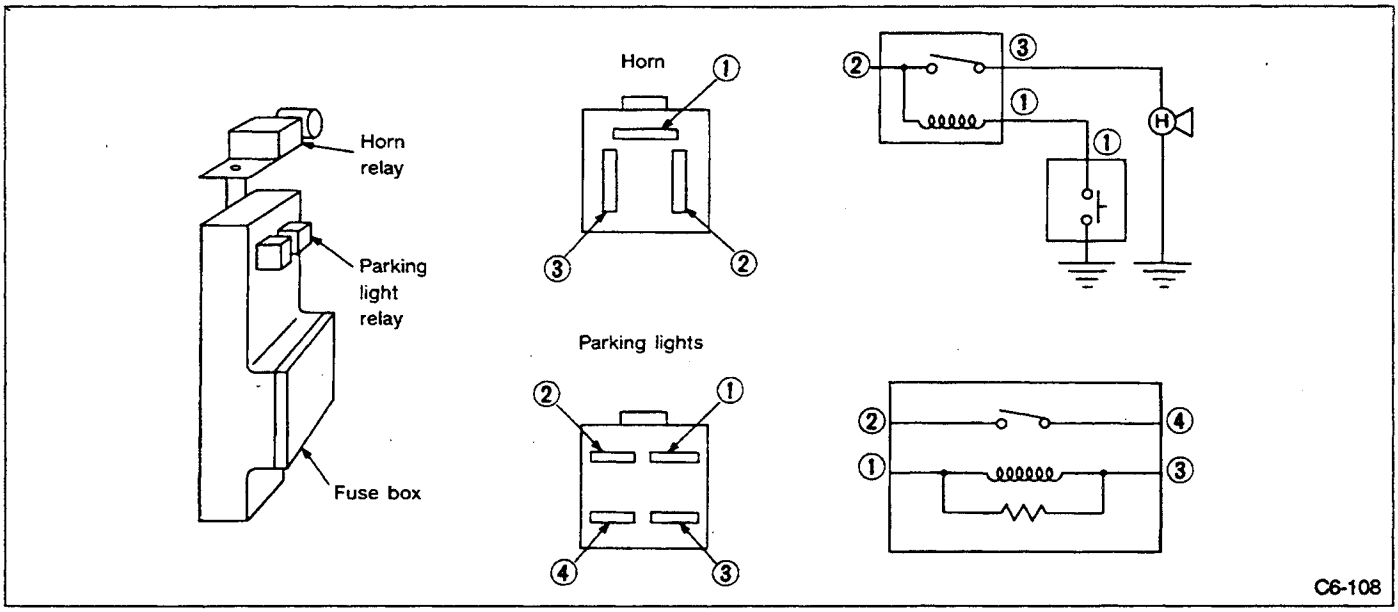

Fig. 62

PIN	HORN OFF	HORN ON	ALARM ON	PIN	LIGHT OFF	LIGHT ON	ALARM ON
1	OPEN	EARTH	EARTH	1	IGN	IGN	+ 12V
2	+ 12V	+ 12V	+ 12V	2	OPEN	+ 12V	+ 12V
3	OPEN	+ 12V	+ 12V	3	OPEN	EARTH	EARTH
				4	+ 12V	+ 12V	+ 12V

J: INSPECTION OF ACTIVE ARMING

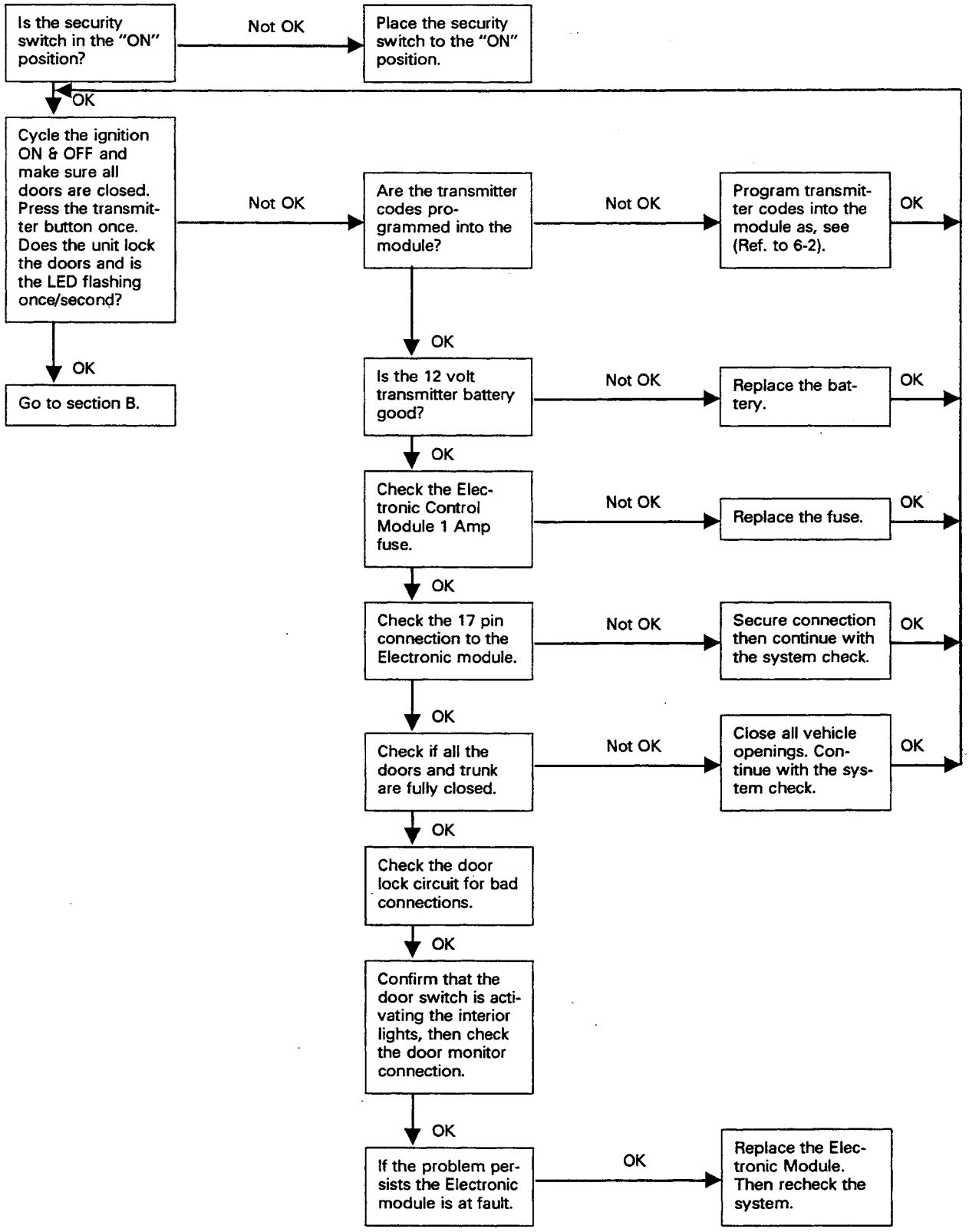

K: INSPECTION OF SHOCK SENSOR

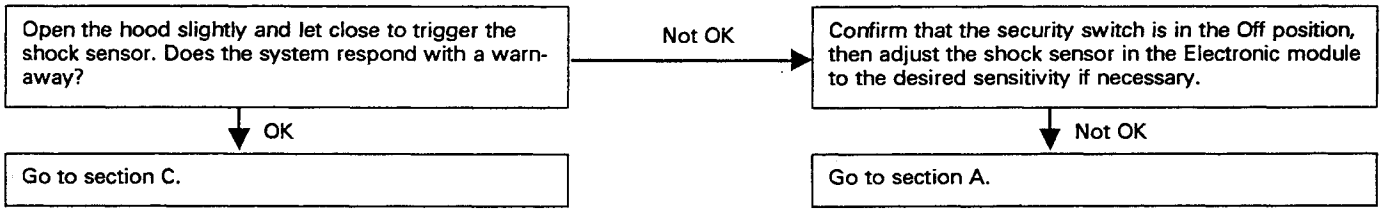

L: INSPECTION OF DRIVER DOOR CIRCUIT

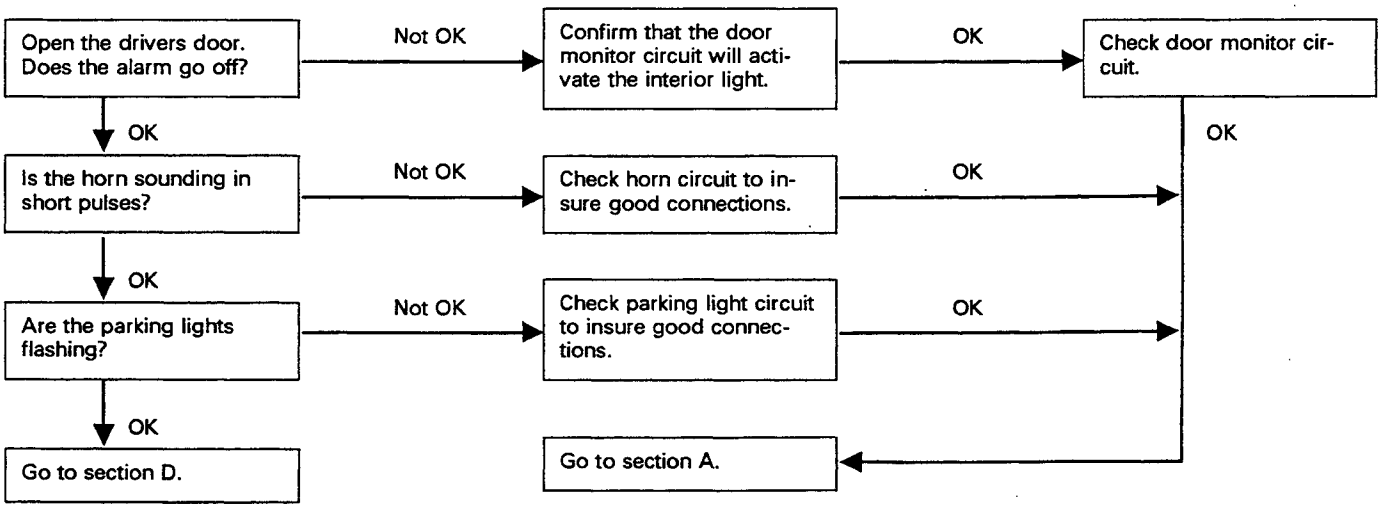

M: INSPECTION OF STARTER CUT SYSTEM

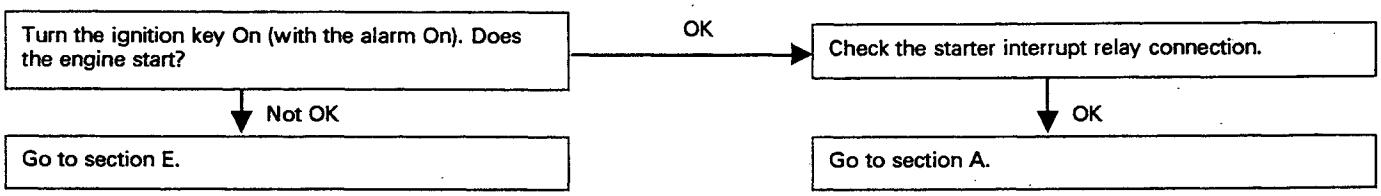

N: INSPECTION OF DOOR LOCK SYSTEM

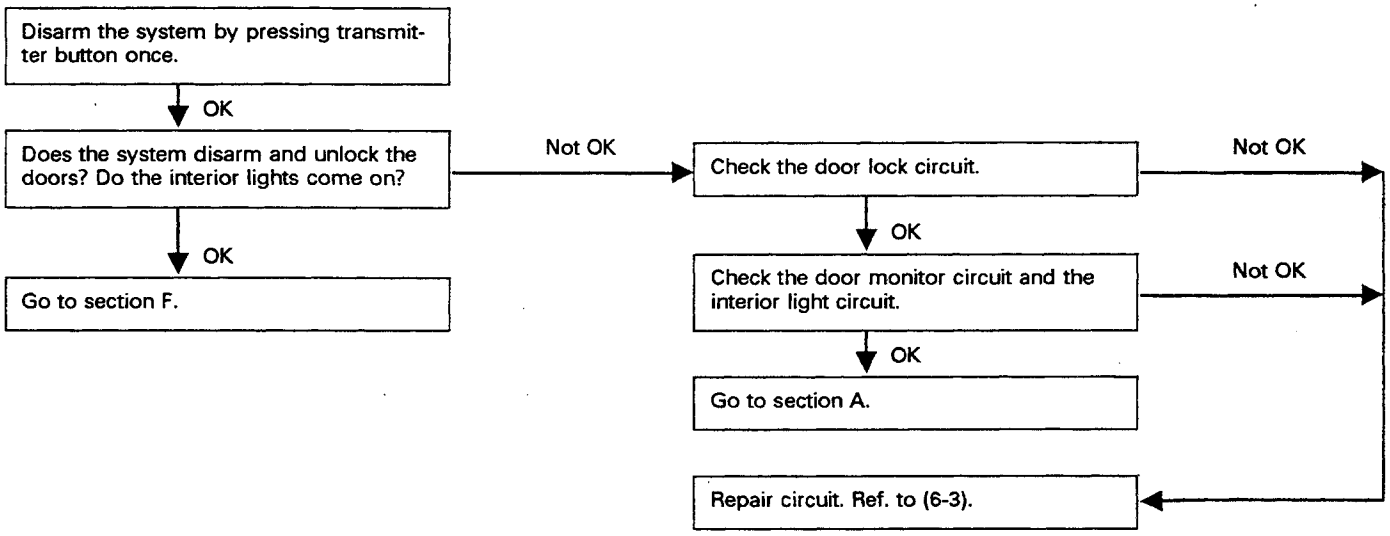

O: INSPECTION OF TRUNK CIRCUIT

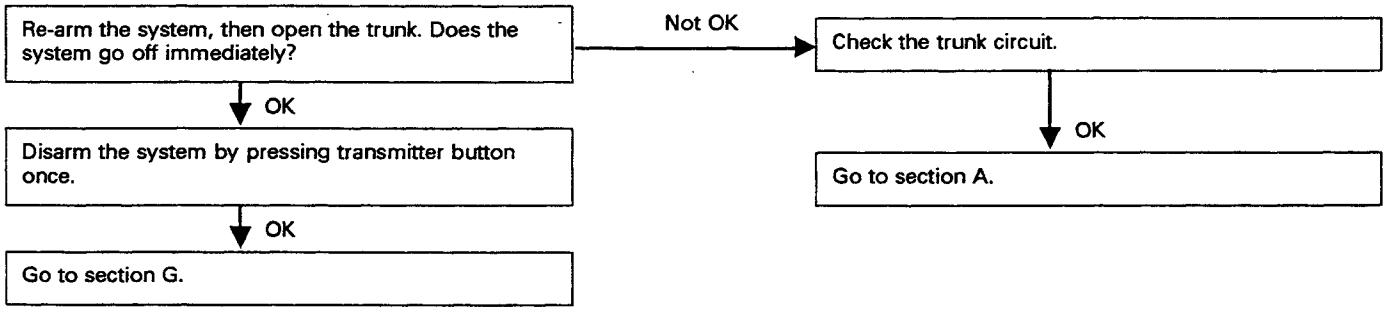

P: INSPECTION OF PASSENGER DOOR CIRCUIT

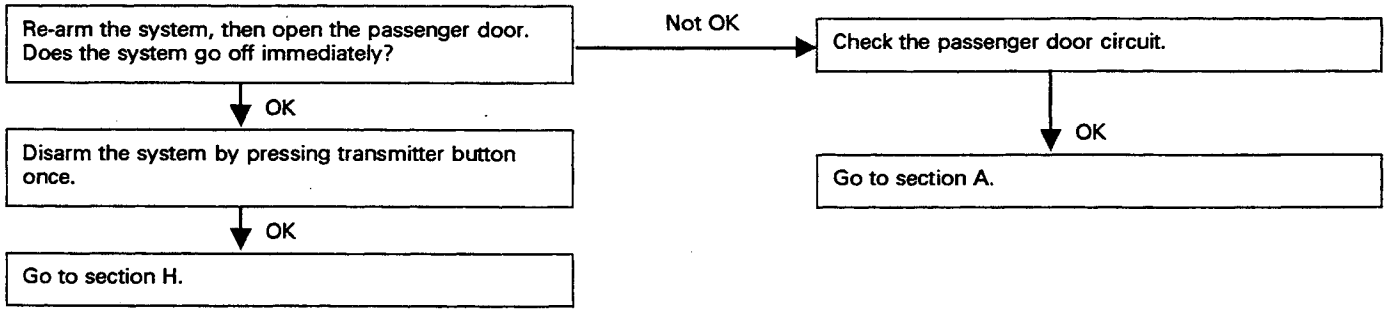

Q: INSPECTION OF PASSIVE ARMING

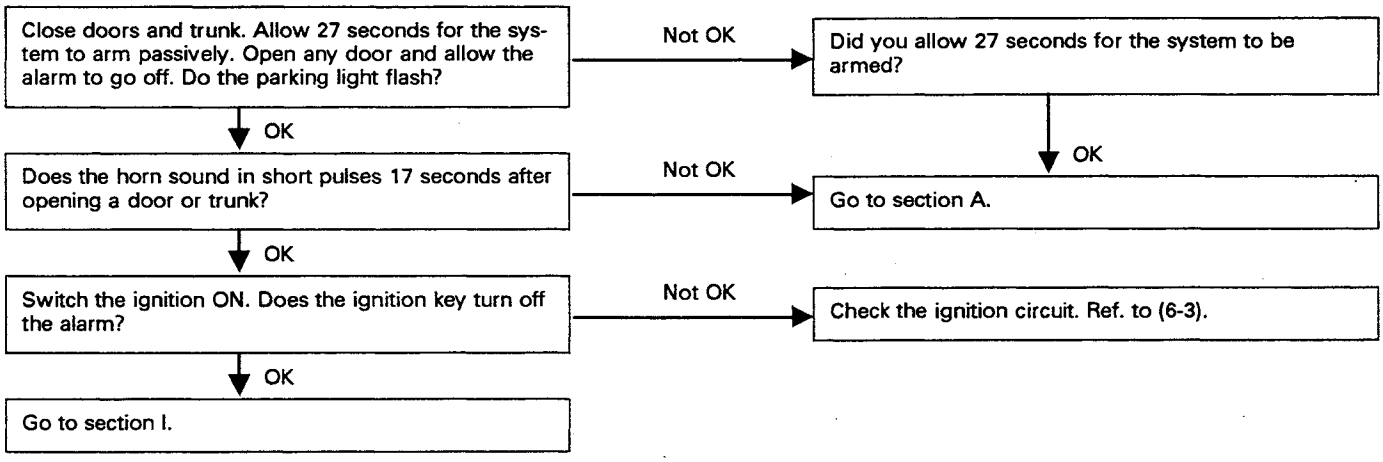

R: INSPECTION OF SECURITY SWITCH

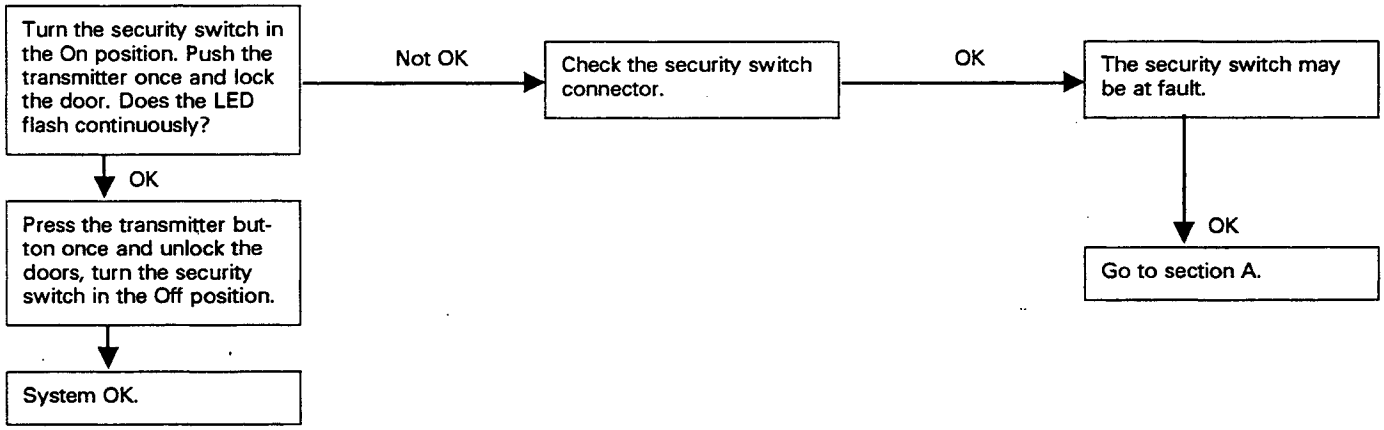

12. Time Control Unit

A time control unit equipped with various control functions is installed to reduce harnesses as well as to increase space and reliability.

1. CONTROL FUNCTIONS

1) Rear window intermittent wiper:
   7 ± 3 seconds
2) OFF delay interconnected with rear window washer:
   2.5 ± 0.6 seconds
3) Rear defogger timer:
   15 ± 4 minutes
4) Illumination control:
   12 — 100% (duty ratio)
5) Interior light timer:
   10 ± 3 seconds
6) Ignition key hole illumination OFF delay:
   10 ± 3 seconds
7) Door key hole illumination OFF delay:
   10 ± 3 seconds
8) Courtesy light OFF delay:
   10 ± 3 seconds
9) Step light OFF delay:
   10 ± 3 seconds
10) Illumination dim cancel signal control (inter- connected with lighting switch)
11) Built-in warning buzzer (for unfastened seat belts, ignition key left in slot)

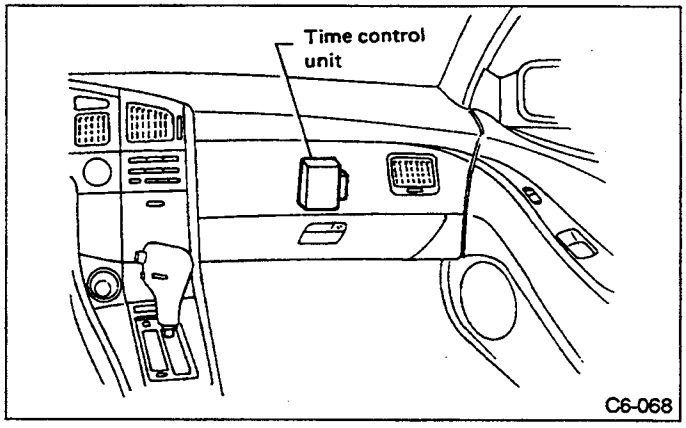

Fig. 63

2. DIAGRAM

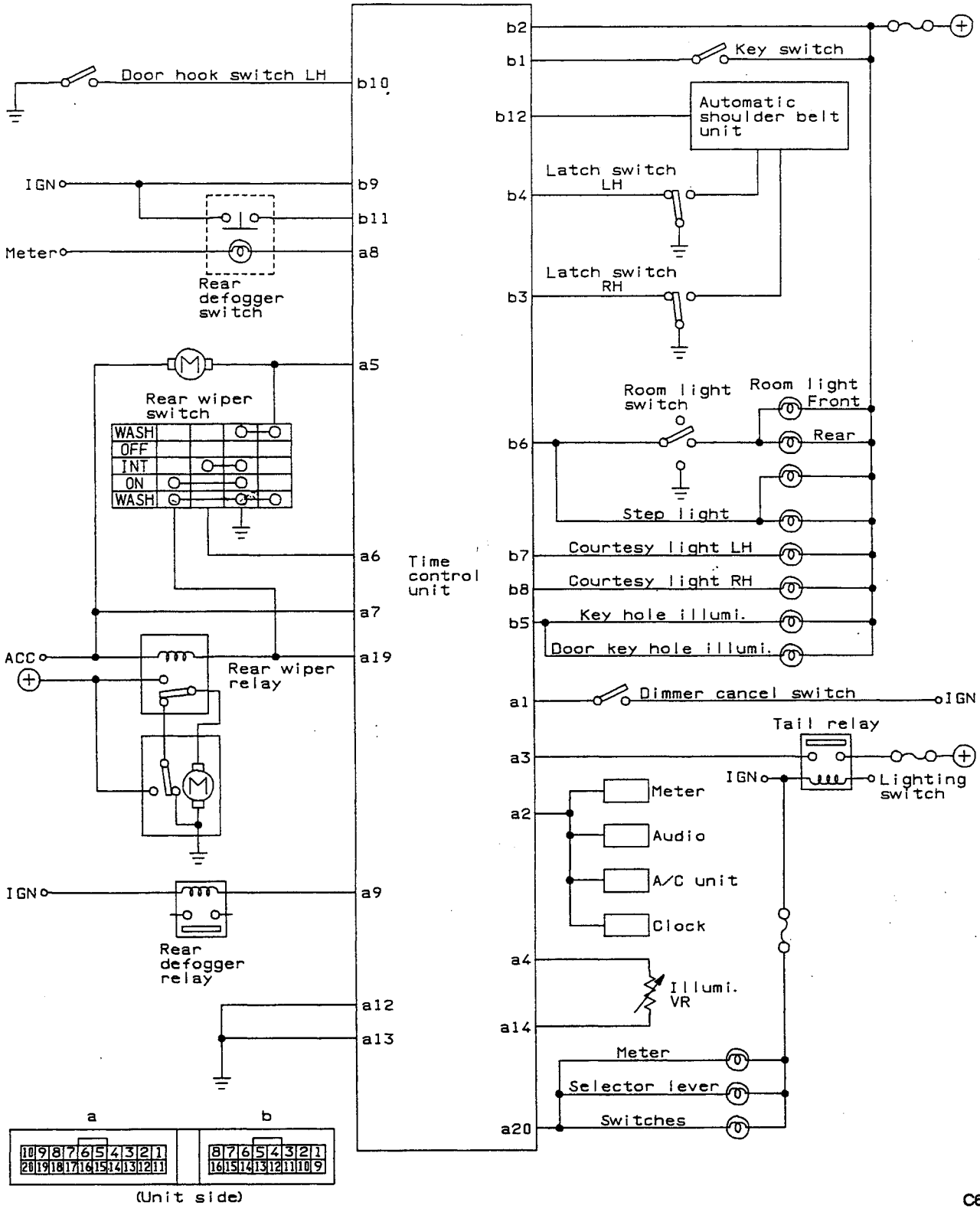

C6-069

Fig. 64

13. Vehicle Speed Sensor

A: DESCRIPTION

1. MECHANISM

The vehicle speed sensor is a rotating type that utilizes a magnetic resistance element (MRE). The MRE is a two-dimensional magnetic sensor whose resistance value varies with changes in the direction of the magnetic field. When the multi-pole ring magnet built into the sensor rotates along with the revolution of the transmission's driven gear, the direction of the magnetic field applied to the MRE cyclically changes by the same number of magnet poles, causing a cyclical change in the resistance value of the MRE. This change in the resistance value is shaped to a rectangular waveform through a built-in IC which produces it as a pulse output.

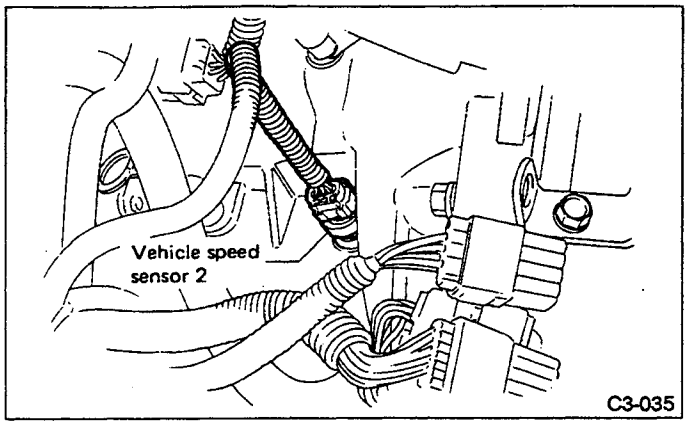

Fig. 65

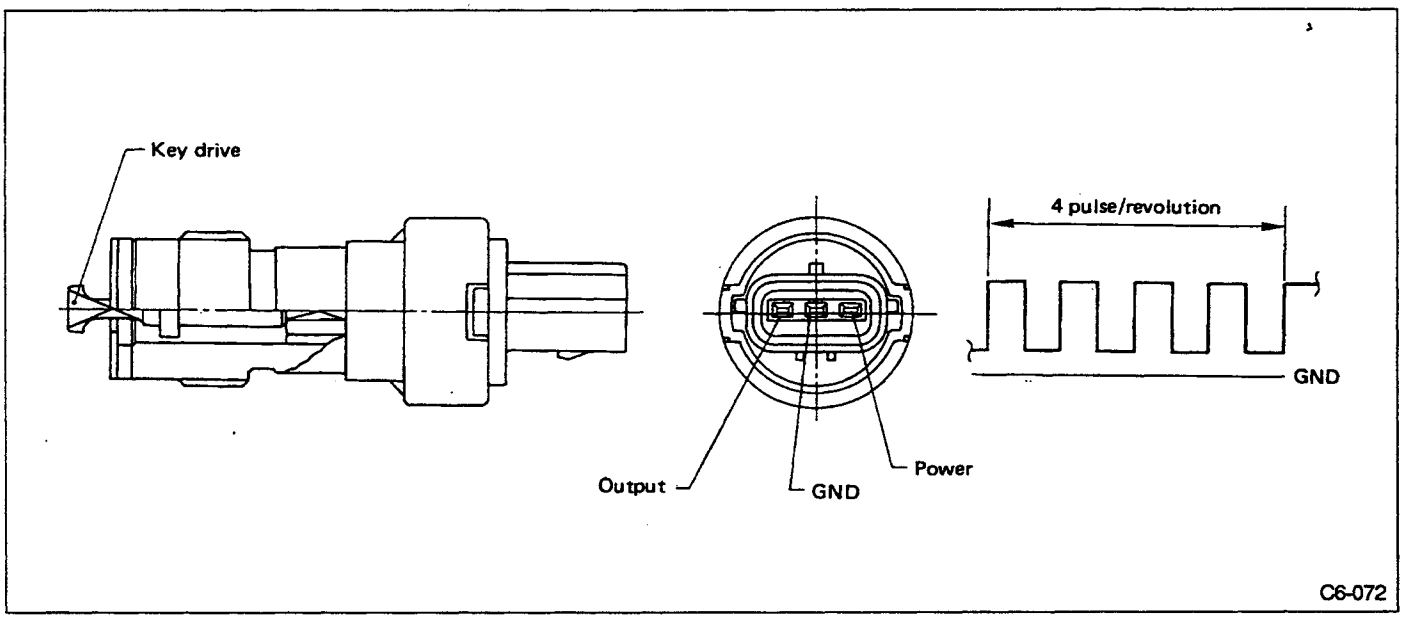

Fig. 66

2. GENERAL PRECAUTIONS

1) Be careful not to drop or bump sensor as this may break built-in magnet.
2) Drive key is designed to separate from vehicle speed sensor. Be careful not to lose it or forget to install.
3) Vehicle speed sensor is installed in part (which contains bearings, etc., finished to a high degree of accuracy). Do not allow foreign matter (filings, sand, etc.) to get into it.
4) When checking output of vehicle speed sensor as a single unit, ensure test leads are connected to their correct terminals. Failure to do this may damage internal IC.
5) Discard vehicle speed sensor after removal; replace with new one.

B: REMOVAL

a. Be careful when removing vehicle speed sensor immediately after driving vehicle for a while as temperature around it is high.
b. Before removing vehicle speed sensor, clean dirt, etc. from surrounding areas. Take care not to allow foreign matter to get into mounting hole.
1) Remove collector cover.
2) Disconnect vehicle speed sensor connector.
3) Turn and remove vehicle speed sensor.
4) Remove key and packing.

C: INSTALLATION

a. Ensure sensor mounting hole is clean and free of foreign matter.
b. Apply grease to tip end of key to prevent key from falling off sensor.
c. Align tip end of key with key groove on end of speedometer shaft during installation.
1) Hand tighten vehicle speed sensor, then tighten it using tool.
Tightening torque required for sensor to reach bottom of transmission:

0.39 — 0.88 N•m
(4.0 — 9.0 kg-cm, 3.5 — 7.8 in-lb)

a. When torque must be applied that exceeds 0.88 N•m (9.0 kg-cm, 7.8 in-lb), the key and key groove on end of speedometer may not be aligned properly. Remove the key, align it correctly and reassemble.
b. Sensor threads are secured by Locktite. The reassembly must be completed within 5 minutes before Locktite dries.
2) Tighten vehicle speed sensor further to specified torque.

5.9 ± 1.5 N•m
(60 ± 15 kg-cm, 52 ± 13 in-lb)

T TROUBLESHOOTING (For Cruise Control) AIRBAG

1. Self Diagnosis

1. GENERAL

The self-diagnosis function of the cruise control system uses an external select monitor. The self-diagnosis function operates in two categories — the cruise cancel conditions diagnosis and real-time diagnosis, which are used depending on the type of problems.

Applicable cartridge No.: 498348500

- Cruise cancel conditions diagnosis

This category of diagnosis requires actual vehicle driving in order to determine the cause, (as when cruise speed is cancelled during driving although no cruise cancel condition is not entered).

⇩

Cruise control unit memory stores the last "cancel" condition which occurred during driving. The code number corresponding with the last cruise "cancel" may be shown on the select monitor display.

a. The cruise control memory stores not only the last cruise "cancel" which occurred (although "cancel" operation is not entered by the driver), but also the "cancel" condition input by the driver.
b. The last cruise "cancel" only is stored in the select monitor memory.
c. The content of memory is cleared when ignition switch or cruise main switch is turned OFF.

- Real-time diagnosis

The real-time diagnosis function is used to determine whether or not the input of output signal system is in good order, according to signal emitted from switches, sensors, etc.

Vehicle cannot be driven at cruise speed because problems occurs in the cruise control system or its associated circuits.

⇩

Dummy signals are manually entered from select monitor's keyboard, etc., to determine whether or not the vacuum pump motor circuit, etc. are in good order.

2. SELF-DIAGNOSIS PROCEDURES USING SELECT MONITOR

1) Connect select monitor to connector (B35).
2) Turn ignition switch ON, then turn cruise main switch ON.
3) Turn select monitor's power ON. All LED's will come on. Select monitor display will read, as shown below, after several seconds.

```
SELECT    SYSTEM
EGI:0,    OTHERS :/
```

4) Press "/" three times.

```
SELECT    SYSTEM
C/C:0,    OTHERS :/
```

5) Press "0."

```
CRUISE          (F00)
CONTROL
```

If cruise main switch is OFF, error 2 will appear. Turn cruise main switch ON and repeat steps 2.

6) Press "F", "B", "0", and "ENT" in that order, and enter the desired designated code ("FB0", for example), or press scroll key to select the code.

3. DIAGNOSIS OF CRUISE CANCEL CONDITIONS

1) Connect select monitor.
2) Turn ignition and cruise main switch ON, and set select monitor in "FB0" mode.
3) Start engine and drive vehicle at at least 40 km/h (25 MPH) with cruise speed set.
4) If cruise speed is cancelled itself (without doing any cancel operations), a trouble code will appear on select monitor display.

a. A trouble code will also appear when cruise cancel is effected by driver. Do not confuse.
b. Have a co-worker ride in vehicle to assist in diagnosis during driving.
5) Trouble code will be cleared by turning ignition or cruise main switch OFF.

Function code indication		Item to measure		Contents of diagnosis
Code No.	Abbreviation	Trouble code	Abbreviation	
FB0	CANCEL	10	OK	Normal
		11	BR/ST/CL or N	Input signals from brake switch, stop lamp switch, inhibitor switch.
		12	E/G REV	Engine speed (rpm) limiter
		13	SPEED LIM	Low-speed control limiter
		14	SET+ RESUME	Simultaneous entry of two signals (Shorted circuit)
		21	MOTOR	Faulty motor or motor drive system
		22	VENT VALVE	Faulty vent valve and valve drive system
		23	C/U RELAY	Faulty relay built into cruise control unit
		24	SP SENSOR	Faulty vehicle speed sensor
		25	RESUME SW	Faulty resume switch

4. REAL-TIME DIAGNOSIS

1) Switch system diagnosis
   (1) Connect select monitor.
   (2) Turn ignition switch and cruise main switch ON.
   (3) Set select monitor in FA0 mode.
   (4) Ensure that normal indication is displayed when controls are operated as indicated below:
   - When SET/COAST switch is pressed.
   - WHEN RESUME/ACCEL switch is pressed.
   - When brake pedal is depressed. (Stop and brake switch turns ON.)
   - When select lever is set to "N"

LED's come on shortly after switches are pressed.

Function code indication		Item to measure	Content of items to be monitored
Code No.	Abbreviation		
FA0	1. SE	SET/COAST switch	LED 1 comes on when switch is turned ON.
	2. RE	RESUME/ACCEL switch	LED 2 comes on when switch is turned ON.
	4. ST	Stop light switch	LED 4 comes on when switch is turned ON (brake pedal is depressed)
	5. BR	Brake switch / inhibitor switch	• Brake switch [Set in the D range]. LED 5 comes on when brake pedal is depressed. • LED 5 comes on when select lever is set to "N".

2) Output system diagnosis
(1) Connect select monitor.
(2) Turn ignition switch and cruise main switch ON (with engine OFF).
(3) Set select lever in "D" range.
(4) Set select monitor in FB1 mode. The display will read as shown below, until input OK (which indicates no problems) is present.
However, you can change this display to another mode as desired.

O U T P U T	(F B I)
r e a d y ?	Y e s : 0

(5) After ensuring that select lever is set to "P" or "N" range, press "0".

For example, pressing "0" in "N" range shows "31 MOTOR" (which indicates a faulty motor) on display because power supply to vacuum pump motor is disconnected. When this is shown, set select lever to "D" range and turn cruise main switch OFF. Then start all over again after main switch is turned ON again.

Function code indication		Item to measure		Contents of diagnosis
Code No.	Abbreviation	Trouble code	Abbreviation	
FB1	OUTPUT	10	OK	Normal
		31	MOTOR	Open or shorted vacuum pump motor circuit/harness
		32	VENT VALVE	Open or shorted vent circuit/harness
		33	C/U RELAY	Deposited safety relay built into cruise control unit
		34	C/U VENT V	Faulty vent valve drive circuit of cruise control unit
		35	C/U MOTOR	Faulty vacuum pump motor drive circuit

5. DATA SHOWN ON SELECT MONITOR DISPLAY

Indication of function code		Item to measure	Contents of items to be monitored
Code No.	Abbreviation		
F 00	CRUISE CONTROL	Cruise control unit identification	Reads ROM ID number of cruise control unit to display a possible communication state.
F 01	VSP (MPH)	Vehicle speed (MPH)	Displays vehicle speed data (in miles/h) determined by cruise control unit in relation to signal emitted from vehicle speed sensor on transmission.
F 02	VSP (km/h)	Vehicle speed (km/h)	Displays vehicle speed in km/h.
F 03	EREV (rpm)	Engine speed	Displays engine rpm determined by cruise speed control unit in relation to reference signal emitted from crank angle sensor.

2. I/O Signal of Cruise Control Unit

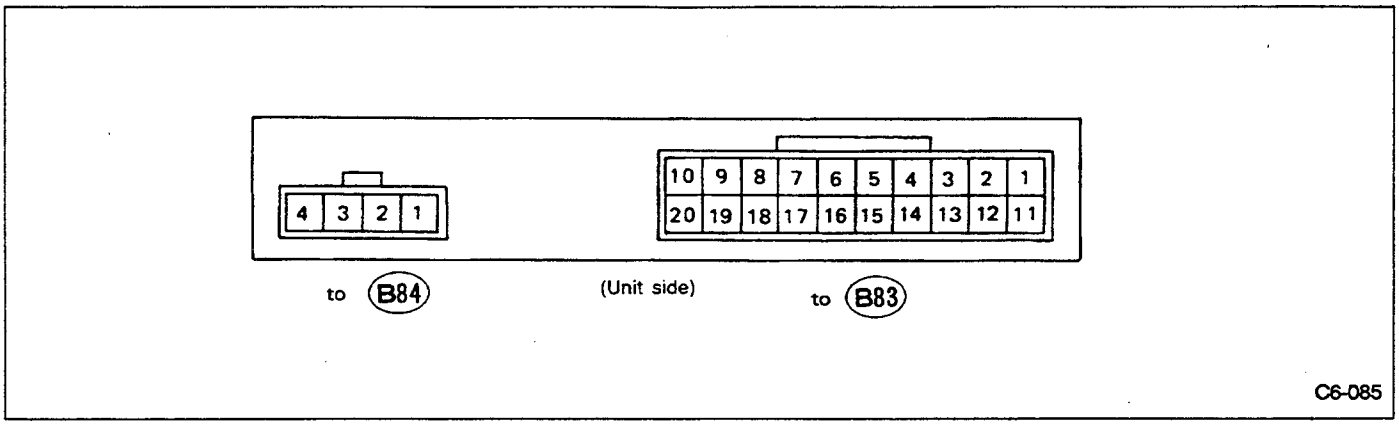

Fig. 67

Content	Connector No.	Terminal No.	Measuring conditions and I/O signals (ignition switch ON and engine idling)
Main switch	B84	1	• When main switch is pressed, battery voltage is present; when it is released, approximately 6.5 volts are present. • When main switch is OFF, "0" volts are present.
Main relay (solenoid)		2	• When main switch is turned ON, indicator comes on and battery voltage is present. • When main switch is turned OFF, "0" volts are present.
Main relay (contacts)		4	↑
Engine speed (rpm) signal	B83	2	When engine starts, a pulse signal is entered (Observe using an oscilloscope.)
Vehicle speed sensor		7	When all four wheels are raised off ground and any wheel is rotated manually, approximately 5 and 0 volt pulse signals are alternately sent to cruise control unit.
Brake switch		15	Set select lever to any position other than "P" or "N", with main switch ON. Then check that: • 0 volts are present when brake pedal is depressed. • Battery voltage is present when brake pedal is released, or • 0 volts are present when select lever is set to "P" or "N". • Battery voltage is present when select lever is in any position other than "P" or "N".
Stop light switch		20	With ignition switch ON or OFF: • Depress brake pedal to check that battery voltage is present. • "0" volts are present with brake pedal released.
SET/COAST switch		18	• When switch is turned ON, battery voltage is present. • When switch is turned OFF, "0" volts are present.
RESUME/ACCEL switch		19	↑
Set signal		11	ECU emits a ground-level signal while driving vehicle at at least 40 km/h (25 MPH) with SET switch ON.
Power supply to vacuum motor, vent valve and safety valve		14	• "0" volts are present when vehicle is stopped. • Battery voltage is present while cruise control system is operating.
Vacuum motor output		8	• Power supply is ON when vehicle is stopped. • ON-and-OFF (0 and 12 volts) operation is alternately repeated while cruise control is operating.
Vent valve output		9	↑

Voltage at terminals (11, 14, 8 and 9) cannot be checked unless vehicle is driving at cruising speed.

3. Basic Troubleshooting Procedure

A: BASIC TROUBLESHOOTING CHART

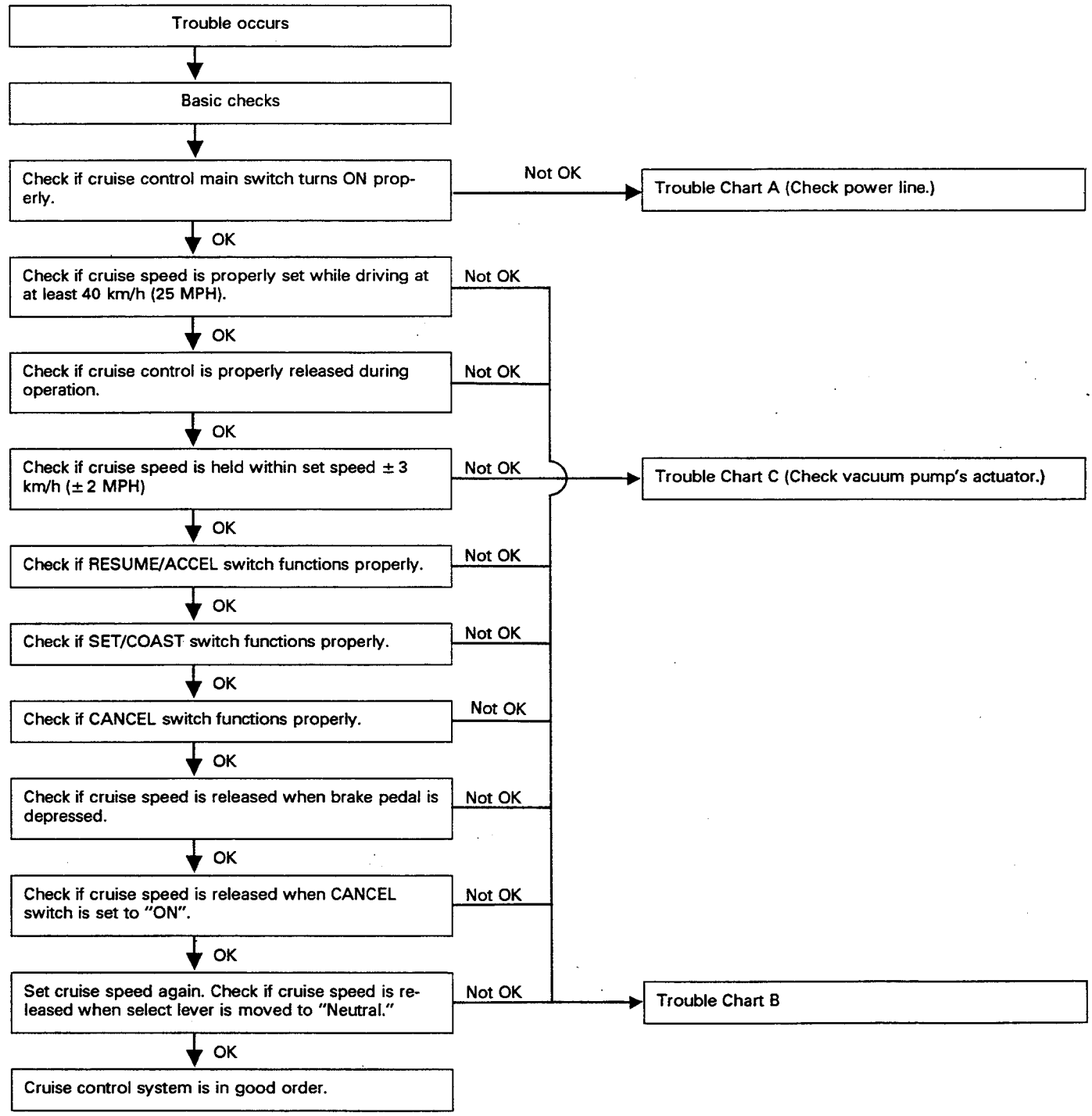

B: BASIC CHECKS

1. CHECK CABLE AND VACUUM HOSE

1) Cable installation
- Ensure that cruise control cable is attached to the left of accelerator cable (on accelerator pedal side).
- Ensure that accelerator cable throttle cam does not move when cruise control throttle cam is moved by hand.
- Ensure that throttle cam moves smoothly.

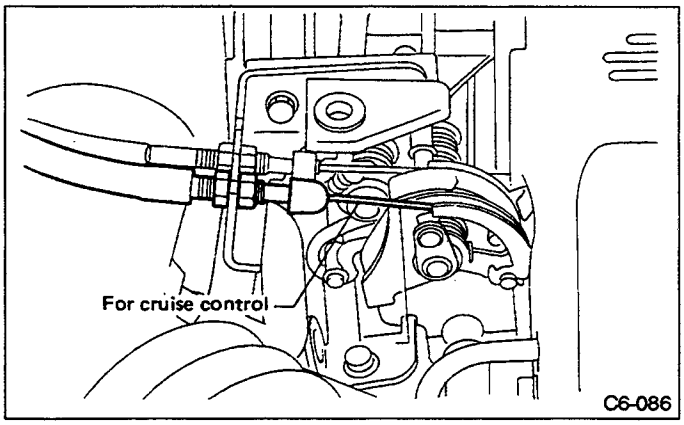

Fig. 68

2) Cable free play
- Ensure that throttle cam-to-lever clearance is within specifications.

Standard value: 1 mm (0.04 in)

If clearance is not within specifications, adjust cable at its outer end.

- Ensure that cap is positioned in groove.

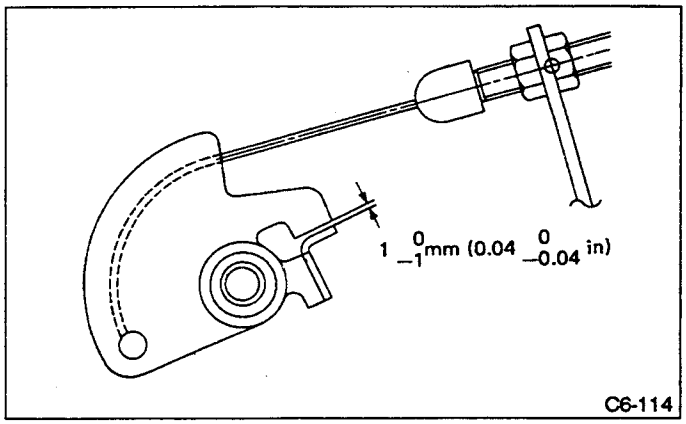

Fig. 69

3) Vacuum hose
Check vacuum hose (which connects vacuum pump and diaphragm) for disconnection or cracks.

2. CRUISE CONTROL UNIT CHECK

When a problem occurs in cruise control unit or its associated circuits, basic checks must first be conducted at the power supply, ground circuit, various terminal voltages, etc. Cruise control unit is not easily accessible for removal. In addition, a select monitor can be utilized, as required, to conduct "real-time" diagnosis or easily determine whether or not the cruise control unit is malfunctioning.

1) Cruise control unit removal
Cruise control unit can be extracted after glove box are removed.

2) Disconnect cruise control unit connector. Use harness on body side to check cruise control unit condition.

3) Power supply check (ignition switch ON)

	Connector & terminal No.		Ignition switch ON
Main switch	B84	No. 1	Battery voltage is present when main switch is continuously pressed; 0 volts are present when main switch is released.
Main relay (solenoid)		No. 2	Battery voltage is present when main switch is continuously pressed; 0 volts are present when main switch is released.
Main relay (contacts)		No. 4	↑

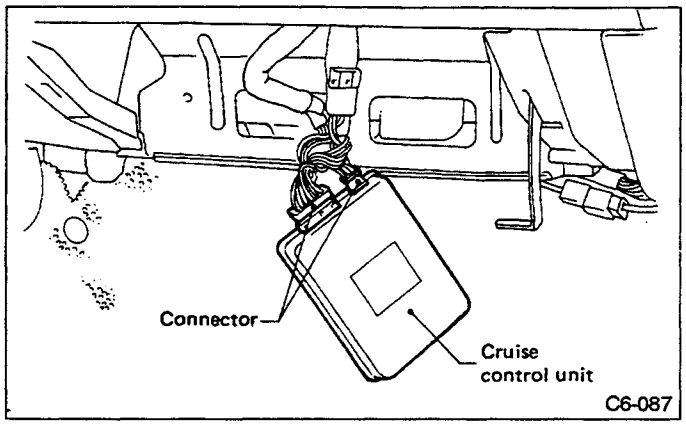

Fig. 70

4) Continuity check
Check continuity between terminals (indicated in table below).

Connector & Terminal / Specified
(B83) No. 10 — Body / 1 Ω max.

〈For reference〉

Engine speed signal	(B83)	No. 2	A pulse signal is present when engine starts.
Vehicle speed sensor		No. 7	A pulse signal (approx. 0 — 5 volts) is present when all four wheels are raised off ground and one of them is rotated.
Brake switch		No. 15	Turn main switch ON. Move select lever to any position other than "P" or "N". Under this condition, 0 volts are present when brake pedal is depressed and battery voltage is present when brake pedal is released.
Stop light switch		No. 20	Battery voltage (Brake pedal depressed) 0 V (Brake pedal released)
SET/COAST switch		No. 18	Battery voltage (switch ON) 0 V (switch OFF)
RESUME/ACCEL switch		No. 19	Same as above

4. Trouble Chart A

Cruise control main switch fails to turn ON.

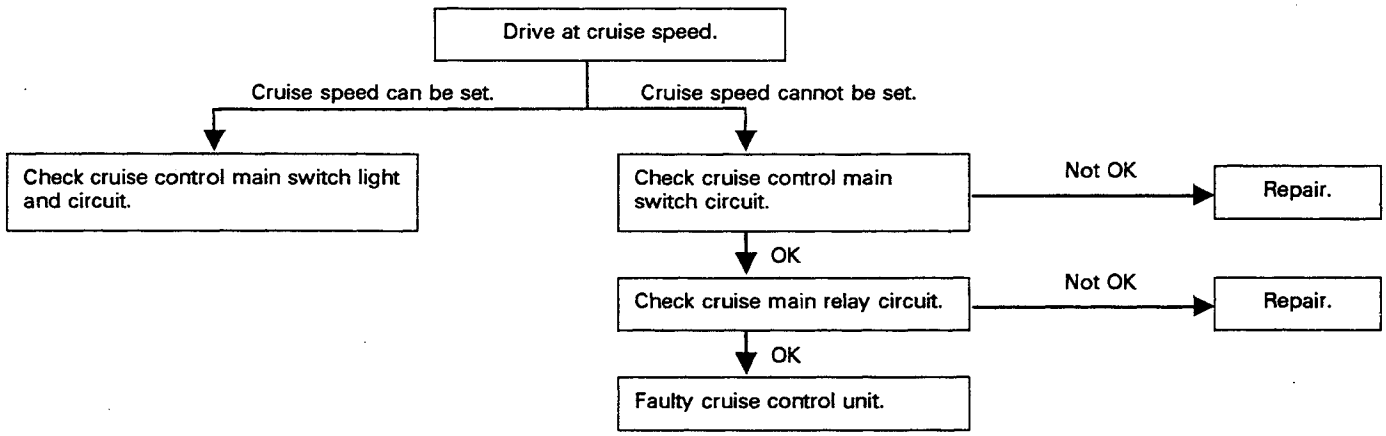

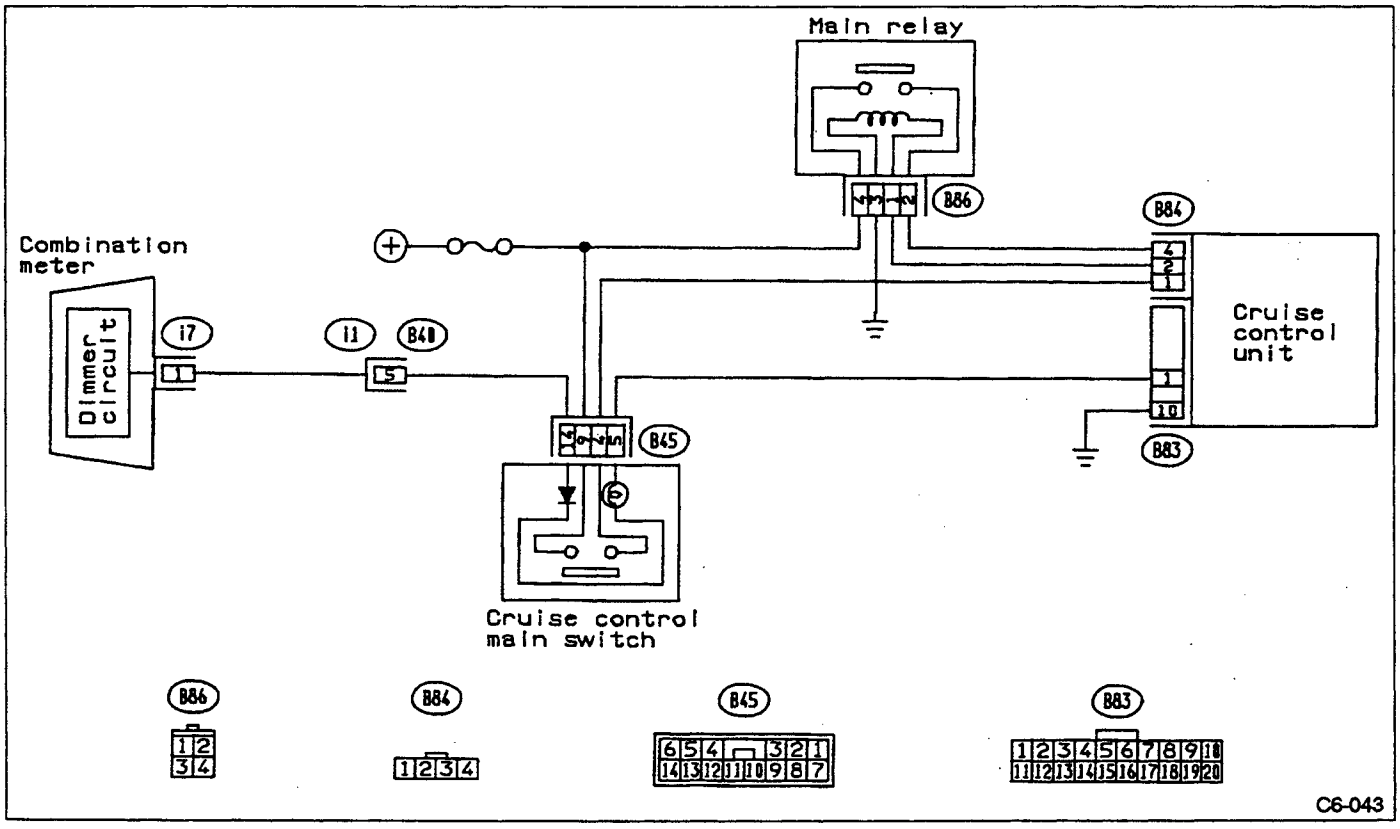

Fig. 71

A: CHECK INDICATOR AND CIRCUIT IN CRUISE CONTROL MAIN SWITCH

CONTENT OF DIAGNOSIS:
Bulb failure or open harness of the indicator circuit in the cruise control main switch.

TROUBLE SYMPTOM:
Cruise control can be set normally indicator does not come on (when main switch is pressed).

1	Check cruise control main switch.	Not OK →	Replace bulb.
	↓ OK		
2	Check circuit between cruise control unit and cruise control main switch indicator light.	Not OK →	Wiring repair If no output from the cruise control unit, replace the cruise control unit.

1. CHECKING THE INDICATOR LIGHT IN THE CRUISE CONTROL MAIN SWITCH

1) Remove cruise main switch.
2) Measure resistance value between cruise control main switch terminals.

Terminal/Specified resistance:
No. 5 — No. 14/Approx. 160Ω

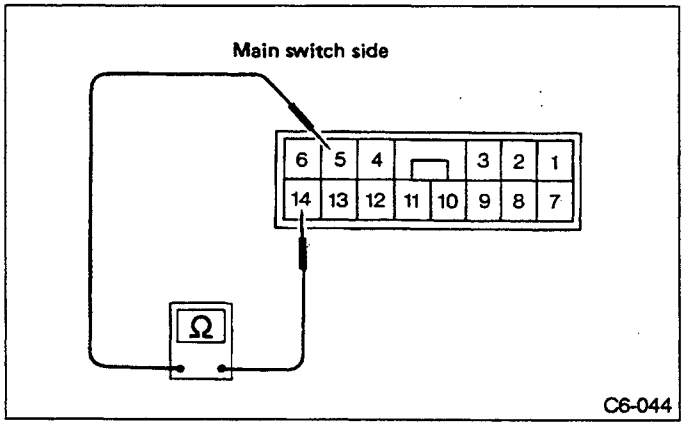

Fig. 72

2. CHECK CIRCUIT BETWEEN CRUISE CONTROL UNIT AND CRUISE CONTROL MAIN SWITCH INDICATOR LIGHT

1) Cruise control unit and body
Measure voltage between cruise control main switch and body. (Perform this measurement by turning ON the ignition switch and the cruise control main switch.)

Connector & terminal/Specified voltage:
(B84) No. 4 — Body/10 — 13 V
(B83) No. 1 — Body/10 — 13 V

B: CHECK CRUISE CONTROL MAIN SWITCH AND MAIN RELAY

CONTENT OF DIAGNOSIS:
Faulty cruise control main switch or relay, or open harness.

TROUBLE SYMPTOM:
Cruise control main switch is not turned ON and cruise control cannot be set.

1	Check fuse (No. 18).	Not OK	Melted fuse → repair the shorted part of the circuit. → Fuse replace.
	↓ OK		
2	Check cruise control main switch.	Not OK	Open harness → repair. Faulty main switch → replace.
	↓ OK		
3	Check harness between cruise control main switch and cruise control unit.	Not OK	Repair harness.
	↓ OK		
4	Check main relay.	Not OK	Replace relay.
	↓ OK		
	Faulty in the cruise control unit.		

- If main relay operates, this circuit operates normally. Whether main relay is normal or not can be checked by operating sound. (When turning ON ignition switch and main switch, a click sound heard from glove box side is normal.)

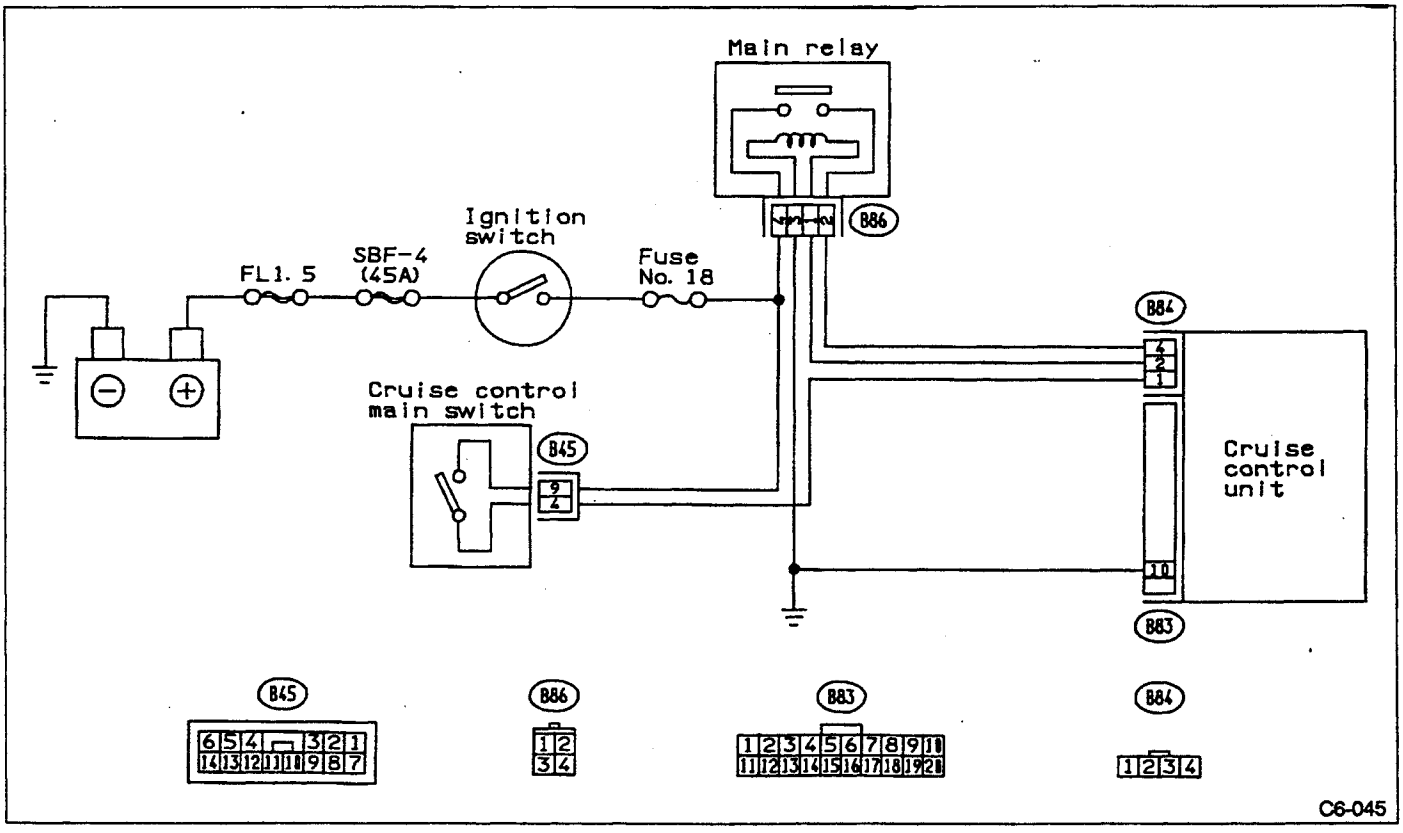

Fig. 73

1. CHECK FUSE (No. 18)

1) Check fuse (No. 18)
Test circuit with a tester.
2) Checking voltage of the ignition power source
Turn ignition switch ON and measure the voltage between the fuse box connector and the body.

Connector & terminal/Specified voltage:
(B44) No. 4 — Body/10 — 13 V

2. CHECKING CRUISE CONTROL MAIN SWITCH

1) Cruise control main switch
Turn ignition switch ON and measure the voltage between cruise control main switch connector and body.

Connector & terminal/Specified voltage:
(B45) No. 9 — Body/10 — 13 V

2) Check ON/OFF function of main switch
Measure resistance between main switch and terminal.

Terminal/Specified resistance:
No. 4 — No. 9/0 Ω(Switch ON)
1 MΩ min (Switch OFF)

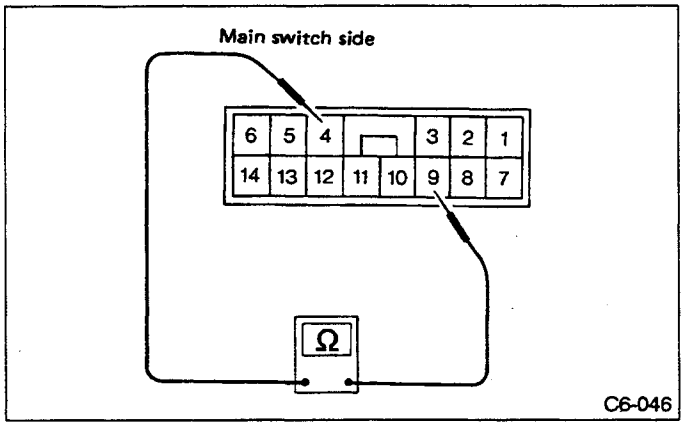

Fig. 74

3. CHECKING HARNESS BETWEEN CRUISE CONTROL MAIN SWITCH AND THE CRUISE CONTROL UNIT

To check whether harnesses are normal or not, measure voltage at each of the terminals as the distance between connectors is long.
1) Turn ignition switch ON.
2) Turn cruise main switch ON.
3) Measure voltage between each of terminals and body.

Connector & terminal/Specified voltage:
(B45) No. 9 — Body/10 — 13 V
(B45) No. 4 — Body/10 — 13 V
(B84) No. 1 — Body/10 — 13 V

4. CHECKING MAIN RELAY

1) Turn ignition switch ON.
2) Check voltage at main relay power source. (Tighten main relay together the cruise control unit. Black connector) Measure the voltage between the main relay and the body.
Measure the voltage between the main relay and the body.

Connector & terminal/Specified voltage:
(B86) No. 4 — Body/10 — 13 V

3) Check main relay operation
Measure resistance between contact point side terminals when applying battery power to exciting coil side (No. 1-3).

- Whether relay is normal or not can be easily checked by relay operation sound. (When turning ignition switch and cruise control main switch ON, a click sound heard from left side of glove box is normal.)

Terminal/Specified resistance:
No. 2 — No. 4/0 Ω(with 12 V connection)
1 MΩ min (without 12 V connection)

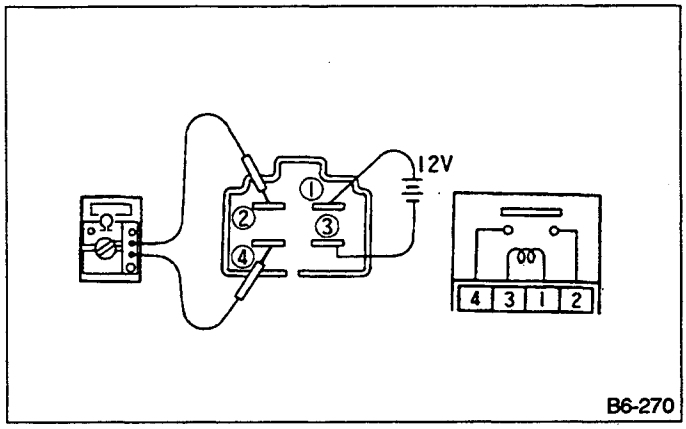

Fig. 75

5. Trouble Chart B

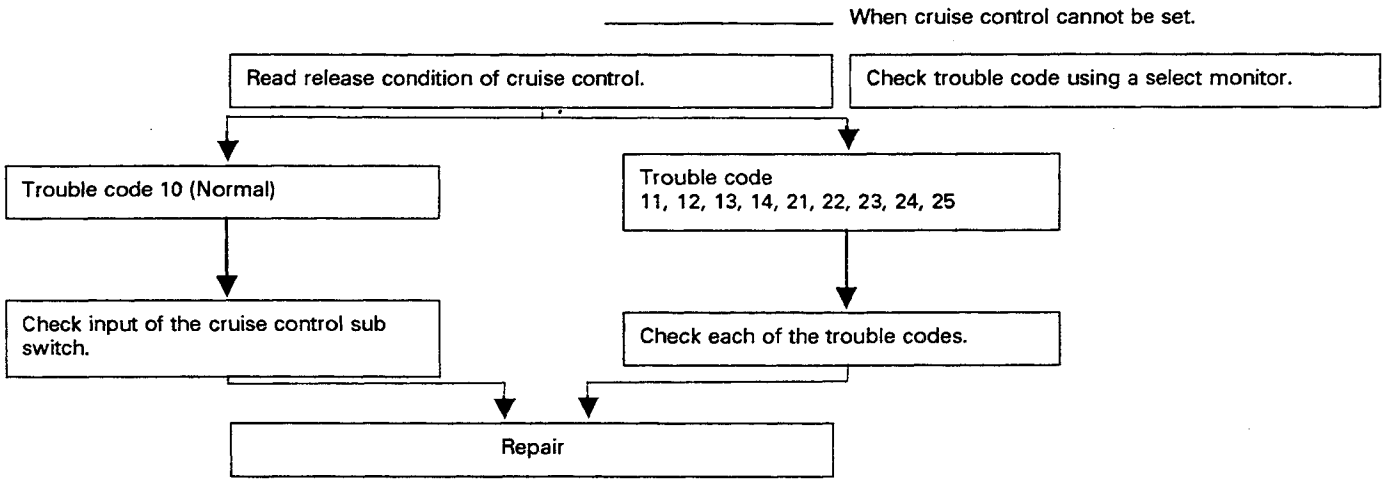

	Page
Check trouble code with a select monitor.	65
Check input of cruise control sub switch. (SET/COAST SW, RESUME/ACCEL SW)	66
Trouble code 11. Stop light switch, brake switch and inhibitor switch	68
Trouble code 12. Failure of engine revolution input signal	70
Trouble code 13. and 24. Malfunction in speed sensor system	72
Trouble code 14. Simultaneous input of SET/COAST and RESUME/ACCEL SW signals (CANCEL SW "ON")	74
Trouble code 21. and 22. Malfunction in cruise vacuum pump and vent valve	76
Trouble code 23. Malfunction in built-in relay of cruise control unit	78

A: CHECK TROUBLE CODE WITH A SELECT MONITOR.

CONTENT OF DIAGNOSIS:
Read trouble code.

TROUBLE SYMPTOMS:
- Cruise control cannot be set.
- Cruise control is occasionally released.

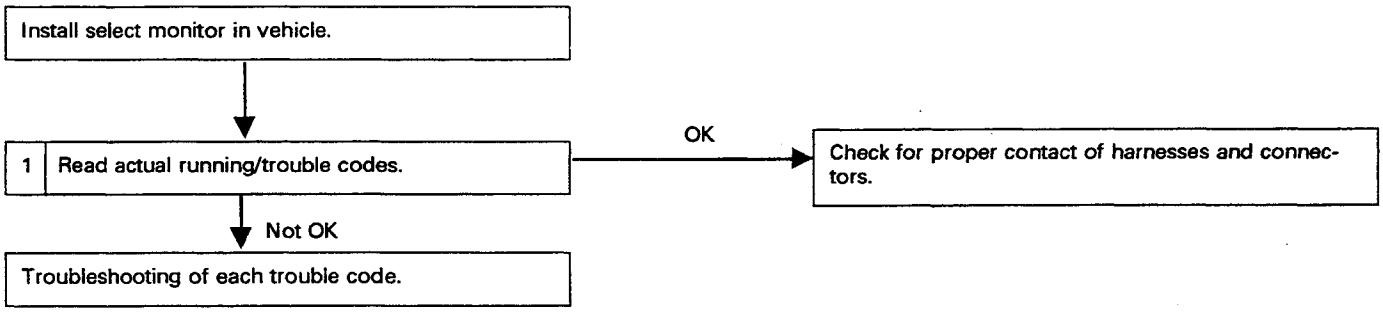

- By checking the trouble codes, it can be read through a self diagnosis, but it is effective to use a select monitor.

1. READING THE TROUBLE CODE

- Measuring condition: continuous running until cruise control is released.

```
C A N C E L                    ( F B 0 )
1 1                  B R / S T / CL or N
```

- Operation of the function keys: [F] [B] [0] [ENT]
- Indication: Always perform diagnosis while vehicle is running, and immediately indicate trouble code number when release condition occurs.

B: CHECK INPUT OF CRUISE CONTROL SUB SWITCH.

CONTENT OF DIAGNOSIS:
SET/COAST SW or disconnection of the wiring or short circuit, RESUME/ACCEL SW or disconnection of the wiring or short circuit

TROUBLE SYMPTOM:
The cruise control cannot be set, or it is cancelled immediately.
RESUME/ACCEL cannot be operated.

1 Check the signal using a select monitor.
- OK → Check for disconnection of the harnesses and connectors.
- Not OK ↓

2 Check the cruise sub switch.
- Not OK → Failure in the power source system - Check the horn relay circuit. Failure in the switch or harnesses - replace.
- OK ↓

Failure of the Cruise control unit.

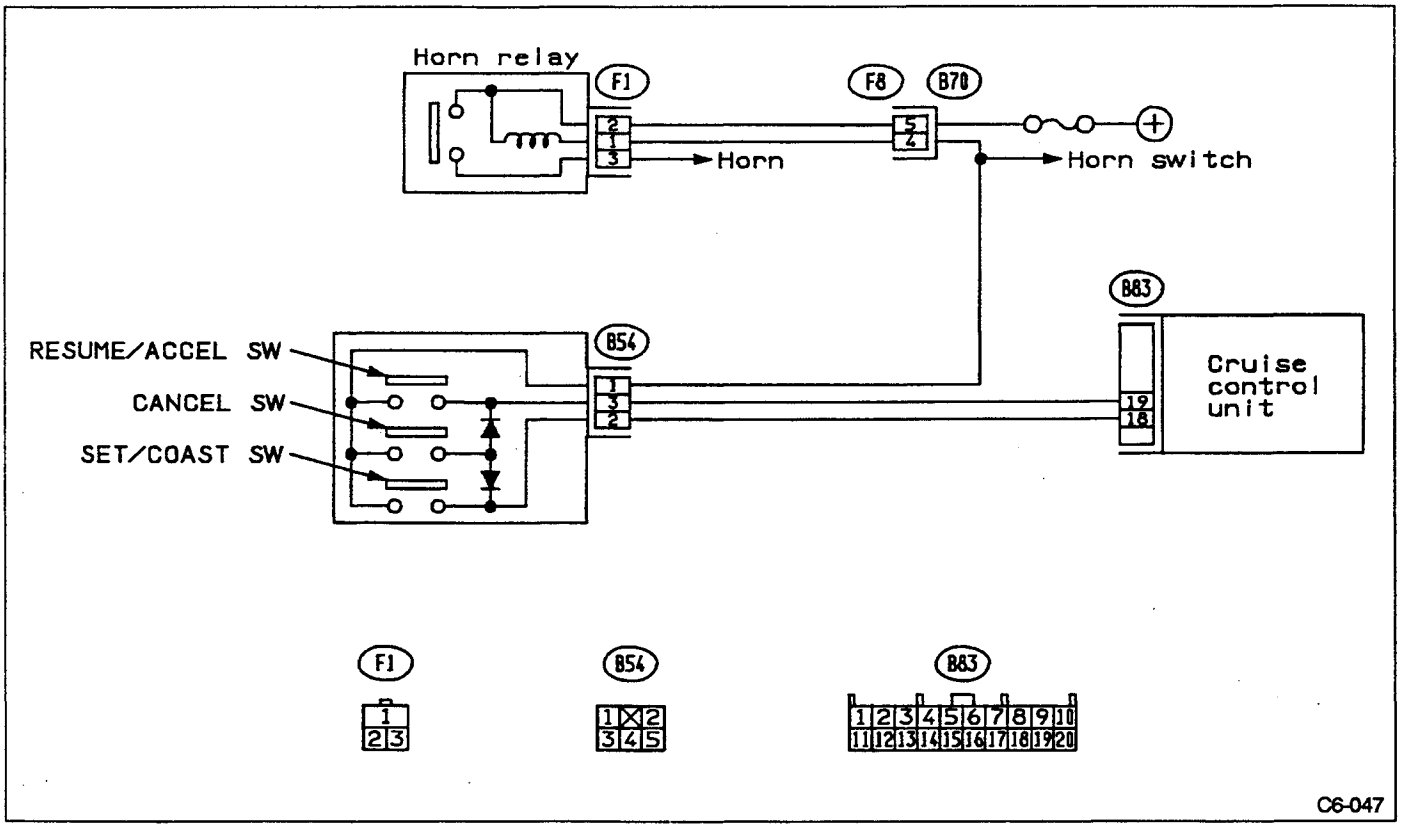

Fig. 76

1. CHECK WITH SELECT MONITOR

1) Measuring condition: Turn ON the ignition switch and cruise main switch.

- Operation of the function keys: F A O ENT
  When pushing the SET SW: [1] LED goes out - lights.
- When pushing the RESUME SW: [2] LED goes out - lights.
- When pushing the CANCEL SW: [1] [2] LEDs go out - light.

2. CHECK CRUISE CONTROL SUB SWITCH

1) Separate connector from sub switch connector. (Use together with horn power supply.)
2) Check voltage between sub switch connector and body.

Connector & terminal/Specified voltage:
(B54) No. 1 — Body/10 — 13 V

---

3) Check for harness short circuit between sub switch and cruise control unit.

Connector & terminal/Specified resistance:
(B54) No. 2 — Body/1 MΩ min
(B54) No. 3 — Body/1 MΩ min

---

4) Check inner switch of the cruise control sub-switch. Check continuity at switch side connector.

Connector & terminal:
(B54) No. 1 — 2 [SET/COAST SWITCH]
(B54) No. 1 — 3 [RESUME/ACCEL SWITCH]
(B54) No. 1 — 2
No. 1 — 3 [CANCEL SWITCH]
Specified voltage:
0 Ω(Switch ON)
1 MΩ min (Switch OFF)

C: TROUBLE CODE 11 (STOP LIGHT SW, BRAKE SW AND INHIBITOR SW)

CONTENTS OF DIAGNOSIS:
- Failure or disconnection of the stop light switch and brake switch.
- Failure or disconnection of the inhibitor relay and inhibitor switch.

TROUBLE SYMPTOM:
The cruise control cannot be set.

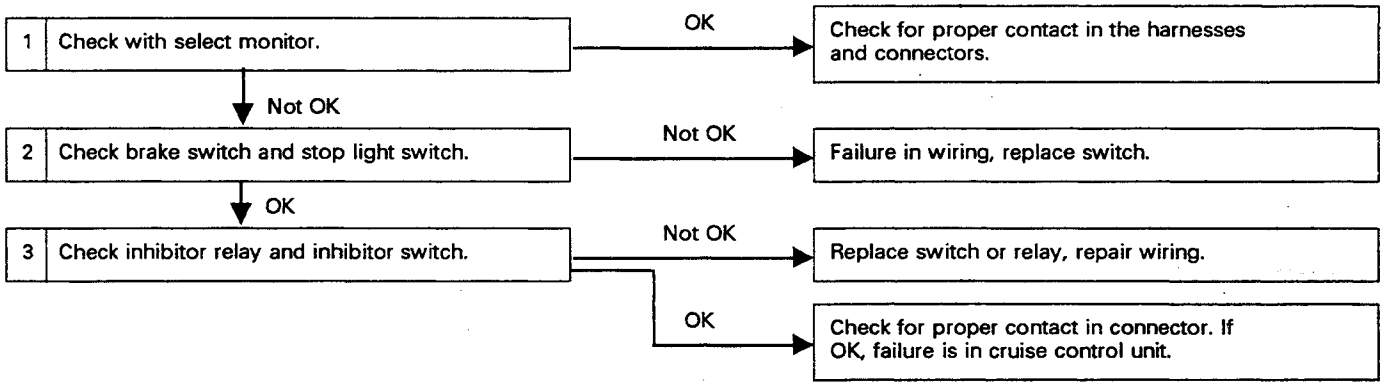

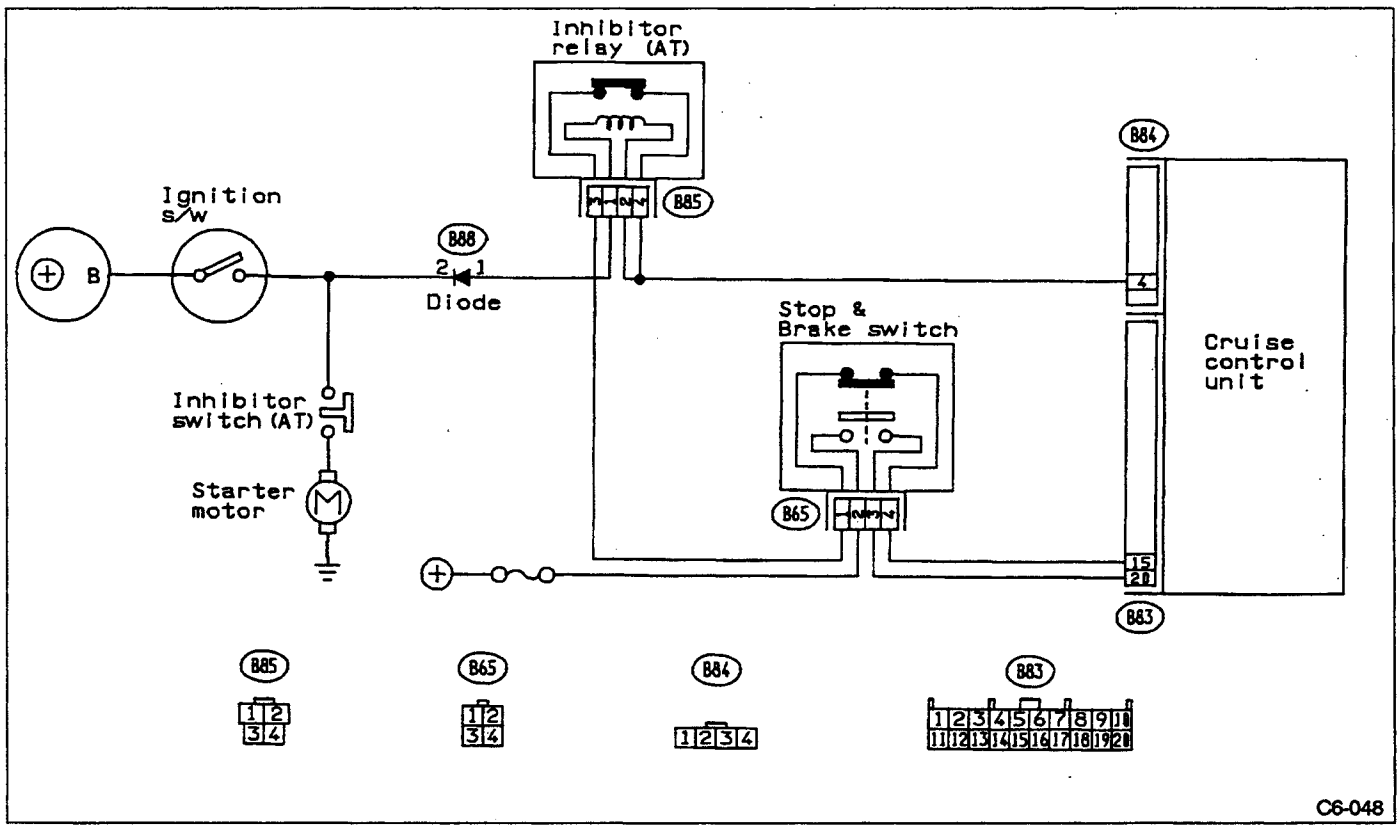

Fig. 77

1. CHECK WITH SELECT MONITOR

- Measurement condition: Turn ignition switch ON. Turn cruise main switch ON.
- Operation of the function keys: F A O ENT

(1) When depressing brake pedal (Set in the D range)
Stop light switch:
4 LED goes out - lights.
Brake switch:
5 LED goes out - lights.

(2) When setting shift lever in N position (Inhibitor relay signal)
5 LED goes out - lights.

2. CHECK BRAKE SWITCH AND STOP LIGHT SWITCH

1) Remove connector of stop light switch.
2) Check circuit between each terminal while depressing brake pedal.

Pedal operation	Brake switch Between No. 1-4	Stop light switch Between No. 2-3
Depressing the brake pedal	Circuit failure	Circuit normal
Without depressing the brake pedal	Circuit normal	Circuit failure

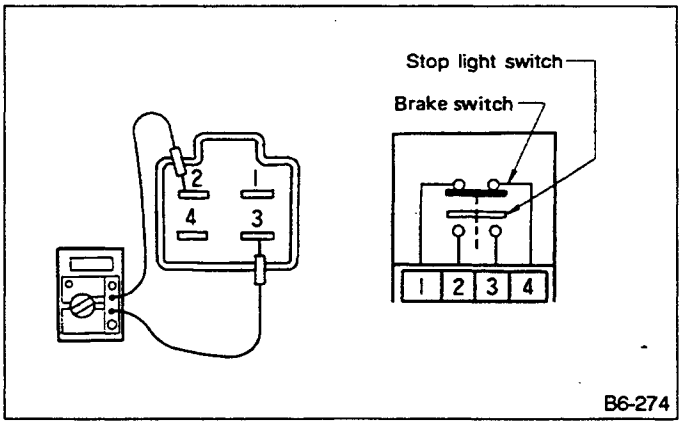

Fig. 78

3. CHECK INHIBITOR RELAY AND INHIBITOR SWITCH (N RANGE)

1) Check inhibitor relay and inhibitor switch.
Turn ignition switch and cruise main switch ON when setting the shift lever to the N position. Operation sounds will be heard when relay contact points are separated.
2) Check inhibitor relay.
When applying 12 V power to terminals No. 1 to 2 of inhibitor relay.

Terminal/Specified resistance:
No. 3 — No. 4/1 MΩ min

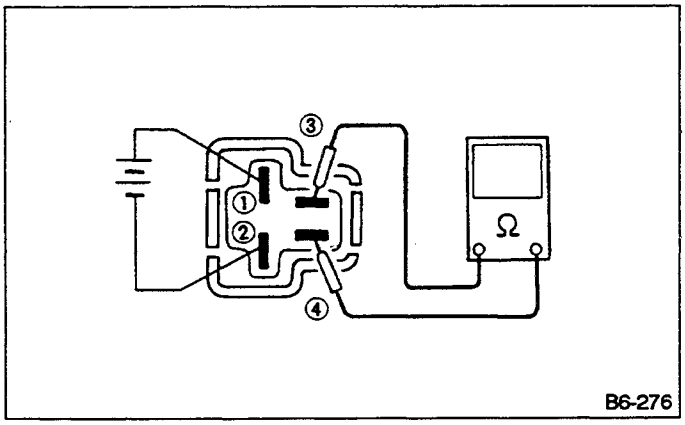

Fig. 79

3) Item check for inhibitor switch
When engine starts in the N range (the starter rotates), N range contact point of the inhibitor is normal.
4) Check the wiring harnesses.

D: TROUBLE CODE 12 (FAILURE OF ENGINE REVOLUTION INPUT SIGNAL)

CONTENT OF DIAGNOSIS:
Short circuit of engine revolution input signal from MPFI control unit

TROUBLE SYMPTOM:
Cruise control cannot be set. (Cancelled immediately)

1	Check rotation signal with select monitor.	OK →	Check for proper contact of harness.

Not OK ↓

After checking harnesses between cruise control unit and ECU (MPFI), check MPFI system.

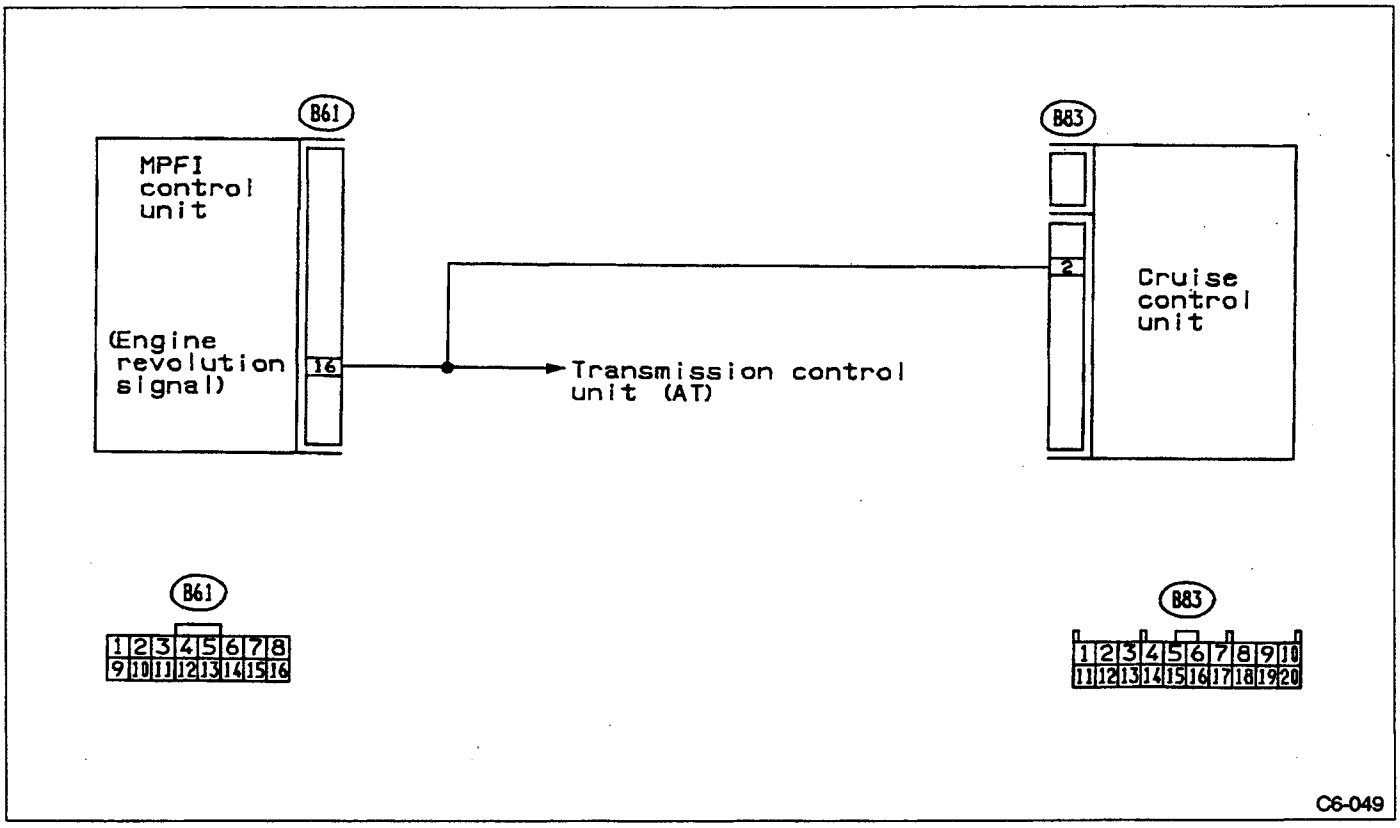

Fig. 80

1. CHECK WITH SELECT MONITOR

- Measurement condition: idling or 2,000 rpm

E R E V	F 0 3 2,000 rpm

- Operation of function keys: F | 0 | 3 | ENT

Standard value: ± 100 rpm

Reference: Indicated value for disconnection or short circuit: 0 — 1 km/h

E: TROUBLE CODE 13 AND 24 - MALFUNCTION IN SPEED SENSOR SYSTEM

CONTENT OF DIAGNOSIS:
Disconnection or short circuit of speed sensor

TROUBLE SYMPTOM:
Cruise control cannot be set. (Cancelled immediately)

1	Check speed signal with select monitor.	OK	Failure in cruise control unit.
	↓ Not OK		
2	Perform a circuit test between B9 No. 1 to B83 No. 7. Perform a circuit test of the vehicle speed sensor and earth system.	OK	Failure in speed sensor.
	↓ Not OK		
	Repair harnesses and connectors.		

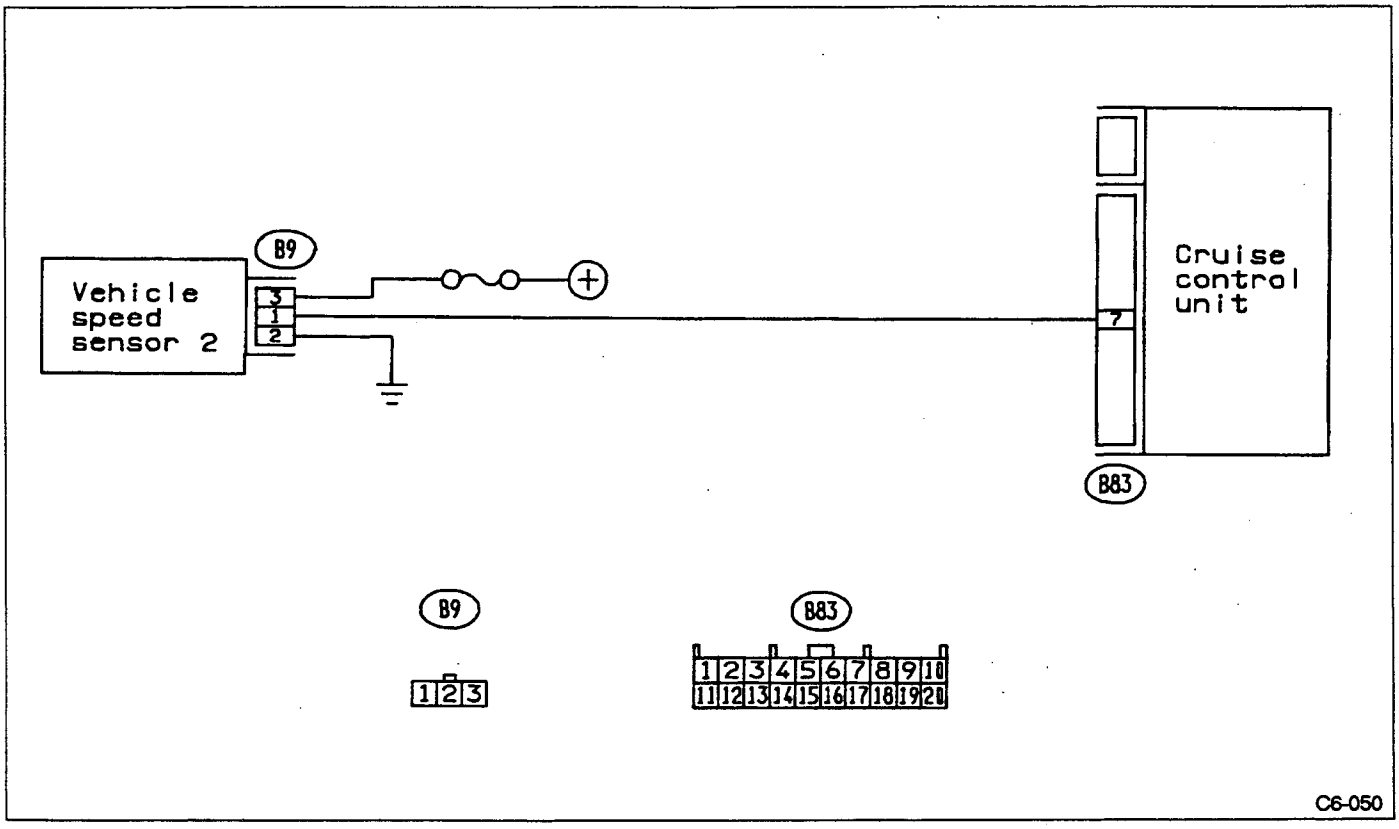

Fig. 81

1. CHECK VEHICLE SPEED SIGNAL WITH SELECT MONITOR

- Driving condition: Running at speed greater than 40 km/h (25 MPH)

V S P	(F 0 2)
	90 km / h

- Operation of the function keys: F 0 2 ENT

Standard value: ± 16km/h (± 10 MPH)

Reference:
- When there is a failure in the speed sensor, the indicated value of the meter will be incorrect.
- When there is a disconnection or short circuit in the harness between vehicle speed sensor and the cruise control unit, the indicated value will be 0 — 1 km/h.

2. CIRCUIT TEST FOR EACH HARNESSES

1) Separate connectors from vehicle speed sensor and cruise control unit.
2) Perform a circuit test in the harnesses.

Connector & terminal/Specified resistance:
(B9) No. 11 — (B83) No.7/1 Ω max

F: TROUBLE CODE 14 - SIMULTANEOUS INPUT OF SET/COAST AND RESUME/ACCEL SW SIGNALS (CANCEL SW "ON")

CONTENT OF DIAGNOSIS:
Short circuit inside the sub switch.

TROUBLE SYMPTOM:
Cruise control cannot be set.
Cancelled immediately.

1	Check short circuit of cruise control sub-switch.	Not OK →	Replace the switch.
	↓ OK		
	Check for short circuit in harness between switch and cruise control unit.		

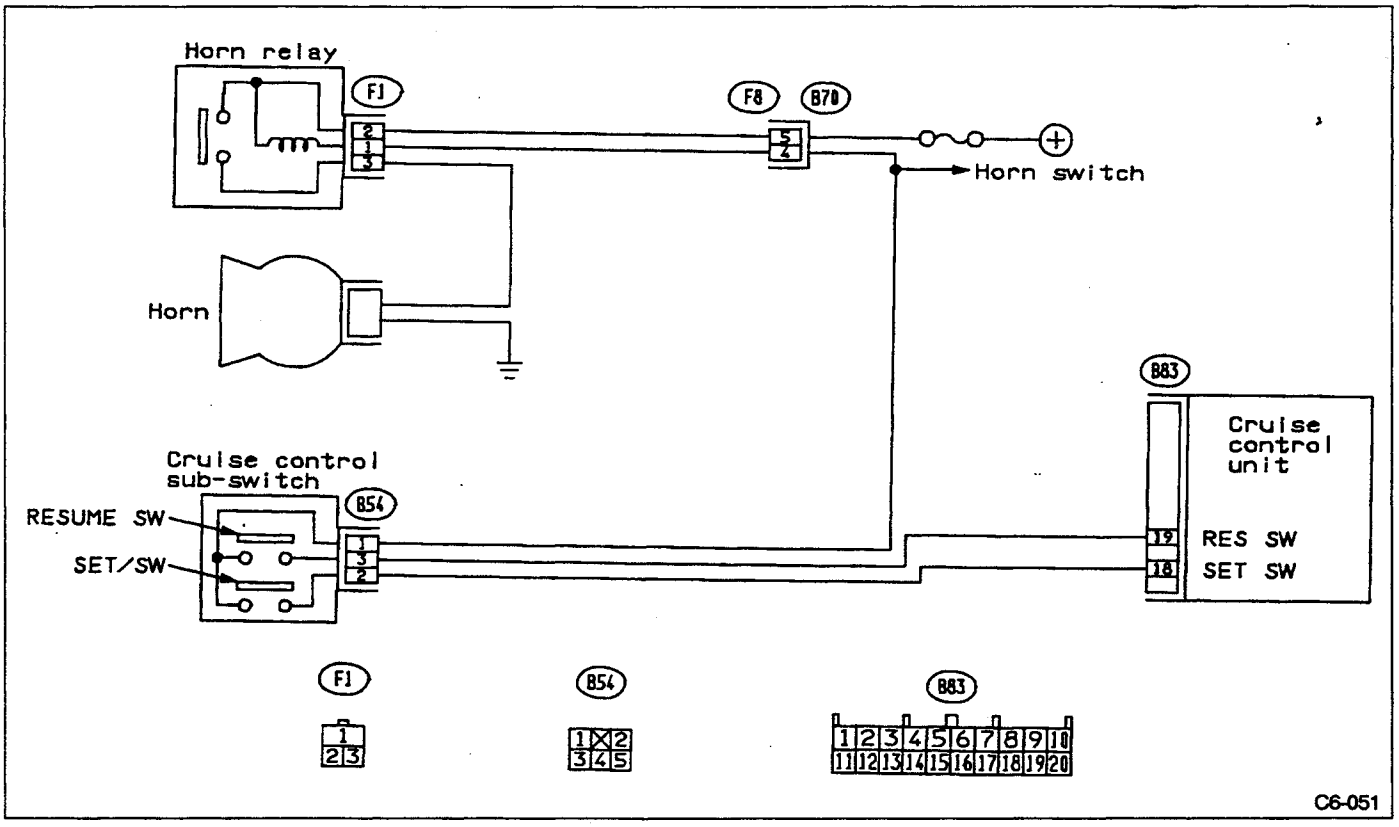

Fig. 82

1. CHECK FOR SHORT CIRCUIT OF CRUISE CONTROL SUB SWITCH

1) Separate connector of cruise control sub- switch.
2) Perform a circuit test between each of terminals while pushing the sub switch.
Measure resistance between each terminal of cruise control sub switch.

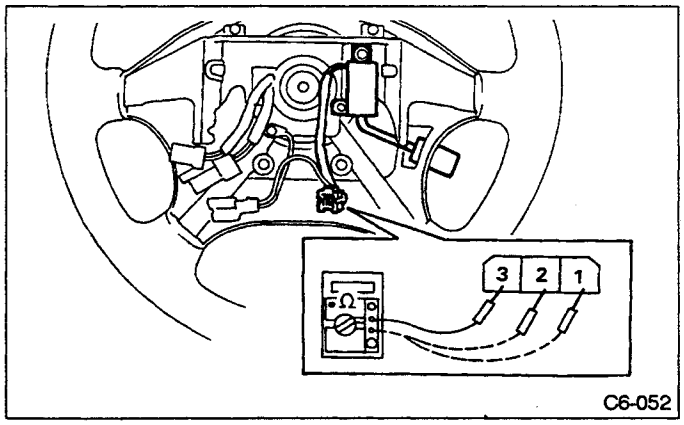

Fig. 83

Terminal/Specified resistance:
No. 1 — No. 2/0 Ω(SET switch ON)
No. 1 — No. 3/0 Ω(RESUME switch ON)
No. 1 — No. 2/Approx. 20 Ω(CANCEL switch ON)
No. 1 — No. 3/Approx. 20 Ω

G: TROUBLE CODE 21 AND 22 (MALFUNCTION IN CRUISE VACUUM PUMP AND VENT VALVE)

CONTENT OF DIAGNOSIS:
Open or poor contact of the vacuum pump motor and vent valve

TROUBLE SYMPTOM:
Cruise control cannot be set. (Or cancelled immediately)

1	Check with select monitor.	OK	Check for poor contact in harness and connector.
	↓ Not OK		
2	Measure resistance of vacuum pump and vent valve.	Not OK	Malfunction in vacuum pump and vent valve.
	↓ OK		
3	Perform a circuit test in harness between cruise control unit, vacuum pump and vent valve.	Not OK	Failure in harness.
	↓		
	Faulty cruise control unit (Check input and output voltage).		

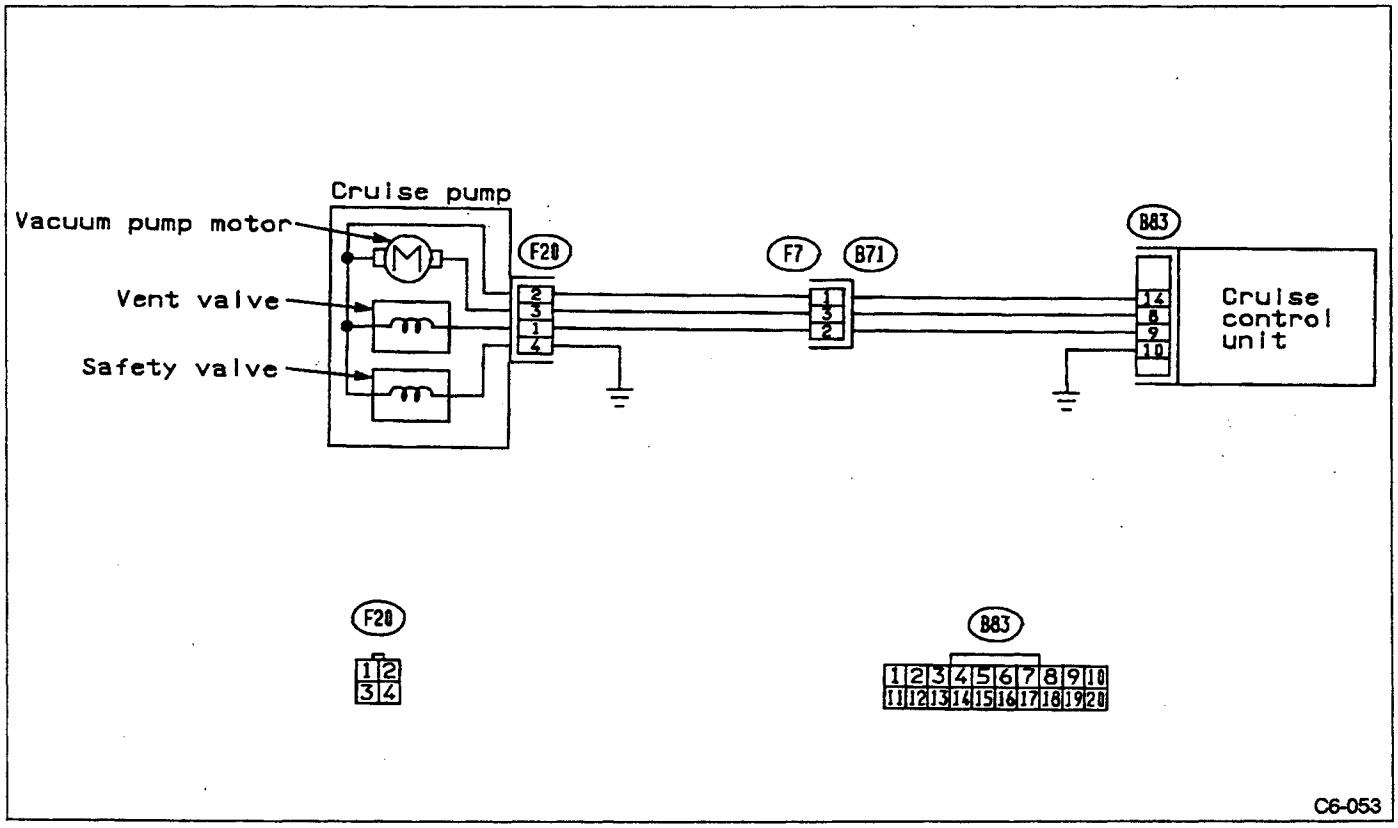

Fig. 84

1. CHECK WITH SELECT MONITOR

1) Turn engine OFF.
2) Connect select monitor.
3) Turn ignition switch ON (the engine is OFF) and turn cruise control main switch ON.
4) Operation of function keys: [F] [B] [1] [ENT]
5) Confirm that the select lever is set in any other than the P, N range, then depress the [0] key.

The code number of the failuring parts will be indicated.

"Failure of the 31 MOTOR" will be indicated when setting in the P, N range. In this case, turn OFF the cruise main switch once, then turn it ON again and perform the same procedure.

[F] [B] [1] [ENT]

O U T P U T	(F B I)
r e a d y ?	Y e s : 0

⇩

[0]

⇩

O U T P U T	(F B I)
3 1 M O T O R	

Normal: Code (10)

Reference — Code No. of malfunction

- Open or short circuit in vacuum motor and harness 31
- Open or short circuit in valve and harness 32
- Faulty valve drive circuit in cruise control unit 34
- Faulty motor drive circuit in cruise control unit 35
- Built-in relay of cruise control unit is stuck 33

2. MEASUREMENT OF COIL RESISTANCE IN VACUUM PUMP AND VENT VALVE

1) Separate the connector.
2) Measure the resistance value of the vacuum pump and vent valve. (Range Ω x 1)

Connector & terminal/Specified resistance:
No. 2 — No. 3/100 — 110 Ω
No. 2 — No. 1/Approx. 53 Ω
No. 2 — No. 4/Approx. 53 Ω

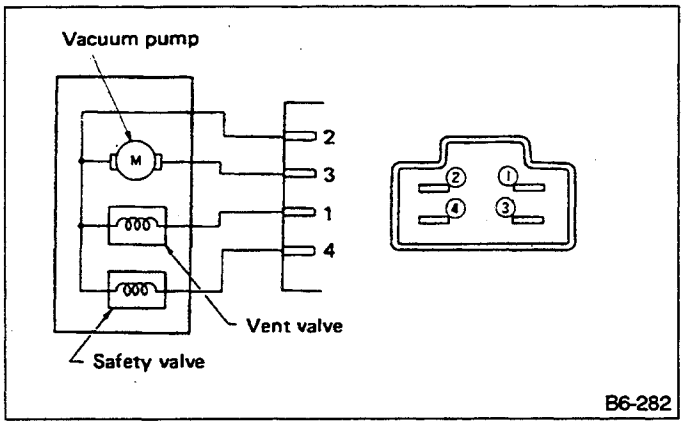

Fig. 85

3. CIRCUIT TEST IN HARNESS BETWEEN CRUISE CONTROL UNIT AND VACUUM MOTOR.

1) Separate both sides of connectors.
2) Perform a circuit test between each of the harnesses.

Connector & terminal/Specified resistance:
(B83) No. 14 — (F20) No. 2/1 Ω max.
(B83) No. 8 — (F20) No. 3/1 Ω max.

H: TROUBLE CODE 23 - MALFUNCTION IN BUILT-IN RELAY OF CRUISE CONTROL UNIT

CONTENT OF DIAGNOSIS:
Welding of built-in relay of cruise control unit

TROUBLE SYMPTOM:
Cruise canceling function does not operate, but fuel-safe function operates.

Perform real time diagnosis (FB1 mode) with select monitor, and replace cruise control unit when TROUBLE CODE 33 is indicated.

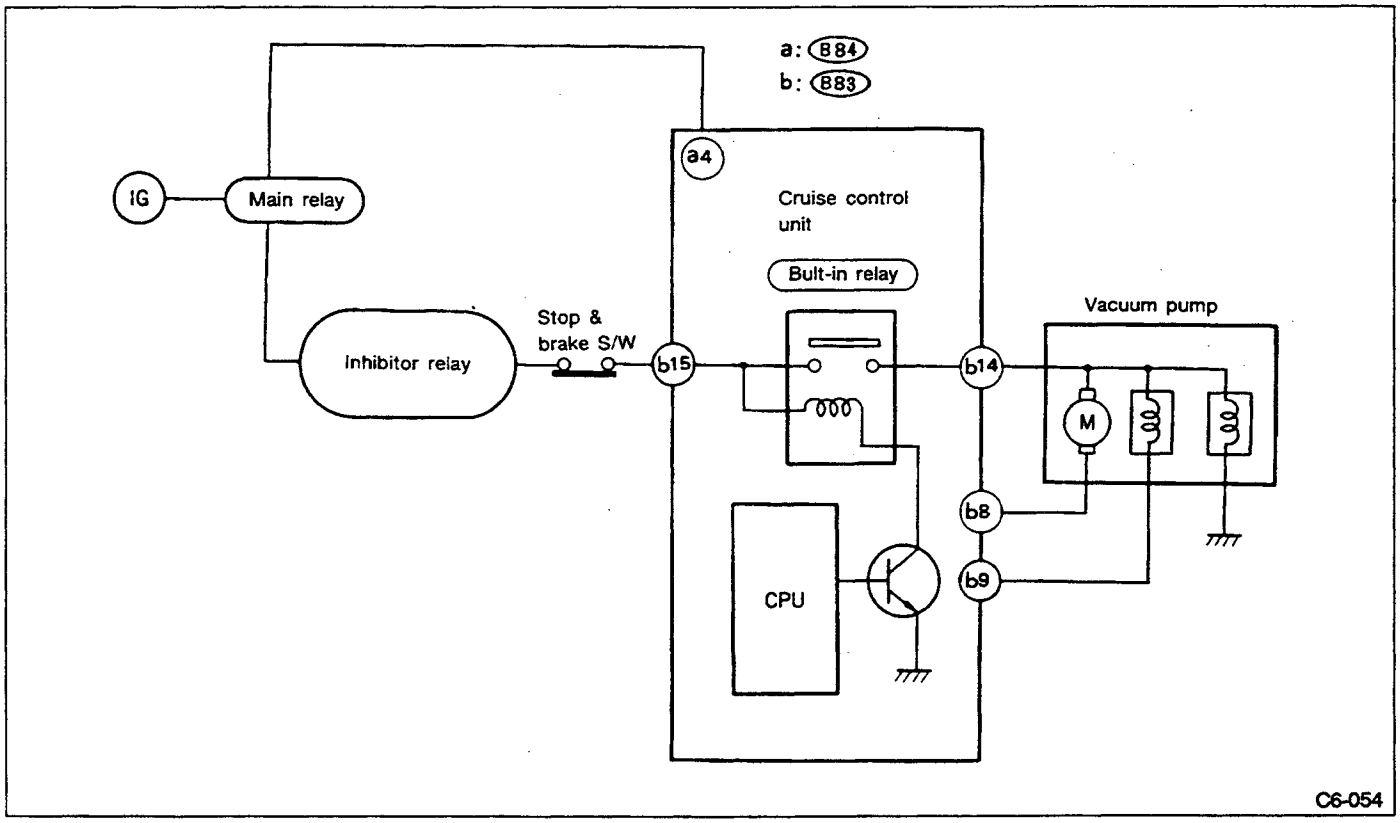

Fig. 86

6. Trouble Chart C

When not running at a fixed speed.

Check vehicle speed input signal with select monitor.

↓

(At first, confirm that vehicle speed signal is input normally.)

Check operation of vacuum pump and actuator ASSY.

↓

Check operation of actuator while forcely operating vacuum pump.

Repair.

A: CHECK OPERATION OF VACUUM PUMP AND ACTUATOR ASSY

CONTENT OF DIAGNOSIS:
Sticking of air leaves of vacuum pump and actuator, or sticking of valve and actuator diaphragm

TROUBLE SYMPTOM:
Cannot run at set speed ± 3 km/h (± 2 MPH).

1 Check for leakage and sticking of actuator valve.

Not OK → Replace the actuator ASSY.

↓ OK

Faulty cruise control unit.

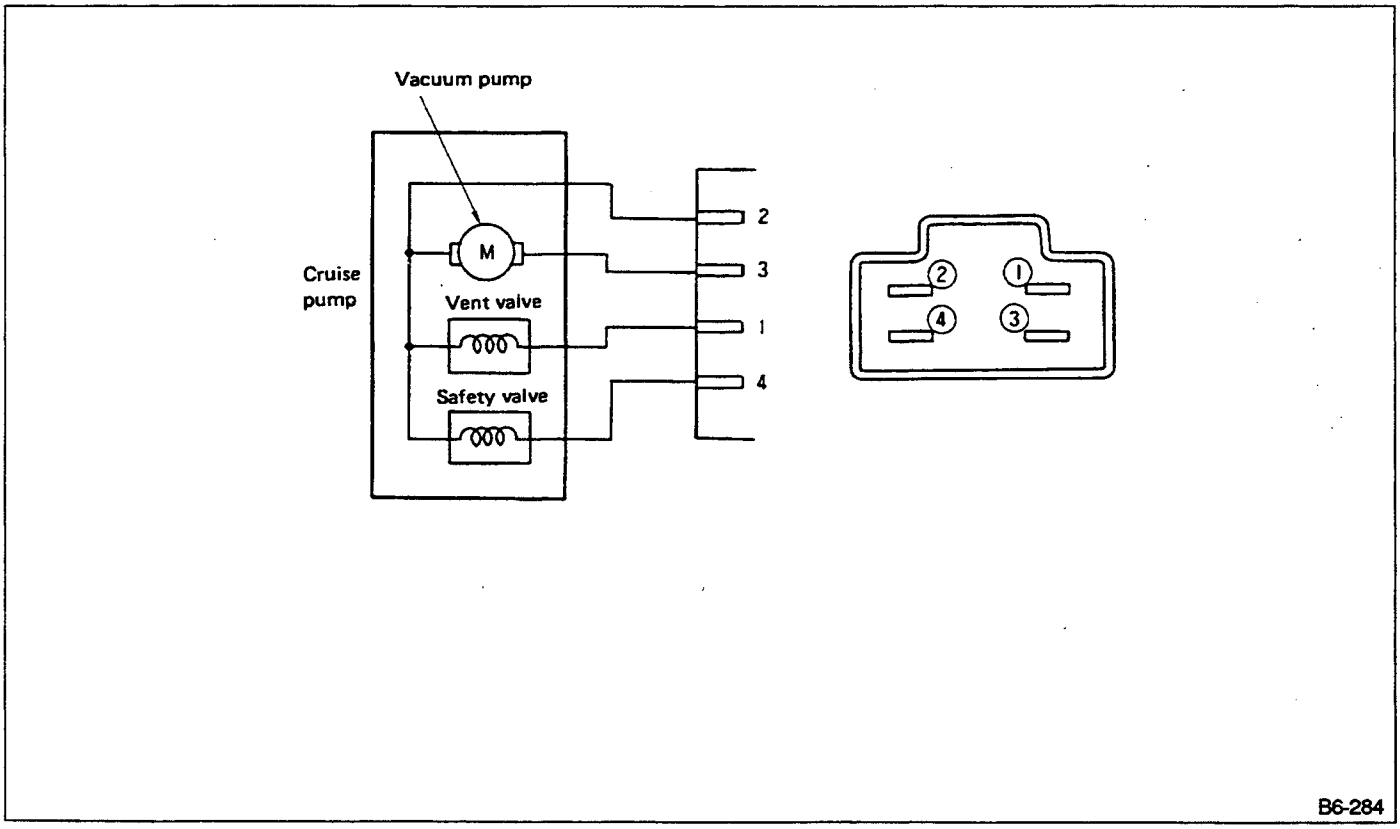

Fig. 87

1. CHECK FOR LEAKAGE AND STICKING OF ACTUATOR VALVE

1) Separate connector from vacuum pump.
2) Check for leakage of valve. (Perform this check when engine is OFF.)
Apply battery voltage (+) to cruise vacuum pump connector No. 2, and connect No. 1 and No. 4 to ground.
After connecting No. 3 to ground, throttle vehicle should be fully opened within 3 seconds.
In case it closes too late: valve leakage
3) Check for sticking of valve.
Remove battery power source from No. 2.
After removing, throttle valve should be fully closed within 3 seconds.
In case it closes too late : valve sticking
: sticking of the actuator diaphragm

SUBARU

SVX

1992

Page

1. General Description 2
2. Working Precautions 9
3. How to Use Wiring Diagram 12
4. Wiring Diagram and Troubleshooting 14
   1. POWER SUPPLY ROUTING 14
   2. GROUND DISTRIBUTION 16
   3. ANTI-LOCK BRAKE SYSTEM 20
   4. A/T CONTROL SYSTEM 22
   5. A/T SHIFT LOCK SYSTEM 24
   6. AUDIO & CLOCK SYSTEM 25
   7. AUTOMATIC SHOULDER BELT & KEY WARNING CHIME SYSTEM 26
   8. BACK-UP LIGHT SYSTEM 28
   9. CHARGING SYSTEM 29
   10. COMBINATION METER 31
   11. COURTESY LIGHT & KEY HOLE ILLUMINATION LIGHT SYSTEM 35
   12. CRUISE CONTROL SYSTEM 36
   13. DOOR LOCK SYSTEM 40
   14. ELECTRONICALLY CONTROLLED POWER STEERING SYSTEM 42
   15. ENGINE ELECTRICAL (MPFI) SYSTEM 44
   16. FRONT WIPER AND WASHER SYSTEM 48
   17. FUEL GAUGE SYSTEM 49
   18. HORN AND CIGARETTE LIGHTER SYSTEM 51
   19. LIGHTING (HEADLIGHT & FOG LIGHT) SYSTEM 52
   20. LIGHTING (TAIL LIGHT•ILLUMINATION LIGHT•etc.) SYSTEM 56
   21. OIL PRESSURE AND TEMPERATURE GAUGE SYSTEM 58
   22. PARKING BRAKE AND BRAKE FLUID LEVEL WARNING SYSTEM 59
   23. POWER SEAT SYSTEM 61
   24. POWER WINDOW SYSTEM 62
   25. RADIATOR FAN & AIR CONDITIONER SYSTEM 64
   26. REAR WINDOW DEFOGGER SYSTEM 68
   27. REAR WIPER AND WASHER SYSTEM 69
   28. REMOTE CONTROL REARVIEW MIRROR SYSTEM 70
   29. SECURITY SYSTEM 71
   30. SPEEDOMETER SYSTEM 72
   31. SPOT LIGHT, ROOM LIGHT & VANITY MIRROR LIGHT SYSTEM 73
   32. SRS (AIRBAG SYSTEM) 74
   33. STARTING SYSTEM 75
   34. STOP LIGHT SYSTEM 76
   35. SUNROOF SYSTEM 77
   36. TIME CONTROL SYSTEM 78
   37. TRUNK ROOM LIGHT SYSTEM 79
   38. TURN SIGNAL AND HAZARD SYSTEM 80
5. Control Unit & Relay Location 82
6. Electrical Wiring Harness and Ground Point 84

1. General Description

1. HOW TO USE THIS MANUAL

The description of the electrical system is divided into the charging system, starting system, etc.

1. First, open to the necessary electrical system section and wiring diagram.
2. Next, open the foldout page of the electrical wiring diagram. By observing the electrical wiring harness' illustrations (front, instrument panel, etc.), the wiring diagram connector can be located.

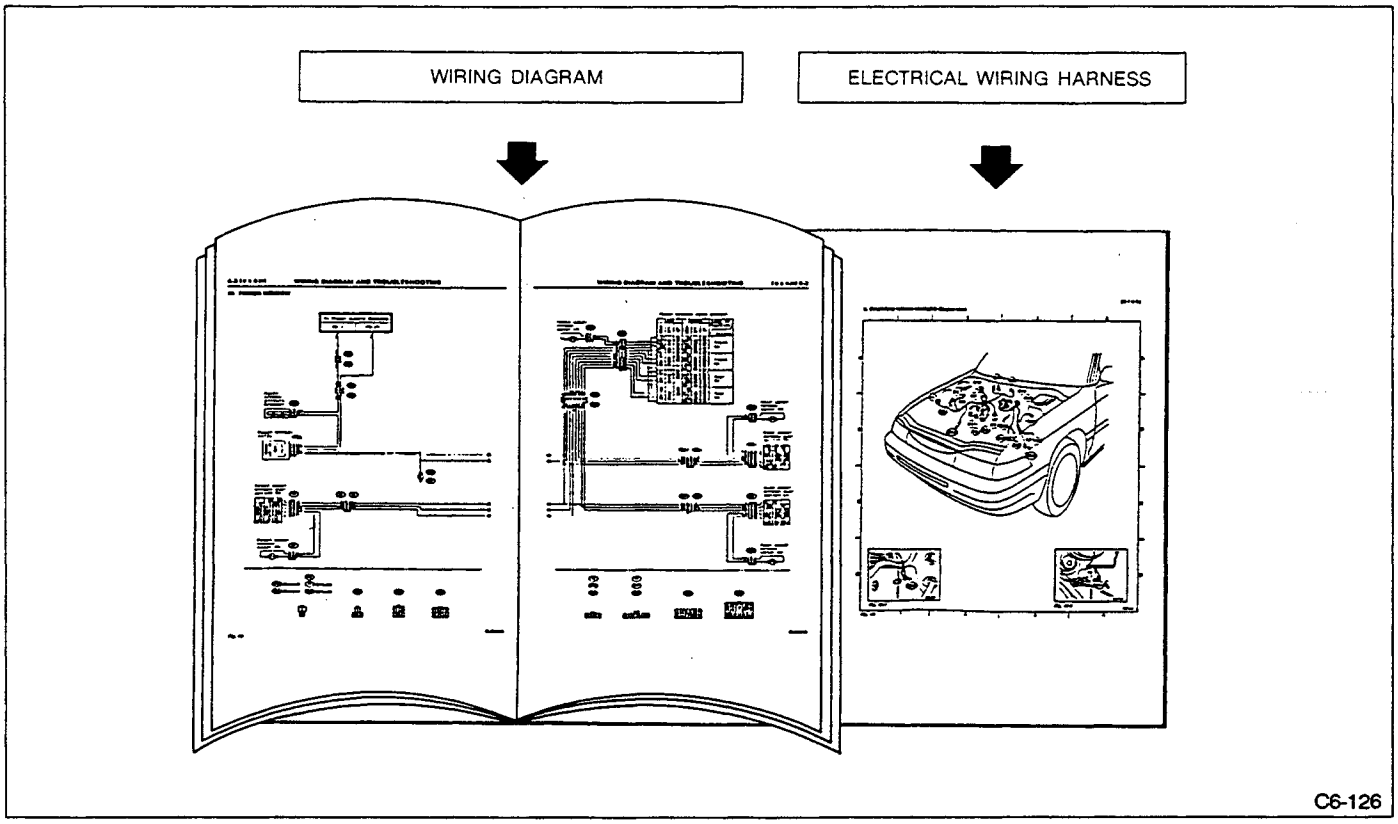

Fig. 1

2. WIRING DIAGRAM

The wiring diagram of each system is illustrated so that you can understand the path through which the electric current flows from the battery.

Sketches and codes are used in the diagrams. They should read as follows:

1) Each connector and its terminal position are indicated by a sketch of the connector in a disconnected state which is viewed from the front, as shown in figure.

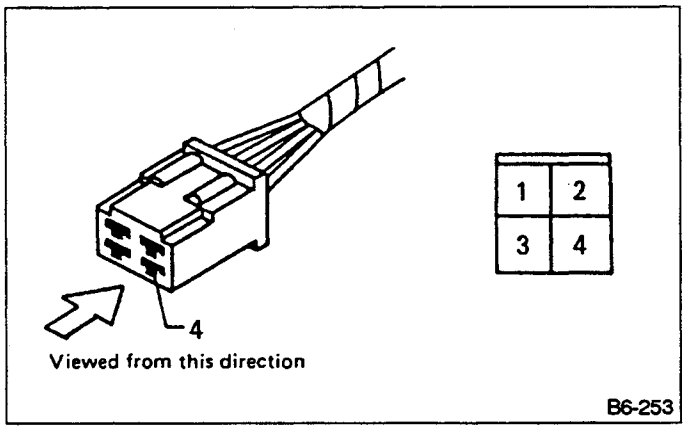

Fig. 2

2) The number of poles or pins, presence of a lock, and pin number of each terminal are indicated in the sketch of each connector.

In the sketch, the highest pole number refers to the number of poles which the connector has. For example, the sketch of the connector shown in Figure 3 indicates the connector has 9 poles.

Connector used in vehicle	Connector shown in wiring diagram		
	Sketch	Symbol	Number of poles
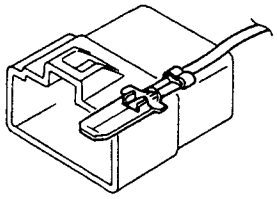	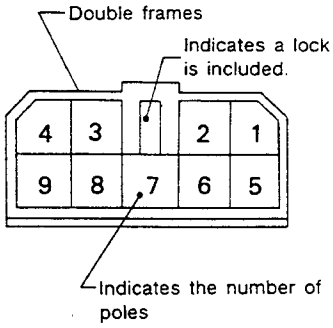	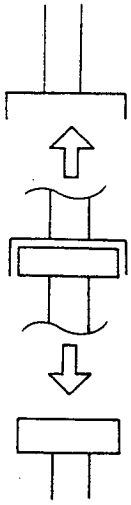	Numbered in order from upper right to lower left.
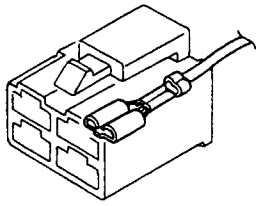	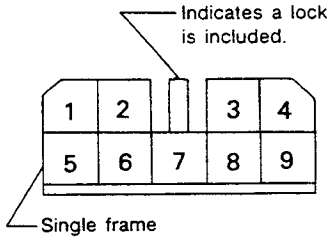		Numbered in order from upper left to lower right.

Fig. 3 B6-254

When one set of connectors is viewed from the front side, the pole numbers of one connector are symmetrical to those of the other. When these two connectors are connected as a unit, the poles which have the same number are joined.

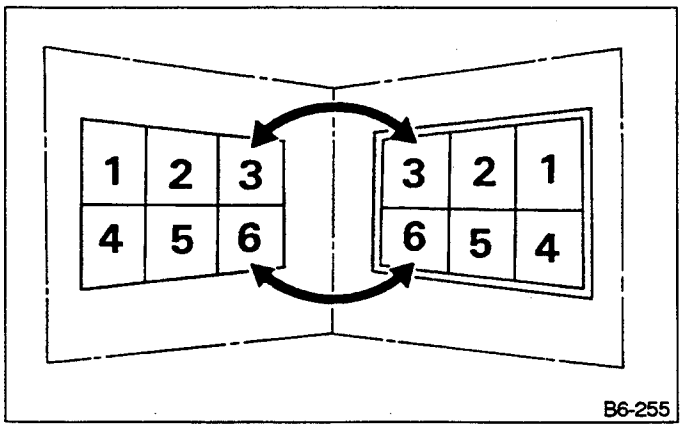

Fig. 4

3) Electrical wiring harness

The connectors are numbered along with the number of poles, external colors, and mating connections in the accompanying list.

4) The sketch of each connector in the wiring diagram usually shows the "A" side of the connector. The relationship between the wire color, terminal number and connector is described below.

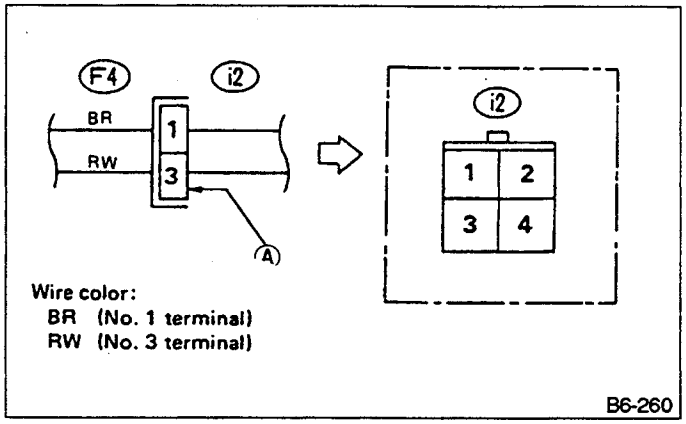

Fig. 5

A wire which runs in one direction from a connector terminal sometimes may have a different color from that which runs in the other direction from that terminal.

5) In wiring diagram, connectors which have no terminal number refer to one-pole types. Sketches of these connectors are omitted intentionally.

6) The following color codes are used to indicate the colors of the wires used.

Color code	Color
L	Blue
B	Black
Y	Yellow
G	Green
R	Red
W	White
Br	Brown
Lg	Light green
Gr	Gray
P	Pink
Or	Orange
Lb	Light Blue
V	Violet
SA	Sealed (Inner)
SB	Sealed (Outer)

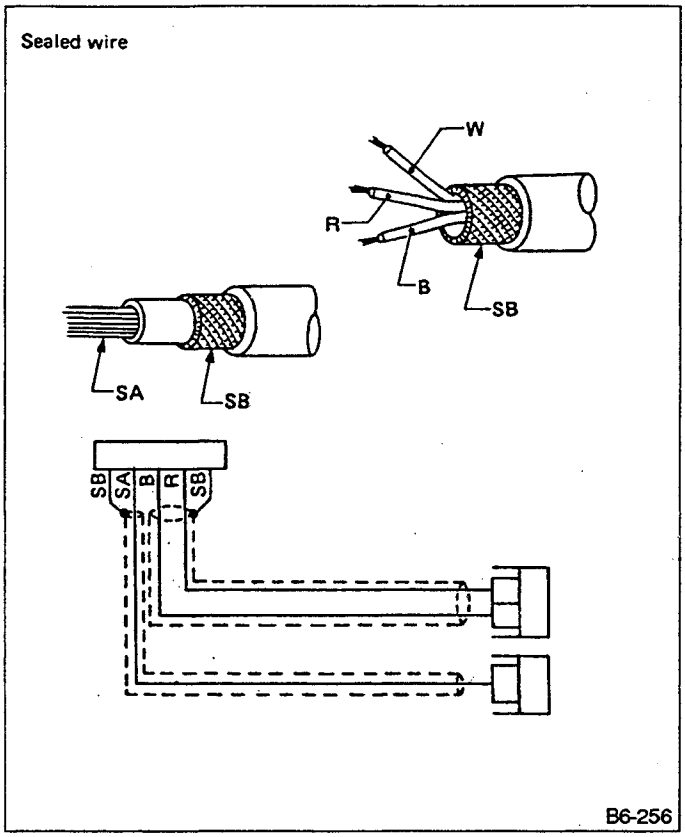

Fig. 6

7) The wire color code, which consists of two letters (or three letters including Br or Lg), indicates the standard color (base color of the wire covering) by its first letter and the stripe marking by its second letter.

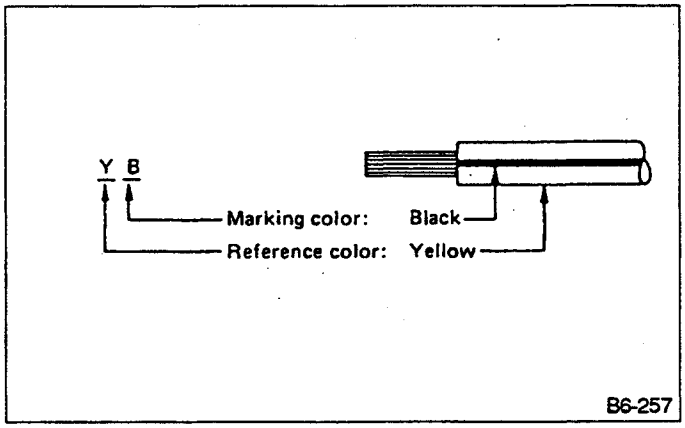

Fig. 7

8) The table below lists the nominal sectional areas and allowable currents of the wires.

Nominal sectional area mm^2	No. of strands/ strand diameter	Outside diameter of finished wiring mm	Allowable current Amps/40°C
0.3	7/0.26	1.8	7
0.5	7/0.32	2.2 (or 2.0)	12
0.75	30/0.18	2.6 (or 2.4)	16
0.85	11/0.32	2.4 (or 2.2)	16
1.25	16/0.32	2.7 (or 2.5)	21
2	26/0.32	3.1 (or 2.9)	28
3	41/0.32	3.8 (or 3.6)	38
5	65/0.32	4.6 (or 4.4)	51
8	50/0.45	5.5	67

a. The allowable current in the above table indicates the tolerable amperage of each wire at an ambient temperature of 40°C (104°F).
b. The allowable current changes with ambient temperature. Also, it changes if a bundle of more than two wires is used.
c. When replacing or repairing a wire, be sure to use the same size and type of the wire which was originally used.
9) Each unit is directly grounded to the body or indirectly grounds through a harness ground terminal. Different symbols are used in the wiring diagram to identify the two grounding systems.

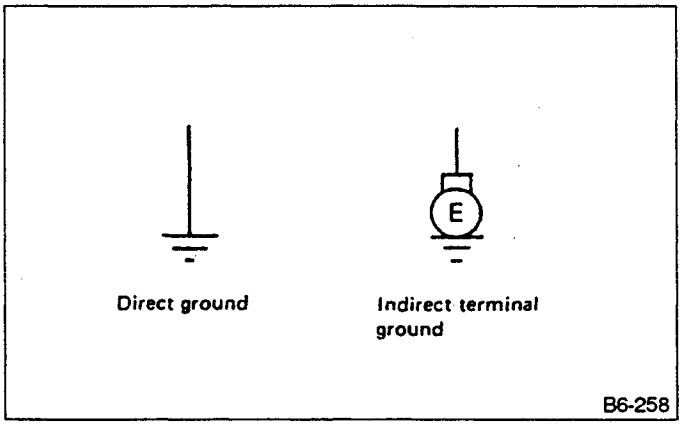

Fig. 8

The ground points shown in the wiring diagram refer to the following:
(GB) Body ground
(GE) Engine ground
(GR) Radio ground
All wiring harnesses are provided with a ground point which should be securely connected.

10) Relays are classified as normally-open or normally-closed.
The normally-closed relay has one or more contacts.
The wiring diagram shows the relay mode when the energizing circuit is OFF.

Relay type		Energizing circuit OFF	Energizing circuit ON
Normally-open type	4-pole	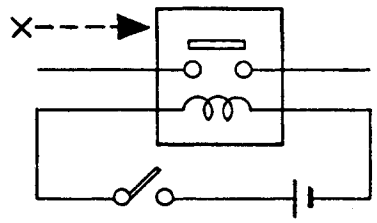	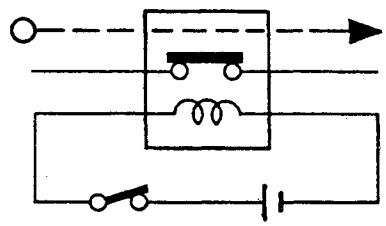
	6-pole	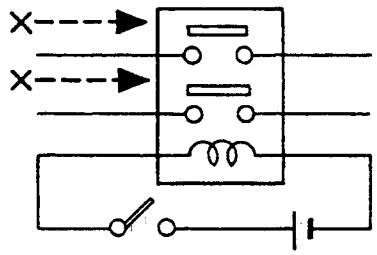	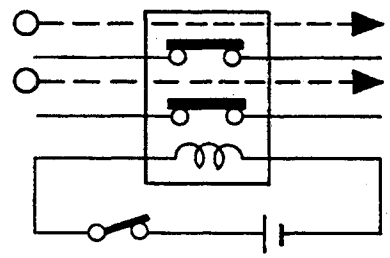
Normally-closed type	4-pole	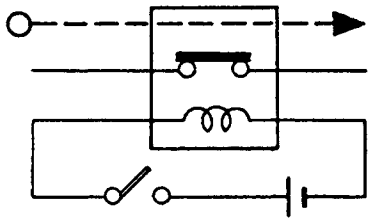	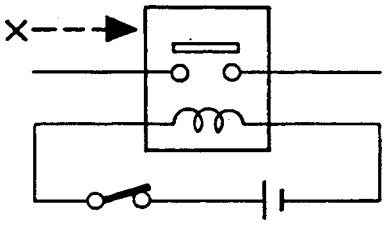
Mixed type	5-pole	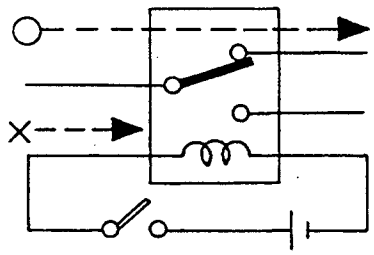	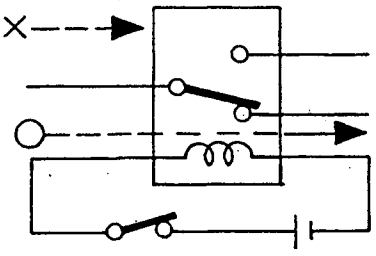

B6-243

Fig. 9

Key to symbols:
○ → : Current flows>
X → : Current does not flow.

11) Each connector number shown in the wiring diagram corresponds to that in the wiring harness. The location of each connector in the actual vehicle is determined by reading the first character of the connector (for example, a "F" for F8, "i" for i16, etc.) and the type of wiring harness.
The first character of each connector number refers to the area or system of the vehicle, as indicated in table below.

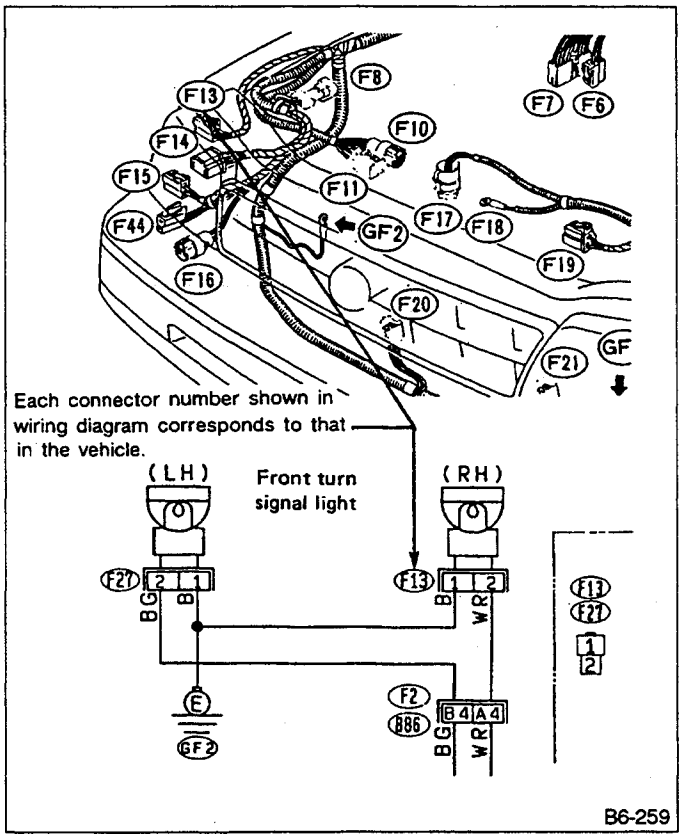

B6-259

Fig. 10

Symbol	Wiring harness & Cord
F	Front wiring harness LH
B	Bulkhead wiring harness
E	Engine wiring harness
T	Transmission cord
D	Door cord LH & RH
I	Instrument panel meter cord, Instrument panel center cord
R	Rear wiring harness, Room light cord, Fuel cord, Sunroof cord, Trunk lid hinge cord, Trunk lid cord

3. TROUBLESHOOTING PROCEDURES

The most important purpose of troubleshooting is to determine which part is malfunctioning quickly, to save time and labor.

1. Identification of trouble symptom

Determine what the problem is based on the symptom.

2. Probable cause of trouble

Look at the wiring diagram and check the system's circuit. Then check the switch, relay, fuse, ground, etc.

3. Location and repair of trouble

1) Using the troubleshooting narrow down the causes.
2) If necessary, use a voltmeter, ohmmeter, etc.
3) Before replacing certain component parts (switch, relay, etc.), check the power supply, ground, for open wiring harness, poor connectors, etc. If no problems are encountered, check the component parts.

4. Confirmation of system operation

After repairing, ensure that the system operates properly.

4. VOLTAGE MEASUREMENT

1) Using a voltmeter, connect the negative lead to a good ground point or negative battery terminal and the positive lead to the connector or component terminal.
2) Contact the positive probe of the voltmeter on connector (A).
The voltmeter will indicate a voltage.
3) Shift the positive probe to connector (B). The voltmeter will indicate no voltage.
With test setup held as it is, turn switch ON. The voltmeter will indicate a voltage and, at the same time, the light will come on.
4) The circuit is in good order. If a problem such as a lamp failing to light occurs, use the procedures outlined above to track down the malfunction.

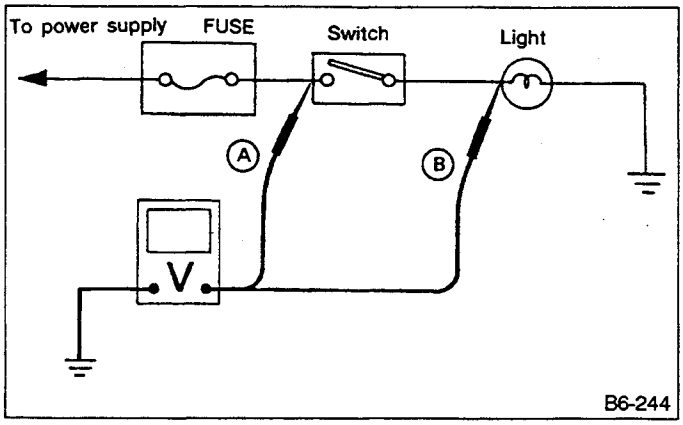

Fig. 11

5. CIRCUIT CONTINUITY CHECKS

1) Disconnect the battery terminal or connector so there is no voltage between the check points.
Contact the two leads of an ohmmeter to each of the check points.
If the circuit has diodes, reverse the two leads and check again.
2) Use an ohmmeter to check for diode continuity.
When contacting the negative lead to the diode positive side and the positive lead to the negative side, there should be continuity.
When contacting the two leads in reverse, there should be no continuity.

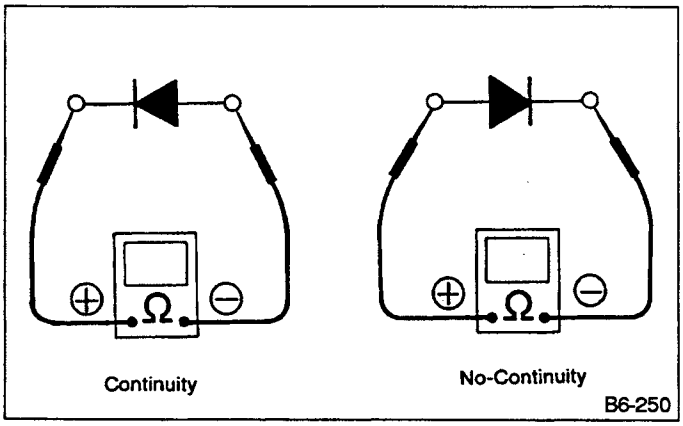

Fig. 12

3) Symbol "o—o" indicates that continuity exists between two points or terminals. For example, when a switch position is "3", continuity exists among terminals 1, 3 and 6, as shown in table below.

Terminal / Switch Position	1	2	3	4	5	6
OFF						
1	o				o	o
2	o			o		o
3	o		o			o
4	o	o				o

6. HOW TO DETERMINE AN OPEN CIRCUIT

1) Voltmeter Method
An open circuit is determined by measuring the voltage between respective connectors and ground using a voltmeter, starting with the connector closest to the power supply. The power supply must be turned ON so that current flows in the circuit. If voltage is not present between a particular connector and ground, the circuit between that connector and the previous connector is open.

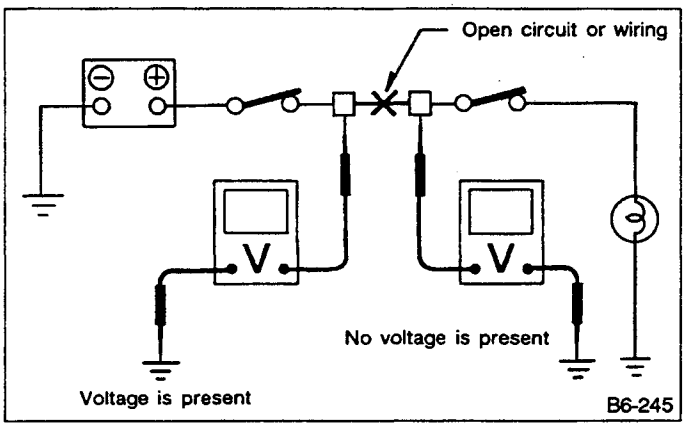

Fig. 13

2) Ohmmeter method
Disconnect all connectors affected, and check continuity in the wiring between adjacent connectors. When the ohmmeter indicates "infinite", the wiring is open.

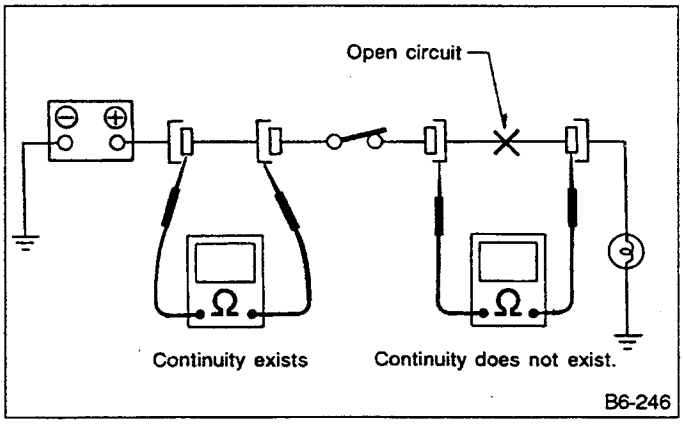

Fig. 14

7. HOW TO DETERMINE A SHORTCIRCUIT

1) Test lamp method
Connect a test lamp (rated at approximately 3 watts) in place of the blown fuse and allow current to flow through the circuit. Disconnect one connector at a time from the circuit, starting with the one located farthest from the power supply. If the test lamp goes out when a connector is disconnected, the wiring between that connection and the next connector (farther from the power supply) is shorted.

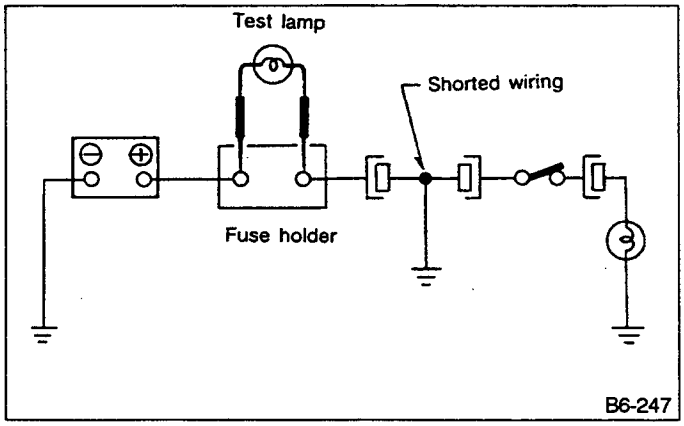

Fig. 15

2) Ohmmeter method
Disconnect all affected connectors, and check continuity between each connector and ground. When ohmmeter indicates continuity between a particular connector and ground, that connector is shorted.

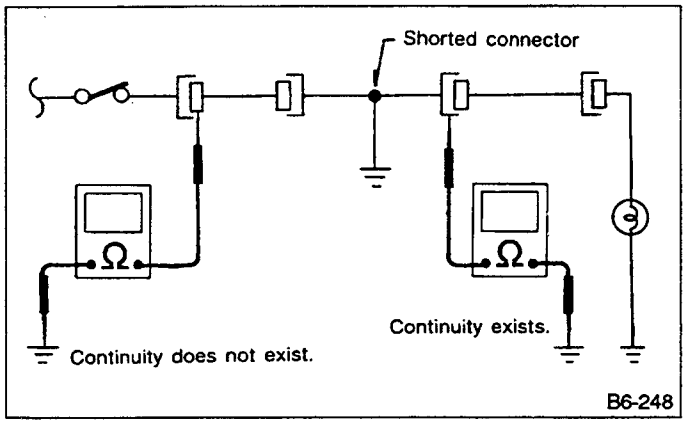

Fig. 16

2. Working Precautions

1. PRECAUTIONS WHEN WORKING WITH THE PARTS MOUNTED ON THE VEHICLE

1) When working under a vehicle which is jacked up, always be sure to use safety stands.
2) The parking brake must always be applied during working. Also, in automatic transmission vehicles, keep the select lever set to the P (Parking) range.
3) Be sure the workshop is properly ventilated when running the engine. Further, be careful not to touch the belt or fan while the engine is operating.
4) Be careful not to touch hot metal parts, especially the radiator and exhaust system immediately after the engine has been shut off.

2. PRECAUTIONS IN TROUBLE DIAGNOSIS AND REPAIR OF ELECTRIC PARTS

1) The battery cable must be disconnected from the battery's (−) terminal, and the ignition switch must be set to the OFF position, unless otherwise required by the troubleshooting.
2) Securely fasten the wiring harness with clamps and slips so that the harness does not interfere with the body end parts or edges and bolts or screws.
3) When installing parts, be careful not to catch them on the wiring harness.

4) When disconnecting a connector, do not pull the wires, but pull while holding the connector body.

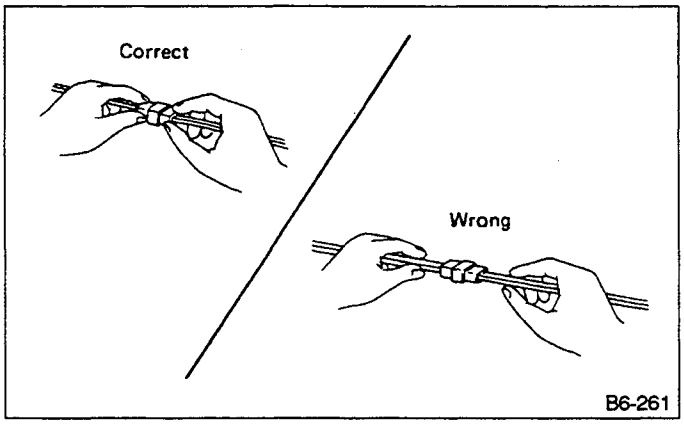

Fig. 17

5) Some connectors are provided with a lock. One type of such a connector is disconnected by pushing the lock, and the other, by moving the lock up. In either type the lock shape must be identified before attempting to disconnect the connector.
To connect, insert the connector until it snaps and confirm that it is tightly connected.

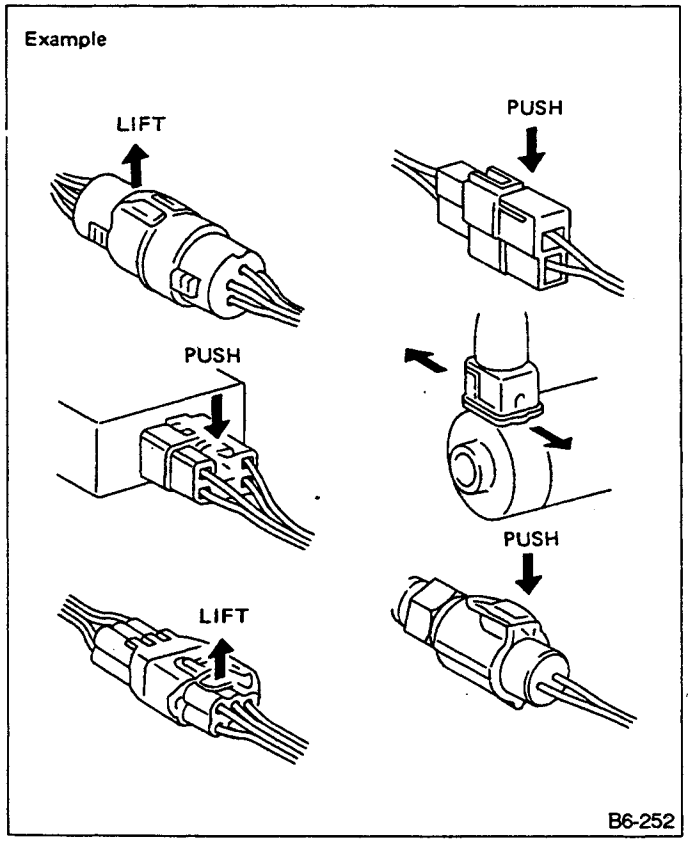

Fig. 18

6) When checking continuity between connector terminals, or measuring voltage across the terminal and ground, always contact tester probe(s) on terminals from the wiring connection side. If the probe is too thick to gain access to the terminal, use "mini" test leads.
To check water-proof connectors (which are not accessible from the wiring side), contact test probes on the terminal side being careful not to bend or damage the terminals.

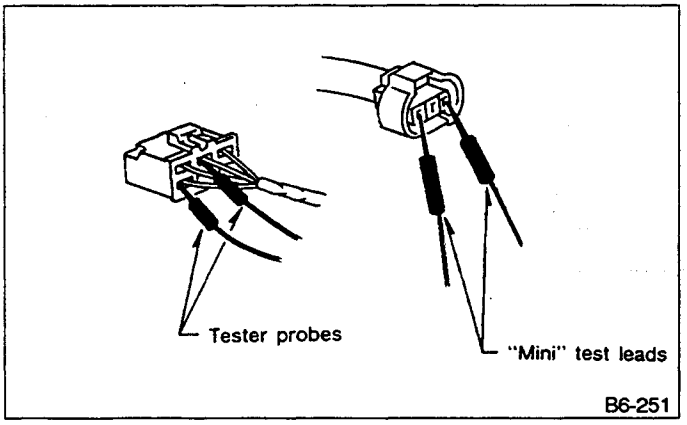

Fig. 19

7) Sensors, relays, electrical unit, etc., are sensitive to strong impacts.
Handle them with care so that they are not dropped or mishandled.

ABBREVIATION LIST

Abbr.	Full name
ABS	Antilock Brake System
ACC	Accessory
A/C	Air Conditioner
AD	Auto Down
AT	Automatic Transmission
AU	Auto Up
+B	Battery
DN	Down
DRL	Daytime Running Light
E	Ground
F/B	Fuse & Joint Box
FL1.5	Fusible link 1.5 mm^2
IG	Ignition
Illumi.	Illumination

Abbr.	Full name
LH	Left Hand
Lo	Low
M	Motor
M/B	Main Fuse Box
MG	Magnet
Mi	Middle
MPFI	Multi Point Fuel Injection Model
OP	Optional Parts
PASS	Passing
RH	Right Hand
SBF	Slow Blow Fuse
ST	Starter
SW	Switch
UP	Up
WASH	Washer

3. How to Use Wiring Diagram

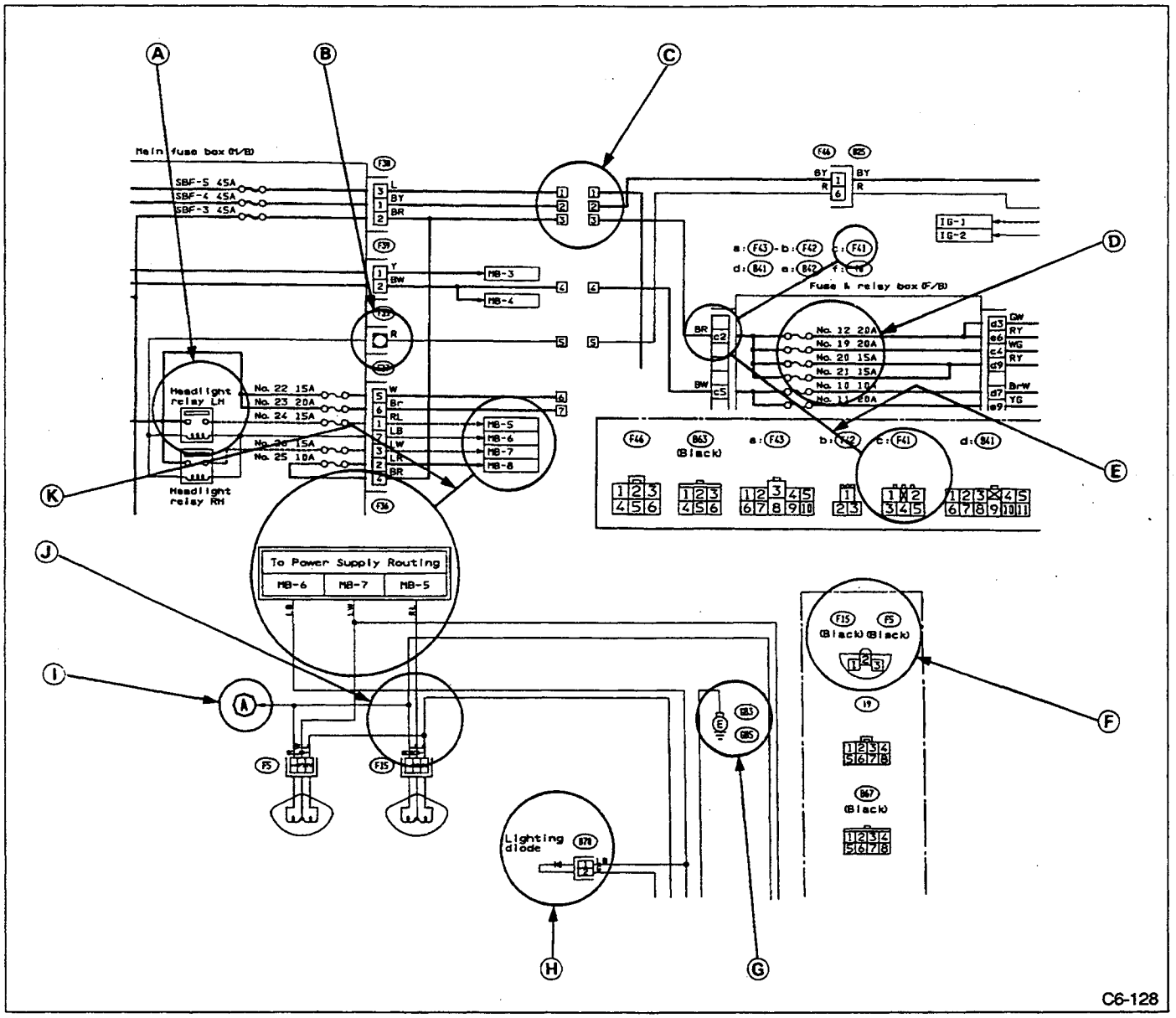

Fig. 20

A	RELAY

A symbol used to indicate a relay.
⟨Refer to Fig. 9⟩

B	CONNECTOR-1

The sketch of the connector indicates the one-pole types.

C	WIRING CONNECTION

Some wiring diagrams are indicated in foldouts for convenience. Wiring destinations are indicated where necessary by corresponding symbols (as when two pages are needed for clear indication).

D	FUSE NO. & RATING

The "FUSE NO. & RATING" corresponds with that used in the fuse box (main fuse box, fuse and joint box.)

E	CONNECTOR-2

1. Each connector is indicated by a symbol.
2. Each terminal number is indicated in the corresponding wiring diagram in an abbreviated form.
3. For example, terminal number "C2" refers to No. 2 terminal of connector (C:F41) shown in the connector sketch.
⟨Refer to Fig. 3⟩

F CONNECTOR SKETCH

1. Each connector sketch clearly identifies the shape and color of a connector as well as terminal locations. Non-colored connectors are indicated in natural color.
2. When more than two types of connector number are indicated in a connector sketch, it means that the same type connectors are used.

G GROUND

Each grounding point can be located easily by referring to the corresponding wiring harness.
〈Refer to Fig. 8〉

H DIODE

A symbol is used to indicate a diode.
〈Refer to Fig. 12〉

I WIRE TRACING ON EXTENDED WIRING DIAGRAMS

For a wiring diagram extending over at least two pages, a symbol (consisting of the same characters with arrows), as shown below, facilitates wire tracing from one page to the next.
A ↔ A, B ↔ B

J SYMBOLS OF WIRE CONNECTION AND CROSSING


Symbol — Refers to wires which are connected and branched at the "dot" point.


Symbol — Refers to wires which are crossed but not connected.

K POWER SUPPLY ROUTING

A symbol is used to indicate the power supply in each wiring diagram.
"MB-5", "MB-6", etc., which are used as power-supply symbols throughout the text, correspond with those shown in the POWER SUPPLY ROUTING in the wiring diagram.
Accordingly, using the POWER SUPPLY ROUTING and wiring diagrams permits service personnel to understand the entire electrical arrangement of a system.

SYMBOLS AND ABBREVIATIONS

A number of symbols and abbreviations are used in each wiring diagram to easily identify parts or circuits.

4. Wiring Diagram and Troubleshooting

1. POWER SUPPLY ROUTING

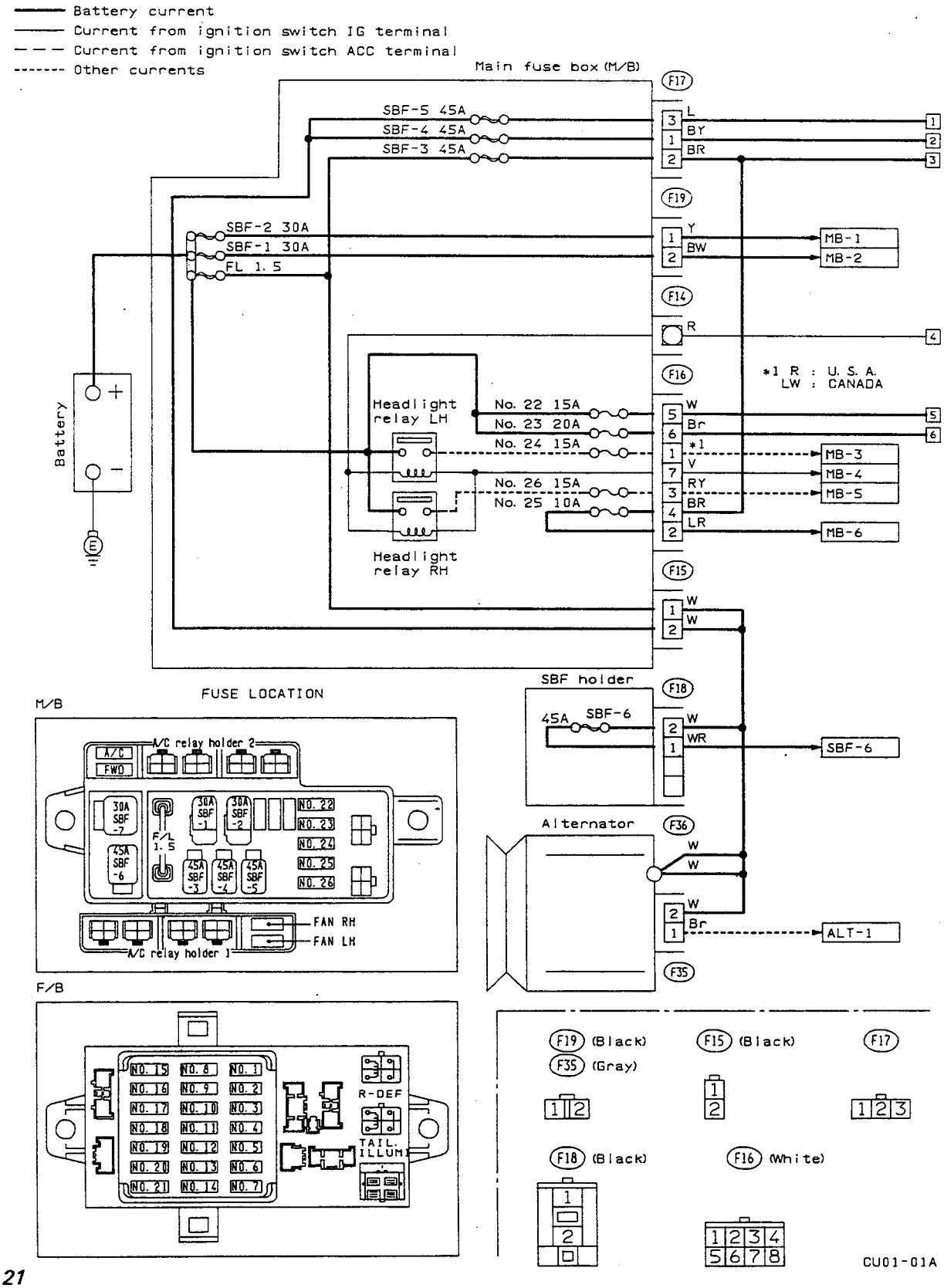

Fig. 21

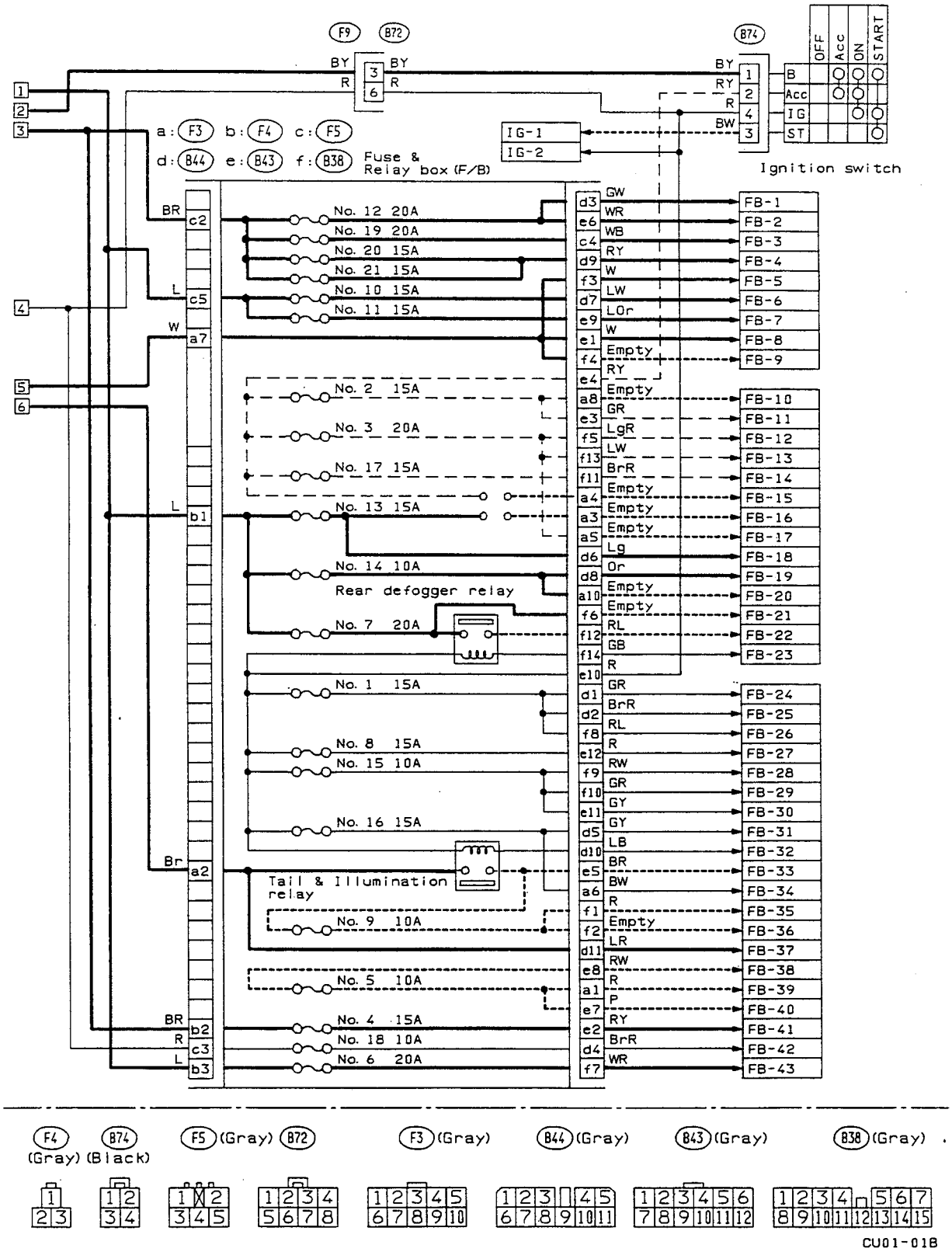
F9
B72
B74
BY
R
RY
BW
OFF
Acc
ON
START
B
Acc
IG
ST
Ignition switch
a: F3 b: F4 c: F5
d: B44 e: B43 f: B38
Fuse & Relay box (F/B)
IG-1
IG-2
No. 12 20A
No. 19 20A
No. 20 15A
No. 21 15A
No. 10 15A
No. 11 15A
No. 2 15A
No. 3 20A
No. 17 15A
No. 13 15A
No. 14 10A
Rear defogger relay
No. 7 20A
No. 1 15A
No. 8 15A
No. 15 10A
No. 16 15A
Tail & Illumination relay
No. 9 10A
No. 5 10A
No. 4 15A
No. 18 10A
No. 6 20A
FB-1
FB-2
FB-3
FB-4
FB-5
FB-6
FB-7
FB-8
FB-9
FB-10
FB-11
FB-12
FB-13
FB-14
FB-15
FB-16
FB-17
FB-18
FB-19
FB-20
FB-21
FB-22
FB-23
FB-24
FB-25
FB-26
FB-27
FB-28
FB-29
FB-30
FB-31
FB-32
FB-33
FB-34
FB-35
FB-36
FB-37
FB-38
FB-39
FB-40
FB-41
FB-42
FB-43
F4 (Gray)
B74 (Black)
F5 (Gray)
B72
F3 (Gray)
B44 (Gray)
B43 (Gray)
B38 (Gray)
CU01-01B

4. Wiring Diagram and Diagnostics

2. GROUND DISTRIBUTION

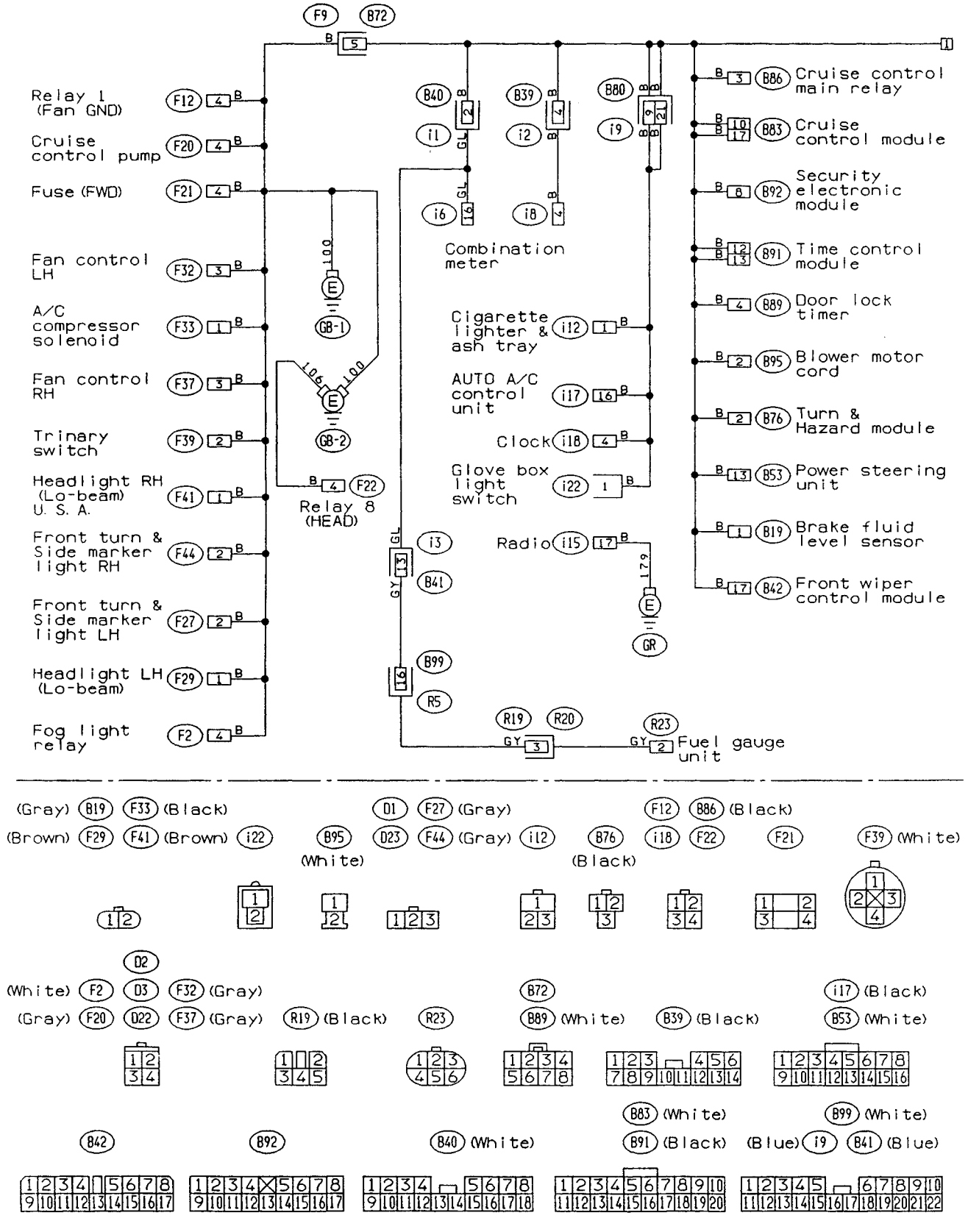

Fig. 1

CU04-02A

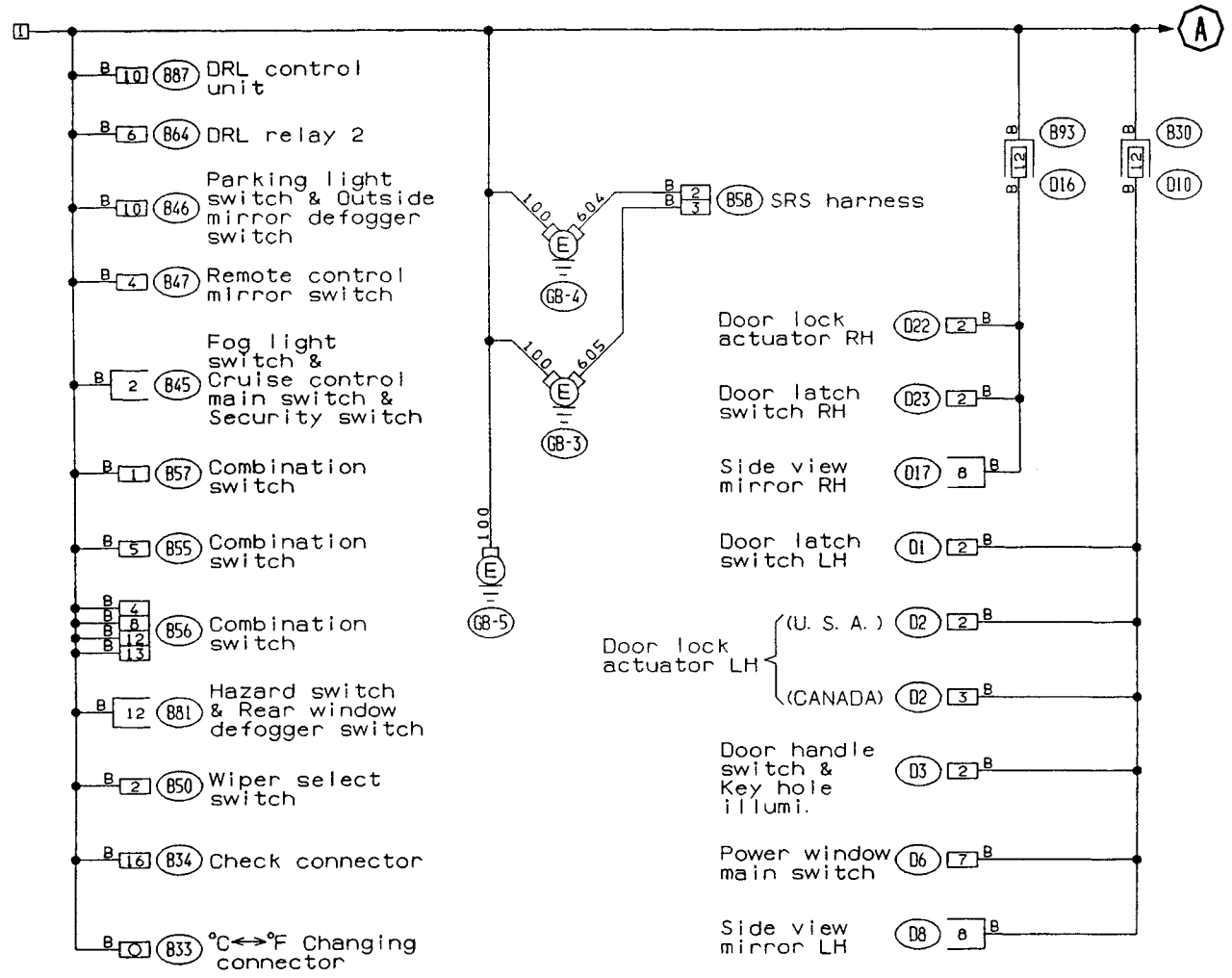
DRL control unit
DRL relay 2
Parking light switch & Outside mirror defogger switch
Remote control mirror switch
Fog light switch & Cruise control main switch & Security switch
Combination switch
Combination switch
Combination switch
Hazard switch & Rear window defogger switch
Wiper select switch
Check connector
°C↔°F Changing connector
SRS harness
Door lock actuator RH
Door latch switch RH
Side view mirror RH
Door latch switch LH
Door lock actuator LH
(U. S. A.)
(CANADA)
Door handle switch & Key hole illumi.
Power window main switch
Side view mirror LH

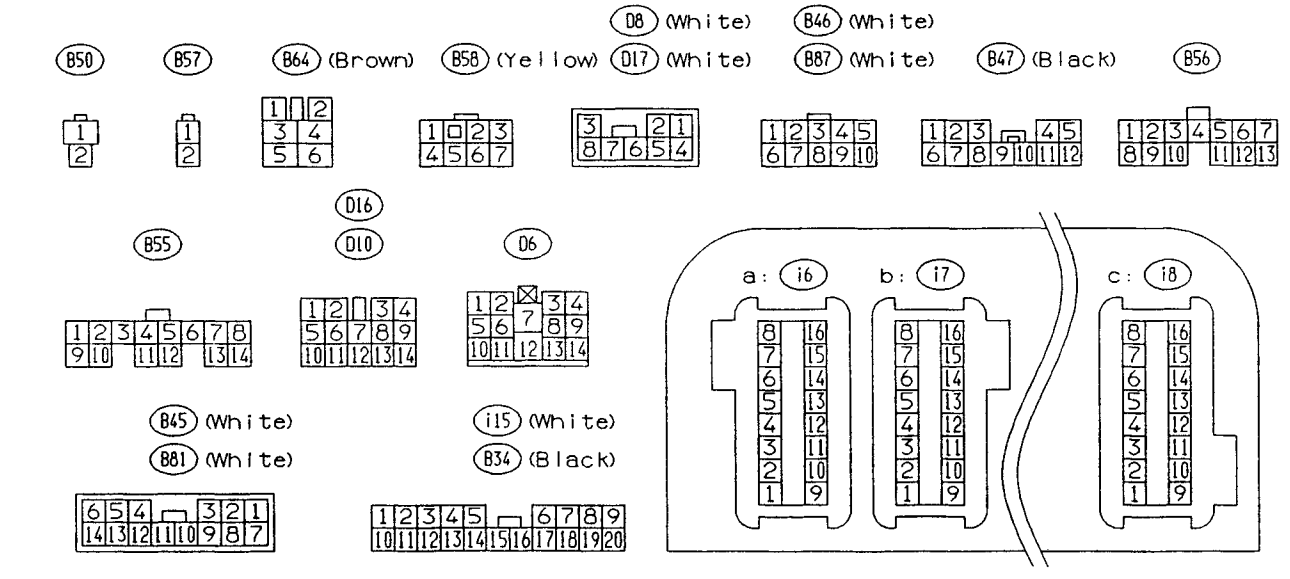
(White)
(White)
(Brown)
(Yellow)
(White)
(White)
(Black)
a:
b:
c:
(White)
(White)
(Black)

CU04-02B

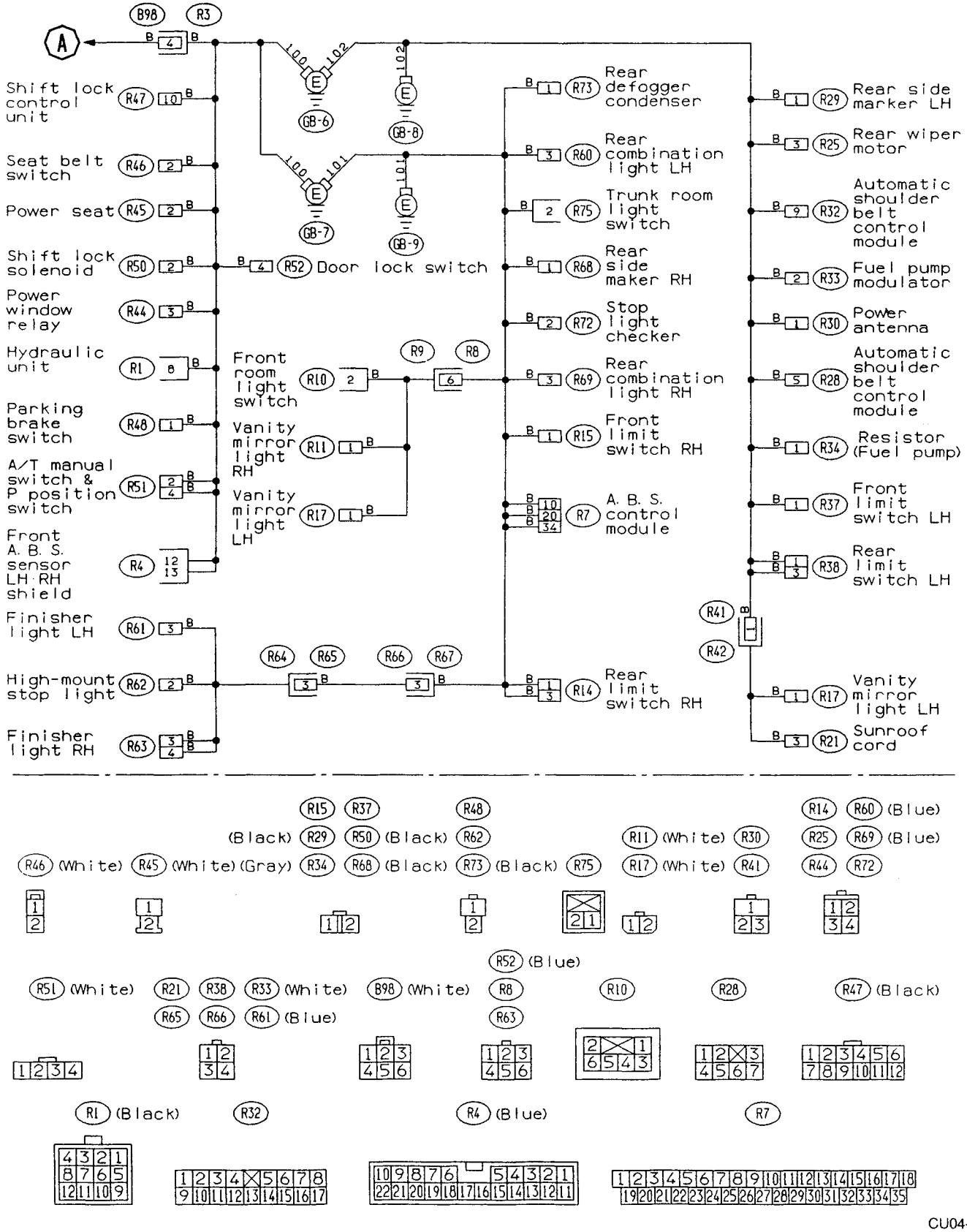

CU04-02C

Fig. 2

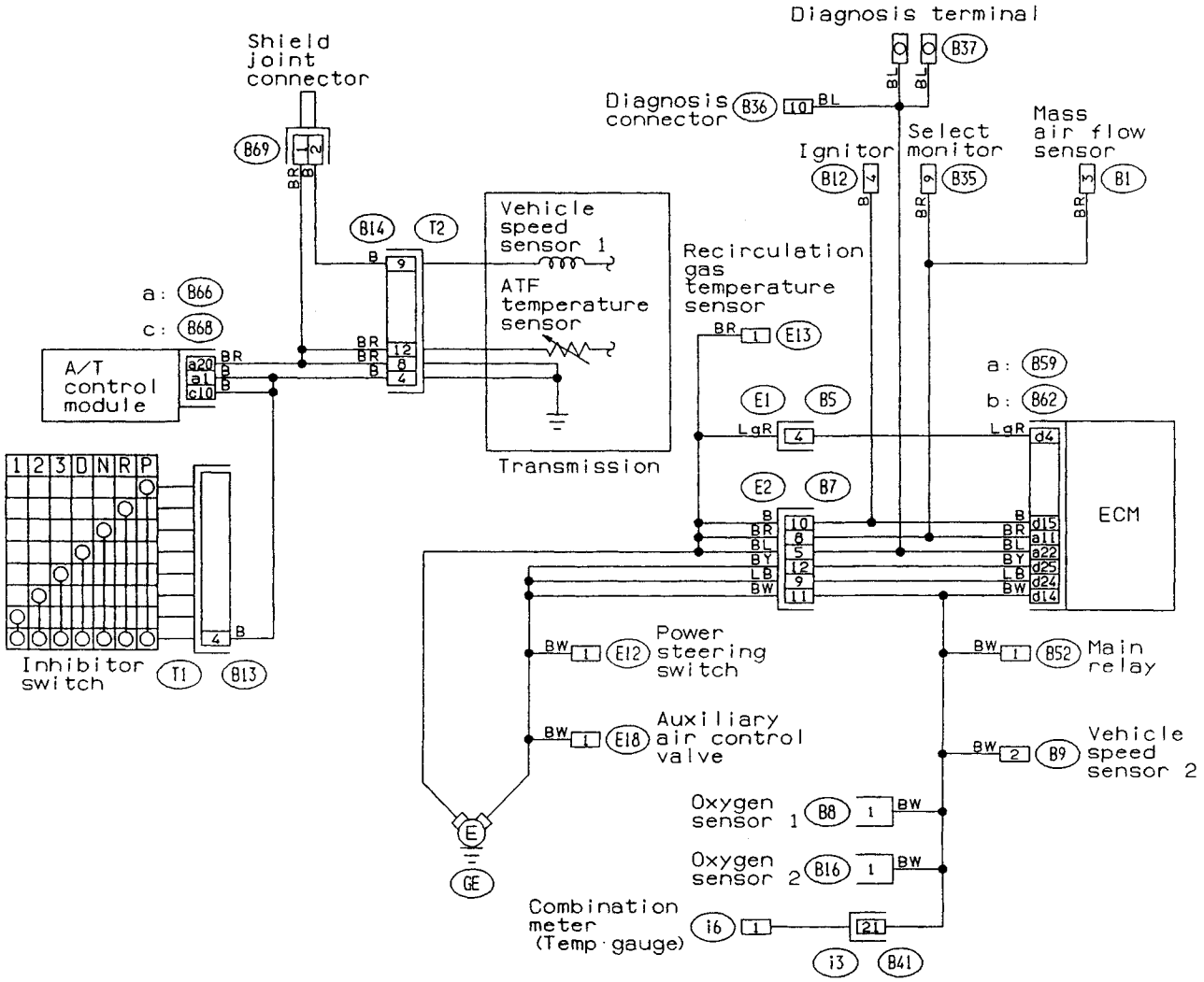
Diagnosis terminal
B37
Shield joint connector
B69
Diagnosis connector
B36
Ignitor
B12
Select monitor
B35
Mass air flow sensor
B1
Vehicle speed sensor 1
ATF temperature sensor
B14
T2
Recirculation gas temperature sensor
E13
a: B66
c: B68
A/T control module
a: B59
b: B62
E1
B5
E2
B7
ECM
Transmission
1 2 3 D N R P
Inhibitor switch
T1
B13
Power steering switch
E12
Main relay
B52
Auxiliary air control valve
E18
Vehicle speed sensor 2
B9
Oxygen sensor 1
B8
Oxygen sensor 2
B16
Combination meter (Temp gauge)
i6
i3
B41
E
GE

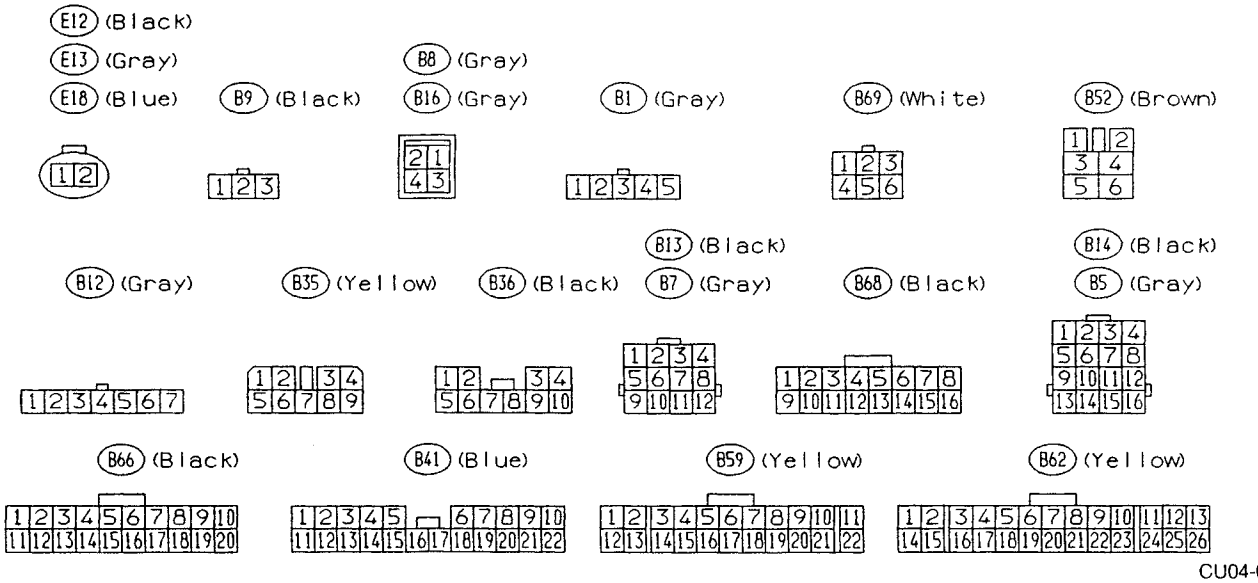
E12 (Black)
E13 (Gray)
E18 (Blue)
B9 (Black)
B8 (Gray)
B16 (Gray)
B1 (Gray)
B69 (White)
B52 (Brown)
B12 (Gray)
B35 (Yellow)
B36 (Black)
B13 (Black)
B7 (Gray)
B68 (Black)
B14 (Black)
B5 (Gray)
B66 (Black)
B41 (Blue)
B59 (Yellow)
B62 (Yellow)

CU04-02D

3. ANTI-LOCK BRAKE SYSTEM

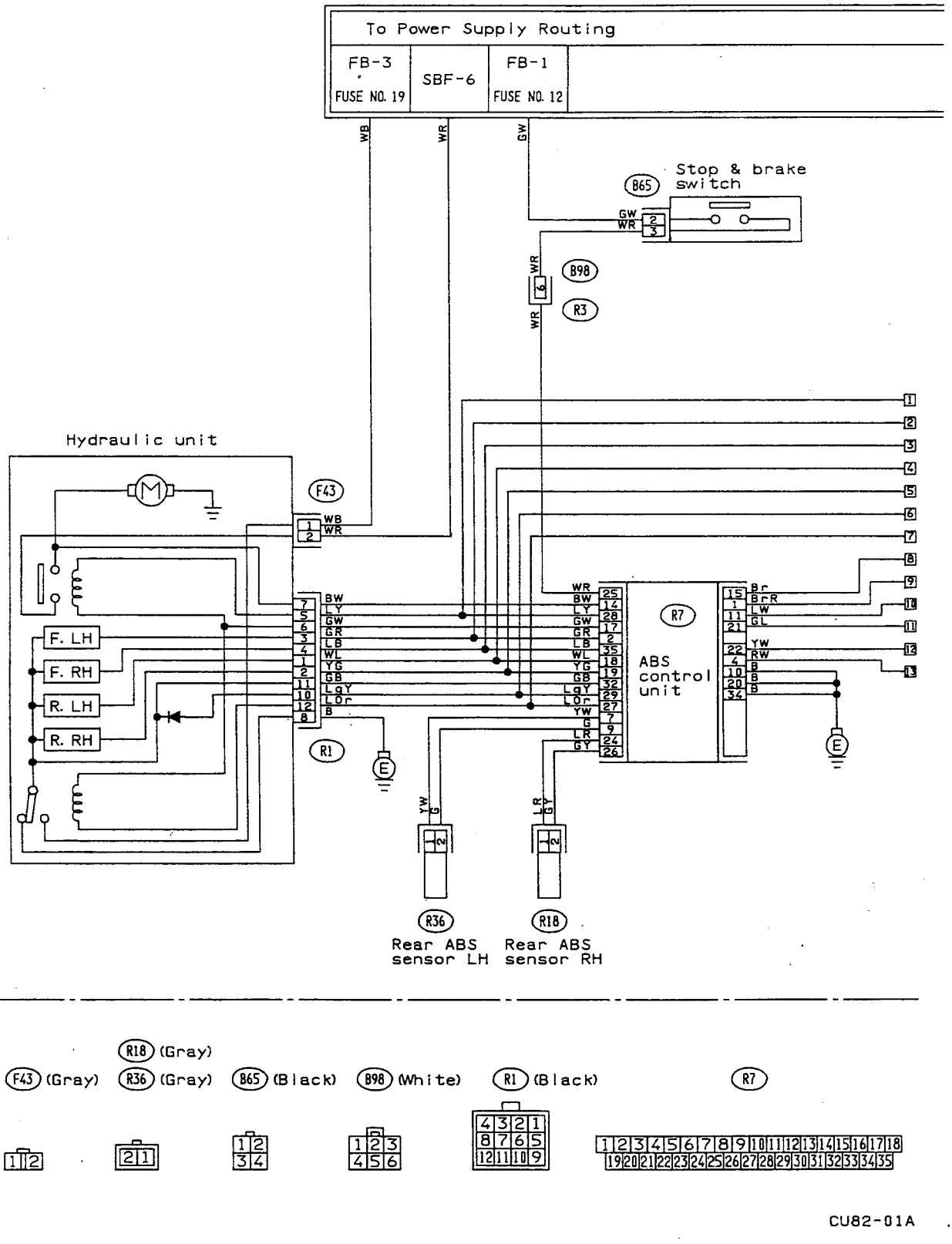

Fig. 23

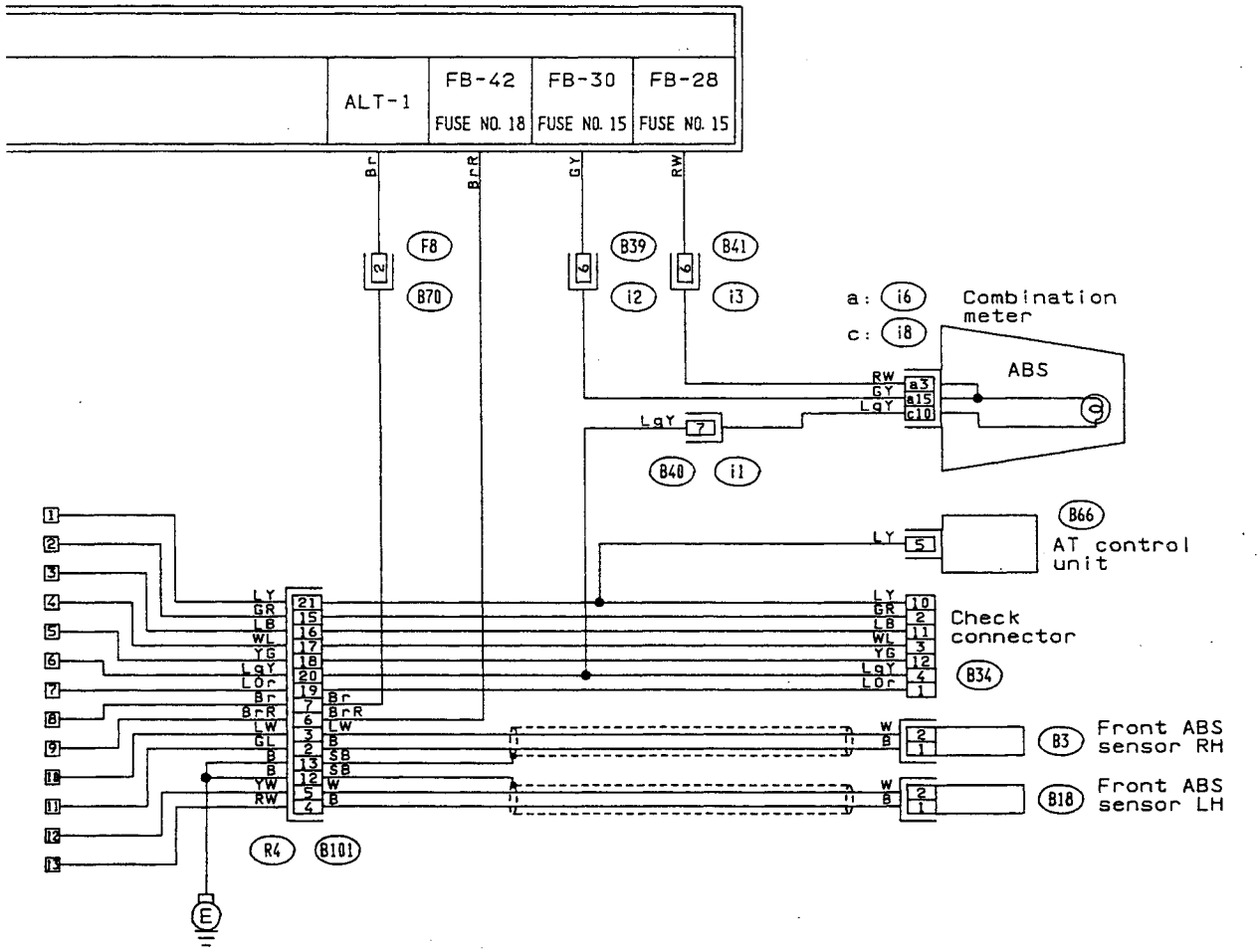
ALT-1
FB-42
FUSE NO. 18
FB-30
FUSE NO. 15
FB-28
FUSE NO. 15
Br
BrR
GY
RW
F8
B70
B39
i2
B41
i3
a: i6
c: i8
Combination meter
ABS
RW
GY
LgY
B3
a15
C10
LgY
7
B40
i1
B66
LY
5
AT control unit
Check connector
B34
Front ABS sensor RH
B3
Front ABS sensor LH
B18
R4
B101
E

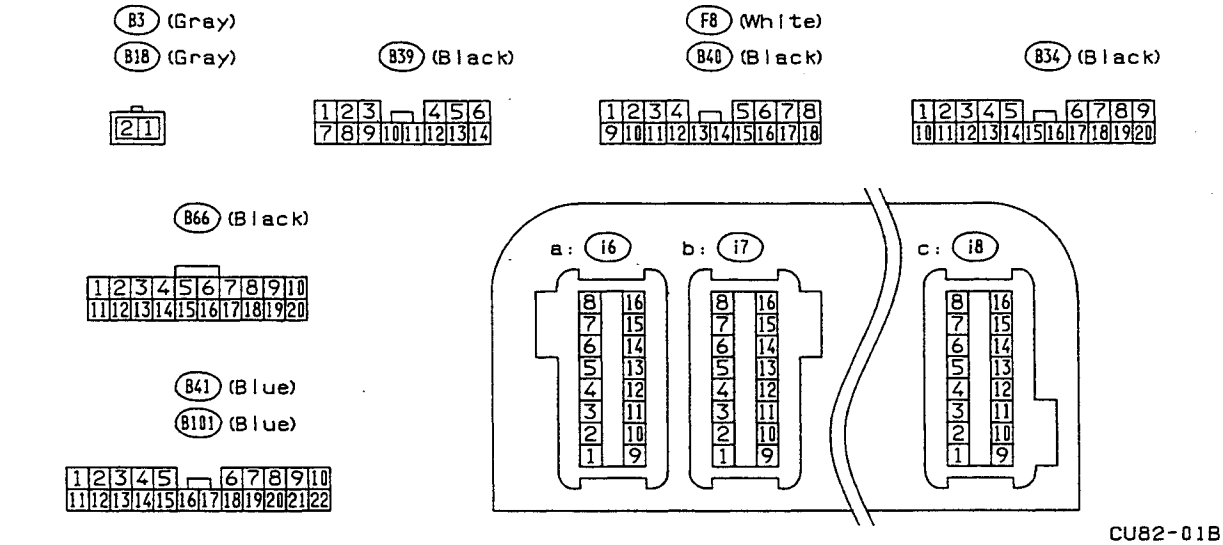
B3 (Gray)
B18 (Gray)
B39 (Black)
F8 (White)
B40 (Black)
B34 (Black)
B66 (Black)
B41 (Blue)
B101 (Blue)
a: i6
b: i7
c: i8

CU82-01B

4. A/T CONTROL SYSTEM

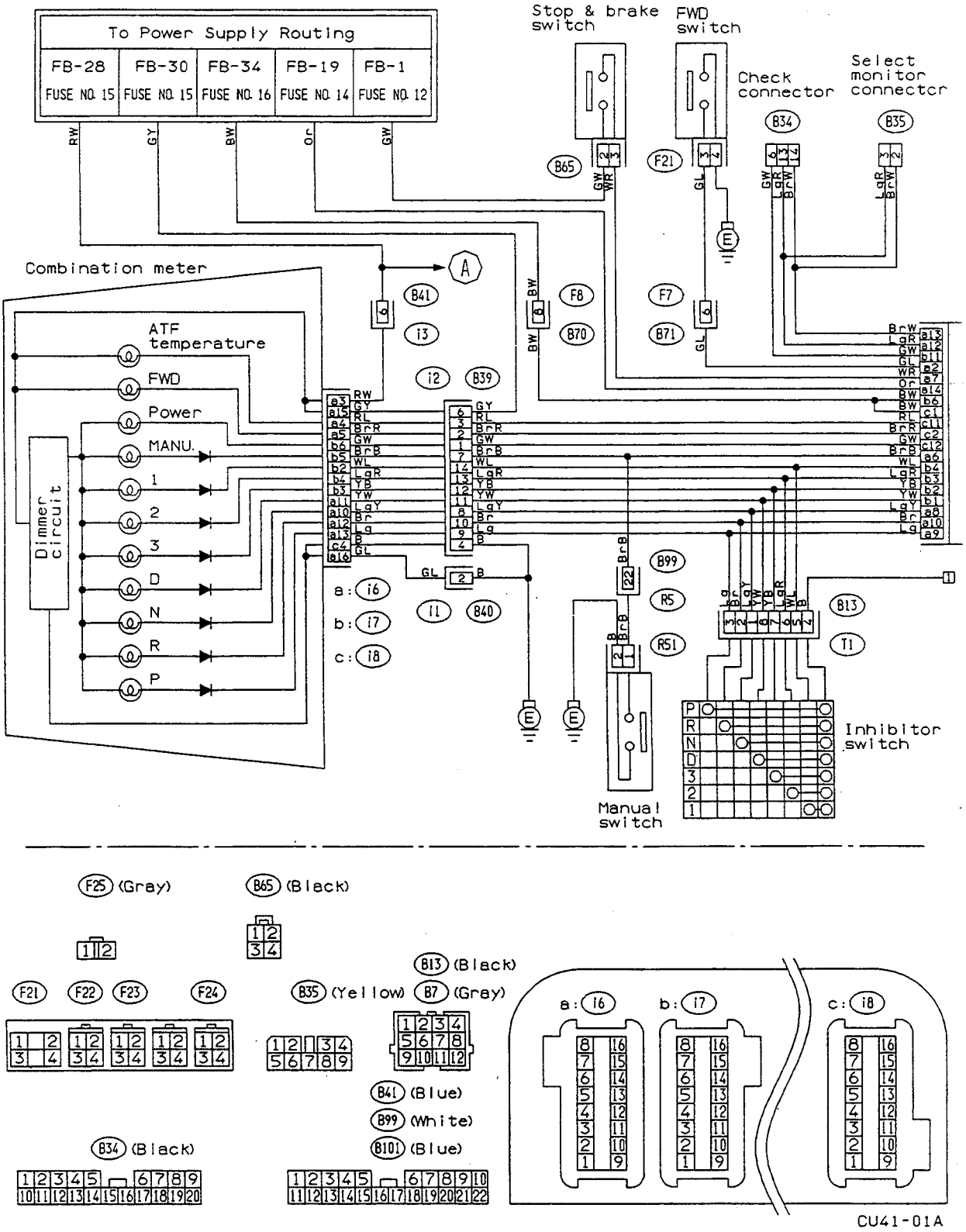

Fig. 24

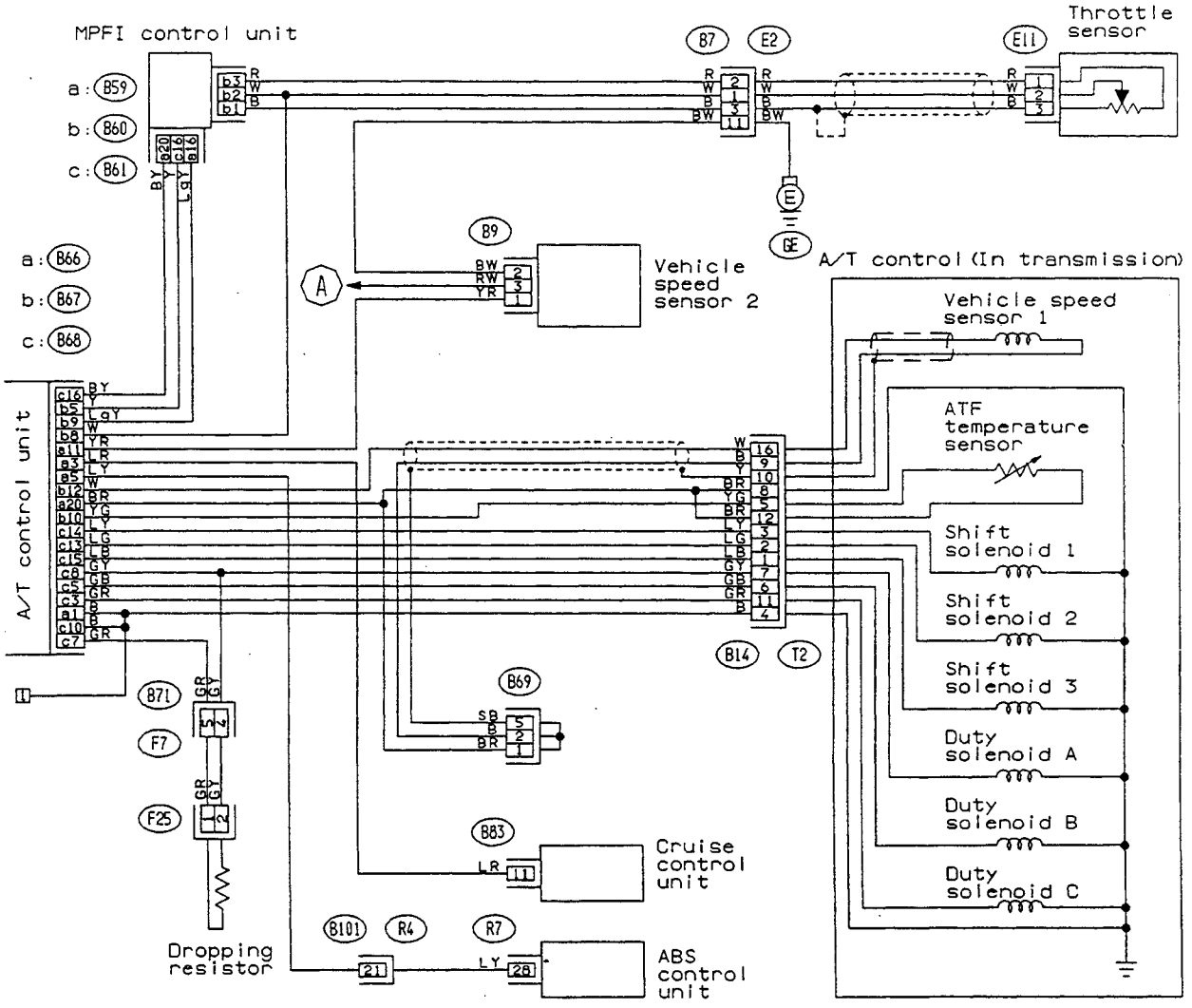
MPFI control unit
a: B59
b: B60
c: B61
B7
E2
E11
Throttle sensor
E
GE
B9
Vehicle speed sensor 2
A
A/T control (In transmission)
Vehicle speed sensor 1
ATF temperature sensor
Shift solenoid 1
Shift solenoid 2
Shift solenoid 3
Duty solenoid A
Duty solenoid B
Duty solenoid C
a: B66
b: B67
c: B68
A/T control unit
B14
T2
B69
B71
F7
F25
B83
Cruise control unit
B101
R4
R7
ABS control unit
Dropping resistor

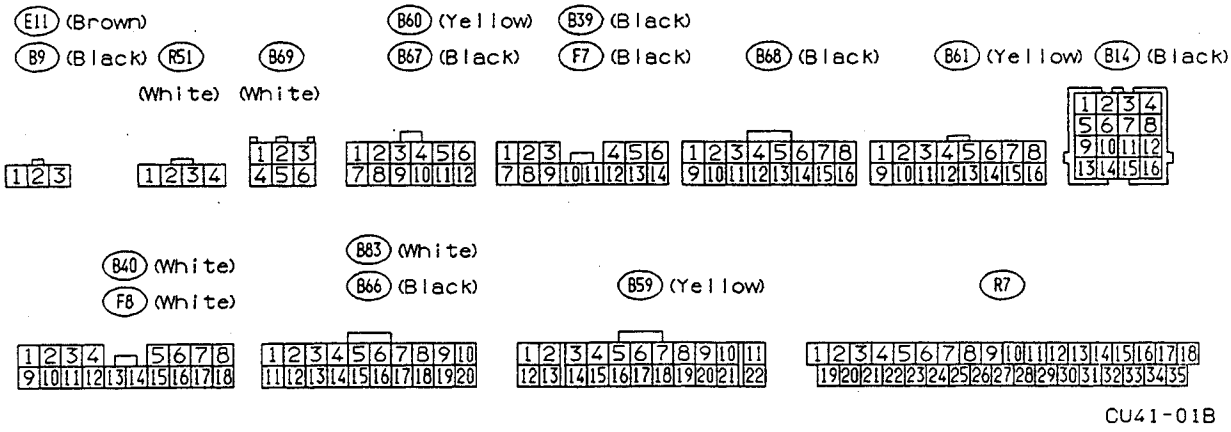
E11 (Brown)
B9 (Black)
R51
B69 (White)
B69 (White)
B60 (Yellow)
B67 (Black)
B39 (Black)
F7 (Black)
B68 (Black)
B61 (Yellow)
B14 (Black)
B40 (White)
F8 (White)
B83 (White)
B66 (Black)
B59 (Yellow)
R7

CU41-01B

5. A/T SHIFT LOCK SYSTEM

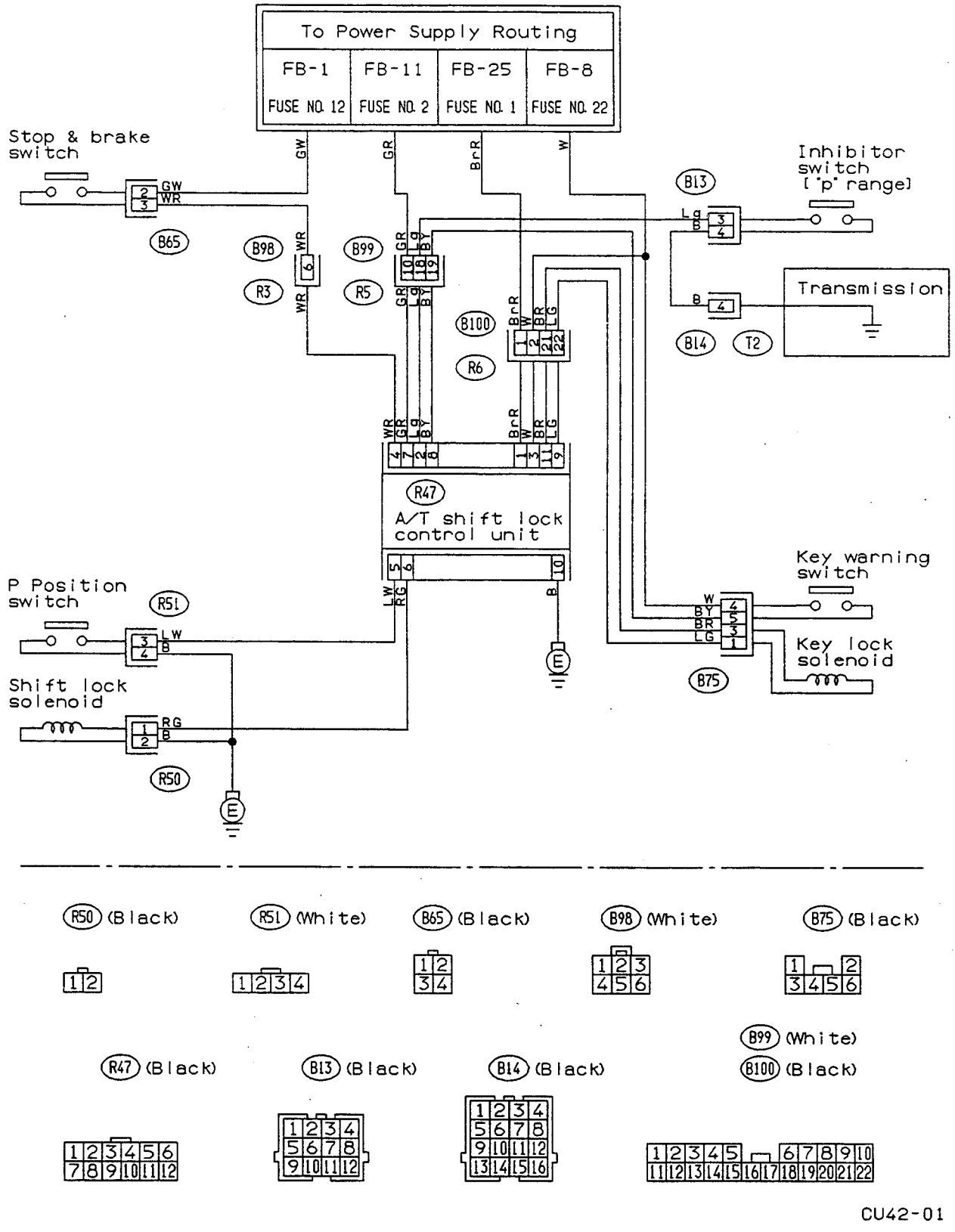

Fig. 25

6. AUDIO & CLOCK SYSTEM

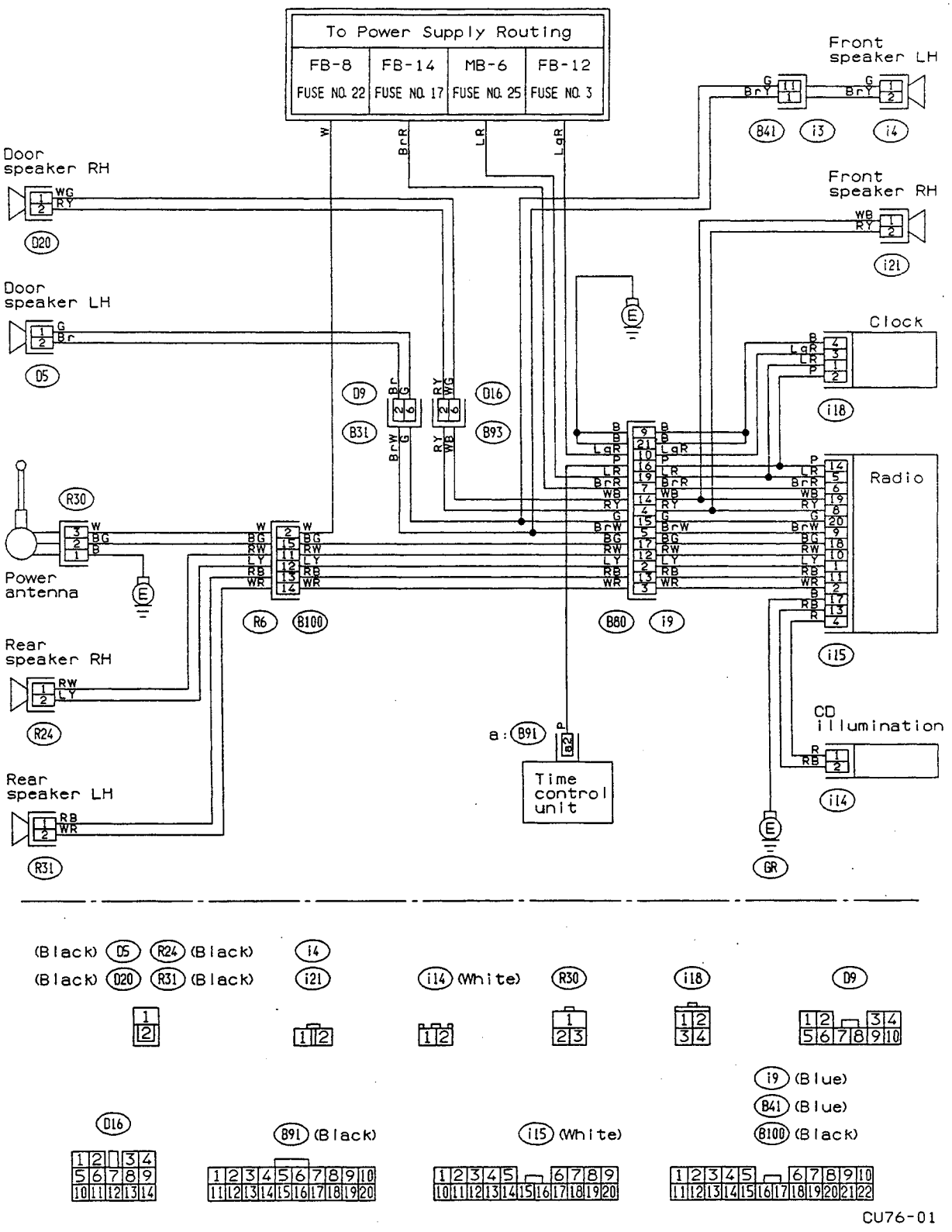

Fig. 26

7. AUTOMATIC SHOULDER BELT & KEY WARNING CHIME SYSTEM

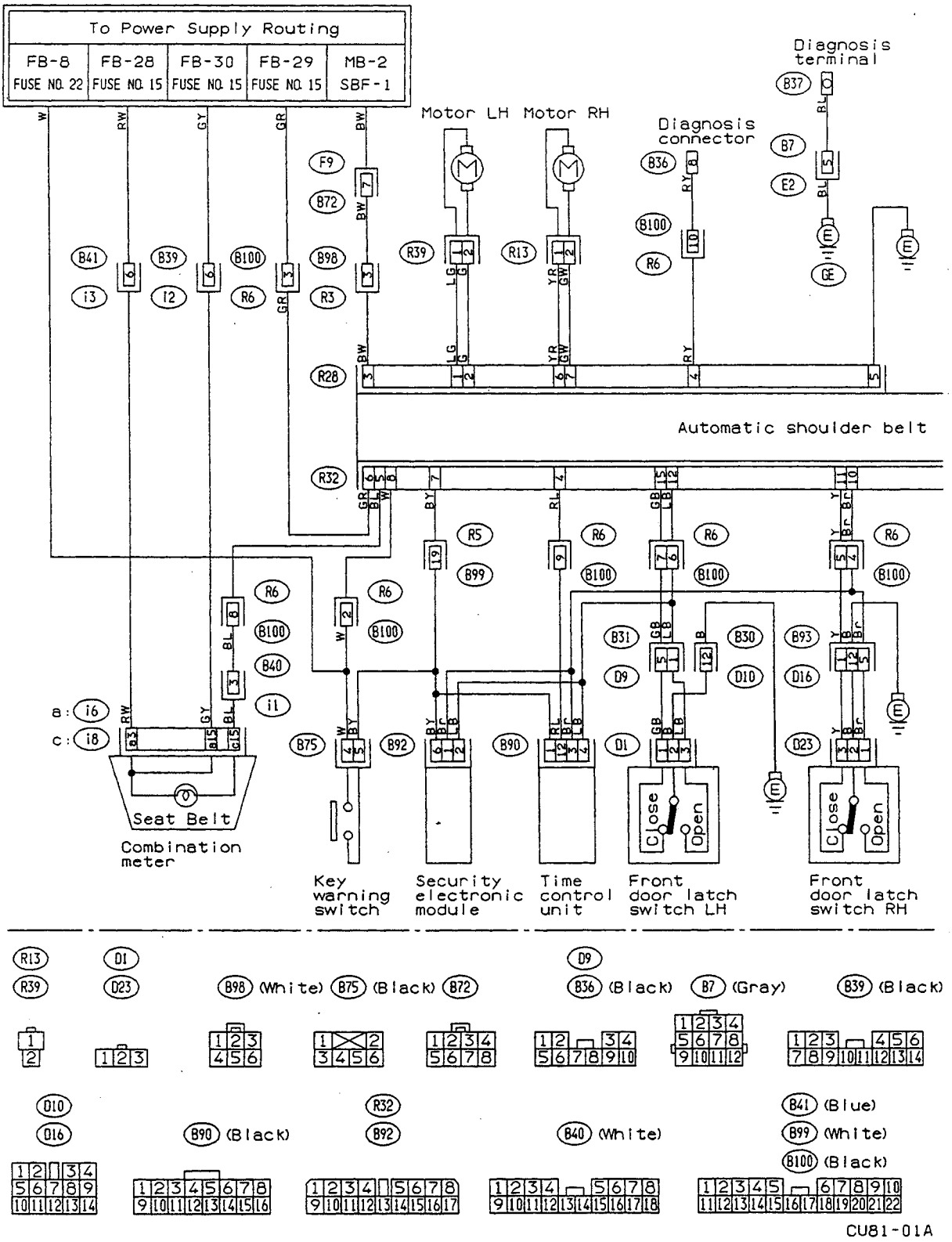

Fig. 27

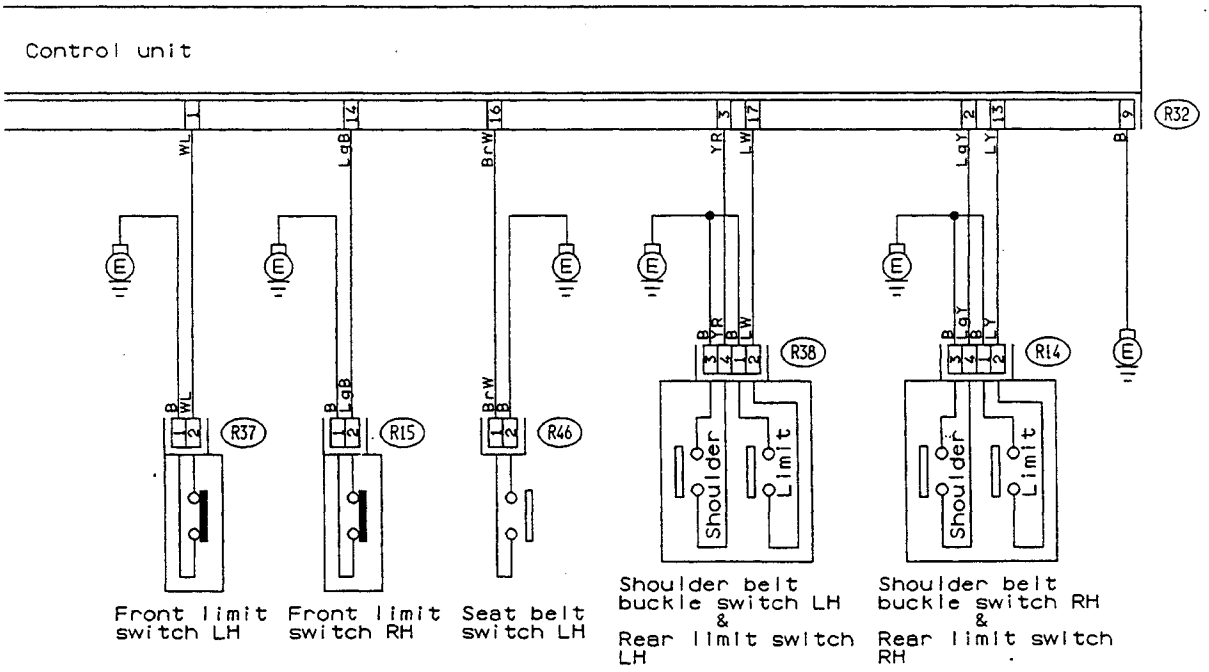
Control unit
R32
WL
LgB
BrW
YR
LW
LgY
LY
B
R37
R15
R46
R38
R14
Shoulder
Limit
Front limit switch LH
Front limit switch RH
Seat belt switch LH
Shoulder belt buckle switch LH & Rear limit switch LH
Shoulder belt buckle switch RH & Rear limit switch RH

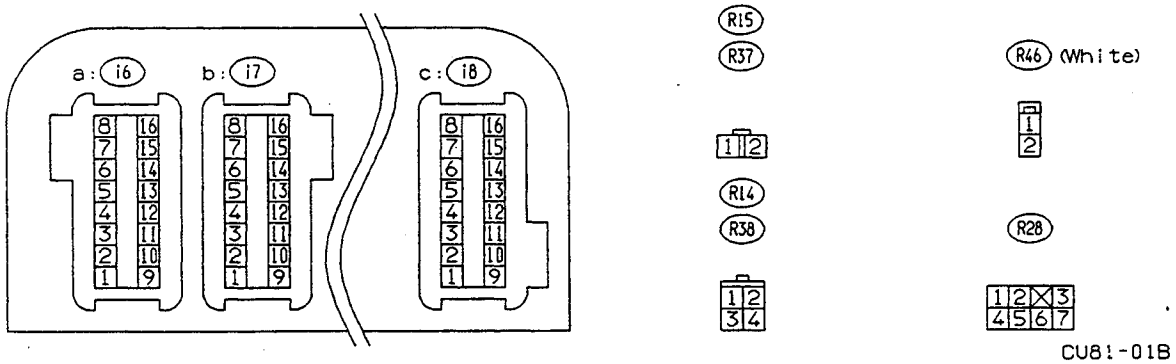
a: i6
b: i7
c: i8
R15
R37
R14
R38
R46 (White)
R28
CU81-01B

8. BACK-UP LIGHT SYSTEM

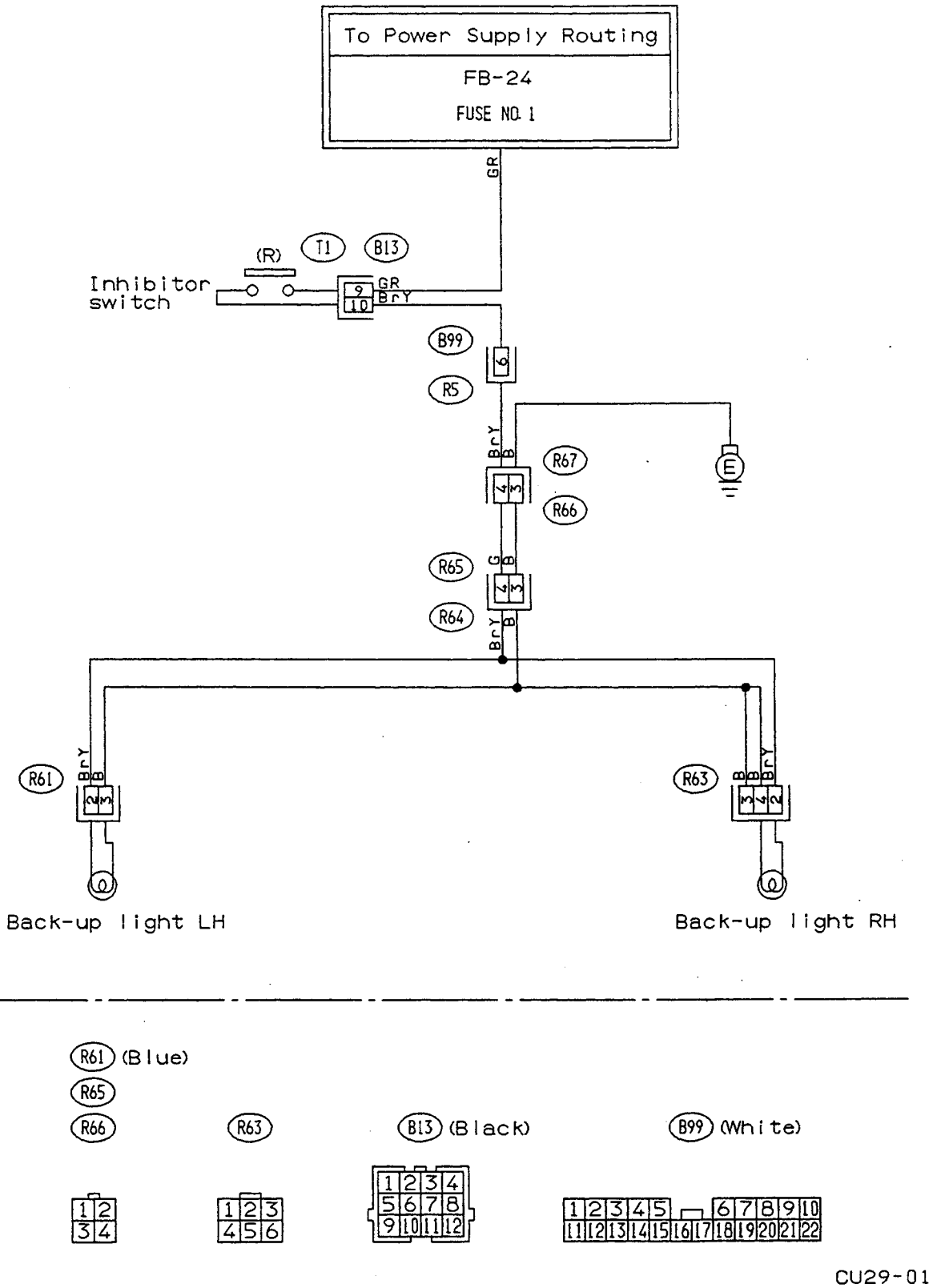

Fig. 28

9. CHARGING SYSTEM

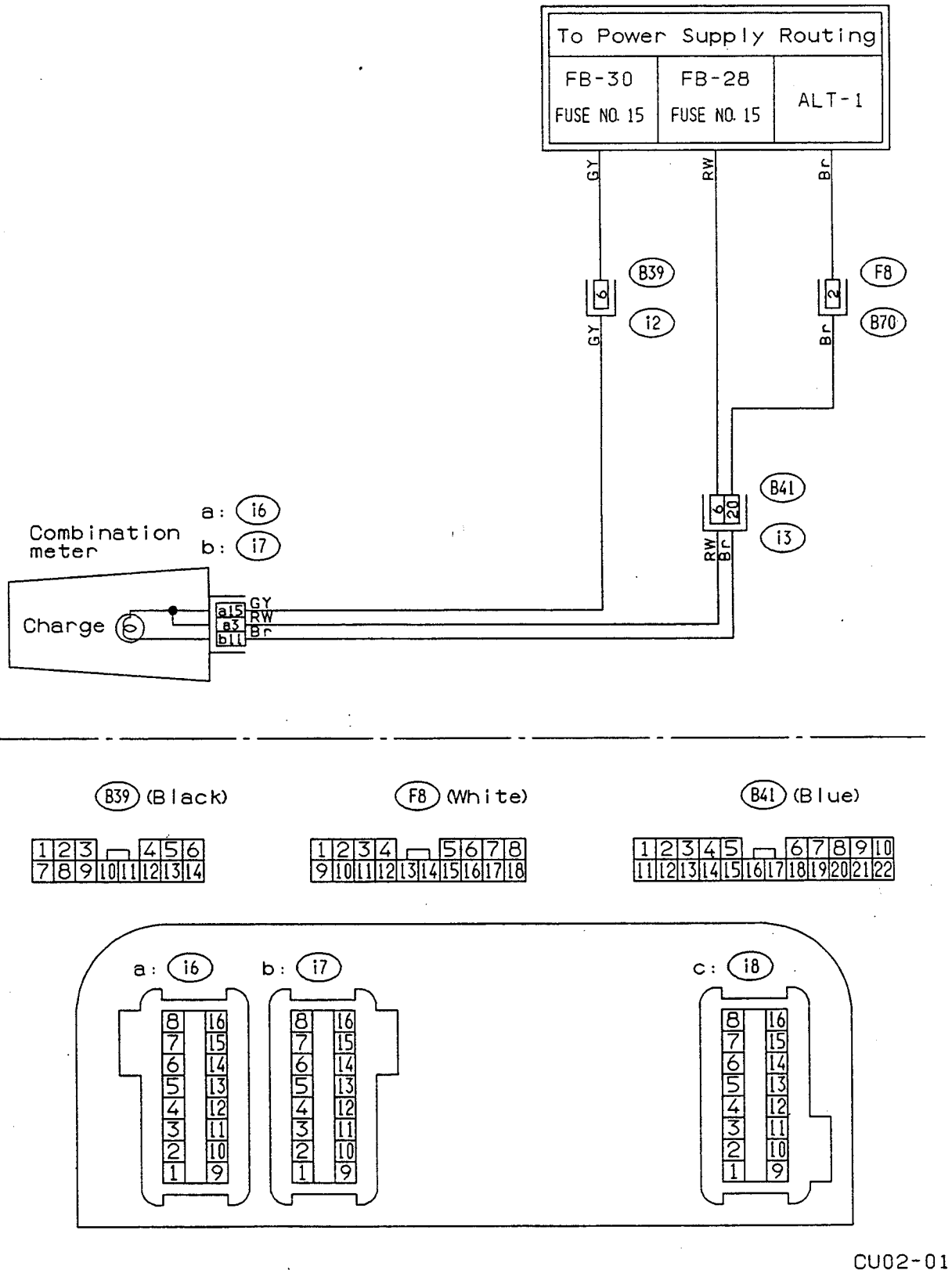

Fig. 29

10. COMBINATION METER

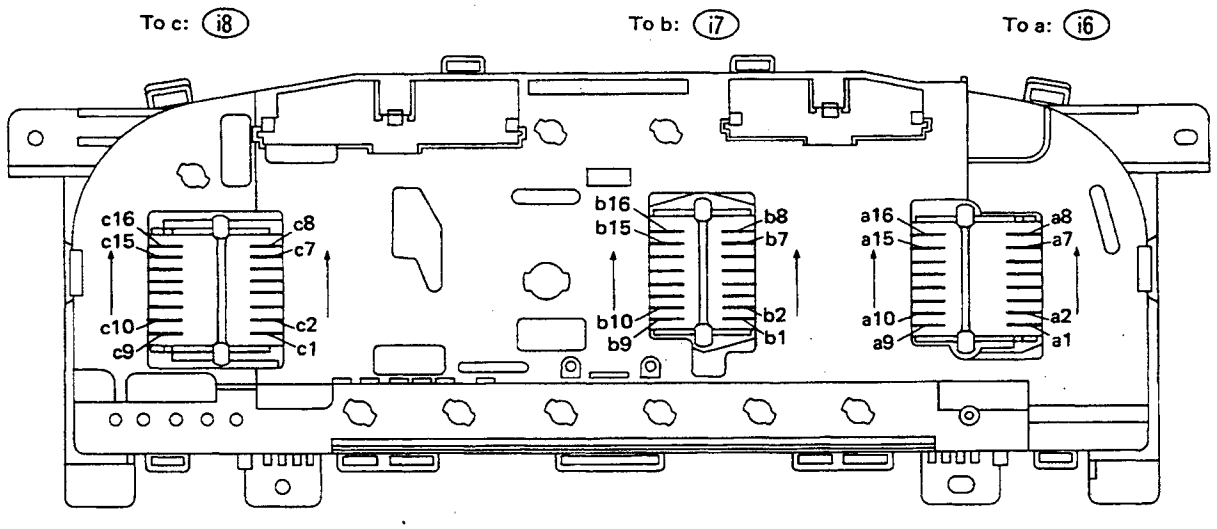

Fig. 30

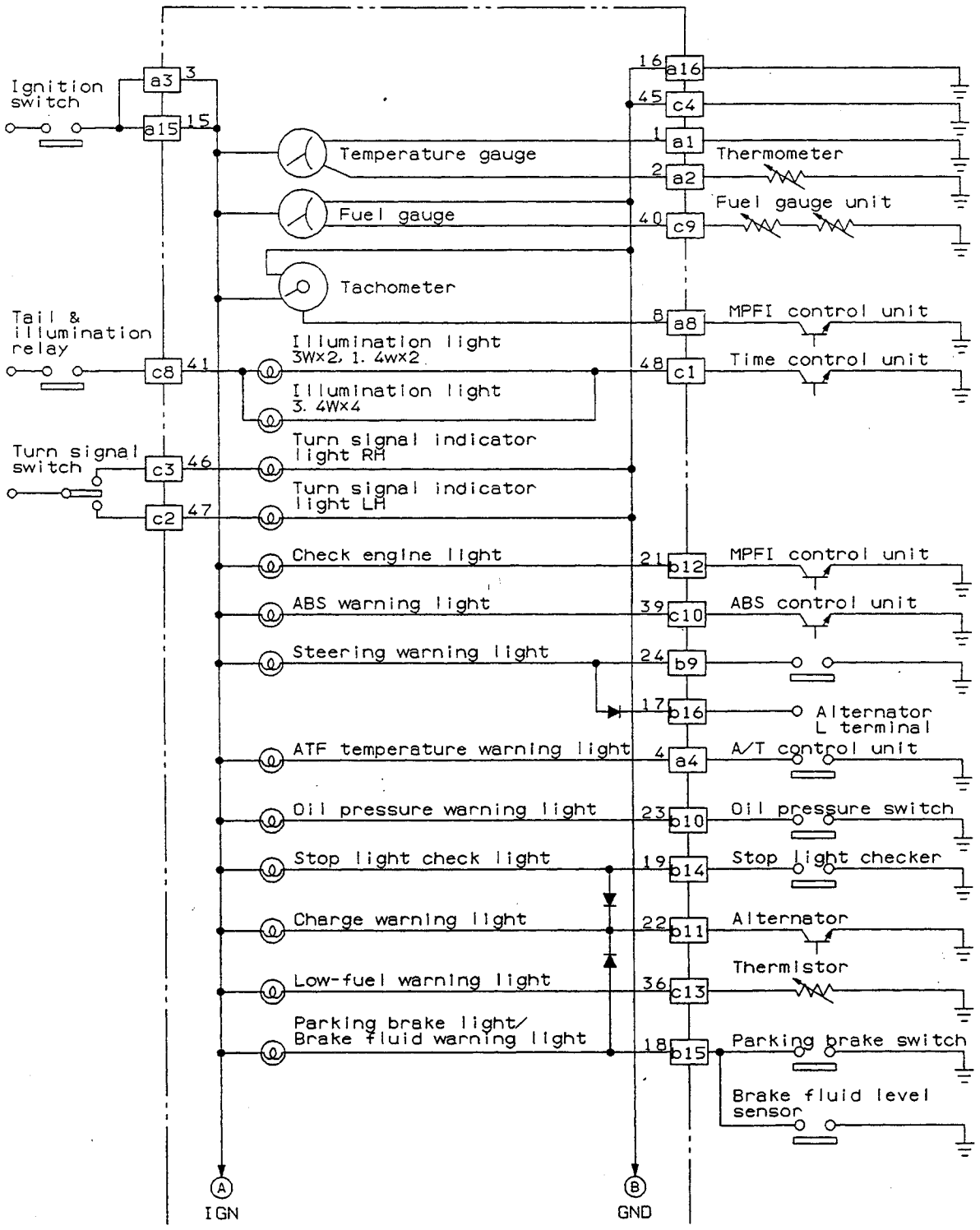

CU65-01A

Fig. 31

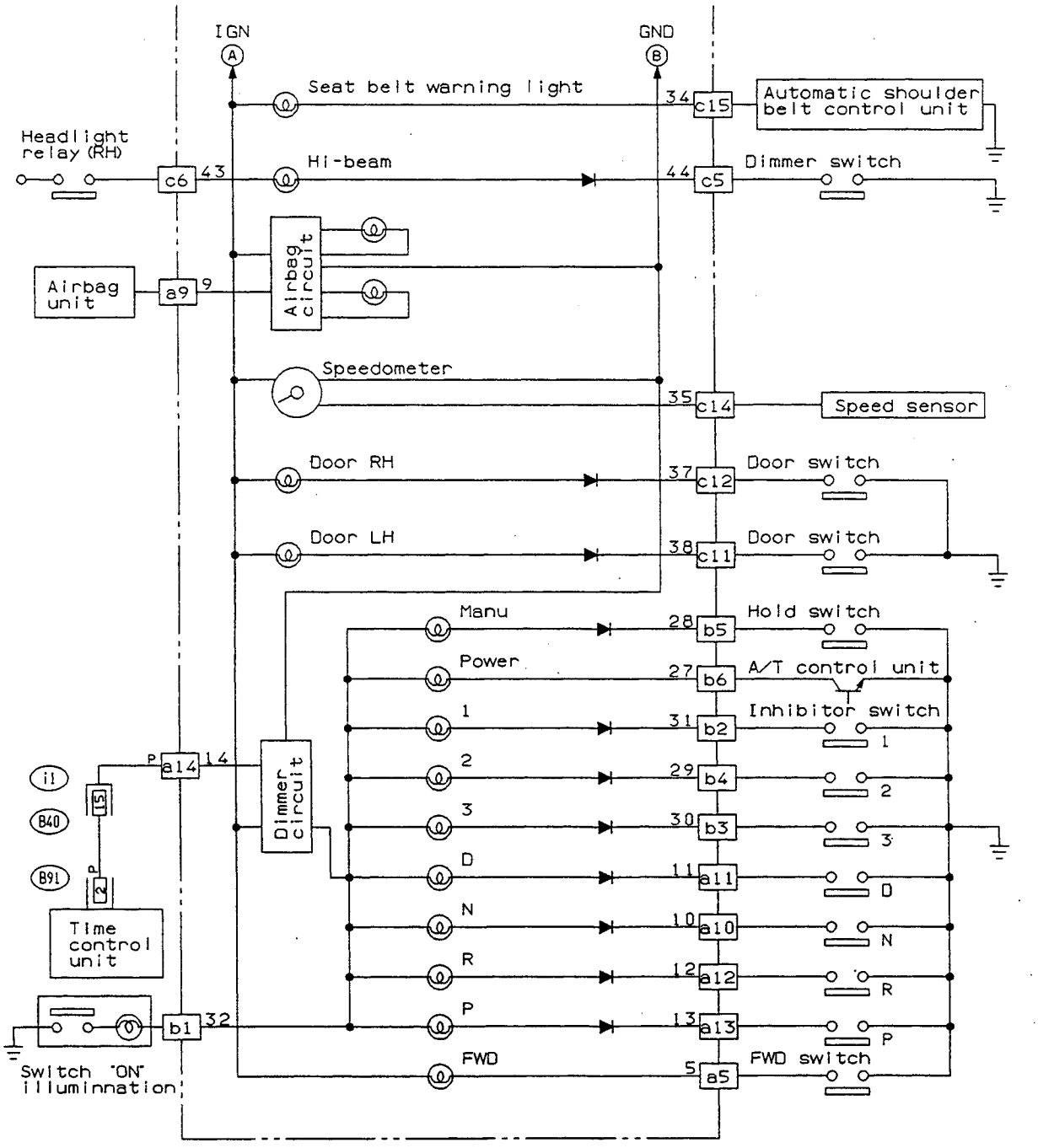
IGN
A
GND
B
Seat belt warning light
34
c15
Automatic shoulder belt control unit
Headlight relay (RH)
c6
43
Hi-beam
44
c5
Dimmer switch
Airbag unit
a9
9
Airbag circuit
Speedometer
35
c14
Speed sensor
Door RH
37
c12
Door switch
Door LH
38
c11
Door switch
Manu
28
b5
Hold switch
Power
27
b6
A/T control unit
1
31
b2
Inhibitor switch
1
2
29
b4
2
3
30
b3
3
D
11
a11
D
N
10
a10
N
R
12
a12
R
P
13
a13
P
FWD
5
a5
FWD switch
P
a14
14
Dimmer circuit
i1
B40
B91
15
2
Time control unit
b1
32
Switch "ON" illuminnation


B40 (White)
1 2 3 4 5 6 7 8
9 10 11 12 13 14 15 16 17 18
B91 (Black)
1 2 3 4 5 6 7 8 9 10
11 12 13 14 15 16 17 18 19 20

CU65-01B

11. COURTESY LIGHT & KEY HOLE ILLUMINATION LIGHT SYSTEM

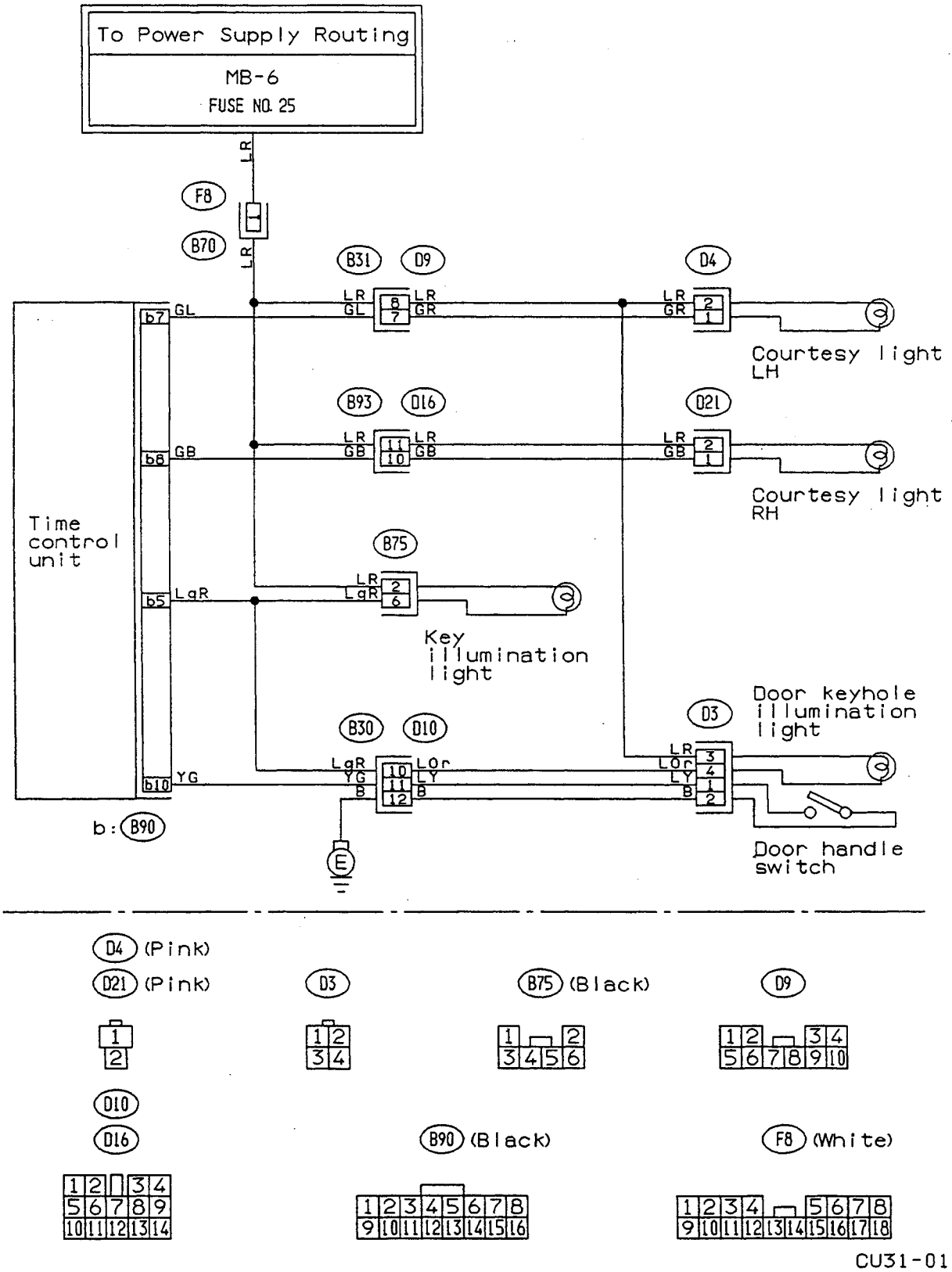

Fig. 32

12. CRUISE CONTROL SYSTEM

• U.S.A. model

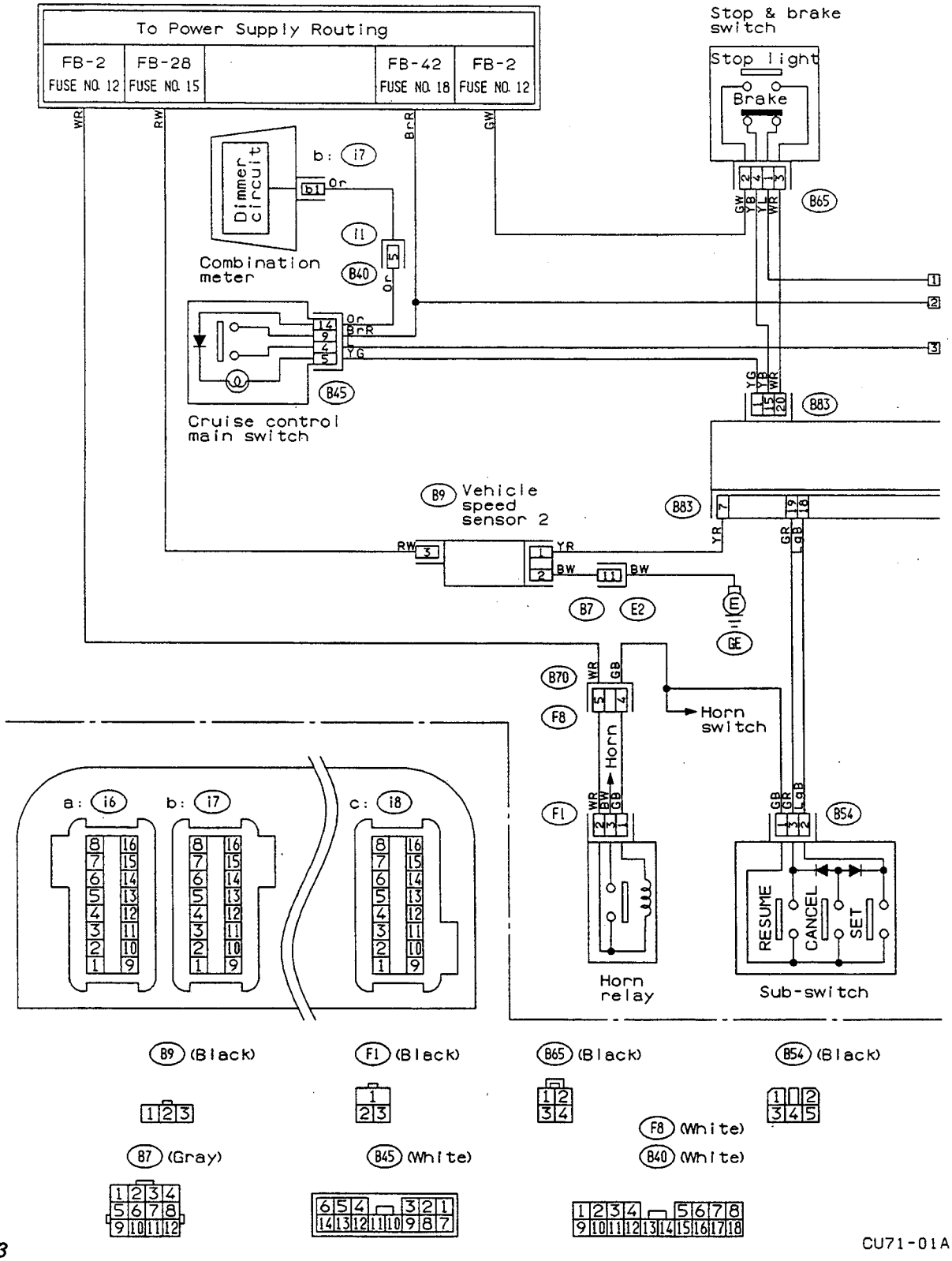

Fig. 33

CU71-01A

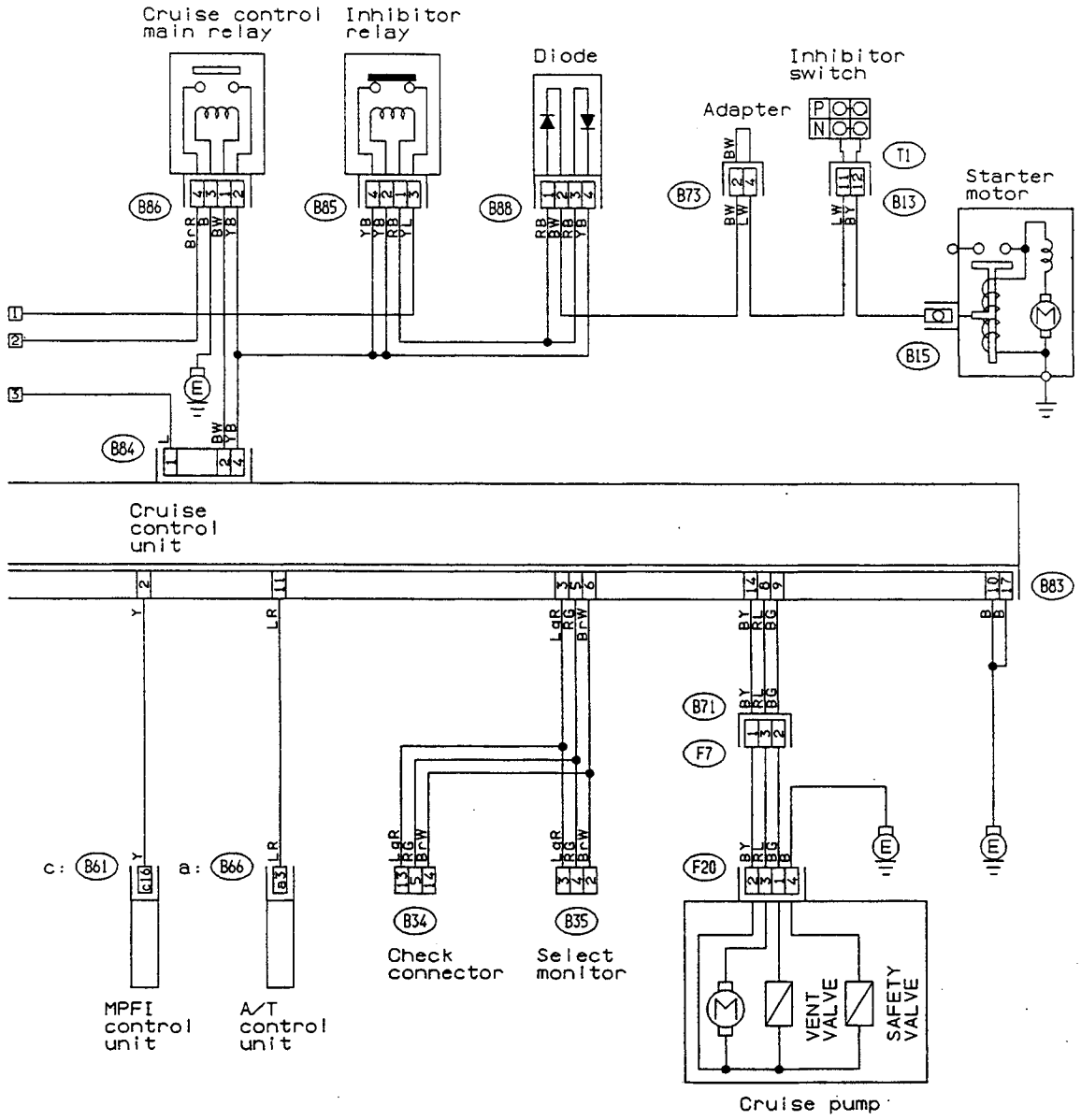
Cruise control main relay
Inhibitor relay
Diode
Inhibitor switch
Adapter
Starter motor
B886
B885
B888
B73
T1
B13
B15
B884
Cruise control unit
B83
B71
F7
F20
c: B61
a: B66
B34
B35
Check connector
Select monitor
MPFI control unit
A/T control unit
VENT VALVE
SAFETY VALVE
Cruise pump

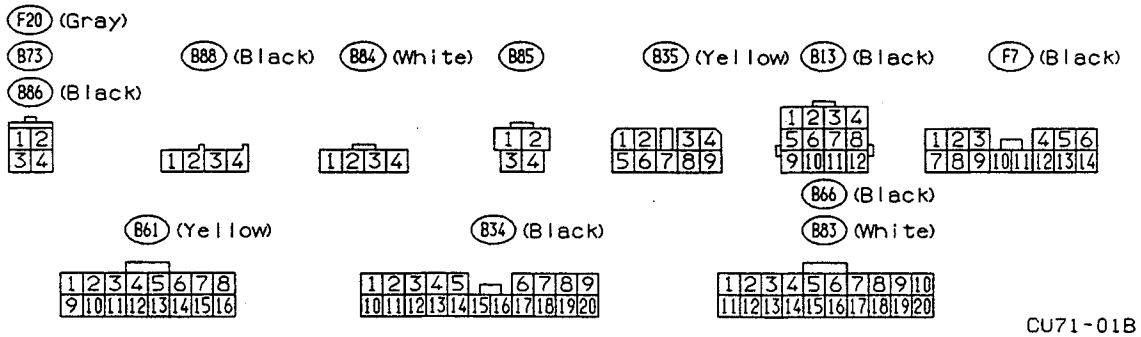
F20 (Gray)
B73
B886 (Black)
B888 (Black)
B884 (White)
B885
B35 (Yellow)
B13 (Black)
F7 (Black)
B66 (Black)
B61 (Yellow)
B34 (Black)
B83 (White)

CU71-01B

• **CANADA model**

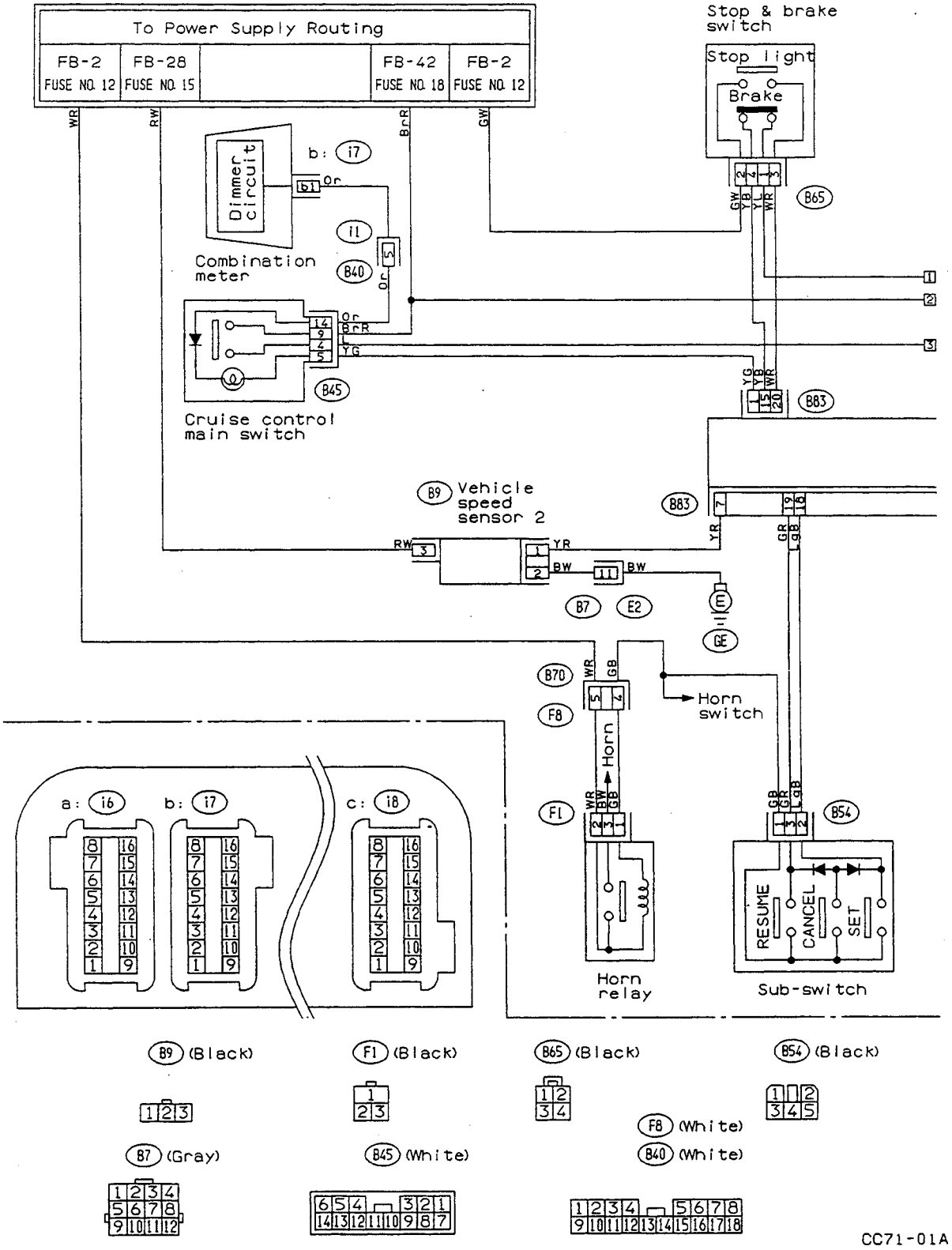

Fig. 34

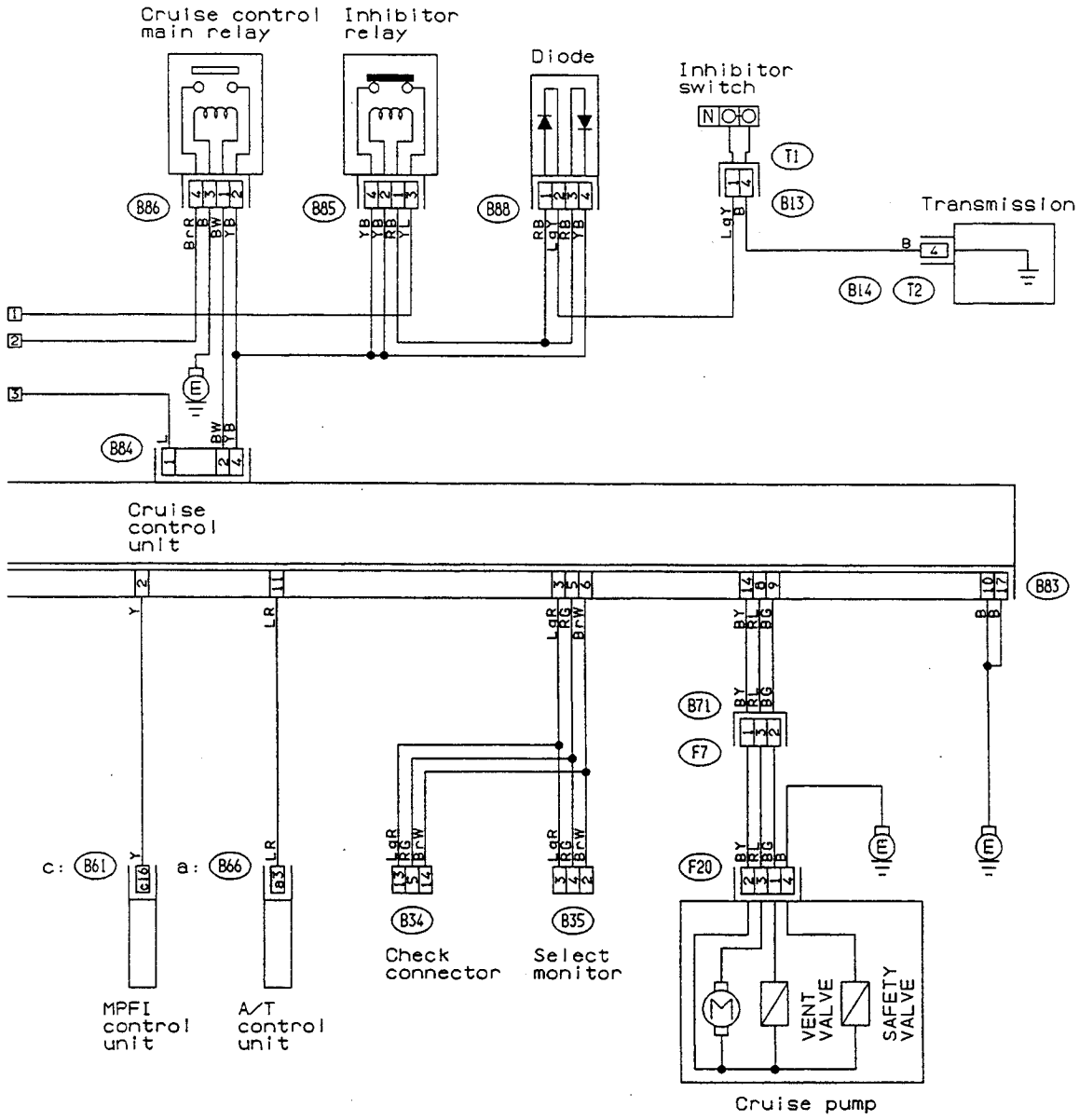
Cruise control main relay
Inhibitor relay
Diode
Inhibitor switch
Transmission
Cruise control unit
Check connector
Select monitor
MPFI control unit
A/T control unit
VENT VALVE
SAFETY VALVE
Cruise pump

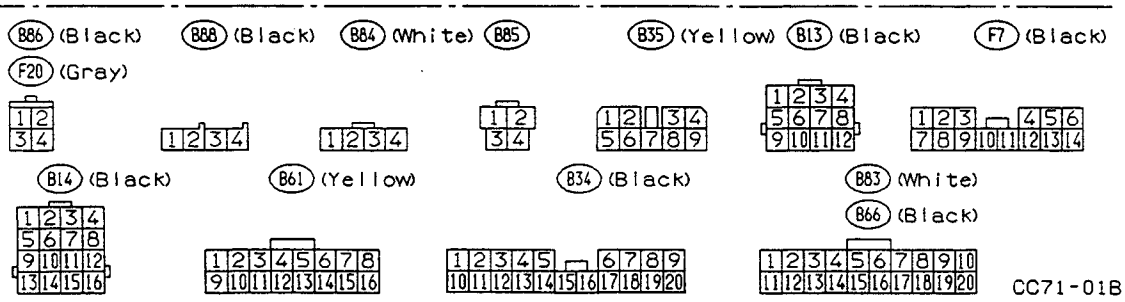
B86 (Black)
B88 (Black)
B84 (White)
B85
B35 (Yellow)
B13 (Black)
F7 (Black)
F20 (Gray)
B14 (Black)
B61 (Yellow)
B34 (Black)
B83 (White)
B66 (Black)
CC71-01B

13. DOOR LOCK SYSTEM

• U.S.A. and Canada model

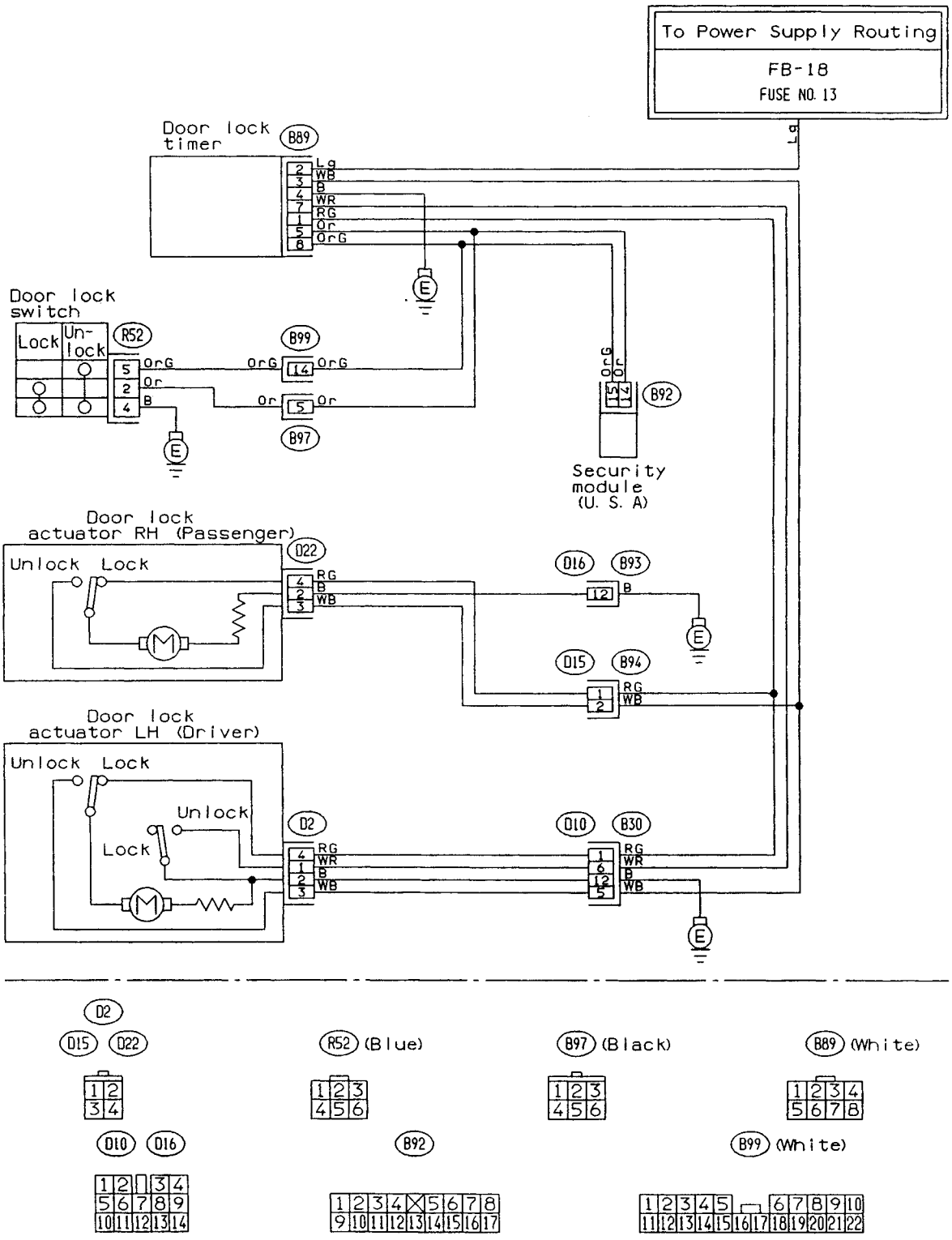

CU73-02

Fig. 3

15. ENGINE ELECTRICAL (MPFI) SYSTEM

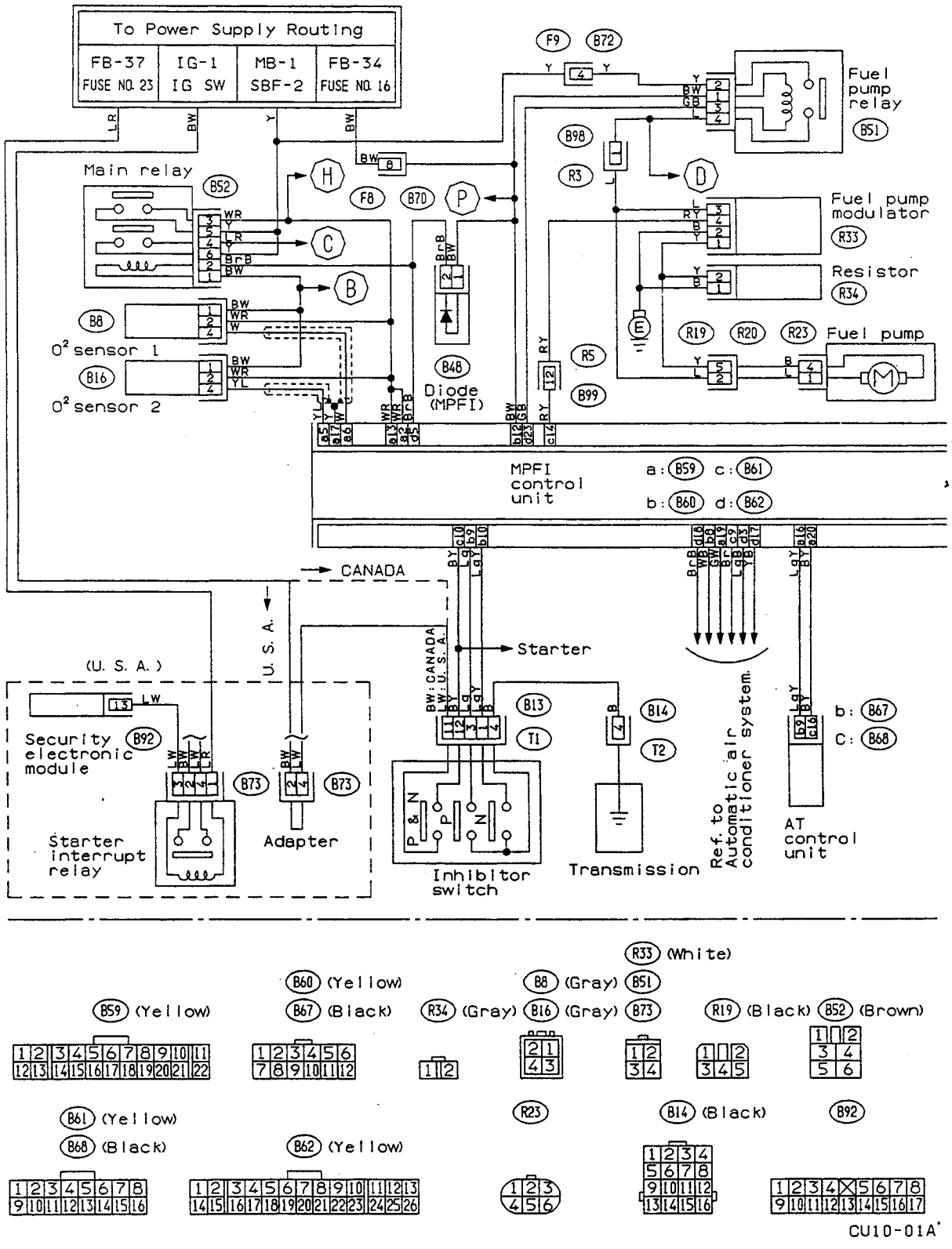

Fig. 38-1

• **CANADA model**

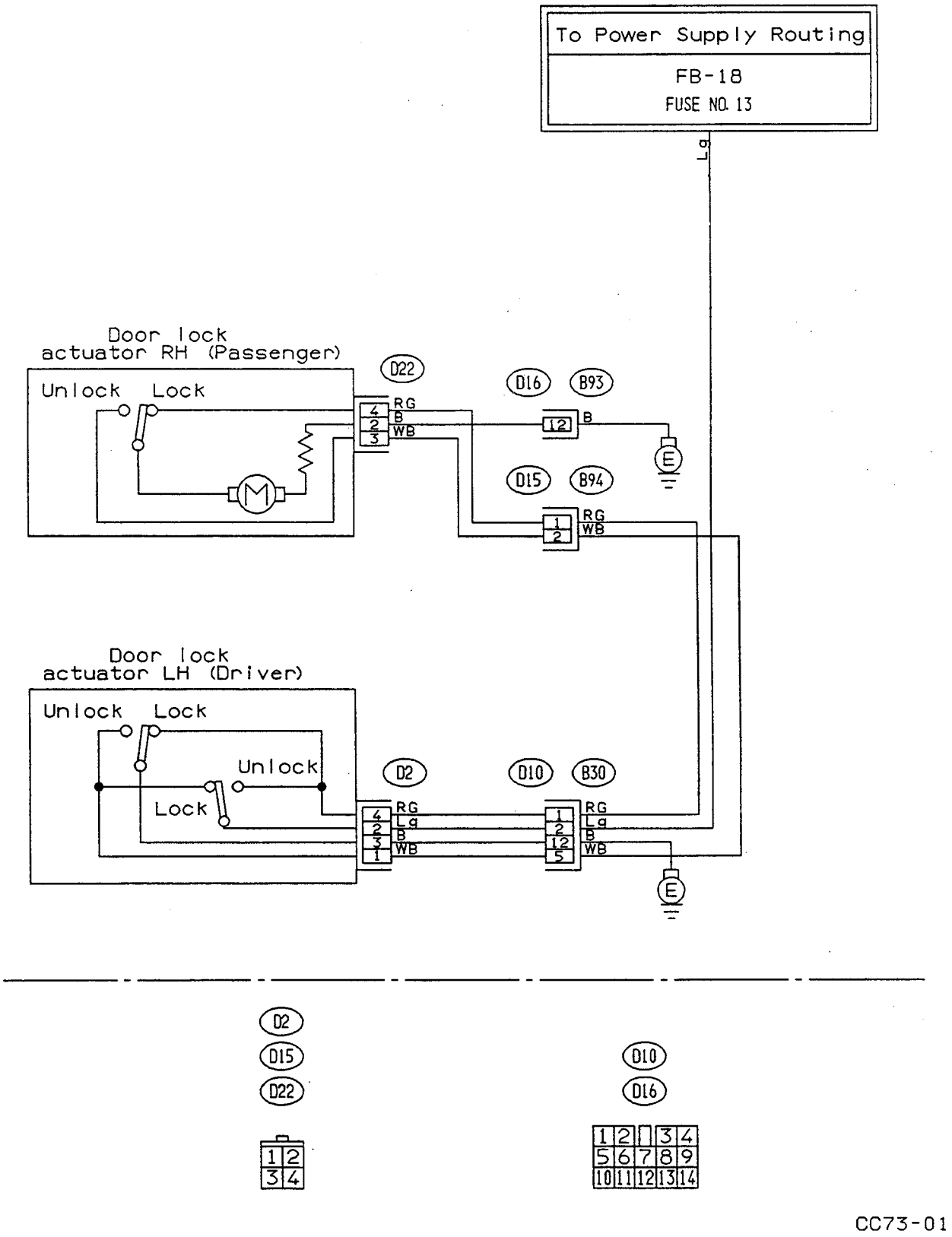

Fig. 36

14. ELECTRONICALLY CONTROLLED POWER STEERING SYSTEM

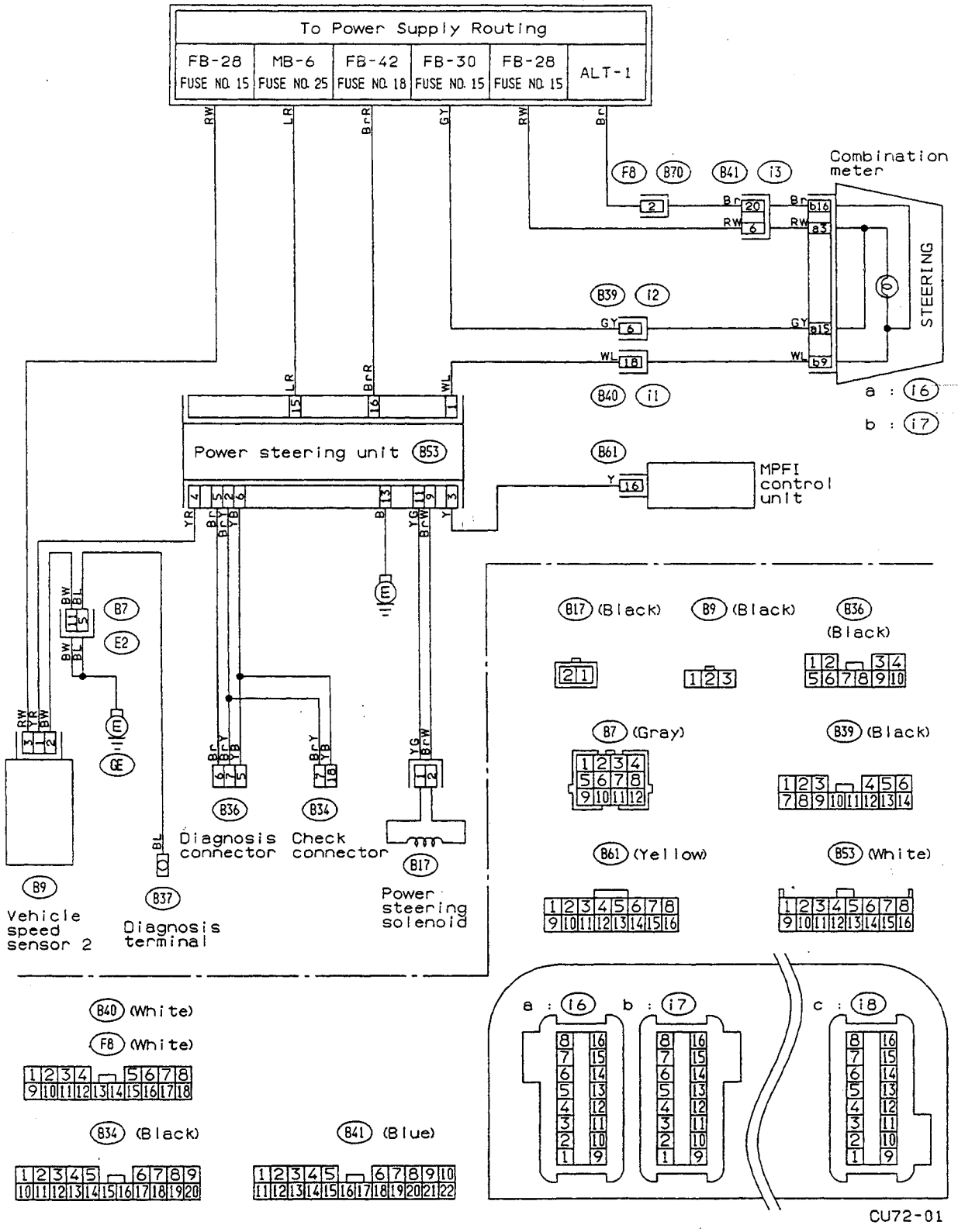

Fig. 37

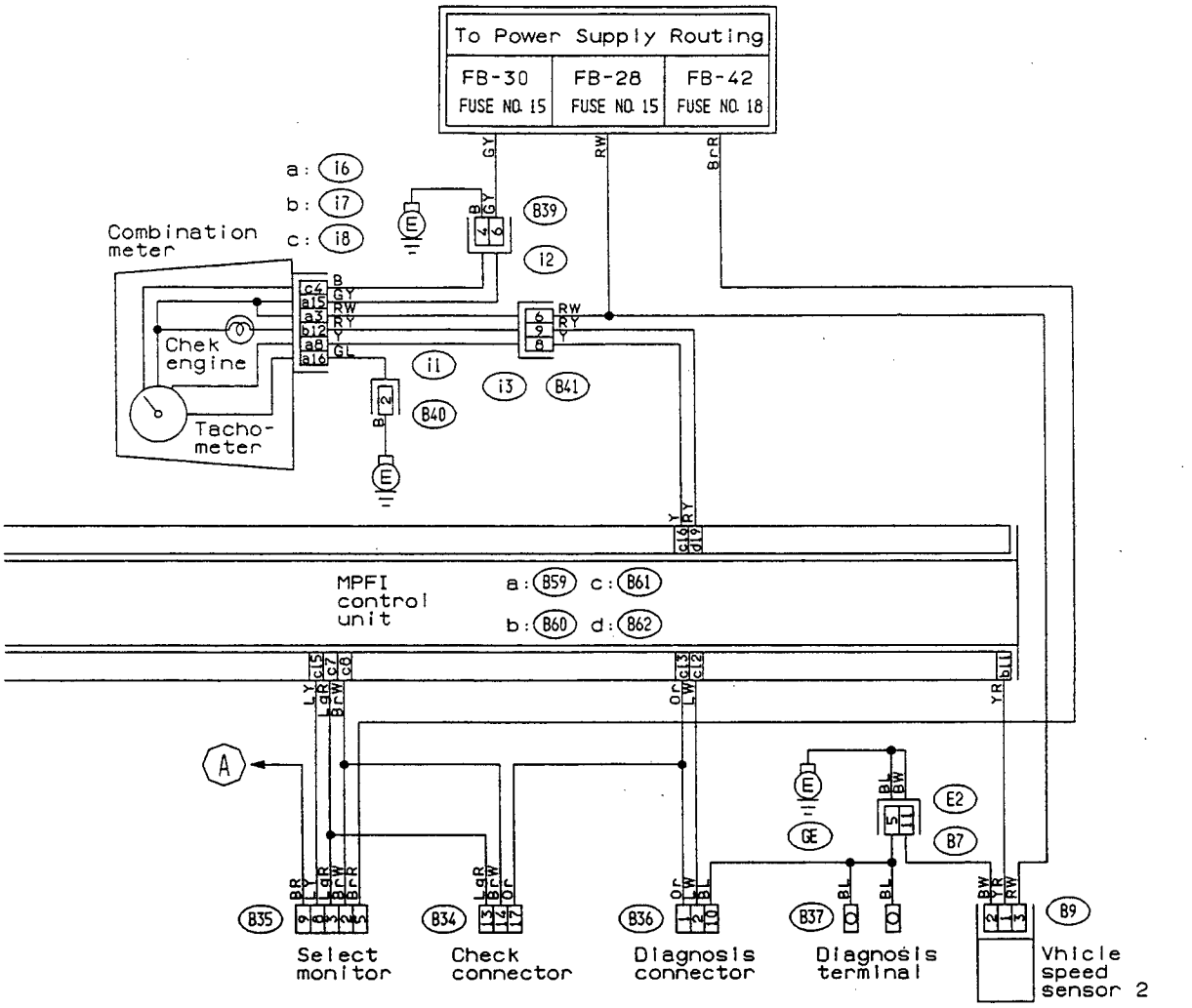
To Power Supply Routing
FB-30 FUSE NO. 15
FB-28 FUSE NO. 15
FB-42 FUSE NO. 18
Combination meter
Chek engine
Tacho-meter
MPFI control unit
a: B59 c: B61
b: B60 d: B62
Select monitor
Check connector
Diagnosis connector
Diagnosis terminal
Vhicle speed sensor 2

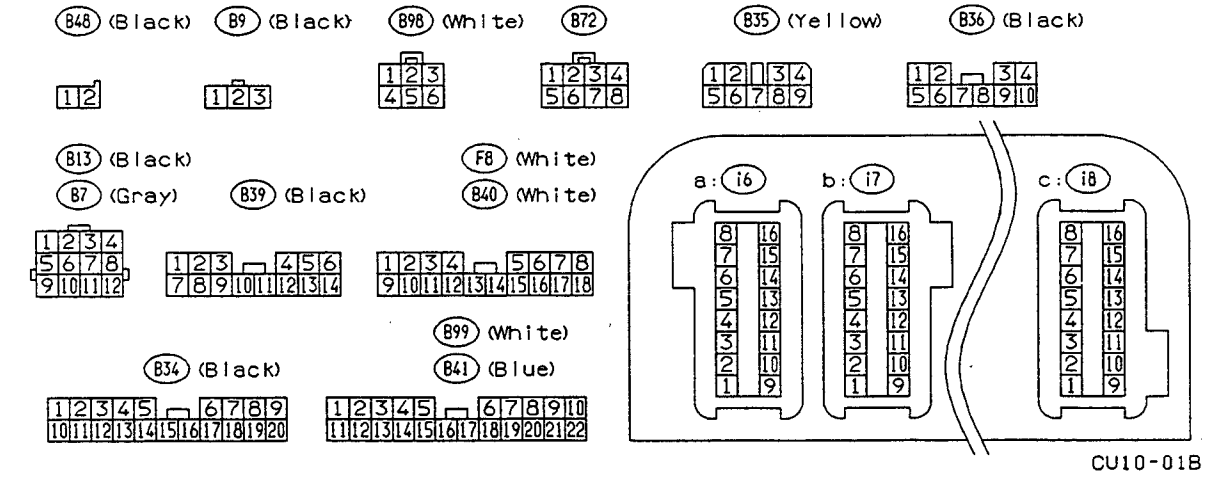
B48 (Black)
B9 (Black)
B98 (White)
B72
B35 (Yellow)
B36 (Black)
B13 (Black)
B7 (Gray)
B39 (Black)
F8 (White)
B40 (White)
B99 (White)
B34 (Black)
B41 (Blue)
a: i6
b: i7
c: i8
CU10-01B

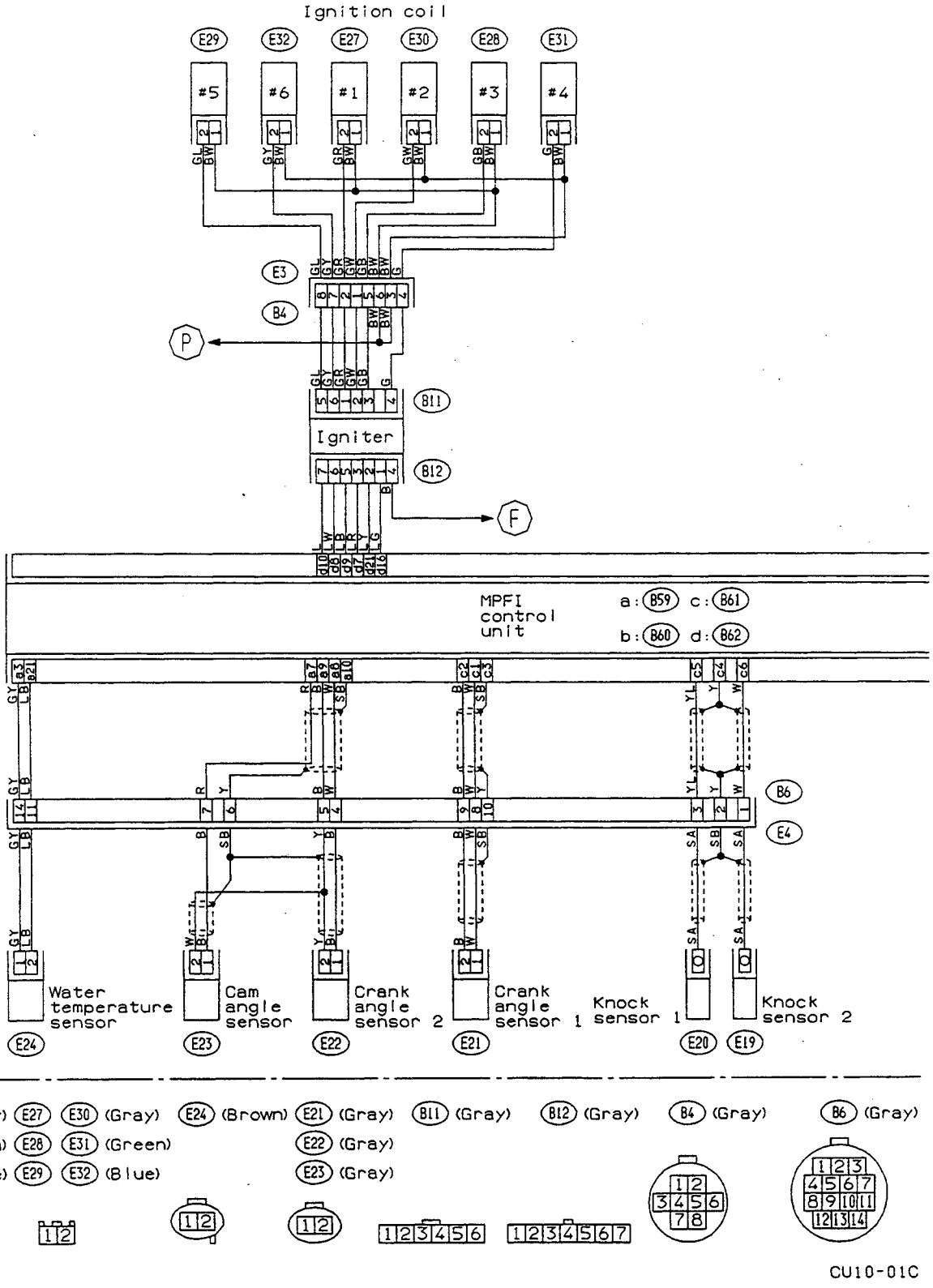
Ignition coil
#5
#6
#1
#2
#3
#4
Igniter
MPFI control unit
a: B59 c: B61
b: B60 d: B62
Water temperature sensor
Cam angle sensor
Crank angle sensor 2
Crank angle sensor 1
Knock sensor 1
Knock sensor 2
(Gray) E27 E30 (Gray) E24 (Brown) E21 (Gray) B11 (Gray) B12 (Gray) B4 (Gray) B6 (Gray)
(Green) E28 E31 (Green) E22 (Gray)
(Blue) E29 E32 (Blue) E23 (Gray)
CU10-01C

Fig. 38-2

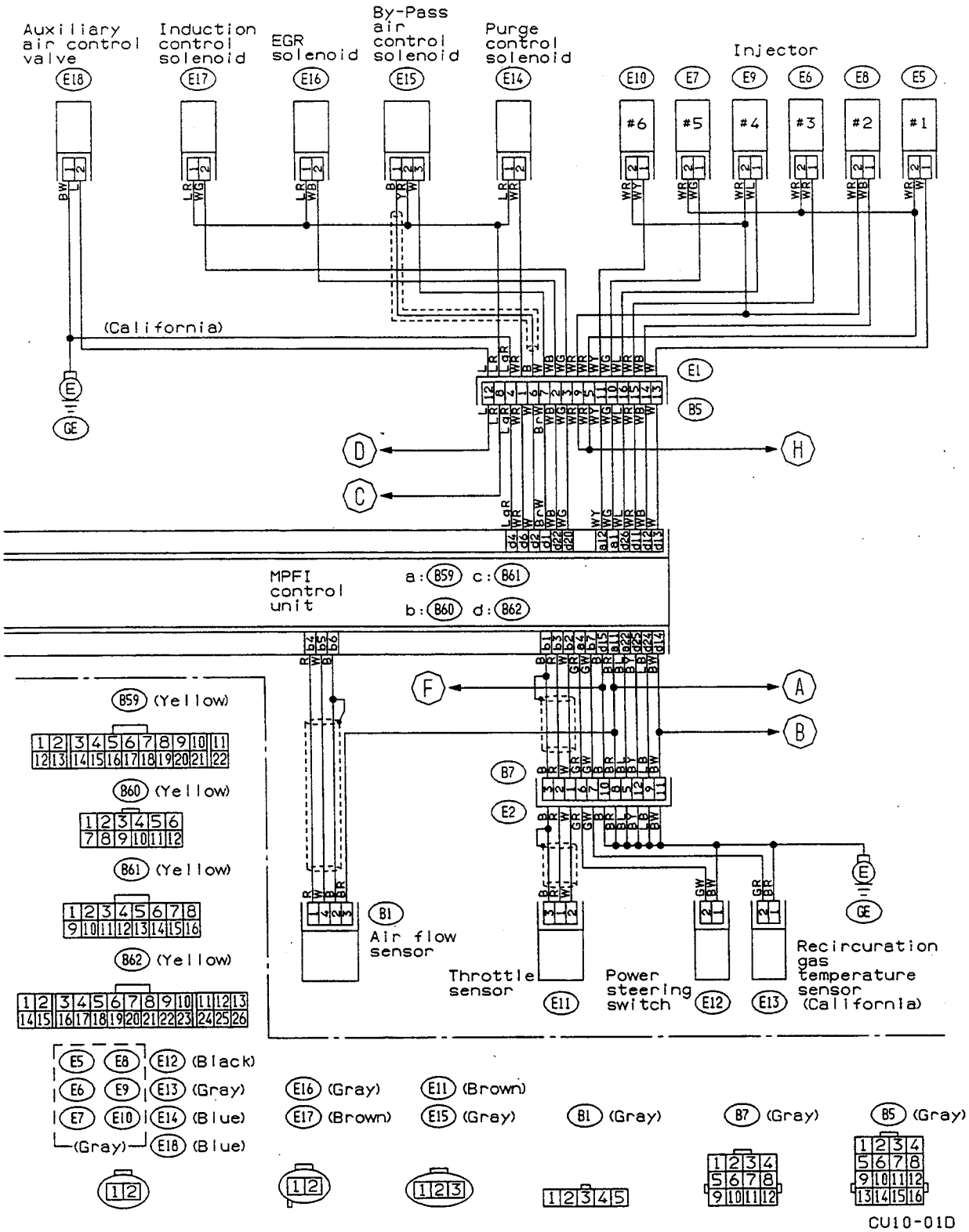
Auxiliary air control valve
Induction control solenoid
EGR solenoid
By-Pass air control solenoid
Purge control solenoid
Injector
#6
#5
#4
#3
#2
#1
(California)
MPFI control unit
a: B59 c: B61
b: B60 d: B62
Air flow sensor
Throttle sensor
Power steering switch
Recircuration gas temperature sensor (California)
B59 (Yellow)
B60 (Yellow)
B61 (Yellow)
B62 (Yellow)
E5 E8 E12 (Black)
E6 E9 E13 (Gray)
E7 E10 E14 (Blue)
(Gray) E18 (Blue)
E16 (Gray)
E17 (Brown)
E11 (Brown)
E15 (Gray)
B1 (Gray)
B7 (Gray)
B5 (Gray)
CU10-01D

16. FRONT WIPER AND WASHER SYSTEM

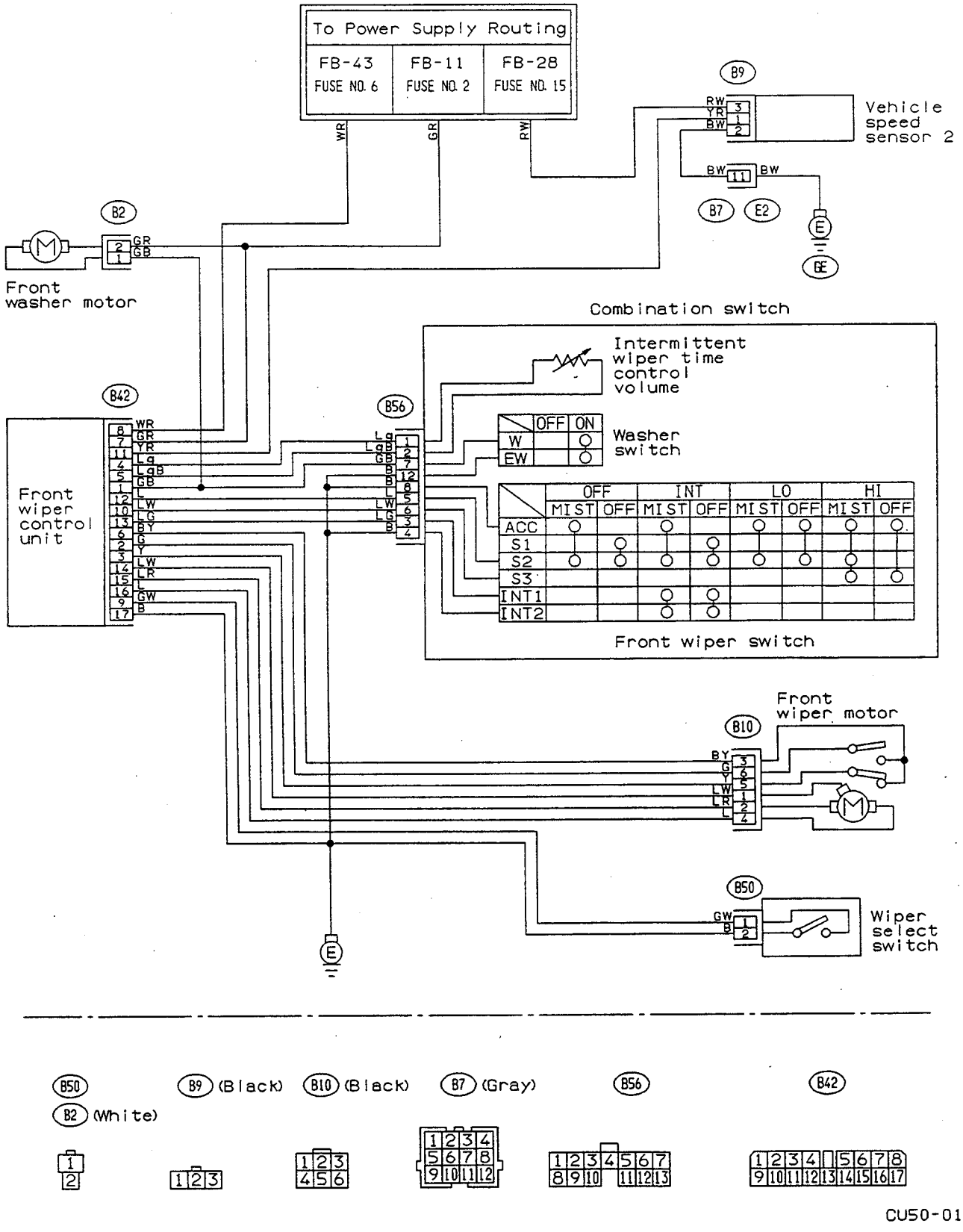

Fig. 39

17. FUEL GAUGE SYSTEM

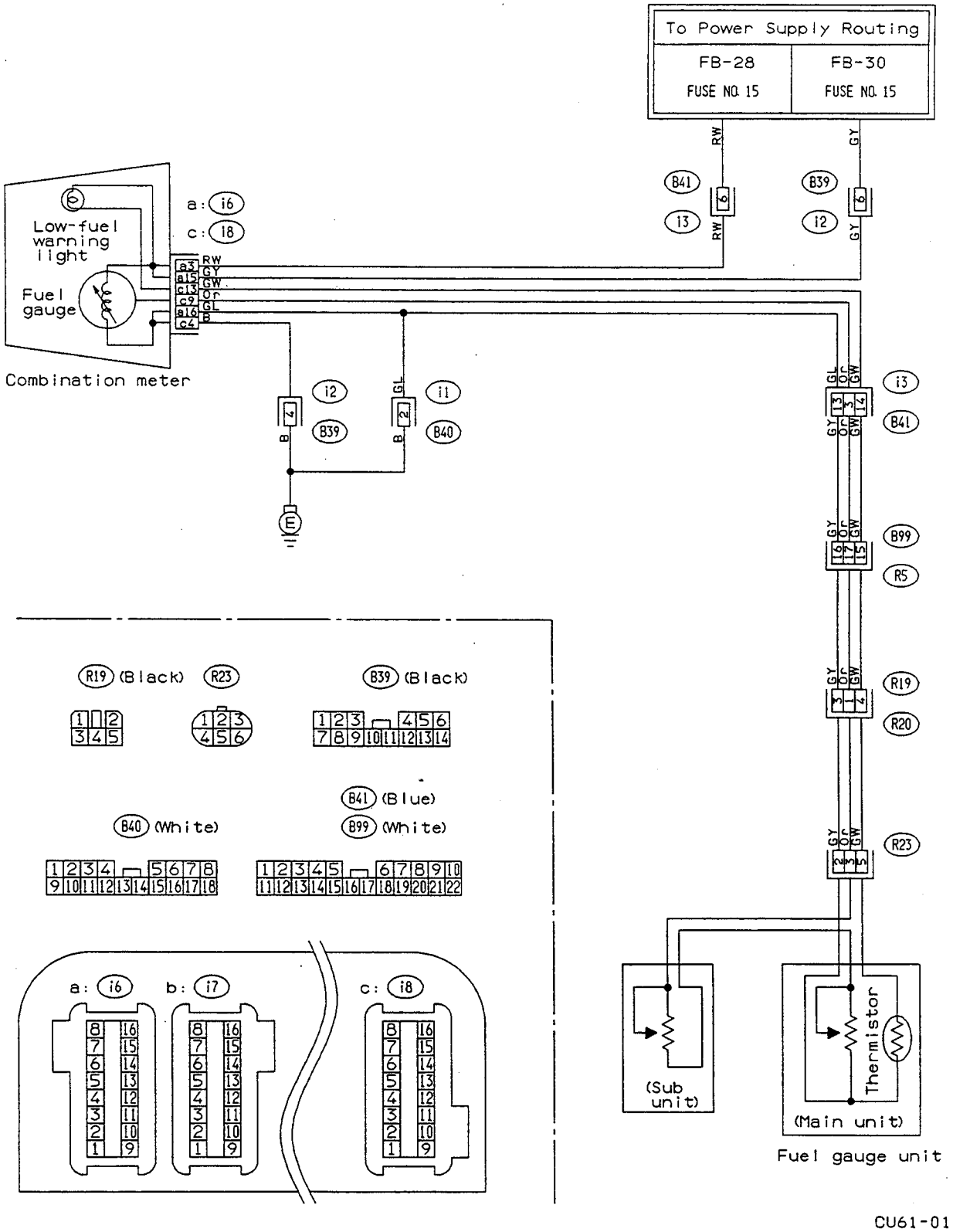

Fig. 40

18. HORN AND CIGARETTE LIGHTER SYSTEM

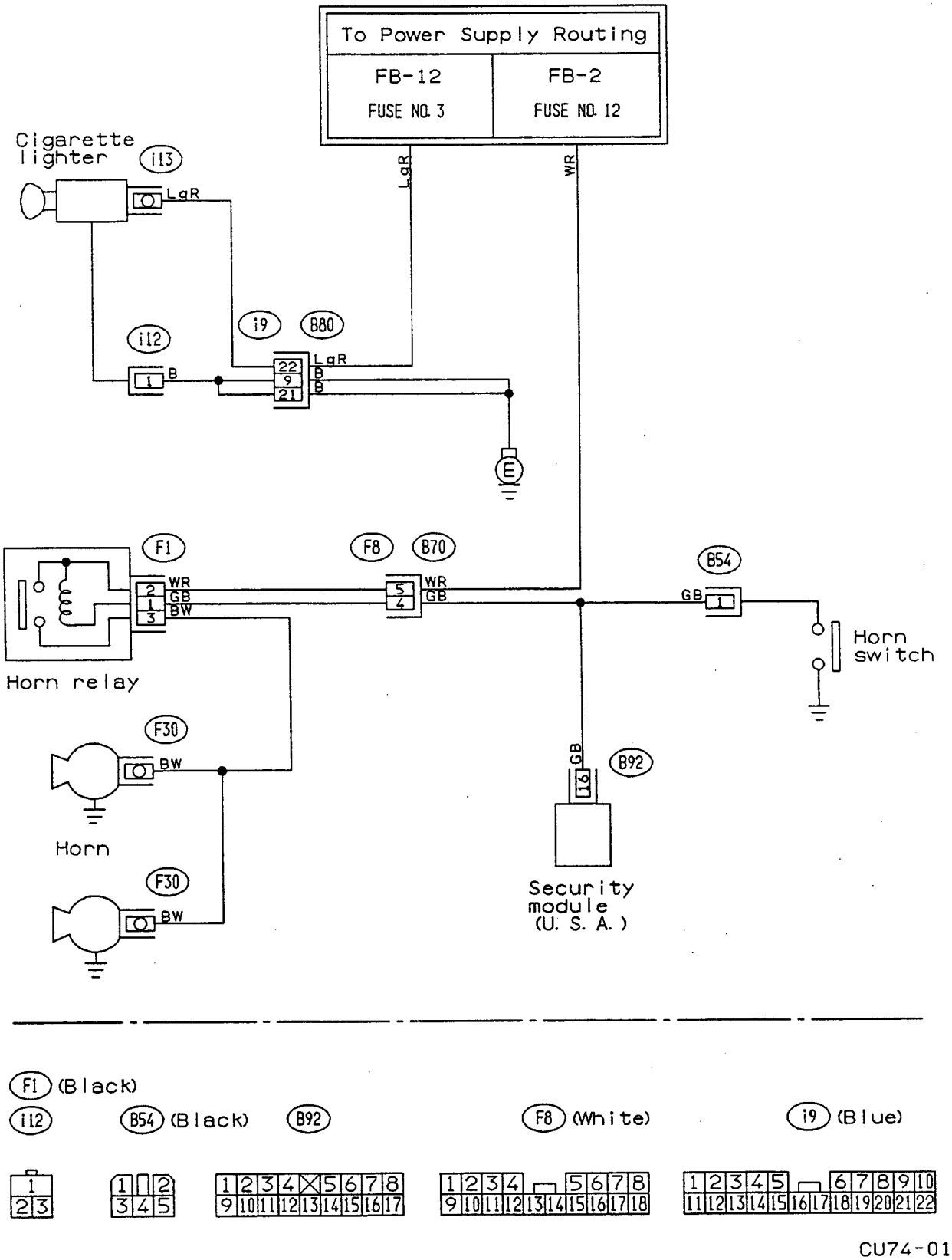

Fig. 41

19. LIGHTING (HEADLIGHT & FOG LIGHT) SYSTEM

- **U.S.A. model**

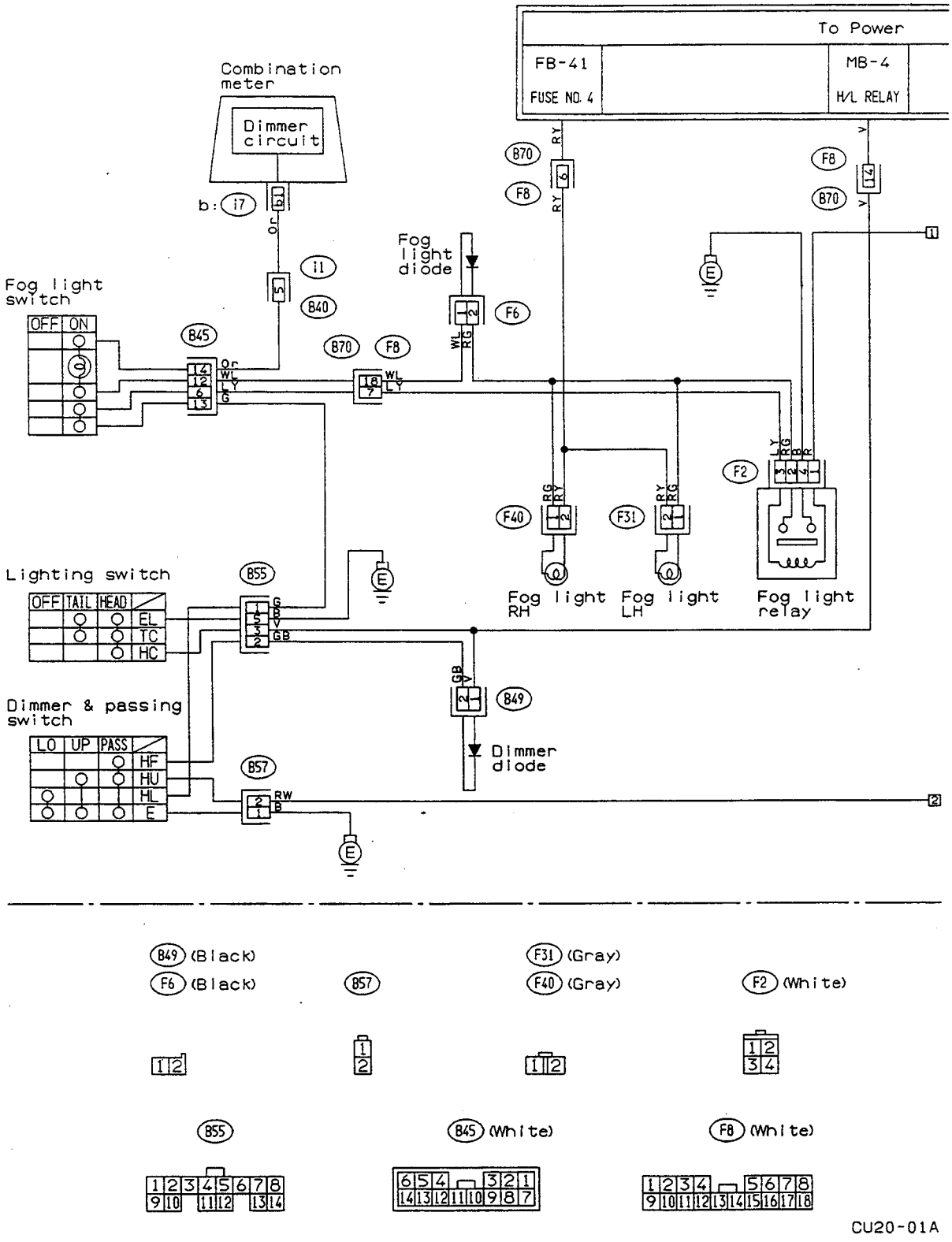

Fig. 42

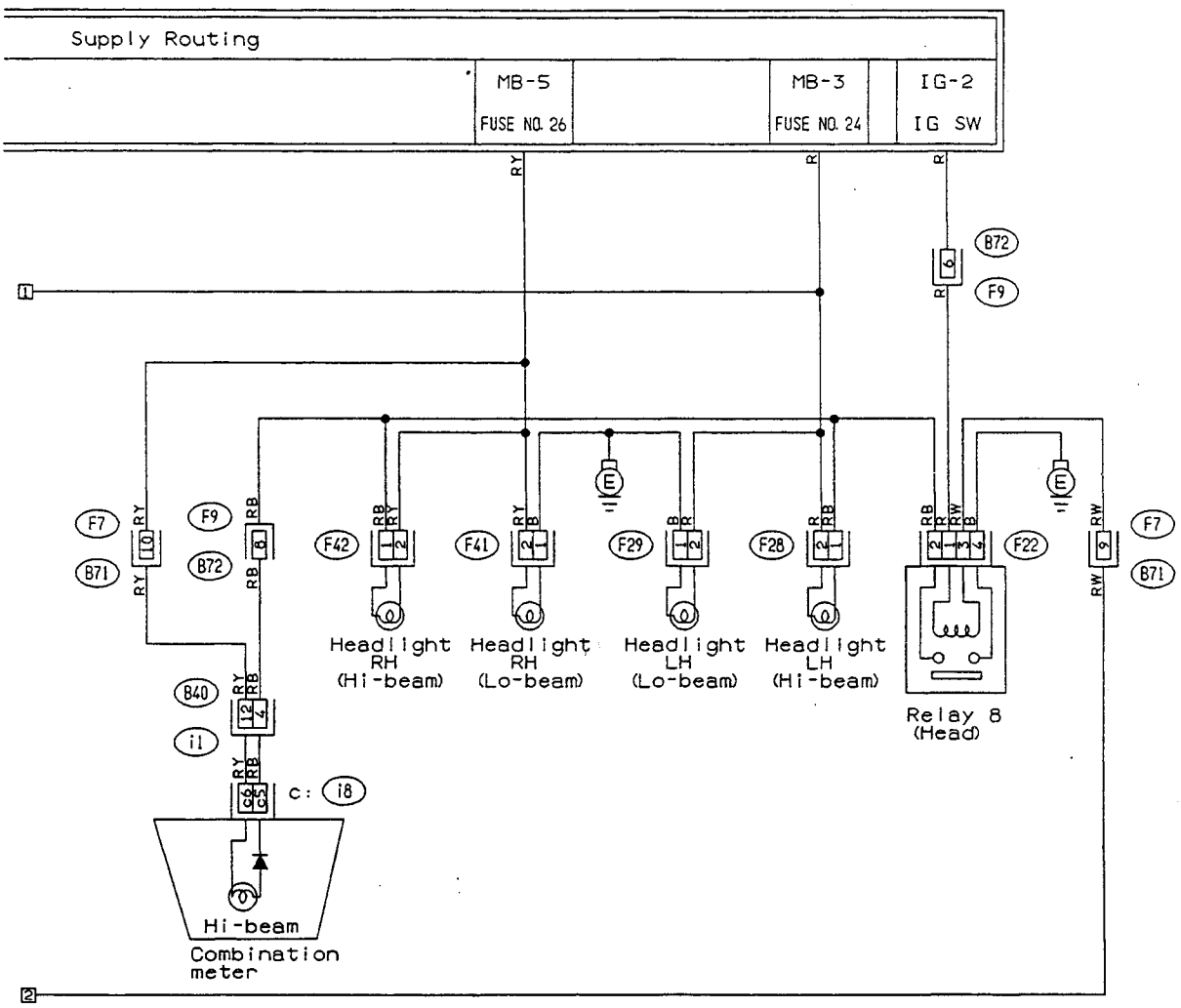
Supply Routing
MB-5
FUSE NO. 26
MB-3
FUSE NO. 24
IG-2
IG SW
B72
F9
F7
B71
F42
F41
F29
F28
F22
Headlight RH (Hi-beam)
Headlight RH (Lo-beam)
Headlight LH (Lo-beam)
Headlight LH (Hi-beam)
Relay 8 (Head)
B40
i1
c: i8
Hi-beam
Combination meter

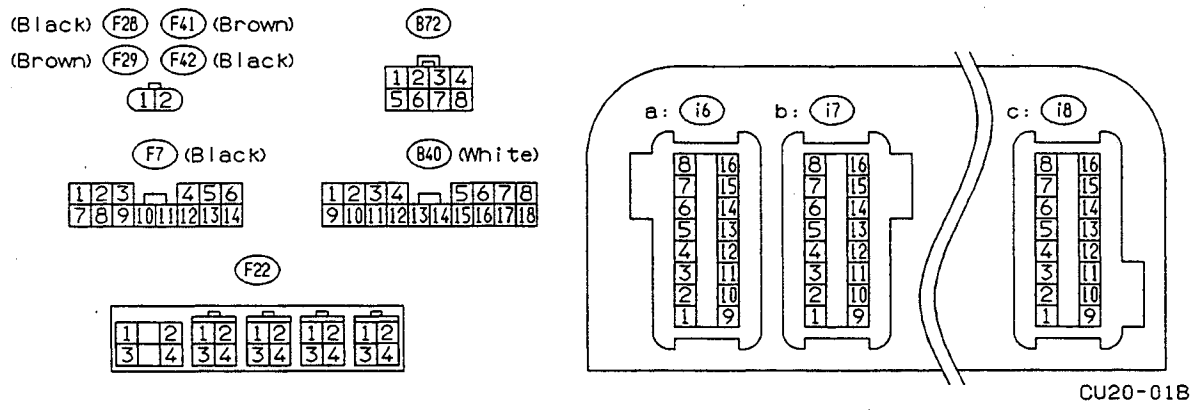
(Black) F28 F41 (Brown)
(Brown) F29 F42 (Black)
B72
F7 (Black)
B40 (White)
F22
a: i6
b: i7
c: i8
CU20-01B

- **CANADA model**

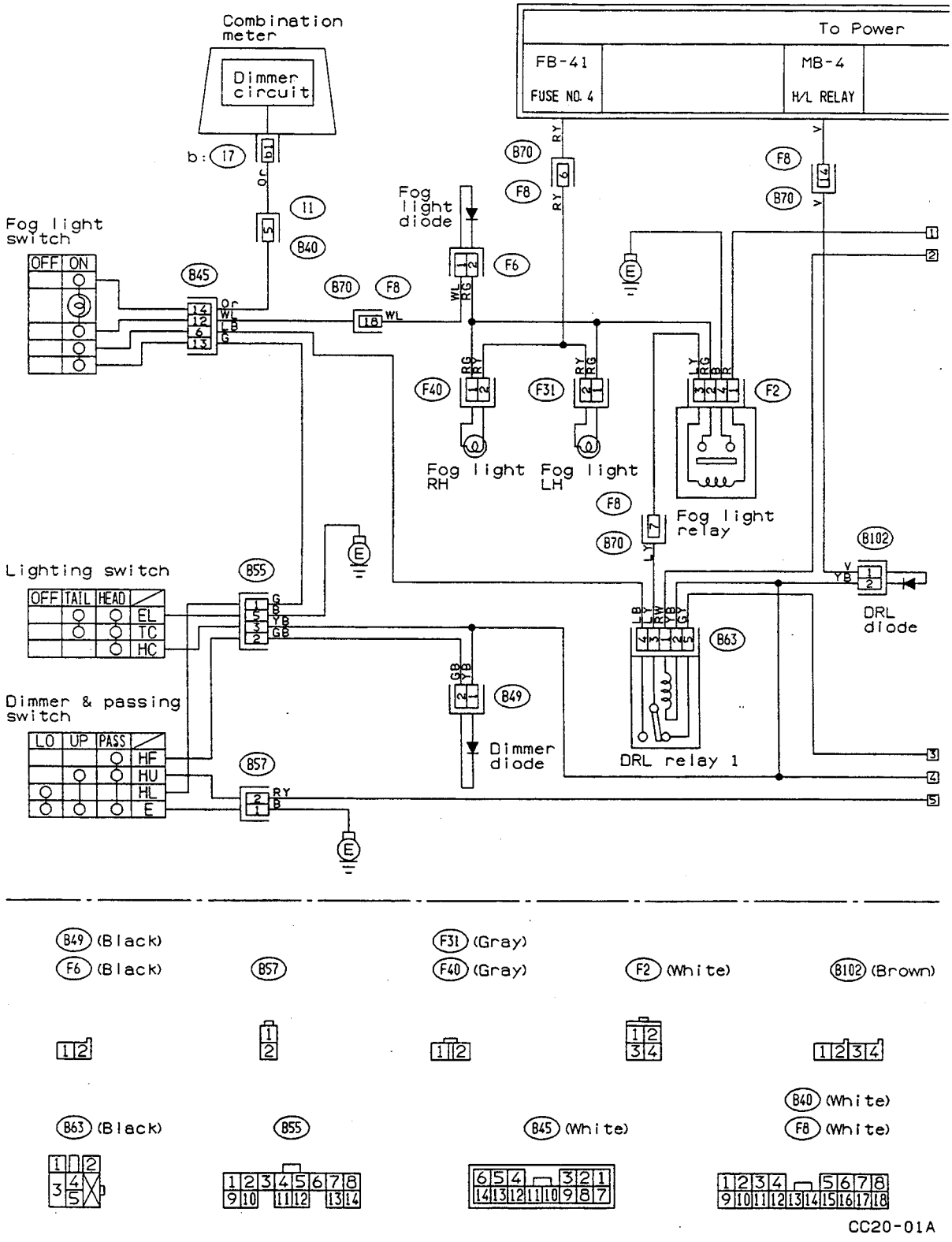

Fig. 43

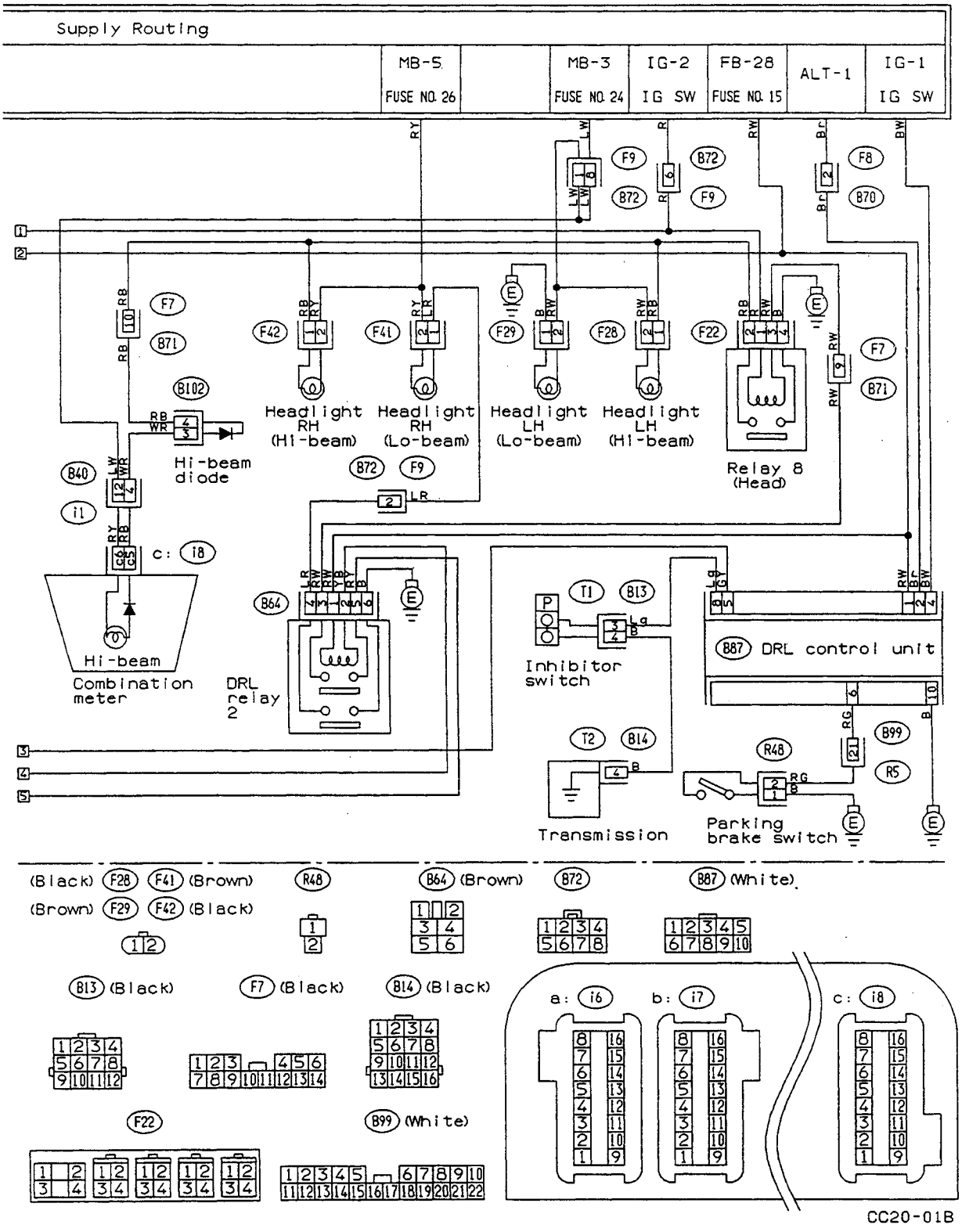
Supply Routing
MB-5 FUSE NO. 26
MB-3 FUSE NO. 24
IG-2 IG SW
FB-28 FUSE NO. 15
ALT-1
IG-1 IG SW
Headlight RH (Hi-beam)
Headlight RH (Lo-beam)
Headlight LH (Lo-beam)
Headlight LH (Hi-beam)
Hi-beam diode
Relay 8 (Head)
Hi-beam
Combination meter
DRL relay 2
Inhibitor switch
B87 DRL control unit
Transmission
Parking brake switch
(Black) F28 F41 (Brown)
(Brown) F29 F42 (Black)
R48
B64 (Brown)
B72
B87 (White)
B13 (Black)
F7 (Black)
B14 (Black)
a: i6
b: i7
c: i8
F22
B99 (White)
CC20-01B

20. LIGHTING (TAIL LIGHT·ILLUMINATION LIGHT·etc.) SYSTEM

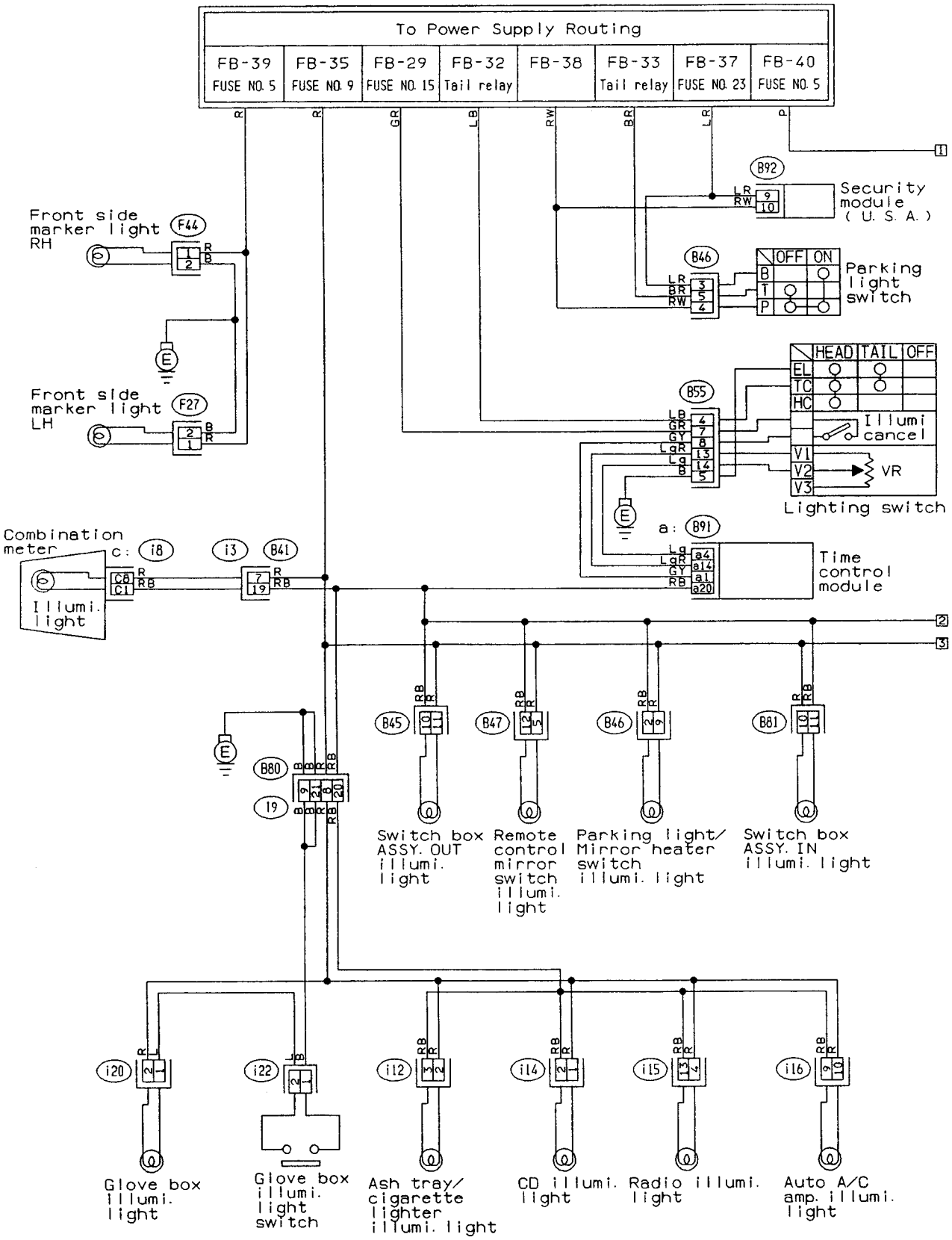

Fig. 4

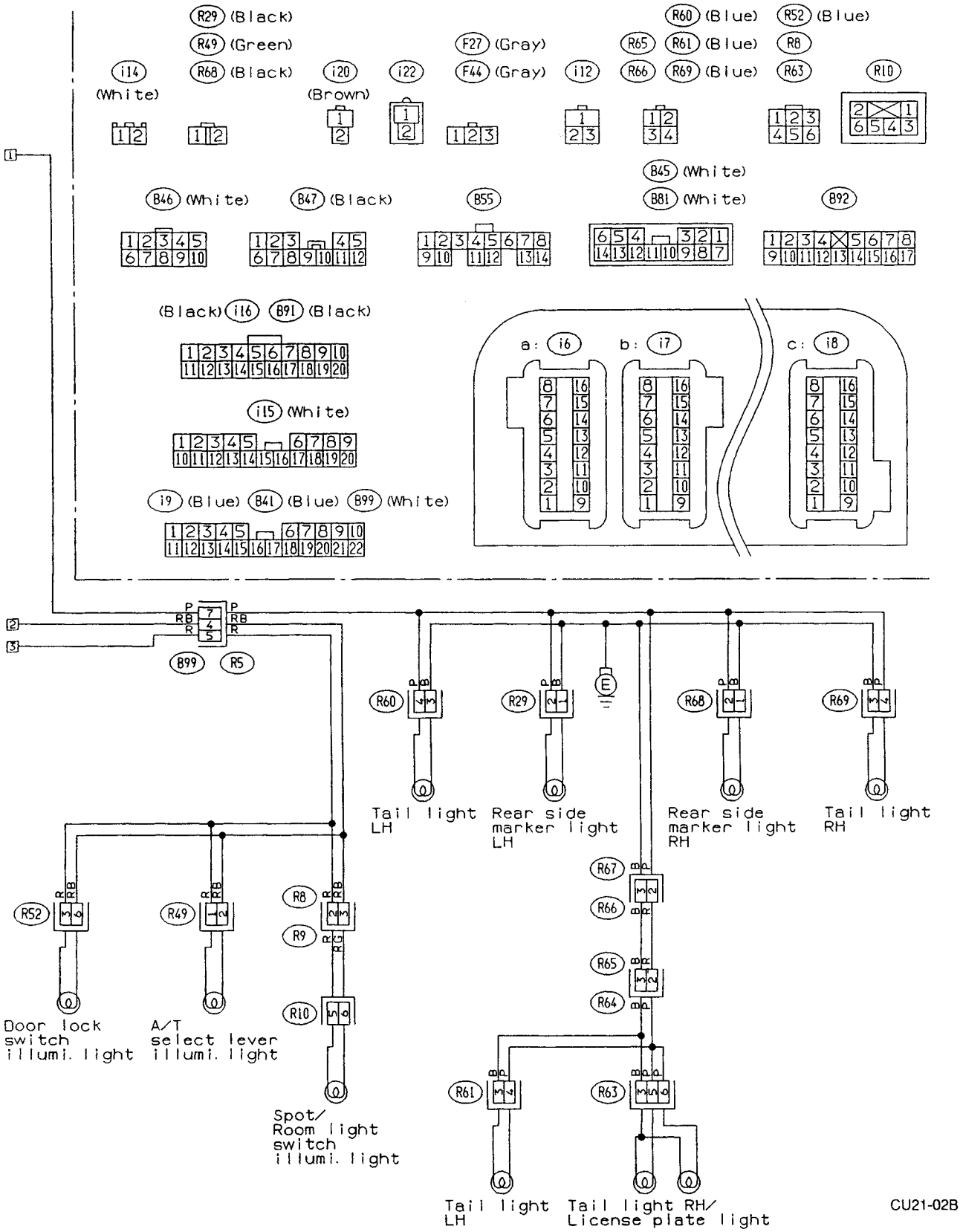
R29 (Black)
R49 (Green)
R68 (Black)
i14 (White)
i20 (Brown)
i22
F27 (Gray)
F44 (Gray)
i12
R60 (Blue)
R65
R61 (Blue)
R66
R69 (Blue)
R52 (Blue)
R8
R63
R10
B45 (White)
B81 (White)
B46 (White)
B47 (Black)
B55
B92
(Black) i16
B91 (Black)
i15 (White)
i9 (Blue)
B41 (Blue)
B99 (White)
a: i6
b: i7
c: i8
B99
R5
R60
R29
R68
R69
Tail light LH
Rear side marker light LH
Rear side marker light RH
Tail light RH
R52
R49
R8
R9
R10
R67
R66
R65
R64
R61
R63
Door lock switch illumi. light
A/T select lever illumi. light
Spot/ Room light switch illumi. light
Tail light LH
Tail light RH/ License plate light
CU21-02B

21. OIL PRESSURE AND TEMPERATURE GAUGE SYSTEM

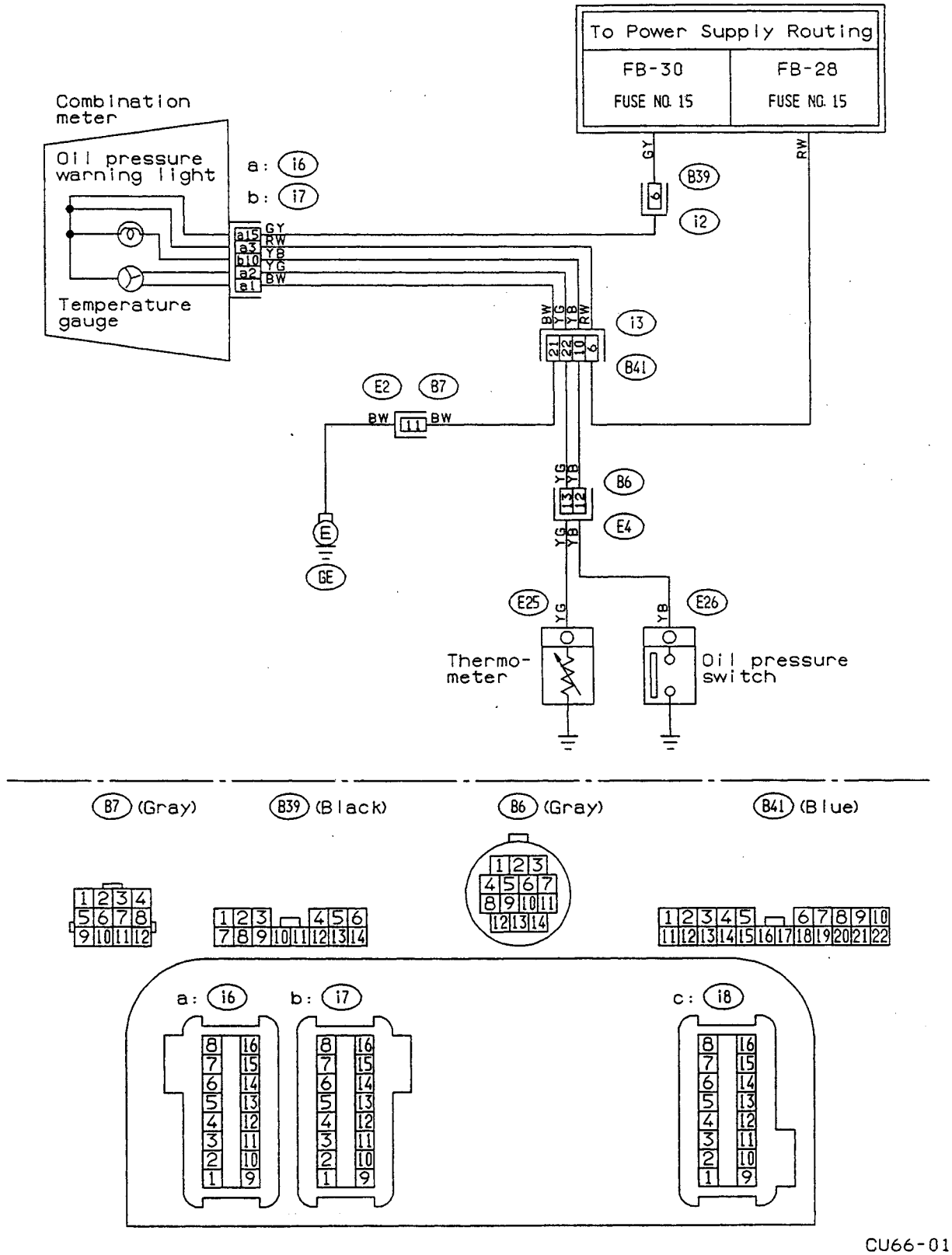

Fig. 45

22. PARKING BRAKE AND BRAKE FLUID LEVEL WARNING SYSTEM

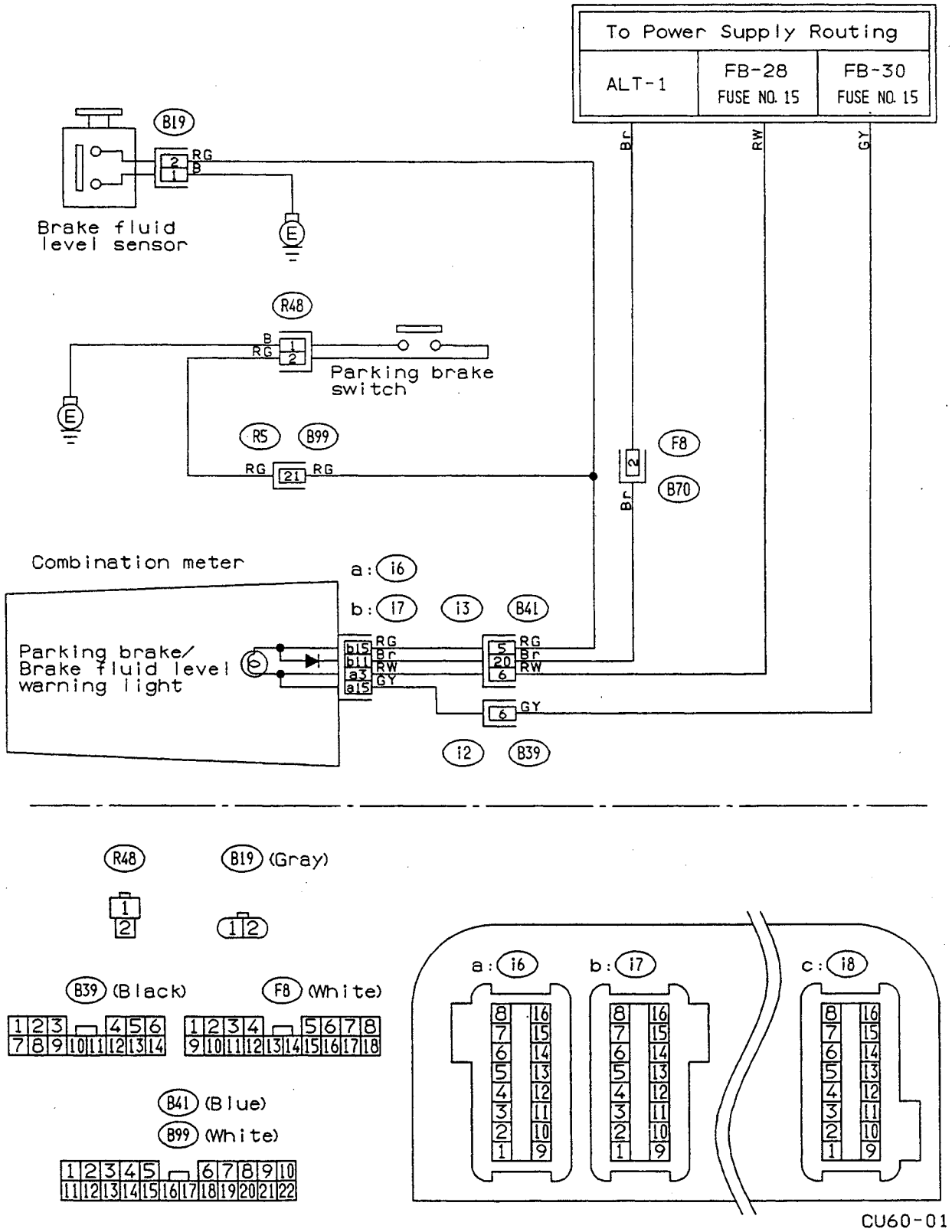

Fig. 46

23. POWER SEAT SYSTEM

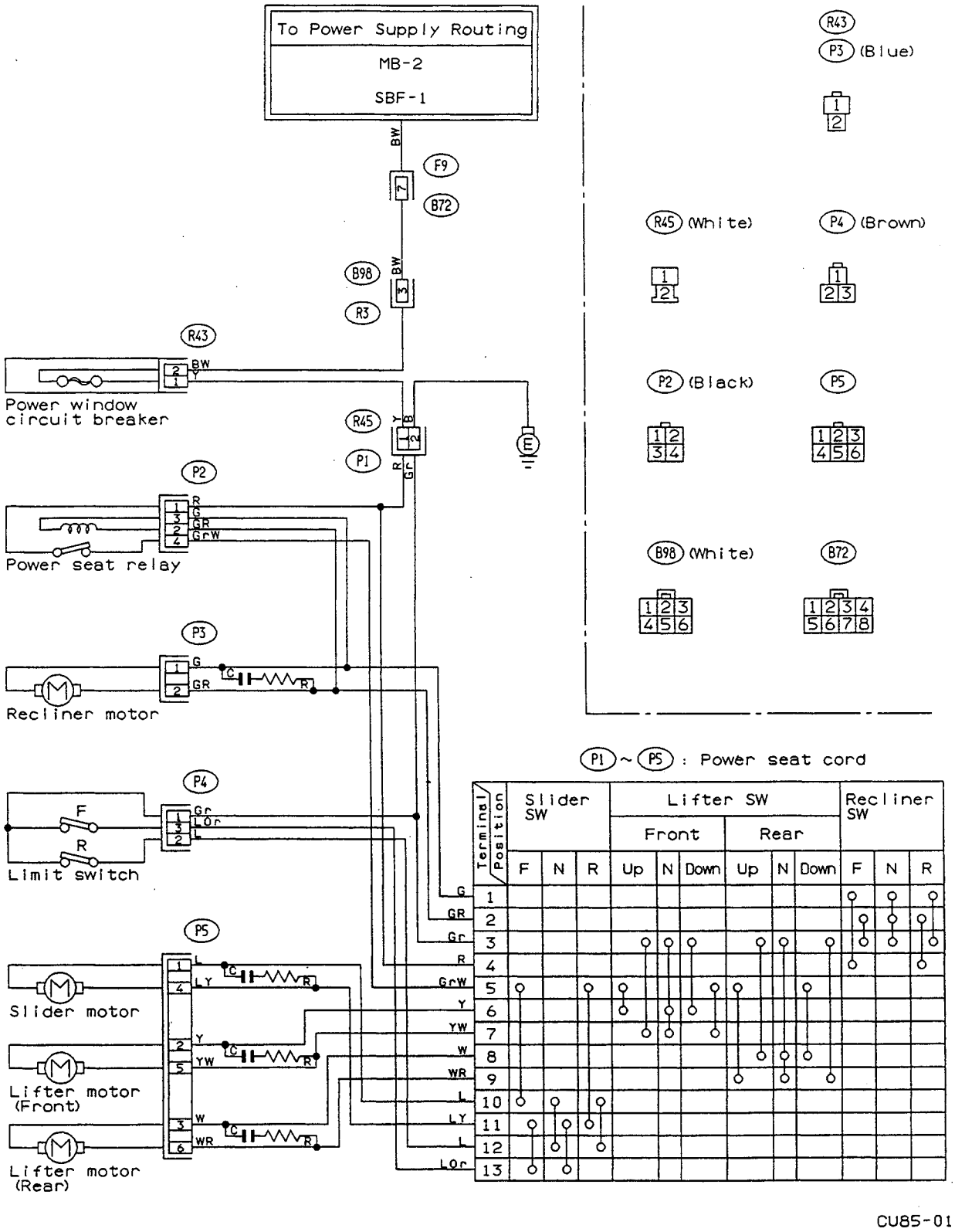

Fig. 47

24. POWER WINDOW SYSTEM

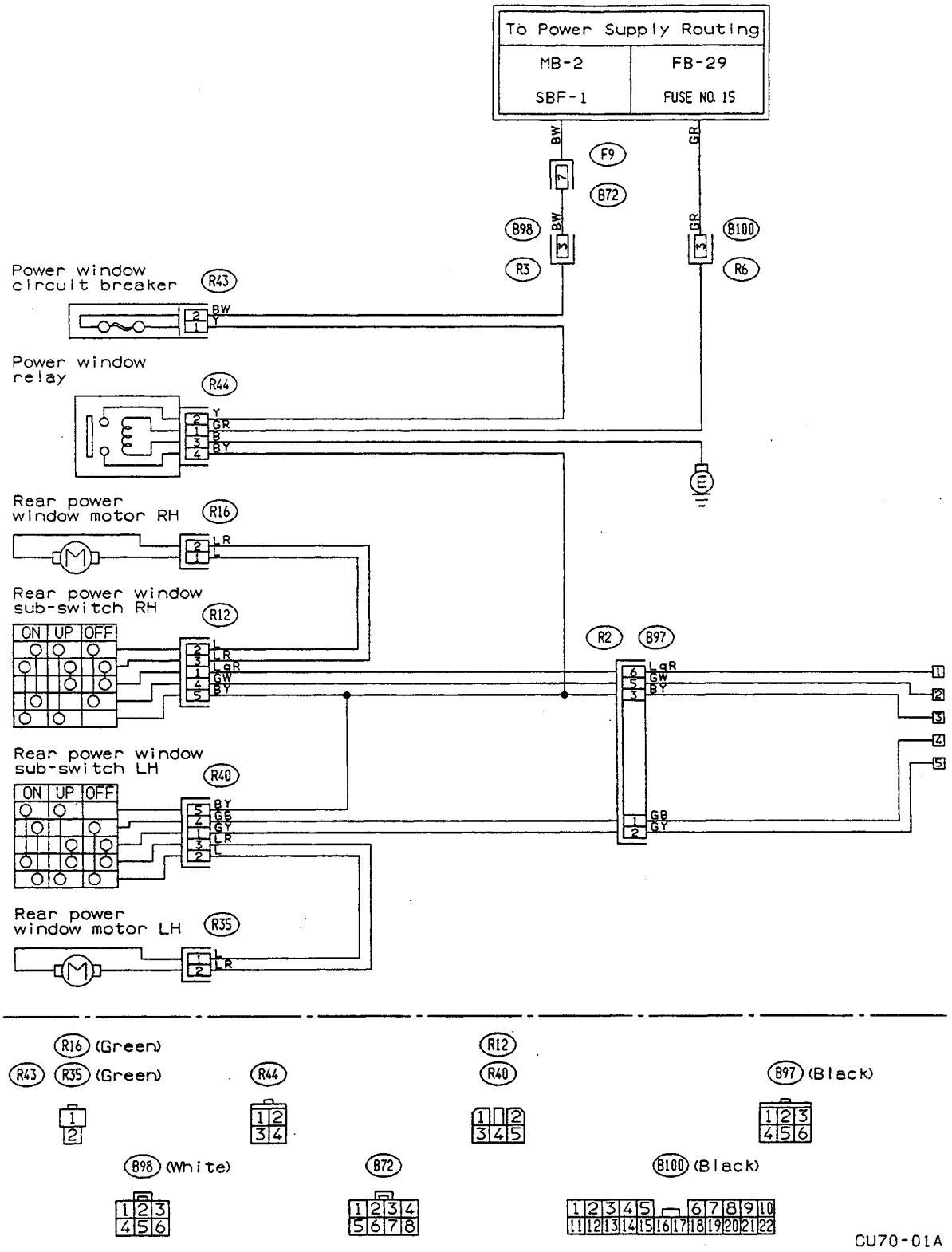

Fig. 48

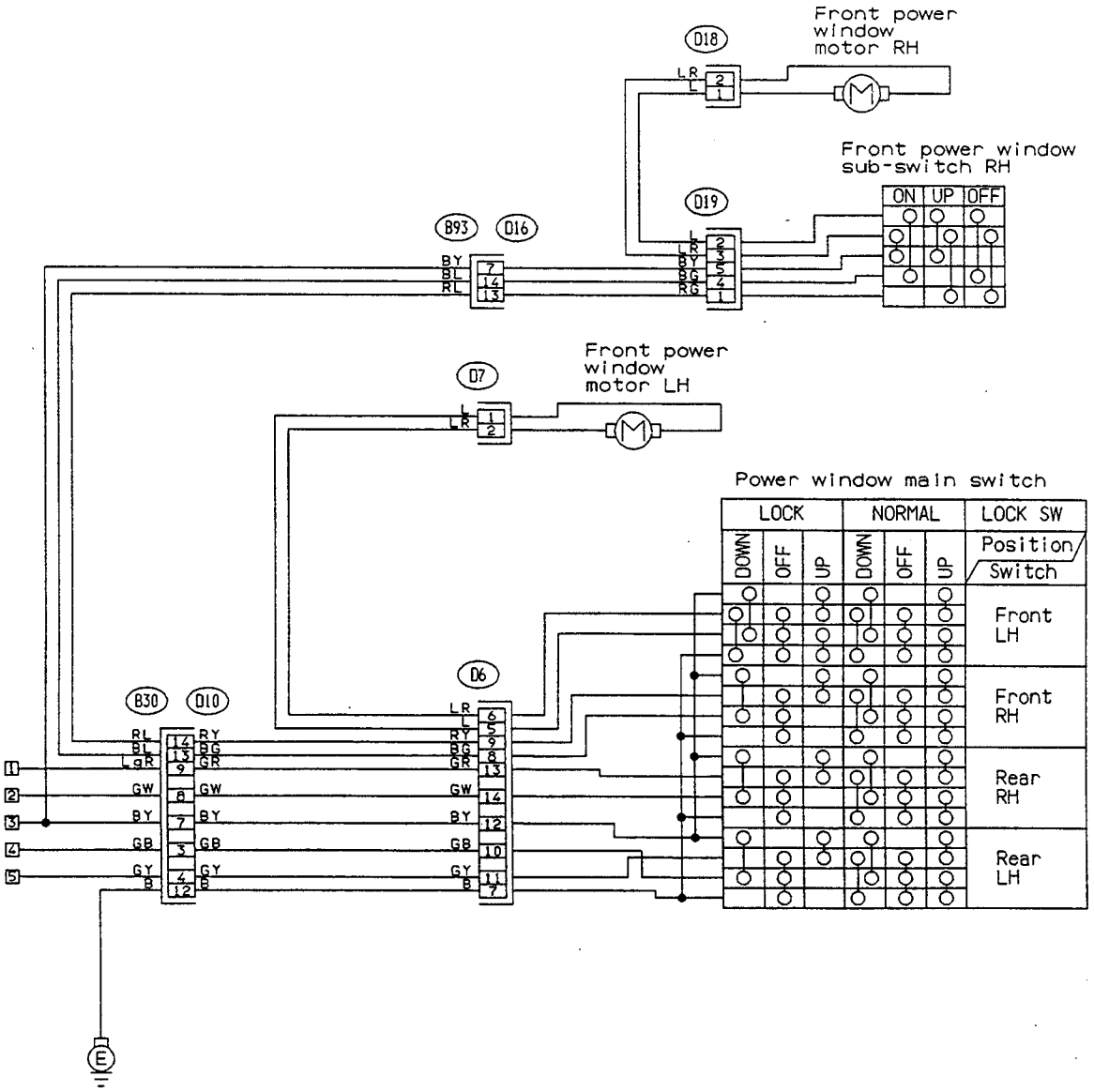
Front power window motor RH
Front power window sub-switch RH
ON UP OFF
Front power window motor LH
Power window main switch
LOCK
NORMAL
LOCK SW
DOWN
OFF
UP
Position
Switch
Front LH
Front RH
Rear RH
Rear LH

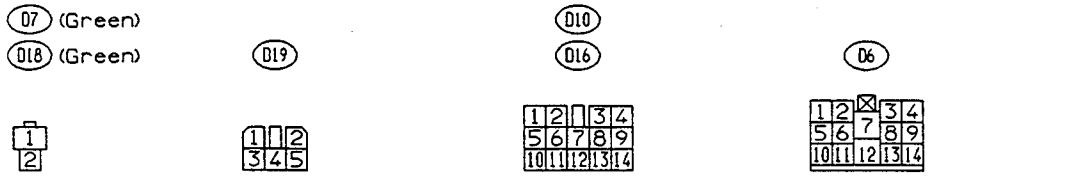
D7 (Green)
D18 (Green)
D19
D10
D16
D6

CU70-01B

25. RADIATOR FAN & AIR CONDITIONER SYSTEM

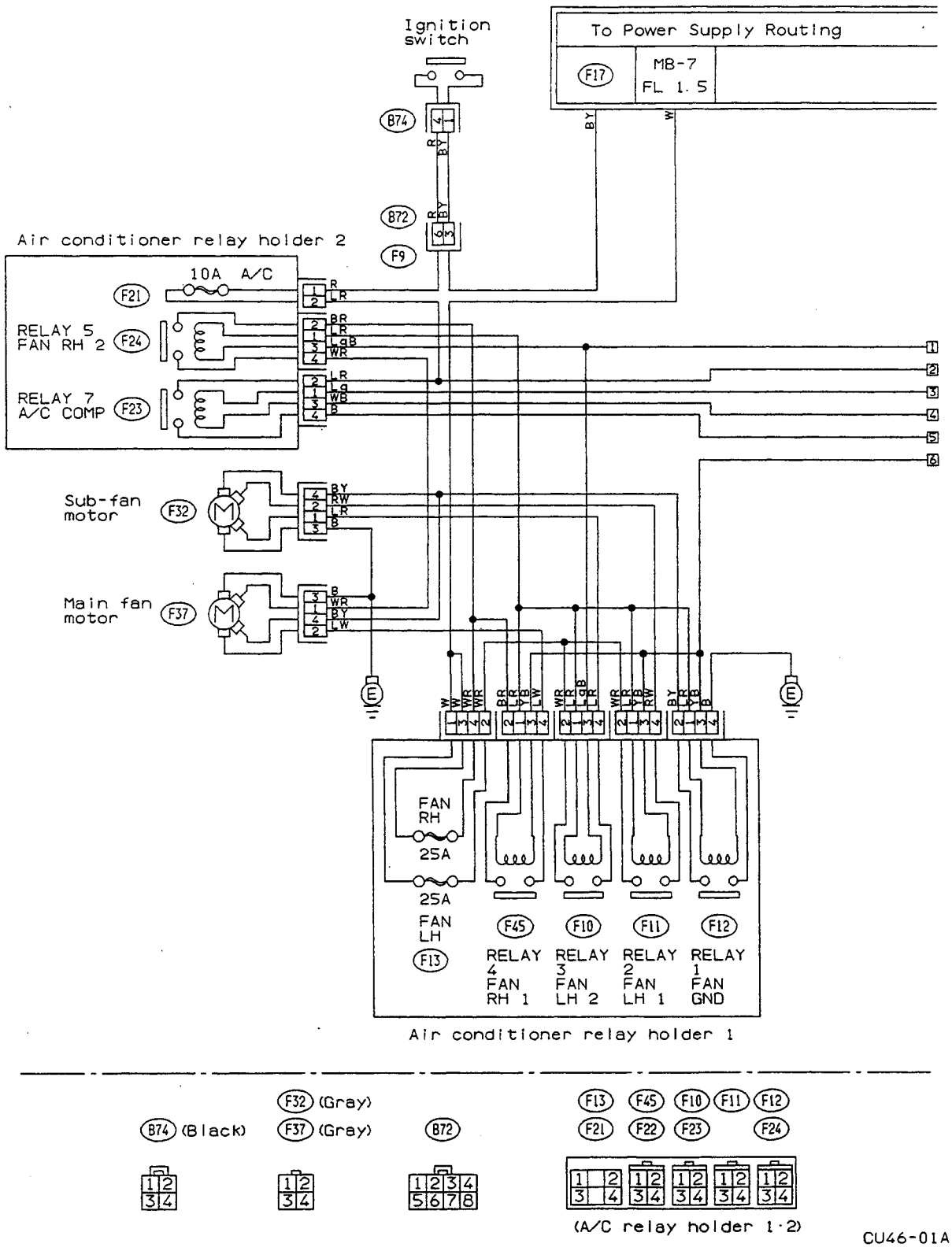

Fig. 49-1

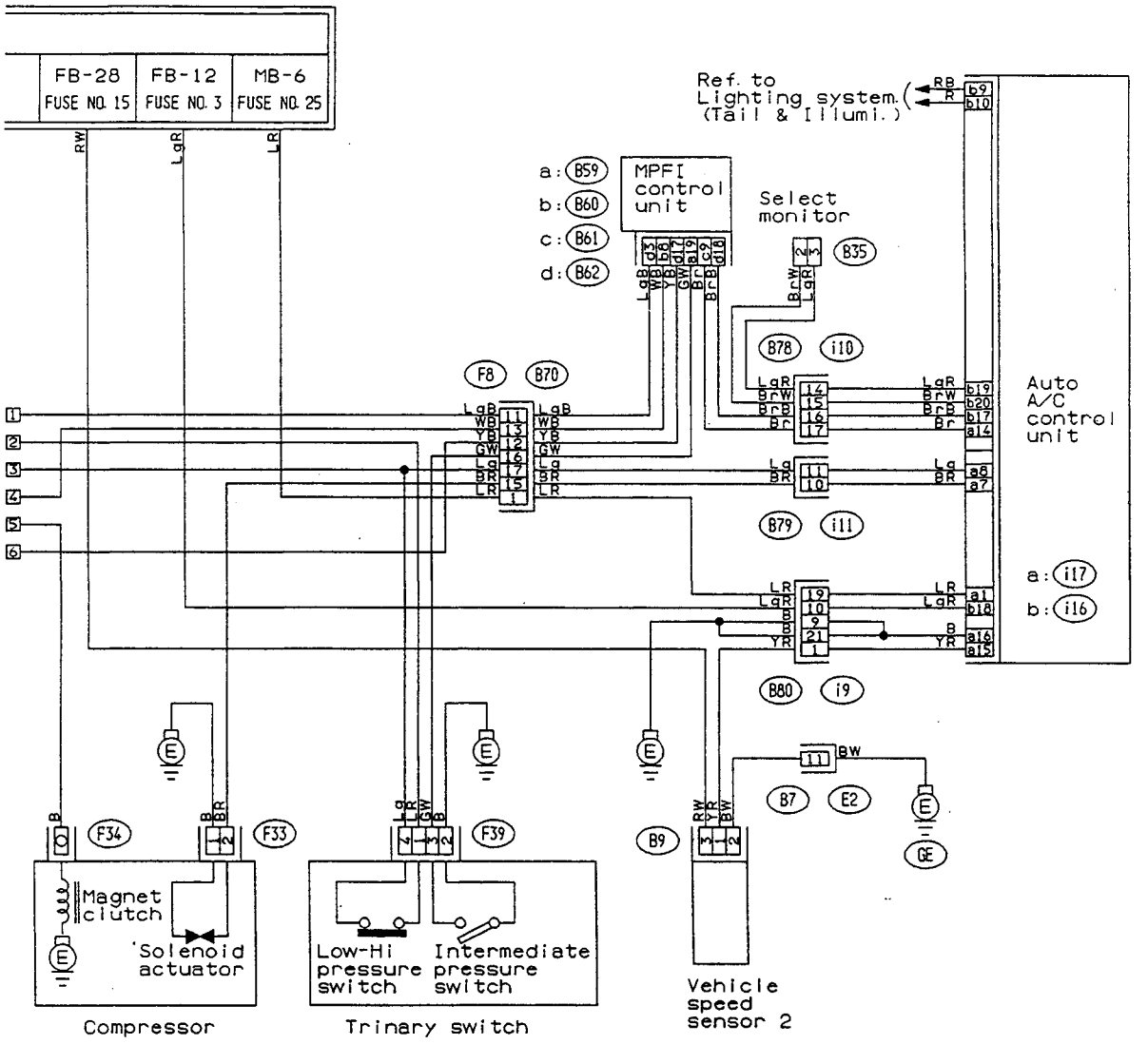
FB-28
FUSE NO. 15
FB-12
FUSE NO. 3
MB-6
FUSE NO. 25
Ref. to Lighting system. (Tail & Illumi.)
a: B59
b: B60
c: B61
d: B62
MPFI control unit
Select monitor
B35
B78
i10
F8
B70
Auto A/C control unit
a: i17
b: i16
B79
i11
B80
i9
B7
E2
B9
F34
F33
F39
Magnet clutch
Solenoid actuator
Low-Hi pressure switch
Intermediate pressure switch
Vehicle speed sensor 2
Compressor
Trinary switch

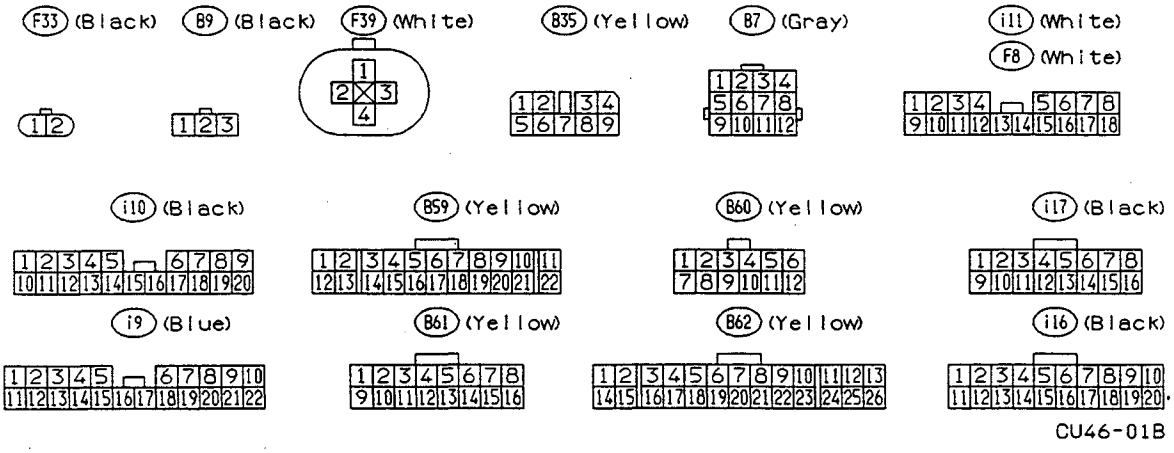
F33 (Black)
B9 (Black)
F39 (White)
B35 (Yellow)
B7 (Gray)
i11 (White)
F8 (White)
i10 (Black)
B59 (Yellow)
B60 (Yellow)
i17 (Black)
i9 (Blue)
B61 (Yellow)
B62 (Yellow)
i16 (Black)

CU46-01B

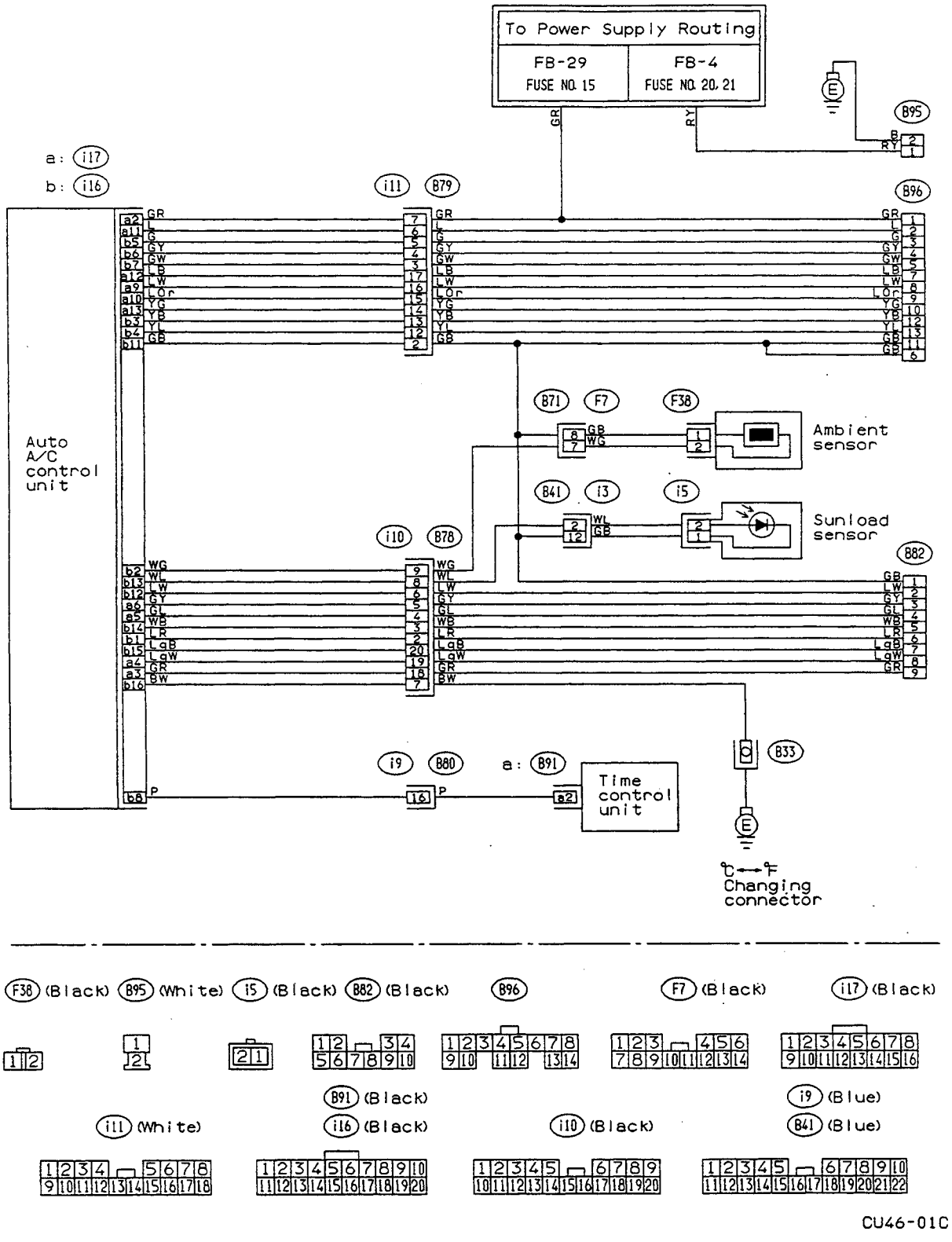
To Power Supply Routing
FB-29
FUSE NO. 15
FB-4
FUSE NO. 20, 21
Auto A/C control unit
Ambient sensor
Sunload sensor
Time control unit
Changing connector
(F38) (Black) (B95) (White) (i5) (Black) (B82) (Black) (B96) (F7) (Black) (i17) (Black)
(i11) (White) (B91) (Black) (i16) (Black) (i10) (Black) (i9) (Blue) (B41) (Blue)
CU46-01C

Fig. 49-2

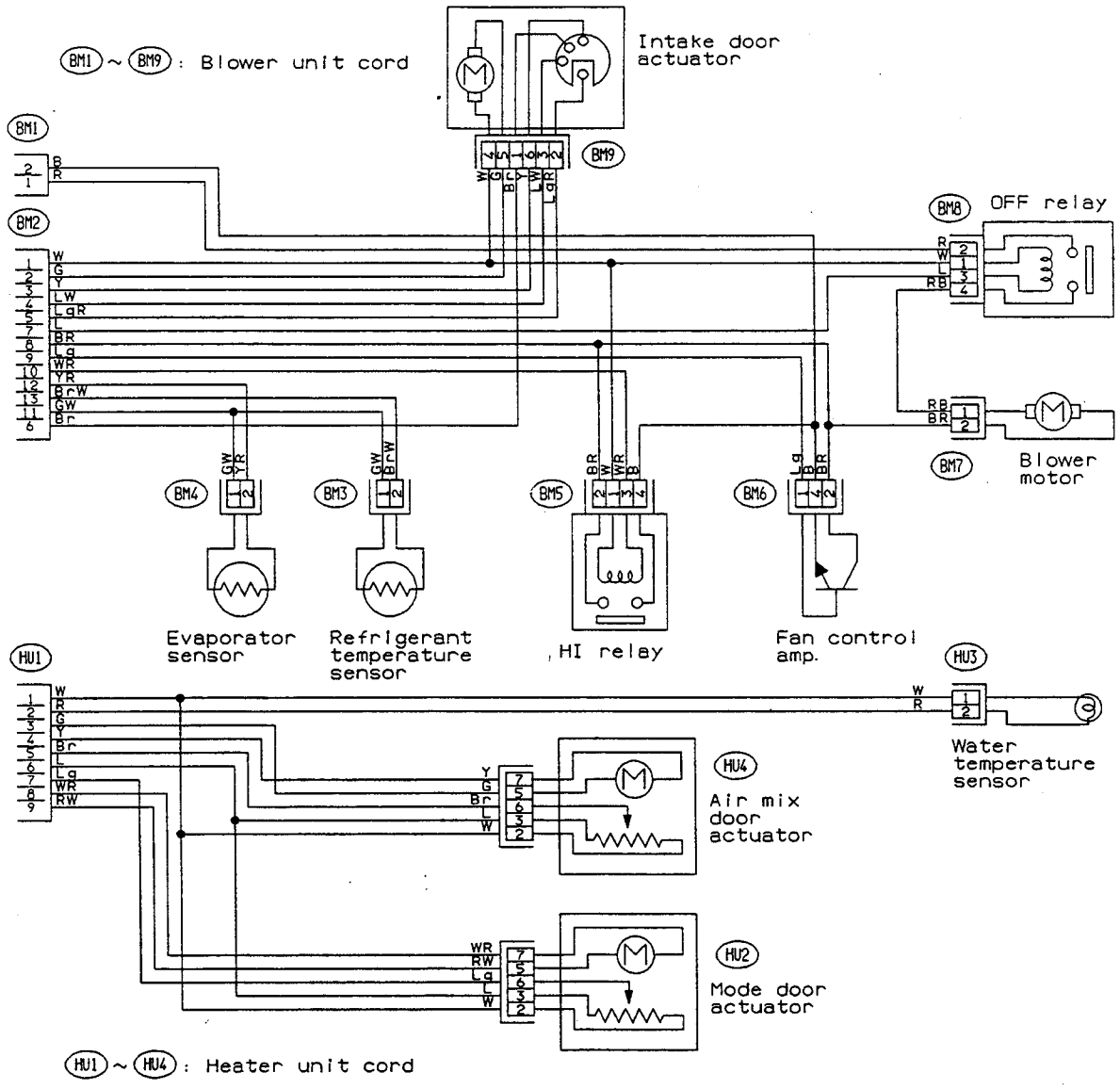
(BM1) ~ (BM9) : Blower unit cord
Intake door actuator
(BM1)
(BM2)
(BM9)
(BM8) OFF relay
(BM7) Blower motor
(BM4)
(BM3)
(BM5)
(BM6)
Evaporator sensor
Refrigerant temperature sensor
HI relay
Fan control amp.
(HU1)
(HU3)
Water temperature sensor
(HU4)
Air mix door actuator
(HU2)
Mode door actuator
(HU1) ~ (HU4) : Heater unit cord

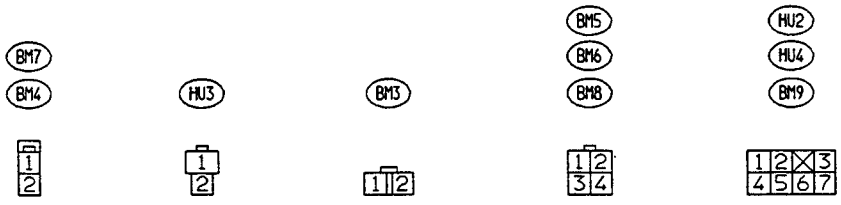
(BM7)
(BM4)
(HU3)
(BM3)
(BM5)
(BM6)
(BM8)
(HU2)
(HU4)
(BM9)

CU46-01D

26. REAR WINDOW DEFOGGER SYSTEM

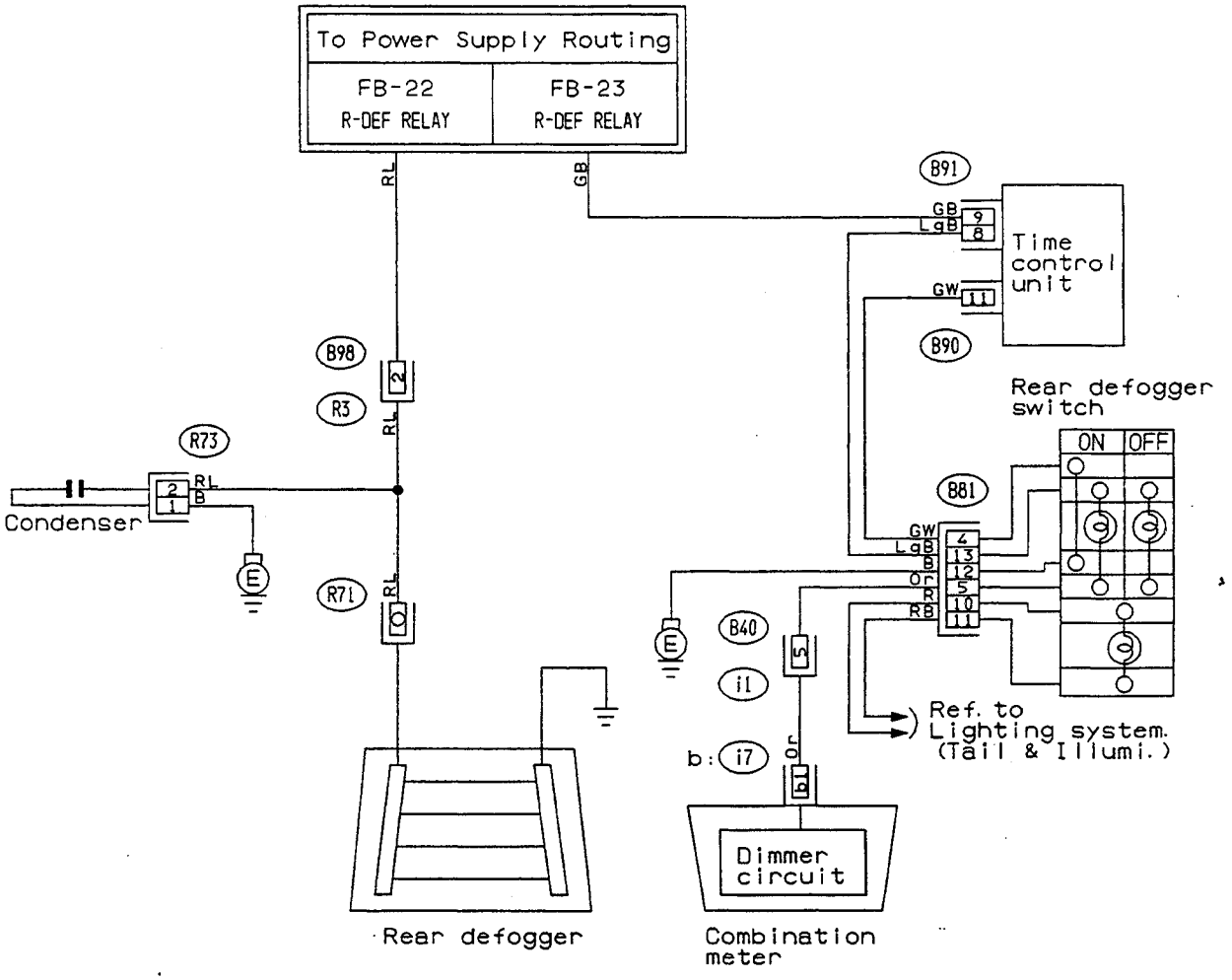

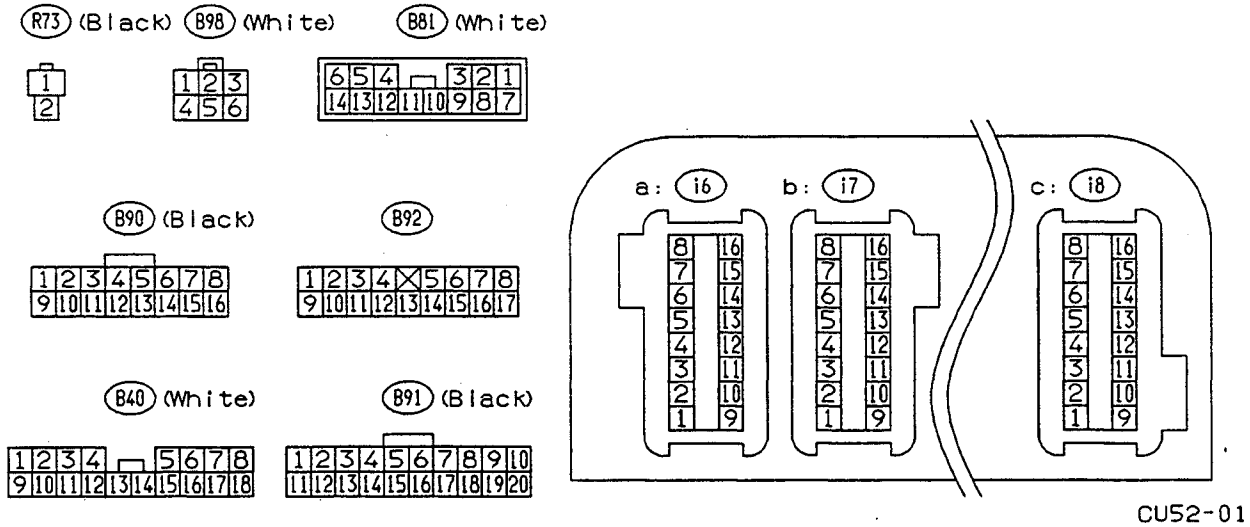

Fig. 50

27. REAR WIPER AND WASHER SYSTEM

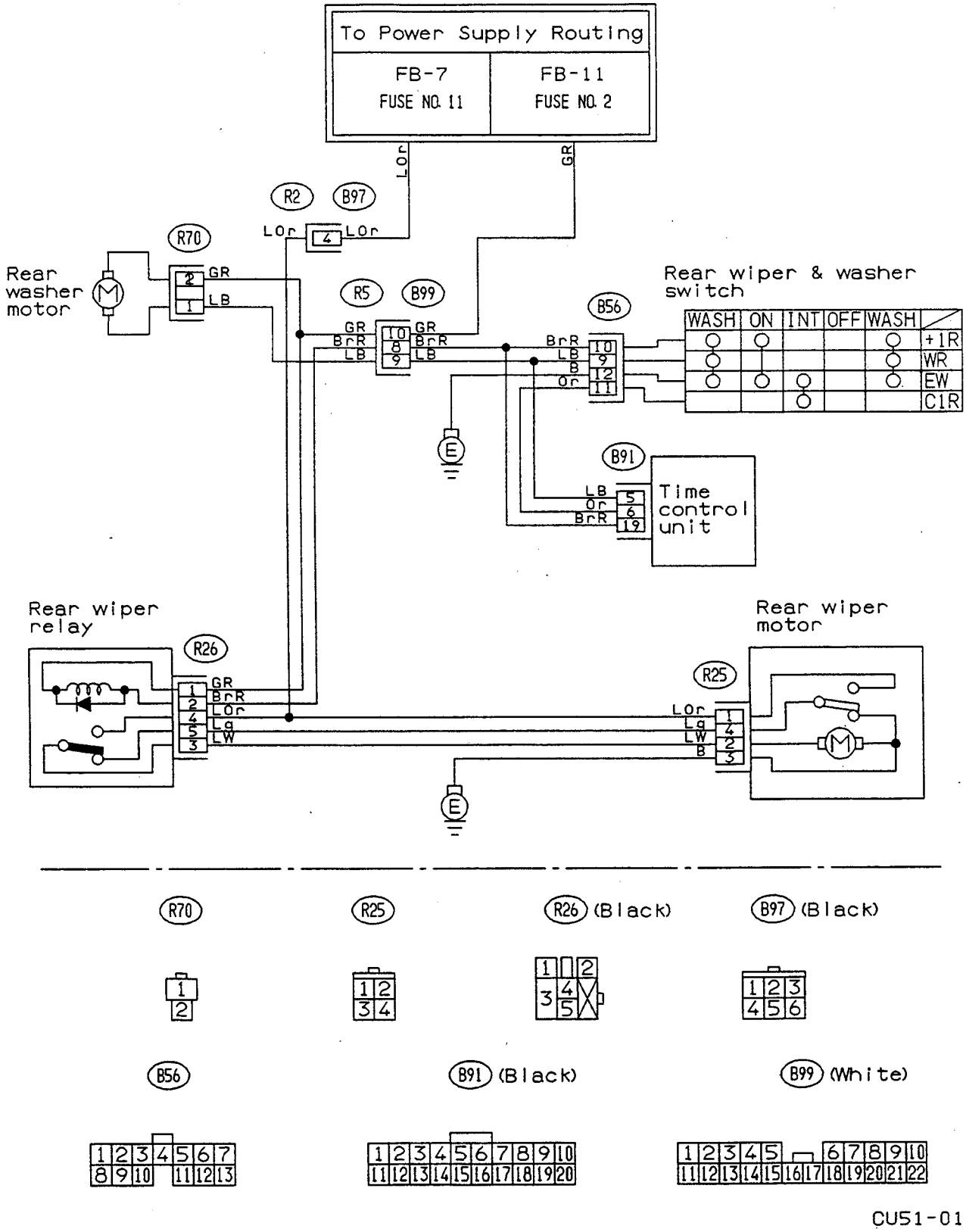

Fig. 51

28. REMOTE CONTROL REARVIEW MIRROR SYSTEM

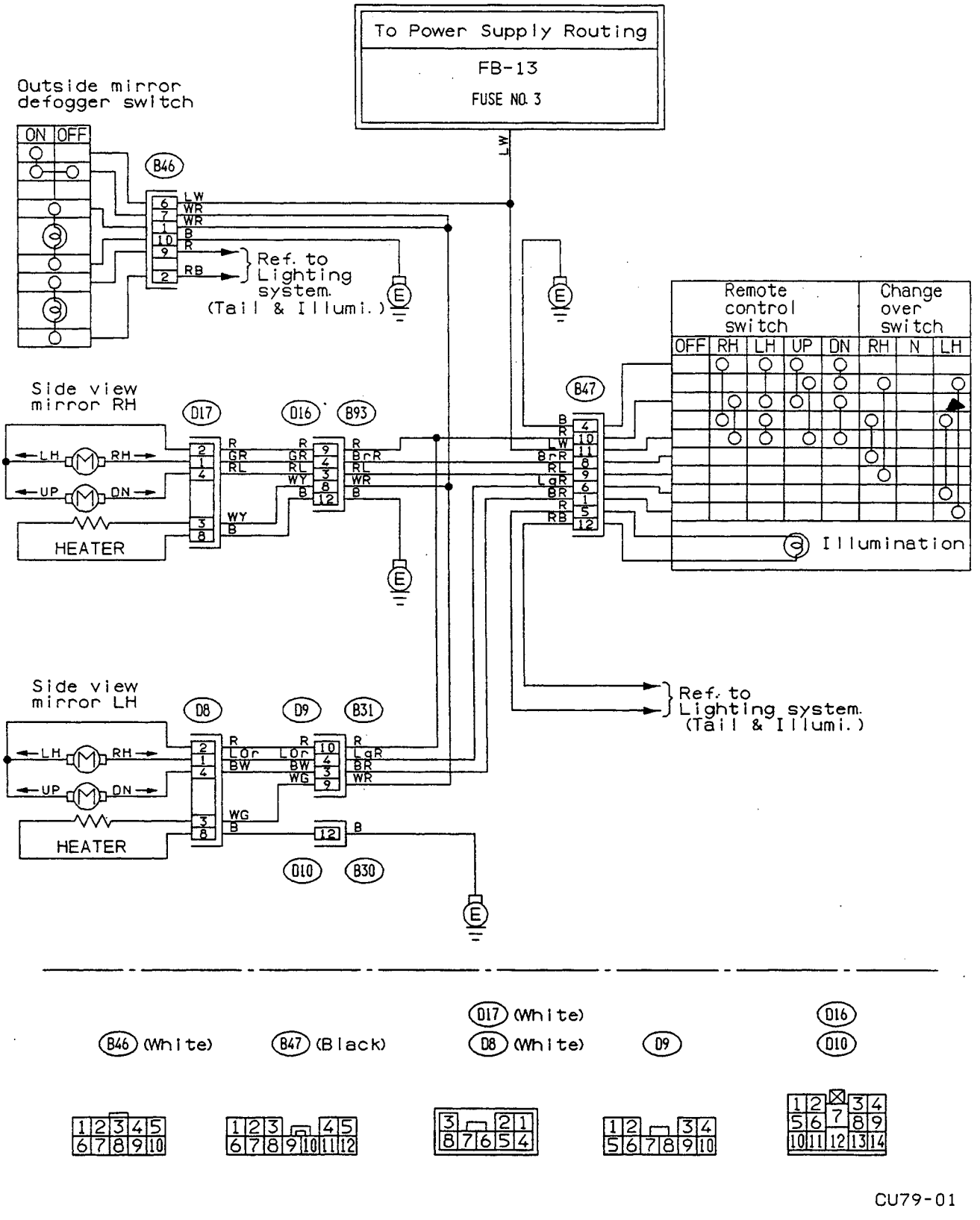

Fig. 52

29. SECURITY SYSTEM

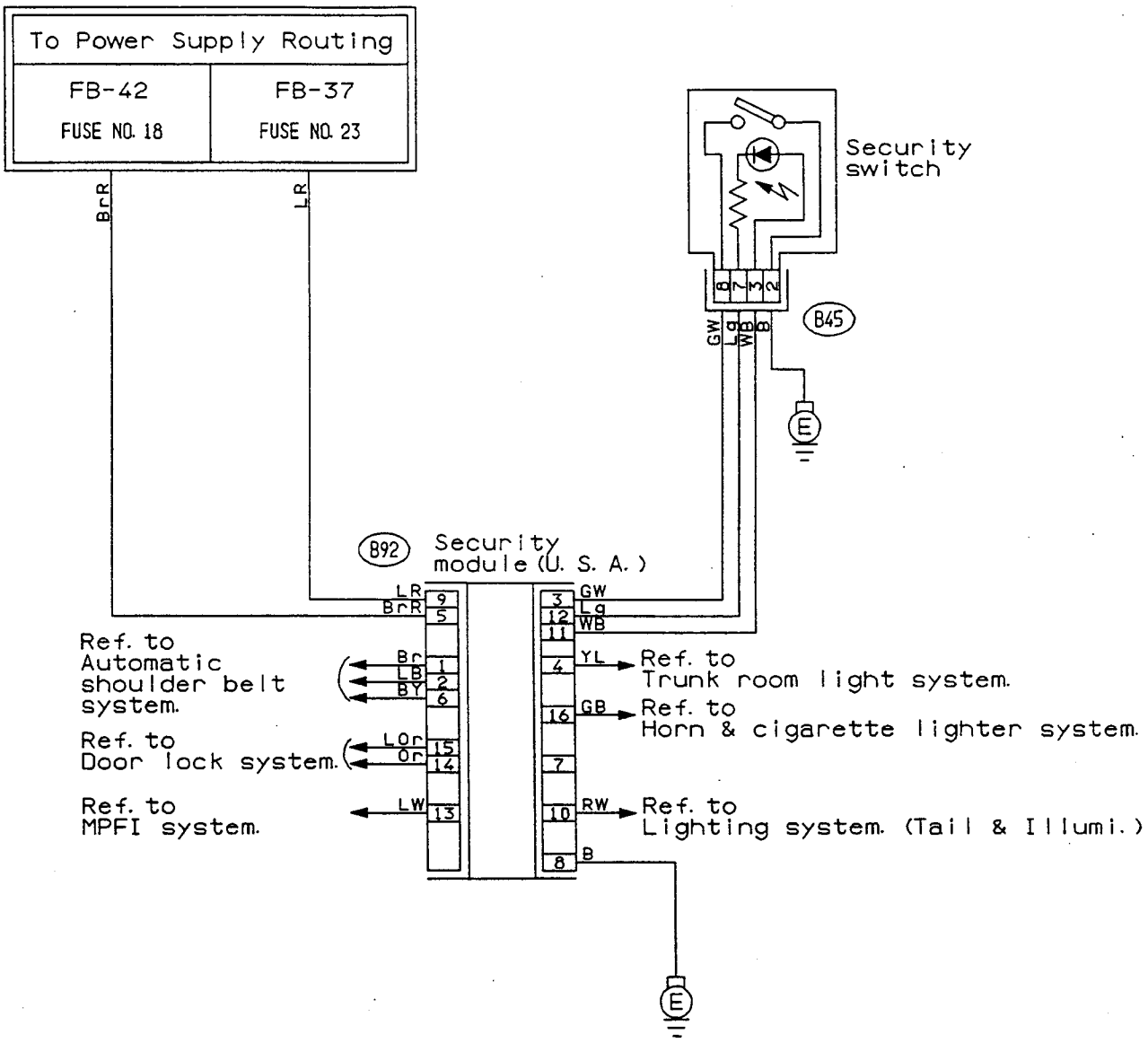

Fig. 53

30. SPEEDOMETER SYSTEM

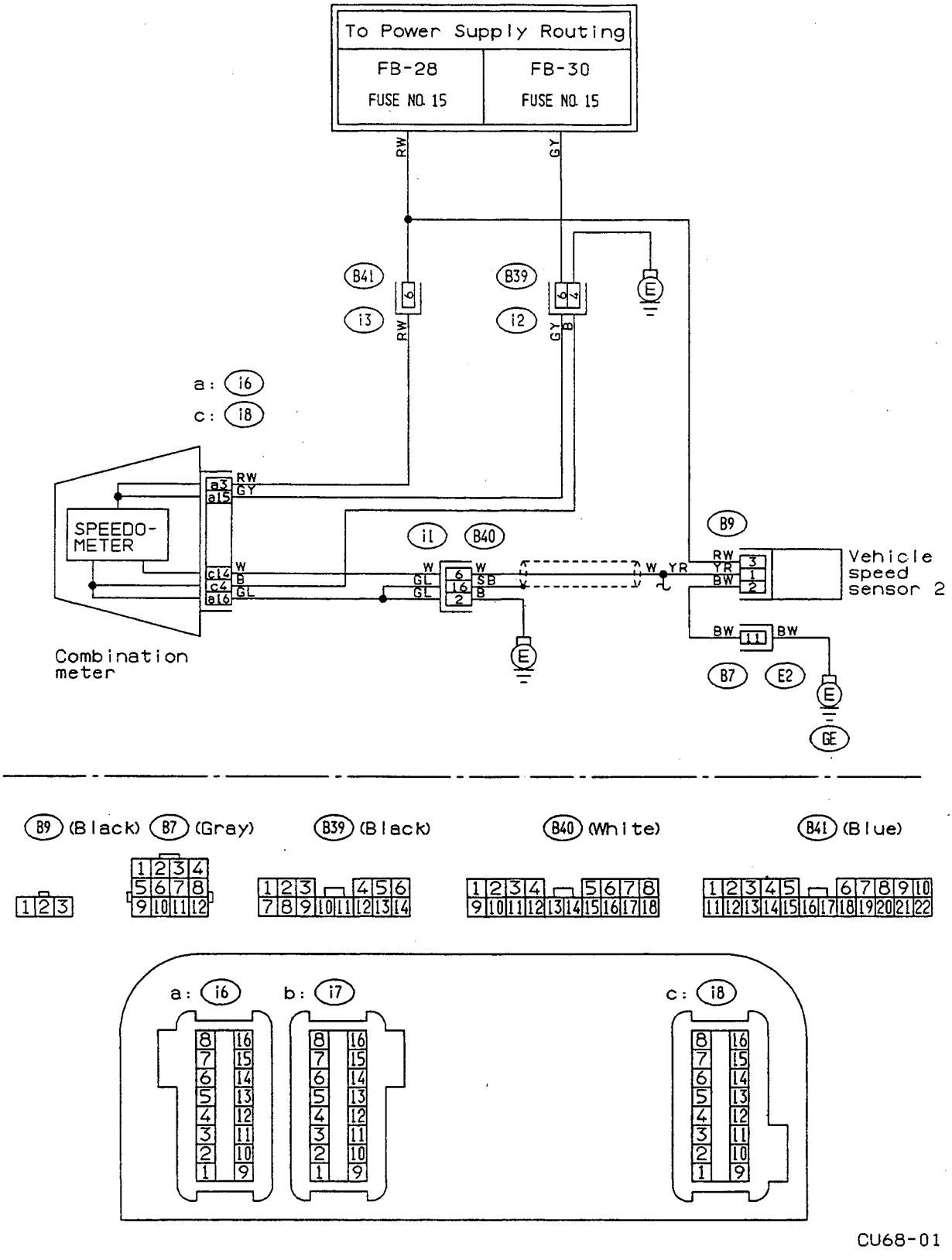

Fig. 54

31. SPOT LIGHT, ROOM LIGHT & VANITY MIRROR LIGHT SYSTEM

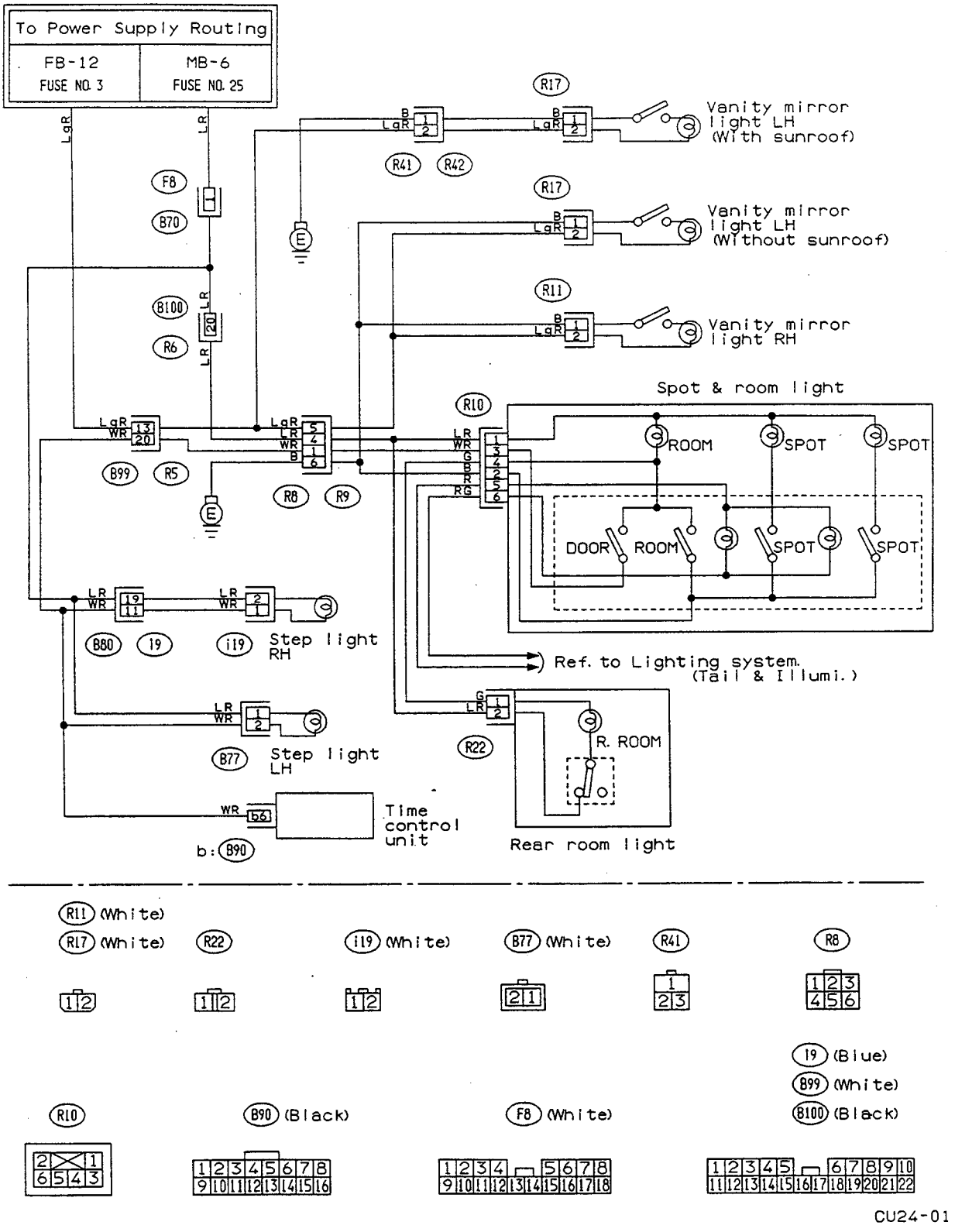

Fig. 55

32. SRS (AIRBAG SYSTEM)

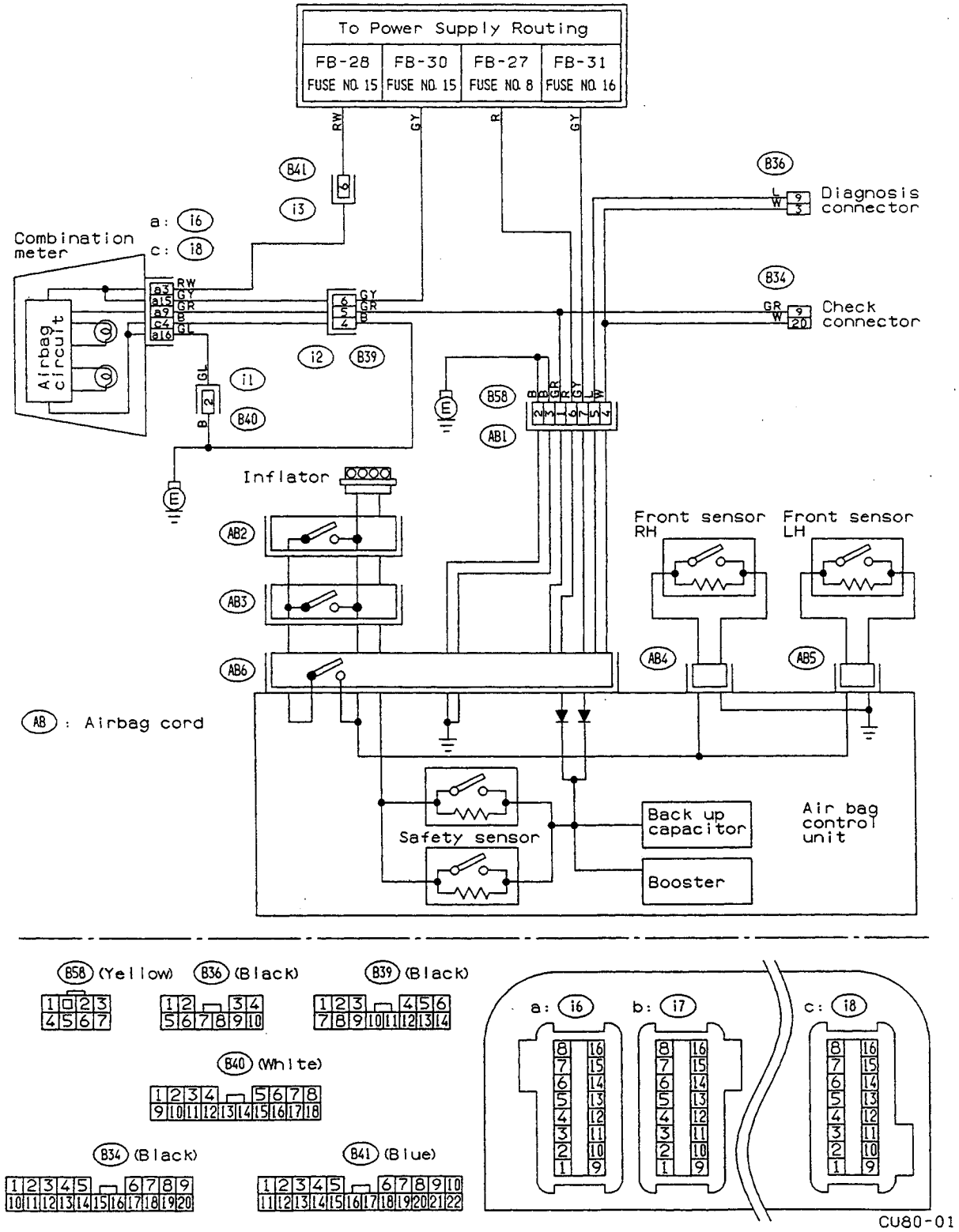

Fig. 56

33. STARTING SYSTEM

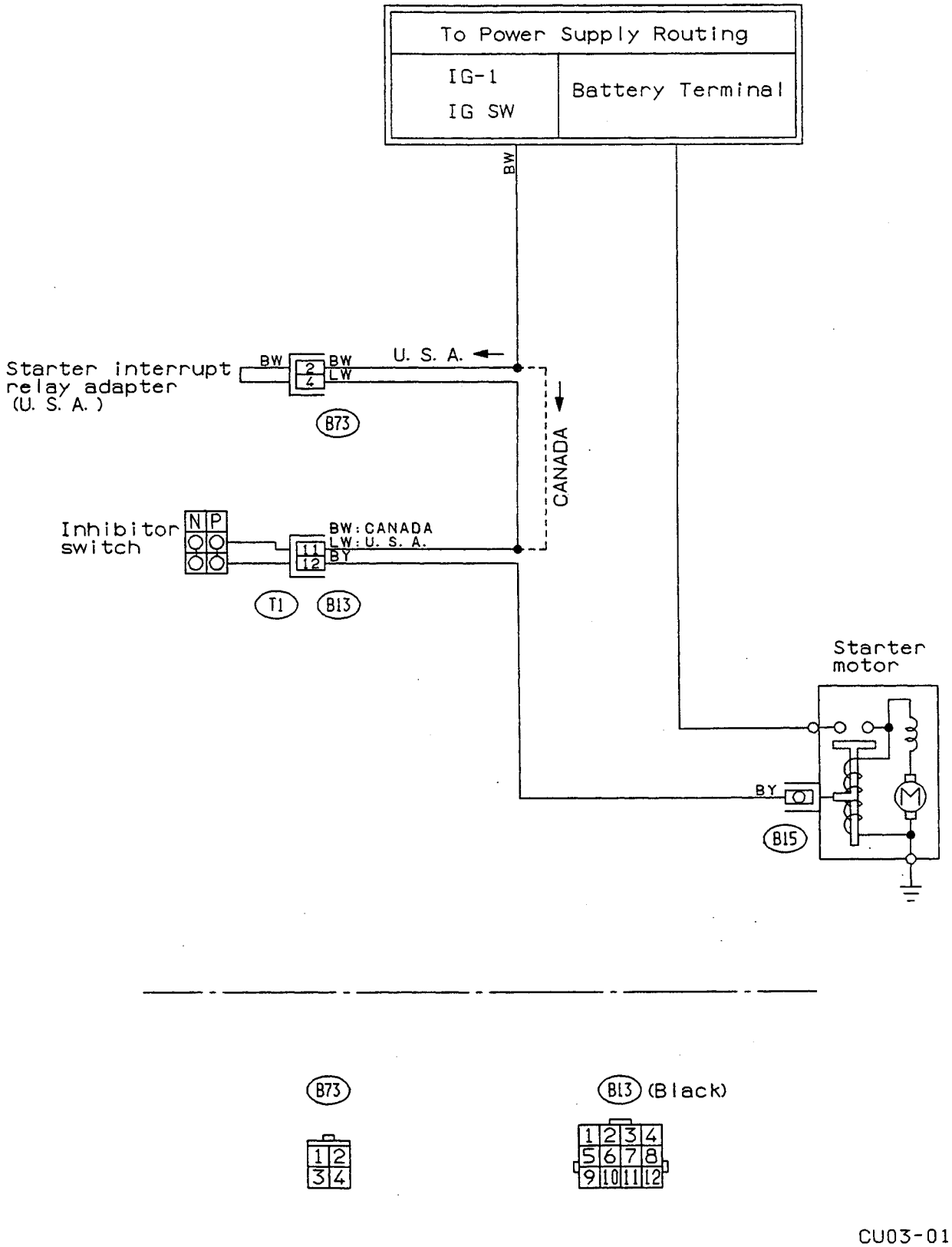

Fig. 57

34. STOP LIGHT SYSTEM

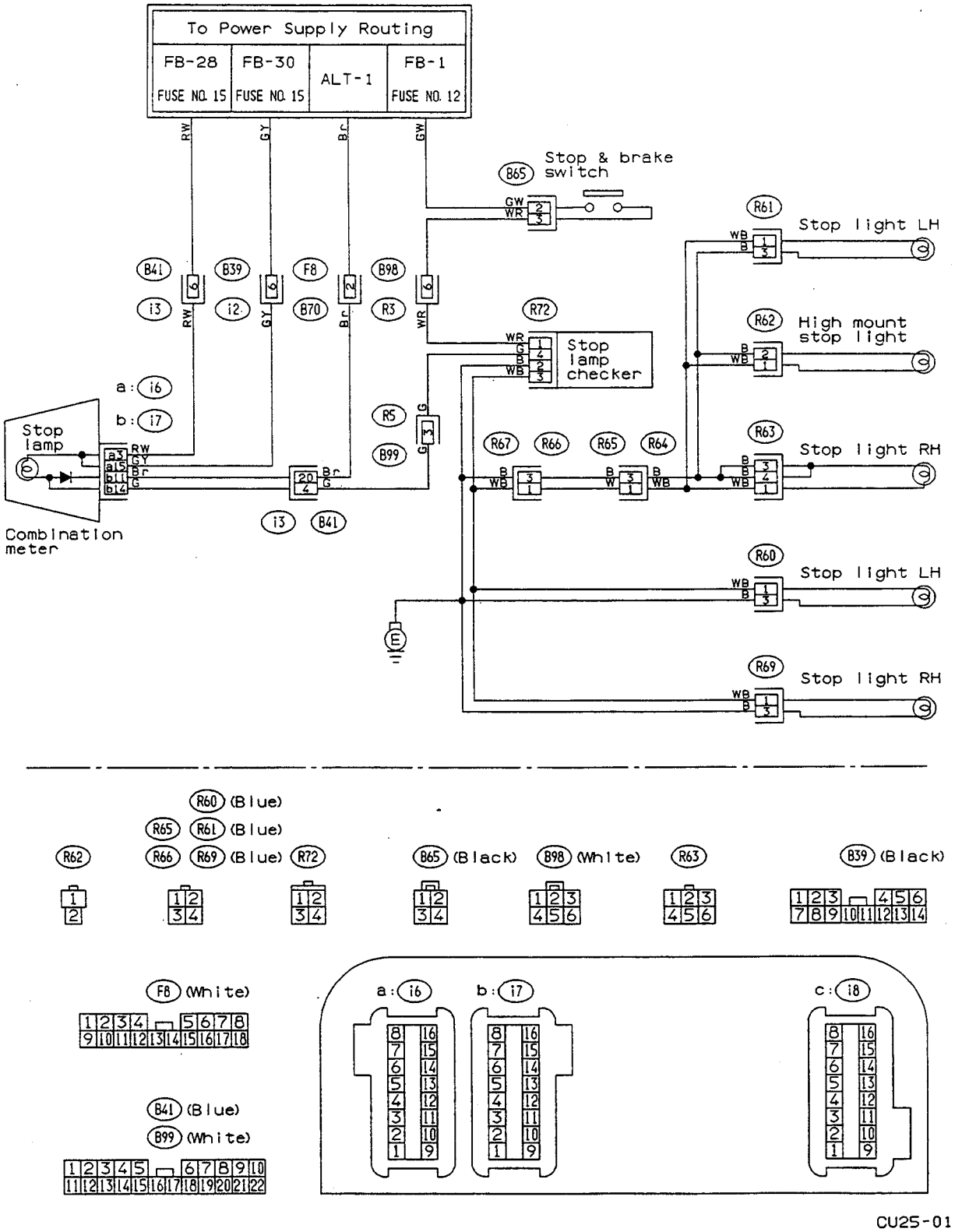

Fig. 58

35. SUNROOF SYSTEM

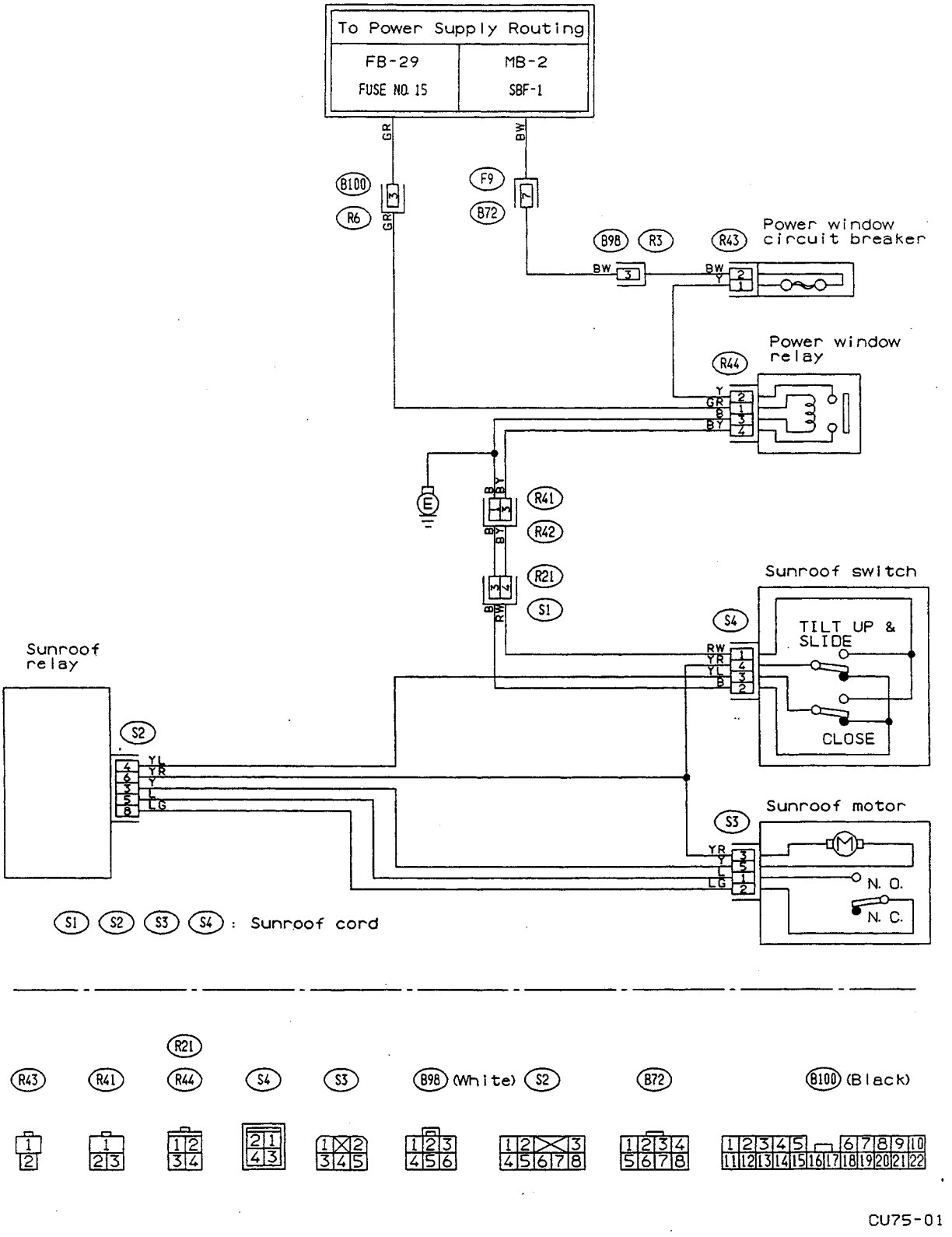

Fig. 59

36. TIME CONTROL SYSTEM

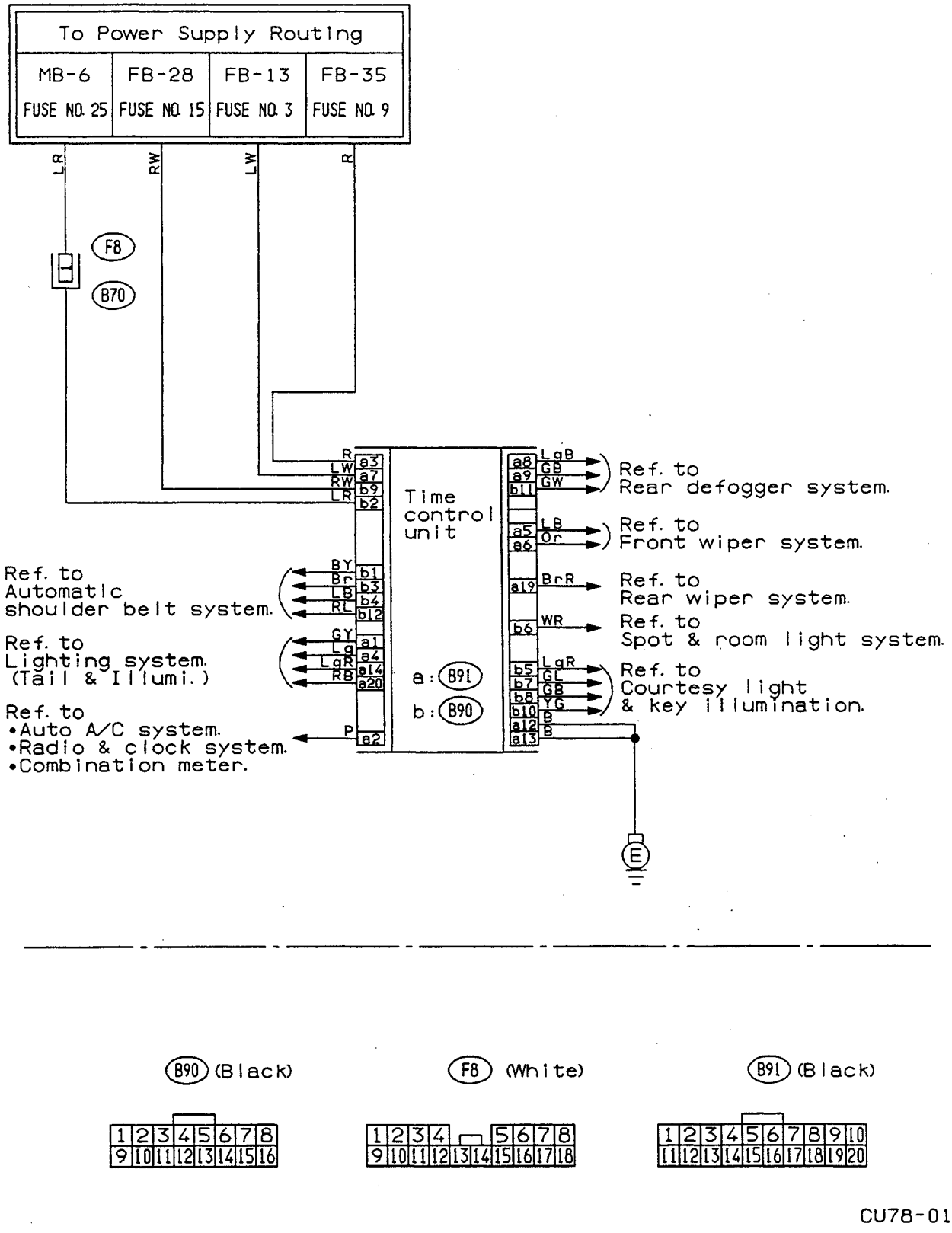

Fig. 60

37. TRUNK ROOM LIGHT SYSTEM

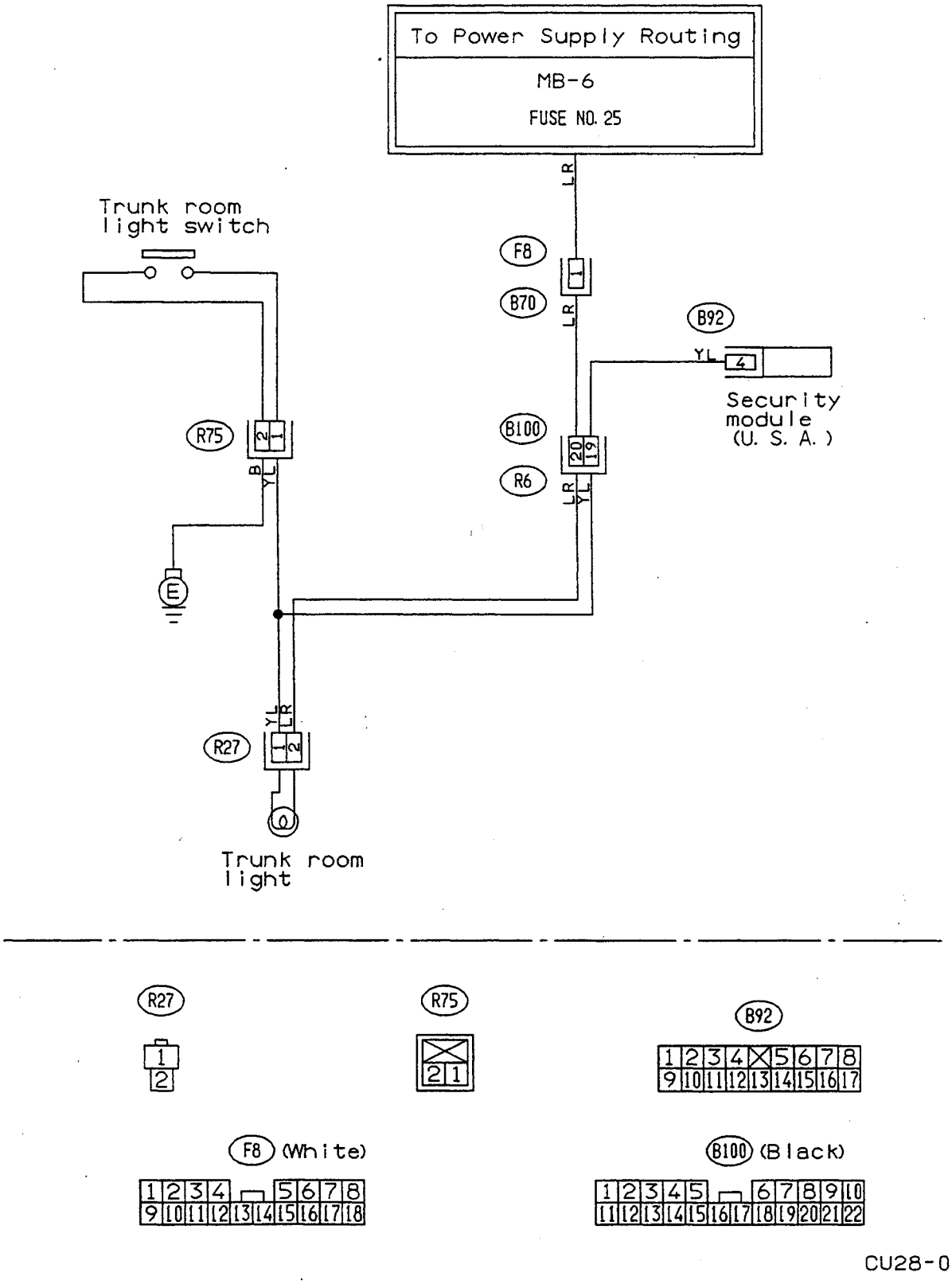

Fig. 61

38. TURN SIGNAL AND HAZARD SYSTEM

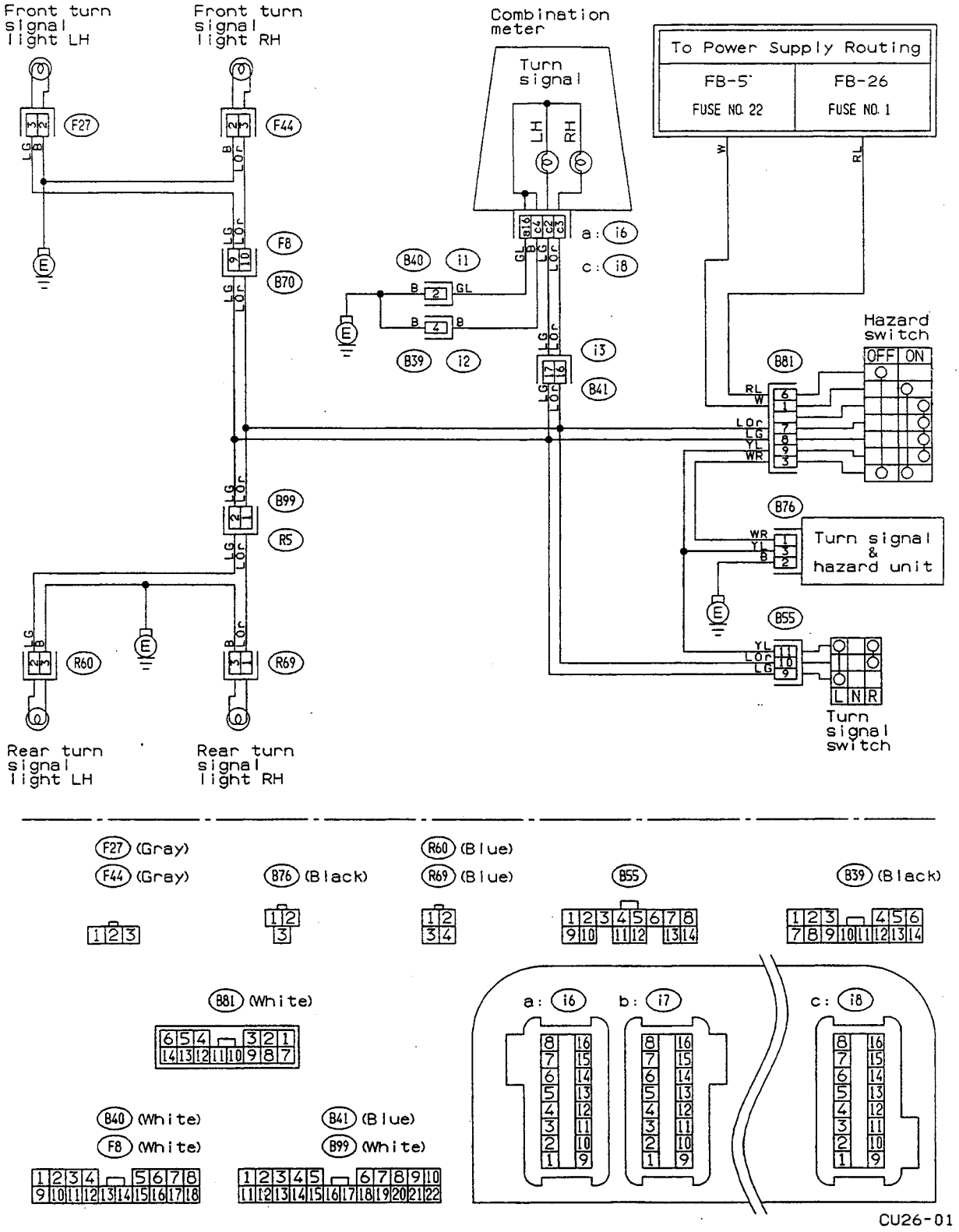

Fig. 62

5. Control Module & Relay Location

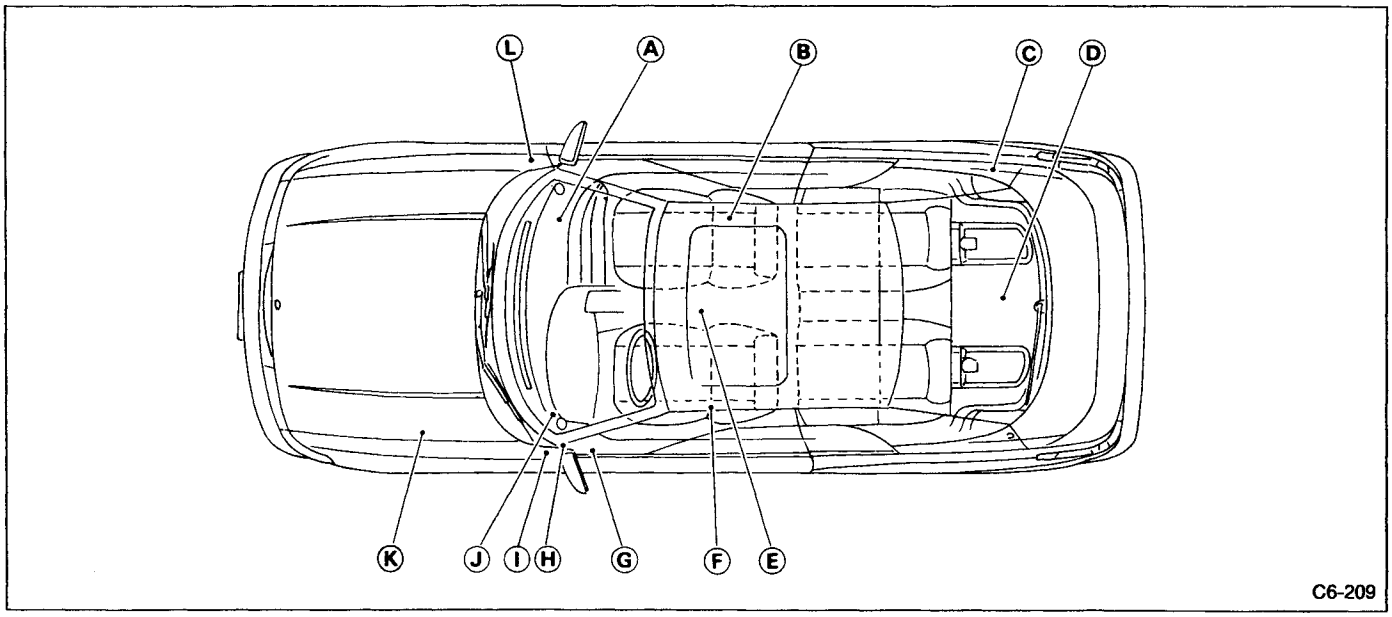

Fig. 5

Electrical control module	Refer to
A.B.S. control module	B
Automatic shoulder belt control module	D
Transmission Control Module (TCM)	H
Cruise control main relay	A
Cruise control module	A
Diagnosis connector	G
Diagnosis terminal	G
Door lock timer	L
Fog light relay	H
Front wiper control module	J
Fuel pump modulator	D
Fuel pump relay	J
Headlight relay LH	K
Headlight relay RH	K
Horn relay	H
Inhibitor relay	A
Main relay	J
Engine Control Module (ECM)	H
Power steering control module	J

Electrical control module	Refer to
Power window circuit breaker	F
Power window relay	F
Relay 1 (Fan GND)	K
Relay 2 (Fan LH1)	K
Relay 3 (Fan LH2)	K
Relay 4 (Fan RH1)	K
Relay 5 (Fan RH2)	K
Relay 7 (A/C COMP)	K
Relay 8 (HEAD)	K
Rear defogger relay	I
Rear wiper relay	D
Resistor (Fuel control)	D
Data link connector	G
Shift lock control module	E
Stop light checker	C
Tail & Illumination relay	I
Time control module	A
Turn & Hazard control module	J

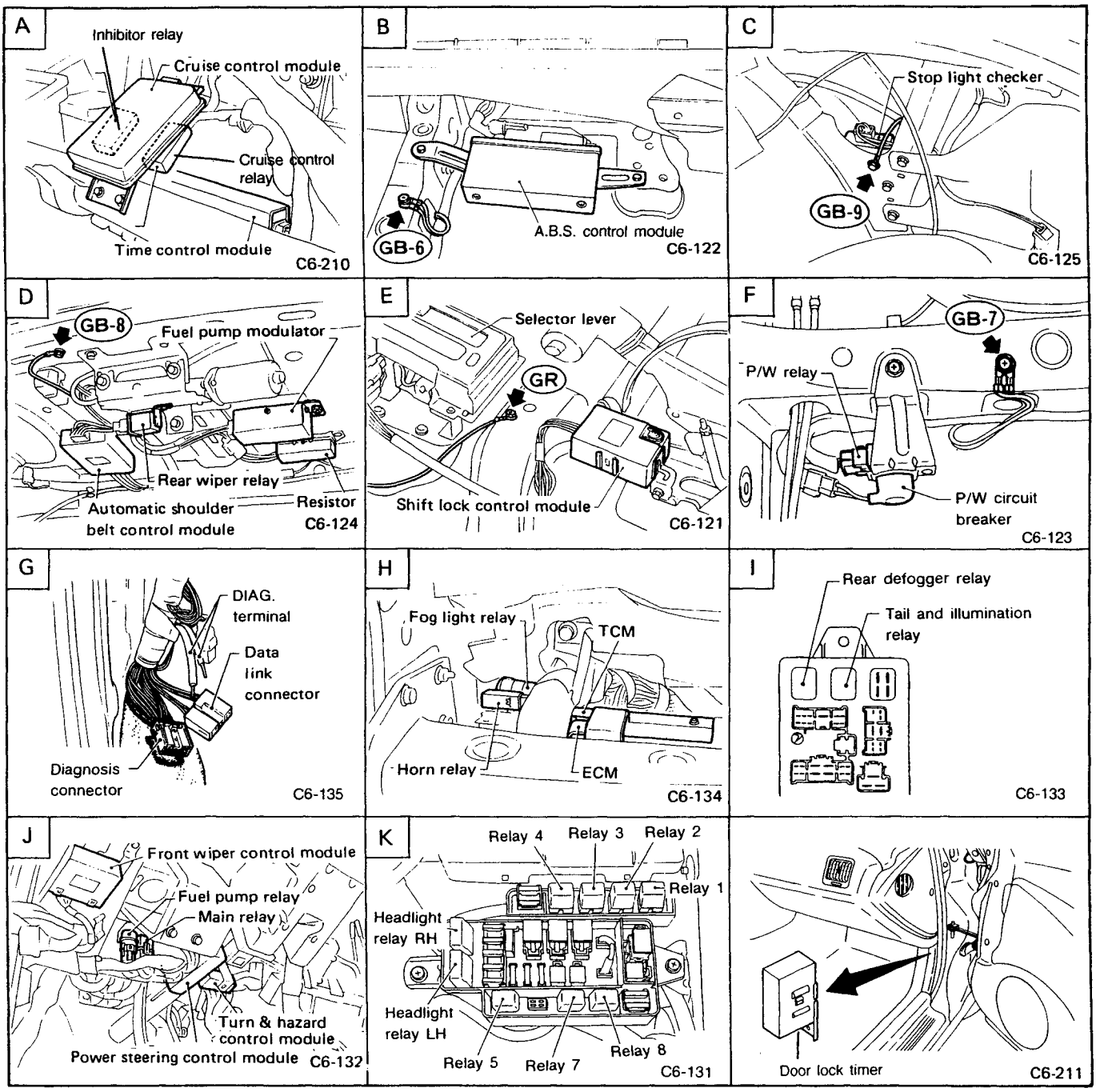
A
Inhibitor relay
Cruise control module
Cruise control relay
Time control module
C6-210
B
GB-6
A.B.S. control module
C6-122
C
Stop light checker
GB-9
C6-125
D
GB-8
Fuel pump modulator
Rear wiper relay
Automatic shoulder belt control module
Resistor
C6-124
E
Selector lever
GR
Shift lock control module
C6-121
F
GB-7
P/W relay
P/W circuit breaker
C6-123
G
DIAG. terminal
Data link connector
Diagnosis connector
C6-135
H
Fog light relay
TCM
Horn relay
ECM
C6-134
I
Rear defogger relay
Tail and illumination relay
C6-133
J
Front wiper control module
Fuel pump relay
Main relay
Turn & hazard control module
Power steering control module
C6-132
K
Relay 4
Relay 3
Relay 2
Relay 1
Headlight relay RH
Headlight relay LH
Relay 5
Relay 7
Relay 8
C6-131
Door lock timer
C6-211

Fig. 6

6. Electrical Wiring Harness and Ground Point

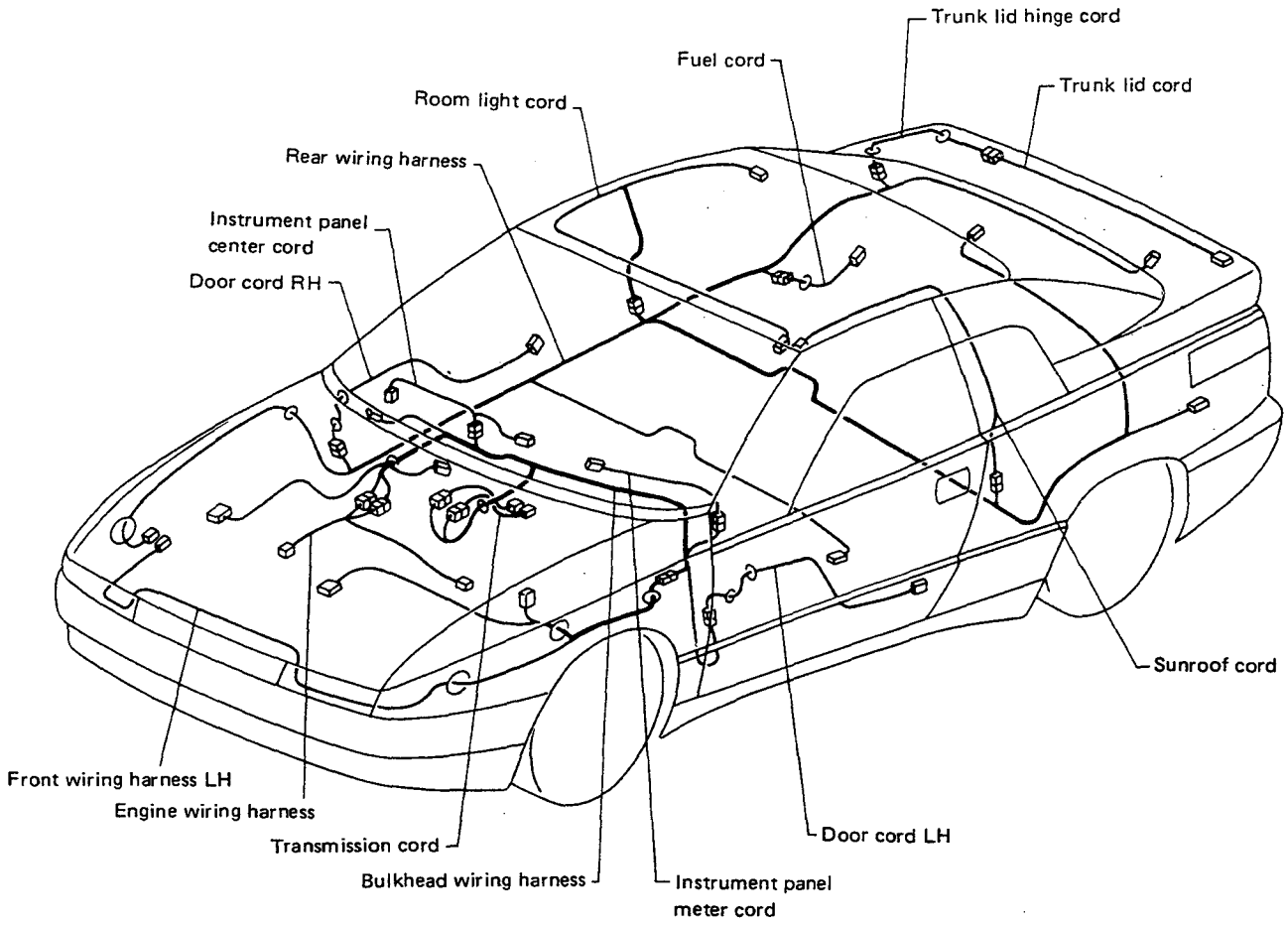

C6-001

Fig. 65

Connector				Connecting to	
No.	Pole	Color	Area	No.	Name
F1	3	Black	A4		Horn relay
F2	4	White	A4		Fog light relay
F3	10	Gray	A4		F/B
F4	3	Gray	B4		
F5	5	Gray	B4		
F6	2	Black	B4		Diode (Fog light)
F7	14	Black	B4	B71	Bulkhead wiring harness
F8	18	White	B3	B70	
F9	8		B3	B72	
F10	4		B3		Relay 3 (Fan LH2) M/B
F11	4		B3		Relay 2 (Fan LH1) M/B
F12	4		B3		Relay 1 (Fan GND) M/B
F13	4		B3		Fuse (Fan LH & RH) M/B
F14	1	Brown	B3		M/B
F15	2	Black	B3		
F16	8	White	B3		
F17	3		B3		
F18	2	Black	B3		SBF holder M/B
F19	2	Black	B3		M/B
F20	4	Gray	B3		Cruise control pump
F21	4		B3		Fuse (A/C & FWD) M/B
F22	4		B3		Relay 8 (HEAD) M/B
F23	4		B3		Relay 7 (A/C COMP) M/B
F24	4		B3		Relay 5 (Fan RH2) M/B
F25	2	Gray	B3		A/T resistor
F27	3	Gray	C3		Front turn & side marker light LH
F28	2	Black	B2		Headlight LH (Hi-beam)
F29	2	Brown	C2		Headlight LH (Lo-beam)
F30	1 x 2	Black	B2		Horn
F31	2	Gray	B2		Front fog light LH
F32	4	Gray	B2		Radiator fan LH (Sub fan)
F33	2	Black	B2		A/C compressor solenoid
F34	1	Black	B2		A/C compressor clutch
F35	2	Gray	B2		Alternator
F36	1 x 2		B2		
F37	4	Gray	B1		Radiator fan RH (Main fan)
F38	2	Black	B1		Ambient sensor
F39	4	White	B1		Trinary switch
F40	2	Gray	B1		Front fog light RH
F41	2	Brown	B1		Headlight RH (Lo-beam)
F42	2	Black	B1		Headlight LH (Hi-beam)
F43	2	Gray	B1		Hydraulic unit
F44	3	Gray	B1		Front turn & side marker light RH
F45	4		B3		Relay 4 (Fan RH1) M/B

1. FRONT WIRING HARNESS AND GROUND POINT

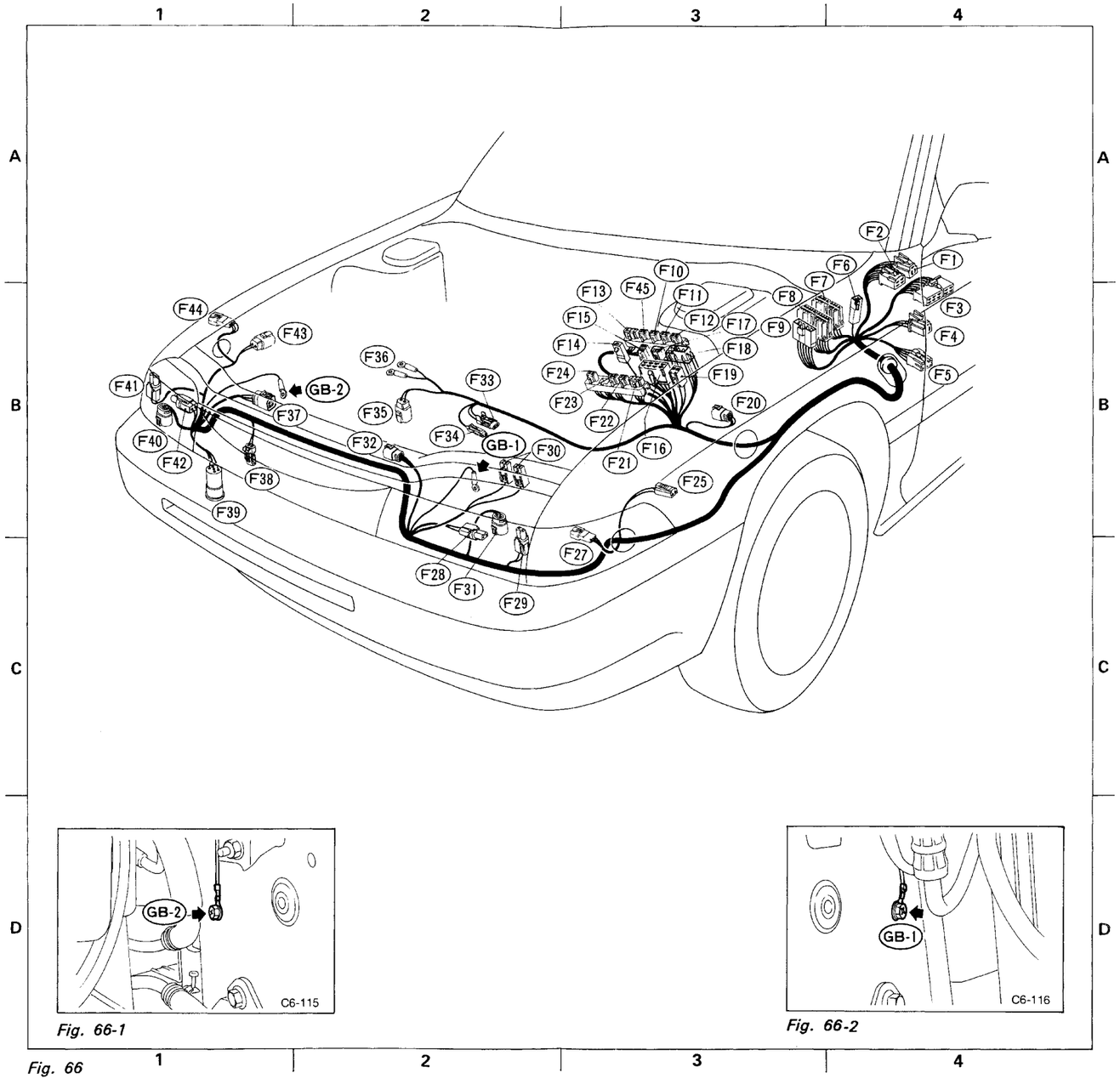

Fig. 66-1

Fig. 66-2

Fig. 66

Connector				Connecting to	
No.	Pole	Color	Area	No.	Name
B1	5	Gray	B2		Air flow sensor
B2	2	White	B2		Front washer motor
B3	2	Gray	B2		ABS front sensor RH
B4	8	Gray	B2	E3	Engine wiring harness
B5	16	Gray	B2	E1	
B6	14	Gray	B2	E4	
B7	12	Gray	B2	E2	
B8	4	Gray	B2		O_2 sensor 1
B9	3	Black	B2		Vehicle speed sensor 2
B10	6	Black	A2		Front wiper motor
B11	6	Gray	A2		Igniter
B12	7	Gray	A3		
B13	12	Black	B3	T1	Transmission cord
B14	16	Black	B3	T2	
B15	1	Black	B3		Starter motor
B16	4	Gray	B3		O_2 sensor 2
B17	2	Black	B3		Power steering solenoid
B18	2	Gray	B3		ABS front sensor LH
B19	2	Gray	B3		Brake fluid level sensor

2. BULKHEAD WIRING HARNESS (Engine side)

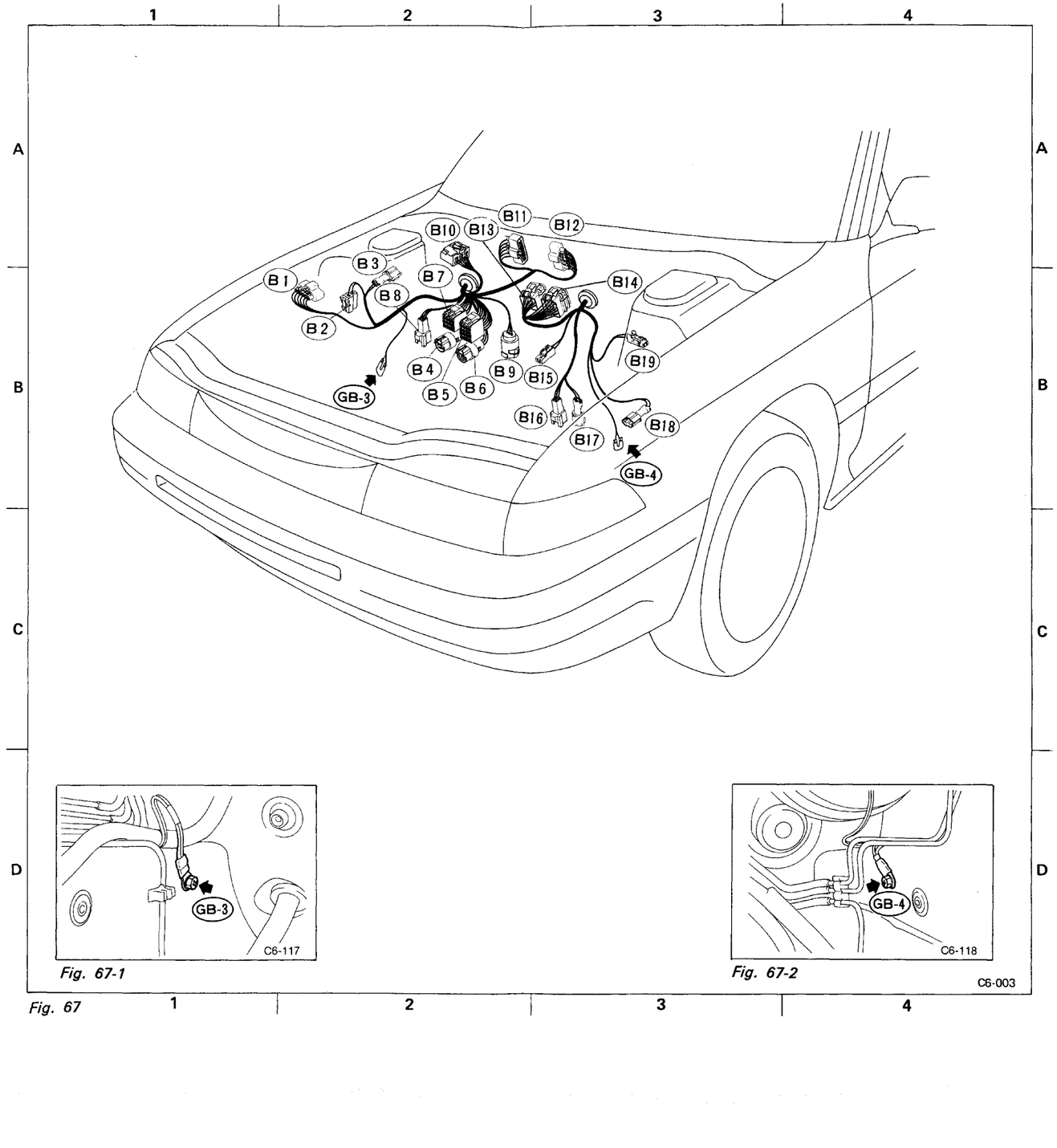

Fig. 67-1

Fig. 67-2

Fig. 67

3. ENGINE WIRING HARNESS · TRANSMISSION CORD AND GROUND POINT

Connector				Connecting to	
No.	Pole	Color	Area	No.	Name
E1	16	Gray	A4	B5	Bulkhead wiring harness
E2	12	Gray	A3	B7	
E3	8	Gray	B2	B4	
E4	14	Gray	B2	B6	
E5	2	Gray	A3		Injector #1
E6	2	Gray	A3		Injector #3
E7	2	Gray	A3		Injector #5
E8	2	Gray	B4		Injector #2
E9	2	Gray	B4		Injector #4
E10	2	Gray	B4		Injector #6
E11	3	Brown	A4		Throttle sensor
E12	2	Black	A2		Power steering switch
E13	2	Gray	A3		Recirculation gas temperature sensor
E14	2	Blue	A3		Purge control solenoid
E15	3	Gray	A4		By-pass air control solenoid
E16	2	Gray	A3		EGR solenoid
E17	2	Brown	A4		Induction control solenoid
E18	2	Blue	A3		Auxiliary air control valve
E19	1	Gray	B2		Knock sensor 2
E20	1	Gray	B1		Knock sensor 1
E21	2	Gray	B1		Crank angle sensor 1
E22	2	Gray	C2		Crank angle sensor 2
E23	2	Gray	B2		Cam angle sensor
E24	2	Brown	B2		Water temperature sensor
E25	1		B1		Thermometer
E26	1		B2		Oil pressure switch
E27	2	Gray	B2		Ignition coil #1
E28	2	Green	B2		Ignition coil #3
E29	2	Blue	B2		Ignition coil #5
E30	2	Gray	B3		Ignition coil #2
E31	2	Green	B3		Ignition coil #4
E32	2	Blue	B3		Ignition coil #6

Connector				Connecting to	
No.	Pole	Color	Area	No.	Name
T1	12	Black	D3	B13	Bulkhead wiring harness
T2	16	Black	D4	B14	Bulkhead wiring harness

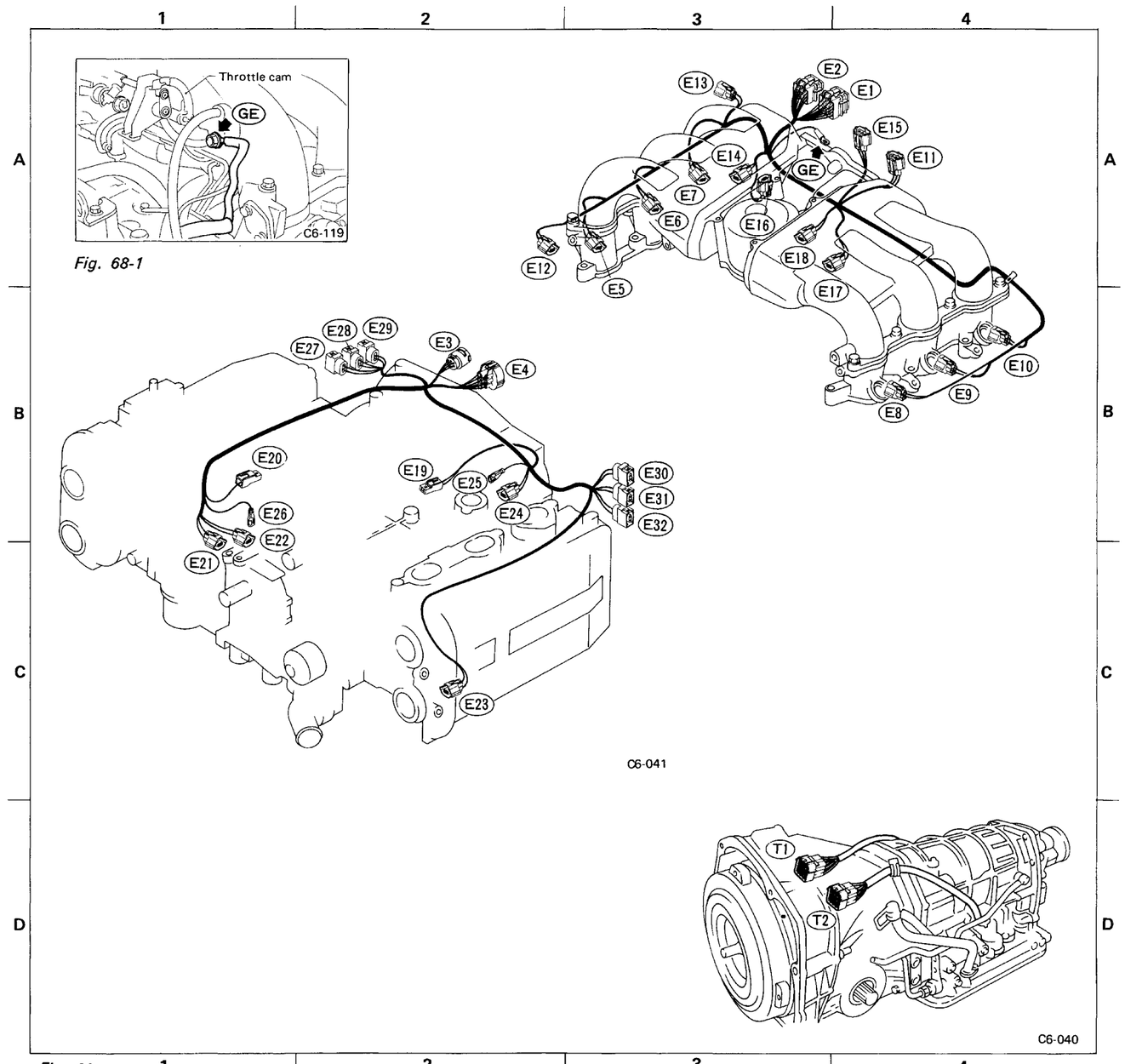

Fig. 68-1

Fig. 68

Connector				Connecting to	
No.	Pole	Color	Area	No.	Name
B30	14		C1	D10	Door cord LH
B31	10		C1	D9	Door cord LH
B33	1 x 2		C1		°C ↔ °F Changing connector
B34	20	Black	C1		Check connector (Manufacturing)
B35	9	Yellow	C1		Select monitor
B36	10	Black	C1		Diagnosis connector
B37	1 x 2		C1		Diagnosis terminal
B38	15	Gray	C1		F/B
B39	14	Black	B1	i2	Instrument panel meter cord
B40	18	White	B1	i1	
B41	22	Blue	B1	i3	
B42	17		B1		Front wiper control unit
B43	12	Gray	B1		F/B
B44	11	Gray	B1		F/B
B45	14	White	B1		Fog light switch & cruise control main switch
B46	10	White	B1		Parking light switch & outside mirror defogger switch
B47	12	Black	B1		Remote control mirror switch
B48	2	Black	B1		Diode (MPFI)
B49	2	Black	C1		Diode (Dimmer)
B50	2		C2		Wiper select switch
B51	4		C1		Fuel pump relay
B52	6	Brown	C2		Main relay (MPFI)
B53	16	White	B2		Power steering unit
B54	5	Black	C2		Horn switch & cruise control sub switch
B55	14		C2		Combination switch
B56	13		C2		
B57	2		C2		
B58	7	Yellow	C1		SRS (Airbag) harness
B59	22	Yellow	B2		MPFI control unit
B60	12	Yellow	B2		
B61	16	Yellow	B2		
B62	26	Yellow	B2		
B63	5	Black	B2		Daytime running light relay 1
B64	6	Brown	B2		Daytime running light relay 2
B65	4	Black	B2		Stop & brake switch
B66	20	Black	B2		A/T control unit
B67	12	Black	B2		
B68	16	Black	B2		
B69	6	White	B2		Shield joint connector (A/T)
B70	18	White	B2	F8	Front wiring harness LH
B71	14	Black	B2	F7	
B72	8		B2	F9	
B73	4		B2		Starter interrupt relay adapter

Connector				Connecting to	
No.	Pole	Color	Area	No.	Name
B74	4	Black	B2		Ignition switch
B75	6	Black	B2		
B76	3	Black	B2		Turn & hazard unit
B77	2	White	B2		Step light LH
B78	20	Black	B2	i10	Instrument panel center cord
B79	18	White	B2	i11	
B80	22	Blue	B2	i9	
B81	14	White	B2		Hazard switch & rear window defogger switch
B82	10	Black	B2	HU1	Heater unit cord
B83	20	White	A3		Cruise control unit
B84	4	White	A3		
B85	4		B3		Inhibitor relay
B86	4	Black	B3		Cruise control main relay
B87	10	White	A4		Daytime running light control unit
B88	4	Black	A4		Diode (Cruise control)
B89	8	White	A4		Door lock timer
B90	16	Black	B4		Time control unit
B91	20	Black	B4		
B92	17		B4		Security electronic module
B93	14		B4	D16	Door cord RH
B94	4		B4	D15	
B95	2	White	B4	BM1	Blower unit cord
B96	14		B4	BM2	
B97	6	Black	B4	R2	Rear wiring harness
B98	6	White	B4	R3	
B99	22	White	B4	R5	
B100	22	Black	B4	R6	
B101	22	Blue	C4	R4	
B102	4	Brown	B1		Diode (DRL & Hi-beam)
BM1	2	White	D3	B95	Bulkhead wiring harness
BM2	14		D3	B96	
BM3	2		D3		Refrigerant temperature sensor
BM4	2		D3		Evaporator sensor
BM5	4		D3		Hi-relay
BM6	4		D3		Fan control amp.
BM7	2		D3		Blower motor
BM8	4		D3		OFF relay
BM9	7		D3		Intake door actuator
HU1	10	Black	D2		Bulkhead wiring harness
HU2	7		D2		Mode door actuator
HU3	2		D3		Water temperature sensor
HU4	7		D3		Air mix door actuator

4. BULKHEAD WIRING HARNESS (Interior side)

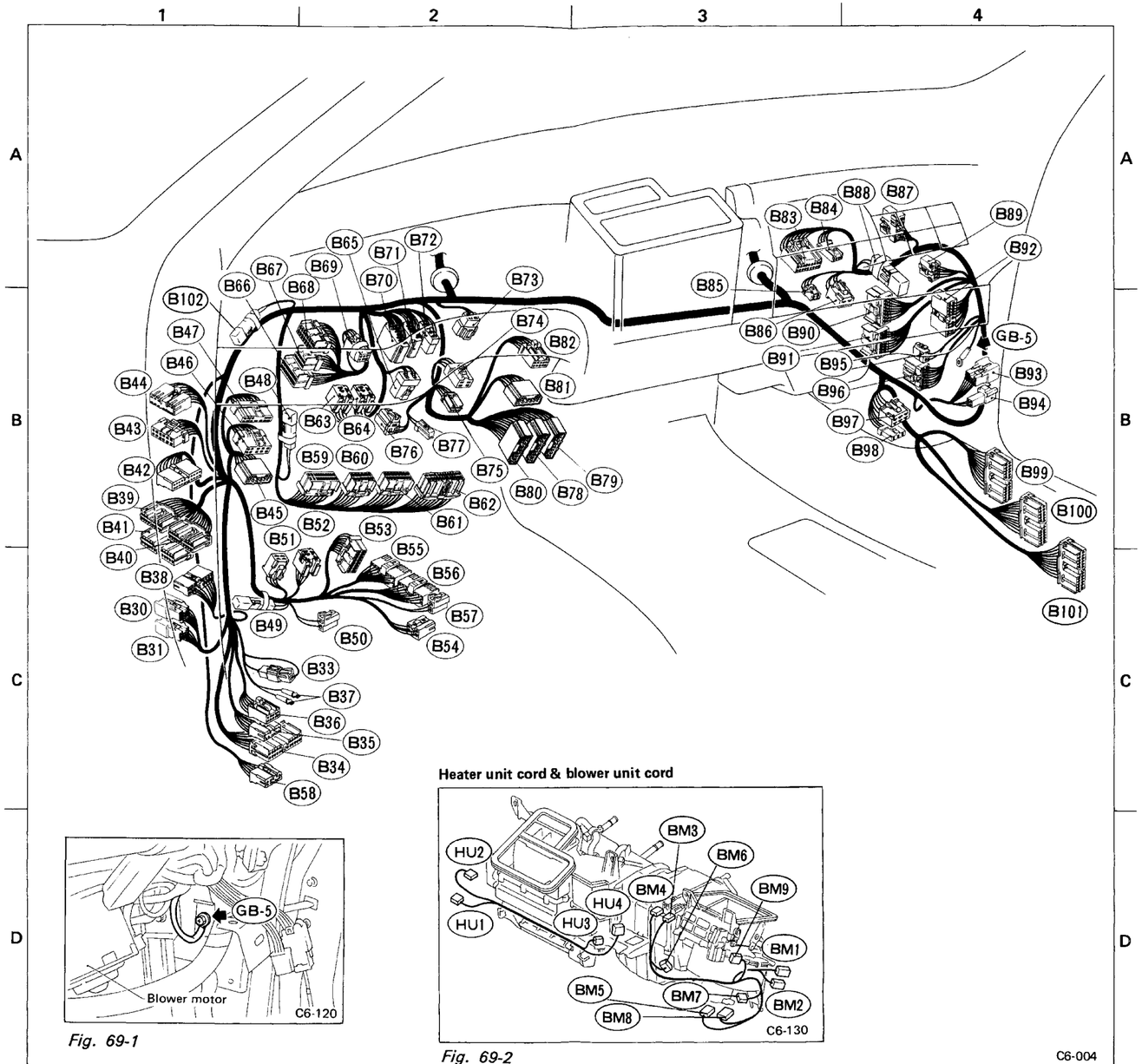

Fig. 69

Fig. 69-1

Heater unit cord & blower unit cord

Fig. 69-2

5. INSTRUMENT PANEL WIRING HARNESS

Connector				Connecting to	
No.	Pole	Color	Area	No.	Name
i1	18	White	B1	B40	Bulkhead wiring harness
i2	14	Black	B1	B39	
i3	22	Blue	B1	B41	
i4	2		A1		Front speaker LH
i5	2	Black	A2		Sunload sensor
i6	16	Gray	A1		Combination meter (With yellow bracket)
i7	16	Gray	A1		Combination meter (With white bracket)
i8	16	Gray	B2		Combination meter (With yellow bracket)
i9	22	Blue	B2	B80	Bulkhead wiring harness
i10	20	Black	B2	B78	
i11	18	White	B2	B79	
i12	3		C2		Cigarette lighter & ash tray (Illumination light & ground)
i13	1		C2		Cigarette lighter (Power)
i14	2	White	C2		CD illumination light
i15	20	White	B2		Radio
i16	20	Black	B2		Auto A/C control unit
i17	16	Black	B2		
i18	4		B2		Clock
i19	2	White	B3		Step light RH
i20	2	Brown	C3		Glove box light
i21	2		B4		Front speaker RH
i22	2		C4		Glove box light switch

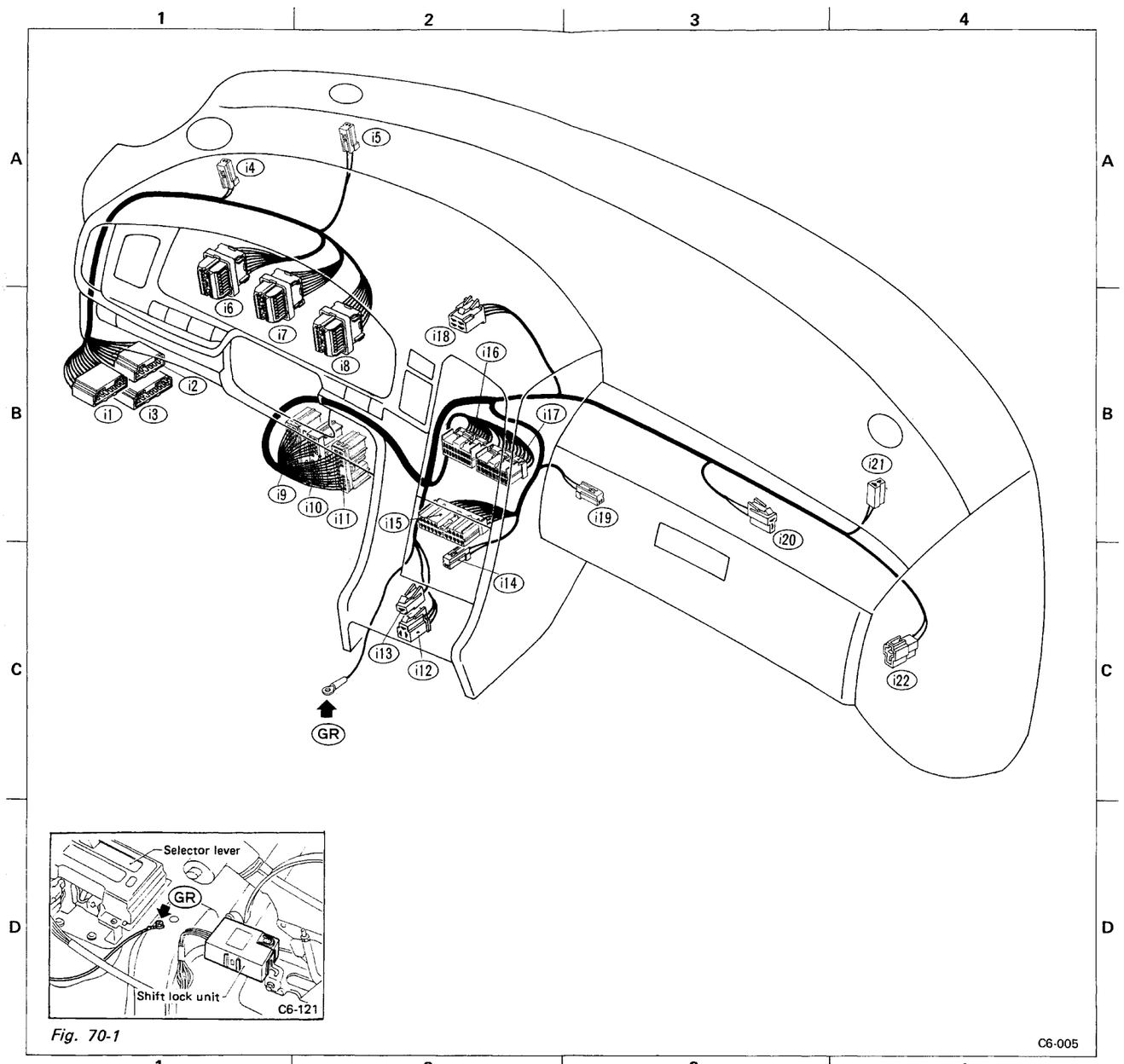

Fig. 70-1

Fig. 70

6. DOOR CORD

Connector				Connecting to	
No.	Pole	Color	Area	No.	Name
D1	3		B1		Door latch switch LH
D2	4		B1		Door lock actuator LH
D3	4		B1		Door handle switch & key hole illumination
D4	2	Pink	B2		Courtesy light LH
D5	2	Black	B3		Door speaker LH
D6	14		B2		Power window main switch
D7	2	Green	B3		Front power window motor LH
D8	8	White	B3		Side view mirror LH
D9	10		B3	B31	Bulkhead wiring harness
D10	14		B3	B30	
D15	4		D2	B94	Bulkhead wiring harness
D16	14		D2	B93	
D17	8	White	D2		Side view mirror RH
D18	2	Green	D2		Front power window motor RH
D19	5		D3		Front power window sub-switch RH
D20	2	Black	D2		Door speaker RH
D21	2	Pink	D3		Courtesy light RH
D22	4		D4		Door lock actuator RH
D23	3		D4		Door latch switch RH

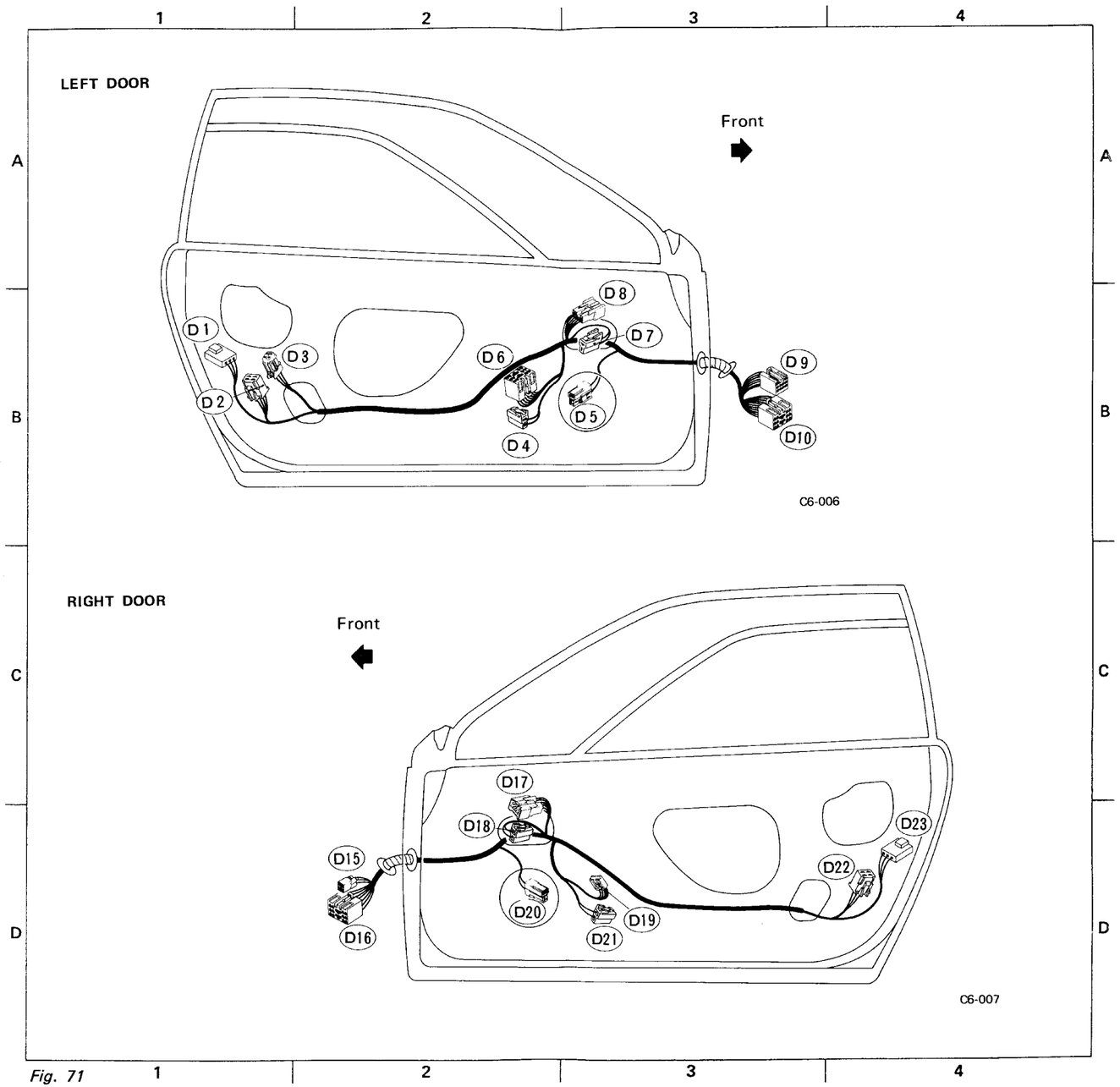

Fig. 71

7. REAR WIRING HARNESS

Connector				Connecting to	
No.	Pole	Color	Area	No.	Name
R1	12	Black	B1		Hydraulic unit
R2	6	Black	B2	B97	Bulkhead wiring harness
R3	6	White	B2	B98	
R4	22	Blue	B2	B101	
R5	22	White	B2	B99	
R6	22	Black	B2	B100	
R7	35		B2		A.B.S. control module
R8	6		B2	R9	Room light cord
R9	6		B2	R8	Rear wiring harness
R10	6		B2		Front room light switch
R11	2	White	B2		Vanity mirror illumination light RH
R12	5		B3		Rear power window sub switch RH
R13	2		B3		Automatic shoulder belt motor RH
R14	4		B3		Automatic shoulder belt rear limit switch RH
R15	2		B3		Automatic shoulder belt front limit switch RH
R16	2	Green	B3		Rear power window motor RH
R17	2	White	B3		Vanity mirror illumination light LH
R18	2	Gray	B3		A.B.S. rear sensor RH
R19	5	Black	B3	R20	Fuel cord
R20	5	Black	B3	R19	Rear wiring harness
R21	4		B3		Sunroof cord
R22	2		B3		Rear room light
R23	6		B3		Fuel pump & gauge unit
R24	2	Black	B3		Rear speaker RH
R25	4		B4		Rear wiper motor
R26	5	Black	B4		Rear wiper relay
R27	2		B4		Trunk room light
R28	7		B4		Automatic shoulder belt control module

Connector				Connecting to	
No.	Pole	Color	Area	No.	Name
R29	2	Black	B4		Rear side marker LH
R30	3		B4		Power antenna
R31	2	Black	B4		Rear speaker LH
R32	17		B4		Automatic shoulder belt control module
R33	4	White	B4		Fuel pump modulator
R34	2	Gray	B4		Resistor (Fuel pump control)
R35	2	Green	B4		Rear power window motor LH
R36	2	Gray	B4		A.B.S. rear sensor LH
R37	2		C4		Automatic shoulder belt front limit switch
R38	4		C4		Automatic shoulder belt rear limit switch
R39	2		C4		Automatic shoulder belt motor LH
R40	5		C3		Rear power window sub switch LH
R41	3		B3	R42	Sunroof cord
R42	3		B3	R41	Rear wiring harness
R43	2		C3		Power window circuit breaker
R44	4		C3		Power window relay
R45	2	White	C3		Power seat
R46	2	White	C3		Seat belt switch
R47	12	Black	B3		Shift lock control module
R48	2		B3		Parking brake switch
R49	2	Green	B2		Select lever illumination light
R50	2	Black	B2		Shift lock solenoid
R51	4	White	B2		A/T manual switch & P position switch
R52	6	Blue	C2		Door lock switch

NOTE: Other Wiring Diagrams for '92-'93 are found in Section 6-3 of the '92 SVX Service Manual.

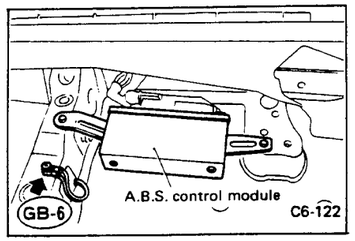

B-2

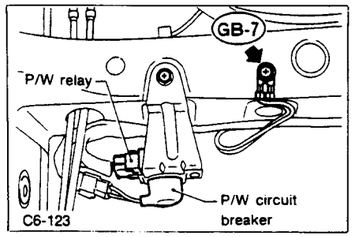

C-3

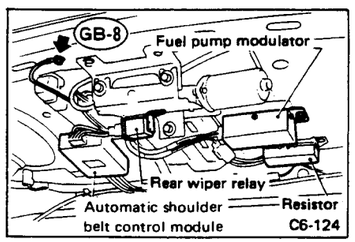

B-4

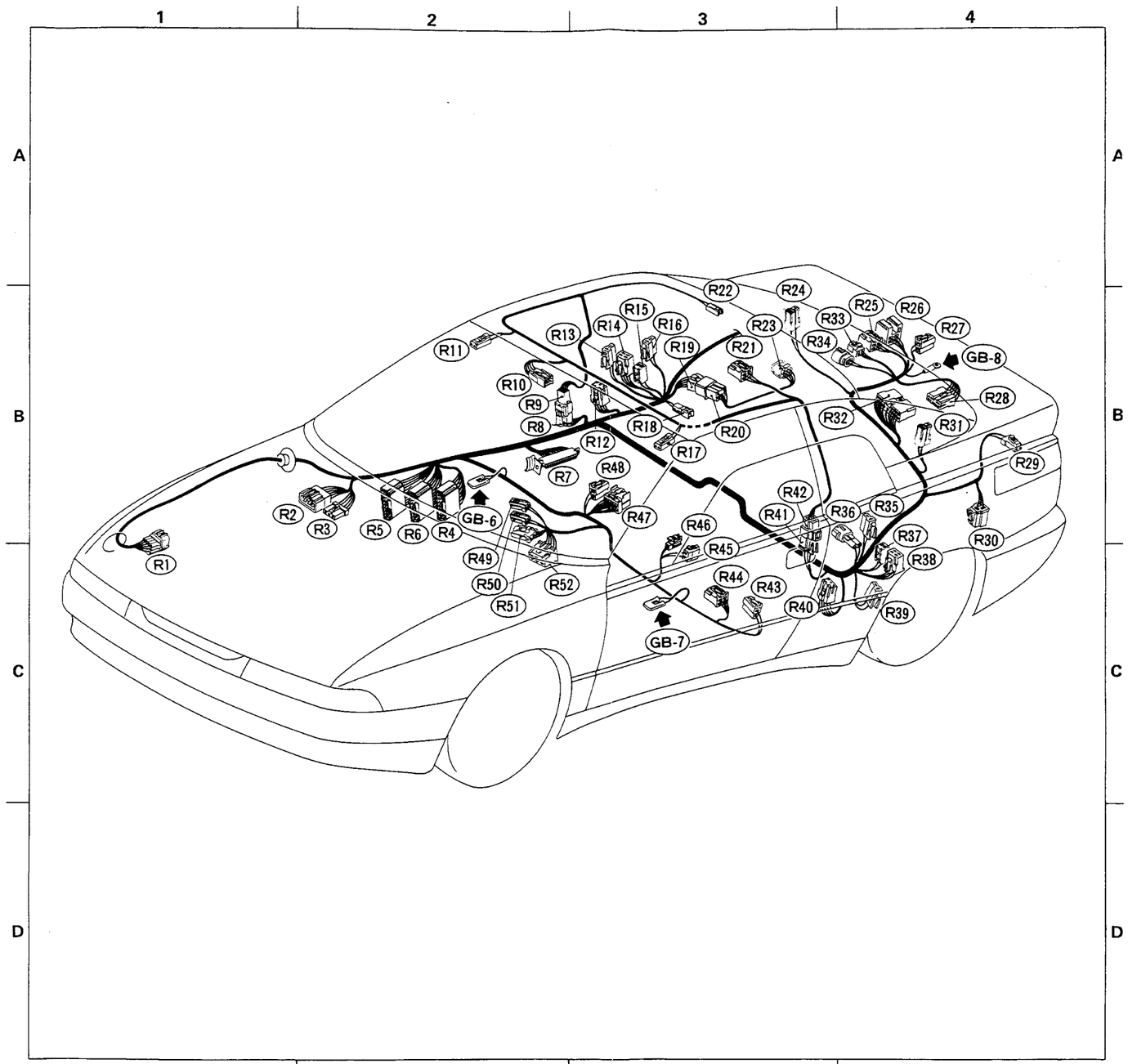

Fig. 7

8. REAR END WIRING HARNESS AND GROUND POINT OF 4-DOOR SEDAN

Connector				Connecting to	
No.	Pole	Color	Area	No.	Name
R60	4	Blue	B2		Rear combination light LH
R61	4	Blue	B3		Finisher light LH
R62	2		B3		High-mount stop light
R63	6		B3		Finisher light RH
R64	4		B3	R65	Trunk lid hinge cord
R65	4		B4	R64	Trunk lid cord
R66	4		B4	R67	Rear wiring harness
R67	4		B4	R66	Trunk lid hinge cord
R68	2	Black	B4		Rear side maker RH
R69	4	Blue	B4		Rear combination light RH
R70	2		B4		Rear washer motor
R71	1		B4		Rear defogger (Power)
R72	4		B4		Stop light checker
R73	2	Black	B4		Rear defogger condenser
R74	4		B4		Telephone (OP)
R75	2		B3		Trunk room light switch

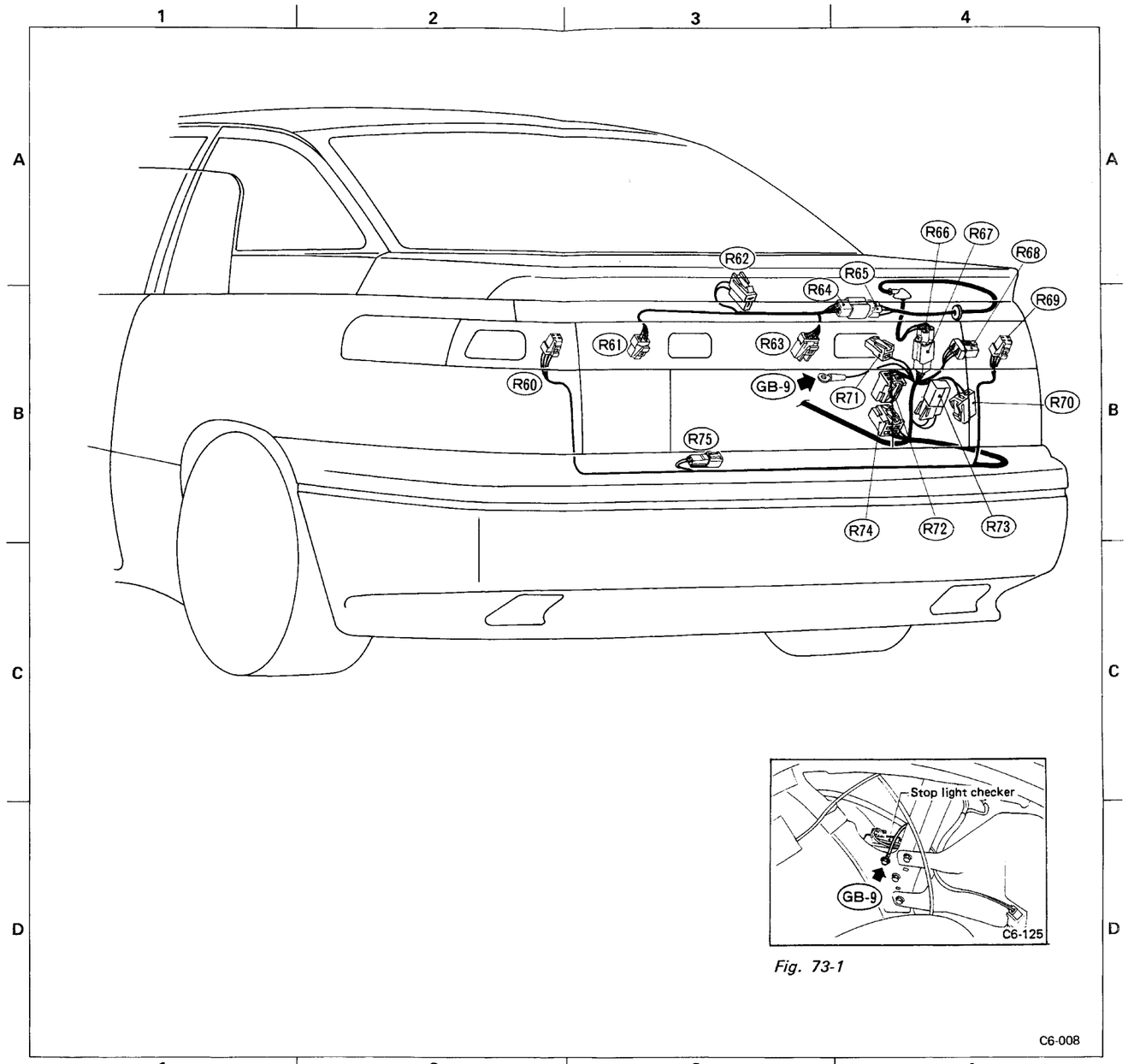

Fig. 73-1

Fig. 73