A000A01A-GAT

This Owner's Manual should be considered a part of the car and remain with it when it is sold for the use of the next owner.

OWNER'S I.D.

ORIGINAL: NAME: _____

ADDRESS: STREET: _____

TOWN: _____

COUNTRY: _____

P.CODE: _____

DATE OF SALE: _____

SUBSEQUENT: NAME: _____

ADDRESS: STREET: _____

TOWN: _____

COUNTRY: _____

P.CODE: _____

TRANSFER DATE: _____

HYUNDAI

# Getz

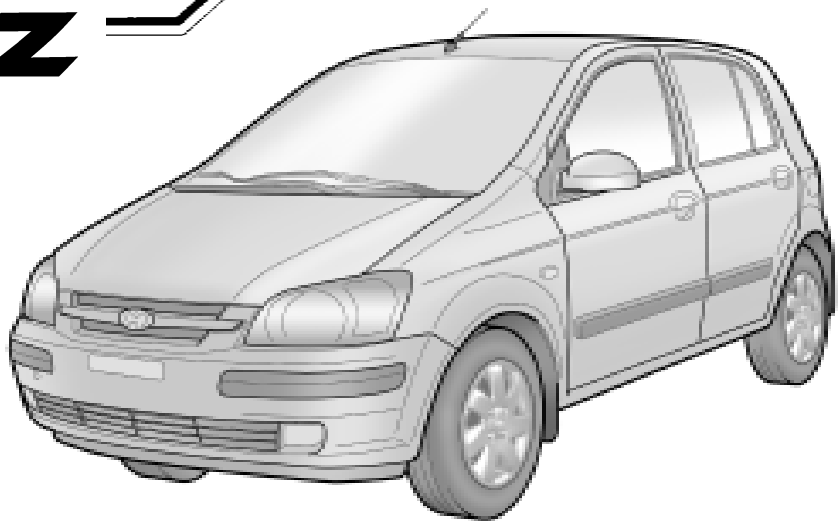

HTB089

## OWNER'S MANUAL

A030A01TB-GAT

**Operation**
**Maintenance**
**Specifications**

**All information in the Owner's Manual is current at the time of publication. Hyundai reserves the right to make changes at any time as part of our policy of continual product improvement may be carried out.**

**This manual applies to all Hyundai models and includes descriptions and explanations of optional as well as standard equipment. As a result, you may find material in this manual that does not apply to your specific vehicle.**

**Please note that some models are equipped with Right-Hand Drive (RHD). The explanations and illustrations for some operations in RHD models are opposite of those written in this manual.**

A040A01A-AAT

## FOREWORD

Thank you for choosing Hyundai. We are pleased to welcome you to the growing number of discriminating people who drive Hyundais. The advanced engineering and high-quality construction of each Hyundai we build is something of which we're very proud.

Your Owner's Manual will introduce you to the features and operation of your new Hyundai. It is suggested that you read it carefully since the information it contains can contribute greatly to the satisfaction you receive from your new car.

The manufacturer also recommends that all service and maintenance on your car be performed by an authorized Hyundai dealer. Hyundai dealers are prepared to provide high-quality service, maintenance and any other assistance that may be required.

A050A04A-AAT

## HYUNDAI MOTOR COMPANY

**Note:** Because future owners will also need the information included in this manual, if you sell this Hyundai, please leave the manual in the vehicle for their use. Thank you.

**CAUTION:**
**Severe engine and transaxle damage may result from the use of poor quality fuels and lubricants that do not meet Hyundai specifications. You must always use high quality fuels and lubricants that meet the specifications listed on Page 9-4 in the Vehicle Specifications section of the Owner's Manual.**

Copyright 2002 Hyundai Motor Company. All rights reserved. No part of this publication may be reproduced, stored in any retrieval system or transmitted in any form or by any means without the prior written permission of Hyundai Motor Company.

A020A01A-AAT

## RESPONSIBILITY FOR MAINTENANCE

The maintenance requirements for your new Hyundai are found in Section 5. As the owner, it is your responsibility to see that all maintenance operations specified by the manufacturer are carried out at the appropriate intervals. When the vehicle is used in severe driving conditions, more frequent maintenance is required for some operations. Maintenance requirements for severe operating conditions are also included in Section 5.

A070A01A-GAT

## CAUTION: MODIFICATIONS TO YOUR HYUNDAI

**Modification of components may void the manufacturer's warranty**
Your Hyundai should not be modified in any way. Modifications may adversely affect the safety, durability and performance of your Hyundai. Components which are subjected to modification or are added to the vehicle resulting in consequential damage are not covered by the vehicle manufacturer's warranty.

A080A01S-AAT

## TWO-WAY RADIO OR CELLULAR TELEPHONE INSTALLATION

Your vehicle is equipped with electronic fuel injection and other electronic components. It is possible for an improperly installed/adjusted two-way radio or cellular telephone to adversely affect electronic systems. For this reason, we recommend that you carefully follow the radio manufacturer's instructions or consult your Hyundai dealer for precautionary measures or special instructions if you choose to install one of these devices.

A090A01A-AAT

## SAFETY AND VEHICLE DAMAGE WARNING

This manual includes information titled as WARNING, CAUTION and NOTE. These titles indicate the following:

**WARNING:**
**This indicates that a condition may result in harm, serious injury or death to you or other persons if the warning is not heeded. Follow the advice provided with the warning.**

**CAUTION:**
**This indicates that a condition may result in damage to your vehicle or its equipment if the caution is not heeded. Follow the advice provided with the caution.**

**NOTE:**
**This indicates that interesting or helpful information is being provided.**

A100A01L-GAT

# GUIDE TO HYUNDAI GENUINE PARTS

## 1. What are Hyundai Genuine Parts?

Hyundai Genuine Parts are the same parts used by Hyundai Motor Company to manufacture vehicles. They are designed and tested for the optimum safety, performance, and reliability to our customers.

## 2. Why should you use genuine parts?

Hyundai Genuine Parts are engineered and built to meet rigid original manufacturing requirements. Using imitation, counterfeit or used salvage parts are not covered under the Hyundai New Vehicle Limited Warranty or any other Hyundai warranty. In addition, any damage to or failure of Genuine Hyundai Parts caused by the installation or failure of an imitation, counterfeit or used salvage part is not covered by Hyundai Motor Company.

## 3. How can you tell if you purchasing Hyundai Genuine Parts?

Look for the Hyundai Genuine Parts Logo on the package (see below).

The export specifications are written in English only.

Hyundai Genuine Parts are only sold through authorized Hyundai Dealership and Service Center.

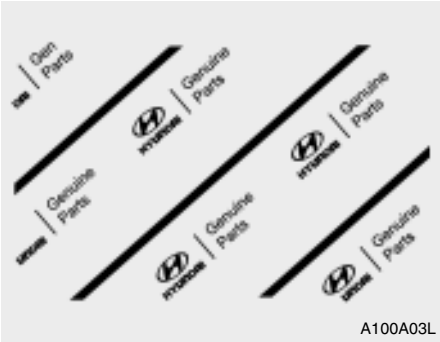


A100A03L

A100A01L

A100A02L

A100A04L

## TABLE OF CONTENTS


| SECTION | PAGE | |
|---|---|---|
| 1. FEATURES OF YOUR HYUNDAI | 1-1 | 1 |
| 2. DRIVING YOUR HYUNDAI | 2-1 | 2 |
| 3. WHAT TO DO IN AN EMERGENCY | 3-1 | 3 |
| 4. CORROSION PREVENTION & APPEARANCE CARE | 4-1 | 4 |
| 5. VEHICLE MAINTENANCE REQUIREMENTS | 5-1 | 5 |
| 6. DO-IT-YOURSELF MAINTENANCE | 6-1 | 6 |
| 7. EMISSION CONTROL SYSTEMS | 7-1 | 7 |
| 8. CONSUMER INFORMATION | 8-1 | 8 |
| 9. VEHICLE SPECIFICATIONS | 9-1 | 9 |
| 10. INDEX | 10-1 | 10 |

B250A01TB-GAT

# INSTRUMENTS AND CONTROLS (LEFT-HAND DRIVE)

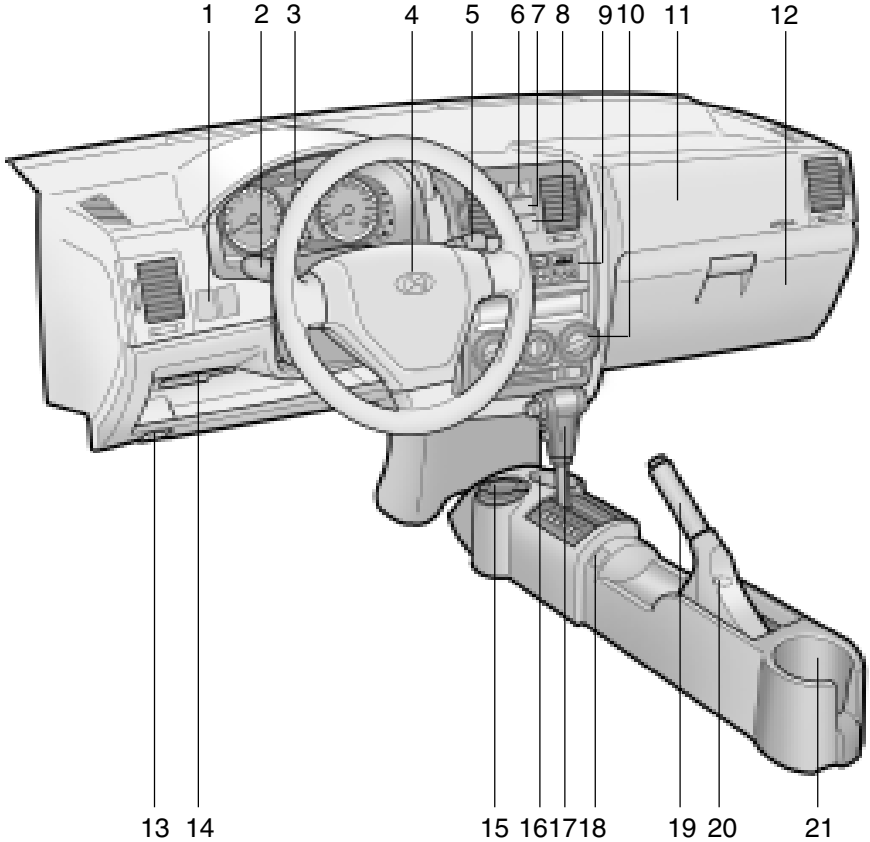


HTB032A

1. Headlight Leveling Switch (If installed)
2. Multi-Function Light Switch
3. Instrument Cluster
4. Horn and Driver's Airbag (If installed)
5. Windshield Wiper/Washer Switch
6. Hazard Warning Light
7. Front Fog Light Switch (If installed)
8. Rear Fog Light Switch (If installed)
9. Audio System (If installed)
10. Heating/Air Conditioning Control Panel (If installed)
11. Passenger's Airbag (If installed)
12. Glove Box
13. Hood Release Lever
14. Fuse Box
15. Ashtray
16. Front Drink Holder
17. Shift Lever (If installed)
18. Seat Warmer (If installed)
19. Parking Brake Lever
20. Cigarette Lighter
21. Rear Drink Holder

**CAUTION:**

**When installing a container of liquid air freshener inside a vehicle, do not place it near the instrument cluster nor on the instrument panel pad surface. If there is any leakage from the air freshener onto these areas (instrument cluster, instrument panel pad or air ventilator), it may damage these parts.If the liquid from the air freshener does leak onto these areas, wash them with water immediately.**

B250B01TB-GAT

## INSTRUMENTS AND CONTROLS (RIGHT-HAND DRIVE)

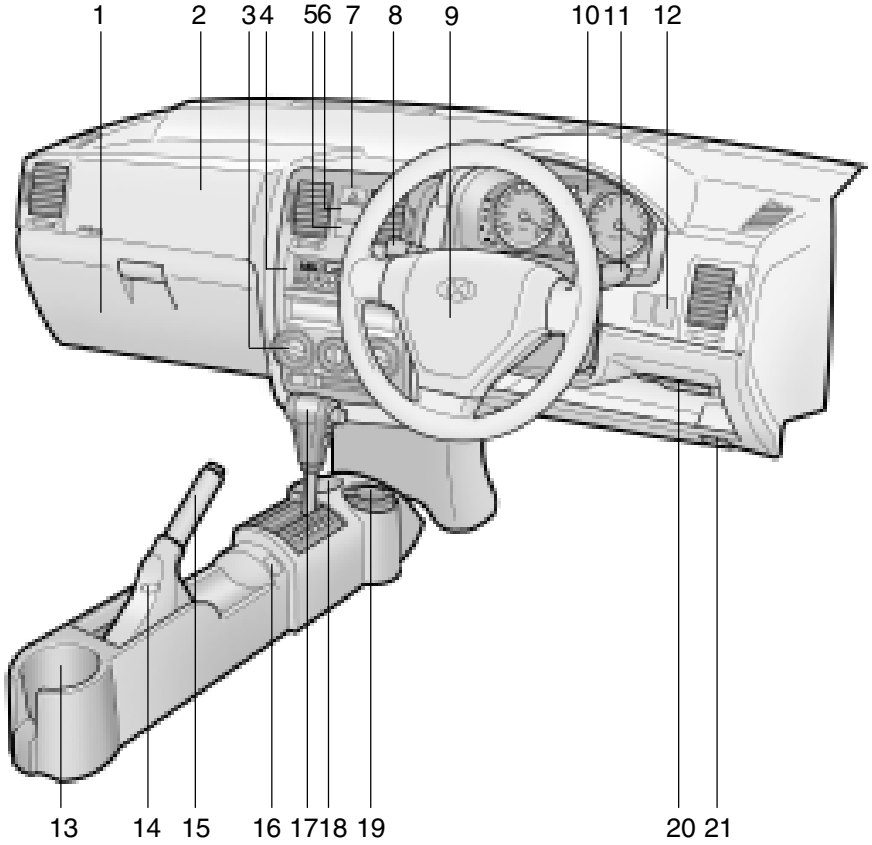


HTB032A-D

1. Glove Box
2. Passenger's Airbag (If installed)
3. Heating/Air Conditioning Control Panel (If installed)
4. Audio System (If installed)
5. Rear Fog Light Switch (If installed)
6. Front Fog Light Switch (If installed)
7. Hazard Warning Light
8. Windshield Wiper/Washer Switch
9. Horn and Driver's Airbag (If installed)
10. Instrument Cluster
11. Multi-Function Light Switch
12. Headlight Leveling Switch (If installed)
13. Rear Drink Holder
14. Cigarette Lighter
15. Parking Brake Lever
16. Seat Warmer (If installed)
17. Shift Lever (If installed)
18. Front Drink Holder
19. Ashtray
20. Fuse Box
21. Hood Release Lever

**CAUTION:**

**When installing a container of liquid air freshener inside a vehicle, do not place it near the instrument cluster nor on the instrument panel pad surface. If there is any leakage from the air freshener onto these areas (instrument cluster, instrument panel pad or air ventilator), it may damage these parts. If the liquid from the air freshener does leak onto these areas, wash them with water immediately.**

B255A01TB-GAT

## INDICATOR SYMBOLS ON THE INSTRUMENT PANEL

- AIR BAG — SRS (Airbag) Service Reminder Indicator
- ABS — ABS Service Reminder Indicator
- O/D OFF — O/D OFF Indicator (Automatic transaxle only)
- Turn Signal Indicator Lights
- High Beam Indicator Light
- Oil Pressure Warning Light
- BRAKE — Parking Brake/Brake Level Warning Light
- Charging System Warning Light
- Tail Gate Open Warning Light
- Door Ajar Warning Light and Chime
- Low Fuel Level Warning Light
- CHECK — Malfunction Indicator Light
- Seat Belt Reminder Light
- EPS — Electric Power Steering System (EPS) Warning Light
- Immobilizer Indicator
- Diesel Pre-heat Indicator Light (Diesel only)
- Fuel Filter Warning Light (Diesel only)

* A detail explanations of these items will be found on page 1-44

# 1. FEATURES OF YOUR HYUNDAI


Fuel Recommendations ..... 1-2
Breaking in Your New Hyundai ..... 1-3
Key (Immobilizer system) ..... 1-4
Door locks (Theft-alarm system) ..... 1-7
Power windows ..... 1-12
Seat ..... 1-13
Seat Belt ..... 1-20
Child restraint system ..... 1-26
Supplemental restraint (AIRBAG) system ..... 1-34
Instrument cluster and indicator lights ..... 1-41
Warning Light and Indicator ..... 1-44
Trip computer ..... 1-51
Multi-Function Light Switch ..... 1-53
Windshield wiper/Washer Switch ..... 1-54
Sunroof ..... 1-60
Mirror ..... 1-64
Hood Release ..... 1-67
How to use luggage Room ..... 1-70
Heating and cooling control ..... 1-75
Stereo sound system ..... 1-84
Audio system ..... 1-86
Antenna ..... 1-107

B010A01O-GAT

## FUEL RECOMMENDATIONS

### Use Unleaded Gasoline

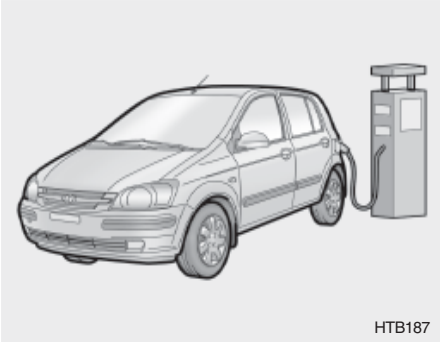


Unleaded gasoline with a Pump Octane Rating of 87 (Research Octane Number 91) or higher must be used in Hyundai vehicle. If leaded gasoline is used, it will cause the catalytic converter to become ineffective and the emission control system to malfunction. This can also result in increased maintenance expense. To avoid accidental use of leaded fuel, the large nozzle used with leaded gasoline at service stations can not be inserted into fuel tank opening of Hyundai vehicle.

**NOTE:**

- **For some countries, Hyundai vehicles are designed to use leaded gasoline. When you are going to use leaded gasoline, ask to Hyundai dealer whether leaded gasoline in your vehicle is available or not.**
- **Octane Rating of leaded gasoline is same with unleaded one.**

### Use Diesel

Diesel fuel of 52 to 54 cetane is used in Hyundai vehicle. If two types of diesel fuel are available, use summer or winter fuel properly according to the following temperature conditions.

- Above -5°C (23°F) ... Summer type diesel fuel.
- Below -5°C (23°F) ... Winter type diesel fuel.

Watch the fuel level in the tank very carefully : If the engine stops through fuel failure, the circuits must be completely purged to permit restarting.

**CAUTION:**

- **Do not let any gasoline or water enter the tank. This would make it necessary to drain it out and to bleed the lines to avoid jamming the injection pump and damaging the engine.**
- **In winter, in order to cut down incidents due to freezing, paraffin oil may be added to the fuel if the temperature drops to below -10°C. Never use more than 20% paraffin oil.**

B010B01A-AAT

### What About Gasohol?

Gasohol (a mixture of 90% unleaded gasoline and 10% ethanol or grain alcohol) may be used in your Hyundai. However, if your engine develops driveability problems, the use of 100% unleaded gasoline is recommended. Fuels with unspecified quantities of alcohol, or alcohols other than ethanol, should not be used.

B010D01S-AAT

## Do not Use Methanol

Fuels containing methanol (wood alcohol) should not be used in your Hyundai. This type of fuel can reduce vehicle performance and damage components of the fuel system.

**CAUTION:**
**Your Hyundai's New Vehicle Limited Warranty may not cover damage to the fuel system and performance problems that are caused by the use of methanol or fuels containing methanol.**

B010E01A-AAT

## Gasolines for Cleaner Air

To help contribute to cleaner air, Hyundai recommends that you use gasolines treated with detergent additives, which help prevent deposit formation in the engine. These gasolines will help the engine run cleaner and the Emission Control System performance.

B010F01A-AAT

## Operation in Foreign Countries

If you are going to drive your Hyundai in another country, be sure to:

- o Observe all regulations regarding registration and insurance.
- o Determine that acceptable fuel is available.

B020A01S-GAT

## BREAKING IN YOUR NEW HYUNDAI

### During the First 2,000 Km (1,200 Miles)
### (Gasoline Engine)

No formal "break-in" procedure is required with your new Hyundai. However, you can contribute to the economical operation and durability of your Hyundai by observing the following recommendations during the first 2,000 km (1,200 miles).

- o Don't drive faster than 88 km/h (55 mph).
- o While driving, keep your engine speed (rpm, or revolutions per minute) between 2,000 rpm and 4,000 rpm.
- o Use moderate acceleration. Don't start, depress the accelerator pedal fully.
- o For the first 300 km (200 miles), try to avoid hard stops.
- o Don't lug the engine (in other words, don't drive so slowly in toohigh a gear that the engine "bucks": shift to a lower gear).
- o Whether going fast or slow, vary your speed from time to time.
- o Don't let the engine idle longer than 3 minutes at one time.
- o Don't tow a trailer during the first 2,000 km (1,200 miles) of operation.

B020B01FC-GAT

## BREAKING IN YOUR NEW HYUNDAI

### During the First 1,000 Km (600 Miles)

### (Diesel Engine)

No formal "break-in" procedure is required with your new Hyundai. However, you can contribute to the economical operation and durability of your Hyundai by observing the following recommendations during the first 1,000 km (600 miles).

- o While driving, keep your engine speed (rpm, or revolutions per minute) within 3,000 rpm.
- o While driving, keep under three quarters of maximum speed.
- o Use moderate acceleration. Don't start, depress the accelerator pedal fully.
- o For the first 300 km (200 miles), try to avoid hard stops.
- o Don't lug the engine (in other words, don't drive so slowly in too-high a gear that the engine "bucks": shift to a lower gear).
- o Whether going fast or slow, vary your speed from time to time.
- o Don't let the engine idle longer than 3 minutes at one time.
- o Don't tow a trailer during the first 1,000 km (600 miles) of operation.

B030A01A-AAT

## KEYS

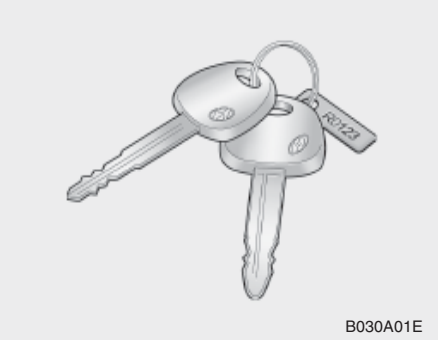


B030A01E

For greater convenience, the same key operates all the locks in your Hyundai. However, because the doors can be locked without a key, carrying a spare key is recommended in case you accidentally lock one key inside the car.

B030B01A-AAT

## Record Your Key Number

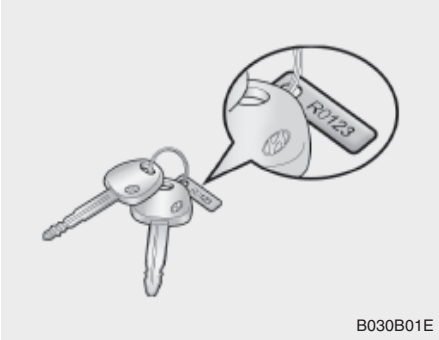


B030B01E

A code number is stamped on the number plate that came with the keys to your Hyundai. This key number plate should not be left with the keys but kept in a safe place, not in the vehicle. The key number should also be recorded in a place where it can be found in an emergency.

If you need additional keys, or if you should lose your keys, your authorized Hyundai dealer can make new keys if you can supply the key number.

B880A01A-GAT

## IMMOBILIZER SYSTEM (If Installed)

The immobilizer system is an anti-theft device, designed to deter automobile theft.

B880B03A-GAT

## Keys

All of the locks fitted to the vehicle are operated by the same key. However, since it is possible to lock the doors without the use of the key, care should be exercised to ensure that the key does not become locked inside the vehicle by mistake.

### NOTE:

**If you make your own duplicate key, you will not be able to cancel the system or start the engine.**

B880C02A-GAT

## Key Numbers

B880C01L

The vehicle key number is recorded upon a metal tag attached to the keys when the vehicle is first delivered to you.

The key number should be recorded and kept in a safe place in case the need to order further keys arises. New keys are available from any Hyundai dealer by quoting the relevant key number.

In the interest of security, the metal tag attached to the keys which bears the key number should be removed from the key ring after you receive your new vehicle. In addition, key numbers cannot be provided by Hyundai for security reasons.

If you need additional keys or if you should lose your keys, your authorized Hyundai dealer can make new keys.

B880D02A-GAT

## Limp home procedures

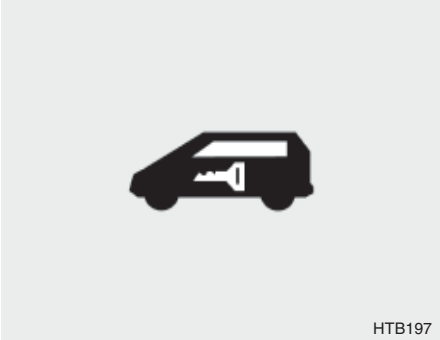


In case the immobilizer warning indicator blinks for five seconds when the ignition key is turned to "ON" position, this indicates that the immobilizer system is out of order. And you cannot start the engine without the limp home procedures with ignition key.
The following procedure is how to start the engine with the function of the limp home. (0, 1, 2, 3 as a sample password).

### NOTE:

**You can get the limp home password when the vehicle is first delivered to you. If you do not have the password, consult your authorized Hyundai dealer.**

1. To set the password you may turn the ignition key "ON" and then turn it "OFF" according to the digit numbers, then the immobilizer indicator will blink along with the operation of the ignition key. For example, turn the ignition key once for digit number "1", and twice for "2", and so on. However, for the digit number "0", you must turn the ignition key for 10 times.
2. Wait for 3~10 seconds.
3. You may set the remaining number of digits by following the same procedures 1 and 2.
4. If all of four digits have been tried successfully, turn the ignition key "ON" and check that the immobilizer indicator illuminates. From this time, you have to start your engine within 30 seconds. If you start your engine after 30 seconds, your engine will not start.

### NOTE:

**If the engine dies while driving after limp home procedure, you can start your engine within 8 seconds without limp home procedure again.**

5. If the immobilizer indicator blinks for five seconds, you have to try the limp home procedure again from the beginning.

After doing the limp home procedure, you have to consult with your authorized Hyundai dealer as soon as possible.

### CAUTION:

- **If you fail to try the limp home procedure with the sequence of three times, you have to wait for about one hour to do the limp home procedure again.**
- **If you cannot start your engine in spite of limp home procedure, have your vehicle towed by an authorized Hyundai dealer.**

B040A01A-AAT

## DOOR LOCKS

**WARNING:**

- **Unlocked doors can be dangerous. Before you drive away (especially if there are children in the car), be sure that all the doors are securely closed and locked so that the doors cannot be inadvertently opened from the inside. This helps ensure that doors will not be opened accidentally. Also, when combined with the proper use of seat belts, locking the doors helps keep occupants from being ejected from the car in case of an accident.**
- **Before opening the door, always look for and avoid oncoming traffic.**

B040B01A-AAT

### Locking and Unlocking Front Doors With a Key

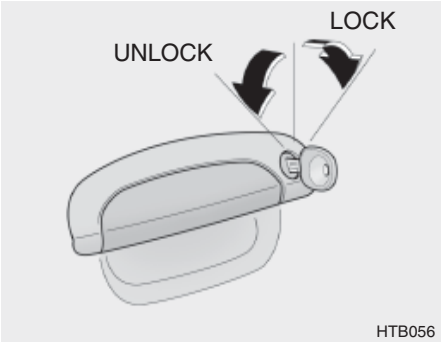


- The door can be locked or unlocked with a key.
- Lock the door by turning the key toward the front of the vehicle and unlock it by turning the key toward the rear.

B040C01FC-GAT

### Locking From the Outside

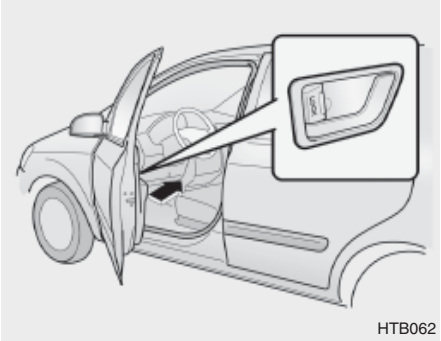


The doors can be locked without a key. To lock the doors from the outside, first push the inside lock switch to the "LOCK" position, so that the red mark on the switch is not visible, then close the door.
The door will not lock if the key is left in the ignition switch when the front doors close. This is normal. (If installed)

**NOTE:**

- **When locking the door this way, be careful not to lock the door with the ignition key left in the vehicle.**

- **To protect against theft, always remove the ignition key, close all windows, and lock all doors and tail gate when leaving your vehicle unattended.**

B040D01FC-GAT

## Locking From the Inside

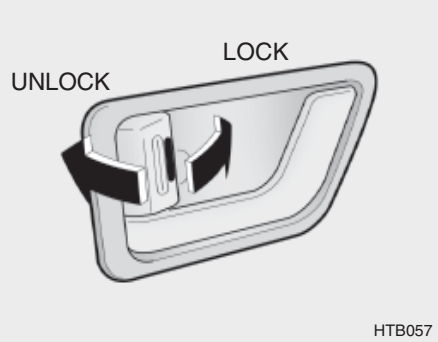


To lock the doors from the inside, simply close the door and push the lock switch to the "LOCK" position. When this is done, neither the outside nor the inside door handle can be used.

**NOTE:**
**When the door is locked, the red mark on the switch is not visible and the character "LOCK" on the switch is visible.**

B040E03A-AAT

## CHILD-PROTECTOR REAR DOOR LOCK

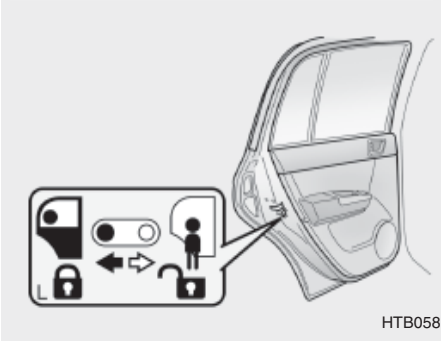


Your Hyundai is equipped with a "child-protector" rear door lock assembly. When the lock mechanism is engaged, the rear door cannot be opened from the inside. It's use is recommended whenever there are small children in the rear seat.

To engage the child-protector feature so that the door cannot be opened from the inside, move the child-protector lever to the "🔒" position and close the door. Move the lever to the opposite direction of the " 🔒 " position when normal door operation is desired.

If you wish to be able to open the door from the outside, the outside door handle will function normally.

B040G01FC-GAT

## Central Door Lock (If Installed)

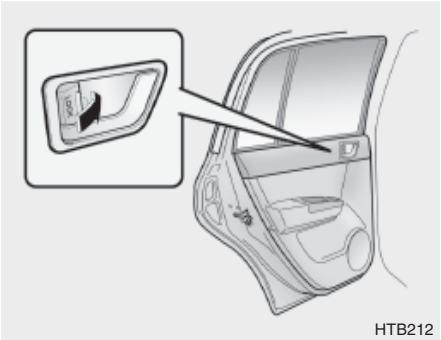

The central door locking is operated by pushing the driver's door lock switch toward the front or rear of the vehicle. If the passenger and rear doors are open when the switch is pushed, the door will remain locked when closed.

**NOTE:**

- **When pushing the switch toward the rear, all doors and tail gate will unlock.**
  **When pushing the switch toward the front, all doors and tail gate will lock.**
- **When the door is unlocked, the red mark on the switch is visible and the character "LOCK" on the switch is visible.**
- **The central door locking is operated by turning the key (with theft-alarm system: driver's door and passenger's door, without theft-alarm system: driver's door only) toward the front or rear of the vehicle.**

B070A01A-AAT

## THEFT-ALARM SYSTEM (If Installed)

This system is designed to provide protection from unauthorized entry into the car. This system is operated in three stages: the first is the "Armed" stage, the second is the "Alarm" stage, and the third is the "Disarmed" stage. If triggered, the system provides an audible alarm with blinking of the turn signal lights.

B070B01O-GAT

### Armed Stage

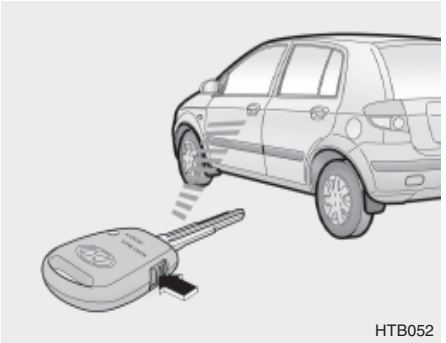


Park the car and stop the engine. Arm the system as described below.

1) Remove the ignition key from the ignition switch.
2) Make sure that the engine hood and tail gate are locked.
3) Lock the doors using the transmitter of the keyless entry system.

After completion of the steps above, the turn signal lights will blink once to indicate that the system is armed.

**NOTE:**

1) **If any door, tail gate or engine hood remains open, the system will not be armed.**
2) **If this happens, rearm the system as described above.**

**CAUTION:**

**Do not arm the system until all passengers have left the car. If the system is armed while a passenger(s) remains in the car, the alarm may be activated when the remaining passenger(s) leaves the car.**

B070C01FC-GAT

## Alarm Stage

The alarm will be activated if any of the following occurs while the car is parked and the system is armed.

1) A front or rear door is opened without using the transmitter.
2) The tail gate is opened without using the transmitter.
3) The engine hood is opened.

The alarming horn will sound and the turn signal light will blink continuously for 27 seconds (E.C only/ Except E.C 3 times). To turn off the system, unlock the door or tail gate with the transmitter.

B070D01TB-AAT

## Disarmed Stage

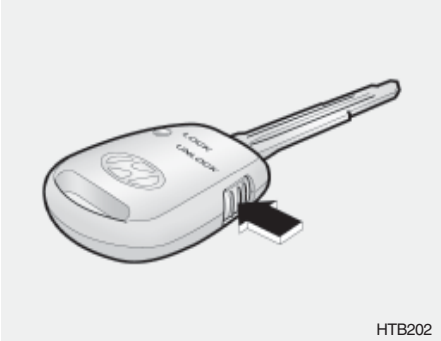

HTB202

The system will be disarmed when the driver's or passenger's door is unlocked by depressing the button on the transmitter.

After completion of the step above, the turn signal lights will blink twice to indicate that the system is disarmed.

### NOTE:

**Once the system has been disarmed, it can not be rearmed except by repeating the arming procedures.**

### CAUTION:

**Only the transmitter can disarm the armed stage. If the transmitter does not disarm the system, it is necessary to take the following steps;**

1. **Unlock the door with the key, which will cause, the alarm to be activated.**
2. **Insert the key in the ignition key cylinder and turn the ignition key to "ON" position.**
3. **Wait for 30 seconds.**

**After completing the steps above, the system will be disarmed.**

B070F01TB-GAT

## Keyless Entry System (If Installed)

### Locking doors

1. Close all doors.
2. Push the button on the transmitter.
3. At the same time all doors lock, the turn signal lights will blink once to indicate that the system is armed.

### Unlocking doors

1. Push the button on the transmitter.
2. At the same time all doors unlock, the turn signal light will blink twice to indicate that the system is disarmed.

B070E01TB-GAT

## Replacing the battery

When the transmitter's battery begins to get weak, it may take several pushes on the button to lock or unlock the doors, and the LED will not light. Replace the battery as soon as possible.

Battery type : CR1220

### Replacement instructions:

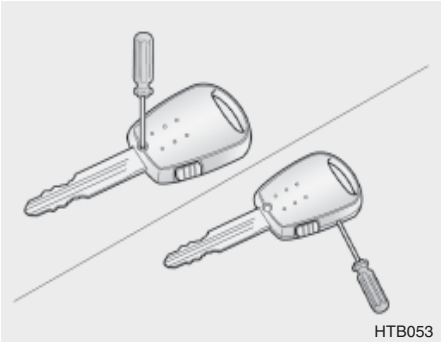


1. Remove the screw with a (+) screwdriver.
2. Separate the case with a (-) screwdriver as shown in the illustration.

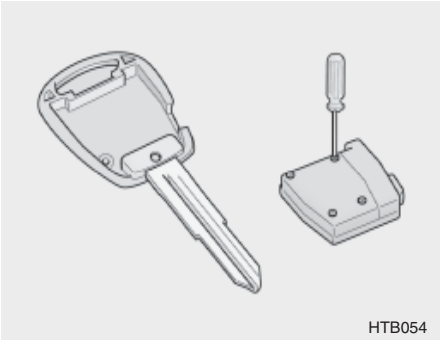


3. Remove four screws back side of the built-in circuit.

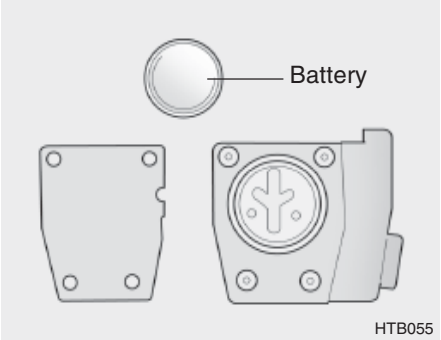


4. Remove the old battery from the case and note the polarity. Make sure the polarity of the new battery is the same (+side facing up), then insert it in the transmitter.

B050A01A-AAT

## WINDOW GLASS

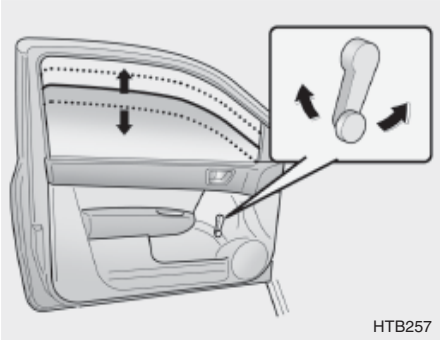


To raise or lower the window, turn the window regulator handle clockwise or counterclockwise.

**WARNING:**
**When opening or closing the windows, make sure your passenger's arms, hands and body are safely out of the way.**

B060A01E-AAT

## POWER WINDOWS (If Installed)

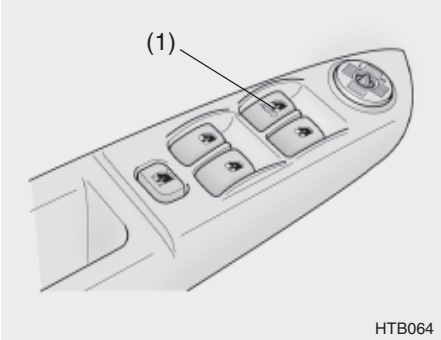


The power windows operate when the ignition key is in the "ON" position. The main switches are located on the driver's armrest and control the front and rear windows on both sides of the vehicle. The windows may be opened by depressing the appropriate window switch and closed by pulling up the switch. To open the window on the driver's side, press the switch(1) down. The window moves as long as the switch is operated.

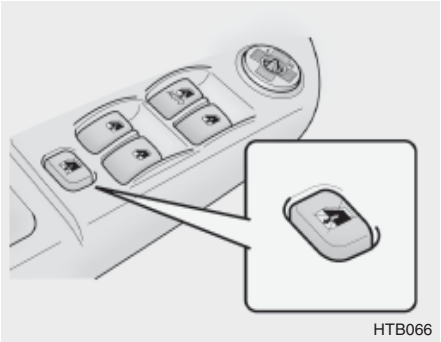


In order to prevent operation of the passenger front and rear windows, a window lock switch is provided on the armrest of the driver's door. To disable the power windows, press the window lock switch.
To revert to normal operation, press the window lock switch a second time.

### Auto-Down Window (Driver's Side)

The Auto-Down window is moved to its fully open position by pushing the switch. To stop at the desired position push the switch again.

**WARNING:**

1) **Be careful that someone's head, hands and body are not trapped by a closing window.**
2) **Never try to operate the main switch on the driver's door and the individual door window switch in opposing directions at the same time. If this is done, the window will stop and cannot be opened or closed.**
3) **Do not leave children alone in the car. Always remove the ignition key for their safety.**

B080A01FC-GAT

## ADJUSTABLE SEATS

**WARNING:**

**Never attempt to adjust the seat while the vehicle is moving. This could result in loss of control, or an accident which may cause death, serious injury, or property damage.**

B080B01FC-GAT

## FRONT SEATS

### Adjusting Seat Forward and Rearward

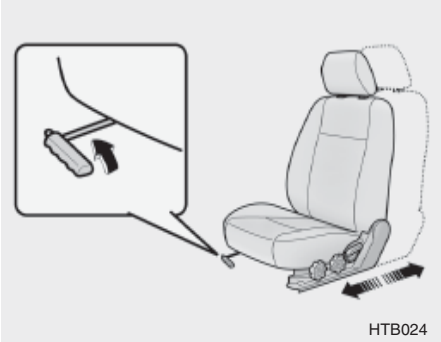

HTB024

To move the seat toward the front or rear, pull the lock release lever upward. This will release the seat on its track so you can move it forward or rearward to the desired position. When you find the position you want, release the lever and slide the seat forward or rearward on its track until it locks into the desired position and cannot be moved further.

B080C01A-AAT

### Adjusting Seatback Angle

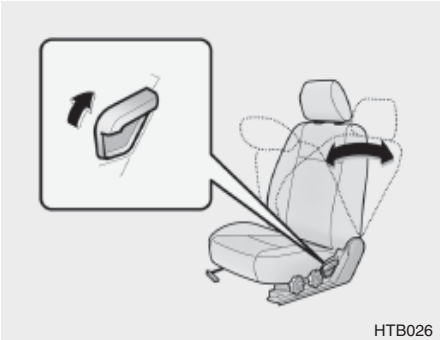

HTB026

To recline the seatback, lean forward to take your weight off it, then pull up on the recliner control lever at the outside edge of the seat. Now lean back until the desired seatback angle is achieved. To lock the seatback into position, release the recliner control lever.

**WARNING:**

**To minimize risk of severe injury in the event of a collision or a sudden stop, both the driver and passenger seatbacks should always be in an upright position while the vehicle is in motion. The protection provided by the seat belts and airbags may be reduced significantly when the seatbacks are reclined. There is greater risk that the driver and passenger will slide under the seat belt which may result in serious injury if a crash occurs when the seatbacks are reclined. The seat belt cannot provide full protection to an occupant if the seat back is reclined.**

B080D02A-AAT

## Adjustable Headrests

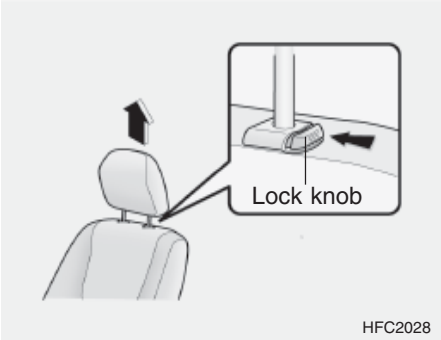


Headrests are designed to help reduce the risk of neck injuries.
To raise the headrest, pull it up. To lower it, push it down while pressing the lock knob.

**WARNING:**

- **For maximum effectiveness in case of an accident, the headrest should be adjusted so the top of the headrest is at the same height as the top of the occupant's ears. The use of a cushion that holds the body away from the seatback is not recommended.**
- **Do not operate the vehicle with the headrests removed as severe injury to an occupant may occur in the event of an accident. Headrests may provide protection against severe neck injuries when properly adjusted.**

B080E01O-AAT

## Lumbar Support Control (Driver's Seat Only) (If Installed)

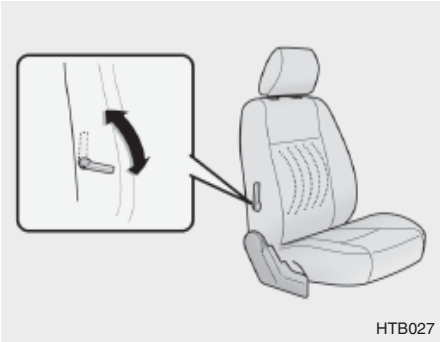


To adjust the lumbar support, turn the handle on the outboard or left side of the seat. To increase the amount of lumbar support, pull the lever forward. To decrease it, push the lever toward the rear.

B080F01S-AAT

## Seat Cushion Height Adjustment (Driver's Seat Only) (If Installed)

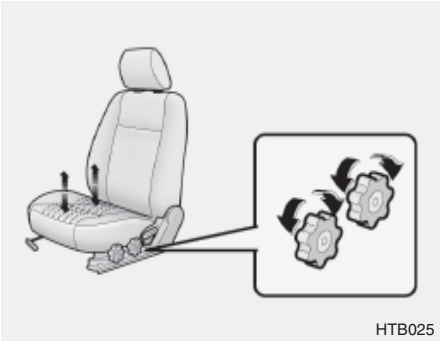


To raise or lower the front part of the seat cushion, turn the front knob forward or rearward. To raise or lower the rear part of the seat cushion, turn the rear knob forward or rearward.

B130A01A-AAT

## REAR SEAT ENTRY (For 3-door model)

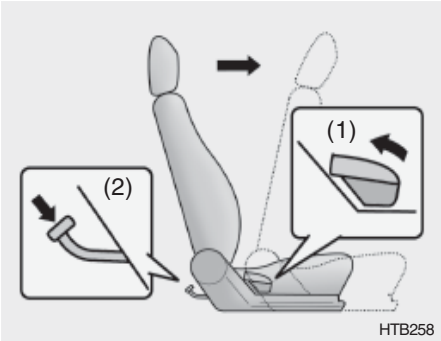


The front passenger seatback should be tilted to enter the rear seat.
By pulling up on the recliner control lever (1) at the outside of the front passenger seat, the seatback will tilt forward and the seat will automatically slide forward.
Rear seat occupants can tilt the front passenger seatback by depressing the foot lever (2) as shown in the illustration.

**WARNING:**
**Passengers sitting in the rear seat should be careful not to accidentally press the foot lever (2) while the vehicle is moving, as this may cause the seatback to move forward and injure a front seat occupant.**

B080I01FC-GAT

## REAR SEAT Adjusting Seatback Angle

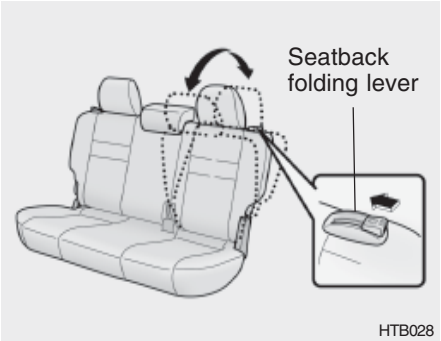

To recline the seatback, push the seatback folding lever toward the headrest, and release it after the desired seatback angle is achieved.
When you recline the seatback to desired position, always be sure it has locked into position.

**CAUTION:**
**When reclining the seatback angle, you should be adjust the seatback folding lever with standing.**

B090A01FC-GAT

## Adjustable Headrests (If Installed)

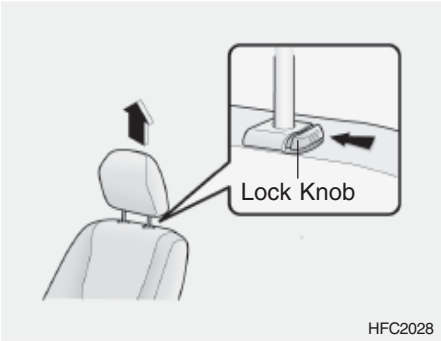


Headrests are designed to help reduce the risk of neck injuries.
To raise the headrest, pull it up. To lower it, push it down while pressing the lock knob.

**WARNING:**
- **For maximum effectiveness in case of an accident, the headrest should be adjusted so the top of the headrest is at the same height as the top of the occupant's ears. The use of a cushion that holds the body away from the seatback is not recommended.**
- **Do not operate vehicle with the headrests removed as severe injury to an occupant may occur in the event of an accident. Headrests may provide protection against severe neck injuries when properly adjusted.**

B099A02F-AAT

## BEFORE FOLDING THE REAR SEATS

Outboard Rear Seat Belt

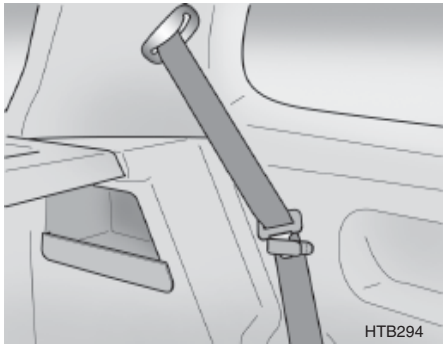


Rear Seat Center's 3 Point Type Seat Belt (If installed)

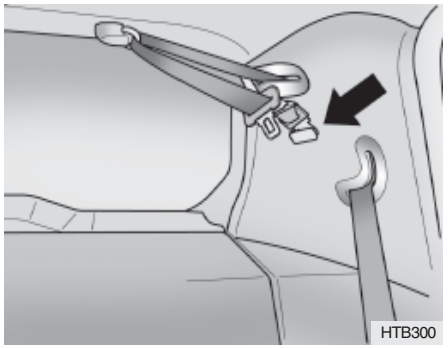


In order to prevent the shoulder belt from being damaged while folding the rear seat, the shoulder belt must be passed through the hanger to keep it out of the way.

**CAUTION:**
**Seat belts must be removed from the hanger when in use.**

B090B01TB-GAT

## Folding Rear Seatback and Seat Cushion

For greater convenience, the entire seatback and seat cushion may be folded down and up.

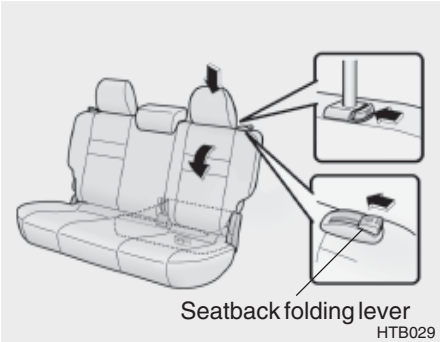


1. Push the headrest down to the lowest position.
2. To fold down the seatback , push and hold the seatback folding lever toward the headrest, then push down the seatback.

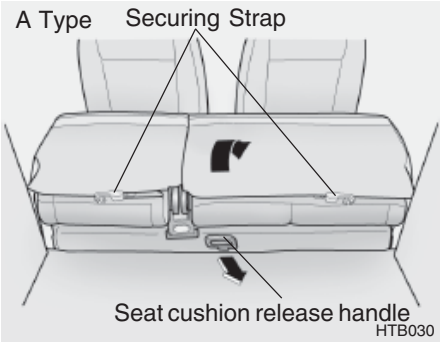


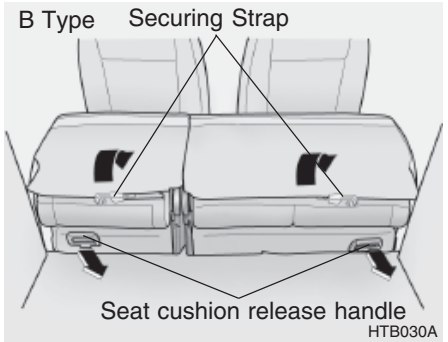


3. A Type: Pull the seat cushion release handle rear ward, then lift up the entire seat cushion.
   B Type: Pull the seat cushion release handle rear ward, then lift up a desired seat cushion.

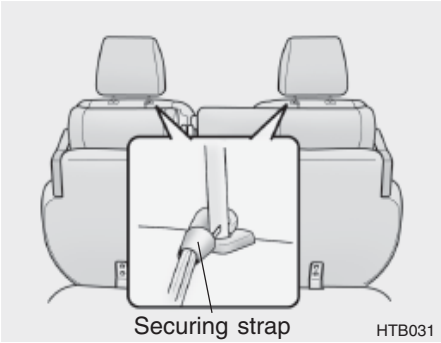


4. To secure the seat, hook the securing strap under the seat back to the headrest stay of front driver and passenger seat.
5. To return the seatback and seat cushion to its normal position, reverse the above procedure.

o When you return the seatback to its upright position, always be sure it is locked into position by pulling and pushing on the top of seatback.

**WARNING:**

- **When you return the folded down seatback to its upright position, make sure the seat belts are in position to be accessible and to function properly.**
- **When you return the folded down seatback to its upright position, be careful not to get your fingers or legs in.**
- **The purpose of the fold down rear seatback and the fold forward rear seat cushion is to increase cargo space. Do not allow passengers to sit in the cargo area while the car is moving. This is not a proper seating position and no seat belts are available for use when the seatback is folded down. Passengers who are not properly seated and wearing seat belts could sustain serious injuries or death in case of an accident or a sudden stop.**

- **Objects should not extend higher than the top of the front seatbacks. This could allow cargo to slide forward and cause injury or damage during sudden stops.**
- **When you return the folded down seatback to its upright position, always be sure to install the headrests in their proper positions. Headrests are important to the safety of occupants in a rear collision. If the headrests are not installed in their proper position, serious injury or death could result if a rear end collision occurs.**

B100A01FC-GAT

## SEAT WARMER (If Installed)

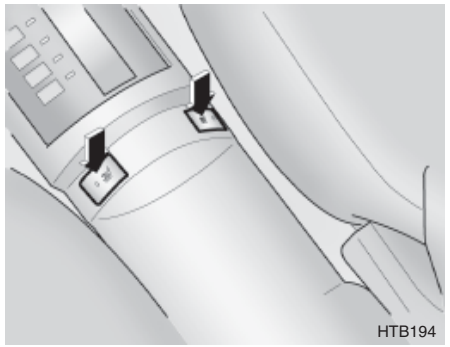


The seat warmer is provided to warm the front seats during cold weather. When the engine is running, push either of the switches to warm the driver's seat or the passenger's seat.
During mild weather or under conditions where the operation of the seat warmer is not needed, keep the switches in the "OFF" position.

B140A01B-GAT

## REAR SEAT WARNING

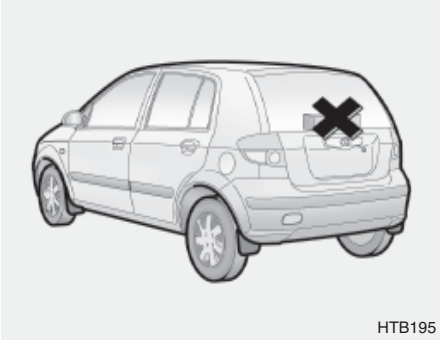


For the safety of all passengers, luggage or other cargo should not be piled higher than the top of the seatback.

B150A02A-GAT

## SEAT BELT PRECAUTIONS

All occupants of the vehicle should wear their seat belts at all times. Indeed, your province's laws may require that some or all occupants of the vehicle use seat belts.
The possibility of injury or the severity of injury in an accident will be decreased if this elementary safety precaution is observed. In addition, the following recommendations are made:

B150B01Y-GAT

### Infant or Small Child

Some countries require the use of child restraint systems for infants and small children. Whether this is required by law or not, it is strongly recommended that a child restraint seat or infant restraint system be used for infants or small children weighing less than 18 kilograms (40 pounds).

**NOTE:**
**Small children are best protected in an accident when properly restrained by a child restraint system.**

B150C02A-AAT

### Larger Children

Children who are too large for child restraint systems should occupy the rear seat and use the available lap/shoulder belts. The lap portion should be fastened snug on the hips and as low as possible. Check belt fit periodically. A child's squirming could put the belt out of position. Children are afforded the most safety in the event of an accident when they are restrained by a proper restraint system in the rear seat. If a larger child (over age 13) must be seated in the front seat, the child should be securely restrained by the available lap/shoulder belt and the seat should be placed in the rearmost position. Children under the age of 13 should be restrained securely in the rear seat. NEVER place a rear facing child seat in the front seat of a vehicle.

B150D01S-AAT

### Pregnant Women

The use of a seat belt is recommended for pregnant women to lessen the chance of injury in an accident. When a seat belt is used, it should be placed as low and snugly as possible on the hips, not across the abdomen. For specific recommendations, consult a physician.

B150E01A-AAT

### Injured Person

A seat belt should be used when an injured person is being transported. When this is necessary, you should consult a physician for recommendations.

B150F01A-AAT

### One Person Per Belt

Two people (including children) should never attempt to use a single seat belt. This could increase the severity of injuries in case of an accident.

B150G01A-AAT
## Do Not Lie Down

To reduce the chance of injuries in the event of an accident, and to achieve maximum effectiveness of the restraint system, all passengers should be sitting up and the front seats should be in an upright position when the car is moving. A seat belt cannot provide proper protection if the person is lying down in the rear seat or if the front seat is in a reclined position.

**WARNING:**
**Sitting in a reclined position or lying down when your vehicle is in motion can be dangerous. Even if you buckle up, your seat belts can't do their job when you're reclined.**
**The shoulder belt can't do its job because it won't be against your body. Instead, it will be in front of you. In a crash you could go into it with great force, receiving serious neck or other injuries.**
**The lap belt can't do its job either. In a crash the belt could go up over your abdomen. The belt forces would be applied there, not at your pelvic bones.**
**This could cause serious internal injuries.**
**For proper protection when the vehicle is in motion, have the seatback upright. Then sit back in the seat and wear your seat belt properly. See page 1-22.**

B160A01A-AAT
## CARE OF SEAT BELTS

Seat belt systems should never be disassembled or modified. In addition, care should be taken to assure that seat belts and belt hardware are not damaged by seat hinges, doors or other abuse.

**WARNING:**
**When you return the rear seatback to its upright position after the rear seatback was folded down, be careful not to damage the seat belt webbing or buckle. Be sure that the webbing or buckle does not get caught or pinched in the rear seat.**

B160B01A-AAT
## Periodic Inspection

It is recommended that all seat belts be inspected periodically for wear or damage of any kind. Parts of the system that are damaged should be replaced as soon as possible.

B160C01A-AAT
## Keep Belts Clean and Dry

Seat belts should be kept clean and dry. If belts become dirty, they can be cleaned by using a mild soap solution and warm water. Bleach, dye, strong detergents or abrasives should not be used because they may damage and weaken the fabric.

B160D01A-AAT
## When to Replace Seat Belts

Entire in-use seat belt assembly or assemblies should be replaced if the vehicle has been involved in an accident. This should be done even if no damage is visible. Additional questions concerning seat belt operation should be directed to your Hyundai Dealer.

B170A04A-AAT

## HEIGHT ADJUSTABLE FRONT SEAT SHOULDER BELT (If Installed)

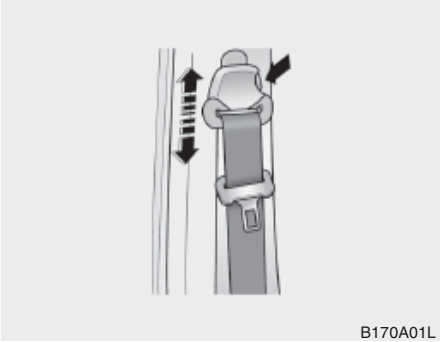


You can adjust the height of the shoulder belt anchor to one of the 4 positions.

If the height of the adjusting seat belt is too near your neck, you will not be getting the most effective protection. The shoulder portion should be adjusted so that it lies across your chest and midway over your shoulder nearest the door and not your neck.

To adjust the height of the seat belt anchor, lower or raise the height adjuster into an appropriate position. To raise the height adjuster, pull it up. To lower it, push it down while pressing the height adjuster button.

Release the button to lock the anchor into position. Try sliding the release button to make sure that it has locked into the position.

**WARNING:**

- **The height adjuster must be in the locked position when the vehicle is moving.**
- **The misadjustment of height of the shoulder belt could reduce the effectiveness of the seat belt in a crash.**

B180A02A-GAT

## SEAT BELTS 3-Point System with Emergency Locking Retractor (If Installed)

### To Fasten Your Belt

To fasten your seat belt, pull it out of the retractor and insert the metal tab into the buckle. There will be an audible "click" when the tab locks into the buckle.

The seat belt automatically adjusts to the proper length only after the lap belt is adjusted manually so that it fits snugly around your hips. If you lean forward in a slow, easy motion, the belt will extend and let you move around. If there is a sudden stop or impact, however, the belt will lock into position. It

will also lock if you try to lean forward too quickly. Check to make sure that the belt is properly locked and that the belt is not twisted.

B200A01S-GAT

## Adjusting Your Seat Belt

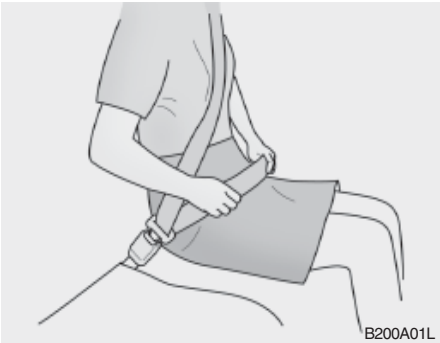


You should place the belt as low as possible on your hips, not on your waist. If the belt is located too high on your body, you could slide under it in case of accident or a sudden stop. This could result of death, serious injury or property damage. Both arms should not be under or over the belt. Rather, one should be over and the other under, as shown in the illustration.

Never wear the seat belt under the arm nearest the door.

B210A01A-AAT

## To Release the Seat Belt

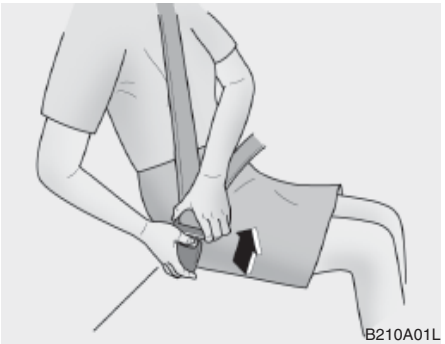


The seat belt is released by pressing the release button in the locking buckle. When it is released, the belt should automatically draw back into the retractor.
If this does not happen, check the belt to be sure it is not twisted, then try again.

B220A01A-AAT

## SEAT BELTS (2-Point Static Type) (Rear Seat Center) (If Installed)
## To Fasten Your Seat Belt

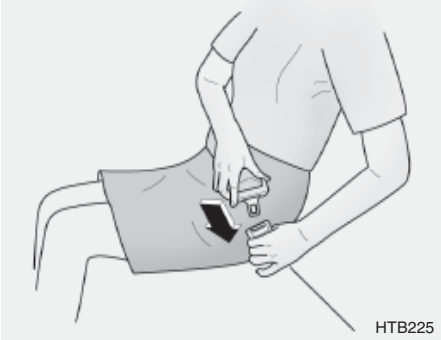


To fasten a 2-point static type belt, insert the metal tab into the locking buckle. There will be an audible "click" when the tab locks into the buckle. Check to make sure the belt is properly locked and that the belt is not twisted.

B220B01A-AAT

## Adjusting Your Seat Belt

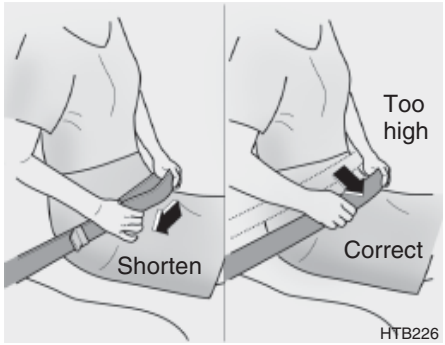


With a 2-point static type seat belt, the length must be adjusted manually so it fits snugly around your body. Fasten the belt and pull on the loose end to tighten. The belt should be placed as low as possible on your hips, not on your waist. If the belt is too high, it could increase the possibility of your being injured in an accident.

B220C01A-AAT

## To Release the Seat Belt

When you want to release the seat belt, press the button in the locking buckle.

**WARNING:**

**The center lap belt latching mechanism is different from those for the rear seat shoulder belts. When fastening the rear seat shoulder belts or the center lap belt, make sure they are inserted into the correct buckles to obtain maximum protection from the seat belt system and assure proper operation.**

B220A01Y-GAT

## SEAT BELTS - Rear Seat Center's 3-Point System With Emergency Locking Retractor (If installed)

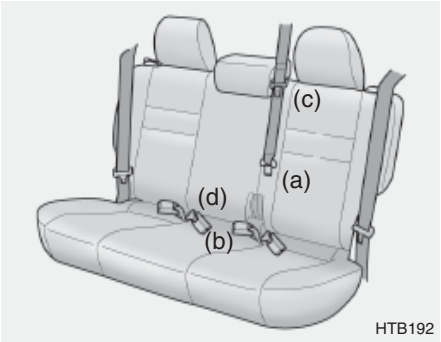


1. Before fastening the rear seat center belt, confirm the metal tab (a) and buckle (b) are latched together.
2. After confirming that (a) and (b) are latched, pull the seat belt out of the retractor and insert the metal tab (c) into the buckle (d).

There will be an audible "click" when the tab locks in the buckle. The seat belt automatically adjusts to the proper length only after the lap belt is adjusted manually so that it fits snugly around

your hips. If you lean forward in a slow, easy motion, the belt will extend and let you move around. If there is a sudden stop or impact, the belt will lock into position. It will also lock if you try to lean forward too quickly.

**WARNING:**

- **When using the rear seat center belt, you must lock all metal tabs and buckles. If any metal tab or buckle is not locked, it will increase the chance of injury in the event of collision.**
- **Never unlock the metal tab (a) and the buckle (b) with the following exceptions.**
  - **(1) In case of folding rear seatbacks down.**
  - **(2) If transporting an object on the rear seat may cause damage to the rear seat center belt.**
- **Lock the metal tab (a) and the buckle (b) immediately after folding rear seatbacks up.**

B220C01Y-GAT

## To Release the Seat Belt (If installed)

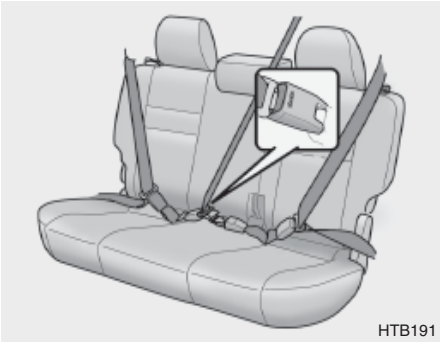


When you want to release the seat belt, press the button in the locking buckle.

**WARNING:**

**The center belt latching mechanism is different from those for the rear seat shoulder belts. When fastening the rear seat shoulder belts or the rear seat center belt, make sure they are inserted into the correct buckles to obtain maximum protection from the seat belt system and assure proper operation.**

B230A03A-GAT

## CHILD RESTRAINT SYSTEM (If Installed)

Children riding in the car should sit in the rear seat and must always be properly restrained to minimize the risk of injury in an accident, sudden stop or sudden maneuver. According to accident statistics, children are safer when properly restrained in the rear seats than in the front seat. Larger children not in a child restraint should use one of the seat belts provided.

You are required by law to use safety restraints for children. If small children ride in your vehicle you must put them in a child restraint system (safety seat). Children could be injured or killed in a crash if their restraints are not properly secured. For small children and babies, a child seat or infant seat must be used. Before buying a particular child restraint system, make sure it fits your car and seat belts, and fits your child. Follow all the instructions provided by the manufacturer when installing the child restraint system.

**WARNING:**

- **A child restraint system must be placed in the rear seat. Never install a child or infant seat on the front passenger's seat. Should an accident occur and cause the passenger side airbag to deploy, it could severely injure or kill an infant or child seated in an infant or child seat. Thus, only use a child restraint in the rear seat of your vehicle.**
- **Since a safety belt or child restraint system can become very hot if it is left in a closed vehicle, be sure to check the seat cover and buckles before placing a child there.**
- **When the child restraint system is not in use, store it in the trunk or fasten it with a safety belt so that it will not be thrown forward in the case of a sudden stop or an accident.**
- **Children who are too large to be in a child restraint should sit in the rear seat and be restrained with the available lap/shoulder belts. Never allow children to ride in the front passenger seat.**
- **Always make sure that the shoulder belt portion of the outboard lap/shoulder belt is positioned midway over the shoulder, never across the neck or behind the back. Moving the child closer to the center of the vehicle may help provide a good shoulder belt fit. The lap belt portion of the lap/shoulder belt or the center seat lap belt must always be positioned as low as possible on the child's hips and as snug as possible.**
- **If the seat belt will not properly fit the child, Hyundai recommends the use of an approved booster seat in the rear seat in order to raise the child's seating height so that the seat belt will properly fit the child.**

- **Never allow a child to stand up or kneel on the seat.**
- **Never use an infant carrier or child safety seat that "hooks" over a seatback; it may not provide adequate security in an accident.**
- **Never allow a child to be held in a person's arms while they are in a moving vehicle, as this could result in serious injury to the child in the event of an accident or a sudden stop. Holding a child in a moving vehicle does not provide the child with any means of protection during an accident, even if the person holding the child is wearing a seat belt.**
- **If the child restaint seat is not anchored properly, the risk of a child being seriously injured or killed in a collision greatly increases.**

B230G01A-GAT

## Installation on Outboard Rear Seats

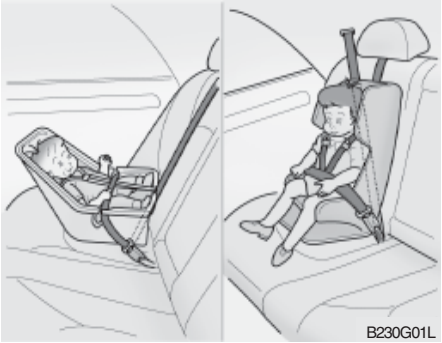


To install a child restraint system in the outboard rear seats, extend the shoulder/lap belt from its retractor. Install the child restraint system, buckle the seat belt and allow the seat belt to take up any slack. Make sure that the lap portion of the belt is tight around the child restraint system and the shoulder portion of the belt is positioned so that it cannot interfere with the child's head or neck. After installation of the child restraint system, try to move it in all directions to be sure the child restraint system is securely installed.

If you need to tighten the belt, pull more webbing toward the retractor. When you unbuckle the seat belt and allow it to retract, the retractor will automatically revert back to its normal seated passenger emergency locking usage condition.

**NOTE:**

- **Before installing the child restraint system, read the instructions supplied by the child restraint system manufacturer.**
- **If the seat belt does not operate as described, have the system checked immediately by your authorized Hyundai dealer.**

**WARNING:**

**Do not install any child restraint system in the front passenger seat. Should an accident occur and cause the passenger side airbag to deploy, it could severely injure or kill an infant or child seated in an infant or child seat. Therefore, only use a child restraint system in the rear seat of your vehicle.**

B230B02A-GAT

## Using a Child Restraint System with "Tether Anchorage" System

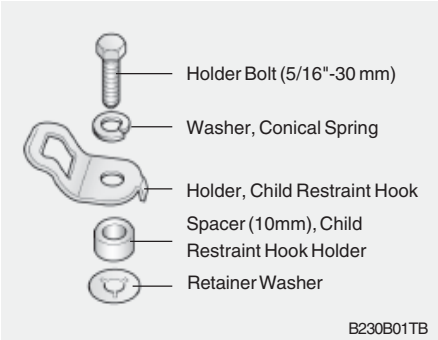


For small children and babies, the use of a child seat or infant seat is strongly recommended. This child seat or infant seat should be of appropriate size for the child and should be installed in accordance with the manufacturer's instructions. It is further recommended that the seat be placed in the vehicle's rear seat since this can make an important contribution to safety. Your vehicle is provided with three child restraint hook holders for installing the child seat or infant seat.

B230E02FC-GAT

## Securing a Child Restraint System with "Tether Anchorage" System

Three child restraint hook holders are located on the vertical back panel. (behind rear bumper bar)

1. Route the child restraint seat strap over the seatback.
   For vehicles with adjustable headrests, route the tether strap under the headrest and between the headrest posts, otherwise route the tether strap over the top of the seatback.

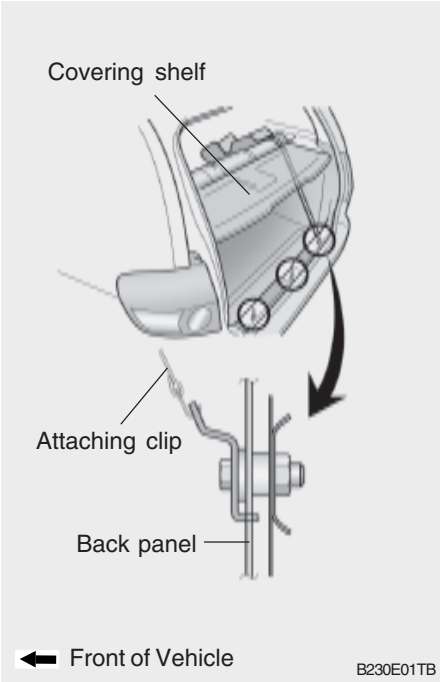


2. Remove the load space cover.
3. Connect the tether strap hook to the child restraint hook holder and tighten to secure the seat.

**WARNING:**
**To install the Child Restraint Seat, for safety reasons the Seat should be positioned rearmost with the seatback in a vertical position, not reclined.**

B230D03E-GAT

## Using a Child Restraint System with "ISOFIX" System and "Tether Anchorage" System

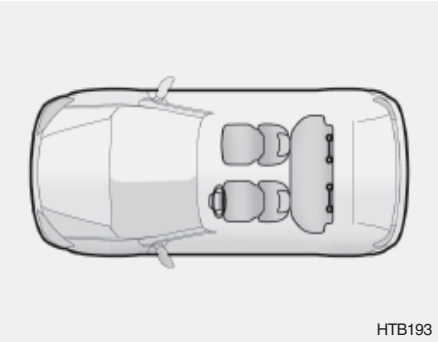
HTB193

ISOFIX is a standardised method of fitting child seats that eliminates the need to use the standard adult seat belt to secure the seat in the vehicle. This enables a much more secure and positive location with the added benefit of easier and quicker installation.

An ISOFIX-seat can only be installed if it has vehicle-specific approval in accordance with the requirements of ECE-R44. For your Hyundai, the Hyundai ISOFIX GR1 / Hyundai Duo / Römer ISOFIX GR1 and the Römer Duo ISOFIX / Britax Duo ISOFIX is approved according to the requirement ECE-R44. This seat has been tested extensively by Hyundai and is recommended for your Hyundai.

**NOTE:**
**At present, this seat is the only one complying with that provision. In case that other manufacturers will furnish proof of a respective certification, Hyundai is going to evaluate this seat carefully and will give a recommendation provided that seat complies to the law. Please ask your Hyundai dealer in this respect.**

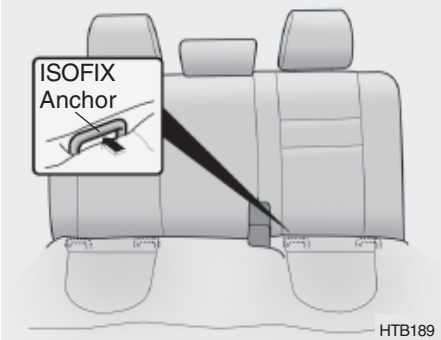

HTB189

On each side of the rear seat, between the cushion and backrest, are located a pair of ISOFIX anchorage points together with a top tether mounting on the luggage compartment. During the installing, the seat has to be engaged at the anchorage-points in a way you can hear it clicking (check by pulling!) and has to be fixed with the Top Tether-belt on the belonging point in the luggage-compartment. The installing and the use of a child-seat has to be done according to the installing-manual, which is added to the ISOFIX-seat.

## NOTE:

**An ISOFIX-child-seat can only be installed if the seat has a vehicle-specific approval according to ECE-R44. Before using the ISOFIX-child-seat, which was bought for another car, ask your Hyundai-dealer whether this seat-type is approved and recommended for your Hyundai.**

## To secure the child restraint seat

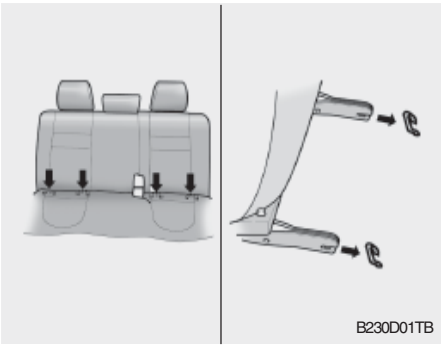


1. To engage the child restraint seat to the ISOFIX anchor, insert the child restraint seat latch into the ISOFIX anchor. Listen for the audible "click" sound.
2. Connect the tether strap hook to the child restraint hook holder and tighten to secure the seat. Refer to "Securing a Child Restraint System with the Tether Anchorage System" on page 1-28.

## WARNING:

- **Do not install a child restraint seat at the center of the rear seat using the vehicle's ISOFIX anchors. The ISOFIX anchors are only provided for the left and right outboard rear seating positions. Do not misuse the ISOFIX anchors by attempting to attach a child restraint seat in the middle of the rear seat to the ISOFIX anchors. In a crash, the child restraint seat ISOFIX attachments may not be strong enough to secure the child restraint seat properly in the center of the rear seat and may break, causing serious injury or death.**
- **Do not mount more than one child restraint to a child restraint lower anchorage point. The improper increased load may cause the anchorage points or tether anchor to break, causing serious injury or death.**
- **Attach the ISOFIX or ISOFIX-compatible child restraint seat only to the appropriate locations shown in the illustration.**

**o Always follow the installation and use instructions provided by the manufacturer of the child restraint.**

B230H01TB-GAT

## Child Seat Restraint Suitability For Seat Position

Use child safety seats that have been officially approved and are appropriate for your children. When using the child safety seats, refer to the following table.

| Age Group | Seating Position | | |
|---|---|---|---|
| | Front Passenger | Rear Outboard | Rear Center |
| 0 : Up to 10 kg (0 ~ 9 months) | X | U | X |
| 0+ : Up to 13 kg (0 ~ 2 years) | X | U | X |
| I : 9kg to 18kg (9 months ~ 4 years) | X | U, L1 | X |
| II & III : 15kg to 36kg (4 ~ 12 years) | X | UF | X |

U : Suitable for "universal" category restraints approved for use in this mass group

UF: Suitable for forward-facing "universal" category restraints approved for use in this mass group

L1 : Suitable for "Römer ISOFIX GR1" approved for use in this mass group (Approval No: E1 R44-03301133)

X : Seat position not suitable for children in this mass group

B180C01A-GAT

## Pre-tensioner Seat Belt (Without A/BAG) (If Installed)

Ordinarily the pre-tensioner seat belt operates in the same way as E.L.R (Emergency Locking Retractor) type (When vehicles stop suddenly, the belt will lock into the position. It will also lock if you try to lean forward too quickly.). However, when vehicles crash, the retractor rewinds the belt webbing. This will restrain the passenger movement quickly and also reduce the slack between passenger and belt webbing.

### NOTE:

- **o When the pre-tensioner seat belt is activated, there may be an explosion noise. This noise is normal and is not hazardous.**
- **o Pre-tensioner seat belt is designed to operate only when a sufficiently severe impact occurs and it will be only operated once.**

**WARNING:**
**If the pre-tensioner seat belt was activated, never attempt to replace it by yourself. It must be replaced by an authorized Hyundai Dealer.**

B180B01A-GAT

## Pre-tensioner Seat Belt (With A/BAG) (If Installed)

Your Hyundai vehicle is equipped with driver's and front passenger's pre-tensioner seat belts. The purpose of the pre-tensioner is to make sure that the seat belts fit tightly against the occupant's body in certain frontal collisions.
The pre-tensioner seat belts can be activated with the airbags.

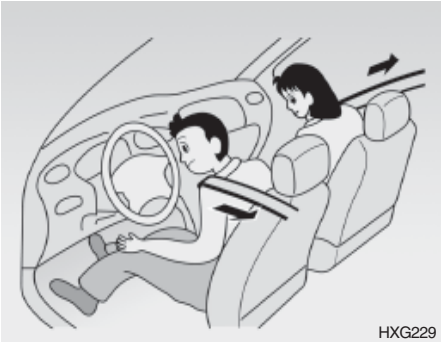
HXG229

The pre-tensioner seat belt operates in the same way as an Emergency Locking Retractor (ELR) type of seat belt. When the vehicle stops suddenly, or if the occupant tries to lean forward too quickly, the seat belt retractor will lock into position. However, in certain frontal collisions, the pre-tensioner will activate and pull the seat belt into tighter contact against the occupant's body.

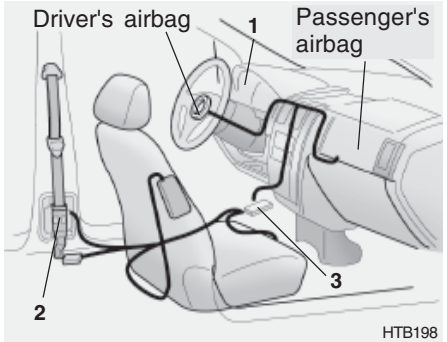

HTB198

The seat belt pre-tensioner system consists mainly of the following components.

Their locations are shown in the illustration.

1. SRS airbag warning light
2. Seat belt pre-tensioner assembly
3. SRS control module

**WARNING:**

**To obtain maximum benefit from a pre-tensioner seat belt:**

1. **The seat belt must be worn correctly.**
2. **The seat belt must be adjusted to the correct position.**

**NOTE:**

- **Both the driver's and front passenger's pre-tensioner seat belts will be activated in certain frontal collisions. The pre-tensioner seat belts can be activated with the airbags. The pre-tensioners will be activated under these conditions even if the seat belts are not being worn at the time of the collision.**
- **When the pre-tensioner seat belts are activated, a loud noise may be heard and fine dust, which may appear to be smoke, may be visible in the passenger compartment. These are normal operating conditions and are not hazardous.**
- **Although it is harmless, the fine dust may cause skin irritation and should not be breathed for prolonged periods. Wash your hands and face thoroughly after an accident in which the pre-tensioner seat belts were activated.**

**CAUTION:**

- **Because the sensor that activates the SRS airbag is connected with the pre-tensioner seat belt, the SRS airbag warning light AIR BAG on the instrument panel will blink for approximately 6 seconds after the ignition key has been turned to the "ON" position, and then it should turn off.**
- **If the pre-tensioner seat belt is not working properly, this warning light will illuminate even if there is no malfunction of the SRS airbag system . If the SRS airbag warning light does not illuminate when the ignition key is turned to "ON", or if it remains illuminated after blinking for approximately 6 seconds, or if it illuminates while the vehicle is being driven, please have an authorized Hyundai dealer inspect the pre-tensioner seat belt or SRS airbag system as soon as possible.**

**WARNING:**

- **Pre-tensioners are designed to operate only one time. After activation, pre-tensioner seat belts must be replaced. All seat belts, of any type, should always be replaced after they have been worn during a collision.**
- **The pre-tensioner seat belt assembly mechanisms become hot during activation. Do not touch the pre-tensioner seat belt assemblies for several minutes after they have been activated.**
- **Do not attempt to inspect or replace the pre-tensioner seat belts yourself. This must be done by an authorized Hyundai dealer.**
- **Do not strike the pre-tensioner seat belt assemblies.**

- **Do not attempt to service or repair the pre-tensioner seat belt system in any manner.**
- **Improper handling of the pre-tensioner seat belt assemblies, and failure to heed the warnings to not strike, modify, inspect, replace, service or repair the pre-tensioner seat belt assemblies may lead to improper operation or inadvertent activation and serious injury.**
- **Always wear the seat belts when driving or riding in a motor vehicle.**

B240A01TB-GAT

## SUPPLEMENTAL RESTRAINT (AIRBAG) SYSTEM (If Installed)

Driver's Airbag

HTB201

Your Hyundai is equipped with a Supplemental Restraint (Airbag) System. The indications of the system's presence are the letters "SRS AIR BAG" embossed on the airbag pad cover in the steering wheel and printed on the passenger's side front panel pad above the glove box.

The Hyundai SRS consists of airbags installed under the pad covers in the center of the steering wheel and the passenger's side front panel above the glove box. The purpose of the SRS is to provide the vehicle's driver and/or the front passenger with additional protection than that offered by the seat belt system alone, in case of a frontal impact of sufficient severity.

### NOTE:

**Be sure to read information about the SRS on the labels provided on the backside of the sun visor and in the glove box.**

### WARNING:

- **As its name implies, the SRS is designed to work with, and be supplemental to, the driver's and the passenger's three point seat belt systems and is not a substitute for them. Therefore your seat belts must be worn at all times while the vehicle is in motion. In addition, the airbags deploy only in certain frontal impact conditions severe enough to cause significant injury to the vehicle occupants.**

- The SRS is designed to deploy the airbags only when an impact is sufficiently severe and when the impact angle is less than 30° from the forward longitudinal axis of the vehicle and will not deploy in side, rear or rollover impacts. Additionally, the airbags will only deploy once. Thus, seat belts must be worn at all times.

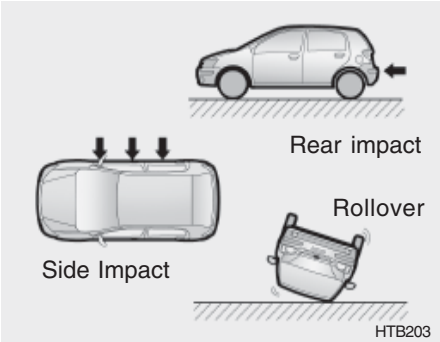


- Front airbags are not intended to deploy in side-impact, rear-impact or rollover crashes. In addition, airbags will not deploy in frontal crashes below the deployment threshold speed.
- The driver should sit back as far as possible while still maintaining control of the vehicle. If you are sitting too close to the airbag, it can cause death or serious injury when it inflates.
- No objects should be placed over or near the airbag modules on the steering wheel, instrument panel, and the front passenger's panel above the glove box, because any such object could cause harm if the vehicle is in a crash severe enough to cause the airbags to deploy.
- If the airbags deploy, they must be replaced by an authorized Hyundai dealer.
- Do not tamper with or disconnect SRS wiring, or other components of the SRS system. Doing so could result in injury, due to accidental firing of the airbags or by rendering the SRS inoperative.
- Do not install a child restraint system in the front passenger seat position. A child restraint system must never be placed in the front seat. The infant or child could be severely injured or killed by an airbag deployment in case of an accident.
- Do not allow children to ride in the front passenger seat. If older children (teenagers and older) must ride in the front seat, make sure they are always properly belted and that the seat is moved back as far as possible.
- For maximum safety protection in all types of crashes, all occupants including the driver should always wear their seat belts whether or not an airbag is also provided at their seating position to minimize the risk of severe injury or death in the event of a crash. Do not sit or lean unnecessarily close to the airbag while the vehicle is in motion.
- The SRS airbag system must deploy very rapidly to provide protection in a crash. If an occupant is out of position because of not wearing a seat belt, the airbag may forcefully contact the occupant causing serious or fatal injuries.

B240B01FC-GAT

## SRS Components and Functions

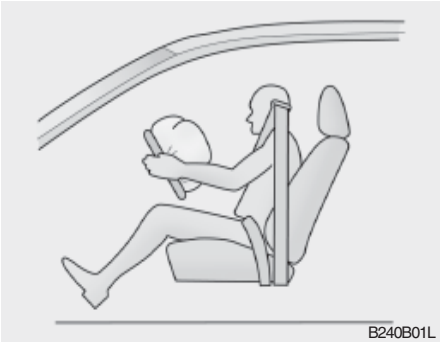


The SRS consists of the following components:

- Driver's Airbag Module
- Passenger's Airbag Module
- SRS Service Reminder Indicator (SRI)
- SRS Control Module (SRSCM)

The SRSCM continually monitors all elements while the ignition is "ON" to determine if a frontal or near-frontal impact is severe enough to require airbag deployment.

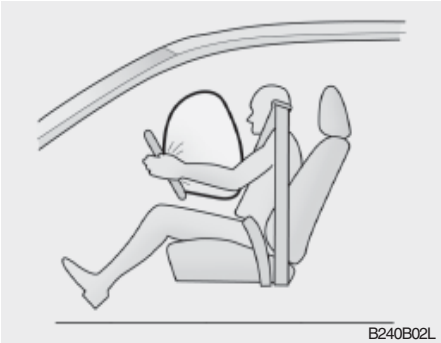


The SRS service reminder indicator (SRI) on the instrument panel will blink for about 6 seconds after the ignition key is turned to the "ON" position or after the engine is started, after which the SRI should go out.

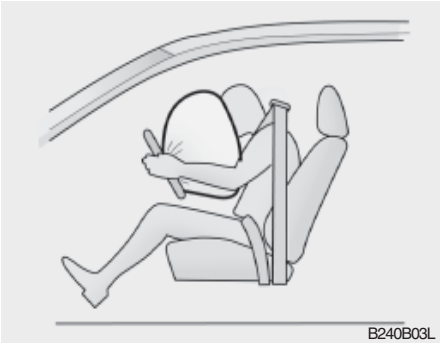


The airbag modules are located both in the center of the steering wheel and in the front passenger's panel above the glove box. When the SRSCM detects a considerable impact to the front of the vehicle, it will automatically deploy the airbags.

Passenger's Airbag

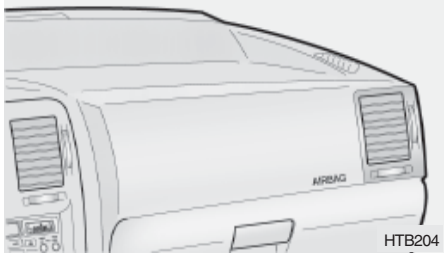


Upon deployment, tear seams molded directly into the pad covers will separate under pressure from the expansion of the airbags. Further opening of the covers then allows full inflation of the airbags.

A fully inflated airbag in combination with a properly worn seat belt slows the driver's or the passenger's forward motion, thus reducing the risk of head or chest injury.

**CAUTION:**

**Do not install or place any accessories (drink holder, cassette holder, sticker, etc) on the front passenger's panel above the glove box in a vehicle with passenger's air bag. Such objects may become dangerous projectiles and cause injury if the passenger's air bag inflates.**

Passenger's Airbag

After complete inflation, the airbag immediately starts deflating, enabling the driver to maintain forward visibility.

**CAUTION:**

**When installing a container of liquid air freshener inside a vehicle, do not place it near the instrument cluster nor on the instrument panel pad surface. If there is any leakage from the air freshener onto these areas (instrument cluster, instrument panel pad or air ventilator), it may damage these parts. If the liquid from the air freshener does leak onto these areas, wash them with water immediately.**

**WARNING:**

- **When the SRS is activated, there may be a loud noise and fine dust will be released throughout the vehicle. These conditions are normal and are not hazardous. However, the fine dust generated during airbag deployment may cause skin irritation. Be sure to wash your hands and face thoroughly with lukewarm water and a mild soap after an accident in which the airbags were deployed.**

- **The SRS can function only when the ignition key is in the "ON" position. If the SRS SRI does not come on, or continuously remains on, after flashing for about 6 seconds when the ignition key is turned to the "ON" position, or after the engine is started, or comes on while driving, the SRS is not working properly. If this occurs, have your vehicle immediately inspected by your Hyundai dealer.**
- **Before you replace a fuse or disconnect a battery terminal, turn the ignition key to the "LOCK" position or remove the ignition key. Never remove or replace the air bag related fuse(s) when the ignition key is in the "ON" position. Failure to heed this warning will cause the SRS SRI to illuminate.**

B990B03Y-GAT

## Side Impact Airbag (If Installed)

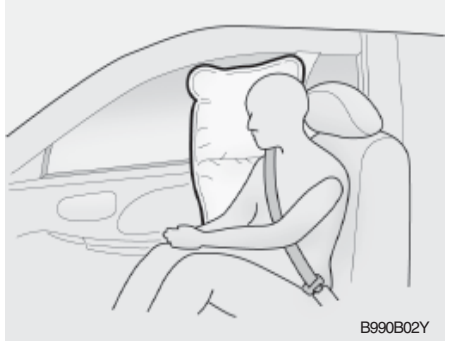


Your Hyundai is equipped with a side airbag in each front seat. The purpose of the airbag is to provide the vehicle's driver and/or the front passenger with additional protection than that offered by the seatbelt alone. The side impact airbags are designed to deploy only during certain side impact collisions, depending on the crash severity, angle, speed and point of impact. The air bags are not designed to deploy in all side impact situations.

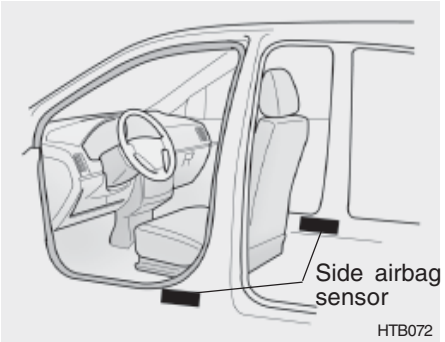


**WARNING:**

- **For best protection from the side impact airbag system and to avoid being injured by the deploying side impact airbag, both front seat occupants should sit in an upright position with the seat belt properly fastened. The driver's hands should be placed on the steering wheel at the 9:00 and 3:00 o'clock positions. The passenger's arms and hands should be placed in their laps.**
- **Do not use any accessory seat covers.**

- **Use of seat covers could reduce or prevent the effectiveness of the system.**
- **Do not install any accessories on the side or near the side impact airbag.**
- **Do not use excessive force on the side of the seat.**
- **Do not place any objects over the airbag or between the airbag and yourself.**
- **Do not place any objects (an umbrella, bag, etc.) between the front door and the front seat. Such objects may become dangerous projectiles and cause injury if the supplemental side impact air bag inflates.**
- **To prevent unexpected deployment of the side impact air bag that may result in personal injury, avoid impact to the side airbag sensor when the ignition key is on.**

B240C02Y-GAT

## SRS Care

The SRS is virtually maintenance-free and there are no parts you can safely service by yourself. The entire SRS system must be inspected by an authorized Hyundai dealer in 10 years after the date that the vehicle was manufactured.

Any work on the SRS system, such as removing, installing, repairing, or any work on the steering wheel must be performed by a qualified Hyundai technician. Improper handling of the SRS system may result in serious personal injury.

B240C02L

**WARNING:**

- **Do not install a child restraint system in the front passenger seat position.**
  **A child restraint system must never be placed in the front seat. The infant or child could be severely injured by an airbag deployment in case of an accident.**
- **Extreme Hazard! Do not use a reward facing restraint on a seat protected by an airbag in front of it!**

- **Modification to SRS components or wiring, including the addition of any kind of badges to the pad covers or modifications to the body structure, can adversely affect SRS performance and lead to possible injury.**
- **For cleaning the airbag pad covers, use only a soft, dry cloth or one which has been moistened with plain water. Solvents or cleaners could adversely affect the airbag covers and proper deployment of the system.**
- **No objects should be placed over or near the airbag modules on the steering wheel, instrument panel, and the front passenger's panel above the glove box, because any such object could cause harm if the vehicle is in a crash severe enough to cause the airbags to inflate.**
- **If the airbags inflate, they must be replaced by an authorized Hyundai dealer.**

- **Do not tamper with or disconnect SRS wiring, or other components of the SRS system. Doing so could result in injury, due to accidental firing of the airbags or by rendering the SRS inoperative.**
- **If components of the airbag system must be discarded, or if the vehicle must be scrapped, certain safety precautions must be observed. Your Hyundai dealer knows these precautions and can give you the necessary information. Failure to follow these precautions and procedures could increase the risk of personal injury.**
- **If you sell your vehicle, be sure to inform the new owner of these important points and make certain that this manual is transferred to the new owner.**
- **If your car was flooded and has soaked carpeting or water on flooring, you shouldn't try to start engine; have the car towed to authorized Hyundai dealer.**

B260A02TB-GAT

# INSTRUMENT CLUSTER AND INDICATOR

## A Type (Without Tachometer)

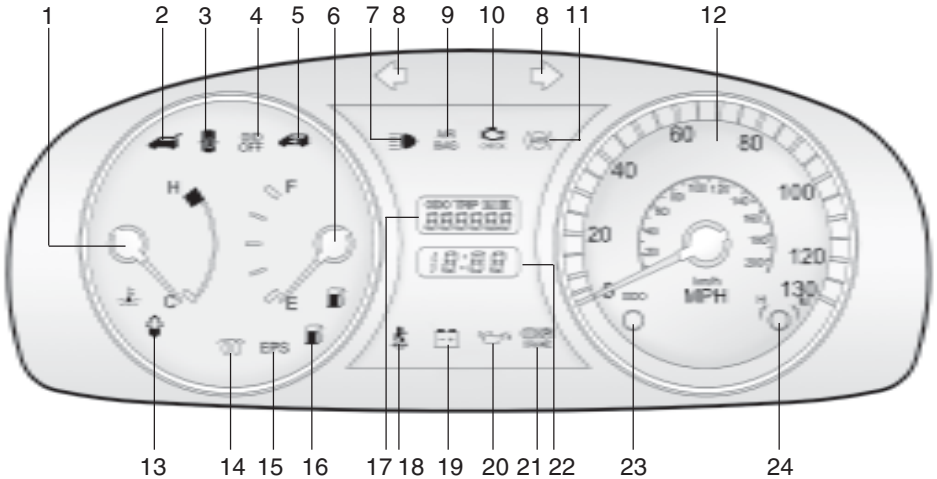


HTB003B

1. Temperature Gauge
2. Tail Gate Open Warning Light
3. Door Ajar Warning Light
4. Overdrive off Indicator Light (Auto T/A only)
5. Immobilizer Warning Indicator Light (If installed)
6. Fuel Gauge
7. High Beam Indicator Light
8. Turn Signal Indicator Light
9. SRS (Airbag) Warning Light (If installed)
10. Malfunction Indicator Light (MIL) (If installed)
11. ABS Warning Light (If installed)
12. Speedometer
13. Fuel Filter Warning Light (Diesel only)
14. Diesel Pre-heat Indicator Light (Diesel only)
15. Electric Power Steering Warning Light (If installed)
16. Low Fuel Warning Light
17. Odometer/Trip Odometer
18. Seat Belt Warning Light
19. Charging System Warning Light
20. Oil Pressure Warning Light
21. Parking Brake/Brake Fluid Level Warning Light
22. Digital Clock
23. Trip Odometer Reset Switch
24. Clock Reset Switch

B260B02TB-GAT

## B Type (Without Trip Computer)

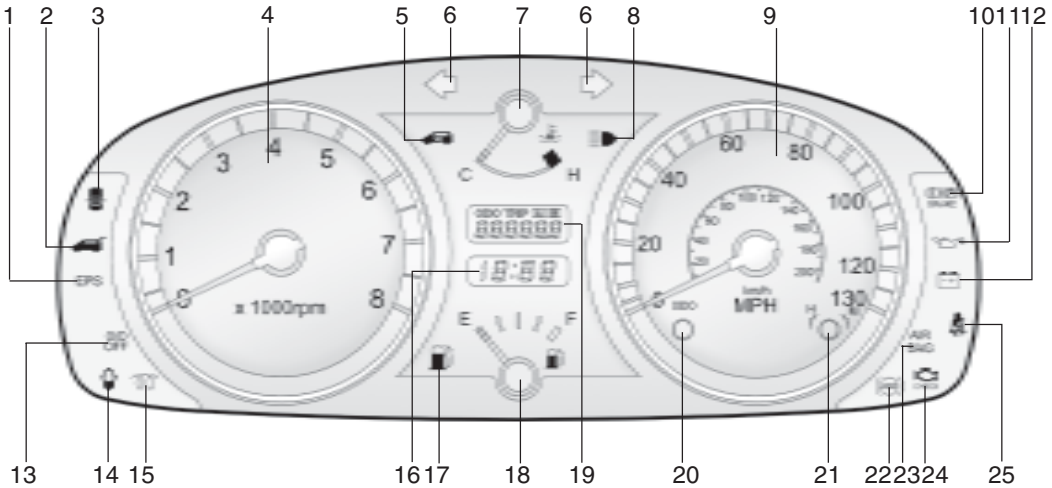


HTB001B

1. Electric Power Steering Warning Light (If installed)
2. Tail Gate Open Warning Light
3. Door Ajar Warning Light
4. Tachometer
5. Immobilizer Warning Indicator Light (If installed)
6. Turn Signal Indicator Light
7. Temperature Gauge
8. High Beam Indicator Light
9. Speedometer
10. Parking Brake/Brake Fluid Level Warning Light
11. Oil Pressure Warning Light
12. Charging System Warning Light
13. Overdrive off Indicator Light (Auto T/A only)
14. Fuel Filter Warning Light (Diesel only)
15. Diesel Pre-heat Indicator Light (Diesel only)
16. Digital Clock
17. Low Fuel Warning Light
18. Fuel Gauge
19. Odometer/Trip Odometer
20. Trip odometer Reset Switch
21. Clock Reset Switch
22. ABS Warning Light (If installed)
23. SRS (Airbag) Warning Light (If installed)
24. Malfunction Indicator Light (MIL) (If installed)
25. Seat Belt Warning Light

B260C02TB-GAT

## C Type (With Trip Computer)

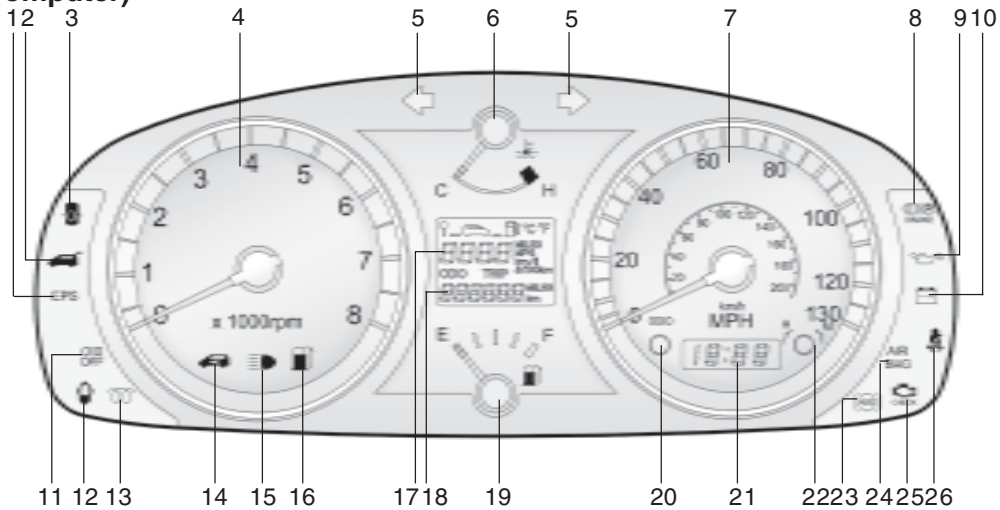


HTB002B

1. Electric Power Steering Warning Light (If installed)
2. Tail Gate Open Warning Light
3. Door Ajar Warning Light
4. Tachometer
5. Turn Signal Indicator Light
6. Temperature Gauge
7. Speedometer
8. Parking Brake/Brake Fluid Level Warning Light
9. Oil Pressure Warning Light
10. Charging System Warning Light
11. Overdrive Off Indcator Light (Auto T/A only)
12. Fuel Filter Warning Light (Diesel only)
13. Diesel Pre-heat Indicator Light (Diesel only)
14. Immobilizer Warning Indicator Light (If installed)
15. High Beam Indicator Light
16. Low Fuel Warning Light
17. Trip Computer (If installed)
18. Odometer/Trip Odometer
19. Fuel Gauge
20. Trip Computer mode Convert Switch
21. Digital Clock
22. Clock Reset Switch
23. ABS Warning Light (If installed)
24. SRS (Airbag) Warning Light (If installed)
25. Malfunction Indicator Light (MIL) (If installed)
26. Seat Belt Warning Light

B260B01S-GAT

## SRS (Airbag) Service Reminder Indicator (SRI) (If Installed)

The SRS service reminder indicator (SRI) comes on and flashes for about 6 seconds after the ignition key is turned to the "ON" position or after the engine is started, after which it will go out.

This light also comes on when the SRS is not working properly. If the SRI does not come on, or continuously remains on after flashing for about 6 seconds when you turned the ignition key to the "ON" position or started the engine, or if it comes on while driving, have the SRS inspected by an authorized Hyundai Dealer.

B260P02Y-GAT

## ABS Service Reminder Indicator (SRI) (If Installed)

When the key is turned to the "ON" position, the Anti-Lock Brake System will come on and then go off in a few seconds. If the ABS SRI remains on, comes on while driving, or does not come on when the key is turned to the "ON" position, this indicates that there may be a problem with the ABS.
If this occurs, have your vehicle checked by your Hyundai dealer as soon as possible. The normal braking system will still be operational, but without the assistance of the anti-lock brake system.

**CAUTION:**
**If both ABS SRI and Parking Brake/ Brake fluid level warning lights remain "ON" or come on while driving, there may be a problem with E.B.D (Electronic Brake Force Distribution).**
**If this occurs, avoid sudden stops and have your vehicle checked by your Hyundai dealer as soon as possible.**

B260C01A-AAT

## O/D OFF Indicator (Automatic transaxle only) (If Installed)

When the overdrive switch is turned on, the overdrive off indicator will go out. This amber indicator will be illuminated when the overdrive switch is turned off.

B260D01A-AAT

## Turn Signal Indicator Lights

The blinking green arrows on the instrument panel show the direction indicated by the turn signals. If the arrow comes on but does not blink, blinks more rapidly than normal, or does not illuminate at all, a malfunction in the turn signal system is indicated. Your dealer should be consulted for repairs.

B260F01A-AAT

## High Beam Indicator Light

The high beam indicator light comes on whenever the headlights are switched to the high beam or flash position.

B260G01A-AAT

## Oil Pressure Warning Light

**CAUTION:**

**If the oil pressure warning light stays on while the engine is running, serious engine damage may result. The oil pressure warning light comes on whenever there is insufficient oil pressure. In normal operation, it should come on when the ignition switch is turned on, then go out when the engine is started. If the oil pressure warning light stays on while the engine is running, there may be a serious malfunction.**

**If this happens, stop the car as soon as it is safe to do so, turn off the engine and check the oil level. If the oil level is low, fill the engine oil to the proper level and start the engine again. If the light stays on with the engine running, turn the engine off immediately. In any instance where the oil light stays on when the engine is running, the engine should be checked by an authorized Hyundai dealer before the car is driven again.**

B260H03A-AAT

## Parking Brake/Brake Fluid Level Warning Light

**WARNING:**

**If you suspect brake trouble, have your brakes checked by a Hyundai dealer as soon as possible. Driving your car with a problem in either the brake electrical system or brake hydraulic system is dangerous, and could result in a serious injury or death.**

### Warning Light Operation

The parking brake/brake fluid level warning light should come on when the parking brake is applied and the ignition switch is turned to "ON" or "START". After the engine is started, the light should go out when the parking brake is released.

If the parking brake is not applied, the warning light should come on when the ignition switch is turned to "ON" or "START", then go out when the engine starts. If the light comes on at any other time, you should slow the vehicle and bring it to a complete stop in a safe location off the roadway.

The brake warning light indicates that the brake fluid level in the brake master cylinder is low and hydraulic brake fluid conforming to DOT 3 or DOT 4 specifications should be added. After adding fluid, if no other trouble is found, the car should be immediately and carefully driven to a Hyundai dealer for inspection. If further trouble is experienced, the vehicle should not be driven at all but taken to a dealer by a professional towing service or some other safe method.

Your Hyundai is equipped with dual-diagonal braking systems. This means you still have braking on two wheels even if one of the dual systems should fail. With only one of the dual systems working, more than normal pedal travel and greater pedal pressure are required to stop the car. Also, the car will not stop in as short a distance with only half of the brake system working. If the brakes fail while you are driving, shift to a lower gear for additional engine braking and stop the car as soon as it is safe to do so.

B260J01S-GAT

## Charging System Warning Light

The charging system warning light should come on when the ignition is turned on, then go out when the engine is running. If the light stays on while the engine is running, there is a malfunction in the electrical charging system. If the light comes on while you are driving, stop, turn off the engine and check under the hood. First, make certain the generator drive belt is in place. If it is, check the tension of the belt. And then, have the system checked by your Hyundai dealer.

**CAUTION:**

**If the drive belt (generator belt) is loosen, broken, or mission while the vehicle is driving, there may be a serious malfunction, engine could overheat because this belt also drives the water pump.**

B260K01B-GAT

## Tail Gate Open Warning Light

This light remains on unless the tail gate is completely closed.

B260L01A-GAT

## Door Ajar Warning Light

The door ajar warning light warns you that a door is not completely closed.

B260M01A-AAT

## Low Fuel Level Warning Light

The low fuel level warning light comes on when the fuel tank is approaching empty. When it comes on, you should add fuel as soon as possible. Driving with the fuel level warning light on or with the fuel level below "E" can cause the engine to misfire and damage the catalytic converter.

B260N02FC-GAT

## Malfunction Indicator Light (If installed)

This light illuminates when there is a malfunction of an exhaust gas related component, and the system is not functioning properly so that
the exhaust gas regulation values are not satisfied. This light will illuminate when the ignition key is tuned to the "ON" position, and will go out after the engine start. If it illuminates while driving, or does not illuminate when the ignition key is turned to the "ON" position, take your car to your nearest authorized Hyundai dealer and have the system checked.

B260E01HP-GAT

## Seat Belt Warning Light

The seat belt warning light blinks for about 6 seconds when the ignition key is turned from the "OFF" position to "ON" or "START".

B260T01TB-GAT

## Electric Power SteeringSystem (EPS) Warning Light (If installed)

This indicator light comes on about 4 seconds after the ignition key is turned to the "ON" position or after the engine is started, it will go out.
This light also comes on when the EPS has some troubles. If it comes on while driving, have your vehicle inspected by an authorized Hyundai Dealer.

**CAUTION:**
**When you move the electric power steering back-end and forth-end continuously in stop position, steering wheel plays heavily to operate anti-overload system. It is normal condition. It returns to be normal getting time.**

B260U01TB-GAT

## Immobilizer Indicator Light (If installed)

This indicator light comes on for some seconds after the ignition key is turned to the "ON" position. At this time, you can start the engine. The light goes out after the engine is running. In case this light goes out before you start the engine, you must turn to the "LOCK" position and restart the engine. In case this light blinks for five seconds when the ignition key is turned to "ON" position, this indicates that the immobilizer system is out of order. At this time, refer to the explanation of the Limp home procedure(See page 1-6) or consult to the Hyundai dealer.

B260S01B-GAT

## Diesel Pre-heat Indicator Light-Amber (Diesel Engine)

The indicator light illuminates amber when the ignition switch is placed at the "ON" position. The engine can be started after the pre-heat indicator light goes off. The illuminating time varies with the water temperature, air temperature and battery condition.

**NOTE:**
**If the engine were not started 10 seconds after the preheating is completed, turn the ignition key once more to the "LOCK" position, and then to the "ON" position, in order to preheat again.**

B265A01B-GAT

## Fuel Filter Warning Light-Red (Diesel Engine)

This light illuminates when the ignition switch is set to the "ON" position and goes off after the engine has started. If it lights up while the engine is running, it indicates that water has accumulated inside the fuel filter. If this happens, remove the water from the fuel filter. (Refer to "6-29 page")

B900A01A-GAT

## ACOUSTIC WARNING SOUND (If Installed)

The acoustic warning chime sounds when the tail lights are on and the door in driver side is open. This prevents the battery from discharging when the car is left with the tail lights on. The chime sounds until the tail lights are turned off.

B270A01A-AAT

## BRAKE PAD WEAR WARNING SOUND

The front disc brake pads have wear indicators that should make a high-pitched squealing or scraping noise when new pads are needed. The sound may come and go or be heard all the time when the vehicle is moving. It may also be heard when the brake pedal is pushed down firmly. Excessive rotor damage will result if the worn pads are not replaced. See your Hyundai dealer immediately.

B280A01A-AAT

## FUEL GAUGE

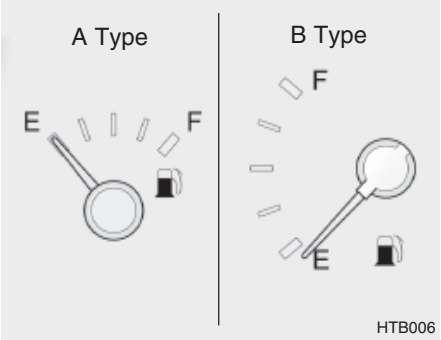


The needle on the gauge indicates the approximate fuel level in the fuel tank. The fuel capacity is given in Section 9.

B290A02A-AAT

## ENGINE COOLANT TEMPERATURE GAUGE

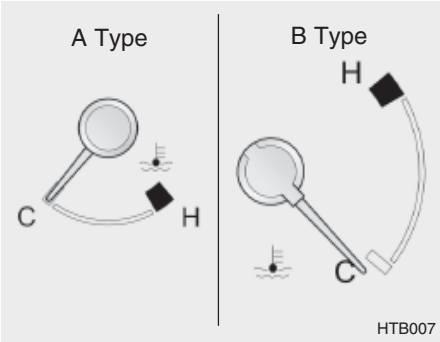


**WARNING:**
**Never remove the radiator cap when the engine is hot. The engine coolant is under pressure and could erupt and cause severe burns. Wait until the engine is cool before removing the radiator cap.**

The needle on the engine coolant temperature gauge should stay in the normal range. If it moves across the dial to "H" (Hot), pull over and stop as soon as possible and turn off the engine. Then open the hood and check the coolant level and the water pump drive belt. If you suspect cooling system trouble, have your cooling system checked by a Hyundai dealer as soon as possible.

B300A01A-GAT

## SPEEDOMETER

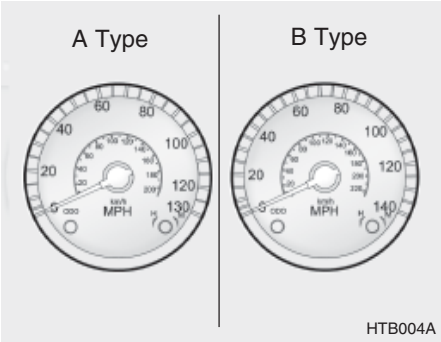


Your Hyundai's speedometer is calibrated in kilometers per hour or miles per hour.

B330A01A-AAT

## TACHOMETER

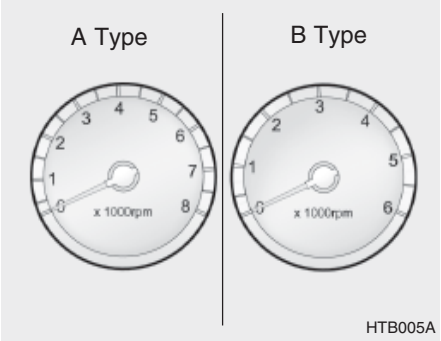


The tachometer registers the speed of your engine in revolutions per minute (rpm). It is useful to help you shift at the appropriate engine speed to avoid lugging or over-revving the engine.

**CAUTION:**
**The engine should not be raced to such a speed that the needle enters the red zone on the tachometer face. This can cause severe engine damage and may void your warranty.**

B310B01TB-GAT

# ODOMETER/TRIP ODOMETER

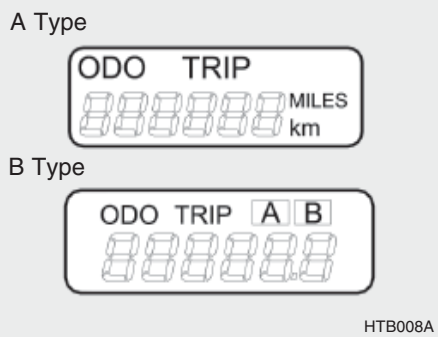


## A TYPE (WITH TRIP COMPUTER)

### 1. Odometer

The odometer records the total driving distance in kilometers or miles, and is useful for keeping a record for maintenance intervals.

**NOTE:**
**Any alteration of the odometer may void your warranty coverage.**

### 2. Trip odometer

- o This mode indicates the drive distance travelled since the last drive time reset.
- o Pressing the reset switch built in left side of speedmeter for more than 1 second, when the drive distance is being displayed, clears the drive distance to zero.
- o Refer to the explanation of the trip computer (see page 1-52, Drive Distance).

## B TYPE (WITHOUT TRIP COMPUTER)

### Function of digital odometer/trip odometer

Pushing in the reset switch when the ignition switch is turned "ON" will display the following sequence:

### 1. Odometer

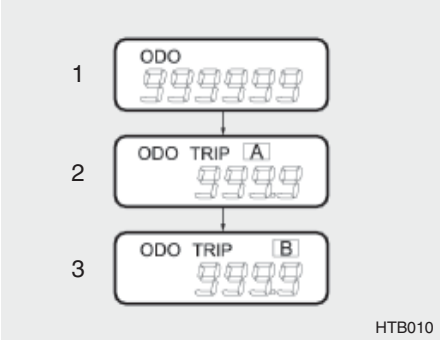


The odometer records the total driving distance in kilometers or miles, and is useful for keeping a record for maintenance intervals.

**NOTE:**
**Any alteration of the odometer may void your warranty coverage.**

### 2,3 Trip odometer

Records the distance of 2 trips in kilometers or miles.

**TRIP A:** First distance you have traveled from your origination point to a first destination.
**TRIP B:** Second distance from the first destination to the final destination.

To shift from TRIP A to TRIP B, press the reset switch. When pressed for 1 second, it will reset to 0.

B400B01TB-GAT

## TRIP COMPUTER (If Installed)

HTB009A

The trip computer is the microcomputer-controlled driver information gauge that displays information related to driving, such as outside temperature distance to empty, drive distance and average consumption on the LCD.

### Reset switch

- o The reset switch is used to zero the multi-functional display mode.
- o Pushing in the reset switch built in left side of speedmeter changes the display as follows;

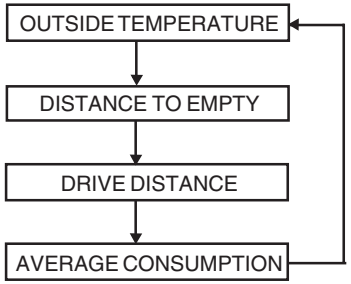


### 1. Outside temperature

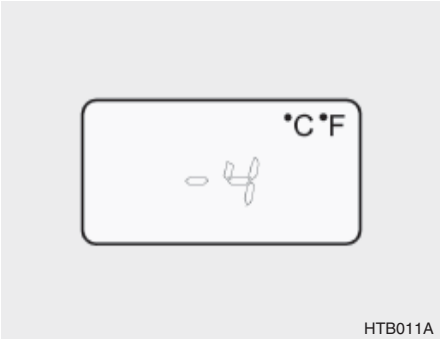

HTB011A

This mode indicates the outside temperature between -40˚C (-40˚F) and 75 ˚C (167˚ F) .

### 2. Distance to empty

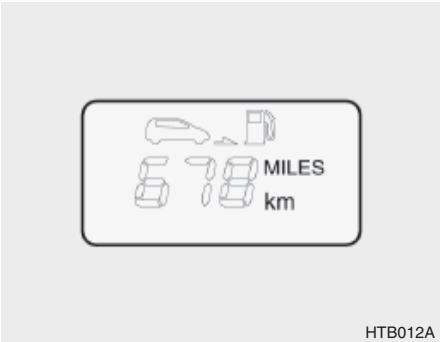

HTB012A

- o This mode indicates the estimated distance to empty from the current fuel in the fuel tank and distance to empty symbol.
- o When refueling with more than 6 liters, the trip computer will recognize refueling.
- o When the battery has been reinstalled after being discharged or disconnected, drive more than 32km for an accurate distance to empty.

**NOTE:**

- **o If the distance to empty is indicated "---", have the trip computer system checked by your authorized Hyundai dealer.**
- **o The distance to empty can differ from the actual tripmeter according to driving conditions.**
- **o The distance to empty can vary according to the driving conditions, driving pattern or vehicle speed.**

## 3. Drive Distance

- o This mode indicates the drive distance travelled since the last drive time reset.
- o Pressing the reset switch built in left side of speedmeter for more than 1 second, when the drive distance is being displayed, clears the drive distance to zero.

## 4. Average Consumption

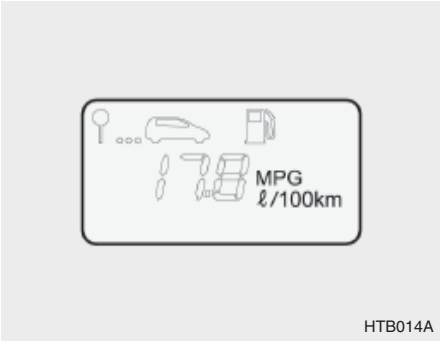


- o This mode indicates the average consumption since the data reset.
- o It displays per 10 seconds after you drive over 50m and 10 seconds.
- o Calculation Method

| | |
|---|---|
| MPG = | $\frac{\text{Total Cruise Distance(Miles)}}{\text{Total Fuel Consumption (G)}}$ |
| L/100km = | $\frac{\text{Total Fuel Consumption(L) x 100}}{\text{Total Cruise Distance (km)}}$ |

B340A01A-AAT

## COMBINATION TURN SIGNAL, HEADLIGHT AND HIGH-BEAM SWITCH

### Turn Signal Operation

Pulling down on the lever causes the turn signals on the left side of the car to blink. Pushing upwards on the lever causes the turn signals on the right side of the car to blink. As the turn is completed, the lever will automatically return to the center position and turn off the turn signals at the same time. If either turn signal indicator light blinks more rapidly than usual, goes on but does not blink, or does not go on at all, there is a malfunction in the system. Check for a burned-out fuse or bulb or see your Hyundai dealer.

B340B01A-AAT

### Lane Change Signal

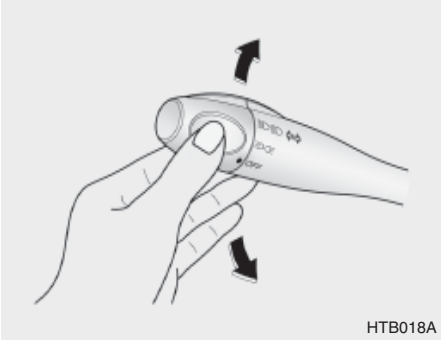


To indicate a lane change, move the lever up or down to a point where it begins flashing.
The lever will automatically return to the center position when released.

B340C01FC-GAT

### Headlight Switch

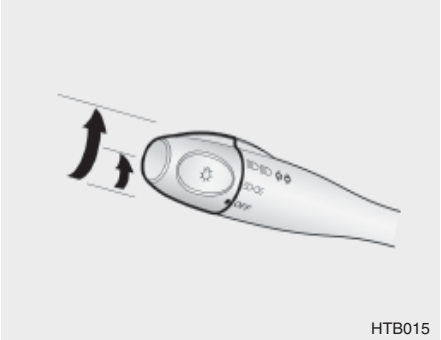


To operate the headlights, turn the barrel on the end of the multi-function switch. The first position turns on the parking lights, sidelights, tail lights and instrument panel lights. The second position turns on the headlights.

### Parking light auto cut (If installed)

If you do not turn the parking lights "OFF" after driving, the parking light will automatically shut "OFF" when the driver's door is opened.
To turn them "ON" again you must simply turn the ignition key to the "ON" position.

B340F01A-GAT

## Daytime Running Lights (If Installed)

Your Hyundai is equipped with daytime running lights. The daytime running lights are used to improve visibility for oncoming traffic. Your vehicle daytime running lights are designed to remain on continuously when the engine is operating even though the headlight switch is in the "OFF" position. However, the daytime running lights will be off while the parking brake is applied.

B340D01A-AAT

## High-beam Switch

To turn on the headlight high beams, push the lever forward (away from you). The high beam indicator light will come on at the same time. For low beams, pull the lever back toward you.

B340E01A-AAT

## Headlight Flasher

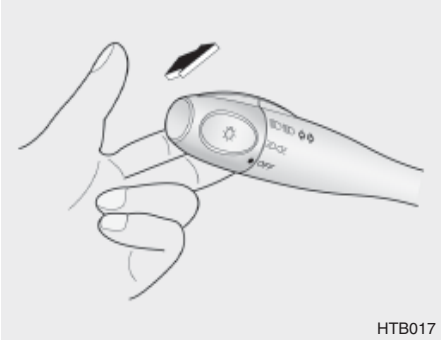


To flash the headlights, pull the switch lever toward you, then release it. The headlights can be flashed even though the headlight switch is in the "OFF" position.

B350A01A-AAT

## WINDSHIELD WIPER AND WASHER SWITCH

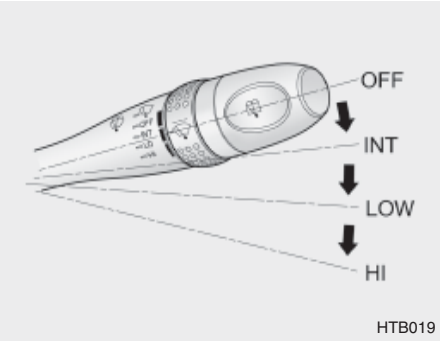


The windshield wiper switch has three positions:

1. Intermittent wiper operation
2. Low-speed operation
3. High-speed operation

### NOTE:

**To prevent damage to the wiper system, do not attempt to wipe away heavy accumulations of snow or ice. Accumulated snow and ice should be removed manually. If there is only a light layer of snow or**

**ice, operate the heater in the defrost mode to melt the snow or ice before using the wiper.**

B350B01O-GAT

## Windshield Washer Operation

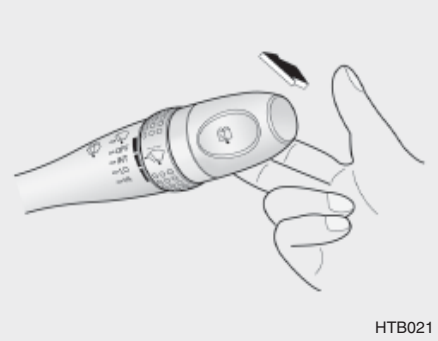


To use the windshield washer, pull the wiper/washer lever toward the steering wheel. When the washer lever is operated, the wipers automatically make two passes across the windshield. The washer continues to operate until the lever is released.

**NOTE:**

- **Do not operate the washer more than 15 seconds at a time or when the fluid reser- voir is empty.**
- **In icy or freezing weather, be sure the wiper blades are not frozen to the glass prior to operating the wipers.**
- **In areas where water freezes in winter, use windshield washer antifreeze.**

## Mist Wiper Operation

If a single wipe is desired in mist, push the windshield wiper and washer control lever upwards.

B350C01FC-GAT

## Adjustable Intermittent Wiper Operation (If Installed)

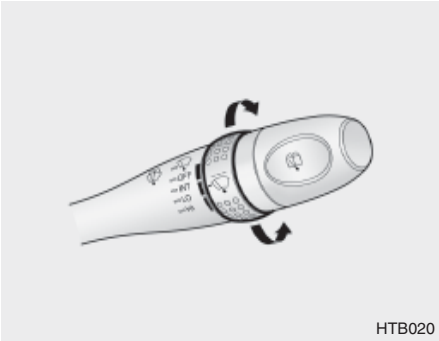


To use the intermittent wiper feature, place the wiper switch in the "INT" position. With the switch in this position, the interval between wipes can be varied from approximately 1 to 18 seconds by turning the interval adjuster barrel.

B350A01TB-AAT

## Tail Gate Wiper And Washer Switch (If installed)

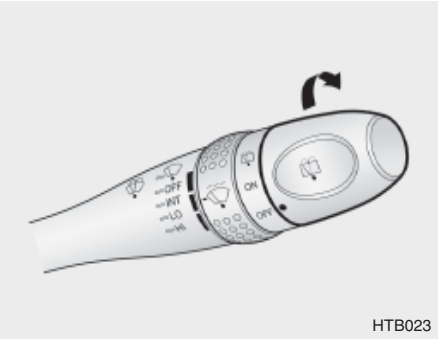


HTB023

1. : The washer fluid will be sprayed onto the rear window and the wiper operates while the rear window wiper barrel is placed in this position.
2. ON : When the point indicates "ON", the rear window wiper operates continuously.
3. OFF

B370A01A-AAT

## HAZARD WARNING SYSTEM

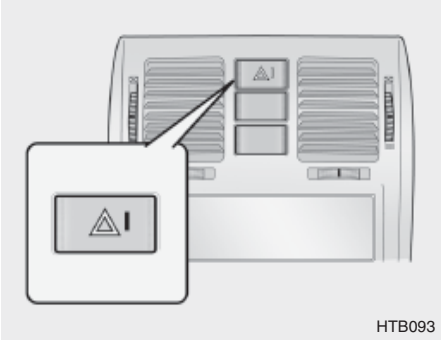

HTB093

The hazard warning system should be used whenever you find it necessary to stop the car in a hazardous location. When you must make such an emergency stop, always pull off the road as far as possible.

The hazard warning lights are turned on by pushing in on the hazard switch. This causes all turn signal lights to blink. The hazard warning lights will operate even though the key is not in the ignition.

To turn the hazard warning lights off, push in on the switch a second time.

B380A01HP-AAT

## REAR WINDOW DEFROSTER SWITCH

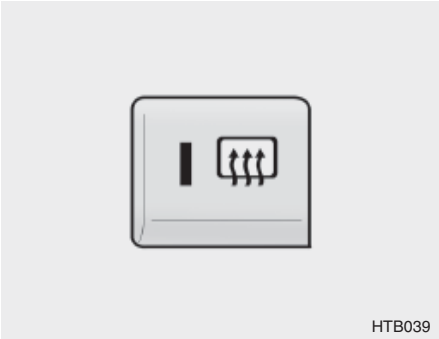

HTB039

The rear window defroster is turned on by pushing in on the switch. To turn the defroster off, push in on the switch a second time. The rear window defroster automatically turns itself off after about 20 minutes. To restart the defroster cycle, push in on the switch again after it has turned itself off.

**CAUTION:**
**Do not clean the inner side of the rear window glass with an abrasive type of glass cleaner or use a scraper to remove foreign deposits from the inner surface of the glass as this may cause damage to the defroster elements.**

**NOTE:**
**The engine must be running for the rear window defroster to operate.**

B360B01FC-GAT

## FRONT FOG LIGHT SWITCH (If Installed)

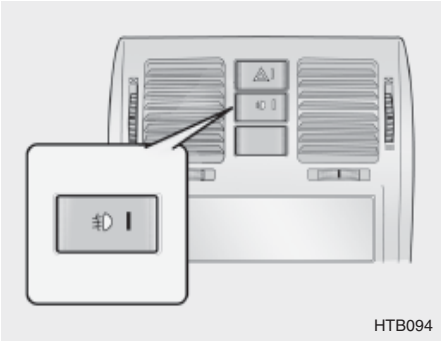


To turn on the front fog lights, push the switch in the "ON" position. They will come on when the headlight switch is in the first or second position.

B360A01Y-GAT

## REAR FOG LIGHT SWITCH (If Installed)

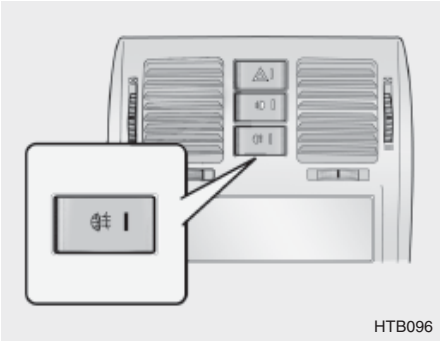


To turn on the rear fog lights, push the switch. They will come on when the headlight switch is in the second position and the key is in the "ON" position.

B400A01TB-AAT
## DIGITAL CLOCK

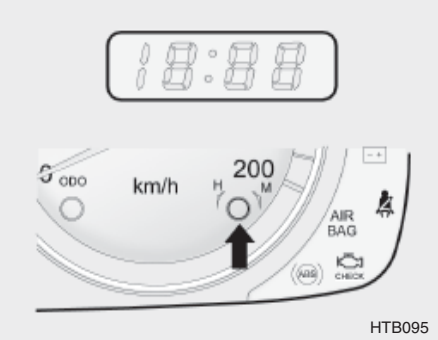

HTB095

There is a digital clock control button built-in right side of the speedometer. Its functions are:

- o **Reset**: Push the button for more than 1 second.
- o **Min/Hour Adjustment:** Turn to "H" for 0.5 second to advance the hour indicated. Turn to "M" for 0.5 second to advance the minute indicated.
- o **Auto mode:** Turn to the right or left side for more than 1 second to advance fastly.

**CAUTION:**
**Don't turn the switch excessively to prevent switch damage.**

B420A02A-AAT
## CIGARETTE LIGHTER

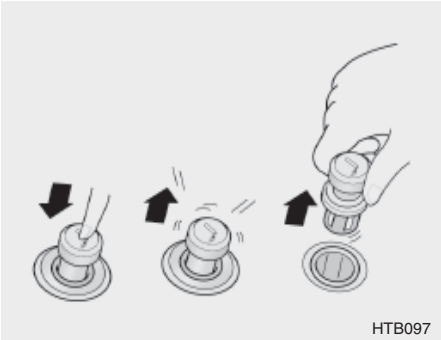
HTB097

For the cigarette lighter to work, the key must be in the "ACC" position or the "ON" position.
To use the cigarette lighter, push it all the way into its socket. When the element has heated, the lighter will pop out to the "ready" position.
Do not hold the cigarette lighter pressed in. This can damage the heating element and create a fire hazard.

If it is necessary to replace the cigarette lighter, use only a genuine Hyundai replacement or its approved equivalent.

**CAUTION:**
**Do not use electric accessories or equipment other than the Hyundai genuine parts in the socket.**

B430A01TB-GAT
## FRONT ASHTRAY

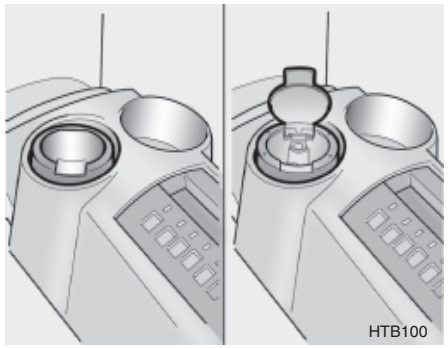
HTB100

The front ashtray may be opened by pulling it up by its top edge. To close the ashtray cover firmly, let the lid grip protrude outside. To remove the ashtray to empty or clean it, pull the cover up all the way out.
Either holder can be a drink holder or a ashtray holder.

B450A01TB-GAT
## DRINK HOLDER (If Installed)

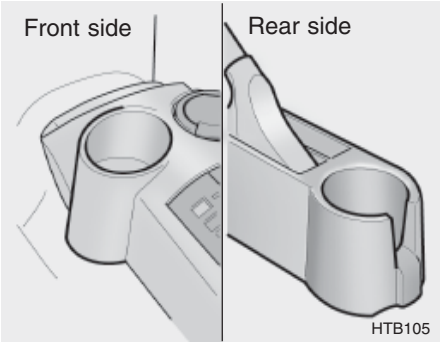


The drink holder is used for holding cups or cans.
Either holder can be a drink holder or a ashtray holder.

B455A01TB-GAT
## CONSOLE TRAY

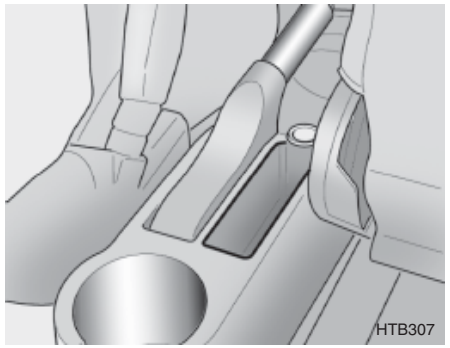


There is multipurpose receipts to accept pens or CD case in the console tray.

B340G01S-GAT
## HEADLIGHT LEVELING DEVICE SYSTEM (If Installed)

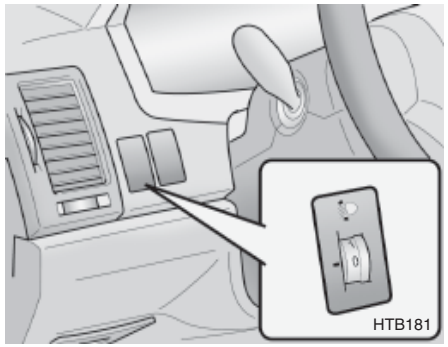


To adjust the headlight beam level according to the number of the passengers and the loading weight in the luggage area, turn the beam leveling switch.
The higher the number of the switch position, the lower the headlight beam level. Always keep the headlight beam at the proper leveling position, or headlights may dazzle other road users.
Listed below are the examples of proper switch settings. For loading conditions other than those listed below, adjust the switch position so that the beam level may be the nearest as the condition obtained according to the list.

| Loading condition | Switch position |
|---|---|
| Driver only | 0 |
| Driver + front passenger | 0 |
| Full passengers (including driver) | 1 |
| Full passengers (including driver) + full trunk loading (or light trailer loading) | 2 |
| Driver + full trunk loading (or maximum trailer loading) | 3 |

B460A01Y-AAT

## SUNROOF (If installed)
## Sun Shade

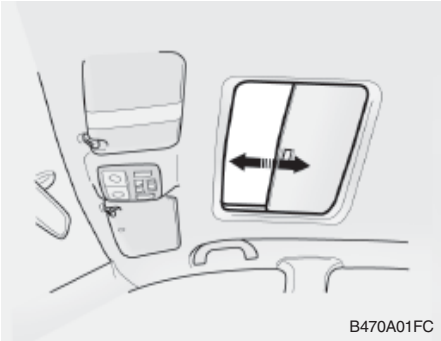


Your HYUNDAI is equipped with a sliding sunshade which you can manually adjust to let in light with the sunroof closed, or to block sunlight.

**WARNING:**
**Never adjust the sunshade while driving.**

B460B01GK-GAT

## Opening the Sunroof System

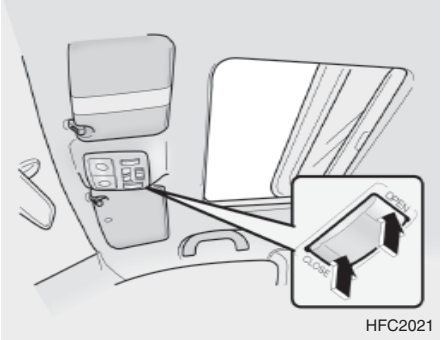


The sunroof can be electrically opened or closed with the ignition key in the "ON" position. The sunroof is moved to its fully open position by pushing the "Open" switch, and to stop at the desired position, push in any switches (Open, Close, Up, Down). To close, press and hold the "CLOSE" button. Release the button when the sunroof reaches the desired position.

**WARNING:**

- **Do not close a sunroof if anyone's hands, arms or body are between the sliding glass and the sunroof sash, as this could result in injury.**
- **Do not place your head or arms out of the sunroof opening at any time.**

**CAUTION:**

- **Do not open the sunroof in severely cold temperature or when it is covered with ice or snow.**
- **Periodically remove any dirt that may have accumulated on the guide rails.**

B460C01GK-GAT

## Tilting the Sunroof System

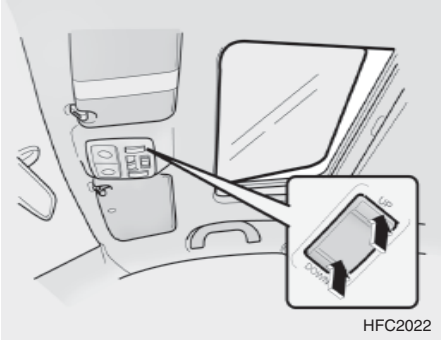

HFC2022

The sunroof is moved to its fully tilt up position by pushing the "UP" switch, and to stop at the desired position, push in any switches (Open, Close, Up, Down).
To tilt down, press and hold the "DOWN" button. Release the button when the sunroof reaches the desired position.

**NOTE:**

**After washing the car or after there is rain, be sure to wipe off any water that is on the sunroof before operating it.**

B460D01TB-AAT

## Manual Operation of Sunroof

If the sunroof does not electrically operate:

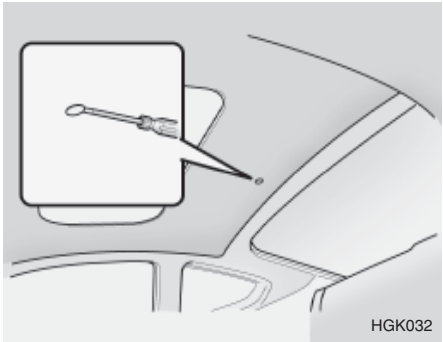
HGK032

1. Remove the cap located in the rear roof panel by using a coin or screw driver.

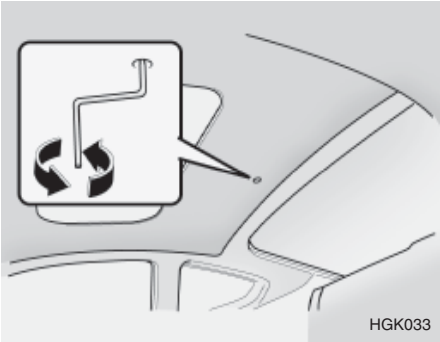


2. Insert the hexagonal head wrench provided with the vehicle into the socket. This wrench can be found in the vehicle's trunk or glove box.
3. Turn the wrench counterclockwise to open or clockwise to close the sunroof.

B460E01TB-GAT

## Resetting the Sunroof System

If the battery has been recharged, disconnected, if the sunroof is operated with the hexagonal head wrench manually, or if the sunroof operation is stopped by that ignition key is turned to the "OFF" position while it is moving, you may need to reset the sunroof.

To do this;
1. Turn the ignition switch "OFF".
2. With pressing "open" "up" button at the same time, turn the ignition switch "ON".
3. If the sunroof is set like this, the sunroof is reset with tilting up/down automatically once for all.

**CAUTION:**
**If the sunroof is not reset, it may not be operated properly.**

B480A01E-AAT

## FRONT INTERIOR LIGHT
## Map Light

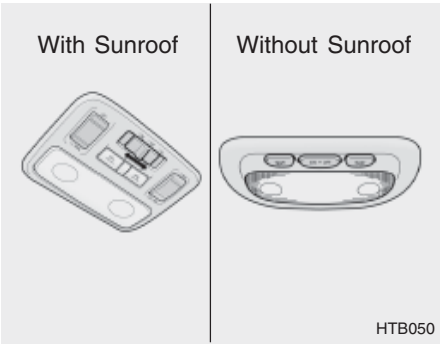


The two map light switches are located on both sides of the front overhead console. Push in the map light switch to turn the light on or off. This light produces a spot beam for convenient use as a map light at night or as a personal light for the driver and the passenger.

B490A01E-AAT
## INTERIOR LIGHT

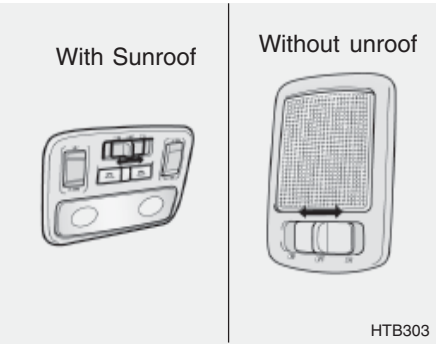


The interior courtesy light has a button of three positions. The three positions are:

### o DR
In the "DR" position, the interior courtesy light comes on when any door is opened regardless of the ignition key position. The light goes out when the door is closed.

### o ON
In the "ON" position, the light stays on at all times.

### o OFF
In the "OFF" position, the light stays off at all times even though a door is open.

B491A01TB-GAT
## SPECTACLE CASE (If Installed)

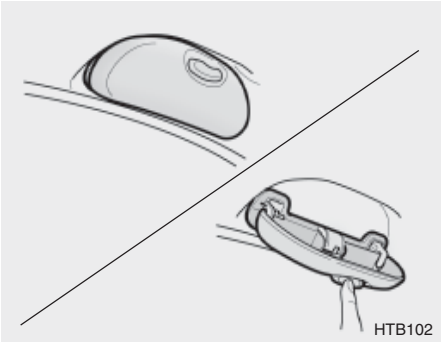


The spectacle case is located on the driver side of roof trim.
Pull the end of the cover to open the spectacle case.

**WARNING:**
**Do not keep objects such as sharp or unsuitable things inside the spectacle case. Such objects can be thrown out in the event of a sudden stop or an accident, possibly injuring the passengers in the vehicle.**

B500A01A-AAT
## GLOVE BOX

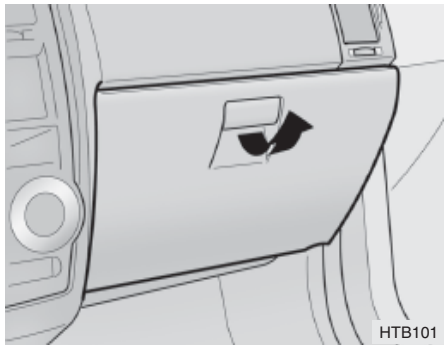

**WARNING:**
**To avoid the possibility of injury in case of an accident or a sudden stop, the glove box door should be kept closed when the car is in motion.**

o To open the glove box, pull on the glove box release lever.

B510A01A-AAT

## OUTSIDE REAR VIEW MIRROR
### Manual Type (If installed)

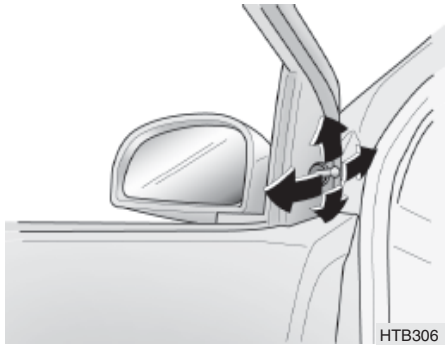


The outside rearview mirrors are equipped with a remote control for your convenience. It is operated by the control lever in the bottom front corner of the window.
Before driving away, always check that your mirrors are positioned so you can see behind you, both to the left and right sides, as well as directly behind your vehicle. When using the mirror, always exercise caution when attempting to judge the distance of vehicles behind or along side of you.

**CAUTION:**
**If the mirror control is jammed with ice, do not attempt to break it free using the control handle or by manipulating the face of the mirror. Use an approved spray de-icer (not radiator antifreeze) to release the frozen mechanism or move the vehicle to a warm place and allow the ice to melt.**

B510B01FC-GAT

## Electric Type (If installed)

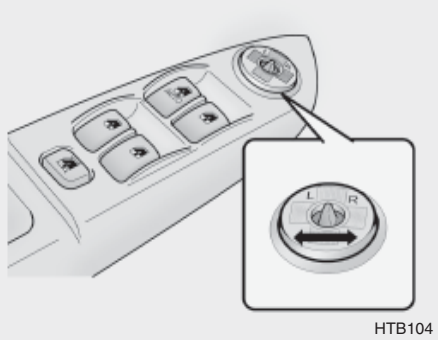

HTB104

The outside rearview mirrors can be adjusted to your preferred rear vision, both directly behind the vehicle, and to the rear of the left and right sides.
The remote control outside rearview mirror switch controls the adjustments for both right and left outside mirrors.

### To adjust the position of either mirror:

1. Move the selecting switch to the right or left to activate the adjustable mechanism for the corresponding door mirror.
2. Now, adjust mirror angle by depressing the appropriate perimeter switch as illustrated.

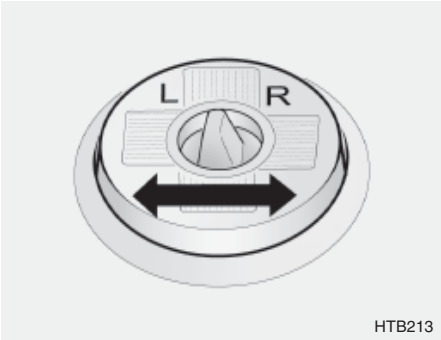

HTB213

**CAUTION:**

- **Do not operate the switch continuously for an unnecessary length of time.**
- **Scraping ice from the mirror face could cause permanent damage. To remove any ice, use a sponge, soft cloth or approved de-icer.**

**WARNING:**

**Be careful when judging the size or distance of any object seen in the passenger side rear view mirror. It is a convex mirror with a curved surface. Any objects seen in this mirror are closer than they appear.**

B510D01HP-AAT

## OUTSIDE REARVIEW MIRROR HEATER (If Installed)

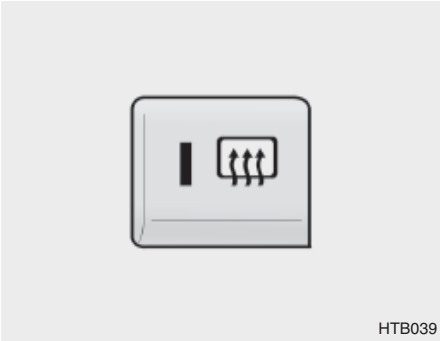


The outside rearview mirror heater is actuated in connection with the rear window defroster. To heat the outside rearview mirror glass, push in the switch for the rear window defroster. The rearview mirror glass will be heated for defrosting or defogging and will give you improved rear vision in inclement weather conditions. Push the switch again to turn the heater off. The outside rearview mirror heater automatically turns itself off after 20 minutes.

B510C01A-AAT

## FOLDING THE OUTSIDE REARVIEW MIRRORS

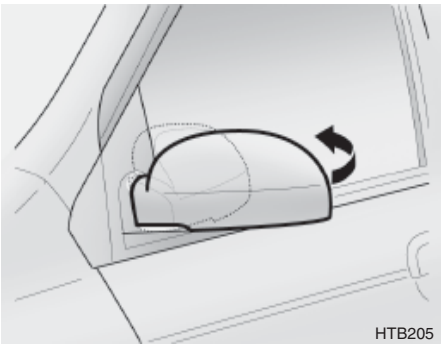


To fold the outside rearview mirrors, push them towards the rear.
The outside rearview mirrors can be folded rearward for parking in narrow areas.

**WARNING:**
**Do not adjust or fold the outside rearview mirrors while the vehicle is moving. This could result in loss of control, and an accident which could cause death, serious injury or property damage.**

B520A01A-AAT

## DAY/NIGHT INSIDE REARVIEW MIRROR

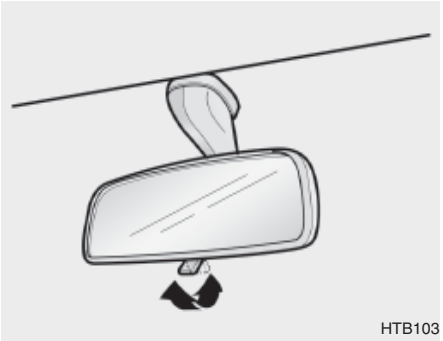


Your Hyundai is equipped with a day/night inside rearview mirror. The "night" position is selected by flipping the tab at the bottom of the mirror toward you. In the "night" position, the glare of headlights of cars behind you is reduced.

B530A01A-AAT

## PARKING BRAKE

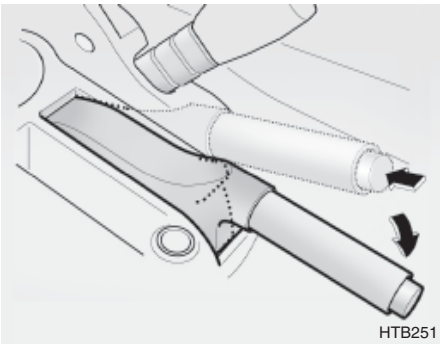


Always engage the parking brake before leaving the car. This also turns on the parking brake indicator light when the key is in the "ON" or "START" position. Before driving away, be sure that the parking brake is fully released and the indicator light is off.

- o To engage the parking brake, pull the lever up as far as possible.
- o To release the parking brake, pull up the lever and press the thumb button. Then, while holding the button in, lower the brake lever.

B550A01S-GAT

## HIGH-MOUNTED REAR STOP LIGHT (If Installed)

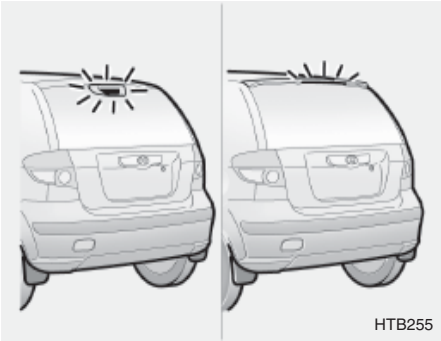


In addition to the lower-mounted rear stop lights on either side of the car, the high mounted rear stop light in the center of the rear window or inserted in the rear spoiler also lights when the brakes are applied.

B570A01TB-GAT

## HOOD RELEASE

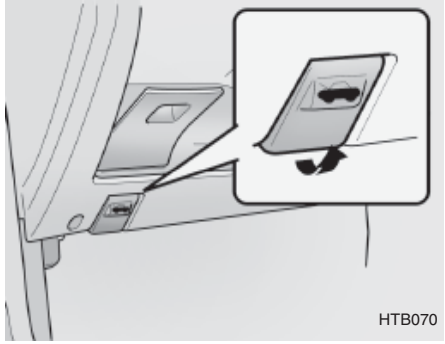


1. Pull the release knob to unlatch the hood.

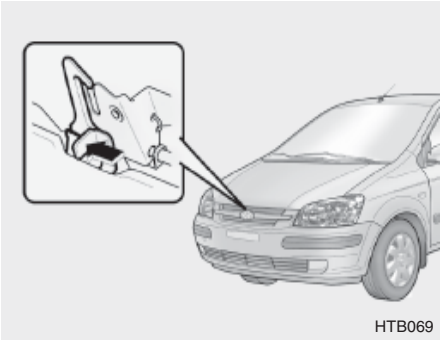


2. Push the safety catch lever sidewards and lift the hood.

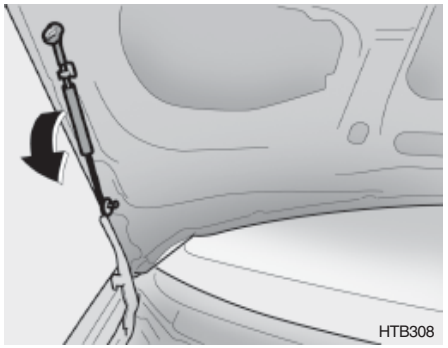


3. Pull the support rod from the hood.

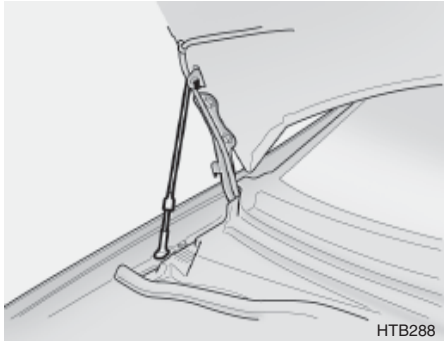


4. Hold the hood open with the support rod.

Before closing the hood, return the support rod to its clip to prevent it from rattling. Lower the hood until it is about 30 cm (1 ft.) above the closed position and let it drop. Make sure that it locks into place.

**CAUTION:**
**Make sure that the support rod has been released prior to closing the hood.**

**WARNING:**
- **Always double check to be sure that the hood is firmly latched before driving away. If it is not latched, the hood could fly open while the vehicle is being driven, causing a total loss of visibility, which might result in an accident.**
- **The support rod must be inserted completely into the hole provided in the hood whenever you inspect the engine compartment. This will prevent the hood from falling and possibly injuring you.**
- **Do not move the vehicle with the hood in the raised position, as vision is obstructed and the hood could fall or be damaged.**

B560A01HP-AAT

## REMOTE FUEL-FILLER LID RELEASE

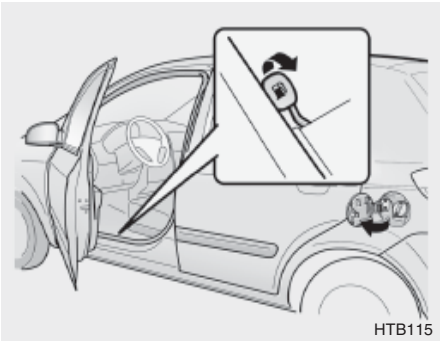


The fuel-filler lid may be opened from inside the vehicle by pulling up on the fuel-filler lid opener located on the front floor area on the left side of the car.

**NOTE:**
**If the fuel-filler lid will not open because ice has formed around it, tap lightly or push on the lid to**

**break the ice and release the lid. Do not pry on the lid. If necessary, spray around the lid with an approved de-icer fluid (do not use radiator anti-freeze) or move the vehicle to a warm place and allow the ice to melt.**

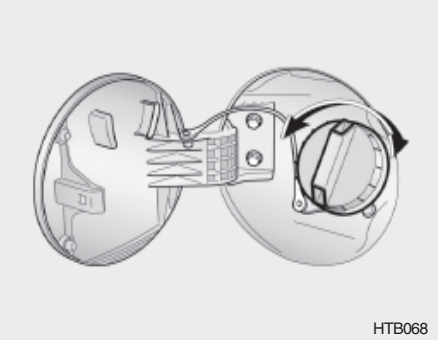
HTB068

**WARNING:**
**Fuel vapors are dangerous. Before refueling, always stop the engine and never allow sparks or open flames near the filler area. If you need to replace the filler cap, use a genuine Hyundai replacement part. If you open the fuel filler cap during high ambient temperatures, a slight "pressure sound" may be heard. This is normal and not a cause for concern. Whenever you open the fuel filler cap, turn it slowly.**

B540A01FC-GAT

## TAIL GATE

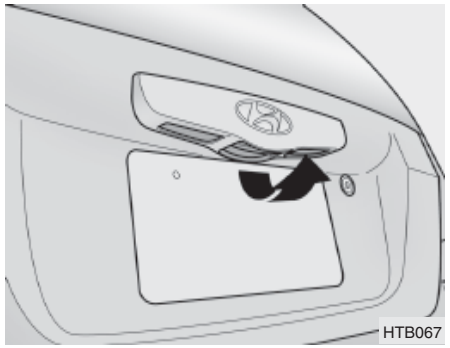
HTB067

**WARNING:**
**The tail gate should always be kept completely closed while the vehicle is in motion. If it is left open or ajar, poisonous exhaust gases may enter the car resulting in serious illness or death to the occupants. See additional warnings concerning exhaust gases on page 2-2.**

- The tail gate can be locked or unlocked with a key.
- The tail gate is opened by pulling the outside handle up, raising the tail gate manually.
- To close, lower the tail gate, then press down on it until it is closed. To be sure the tail gate is fully closed, always try to pull it up again without using the outside handle.

B540A01TB-GAT

## SEATBACK HOLDER

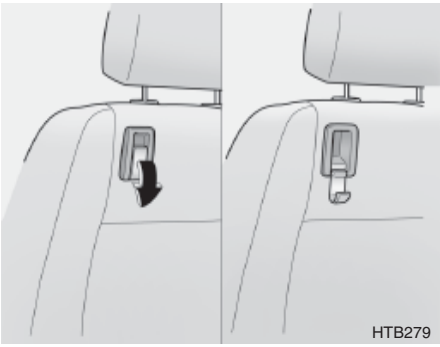


There is a front passenger seatback holder to hang a shopping bag and so on.

**CAUTION**

**Do not hang a bag beyond 30 kg. It may cause damage to the seatback holder.**

B540B01TB-GAT

## SEAT POCKET (If installed)

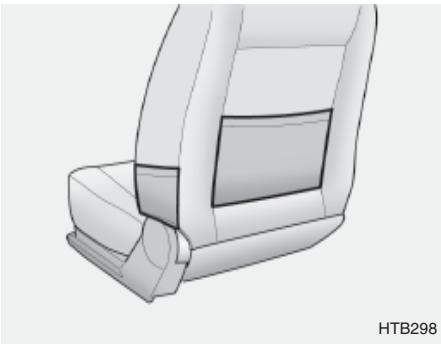


Seat side pocket is located on the front passenger seat to accept scratch paper and so on.
There are seatback pockets on the backside of the front seats (If installed)

B545A01TB-GAT

## HOW TO USE LUGGAGE ROOM

B650A01FC-GAT

### Cargo Area Cover (If installed)

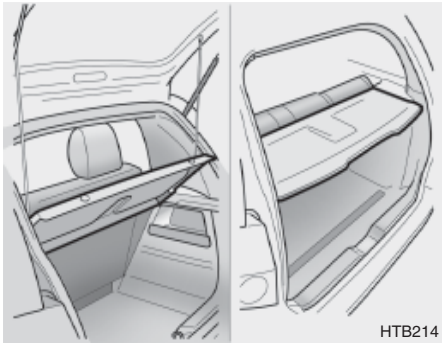


Nothing should be carried on top of the luggage cover. Loose materials could result in injury to vehicle occupants during sudden braking.

## Luggage Side Trim

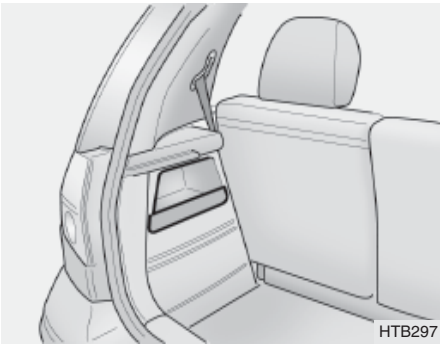


There are multipurpose receipts to accept small commodities in the luggage side trim.

B545B01TB-GAT

## Luggage Under Tray (If installed)

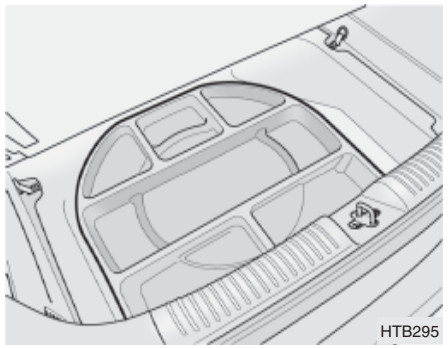


There is a multipurpose receipt space under the luggage room mat.

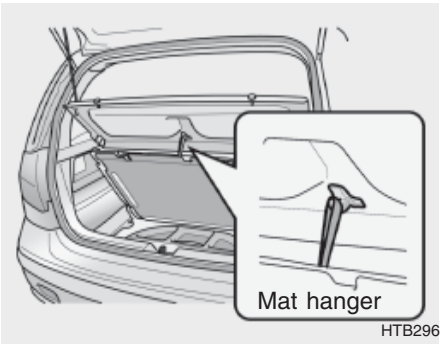


Before use the luggage under tray, hang the luggage room mat to the mat hanger. Mat hanger is located beneath the center of the cargo area cover.

**CAUTION:**
**Should install the luggage under tray on the spare tire. Unless, it may cause transformation of the luggage room mat.**

B540D02FC-GAT

## Luggage Net (If Installed)

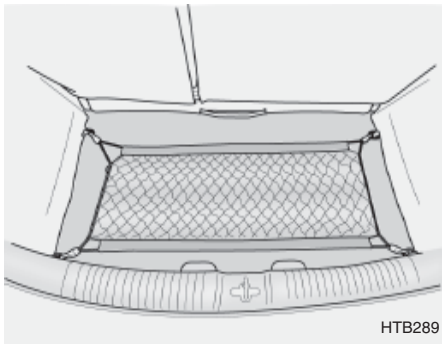


Some objects can be kept in the net in the luggage compartment.
Use the luggage net on the floor or at the back of the luggage compartment to prevent objects from sliding.

**WARNING:**
**Avoid eye injury. DO NOT over-stretch. ALWAYS keep face and body out of recoil path. DO NOT use when strap has visible signs of wear or damage.**

B545C01TB-GAT

## Luggage Board (If installed)

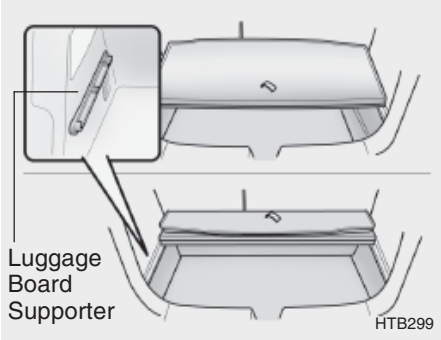


For greater convenience, your Hyundai can devide the cargo space with the luggage board. Fix the luggage board to the luggage board supporter. Fold the board to pull the grip upward and push forward.

**CAUTION:**

- **When you want to enlarge the cargo space, remove the luggage board from the luggage board supporter after folding the rear seat.**
- **Do not load cargo beyond 30kg. It may cause damage to the luggage board.**

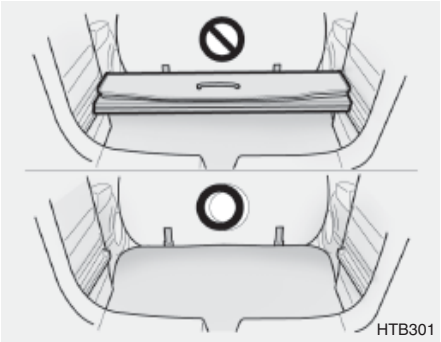

- **To use the luggage board with unfolding, fix it in the luggage board supporter. There will be an audible "Click" when the luggage board fixes in the supporter.**
- **The luggage board can be thrown out in the event of a sudden stop or an accident. Unfold the luggage board stablely to prevent cargo damage.**

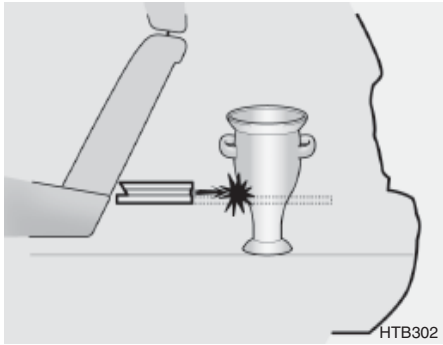


B560B01O-GAT

## AUTO FUEL CUT SWITCH (Gasoline Engine) (If installed)

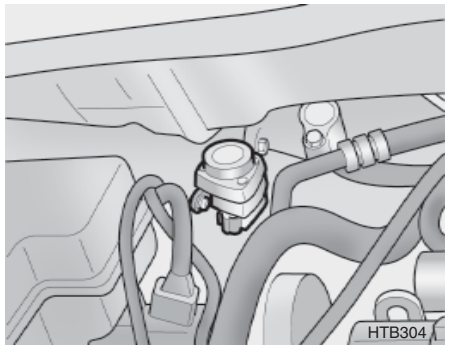


The auto fuel cut switch is located on the driver's side of the engine compartment.
In the event of a collision or sudden impact, the auto fuel cut device cuts off the fuel supply. If this device is activated, it must be reset by pressing in on the top of the switch before the engine can be restarted.

**WARNING:**
**Before resetting the auto fuel cut switch, the fuel line should be checked for fuel leaks.**

B580A01TB-GAT

## SUN VISOR

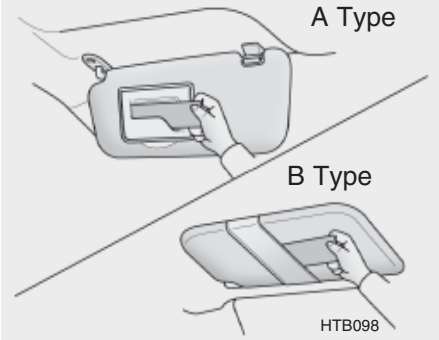


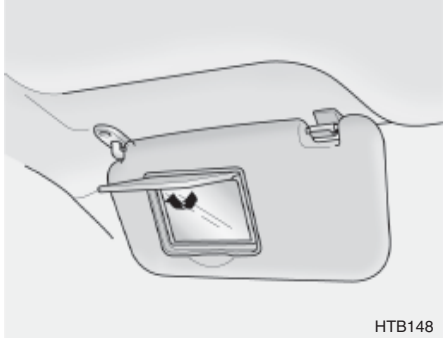

Your Hyundai is equipped with sun visors to give the driver and front passenger either frontal or side ward shade. The sun visors are fitted on both sides on all models. To reduce glare or to shut out direct rays of the sun, turn the sun visor down to block the annoyance. A ticket holder is provided on the back of the sun visor for the driver. Vanity mirrors are provided on the back of the sunvisor for the driver and the front passenger (If installed).

## NOTE:

**The Supplemental Restraint System (SRS) label containing useful information can be found on the front of each sun visor.**

**WARNING:**

**Do not place the sun visor in such a manner that it obscures visibility of the roadway, traffic or other objects.**

B600A01A-AAT

## STEERING WHEEL TILT LEVER (If Installed)

## To Adjust the Steering Wheel:

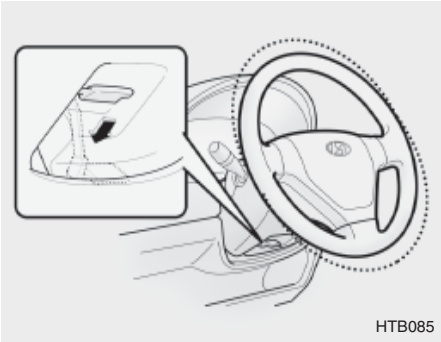


1. Push the lever downward to unlock.
2. Raise or lower the steering wheel to the desired position.
3. After adjustment, securely tighten the lever by pulling it upward.

**WARNING:**

**Do not attempt to adjust the steering wheel while driving as this may result in loss of control of the vehicle which may cause serious injury or death.**

B610B01A-GAT

## HORN

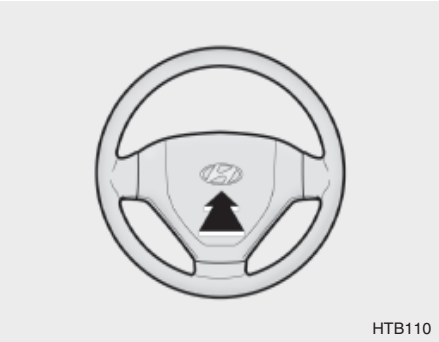


Press the center hub of the steering wheel to sound the horn.

B710A01TB-GAT

## HEATING AND COOLING CONTROL (If Installed)

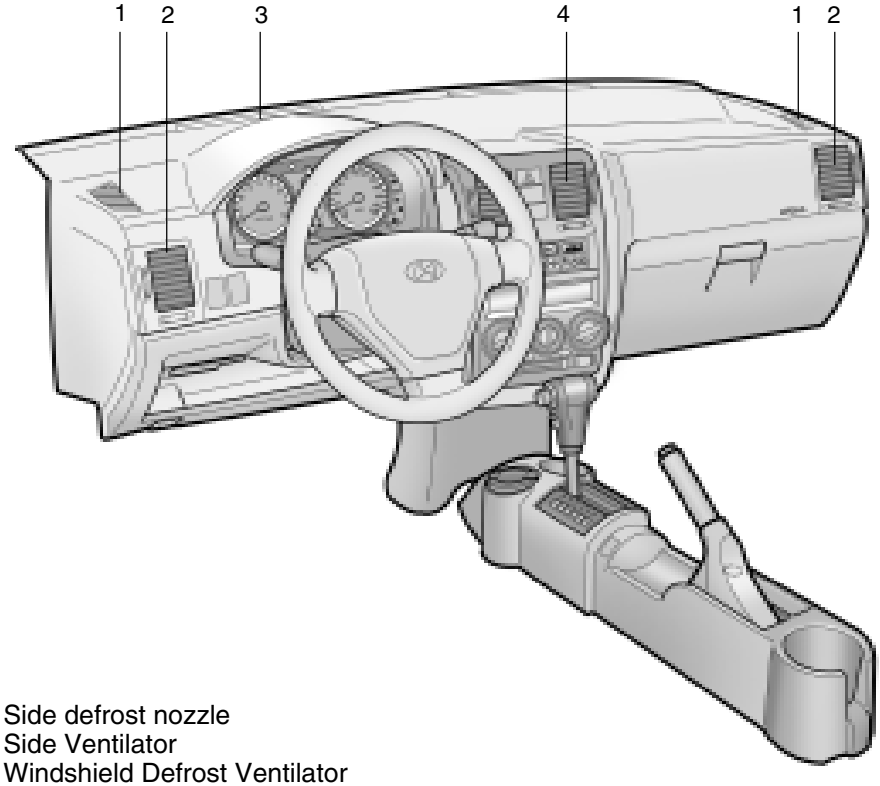


1. Side defrost nozzle
2. Side Ventilator
3. Windshield Defrost Ventilator
4. Center Ventilator

HTB032A

B710A01S-AAT

## VENTILATION

To operate the ventilation system:

- o Set the air intake control to "Fresh" mode ( ).
- o To direct all intake air to the dashboard vents, set the air flow control to "Face".
- o Adjust the fan speed control to the desired speed.
- o Set the temperature control between "Cool" and "Warm".

B710B01A-AAT

### Center Ventilator

The center ventilators are located in the middle of the dashboard.
To change the direction of the air flow, turn the control knob on the middle of the ventilator as desired.

B710C01Y-AAT

## Side Ventilator

The side vent knobs control the amount of outside air entering the vehicle through the side vents. These vents can also be closed, so no air enters through the side vents. To change the direction of the air flow, turn the control knobs as desired.

B670A01TB-GAT

## HEATING AND VENTILATION (If Installed)

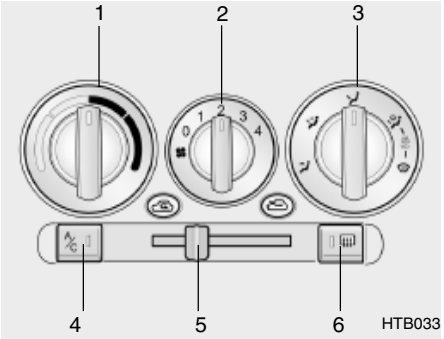


1. Temperature control switch
2. Fan speed control switch
3. Air flow control switch
4. Air conditioning switch
5. Air intake control switch
6. Rear window defroster switch

B670B01A-AAT

## Fan Speed Control (Blower Control)

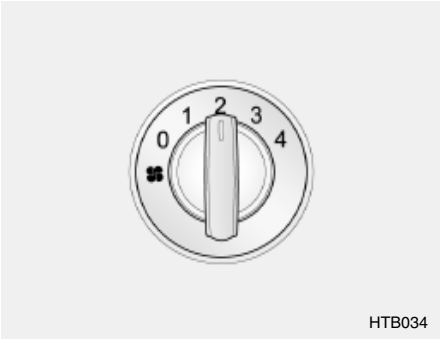


This is used to turn the blower fan on or off and to select the fan speed.
This blower fan speed, and therefore the volume of air delivered from the system, may be controlled manually by setting the blower control between the "1" and "4" positions.

B670C02A-AAT

## Air Intake Control

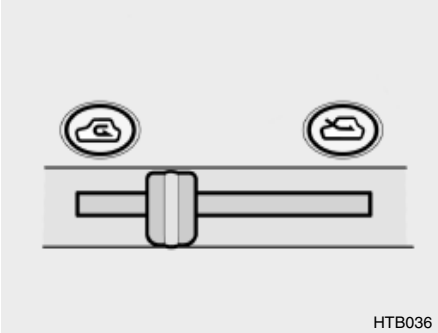


This is used to select fresh outside air or recirculation inside air.

Fresh
Recirculation

With the " " mode selected, air enters the vehicle from outside and is heated or cooled according to the other functions selected.
With the " " mode selected, air from within the passenger compartment is drawn through the heating system and heated or cooled according to the other functions selected.

**NOTE:**
**It should be noted that prolonged operation of the heating system in " " mode will give rise to misting of the windshield and side windows and the air within the passenger compartment will become stale. In addition prolonged use of the air conditioning with the " " mode selected may result in the air within the passenger compartment becoming excessively dry.**

B670D01TB-AAT

## Air Flow Control

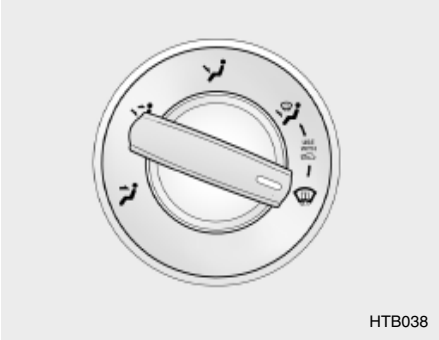


This is used to direct the flow of air. Air can be directed to the floor, dashboard outlets, or windshield. Five symbols are used to represent Face, Bi-Level, Floor, Floor-Defrost and Defrost air position.

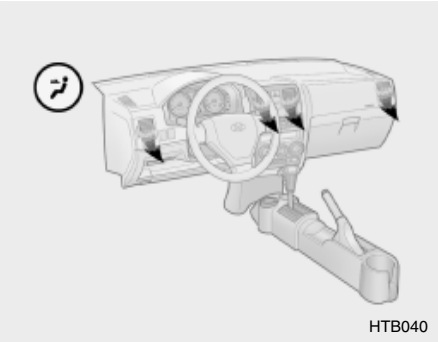


### Face-Level

Selecting the "Face" mode will cause air to be discharged through the face level vents.

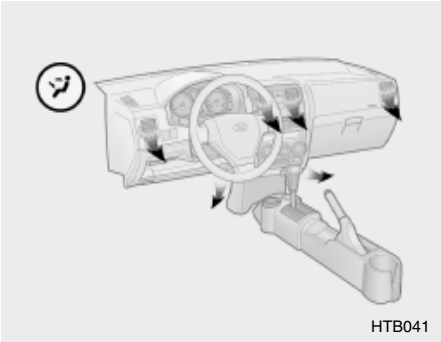


### Bi-Level

Air is discharged through the face vents and the floor vents. This makes it possible to have cooler air from the dashboard vents and warmer air from the floor outlets at the same time.

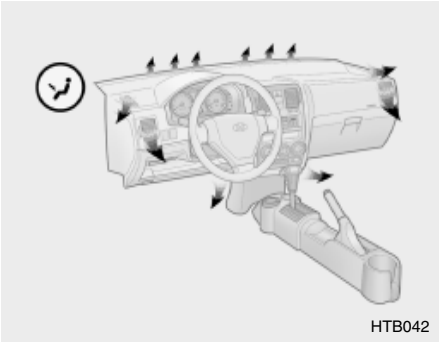


### Floor-Level

Air is discharged through the floor vents, windshield defroster nozzle, side defroster nozzle, side ventilator.

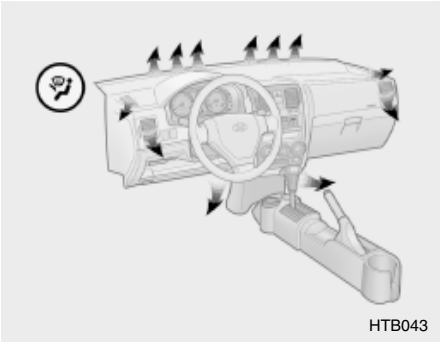


### Floor-Defrost Level

Air is discharged through the windshield defrost nozzle, the floor vents, side defroster nozzle, side ventilator.

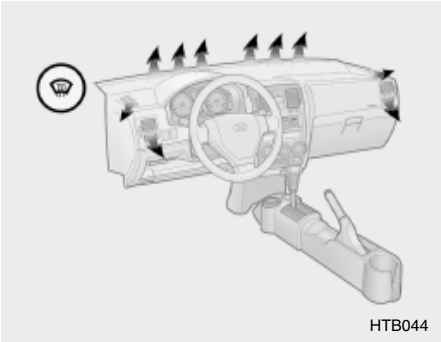


### Defrost-Level

Air is discharged through the windshield defrost nozzle, side defroster nozzle, side ventilator.

B670E01A-AAT

## Temperature Control

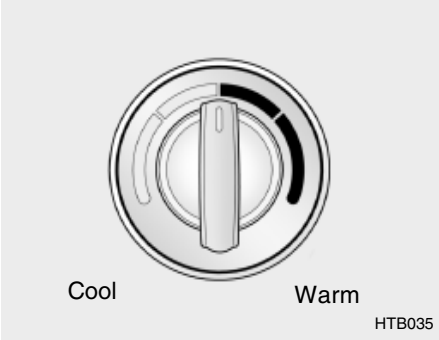


This is used to turn the heating system on and off and to select the degree of heating desired.

B690A01A-AAT

## HEATING CONTROLS

For normal heating operation, set the air intake control to the fresh air ( ) position and the air flow control to the floor ( ) position.
For faster heating, the air intake control should be set in the recirculate ( ) position.
If the windows fog up, set the air flow control to the defrost ( ) position and the air intake control to the fresh air ( ) position.
For maximum heat, move the temperature control to "Warm".

B670B01A-AAT

## BI-LEVEL HEATING

Your Hyundai is equipped with bi-level heating controls. This makes it possible to have cooler air from the dashboard vents and warmer air from the floor outlets at the same time. To use this feature:

- o Set the air intake control to the fresh air ( ) position.
- o Set the air flow control at the bi-level ( ) position.
- o Set the temperature control between "Cool" and "Warm".

B720A01TB-GAT

## DEFROSTING/DEFOGGING

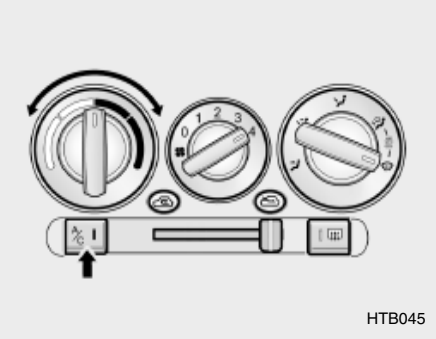


Use the heating/ventilation system to defrost or defog the windshield:

### To remove interior fog on the windshield:

- o Set the air intake control to the fresh air ( ) position.
- o Set the air flow control to the defrost ( ) position.
- o For more rapid action, turn on the air conditioning.
- o Set the temperature control to the desired position.
- o Set the fan speed control between "1" and "4" position.

### To remove the frost or exterior fog on the windshield:

- o Set the air intake control to the fresh ( ) position.
- o Set the air flow control to the defrost ( ) position
- o Set the temperature control to warm.
- o Set the fan speed control to position "3" or "4".

### NOTE:

**When the A/C is operated continuously on the floor-defrost level ( ) or defrost level ( ), it may cause fog to form on the exterior windshield. If this occurs, set the air flow control to the face level position ( ) and fan speed control to the low position.**

B730A01FC-GAT

## Operation Tips

- o To keep dust or unpleasant fumes from entering the car through the ventilation system, temporarily set the air intake control at "Recirculation". Be sure to return the control to "Fresh" when the irritation has passed to keep fresh air in the vehicle. This will help keep the driver alert and comfortable.
- o Air for the heating/cooling system is drawn in through the grilles just ahead of the windshield. Care should be taken that these are not blocked by leaves, snow, ice or other obstructions.
- o To prevent interior fog on the windshield, set the air intake control to the fresh air ( ) position and fan speed to the desired position.

B740A01A-AAT

## AIR CONDITIONING SWITCH (If Installed)

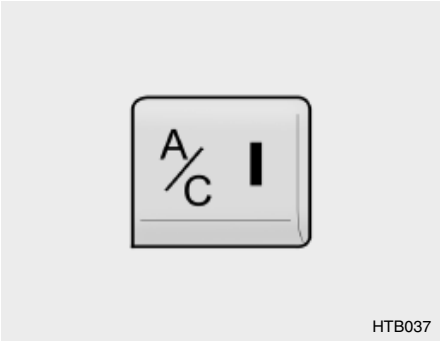


The air conditioning is turned on by pushing the A/C button on the heating/air conditioning control panel.

B740B02A-AAT

## AIR CONDITIONING OPERATION (Cooling)

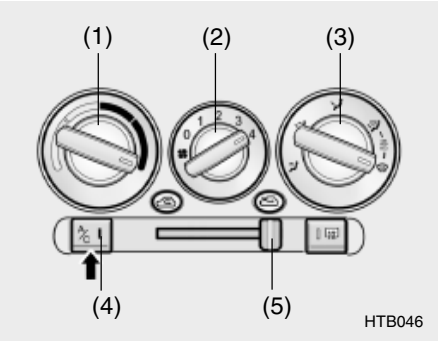


To use the air conditioning to cool the interior:

- o Turn on the fan control switch (2).
- o Turn on the air conditioning switch (4) by pushing in on the switch. The air conditioning indicator light should come on at the same time.
- o Set the air intake control to the position (5).
- o Set the temperature control (1) to "Cool". ("Cool" provides maximum cooling. The temperature may be moderated by moving the control toward "Warm".)
- o Adjust the fan control (2) to the desired speed. For greater cooling, turn the fan control to one of the higher speeds or temporarily select the position on the air intake control.

B740C01A-AAT

## De-Humidified Heating

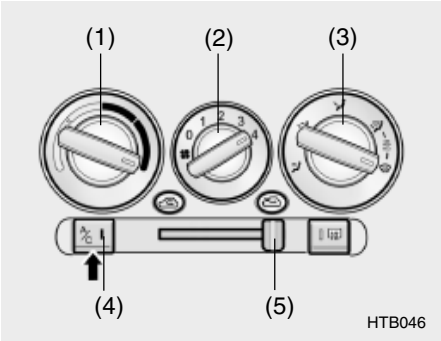


For dehumidified heating:

- o Turn on the fan control switch (2).
- o Turn on the air conditioning switch (4). The air conditioning indicator light should come on at the same time.
- o Set the air intake control (5) to the fresh air ( ) position.
- o Set the air flow control (3) to the face ( ) position.
- o Adjust the fan control (2) to the desired speed.
- o For more rapid action, set the fan at one of the higher speeds.
- o Adjust the temperature control (1) to provide the desired amount of warmth.

B740D01A-AAT

## Operation Tips

- o If the interior of the car is hot when you first get in, open the windows for a few minutes to expel the hot air.
- o When you are using the air conditioning system, keep all windows closed to keep hot air out.
- o When moving slowly, as in heavy traffic, shift to a lower gear. This increases engine speed, which in turn increases the speed of the air conditioning compressor.
- o On steep grades, turn the air conditioning off to avoid the possibility of the engine over-heating.
- o During winter months or in periods when the air conditioning is not used regularly, run the air conditioning once every month for a few minutes. This will help circulate the lubricants and keep your system in peak operating condition.

B760A01TB-GAT

## AIR FILTER (In Front of evaporator unit) (If Installed)

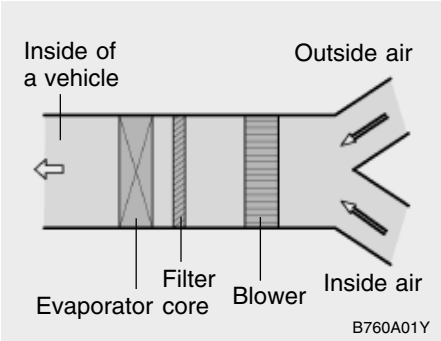


The air filter is located in front of the evaporator unit behind the glove box. It operates to decrease pollutants from entering the car and to filter the air.
To replace the air filter, refer to the page 6-23

**CAUTION:**

- **o Replace the filter every 20,000 km (12,000 miles) or once a year. If the car is being driven in severe conditions such as dusty, rough roads, more frequent air filter inspections and changes are required.**
- **o When the air flow rate is suddenly decreased, it must be checked at an authorized dealer.**

B750A02A-AAT

## STEREO SOUND SYSTEM
### How Car Audio Works

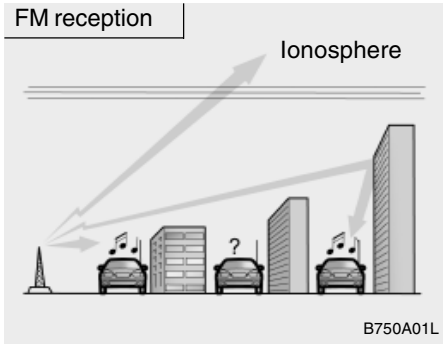


AM and FM radio signals are broadcast from transmitter towers located around your city. They are intercepted by the radio antenna on your car. This signal is then received by the radio and sent to your car speakers.

When a strong radio signal has reached your vehicle, the precise engineering of your audio system ensures high quality reproduction. However, in some cases the signal coming to your vehicle is not strong and clear. This can be due to factors such as the distance from the radio station, closeness of other strong radio stations or the presence of buildings, bridges or other large obstructions in the area.

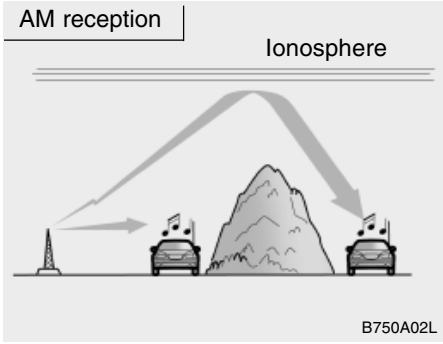


AM broadcasts can be received at greater distances than FM broadcasts. This is because AM radio waves are transmitted at low frequency. These long, low frequency radio waves can follow the curvature of the earth rather than travelling straight out into the atmosphere. In addition, they curve around obstructions so that they can provide better signal coverage.

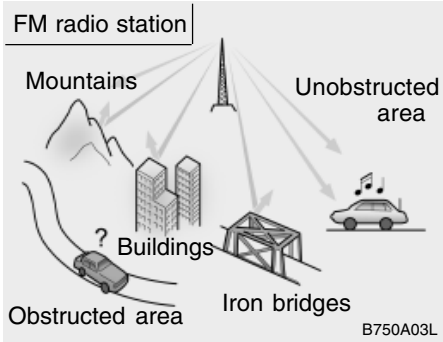


FM broadcasts are transmitted at high frequency and do not bend to follow the earth's surface. Because of this, FM broadcasts generally begin to fade at short distances from the station. Also, FM signals are easily affected by buildings, mountains, or other obstructions. These can result in certain listening conditions which might lead you to believe a problem exists with your radio. The following conditions are normal and do not indicate radio trouble:

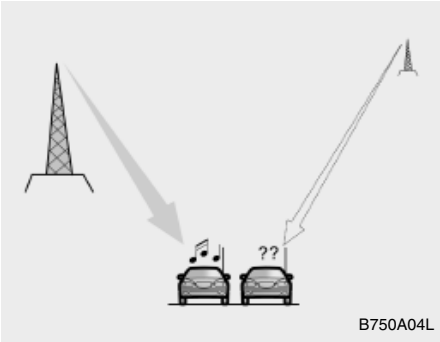


- Fading - As your car moves away from the radio station, the signal will weaken and sound will begin to fade. When this occurs, we suggest that you select another stronger station.
- Flutter/Static - Weak FM signals or large obstructions between the transmitter and your radio can disturb the signal causing static or fluttering noises to occur. Reducing the treble level may lessen this effect until the disturbance clears.

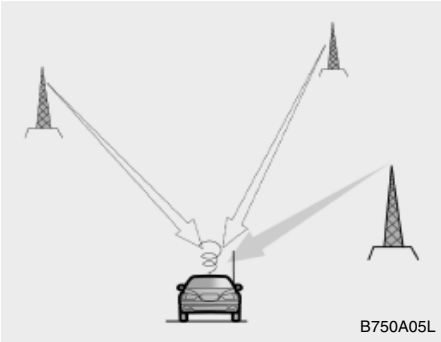


- Station Swapping - As a FM signal weakens, another more powerful signal near the same frequency may begin to play. This is because your radio is designed to lock onto the clearest signal. If this occurs, select another station with a stronger signal.
- Multi-Path Cancellation - Radio signals being received from several directions can cause distortion or fluttering. This can be caused by a direct and reflected signal from the same station, or by signals from two stations with close frequencies. If this occurs, select another station until the condition has passed.

B750B02Y-AAT

## Using a cellular phone or a two-way radio

When a cellular phone is used inside the vehicle, noise may be produced from the audio equipment. This does not mean that something is wrong with the audio equipment. In such a case, use the cellular phone at a place as far as possible from the audio equipment.

**CAUTION:**

**When using a communication system such a cellular phone or a radio set inside the vehicle, a separate external antenna must be fitted. When a cellular phone or a radio set is used with an internal antenna alone, it may interfere with the vehicle's electrical system and adversely affect safe operation of the vehicle.**

**WARNING:**

**Don't use a cellular phone when you are driving, you must stop at a safe place to use a cellular phone.**

K210A01TB-GAT

# STEREO RADIO OPERATION (K210, K220) (If installed)

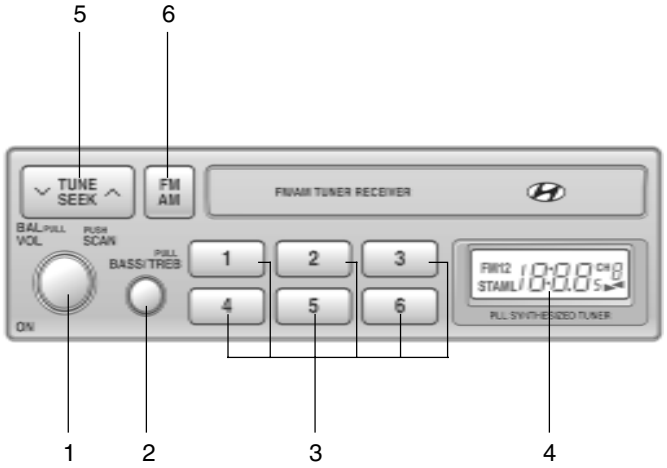


K210A01TB

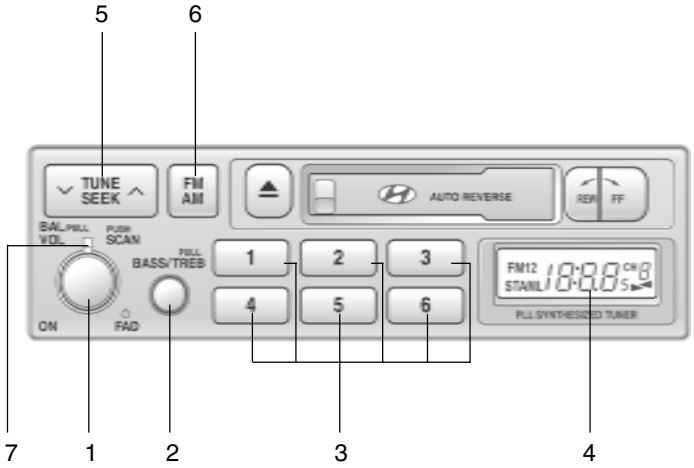


K220A01TB

1. Power ON/OFF, VOLUME, BALANCE, SCAN Button
2. BASS/TREBLE-pull Button
3. Preset Buttons
4. LCD
5. TUNE/SEEK Button
6. FM/AM Button
7. FADER Button

K210B01TB-GAT

## 1. POWER ON/OFF, VOLUME

Rotate the Power switch clockwise to turn on the audio when the ignition switch is at ACC or ON position. Once the system is on, you can increase or decrease the volume by rotating the knob clockwise or counter-clockwise.

### o BALANCE

Further pull the volume button and rotate clockwise to emphasize right sound speaker.
Or rotate counter-clockwise to emphasize left sound speaker.

### o SCAN Button

When this button is pressed, the frequency will be increased to be tuned to the next receivable station one after another, receiving each station for 5 seconds. if the desirable station is tuned, press this button (scan) again to cancel scan function.

## 2. BASS/TREBLE-pull

Press this button to pop up. Rotate the knob clockwise to increase the Bass and rotate to counter-clockwise to decrease the Bass.
Further pull the button and rotate clockwise to increase the Treble.
Or rotate counter-clockwise to decrease the Treble. After adjustment press the button.

## 3. PRESET ( 1 ~ 6 )

Press any of these buttons not more than 2 seconds to listen to the station in memory. Press the preset button for 2 seconds or more, then the current station will be stored into the memory of the preset button.

## 4. LCD

LCD shows the following information; band of FM1/FM2/AM/(L)/(M) frequency, preset channel number, ST in case of FM Stereo.

## 5. TUNE

Press the ∧ button not more than 1 second then frequency is increased. Likewise press the ∨ button not more than 1 second to decrease the frequency.

### o SEEK

Press the ∧ button for over 1 second, then it will tune to the next receivable higher frequency station. Likewise, press the ∨ button for over 1 second then it will tune to the next receivable lower frequency station.If the selected station is in the preset memory, memorized channel will be on the display too.

## 6. FM/AM Button

FM/AM band button, which is used to change the band repeatedly in following manner.

FM1→ FM2 → AM → FM1
(FM1→ FM2 → M → L → FM1 : Europe)

## 7. Fader (If installed)

This button is located top side of the volume switch. Rotate clockwise to attenuate front speaker sound. Rotate counter-clockwise to attenuate rear speaker sound.

K220A01TB-GAT

## CASSETTE TAPE PLAYER OPERATION (K220) (If installed)

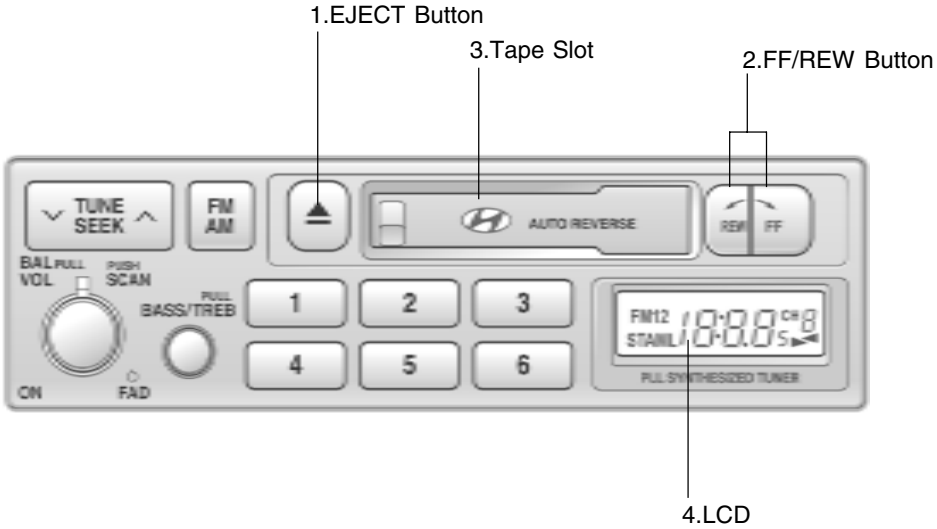


K220A01TB-1

K220B01TB-GAT

## 1. Tape Eject Button ( ▲ )

Press this button to eject the cassette tape.

## 2. Cassette tape loading slot

Insert the tape into the loading slot as the open side faces the right.

## 3. FF/REW, tape side selection Button

Press "REW " button to fast backward the tape, Press "FF" button to fast forward the tape.
While the cassette is in operation, press these button altogether to play reverse side.

## 4. LCD

LCD shows the tape direction (▶or◀) of the cassette in play.

K240A01TB-GAT

## STEREO RADIO OPERATION (K240) (If installed)

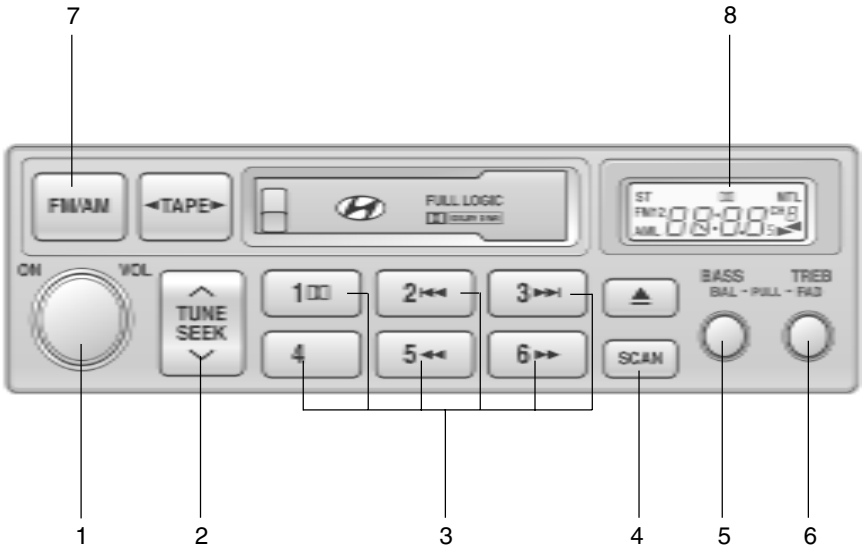


K240A01TB

1. Power ON/OFF, VOLUME
2. TUNE/SEEK Button
3. PRESET Buttons
4. SCAN Button
5. BASS/BAL pull Button
6. TREB/pull FAD Button
7. FM/AM Button
8. LCD

K240B01TB-GAT

## 1. POWER ON/OFF, VOLUME

Press this button to turn on/off the audio when the ignition switch is at ACC or ON position. Once the system is on, you can increase or decrease the volume by rotating the knob clockwise or counter-clockwise. Press this button again to
turn it off.

## 2. TUNE

Press the ∧ button not more than 0.5 second then frequency is increased.
Likewise press the ∨ button not more than 0.5 second to decrease the frequency.
With the button held down for 0.5 sec or more, the beep sound will be heard and frequency will increase or decrease rapidly. if you release the button after the beep sound, seek function is in operation.

## o SEEK

Press the ∧ button for over 0.5 second and release the button after beep sound, then it will tune to the next receivable higher frequency station. Likewise, press the ∨ button for over 0.5 second and release the button after the beep sound, then it will tune to the next receivable lower frequency station. if the selected station is in the preset memory, memorized channel will be on the display too.

## 3. PRESET

Press any of these buttons not more than 2 seconds to listen to the station in memory. Press the preset button for 2 seconds or more, then the current station will be stored into the memory of the preset button with the sound.

## 4. SCAN Button

When this button is pressed, the frequency will be increased to be tuned to the next receivable station one after another, receiving each station for 5 seconds. if the desirable station is tuned, press this button (scan) again to cancel scan function.

## 5. BASS/BAL- pull

Press to pop the knob out, To increase the bass, rotate the knob clockwise, while to decrease the Bass, rotate the knob counterclockwise. Further pull the popped-ed knob for the balance control. Rotate the knob clockwise to emphasize right speaker sound. (Left speaker sound will be attenuated) When the control knob is turned counter-clockwise, left speaker sound will be emphasized. (Right speaker will be attenuated)

## 6. TREB/pull-FAD

Press the pop the knob out and turn clockwise to increase the treble or counterclockwise to decrease the treble. Further pull the popped-up knob for the Fader control. Turn the control knob counter clockwise to emphasize front speaker sound.
(Rear speaker sound will be attenuated) When the control knob is turned clockwise, rear speaker sound will be emphasized. (Front speaker sound will be attenuated)

## 7. FM/AM Button

FM/AM band button, which is used to change the band repeatedly in the following manner .

FM1→FM2→AM→FM1
(FM1→ FM2 → M → L → FM1 : Europe)

## 8. LCD

LCD shows the following information; band of FM1/FM2/AM frequency, preset channel number, ST in case of FM Stereo.

K240C01TB-GAT

## CASSETTE TAPE PLAYER OPERATION (K240) (If installed)

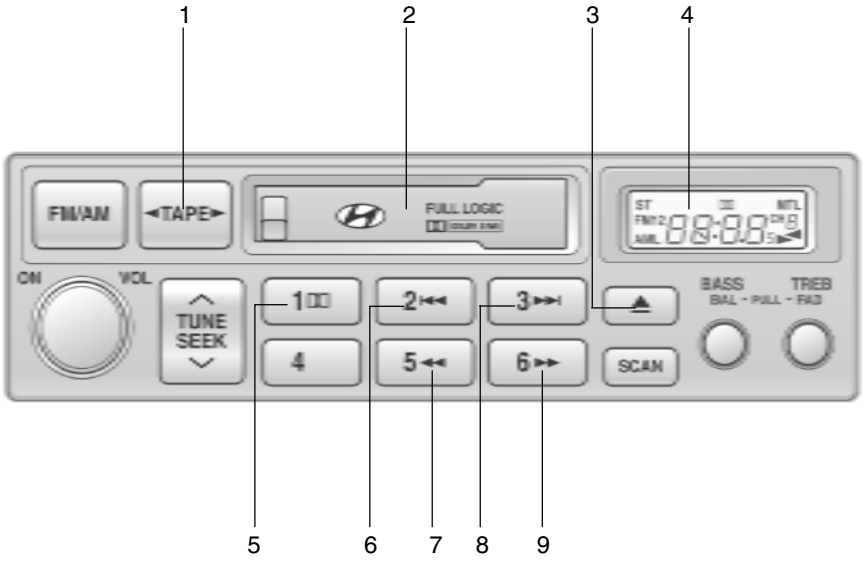


K240A01TB

1. Tape mode and side selection Button
2. Tape slot
3. Tape Eject Button
4. LCD
5. DOLBY Button
6. AMS-REW Button
7. Rewind (REW) Button
8. AMS-FF Button
9. Fast Forward (FF) Button

K240D01TB-GAT

## 1. Tape mode and side selection Button

Press this button to play the tape when it is in the cassette deck. Once the tape mode is selected, you can play the reverse side of the tape by merely depressing the button again.

## 2. Cassette tape loading slot

Insert the tape into the loading slot as the open side faces the right. The player will pull the tape in and automatically begin playback even when the audio power is off and the ignition switch is either in the position of "ACC"or "ON".

## 3. Tape Eject Button (▲)

Press this button to eject the cassette tape. Tape will be ejected even when the ignition switch is in the position of "OFF".

## 4. LCD

LCD shows the operating conditions of the cassette in play. It informs the driver of playing status, tape direction, FF or REW, MTL in metallic tape use, and Dolby etc.

## 5. Dolby Button

When you play the Dolby recorded tape, press this button to reduce the background noise. If you press this button DD is displayed. One more press will let the DD disappear from the display.

## 6. AMS-REW Button (|◀◀)

Press button to rewind the tape quickly and start replay at the beginning of the current music. During the AMS-REWINDING. "REW" sign blinks on the display.
Press the button once more to stop REWINDING and start play again.

## 7. Rewind button (◀◀)

You can rewind the tape to the beginning of the tape by pressing the " ◀◀ " button during the play ("REW" is shown on the display). Tape play starts when the "◀◀" button is pressed again during the REW mode.

## 8. AMS-FF Button (▶▶|)

Press button to fast forward the tape and start play at the beginning of next music segment. During the AMS-FF, "FF"sign blinks on the display.
Press the button again to stop FF action and start play.

## 9. Fast Forward Button (▶▶)

You can fast forward the tape to the end of the tape by pressing the "▶▶" button during the play. (Then "FF" is shown on the display). Tape play starts when the ▶▶ button is pressed again during the FF mode.

H290A01FC-GAT

## STEREO RADIO OPERATION (H280) (If installed)

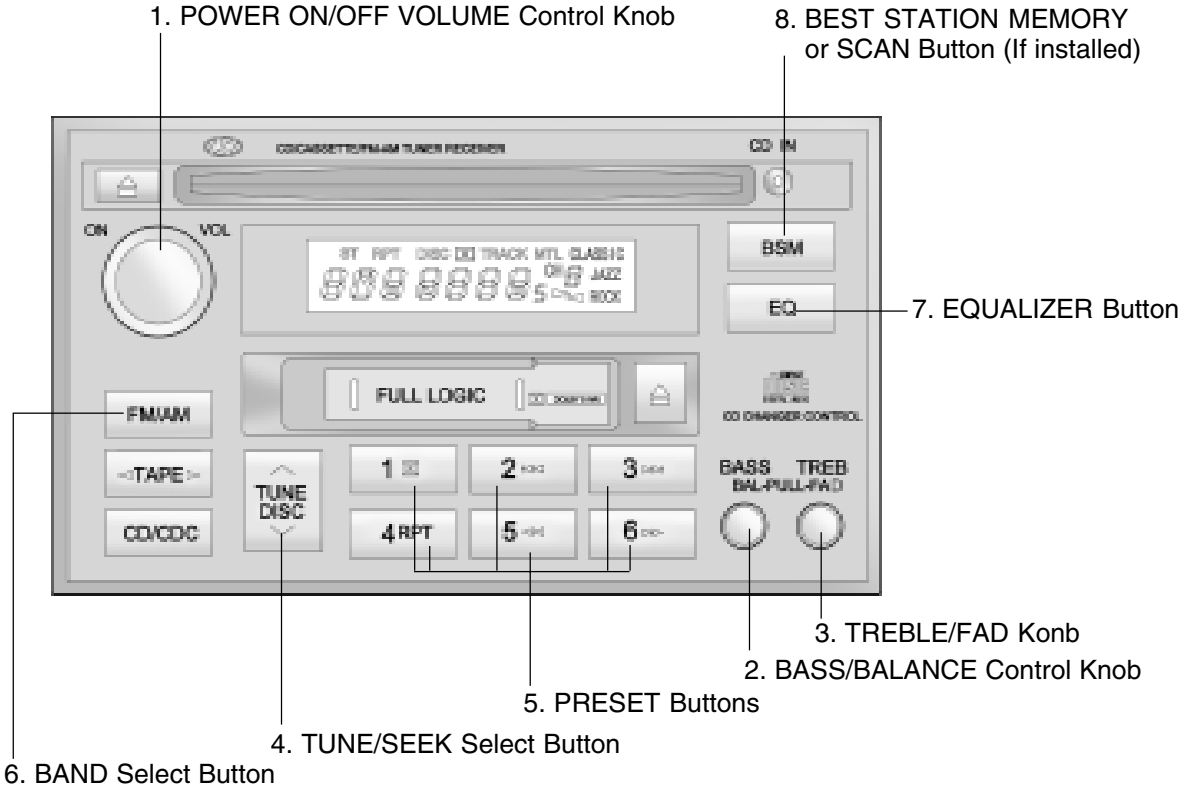


H290A01O

H290B03E-GAT

## 1. POWER ON-OFF Control Knob

The radio unit may be operated when the ignition key is in the "ACC" or "ON" position. Press the button to switch the power on. The display shows the radio frequency in the radio mode, the tape direction indicator in the tape mode or CD track in either the CD mode or CD AUTO CHANGER mode. To switch the power off, press the button again.

## VOLUME Control

Rotate the knob clockwise to increase the volume and turn the knob counterclockwise to reduce the volume.

## 2. BASS/BALANCE Control Knob BASS Control Knob

Press to pop the knob out. To increase the bass, rotate the knob clockwise, while to decrease the bass, rotate the knob counterclockwise.

## BALANCE Control knob

Pull the Bass control knob out further. Rotate the knob clockwise to emphasize right speaker sound. (Left speaker sound will be attenuated) When the control knob is turned counterclockwise, left speaker sound will be emphasized (Right speaker sound will be attenuated).

## 3. TREBLE/FAD Knob TREBLE Control Knob

Press to pop the knob out and turn to the left or right for the desired treble tone.

## FAD (Fader Control) Knob

Pull the Bass control knob out further. Turn the control knob counterclockwise to emphasize front speaker sound. (Rear speaker sound will be attenuated) When the control knob is turned clockwise, rear speaker sound will be emphasized. (Front speaker sound will be attenuated)

## 4. TUNE (Manual) Select Button

Press the ( ∧ ) side or ( ∨ ) side to increase or to decrease the frequency. Press either button and hold down to continuously scroll, Release button once the desired station is reached.

## SEEK Operation (Automatic Channel Selection)

Press the TUNE select button for 0.5 sec or more. Releasing it will automatically tune to the next available station with a beep sound.
When the (∧) side is pressed longer than 0.5 second, releasing will automatically tune to the next higher frequency and when the (∨) side is pressed longer than 0.5 second and releasing will automatically tune to the next lower frequency.

## 5. PRESET STATION Select Buttons

Six (6) stations for AM, FM and FM2 respectively can be preset in the electronic memory circuit.

## HOW TO PRESET STATIONS

Six AM and twelve FM stations may be programmed into the memory of the radio. Then, by simply pressing the band select button and/or one of the six station select buttons, you may recall any of these stations instantly. To program the stations, follow these steps:

- o Press band selector to set the band for AM, FM or FM2.
- o Select the desired station to be stored by seek or manual tuning.
- o Determine the preset station select button you wish to use to access that station.
- o Press the station select button for more than two seconds. A select button indicator will show in the display indicating which select button you have depressed. The frequency display will flash after it has been stored into the memory with beep sound. You should then release the button, and proceed to program the next desired station. A total of 18 stations can be programmed by selecting one AM and two FM station per button.
- o When completed, any preset station may be recalled by selecting AM, FM or FM2 band and the appropriate station button.

### 6. BAND Selector

Pressing the FM/AM button changes the AM, FM1 and FM2 bands. The mode selected is shown on the display.

### 7. EQUALIZER Button

Press the EQ button to select the CLASSIC, JAZZ, ROCK and DEFEAT MODE for the desired tone quality. Each press of the button changes the display as follows;

CLASSIC → JAZZ → ROCK → DEFEAT

### 8. Best Station Memory Button (BSM) (If installed)

When the BSM button is pressed for two seconds or longer, the six channels from the highest field intensity are selected next and stored in memory. The stations selected are stored in the sequence frequency from the first preset key.

### SCAN Button (If installed)

When the scan button is pressed, the frequency will increase and the receivable stations will be tuned in one after another, receiving each station for 5 seconds. To stop scanning, press the scan button again.

H290C01FC-GAT

## CASSETTE TAPE PLAYER OPERATION (H280) (If Installed)

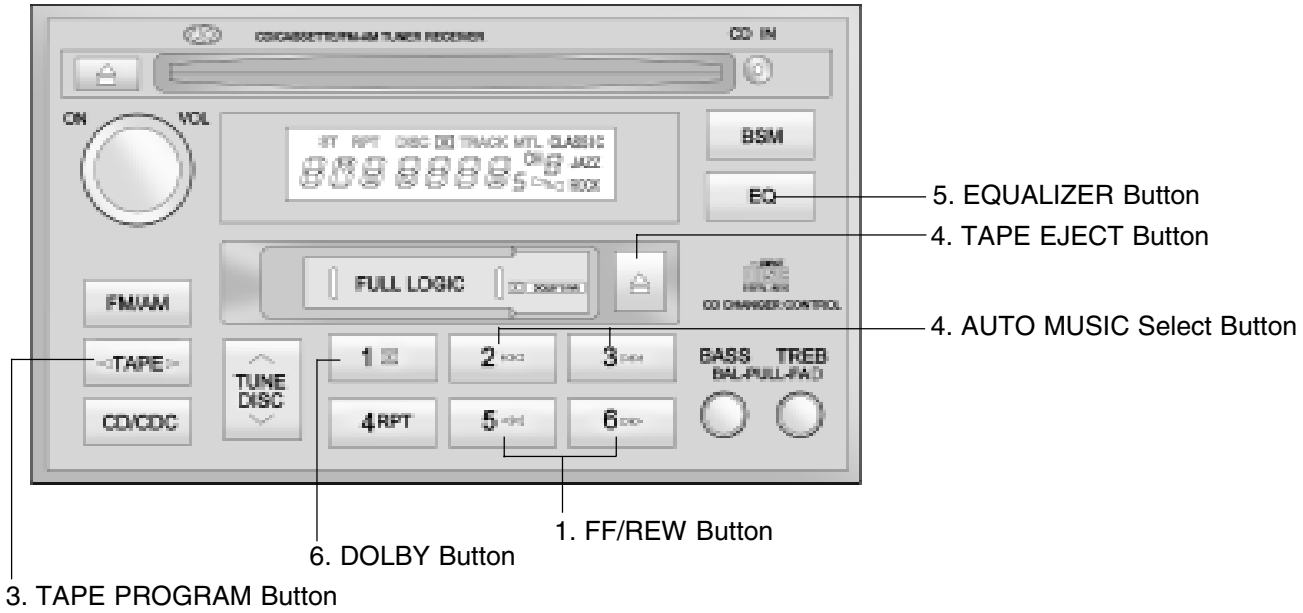


H290A01O

H290D01O-GAT

## 1. FF/REW Button

- o Fast forward tape winding starts when the FF (▶▶) button is pressed during the PLAY or REW mode.
- o Tape play starts when the FF (◀◀) button is pressed again during the FF mode.
- o Tape rewinding starts when the REW (▶▶) button is pressed during the PLAY or FF mode.
- o Tape play starts when the REW (◀◀) button pressed again during the REW mode.

## 2. AUTO MUSIC Select Button

Press the button to find the starting point of each song in a prerecorded music tape. The quiet space between songs (must have at least a 4 sec. gap) can be accepted by the AUTO MUSIC Select button.

- o Pressing the |◀◀ button will play the beginn-ing of the next music segment.
- o Pressing the |◀◀ button will start replay at the beginning of the music just listened to.

## 3. TAPE PROGRAM Button

This allows you to play the reverse side of the tape by merely depressing the program button. An arrow will appear in the display to show tape direction.

## 4. TAPE EJECT button

- o When the ⏏ button is pressed with the cassette loaded, the cassette is ejected.
- o When the ⏏ button is pressed during the FF/REW mode, the cassette is ejected.

## 5. EQ Button

Press the EQ button to select the CLASSIC, JAZZ, ROCK and DEFEAT MODE for the desired tone quality. Each press of the button changes the display as follows;

CLASSIC → JAZZ → ROCK → DEFEAT

## 6. DOLBY Button

If you get background noise during tape PLAY, you can reduce this considerably by merely pressing the DOLBY button. If you want to cancel the DOLBY feature, press the button again.

H290E01FC-GAT

## COMPACT DISC PLAYER OPERATION (H280) (If installed)

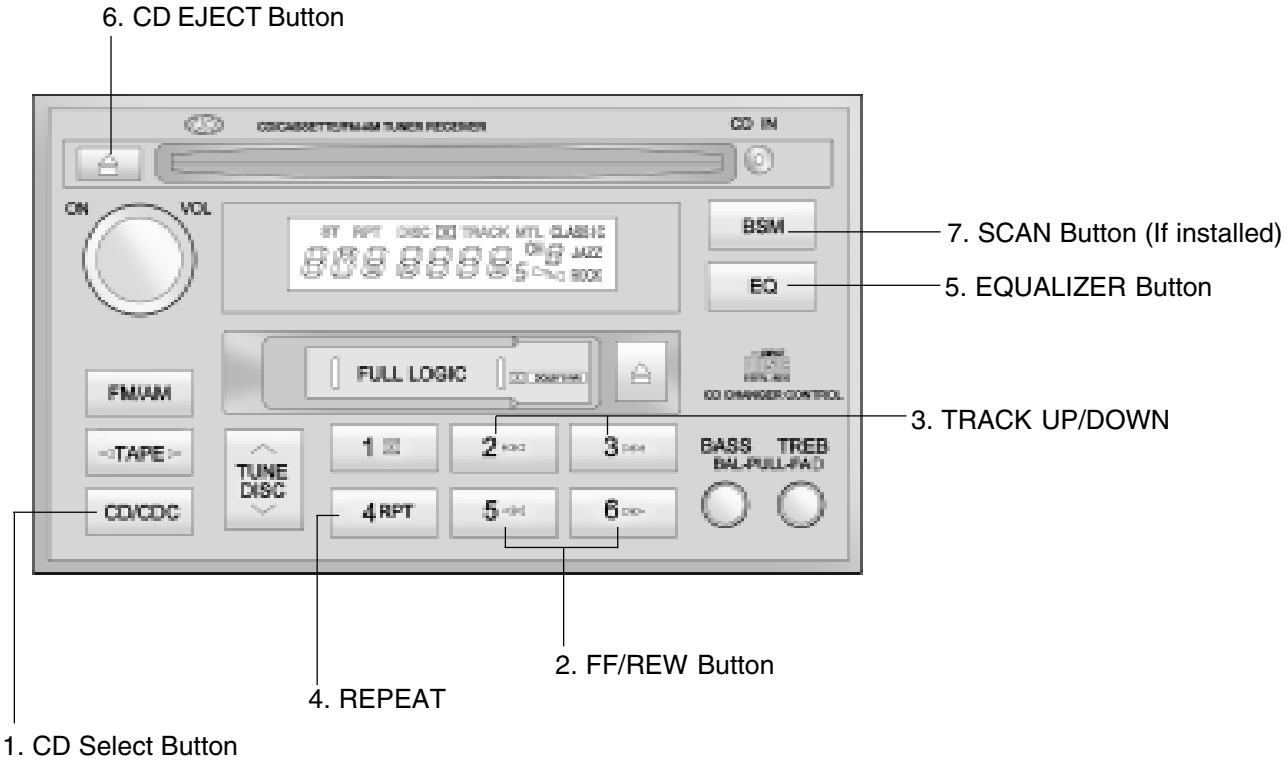


H290A01O

H290F01O-GAT

## 1. CD Select Button

- o Insert the CD with the label facing upward.
- o Insert the CD to start CD playback, during radio operation or cassette tape playing.
- o When a disc is in the CD deck, if you press the play button the CD player will begin playing even if the radio or cassette player is being used.
- o The CD player can be used when the ignition switch is in either the "ON" or "ACC" position.

## 2. FF/REW (▶▶/◀◀)

If you want to fast forward or reverse through the compact disc track, push and hold in the FF (▶▶) or REW (◀◀) button.
When you release the button, the compact disc player will resume playing.

## 3. TRACK UP/DOWN

- o The desired track on the disc currently being played can be selected using the track number.
- o Press |◀◀ button once to skip forward to the beginning of the next track. Press |◀◀ button once to skip back to the beginning of the track.

## 4. REPEAT

- o To repeat the music you are listening to, press the RPT button. To cancel, press again.
- o If you do not release RPT operation when the track ends, it will automatically be replayed.
  This process will be continued until you push the button again.

## 5. EQUALIZER Button

Press the EQ button to select the CLASSIC, JAZZ, ROCK and DEFEAT MODE for the desired tone quality. Each press of the button changes the display as follows;

CLASSIC → JAZZ → ROCK → DEFEAT

## 6. CD EJECT Button

When the ⏏ button is pressed with the CD loaded, the CD is ejected.

## 7. SCAN Button (If installed)

- o Press the SCAN button to playback the first 10 seconds of each track.
- o Press the SCAN button again within 10 sec. for the desired track.

## NOTE:

- **o To assure proper operation of the unit, keep the vehicle interior temperature within a normal range by using the vehicle's air conditioning or heating system.**
- **o When replacing the fuse, replace it with a fuse having the correct capacity.**
- **o The preset station frequencies are all erased when the car battery is disconnected. Therefore, all data will have to be set again if this should occur.**
- **o Do not add any oil to the rotating parts. Keep magnets, screwdrivers and other metallic objects away from the tape mechanism and head.**

- **This equipment is designed to be used only in a 12 volt DC battery system with negative ground.**
- **This unit is made of precision parts. Do not attempt to disassemble or adjust any parts.**
- **When driving your vehicle, be sure to keep the volume of the unit set low enough to allow you to hear sounds coming from the outside.**
- **Do not expose this equipment (including the speakers and tape) to water or excessive moisture.**

B890A01Y-AAT

## AUDIO FAULT CODE (H280 only)

If you see any error indication in the display while using the CD or Tape mode, find the cause in the chart below. If you cannot clear the error indication, take the car to your Hyundai dealer.

| INDICATION | CAUSE | SOLUTION |
|---|---|---|
| Er2 | CDP DECK MECHANICAL ERROR<br>(EJECT ERROR, LOADING ERROR) | After resetting the audio, push the eject button.<br>If disc is not ejected, consult your hyundai dealer. |
| Er3 | FOCUS ERROR<br>DATA READ ERROR | Make sure the disc is not scratched or damaged.<br>Press the eject button and pull out the disc.<br>Then insert a normal cd disc. |
| Er6 | DISC ERROR | Check if the disc is inserted correctly in the cd player.<br>Make sure the disc is not scratched or damaged. |
| Er8 | TAPE DECK ERROR<br>TAPE EJECT ERROR | After resetting the audio, push the eject button.<br>If tape is not ejected, consult your hyundai dealer. |
| HHH | TEMPERATURE IS TOO HIGH | Fault code will reset automatically when the temperature returns to normal. |
| no CD | NO DISC IN MAGAZINE<br>NO CD MAGAZINE IN THE AUTO CHANGER | Insert disc in magazine or insert cd magazine in the auto changer. |

B850A01F-AAT

## CARE OF DISC

### Proper Handling

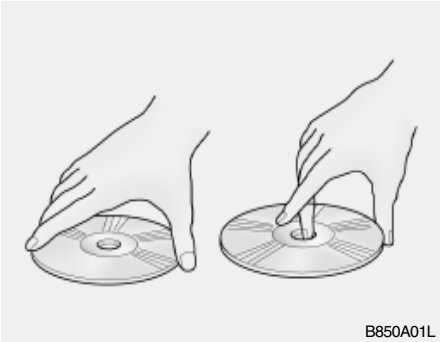


Handle your disc as shown. Do not drop the disc. Hold the disc so you will not leave fingerprints on the surface. If the surface is scratched, it may cause the pickup to skip signal tracks. Do not affix tape, paper, or gummed labels on the disc. Do not write on the disc.

### Damaged Disc

Do not attempt to play damaged, warped or cracked discs. These could severely damage the playback mechanism.

### Storage

When not in use, place your discs in their individual cases and store them in a cool place away from the sun, heat, and dust.

Do not grip or pull out the disc with your hand while the disc is being pulled into the unit by the self loading mechanism.

Do not pull the unit from the dash immediately after a disc is inserted or the eject switch has been pressed. If the unit is pulled out before an operation is completed, the disc will be unstable in the unit and may be damaged.

Do not attempt to insert a disc into the unit when the unit is out of the dash or the power is off.

### Keep Your Discs Clean

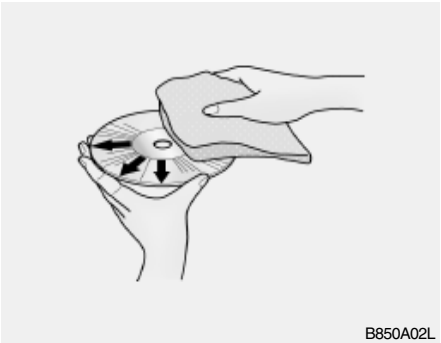


Fingerprints, dust, or soil on the surface of a disc could cause the pickup to skip signal tracks. Wipe the surface clean with a clean soft cloth.

If the surface is heavily soiled, dampen a clean soft cloth in a solution of mild neutral detergent to wipe it clean. See drawing.

B860A01A-AAT

## CARE OF CASSETTE TAPES

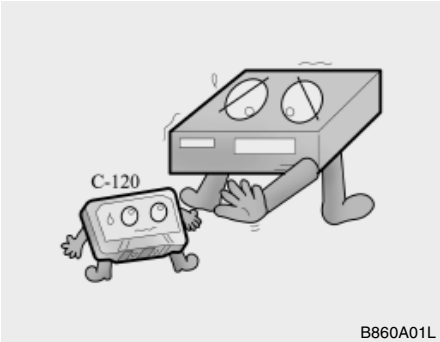

B860A01L

Proper care of your cassette tapes will extend the tape life and increase your listening enjoyment. Always protect your tapes and cassette cases from direct sunlight, severely cold and dusty conditions. When not in use, cassettes should always be stored in the original protective cassette case. When the vehicle is very hot or cold, allow the interior temperature to become more comfortable before listening to your cassettes.

- o Never leave a cassette inserted in the player when not being played. This could damage the tape player unit and the cassette tape.
- o We strongly recommend against the use of tapes longer than C-60 (60 minutes total). Tapes such as C-120 or C-180 are very thin and do not perform as well in the automotive environment.

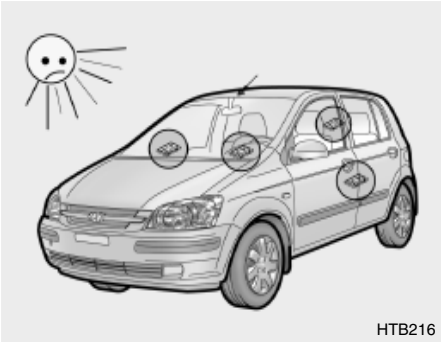
HTB216

- o Be sure that the cassette label is not loose or peeling off or tape ejection may be difficult.
- o Never touch or soil the actual audio tape surfaces.
- o Keep all magnetized objects, such as electric motors, speakers or transformers away from your cassette tapes and tape player unit.
- o Store cassettes in a cool, dry place with the open side facing down to prevent dust from setting in the cassette body.
- o Avoid repeated fast reverse usage to replay one given tune or tape section. This can cause poor tape winding to occur, and eventually cause excessive internal drag and poor audio quality in the cassette. If this occurs, it can sometimes be corrected by fast winding the tape from end to end several times. If this does not correct the problem, do not continue to use the tape in your vehicle.

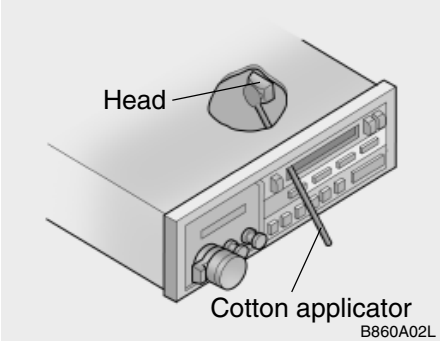

B860A02L

- o The playback head, capstan and pinch rollers will develop a coating of tape residue that can result in deterioration of sound quality, such as a wavering sound. They should be cleaned monthly using a commercially available head cleaning tape or special solution available from audio specialty shops. Follow the supplier's directions carefully and never oil any part of the tape player unit.
- o Always be sure that the tape is tightly wound on its reel before inserting in the player. Rotate a pencil in the drive sprockets to wind up any slack.

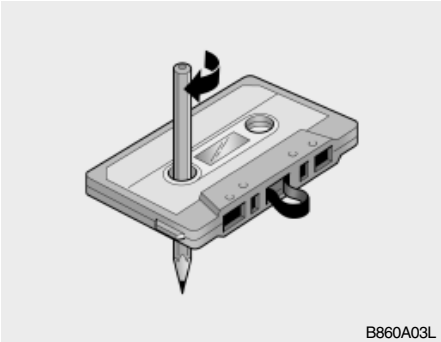


**NOTE:**

**Look at a tape before you insert it. If the tape is loose, tighten it by turning one of the hubs with a pencil or your finger.**

**If the label is peeling off, do not put it in the drive mechanism.**

**Do not leave tapes sitting where they are exposed to hot, warm, or high humidity, such as on top of the dashboard or in the player.**

**If a tape is exposed to extreme heat or cold, let it reach a moderate temperature before putting it in the player.**

B870D01FC-GAT

## ANTENNA

### Roof Antenna

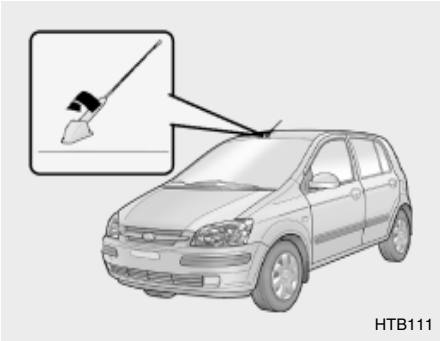


Your car uses a roof antenna to receive both AM and FM broadcast signals.

This antenna is a removable type. To remove the antenna, turn the antenna counterclockwise. To install the antenna, turn the antenna clockwise.

**CAUTION:**

- **Be sure to remove the antenna before washing the car in an automatic car wash or it may be damaged.**
- **Before entering a place with a low height clearance, be sure to adjust the roof antenna low.**
- **When reinstalling your antenna, it is important that it is fully tightened to ensure proper reception.**

# 2. DRIVING YOUR HYUNDAI

Before starting the engine ..... 2-3
Key position ..... 2-4
Starting ..... 2-5
Operating the manual transaxle ..... 2-7
Automatic transaxle ..... 2-9
Good braking practices ..... 2-12
Anti-Lock brake system (ABS) ..... 2-13
Driving for economy ..... 2-14
Winter Driving ..... 2-15
Trailer or vehicle towing ..... 2-18

C010A01O-AAT

## WARNING: ENGINE EXHAUST CAN BE DANGEROUS!

Engine exhaust fumes can be extremely dangerous. If, at any time, you smell exhaust fumes inside the vehicle, open the windows immediately.

**o Do not inhale exhaust fumes.**
Exhaust fumes contain carbon monoxide, a colorless, odorless gas that can cause unconsciousness and death by asphyxiation.

**o Be sure the exhaust system does not leak.**
The exhaust system should be checked whenever the vehicle is raised to change the oil or for any other purpose. If you hear a change in the sound of the exhaust or if you drive over something that strikes the underneath side of the car, have the exhaust system checked as soon as possible by your Hyundai dealer.

**o Do not run the engine in an enclosed area.**
Letting the engine idle in your garage, even with the garage door open, is a hazardous practice. Never run the engine in your garage any longer than it takes to start the engine and back the car out.

**o Avoid idling the engine for prolonged periods with people inside the car.**
If it is necessary to idle the engine for a prolonged period with people inside the car, be sure to do so only in an open area with the air intake set at "Fresh" and fan operating at one of the higher speeds so fresh air is drawn into the interior.

If you must drive with the tail gate open because you are carrying objects that make this necessary:

1. Close all windows.
2. Open side vents.
3. Set the air intake control at "Fresh", the air flow control at "Floor" or "Face" and the fan at one of the higher speeds.

To assure proper operation of the ventilation system, be sure the ventilation air intakes located just in front of the windshield are kept clear of snow, ice, leaves or other obstructions.

C020A01O-GAT

## BEFORE STARTING THE ENGINE

Before you start the engine, you should always:

1. Look around the vehicle to be sure there are no flat tires, puddles of oil, water or other indications of possible trouble.
2. After entering the car, check to be sure the parking brake is engaged.
3. Check that all windows, and lights are clean.
4. Check that the interior and exterior mirrors are clean and in position.
5. Check your seat, seatback and headrest to be sure they are in their proper positions.
6. Lock all the doors.
7. Fasten your seat belt and be sure that all other occupants have fastened theirs.
8. Turn off all lights and accessories that are not needed.
9. When you turn the ignition switch to "ON", check that all appropriate warning lights are operating and that you have sufficient fuel.
10. Check the operation of warning lights and all bulbs when key is in the "ON" position.

**WARNING:**
**(DIESEL ENGINE)**
**To ensure that sufficient vacuum exists within the brake system during cold weather start-up conditions, it is necessary to run the engine at idle for several seconds after starting the engine.**

C030A01A-GAT

## COMBINATION IGNITION SWITCH

### To Start the Engine

- If your Hyundai is equipped with a manual transaxle, place the shift lever in neutral and depress the clutch pedal fully.
- If your Hyundai has an automatic transaxle, place the shift lever in "P" (park).
- To start the engine, insert the ignition key and turn it to the "START" position. Release it as soon as the engine starts. Do not hold the key in the "START" position for more than 15 seconds.

**NOTE:**
**For safety, the engine will not start if the shift lever is not in "P" or "N" Position (Automatic transaxle).**

C040A01A-AAT

## KEY POSITIONS

**WARNING:**

**The engine should not be turned off or the key removed from the ignition key cylinder while the vehicle is in motion. The steering wheel is locked by removing the key.**

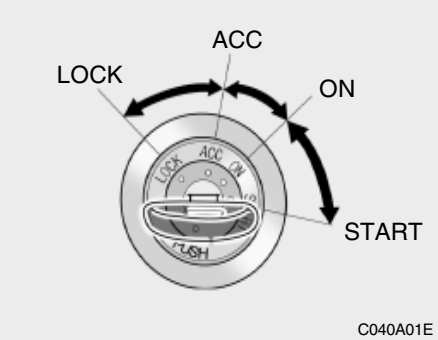


C040A01E

### o "START"

The engine is started in this position. It will crank until you release the key.

**NOTE:**

**Do not hold the key in the "START" position for more than 15 seconds.**

### o "ON"

When the key is in the "ON" position, the ignition is on and all accessories may be turned on. If the engine is not running, the key should not be left in the "ON" position. This will discharge the battery and may also damage the ignition system.

### o "ACC"

With the key in the "ACC" position, some electrical accessories (radio etc.) may be operated.

### o "LOCK"

The key can be removed or inserted in this position.
To protect against theft, the steering wheel locks by removing the key.

**NOTE:**

**To unlocking the steering wheel, insert the key, and then turn the steering wheel and key simultaneously.**

C070C01A-AAT

## To Remove The Ignition Key

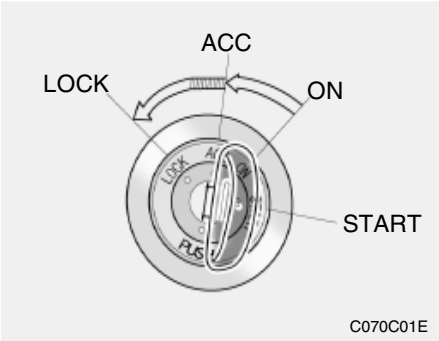


C070C01E

1. Turn the ignition key to the "ACC" position.
2. Simultaneously push and turn the ignition key counterclockwise from the "ACC" position to the "LOCK" position.
3. The key can be removed in the "LOCK" position.

C050A01A-AAT

## STARTING

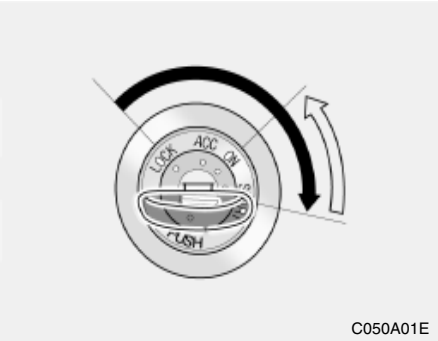


C050A01E

**WARNING:**
**Never run the engine in a closed or poorly ventilated area any longer than is needed to move your car in or out of the area. The carbon monoxide gas emitted is odorless and can cause serious injury or death.**

C051A01O-GAT

## STARTING FOR THE DIESEL ENGINE

ENGINE COLD

- o Turn the ignition key to position "ON" and wait for the pre-heat indicator light to go out.
- o Operate the starter until the engine runs.

ENGINE WARM

Operate the starter. If the engine does not respond on the first attempt, wait several seconds and try again using the pre-heat.

C050B02S-GAT

## NORMAL CONDITIONS

The Starting Procedure:

1. Insert key, and fasten the seat belt.
2. Depress the clutch pedal fully and place the gearshift lever (manual transaxle) in neutral or the selector lever (automatic transaxle) in "P" (park) position.
3. After turning the ignition key to the "ON" position, make certain all warning lights and gauges are functioning properly before starting the engine.
4. On vehicles equipped with the diesel preheat indicator light, turn the ignition key to the "ON" position. The diesel pre-heat indicator light will first illuminate in amber, and then after a short time, the amber illumination will go off, indicating that preheating is completed.

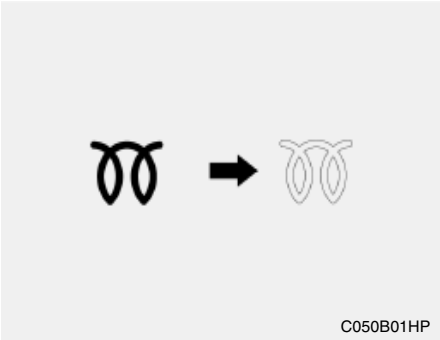


**NOTE:**
**If the engine were not started 10 seconds after the preheating is completed, turn the ignition key once more to the "LOCK" position, and then to the "ON" position, in order to preheat again.**

**WARNING:**
**Be sure that the clutch is fully depressed when starting a manual transaxle vehicle. Otherwise there is the potential to cause damage to the vehicle or injury to someone inside or outside the vehicle as a result of the forward or backward movement of the vehicle that will occur if the clutch is not depressed when the vehicle is started.**

5. Turn the ignition key to the "Start" position and release it when the engine starts.

C055B01B-GAT

## STARTING AND STOPPING THE ENGINE FOR TURBO CHARGER INTERCOOLER (DIESEL ENGINE)

(1) Do not race the engine or sudden accelerate the engine immediately after start it. If the engine is cold, allow the engine to idle for several seconds before it is driven to ensure sufficient lubrication of the turbo charger unit.
(2) After high speed or extended driving, requiring a heavy engine load, the engine should be allowed to idle about 1 minute before turning it off. This idle time will allow the turbo charger to cool prior to shutting the engine off.

**WARNING:**
**Do not turn the engine off immediately after it has been subjected to a heavy load. Doing so may cause severe damage to the engine or turbo charger unit.**

C070A02A-AAT

## OPERATING THE MANUAL TRANSAXLE

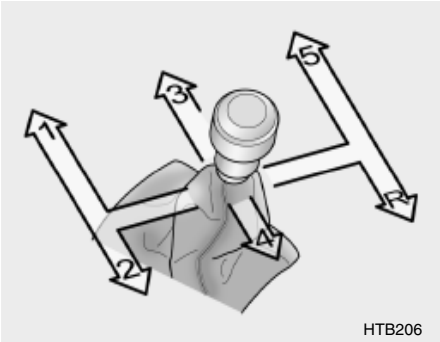


Your Hyundai's manual transaxle has a conventional shift pattern. This shift pattern is imprinted on the shift knob. The transaxle is fully synchronized in all forward gears so shifting to either a higher or a lower gear is easily accomplished.

**NOTE:**

- **To shift into reverse, rest the lever in neutral for at least 3 seconds after your car is completely stopped. Then move the lever into the reverse position.**
- **During cold weather, shifting may be difficult until the transaxle lubricant has warmed up. This is normal and not harmful to the transaxle.**
- **If you 've come to a complete stop and it's hard to shift into 1st or R(Reverse), put the shift lever in N(Neutral) position and release the clutch. Press the clutch pedal back down, and then shift into 1st or R(Reverse) gear position.**
- **Do not use the shift lever as a handrest during driving, as this can result in premature wear of the transaxle shift forks.**

**CAUTION:**

**When downshifting from fifth gear to fourth gear, caution should be taken not to inadvertently press the gear lever sideways in such a manner that second gear is engaged. Such a drastic downshift may cause the engine speed to increase to the point that the tachometer will enter the red-zone. Such over-revving of the engine may possibly cause engine damage.**

C070B01A-AAT

### Using the Clutch

The clutch should be pressed all the way to the floor before shifting, then released slowly. The clutch pedal should always be used after fully returning to the original position. Do not rest your foot on the clutch pedal while driving. This can cause unnecessary wear. Do not partially engage the clutch to hold the car on an incline. This causes unnecessary wear. Use the parking brake to hold the car on an incline. Do not operate the clutch pedal rapidly and repeatedly.

C070E03A-GAT

## RECOMMENDED SHIFT POINTS

| Shift from-to | Recommended |
|---|---|
| 1-2 | 20 km/h (15 mph) |
| 2-3 | 40 km/h (25 mph) |
| 3-4 | 55 km/h (35 mph) |
| 4-5 | 75 km/h (45 mph) |

The shift points as shown above are recommended for optimum fuel economy and performance.

C070D02A-AAT

## Good Driving Practices

- o Never take the car out of gear and coast down a hill. This is extremely hazardous. Always leave the car in gear.
- o Don't "ride" the brakes. This can cause them to overheat and malfunction. Instead, when you are driving down a long hill, slow down and shift to a lower gear. When you do this, engine braking will help slow the car.
- o Slow down before shifting to a lower gear. This will help avoid over-revving the engine, which can cause damage.
- o Slow down when you encounter cross winds. This gives you much better control of your car.
- o Be sure the car is completely stopped before you attempt to shift into reverse. The transaxle can be damaged if you do not. To shift into reverse, depress the clutch, move the shift lever to neutral, wait three seconds, then shift to the reverse position.
- o Exercise extreme caution when driving on a slippery surface. Be especially careful when braking, accelerating or shifting gears. On a slippery surface, an abrupt change in vehicle speed can cause the drive wheels to lose traction and the vehicle to go out of control.

**WARNING:**

- **o The risk of rollover is greatly increased if you lose control of your vehicle at highway speeds.**
- **o Loss of control often occurs if two or more wheels drop off the roadway and the driver oversteers to reenter the roadway.**
- **o In the event your vehicle leaves the roadway, do not steer sharply. Instead, slow down before pulling back into the travel lanes.**
- **o In a collision crash, an unbelted person is significantly more likely to die than a person wearing a seatbelt.**

C090A01A-GAT

## AUTOMATIC TRANSAXLE

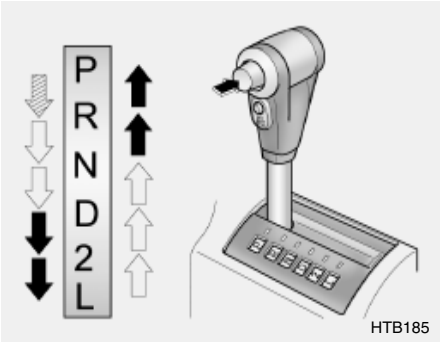


The highly efficient Hyundai automatic transaxle has four forward speeds and one reverse speed. It has a conventional shift pattern as shown in the illustration. At night, with the first position of the multi-function switch, the appropriate symbol on the shift pattern indicator will be illuminated according to the range selected.

**CAUTION:**
**Never shift into "R" or "P" position while the vehicle is moving.**

**NOTE:**

**Depress the brake pedal and push the button when shifting.**

**Push the button when shifting.**

**The selector lever can be shifted freely.**

For optimum fuel economy, accelerate gradually. The transaxle will automatically shift to the second, third and overdrive gears.

C090B01A-AAT

### The Function of Each Position Is As Follows:

### o P (Park):

Use to hold the vehicle in place when parking or while starting the engine; shift the selector lever to the "P" (Park) position. Whenever parking the car, apply the parking brake and shift the selector lever to the "P" (Park) position.

**CAUTION:**
**Never place the selector lever in the "P" (Park) position unless the vehicle is fully stopped. Failure to observe this caution will cause severe damage to the transaxle.**

C090C01A-AAT

### o R(Reverse):

Use for backing up the vehicle. Bring the car to a complete stop before shifting the selector lever to "R" position.

C090D02A-AAT

### o N (Neutral):

In the "N" position, the transaxle is in neutral, which means that no gears are engaged. The engine can be started with the shift lever in "N" position, although this is not recommended except if the engine stalls while the car is moving.

C090E01A-GAT

### o D (Drive):

Use for normal driving. The transaxle will automatically shift through a four-gear sequence. Never downshift manually to "2" position or "L" position when vehicle speed is more than
95 km/h (60 mph).

C090F01A-AAT

### o 2 (Second gear):

Use for driving on a slippery road, hill climbing or engine braking downhill. "2" automatically shifts between first and second gears.
This means that no shift-up to 3rd gear is performed. However, the shift-up to third gear is done when the car speed exceeds a certain value to prevent the engine from over-revving. Manually move the selector to "D" returning to normal driving condition.

C090G01S-GAT

### o L (Low gear):

Use for driving up a very steep grade or for engine braking when descending steep hills. When downshifting to "L", the transaxle will temporarily remain in second gear until the vehicle has slowed enough for low gear to engage. Do not exceed 50 km/h (30 mph) in low gear.
"L" shifts to 1st gear only. However, shift up to 2nd is performed when the car exceeds a certain speed and, as speed increases, the transaxle will shift up to 3rd gear to prevent over-revving the engine.

C090H01A-GAT

### NOTE:

- **For smooth and safe operation, depress the brake pedal when shifting from "Neutral" position or "Park" position to a forward or reverse gear.**
- **The brake pedal fully depressed in order to move the shift lever from the "P" (Park) position to any of the other positions.**
- **It is always possible to shift from "R", "N", "D", "2", "L" position to "P" position. The vehicle must be fully stopped to avoid transaxle damage.**

C090I02A-AAT

**CAUTION:**

- **Shift into "R" and "P" position only when the vehicle has completely stopped.**
- **Do not accelerate the engine in reverse or any of the forward positions with the brakes applied.**
- **Always apply the footbrake when shifting from "P" or "N", to "R", "D", "2" or "L" position.**
- **Do not use the "P" (Park) position in place of the parking brake. Always set the parking brake, shift the transaxle into "P" (Park) position and turn off the ignition when you leave the vehicle, even momentarily. Never leave the vehicle unattended while the engine is running.**
- **Check the automatic transaxle fluid level regularly, and add fluid as necessary.**
  **See the maintenance schedule for the proper fluid recommendation.**

C090N02A-AAT

## Good Driving Practices

- Never move the gear selector lever from "P" or "N" to any other position with the accelerator pedal depressed.
- Never move the gear selector lever into "P" when the vehicle is in motion.
- Be sure the car is completely stopped before you attempt to shift into "R".
- Never take the car out of gear and coast down a hill. This may be extremely hazardous. Always leave the car in gear when moving.
- Do not "ride" the brakes. This can cause them to overheat and malfunction. Instead, when you are driving down a long hill, slow down and shift to a lower gear. When you do this, engine braking will help slow the car.
- Slow down before shifting to a lower gear. Otherwise, the lower gear may not be engaged.
- Always use the parking brake. Do not depend on placing the transaxle in "P" to keep the car from moving.
- Exercise extreme caution when driving on a slippery surface. Be especially careful when braking, accelerating or shifting gears. On a slippery surface, an abrupt change in vehicle speed can cause the drive wheels to lose traction and the vehicle to go out of control.
- Turn the overdrive switch on for good fuel economy and smooth driving. If engine braking is needed in the "D" range or if repeated upshifting and downshifting between 3rd and 4th gear is needed when climbing a gentle slope, it is recommended that the overdrive switch be turned off. Turn the overdrive switch back on immediately afterward.

**WARNING:**

- **The risk of rollover is greatly increased if you lose control of your vehicle at highway speeds.**
- **Loss of control often occurs if two or more wheels drop off the roadway and the driver oversteers to reenter the roadway.**
- **In the event your vehicle leaves the roadway, do not steer sharply. Instead, slow down before pulling back into the travel lanes.**
- **In a collision crash, an unbelted person is significantly more likely to die than a person wearing a seatbelt.**

C090P01A-GAT

## Overdrive Switch

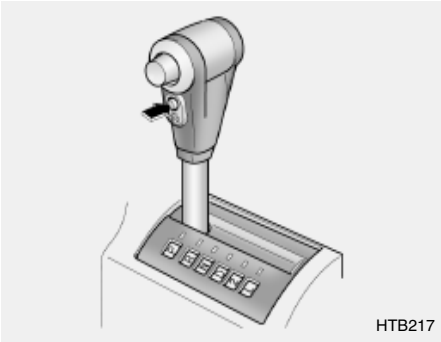


When the overdrive switch is turned on, the transaxle will automatically upshift to the second, third and overdrive gears. When the overdrive switch is turned off, the transaxle will not upshift to the overdrive gear. For normal driving, the selector lever should be left in the "D" position and the overdrive switch turned on.

If you need to accelerate rapidly, press the accelerator pedal all the way to the floor. The transaxle will automatically shift to a lower gear, depending on the vehicle speed and load.

C130A01A-AAT

## GOOD BRAKING PRACTICES

**WARNING:**

**Nothing should be carried on top of the shelf panel behind the rear seat. If there were an accident or a sudden stop, such objects could move forward and cause damage to the vehicle or injure the occupants.**

- After being parked, check to be sure the parking brake is not engaged and that the parking brake indicator light is out before driving away.
- Driving through water may get the brakes wet. They can also get wet when the car is washed. Wet brakes can be dangerous! Your car will not stop as quickly if the brakes are wet. Wet brakes may cause the car to pull to one side. To dry the brakes, apply the brakes lightly until the braking action returns to normal, taking care to keep the car under control at all times. If the braking action does not return to normal, stop as soon as it is safe to do so and call your Hyundai dealer for assistance.

- o Don't coast down hills with the car out of gear. This is extremely hazardous. Keep the car in gear at all times, use the brakes to slow down, then shift to a lower gear so that engine braking will help you maintain a safe speed.
- o Don't "ride" the brake pedal. Resting your foot on the brake pedal while driving can be dangerous because it can result in the brakes overheating and losing their effectiveness. It also increases the wear of the brake components.
- o If a tire goes flat while you are driving, apply the brakes gently and keep the car pointed straight ahead while you slow down. When you are moving slowly enough for it to be safe to do so, pull off the road and stop in a safe place.
- o If your car is equipped with an automatic transaxle, don't let your car creep forward. To avoid creeping forward, keep your foot on the brake pedal when the car is stopped.
- o Use caution when parking on a hill. Engage the parking brake and place the gear selector lever in "P" (automatic transaxle) or in first or reverse gear (manual transaxle). If your car is facing downhill, turn the front wheels into the curb to help keep the car from rolling. If your car is facing uphill, turn the front wheels away from the curb to help keep the car from rolling.
  If there is no curb or if it is required by other conditions to keep the car from rolling, block the wheels.
- o Under some conditions your parking brake can freeze in the engaged position. This is most likely to happen when there is an accumulation of snow or ice around or near the rear brakes or if the brakes are wet. If there is a risk that the parking brake may freeze, apply it only temporarily while you put the gear selector lever in "P" (automatic) or in first or reverse gear (manual transaxle) and block the rear wheels so the car cannot roll. Then release the parking brake.
- o Do not hold the vehicle on the upgrade with the accelerator pedal. This can cause the transmission to overheat. Always use the brake pedal or parking brake.

C120A02A-AAT

## ANTI-LOCK BRAKE SYSTEM (If Installed)

The Anti-Lock Brake System (ABS) is designed to prevent wheel lock-up during sudden braking or on hazardous road surfaces. The ABS control module monitors the wheel speed and controls the pressure applied to each brake. Thus, in emergency situations or on slick roads, ABS will increase vehicle control during braking.

### NOTE:

**During ABS operation, a slight pulsation may be felt in the brake pedal when the brakes are applied. Also, a noise may be heard in the engine compartment while braking. These conditions are normal and indicate that the anti-lock brake system is functioning properly.**

**WARNING:**

**ABS will not prevent accidents due to improper or dangerous driving maneuvers. Even though vehicle control is improved during emergency braking, always maintain a safe distance between you and objects ahead. Vehicle speeds should always be reduced during extreme road conditions.**

**The braking distance for cars equipped with an anti-lock braking system may be longer than for those without it in the following road conditions.**

- **Driving on rough, gravel or snow-covered roads.**
- **Driving with tire chains installed.**
- **Driving on roads where the road surface is pitted or has different surface height.**

**During these conditions, the vehicle should be driven at reduced speeds. The safety features of an ABS equipped vehicle should not be tested by high speed driving or cornering. This could endanger the safety of yourself or others.**

C140A01A-GAT

## DRIVING FOR ECONOMY

You can save fuel and get more kilometers from your car if you follow these suggestions:

- Drive smoothly. Accelerate at a moderate rate. Don't make "jack-rabbit" starts or full-throttle shifts and maintain a steady cruising speed. Don't race between stop-lights. Try to adjust your speed to that of the other traffic so you don't have to change speeds unnecessarily. Avoid heavy traffic whenever possible.
  Always maintain a safe distance from other vehicles so you can avoid unnecessary braking. This also reduces brake wear.
- Drive at a moderate speed. The faster you drive, the more fuel your car uses. Driving at a moderate speed, especially on the highway, is one of the most effective ways to reduce fuel consumption.
- Don't "ride" the brake or clutch pedal. This can increase fuel consumption and also increase wear on these components. In addition, driving with your foot resting on the brake pedal may cause the brakes to overheat, which reduces their effectiveness and may lead to more serious consequences.
- Take care of your tires. Keep them inflated to the recommended pressure. Incorrect inflation, either too much or too little, results in unnecessary tire wear. Check the tire pressures at least once a month.
- Be sure that the wheels are aligned correctly. Improper alignment can result from hitting curbs or driving too fast over irregular surfaces. Poor alignment causes faster tire wear and may also result in other problems as well as greater fuel consumption.

- o Keep your car in good condition. For better fuel economy and reduced maintenance costs, maintain your car in accordance with the maintenance schedule in Section 5. If you drive your car in severe conditions, more frequent maintenance is required (see Section 5 for details).
- o Keep your car clean. For maximum service, your Hyundai should be kept clean and free of corrosive materials. It is especially important that mud, dirt, ice, etc. not be allowed to accumulate on the underside of the car. This extra weight can result in increased fuel consumption and also contribute to corrosion.
- o Travel lightly. Don't carry unnecessary weight in your car. Weight reduces fuel economy.
- o Don't let the engine idle longer than necessary. If you are waiting (and not in traffic), turn off your engine and restart only when you're ready to go.
- o Remember, your Hyundai does not require extended warm-up. As soon as the engine is running smoothly, you can drive away. In very cold weather, however, give your engine a slightly longer warm-up period.
- o Don't "lug" or "over-rev" the engine. Lugging is driving too slowly in too high a gear resulting in the engine bucking. If this happens, shift to a lower gear. Over-revving is racing the engine beyond its safe limit. This can be avoided by shifting at the recommended speeds.
- o Use your air conditioning sparingly. The air conditioning system is operated by engine power so your fuel economy is reduced when you use it.

C150A01A-AAT

## SMOOTH CORNERING

Avoid braking or gear changing in corners, especially when roads are wet. Ideally, corners should always be taken under gentle acceleration. If you follow these suggestions, tire wear will be held to a minimum.

C160A01A-AAT

## WINTER DRIVING

The more severe weather conditions of winter result in greater wear and other problems. To minimize the problems of winter driving, you should follow these suggestions:

C160B01A-GAT

### Snowy or Icy Conditions

To drive your vehicle in deep snow, it may be necessary to use snow tires or to install tire chains on your tires. If snow tires are needed, it is necessary to select tires equivalent in size and type to the original equipment tires. Failure to do so may adversely affect the safety and handling of your car. Speeding, rapid acceleration, sudden brake applications, and sharp turns are potentially very hazardous practices. During deceleration, use engine braking to the fullest extent. Sudden brake applications on snowy or icy roads may cause skids to occur. You need to keep sufficient distance between the vehicle in front and your vehicle. Also, apply the brake gently. It should be noted that installing tire

chains on the tire will provide a greater driving force, but will not prevent side skids.

**NOTE:**
**Tire chains are not legal in all provinces. Check province laws before fitting tire chains.**

C160C01A-AAT
## Use High Quality Ethylene Glycol Coolant

Your Hyundai is delivered with high quality ethylene glycol coolant in the cooling system. It is the only type of coolant that should be used because it helps prevent corrosion in the cooling system, lubricates the water pump and prevents freezing. Be sure to replace or replenish your coolant in accordance with the maintenance schedule in Section 5. Before winter, have your coolant tested to assure that its freezing point is sufficient for the temperatures anticipated during the winter.

C160D01A-AAT
## Check Battery and Cables

Winter puts additional burdens on the battery system. Visually inspect the battery and cables as described in Section 6. The level of charge in your battery can be checked by your Hyundai dealer or a service station.

C160E01A-AAT
## Change to "Winter Weight" Oil if Necessary

In some climates it is recommended that a lower viscosity "winter weight" oil be used during cold weather. See Section 9 for recommendations. If you aren't sure what weight oil you should use, consult your Hyundai dealer.

C160F01A-AAT
## Check Spark Plugs and Ignition System

Inspect your spark plugs as described in Section 6 and replace them if necessary. Also check all ignition wiring and components to be sure they are not cracked, worn or damaged in any way.

C160G01A-GAT
## To Keep Locks from Freezing

To keep the locks from freezing, squirt an approved de-icer fluid or glycerine into the key opening. If a lock is covered with ice, squirt it with an approved de-icing fluid to remove the ice. If the lock is frozen internally, you may be able to thaw it out by using a heated key. Handle the heated key with care to avoid burning your fingers.

**NOTE:**
**The proper temperature for using the immobilizer key is from -40°C to 80°C. If you heat the immobilizer key over 80°C to open the frozen lock, it may cause damage to the transponder in its head.**

C160H01A-AAT

## Use Approved Anti-Freeze in Window Washer System

To keep the water in the window washer system from freezing, add an approved anti-freeze solution in accordance with instructions on the container. Window washer anti-freeze is available from Hyundai dealers and most auto parts outlets. Do not use engine coolant or other types of anti-freeze as these may damage the finish.

C160I01A-AAT

## Don't Let Your Parking Brake Freeze

Under some conditions your parking brake can freeze in the engaged position. This is most likely to happen when there is an accumulation of snow or ice around or near the rear brakes or if the brakes are wet. If there is a risk the parking brake may freeze, apply it only temporarily while you put the gear selector lever in "P" (automatic) or in first or reverse gear (manual transaxle) and block the rear wheels so the car cannot roll. Then release the parking brake.

C160J01A-AAT

## Don't Let Ice and Snow Accumulate Underneath

Under some conditions, snow and ice can build up under the fenders and interfere with the steering. When driving in severe winter conditions where this may happen, you should periodically check underneath the car to be sure the movement of the front wheels and the steering components is not obstructed.

C160K01A-AAT

## Carry Emergency Equipment

Depending on the severity of the weather where you drive your car, you should carry appropriate emergency equipment. Some of the items you may want to carry include tire chains, tow straps or chains, flashlight, emergency flares, sand, a shovel, jumper cables, a window scraper, gloves, ground cloth, coveralls, a blanket, etc.

C170A01A-AAT

## HIGHER SPEED MOTORING Pre-Trip Inspections

### 1. Tires:

Adjust the tire inflation pressures to specification. Low tire inflation pressures will result in overheating and possible failure of the tires.
Avoid using worn or damaged tires which may result in reduced traction or tire failure.

### NOTE:

**Never exceed the maximum tire inflation pressure shown on the tires.**

### 2. Fuel, engine coolant and engine oil:

High speed travel consumes 1.5 times more fuel than urban motoring. Do not forget to check both engine coolant and engine oil.

### 3. Drive belt:

A loose or damaged drive belt may result in overheating of the engine.

C180A01A-AAT

## USE OF LIGHTS

Check your lights regularly for correct operation and always keep them clean. When driving during the day in conditions of poor visibility, it is helpful to drive with headlights on low beam. This enables you to be seen as well as to see.

C190A02A-GAT

## TRAILER OR VEHICLE TOWING

If you are considering towing with your car, you should first check with your Province Department of Motor Vehicles to determine their legal requirements. Since laws vary from province to province, the requirements for towing trailers, cars, other types of vehicles, or apparatus may differ. Ask your Hyundai dealer for further details before towing.

**CAUTION**

**Do not do any towing with your car during its first 2,000 km (1,200 miles) in order to allow the engine to properly break in. Failure to heed this caution may result in serious engine or transaxle damage.**

C190B01S-AAT

### Trailer Hitches

Select the proper hitch and ball combination, making sure that it's location is compatible with that of the trailer or vehicle being towed.
Use a quality non-equalizing hitch which distributes the tongue load uniformly throughout the chassis.

The hitch should be bolted securely to the car and installed by a qualified technician. DO NOT USE A HITCH DESIGNED FOR TEMPORARY INSTALLATION AND NEVER USE ONE THAT ATTACHES ONLY TO THE BUMPER.

C190C03S-GAT

### Trailer Brakes

If your trailer is equipped with a braking system, make sure it conforms to federal and/or local regulations and that it is properly installed and operating correctly.

**NOTE:**

**If you tow a trailer or vehicle, your car will require more frequent maintenance due to the additional load. See "Maintenance Under Severe Usage Conditions" on page 5-5.**

**CAUTION:**

- **Never connect a trailer brake system directly to the vehicle brake system.**
- **When towing a trailer on steep grades (in excess of 12%) pay close attention to the engine coolant temperature gauge to ensure the engine does not overheat. If the needle of the coolant temperature gauge moves across the dial towards "H" (HOT), pull over and stop as soon as it is safe to do so, and allow the engine to**

**idle until it cools down. You may proceed once the engine has cooled sufficiently.**

C190D01A-GAT

## Safety Chains

Should the hitch connection between your car and the trailer or vehicle you are towing fail, the trailer or vehicle could wander dangerously across other lanes of traffic and ultimately collide with another vehicle. To eliminate this potentially dangerous situation, safety chains, attached between your car and the trailer or towed vehicle, are required in most provinces.

C190E02TB-GAT

## Trailer Weight Limit

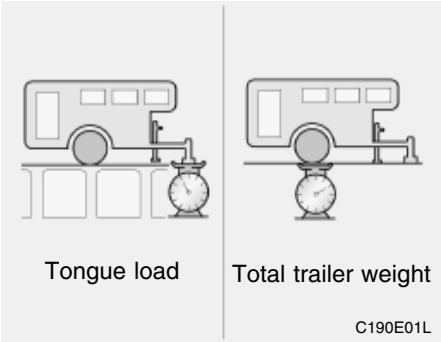


Tongue loads can be increased or decreased by redistributing the load in the trailer. This can be verified by checking the total weight of the loaded trailer and then checking the load on the tongue.

### NOTE:

1. **Never load the trailer with more weight in the back than in the front. About 60% of the trailer load should be in the front half on the trailer and the remaining 40% in the rear.**
2. **The total gross vehicle weight with trailer must not exceed the Gross Vehicle Weight Rating (GVWR) shown on the vehicle identification plate (see page 8-1). The total gross vehicle weight is the combined weight of the vehicle, driver, all passengers and their luggage, cargo, hitch, trailer tongue load and other optional equipment.**
3. **The front or rear axle weight must not exceed the Gross Axle Weight Rating (GAWR) shown on the vehicle identification plate (see page 8-2). It is possible that your towing package does not exceed the GVWR but exceeds the GAWR. Improper trailer loading and/or too much luggage in the trunk can overload the rear axle. Redistribute the load and check the axle weight again.**
4. **The maximum permissible static vertical load on the coupling device ; 44kg**

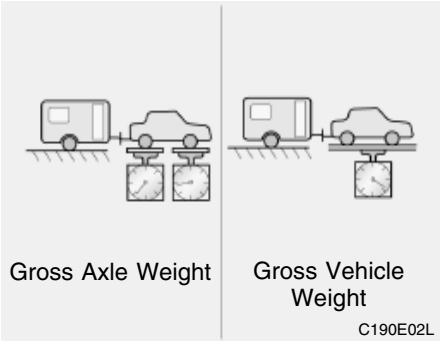


5. **The maximum permissible overhang of the coupling point : 690 mm**

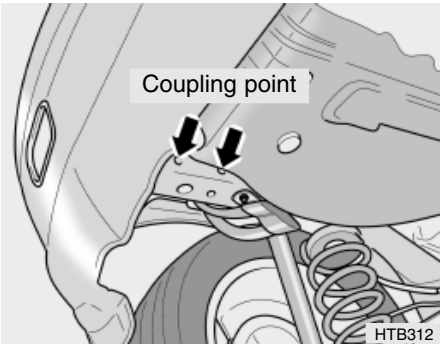


**CAUTION:**
**The following specifications are recommended when towing a trailer. The loaded trailer weigh cannot safely exceed the values in the following chart.**

kg. (Lbs)

| Type | | | Maximum Towable Weight | |
|---|---|---|---|---|
| | | | Trailer | Tongue |
| With Brake Type | 1.1L | MANUAL TRANSAXLE | 700 (1,543) | 44 (97) |
| | 1.3L | | 1000 (2,204) | |
| | 1.6L | | 1,100 (2,425) | |
| | Diesel | | 1,100 (2,425) | |
| | 1.3L | AUTO TRANSAXLE | 900(1,984) | |
| | 1.6L | | 1,100 (2,425) | |
| Without Brake Type | | | 450(992) | |

**WARNING:**
**Improperly loading your car and trailer can serious affect its steering and braking performance causing a crash in which could cause serious injury or death.**

C190F02A-GAT

## Trailer or Vehicle Towing Tips

1. Before towing, check hitch and safety chain connections as well as proper operation of the trailer running lights, brake lights, and turn signals.
2. Always drive your vehicle at a moderate speed (Less than 100 km/h).
3. Trailer towing requires more fuel than normal conditions.
4. To maintain engine braking efficiency and electrical charging performance, do not use fifth gear (manual transaxle) or overdrive (automatic transaxle).
5. Always secure items in the trailer to prevent load shift while driving.

6. Check the condition and air pressure of all tires on the trailer and your car. Low tire pressure can seriously affect the handling. Also check the spare tire.
7. The vehicle/trailer combination is more affected by crosswind and buffeting.
   When being passed by a large vehicle, keep a constant speed and steer straight ahead. If there is too much wind buffeting slow down to get out of the other vehicle's air turbulence.
8. When parking your car and trailer, especially on a hill, be sure to follow all the normal precautions. Turn your front wheel into the curb, set the parking brake firmly, and put the transaxle in 1st or Reverse (manual) or Park (automatic). In addition, place wheel chocks at each of the trailer's tires.
9. If the trailer has electric brakes, start your vehicle and trailer moving, and then apply the trailer brake controller by hand to be sure the brakes are working. This lets you check your electrical connection at the same time.
10. During your trip, check occasionally to be sure that the load is secure, and that the lights and any trailer brakes are still working.
11. Avoid jerky starts, sudden acceleration or sudden stops.
12. Avoid sharp turns and rapid lane changes.
13. Avoid holding the brake pedal down too long or too frequently. This could cause the brakes to overheat, resulting in reduced braking efficiency.
14. When going down a hill, shift into a lower gear and use the engine braking effect.
    When ascending a long grade, downshift the transaxle to a lower gear and reduce speed to reduce chances of engine overloading and/or overheating.
15. If you have to stop while going uphill, do not hold the vehicle in place by pressing on the accelerator. This can cause the automatic transaxle to overheat. Use the parking brake or footbrake.

**NOTE:**
**When towing check transaxle fluid more frequently.**

**CAUTION:**
**If overheating should occur when towing, (temperature gauge reads near red zone), taking the following action may reduce or eliminate the problem.**

1. Turn off the air conditioner.
2. Reduce highway speed.
3. Select a lower gear when going uphill.
4. While in stop and go traffic, place the gear selection in park or neutral and idle the engine at a higher speed.

# 3. WHAT TO DO IN AN EMERGENCY

If the engine will not start ..... 3-2
Jump starting ..... 3-3
If the engine overheats ..... 3-4
Spare tire ..... 3-5
If you have a flat tire ..... 3-6
If your car must be towed ..... 3-11
Emergency towing ..... 3-13
If you lose your keys ..... 3-14

D010A01A-AAT

## IF THE ENGINE WILL NOT START

**CAUTION:**

**If the engine will not start, do not push or pull the car to start it. This could result in a collision or cause other damage. In addition, push or pull starting may cause the catalytic converter to be overloaded and create a fire hazard.**

D010B02A-AAT

### If Engine Doesn't Turn Over or Turns Over Slowly

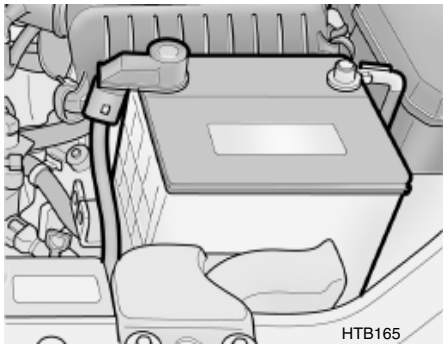


1. If your car has an automatic transaxle, be sure the gear selector lever is in "N" or "P" and the emergency brake is set.
2. Check the battery connections to be sure they are clean and tight.
3. Turn on the interior light. If the light dims or goes out when you operate the starter, the battery is discharged.
4. Check the starter connections to be sure they are securely tightened.
5. Do not push or pull the vehicle to start it. See instructions for "Jump Starting".

D010C01A-AAT

### If Engine Turns Over Normally but Does Not Start

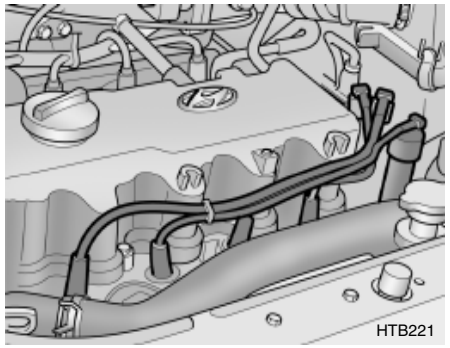


1. Check fuel level.
2. Check all connectors at ignition, coil and spark plugs. Reconnect any that may be disconnected or loose.
3. Check the fuel line in the engine room.
4. If engine still refuses to start, call a Hyundai dealer or seek other qualified assistance.

D010D01A-AAT

### If the Engine Stalls While Driving

1. Reduce your speed gradually, keeping a straight line. Move cautiously off the road to a safe place.
2. Turn on your emergency flashers.
3. Try to start the engine again. If your vehicle will not start, contact a Hyundai dealer or seek other qualified assistance.

D020A02A-AAT

## JUMP STARTING

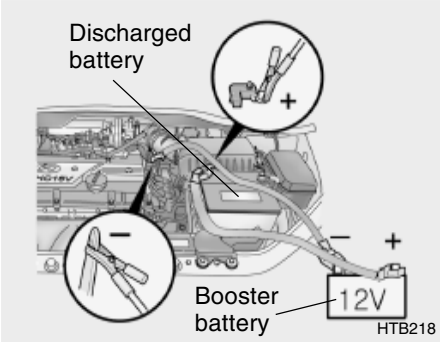


**WARNING:**

**The gas produced by the battery during the jump-start operation is highly explosive. If these instructions are not followed exactly, serious personal injury and damage to the vehicle may occur! If you are not sure how to follow this procedure, seek qualified assistance. Automobile batteries contain sulfuric acid. This is poisonous and highly corrosive. When jump starting, wear protective glasses and be careful not to get acid on yourself, your clothing or on the car.**

- o If you should accidentally get acid on your skin or in your eyes, immediately remove any contaminated clothing and flush the area with clear water for at least 15 minutes. Then promptly obtain medical attention. If you must be transported to an emergency facility, continue to apply water to the affected area with a sponge or cloth.
- o The gas produced by the battery during the jump-start operation is highly explosive. Do not smoke or allow a spark or open flame in the vicinity.
- o The battery being used to provide the jump start must be 12-volt. If you cannot determine that it is a 12-volt battery, do not attempt to use it for the jump start.
- o To jump start a car with a discharged battery, follow this procedure exactly:

1. If the booster battery is installed in another vehicle, be sure the two vehicles are not touching.
2. Turn off all unnecessary lights and accessories in both vehicles.
3. Attach the clamps of the jumper cable in the exact order shown in the illustration. That is, first, attach one clamp of the jumper cable to the positive (+) post or cable of the discharged battery. Then attach the other end of the same cable to the positive (+) post or cable of the booster battery. Next, using the other cable, attach one clamp to the negative (-) post or cable of the booster battery. Then attach the other end of that cable to a solid metal part of the engine away from the battery. Do not connect the cable to any moving part.
4. Start the engine in the car with the booster battery and let it run for a few minutes. This will help to assure that the booster battery is fully charged. During the jumping operation, run the engine in this vehicle at about 2,000 rpm.
5. Start your engine using the normal starting procedure. After the engine starts, leave the jumper cables connected and let the engine run at fast idle or about 2,000 rpm for several minutes.

6. Carefully remove the jumper cables in the reverse order of attachment.

If you do not know why your battery became discharged (because the lights were left on, etc.), have the charging system checked by your Hyundai dealer.

D030A01TB-AAT

## IF THE ENGINE OVERHEATS

If your temperature gauge indicates overheating, you experience a loss of power, or hear loud pinging or knocking, the engine is probably too hot. If this happens to you, you should:

1. Pull off the road and stop as soon as it is safe to do so.
2. Place the gear selector lever in "P" (automatic), or neutral (manual transaxle) and set the parking brake. If the air conditioning is on, turn it off.
3. If engine coolant is running out under the car or steam is coming out from the hood, stop the engine. Do not open the hood until the engine coolant has stopped running or the steaming has stopped. If there is no visible loss of engine coolant and no steam, leave the engine running and check to be sure the engine cooling fan is operating. If the fan is not running, turn the engine off.
4. Check to see if the water pump drive belt is missing. If it is not missing, check to see that it is tight. If the drive belt seems to be satisfactory, check for coolant leaking from the radiator, hoses or under the car. (If the air conditioning had been in use, it is normal for cold water to be draining from it when you stop).

**WARNING:**
**While the engine is running, keep hair, hands, and clothing away from moving parts such as the fan and drive belts to prevent injury.**

**WARNING (Diesel only):**
**Never work on injection system with engine running or within 30 seconds after shutting off engine. High pressure pump, rail, injectors and high pressure pipes are subject to high pressure even after the engine stopped. The fuel jet produced by fuel leaks may cause serious injury, if it touch the body. People using pacemakers should not move than 30cm closer to the ECU or wiring harness within the engine room while engine is running, since the high currents in the Common Rail system produce considerable magnetic fields.**

5. If the water pump drive belt is broken or coolant is leaking out, stop the engine immediately and call the nearest Hyundai dealer for assistance.

**WARNING:**
**Do not remove the radiator cap when the engine is hot. This can allow coolant to be blown out of the opening and cause serious burns.**

6. If you cannot find the cause of the overheating, wait until the engine temperature has returned to normal. Then, if the engine coolant has been lost, carefully remove the radiator cap and add engine coolant to bring the fluid level in the reservoir up to the halfway mark.
7. Proceed with caution, keeping alert for further signs of overheating. If overheating happens again, call a Hyundai dealer for assistance.

**CAUTION:**
**Serious loss of engine coolant indicates there is a leak in the cooling system and this should be checked as soon as possible by a Hyundai dealer.**

D040A01TB-GAT

## TEMPORARY SPARE TIRE

The following instructions for the temporary spare tire should be observed:

1. Check inflation pressure as soon as practical after installing the spare tire, and adjust to the specified pressure. The tire pressure should be periodically checked and maintained at the specified pressure while the tire is stored.

### Spare Tire Pressure

| | |
|---|---|
| Tire Size | T105/70D14 |
| Inflation Pressure | 420 kPa (60 psi) |

2. The spare tire should only be used temporarily and should be returned to the luggage compartment as soon as the original tire can be repaired or replaced.
3. Continuous use at speeds of over 80 km/h (50 mph) is not recommended.
4. As the temporary spare tire is specifically designed for your car, it should not be used on any other vehicle.
5. The temporary spare tire should not be used on any other wheels, nor should standard tires, snow tires, wheel covers or trim rings be used with the temporary spare wheel. If such use is attempted, damage to these items or other car components may occur.
6. The temporary spare tire pressure should be checked once a month while the tire is stored.

**CAUTION:**
- **Do not use snow chains with your temporary spare tire.**
- **Do not use more than one temporary spare tire at a time.**

D040B01FC-GAT

## FULL SIZE SPARE TIRE (If Installed)

The following instructions for the FULL SIZE spare tire should be observed:

Check inflation pressure as soon as practical after installing the spare tire, and adjust to the specified pressure. The tire pressure should be periodically checked and maintained at the specified pressure while the tire is stored.

### Spare Tire Pressure

| | |
|---|---|
| Tire Size | Full Size |
| Inflation Pressure | 210 kPa (30 psi) |

D040B01A-AAT

## Handling the Spare Tire

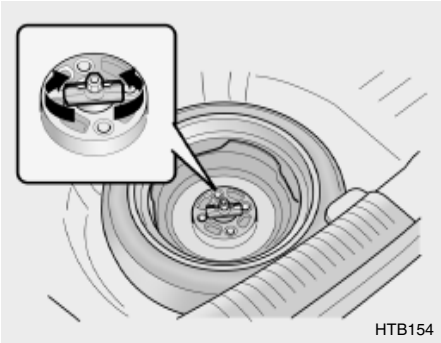


Remove the installation bolt to remove the spare tire. To replace the spare tire in its storage compartment, tighten the bolt firmly with your fingers until there is no more play in the spare tire.

D050A01A-AAT

## IF YOU HAVE A FLAT TIRE

If a tire goes flat while you are driving:

1. Take your foot off the accelerator pedal and let the car slow down while driving straight ahead. Do not apply the brakes immediately or attempt to pull off the road as this may cause a loss of control. When the car has slowed to such a speed that it is safe to do so, brake carefully and pull off the road. Drive off the road as far as possible and park on firm, level ground. If you are on a divided highway, do not park in the median area between the two traffic lanes.
2. When the car is stopped, turn on your emergency hazard flashers, set the parking brake and put the transaxle in "P" (automatic) or reverse (manual transaxle).
3. Have all passengers get out of the car. Be sure they all get out on the side of the car that is away from traffic.
4. Change the tire following the instructions provided on the following pages.

D060A01A-AAT

## CHANGING A FLAT TIRE

The procedure described on the following pages can be used to rotate tires as well as to change a flat tire. When preparing to change a flat tire, check to be sure the gear selector lever is in "P" (automatic transaxle) or reverse gear (manual transaxle) and that the parking brake is set, then:

D060K01FC-GAT

## Wheel Cap (If Installed)

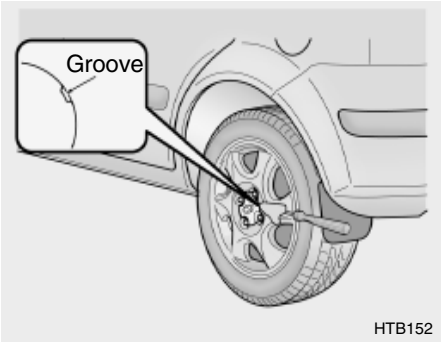


1. Wrap a piece of cloth around the tip of the screw driver to avoid scratching.
2. Insert the screw driver into the groove of the wheel cap and pry gently to remove the wheel cap.
3. Change the flat tire.

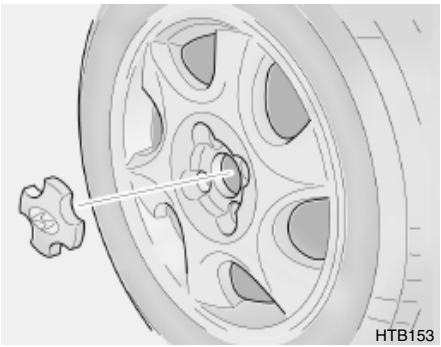


4. Reinstall the wheel cap by fitting the boss of the wheel cap in the groove of the wheel, hitting the center of the wheel cap with your hand.

D060B01TB-GAT

## 1. Obtain Spare Tire and Tool

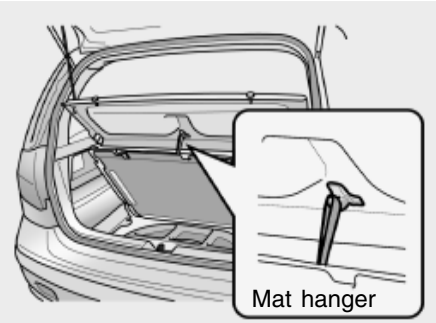

HTB296

Hang the luggage room mat to the mat hanger and remove the luggage under tray (If installed)

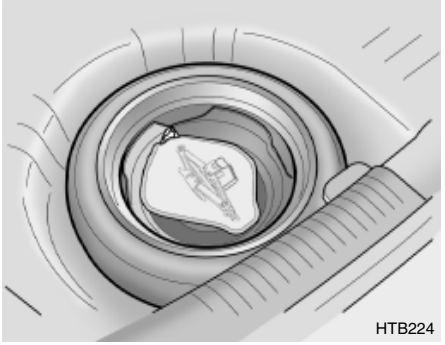
HTB224

Take out the jack case and tool bag, then remove the spare tire from the luggage room.

**NOTE:**

**The jack case is located on the spare tire in the vehicle.**

D060C01A-AAT

## 2. Block the Wheel

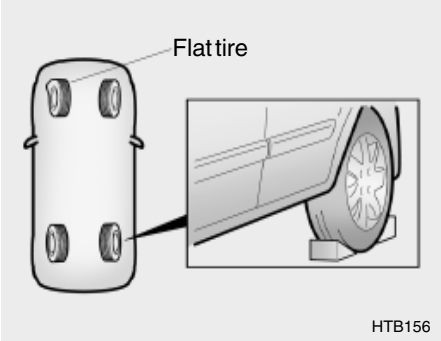

HTB156

Block the wheel that is diagonally opposite from the flat to keep the vehicle from rolling when the car is raised on the jack.

D060D01A-AAT

## 3. Loosen Wheel Nuts

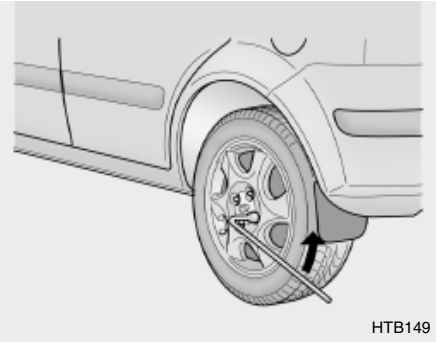
HTB149

The wheel nuts should be loosened slightly before raising the car. To loosen the nuts, turn the wheel nut wrench handle counterclockwise. When doing this, be sure that the socket is seated completely over the nut so it cannot slip off. For maximum leverage, position the wrench so the handle is to the right as shown in the drawing. Then, while holding the wrench near the end of the handle, pull up on it with steady pressure. Do not remove the nuts at this time. Just loosen them about one-half turn.

D060E01A-AAT

## 4. Put the Jack in Place

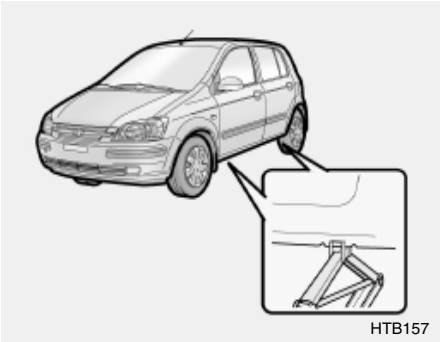


The base of the jack should be placed on firm, level ground. The jack should be positioned as shown in the drawing.

D060F02E-AAT

## 5. Raising the Car

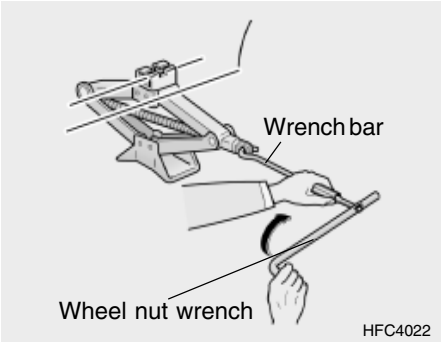


After inserting a wrench bar into the wheel nut wrench, install the wrench bar into the jack as shown in the drawing. To raise the vehicle, turn the wheel nut wrench clockwise. As the jack begins to raise the vehicle, double check that it is properly positioned and will not slip. If the jack is on soft ground or sand, place a board, brick, flat stone or other object under the base of the jack to keep it from sinking.

Raise the car high enough so that the fully inflated spare tire can be installed. To do this, you will need more ground clearance than is required to remove the flat tire.

**WARNING:**

**Do not get under the car when it is supported by the jack! This is very dangerous as the vehicle could fall and cause serious injury or death. No one should stay in the car while the jack is being used.**

D060G01Y-AAT

## 6. Changing Wheels

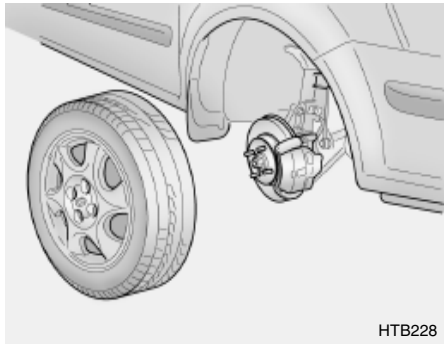


Loosen the wheel nuts and remove them with your fingers. Slide the wheel off the studs and lay it flat so it cannot roll away. To put the wheel on the hub, pick up the spare tire, line up the holes

with the studs and slide the wheel onto them. If this is difficult, tip the wheel slightly and get the top hole in the wheel lined up with the top stud. Then jiggle the wheel back and forth until the wheel can be slid over the other studs.

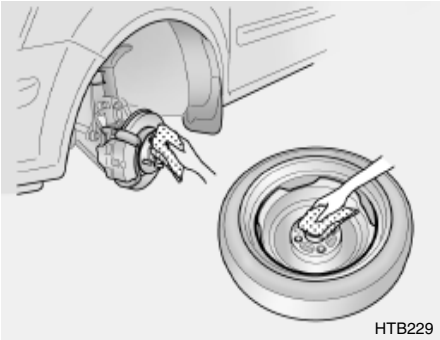


**WARNING:**
**Wheel and wheel covers may have sharp edges. Handle them carefully to avoid possible severe injury.**

**Before putting the wheel into place, be sure that there is nothing on the hub or wheel (such as mud, tar, gravel, etc.) that interferes with the wheel from fitting solidly against the hub. If there is, remove it. If there is not good contact on the mounting surface between the wheel and hub, the wheel nuts could loosen and cause the loss of a wheel. Loss of a wheel may result in loss of control of the vehicle. This may cause serious injury or death.**

D060H02A-AAT

## 7. Re-install Wheel Nuts

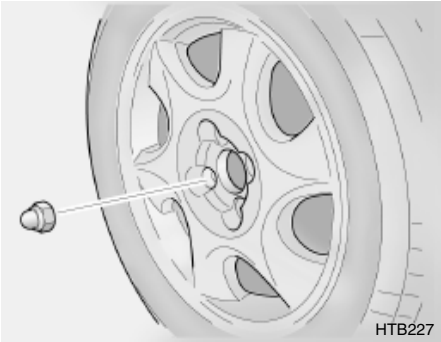


To reinstall the wheel cover, hold it on the studs, put the wheel nuts on the studs and tighten them finger tight. The nuts should be installed with their small diameter ends directed inward. Jiggle the tire to be sure it is completely seated, then tighten the nuts as much as possible with your fingers again.

D060I01E-GAT

## 8. Lower Vehicle and Tighten Nuts

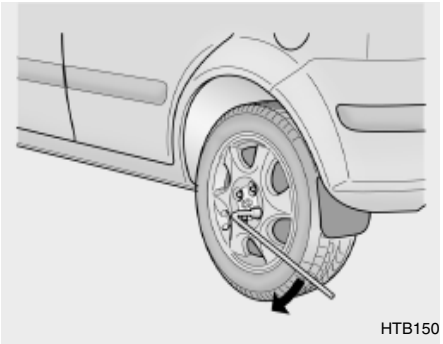


Lower the car to the ground by turning the wheel nut wrench counterclockwise. Then position the wrench as shown in the drawing and tighten the wheel nuts. Be sure the socket is seated completely over the nut. Do not stand on the wrench handle or use an extension pipe over the wrench handle.
Go around the wheel tightening every other nut until they are all tight. Then double-check each nut for tightness. After changing wheels, have a technician tighten the wheel nuts to their proper torque as soon as possible.

### Wheel nut tightening torque:

Steel wheel & aluminium alloy wheel: 900-1,100 kg.cm (65-80 lb.ft)

D060J01FC-GAT

## After Changing Wheels

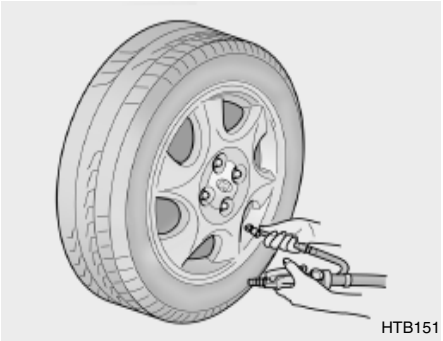


If you have a tire gauge, remove the valve cap and check the air pressure. If the pressure is lower than recommended, drive slowly to the nearest service station and inflate to the correct pressure. If it is too high, adjust it until it is correct. Always reinstall the valve cap after checking or adjusting tire pressure. If the cap is not replaced, air may leak from the tire. If you lose a valve cap, buy another and install it as soon as possible.

After you have changed wheels, always secure the flat tire in its place in the luggage room and return the jack and tools to their proper storage locations.

D080A01TB-GAT

## IF YOUR CAR MUST BE TOWED

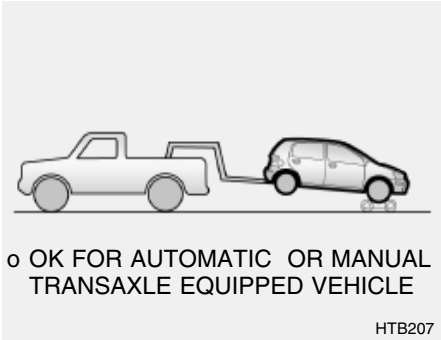


**CAUTION:**
**Your car can be damaged if towed incorrectly!**

If your car has to be towed, it should be done by your Hyundai dealer or a commercial tow truck service. This will help assure that your car is not damaged in towing. Also, professionals are generally aware of local laws governing towing. In any case, rather than risk damage to your car, it is suggested that you show this information to the tow truck operator. Be sure that a safety chain system is used and that all local laws are observed.

o OK FOR AUTOMATIC OR MANUAL TRANSAXLE EQUIPPED VEHICLE WITH NO DAMAGE

HTB208

- o If the car is being towed with the rear wheels on the ground, be sure the parking brake is released.
- o If the car is being towed with the front wheels on the ground, be sure that the transaxle is in neutral. Also, be sure that the ignition key is in the "ACC" position. This is necessary to prevent damage to the steering lock mechanism, which is not designed to hold the front wheels straight while the car is being towed.
- o If any of the loaded wheels or suspension components are damaged, a towing dolly must be used.

**CAUTION:**

**When towing the vehicle with the rear wheels on the ground, it should be towed with wheel lift type truck. Otherwise, this can cause serious damage to the front suspension parts.**

D080C02A-GAT

## Towing a Car With Automatic Transaxle

o NOT OK FOR AUTOMATIC TRANSAXLE EQUIPPED VEHICLE
o OK FOR MANUAL TRANSAXLE

HTB209

**CAUTION:**

**A car with an automatic transaxle should never be towed from the rear with the front wheels on the ground. This can cause serious damage to the transaxle. If the car must be towed from the rear, a towing dolly must be used under the front wheels.**

If the car is being towed with the rear wheels on the ground, be sure the parking brake is released.

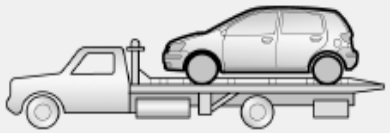

o OK FOR AUTOMATIC OR MANUAL TRANSAXLE EQUIPPED VEHICLE

HTB210

**NOTE:**

**Before towing, check the level of the transaxle fluid. If it is below the "HOT" range on the dipstick, add fluid. If you cannot add fluid, a towing dolly must be used.**

D080D01TB-AAT

## EMERGENCY TOWING

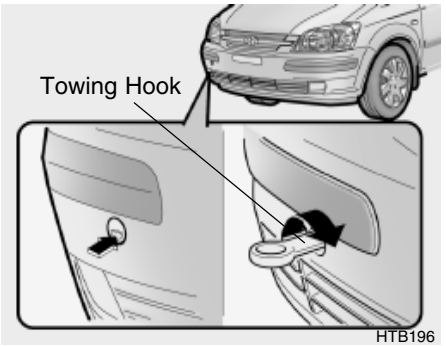


HTB196

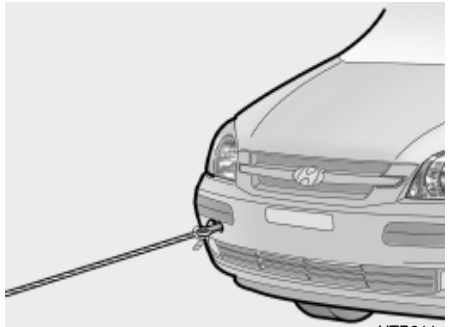

HTB211

For emergency towing when no commercial tow vehicle is available. Do not attempt to tow your vehicle in this manner on any unpaved surface. This could result in serious damage to your car.

Nor should towing be attempted if the wheels, drive train, axles, steering or brakes are damaged. Before towing, be sure the transaxle is in neutral and the key is in "ACC" (with the engine off) or in the "ON" position (with the engine running). A driver must be in the towed car to steer it and operate the brakes.

(1)Open the towing cover to push it with your finger.

(2)To mount the towing hook, rotate it clockwise.

**CAUTION**

**It should be tightened firmly with your fingers until there is no more play in the towing hole. Towing hook is located in the jack case on the spare tire.**

(3)Attach a tow cable, chain or strap to one of the tie-down hooks under the front of your car.

**CAUTION:**

**If the car is being towed with all four wheels on the ground, it can be towed only from the front. Be sure that the transaxle is in neutral. Do not tow at speeds greater than 50 km/h (30 mph) and for more than 25 km (15 miles).**
**Be sure the steering is unlocked by placing the key in the "ACC" position. A driver must be in the towed vehicle to operate the steering and brakes.**

D120A01A-GAT

## IF YOU LOSE YOUR KEYS

If you lose your keys, many Hyundai dealers can make you a new key if you have your key number.
If you lock the keys inside your car and you cannot obtain a new key, many Hyundai dealers can use special tools to open the door for you.

Information about the key of immobilizer system (if installed) will be found on page 1-5.

# 4. CORROSION PREVENTION & APPEARANCE CARE

Corrosion protection ..... 4-2
To help prevent corrosion ..... 4-2
Washing and waxing ..... 4-3
Cleaning the interior ..... 4-5

E010A01A-AAT

# CORROSION PROTECTION

## Protecting Your Hyundai from Corrosion:

By using the most advanced design and construction practices to combat corrosion, Hyundai produces cars of the highest quality. However, this is only part of the job. To achieve the long-term corrosion resistance your Hyundai can deliver, the owner's co-operation and assistance is also required.

E010B01A-AAT

## Common Causes of Corrosion

The most common causes of corrosion on your car are:

- o Road salt, dirt and moisture that is allowed to accumulate underneath the car.
- o Removal of paint or protective coatings by stones, gravel, abrasion or minor scrapes and dents which leave unprotected metal exposed to corrosion.

E010C01A-AAT

## High-Corrosion Areas

If you live in an area where your car is regularly exposed to corrosive materials, corrosion protection is particularly important. Some of the common causes of accelerated corrosion are road salts, dust control chemicals, ocean air and industrial pollution.

E010D01A-AAT

## Moisture Breeds Corrosion

Moisture creates the conditions in which corrosion is most likely to occur. For example, corrosion is accelerated by high humidity, particularly when temperatures are just above freezing. In such conditions, the corrosive material is kept in contact with the car surfaces by moisture that is slow to evaporate.

Mud is particularly corrosive because it is slow to dry and holds moisture in contact with the vehicle. Although the mud appears to be dry, it can still retain the moisture and promote corrosion.
High temperatures can also accelerate corrosion of parts that are not properly ventilated so the moisture can be dispersed. For all these reasons, it is particularly important to keep your car clean and free of mud or accumulations of other materials. This applies not only to the visible surfaces but particularly to the underside of the car.

E020A01A-AAT

# TO HELP PREVENT CORROSION

You can help prevent corrosion from getting started by observing the following:

E020B01A-AAT
## Keep Your Car Clean

The best way to prevent corrosion is to keep your car clean and free of corrosive materials. Attention to the underside of the car is particularly important.

- o If you live in a high-corrosion area — where road salts are used, near the ocean, areas with industrial pollution, acid rain, etc.—, you should take extra care to prevent corrosion. In winter, hose off the underside of your car at least once a month and be sure to clean the underside thoroughly when winter is over.
- o When cleaning underneath the car, give particular attention to the components under the fenders and other areas that are hidden from view. Do a thorough job; just dampening the accumulated mud rather than washing it away will accelerate corrosion rather than prevent it. Water under high pressure and steam are particularly effective in removing accumulated mud and corrosive materials.
- o When cleaning lower door panels, rocker panels and frame members, be sure that drain holes are kept open so that moisture can escape and not be trapped inside to accelerate corrosion.

E020C01A-AAT
## Keep Your Garage Dry

Don't park your car in a damp, poorly ventilated garage. This creates a favorable environment for corrosion. This is particularly true if you wash your car in the garage or drive it into the garage when it is still wet or covered with snow, ice or mud. Even a heated garage can contribute to corrosion unless it is well ventilated so moisture is dispersed.

E020D01A-AAT
## Keep Paint and Trim in Good Condition

Scratches or chips in the finish should be covered with "touch-up" paint as soon as possible to reduce the possibility of corrosion. If bare metal is showing through, the attention of a qualified body and paint shop is recommended.

E020E01A-AAT
## Don't Neglect the Interior

Moisture can collect under the floor mats and carpeting to cause corrosion. Check under the mats periodically to be sure the carpeting is dry. Use particular care if you carry fertilizers, cleaning materials or chemicals in the car.
These should be carried only in proper containers and any spills or leaks should be cleaned up, flushed with clear water and thoroughly dried.

E030A01A-AAT
# WASHING AND WAXING
## Washing Your Hyundai

Never wash your car when the surface is hot from being in the sun. Always wash your car in the shade.

Wash your car frequently. Dirt is abrasive and can scratch the paint if it is not removed. Air pollution or acid rain may damage the paint and trim through chemical action if pollutants are allowed to remain in contact with the surface. If you live near the ocean or in an area where road salts or dust con-

trol chemicals are used, you should pay particular attention to the underside of the car. Start by rinsing the car to remove dust and loose dirt. In winter, or if you have driven through mud or muddy water, be sure to thoroughly clean the underside as well. Use a hard direct stream of water to remove accumulations of mud or corrosive materials. Use a good quality car-washing solution and follow the manufacturer's directions on the package. These are available at your Hyundai dealer or auto parts outlet. Don't use strong household detergents, gasoline, strong solvents or abrasive cleaning powders as these may damage the finish.

Use a clean sponge or cloth, rinse it frequently and don't damage the finish by rubbing too hard. For stubborn spots, dampen them frequently and remove them a little at a time.

To clean whitewall tires, use a stiff brush or soapy steel-wool scouring pad.

To clean plastic wheel covers, use a clean sponge or soft cloth and water.

To clean cast aluminum alloy wheels, use a mild soap or neutral detergent. Do not use abrasive cleaners. Protect the bare-metal surfaces by cleaning, polishing and waxing. Because aluminum is subject to corrosion, be sure to give aluminum alloy wheels special attention in winter. If you drive on salted roads, clean the wheels thoroughly afterwards.

After washing, be sure to rinse thoroughly. If soapy water dries on the finish, streaking will result.

When the weather is warm and the humidity low, you may find it necessary to rinse each section immediately after washing to avoid streaking.

After rinsing, dry the car using a damp chamois or soft, absorbent cloth. The reason for drying the car is to remove water from the car so it will dry without water spots. Don't rub, this can damage the finish.

If you find any nicks or scratches in the paint, use touch-up paint to cover them to prevent corrosion. To protect the paintwork of the car against corrosion, you must clean your Hyundai (at least once a month). Give special attention to the removal of salt, mud and other substances on the underside of the splashboards of the car. Make sure that the outlets and the underside of the doors are open. Paint damage can be caused by small accumulation of tar, industrial precipitation, tree resin, insects and bird droppings, when not removed immediately. If water alone is not strong enough to remove the accumulated dirt, use a mild car washing solution. Be sure to rinse the surface after washing to remove the solution. Never allow the solution to dry on the painted surfaces.

E030B01A-AAT
## Spot Cleaning

Don't use gasoline, strong solvents or corrosive cleaning agents. These can damage the finish of the car. To remove road tar, use turpentine on a clean, soft cloth or commercially available bug and tar remover. Be gentle. To remove dead insects or tree sap, use warm water and mild soap or car-washing solution. Soak the spot and rub gently. If the paint has lost its luster, use a commercial car-cleaning polish.

E030C01A-AAT
## Polishing and Waxing

Always wash and dry the car before polishing or waxing or using a combination cleaner and wax. Use a good quality commercial product and follow the manufacturer's directions on the container. Polish and wax the bright trim pieces as well as the paint.

E030D01A-AAT
## When to Wax Again

You should polish and wax the car again when water no longer beads on a clean surface but spreads out over a larger area.

E030E01A-AAT
## Maintaining Bumpers

Special precautions must be observed to preserve the appearance of the bumpers on your Hyundai. They are:

- o Be careful not to spill battery electrolyte or hydraulic brake fluid on the bumpers. If you do, wash it off immediately with clear water.
- o Be gentle when cleaning the bumper surfaces. They are made of soft plastic and the surface can be damaged if mistreated. Do not use abrasive cleaners. Use warm water and mild soap or car-washing solution.
- o Do not expose the bumpers to high temperatures. For example, if you have your car repainted, do not leave the bumpers on the car if the car is going to be placed in a high-temperature paint booth.

E040A01A-AAT
## CLEANING THE INTERIOR
## To Clean the Vinyl Upholstery

To clean the vinyl upholstery, first remove loose dirt and dust with a vacuum cleaner. Then apply a solution of mild soap or detergent and water using a clean sponge or soft cloth. Allow this to stay on the surface to loosen the dirt, then wipe with a clean damp sponge or cloth. If all the dirt stains are not removed, repeat this procedure until the upholstery is clean. Do not use gasoline, solvent, paint thinner or other strong cleaners.

E040B01A-AAT
## To Clean the Leather Upholstery (If installed)

In the normal course of use, leather upholstered surfaces will, like any material, pick-up dust and dirt. This dust and dirt must be cleaned off or it may work into the surface of the leather, causing damage.

Fine leather needs care, and should be cleaned when necessary. Washing leather thoroughly with soap and water

will keep your leather lustrous, beautiful and ensure you have many years of wear.
Take a piece of cheese cloth and using any mild soap and lukewarm water, work up a good lather. Thoroughly wash the leather. Wipe clean with a slightly damp cloth and dry with soft cloth. Do this as often as the leather becomes soiled.

During tanning operations, sufficient oils are incorporated through processing that none need be applied during the life of the leather. Oil applied to the finished surface will in no way help the leather and may do more harm than good. Varnishes and furniture polishes should never be used under any conditions.

E040C01A-AAT

## Cleaning the Carpets

Use a foam-type carpet cleaner. Cleaners of this type are available in aerosol cans in liquid form or powder. Read the instructions and follow them exactly. Using a vacuum cleaner with the appropriate attachment, remove as much dirt from the carpets as possible. Apply the foam following the manufacturer's directions, then rub in overlapping circles. Do not add water. These cleaners work best when the carpet is kept as dry as possible.

E040D01A-AAT

## Cleaning the Seat Belts

To clean the seat belts, use a cloth or sponge with mild soap or detergent and warm water. Do not use strong detergents, dye, bleach or abrasive materials on the seat belts as this may weaken the fabric.
While cleaning the belts, inspect them for excessive wear, cuts, fraying or other signs of damage and replace them if necessary.

E040E01A-AAT

## Cleaning the Windows

You may use any household window cleaner on the windows. However, when cleaning the inside of the rear window be careful not to damage the rear window defroster wiring.

E050A01A-AAT

## Any Questions?

If you have any questions about the care of your car, consult your Hyundai dealer.

# 5. VEHICLE MAINTENANCE REQUIREMENTS

Maintenance intervals ..... 5-2
Scheduled maintenance ..... 5-4
Maintenance under severe usage conditions ..... 5-7
Explanation of scheduled maintenance items ..... 5-8

F010A01A-GAT

# MAINTENANCE INTERVALS

## Service Requirements

To assure that you receive the greatest number of kilometers of satisfying operation from your Hyundai, certain maintenance procedures must be performed. Although careful design and engineering have reduced these to a minimum, those that are required are of the utmost importance.

It is your responsibility to have these maintenance procedures performed to comply with the terms of the warranties covering your new Hyundai. The Service Passport supplied with your new vehicle provides further information about these warranties.

F010B01A-AAT

## Maintenance Requirements

The maintenance required for your Hyundai can be divided into three main areas:

- o Specified scheduled procedures
- o General checks
- o Do-it-yourself maintenance

F010C01A-GAT

## Specified Scheduled Procedures

These are the procedures such as inspections, adjustments and replacements that are listed in the maintenance charts starting on page 5-4. These procedures must be performed at the intervals shown in the maintenance schedule to assure that your warranty remains in effect. Although it is strongly recommended that they be performed by the factory-trained or distributor-trained technicians at your Hyundai dealer, these procedures may be performed at any qualified service facility.

It is suggested that genuine Hyundai service parts be used for any required repairs or replacements. Other parts of equivalent quality such as engine oil, engine coolant, manual or auto transaxle oil, brake fluid and so on which are not supplied by Hyundai Motor Company or its distributor may be used without affecting your warranty coverage but you should always be sure these are equivalent to the quality of the original Hyundai parts. Your Service Passport provides further information about your warranty coverage.

F010D01A-GAT

## General Checks

These are the regular checks you should perform when you drive your Hyundai or you fill the fuel tank. A list of these items will be found on page 6-6.

F010E01A-AAT

## Do-It-Yourself Maintenance

If you are mechanically inclined, own a few tools that are required and want to take the time to do so, you can inspect and service a number of items. For more information about doing it yourself, see Section 6.

F010F01A-AAT

## A Few Tips

- o Whenever you have your Hyundai serviced, keep copies of the service records in your glovebox. This will help ensure that you can document that the required procedures have been performed to keep your warranties in effect. This is especially important when service is not performed by an authorized Hyundai dealer.
- o If you choose to do your own maintenance and repairs, you may find it helpful to have an official Hyundai Shop Manual. A copy of this publication may be purchased at your Hyundai dealer's parts department.

F020A01Y-GAT

## SCHEDULED MAINTENANCE REQUIREMENTS

Inspection should be performed any time a malfunction is experienced or suspected. Receipts for all emission control system services should be retained to demonstrate compliance with conditions of the emissions system warranty.

For severe usage maintenance requirements, see page 5-7 of this section.

F030A01A-GAT

## SCHEDULED MAINTENANCE

The following maintenance services must be performed to assure good vehicle control and performance. Keep receipts for all vehicle services to protect your warranty.
Where both mileage and time are shown, the frequency of service is determined by whichever occurs first.

F030B01TB-GAT

R : Replace I : Inspect and, after inspection, clean, adjust, repair or replace if necessary

| NO. | DESCRIPTION | KILOMETERS X 1000 | 15 | 30 | 45 | 60 | 75 | 90 | 105 | 120 |
|---|---|---|---|---|---|---|---|---|---|---|
| | | MONTHS | 12 | 24 | 36 | 48 | 60 | 72 | 84 | 96 |
| | ENGINE CONTROL SYSTEM MAINTENANCE (GASOLINE) | | | | | | | | | |
| 1 | ENGINE OIL & FILTER (SG OR ABOVE) | See Note (1) | R | R | R | R | R | R | R | R |
| 2 | DRIVE BELT (WATER PUMP, ALTERNATOR & A/CON) | | | I | | I | | I | | I |
| 3 | FUEL FILTER (MFI) | | | | | R | | | | R |
| 4 | FUEL LINES, FUEL HOSES & CONNECTIONS | | I | I | I | I | I | I | I | I |
| 5 | TIMING BELT | | | | | I | | R | | |
| 6 | VAPOR HOSE & FUEL FILLER CAP | | | I | | I | | I | | I |
| 7 | VACUUM CRANKCASE VENTILATION HOSES | | | I | | I | | I | | I |
| 8 | AIR CLEANER FILTER | | I | R | I | R | I | R | I | R |
| 9 | SPARK PLUGS | | See Note (2) | | | | | | | |

Note : (1) SF OR LOWER : EVERY 10,000 KM OR 6 MONTHS : "R"
(2) FOR EVERY 40,000KM: "R"

F030D02B-GAT

R :Replace I : Inspect and, after Inspection, clean, adjust, repair or replace if necessary.

| NO. | DESCRIPTION | | KILOMETERS X 1000 | 15 | 30 | 45 | 60 | 75 | 90 | 105 | 120 |
|---|---|---|---|---|---|---|---|---|---|---|---|
| | | | MONTHS | 12 | 24 | 36 | 48 | 60 | 72 | 84 | 96 |
| | ENGINE CONTROL SYSTEM MAINTENANCE (DIESEL) | | | | | | | | | | |
| 1 | ENGINE OIL & FILTER (API Class: CF-4 or ABOVE) See Note(1) (ACEA Class: B4 or ABOVE) | | | R | R | R | R | R | R | R | R |
| 2 | AIR CLEANER FILTER | | | I | I | R | I | I | R | I | I |
| 3 | FUEL FILTER CARTRIDGE | European Community Only | | | R | | R | | R | | R |
| | | Except European Community | | See Note (2) | | | | | | | |
| 4 | TIMING BELT | | | | | | | | | | R |
| 5 | DRIVE BELT (FOR P/STR'G PUMP, ALTERNATOR & A/CON) | | | | I | | I | | R | | I |
| 6 | ALTERNATOR VACUUM PUMP | | | I | I | I | I | I | I | I | I |
| 7 | ALTERNATOR OIL HOSE & VACUUM HOSE | | | I | I | I | I | I | I | I | I |
| 8 | FUEL LINES, FUEL HOSE & CONNECTIONS | | | I | I | I | I | I | I | I | I |

Note : (1) EVERY 500 KM OR BEFORE STARTING A LONG TRIP : "I"
(2) INSPECT EVERY 7,500KM OR 6 MONTHS AND REPLACE EVERY 15,000KM OR 12 MONTHS.
WHEN REPLACING THE FUEL FILTER CARTRIDGE, USE HYUNDAI GENUINE PARTS.

F030C03TB-GAT

R : Replace I : Inspect and, after inspection, clean, adjust, repair or replace if necessary

| NO. | DESCRIPTION | | KILOMETERS X 1000 | 15 | 30 | 45 | 60 | 75 | 90 | 105 | 120 |
|---|---|---|---|---|---|---|---|---|---|---|---|
| | | | MONTHS | 12 | 24 | 36 | 48 | 60 | 72 | 84 | 96 |
| | GENERAL MAINTENANCE | | | | | | | | | | |
| 1 | COOLING SYSTEM | | | I | I | I | I | I | I | I | I |
| 2 | COOLANT | | | See Note (2) | | | | | | | |
| 3 | MANUAL TRANSAXLE OIL | | | I | I | I | I | I | I | I | I |
| 4 | AUTOMATIC TRANSAXLE FLUID | European Community Only | | I | I | I | I | I | R | I | I |
| | | Except European Community | | I | I | I | I | I | I | I | I |
| 5 | BRAKE HOSES AND LINES | | | I | I | I | I | I | I | I | I |
| 6 | BRAKE FLUID | | | | I | | I | | I | | I |
| 7 | REAR BRAKE DRUMS/LININGS, PARKING BRAKE | | | | I | | I | | I | | I |
| 8 | BRAKE PADS, CALIPERS AND ROTORS | | | I | I | I | I | I | I | I | I |
| 9 | EXHAUST PIPE AND MUFFLER | | | I | I | I | I | I | I | I | I |
| 10 | SUSPENSION MOUNTING BOLTS | | | I | I | I | I | I | I | I | I |
| 11 | STEERING GEAR BOX, LINKAGE & BOOTS/LOWER ARM BALL JOINT | | | I | I | I | I | I | I | I | I |
| 12 | POWER STEERING PUMP, BELT AND HOSES | | | I | I | I | I | I | I | I | I |
| 13 | DRIVE SHAFTS AND BOOTS | | | | I | | I | | I | | I |
| 14 | AIR CONDITIONING REFRIGERANT | | | I | I | I | I | I | I | I | I |
| 15 | AIR FILTER (FOR EVAPORATOR AND BLOWER UNIT) | | | See Note (3) | | | | | | | |

Note : (2) FOR THE FIRST TIME, REPLACE THE COOLANT 100,000 KM OR 60 MONTHS.
AFTER THAT, REPLACE IT EVERY 45,000 KM OR 24 MONTHS.
(3) FOR EVERY 12 MONTHS OR 20,000 KM, WHICHEVER OCCURS FIRST : "R"

F040A06A-GAT

## MAINTENANCE UNDER SEVERE USAGE CONDITIONS

The following items must be serviced more frequently on cars normally used under severe driving conditions. Refer to the chart below for the appropriate maintenance intervals.

R : Replace I : Inspect and, after inspection, clean, adjust, repair or replace if necessary

| MAINTENANCE ITEM | | MAINTENANCE OPERATION | MAINTENANCE INTERVALS | DRIVING CONDITION |
|---|---|---|---|---|
| ENGINE OIL AND FILTER | | R | EVERY 7,500 KM OR 6 MONTHS | A, B, C, F, H |
| AIR CLEANER FILTER | | R | MORE FREQUENTLY | C, E |
| SPARK PLUGS | | R | MORE FREQUENTLY | B, H |
| TIMING BELT | | R | EVERY 60,000 KM OR 48 MONTHS | D, E, F, G |
| BRAKE PADS, CALIPERS AND ROTORS | | I | MORE FREQUENTLY | C, D, G, H |
| REAR BRAKE DRUMS/LININGS/PADS, PARKING BRAKE | | I | MORE FREQUENTLY | C, D, G, H |
| STEERING GEAR BOX, LINKAGE & BOOTS/LOWER ARM BALL JOINT | | I | MORE FREQUENTLY | C, D, E, F |
| DRIVESHAFTS AND BOOTS | | I | EVERY 15,000 KM OR 12 MONTHS | C, D, E, F |
| MANUAL TRANSAXLE OIL | | R | EVERY 100,000 KM | A, C, D, E, F, G, H, I, J |
| AUTOMATIC TRANSAXLE FLUID | European community Only | R | EVERY 45,000 KM | A, C, E, F, G, H, I |
| | Except European community | | EVERY 40,000 KM | |
| AIR FILTER (For Evaporator and Blower unit) | | R | MORE FREQUENTLY | C, E |

### SEVERE DRIVING CONDITIONS

A - Repeated short distance driving
B - Extensive idling
C - Driving in dusty, rough roads
D - Driving in areas using salt or other corrosive materials or in very cold weather
E - Driving in sandy areas
F - More than 50% driving in heavy city traffic during hot weather above 32°C (90°F)
G - Driving in mountainous areas
H - Towing a trailer
I - Driving for patrol car, taxi, commercial car or vehicle towing
J - Driving over 170 Km/h (100 MPH)

F060A01A-AAT

## EXPLANATION OF SCHEDULED MAINTENANCE ITEMS

F060M01A-AAT

### o Engine Oil and Filter

The engine oil and filter should be changed at the intervals specified in the maintenance schedule. If the car is being driven in severe conditions, more frequent oil and filter changes are required.

F060B01A-AAT

### o Drive Belts

Inspect all drive belts for evidence of cuts, cracks, excessive wear or oil and replace if necessary. Drive belts should be checked periodically for proper tension and adjusted as necessary.

F060C01A-AAT

### o Fuel Filter

A clogged filter can limit the speed at which the vehicle may be driven, damage the emission system and cause hard starting. If an excessive amount of foreign matter accumulates in the fuel tank, the filter may require replacement more frequently.
After installing a new filter, run the engine for several minutes, and check for leaks at the connections. Fuel filters should be installed by trained technicians.

F060D01TB-AAT

### o Fuel Lines, Fuel Hoses and Connections

Check the fuel lines, fuel hoses and connections for leakage and damage. Have a trained technician replace any damaged or leaking parts immediately.

**! WARNING (Diesel only):**
**Never work on injection system with engine running or within 30 seconds after shutting off engine. High pressure pump, rail, injectors and high pressure pipes are subjected to high pressure even after the engine has been switched off. The fuel jet produced by fuel leaks may cause serious injury, if it contacts with the body. People using pacemakers should not move closer than 30cm to the ECU or wiring harness within the engine room with the engine running, since the high currents in the Common Rail system produce considerable magnetic fields.**

F060E01A-AAT

### o Timing Belt

Inspect all parts related to the timing belt for damage and deformation. Replace any damaged parts immediately.

F060G01A-AAT

### o Vapor Hose and Fuel Filler Cap

The vapor hose and fuel filler cap should be inspected at those intervals specified in the maintenance schedule. Make sure that a new vapor hose or fuel filler cap is correctly replaced.

F060F01A-AAT

### o Vacuum, Crankcase Ventilation Hoses

Inspect the surface of hoses for evidence of heat and/or mechanical damage. Hard and brittle rubber, cracking, tears, cuts, abrasions, and excessive swelling indicate deterioration. Particular attention should be paid to examine those hose surfaces nearest to high heat sources, such as the exhaust manifold.
Inspect the hose routing to assure that the hoses do not come in contact with any heat source, sharp edges or moving component which might cause heat damage or mechanical wear. Inspect all hose connections, such as clamps and couplings, to make sure they are secure, and that no leaks are present. Hoses should be replaced immediately if there is any evidence of deterioration or damage.

F060H01A-AAT

### o Air Cleaner Filter

A Genuine Hyundai air cleaner filter is recommended when filter is replaced.

F060J01A-AAT

### o Spark Plugs

Make sure to install new spark plugs of the correct heat range.

F070B01A-GAT

### o Cooling System

Check the cooling system part, such as radiator, coolant reservoir, hoses and connections for leakage and damage. Replace any damaged parts.

F070C01A-AAT

### o Engine Coolant

The coolant should be changed at the intervals specified in the maintenance schedule.

F070D01A-AAT

### o Manual Transaxle Oil

Inspect the manual transaxle oil according to the maintenance schedule.

**NOTE:**
**If the oil level is low, check for possible leaks before adding oil. Do not overfill.**

F070E03A-AAT

### o Automatic Transaxle Fluid and Filter

The fluid level should be in the "HOT" range of the dipstick, after the engine and transaxle are at normal operating temperature. Check the automatic transaxle fluid level with the engine running and the transaxle in neutral, with the parking brake properly applied. Use DIAMOND ATF SP-III or SK ATF SP-III when adding or changing fluid.

F070F01A-AAT

### o Brake Hoses and Lines

Visually check for proper installation, chafing, cracks, deterioration and any leakage. Replace any deteriorated or damaged parts immediately.

F070G02A-AAT

### o Brake Fluid

Check brake fluid level in the brake fluid reservoir. The level should be between "MIN" and "MAX" marks on the side of the reservoir. Use only hydraulic brake fluid conforming to DOT 3 or DOT 4.

F070H01A-AAT

### o Rear Brake Drums/Linings Parking Brake

Check the rear brake drums and linings for scoring, burning, leaking fluid, broken parts, and excessive wear. Inspect the parking brake system including the parking brake lever and cables. For detailed service procedures, refer to the Shop Manual.

F070J01A-AAT

### o Brake Pads, Calipers and Rotors

Check the pads for excessive wear, discs for run out and wear, and calipers for fluid leakage.

F070K01A-AAT

### o Exhaust Pipe and Muffler

Visually inspect the exhaust pipes, muffler and hangers for cracks, deterioration, or damage. Start the engine and listen carefully for any exhaust gas leakage. Tighten connections or replace parts as necessary.

F070L01A-AAT

### o Suspension Mounting Bolts

Check the suspension connections for looseness or damage. Retighten to the specified torque.

F070M01A-AAT

### o Steering Gear Box, Linkage & Boots/Lower arm Ball Joint

With the vehicle stopped and engine off, check for excessive free-play in the steering wheel. Check the linkage for bends or damage. Check the dust boots and ball joints for deterioration, cracks, or damage. Replace any damaged parts.

F070N01A-AAT

### o Power Steering Pump, Belt and Hoses

Check the power steering pump and hoses for leakage and damage. Replace any damaged or leaking parts immediately. Inspect the power steering belt for evidence of cuts, cracks, excessive wear, oiliness and proper tension. Replace or adjust it if necessary.

F070P01A-AAT

## o Driveshafts and Boots

Check the drive shafts, boots and clamps for cracks, deterioration, or damage. Replace any damaged parts and, if necessary, repack the grease.

F070Q01A-AAT

## o Air Conditioning Refrigerant

Check the air conditioning lines and connections for leakage and damage. Check air conditioning performance according to the relevant shop manual if necessary.

# 6. Do-It-Yourself Maintenance

Engine compartment ..... 6-2
General checks ..... 6-6
Checking the engine oil ..... 6-7
Changing the oil and filter ..... 6-9
Checking and changing the engine coolant ..... 6-13
Spark plugs ..... 6-15
Changing the air cleaner filter ..... 6-17
Checking the transaxle oil (Manual) ..... 6-18
Checking the transaxle fluid (Automatic) ..... 6-19
Checking the brakes ..... 6-21
Air conditioning care ..... 6-22
Checking drive belts ..... 6-25
Checking and replacing fuses ..... 6-26
Power steering fluid level ..... 6-30
Replacement of bulbs ..... 6-32
Fuse panel description ..... 6-38

G010A01TB-GAT

## ENGINE COMPARTMENT (1.1 SOHC)

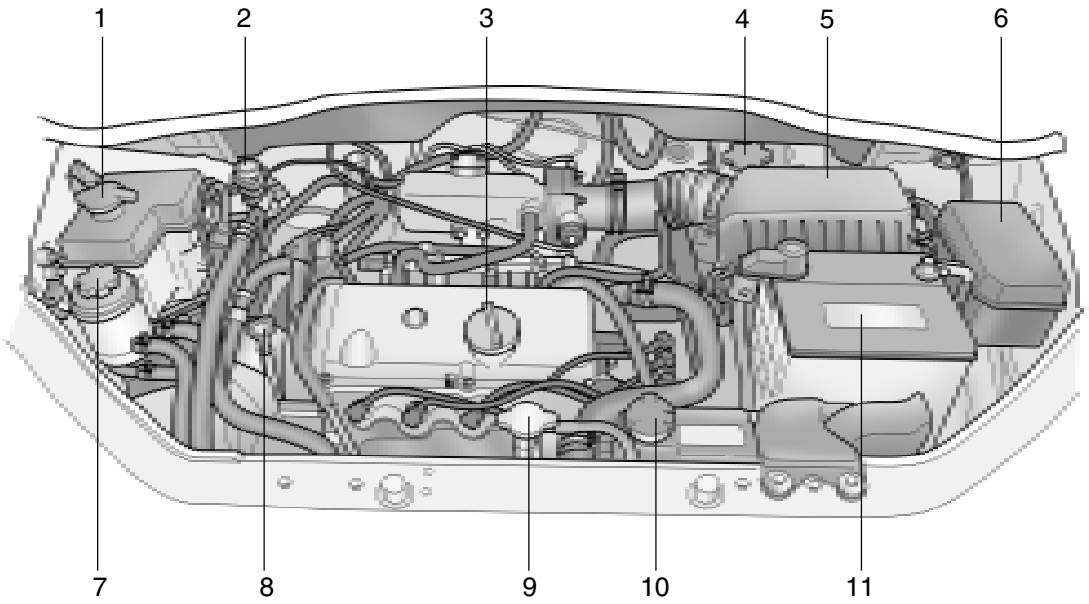


1. Windshield washer fluid reservoir cap
2. Auto fuel cut switch (If installed)
3. Engine oil filler cap
4. Brake fluid and clutch fluid reservoir
5. Air filter element
6. Relay box
7. Power steering fluid reservoir
8. Engine oil level dipstick
9. Radiator cap
10. Engine coolant reservoir
11. Battery

G010B01TB-GAT

## ENGINE COMPARTMENT (1.3 SOHC)

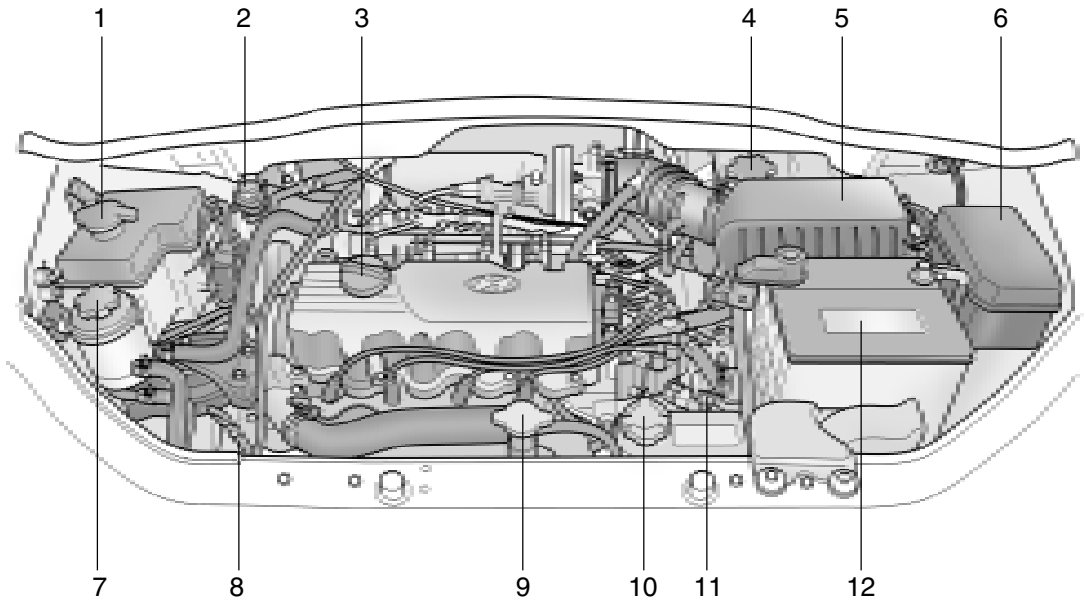


1. Windshield washer fluid reservoir cap
2. Auto fuel cut switch (If installed)
3. Engine oil filler cap
4. Brake fluid and clutch fluid reservoir
5. Air filter element
6. Relay box
7. Power steering fluid reservoir (If installed)
8. Engine oil level dipstick
9. Radiator cap
10. Engine coolant reservoir
11. Automatic transaxle fluid level dipstick (If installed)
12. Battery

G010B01TB-GAT

## ENGINE COMPARTMENT (1.6L DOHC)

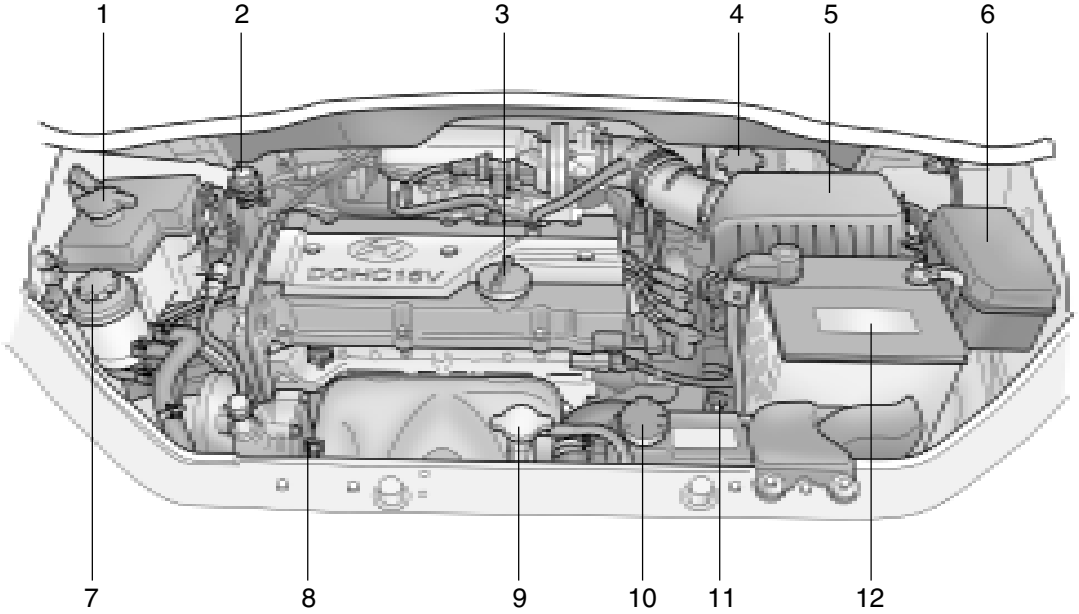


**CAUTION:**
When inspecting or servicing the engine, you should handle tools and other heavy objects carefully so that the plastic rocker cover of the engine is not damaged.

1. Windshield washer fluid reservoir cap
2. Auto fuel cut switch (If installed)
3. Engine oil filler cap
4. Brake fluid and clutch fluid reservoir
5. Air filter element
6. Relay box
7. Power steering fluid reservoir (If installed)
8. Engine oil level dipstick
9. Radiator cap
10. Engine coolant reservoir
11. Automatic transaxle fluid level dipstick (If installed)
12. Battery

G010C01TB-GAT

## ENGINE COMPARTMENT (DIESEL)

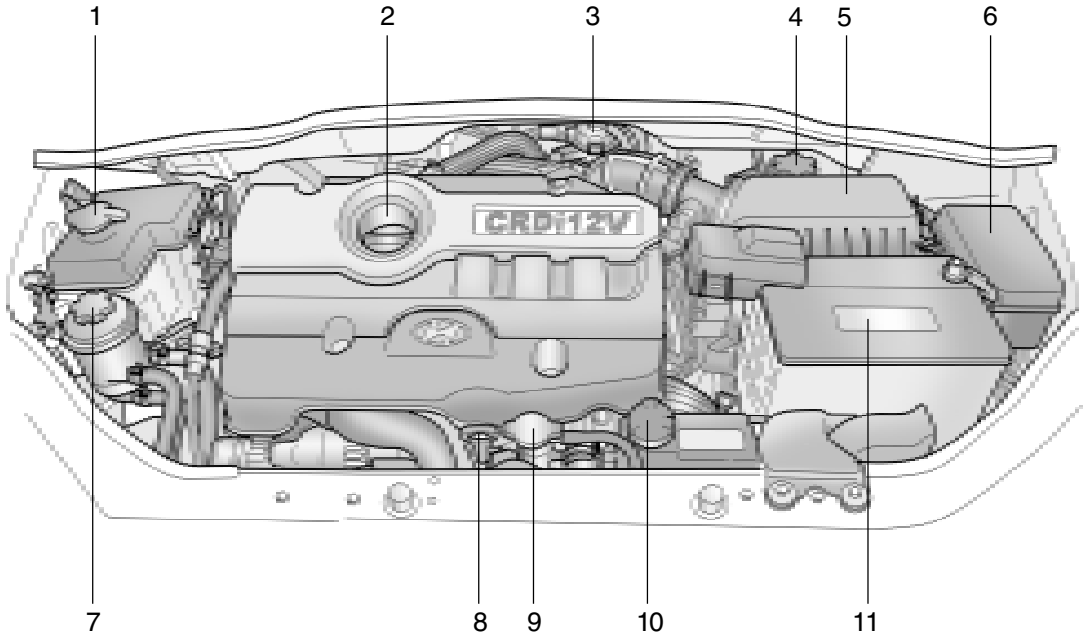


HTB159

**CAUTION:**
When inspecting or servicing the engine, you should handle tools and other heavy objects carefully so that the plastic rocker cover of the engine is not damaged.

1. Windshield washer fluid reservoir cap
2. Engine oil filler cap
3. Fuel filter
4. Brake fluid and clutch fluid reservoir
5. Air filter element
6. Relay box
7. Power steering fluid reservoir
8. Engine oil level dipstick
9. Radiator cap
10. Engine coolant reservoir
11. Battery

G020A01A-AAT

## GENERAL CHECKS

Engine Compartment
The following should be checked regularly:

- o Engine oil level and condition
- o Transaxle fluid level and condition
- o Brake fluid level
- o Clutch fluid level
- o Engine coolant level
- o Windshield washer fluid level
- o Accessory drive belt condition
- o Engine coolant hose condition
- o Fluid leaks (on or below components)
- o Power steering fluid level
- o Battery condition

G020B01A-AAT

## Vehicle Exterior

The following should be checked monthly:

- o Overall appearance and condition
- o Wheel condition and wheel nut torgue
- o Air filter condition
- o Exhaust system condition
- o Light condition and operation
- o Windshield glass condition
- o Wiper blade condition
- o Paint condition and body corrosion
- o Fluid leaks
- o Door and hood lock condition
- o Tire pressure and condition (including spare tire)

G020C01A-AAT

## Vehicle Interior

The following should be checked each time when the vehicle is driven:

- o Lights operation
- o Windshield wiper operation
- o Horn operation
- o Defroster, heater system operation (and air conditioning, if installed)
- o Steering operation and condition
- o Mirror condition and operation
- o Turn signal operation
- o Accelerator pedal operation
- o Brake operation, including parking brake
- o Manual transaxle operation, including clutch operation
- o Automatic transaxle operation, including "Park" mechanism operation
- o Seat control condition and operation
- o Seat belt condition and operation
- o Sunvisor operation

If you notice anything that does not operate correctly or appears to be functioning incorrectly, inspect it carefully and seek assistance from your Hyundai dealer if service is needed.

G030A01FC-GAT

## CHECKING THE ENGINE OIL
## Gasoline Engine
## Recommended Oil

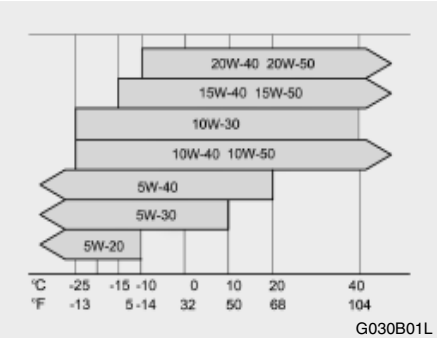


Engine oil is essential to the performance and service of the engine. It is suggested that you check the oil level at least once a week in normal use and more often if you are on a trip or driving in severe conditions.

SH, SG or SG/CD (API) multi-grade and fuel efficient oil is recommended.

**NOTE:**
**SAE 5W-20 is not recommended for sustained high speed vehicle operation.**

G030B02TB-GAT

## CHECKING THE ENGINE OIL
## Diesel Engine
## Recommended Oil

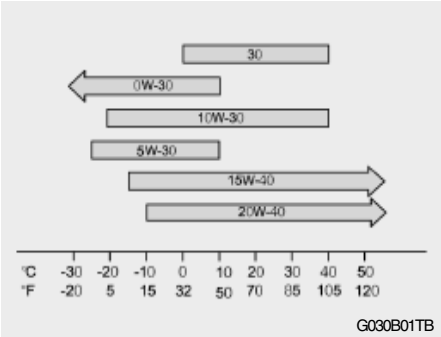


Engine oil is essential to the performance and service of the engine. It is suggested that you check the oil level every 500km or before starting a long trip and more often if you are driving in severe conditions.

The engine oil quality should meet the following classification:

API class: CF-4 or ABOVE
ACEA class: B4 or ABOVE

**NOTE:**
**SAE 0W-30 oil is for extra cold zone and to be restricted by driving condition and dealing area. (Especially, not recommended for sustained high loaded and high speed operation.)**

G030C01FC-GAT

## To Check the Oil Level

Gasoline engine

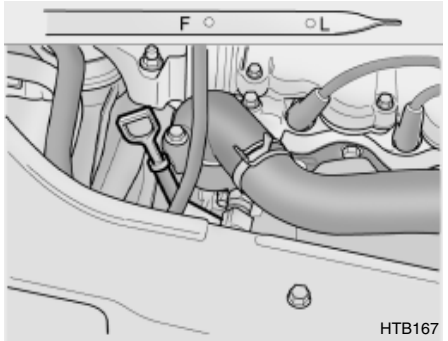

HTB167

Diesel engine

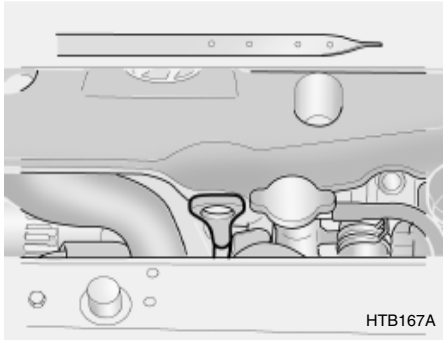
HTB167A

Before checking the oil, warm up the engine to normal operating temperature and be sure your car is parked on level ground. Turn the engine off.

Wait about five minutes (gasoline engine) /Wait about two minutes (diesel engine), then remove the dipstick, wipe it off, fully reinsert the dipstick and withdraw it again. Then note the highest level the oil has reached on the dipstick. It should be between the upper ("FULL") and lower ("LOW") range.

G030D02A-GAT

## Adding Oil

Gasoline engine

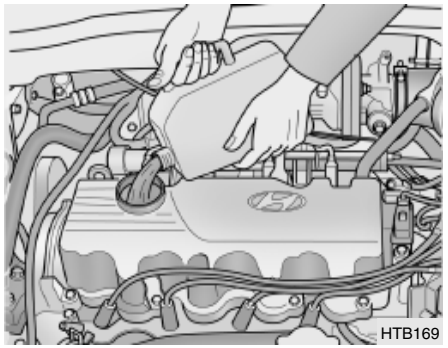
HTB169

Diesel engine

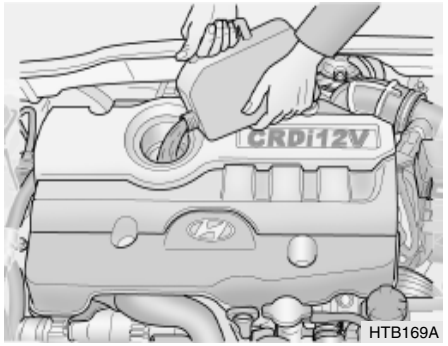

HTB169A

If the oil level is close to or below the "L" mark, add oil until it reaches the "F" mark. To add oil:

1. Remove the oil filler cap by turning it counterclockwise.
2. Add oil, then check the level again. Do not overfill.
3. Replace the cap by turning it clockwise.

The distance between the "F" and "L" marks is equal to about 1 liter(Gasoline Engine)/1.2 liter(Diesel Engine) of oil.

G350A01A-GAT

## ENGINE OIL CONSUMPTION

### Function of Engine Oil

Engine oil has the primary function of lubricating and cooling the inside of the engine.

### Engine oil consumption

It is normal that an engine should consume some engine oil while normal driving. The cause of oil consumption in a normal engine are as follows;

- o Engine oil is used to lubricate pistons, piston rings and cylinders.
  A thin film of oil is left on the cylinder wall when a piston moves downwards in the cylinder. High negative pressure generated during engine operation sucks some of the oil into the combustion chamber.
  This oil with some oil of the cylinder wall is burned by the high temperature combustion gases during the combustion process.
- o The engine oil consumption is strongly effected by the viscosity and quality of oil, engine rpm and driving condition etc. The engine oil is more consumed under severe driving conditions such as high speeds and frequent acceleration and deceleration than normal driving condition.

G040A04A-AAT

## CHANGING THE OIL AND FILTER (Gasoline Engine/ Diesel Engine : Left hand drive type(Except E.C), Right hand drive type)

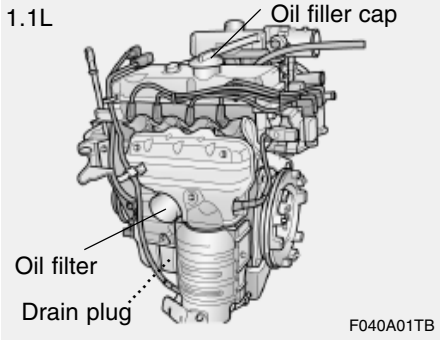


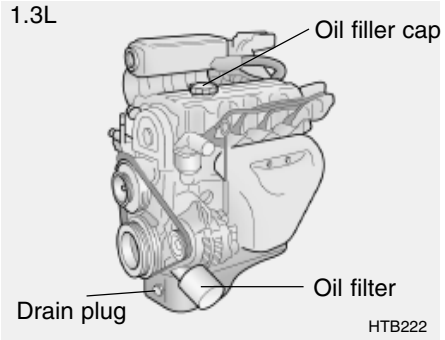

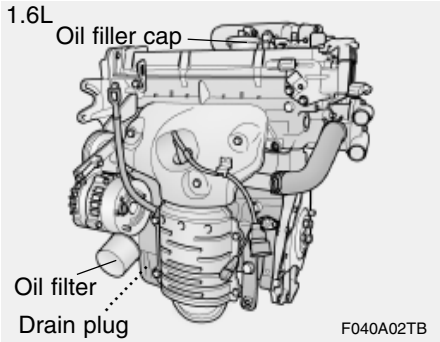


Diesel Engine (LHD(Except E.C), RHD)

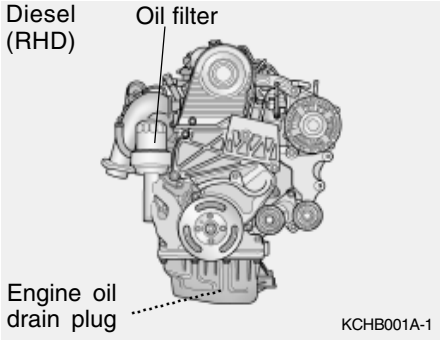


The engine oil and filter should be changed at those intervals specified in the maintenance schedule in Section 5. If the car is being driven in severe conditions, more frequent oil and filter changes are required.

The procedure for changing the oil and filter is as follows:

1. Park the car on level ground and set the parking brake. Start the engine and let it warm up until the needle on the coolant temperature gauge moves above the lowest mark. Turn the engine off and place the gear selector lever in "P" (automatic) or reverse gear (manual transaxle). Set the parking brake.
2. Open the hood and remove the engine oil filler cap.
3. Slide underneath the car and loosen the drain plug by turning it counterclockwise with a wrench of the proper size. Be sure that a drain pan is in position to catch the oil as it drains out, then remove the drain plug.

**WARNING:**
**Be very careful when draining the engine oil as it may be hot enough to burn you!**

4. When the oil has stopped draining, replace the drain plug using a new washer and retighten by turning it clockwise.

   **Tightening torque is: 3.5 ~ 4.5 kgf.m**

5. Remove the oil filter by turning it counterclockwise with a oil filter wrench of the proper size. A certain amount of oil will come out when you remove the filter. So be sure to have your drain pan in place underneath it.
6. Install a new oil filter in accordance with the instructions on the carton or on the filter itself. Do not overtighten.

   **Tightening torque:**
   **Gasoline - 1.2 ~ 1.6 kgf.m**
   **Diesel(LHD(Except E.C), RHD) - 2.3 ~ 2.5 kgf.m**

   Be sure that the mounting surface on the engine is clean and that the old gasket is removed completely. Lubricate the new gasket on the filter with clean engine oil before installation.

7. Refill the crankcase with the recommended engine oil. Refer to the specification in chapter 9 for engine oil capacity.
8. Start the engine and check to be sure no oil is leaking from the drain plug or oil filter.
9. Shut off the engine and recheck the oil level.

**NOTE:**
**Always dispose of used engine oil in an environmentally acceptable manner. It is suggested that it be placed in a sealed container and taken to a service station for reclamation. Do not pour the oil on the ground or put it into the household trash.**

**WARNING:**
**Used motor oil may cause irritation or cancer of the skin if left in contact with the skin for prolonged periods of time. Wash your hands thoroughly with soap and warm water as soon as possible after handling used oil.**

G040B03FC-GAT

## CHANGING THE OIL AND FILTER (Diesel Engine: Left hand drive type (E.C only))

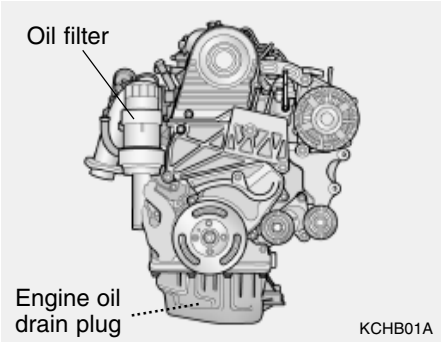


The engine oil and filter should be changed at those intervals specified in the maintenance schedule in Section 5. If the car is being driven in severe conditions, more frequent oil and filter changes are required.

The procedure for changing the oil and filter is as follows:

1. Park the car on level ground and set the parking brake. Start the engine and let it warm up until the needle on the coolant temperature gauge moves above the lowest mark. Turn the engine off and place the gear selector lever in "P" (automatic) or reverse gear (manual transaxle).
2. Open the hood and remove the engine oil filler cap.
3. Slide underneath the car and loosen the oil pan drain plug by turning it counterclockwise oil pan with a wrench of the proper size. Be sure that a drain pan is in position to catch the oil as it drains out, then remove the drain plug.

**WARNING:**
**Be very careful when draining the engine oil as it may be hot enough to burn you!**

4. When the oil has stopped draining, replace the drain plug using a new washer and retighten by turning it clockwise.

   **Oil pan drain plug tightening torque: 3.5 ~ 4.5 kgf.m**

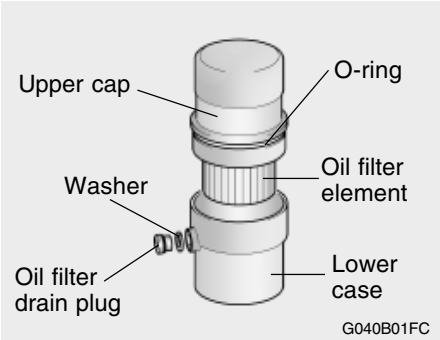


5. Loosen the oil filter drain plug by turning it counterclockwise with a wrench of the proper size and drain out some oil in the oil filter. Be sure that a drain pan is in position to catch the oil.
6. Loosen the oil filter upper cap with a proper tool from the lower case until an O-ring is seen. Then, drain the oil completely.
7. Pull out the oil filter upper cap with element from the lower case.
   Using a clean cloth, remove any dirt or oil accumulated around the lower case.
8. Install a new copper washer of the oil filter drain plug by the side of lower case and retighten by turning it clockwise.

   **Tightening torque : 0.8 ~ 1.0 kgf.m**
9. After mounting a new oil filter element and new O-ring to upper cap, install the upper cap to lower case and retighten by turning it clockwise. Do not over-tighten.

   **Tightening torque : 2.3 ~ 2.5 kgf.m**
10. Refill the crankcase with the recommended engine oil. Refer to the specification in chapter 9 for engine oil capacity.
11. Start the engine and check to be sure no oil is leaking from the drain plug or oil filter.
12. Shut off the engine and recheck the oil level.

**NOTE:**
**It is recommended that the engine oil and filter should be changed by an authorized Hyundai dealer.**

**NOTE:**
**Always dispose of used engine oil in an environmentally acceptable manner. It is suggested that it be placed in a sealed container and taken to a service station for maybe reclaimation. Do not pour the oil on the ground or put it into the household trash.**

**WARNING:**
**Used motor oil may cause irritation or cancer of the skin if left in contact with the skin for prolonged periods of time. Wash your hands thoroughly with soap and warm water as soon as possible after handling used oil.**

G050A01A-AAT

## CHECKING AND CHANGING THE ENGINE COOLANT

**WARNING:**

**Do not remove the radiator cap when the engine is hot. When the engine is hot, the engine coolant is under pressure and may erupt through the opening if the cap is removed. You could be seriously burned if you do not observe this precaution. Do not remove the radiator cap until the radiator is cool to the touch.**

G050B01A-AAT

### Recommended Engine Coolant

Gasoline engine

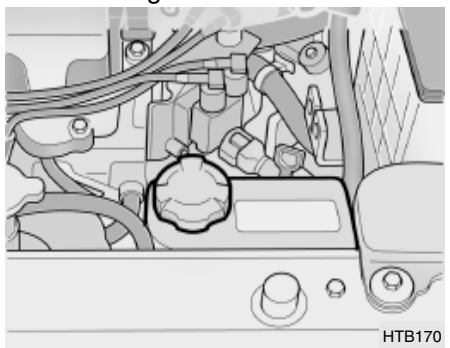


Diesel engine

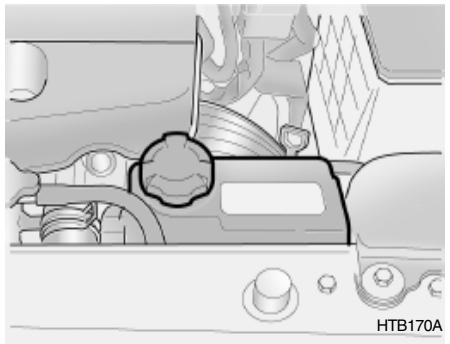


Use a high quality ethylene-glycol coolant in a 50/50 mix with water. The engine coolant should be compatible with aluminum engine parts. Additional corrosion inhibitors or additives should not be used. The cooling system must be maintained with the correct concentration and type of engine coolant to prevent freezing and corrosion. Never allow the concentration of antifreeze to exceed the 60% level or go below the 35% level, or damage to the cooling system may result. For proper concentration when adding or replacing the engine coolant, refer to the following table.

| Ambient temperature °C ( °F) | Engine coolant concentration | |
|---|---|---|
| | Antifreeze solution | Water |
| -15 (5) | 35% | 65% |
| -25 (-13) | 40% | 60% |
| -35 (-31) | 50% | 50% |
| -45 (-49) | 60% | 40% |

G050C01A-GAT

## To Check the Coolant Level

The coolant level can be seen on the side of the plastic coolant reservoir. The level of the coolant should be between the "LOW" and "FULL" lines on the reservoir when the engine is cold. If the level is below the "LOW" mark, add engine coolant to bring it up between "LOW" and "FULL". If the level is low, inspect for coolant leaks and recheck the fluid level frequently. If the level drops again, visit your Hyundai dealer for an inspection and diagnosis of the reason.

G050D02A-AAT

## To Change the Coolant

The coolant should be changed at those intervals specified in the vehicle maintenance schedule in Section 5.

**CAUTION:**
**Engine coolant can damage the finish of your car. If you spill engine coolant on the car, wash it off thoroughly with clean water.**

1. Park the car on level ground, set the parking brake and remove the radiator cap when cool.
2. Be sure your drain receptacle is in place. Open the drain cock on the radiator. Allow all the engine coolant to drain from the cooling system, then securely close the drain cock.
3. Check Section 9 for the capacity of the cooling system in your car. Then, following the manufacturer's directions on the engine coolant container, add the appropriate quantity of coolant to the radiator.

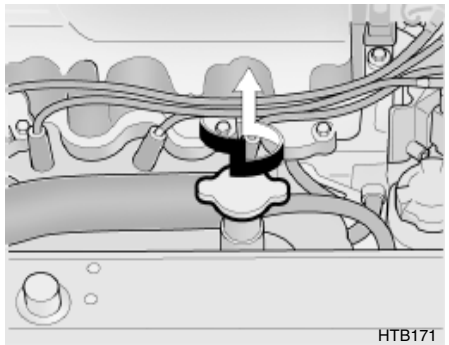


4. Turn the radiator cap counterclockwise without pressing down on it, until it stops. This relieves any pressure remaining in the cooling system. And remove the radiator cap by pushing down and turning counterclockwise.
   Now fill the radiator with clean demineralized or distilled water. Continue to add clean demineralized or distilled water in small quantities until the fluid level stays up in the radiator neck.

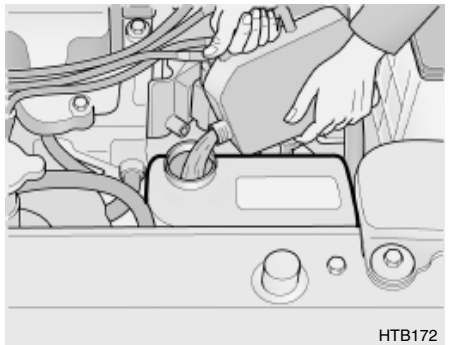


5. Start the engine, top off the radiator with water and then add engine coolant to the reservoir until the level is between "LOW" and "FULL".
6. Replace the radiator and reservoir caps and check to be sure the drain cocks are fully closed and not leaking.

**WARNING:**
**The cooling fan is controlled by engine coolant temperature and may sometimes operate even when the engine is not running. Use extreme caution when working near the blades of the cooling fan so that you are not injured by a rotating fan blade. As the engine coolant temperature decreases, the fan will automatically shut off. This is a normal condition.**

G060B02S-GAT

## REPLACING THE SPARK PLUGS

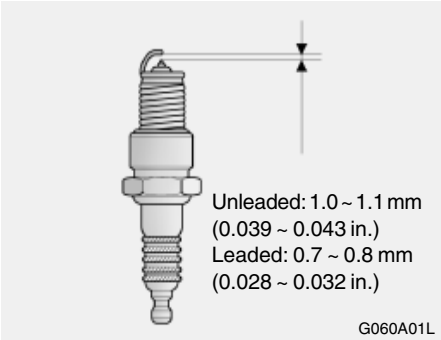


The spark plugs should be changed at the intervals specified in the vehicle maintenances schedule in Section 5 or whenever engine performance indicates they should be changed. Symptoms that suggest poor spark plug performance include engine misfiring under load, loss of fuel economy, poor acceleration, etc. When spark plugs are replaced, always use spark plugs recommended by Hyundai. The use of other spark plugs can result in loss of performance, radio interference or engine damage.

**NOTE:**
**When replacing the spark plugs, always use genuine parts recommended.**

**Recommended Spark Plugs:**

| | Unleaded engine | Leaded engine |
|---|---|---|
| CHAMPION | RC10YC4 | RC10YC |
| NGK | BKR5ES-11 | BKR5ES |

G060C01S-GAT

## Changing the Spark Plugs

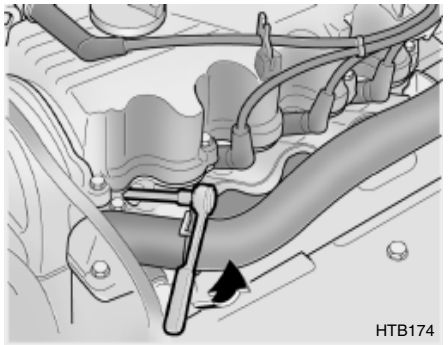


You will find it easier to change spark plugs if the engine is cold. Always change one spark plug at a time. This helps avoid getting the wires mixed up.

1. Remove the center cover on the engine rocker cover. (1.6L only)
2. Using a clean cloth, remove any dirt that has accumulated around the spark plug so it cannot fall into the cylinder when the spark plug is removed.
3. To remove the spark plug cable, pull straight up on the insulated connector, not the cable. Pulling on the cable may damage the carbon core conductor.

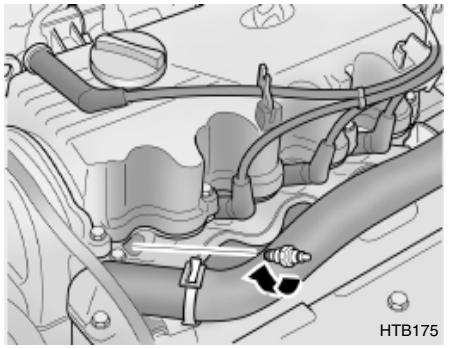


**WARNING:**
**It is recommended that the engine be cool or cold when changing the spark plugs. If the engine is hot, you could burn yourself on the insulated connector, the spark plug or the engine itself.**

4. When preparing to remove the old spark plug, guide the socket down over the spark plug, being careful not to damage the ceramic insulator.
5. To remove the spark plug, turn the wrench handle in a counterclockwise direction.
6. To install the new spark plug, guide the socket down over the spark plug, being careful not to damage the ceramic insulator.

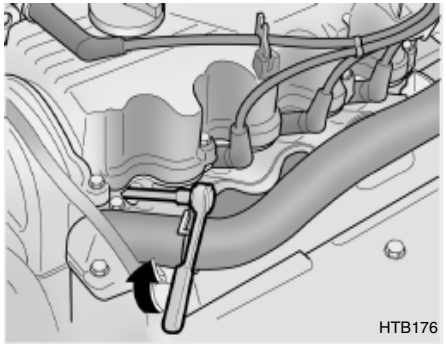


**NOTE:**
**Spark plugs should be tightened firmly. Over-tightening can damage the threads in the aluminum cylinder head. Leaving them too loose can cause the spark plugs to get very hot and possibly result in damage to the engine.**

7. Replace the cable by pushing the insulated connector directly down onto the electrode. Check to be sure it has snapped into place and can't fall off.

G070A01TB-AAT

## CHANGING THE AIR CLEANER FILTER

Gasoline engine

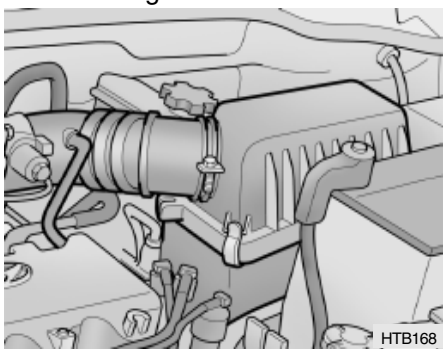


Diesel engine

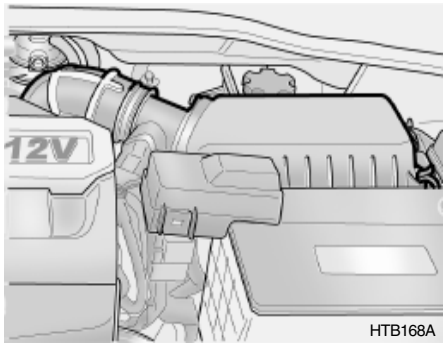


1. Remove the engine cover (If installed)
2. Unsnap the clips around the cover.
3. Lift the cover off.
4. Remove the old filter and replace to the new one. Genuine Hyundai Replacement Parts are recommended.

**CAUTION:**
**Operating your vehicle without a proper air filter in place can result in excessive engine wear.**

G080A02A-AAT

## WINDSHIELD WIPER BLADES

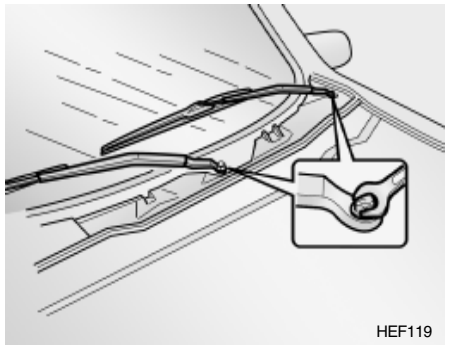


The wiper blades should be carefully inspected from time to time and cleaned to remove accumulations of road film or other debris. To clean the wiper blades and arms, use a clean sponge or cloth with a mild soap or detergent and water. If the wipers continue to streak or smear the glass, replace them with Genuine Hyundai Replacement parts or their equivalent.

**NOTE:**

- **Do not operate the wipers on dry glass. This can result in more rapid wear of the wiper blades and may scratch the glass.**
- **Keep the blade rubber out of contact with petroleum products such as engine oil, gasoline, etc.**

G090A01A-GAT

## FILLING THE WASHER RESERVOIR

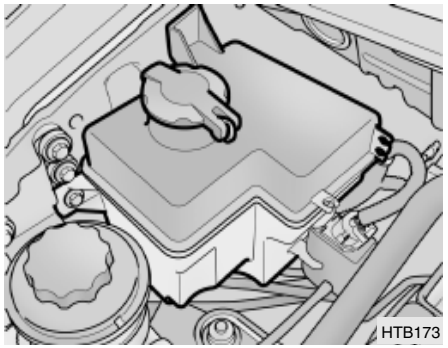


The washer fluid reservoir supplies fluid to the windshield washer system. A good quality washer fluid should be used to fill the washer reservoir. The fluid level should be checked more frequently during bad weather or whenever the washer system is in more frequent use.
The capacity of the washer reservoir is 3.0 liters (3.2 U.S. quarts).

**CAUTION:**

- **Radiator antifreeze (engine coolant) should not be used in the washer system because it will damage the car's finish.**
- **The washer lever should not be pulled and the washer should not be operated if the washer reservoir is empty. This can damage the washer fluid pump.**

G100A03A-GAT

## CHECKING THE TRANSAXLE OIL (MANUAL)

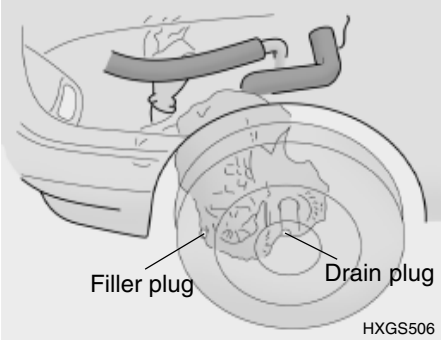


Transaxle lubricant in the manual transaxle should be checked at those intervals specified in the vehicle maintenance schedule in Section 5.

### Recommended Oil

Use only HYUNDAI GENUINE PARTS MTF 75W/90 (API GL-4) in the manual transaxle.

### Manual Transaxle Oil Capacity

The oil capacity of the manual transaxle is 2.15 liters.

**WARNING:**

**It is always better to check the transaxle oil level when the engine is cool or cold. If the engine is hot, you should exercise great caution to avoid burning yourself on hot engine or exhaust parts.**

G100B02A-AAT

## To Check the Maunal Transaxle Fluid Level

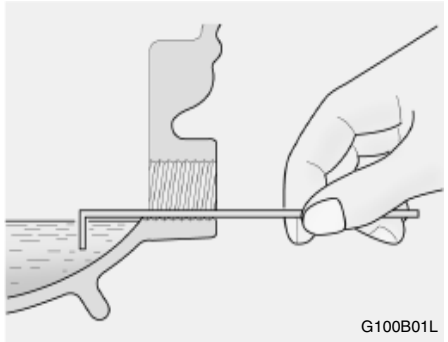


Park the car on level ground with the engine off.

1. Using a wrench of the correct size, loosen the oil filler plug by turning it counterclockwise and remove it with your fingers.
2. Use your finger or suitable tool to feel inside the hole. The oil level should be at its bottom edge. If it is not, check for leaks before adding oil. To refill the transaxle or bring the oil level up,add oil slowly until it reaches the proper level. Do not overfill.
3. Replace the plug and washer, screw it in with your fingers and then tighten securely with the wrench.

G110A01A-AAT

## CHECKING THE TRANSAXLE FLUID (AUTOMATIC)

Transaxle fluid in the automatic transaxle should be checked at those intervals specified in the vehicle maintenance schedule in Section 5.

G110B03A-AAT

## Recommended Fluid

Your Hyundai automatic transaxle is specially designed to operate with DIAMOND ATF SP-III or SK ATF SP-III. Damage caused by a nonspecified fluid is not covered by your new vehicle limited warranty.

G110C01TB-GAT

## Transaxle Fluid Capacity

The fluid capacity of the automatic transaxle is 6.1 liters.

**WARNING:**

**The transaxle fluid level should be checked when the engine is at normal operating temperature. This means that the engine, radiator, exhaust system etc., are very hot. Exercise great care not to burn yourself during this procedure.**

G110D02A-GAT

## To Check the Transaxle Fluid Level

Park the car on level ground with the parking brake engaged. When the transaxle fluid level is checked, the transaxle fluid should be at normal operating temperature and the engine idling.

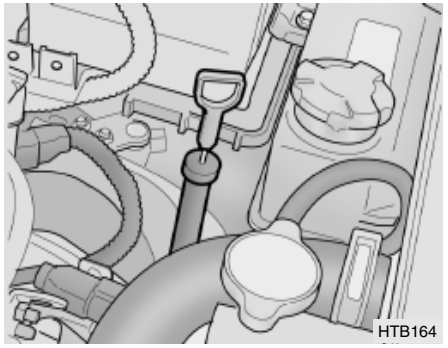


While the engine is idling, apply the brakes and move the gear selector lever from "P" to each of its other positions -- "R", "N", "D", "2", "L" -- and then return to "N" or "P". With the engine still idling:

1. Open the hood, being careful to keep hands, long hair and clothing clear of any moving parts.
2. Remove the transaxle dipstick, wipe it clean, reinsert the dipstick as far as it will go, then remove it again. Now check the fluid level on the dipstick. It should be in the "HOT" range on the dipstick.

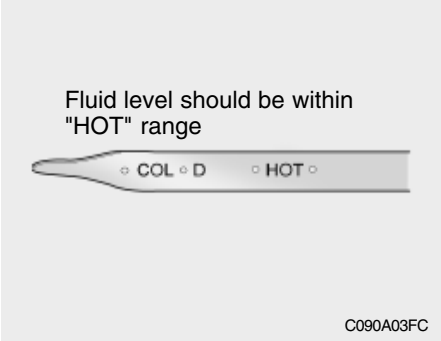


3. If the transaxle fluid level is low, use a funnel to add transaxle fluid through the dipstick tube until the level reaches the "HOT" range. Do not overfill.

**WARNING:**
**The cooling fan is controlled by engine coolant temperature and may sometimes operate even when the engine is not running. Use extreme caution when working near the blades of the cooling fan, so that you are not injured by a rotating fan blade. As the engine coolant temperature decreases, the fan will automatically shut off. This is a normal condition.**

**WARNING (Diesel only):**
**Never work on injection system with engine running or within 30 seconds after shutting off engine. High pressure pump, rail, injectors and high pressure pipes are subjected to high pressure even after the engine has been switched off. The fuel jet produced by fuel leaks may cause serious injury, if it contacts with the body. People using pacemakers should not move closer than 30cm to the ECU or wiring harness within the**

**engine room with the engine running, since the high currents in the Common Rail system produce considerable magnetic fields.**

G120A01A-AAT

## CHECKING THE BRAKES

**CAUTION:**

**Because brakes are essential to the safe operation of the car, it is suggested that they be checked and inspected by your Hyundai dealer. The brakes should be checked and inspected for wear at those intervals specified in the vehicle maintenance schedule in Section 5.**

G120B01A-AAT

## Checking the Brake Fluid Level

**WARNING:**

**Use caution when handling brake fluid. It can damage your vision if it gets into your eyes. It will also damage your vehicle's paint if spilled on it and not removed immediately.**

G120C02A-AAT

## Recommended Brake Fluid

Use only hydraulic brake fluid conforming to DOT 3 or DOT 4 specifications in your braking system. Follow the instructions printed on the container.

G120D01A-AAT

## To Check the Fluid Level

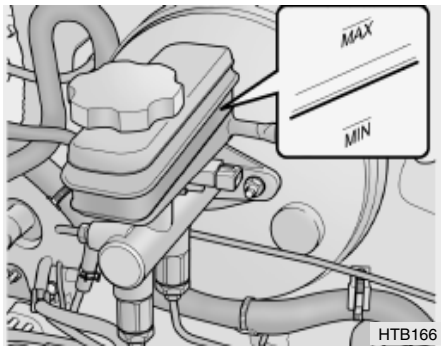


The fluid level in the brake fluid reservoir should be checked periodically. The level should be between the "MIN" and "MAX" marks on the side of the reservoir. If the level is at or below the "MIN" mark, carefully add fluid to bring it up to "MAX". Do not overfill.

G120E01TB-AAT

## Adding Brake Fluid

**WARNING:**
**Handle brake fluid carefully. It can damage your vision if it gets into your eyes. Use only DOT 3 or DOT 4 specification fluid from a sealed container. Do not allow the fluid can or reservoir to remain open any longer than required. This will prevent entry of dirt and moisture which can damage the brake system and cause improper operation.**

To add brake fluid;

1) If it is necessary, remove the air cleaner cover.
2) Wipe away any dirt then unscrew the fluid reservoir cap.
3) Slowly pour the recommended fluid into the reservoir using by a funnel. Do not overfill.
4) Carefully replace the cap on the reservoir and tighten.

G140A01A-AAT

## AIR CONDITIONING CARE
## Keeping the Condenser Clean

The air conditioning condenser (and engine radiator) should be checked periodically for accumulation of dirt, dead insects, leaves, etc. These can interfere with maximum cooling efficiency. When removing such accumulations, brush or hose them away carefully to avoid bending the cooling fans.

G140B01A-AAT

## Checking the Air Conditioning Operation

1. Start the engine and let it run at a fast idle for several minutes with the air conditioning set at the maximum cold setting.
2. If the air coming out of the in-dash vents is not cold, have the air conditioning system inspected by your Hyundai dealer.

**CAUTION:**
**Running the air conditioning system for extended periods of time with a low refrigerant level may damage the compressor.**

G140C01A-AAT

## Lubrication

To lubricate the compressor and the seals in the system, the air conditioning should be run for at least 10 minutes each week. This is particularly important during cool weather when the air conditioning system is not otherwise in use.

G140D01TB-GAT

## Checking the Compressor Drive Belt

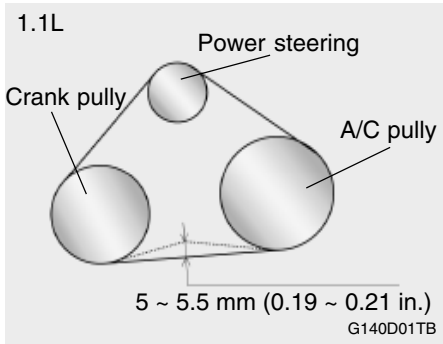

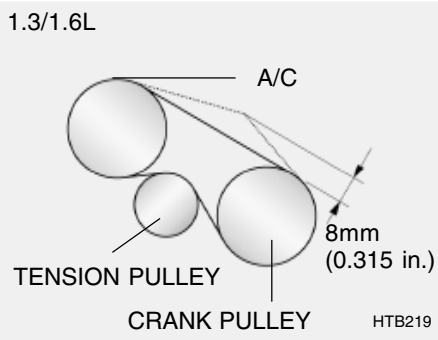


When the air conditioning is being used regularly, the compressor drive belt tension should be checked at least once a month.
To check the drive belt tension, press down on the belt halfway between the engine crankshaft and compressor pulleys. Pressing with your finger, you should not be able to deflect this belt anymore than 8.0 mm (1.1L: 5~ 5.5 mm). If you have the instruments to check it with a force of 98N (22 lb.), the deflection should be approx. 8.0 mm (0.315 in.). If the belt is too loose, have it adjusted by your Hyundai dealer.

B145A01TB-GAT

## CHANGING THE AIR FILTER (In Front of evaporator unit) (If Installed)

The air filter is located in front of the evaporator unit behind the glove box. It operates to decrease pollutants from entering the car and to filter the air.

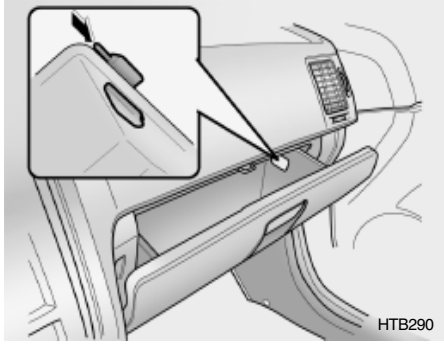


1. Remove the adjusting pins on both sides of the glove box to open half the glove box.

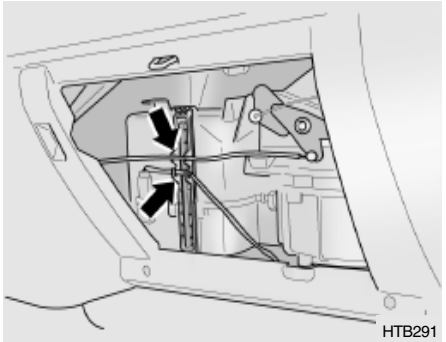


2. Remove the cable and the wiring from the filter cover.

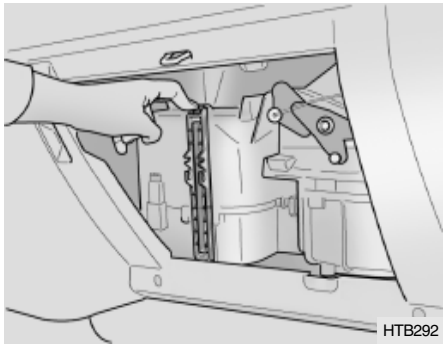


3. Remove the filter cover to push the upside of the filter cover.

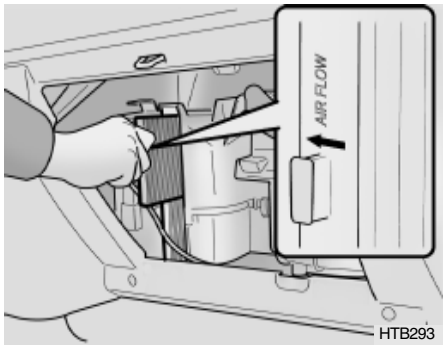


4. Replace the two filters.

**CAUTION:**
**Be sure to install the air filter in the direction of the arrow sign. Unless, it may cause noise or deterioration.**

5. Installation is the reverse order of disassembly.

G150A01A-GAT

## CHECKING STEERING WHEEL FREEPLAY

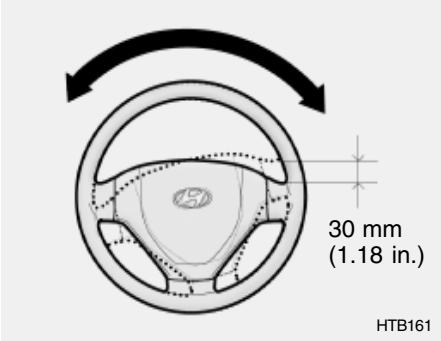


To check the steering wheel freeplay, stop the car with the wheels pointed straight ahead and gently move the steering wheel back and forth. Use very light finger pressure and be sensitive to changes in resistance that mark the limits of the freeplay. If the freeplay is greater than specified, have it inspected by your Hyundai dealer and adjusted or repaired if necessary.

G160A01A-GAT

## CHECKING CLUTCH PEDAL FREEPLAY

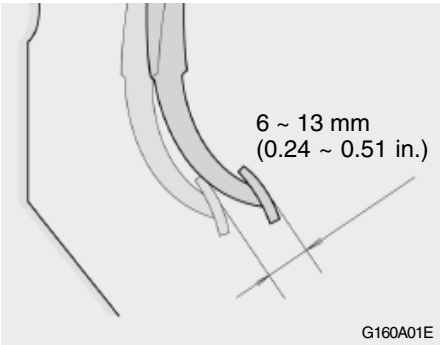


With the engine off, press lightly on the clutch pedal until you feel a change in resistance. This is the clutch pedal freeplay. The freeplay should be within the limits specified in the illustration. If it is not, have it inspected by your Hyundai dealer and adjusted or repaired if necessary.

G170A01A-GAT

## CHECKING BRAKE PEDAL FREEPLAY

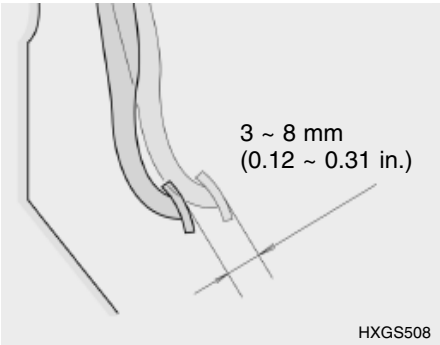


With the engine off, press down on the brake pedal several times to reduce the vacuum in the brake booster.
Then, using your hand, press down slowly on the brake pedal until you feel a change in resistance. This is the brake pedal freeplay.
The freeplay should be within the limits specified in the illustration. If it is not, have it inspected by your Hyundai dealer and adjusted or repaired if necessary.

G180A01A-GAT

## CHECKING BRAKE PEDAL CLEARANCE

You need a helper to check the brake pedal clearance. With the engine running, have your helper press down on the brake pedal several times and then hold it down with a force of about 490 N (50 Kg, 110 lbs). The brake pedal clearance is the distance from the top surface of the brake pedal to the asphalt sheeting under the floor mat.
If the brake pedal clearance is not within the limits specified in the illustration, have it inspected by your Hyundai dealer and adjusted or repaired if necessary.

G190A01A-GAT

## CHECKING DRIVE BELTS (Gasoline)

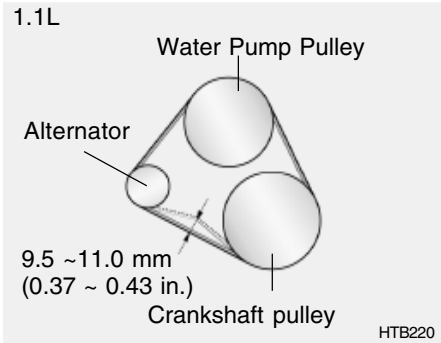


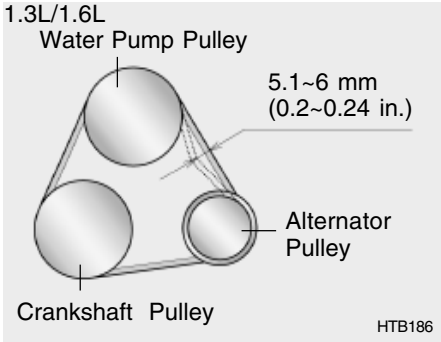

Drive belts should be checked periodically for proper tension and adjusted if necessary. At the same time, belts should be examined for cracks, wear, fraying or other evidence of deterioration and replaced if necessary.
Belt routing should also be checked to be sure there is no interference between the belts and other parts of the engine. After a belt is replaced, the new belt should be adjusted again after two or three weeks to eliminate slack resulting from initial stretching after use.

G190B01TB-GAT

## CHECKING DRIVE BELTS (Diesel)

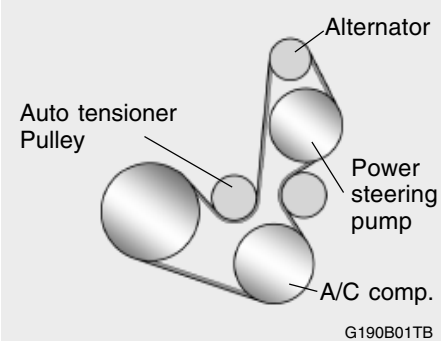


At the scheduled maintenance inspection, belts should be examined for cracks, wear, fraying or other evidence of deterioration and replaced if necessary.
Belt routing should also be checked to be sure there is no interference between the belts and other parts of the engine.

G200A01A-AAT

## CHECKING AND REPLACING FUSES

### Replacing a Fusible Link

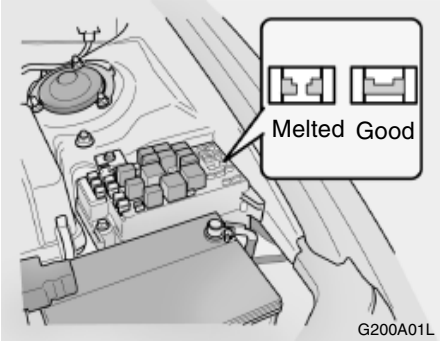


A fusible link will melt if the electrical circuits from the battery are ever overloaded, thus preventing damage to the entire wiring harness. (This could be caused by a short in the system drawing too much current.) If this ever happens, have a Hyundai dealer determine the cause, repair the system and replace the fusible link. The fusible links are located in a fuse box for easy inspection.

**CAUTION:**
**When replacing a fusible link, never use anything but a new fusible link with the same or lower amperage rating. Never use a piece of wire or a higher-rated fusible link. This could result in serious damage and create a fire hazard.**

G200B02A-AAT

## Replacing Accessory Fuse

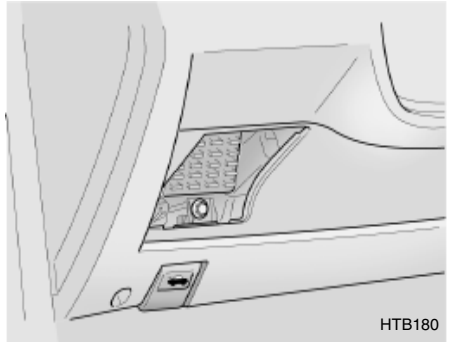


The fuse box for the lights and other electrical accessories will be found low on the dashboard on the driver's side. Inside the box you will find a list showing the circuits protected by each fuse. If any of your car's lights or other electrical accessories stop working, a blown fuse could be the reason. If the fuse has burned out, you will see that the metal strip inside the fuse has burned through. If you suspect a blown fuse, follow this procedure:

1. Turn off the ignition and all other switches.
2. Open the fuse box and examine each fuse. Remove each fuse by pulling it toward you (a small "fuse puller" tool is contained in the fuse box to simplify this operation).
3. Be sure to check all other fuses even if you find one that appears to have burned out.

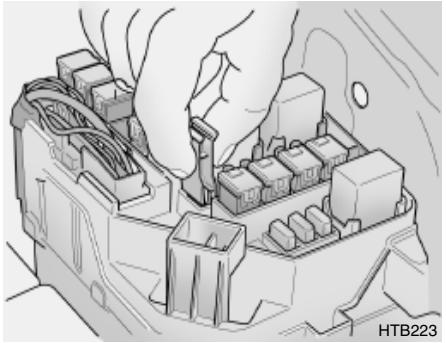


4. Replace the blown fuse by pressing a new fuse of the same rating into place. The fuse should be a snug fit. If it is not, have the fuse clip repaired or replaced by a Hyundai dealer. If you do not have a spare fuse, you may be able to borrow a fuse of the same or lower rating from an acces-

sory you can temporarily get along without (the radio or cigarette lighter, for example). Always remember to replace the borrowed fuse.

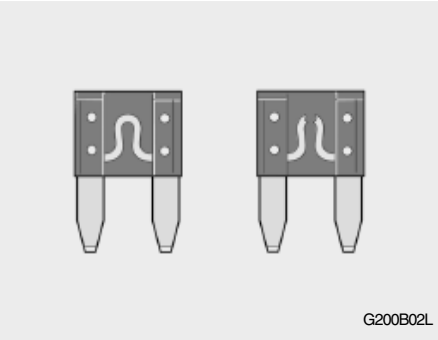


**CAUTION:**
**A burned-out fuse indicates that there is a problem in the electrical circuit. If you replace a fuse and it blows as soon as the accessory is turned on, the problem is serious and should be referred to a Hyundai dealer for diagnosis and repair. Never replace a fuse with anything except a fuse with the same or a lower amperage rating. A higher capacity fuse could cause damage and create a fire hazard.**

**NOTE:**
**See page 6-38 for the fuse panel descriptions.**

G210A01A-AAT

## CHECKING THE BATTERY

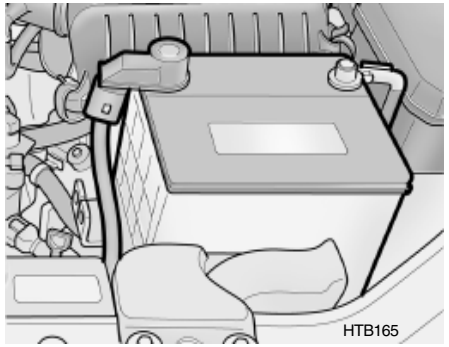


**WARNING:**
**Batteries can be dangerous! When working with batteries, carefully observe the following precautions to avoid serious injuries.**

The fluid in the battery contains a strong solution of sulfuric acid, which is poisonous and highly corrosive. Be careful not to spill it on yourself or the car. If you do spill battery fluid on yourself, immediately do the following:

- o If battery fluid is on your skin, flush the affected areas with water for at least 15 minutes and then seek medical assistance.
- o If battery fluid is in your eyes, rinse out your eyes with water and get medical assistance as soon as possible. While you are being driven to get medical assistance, continue to rinse your eyes by using a sponge or soft cloth saturated with water.
- o If you swallow battery fluid, drink a large quantity of water or milk followed by milk of magnesia, eat a raw egg or drink vegetable oil. Get medical assistance as soon as possible.

While batteries are being charged (either by a battery charger or by the vehicle's alternator), they produce explosive gases. Always observe these warnings to prevent injuries from occurring:

- o Charge batteries only in a well ventilated area.
- o Do not permit flames, sparks or smoking in the area.
- o Keep children away from the area.

G210B01A-AAT

## Checking the Battery

Keep the battery clean. Any evidence of corrosion around the battery posts or terminals should be removed using a solution of household baking soda and warm water. After the battery terminals are dry, cover them with a light coating of grease.

G220A01A-AAT

## CHECKING ELECTRIC COOLING FANS

**WARNING:**

**The cooling fan is controlled by engine coolant temperature and may sometimes operate even when the engine is not running. Use extreme caution when working near the blades of the coolant fan, so that you are not injured by a rotating fan blade. As the engine coolant temperature decreases the fan will automatically shut off. This is a normal condition.**

G220B01A-AAT

## Checking Engine Cooling Fan

The engine coolant fan should come on automatically if the engine coolant temperature is high.

G220C01TB-AAT

## Checking Condenser Cooling Fan

When the air conditioning is in operation, the condenser cooling fan comes on automatically to be controlled by ECU.

G230A03A-GAT

## POWER STEERING FLUID LEVEL

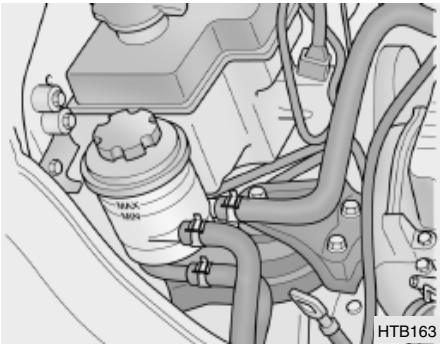

HTB163

The power steering fluid level should be checked regularly.
To check the power steering fluid level, be sure the ignition is "OFF", then check to make certain that the power steering fluid level is between the "MAX" and "MIN" level markings on the fluid reservoir.

### NOTE:

**Grinding noise from the power steering pump may be heard immediately after the engine is started in extremely cold conditions (below -20°C). If the noise stops during warm up, there is no abnormal function in the system. It is due to a power steering fluid characteristic in extremely cold conditions.**

### Recommended Fluid

Use PSF-3 type fluid

### NOTE:

**Do not start the engine when the power steering oil reservoir is empty.**

G240A01A-AAT

## POWER STEERING HOSES

It is suggested that you check the power steering hose connections for fluid leakage at regular intervals. The power steering hoses should be replaced if there is severe surface cracking, scuffing or worn spots. Deterioration of the hose could cause premature failure.

G300A01TB-GAT

## REMOVAL OF WATER FROM THE FUEL FILTER (DIESEL ENGINE)

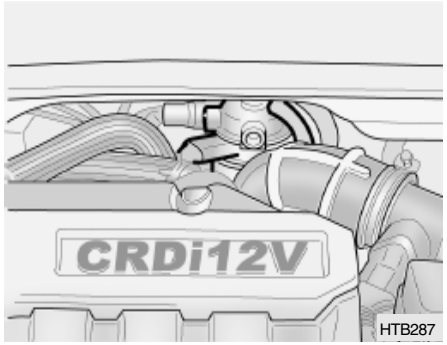

HTB287

If the fuel filter warning light illuminates during driving, it indicates that water has accumulated in the fuel filter. If this occurs, remove the water as described below.

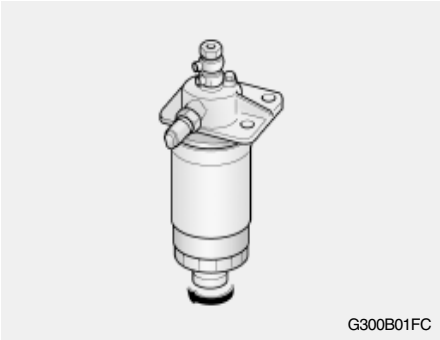


1. Remove the engine cover.
2. Disconnect the air intake hose from air cleaner cover.
3. Loosen the drain plug at the bottom of the fuel filter.
4. Tighten the drain plug when water no longer comes out.
5. Check to be sure that the warning lamp illuminates when the ignition key is turned to "ON", and that it goes off when the engine is started. If in doubt, consult your nearest authorized HYUNDAI dealer.

**NOTE:**
**It is recommended that water accumulated in the fuel filter should be removed by an authorized Hyundai dealer.**

**WARNING:**
**Be sure to carefully wipe away any water drained out in this manner, because the fuel mixed in the water might be ignited and result in a fire.**

G290A01FC-GAT

## HEADLIGHT AIMING ADJUSTMENT

Before performing aiming adjustment, make sure of the following.

1. Keep all tires inflated to the correct pressure.
2. Place the vehicle on level ground and press the front bumper and rear bumper down several times. Place the vehicle at a distance of 3,000 mm (118 in.) from the test wall.
3. See that the vehicle is unloaded (except for full levels of coolant, engine oil and fuel, and spare tire, jack, and tools).
4. Clean the head lights lens and turn on the headlight (low beam).

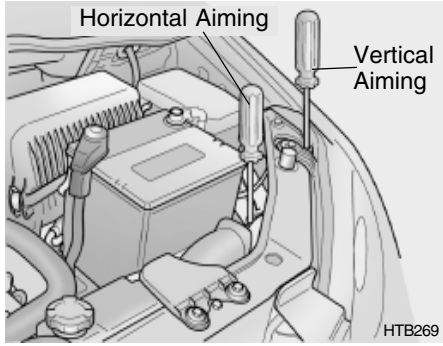


5. Open the hood.
6. Draw the vertical line (through the center of each headlight beam pattern) and the horizontal line (through the center of each headlight beam pattern) on the aiming screen.

   And then, draw the horizontal parallel line at 30 mm (1.18 in.) under the horizontal line.

7. Adjust each cut-off line of the low beam to the parallel line with a phillips screwdriver - VERTICAL AIMING.
8. Adjust each cut-off line of the low beam to each vertical line with a phillips screwdriver - HORIZONTAL AIMING.

G290B01TB-GAT

## Adjustment After Headlight Assembly Replacement

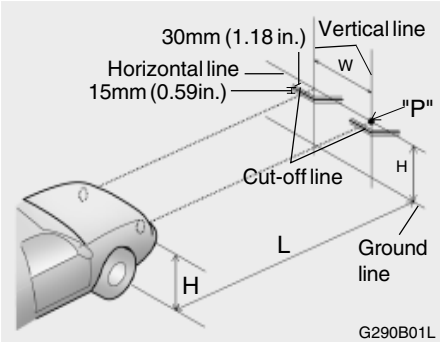


If the vehicle has had front body repair and the headlight assembly has been replaced, the headlight aiming should be checked using the aiming screen as shown in the illustration. Turn on the headlight switch. (Low Beam Position)

1. Adjust headlights so that main axis of light is parallel to center line of the body and is aligned with point "P" shown in the illustration.
2. Dotted lines in the illustration show the center of headlights.

## SPECIFICATIONS:

"H"
Horizontal center line of headlights from ground.
: 656 mm (26.8 in.)

"W"
Distance between each headlight center.
: 1,100 mm (43.3 in.)

"L"
Distance between the headlights and the wall that the lights are tested against.
: 3,000 mm (118 in.).

G270A01TB-GAT

## REPLACEMENT OF BULBS
### Headlight Bulb

Before attempting to replace a headlight bulb, be sure the switch is turned to the "OFF" position.
The next paragraph shows how to reach headlight bulbs so they may be changed. Be sure to replace the burned-out bulb with one of the same number and wattage rating.

**CAUTION:**
**Keep the lamps out of contact with petroleum product, such as oil, gasoline, etc.**

1. Allow the bulb to cool. Wear eye protection.
2. Always grasp the bulb by its plastic base, avoid touching the glass.
3. Disconnect the power cord from the bulb base in the back of the headlight.

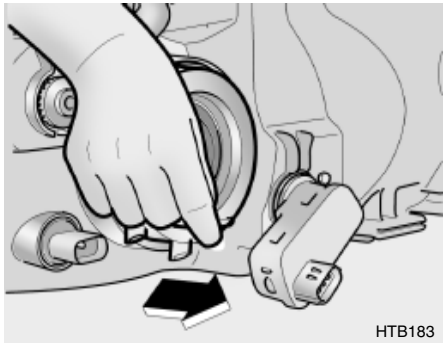


4. Remove the dust cover.

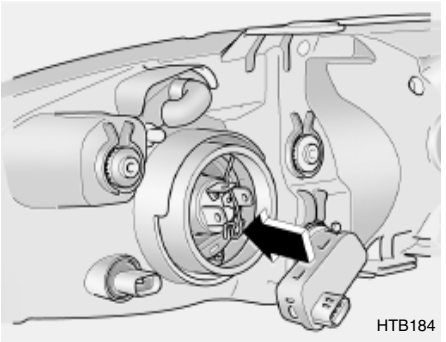


5. Push the bulb spring for removing the headlight bulb.

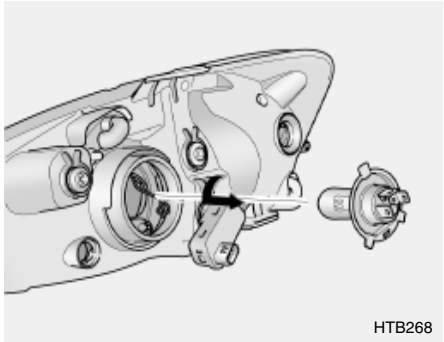


6. Remove the protective cap from the replacement bulb and install the new bulb by matching the plastic base with the headlight hole. Install the dust cover after retightening the bulb spring and reconnect the power cord.
7. Use the protective cap and carton to dispose of the old bulb.
8. Check for proper headlight aim.

**WARNING**

**The halogen bulb contains gas under pressure and if impacted could shatter, resulting in flying fragments. Always wear eye protection when servicing the bulb. Protect the bulb against abrasions or scratches and against liquids when lighted. Turn on the bulb only when installed in a headlight. Replace the headlight if damaged or cracked. Keep the bulb out of the reach of children and dispose of the used bulb with care.**

G270B01TB-GAT

## Front Turn Signal light / Position Light

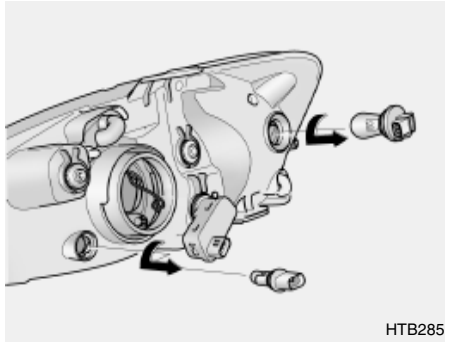


1. Disconnect the power cord from the bulb.
2. Replace to the new bulb.

G270C01TB-GAT

## Luggage Compartment Light (If Installed)

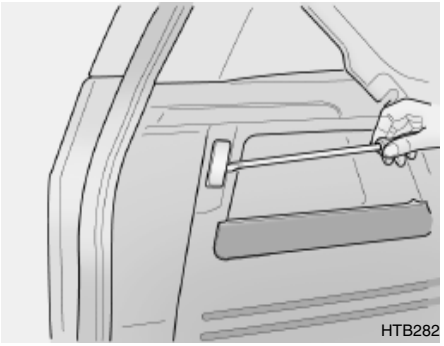


1. Remove the cover with a (-) driver.

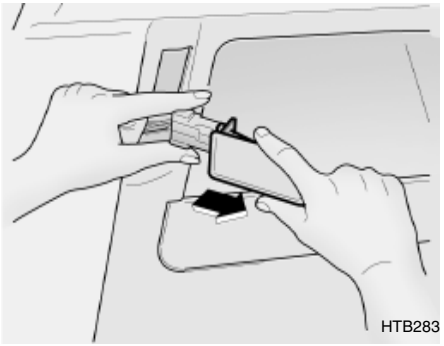


2. Disconnect the power cord.

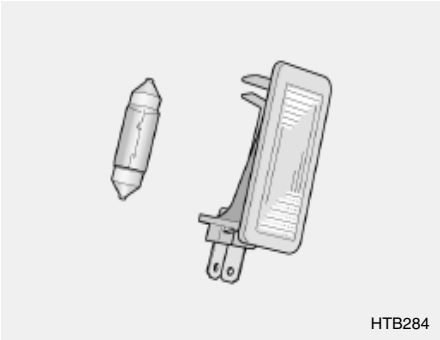


3. Replace to the new bulb.

G270D01TB-GAT

## Rear Combination Light

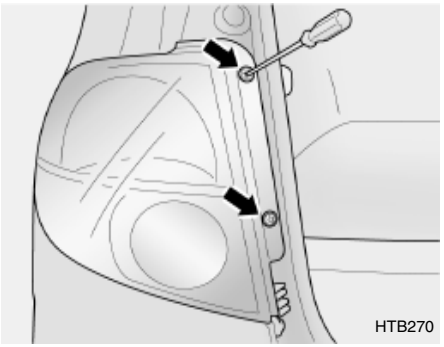


1. Remove the cover with a (+) driver
2. Disconnect the power cord.

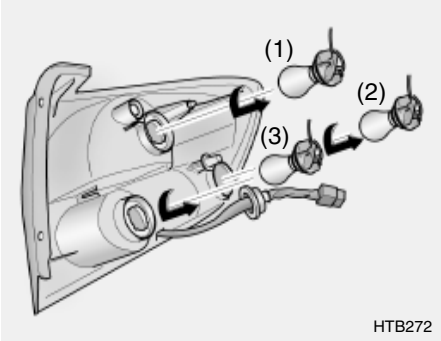


3. Replace to the new bulb.

(1) Stop/Tail Light
(2) Turn Signal Light
(3) Back-up Light

G270E01A-GAT

## Side Repeater (If Installed)

1. Push the cover toward the front of vehicle and remove it.

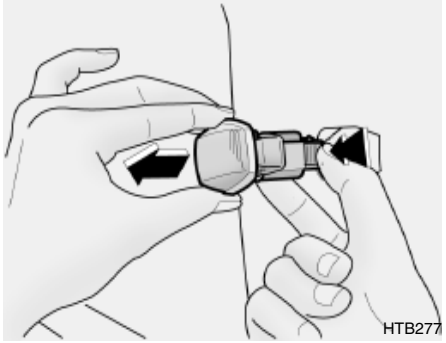


2. Disconnect the power code.

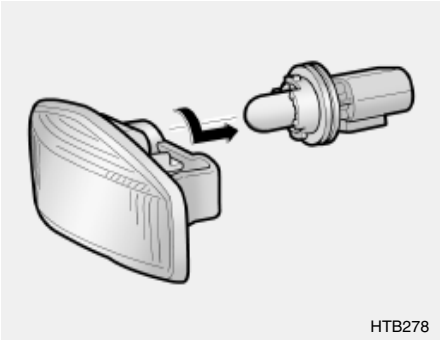


3. Replace to the new bulb.

G270F01TB-GAT

## Rear Fog Light (If installed)

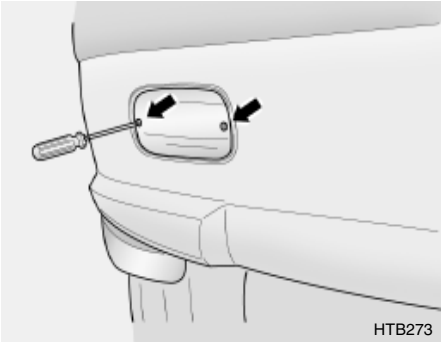


1. Remove the cover with a (+) driver.

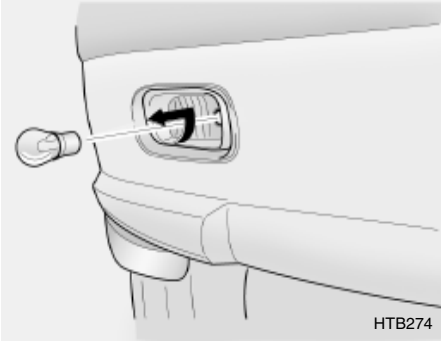


2. Replace to the new bulb.

G270G01TB-GAT

## Interior Light (If installed)

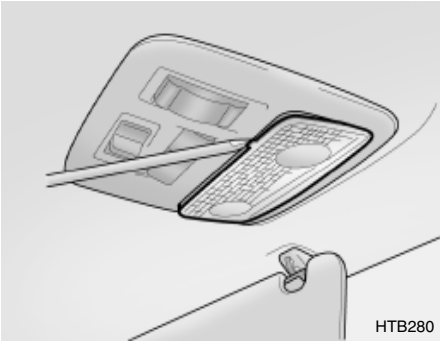


1. Remove the cover with a (-) driver.

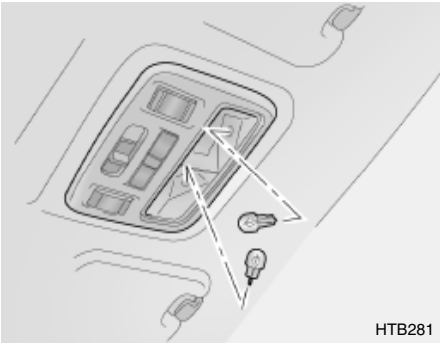


2. Replace to the new bulb.

G280A01TB-GAT

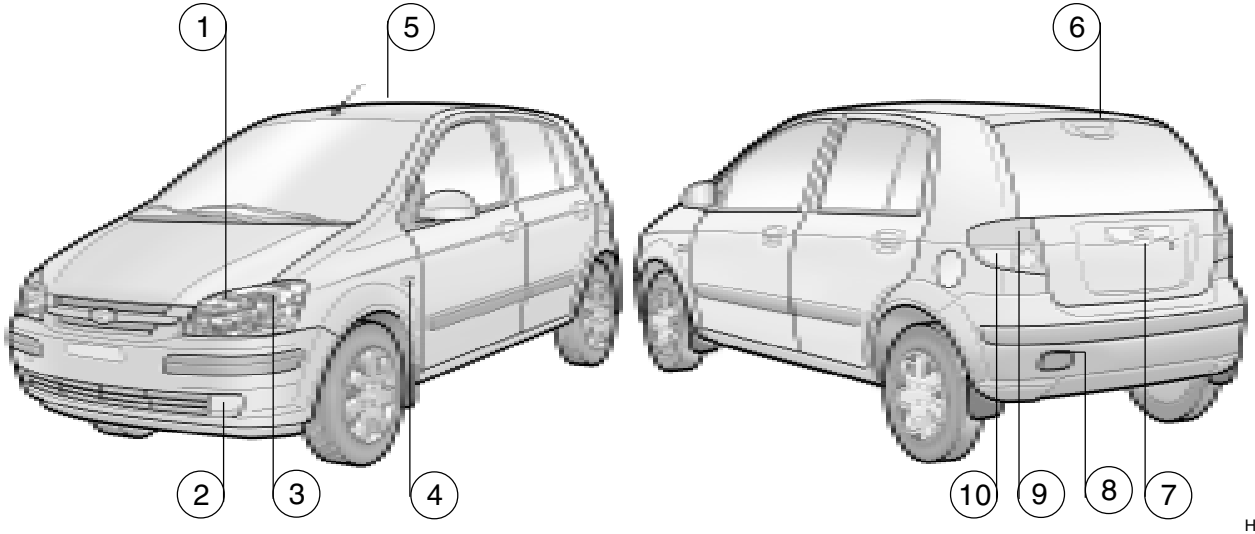


HTB147A

| No. | Part Name | | Wattage | No. | Part Name | | Wattage |
|---|---|---|---|---|---|---|---|
| 1 | Head Light (High/Low) | | 60/55 | 6 | High Mounted Rear Stop Light | | 16 |
| | Front Position Light | | 5 | 7 | License Plate Light | | 5 |
| 2 | Front Fog Light (If installed) | | 27 | 8 | Rear Fog Light (If installed) | | 21 |
| 3 | Front Turn Signal Light | | 21 | 9 | Luggage Compartment Light | | 5 |
| 4 | Side Repeater (If installed) | | 5 | 10 | Rear Combination | Turn Signal Light | 21 |
| 5 | Interior Light | Map Light | 10 | | | Stop/Tail Light | 21/5 |
| | | Room Light | 10 | | | Back -up Light | 21 |

G200C01TB-GAT

# FUSE PANEL DESCRIPTION

## Engine Compartment

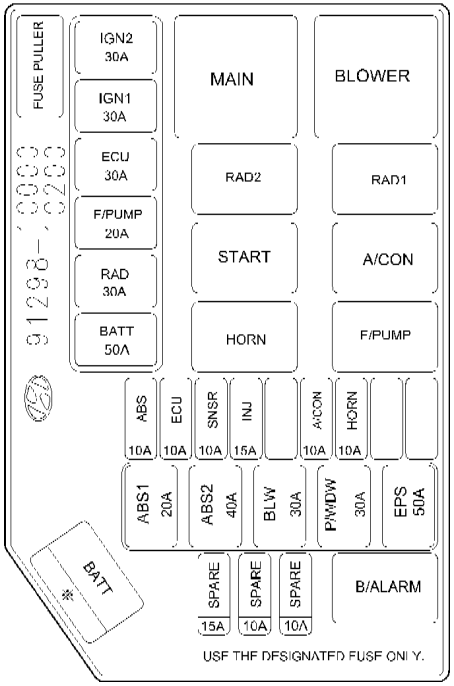


HTB261-E

| DESCRIPTION | FUSE RATING | | PROTECTED COMPONENTS |
|---|---|---|---|
| IGN 2 | 30A | | Ignition Switch |
| IGN 1 | 30A | | Ignition Switch, Start Relay |
| ECU | 30A | | Fuel pump, Alternator, ECM |
| F/PUMP | 20A | | Auto Fuel Cut Switch |
| RAD | 30A | | Radiator Fan |
| BATT | 50A | | Headlight, Defogger Relay |
| ABS | 10A | | ABS |
| ECU | 10A | | ECM |
| SNSR | 10A | | A/CON, Fuel Pump |
| INJ | 15A | | Injector |
| A/CON | 10A | | A/Conditioner |
| HORN | 10A | | Horn |
| ABS1 | 20A | | ABS |
| ABS2 | 40A | | ABS |
| BLW | 30A | | Blower, Blower Motor |
| P/WDW | 30A | | Power Window |
| EPS | 50A | | Electronic power steering |
| BATT(※) | 1.1L | 100A | Alternator |
| | 1.3/1.6L | 120A | |
| SPARE | 15A | | Spare Fuse |
| SPARE | 10A | | Spare Fuse |
| SPARE | 10A | | Spare Fuse |

## NOTE:

**Not all fuse panel descriptions in this manual may be applicable to your vehicle. It is accurate at the time of printing. When you inspect the fuse box on your vehicle, refer to the fuse box label.**

G200D01TB-GAT

## Inner Panel (Left hand drive type)

| USE THE DESIGNATED FUSE ONLY | | | |
|---|---|---|---|
| FUSE PULLER | 1 | POWER CONN & R/LP | |
| | | 15A | |
| H/LP LH | F/FOG | H/LP RH | PR/HTD |
| 15A | 10A | 15A | 30A |
| BLOWER | IGNITION | R/FOG | FRT WPR |
| 10A | 10A | 10A | 20A |
| HAZARD | STOP | ECU2 | HTD MIR |
| 15A | 15A | 15A | 10A |
| S/HTD | DRL | | START |
| 20A | 10A | | 10A |
| RR/WPR | D/LOCK | A/BAG | ECU1 |
| 15A | 20A | 10A | 10A |
| C/LIGHT | CLUSTER | TAIL RH | T/SIG |
| 15A | 10A | 10A | 10A |
| AUDIO | A/BAG IND | TAIL LH | A/C SW |
| 10A | 10A | 10A | 10A |

HTB260-E

| DESCRIPTION | FUSE RATING | PROTECTED COMPONENTS |
|---|---|---|
| POWER CONN & R/LP | 15A | Room Lamp, Audio, Cluster |
| H/LP LH | 15A | High Beam Light Indicator, Headlight (LH) |
| F/FOG | 10A | Front Fog Light |
| H/LP RH | 15A | Headlight (RH) |
| PR/HTD | 30A | Rear window Defroster |
| BLOWER | 10A | Blower, Sunroof |
| IGNITION | 10A | Fog light, ETACM, Power Window,Headlight leveling Device |
| R/FOG | 10A | Rear Fog Light |
| FRT WPR | 20A | Front Wiper Motor |
| HAZARD | 15A | Hazard Warning Light, ETACM |
| STOP | 15A | Stop Light, Power Window |
| ECU2 | 15A | ECM |
| HTD MIR | 10A | Rear window Defroster |
| S/HTD | 20A | Seat Warmer |
| DRL | 10A | Daytime Running Light |
| START | 10A | Start Relay, Theft alarm system |
| RR/WPR | 15A | Rear Wiper Motor |
| D/LOCK | 20A | Door Lock System, Sunroof |
| A/BAG | 10A | Air Bag |
| ECU1 | 10A | PCM, ABS control |
| C/LIGHT | 15A | Cigarette Lighter |
| CLUSTER | 10A | Cluster |
| TAIL RH | 10A | STOP/Tail Light (RH) |
| T/SIG | 10A | Turn Signal Light, Back-up Light |
| AUDIO | 10A | Audio, Electronic Outside Mirror |
| A/BAG IND | 10A | A/Bag, Indicator |
| TAIL LH | 10A | Stop/Tail Light (LH) |
| A/C SW | 10A | Air conditioner |

G200E01TB-GAT

## Inner Panel (Right hand drive type)

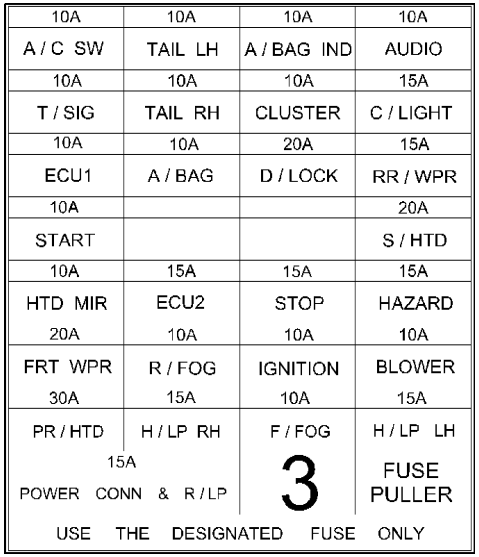


HTB260-D

| DESCRIPTION | FUSE RATING | PROTECTED COMPONENTS |
|---|---|---|
| A/C SW | 10A | Air conditioner |
| TAIL LH | 10A | Stop/Tail Light (LH) |
| A/BAG IND | 10A | A/Bag Indicator |
| AUDIO | 10A | Audio, Electronic Outside Mirror |
| T/SIG | 10A | Turn signal Light, Back-up Light |
| TAIL RH | 10A | Stop/Tail Light (RH) |
| CLUSTER | 10A | Cluster |
| C/LIGHT | 15A | Cigarette Lighter |
| ECU 1 | 10A | PCM, ABS control |
| A/BAG | 10A | Air Bag |
| D/LOCK | 20A | Door Lock System, Sunroof |
| RR/WPR | 15A | Rear Wiper Motor |
| START | 10A | Start Relay, 9oTheft alarm system |
| S/HTD | 20A | Seat Warmer |
| HTD MIR | 10A | Rear window Defroster |
| ECU2 | 15A | ECM |
| STOP | 15A | Stop Light, Power Window |
| HAZARD | 15A | Hazard Warning Light, ETACM |
| FRT WPR | 20A | Front Wiper Motor |
| R/FOG | 10A | Rear Fog Light |
| IGNITION | 10A | Fog light, ETACM, Power Window, Headlight leveling Device |
| BLOWER | 10A | Blower, Sunroof |
| PR/HTD | 30A | Rear window Defroster |
| H/LP RH | 15A | Headlight (RH) |
| F/FOG | 10A | Front Fog Light |
| H/LP LH | 15A | High Beam Light Indicator, Headlight (LH) |
| POWER CONN & R/LP | 15A | Room Lamp, Audio, Cluster |

# 7. EMISSION CONTROL SYSTEM

Emission control system ..... 7-2
Catalytic converter ..... 7-3
EGR system ..... 7-4

H010A01A-GAT

## EMISSION CONTROL SYSTEM (If Installed)

Your Hyundai is equipped with an emission control system to meet all requirements of the Emission prohibition rules of your province.
There are three emission control systems which are as follows.

1) Crankcase emission control system
2) Evaporative emission control system
3) Exhaust emission control system

In order to assure the proper function of the emission control systems, it is recommended that you have your car inspected and maintained by an authorized Hyundai dealer in accordance with the maintenance schedule in this manual.

H010B01A-AAT

## 1. Crankcase Emission Control System

The positive crankcase ventilation system is employed to prevent air pollution caused by blow-by gases being emitted from the crankcase. This system supplies fresh air to the crankcase through the air intake hose. Inside the crankcase, the fresh air mixes with blow-by gases, which then pass through the PCV valve and into the induction system.

H010C01E-GAT

## 2. Evaporative Emission Control System

The Evaporative Emission Control System is designed to prevent fuel vapors from escaping into the atmosphere.

### Canister

While the engine is inoperative, fuel vapors generated inside the fuel tank are absorbed and stored in the canister. When the engine is running, the fuel vapors absorbed in the canister are drawn into the induction system through
the purge control solenoid valve.

### Purge Control Solenoid Valve (PCSV)

The purge control solenoid valve is controlled by the Engine Control Module (ECM); when the engine coolant temperature is low during idling, the PCSV closes so that evaporated fuel is not taken into the engine. After the engine warms-up during ordinary driving, the PCSV opens so as to introduce evaporated fuel to the engine.

H010D01A-AAT

## 3. Exhaust Emission Control System

The exhaust emission control system is a highly effective system which controls exhaust emission while maintaining good vehicle performance.

H020A01A-GAT

## CATALYTIC CONVERTER (If Installed) ; For a gasoline engine

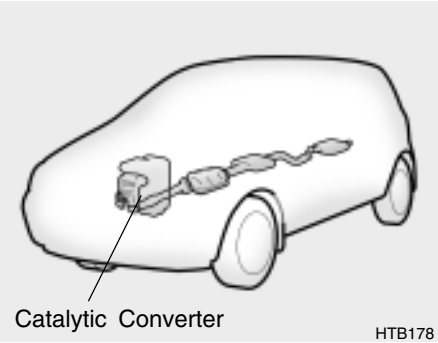


The catalytic converter is part of the exhaust emission control system. Its purpose is to remove certain engine emission products from the engine's exhaust. It looks something like a muffler and is located underneath the car in the exhaust system.

H020D01S-GAT

## CATALYTIC CONVERTER ; For a diesel engine

All Hyundai vehicles are equipped with oxidation type catalytic converter to reduce the carbon monoxide, hydrocarbons and particulate contained in the exhaust gas.

H020B01A-GAT

### About the Catalytic Converter

Exhaust gases passing through the catalytic converter cause it to operate at very high temperatures. As a result, the introduction of large amounts of unburned gasoline may cause it to overheat and create a fire hazard. This can be avoided by observing the following:

- o Use unleaded fuel only.
- o Maintain your engine in good condition. Extremely high converter temperatures can result from improper operation of the electrical, ignition or fuel injection systems.
- o If your engine stalls, pings, knocks, or is hard to start, take your car to your Hyundai dealer as soon as possible and have the difficulty corrected.
- o Avoid driving with a very low fuel level. If your run out of gasoline, it could cause the engine to misfire and result in excessive loading of the catalytic converter.
- o Avoid idling the engine for periods longer than 10 minutes.
- o Your Hyundai should not be either pushed or pulled to get it started. This can cause the catalytic converter to overload.
- o Take care not to stop your Hyundai over any combustible material such as grass, paper, leaves or rags. As these materials could come in contact with the catalytic converter and could cause a fire.
- o Do not touch the catalytic converter or any other part of the exhaust system while the engine is running as it is very hot and could result in burns.
- o Remember that your Hyundai dealer is your best source of assistance.

H020C01S-GAT

## EGR SYSTEM
## ; For a diesel engine

This system helps control oxides of nitrogen by recirculating a part of the exhaust gas into the engine.

# 8. CONSUMER INFORMATION

Vehicle Identification Number (VIN) ..... 8-2
Engine number ..... 8-2
Recommended inflation pressures ..... 8-3
Snow tires ..... 8-4
Tire chains ..... 8-4
Tire rotation ..... 8-5
Tire balancing ..... 8-5
Tire traction ..... 8-5
When to replace tires ..... 8-5
Spare tire and tools ..... 8-6

I010A01TB-GAT

## VEHICLE IDENTIFICATION NUMBER (VIN)

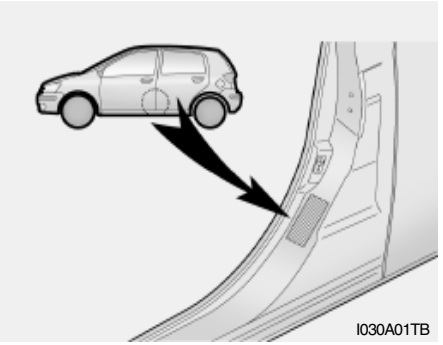
I030A01TB

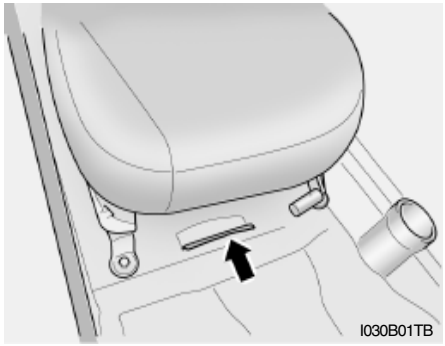
I030B01TB

The vehicle identification number (VIN) is the number used in registering your car and in all legal matters pertaining to its ownership, etc.
It can be found on the center piller of the driver side and the lower side of the front passenger seat.

I010B01A-GAT

## ENGINE NUMBER

1.1L

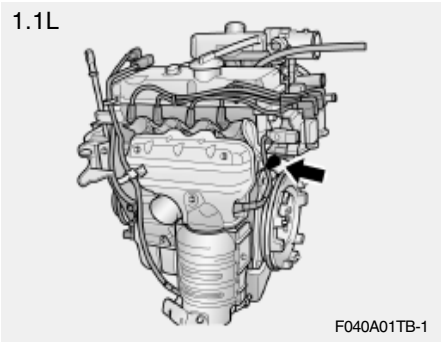
F040A01TB-1

1.3L

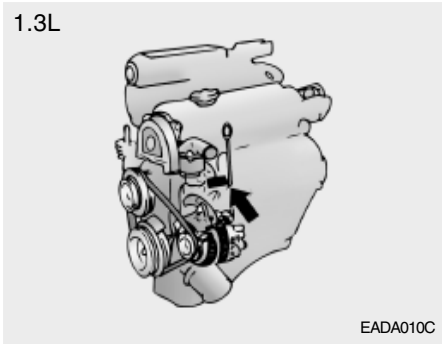
EADA010C

1.6L

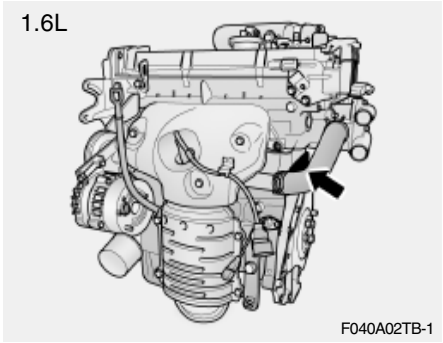
F040A02TB-1

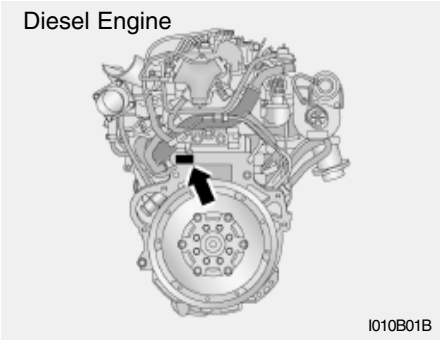


The engine number is stamped on the engine block as shown in the drawing.

I020A01A-AAT

## TIRE INFORMATION

The tires supplied on your new Hyundai are chosen to provide the best performance for normal driving.

I030A03TB-GAT

## RECOMMENDED INFLATION PRESSURES

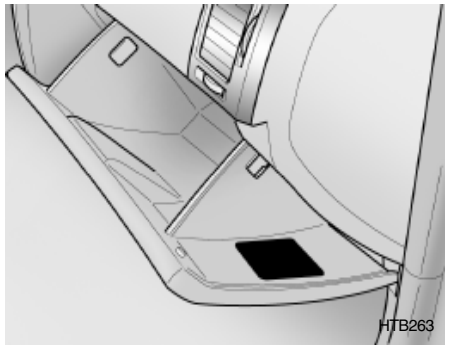


The tire label located in the glove box gives the tire pressures recommended for your car.

| RIM SIZE | TIRE SIZE | PRESSURE, kPa (PSI) | | | |
|---|---|---|---|---|---|
| | | UP TO 2 PERSONS | | UP TO MAX. LOAD | |
| | | FRONT | REAR | FRONT | REAR |
| 4.5Jx13 | 155/80R13 | 210(30) | 210(30) | 230(33) | 230(33) |
| 5.0Jx13 | 165/65R14 | | | | |
| 5.0Jx14 | 175/65R14 | | | | |
| 5.5Jx14 | | | | | |
| 5.5Jx15 | 185/55R15 | | | | |
| 4.0Tx14 | T105/70D14 | 420(60) | 420(60) | 420(60) | 420(60) |

These pressures were chosen to provide the most satisfactory combination of ride comfort, tire wear and stability under normal conditions. Tire pressures should be checked at least monthly. Proper tire inflation pressures should be maintained for these reasons:

- o Lower-than-recommended tire pressures cause uneven tread wear and poor handling.
- o Higher-than-recommended tire pressures increase the chance of damage from impacts and cause uneven tread wear.

**CAUTION:**

**Always observe the following:**

- **Check pressures when the tires are cold. That is, after the car has been parked for at least three hours and hasn't been driven more than 1.6 km or one mile since starting up.**
- **Check the pressure of your spare tire each time you check the pressure of other tires.**

I040A01S-GAT

## SNOW TIRES

If you equip your car with snow tires, they should be the same size and have the same load capacity as the original tires. Snow tires should be installed on all four wheels; otherwise, poor handling may result.

Snow tires should carry 28 kPa (4 psi) more air pressure than the pressure recommended for the standard tires on the tire label on, or up to the maximum pressure shown on the tire sidewall whichever is less.

Do not drive faster than 120 km/h (75 mph) when your car is equipped with snow tires.

I050A01TB-GAT

## TIRE CHAINS

Tire chains, if necessary should be installed on the front wheels. Be sure that the chains are the proper size and that they are installed in accordance with the manufacturer's instructions.

To minimize tire and chain wear, do not continue to use tire chains when they are no longer needed.

**WARNING:**

- **When driving on roads covered with snow or ice, drive at less than 30 km/h (20 mph).**
- **Use the SAE "S" class or wire & plastic chains.**
- **Don't use the tire chains in 185/55R 15 tire to prevent body damage.**
- **If you have noise caused by chaws contacting the body, retighten the chain to avoid contact with the vehicle body.**
- **Retighten the chains to prevent from a body damage after driving 0.5 ~ 1 km with equipping chains.**

I060A01FC-GAT

## TIRE ROTATION

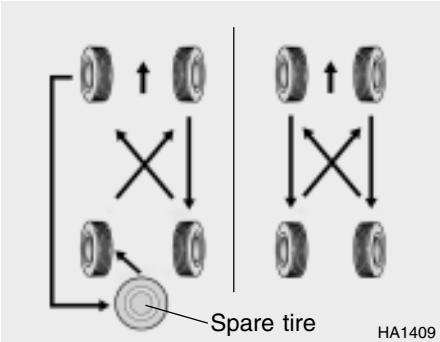


Tires should be rotated every 10,000 km (6,000 miles). If you notice that tires are wearing unevenly between rotations, have the car checked by a Hyundai dealer so the cause may be corrected.
After rotating, adjust the tire pressures and be sure to check wheel nut tightness.

**WARNING:**

- **Do not use the temporary spare tire for tire rotation.**
- **Do not mix bias-ply and radial-ply tires under any circumstances. This may cause dangerous handling characteristics.**

I070A01A-AAT

## TIRE BALANCING

A tire that is out of balance may affect handling and tire wear. The tires on your Hyundai were balanced before the car was delivered but may need balancing again during the years you own the car.
Whenever a tire is dismounted for repair, it should be rebalanced before being reinstalled on the car.

I080A01A-AAT

## TIRE TRACTION

Tire traction can be reduced if you drive on worn tires, tires that are improperly inflated or on slippery road surfaces. Tires should be replaced when tread wear indicators appear. To reduce the possibility of losing control, slow down whenever there is rain, snow or ice on the road.

I090A01S-GAT

## WHEN TO REPLACE TIRES

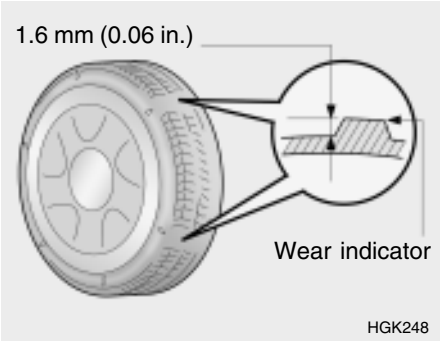

**WARNING:**

- **Driving on worn-out tires is dangerous! Worn-out tires can cause loss of braking effectiveness, steering control and traction. When replacing tires, never mix radial and bias-ply tires on the same car. If you replace radial tires with bias-ply tires, they must be installed in sets of four.**
- **Using tires and wheels of other than the recommended sizes may cause unusual handling characteristics that may cause death, serious injury or property damage.**

The original tires on your car have tread wear indicators. The tread wear indicators appear when the tread depth is 1.6 mm (0.06 in.). The tire should be replaced when these appear as a solid bar across two or more grooves of the tread. Always replace your tires with those of the recommended size. If you change wheels, the new wheel's rim width and offset must meet Hyundai specification.

I100A01TB-GAT

## SPARE TIRE AND TOOLS

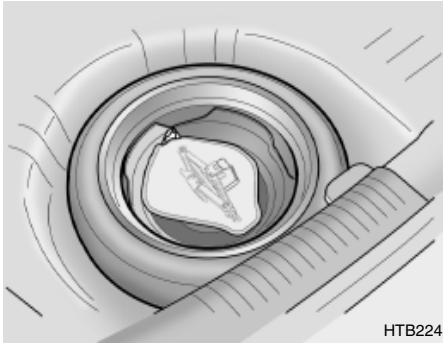


Your Hyundai is delivered with the following:

Spare tire and wheel
Wheel nut wrench, Wrench bar,
Spanner, Screw driver,
Jack,
Towing Hook

# 9. VEHICLE SPECIFICATIONS

Measurement ..... 9-2
Engine ..... 9-3
Lubrication chart ..... 9-4

J010A01TB-GAT
## MEASUREMENT

mm (in.)

| | | |
|---|---|---|
| Overall length | | 3,810 (150) |
| Overall width | | 1,665(65.6) |
| Overall height (unladen) | GEN | 1,495(58.9) |
| | EC | 1,490(58.7) |
| Wheel base | | 2,455(96.7) |
| Wheel tread | Front | 1,450(57.1) |
| | Rear | 1,440(56.7) |

J020A01TB-GAT
## POWER STEERING

| | | |
|---|---|---|
| Type | | Rack and pinion |
| Wheel free play | | 0 ~ 30 mm (0 ~ 1.18 in.) |
| Rack stroke | Manual | 132 mm (5.20 in.) |
| | Power | 140 mm (5.5 in.) |
| Oil pump type | | Vane type |

J060A01TB-GAT
## FUEL SYSTEM

| Fuel tank | Liter | Imp.gal |
|---|---|---|
| Capacity | 45 | 9.9 |

J030A02TB-GAT
## TIRE

| | |
|---|---|
| Standard | 155/80R13, 165/65R14 |
| Option | 175/65R14, 185/55R15 |

J035A01TB-GAT
## SPARE TIRE

| | |
|---|---|
| Standard | T105/70D14(Temporary) |
| Option | Full size |

J040A03TB-GAT
## ELECTRICAL

| Item | GASOLINE | | | DIESEL |
|---|---|---|---|---|
| | 1.1 L | 1.3 L | 1.6 L | 1.5 L |
| Battery | 45AH, 55AH | | | 60AH |
| Alternator | 13.5V,70A | 13.5V, 90A | | 12V, 90A |

J050A01FC-GAT
## BRAKE

| | |
|---|---|
| Type | Dual hydraulic with brake booster |
| Front brake type | Ventilated disc |
| Rear brake type | Drum |
| Parking brake | Cable |

J070A01TB-GAT

## ENGINE

| ITEMS | | | GASOLINE | | | DIESEL |
|---|---|---|---|---|---|---|
| | | | 1.1 L | 1.3 L | 1.6 L | 1.5L |
| Engine Type | | | 4-Cylinder in -line SOHC | | 4-Cylinder in -line DOHC | 3-Cylinder in -line SOHC |
| Bore x Stroke | | | 67 x 77 | 71.5 x 83.5 | 76.5 x 87 | 83 x 92 |
| Displacement (cc) | | | 1,086 | 1,341 | 1,599 | 1,493 |
| Firing order/Injection order | | | 1-3-4-2 | | | 1-3-2 |
| Valve clearance (Cold Engine 20 ± 5°C) | | Intake | 0.13 mm | - | - | - |
| | | Exhaust | 0.17 mm | - | - | - |
| Spark plug | Unleaded | NGK | BKR5ES-11 | | | - |
| | | CHAMPION | RC10YC4 | | | - |
| | Leaded | NGK | BKR5ES | | | - |
| | | CHAMPION | RC10YC | | | - |
| Spark plug gap | | Unleaded | 1.0 ~ 1.1 mm (0.039 ~ 0.043 in.) | | | - |
| | | Leaded | 0.7 ~ 0.8 mm (0.028 ~ 0.032 in.) | | | - |
| Idle speed (RPM) | | | 850 ± 100 | 700 ± 100 | | - |
| Ignition timing (Base)/Injection timing | | | BTDC 6°±5° | BTDC 5°±5° | | Auto control |

J080A02TB-GAT

## LUBRICATION CHART

| Item | | Oil & Grease Standard | | Q'ty (liter) |
|---|---|---|---|---|
| Engine Oil | Gasoline | API SG or ABOVE | SAE 20W-40, 20W-50 (ABOVE -10°C) | Drain and refill (with oil filter) : 3.3 (2.9 Imp.qts) |
| | | | SAE 15W-40, 15W-50 (ABOVE -15°C) | |
| | | | SAE 10W-30 (-25°C ~ 40°C) | |
| | | | SAE 10W-40, 10W-50 (ABOVE -25°C) | |
| | | | SAE 5W-20 (BELOW -10°C) *1, *2 | |
| | | | SAE 5W-30 (BELOW 10°C) *1 | |
| | | | SAE 5W-40 (BELOW 20°C) *1 | |
| | Diesel | API CF-4 or ABOVE, ACEA B4 or ABOVE | SAE 30 (0°C ~ 40°C) | Drain and refill (with oil filter) : 4.8 (4.2 Imp.qts) |
| | | | SAE 20W-40 (ABOVE -10°C) | |
| | | | SAE 15W-40 (ABOVE -15°C) | |
| | | | SAE 10W-30 (-20°C ~ 40°C) | |
| | | | SAE 5W-30 (-25°C ~ 10°C) | |
| | | | SAE 0W-30 (BELOW 10°C) *1, *2 | |
| | | *1. Restricted to driving condition and dealing area | | |
| | | *2. Not recommended for sustained high speed vehicle operation | | |
| Engine Oil Consumption | | Normal driving condition | | MAX. 1L / 1,500 Km |
| | | Severe driving condition | | MAX. 1L / 1,000 Km |
| Transaxle | Manual | HYUNDAI GENUINE PARTS MTF 75W/90 (API GL-4) | | 2.15 (1.86 Imp. qts) |
| | Auto | DIAMOND ATF SP-III, SK ATF SP-III | | 6.1 (5.3 Imp.qts) (Gasoline only) |
| Power Steering | | PSF-3 | | As required |
| Brake Fluid | | DOT 3, DOT 4 or equivalent | | As required |
| Coolant | | Ethylene glycol base for aluminum radiator | | Gasoline : 5.5(4.8 Imp.qts)<br>Diesel: 5.7 (5.0 Imp.qts) |

# 10.INDEX

**A**
Air Bag ..... 1-34
Air Cleaner Filter ..... 6-17
Air Conditioning
  Care ..... 6-22
  Operation ..... 1-82
  Switch ..... 1-81
Air filter ..... 1-83, 6-23
Antenna ..... 1-107
Ashtray ..... 1-58
Auto Fuel cut Switch ..... 1-73

**B**
Battery ..... 2-16, 6-28
Brake
  Anti-lock system ..... 2-13
  Checking the brakes ..... 6-21
  Fluid ..... 6-21
  Pedal clearance ..... 6-25
  Pedal freeplay ..... 6-25
  Practices ..... 2-12
Breaking-In your New Hyundai ..... 1-3
Bulbs Replacement ..... 6-32
Bulbs wattage ..... 6-37

**C**
Care of Cassette Tapes ..... 1-106
Cargo area cover ..... 1-70
Cassette Tape Player Operation (K220, K240, H280)
  ..... 1-89, 1-94, 1-99
Catalytic Converter ..... 7-3
Child-Protector Rear Door Lock ..... 1-8
Child Restraint System ..... 1-26
Cigarette Lighter ..... 1-58
Clock ..... 1-58
Clutch
  Pedal freeplay ..... 6-24
Combination Ligh
  Headlight flasher ..... 1-54
  Headlight switch ..... 1-53
  High-beam switch ..... 1-54
  Lane change signal ..... 1-53
  Turn signal operation ..... 1-53
Compact Disc Player Operation (H280) ..... 1-101
Console tray ..... 1-59
Cooling Fans ..... 6-29
Corrosion protection
  Cleaning the interior ..... 4-5
  Protecting your Hyundai from corrosion ..... 4-2
  Washing and waxing ..... 4-3

**D**
Defrosting / Defogging ..... 1-80
Door
  Door locks ..... 1-7
  Locking, unlocking front doors with a key ..... 1-7
Drink Holder ..... 1-59
Drive Belts ..... 6-25
Driving
  Economical driving ..... 2-14
  Smooth cornering ..... 2-15
  Winter driving ..... 2-15

**E**
Emission Control System ..... 7-2
Engine
  Before starting the engine ..... 2-3
  Compartment ..... 6-2
  Coolant ..... 6-13
  Coolant temperature gauge ..... 1-49
  If the engine overheats ..... 3-4
  Number ..... 8-2
  Oil ..... 6-7
  Starting ..... 2-3
Engine Exhaust Can Be Dangerous ..... 2-2

**F**
Fog Light
  Front ..... 1-57
  Rear ..... 1-57
Front Seats
  Adjustable front seats ..... 1-13
  Adjustable headrests ..... 1-14
  Adjusting seat forward and rearward ..... 1-13
  Adjusting seatback angle ..... 1-13
  Lumbar support control ..... 1-14
  Seat cushion height adjustment ..... 1-15
  Seat warmer ..... 1-19
Fuel
  Capacity ..... 9-2
  Gauge ..... 1-48
  recommendations ..... 1-2
Fuel Filler Lid
  Remote release ..... 1-68
Fuses ..... 6-26
Fuse Panel description ..... 6-38

**G**
General Checks ..... 6-6
Glove Box ..... 1-63

**H**
Hazard Warning System ..... 1-56
Headlight Aiming Adjustment ..... 6-31
Headlight Leveling Device System ..... 1-59
Heating and cooling control ..... 1-75
Heating and Ventilation ..... 1-76
  Air flow control ..... 1-77
  Air intake control ..... 1-77
  Bi-level heating ..... 1-80
  Fan speed control ..... 1-76
  Temperature control ..... 1-79
High-Mounted Rear Stop Light ..... 1-67
Hood Release ..... 1-67
How to use luggage room ..... 1-70
Horn ..... 1-74

**I**
Ignition Switch ..... 2-3
Immobilizer System ..... 1-5
Instrument Cluster and Indicator ..... 1-41
I
Interior Light
  Interior light ..... 1-63
  Map light ..... 1-62
Intermittent Wiper ..... 1-55

**J**
Jump Starting ..... 3-3

**K**
Key ..... 1-4
  If you lose your keys ..... 3-14
  Positions ..... 2-4

**L**
Lubrication Chart ..... 9-4
Luggage Net ..... 1-72
Luggage Board ..... 1-72
Luggage Under Tray ..... 1-71

**M**
Maintenance Intervals
  Explanation of scheduled maintenance items ..... 5-8
  Maintenance under severe usage conditions ..... 5-7
  Scheduled maintenance ..... 5-4
  Service requirements ..... 5-2
Mirrors
  Day-night inside rearview ..... 1-66
  Outside rearview mirror heater ..... 1-66

**O**
Odometer ..... 1-50
Outside rear view ..... 1-64

**P**
Parking Brake ..... 1-67
Power Steering Fluid Level ..... 6-30
Power Windows ..... 1-12

**R**
Rear Seat ..... 1-15
Rear Window Defroster Switch ..... 1-56

**S**
Seat
  Front ..... 1-13
Seatback Holder ..... 1-70
Seat Pocket ..... 1-70
Seat Warmer ..... 1-19
Seat Belts
  3-Point system ..... 1-22
  Adjustable height ..... 1-22
  Adjusting your seat belt ..... 1-23
  Care of seat belts ..... 1-21
  Precautions ..... 1-20
Spark Plugs ..... 6-15
Spectacle Case ..... 1-63
Speedometer ..... 1-49
Starting ..... 2-5
Steering Wheel Freeplay ..... 6-24
Steering Wheel Tilt Lever ..... 1-74
Stereo Radio Operation (K210/K220, K240, H280)
  ..... 1-86, 1-91, 1-96
Stereo Sound System ..... 1-84
Sun Visor ..... 1-73
Sunroof ..... 1-60

**T**
Tachometer ..... 1-49
Tail gate ..... 1-69
Theft-Alarm system ..... 1-9
Tires
  Balancing ..... 8-5
  Chains ..... 8-4
  If you have a flat tire ..... 3-6
  Information ..... 8-3
  Pressure ..... 8-3
  Replacement ..... 8-7
  Rotation ..... 8-5
  Snow tires ..... 8-4
  Spare tire ..... 3-5
  Traction ..... 8-5
Towing
  A trailer (or vehicle) ..... 2-18
  Emergency ..... 3-13
  If your car must be towed ..... 3-11
Trailer or Vehicle towing ..... 2-18
Transaxle
  Automatic ..... 2-9
  Automatic transaxle fluid checking ..... 6-19
  Manual ..... 2-7
  Manual transaxle Oil checking ..... 6-18
Trip Computer ..... 1-51
Trip Odometer ..... 1-50

**V**

Vehicle Identification Number ..... 8-2

**W**

Warning Lights ..... 1-44
Windshield Wiper and Washer ..... 1-54
Windshield Wiper Blades ..... 6-17
Winter Driving ..... 2-15

A000A01A-GAT

This Owner's Manual should be considered a part of the car and remain with it when it is sold for the use of the next owner.

OWNER'S I.D.

ORIGINAL: NAME: _____

ADDRESS: STREET: _____

TOWN: _____

COUNTRY: _____

P.CODE: _____

DATE OF SALE: _____

SUBSEQUENT: NAME: _____

ADDRESS: STREET: _____

TOWN: _____

COUNTRY: _____

P.CODE: _____

TRANSFER DATE: _____

SA020A1-E

## Responsibilty For Maintenance

It is the responsibility of the vehicle owner/driver to ensure that all routine maintenance services are undertaken in line with the recommendations specified in Section 5 of this manual. In addition, in order to ensure continued validity of the new vehicle warranty and safe operation of the vehicle, non scheduled maintenance/running repairs should be undertaken at the earliest available opportunity.

Under severe operating conditions, more frequent maintenance is required. Details of the maintenance schedule for such conditions are also given in section 5.

It is recommended that all maintenance operations and repairs are entrusted to a franchised Hyundai dealer to ensure that the latest repair methods, specialized tooling and genuine Hyundai parts are used to ensure the continued reliability and safety of the vehicle.

HYUNDAI

# Getz

SA010A1-E

## OWNER'S MANUAL
## Operation
## Maintenance
## Specifications

HTB089

The information in this Owner's Manual is current at the time of publication. However, the right to amend specifications without notice or obligation to incorporate such amendments into vehicles already produced is reserved.

This manual applies to all markets and includes descriptions and explanations of optional as well as standard equipment. As a result, some of the equipment operating descriptions referred to may not apply to the particular vehicle with which this manual is supplied.

Please refer to the nearest franchised Hyundai dealer for information regarding current standard and optional equipment levels.

# FOREWORD

Hyundai Motor Company wish to take this opportunity to thank you for purchasing a Hyundai product and to welcome you to the ever increasing number of discriminating motorists who drive Hyundai vehicles. The advanced engineering and construction methods employed during both design and production of the Hyundai marque are something of which we are proud, and this commitment to providing a high quality product is supported by a comprehensive after sales and warranty service of which we are equally proud.

This owners manual will introduce the operating and maintenance requirements for the vehicle and it is recommended that it is carefully read to ensure that the maximum performance and durability along with safe and satisfactory operation are obtained. The recommended routine maintenance servicing along with any running repairs that may be required should be entrusted to a franchised Hyundai dealer to ensure that only the latest methods and genuine Hyundai replacement parts are used for the continued reliability, safety and performance of the vehicle.

Should any question or query exist regarding any aspect of your Hyundai please contact the nearest Hyundai dealer who will be only too pleased to assist wherever possible.

**Note:** This owners manual should be considered as part of the vehicle and should be kept in the vehicle at all times for ease of reference.

In the event of the vehicle being sold please ensure that this manual is left in the vehicle for the reference of the new owner.

**CAUTION:**
**Severe engine and transaxle damage may result from the use of poor quality fuels and lubricants that do not meet Hyundai specifications. You must always use high quality fuels and lubricants that meet the specifications listed on Page 9-4 in the Vehicle Specifications section of the Owner's Manual.**

All rights reserved. No part of this publication may be reproduced, stored in any retrieval system or transmitted in any form or by any means without the prior written permission of Hyundai Motor Company.

SA040A1-E

## CAUTION: MODIFICATIONS TO ORIGINAL VEHICLE SPECIFICATION

Modification to the original vehicle specification may invalidate the manufacturers warranty and may adversely affect the safety and durability of the vehicle.
Components which are subject to modification or are added to the original vehicle specification without the express approval of the manufacturer and result in consequential loss or damage are not covered by the vehicle manufacturers warranty.

SA050A1-E

## TWO WAY RADIO INSTALLATION

This vehicle is fitted with electronically controlled fuel injection or other micro processor controlled equipment.
It is possible for incorrectly installed two way radio equipment including mobile telephones to adversely affect these systems.
Before radio equipment of this kind is installed, please contact your Hyundai dealer for recommendation regarding the suitability of the particular radio equipment concerned and the recommended method of installation and equipment location.
Incorrectly installed or unsuitable equipment which gives rise to incorrect functioning of or damage to electronic vehicle components will not fall within the scope of the vehicle manufacturers warranty.

A090A01A-AAT

## SAFETY AND VEHICLE DAMAGE WARNING

This manual includes information titled as WARNING, CAUTION and NOTE. These titles indicate the following:

**WARNING:**
**This indicates that a condition may result in harm, serious injury or death to you or other persons if the warning is not heeded. Follow the advice provided with the warning.**

**CAUTION:**
**This indicates that a condition may result in damage to your vehicle or its equipment if the caution is not heeded. Follow the advice provided with the caution.**

**NOTE:**
**This indicates that interesting or helpful information is being provided.**

A100A01L-EAT

## Guide to Hyundai Genuine Parts

### 1.What are Hyundai Genuine Parts?

Hyundai Genuine Parts are the same parts used by Hyundai Motor Company to manufacture vehicles. They are designed and tested for the optimum safety, performance, and reliability to our customers.

### 2.Why should you use genuine parts?

Hyundai Genuine Parts are engineered and built to meet rigid original manufacturing requirements. Using imitation, counterfeit or used salvage parts is not covered under the Hyundai New Vehicle Limited Warranty or any other Hyundai warranty. In addition, any damage to or failure of Genuine Hyundai Parts caused by the installation or failure of an imitation, counterfeit or used salvage part is not covered by Hyundai Motor Company.

### 3.How can you tell if you are purchasing Hyundai Genuine Parts?

Look for the Hyundai Genuine Parts Logo on the package (see below).

The export specifications are written in English only.

Hyundai Genuine Parts are only sold through authorized Hyundai Dealerships.

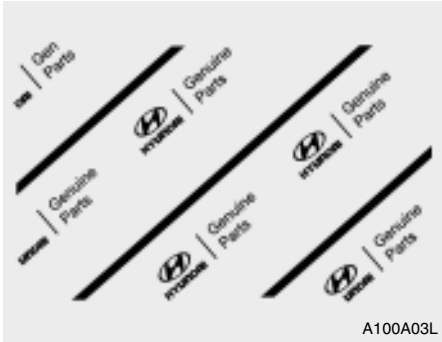

A100A03L

A100A01L

A100A02L

A100A04L

## TABLE OF CONTENTS


| SECTION | PAGE | |
|---|---|---|
| 1. FEATURES OF YOUR HYUNDAI | 1-1 | 1 |
| 2. DRIVING YOUR HYUNDAI | 2-1 | 2 |
| 3. WHAT TO DO IN AN EMERGENCY | 3-1 | 3 |
| 4. CORROSION PREVENTION & APPEARANCE CARE | 4-1 | 4 |
| 5. VEHICLE MAINTENANCE REQUIREMENTS | 5-1 | 5 |
| 6. DO-IT-YOURSELF MAINTENANCE | 6-1 | 6 |
| 7. EMISSION CONTROL SYSTEMS | 7-1 | 7 |
| 8. CONSUMER INFORMATION | 8-1 | 8 |
| 9. VEHICLE SPECIFICATIONS | 9-1 | 9 |
| 10. INDEX | 10-1 | 10 |

B250B01TB-EAT

# INSTRUMENTS AND CONTROLS

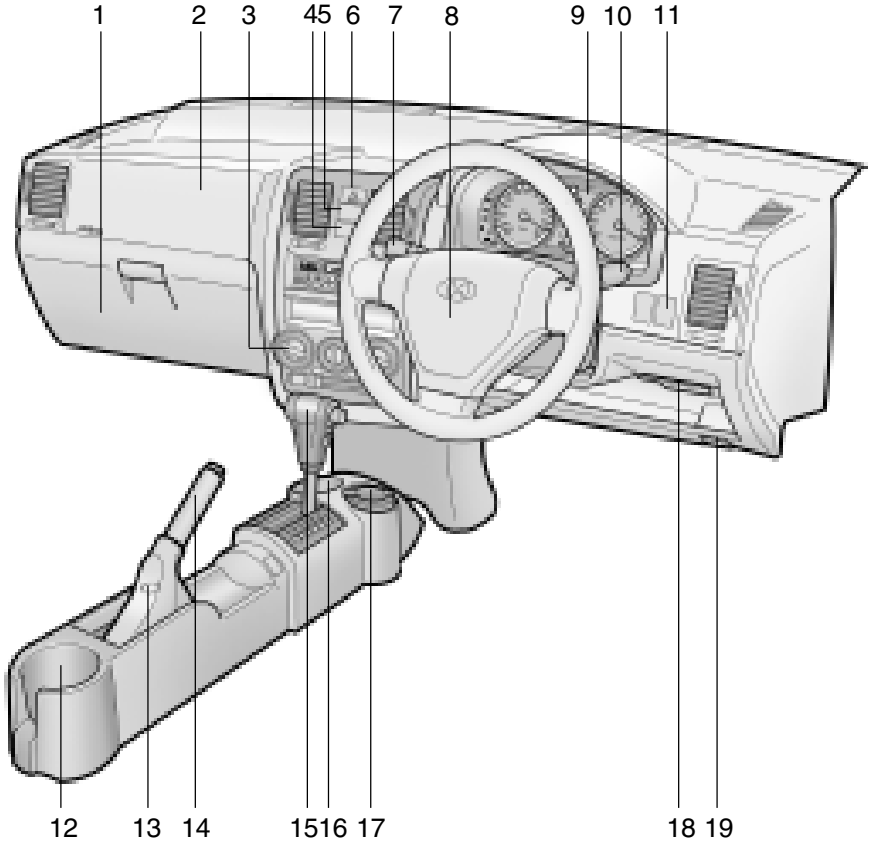

1. Glove Box
2. Passenger's Airbag (Not all models)
3. Heating/Air Conditioning Control Panel (Not all models)
4. Rear Fog Light Switch
5. Front Fog Light Switch (Not all models)
6. Hazard Warning Light
7. Windshield Wiper/Washer Switch
8. Horn and Driver's Airbag (Not all models)
9. Instrument Cluster
10. Multi-Function Light Switch
11. Headlight Leveling Switch (Not all models)
12. Rear Drink Holder
13. Cigarette Lighter
14. Parking Brake Lever
15. Shift Lever (Not all models)
16. Front Drink Holder
17. Ashtray
18. Fuse Box
19. Hood Release Lever

**CAUTION:**

**When installing a container of liquid air freshener inside a vehicle, do not place it near the instrument cluster nor on the instrument panel pad surface. If there is any leakage from the air freshener onto these areas (instrument cluster, instrument panel pad or air ventilator), it may damage these parts. If the liquid from the air freshener does leak onto these areas, wash them with water immediately.**

B255A01TB-GAT

## INDICATOR SYMBOLS ON THE INSTRUMENT PANEL

- AIR BAG — SRS (Airbag) Service Reminder Indicator
- ABS — ABS Service Reminder Indicator
- O/D OFF — O/D OFF Indicator (Automatic transaxle only)
- Turn Signal Indicator Lights
- High Beam Indicator Light
- Oil Pressure Warning Light
- BRAKE — Parking Brake/Brake Level Warning Light
- Charging System Warning Light
- Tail Gate Open Warning Light
- Door Ajar Warning Light and Chime
- Low Fuel Level Warning Light
- CHECK — Malfunction Indicator Light
- Seat Belt Reminder Light
- EPS — Electric Power Steering System (EPS) Warning Light
- Immobilizer Indicator
- Diesel Pre-heat Indicator Light (Diesel only)
- Fuel Filter Warning Light (Diesel only)

* A detail explanations of these items will be found on page 1-37

# 1. FEATURES OF YOUR HYUNDAI


Fuel Recommendations ..... 1-2
Running In ..... 1-3
Immobilizer system ..... 1-4
Door locks (Theft-alarm system) ..... 1-5
Power windows ..... 1-10
Seat ..... 1-11
Seat Belt ..... 1-16
Child restraint system ..... 1-21
Supplemental restraint (AIRBAG) system ..... 1-29
Instrument cluster and indicator lights ..... 1-35
Warning Light and Indicator ..... 1-37
Trip computer ..... 1-44
Multi-Function Light Switch ..... 1-46
Windshield wiper/Washer Switch ..... 1-48
Sunroof ..... 1-53
Mirror ..... 1-57
Bonnet Release ..... 1-60
How to use luggage Room ..... 1-63
Heating and cooling control ..... 1-68
Stereo sound system ..... 1-77
Antenna ..... 1-81

B010A02O-EAT

## FUEL RECOMMENDATIONS

### Petrol Engines

THIS VEHICLE MUST ONLY BE OPERATED WITH UNLEADED FUEL. SERIOUS DAMAGE WILL RESULT FROM THE USE OF LEADED FUEL.

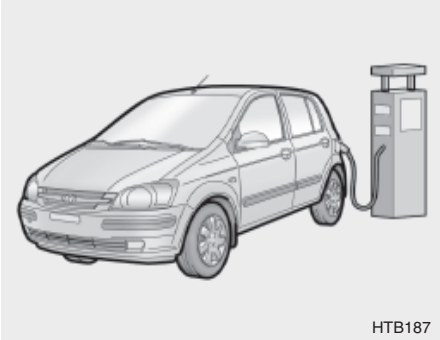

HTB187

Unleaded fuel with a Research Octane Number (RON) of 91 or higher must be used in this vehicle.
To prevent accidental filling of the fuel tank with leaded fuel, a small diameter filler neck along with a restrictor flap are fitted to ensure that only unleaded fuel pump nozzles may enter the filler neck. However, care must be exercised when filling the vehicle tank from jerry cans or by means of a funnel that the fuel being used is unleaded.

The use of leaded fuel in this vehicle will result in irreversible pollution of the catalyst element. Such pollution will prevent correct operation of the catalyst and give rise to increased operating temperatures leading to the catalyst element melting and restricting the exhaust flow along with an increase in exhaust emission levels.

**CAUTION:**
**The vehicle warranty will not extend to damage arising from the use of incorrect fuels.**

### Diesel Engines

Diesel fuel of 52 to 54 cetane is used in Hyundai vehicle. If two types of diesel fuel are available, use summer or winter fuel properly according to the following temperature conditions.

- o Above 23°F (-5°C) ... Summer type diesel fuel.
- o Below 23°F (-5°C) ... Winter type diesel fuel.

Watch the fuel level in the tank very carefully : If the engine stops due to fuel failure, the circuits must be completely purged to permit restarting.

**CAUTION:**
**Do not let any petrol or water enter the tank. This would make it necessary to drain it out and bleed the lines to avoid jamming the injection pump and damaging the engine.**

### Overseas Operation:

When the vehicle is to be operated overseas, the vehicle operator should establish that a suitable fuel for satisfactory operation of the vehicle is available.

SB010E1-A

## PETROLS FOR CLEANER AIR

To help contribute to cleaner air, Hyundai recommends that you use fuels treated with detergent additives, which help to prevent deposit formation in the engine. These fuels will help the engines run cleaner and the Emission Control System performance.

B020A01FC-EAT

## RUNNING IN (Petrol Engine)

The longevity and performance of the vehicle are greatly affected by the care exercised during the first 1,000 miles of motoring. Because of modern manufacturing techniques, rigid guidelines regarding maximum road speeds have become unnecessary. However, certain precautions should be observed in order to obtain the best possible performance and useful life from the vehicle.

1) Do not race the engine without a load (i.e revving the engine in neutral).
2) During the first 500 miles the maximum engine speed should be restricted to 3,000 rpm and gradually increased thereafter.
3) Avoid prolonged constant speed operation. The internal components of the engine will become more quickly run in if the operation speed is varied during the running in period.
4) Never allow the engine to labour. Use the gearbox freely and avoid large throttle open-ings when the engine speed is below 1,500 rpm.
5) Avoid rapid acceleration and maximum throttle openings.
6) Avoid harsh braking during the first 100 miles of urban motoring or 1,000 miles of motorway driving to allow the friction facings of the brake pads and shoes to bed against the discs and drums properly.
7) Avoid trailer towing during the running in period.

B020B01FC-EAT

## RUNNING IN (Diesel Engine)

The longevity and performance of the vehicle are greatly affected by the care exercised during the first 1,000 miles of motoring. Because of modern manufacturing techniques, rigid guidelines regarding maximum road speeds have become unnecessary. However, certain precautions should be observed in order to obtain the best possible performance and useful life from the vehicle.

1) Do not race the engine without a load (i.e revving the engine in neutral).
2) During the first 600 miles the maximum engine speed should be restricted to 3,000 rpm and gradually increased thereafter. And while driving, keep under three quarters of maximum vehicle speed.
3) Avoid prolonged constant speed operation. The internal components of the engine will become more quickly run in if the operation speed is varied during the running in period.
4) Never allow the engine to labour. Use the gearbox freely and avoid large throttle openings when the engine speed is below 1,500 rpm.
5) Avoid rapid acceleration and maximum throttle openings.
6) Avoid harsh braking during the first 100 miles of urban motoring or 1,000 miles of motorway driving to allow the friction facings of the brake pads and shoes to bed against the discs and drums properly.
7) Avoid trailer towing during the running in period.

6SB035A1-FE

## IMMOBILIZER SYSTEM

The immobilizer system is an anti-theft device, designed to prevent and deter vehicle theft.

B880B03A-GAT

### Keys

All of the locks fitted to the vehicle are operated by the same key. However, since it is possible to lock the doors without the use of the key, care should be exercised to ensure that the key does not become locked inside the vehicle by mistake.

### NOTE:

**If you make your own duplicate key, you will not be able to cancel the system or start the engine.**

B880C02A-GAT

### Key Numbers

B880C01L

The vehicle key number is recorded upon a metal tag attached to the keys when the vehicle is first delivered to you.
The key number should be recorded and kept in a safe place in case the need to order further keys arises. New keys are available from any Hyundai dealer by quoting the relevant key number.

In the interest of security, the metal tag attached to the keys which bears the key number should be removed from the key ring after you receive your new vehicle. In addition, key numbers cannot be provided by Hyundai for security reasons.
If you need additional keys or if you should lose your keys, your authorized Hyundai dealer can make new keys.

B040A01A-EAT

# DOOR LOCKS

**WARNING:**

- **Unlocked doors can be dangerous. Before you drive away (especially if there are children in the car), be sure that all the doors are securely closed and locked so that the doors cannot be inadvertently opened from the inside. This helps ensure that doors will not be opened accidentally.**
- **Before opening the door, always look for and avoid oncoming traffic.**

B040B01TB-AAT

## Locking and Unlocking Front Doors With a Key

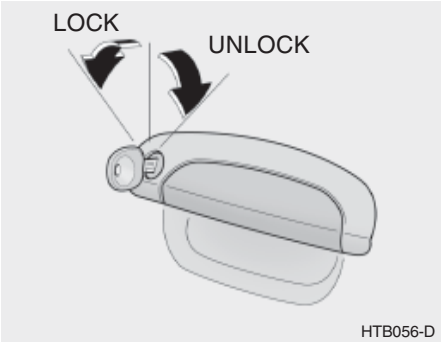


- The door can be locked or unlocked with a key.
- Lock the door by turning the key toward the rear of the vehicle and unlock it by turning the key toward the front.

B040C01FC-GAT

## Locking From the Outside

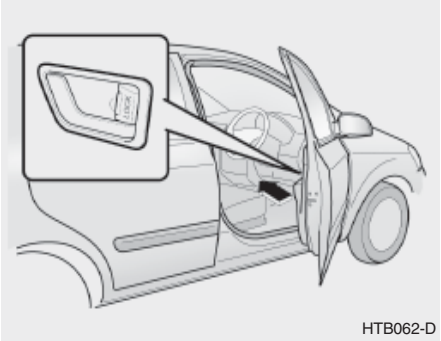


The doors can be locked without a key. To lock the doors from the outside, first push the inside lock switch to the "LOCK" position, so that the red mark on the switch is not visible, then close the door.
The door will not lock if the key is left in the ignition switch when the front doors close. This is normal. (Not all models)

**NOTE:**

- **When locking the door this way, be careful not to lock the door with the ignition key left in the vehicle.**

- **To help prevent theft, always remove the ignition key, close all windows, and lock all doors and tail gate when leaving your vehicle unattended.**

SB040D1-F

## Locking from the Inside

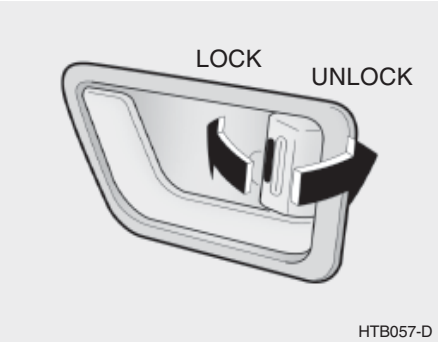


To lock the doors from inside, simply close the door and push the lock switch to the "LOCK" position.
When this is done, the door cannot be using either the inside or the outside door handle.

**NOTE:**
**When the door is locked, the red mark on the switch is not visible and the character "LOCK" on the switch is visible.**

SB040F1-E

## CHILD-PROOF REAR DOOR LOCK

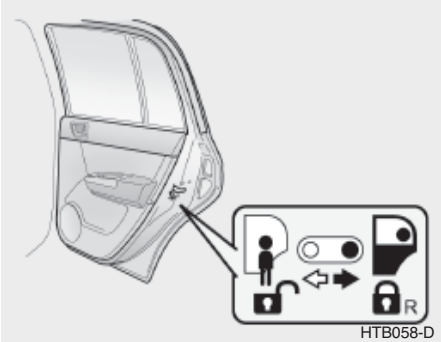


The rear doors are fitted with child proof locks to prevent accidental opening of the doors using the inside door handle, whilst allowing access by means of the outside handle (such as is required in the event of an acccident for example) provided that the door lock button is at the unlocked position. Use of the child proof lock mechanism is recommended when children are carried in the vehicle. The child proof lock mechanism may be activated by opening the door and moving the lever located by the door latch to the " 🔒 " position. Move the lever to the opposite direction of " 🔒 " position when normal door operation is desired.

SB040G1-F

## CENTRAL DOOR LOCK (Not all models)

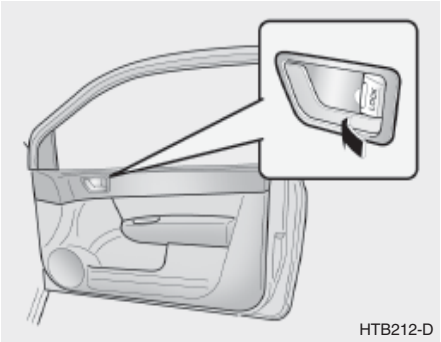

The central door locking is operated by pushing the driver's door lock switch toward the front or rear of the vehicle. If the passenger and rear doors are open when the switch is pushed, the door will remain locked when closed.

**NOTE:**

- **When pushing the switch toward the rear, all doors and tail gate will unlock.**
  **When pushing the switch toward the front, all doors and tail gate will lock.**
- **When the door is unlocked, the red mark on the switch is visible and the character "LOCK" on the switch is visible.**
- **The central door locking is operated by turning the key (with theft-alarm system: driver's door and passenger's door, without theft-alarm system: driver's door only) toward the front or rear of the vehicle.**

B070A01A-EAT

## ANTI-THEFT ALARM SYSTEM (Not all models)

This system is designed to provide protection from unauthorized entry into the car. This system is operated in three stages: the first is the "Armed" stage, the second is the "Alarm" stage, and the third is the "Disarmed" stage. If triggered, the system provides an audible alarm with blinking of the turn signal lights.

B070B01O-DAT

### Armed Stage

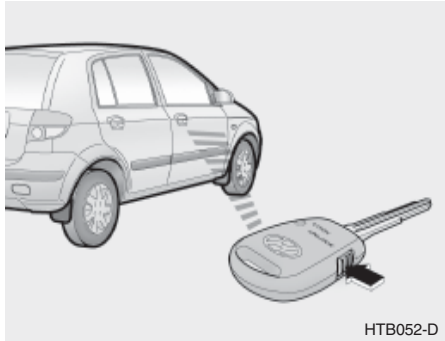


Park the car and stop the engine. Arm the system as described below.

1) Remove the ignition key from the ignition switch.
2) Make sure that the engine bonnet and tail gate are locked.
3) Lock the doors using the transmitter of the keyless entry system.

After completion of the steps above, the turn signal lights will blink once to indicate that the system is armed.

**NOTE:**

1) **If any door, tail gate or engine bonnet remains open, the system will not be armed.**
2) **If this happens, rearm the system as described above.**

**CAUTION:**

**Do not arm the system until all passengers have left the car. If the system is armed while a passenger(s) remains in the car, the alarm may be activated when the remaining passenger(s) leaves the car.**

B070C01FC-EAT

## Alarm Stage

The alarm will be activated if any of the following occurs while the car is parked and the system is armed.

1) A front or rear door is opened without using the transmitter.
2) The tail gate is opened without using the transmitter.
3) The engine bonnet is opened.

The alarming horn will sound and the turn signal lights will blink continuously for 27 seconds. To turn off the system, unlock the door or tail gate with the transmitter.

B070D01TB-AAT

## Disarmed Stage

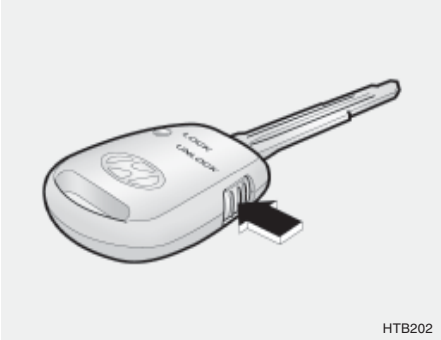

HTB202

The system will be disarmed when the driver's or passenger's door is unlocked by depressing the button on the transmitter.

After completion of the step above, the turn signal lights will blink twice to indicate that the system is disarmed.

### NOTE:

**Once the system has been disarmed, it can not be rearmed except by repeating the arming procedures.**

### CAUTION:

**Only the transmitter can disarm the armed stage. If the transmitter does not disarm the system, it is necessary to take the following steps;**

1. **Unlock the door with the key, which will cause, the alarm to be activated.**
2. **Insert the key in the ignition key cylinder and turn the ignition key to "ON" position.**
3. **Wait for 30 seconds.**

**After completing the steps above, the system will be disarmed.**

B070F01TB-EAT

## Keyless Entry System (Not all models)

### Locking doors

1. Close all doors.
2. Push the button on the transmitter.
3. At the same time all doors lock, the turn signal light will blink once to indicate that the system is armed.

### Unlocking doors

1. Push the button on the transmitter.
2. At the same time all doors unlock, the turn signal light will blink twice to indicate that the system is disarmed.

B070E01TB-GAT

## Replacing the battery

When the transmitter's battery begins to get weak, it may take several pushes on the button to lock or unlock the doors, and the LED will not light. Replace the battery as soon as possible.

Battery type : CR1220

### Replacement instructions:

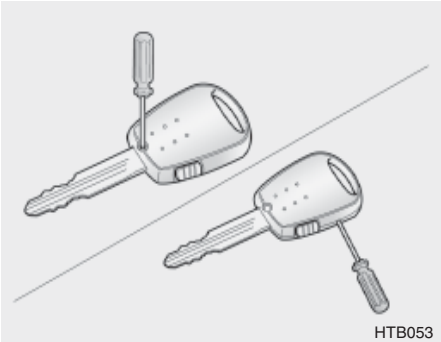


1. Remove the screw with a (+) screwdriver.
2. Separate the case with a (-) screwdriver as shown in the illustration.

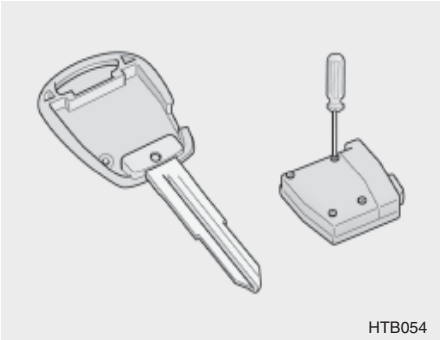


3. Remove four screws back side of the built-in circuit.

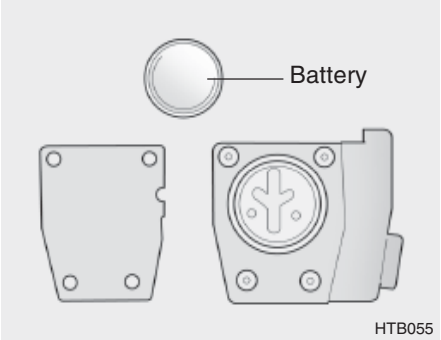


4. Remove the old battery from the case and note the polarity. Make sure the polarity of the new battery is the same (+side facing up), then insert it in the transmitter.

SB060A1-E

## DOOR WINDOWS

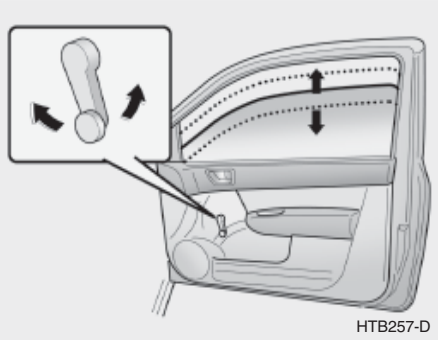


The front door windows may be opened or closed by turning the window regulator handle. Ensure that when the windows are closed, nothing may become trapped between the glass and the door frame.

**WARNING:**
**When opening or closing the windows, make sure your passenger's arms and hands are safety out of the way.**

B060A01E-EAT

## POWER WINDOWS (Not all models)

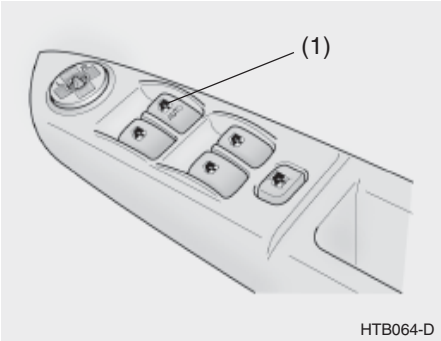


The power windows operate when the ignition key is in the "ON" position. The main switches are located on the driver's armrest and control the front and rear windows on both sides of the vehicle. The windows may be opened by depressing the appropriate window switch and closed by pulling up the switch. To open the window on the driver's side, press the switch(1) down. The window moves as long as the switch is operated.

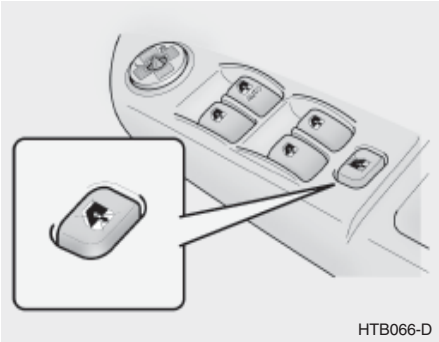


In order to prevent operation of the passenger front and rear windows, a window lock switch is provided on the armrest of the driver's door. To disable the power windows, press the window lock switch.
To revert to normal operation, press the window lock switch a second time.

### Auto-Down Window (Driver's Side)

The Auto-Down window is moved to its fully open position by pushing the switch. To stop at the desired position push the switch again.

**WARNING:**

1) **Be careful that someone's head, hands and body are not trapped by a closing window.**
2) **Never try to operate the main switch on the driver's door and the individual door window switch in opposing directions at the same time. If this is done, the window will stop and cannot be opened or closed.**
3) **Do not leave children alone in the car. Always remove the ignition key for their safety.**

B080A01FC-EAT

## SEAT ADJUSTMENT

**WARNING:**

**Front seat adjustments must not be undertaken whilst the vehicle is in motion. Loss of control of the vehicle may result if seat adjustments are made whilst the vehicle is in motion.**

B080B01FC-EAT

## FRONT SEATS

### Front Seat Rake Adjustment

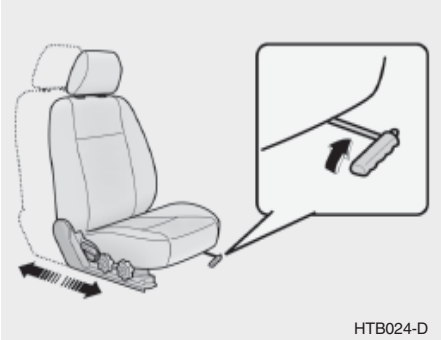


The front seat rake adjustment is performed by raising the lever at the front of the seat base and sliding the seat to the desired position. At this position the lever should be released and the seat rocked to and fro to ensure that the mechanism has locked.

SB070C1-E

### Front Seat Recline Adjustment

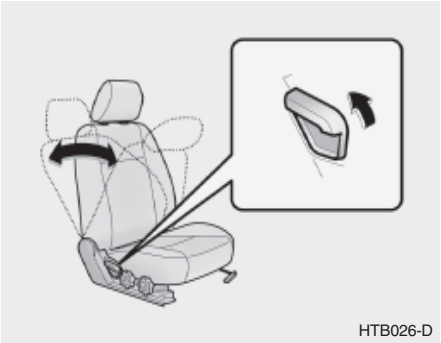


The front seat back recline angle may be adjusted by leaning forward slightly and raising the recline adjustment lever at the side of the seat. When the seatback is at the desired angle, the lever should be released. Ensure that the seatback is locked before driving the vehicle.

SB070D2-E

## Head Restraint Adjustment

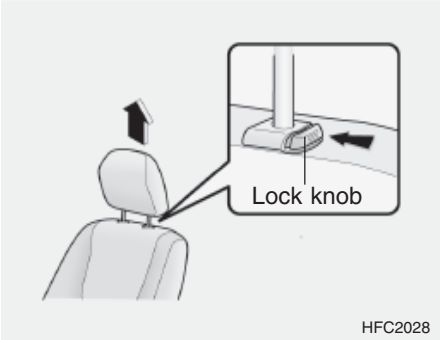


To raise the head restraint, pull it up. To lower it, push it down while pressing the lock knob. For maximum effectiveness in the event of an accident, the restraint must be adjusted so that the restraint is approximately at the level of the seat occupant's ears. The restraint must never be so adjusted that it is centred about the level of the seat occupant's neck.

**WARNING:**
**Do not operate the vehicle with the restraints removed. The restraints provide protection against neck injury when installed and correctly adjusted.**

SB070E1-E

## Lumbar Support Adjustment (Not all models) (Driver's seat only)

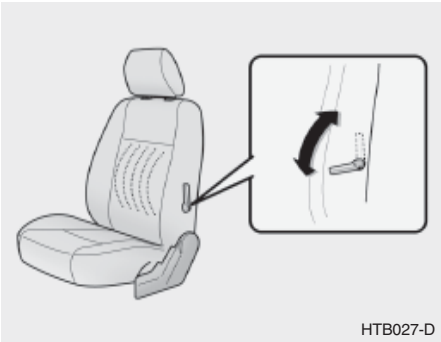


Some models are fitted with adjustable driver seat lumbar support which may be used to increase the amount of lumbar support offered by the seat back. Adjustment is performed by moving the handle at the side of the backrest in a forward direction to increase the support.

SB070F1-F

## Seat Cushion Height Adjustment (Not all models) (Driver's seat only)

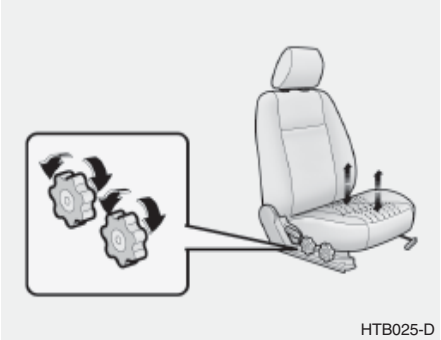


To raise or lower the front part of the seat cushion, turn the front knob forward or rearward.
To raise or lower the rear part of the seat cushion, turn the rear knob forward or rearward.

ZB070A1-E

## REAR SEAT ENTRY (For 3-door model)

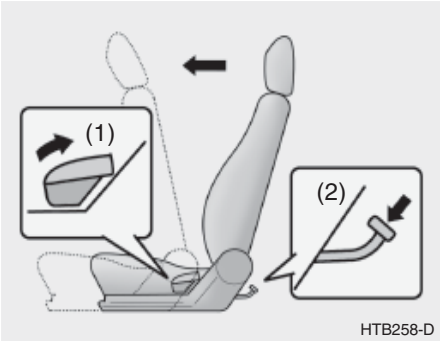


The front passenger seatback should be tilted to enter the rear seat.
By pulling up on the recliner control lever (1) at the outside of the front passenger seat, the seatback will tilt forward and the seat will automatically slide forward.
Rear seat occupants can tilt the front passenger seatback by depressing the foot lever (2) as shown in the drawing.

**WARNING:**
**Passengers sitting in the rear seat should be careful not to accidentally press the foot lever (2) whilst the vehicle is moving. As this may cause the seat back to move forward and injure a front seat occupant.**

B080H01FC-EAT

## REAR SEAT Seat Rake Adjustment

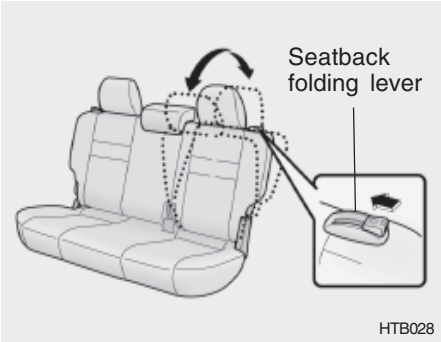


The rear seat rake adjustment is performed by raising the lever at the front of the seat base and sliding the seat to the desired position. At this position the lever should be released and the seat rocked to and fro to ensure that the mechanism has locked.

SB070D2-E

## Head Restraint Adjustment

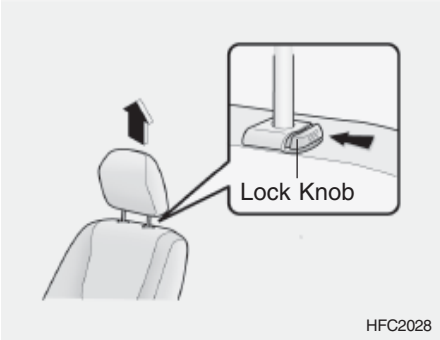


To raise the head restraint, pull it up. To lower it, push it down while pressing the lock knob. For maximum effectiveness in the event of an accident, the restraint must be adjusted so that the restraint is approximately at the level of the seat occupant's ears. The restraint must never be so adjusted that it is centred about the level of the seat occupant's neck.

**WARNING:**
**Do not operate the vehicle with the restraints removed. The restraints provide protection against neck injury when installed and correctly adjusted.**

B099A02F-EAT

## BEFORE FOLDING THE REAR SEATS

Outboard Rear Seat Belt

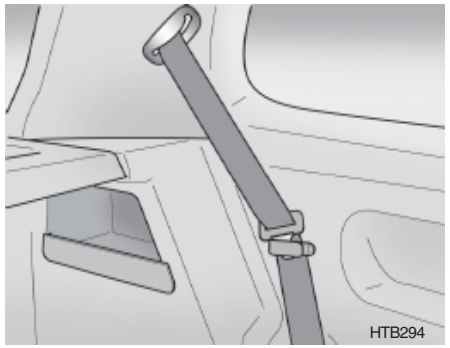


Rear Seat Centre's 3 Point Type Seat Belt.

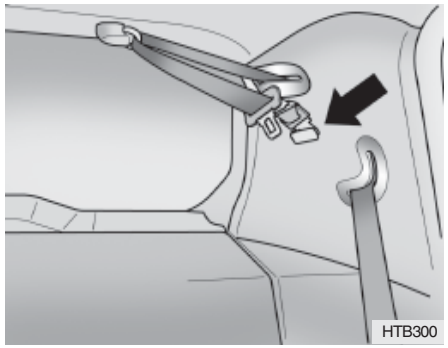


In order to prevent the shoulder belt from being damaged while folding the rear seat, the shoulder belt must be passed through the hanger to keep it out of the way.

**CAUTION:**
**Seat belts must be removed from the hanger when in use.**

B090B01TB-EAT

## Folding Rear Seatback and Seat Cushion

For greater convenience, the entire seatback and seat cushion may be folded down and up.

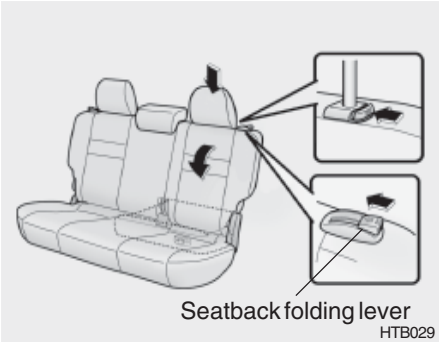


1. Push the headrest down to the lowest position.
2. To fold down the seatback , push and hold the seatback folding lever toward the headrest, then push down the seatback.

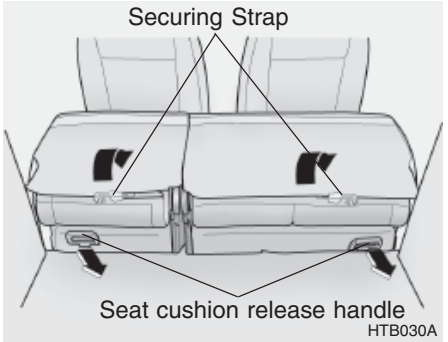


3. Pull the seat cushion release handle rear ward, then lift up a desired seat cushion.

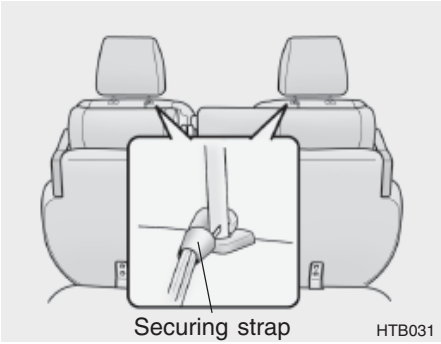


4. To secure the seat, hook the securing strap under the seat back to the headrest stay of front driver and passenger seat.
5. To return the seatback and seat cushion to its normal position, reverse the above procedure.

o When you return the seatback to its upright position, always be sure it is locked into position by pulling and pushing on the top of seatback.

**WARNING:**

- **o When you return the folded down seatback to its upright position, make sure the seat belts are in position to be accessible and to function properly.**
- **o When you return the folded down seatback to its upright position, be careful not to get your fingers or legs in.**
- **o The purpose of the fold down rear seatback and the fold forward rear seat cushion is to increase cargo space. Do not allow passengers to sit in the cargo area while the car is moving. This is not a proper seating position**

**and no seat belts are available for use when the seatback is folded down. Passengers who are not properly seated and wearing seat belts could sustain serious injuries or death in case of an accident or a sudden stop.**

- **Objects should not extend higher than the top of the front seatbacks. This could allow cargo to slide forward and cause injury or damage during sudden stops.**
- **When you return the folded down seatback to its upright position, always be sure to install the headrests in their proper positions. Headrests are important to the safety of occupants in a rear collision. If the headrests are not installed in their proper position, serious injury or death could result if a rear end collision occurs.**

B140A01B-GAT

## REAR SEAT WARNING

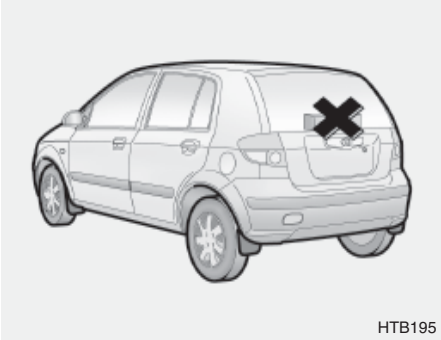


For the safety of all passengers, luggage or other cargo should not be piled higher than the top of the seatback.

SB090A1-E

## SEAT BELT PRECAUTIONS

Seat belts should be worn at all times by all occupants front and rear. The possibility of injury or the severity of injuries suffered in the event of an accident will be greatly reduced by the wearing of seat belts.
In addition the following recommendations should be observed.

SB090B1-E

### Babies/Small Children

Babies and small children must be restrained using a restraint system specifically designed for this purpose. Under no circumstances should a child be carried in the vehicle without the use of a suitable restraint which meets the regulations in force in the country where the vehicle is in operation.

SB090C1-E
## Larger Children

Larger children should occupy the rear seat and be restrained at all times. The restraint may take the form of a special safety belt or the original factory fitted seat belt used in conjunction with an approved booster cushion depending upon the size and weight of the child. Under no circumstances should children be allowed to travel standing, kneeling or lying on the seat.
Never allow children to ride in the front passenger seat.

SB090O1-E
## Pregnant Women

The use of a seat belt is recommended for pregnant women. The seat belt should be worn as low and snugly as possible across the hips, not across the abdomen. A qualified Medical Practitioner should be consulted for further information.

SB090E1-E
## Injured Persons

A seat belt should be used when an injured person is being transported. For specific recommendations, the advice of a qualified Medical Practioner should be sought.

SB090F1-E
## Seat Belt Occupancy

The seat belts are designed to be used by one seat occupant only. The use of a seat belt by more than one person increases the levels of injury which may be sustained in the event of an accident.

SE090G1-E
## Do Not Lie Down

To ensure that the maximum level of protection may be afforded by the seat belt system, all passengers should be sitting in an upright position throughout the journey. The seat belt will be unable to afford maximum protection if the front seats are at or near the fully reclined position.

SB090H1-E
## CARE OF SEAT BELTS

Seat belt assemblies must never be disassembled or modified in any way. In addition, care should be exercised to ensure that the belt assemblies do not become damaged by being trapped in seat mechanisms, door shuts etc.

SB090I-E
## Periodic Inspection

It is recommended that all seat belts be inspected periodically for wear or damage of any kind. Parts of the system that are damaged should be replaced as soon as possible. Under no circumstances must any part of the seat belt assemblies be dismantled or repaired.

SB090J1-E
## Keep Belts Clean and Dry

Seat belts should be kept clean and dry. If belts become dirty, they can be cleaned using a mild soap solution and warm water. Bleach, dye, strong detergents or abrasives should not be used since the fabric may become damaged and weakened.

SB090K1-E

## Replacement of Seat Belts

The entire seat belt assembly or assemblies should be replaced if the vehicle has been involved in an accident even if no damage is evident. Additional questions concerning seat belt operation should be directed to a Hyundai Dealer.

B170A04A-EAT

## HEIGHT ADJUSTABLE FRONT SEAT SHOULDER BELT (Not all models)

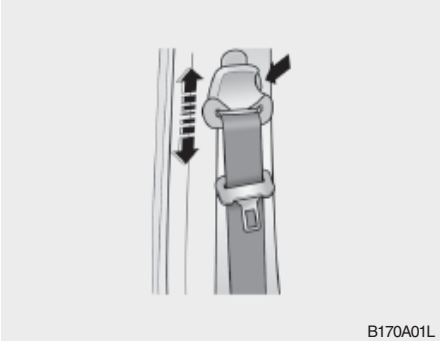

B170A01L

You can adjust the height of the shoulder belt anchor to one of the 4 positions. If the height of the adjusting seat belt is too near your neck, you will not be getting the most effective protection. The shoulder portion should be adjusted so that it lies across your chest and midway over your shoulder nearest the door and not your neck.

To adjust the height of the seat belt anchor, lower or raise the height adjuster into an appropriate position. To raise the height adjuster, pull it up. To lower it, push it down while pressing the height adjuster button.

Release the button to lock the anchor into position. Try sliding the release button to make sure that it has locked into the position.

**WARNING:**

- **The height adjuster must be in the locked position when the vehicle is moving.**
- **The misadjustment of height of the shoulder belt could reduce the effectiveness of the seat belt in a crash.**

SB090P1-E

## SEAT BELTS (3-Point Type)

### To Fasten The Seat Belt

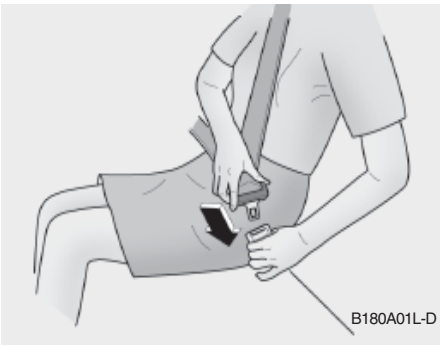

B180A01L-D

The seat belts are fastened by pulling the belt buckle towards the seat belt stalk and inserting the metal tongue of the buckle into the stalk. The buckle should be firmly pressed into the stalk until locked which will be indicated by an audible "click".

The length of the seat belt webbing will be automatically adjusted by the seat belt mechanism to allow the wearer maximum freedom of movement whilst the belt is being worn. However, in the event of rapid deceleration or impact, the belt mechanism will automatically lock.

The mechanism will also lock if the seat belt webbing is withdrawn too quickly when the belt is being fastened or if attempts are made to withdraw the webbing whilst the vehicle is not on level ground. Should the seat belt lock under these conditions, it will be possible to release the mechanism by allowing a small amount of webbing to be retracted and the belt withdrawn again.

B200A01S-GAT

## Adjusting Your Seat Belt

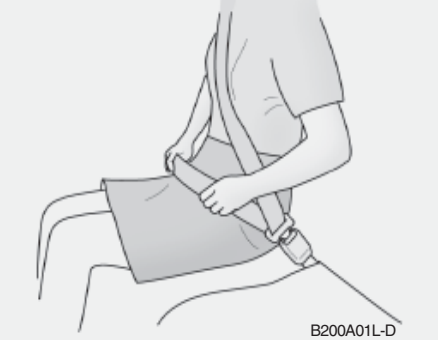


You should place the belt as low as possible on your hips, not on your waist. If the belt is located too high on your body, you could slide under it in case of accident or a sudden stop. This could result of death, serious injury or property damage. Both arms should not be under or over the belt. Rather, one should be over and the other under, as shown in the illustration. Never wear the seat belt under the arm nearest the door.

B210A01A-AAT

## To Release the Seat Belt

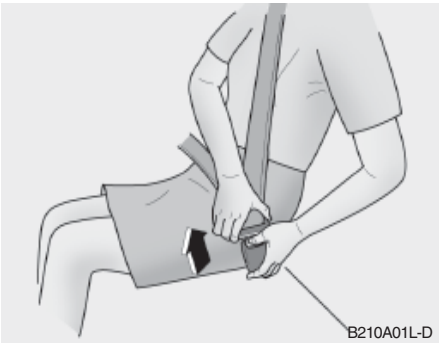


The seat belt is released by pressing the release button in the locking buckle. When it is released, the belt should automatically draw back into the retractor.
If this does not happen, check the belt to be sure it is not twisted, then try again.

B220A01Y-DAT

## SEAT BELTS - Rear Seat Centre's 3-Point System With Emergency Locking Retractor

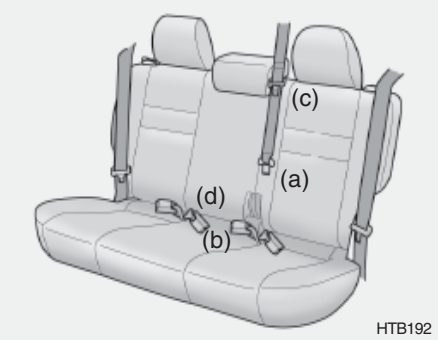


1. Before fastening the rear seat centre belt, confirm the metal tab (a) and buckle (b) are latched together.
2. After confirming that (a) and (b) are latched, pull the seat belt out of the retractor and insert the metal tab (c) into the buckle (d).

There will be an audible "click" when the tab locks in the buckle. The seat belt automatically adjusts to the proper length only after the lap belt is adjusted manually so that it fits snugly around your

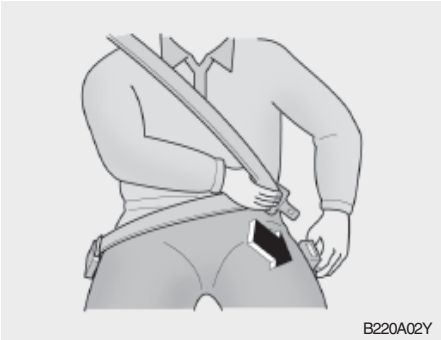


hips. If you lean forward in a slow, easy motion, the belt will extend and let you move around. If there is a sudden stop or impact, the belt will lock into position. It will also lock if you try to lean forward too quickly.

**WARNING:**

- **When using the rear seat centre belt, you must lock all metal tabs and buckles. If any metal tab or buckle is not locked, it will increase the chance of injury in the event of collision.**
- **Never unlock the metal tab (a) and the buckle (b) with the following exceptions.**
  - **(1)In case of folding rear seatbacks down.**
  - **(2)If transporting an object on the rear seat may cause damage to the rear seat centre belt.**
- **Lock the metal tab (a) and the buckle (b) immediately after folding rear seatbacks up.**

B220C01Y-DAT

## To Release the Seat Belt

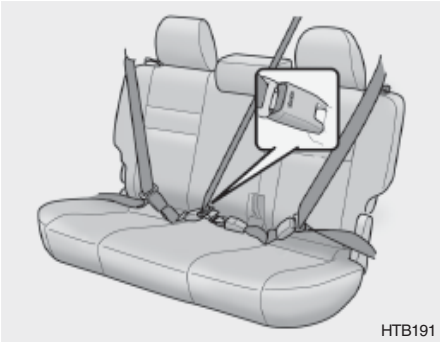


When you want to release the seat belt, press the button in the locking buckle.

**WARNING:**

**The centre belt latching mechanism is different from those for the rear seat shoulder belts. When fastening the rear seat shoulder belts or the rear seat centre belt, make sure they are inserted into the correct buckles to obtain maximum protection from the seat belt system and assure proper operation.**

B230A03A-EAT

## CHILD RESTRAINT SYSTEM

Children riding in the car should sit in the rear seat and must always be properly restrained to minimize the risk of injury in an accident, sudden stop or sudden manoeuvre. According to accident statistics, children are safer when properly restrained in the rear seats than in the front seat. Larger children should use one of the seat belts provided.

You are required by law to use safety restraints for children. If small children ride in your vehicle you must put them in a child restraint system (safety seat). Children could be injured or killed in a crash if their restraints are not properly secured. For small children and babies, a child seat or infant seat must be used. Before buying a particular child restraint system, make sure it fits your car and seat belts, and fits your child. Follow all the instructions provided by the manufacturer when installing the child restraint system.

**WARNING:**

- **A child restraint system must be placed in the rear seat. Never install a child or infant seat on the front passenger's seat.**
  **Should an accident occur and cause the passenger side airbag to deploy, it could severely injure or kill an infant or child seated in an infant or child seat. Thus, only use a child restraint in the rear seat of your vehicle.**
- **Since a safety belt or child restraint system can become very hot if it is left in a closed vehicle, be sure to check the seat cover and buckles before placing a child there.**
- **When the child restraint system is not in use, store it in the trunk or fasten it with a safety belt so that it will not be thrown forward in the case of a sudden stop or an accident.**
- **Children who are too large to be in a child restraint should sit in the rear seat and be restrained with the available lap/shoulder belts.**

**Never allow children to ride in the front passenger seat.**

- **Always make sure that the shoulder belt portion of the outboard lap/shoulder belt is positioned midway over the shoulder, never across the neck or behind the back. Moving the child closer to the centre of the vehicle may help provide a good shoulder belt fit. The lap belt portion of the lap/shoulder belt or the centre seat lap belt must always be positioned as low as possible on the child's hips and as snug as possible.**
- **If the seat belt will not properly fit the child, Hyundai recommends the use of an approved booster seat in the rear seat in order to raise the child's seating height so that the seat belt will properly fit the child.**
- **Never allow a child to stand up or kneel on the seat.**
- **Never use an infant carrier or child safety seat that "hooks" over a seatback; it may not provide adequate security in an accident.**
- **Never allow a child to be held in a person's arms while they are in a moving vehicle, as this could result in serious injury to the child in the event of an accident or a sudden stop. Holding a child in a moving vehicle does not provide the child with any means of protection during an accident, even if the person holding the child is wearing a seat belt.**
- **If the child restraint seat is not anchored properly, the risk of a child being seriously injured or killed in a collision greatly increases.**

B230G01A-GAT

## Installation on Outboard Rear Seats

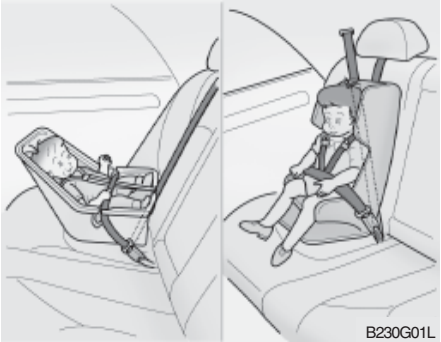


To install a child restraint system in the outboard rear seats, extend the shoulder/lap belt from its retractor. Install the child restraint system, buckle the seat belt and allow the seat belt to take up any slack. Make sure that the lap portion of the belt is tight around the child restraint system and the shoulder portion of the belt is positioned so that it cannot interfere with the child's head or neck. After installation of the child restraint system, try to move it in all directions to be sure the child restraint system is securely installed.

If you need to tighten the belt, pull more webbing toward the retractor. When you unbuckle the seat belt and allow it to retract, the retractor will automatically revert back to its normal seated passenger emergency locking usage condition.

**NOTE:**

- **Before installing the child restraint system, read the instructions supplied by the child restraint system manufacturer.**
- **If the seat belt does not operate as described, have the system checked immediately by your authorized Hyundai dealer.**

**WARNING:**

**Do not install any child restraint system in the front passenger seat. Should an accident occur and cause the passenger side airbag to deploy, it could severely injure or kill an infant or child seated in an infant or child seat. Therefore, only use a child restraint system in the rear seat of your vehicle.**

B230B02A-GAT

## Using a Child Restraint System with "Tether Anchorage" System

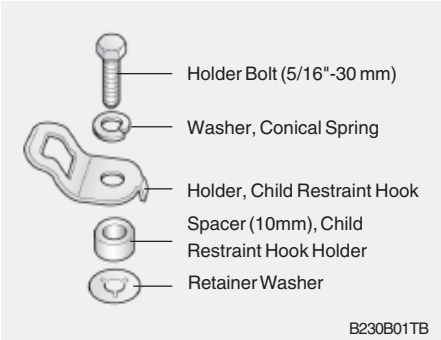


For small children and babies, the use of a child seat or infant seat is strongly recommended. This child seat or infant seat should be of appropriate size for the child and should be installed in accordance with the manufacturer's instructions. It is further recommended that the seat be placed in the vehicle's rear seat since this can make an important contribution to safety. Your vehicle is provided with three child restraint hook holders for installing the child seat or infant seat.

B230E02FC-GAT

## Securing a Child Restraint System with "Tether Anchorage" System

Three child restraint hook holders are located on the vertical back panel. (behind rear bumper bar)

1. Route the child restraint seat strap over the seatback.
   For vehicles with adjustable headrests, route the tether strap under the headrest and between the headrest posts, otherwise route the tether strap over the top of the seatback.

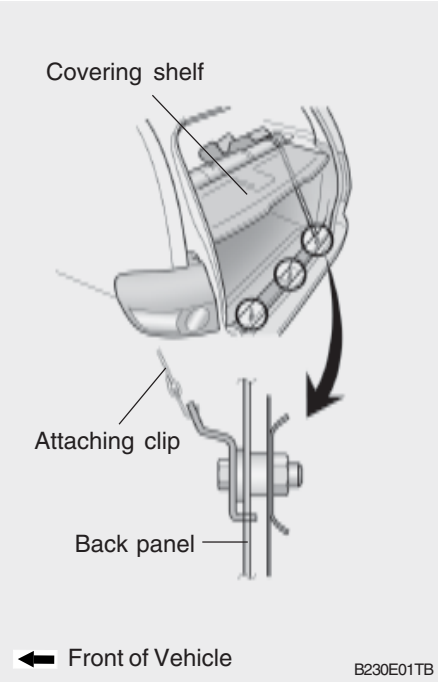


2. Remove the load space cover.
3. Connect the tether strap hook to the child restraint hook holder and tighten to secure the seat.

**WARNING:**
**To install the Child Restraint Seat, for safety reasons the Seat should be positioned rearmost with the seatback in a vertical position, not reclined.**

B230D03E-GAT

## Using a Child Restraint System with "ISOFIX" System and "Tether Anchorage" System

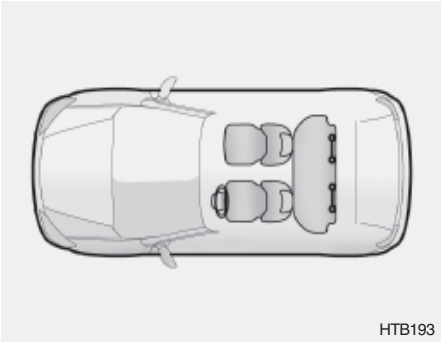


ISOFIX is a standardised method of fitting child seats that eliminates the need to use the standard adult seat belt to secure the seat in the vehicle. This enables a much more secure and positive location with the added benefit of easier and quicker installation.

An ISOFIX-seat can only be installed if it has vehicle-specific approval in accordance with the requirements of ECE-R44. For your Hyundai, the Hyundai ISOFIX GR1 / Hyundai Duo / Römer ISOFIX GR1 and the Römer Duo ISOFIX / Britax Duo ISOFIX is approved ac-

cording to the requirement ECE-R44. This seat has been tested extensively by Hyundai and is recommended for your Hyundai.

## NOTE:

**At present, this seat is the only one complying with that provision. In case that other manufacturers will furnish proof of a respective certification, Hyundai is going to evaluate this seat carefully and will give a recommendation provided that seat complies to the law. Please ask your Hyundai dealer in this respect.**

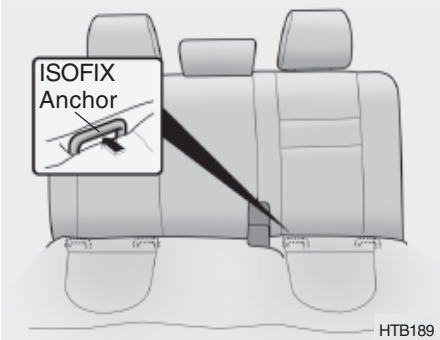


On each side of the rear seat, between the cushion and backrest, are located a pair of ISOFIX anchorage points together with a top tether mounting on the luggage compartment. During the installing, the seat has to be engaged at the anchorage-points in a way you can hear it clicking (check by pulling!) and has to be fixed with the Top Tether-belt on the belonging point in the luggage-compartment. The installing and the use of a child-seat has to be done according to the installing-manual, which is added to the ISOFIX-seat.

## NOTE:

**An ISOFIX-child-seat can only be installed if the seat has a vehicle-specific approval according to ECE-R44. Before using the ISOFIX-child-seat, which was bought for another car, ask your Hyundai-dealer whether this seat-type is approved and recommended for your Hyundai.**

### To secure the child restraint seat

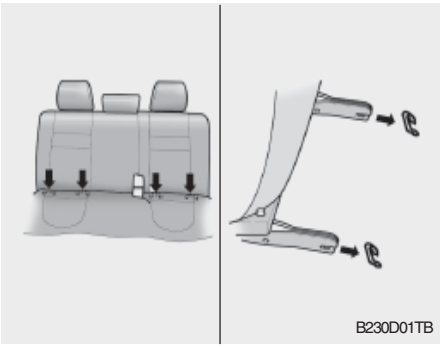


1. To engage the child restraint seat to the ISOFIX anchor, insert the child restraint seat latch into the ISOFIX anchor. Listen for the audible "click" sound.
2. Connect the tether strap hook to the child restraint hook holder and tighten to secure the seat. Refer to "Securing a Child Restraint System with the Tether Anchorage System" on page 1-23.

**WARNING:**

- **Do not install a child restraint seat at the center of the rear seat using the vehicle's ISOFIX anchors. The ISOFIX anchors are only provided for the left and right outboard rear seating positions. Do not misuse the ISOFIX anchors by attempting to attach a child restraint seat in the middle of the rear seat to the ISOFIX anchors. In a crash, the child restraint seat ISOFIX attachments may not be strong enough to secure the child restraint seat properly in the center of the rear seat and may break, causing serious injury or death.**
- **Do not mount more than one child restraint to a child restraint lower anchorage point. The improper increased load may cause the anchorage points or tether anchor to break, causing serious injury or death.**
- **Attach the ISOFIX or ISOFIX-compatible child restraint seat only to the appropriate locations shown in the illustration.**

B230H01TB-GAT

## Child Seat Restraint Suitability For Seat Position

Use child safety seats that have been officially approved and are appropriate for your children. When using the child safety seats, refer to the following table.

| Age Group | Seating Position | | |
|---|---|---|---|
| | Front Passenger | Rear Outboard | Rear Centre |
| 0 : Up to 10 kg (0 ~ 9 months) | X | U | X |
| 0+ : Up to 13 kg (0 ~ 2 years) | X | U | X |
| I : 9kg to 18kg (9 months ~ 4 years) | X | U, L1 | X |
| II & III : 15kg to 36kg (4 ~ 12 years) | X | UF | X |

U : Suitable for "universal" category restraints approved for use in this mass group

UF: Suitable for forward-facing "universal" category restraints approved for use in this mass group

L1 : Suitable for "Römer ISOFIX GR1" approved for use in this mass group (Approval No: E1 R44-03301133)

X : Seat position not suitable for children in this mass group

B180B01A-EAT

## Pre-Tensioner Seat Belt

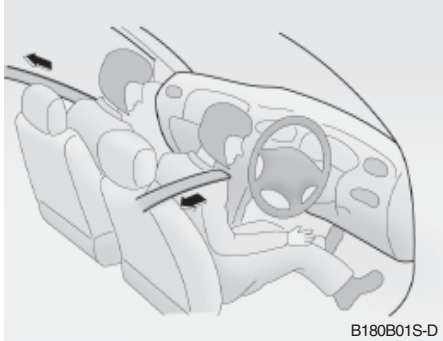


Your Hyundai vehicle is equipped with driver's and front passenger's pre-tensioner seat belts. The purpose of the pre-tensioner is to make sure that the seat belts fit tightly against the occupant's body in certain frontal collisions. The pre-tensioner seat belts can be activated with the airbags.

The pre-tensioner seat belt operates in the same way as an Emergency Locking Retractor (ELR) type of seat belt. When the vehicle stops suddenly, or if the occupant tries to lean forward too quickly, the seat belt retractor will lock into position. However, in certain frontal collisions, the pre-tensioner will activate and pull the seat belt into tighter contact against the occupant's body.

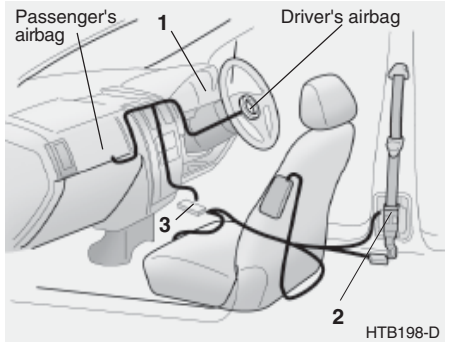


The seat belt pre-tensioner system consists mainly of the following components. Their locations are shown in the illustration.

1. SRS airbag warning light
2. Seat belt pre-tensioner assembly
3. SRS control module

**WARNING:**

**To obtain maximum benefit from a pre-tensioner seat belt:**

1. **The seat belt must be worn correctly.**
2. **The seat belt must be adjusted to the correct position.**

**NOTE:**

- **Both the driver's and front passenger's pre-tensioner seat belts will be activated in certain frontal collisions. The pre-tensioner seat belts can be activated with the airbags. The pre-tensioners will be activated under these conditions even if the seat belts are not being worn at the time of the collision.**
- **When the pre-tensioner seat belts are activated, a loud noise may be heard and fine dust, which may appear to be smoke, may be visible in the passenger compartment. These are normal operating conditions and are not hazardous.**

- Although it is harmless, the fine dust may cause skin irritation and should not be breathed for prolonged periods. Wash your hands and face thoroughly after an accident in which the pre-tensioner seat belts were activated.

**CAUTION:**

- Because the sensor that activates the SRS airbag is connected with the pre-tensioner seat belt, the SRS airbag warning light AIR BAG on the instrument panel will blink for approximately 6 seconds after the ignition key has been turned to the "ON" position and then it should turn off.
- If the pre-tensioner seat belt is not working properly, this warning light will illuminate even if there is no malfunction of the SRS airbag system.
  If the SRS airbag warning light does not illuminate when the ignition key is turned to "ON", or if it remains illuminated after blinking for approximately 6 seconds, or if it illuminates whilst the vehicle is being driven, please have an authorized Hyundai dealer inspect the pre-tensioner seat belt or SRS airbag system as soon as possible.

**WARNING:**

- Pre-tensioners are designed to operate only one time. After activation, pre-tensioner seat belts must be replaced. All seat belts, of any type, should always be replaced after they have been worn during a collision.
- The pre-tensioner seat belt assembly mechanisms become hot during activation. Do not touch the pre-tensioner seat belt assemblies for several minutes after they have been activated.
- Do not attempt to inspect or replace the pre-tensioner seat belts yourself. This must be done by an authorized Hyundai dealer.
- Do not strike the pre-tensioner seat belt assemblies.
- Do not attempt to service or repair the pre-tensioner seat belt system in any manner.
- Improper handling of the pre-tensioner seat belt assemblies, and failure to heed the warnings to not strike, modify, inspect, replace, service or repair the pre-tensioner seat belt assemblies may lead to improper operation or inadvertent activation and serious injury.
- Always wear the seat belts when driving or travelling in a motor vehicle.

B240A01TB-EAT

## SUPPLEMENTAL RESTRAINT (AIRBAG) SYSTEM

Driver's Airbag

HTB201

Your Hyundai is equipped with a Supplemental Restraint (Airbag) System. The indications of the system's presence are the letters "SRS AIR BAG" embossed on the airbag pad cover in the steering wheel and printed on the passenger's side front panel pad above the glove box.

The Hyundai SRS consists of airbags installed under the pad covers in the centre of the steering wheel and the passenger's side front panel above the glove box. The purpose of the SRS is to provide the vehicle's driver and/or the front passenger with additional protection than that offered by the seat belt system alone, in case of a frontal impact of sufficient severity.

### NOTE:

**Be sure to read information about the SRS on the labels provided on the back of the sun visor and in the glove box.**

### WARNING:

- **As its name implies, the SRS is designed to work with, and be supplemental to, the driver's and the passenger's three point seat belt systems and is not a substitute for them. Therefore your seat belts must be worn at all times while the vehicle is in motion. In addition, the airbags deploy only in certain frontal impact conditions severe enough to likely cause significant injury to the vehicle occupants.**
- **The SRS is designed to deploy the airbags only when an impact is sufficiently severe and when the impact angle is less than 30° from the forward longitudinal axis of the vehicle and will not deploy in side, rear or rollover impacts. Additionally, the airbags will only deploy once. Thus, seat belts must be worn at all times.**

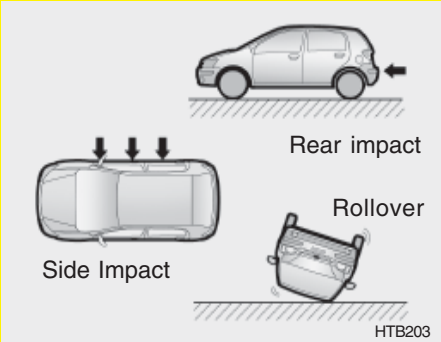


HTB203

- **Front airbags are not intended to deploy in side-impact, rear-impact or rollover crashes. In addition, airbags will not normally deploy in frontal crashes below the deployment threshold speed.**

- **For maximum safety protection in all types of crashes, all occupants including the driver should always wear their seat belts whether or not an airbag is also provided at their seating position to minimize the risk of severe injury or death in the event of a crash. Do not sit or lean unnecessarily close to the airbag while the vehicle is in motion.**
- **The SRS airbag system must deploy very rapidly to provide protection in a crash. If an occupant is out of position because of not wearing a seat belt, the airbag may forcefully contact the occupant causing serious or fatal injuries.**

B240B03A-DAT

## SRS Components and Functions

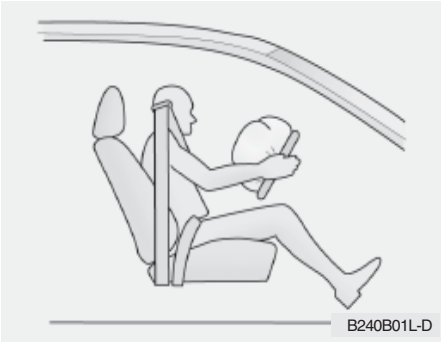


The SRS consists of the following components:

- Driver's Airbag Module
- Passenger's Airbag Module
- SRS Service Reminder Indicator (SRI)
- SRS Control Module (SRSCM)

The SRSCM continually monitors all elements while the ignition is "ON" to determine if a frontal or near-frontal impact is severe enough to require airbag deployment.

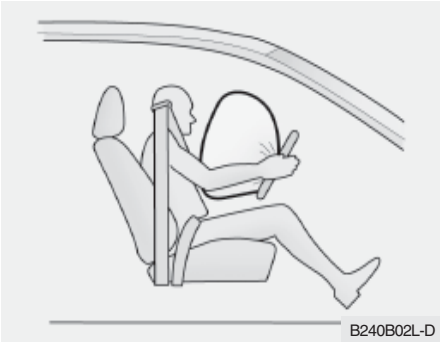


The SRS service reminder indicator (SRI) on the instrument panel will blink for about 6 seconds after the ignition key is turned to the "ON" position or after the engine is started, after which the SRI should go out.

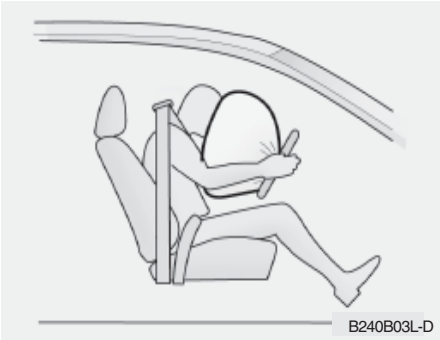


The airbag modules are located both in the centre of the steering wheel and in the front passenger's panel above the glove box. When the SRSCM detects a considerable impact to the front of the vehicle, it will automatically deploy the airbags.

Passenger's Airbag

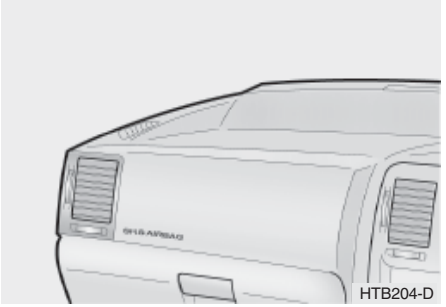


Upon deployment, tear seams molded directly into the pad covers will separate under pressure from the expansion of the airbags. Further opening of the covers then allows full inflation of the airbags.

A fully inflated airbag in combination with a properly worn seat belt slows the driver's or the passenger's forward motion, thus reducing the risk of head or chest injury.

**CAUTION:**

**Do not install or place any accessories (drink holder, cassette holder, sticker, etc) on the front passenger's panel above the glove box in a vehicle with passenger's side air bag. Such objects may become dangerous projectiles and cause injury if the passenger's side air bag inflates.**

Passenger's Airbag

After complete inflation, the airbag immediately starts deflating, enabling the driver to maintain forward visibility.

**CAUTION:**

**When installing a container of liquid air freshener inside a vehicle, do not place it near the instrument cluster nor on the instrument panel pad surface. If there is any leakage from the air freshener onto these areas (instrument cluster, instrument panel pad or air ventilator), it may damage these parts. If the liquid from the air freshener does leak onto these areas, wash them with water immediately.**

**WARNING:**

- **When the SRS is activated, there may be a loud noise and fine dust will be released throughout the vehicle. These conditions are normal and are not hazardous. However, the fine dust generated during airbag deployment may cause skin irritation. Be sure to wash your hands and face thoroughly with lukewarm water and a mild soap after an accident in which the airbags were deployed.**
- **The SRS can function only when the ignition key is in the "ON" position. If the SRS SRI does not come on, or continuously remains on, after flashing for about 6 seconds when the ignition key is turned to the "ON" position, or after the engine is started, or comes on while driving, the SRS is not working properly. If this occurs, have your vehicle immediately inspected by your Hyundai dealer.**
- **Before you replace a fuse or disconnect a battery terminal, turn the ignition key to the "LOCK" position or remove the ignition key. Never remove or replace the air bag related fuse(s) when the ignition key is in the "ON" position. Failure to heed this warning will cause the SRS SRI to illuminate.**

B990B04Y-EAT

## Side Impact Airbag

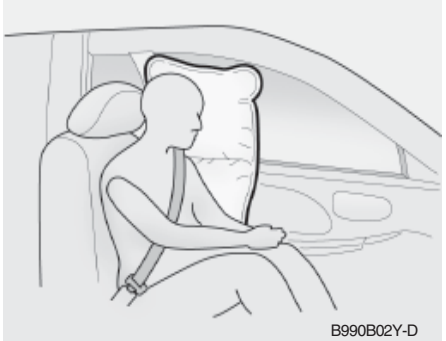


Your Hyundai is equipped with a side impact airbag in each front seat. The purpose of the airbag is to provide the vehicle's driver and/or the front passenger with additional protection than that offered by the seat belt alone. The side impact airbags are designed to deploy only during certain side impact collisions, depending on the crash severity, angle, speed and point of impact. The air bags are not designed to deploy in all side impact situations.

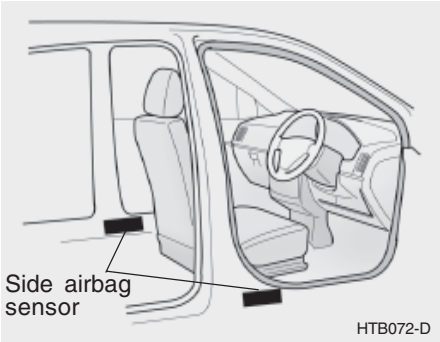


**WARNING:**

- **For best protection from the side airbag system and to avoid being injured is by the deploying side impact airbag, both front seat occupants should sit in an upright position with the seat belt properly fastened. The driver's hands should be placed on the steering wheel at the 9:00 and 3:00 o'clock positions. The passenger's arms and hands should be placed in their laps.**
- **Do not use any accessory seat covers.**
- **Use of seat covers could reduce or prevent the effectiveness of the system.**
- **Do not install any accessories on the side or near the side impact airbag.**
- **Do not use excessive force on the side of the seat.**
- **Do not place any objects over the airbag or between the airbag and yourself.**
- **Do not place any objects (an umbrella, bag, etc.) between the front door and the front seat. Such objects may become dangerous projectiles and cause injury if the supplemental side impact air bag inflates.**
- **To prevent unexpected deployment of the side air impact bag that may result in personal injury, avoid impact to the side airbag sensor when the ignition key is on.**

B240C02Y-GAT

## SRS Care

The SRS is virtually maintenance-free and there are no parts you can safely service by yourself. The entire SRS system must be inspected by an authorized Hyundai dealer in 10 years after the date that the vehicle was manufactured.

Any work on the SRS system, such as removing, installing, repairing, or any work on the steering wheel must be performed by a qualified Hyundai technician. Improper handling of the SRS system may result in serious personal injury.

B240C02L

**WARNING:**

- Do not install a child restraint system in the front passenger seat position.
  A child restraint system must never be placed in the front seat. The infant or child could be severely injured by an airbag deployment in case of an accident.
- Extreme Hazard! Do not use a reward facing restraint on a seat protected by an airbag in front of it!

- Modification to SRS components or wiring, including the addition of any kind of badges to the pad covers or modifications to the body structure, can adversely affect SRS performance and lead to possible injury.
- For cleaning the airbag pad covers, use only a soft, dry cloth or one which has been moistened with plain water. Solvents or cleaners could adversely affect the airbag covers and proper deployment of the system.
- No objects should be placed over or near the airbag modules on the steering wheel, instrument panel, and the front passenger's panel above the glove box, because any such object could cause harm if the vehicle is in a crash severe enough to cause the airbags to inflate.
- If the airbags inflate, they must be replaced by an authorized Hyundai dealer.

- Do not tamper with or disconnect SRS wiring, or other components of the SRS system. Doing so could result in injury, due to accidental firing of the airbags or by rendering the SRS inoperative.
- If components of the airbag system must be discarded, or if the vehicle must be scrapped, certain safety precautions must be observed. Your Hyundai dealer knows these precautions and can give you the necessary information. Failure to follow these precautions and procedures could increase the risk of personal injury.
- If you sell your vehicle, be sure to inform the new owner of these important points and make certain that this manual is transferred to the new owner.
- If your car was flooded and has soaked carpeting or water on flooring, you shouldn't try to start engine; have the car towed to authorized Hyundai dealer.

B260B02TB-EAT

## INSTRUMENT CLUSTER AND INDICATOR

### A Type (Without Trip Computer)

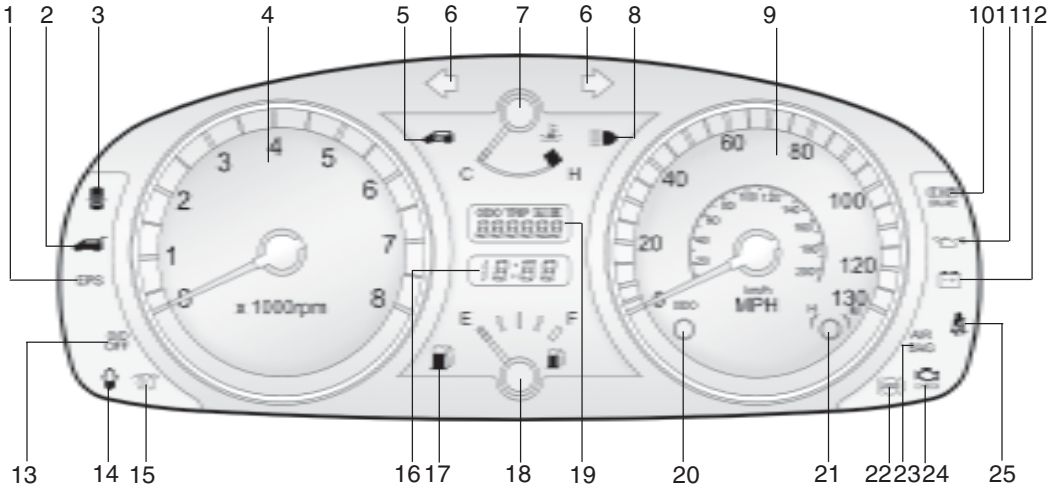


HTB001B

1. Electric Power Steering Warning Light (Not all models)
2. Tail Gate Open Warning Light
3. Door Ajar Warning Light
4. Tachometer
5. Immobilizer Warning Indicator Light
6. Turn Signal Indicator Light
7. Temperature Gauge
8. High Beam Indicator Light
9. Speedometer
10. Parking Brake/Brake Fluid Level Warning Light
11. Oil Pressure Warning Light
12. Charging System Warning Light
13. Overdrive off Indicator Light (Auto T/A only)
14. Fuel Filter Warning Light (Diesel only)
15. Diesel Pre-heat Indicator Light (Diesel only)
16. Digital Clock
17. Low Fuel Warning Light
18. Fuel Gauge
19. Odometer/Trip Odometer
20. Trip odometer Reset Switch
21. Clock Reset Switch
22. ABS Warning Light
23. SRS (Airbag) Warning Light (Not all models)
24. Malfunction Indicator Light (MIL)
25. Seat Belt Warning Light

B260C02TB-EAT

## B Type (With Trip Computer)

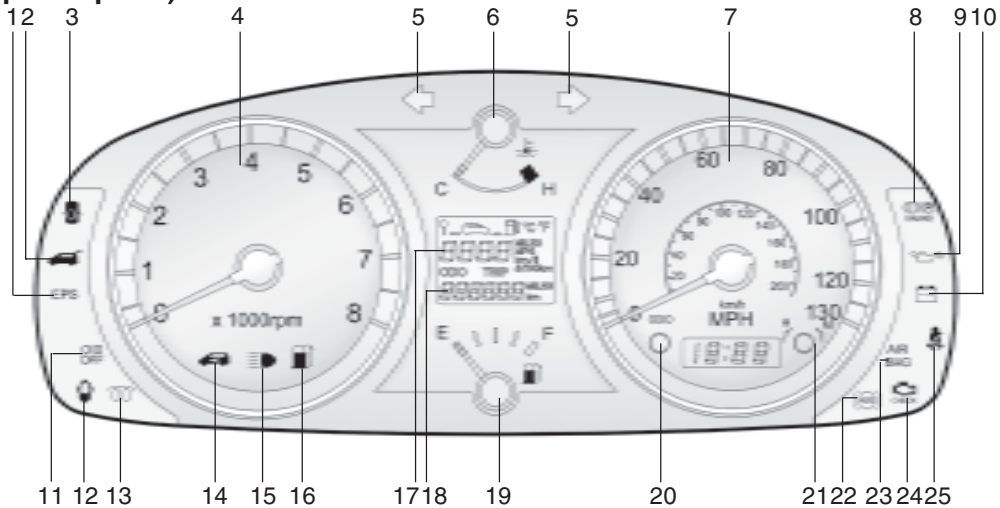


HTB002B

1. Electric Power Steering Warning Light (Not all models)
2. Tail Gate Open Warning Light
3. Door Ajar Warning Light
4. Tachometer
5. Turn Signal Indicator Light
6. Temperature Gauge
7. Speedometer
8. Parking Brake/Brake Fluid Level Warning Light
9. Oil Pressure Warning Light
10. Charging System Warning Light
11. Overdrive Off Indcator Light (Auto T/A only)
12. Fuel Filter Warning Light (Diesel only)
13. Diesel Pre-heat Indicator Light (Diesel only)
14. Immobilizer Warning Indicator Light
15. High Beam Indicator Light
16. Low Fuel Warning Light
17. Trip Computer (Not all models)
18. Odometer/Trip Odometer
19. Fuel Gauge
20. Trip Computer Mode Convert Switch
21. Clock Reset Switch
22. ABS Warning Light
23. SRS (Airbag) Warning Light (Not all models)
24. Malfunction Indicator Light (MIL)
25. Seat Belt Warning Light

SB210C1-F

## SRS (Airbag) SERVICE REMINDER INDICATOR

The SRS service reminder indicator (SRI) comes on and flashes for about 6 seconds after the ignition key is turned to the "ON" position or after the engine is started, after which it will go out.

This light also comes on when the SRS is not working properly.
If the SRI does not come on, or continuously remains on after flashing for about 6 seconds when you turned the ignition key to the "ON" position or started the engine, or if it comes on while driving, have the SRS inspected by an authorized Hyundai Dealer.

B260P02Y-EAT

## ABS SERVICE REMINDER INDICATOR (SRI) (Not all models)

When the key is turned to the "ON" position, the Anti-Lock Brake System SRI will come on and then go off in a few seconds. If the ABS SRI remains on, comes on while driving, or does not come on when the key is turned to the "ON" position, this indicates that there may be a problem with the ABS.
If this occurs, have your vehicle checked by your Hyundai dealer as soon as possible. The normal braking system will still be operational, but without the assistance of the anti-lock brake system.

**CAUTION:**
**If the both ABS SRI and Parking Brake/Brake fluid level warning lights remain "ON" or come on while driving, there may be a problem with E.B.D (Electronic brake force distribution).**
**If this occurs, avoid sudden stops and have your vehicle checked by your Hyundai dealer as soon as possible.**

SB210E1-E

## OVERDRIVE OFF INDICATORLIGHT (Not all models)

When the overdrive (4th gear) switch is turned off and the operation of overdrive (4th gear) is cancelled, the overdrive warning light (O/D OFF) will be illuminated. When the switch is at the on position, the gearbox will operate in the normal fully automatic mode and the warning light will be extinguished.

SB210G1-E

## TURN SIGNAL INDICATOR LIGHT

Operation of a turn signal is indicated by the warning light located in the instrument cluster. If the light fails to illuminate or does not flash, a malfunction within the turn signal system is indicated.

SB210J1-E

## HIGH BEAM INDICATOR LIGHT

The high beam indicator light will illuminate whenever the headlights are switched to high beam of flash position.

SB210K1-E

## OIL PRESSURE WARNING LIGHT

**CAUTION:**

**If the oil pressure light illuminates when the engine is running, an insufficient oil pressure level for continued safe operation of the engine exists. Continued operation of the engine in this condition may result in serious engine damage.**

**Under normal circumstances, the light will illuminate when the ignition is turned "on" and will be extinguished when the engine is started. If the oil pressure warning light illuminates whilst the engine is running, stop the engine immediately and check the engine oil level. If the level is insufficient, add the required amount of oil as indicated by the engine oil dipstick. If the light fails to extinguish when the engine is restarted, do not continue to operate the vehicle.**
**If the oil pressure light illuminates during normal operation and the cause is not an insufficient oil level, or the light fails to illuminate when the ignition is turned "on", contact the nearest Hyundai dealer before further operating the vehicle.**

B260H03A-EAT

## PARKING BRAKE/ BRAKE FLUID LEVEL WARNING LIGHT

**WARNING:**

**In the event of problems being suspected with the braking system, the advice of the nearest Hyundai dealer must be sought before the vehicle is driven. Driving the vehicle with either an electrical or hydraulic braking system defect may be dangerous, resulting in accident or personal injury.**

### Warning light operation

The parking brake/brake fluid level warning light will be illuminated whenever the ignition switch is turned to the "ON" position irrespective of whether or not the parking brake is applied and must be extinguished when the engine starts and the parking brake released.
If the warning light fails to extinguish or illuminates at any other time, the vehicle must be brought to rest in a safe location and the level of brake fluid in the reservoir checked. If the fluid level is incorrect, fluid conforming to DOT 3 or DOT 4 specifications should be added.
If, after correcting the brake fluid level, the warning light continues to be illuminated, the advice of the nearest Hyundai dealer must be sought before the vehicle is driven again.
Your Hyundai is equipped with a diagonally split dual braking system which will ensure that in the event of one of the brake circuits becoming defective, approximately fifty per cent of the normal braking performance will be available.
If failure of one of the circuits occurs, the required amount of pedal effort, pedal travel and stopping distance will be increased. Use of the gearbox is

recommended to assist in bringing the vehicle to rest. The vehicle must not be driven once brake failure has occurred until the system has been repaired and is functioning normally.
The braking system employs a vacuum servo in order that the pedal efforts are reduced. Power for the servo is derived from the engine and therefore, in the event of the engine stopping or the vehicle being towed, pedal efforts will be substantially increased.

SB210M1-E

## CHARGING SYSTEM WARNING LIGHT

The charging system warning light should illuminate when the ignition switch is turned to the "ON" position and should be extinguished when the engine is started. If the light fails to illuminate when the ignition is turned "ON" or fails to extinguish after starting the engine, the nearest Hyundai dealer should be contacted. If the light illuminates whilst the vehicle is being driven, stop the vehicle as soon as it is safe to do so and check the condition of the generator drive belt. If the belt is in place and the tension is satisfactory, the advice of a Hyundai dealer should be sought.

**CAUTION:**
**If the drive belt (generator belt) is loosen, broken, or missing while the vehicle is driving, there may be a serious malfunction, engine could overheat because this belt also drives the water pump.**

B260B01FC-EAT

## TAIL GATE OPEN WARNING LIGHT

The tail gate warning light indicates when the tail gate is open or is not fully closed. Ensure that the light has extinguished prior to driving the vehicle.

SB2100I-E

## DOOR AJAR WARNING LIGHT

The door ajar warning light indicates that a door is not correctly closed. Ensure that the light is extinguished prior to driving the vehicle.

SB210P1-E

## LOW FUEL LEVEL WARNING LIGHT

The low fuel warning light serves to warn the driver that the remaining fuel quantity is approximately 9 litres and that the vehicle should be refuelled. If the vehicle is driven for an extended period with the low fuel warning light illuminated there exists a possibility that misfiring due to fuel shortage may occur. This situation must be avoided to prevent damage to the catalyst occurring.

B260N02FC-EAT

## MALFUNCTION INDICATOR LIGHT

This light illuminates when there is a malfunction of an exhaust gas related component, and the system is not functioning properly so that the exhaust gas regulation values are not satisfied. This light will illuminate when the ignition key is tuned to the "ON" position, and will go out after the engine start. If it illuminates while driving, or does not illuminate when the ignition key is turned to the "ON" position, take your car to your

nearest authorized Hyundai dealer and have the system checked.

B260E01HP-GAT

## SEAT BELT WARNING LIGHT

The seat belt warning light blinks for about 6 seconds when the ignition key is turned from the "OFF" position to "ON" or "START".

B260T01TB-GAT

## ELECTRIC POWER STEERING SYSTEM (EPS) WARNING LIGHT (Not all models)

This indicator light comes on about 4 seconds after the ignition key is turned to the "ON" position or after the engine is started, it will go out.
This light also comes on when the EPS has some troubles. If it comes on while driving, have your vehicle inspected by an authorized Hyundai Dealer.

**CAUTION:**
**When you move the electric power steering back-end and forth-end continuously in stop position, steering wheel plays heavily to operate anti-overload system. It is normal condition. It returns to be nomal getting time.**

B260U01TB-EAT

## IMMOBILIZER INDICATOR LIGHT (Not all models)

This indicator light comes on for some seconds after the ignition key is turned to the "ON" position. At this time, you can start the engine. The light goes out after the engine is running. In case this light goes out before you start the engine, you must turn to the "LOCK" position and restart the engine. In case this light blinks for five seconds when the ignition key is turned to "ON" position, this indicates that the immobilizer system is out of order. At this time, consult to the Hyundai dealer.

B260S01B-GAT

## DIESEL PRE-HEAT INDICATOR LIGHT-AMBER (Diesel Engine)

The indicator light illuminates amber when the ignition switch is placed at the "ON" position. The engine can be started after the pre-heat indicator light goes off. The illuminating time varies with the water temperature, air temperature and battery condition.

**NOTE:**
**If the engine were not started 10 seconds after the preheating is completed, turn the ignition key once more to the "LOCK" position, and then to the "ON" position, in order to preheat again.**

B265A01B-GAT

## FUEL FILTER WARNING LIGHT-RED (Diesel Engine)

This light illuminates when the ignition switch is set to the "ON" position and goes off after the engine has started. If it lights up while the engine is running, it indicates that water has accumulated inside the fuel filter. If this happens, remove the water from the fuel filter. (Refer to "6-26 page")

B900A01A-EAT

## ACOUSTIC WARNING SOUND (Not all models)

The acoustic warning chime sounds when the tail lights are on and the door in driver side is open. This prevents the battery from discharging when the car is left with the tail lights on. The chime sounds until the tail lights are turned off.

SB210S1-E

## BRAKE PAD WEAR INDICATOR

The front brake disc pads are fitted with an audible wear indicator which will cause a high pitched noise to be emitted when the remaining amount of friction lining is below the specified value. When the wear indicator is heard, the brake pads should be replaced without delay to avoid damage occurring to the brake discs and a severe reduction in braking efficiency.

SB215A1-E

## FUEL GAUGE

The fuel gauge indicates the quantity of fuel remaining in the fuel tank.

### NOTE:

**The fuel gauge is not intended to give other than an approximate indication of the fuel level and is unsuitable for the purposes of calculating fuel consumption figures.**

SB215B1-E

## ENGINE COOLANT TEMPERATURE GAUGE

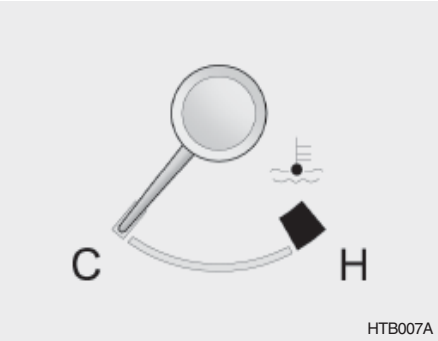


The engine coolant temperature gauge indicates the engine coolant temperature and will, under normal circumstances, give an indication in the "Normal" or centre portion of the scale. Should the indication move into the upper or "Hot" portion of the scale, engine overheating is indicated. Under these circumstances, the vehicle should be brought to rest as soon as is safe to do so and the engine turned off. Once the engine has cooled somewhat, the coolant level and the condition of the generator/water pump drive belt should be checked. If the cause of the overheating cannot be readily established, the assistance of a Hyundai dealer should be sought.

**WARNING:**
**The engine cooling system is pressurized and removal of the radiator cap when the engine is hot may cause hot water and steam to be ejected from the radiator resulting in burns and scalding. The radiator cap must only be removed when the engine has cooled. Do not add cold water to a hot engine to avoid the possibility of engine damage. The use of plain water in the cooling system is not recommended since the aluminium components of the cooling system require the use of a corrosion inhibitor found in the recommended Ethylene Glycol type anti freeze solutions.**

SB215C1-E

## SPEEDOMETER

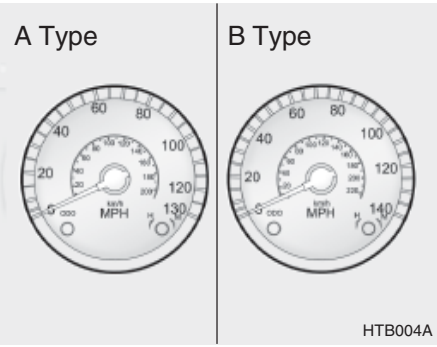


The speedometer indicates the vehicle speed in both miles and kilometres per hour.

SB215F1-E

## TACHOMETER

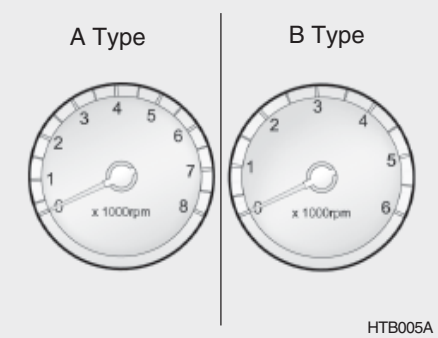


The tachometer registers the speed of the engine in revolutions per minute (R.P.M.).

**CAUTION:**
**The maximum safe engine operating speed is indicated by the red zone of the tachometer scale. The engine should not be operated beyond the beginning of this zone or serious engine damage may result.**

B310B01TB-EAT

## ODOMETER/TRIP ODOMETER

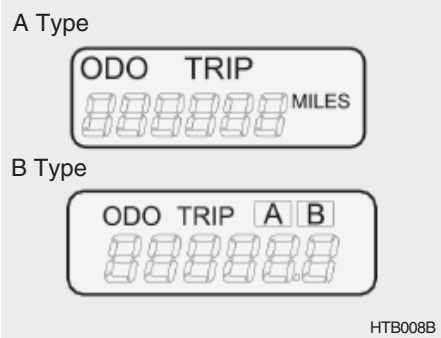


### A TYPE (WITH TRIP COMPUTER)

### 1. Odometer

The odometer records the total driving distance in miles and is useful for keeping a record for maintenance intervals.

**NOTE:**
**Any alteration of the odometer may void your warranty coverage.**

### 2. Trip odometer

- This mode indicates the drive distance travelled since the last drive time reset.
- Pressing the reset switch built in left side of speedmeter for more than 1 second, when the drive distance is being displayed, clears the drive distance to zero.
- Refer to the explanation of the trip computer (see page 1-45, Drive Distance).

### B TYPE (WITHOUT TRIP COMPUTER)

**Function of digital odometer/trip odometer**

Pushing in the reset switch when the ignition switch is turned "ON" will display the following sequence:

## 1. Odometer

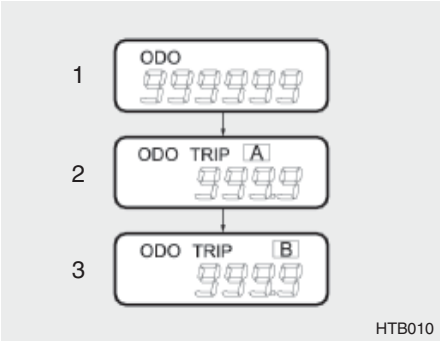


The odometer records the total driving distance in miles and is useful for keeping a record for maintenance intervals.

**NOTE:**
**Any alteration of the odometer may void your warranty coverage.**

## 2,3 Trip odometer

Records the distance of 2 trips in kilometers or miles.

**TRIP A:** First distance you have traveled from your origination point to a first destination.
**TRIP B:** Second distance from the first destination to the final destination.

To shift from TRIP A to TRIP B, press the reset switch. When pressed for 1 second, it will reset to 0.

B400B01TB-EAT

## TRIP COMPUTER (Not all models)

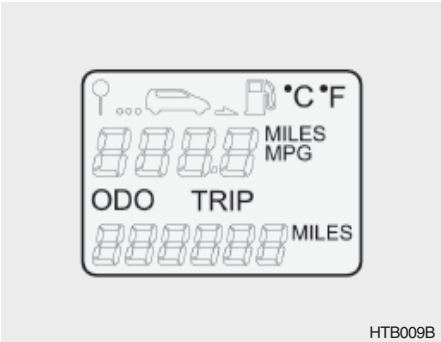


The trip computer is the microcomputer-controlled driver information gauge that displays information related to driving, such as outside temperature distance to empty, drive distance and average consumption on the LCD.

## Reset switch

- The reset switch is used to zero the multi-functional display mode.
- Pushing in the reset switch built in left side of speedmeter changes the display as follows;

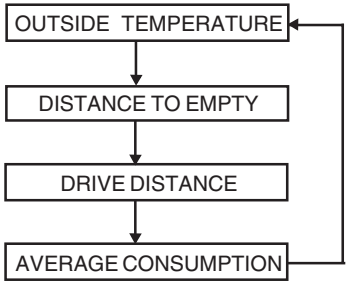

## 1. Outside temperature

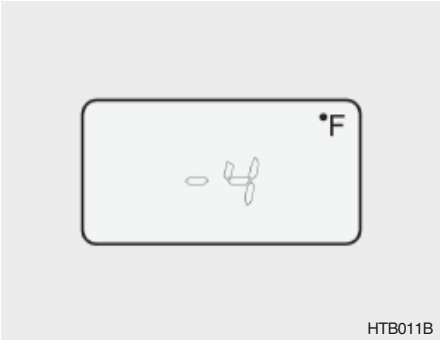


This mode indicates the outside temperature between -40°F (-40°C) and 167°F (75°C).

## 2. Distance to empty

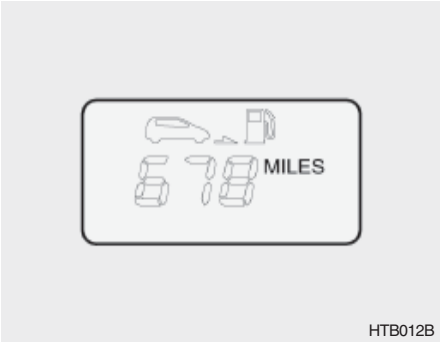


- o This mode indicates the estimated distance to empty from the current fuel in the fuel tank and distance to empty symbol.
- o When refueling with more than 6 liters, the trip computer will recognize refueling.
- o When the battery has been reinstalled after being discharged or disconnected, drive more than 28 mile (32km) for an accurate distance to empty.

**NOTE:**

- **o If the distance to empty is indicated "---", have the trip computer system checked by your authorized Hyundai dealer.**
- **o The distance to empty can differ from the actual tripmeter according to driving conditions.**
- **o The distance to empty can vary according to the driving conditions, driving pattern or vehicle speed.**

## 3. Drive Distance

- o This mode indicates the drive distance travelled since the last drive time reset.
- o Pressing the reset switch built in left side of speedmeter for more than 1 second, when the drive distance is being displayed, clears the drive distance to zero.

## 4. Average Consumption

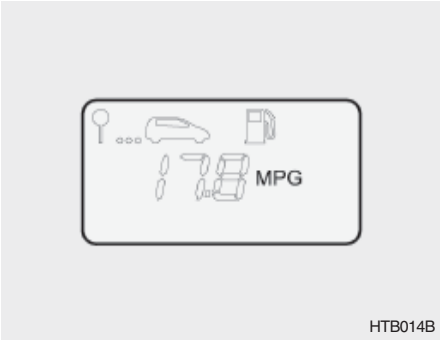


HTB014B

- o This mode indicates the average consumption since the data reset.
- o It displays per 10 seconds after you drive over 0.03 miles (50m) and 10 seconds.
- o Calculation Method

$$MPG = \frac{\text{Total Cruise Distance(Miles)}}{\text{Total Fuel Consumption (G)}}$$

SB220A1-E

## MULTI FUNCTION SWITCH

### Turn Signal Operation

To signal an intention to turn right, the switch lever should be pressed down. To signal an intention to turn left, the switch lever should be pushed upwards. In both instances, the turn signal lights on one side of the car will flash and the warning light located in the instrument cluster will flash in sympathy. Upon completion of the manoeuvre, the lever will, under normal circumstances, return to the "Off" position. However, if the manoeuvre involved only a small movement of the steering wheel, the signal may need to be cancelled manually. If either turn signal indicator flashes more rapidly than normal or refuses to flash at all, a malfunction of the turn signal system may exist.

SB220B1-E

### Lane Change Signal

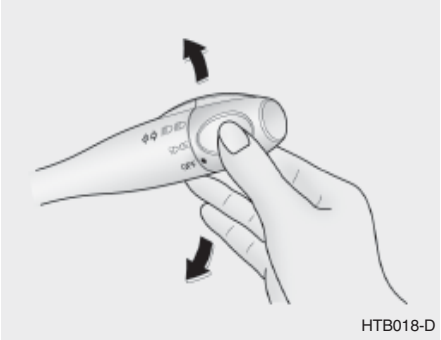

HTB018-D

To indicate an intention to change lanes, moving the lever slightly towards the direction of the relevant turn signal will cause the turn signal lights to flash. When the lever is released, it will return to the "off" position.

B340C01FC-EAT

## LIGHTING SWITCH

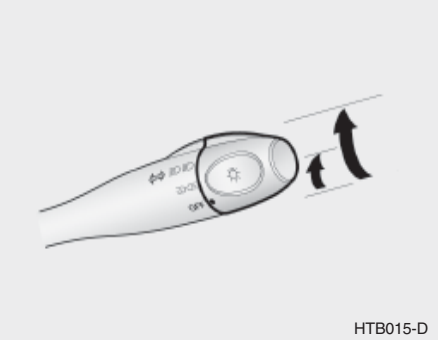


The vehicle sidelights and headlights are operated by rotating the end of the turn signal switch barrel. To operate the parking lights, rotating the switch to the first detent with ignition switch at the "OFF" position will cause the lights to illuminate. To operate the headlights, the turn signal switch barrel should be rotated to the second detent. The headlights will only operate when the ignition switch is at the "On" position. If the ignition switch is turned to the "Off" position, only the parking lights will function.

### Parking light auto cut (Not all models)

If you do not turn the parking lights "OFF" after driving, the parking light will automatically shut "OFF" when the driver's door is opened.
To turn them "ON" again you must simply turn the ignition key to the "ON" position.

SB220D1-E

## HIGH AND LOW BEAM

To turn on the headlight high beams, push the lever forward (away from you). For low beams, pull the lever back (toward you). The appropriate headlight beam indicator light will come on at the same time.

SB220E1-E

## HEADLIGHT FLASH

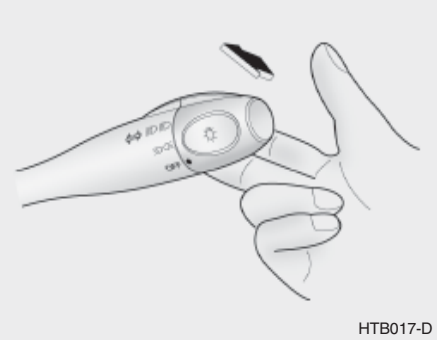


The headlights may be flashed by pulling the turn signal switch lever towards the steering wheel. The headlights will be extinguished when the switch is released.

SB230A1-E

## WINDSCREEN WIPER/ WASHER SWITCH

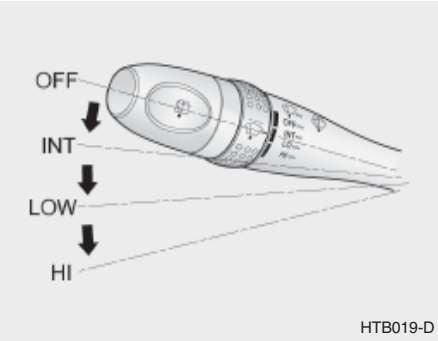


The windscreen wiper switch, dependent upon model, has three operating positions.

1. Intermittent wiper operation. (Not all models)
2. Low speed operation.
3. High speed operation.

### NOTE:

**To prevent damage to the wiper system, do not attempt to wipe away heavy accumulations of snow or ice. Accumulated snow and ice should be removed manually. If there is only a light layer of snow or ice, operate the heater in the defrost mode to melt the snow or ice before using the wiper.**

B350B01O-EAT

## Windscreen Washer Operation

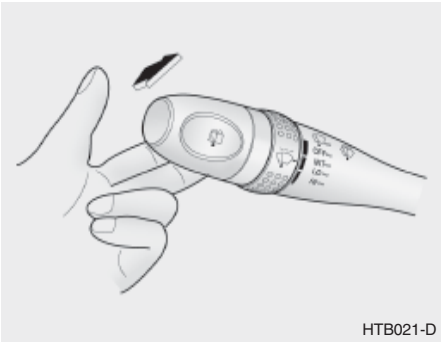


To use the windscreen washer, pull the wiper/washer lever toward the steering wheel. When the washer lever is operated, the wipers automatically make two passes across the windscreen. The washer continues to operate until the lever is released.

### NOTE:

- **Do not operate the washer more than 15 seconds at a time or when the fluid reservoir is empty.**
- **In icy or freezing weather, be sure the wiper blades are not frozen to the glass prior to operating the wipers.**
- **In areas where water freezes in winter, use windscreen washer antifreeze.**

## Mist Wiper Operation

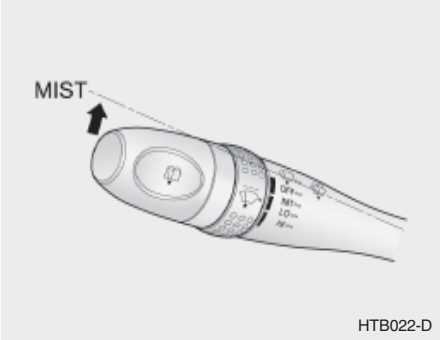


If a single wipe is desired in mist, push the windscreen wiper and washer control lever upwards.

B350C01FC-DAT

## Adjustable Intermittent Wiper Operation

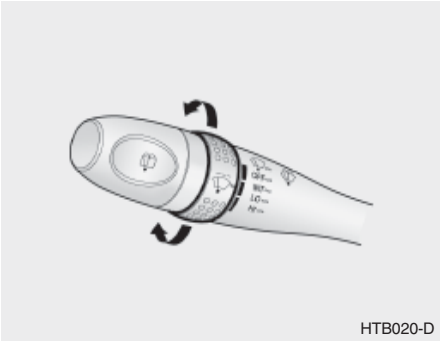


HTB020-D

To use the intermittent wiper feature, place the wiper switch in the "INT" position. With the switch in this position, the interval between wipes can be varied from approximately 1 to 18 seconds by turning the interval adjuster barrel.

B350A01TB-AAT

## Tail Gate Wiper And Washer Switch (Not all models)

HTB023-D

1. : The washer fluid will be sprayed onto the rear window and the wiper operates while the rear window wiper barrel is placed in this position.
2. ON : When the point indicates "ON", the rear window wiper operates continuously.
3. OFF

SB240A1-E

## HAZARD WARNING SYSTEM

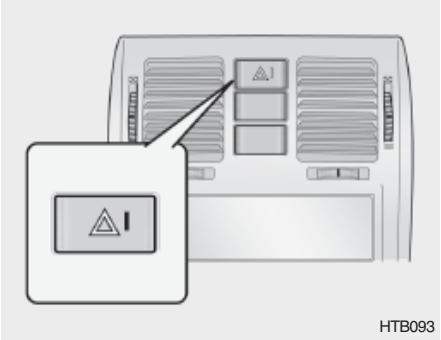

HTB093

The hazard warning system should be used whenever it becomes necessary to stop the car in a hazardous location. The hazard warning system is operated by depressing the switch at which time all turn signal lights will flash simultaneously and the turn signal warning lights located within the instrument cluster will flash simultaneously.
The hazard warning system may be turned off by depressing the switch again.

SB250A1-E

## HEATED REAR WINDOW

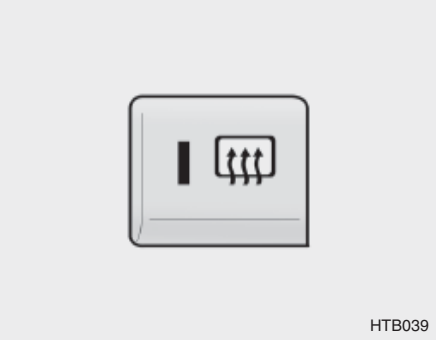


To operate the heated rear window depress the switch shown. The heated rear window will automatically turn off after 20 minutes or when the ignition is turned off.
The system may be turned off manually by depressing the switch again.

**CAUTION:**
**The inside of the rear windscreen should never be cleaned with a hard or sharp implement since damage to the heating element may occur. The glass should only be cleaned with a soft cloth or chamois leather with the use only of a mild detergent or proprietary glass cleaner where necessary. Only horizontal movement of the cloth should be made when cleaning the glass and care should be exercised to ensure that the heating elements are not damaged by rings or jewellery whilst the glass is being cleaned.**

**NOTE:**
**The engine must be running for the heated rear window to operate.**

B360B01FC-EAT

## FRONT FOG LIGHT SWITCH (Not all models)

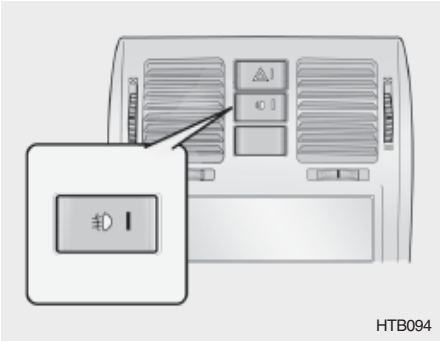


To turn on the front fog lights, push the switch in the "ON" position. They will come on when the headlight switch is in the first or second position.

B360A01Y-GAT

## REAR FOG LIGHT SWITCH

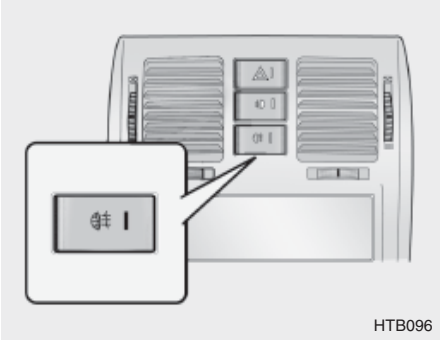


To turn on the rear fog lights, push the switch. They will come on when the headlight switch is in the second position and the key is in the "ON" position.

B400A01TB-AAT

## DIGITAL CLOCK

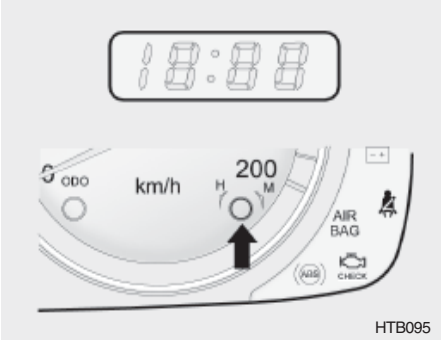


There is a digital clock control button built-in right side of the speedometer. Its functions are:

- o **Reset**: Push the button for more than 1 second.
- o **Min/Hour Adjustment:** Turn to "H" for 0.5 second to advance the hour indicated. Turn to "M" for 0.5 second to advance the minute indicated.
- o **Auto mode:** Turn to the right or left side for more than 1 second to advance fastly.

**CAUTION:**
**Don't turn the switch excessively to prevent switch damage.**

SB290A02-F

## CIGAR LIGHTER

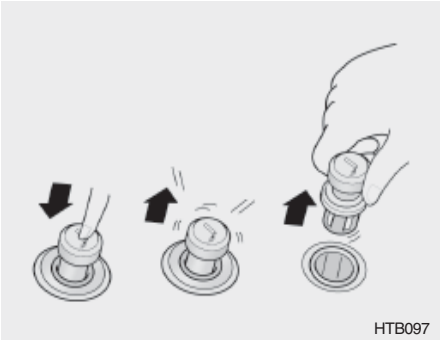


For the cigar lighter to work, the key must be in the "ACC" or the "ON" position.
To use the cigar lighter, push the lighter all the way into its socket. When the element is heated, the lighter will pop out into the "ready" position.
Do not hold the cigar lighter at the depressed position which may result in damage to the vehicle wiring or an electrical fire.

If it is necessary to replace the cigarette lighter, use only a genuine Hyundai replacement part.

**CAUTION:**
**Do not use electric accessories or equipment other than the Hyundai genuine parts in the socket.**

B430A01TB-GAT
## FRONT ASHTRAY

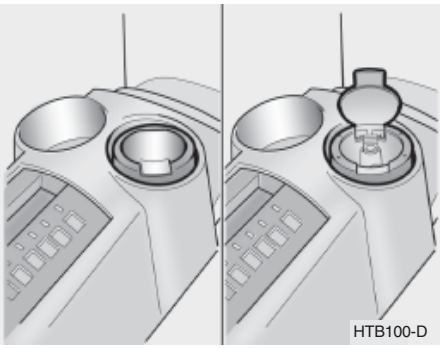


The front ashtray may be opened by pulling it up by its top edge. To close the ashtray cover firmly, let the lid grip protrude outside. To remove the ashtray to empty or clean it, pull the cover up all the way out.
Either holder can be a drink holder or a ashtray holder.

B450A01TB-GAT
## DRINK HOLDER

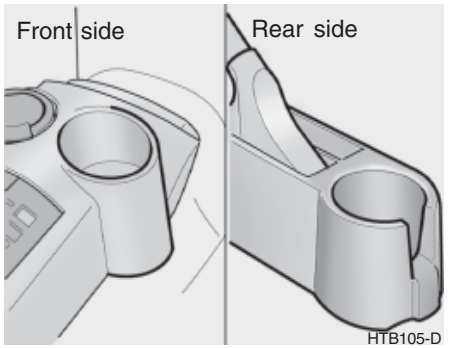


The drink holder is used for holding cups or cans.
Either holder can be a drink holder or a ashtray holder.

B455A01TB-GAT
## CONSOLE TRAY

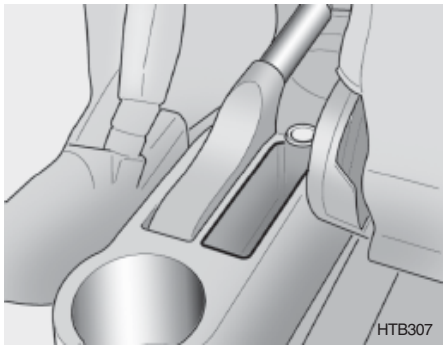


There is multipurpose receipts to accept pens or CD case in the console tray.

B340G01S-EAT

## HEADLIGHT LEVELING DEVICE SYSTEM

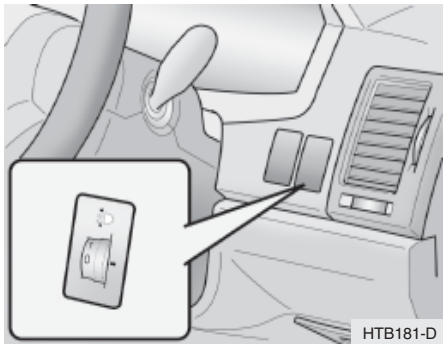


To adjust the headlight beam level according to the number of the passengers and the loading weight in the luggage area, turn the beam leveling switch. The higher the number of the switch position, the lower the headlight beam level. Always keep the headlight beam at the proper leveling position, or headlights may dazzle other road users.
Listed below are the examples of recommended switch settings. For loading conditions other than those listed below, adjust the switch position so that the beam level may be the nearest as the condition obtained according to the list.

| Loading condition | Switch position |
|---|---|
| Driver only | 0 |
| Driver + front passenger | 0 |
| Full passengers (including driver) | 1 |
| Full passengers (including driver) + full trunk loading (or light trailer loading) | 2 |
| Driver + full trunk loading (or maximum trailer loading) | 3 |

B460A01Y-AAT

## SUNROOF (Not all models)
## Sun Shade

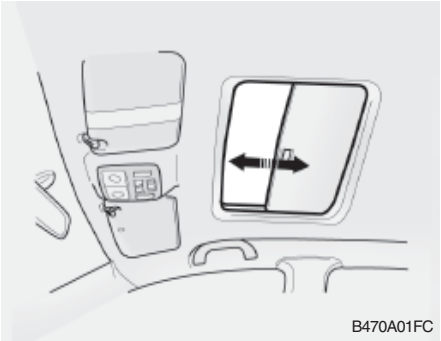


Your HYUNDAI is equipped with a sliding sunshade which you can manually adjust to let in light with the sunroof closed, or to block sunlight.

**WARNING:**
**Never adjust the sunshade while driving.**

B460B01GK-GAT

## Opening the Sunroof System

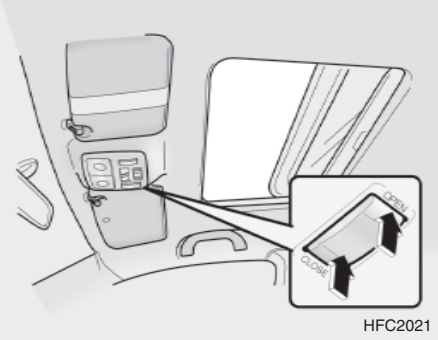

HFC2021

The sunroof can be electrically opened or closed with the ignition key in the "ON" position. The sunroof is moved to its fully open position by pushing the "Open" switch, and to stop at the desired position, push in any switches (Open, Close, Up, Down). To close, press and hold the "CLOSE" button. Release the button when the sunroof reaches the desired position.

**WARNING:**

- **Do not close a sunroof if anyone's hands, arms or body are between the sliding glass and the sunroof sash, as this could result in injury.**
- **Do not place your head or arms out of the sunroof opening at any time.**

**CAUTION:**

- **Do not open the sunroof in severely cold temperature or when it is covered with ice or snow.**
- **Periodically remove any dirt that may have accumulated on the guide rails.**

B460C01GK-GAT

## Tilting the Sunroof System

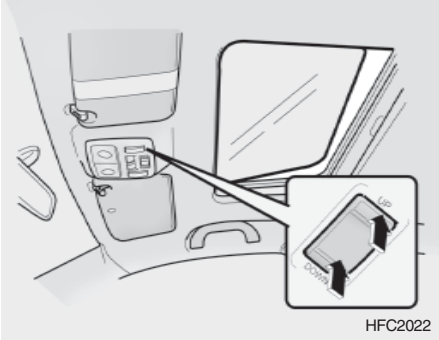

HFC2022

The sunroof is moved to its fully tilt up position by pushing the "UP" switch, and to stop at the desired position, push in any switches (Open, Close, Up, Down).
To tilt down, press and hold the "DOWN" button. Release the button when the sunroof reaches the desired position.

**NOTE:**

**After washing the car or after there is rain, be sure to wipe off any water that is on the sunroof before operating it.**

B460D01TB-AAT

## Manual Operation of Sunroof

If the sunroof does not electrically operate:

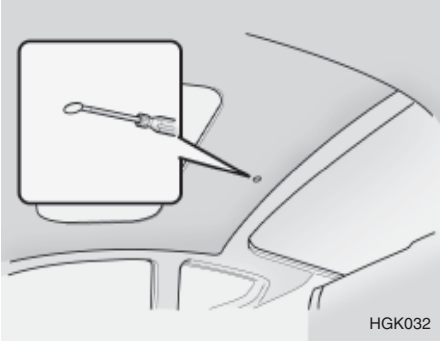


1. Remove the cap located in the rear roof panel by using a coin or screw driver.

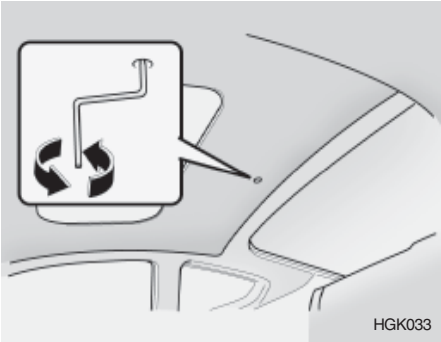


2. Insert the hexagonal head wrench provided with the vehicle into the socket. This wrench can be found in the vehicle's trunk or glove box.
3. Turn the wrench counterclockwise to open or clockwise to close the sunroof.

B460E01TB-GAT

## Resetting the Sunroof System

If the battery has been recharged, disconnected, if the sunroof is operated with the hexagonal head wrench manually, or if the sunroof operation is stopped by that ignition key is turned to the "OFF" position while it is moving, you may need to reset the sunroof.

To do this;

1. Turn the ignition switch "OFF".
2. With pressing "open" "up" button at the same time, turn the ignition switch "ON".
3. If the sunroof is set like this, the sunroof is reset with tilting up/down automatically once for all.

**CAUTION:**

**If the sunroof is not reset, it may not be operated properly.**

B480A01E-EAT

## INTERIOR LIGHT

### Map Light

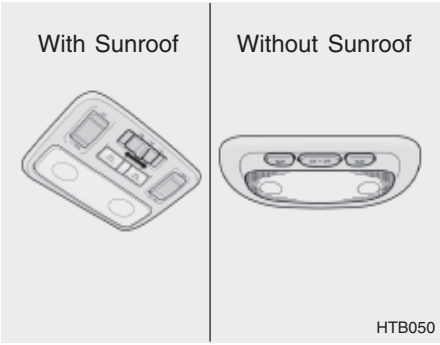


The two map lights are located at each side of the interior light.
The lights may be operated by depressing the switch to turn on the light and pressing again to turn off the light. This light produces a spot beam for convenient use as a map light at night or as a personal light for the driver or the passenger.

SB340B1-E

### Interior Light

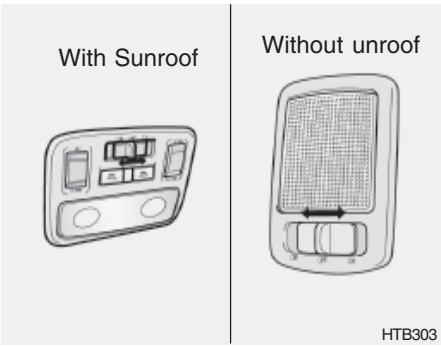


The interior courtesy light has a button of three positions.
The three positions are:

**o DR**
In the "DR" position, the interior courtesy light comes on when any door is opened regardless of the ignition key position. The light goes out when the door is closed.

**o ON**
In the "ON" position, the light stays on at all times.

**o OFF**
In the "OFF" position, the light stays off at all times even though a door is open.

B491A01TB-GAT

## SPECTACLE CASE

### (Not all models)

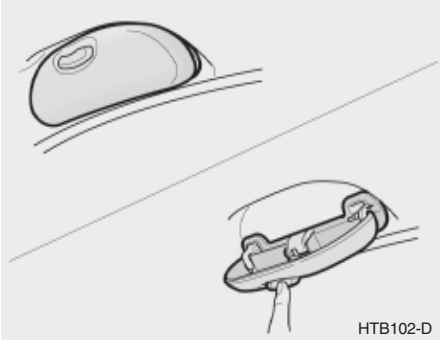


The spectacle case is located on the driver side of roof trim.
Pull the end of the cover to open the spectacle case.

**WARNING:**
**Do not keep objects such as sharp or unsuitable things inside the spectacle case. Such objects can be thrown out in the event of a sudden stop or an accident, possibly injuring the passengers in the vehicle.**

B500A01A-EAT

## GLOVE BOX

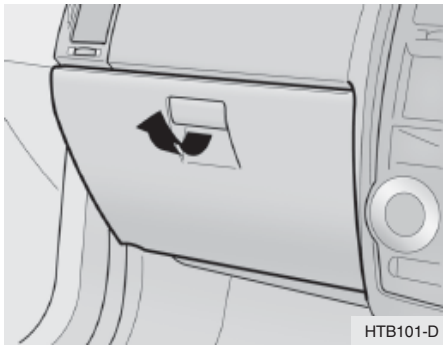


**WARNING:**
**To avoid the possibility of injury, the glove box lid must be kept closed whilst the vehicle is in motion.**

o To open the glove box, pull the glove box release lever.

YB270A2-A

## OUTSIDE REAR VIEW MIRROR
### Manual Type (Not all models)

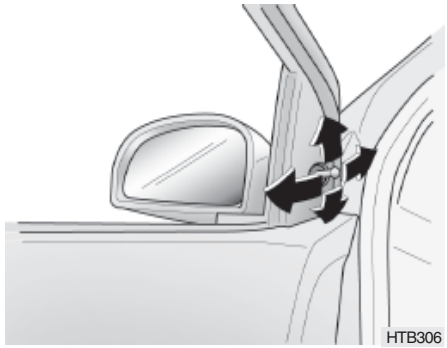


The outside rear view mirrors are equipped with a remote control for your convenience. It is operated by the control lever in the bottom front corner of the window.
Before driving away, always check that your mirrors are positioned so you can see directly behind you. When using the mirror, always exercise caution when attempting to judge the distance of vehicles behind you.

**CAUTION:**
**If the mirror control is jammed with ice, do not attempt to break it free using the control handle or by manipulating the face of the mirror. Use an approved spray de-icer (not radiator antifreeze) to release the frozen mechanism or move the vehicle to a warm place and allow the ice to melt.**

B510B01FC-EAT

## OUTSIDE REAR VIEW MIRROR Electric Type (Not all models)

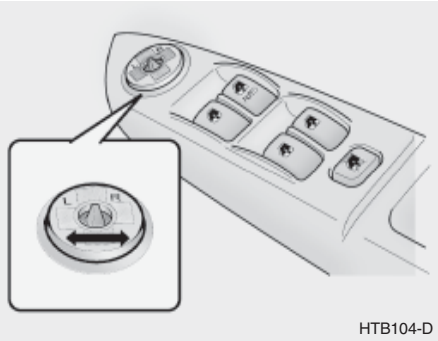

HTB104-D

The outside rear view mirror can be adjusted in any direction to give the maximum rear view vision.
The remote control outside rear view mirror switch controls the adjustments for passenger side door mirror.

### To adjust the position of either mirror:

1. Move the selecting switch to the "L" (or "R") position to activate the adjustable mechanism for the adjusting door mirror.
2. Now, adjust mirror angle by depressing the appropriate perimeter switch as illustrated.

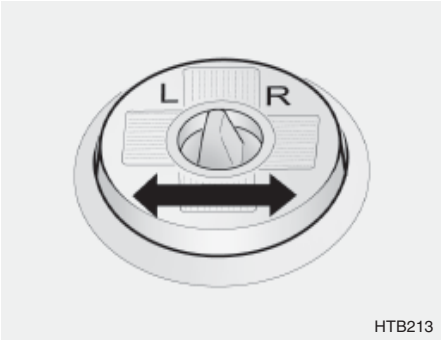

HTB213

**CAUTION:**

- **Do not leave the switch on for an unnecessary length of time.**
- **Scraping ice from the mirror face could cause permanent damage. To remove any ice, use a sponge, soft cloth or approved deicer.**
- **Be careful when judging the size or distance of any object seen in the passenger side rear view mirror. It is a convex mirror with a curved surface, any objects seen in this mirror are closer than they appear.**

B510D01HP-EAT

## OUTSIDE REARVIEW MIRROR HEATER (Not all models)

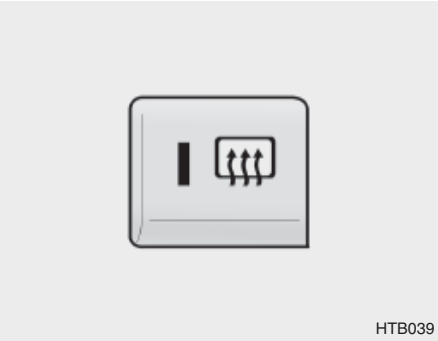


The outside rearview mirror heater is actuated in connection with the rear window defroster. To heat the outside rearview mirror glass, push in the switch for the rear window defroster. The rear-view mirror glass will be heated for defrosting or defogging and will give you improved rear vision in inclement weather conditions. Push the switch again to turn the heater off. The outside rearview mirror heater automatically turns itself off after 20 minutes.

SB360C1-F

## FOLDING THE OUTSIDE REAR VIEW MIRRORS

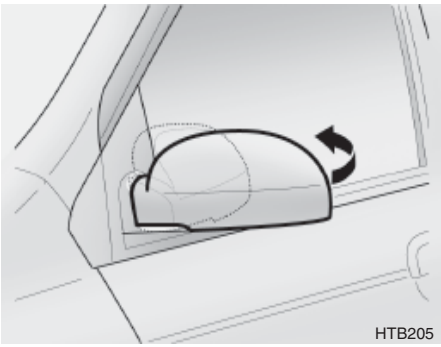


To fold the outside rear view mirrors, push them towards the rear.
The outside rear view mirrors can be folded rearward for parking in restricted areas.

**WARNING:**
**Do not adjust or fold the outside rear view mirrors while the vehicle is moving. This could result in loss of control, and an accident causing death, serious injury or property damage.**

SB370A1-E

## INTERIOR REAR VIEW MIRROR

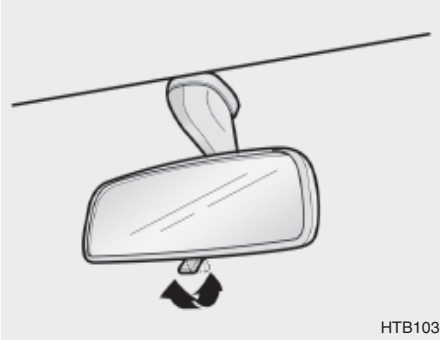


The interior mirror is of the day/night type to enable the glare of headlights from following vehicles to be eliminated during night time driving.
The tab located at the bottom of the mirror should be set to the position nearest the windscreen for normal day time driving, and flipped towards the rear of the vehicle to eliminate glare during night time driving. To adjust the field of vision, the mirror may be moved by hand upon the mounting.

**NOTE:**
**The mirror should always be adjusted prior to setting the vehicle in motion.**

SB380A1-E

## PARKING BRAKE

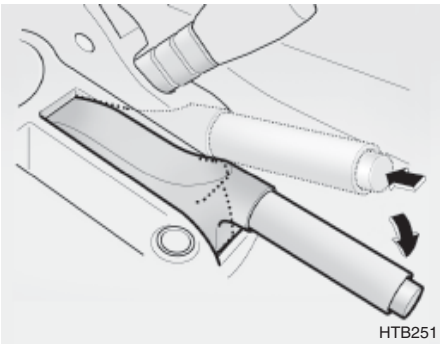


The parking brake must always be set when the vehicle is to be left unattended. When the parking brake is applied, and the ignition key is at the "ON" position, the parking brake warning light will be illuminated. Before driving the vehicle, the parking brake must be fully released and the warning light extinguished.

- o To set the parking brake, apply the foot brake and pull the parking brake lever up with the button depressed. Release the button when the brake is fully applied.
- o To release the parking brake, apply the foot brake and pull up the parking brake lever slightly. Depress the button and lower the lever.

B550A01S-DAT

## HIGH-MOUNTED REAR STOP LIGHT

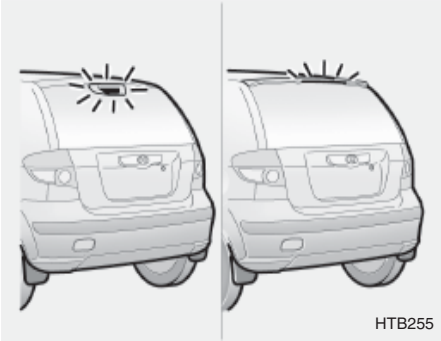


In addition to the lower-mounted rear stoplights on either side of the car, the high mounted rear stoplight in the centre of the rear window or inserted in the rear spoiler also lights when the brakes are applied.

B750A01TB-DAT

## BONNET RELEASE

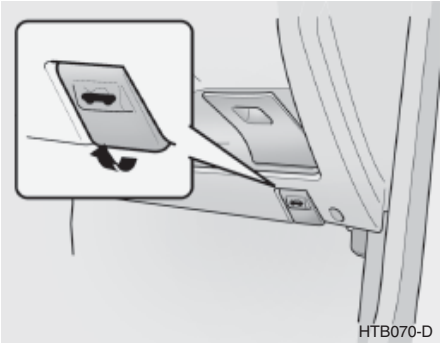


1. Pull the release knob to unlatch the bonnet.

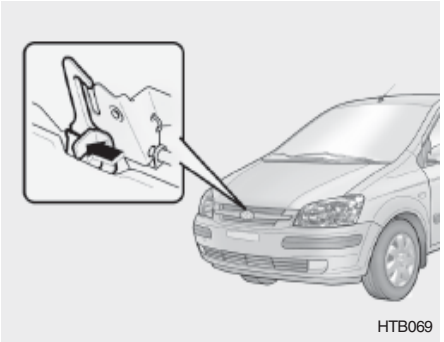


2. Push the safety catch lever sidewards and lift the bonnet.

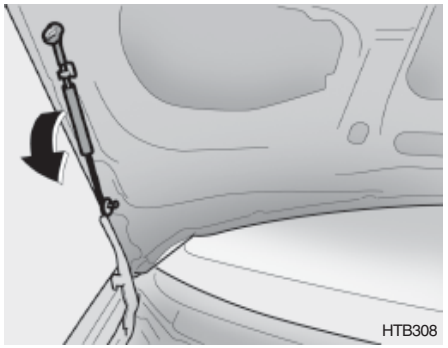


3. Pull the support rod from the bonnet.

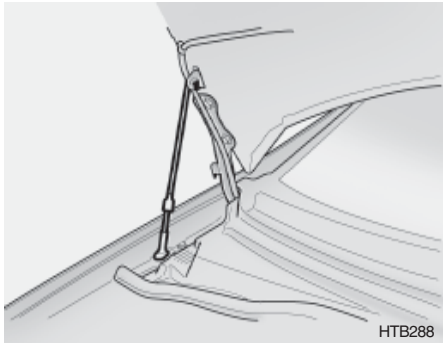


4. Hold the bonnet open with the support rod.

Before closing the bonnet, return the support rod to its clip to prevent it from rattling. Lower the bonnet until it is about 30 cm (1 ft.) above the closed position and let it drop. Make sure that it locks into place.

**CAUTION:**
**Make sure that the support rod has been released prior to closing the bonnet.**

**WARNING:**
- **Always double check to be sure that the bonnet is firmly latched before driving away. If it is not latched, the bonnet could fly open while the vehicle is being driven, causing a total loss of visibility, which might result in an accident.**
- **The support rod must be inserted completely into the hole provided in the bonnet whenever you inspect the engine compartment. This will prevent the bonnet from falling and possibly injuring you.**
- **Do not move the vehicle with the bonnet in the raised position, as vision is obstructed and the bonnet could fall or be damaged.**

SB440A1-E

## REMOTE FUEL FILLER LID RELEASE (Not all models)

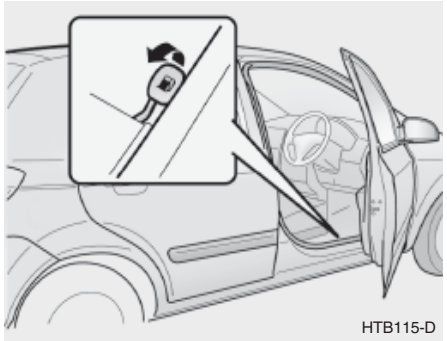


The fuel filler lid may be opened from inside the vehicle by pulling up on the fuel filler lid release.

**NOTE:**
**If the fuel filler lid will not open because ice has formed around it, tap lightly or push on the lid to break the ice and release the lid. Do not pry on the lid. If necessary, spray around the lid with an approved deicer fluid (do not use radiator anti-freeze) or move the vehicle to a warm place and allow the ice to melt.**

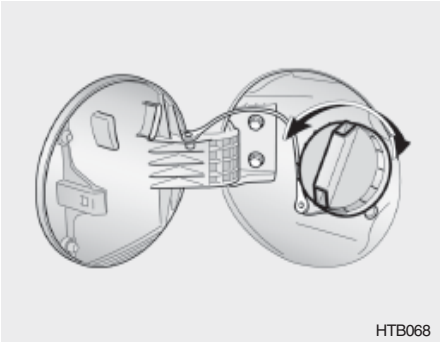
HTB068

**WARNING:**
**Fuel vapours are dangerous. Before refuelling, turn off the engine and never allow sparks, lit cigarettes or open flames near the filler area. When releasing the filler cap, a small amount of residual pressure may generate a slight hissing sound which is not indicative of an abnormality. In the event of the fuel filler cap requiring replacement, only a Genuine Hyundai replacement part should be used to prevent fuel leakage.**

B540A01FC-GAT
## TAIL GATE

HTB067

**WARNING:**
**The tail gate should always be kept completely closed while the vehicle is in motion. If it is left open or ajar, poisonous exhaust gases may enter the car resulting in serious illness or death to the occupants. See additional warnings concerning exhaust gases on page 2-2.**

- The tail gate can be locked or unlocked with a key.
- The tail gate is opened by pulling the outside handle up, raising the tail gate manually.
- To close, lower the tail gate, then press down on it until it is closed. To be sure the tail gate is fully closed, always try to pull it up again without using the outside handle.

B540A01TB-EAT

## SEATBACK HOLDER

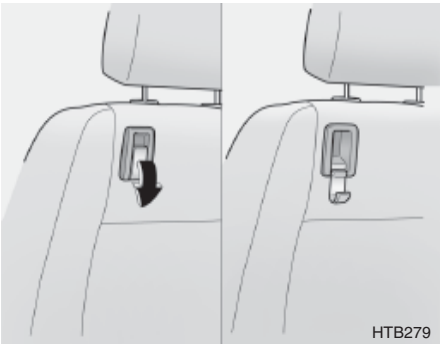


There is a front passenger seatback holder to hang a shopping bag and so on.

**CAUTION**

**Do not hang a bag beyond 66 Lbs (30 kg). It may cause damage to the seatback holder.**

B540B01TB-GAT

## SEAT POCKET (Not all models)

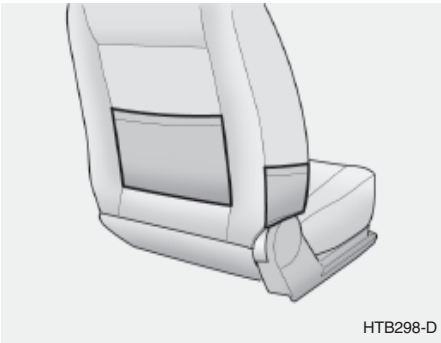


Seat side pocket is located on the front passenger seat to accept scratch paper and so on.
There are seatback pockets on the backside of the front seats (Not all models).

B545A01TB-GAT

## HOW TO USE LUGGAGE ROOM

B650A01FC-GAT

### Cargo Area Cover

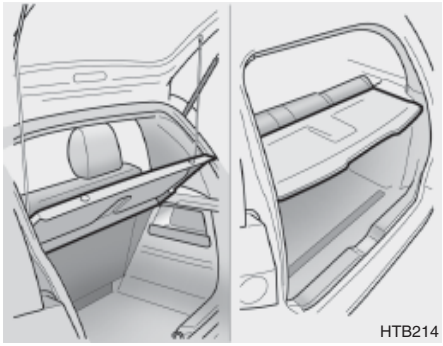


Nothing should be carried on top of the luggage cover. Loose materials could result in injury to vehicle occupants during sudden braking.

## Luggage Side Trim

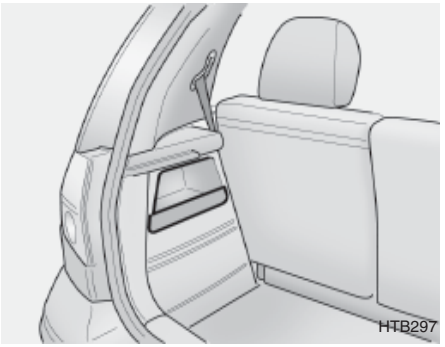


There are multipurpose receipts to accept small commodities in the luggage side trim.

B545B01TB-EAT

## Luggage Under Tray (Not all models)

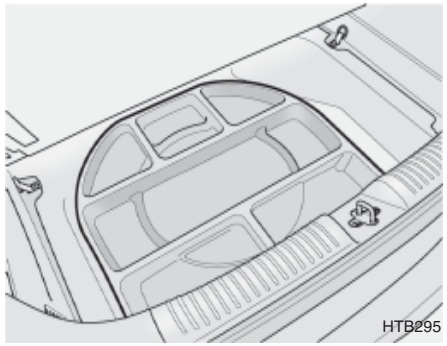


There is a multipurpose receipt space under the luggage room mat.

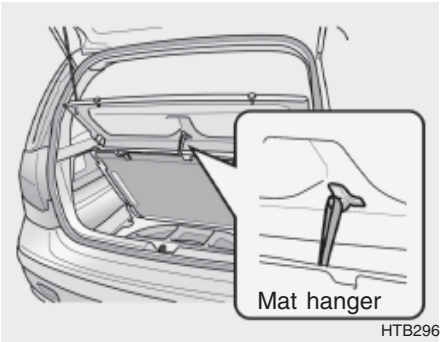


Before use the luggage under tray, hang the luggage room mat to the mat hanger. Mat hanger is located beneath the centre of the cargo area cover.

**CAUTION:**
**Should install the luggage under tray on the spare tire. Unless, it may cause transformation of the luggage room mat.**

B540D02FC-GAT

## Luggage Net (If Installed)

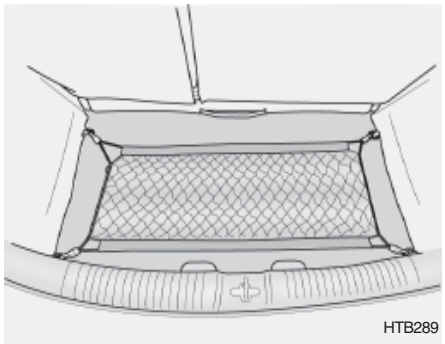


Some objects can be kept in the net in the luggage compartment.
Use the luggage net on the floor or at the back of the luggage compartment to prevent objects from sliding.

**WARNING:**
**Avoid eye injury. DO NOT over-stretch. ALWAYS keep face and body out of recoil path. DO NOT use when strap has visible signs of wear or damage.**

B545C01TB-EAT

## Luggage Board (Not all models)

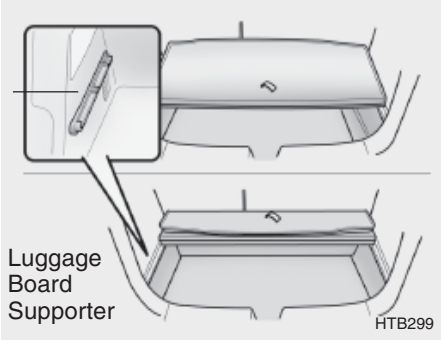


For greater convenience, your Hyundai can devide the cargo space with the luggage board. Fix the luggage board to the luggage board supporter. Fold the board to pull the grip upward and push forward.

**CAUTION:**

- **When you want to enlarge the cargo space, remove the luggage board from the luggage board supporter after folding the rear seat.**
- **Do not load cargo beyond 66 Lbs (30kg). It may cause damage to the luggage board.**

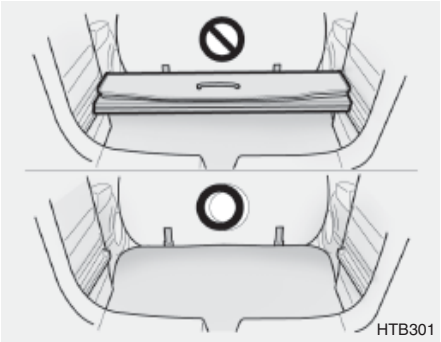

- **To use the luggage board with unfolding, fix it in the luggage board supporter. There will be an audible "Click" when the luggage board fixes in the supporter.**
- **The luggage board can be thrown out in the event of a sudden stop or an accident. Unfold the luggage board stablely to prevent cargo damage.**

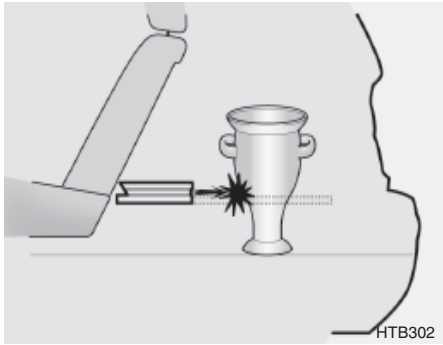


B560B01O-EAT

## AUTO FUEL CUT SWITCH (Petrol Engine)

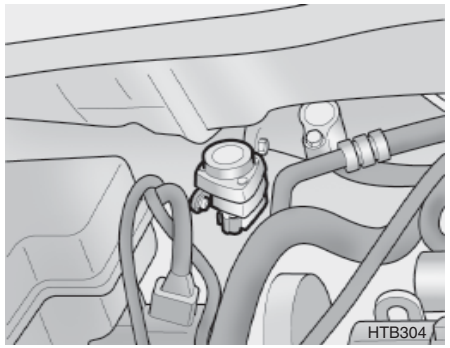


The auto fuel cut switch is located on the driver's side of the engine compartment. In the event of a collision or sudden impact, the auto fuel cut device cuts off the fuel supply. If this device is activated, it must be reset by pressing in on the top of the switch before the engine can be restarted.

**WARNING:**
**Before resetting the auto fuel cut switch, the fuel line should be checked for fuel leaks.**

B580A01TB-GAT

## SUN VISOR

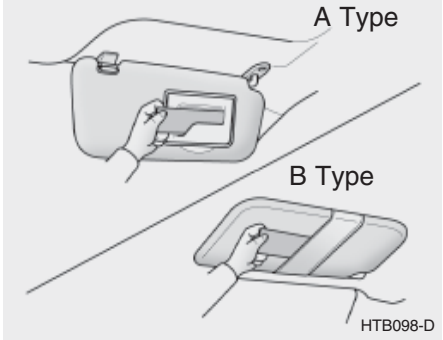


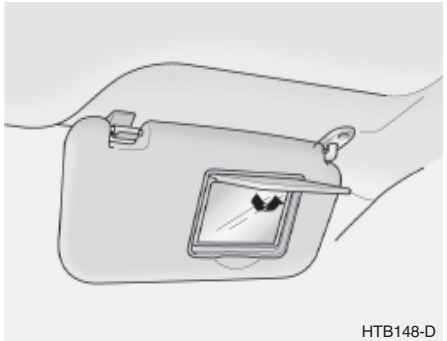

Your Hyundai is equipped with sun visors to give the driver and front passenger either frontal or side ward shade. The sun visors are fitted on both sides on all models. To reduce glare or to shut out direct rays of the sun, turn the sun visor down to block the annoyance. A ticket holder is provided on the back of the sun visor for the driver. Vanity mirrors are provided on the back of the sunvisor for the driver and the front passenger (If installed).

**NOTE:**
**The Supplemental Restraint System (SRS) label containing useful information can be found on the front of each sun visor.**

**WARNING:**
**Do not place the sun visor in such a manner that it obscures visibility of the roadway, traffic or other objects.**

SB520A1-F

## STEERING WHEEL TILT LEVER

**To adjust the steering wheel:**

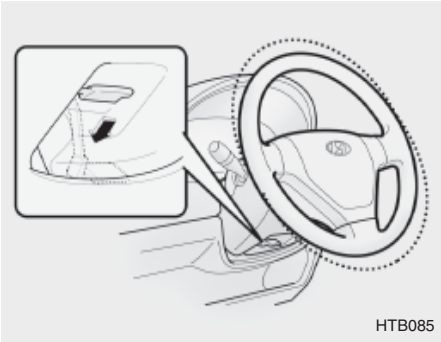


1. Push the lever downward to unlock.
2. Raise or lower the steering wheel to the desired position.
3. After adjustment, securely tighten the lever by pulling it upward

**WARNING:**
**Do not attempt to adjust the steering wheel while driving as this may result in loss of control of the vehicle and result in death or serious injury.**

B610B01A-DAT

## HORN

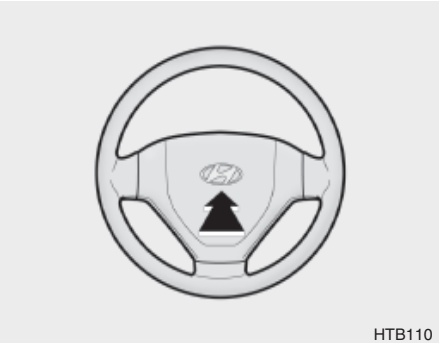


Press the centre hub of the steering wheel to sound the horn.

B710A01TB-EAT

## HEATING AND COOLING CONTROL (If Installed)

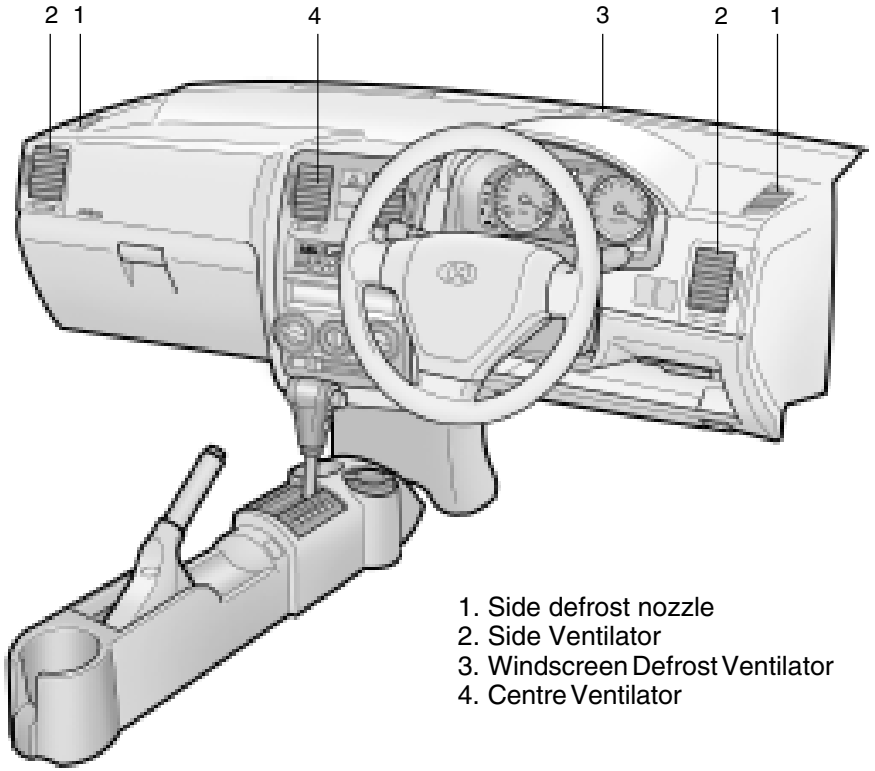


1. Side defrost nozzle
2. Side Ventilator
3. Windscreen Defrost Ventilator
4. Centre Ventilator

HTB032A-D

B710A01S-AAT

## VENTILATION

To operate the ventilation system:

- o Set the air intake control to "Fresh" mode ( ).
- o To direct all intake air to the dashboard vents, set the air flow control to "Face".
- o Adjust the fan speed control to the desired speed.
- o Set the temperature control between "Cool" and "Warm".

B710B01A-DAT

### Centre Ventilator

The centre ventilators are located in the middle of the dashboard.
To change the direction of the airflow, turn the control knob on the middle of the ventilator as desired.

B710C01Y-AAT

## Side Ventilator

The side vent knobs control the amount of outside air entering the vehicle through the side vents. These vents can also be closed, so no air enters through the side vents. To change the direction of the air flow, turn the control knobs as desired.

B670A01TB-GAT

## HEATING AND VENTILATION

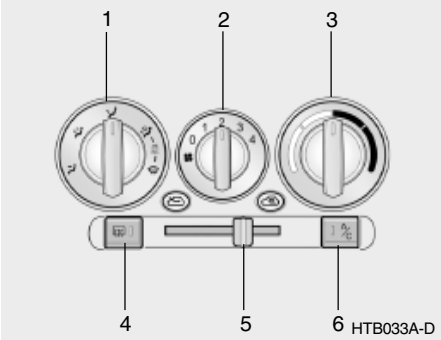


1. Temperature control switch
2. Fan speed control switch
3. Air flow control switch
4. Air conditioning switch
5. Air intake control switch
6. Rear window defroster switch

B670B01A-AAT

## Fan Speed Control (Blower Control)

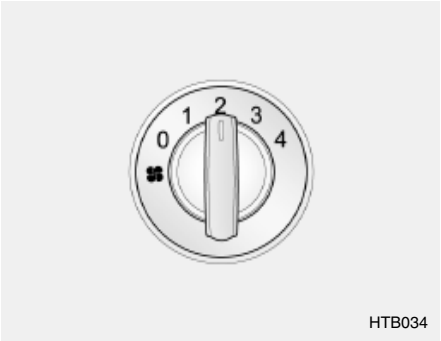


This is used to turn the blower fan on or off and to select the fan speed.
This blower fan speed, and therefore the volume of air delivered from the system, may be controlled manually by setting the blower control between the "1" and "4" positions.

B670C02A-EAT

## Air Intake Control

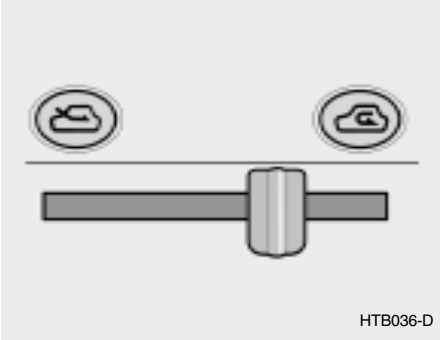


This is used to select fresh outside air or recirculation inside air.

Fresh
Recirculation

With the " " mode selected, air enters the vehicle from outside and is heated or cooled according to the other functions selected.
With the "" mode selected, air from within the passenger compartment is drawn through the heating system and heated or cooled according to the other functions selected.

**NOTE:**
**It should be noted that prolonged operation of the heating system in "" mode will give rise to misting of the windscreen and side windows and the air within the passenger compartment will become stale. In addition prolonged use of the air conditioning with the "" mode selected may result in the air within the passenger compartment becoming excessively dry.**

B670D01TB-EAT

## Air Flow Control

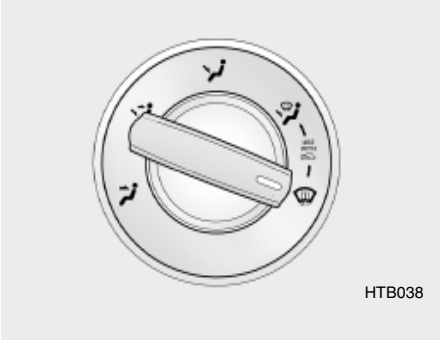


This is used to direct the flow of air. Air can be directed to the floor, dashboard outlets, or windscreen. Five symbols are used to represent Face, Bi-Level, Floor, Floor-Defrost and Defrost air position.

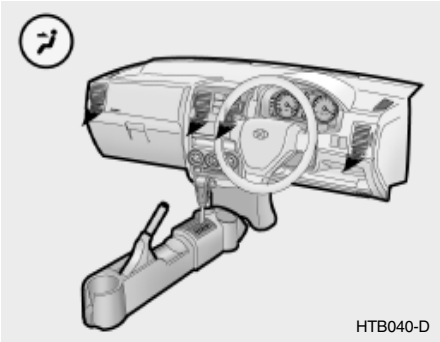


### Face-Level

Selecting the "Face" mode will cause air to be discharged through the face level vents.

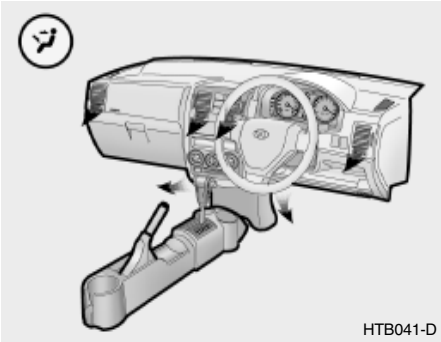


### Bi-Level

Air is discharged through the face vents and the floor vents. This makes it possible to have cooler air from the dashboard vents and warmer air from the floor outlets at the same time.

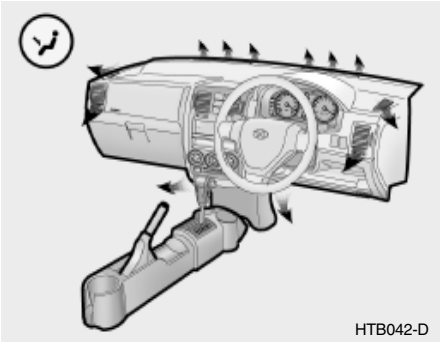


### Floor-Level

Air is discharged through the floor vents, windscreen defroster nozzle, side defroster nozzle, side ventilator.

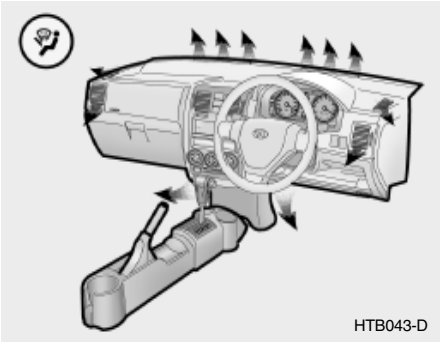


### Floor-Defrost Level

Air is discharged through the windscreen defrost nozzle, the floor vents, side defroster nozzle, side ventilator.

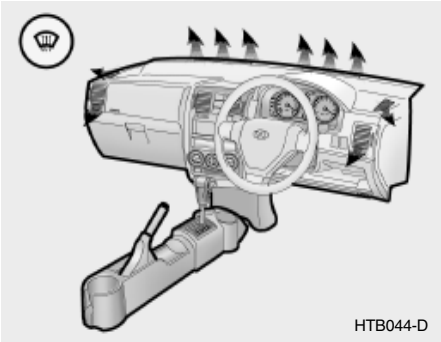


### Defrost-Level

Air is discharged through the windscreen defrost nozzle, side defroster nozzle, side ventilator.

B670E01A-AAT

## Temperature Control

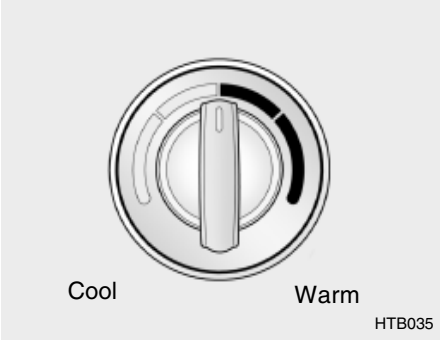


This is used to turn the heating system on and off and to select the degree of heating desired.

B690A01A-AAT

## HEATING CONTROLS

For normal heating operation, set the air intake control to the fresh air ( ) position and the air flow control to the floor ( ) position.
For faster heating, the air intake control should be set in the recirculate ( ) position.
If the windows fog up, set the air flow control to the defrost ( ) position and the air intake control to the fresh air ( ) position.
For maximum heat, move the temperature control to "Warm".

B670B01A-AAT

## BI-LEVEL HEATING

Your Hyundai is equipped with bi-level heating controls. This makes it possible to have cooler air from the dashboard vents and warmer air from the floor outlets at the same time. To use this feature:

- o Set the air intake control to the fresh air ( ) position.
- o Set the air flow control at the bi-level ( ) position.
- o Set the temperature control between "Cool" and "Warm".

B720A01TB-EAT

## DEFROSTING/DEFOGGING

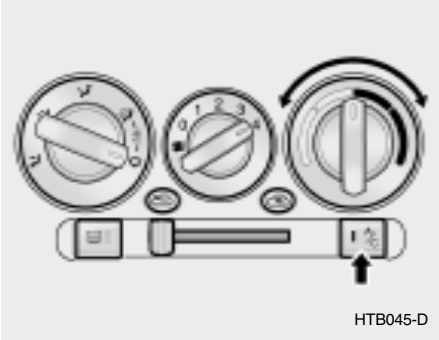


Use the heating/ventilation system to defrost or defog the windscreen:

### To remove interior fog on the windscreen:

- o Set the air intake control to the fresh air ( ) position.
- o Set the air flow control to the defrost ( ) position.
- o For more rapid action, turn on the air conditioning.
- o Set the temperature control to the desired position.
- o Set the fan speed control between "1" and "4" position.

### To remove the frost or exterior fog on the windscreen:

- o Set the air intake control to the fresh ( ) position.
- o Set the air flow control to the defrost ( ) position
- o Set the temperature control to warm.
- o Set the fan speed control to position "3" or "4".

### NOTE:

**When the A/C is operated continuously on the floor-defrost level ( ) or defrost level ( ), it may cause fog to form on the exterior windscreen. If this occurs, set the air flow control to the face level position ( ) and fan speed control to the low position.**

B730A01FC-EAT

## Operation Tips

- o To keep dust or unpleasant fumes from entering the car through the ventilation system, temporarily set the air intake control at "Recirculation". Be sure to return the control to "Fresh" when the irritation has passed to keep fresh air in the vehicle. This will help keep the driver alert and comfortable.
- o Air for the heating/cooling system is drawn in through the grilles just ahead of the windscreen. Care should be taken that these are not blocked by leaves, snow, ice or other obstructions.
- o To prevent interior fog on the windscreen, set the air intake control to the fresh air ( ) position and fan speed to the desired position.

B740A01A-AAT

## AIR CONDITIONING SWITCH (Not all models)

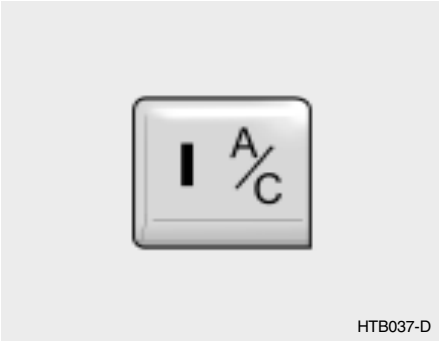


The air conditioning is turned on by pushing the A/C button on the heating/air conditioning control panel.

B740B02A-AAT

## AIR CONDITIONING OPERATION (Cooling)

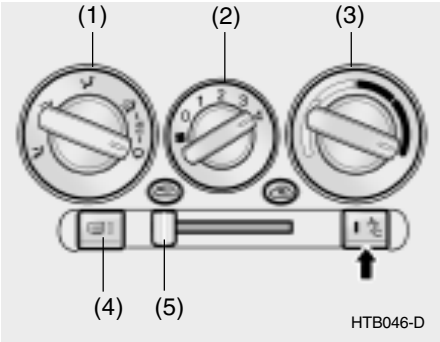


To use the air conditioning to cool the interior:

- o Turn on the fan control switch (2).
- o Turn on the air conditioning switch (4) by pushing in on the switch. The air conditioning indicator light should come on at the same time.
- o Set the air intake control to the position (5).
- o Set the temperature control (1) to "Cool". ("Cool" provides maximum cooling. The temperature may be moderated by moving the control toward "Warm".)
- o Adjust the fan control (2) to the desired speed. For greater cooling, turn the fan control to one of the higher speeds or temporarily select the position on the air intake control.

B740C01A-AAT

## De-Humidified Heating

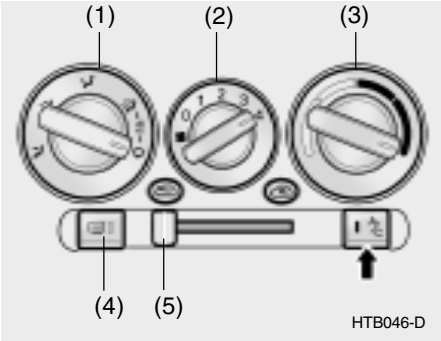


For dehumidified heating:

- o Turn on the fan control switch (2).
- o Turn on the air conditioning switch (4). The air conditioning indicator light should come on at the same time.
- o Set the air intake control (5) to the fresh air ( ) position.
- o Set the air flow control (3) to the face ( ) position.
- o Adjust the fan control (2) to the desired speed.
- o For more rapid action, set the fan at one of the higher speeds.
- o Adjust the temperature control (1) to provide the desired amount of warmth.

B740D01A-AAT

## Operation Tips

- o If the interior of the car is hot when you first get in, open the windows for a few minutes to expel the hot air.
- o When you are using the air conditioning system, keep all windows closed to keep hot air out.
- o When moving slowly, as in heavy traffic, shift to a lower gear. This increases engine speed, which in turn increases the speed of the air conditioning compressor.
- o On steep grades, turn the air conditioning off to avoid the possibility of the engine over-heating.
- o During winter months or in periods when the air conditioning is not used regularly, run the air conditioning once every month for a few minutes. This will help circulate the lubricants and keep your system in peak operating condition.

B760A01TB-EAT

## POLLEN FILTER (In Front of evaporator unit) (Not all models)

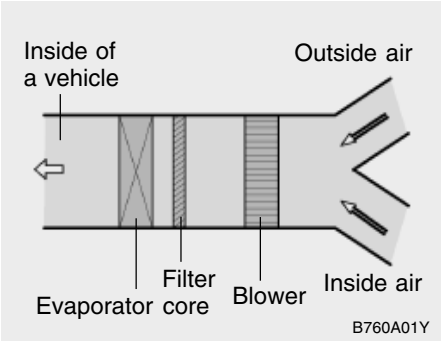


The pollen filter is located in front of the evaporator unit behind the glove box. It operates to decrease pollutants from entering the car and to filter the air. To replace the air filter, refer to the page 6-20.

**CAUTION:**

- **o Replace the filter every 12,000 miles (20,000 km) or once a year. If the car is being driven in severe conditions such as dusty, rough roads, more frequent air filter inspections and changes are required.**
- **o When the air flow rate is suddenly decreased, it must be checked at an authorized dealer.**

B750A02A-AAT

## STEREO SOUND SYSTEM
### How Car Audio Works

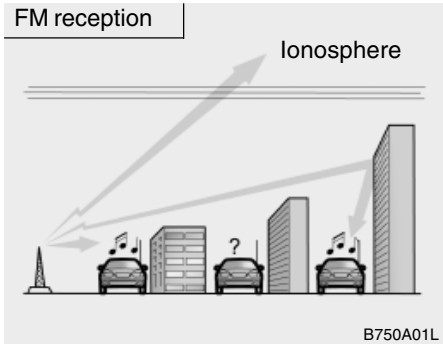


AM and FM radio signals are broadcast from transmitter towers located around your city. They are intercepted by the radio antenna on your car. This signal is then received by the radio and sent to your car speakers.

When a strong radio signal has reached your vehicle, the precise engineering of your audio system ensures high quality reproduction. However, in some cases the signal coming to your vehicle is not strong and clear. This can be due to factors such as the distance from the radio station, closeness of other strong radio stations or the presence of buildings, bridges or other large obstructions in the area.

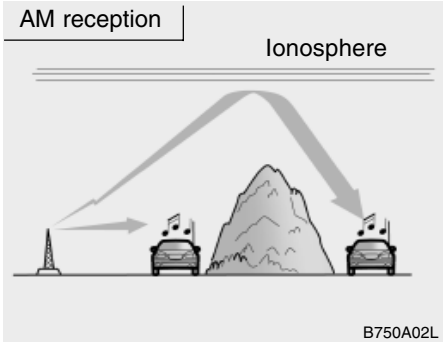


AM broadcasts can be received at greater distances than FM broadcasts. This is because AM radio waves are transmitted at low frequency. These long, low frequency radio waves can follow the curvature of the earth rather than travelling straight out into the atmosphere. In addition, they curve around obstructions so that they can provide better signal coverage.

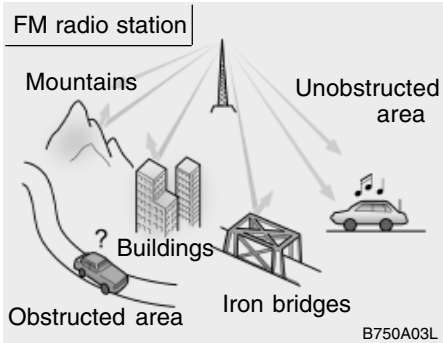


FM broadcasts are transmitted at high frequency and do not bend to follow the earth's surface. Because of this, FM broadcasts generally begin to fade at short distances from the station. Also, FM signals are easily affected by buildings, mountains, or other obstructions. These can result in certain listening conditions which might lead you to believe a problem exists with your radio. The following conditions are normal and do not indicate radio trouble:

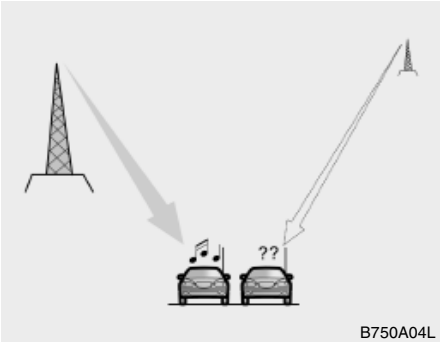

B750A04L

- Fading - As your car moves away from the radio station, the signal will weaken and sound will begin to fade. When this occurs, we suggest that you select another stronger station.
- Flutter/Static - Weak FM signals or large obstructions between the transmitter and your radio can disturb the signal causing static or fluttering noises to occur. Reducing the treble level may lessen this effect until the disturbance clears.

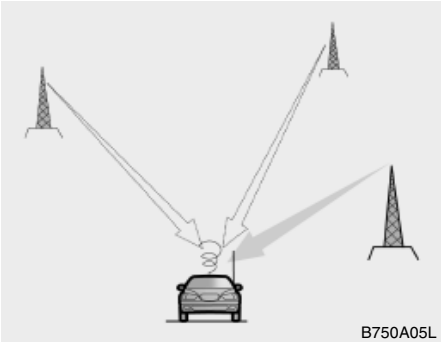
B750A05L

- Station Swapping - As a FM signal weakens, another more powerful signal near the same frequency may begin to play. This is because your radio is designed to lock onto the clearest signal. If this occurs, select another station with a stronger signal.
- Multi-Path Cancellation - Radio signals being received from several directions can cause distortion or fluttering. This can be caused by a direct and reflected signal from the same station, or by signals from two stations with close frequencies. If this occurs, select another station until the condition has passed.

B750B02Y-AAT

## Using a cellular phone or a two-way radio

When a cellular phone is used inside the vehicle, noise may be produced from the audio equipment. This does not mean that something is wrong with the audio equipment. In such a case, use the cellular phone at a place as far as possible from the audio equipment.

**CAUTION:**

**When using a communication system such a cellular phone or a radio set inside the vehicle, a separate external antenna must be fitted. When a cellular phone or a radio set is used with an internal antenna alone, it may interfere with the vehicle's electrical system and adversely affect safe operation of the vehicle.**

**WARNING:**

**Don't use a cellular phone when you are driving, you must stop at a safe place to use a cellular phone.**

B850A01F-AAT

## CARE OF DISC

### Proper Handling

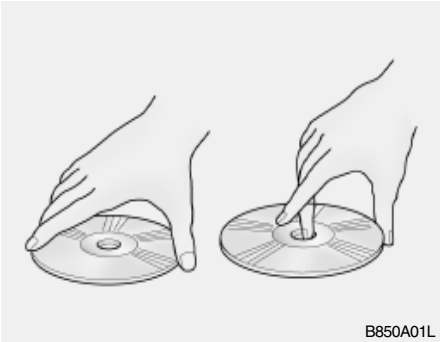


Handle your disc as shown. Do not drop the disc. Hold the disc so you will not leave fingerprints on the surface. If the surface is scratched, it may cause the pickup to skip signal tracks. Do not affix tape, paper, or gummed labels on the disc. Do not write on the disc.

### Damaged Disc

Do not attempt to play damaged, warped or cracked discs. These could severely damage the playback mechanism.

### Storage

When not in use, place your discs in their individual cases and store them in a cool place away from the sun, heat, and dust.

Do not grip or pull out the disc with your hand while the disc is being pulled into the unit by the self loading mechanism.

Do not pull the unit from the dash immediately after a disc is inserted or the eject switch has been pressed. If the unit is pulled out before an operation is completed, the disc will be unstable in the unit and may be damaged.

Do not attempt to insert a disc into the unit when the unit is out of the dash or the power is off.

### Keep Your Discs Clean

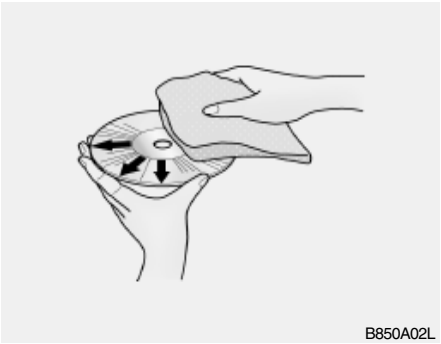


Fingerprints, dust, or soil on the surface of a disc could cause the pickup to skip signal tracks. Wipe the surface clean with a clean soft cloth.

If the surface is heavily soiled, dampen a clean soft cloth in a solution of mild neutral detergent to wipe it clean. See drawing.

B860A01A-AAT

## CARE OF CASSETTE TAPES

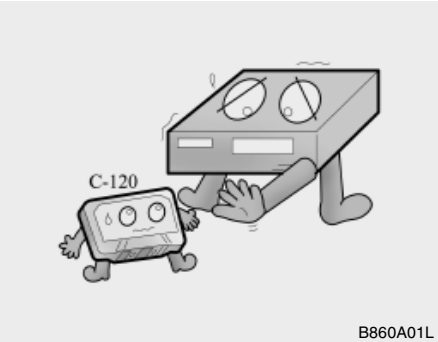

B860A01L

Proper care of your cassette tapes will extend the tape life and increase your listening enjoyment. Always protect your tapes and cassette cases from direct sunlight, severely cold and dusty conditions. When not in use, cassettes should always be stored in the original protective cassette case. When the vehicle is very hot or cold, allow the interior temperature to become more comfortable before listening to your cassettes.

- o Never leave a cassette inserted in the player when not being played. This could damage the tape player unit and the cassette tape.
- o We strongly recommend against the use of tapes longer than C-60 (60 minutes total). Tapes such as C-120 or C-180 are very thin and do not perform as well in the automotive environment.

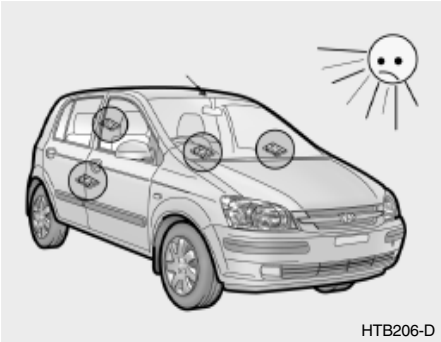
HTB206-D

- o Be sure that the cassette label is not loose or peeling off or tape ejection may be difficult.
- o Never touch or soil the actual audio tape surfaces.
- o Keep all magnetized objects, such as electric motors, speakers or transformers away from your cassette tapes and tape player unit.
- o Store cassettes in a cool, dry place with the open side facing down to prevent dust from setting in the cassette body.
- o Avoid repeated fast reverse usage to replay one given tune or tape section. This can cause poor tape winding to occur, and eventually cause excessive internal drag and poor audio quality in the cassette. If this occurs, it can sometimes be corrected by fast winding the tape from end to end several times. If this does not correct the problem, do not continue to use the tape in your vehicle.

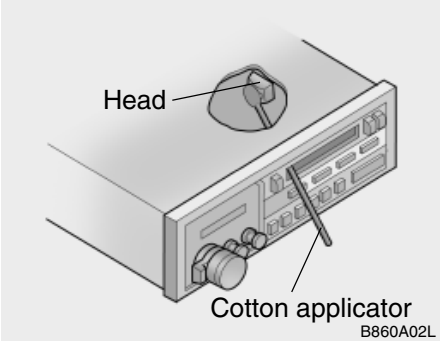

B860A02L

- o The playback head, capstan and pinch rollers will develop a coating of tape residue that can result in deterioration of sound quality, such as a wavering sound. They should be cleaned monthly using a commercially available head cleaning tape or special solution available from audio specialty shops. Follow the supplier's directions carefully and never oil any part of the tape player unit.
- o Always be sure that the tape is tightly wound on its reel before inserting in the player. Rotate a pencil in the drive sprockets to wind up any slack.

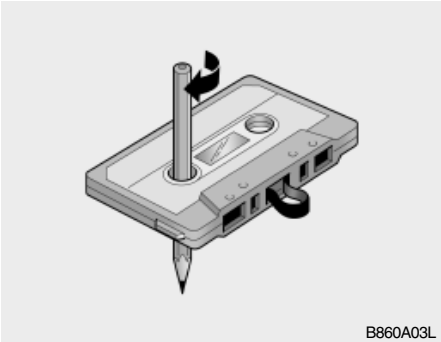


**NOTE:**

**Look at a tape before you insert it. If the tape is loose, tighten it by turning one of the hubs with a pencil or your finger.**

**If the label is peeling off, do not put it in the drive mechanism.**

**Do not leave tapes sitting where they are exposed to hot, warm, or high humidity, such as on top of the dashboard or in the player.**

**If a tape is exposed to extreme heat or cold, let it reach a moderate temperature before putting it in the player.**

B870D01FC-GAT

## ANTENNA

### Roof Antenna

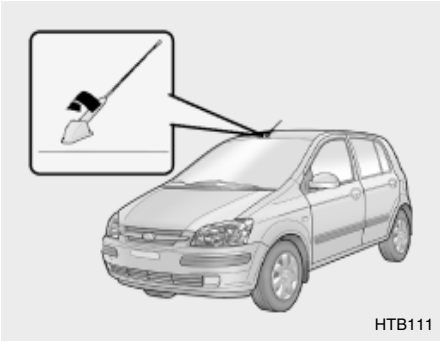


Your car uses a roof antenna to receive both AM and FM broadcast signals.

This antenna is a removable type. To remove the antenna, turn the antenna counterclockwise. To install the antenna, turn the antenna clockwise.

**CAUTION:**

- **Be sure to remove the antenna before washing the car in an automatic car wash or it may be damaged.**
- **Before entering a place with a low height clearance, be sure to adjust the roof antenna low.**
- **When reinstalling your antenna, it is important that it is fully tightened to ensure proper reception.**

# 2. DRIVING YOUR HYUNDAI

Before starting the engine ..... 2-3
Key position ..... 2-4
Starting ..... 2-5
Operating the manual transaxle ..... 2-8
Automatic transaxle ..... 2-9
Effective Braking ..... 2-13
Anti-Lock brake system (ABS) ..... 2-13
Driving for economy ..... 2-14
Winter Driving ..... 2-15
Trailer and Caravan Towing ..... 2-17

SC020A1-E

## WARNING: ENGINE EXHAUST CAN BE DANGEROUS!

Engine exhaust gases are potentially lethal. If at any time engine exhaust gas is detected within the passenger compartment, move the vehicle to an open area and open all windows.

**o Never inhale exhaust gas.**
Exhaust gases contain Carbon Monoxide which is colourless and odourless. Carbon Monoxide is poisonous and can cause unconsciousness and death by asphyxiation.

**o Exhaust System Maintenance.**
Ensure that the exhaust system is maintained in good condition and is free from excessive corrosion and damage which may result in leakage. If the vehicle is driven over an object which strikes the exhaust system, ensure that the exhaust system is inspected at the first available opportunity to ensure that no leakage exists.

**o Confined Areas.**
Do not run the engine in confined spaces, allowing the engine to idle in a garage, even when the doors are open is dangerous practice. Only start the engine immediately prior to moving the vehicle out of the garage.

**o Prolonged Idling.**
If it is necessary to allow the vehicle to idle for prolonged periods, ensure that the heating system air intake control is set to the "Fresh" position, the blower is set to high speed operation and that the vehicle is standing in an open area.

**o Load Carrying.**
If it is necessary to carry long objects which do not permit the boot lid to be fully closed, the side windows must remain closed and the heating air intake control set to the "Fresh" position with the blower running at the highest speed setting.

To ensure correct operation of the heater system, the air intake grilles at the base of the windscreen must not be obstructed by snow leaves etc..

C020A01O-EAT

## BEFORE STARTING THE ENGINE

Before you start the engine, you should always:

1. Look around the vehicle to be sure there are no flat tyres, puddles of oil or water or other indications of possible trouble.
2. After entering the car, check to be sure the parking brake is engaged.
3. Check that all windows, and lights are clean.
4. Check that the interior and exterior mirrors are clean and in position.
5. Check your seat, seatback and headrestraint to be sure they are in their proper positions.
6. Lock all the doors.
7. Fasten your seat belt and be sure that all other occupants have fastened theirs.
8. Turn off all lights and accessories that are not needed.
9. When you turn the ignition switch to "ON" check that all appropriate warning lights are operating and that you have sufficient fuel.
10. Check the operation of warning lights and all bulbs when key is in the "ON" position.

**WARNING:**
**(DIESEL ENGINE)**
**To ensure that sufficient vacuum exists within the brake system during cold weather start-up conditions, it is necessary to run the engine at idle for several seconds after starting the engine.**

SC040A1-F

## COMBINATION IGNITION SWITCH AND STEERING LOCK

### To Start the Engine

- If your Hyundai is equipped with a manual transaxle, place the shift lever in neutral and depress the clutch pedal fully.
- If your Hyundai has an automatic transaxle, place the shift lever in "P" (park).
- To start the engine, insert the ignition key and turn it to the "START" position. Release it as soon as the engine starts. Do not hold the key in the "START" position for more that 15 seconds.

**NOTE:**
**For safety, the engine will not start if the shift lever is not in "P" or "N" Position (automatic transaxle).**

SC050A2-E

## KEY POSITIONS

**WARNING:**
**The engine must never be turned off and the key removed from the ignition key cylinder whilst the vehicle is in motion since the steering lock will operate and control of the vehicle will be lost.**

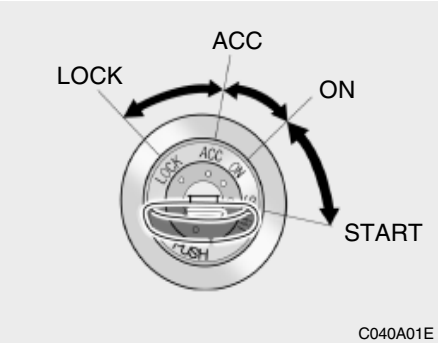

C040A01E

### "START"

The engine is started in this position. It will crank until you release the key.

### NOTE:

**Do not hold the key in the "START" position for more than 15 seconds.**

### "ON"

When the key is at the "ON" position, the ignition and all accessories are available for use. If the engine is not running, the key should not be left at this position since the battery will become discharged and damage to the ignition system may also result. For information regarding engine starting, refer to "STARTING THE ENGINE".

### "ACC"

When the ignition key is at the "ACC" position, the radio and other accessories may be used.

### "LOCK"

The ignition key may only be inserted or removed at this position.

SB050B1-E

## STEERING WHEEL LOCK

When the key is removed, the steering column lock will be activated and will engage when the steering wheel is turned to the appropriate position. It is not necessary to turn the wheel until locked each time the key is removed since in the event of any unauthorized attempt at removal, the lock will become effective as soon as the steering wheel is turned. To unlock the steering, insert the key and turn to the "ACC" position. If the steering is locked, it may be necessary to rock the steering wheel slightly to facilitate turning the key. Under no circumstances should the key be forced since breakage of the key will occur.

SC090D1-F

## To Remove the Ignition Key

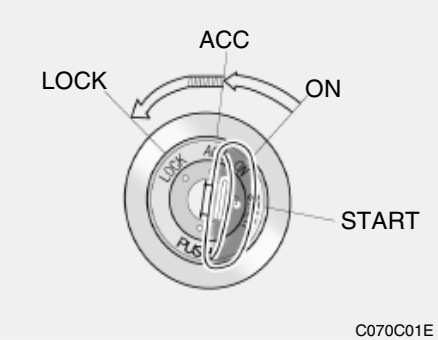


1. Turn the ignition key to the "ACC" position.
2. Simultaneously push and turn the ignition key counterclockwise from the "ACC" posi-tion to the "LOCK" position.
3. The key can be removed in the "LOCK" position.

SC060A1-E

## STARTING THE PETROL ENGINE

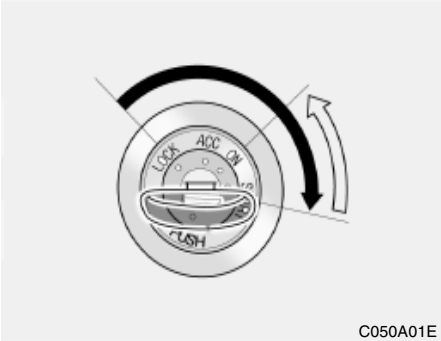


1. Ensure that the transaxle is in neutral and that the clutch pedal is held depressed (manual transaxle) or the transaxle selector is at the "P" position (automatic transaxle vehicle).
2. Turn the ignition key to and hold at the "Start" position until the engine starts. When the engine has started, release the key.

### NOTE:

**Do not operate the starter for more than 15 seconds continuously or continue to operate the starter after the engine has started to avoid damaging the starter motor. If the engine makes a false start, allow it and the starter motor to come to rest before attempting to start the engine again. Never attempt to start the engine with the transaxle in gear. Do not depress the accelerator pedal whilst starting the engine. Allow the engine to idle for 20 seconds or so before driving the vehicle.**

### CAUTION:

**Do not leave the vehicle unattended whilst idling. Never allow the vehicle to idle or warm up in a confined space (ie garage) longer than is necessary to move the vehicle into an open area.**

C051A01O-EAT

## STARTING THE DIESEL ENGINE

ENGINE COLD

- o Turn the ignition key to position "ON" and wait for the pre-heat indicator light to go out.
- o Operate the starter until the engine runs.

ENGINE WARM

Operate the starter. If the engine does not respond on the first attempt, wait several seconds and try again using the pre-heat.

C050B02S-GAT

## NORMAL CONDITIONS

The Starting Procedure:

1. Insert key, and fasten the seat belt.
2. Depress the clutch pedal fully and place the gearshift lever (manual transaxle) in neutral or the selector lever (automatic transaxle) in "P" (park) position.
3. After turning the ignition key to the "ON" position, make certain all warning lights and gauges are functioning properly before starting the engine.
4. On vehicles equipped with the diesel preheat indicator light, turn the ignition key to the "ON" position. The diesel pre-heat indicator light will first illuminate in amber, and then after a short time, the amber illumination will go off, indicating that preheating is completed.

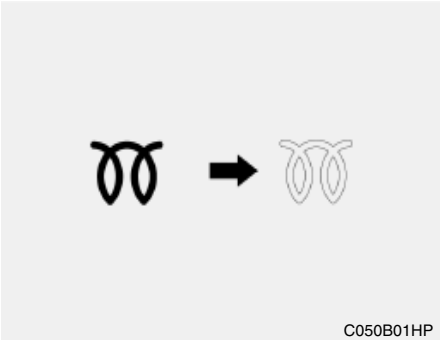

C050B01HP

**NOTE:**

**If the engine were not started 10 seconds after the preheating is completed, turn the ignition key once more to the "LOCK" position, and then to the "ON" position, in order to preheat again.**

**WARNING:**
**Be sure that the clutch is fully depressed when starting a manual transaxle vehicle. Otherwise there is the potential to cause damage to the vehicle or injury to someone inside or outside the vehicle as a result of the forward or backward movement of the vehicle that will occur if the clutch is not depressed when the vehicle is started.**

5. Turn the ignition key to the "Start" position and release it when the engine starts.

C055B01B-GAT

## STARTING AND STOPPING THE ENGINE FOR TURBO CHARGER INTERCOOLER (DIESEL ENGINE)

(1) Do not race the engine or sudden accelerate the engine immediately after start it. If the engine is cold, allow the engine to idle for several seconds before it is driven to ensure sufficient lubrication of the turbo charger unit.
(2) After high speed or extended driving, requiring a heavy engine load, the engine should be allowed to idle about 1 minute before turning it off. This idle time will allow the turbo charger to cool prior to shutting the engine off.

**WARNING:**
**Do not turn the engine off immediately after it has been subjected to a heavy load. Doing so may cause severe damage to the engine or turbo charger unit.**

SC060B1-E

## FUEL ECONOMY

The following suggestions are made to assist in achieving the greatest degree of fuel economy.

- o Maintaining a constant check on fuel consumption will enable the most economical use pattern and driving style to be adopted.
- o Avoid using the vehicle for very short journeys if possible, particularly when a cold start is involved.
- o Ensure that tyre pressures are maintained at the correct level.
- o Use only the recommended grade of fuel.
- o Avoid carrying unnecessary weight, and if a roof rack is in use, remove it as soon as possible after use.
- o Anticipate the road and conditions ahead to enable adjustments in speed to be made smoothly. Avoid heavy acceleration and sharp braking.
- o Avoid cruising at unnecessary high speeds.

- o Always ensure that the periodic maintenance services are performed by a Hyundai dealer at the time and/ or mileage intervals specified.
- o Use the air conditioning only when necessary.

SC090A02-E

## MANUAL TRANSAXLE

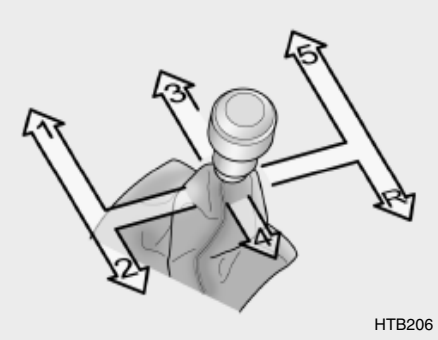


The five speed fully synchronized transaxle is controlled by a floor mounted shift lever upon which the shift pattern is indicated. It is important that when changing gear, the clutch pedal is fully depressed to avoid transaxle damage.

**CAUTION:**

- **o Do not attempt to engage reverse gear when the car is in motion.**
- **o To avoid damaging the selector mechanism, do not use the gear shift lever as a hand rest. Release the lever immediately the shift is completed.**
- **o To avoid premature clutch wear, do not use the clutch pedal as a foot rest, and do not hold the vehicle on a gradient using the clutch.**
- **o Ensure that the engine is not over-revved by upshifting before the tachometer needle enters the red zone.**
- **o Do not coast with the shift lever at the neutral position.**
- **o When descending long gradients, make use of the engine braking to assist the footbrake to avoid brake fade or over-heating.**
- **o When slippery conditions are encountered, increased caution should be exercised when gear changing, braking or accelerating. Abrupt changes in speed may cause a loss of traction or control of the vehicle.**
- **o The starter motor will not operate unless the clutch pedal is depressed whilst the engine is being started.**
- **o During cold weather, shifting may be difficult until the transaxle lubricant has warmed up. This is normal and not harmful to the transaxle.**
- **o If you 've come to a complete stop and it's hard to shift into 1st or R(Reverse), put the shift lever in N(Neutral) position and release the clutch. Press the clutch pedal back down, and then shift into 1st or R(Reverse) gear position.**
- **o Do not use the shift lever as a handrest during driving, as this can result in premature wear of the transaxle shift forks.**

SC090B1-F

## Using the Clutch

The clutch should be pressed all the way to the floor before shifting, then released slowly. Do not rest your foot on the clutch pedal while driving.
This can cause unnecessary wear.
Do not partially engage the clutch to hold the car on an incline. This causes unnecessary wear.
Use the parking brake to hold the car on an incline. Do not operate the clutch pedal rapidly and repeatedly.

C070E03A-EAT

## RECOMMENDED SHIFT POINTS

| Shift from-to | Recommended |
|---|---|
| 1-2 | 15 mph (20 km/h) |
| 2-3 | 25 mph (40 km/h) |
| 3-4 | 35 mph (55 km/h) |
| 4-5 | 45 mph (75 km/h) |

The shift points as shown above are recommended for optimum fuel economy and performance.

C090A01A-GAT

## AUTOMATIC TRANSAXLE

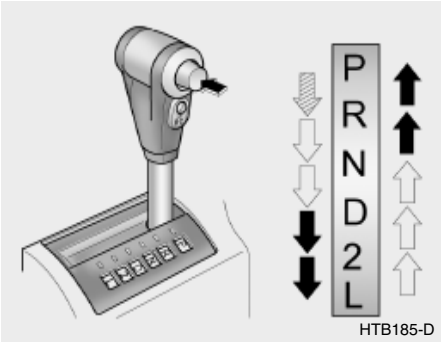


The highly efficient Hyundai automatic transaxle has four forward speeds and one reverse speed. It has a conventional shift pattern as shown in the illustration. At night, with the first position of the multi-function switch, the appropriate symbol on the shift pattern indicator will be illuminated according to the range selected.

**CAUTION:**
**Never shift into "R" or "P" position while the vehicle is moving.**

**NOTE:**

**Depress the brake pedal and push the button when shifting.**

**Push the button when shifting.**

**The selector lever can be shifted freely.**

For optimum fuel economy, accelerate gradually. The transaxle will automatically shift to the second, third and overdrive gears.

YC090A1-E

## SELECTOR POSITIONS

### o P (Park):

With the selector in this position, no drive is transmitted from the engine and the transaxle output and therefore the front wheels locked. The engine may be started with the selector in this position.

**CAUTION:**
**The selector must NEVER be shifted to the "P" position whilst the vehicle is in motion, otherwise serious transaxle damage will result.**

DC110C1-E

### o R (Reverse):

With the selector in this position, reverse gear will be engaged. The engine may not be started with the selector in this position.

**CAUTION:**
**The selector must NEVER be shifted to the "R" position whilst the vehicle is in motion.**

DC110D1-E

### o N (Neutral):

With the selector in this position, no gear is selected and no drive is transmitted from the engine. The engine may be started with the selector in this position.

**CAUTION:**
**Do not coast with the selector at the "N" position.**

DC110E1-E

### o D (Drive):

With the selector in this position, first gear will be engaged from rest and the transmission will automatically upshift to second, third and fourth depending upon the vehicle speed, throttle position and the position of the overdrive switch. The engine may not be started with the selector in this position.

DC110F1-E

### o 2 (Second Gear):

With the selector in this position, first gear will be engaged from rest. The transmission will upshift to second gear depending upon the vehicle speed and throttle position. No upshift to third or fourth will occur. The engine may not be started with the selector in this position.

DC110G2-E

### o L (Low Gear):

With the selector in this position, first gear will be engaged from rest. No upshift will occur regardless of vehicle speed and throttle opening. The engine may not be started with the selector in this position.

**CAUTION:**
**Do not move the selector to the "L" position when the vehicle speed is in excess of 50 m.p.h.**

C090H01A-EAT

**NOTE:**

- **The brake pedal should be depressed when shifting from NEUTRAL to a forward or reverse gear.**
- **The brake pedal fully depressed in order to move the shift lever from the "P" (Park) position to any of the other positions.**
- **It is always possible to shift from "R", "N", "D", "2", "L" position.**

C090I02A-EAT

**CAUTION:**

- **Shift into "R" and "P" only when the vehicle has completely stopped.**
- **Do not accelerate the engine in reverse or any of the forward positions with the brakes applied.**
- **Always apply the footbrake when shifting from "P" or "N", to "R", "D", "2" or "L" position.**
- **Do not use the "P" (Park) position in place of the parking brake. Always set the parking brake, shift the transaxle into "P" (Park) and turn off the ignition when you leave the vehicle, even momentarily. Never leave the vehicle unattended whilst the engine is running.**
- **Check the automatic transaxle fluid level regularly, and add fluid as necessary.**
  **See the maintenance schedule for the proper fluid recommendation.**

FC120D1-E

## General Operating Instructions

- The button in the selector handle must be depressed before the selector can be moved.
- The engine may only be started when the selector is at position "P" or "N".
- Ensure that the footbrake is firmly applied when shifting from "P" or "N" to "D", "2", "L" or "R" and vice versa.
- Always engage the parking brake when the vehicle is unattended, never use the "P" position in place of the parking brake.
- Under normal circumstances, the selector should be placed in the "D" position and the transaxle allowed to select the most ideal ratio for the circumstances. In this position maximum fuel economy will be achieved.
- When descending steep gradients where engine braking is required, the selector should be placed at the "2" or "L" position depending upon the vehicle speed.

- o When ascending steep gradients using large throttle openings, the transaxle may re-peatedly change between two adjacent ratios. This is a normal characteristic and may be prevented by cancelling the overdrive facility if the shifting occurs between third and fourth ratios, selecting position "2" if the shifting occurs between third and second ratios or selecting position "1" if the shifting occurs between first and second ratios.
- o Never move the selector to or from the "P" or "N" position with the accelerator depressed.
- o Ensure that the overdrive switch is at the "ON" position for maximum economy.
- o If rapid acceleration is required, fully depress the accelerator pedal. In this condition, the kickdown mechanism will be operated and the transaxle will automatically downshift according to the vehicle speed.
- o The automatic transaxle may be used to great effect if the vehicle becomes stuck in snow or mud by allowing the vehicle to be rocked to and fro. The engine speed should be held at approximately 1,000rpm by means of the accelerator pedal and the selector lever moved between the "D" and "R" positions to induce a rocking motion.
- o Do not depress the accelerator pedal with the brakes applied and the selector at the "R", "D", "2" or "L" position.
- o Turn the overdrive switch on for good fuel economy and smooth driving. But if engine braking is needed in the "D" range or if repeated upshifting and downshifting between the 3rd and 4th gear is needed when climbing a gentle slope, it is recommended that the overdrive switch be turned off. Turn the overdrive switch back on immediately afterward.

SC130A1-E

## OVERDRIVE SWITCH

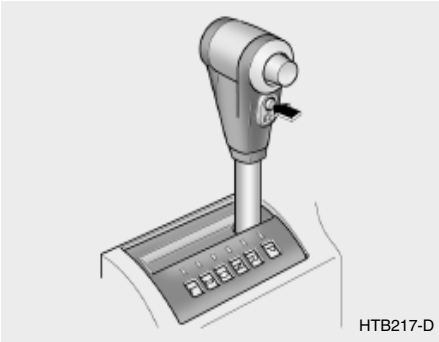


The overdrive switch prevents the transaxle upshifting higher than third gear when the switch is turned "OFF". The transaxle will start from rest in first gear and upshift to second and third gear depending upon the roadspeed and throttle opening but will not upshift to fourth gear. When the overdrive switch is turned "ON", the transaxle will start from rest in first gear and will upshift, depending upon roadspeed and throttle opening to second, third and fourth gear. Therefore, when the overdrive switch is turned "OFF", the transaxle performs as a three speed unit and the overdrive warning light

located in the instrument cluster will be illuminated. When the overdrive switch is turned "ON", the transaxle functions as a fully automatic four speed unit with the maximum fuel economy potential of the vehicle being realized.

SC140A1-E

## EFFECTIVE BRAKING

Braking system performance and friction material life are greatly affected by the driving style adopted. The following suggestions are made to assist in achieving the best results from the braking system.

- o Anticipate the road and conditions ahead in order that heavy braking may be avoided.
- o When descending long gradients, use the engine to assist in retarding the vehicle to minimize the possibility of brake fade occurring.
- o When trailer towing, ensure that the trailer brakes function correctly and use engine braking to assist the vehicle braking system.
- o Use only genuine Hyundai replacement brake pads and shoes to ensure consistent friction characteristics and wear rates.
- o After driving through deep water (e.g. fording), the brakes may become wet and performance reduced. Always check brake efficiency after emerging from the water and dry the brakes by lightly depressing the brake pedal several times whilst driving slowly.
- o Apply the parking brake only when the vehicle is at rest.
- o Since the power assistance provided by the brake servo is derived from the engine, coasting with the engine turned off or towing of the vehicle with the engine turned off will result in greatly increased pedal pressures being required to stop the vehicle.
- o Do not hold the vehicle on the upgrade with the accelerator pedal. This can cause the transmission to overheat. Always use the brake pedal or parking brake.

SC140B1-E

## ANTI-LOCK BRAKE SYSTEM (Not all models)

The Anti-Lock Brake System (ABS) is designed to prevent wheel lock-up during sudden braking or on hazardous road surfaces. The ABS control module monitors the wheel speed and controls the pressure applied to each brake. Thus, in emergency situations or on slick roads, ABS will increase vehicle control during braking.

### NOTE:

**During ABS operation, a slight pulsation may be felt in the brake pedal when the brakes are applied. Also, a noise may be heard in the engine compartment whilst braking. These conditions are normal and indicate that the anti-lock brake system is functioning properly.**

**WARNING:**

**ABS will not prevent accidents due to improper or dangerous driving maneuvers. Even though vehicle control is improved during emergency braking, always maintain a safe distance between you and objects ahead. Vehicle speeds should always be reduced during extreme road conditions.**

**The braking distance for cars equipped with an anti-lock braking system may be longer than for those without it in the following road conditions.**

- **Driving on rough, gravel or snow-covered roads.**
- **Driving with tyre chains installed.**
- **Driving on roads where the road surface is pitted or has different surface height.**

**These roads should be driven at reduced speeds. The safety features of an ABS equipped vehicle should not be tested by high speed driving or cornering. This could endanger the safety of yourself or others.**

SC150A1-F

## DRIVING FOR ECONOMY

You can save fuel and get more miles from your car if you follow these suggestions:

- Drive smoothly. Accelerate at a moderate rate. Don't make "jack-rabbit" starts or full-throttle shifts and maintain a steady cruising speed. Don't race between stop-lights. Try to adjust your speed to that of the other traffic so you don't have to change speeds unnecessarily.
  Avoid heavy traffic whenever possible. Al-ways maintain a safe distance from other vehicles so you can avoid unnecessary braking. This also reduces brake wear.
- Drive at a moderate speed. The faster you drive, the more fuel your car uses. Driving at a moderate speed, especially on the highway, is one of the most effective ways to reduce fuel consumption.
- Don't "ride" the brake or clutch pedal. This can increase fuel consumption and also increase wear on these components. In addition, driving with your foot resting on the brake pedal may cause the brakes to overheat, which reduces their effectiveness and may lead to more serious consequences.
- Take care of your tyres. Keep them inflated to the recommended pressure. Incorrect infla-tion, either too much or too little, results in unnecessary tyre wear. Check the tyre pres-sures at least once a month.
- Be sure that the wheels are aligned correctly. Improper alignment can result from hitting curbs or driving too fast over irregular surfaces. Poor alignment causes faster tyre wear and may also result in other problems as well as greater fuel consumption.

- o Keep your car in good condition. For better fuel economy and reduced maintenance costs, maintain your car in accordance with the maintenance schedule in Section 5. If you drive your car in severe conditions, more frequent maintenance is required (see Section 5 for details).
- o Keep your car clean. For maximum service, your car should be kept clean and free of corrosive materials. It is especially important that mud, dirt, ice, etc. not be allowed to accumulate on the underside of the car. This extra weight can result in increased fuel consumption and also contribute to corrosion.
- o Travel lightly. Don't carry unnecessary weight in your car. Weight is an enemy of good fuel economy.
- o Don't let the engine idle longer than necessary. If you are waiting (and not in traffic), turn off your engine and restart only when you're ready to go.
- o Remember, your car does not require extended warm-up. As soon as the engine is running smoothly, you can drive away. In very cold weather, however, give your engine a slightly longer warm-up period.
- o Don't "lug" or "over-rev" the engine. Lugging is driving too slowly in too high a gear resulting in the engine bucking. If this happens to you, shift to a lower gear.
  Over-revving is racing the engine beyond its safe limit. This can be avoided by shifting at the recommended speeds.
- o Use your air conditioning sparingly. The air conditioning system is operated by the engine power so your fuel economy is reduced when you use it.

SC160A1-F

## SMOOTH CORNERING

Avoid braking or gear changing in corners, especially when roads are wet. Ideally, corners should always be taken under gentle acceleration. If you follow these suggestions, tyre wear will be held to a minimum.

SC170A1-E

## WINTER MOTORING

The onset of winter conditions subject motor vehicles to greater operating demands. Therefore, the following suggestions will assist in maintaining peak performance and reliability during these periods:

ZC170B1-E

### Electrical System

Winter conditions impose severe demands upon vehicle electrical systems, particularly the charging circuit. The battery condition and performance along with the alternator performance and drive belt condition should be checked prior to the onset of winter.

ZC170C1-E

## Anti-freeze/Corrosion inhibitor

The cooling system must always contain an Ethylene-Glycol based anti-freeze solution. The system is filled during manufacture with solution of the correct strength which should be checked before the onset of winter and adjusted or changed as required.

### NOTE:

**The anti-freeze solution contains a corrosion inhibitor to prevent degradation of the aluminum castings contained within the engine. Therefore, never, drain the system and refill with water only.**

In addition, anti-freeze solution must ALWAYS be used in vehicles fitted with air conditioning, to prevent the heater matrix from freezing and subsequently bursting with the refrigeration system in use.

ZC170D1-E

## Door Locks

Should the door lock mechanism become frozen, a proprietary lock de-icer should be used. Alternatively, warming the door key may thaw the door lock. However, the key should be handled carefully to avoid burning the fingers.
Never attempt to thaw a frozen door lock using hot water, since the water will eventually freeze and compound the problem.

### NOTE:

**The proper temperature for using the immobilizer key is from -40°F to 176°F (-40°C to 80°C). If you heat the immobilizer key over 176°F (80°C) to open the frozen lock, it may cause damage to the transponder in its head.**

SC170E1-E

## Windscreen Washers and Wipers

The windscreen washer bottle should be filled with a solution of water and a proprietary winter screen wash additive. The windscreen wipers should not be used if the blades are frozen to the windscreen or if they are covered with snow, before this is removed.

### NOTE:

**Never allow undiluted screen washer fluid additive to spill upon the paintwork or use engine coolant anti-freeze since damage to the paintwork may result.**

- o When driving in extreme conditions, the windscreen wiper blades may fail to clear the screen properly due to the formation of ice upon the blade edge. It will therefore be necessary to periodically remove such ice to restore their efficiency.
- o If the power operated door mirrors become frozen, attempts to adjust these may damage the mechanism.

- The formation of snow or ice built up inside the wheel arches may interfere with the road wheels or steering mechanism. In such instances, unusual noises or an increase in steering effort may result. Therefore, ensure that the wheel arches are checked periodically and any accumulated snow or ice removed.
- It is advisable to carry emergency equipment including, torch, shovel, tow rope, blankets etc., if a journey is to be undertaken into areas of severe road conditions.

C190E01TB-EAT

## TRAILER AND CARAVAN TOWING

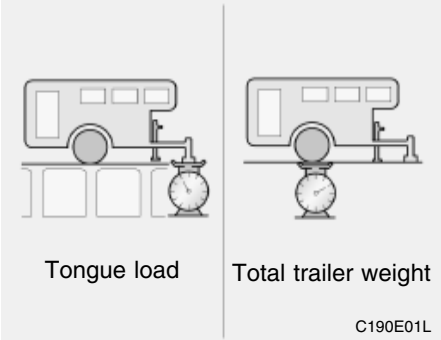


**WARNING:**

**It is not recommended that the vehicle be used for towing until the first 1,000 miles of Running In has been completed. All Hyundai MATRIX models are suited to towing trailers and caravans up to the limits indicated below. This models fitted with automatic transaxle have a transaxle oil cooler and further transaxle cooling should not be required.**

C195F02TB-EAT

## TOWING ATTACHMENTS

It is strongly recommended that only an Hyundai Approved towing attachment is used to ensure that the loads placed upon the body structure are correctly distributed. The use of a non approved attachment will result in the invalidation of the vehicle warranty. Hyundai towing attachments are designed and constructed to ensure maximum towing performance and ease of fitment. A range of accessories including electrical kits are available through the Hyundai dealer network.

It is of the utmost importance that those areas of the vehicle which are subjected to greater stress during towing are maintained in accordance with the recommendations given at the end of this book. In addition, the daily operating checks relating to engine oil, transmission oil and tyres must be performed at each refuelling to ensure maximum reliability and safety.

The use of a proprietary stabiliser will assist in achieving an inherently stable outfit but whilst the use of such equipment will improve the characteristics of a balanced outfit, it will not compensate for a badly loaded and therefore unstable outfit.

The tyres and braking equipment fitted to the trailer or caravan must be maintained in accordance with the recommendations of the manufacturer. Special attention should be paid to tyres which deteriorate through time and exposure rather than as a result of the distances towed. The inside walls of the tyres should be inspected along with the outside walls for cracking and damage. The trailer wheel nut torque must be checked on a regular basis, preferably before each towing session.

The trailer hitch and the safety catch mechanism must be maintained in good working order. The trailer break away cable or chain should be inspected for damage and should be attached to the vehicle towing attachment each and every time the trailer is hitched to the vehicle.

Whilst towing, the performance of the vehicle will be reduced in terms of acceleration, braking and handling due to the increased loads placed upon the vehicle. The driver should anticipate the change in characteristics and adjust the driving style in keeping with these changes. Care should be exercised when cornering and braking to prevent the outfit becoming uncontrollable by reducing cornering speeds and allowing increased braking distances.

The driver should exercise care to ensure that when pulling away from rest particularly on uphill gradients the clutch unit is not subjected to excessive slippage which will reduce the useful life of this component. Use of the "Overdrive Off" "2" and "L" positions when driving vehicles with automatic transmission will assist with braking performance when long down hill gradients are encountered. Improved acceleration performance will be available by selecting "Overdrive Off","2", or "1" depending upon road speed if it is found that the transmission unit makes an undesirable upshift whilst hill climbing or overtaking. The transmission unit should be operated in "D" with the Overdrive "On" under normal circumstances to enhance fuel economy and reduce noise and engine wear.

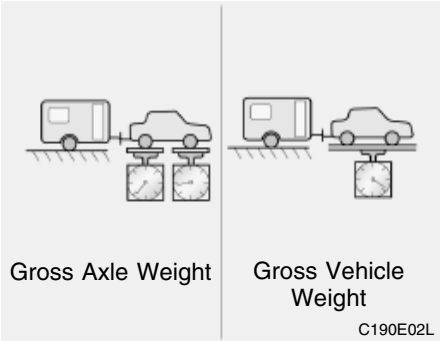


**CAUTION:**
**The use of a badly loaded or overloaded trailer may result in instability.**
**This following specifications are recommended when towing a trailer. The loaded trailer weight or the Gross Train Weight must not exceed the values in the following chart .**

Lbs (kg.)

| Type | | | Maximum Towable Weight | |
|---|---|---|---|---|
| | | | Trailer | Tongue |
| With Brake Type | 1.1L | MANUAL TRANSAXLE | 1,543 (700) | 97 (44) |
| | 1.3L | | 2,204 (1,000) | |
| | 1.6L | | 2,425 (1,100) | |
| | Diesel | | 2,425(1,100) | |
| | 1.3L | AUTO TRANSAXLE | 1,984 (900) | |
| | 1.6L | | 2,425 (1,100) | |
| Without Brake Type | | | 992(450) | |

**NOTE:**

- **The total gross vehicle weight with trailer must not exceed the Gross Vehicle Weight Rating (GVWR) shown on the vehicle identification plate (see page 8-1). The total gross vehicle weight is the combined weight of the vehicle, driver, all passengers and their luggage, cargo, hitch, trailer tongue load and other optional equipment.**
- **The front or rear axle weight must not exceed the Gross Axle Weight Rating (GAWR) shown on the vehicle identification plate (see page 8-1). it is possible that your towing package does not exceed the GVWR but exceeds the GAWR. Improper trailer loading and/or too much luggage in the trunk can overload the rear axle. Redistribute the load and check the axle weight again.**
- **The maximum permissible static vertical load on the coupling device : 44kg**
- **The maximum permissible overhang of the coupling point : 690 mm.**

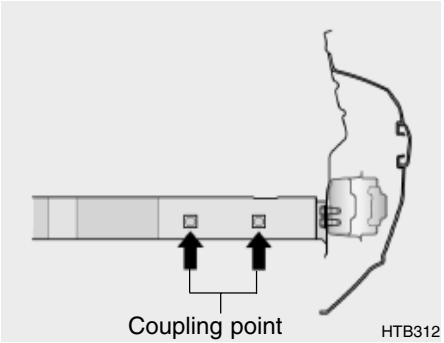


YC200E2-E

## Trailer or Vehicle Towing Tips

1. Before towing, check hitch and safety chain connections as well as proper operation of the trailer running lights, brake lights, and turn signals.
2. Always drive your vehicle at a moderate speed (Less than 62 MPH)
3. Trailer towing requires more fuel than normal conditions.
4. To maintain engine braking efficiency and electrical charging performance, do not use fifth gear (manual transaxle) or overdrive (automatic transaxle).
5. Always secure items in the trailer to prevent load shift while driving.
6. Check the condition and air pressure of all tyres on the trailer and your car. Low tyre pressure can seriously affect the handling. Also check the spare tyre.
7. The vehicle/trailer combination is more affected by crosswind and buffeting.

When being passed by a large vehicle, keep a constant speed and steer straight ahead. If there is too much wind buffeting slow down to get out of the other vehicle's air turbulence.

8. When parking your car and trailer, especially on a hill, be sure to follow all the normal precautions. Turn your front wheel into the curb, set the parking brake firmly, and put the transaxle in 1st or Reverse (manual) or Park (automatic). In addition, place wheel chocks at each of the trailer's tyres.
9. If the trailer has electric brakes, start your vehicle and trailer moving, and then apply the trailer brake controller by hand to be sure the brakes are working. This lets you check your electrical connection at the same time.
10. During your trip, check occasionally to be sure that the load is secure, and that the lights and any trailer brakes are still working.
11. Avoid jerky starts, sudden acceleration or sudden stops.
12. Avoid sharp turns and rapid lane changes.
13. Avoid holding the brake pedal down too long or too frequently. This could cause the brakes to overheat, resulting in reduced braking efficiency.
14. When going down a hill, shift into a lower gear and use the engine braking effect.
    When ascending a long grade, downshift the transaxle to a lower gear and reduce speed to reduce chances of engine overloading and/or overheating.
15. If you have to stop while going uphill, do not hold the vehicle in place by pressing on the accelerator. This can cause the automatic transaxle to overheat. Use the parking brake or footbrake.

**NOTE:**
**When towing check transaxle fluid more frequently.**

**CAUTION:**
**If overheating should occur when towing, (temperature gauge reads near red zone), taking the following action may reduce or eliminate the problem.**

1. Turn off the air conditioner.
2. Reduce highway speed.
3. Select a lower gear when going uphill.
4. While in stop and go traffic, place the gear selection in park or neutral and idle the engine at a higher speed.

# 3. WHAT TO DO IN AN EMERGENCY

If the engine will not start ..... 3-2
Jump starting ..... 3-3
If the engine overheats ..... 3-4
Spare tyre ..... 3-5
In the event of a puncture ..... 3-6
Vehicle Towing or Recovery ..... 3-11
Emergency towing ..... 3-13
If you lose your keys ..... 3-13

SD020A1-E

## IF THE ENGINE WILL NOT START

Seek assistance from the nearest Hyundai dealer with regard to the method of ignition and fuel system diagnosis.

**CAUTION:**

**If the engine refuses to start, no attempt should be made to push or tow start the vehicle. Vehicles with automatic transaxle or fuel injection will not be able to be started in this manner since no drive is transmitted through the automatic transaxle whilst the engine is not running, and in the case of fuel injected derivatives, the fuel pump will not operate under tow start conditions. In addition, if the vehicle is equipped with an exhaust catalyst, damage to the catalyst may result if the vehicle is tow started.**

SD020B1-E

## IF THE ENGINE CANNOT BE CRANKED

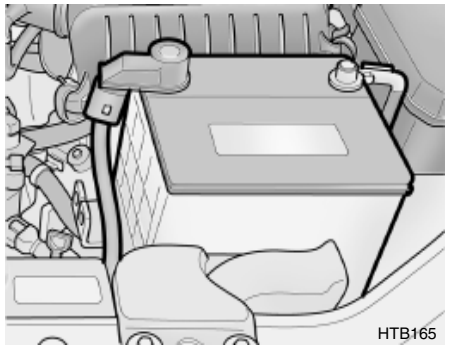


1. If the vehicle is fitted with manual transaxle, ensure that the clutch pedal is depressed whilst cranking the engine. If the vehicle is fitted with automatic transaxle, ensure that the transaxle selector is at the "P" or"N" position.
2. Check the battery terminals and connections to ensure that these are clean and also tight.
3. If the ignition warning lights dim when the engine is cranked and the battery terminals have been checked, a discharged battery is indicated.
4. Do not attempt to push or tow start the vehicle, refer to "Jump Starting" for information regarding engine starting when the battery is discharged.

SD020C1-F

## If Engine Turns Over Normally but Does Not Start

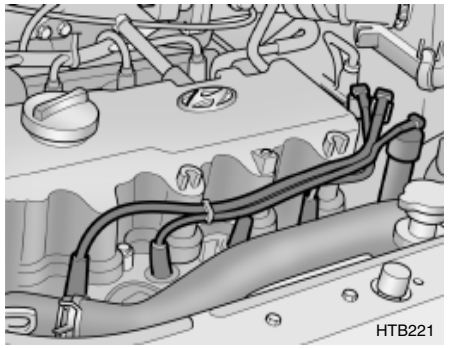


1. Check fuel Level
2. Check all connectors at ignition coil and spark plugs.
   Replace any that may be disconnected or loose.
3. Check fuel line in the engine room.
4. If engine still refuses to start, call a Hyundai dealer or seek other qualified assistance.

AD020D1-A

## If Engine Stalls While Driving

1. Reduce your speed gradually, keeping a straight line. Move cautiously off the road to a safe place.
2. Turn on your emergency flashers.
3. Try starting the engine again. If your vehicle will not start, see "IF THE ENGINE WILL NOT START"

SD030A1-E

## JUMP STARTING

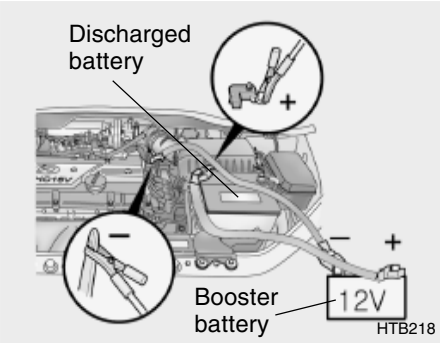


**CAUTION:**
**Personal injury and damage to the vehicle may occur if jump starting is not performed correctly. If any doubt exists as to how this operation should be performed, seek assistance from qualified personnel.**

**WARNING:**
**Motor vehicle batteries contain sulphuric acid and emit hydrogen gas. Protective clothing should be worn and care exercised to prevent the acid from coming into contact with skin or clothing and the vehicle. Naked lights should not be permitted in the vicinity of the battery. Care should be exercised to prevent sparks occurring during connection. If acid accidentally comes into contact with skin or eyes, the affected area should immediately be flushed with copious amounts of water and medical assistance sought.**

1. Ensure that the booster battery is 12 volt type. If the booster battery is installed in another vehicle, ensure that the two vehicles are not touching.
2. Turn off all unnecessary electrical equipment in both vehicles.
3. Ensure that the engine of the vehicle providing the jump start is running prior to connection of the jump cables.
4. Connect the red jump cable to the positive (+) terminal of the booster battery and the other end to the positive (+) terminal of the discharged battery.
5. Attach the black jump cable to the negative (-) terminal of the booster battery, and the other end to a ground point within the engine compartment of the vehicle with the flat battery. Do not connect to the negative battery terminal of the flat battery since sparks may be generated with the subsequent risk of explosion.
6. Raise the booster vehicle engine speed to 2,000 r.p.m. and start the engine of the vehicle with the flat battery.

7. Remove jump cables in the reverse order of installation (black cable first).

**CAUTION:**
**If the jump cable is incorrectly installed, damage to the vehicle electrical system may occur, in particular the electronic components such as the Fuel Injection system computer and the Automatic transaxle computer. The battery must never be disconnected whilst the engine is running.**

D030A01TB-EAT

## IF THE ENGINE OVERHEATS

If the temperature gauge indicates overheating:

1. Pull off the road and stop as soon as it is safe to do so.
2. Place the gear selector lever in "P" (automatic), or neutral (manual transaxle) and set the parking brake. If the air conditioning is on, turn it off.
3. If coolant is running out under the car or steam is coming out from under the bonnet stop the engine. Do not open the bonnet until the coolant has stopped running or the steaming has stopped. If there is no visible loss of coolant and no steam, leave the engine running and check to be sure the engine cooling fan is operating.
   If the fan is not running, turn the engine off.
4. Check to see if the water pump drive belt is missing. If it is not missing, check to see that it is tight. If the drive belt seems to be satisfactory, check for coolant leaking from the radiator, hoses or under the car. (If the air conditioning had been in use, it is normal for cold water to be draining from it).

**WARNING:**
**Whilst the engine is running, keep hands and clothing away from moving parts such as the fan and drive belts to prevent injury.**

**WARNING (Diesel only):**
**Never work on injection system with engine running or within 30 seconds after shutting off engine. High pressure pump, rail, injectors and high pressure pipes are subject to high pressure even after the engine stopped. The fuel jet produced by fuel leaks may cause serious injury, if it touch the body. People using pacemakers should not move than 30cm closer to the ECU or wiring harness within the engine room while engine is running, since the high currents in the Common Rail system produce considerable magnetic fields.**

5. If the water pump drive belt is broken or coolant is leaking out, stop the engine immediately and call the nearest Hyundai dealer for assistance.

**WARNING:**
**Do not remove the radiator cap when the engine is hot since steam and boiling water may be ejected from the radiator resulting in burns or scalding.**

6. If the cause of the overheating cannot be found, wait until the engine temperature has returned to normal. Then, if coolant has been lost, carefully remove the radiator cap and add water to bring the fluid level in the reservoir up to the base of the radiator fill opening. Fill the coolant expansion tank to the halfway mark.
7. Proceed with caution until it is established that the engine is operating normally. If the engine overheats repeatedly, the advice of a Hyundai dealer should be sought.

**CAUTION:**
**Serious loss of coolant indicates there is a leak in the cooling system and this should be checked as soon as possible by a Hyundai dealer.**

YD050A1-E

## SPARE TYRE
## For Full Size (Not all models)

The following instructions for the FULL SIZE spare tyre should be observed: Check inflation pressure as soon as possible after installing the spare tyre, and adjust to the specified pressure. The tyre pressure should be periodically checked and maintained at the specified pressure while the tyre is stored.

### Spare Tyre Pressure

| | |
|---|---|
| Tyre Size | FULL SIZE |
| Inflation Pressure | 30 psi (210 kPa) |

D040A01TB-EAT

## TEMPORARY SPARE TYRE
## (Not all models)

The following instructions for the temporary spare tyre should be observed:

1. Check inflation pressure as soon as practical after installing the spare tyre, and adjust to the specified pressure. The tyre pressure should be periodically checked and maintained at the specified pressure while the tyre is stored.

### Spare Tyre Pressure

| | |
|---|---|
| Tyre Size | T105/70D14 |
| Inflation Pressure | 420 kPa (60 psi) |

2. The spare tyre should only be used temporarily and should be returned to the luggage compartment as soon as the original tyre can be repaired or replaced.
3. Continuous use at speeds of over 50 mph(80 km/h) is not recommended.
4. As the temporary spare tyre is specifically designed for your car, it should not be used on any other vehicle.

5. The temporary spare tyre should not be used on any other wheels, nor should standard tyre, snow tyre, wheel covers or trim rings be used with the temporary spare wheel. If such use is attempted, damage to these items or other car components may occur.
6. The temporary spare tyre pressure should be checked once a month while the tyre is stored.

**CAUTION:**

- **Do not use snow chains with your temporary spare tyre.**
- **Do not use more than one temporary spare tyre at a time.**

SD050A2-E

## SPARE WHEEL (Not all models)

The spare wheel is stored under the luggage compartment floor and is accessed from within the luggage compartment by lifting the carpet and the floor panel.
To remove the spare wheel, unscrew the retainer, rotating this in an anti clockwise direction and lift out the wheel. To replace the wheel, screw the retainer by hand until tight having located the wheel in the luggage compartment floor well. The inflation pressure of the spare wheel should be checked at least monthly and whenever the wheel is fitted to the vehicle.

### Spare Tyre Pressure

| | |
|---|---|
| Tyre Size | Full Size |
| Inflation Pressure | 210 kPa (30 psi) |

SD060A1-E

## IN THE EVENT OF A PUNCTURE

If a puncture occurs whilst driving the vehicle:

1. Bring the car to rest as soon as it is safe to do so and with the minimum amount of braking required which will assist in maintaining the maximum amount of control. The vehicle should be parked wherever possible upon firm level ground to facilitate wheel changing.
2. If the vehicle is creating a hazard and the road conditions do not permit the wheel to be changed safely, assistance should be sought.
3. Passengers must not be allowed to remain inside the vehicle during wheel changing. If a puncture occurs whilst the vehicle is on a motorway, the passengers should take refuge on the motorway embankment to avoid the possibility of injury occurring should the vehicle be struck by other motorway traffic.
4. Wheel changing should be performed according to the following instructions.

SD070A1-E

## CHANGING A FLAT TYRE

It is of the utmost importance that care is exercised when changing road wheels. Ensure that the parking brake is set and that the gear shift lever is in reverse (P, if the vehicle has automatic transaxle).

D060K01FC-EAT

## Wheel Cap (Not all models)

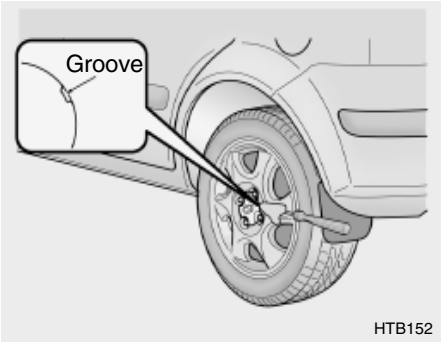


1. Wrap a piece of cloth around the tip of the screwdriver to avoid scratching.
2. Insert a screwdriver into the groove of the wheel cap and pry gently to remove the wheel cap.
3. Change the flat tyre.

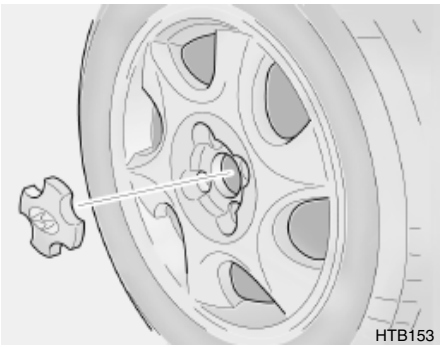


4. Reinstall the wheel cap by fitting the boss of the wheel cap in the groove of the wheel, hitting the centre of the wheel cap with hand.

D060B01TB-EAT

## 1. Obtain Spare Tyre and Tool

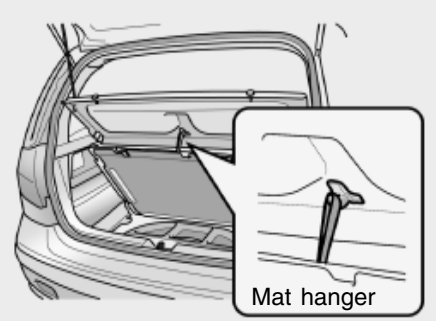


HTB296

Hang the luggage room mat to the mat hanger and remove the luggage under tray (If installed)

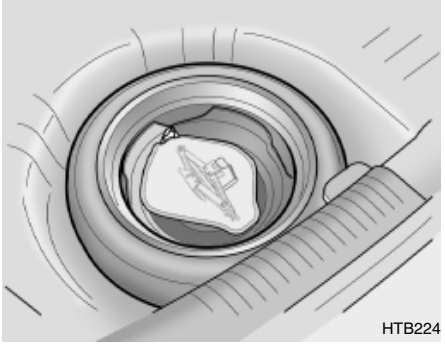

HTB224

Take out the jack case and tool bag, then remove the spare tyre from the luggage room.

**NOTE:**
**The jack case is located on the spare tyre in the vehicle.**

SD070D1-E

## 2. Block the Wheel

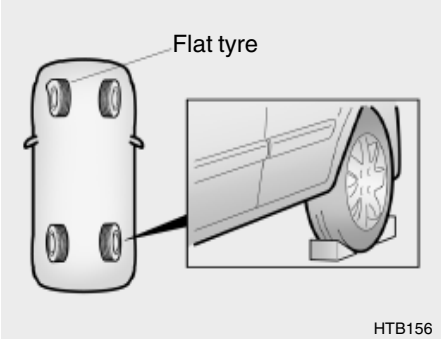


HTB156

Block the wheel that is diagonally opposite from the flat tyre to prevent the vehicle from rolling when the car is raised on the jack.

SD070E1-E

## 3. Loosen Wheel Nuts

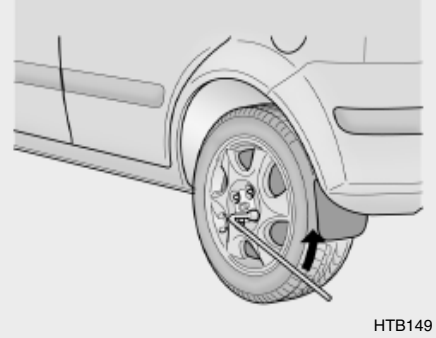

HTB149

The wheel nuts should be loosened slightly before raising the car. To loosen the nuts, turn the wheel brace counter-clockwise. Ensure that the wheel brace socket is seated properly on the nut and that it cannot slip. Do not remove the nuts at this stage.

SD070F1-F

## 4. Put the Jack in Place

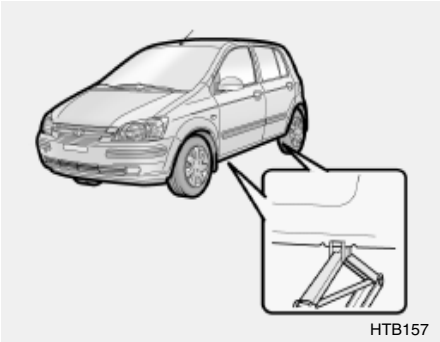


The base of the jack should be placed on firm, level ground. The jack should be positioned as shown in the drawing.

SD070G1-E

## 5. Raising the Car

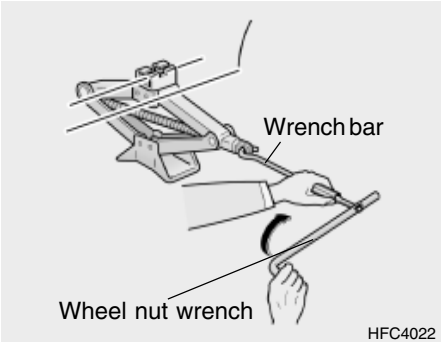


After inserting a wrench bar into the wheel nut wrench, install the wrench bar into the jack as shown in the drawing. To raise the vehicle, turn the wheel nut wrench clockwise. As the jack begins to raise the vehicle, double check that it is properly positioned and will not slip. If the jack is on soft ground or sand, it may be necessary to place a stout piece of timber under the base of the jack to prevent it from sinking.
Raise the car high enough so that the fully inflated spare wheel can be installed.

**WARNING:**
**Do not get under the car when it is supported by the jack! The jack is solely designed for wheel changing and is not intended to support the vehicle for other purposes. The use of purpose designed supports is necessary whilst the vehicle is raised and the operator is required to get underneath.**

SD070H1-E

## 6. Changing Wheels

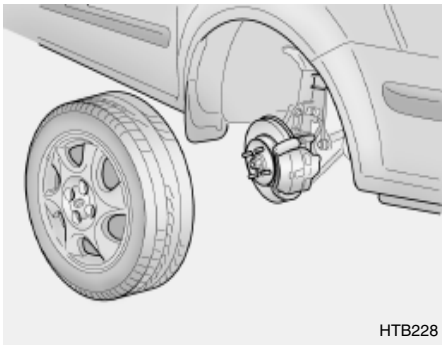

Using the wheel brace, remove the nuts and slide the wheel off the hub and wheel studs. Lie the wheel flat to prevent it from rolling. Ensure that the faces of the wheel and hub are clean. Position the spare wheel over the studs and slide it up to the hub.

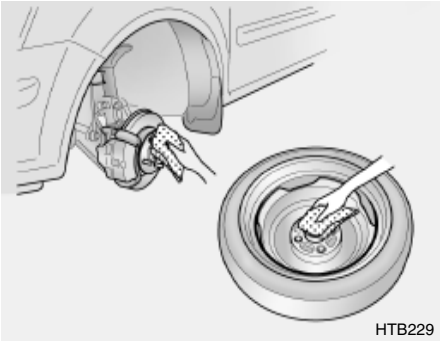


**WARNING:**
**It is important that the faces of the wheel and hub are clean prior to installing the wheel. The prescence of dirt or other matter in the wheel or hub faces could result in the wheel nuts becoming loose whilst the vehicle is being driven.**

SD070I1-E

## 7. Re-install Wheel Nuts

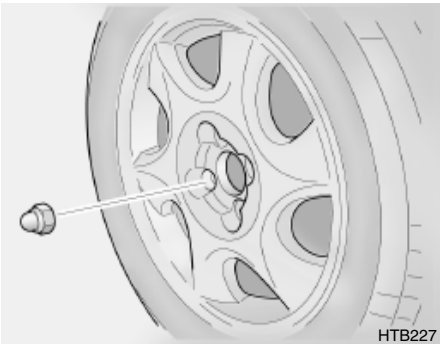


Fit the wheel nuts onto the studs and tighten with the wheel brace.

SD070J1-E

## 8. Lower Vehicle and Tighten Nuts

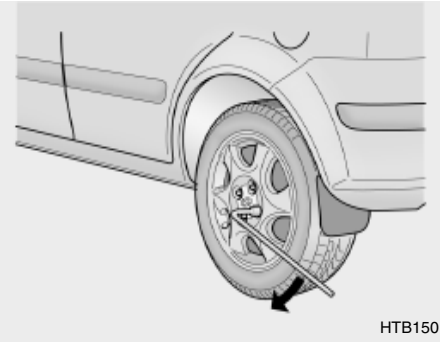


Lower the car to the ground turning the wheel nut wrench counterclockwise. When the vehicle is firmly on the ground, remove the jack and tighten the wheel nuts securely. At the first available opportunity, the wheel nut torque should be checked with a suitable torque wrench.

### Wheel nut tightening torque

Steel wheel & aluminium alloy wheel: 900-1,100 kg.cm (65-80 lb.ft)

SD070K1-E

## AFTER CHANGING WHEELS

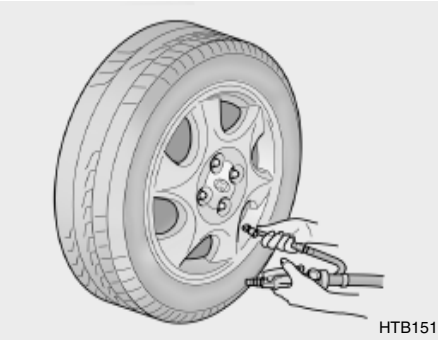

HTB151

The pressure of the spare tyre should be checked at the first available opportunity. If any doubt exists as to the tyre pressure, the vehicle should be driven slowly to the nearest service station and the tyre pressure checked and adjusted as required.
If the valve cap is lost from any of the valves, a replacement should be obtained and fitted at the first available opportunity. The valve cap prevents the ingress of dirt which may cause the valve to stick and therefore leak and is part of the valve sealing function.

Ensure that the spare wheel, jack and wheel nut wrench as well tools are correctly located in the boot of the vehicle to prevent damage and noise.

B080A01TB-EAT

## VEHICLE TOWING OR RECOVERY

o OK FOR AUTOMATIC OR MANUAL TRANSAXLE EQUIPPED VEHICLE

HTB207

**CAUTION:**
**An incorrect tow or recovery could result in serious damage to the vehicle. If any damage to the suspension, steering or transaxle is apparent or suspected, a towing ambulance must be used.**

o OK FOR AUTOMATIC OR MANUAL TRANSAXLE EQUIPPED VEHICLE WITH NO DAMAGE

HTB208

The vehicle may be towed by the conventional method using the towing eye at the front of the vehicle as an attachment point. In addition, a suspended tow with or without an ambulance may be used with either the front or the rear wheels being suspended, provided the above caution is observed.

### In addition, the following points must be noted:

- o If towing by conventional means, the ignition key must be at the "ACC" position, otherwise the steering lock will be activated.
- o Because the brake system and steering system power assistance is derived from the engine, the amount of effort required to stop or steer the vehicle will be greater than normal.
- o If a suspended tow is being given to the rear, the ignition key must be at the "ACC" position since the steering lock is not designed to withstand the force required to hold the front wheels straight during the tow.
- o The vehicle must not be towed with the front wheels on the ground for more than thirty miles.

SD100A2-E

## Automatic Transaxle Vehicle

The vehicle may be towed by the conventional method using the towing eye at the front of the vehicle as an attachment point.
In addition, a suspended tow may be given to the front of the vehicle without an ambulance. In the event of a suspended tow being given to the rear of the vehicle, the use of an ambulance is imperative.

**CAUTION:**
**The following restriction must be observed in order to avoid serious damage to the transaxle .**
**The vehicle must never be towed from the rear with the front wheels on the ground.**
**The vehicle must not be towed until transaxle fluid has been added to bring the level up to the "HOT" marking on the dipstick. (The level will need to be reduced again after towing).**
**The vehicle must not be towed at speeds faster than 25 mph. or distances greater than fifty miles. The general points regarding the steering lock etc. described in the preceding section (Manual transaxle vehicle) should be observed.**

D080D01TB-AAT

## EMERGENCY TOWING

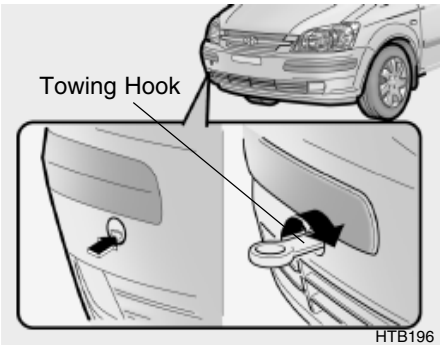


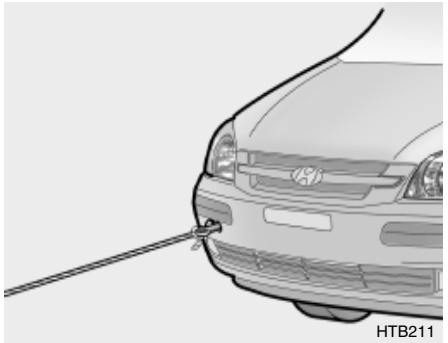


For emergency towing when no commercial tow vehicle is available. Do not attempt to tow your vehicle in this manner on any unpaved surface. This could result in serious damage to your car.
Nor should towing be attempted if the wheels, drive train, axles, steering or brakes are damaged. Before towing, be sure the transaxle is in neutral and the key is in "ACC" (with the engine off) or in the "ON" position (with the engine running). A driver must be in the towed car to steer it and operate the brakes.

(1)Open the towing cover to push it with your finger.
(2)To mount the towing hook, rotate it clockwise.

**CAUTION**
**It should be tightened firmly with your fingers until there is no more play in the towing hole. Towing hook is located in the jack case on the spare tire.**

(3)Attach a tow cable, chain or strap to one of the tie-down hooks under the front of your car.

**CAUTION:**
**If the car is being towed with all four wheels on the ground, it can be towed only from the front. Be sure that the transaxle is in neutral. Do not tow at speeds greater than 30 mph (50 km/h) and for more than 15 miles(25 km).**
**Be sure the steering is unlocked by placing the key in the "ACC" position. A driver must be in the towed vehicle to operate the steering and brakes.**

D120A01A-EAT

## IF YOU LOSE YOUR KEYS

Information about the key of immobilizer system will be found on page 1-4.

# 4. CORROSION PREVENTION & APPEARANCE CARE

Protecting Your Hyundai From Corrosion ..... 4-2
Underbody coatings ..... 4-2
Polishing ..... 4-3
Interior Valeting ..... 4-4

SE020A1-E

## PROTECTING YOUR HYUNDAI FROM CORROSION

By using the most advanced design and construction practices, every Hyundai is built to retain the original factory finish for many years. However, long term durability is also greatly dependant upon maintaining the various protection systems and coatings used in manufacture since constant, exposure to the elements will result in a breakdown and loss of effectiveness. The following suggestions are made to assist in the maintenance of the vehicle bodywork.

SE030A1-E

## UNDERBODY COATINGS

Every Hyundai passenger car receives a full underbody and cavity injection treatment during production. In order that this treatment may retain maximum effectiveness it is recommended that the underbody receives a power wash and a thorough inspection after each winter season. In so doing any accumulations of mud, which act as moisture traps and combine with road salts to accelerate corrosion will be removed. In order to maintain the Anti Perforation Warranty, the requirements regarding the retreatment programme must be observed in accordance with the Terms and Conditions outlined in the separate Anti Perforation Warranty Booklet.

### NOTE:

**The underbody should never be steam cleaned since the underbody coating may be removed by this process.**
**During the interim period between power washing the underbody, the more vulnerable areas such as wheel arches should be hosed off particularly during the winter season to prevent prolonged contact with road salts.**
**Ensure that the various drain points located at the bottom of the door panels and sills are kept clear to prevent water from becoming trapped within the cavities. Wherever possible, the parking of the vehicle in a confined, poorly ventilated location (a garage for example) should be avoided when the vehicle is wet or is covered with snow or ice. Under these conditions, the internal cavities of the vehicle will remain damp for prolonged periods of time which will encourage corrosion. Parking the vehicle where good ventilation exists (outside for example) is preferable.**

SE040A1-E

## VALETING

Regular cleaning of the exterior paintwork serves two important functions. Firstly, the removal of abrasive dirt and contaminants will maintain the lustre of the paintwork and will prevent discolouration and dulling due to prolonged contact.
Secondly, the presence of damage through impact or abrasion will be apparent allowing early rectification to be made thus preventing corrosion from becoming established and spreading beneath the paint film. To avoid "water spotting" the vehicle should not be washed in direct sunlight particularly in the case of vehicles having dark body colours. The heat from the sun rays is absorbed by the paint film increasing the surface temperature. This action causes water used for washing to evaporate quickly leaving behind the deposits from the water and the shampoo used.
Use only a shampoo intended for the purpose and ensure that the body work is thoroughly wetted to soften the dirt film prior to attempting to remove this.
After removing the dirt film with a soft sponge, the body work should be thoroughly rinsed and then dried with a good quality chamois leather to prevent streaking or spotting of the paint work.
Household detergents, solvents and abrasive cleaning materials should not be used in order to avoid damaging the paint film.
Plastic wheel covers should be cleaned using a sponge and water. Cast alloy wheels should be cleaned using a mild soap or neutral detergent. Abrasive compounds must not be used since in the event of these damaging the lacquer coating, oxidization of the aluminium wheel will occur, spoiling the appearance.
The use of an a toothbrush will facilitate cleaning between the wheel "spokes".

SE040B1-E

## STAIN/SPOT REMOVAL

Should tree sap, dead insects or tar prove to be difficult to remove from the paint film, turpentine or a proprietary paint cutting compound may be used. Ensure that the area to be cleaned is not rubbed intensively to prevent breaking through the colour coat and exposing the under coat.

SE040C1-E

## POLISHING

The exterior paint work should be polished with a proprietary wax polish when water no longer collects in bead form on the paint work. The instructions of the product manufacturer should be adhered to.

SE040E1-E
## BUMPER MAINTENANCE

The special material from which the bumpers are manufactured warrants special attention to preserve the appearance of the bumpers. Avoid contact with battery electrolyte or brake fluid and ensure that accidental spillages are immediately flushed with water.
Do not use abrasive cleaning materials which may damage the bumpers.
Avoid subjecting the bumpers to high temperatures such as may be encountered in high bake paint ovens.

SE040F1-E
## ACCIDENT REPAIRS

In the event of the body work sustaining damage, the following points should be noted prior to repairs being undertaken.
If body panels are replaced or repaired, anti corrosion treatment must be applied to the repair area. The product used must be compatible with those used in manufacture. It is recommended that repairs are entrusted to a Hyundai dealer to ensure that replacement parts used are of the same high quality as those used in manufacture of the vehicle and that the correct repair methods and materials will ensure adequate levels of corrosion protection and the continued validity of the Anti Perforation Warranty.

SE050A1-E
## INTERIOR

During the winter period, it is possible that the passenger compartment flooring may become wet from damp footwear or quantities of snow adhering to footwear. The carpet should not be allowed to remain in this condition since the carpet may begin to create musty smells and will promote corrosion of the floor pan in addition to the carpet and under felt beginning to rot.

SE050C1-E
## INTERIOR VALETING

The soft trim and carpets should be maintained with the regular use of a vacuum cleaner. Heavy soiling should be removed with a dry cleaning agent recommended for this purpose following the instructions of the product manufacturer. Paint thinner, solvents or other such cleaning materials should not be used since damage to the upholstery may result.

SE050D1-E
## SEAT BELTS

Seat belts should be cleaned only with a mild soap solution. Strong detergents, solvens or bleaches may damage the belt webbing and therefore reduce the effectiveness of the belt. Belts which display signs of fraying, wear of cut should be replaced.

SE050E1-E

## WINDOWS

A proprietary glass cleaner should be used to clean the inside of the windows. However, the rear heated windshield must only be cleaned using a light horizontal cleaning action. Care should be exercised to avoid the use of abrasive cleaners or contact with items of jewellery which may damage the heating elements.

# 5. VEHICLE MAINTENANCE REQUIREMENTS

Maintenance and Servicing Requirements ..... 5-2
Scheduled maintenance ..... 5-3
Maintenance under severe usage conditions ..... 5-6
Explanation of scheduled maintenance items ..... 5-7

SF020A1-E

## MAINTENANCE AND SERVICING REQUIREMENTS

To ensure the continued reliability and safety of the vehicle, certain routine maintenance operations are required at specific mileage or time intervals.
It is the responsibility of the vehicle owner to ensure that the maintenance schedules shown in both this Owners Manual and the Warranty and Service Passport are adhered to.
The new vehicle warranty may be invalidated if the routine maintenance operations are not performed in line with the recommendations outlined and the safety and durability of the vehicle adversely affected.
It is recommended that all maintenance operations with the exception of the daily operating checks are entrusted to a Hyundai dealer to ensure that the latest repair and maintenance procedures and specialized servicing tools are employed. In addition, the use of genuine Hyundai replacement parts will ensure that the vehicle safety and performance will not be compromised.

**NOTE:**
**The inspection and testing of certain electronic fuel injection/engine management and automatic transmission control systems require specialised electronic equipment specifically designed for Hyundai vehicles. The use of general purpose electrical test equipment may result in damage to the control unit microprocessors.**

SF020C1-E

### Specified Scheduled Procedures

The Specified scheduled procedures are listed in the maintenance charts beginning at page 5-3. The operations specified must be performed at the time or mileage intervals shown irrespective of whether the mileage interval has been reached before the specified time interval.
Certain lubricants and components degrade with both time and mileage (e.g. engine oil and brake fluid) and therefore it is not permissable to base the maintenance schedule upon mileage alone. It is strongly recommended that the maintenance operations are performed by the factory-trained or distributor-trained technicians at your Hyundai dealer because of the need for specialized knowledge and tooling and to ensure that no possibility of invalidating the manufacturers warranty exists.
The maintenance schedules relate to vehicles operated under normal conditions, vehicles which are operated under adverse conditions will require more frequent maintenance which is described at page 5-6.

SF030B1-E

## SERVICE HISTORY

It is important that all scheduled maintenance services are recorded in the warranty and service passport to ensure that proof of maintenance is available when warranty service is required.

AF040C4-E

## SCHEDULED MAINTENANCE

In order to ensure the continued safety, reliability and longevity of the vehicle, the following maintenance service operations should be performed at the time or mileage intervals specified.
It is recommended that all routine maintenance services are entrusted to a Hyundai dealer to ensure that the manufacturers recommended procedures are employed and that only genuine Hyundai replacement parts are used. Incorrect maintenance techniques or the use of non genuine replacement parts may invalidate the vehicle warranty.

F030B01TB-EAT

R : REPLACE I : INSPECT AND, AFTER INSPECTION, CLEAN, ADJUST, REPAIR OR REPLACE IF NECESSARY

| NO. | DESCRIPTION | MILES X 1000 | 10 | 20 | 30 | 40 | 50 | 60 |
|---|---|---|---|---|---|---|---|---|
| | | MONTHS | 12 | 24 | 36 | 48 | 60 | 72 |
| | ENGINE CONTROL SYSTEM MAINTENANCE (PETROL) | | | | | | | |
| 1 | ENGINE OIL & FILTER (SG OR ABOVE) | See Note (1) | R | R | R | R | R | R |
| 2 | DRIVE BELT (WATER PUMP, ALTERNATOR & A/CON) | | | I | | I | | I |
| 3 | FUEL FILTER (MFI) | | | | | R | | |
| 4 | FLUID LEAKS | | I | I | I | I | I | I |
| 5 | TIMING BELT | | | | I | | R | |
| 6 | VENTILATION HOSES | | | I | | I | | I |
| 7 | AIR CLEANER FILTER | | I | R | I | R | I | R |
| 8 | SPARK PLUGS | | See Note (2) | | | | | |

Note : (1) SF OR LOWER: EVERY 6,000 MILES OR 6 MONTHS : "R"
(2) FOR EVERY 25,000 MILES : "R"

F030D02B-EAT

R :Replace I : Inspect and, after Inspection, clean, adjust, repair or replace if necessary.

| NO. | DESCRIPTION | MILES X 1000 | 10 | 20 | 30 | 40 | 50 | 60 | 70 |
|---|---|---|---|---|---|---|---|---|---|
| | | MONTHS | 12 | 24 | 36 | 48 | 60 | 72 | 84 |
| | ENGINE CONTROL SYSTEM MAINTENANCE (DIESEL) | | | | | | | | |
| 1 | ENGINE OIL & FILTER (API Class: CF-4 or ABOVE) See Note (1) (ACEA Class: B4 or ABOVE) | | R | R | R | R | R | R | R |
| 2 | AIR CLEANER FILTER | | I | I | R | I | I | R | I |
| 3 | FUEL FILTER CARTRIDGE | | | R | | R | | R | |
| 4 | TIMING BELT | | | | | | | | R |
| 5 | DRIVE BELT (FOR P/STR'G PUMP, ALTERNATOR AND A/CON) | | | I | | I | | R | |
| 6 | ALTERNATOR VACUUM PUMP | | I | I | I | I | I | I | I |
| 7 | ALTERNATOR OIL HOSE & VACUUM HOSE | | I | I | I | I | I | I | I |
| 8 | FUEL LINES, FUEL HOSE & CONNECTIONS | | I | I | I | I | I | I | I |

Note : (1) ON A DAILY BASIS, WHENEVER THE VEHICLE IS REFUELLED OR BEFORE STARTING A LONG TRIP :"I"

F030C02TB-EAT

R : Replace I : Inspect and, after inspection, clean, adjust, repair or replace if necessary

| NO. | DESCRIPTION | MILES X 1000 | 10 | 20 | 30 | 40 | 50 | 60 |
|---|---|---|---|---|---|---|---|---|
| | | MONTHS | 12 | 24 | 36 | 48 | 60 | 72 |
| | GENERAL MAINTENANCE | | | | | | | |
| 1 | COOLING SYSTEM | | I | I | I | I | I | I |
| 2 | COOLANT | | See NOTE (1) | | | | | |
| 3 | COOLANT SPECIFIC GRAVITY | | I | I | I | I | I | I |
| 4 | MANUAL TRANSAXLE OIL | | I | I | I | I | I | I |
| 5 | AUTOMATIC TRANSAXLE FLUID | | I | I | I | I | I | R |
| 6 | BRAKE PIPES, HOSES, AND CONNECTIONS | | I | I | I | I | I | I |
| 7 | BRAKE FLUID | | I | R | I | R | I | R |
| 8 | CLUTCH FLUID | | I | R | I | R | I | R |
| 9 | REAR BRAKE LININGS AND CYLINDERS | | I | I | I | I | I | I |
| 10 | BRAKE PADS | | I | I | I | I | I | I |
| 11 | SUSPENSION AND STEERING SYSTEM | | I | I | I | I | I | I |
| 12 | FRONT SUSPENSION BALL JOINTS | | I | I | I | I | I | I |
| 13 | POLLEN FILTER (FOR EVAPORATOR AND BLOWER UNIT) | | R | R | R | R | R | R |
| 14 | REAR WHEEL BEARINGS | | I | I | I | I | I | I |
| 15 | TYRE CONDITION AND PRESSURE (incl. Spare) | | I | I | I | I | I | I |
| 16 | LUBRICATE LOCKS AND HINGES | | I | I | I | I | I | I |
| 17 | CHECK ALL ELECTRICAL SYSTEMS | | I | I | I | I | I | I |
| 18 | ROAD TEST | | I | I | I | I | I | I |
| 19 | CHECK ALL SYSTEMS WITH HI-SCAN | | I | I | I | I | I | I |

Note :(1) FOR THE FIRST TIME, REPLACE THE COOLANT 60,000 MILES OR 60 MONTHS.
AFTER THAT, REPLACE IT EVERY 30,000 MILES OR 24 MONTHS.

F040A06A-EAT

## MAINTENANCE UNDER SEVERE USAGE CONDITIONS

The following items must be serviced more frequently on cars normally used under severe driving conditions. Refer to the chart below for the appropriate maintenance intervals.

R : REPLACE I : INSPECT AND, AFTER INSPECTION, CLEAN, ADJUST, REPAIR OR REPLACE IF NECESSARY

| MAINTENANCE ITEM | MAINTENANCE OPERATION | MAINTENANCE INTERVALS | DRIVING CONDITION |
|---|---|---|---|
| ENGINE OIL AND FILTER | R | EVERY 4,500MILES OR 6 MONTHS | A, B, C, F, H |
| AIR CLEANER FILTER | R | MORE FREQUENTLY | C, E |
| SPARK PLUGS | R | MORE FREQUENTLY | B, H |
| TIMING BELT | R | EVERY 37,000MILES OR 48 MONTHS | D, E, F, G |
| BRAKE PADS | I | MORE FREQUENTLY | C, D, G, H |
| REAR BRAKE LININGS AND CYLINDERS | I | MORE FREQUENTLY | C, D, G, H |
| SUSPENSION AND STEERING SYSTEM | I | MORE FREQUENTLY | C, D, E, F |
| MANUAL TRANSAXLE OIL | R | EVERY 60,000MILES | A, C, D, E, F, G, H, I, J |
| AUTOMATIC TRANSAXLE FLUID | R | EVERY 27,000MILES | A, C, E, F, G, H, I |
| POLLEN FILTER (FOR EVAPORATOR AND BLOWER UNIT) | R | MORE FREQUENTLY | C,E |

### SEVERE DRIVING CONDITIONS

A - Repeated short distance driving
B - Extensive idling
C - Driving in dusty, rough roads
D - Driving in areas using salt or other corrosive materials or in very cold weather
E - Driving in sandy areas
F - More than 50% driving in heavy city traffic during hot weather above 90°F (32°C)
G - Driving in mountainous areas
H - Towing a trailer
I - Driving for patrol car, taxi, commercial car or vehicle towing
J - Driving over 100MPH

6ZF060A1-A

## EXPLANATION OF SCHEDULED MAINTENANCE ITEMS

6ZF060M1-A

### o Engine oil and filter

The engine oil and filter should be changed at the intervals specified in the maintenance schedule. If the car is being driven in severe conditions, more frequent oil and filter changes are required.

6ZF060B1-A

### o Drive belts

Inspect all drive belts for evidence of cuts, cracks, excessive wear or oil saturation and replace if necessary. Drive belts should be checked periodically for proper tension and adjusted as necessary.

6ZF060C1-A

### o Fuel filter

A clogged filter can limit the speed at which the vehicle may be driven, damage the emission system and cause hard starting. If an excessive amount of foreign matter accumulates in the fuel tank, the filter may require replacement more frequently.
After installing a new filter, run the engine for several minutes, and check for leaks at the connections.

F060D01TB-EAT

### o Fuel lines, fuel hoses and connections

Check the fuel lines, fuel hoses and connections for leakage and damage. Replace any damaged or leaking parts immediately.

**! WARNING (Diesel only):**
**Never work on injection system with engine running or within 30 seconds after shutting off engine. High pressure pump, rail, injectors and high pressure pipes are subjected to high pressure even after the engine has been switched off. The fuel jet produced by fuel leaks may cause serious injury, if it contacts with the body. People using pacemakers should not move closer than 30cm to the ECU or wiring harness within the engine room with the engine running, since the high currents in the Common Rail system produce considerable magnetic fields.**

6ZF060E1-A

### o Timing belt

Replace timimg belt and inspect all associated parts related for damage and deformation. Replace any damaged parts immediately.

6ZF060G1-A

### o Vapour hose and fuel filler cap

The vapour hose and fuel filler cap should be inspected at those intervals specified in the maintenance schedule. Make sure that a new vapour hose or fuel filler cap is correctly replaced.

6ZF060F1-A

### o Vacuum, crankcase ventilation hoses

Inspect the surface of hoses for evidence of heat and/or mechanical damage. Hard and brittle rubber, cracking, tears, cuts, abrasions, and excessive swelling indicate deterioration. Particular attention should be paid to examining those hose surfaces nearest to high heat sources, such as the exhaust manifold.
Inspect the hose routing to assure that the hoses do not come in contact with any heat source, sharp edges or moving component which might cause heat damage or mechanical wear. Inspect all hose connections, such as clamps and couplings, to make sure they are secure, and that no leaks are present. Hoses should be replaced immediately if there is any evidence of deterioration or damage.

6ZF060H1-A

### o Air cleaner filter

A Genuine Hyundai air cleaner filter is recommended when filter is replaced.

6ZF060J1-A

### o Spark plugs

Make sure to install new spark plugs of the correct heat range.

6ZF070B1-A

### o Cooling system

Check the cooling system part, such as radiator, coolant reservoir, hoses and connections for leakage and damage. Replace any damaged parts.

6ZF070C1-A

### o Engine coolant

The coolant should be changed at the intervals specified in the maintenance schedule.

6ZF070D1-A

### o Manual transaxle oil

Inspect the manual transaxle oil according to the maintenance schedule.

**NOTE:**
**If the oil level is low, check for possible leaks before adding oil. Do not overfill.**

F070E03A-AAT

### o Automatic transaxle fluid

The fluid level should be in the "HOT" range of the dipstick, after engine and transaxle are at normal operating temperature. Check the Automatic Transaxle Fluid level with the engine running and the transaxle in neutral, with the parking brake properly applied. Use DIAMOND ATF SP-III or SK ATF SP-III when adding or changing fluid.

6ZF070F1-A

### o Brake hoses and lines

Visually check for proper installation, chafing, cracks, deterioration and any leakage. Replace any deteriorated or damaged parts immediately.

6ZF070G2-A

### o Brake fluid

Check brake fluid level in the brake fluid reservoir. The level should be between "MIN" and "MAX" marks on the side of the reservoir. Use only hydraulic brake fluid conforming to DOT 3 or DOT 4.

6ZF070H1-A

### o Rear brake drums and linings/ parking brake

Check the rear brake drums and linings for scoring, burning, leaking fluid, broken parts, and excessive wear. Inspect the parking brake system including the parking brake lever and cables. For detailed service procedures, refer to the Shop Manual.

6ZF070J1-A

### o Brake pads, calipers and rotors

Check the pads for excessive wear, discs for run out and wear, and calipers for fluid leakage.

6ZF070K1-A

### o Exhaust pipe and muffler

Visually inspect the exhaust pipes, muffler and hangers for cracks, deterioration, or damage. Start the engine and listen carefully for any exhaust gas leakage. Tighten connections or replace parts as necessary.

6ZF070L1-A

### o Suspension mounting bolts

Check the suspension connections for looseness or damage. Retighten to the specified torque.

6ZF070M1-A

### o Steering gear box, linkage & boots/lower arm ball joint

With the vehicle stopped and engine off, check for excessive freeplay in the steering wheel.
Check the linkage for bends or damage. Check the dust boots and ball joints for deterioration, cracks, or damage. Replace any damaged parts.

6ZF070N1-A

### o Power steering pump, belt and hoses

Check the power steering pump and hoses for leakage and damage. Replace any damaged or leaking parts immediately. Inspect the power steering belt for evidence of cuts, cracks, excessive wear, oiliness and proper tension. Replace or adjust it if necessary.

6ZF070P1-A

## o Driveshafts and boots

Check the drive shafts, boots and clamps for cracks, deterioration, or damage. Replace any damaged parts and, if necessary, repack the grease.

6ZF070Q1-A

## o Air conditioning refrigerant

Check the air conditioning lines and connections for leakage and damage. Check air conditioning performance according to the relevant shop manual if necessary.

# 6. Do-It-Yourself Maintenance

Engine compartment ..... 6-2
Daily operating checks ..... 6-6
Engine oil ..... 6-6
Engine and filter Replacement ..... 6-9
Engine coolant Checking and Replacing ..... 6-10
Spark plug Replacement ..... 6-13
Changing the air cleaner filter ..... 6-14
Manual Transaxle Lubricant ..... 6-15
Automatic Transaxle fluid ..... 6-16
Brake System Checking ..... 6-18
Air conditioning System ..... 6-19
Drive belts ..... 6-23
Individual Circuit Fuses ..... 6-24
Power steering fluid level ..... 6-26
Replacing Light Bulbs ..... 6-28
Fuse panel description ..... 6-34

G010A01TB-EAT

## ENGINE COMPARTMENT (1.1 SOHC)

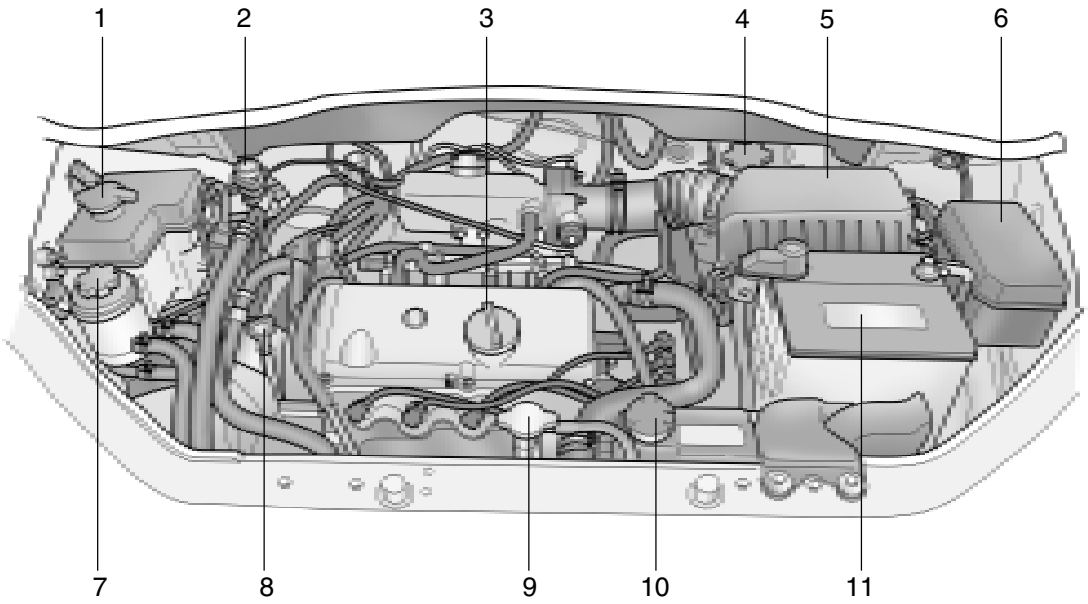


1. Windshield washer fluid reservoir cap
2. Auto fuel cut switch
3. Engine oil filler cap
4. Brake fluid and clutch fluid reservoir
5. Air filter element
6. Relay box
7. Power steering fluid reservoir
8. Engine oil level dipstick
9. Radiator cap
10. Engine coolant reservoir
11. Battery

G010B01TB-EAT

## ENGINE COMPARTMENT (1.3 SOHC)

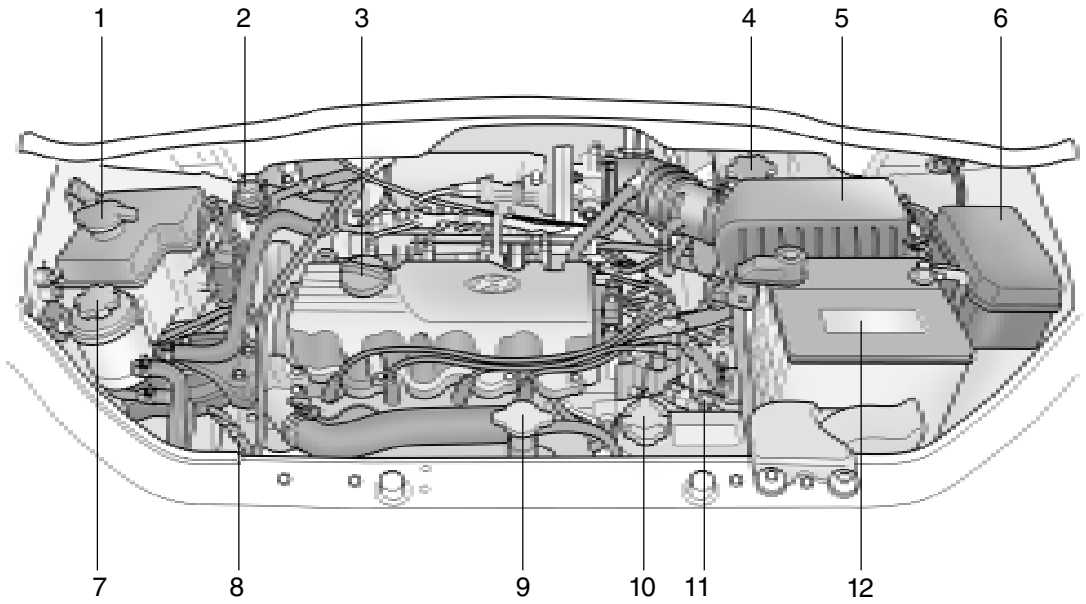


1. Windshield washer fluid reservoir cap
2. Auto fuel cut switch
3. Engine oil filler cap
4. Brake fluid and clutch fluid reservoir
5. Air filter element
6. Relay box
7. Power steering fluid reservoir (Not all models)
8. Engine oil level dipstick
9. Radiator cap
10. Engine coolant reservoir
11. Automatic transaxle fluid level dipstick (Not all models)
12. Battery

G010B01TB-EAT

## ENGINE COMPARTMENT (1.6L DOHC)

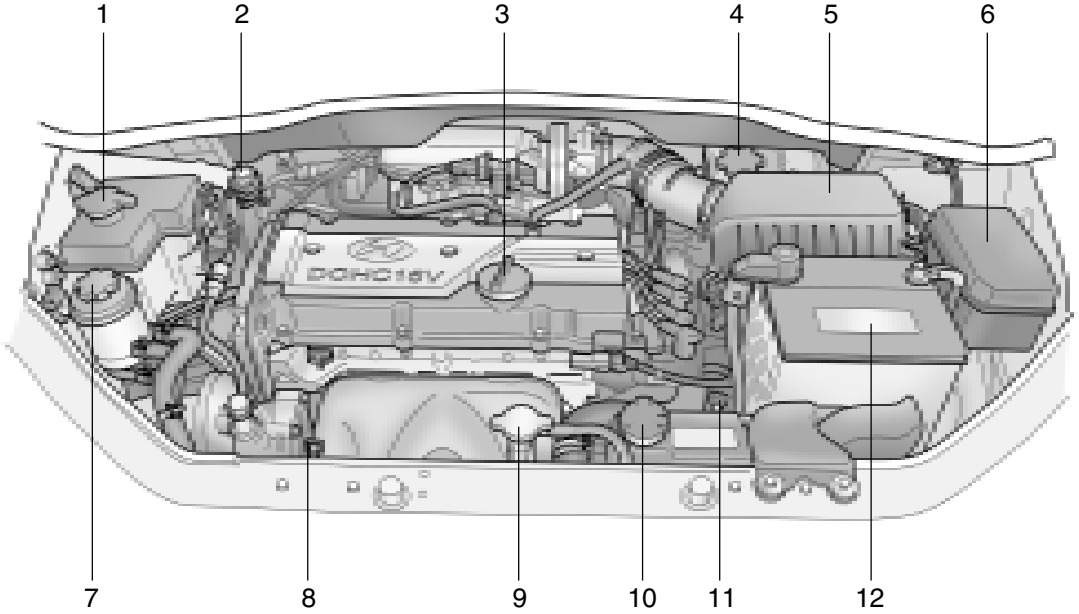


**CAUTION:**
When inspecting or servicing the engine, you should handle tools and other heavy objects carefully so that the plastic rocker cover of the engine is not damaged.

1. Windshield washer fluid reservoir cap
2. Auto fuel cut switch
3. Engine oil filler cap
4. Brake fluid and clutch fluid reservoir
5. Air filter element
6. Relay box
7. Power steering fluid reservoir (Not all models)
8. Engine oil level dipstick
9. Radiator cap
10. Engine coolant reservoir
11. Automatic transaxle fluid level dipstick (Not all models)
12. Battery

G010C01TB-EAT

## ENGINE COMPARTMENT (DIESEL)

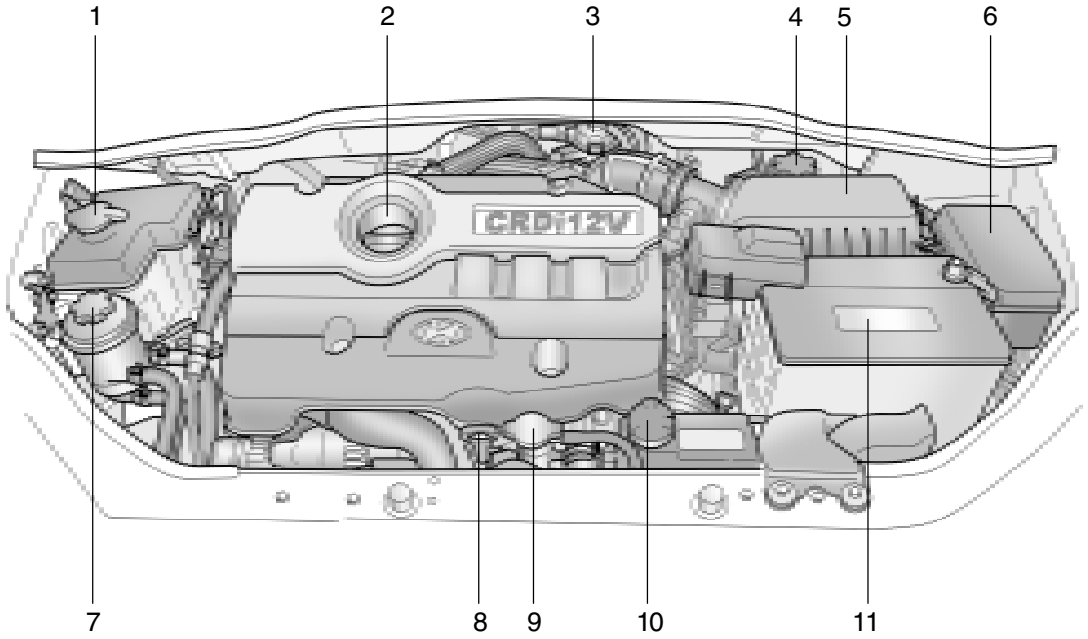


HTB159

**CAUTION:**
When inspecting or servicing the engine, you should handle tools and other heavy objects carefully so that the plastic rocker cover of the engine is not damaged.

1. Windshield washer fluid reservoir cap
2. Engine oil filler cap
3. Fuel filter
4. Brake fluid and clutch fluid reservoir
5. Air filter element
6. Relay box
7. Power steering fluid reservoir
8. Engine oil level dipstick
9. Radiator cap
10. Engine coolant reservoir
11. Battery

SG020B1-E

## DAILY OPERATING CHECKS

The following items should be checked on a daily basis or whenever the vehicle is refuelled, whichever occurs sooner.

- o Engine oil level.
- o Engine coolant level.
- o Power steering fluid level.
- o Brake fluid level.
- o Windscreen washer fluid level.
- o Battery condition.
- o Tyre condition and pressures.
- o Operation and cleanliness of all lighting equipment.
- o Windscreen wiper and washer operation.
- o Horn operation.
- o Warning light operation.
- o Adjustment and cleanliness of mirrors.
- o Seat and seat belt adjustment and operation.
- o Fluid leakage.

The vehicle must not be driven if the daily operating checks indicate that any item of equipment related to the safety or roadworthiness of the vehicle is not functioning correctly.

G030A01FC-EAT

## ENGINE OIL

The correct engine oil level is of paramount importance. An excessively high or low oil level may result in irreparable damage being sustained by the engine. The engine oil level must be checked on a daily basis, whenever the vehicle is refuelled or before starting a long trip, whichever occurs sooner.
In addition, it is imperative that only an approved grade and specification of oil is used to avoid the possibility of serious engine damage and premature wear. The use of "budget price" oil is a false economy that must be avoided if the maximum reliability and useful life is to be obtained from the vehicle.

G030B02A-EAT

## Recommended Oil

### 1. Petrol engine

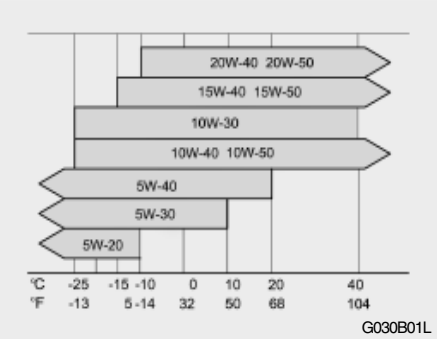


A multi grade oil having a specification which meets A.P.I. specification of SG or above is recommended. The oil viscosity should be selected according to the operating environment of the engine by means of the table shown in the illustration. The engine oil recommendations are complete in themselves and the use of additives is neither required nor recommended. The use of engine oil additives may result in invalidation of the vehicle warranty.

**NOTE:**
**The use of a 5W-20 multi grade oil is not recommended for sustained high speed use.**

## 2. Diesel engine

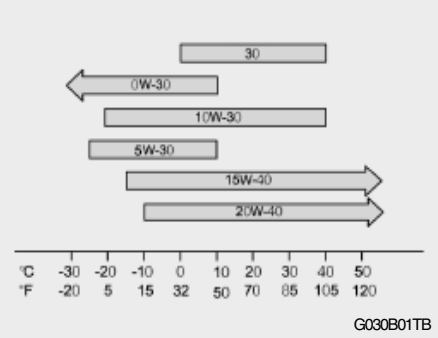


The engine oil quality should meet the following classification:

API class: CF-4 or ABOVE
ACEA class: B4 or ABOVE

**NOTE:**
**SAE 0W-30 oil is for extra cold zone and to be restricted by driving condition and dealing area. (Especially, not recommended for sustained high loaded and high speed operation.)**

SG030C1-E

## Engine Oil Level

Gasoline engine

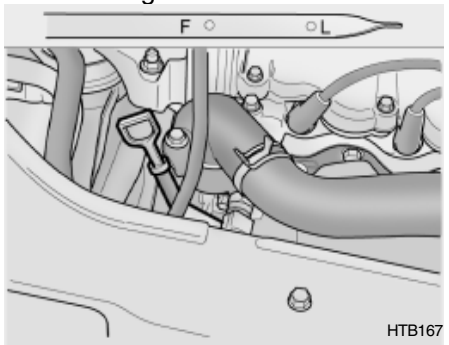


Diesel engine

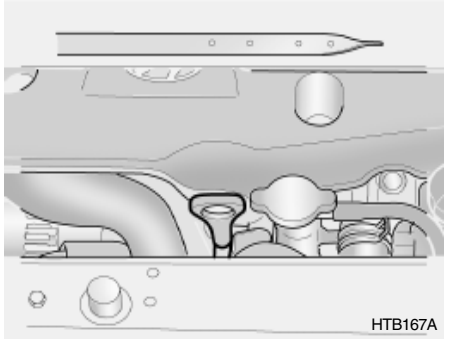


The engine oil level should be checked with the engine at normal operating temperature and the vehicle parked upon level ground.
Prior to checking the level, the vehicle should be allowed to stand for several minutes after the engine has been switched off to allow the oil to drain back to the sump.
Withdraw the dipstick and wipe it with a clean rag. Replace the dipstick fully and withdraw again when the oil level may be read from the stick. Normal oil level is indicated when the oil is present between the two marks on the stick. It is not necessary to add oil if the level is above the lower mark and in any case, oil must not be added to the degree that the level exceeds the upper mark. Replace the dipstick fully after checking the level.

G030D01TB-EAT

## ENGINE OIL REPLENISHMENT

Petrol engine

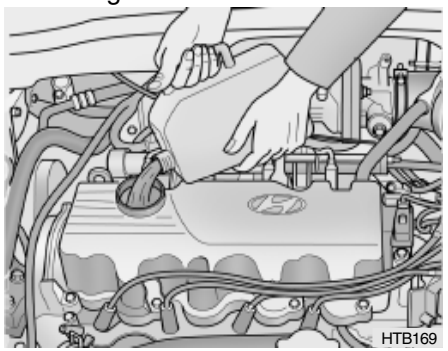


Diesel engine

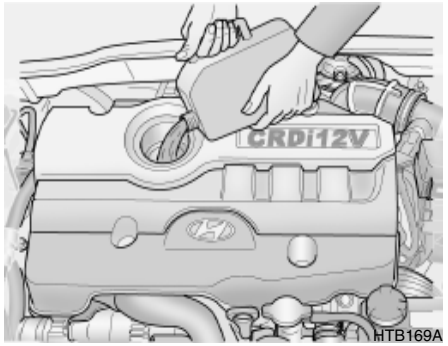


If the indicated oil level is at or below the lower mark of the dipstick, oil should be added until the level is at or below the upper mark.
To add oil to the engine, remove the filler cap by rotating in an counterclockwise direction and pour engine oil into the engine. Before checking the level again, allow several minutes for the oil to drain into the sump. Replace the oil filler cap rotating it in a clockwise direction until tight.
The quantity of oil required to raise the level from the minimum to maximum level is approximately 1.2 litre.

ZG030E1-A

## ENGINE OIL CONSUMPTION

### Function of engine oil

Engine oil has the primary function of lubricating and cooling the inside of the engine.

### Engine oil consumption

It is normal that an engine should consume some engine oil while normal driving. The cause of oil consumption in a normal engine are as follows;

- o Engine oil is used to lubricate pistons, piston rings and cylinders.
  A thin film of oil is left on the cylinder wall when a piston moves downwards in the cylinder. High negative pressure generated during engine operation sucks some of the oil into the combustion chamber.
  This oil with some oil of the cylinder wall is burned by the high temperature combustion gases during the combustion process.
- o The engine oil consumption is strongly effected by the viscosity and quality of oil, engine rpm and driving condition etc.

The engine oil is more consumed under severe driving conditions such as high speeds and frequent acceleration and deceleration than normal driving condition.

G040A01TB-EAT

## ENGINE OIL AND FILTER REPLACEMENT

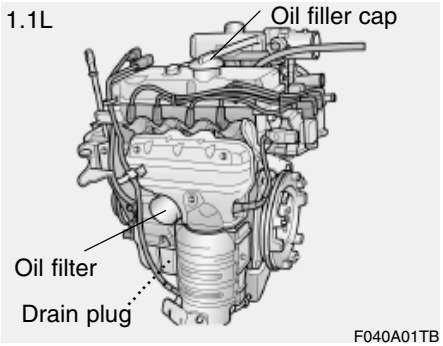


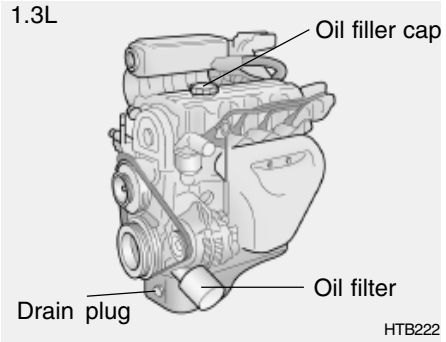


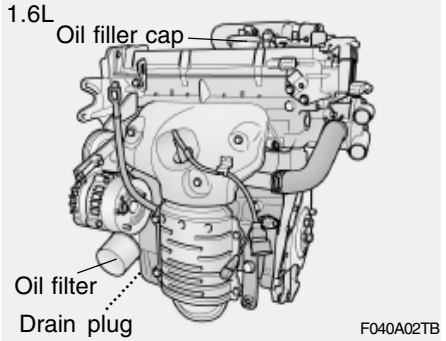


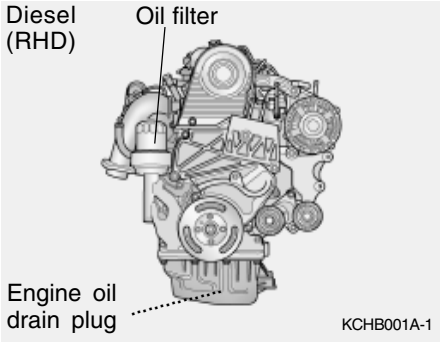


The engine oil and filter must be changed at the time or mileage interval specified in the maintenance schedule. If the vehicle is operated under severe or adverse conditions, the oil and filter must be replaced more frequently.
To replace the oil and filter, proceed as follows:

1. Ensure that the engine is at normal operating temperature and park the vehicle on level ground with the parking brake securely applied and the engine turned off.
2. Open the bonnet and remove the oil filler cap.

3. Prepare a suitable receptacle to collect the displaced oil and remove the drain plug from the sump.

**CAUTION:**
**The oil being drained from the engine will be hot. Care should be exercised to prevent scalding.**

4. When the oil has drained from the sump, replace the drain plug using a new washer ensuring that the plug is not over tightened.

   **Tightening torque is: 3.5 ~ 4.5 kgf.m**

5. Remove the oil filter by rotating counterclockwise, using a proprietary oil filter removal tool if necessary. Note that the oil filter will contain approximately 0.5 litres of oil and this should be collected in a suitable receptacle.
6. Install a new oil filter having smeared the sealing ring with clean oil and rotating clockwise until the filter contacts the mounting and then a further one half turn. Do not over-tighten

   **Tightening torque:**
   **Petrol - 1.2 ~ 1.6 kgf.m**
   **Diesel(RHD) - 2.3 ~ 2.5 kgf.m**

7. Pour the specified quantity of the recommended oil into the engine and replace the filler cap. Start the engine and ensure that no oil leaks exist. Turn off the engine and after a couple minutes, recheck the oil level.

**WARNING:**
**Prolonged and repeated contact with used engine oils may result in serious skin disorders including dermatitis and cancer. Avoid contact with skin as far as possible and always wash thoroughly after any contact. Keep used oils out of reach of children. It is illegal to pollute drains, water courses and soil. Use only authorized waste collection facilities including civic amenity sites and garages for the disposal of used oil and oil filters. If in doubt, contact the local authority for disposal instructions.**

SG050A1-E

## ENGINE COOLANT CHECKING AND REPLACING

**WARNING:**
**Do not remove the radiator cap when the engine is hot, since the system is pressurized and coolant may be ejected from the radiator resulting in scalding.**

SG050B1-E

### Coolant recommendations

Petrol engine

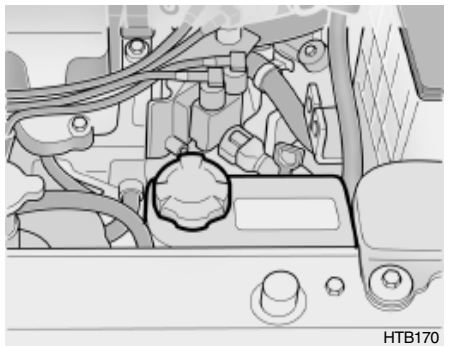

Diesel engine

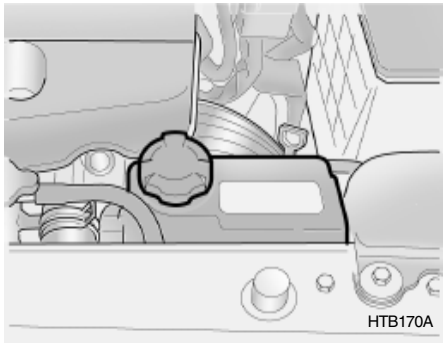


Only ethylene glycol based coolant with a corrosion inhibitor suited to aluminium alloy engine components should be used in the cooling system. No further additives or inhibitors should be used. The coolant specific gravity should be checked as prescribed in the maintenance schedule to ensure adequate frost and corrosion protection. In addition, the engine coolant must be replaced at the specified interval since the corrosion inhibitor properties deteriorate with time.

It is important to note that whilst an increase in the concentration of anti freeze gives an increase in the level of frost protection, a solution which is in excess of 65% anti freeze will result in reduced frost protection and engine overheating. Therefore the recommended concentration of 50% should not be exceeded for general use.
The use of methanol based anti freeze compounds may result in engine overheating and will invalidate the vehicle warranty.

## NOTE:

**It is imperative that vehicles fitted with an air conditioning system have a coolant concentration of the recommended strength at all times. The use of the air conditioning system when the cooling system is filled with water only will result in the heater matrix freezing and subsequently bursting.**

SG050C1-E

## Engine Coolant Level

The engine coolant level may be observed through the side of the plastic coolant reservoir (expansion tank) when the engine is cold. If the level is below the "LOW" mark, add coolant of the correct concentration until the level is between the "LOW" and "Full" marks. If the level falls below the "LOW" mark on a regular basis despite being topped up, consult a Hyundai dealer.

SG050D1-E

## To Change the engine Coolant

The engine coolant should be changed at those intervals specified in the vehicle maintenance schedule in Section 5.

## NOTE:

**Care should be taken to ensure that coolant is not allowed to spill onto the paintwork since the finish may become damaged. If coolant spillage occurs, the affected area should be rinsed thoroughly with water.**

1. Park the vehicle on level ground and ensure that the parking brake is firmly applied, and the engine allowed to cool.
   Do not attempt this operation whilst the engine is hot since burning or scalding may result.
2. Prepare a suitable receptacle to collect the displaced coolant and position this under the radiator drain tap.
3. With the heater temperature control set to the "HOT" position, remove the radiator cap and open the radiator drain tap.

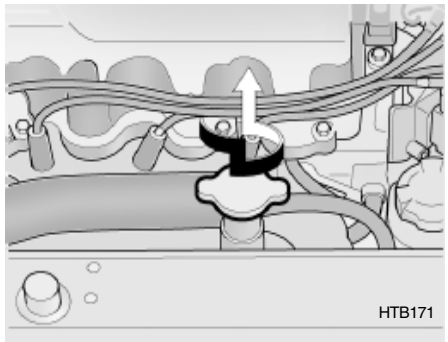


4. When the engine coolant has drained completely, close the drain tap ensuring that this is not over tightened.

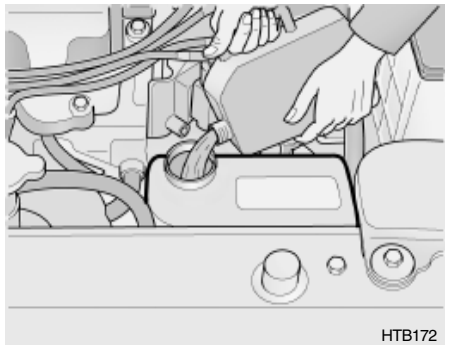


5. Prepare a suitable quantity of new engine coolant (refer to section 9) and pour this into the radiator.
6. Start the engine with the radiator cap still removed and continue to add coolant as the level decreases as air is expelled from the system. When the level remains constant, replace the radiator cap and replenish the coolant reservoir.
7. When the engine is hot, check to ensure that no coolant leaks are present.

**WARNING:**
**The cooling fan is controlled by engine coolant temperature and may sometimes operate even when the engine is not running. Use extreme caution when working near the blades of the cooling fan so that you are not injured by a rotating fan blade. As the engine coolant temperature decreases, the fan will automatically shut off. This is a normal condition.**

SG060A1-E

## SPARKING PLUG REPLACEMENT

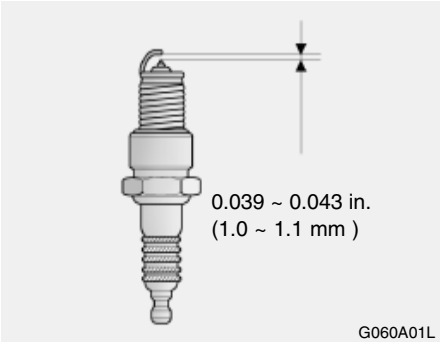


This operation should only be performed when the engine is cold.

1. Remove the centre cover from the engine rocker cover.
2. Remove plug lead from the sparking plug to be replaced, pulling the lead by the rubber cap. (Pulling the lead may damage the carbon conductor).
3. Clean around the base of the plug to be removed, and install the plug socket ensuring that the ceramic insulator does not become damaged. Turn the socket counterclockwise to remove the plug.

**CAUTION:**
**Sparking plugs must only be cleaned using purpose designed equipment. Wire brushing may damage the centre electrodein-sulator causing misfiring to occur. Only the correct grade of sparking plug should be used. Use of an incorrect grade may result in serious engine damage.**

Prior to installing a sparking plug, the gap between the centre and outer electrodes must be checked and adjusted as necessary.
Adjustment is facilitated by bending the outer electrode towards or away from the centre electrode. Under no circumstances should attempts be made to adjust the position of the centre electrode.

4. Insert the sparking plug into the cylinder head and screw by the wrench and until the plug contacts the seating area. Tighten the plug with the socket by a further 1/2 to 3/4 of a turn only.
5. Replace the plug lead ensuring that the cap is pushed firmly into place. Confirm that the cap is correctly seated by lightly pulling upon it.

**NOTE:**
**When replacing the spark plug, always use the genuine parts recommended.**

Recommended Spark Plugs

| | Unleaded engine | Leaded engine |
|---|---|---|
| CHAMPION | RC10YC4 | RC10YC |
| NGK | BKR5ES-11 | BKR5ES |

G070A01TB-EAT

## CHANGING THE AIR CLEANER FILTER

Petrol engine

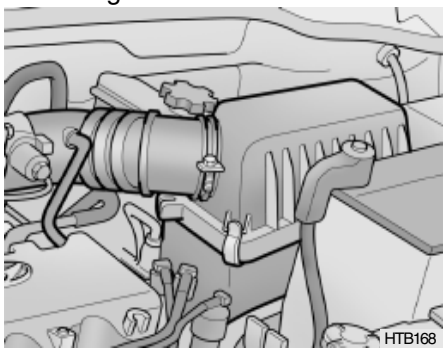


Diesel engine

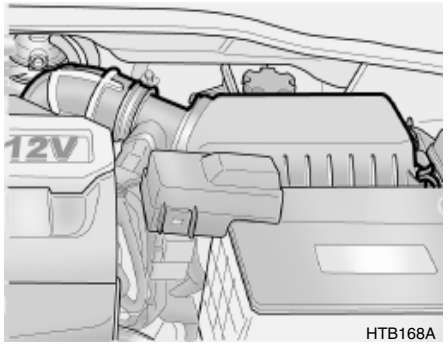


1. Remove the engine cover (Not all models).
2. Unsnap the clips around the cover.
3. Lift the cover off.
4. Remove the old filter and replace to the new one. Genuine Hyundai Replacement Parts are recommended.

**CAUTION:**
**Operating your vehicle without a proper air filter in place can result in excessive engine wear.**

G080A01A-EAT

## WINDSCREEN WIPER BLADES

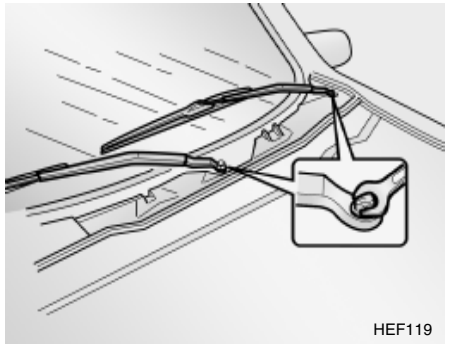


The wiper blades should be carefully inspected from time to time and cleaned to remove accumulations of road film or other debris. To clean the wiper blades and arms, use a clean sponge or cloth with a mild soap or detergent and water. If the wipers continue to streak or smear the glass, replace them with genuine Hyundai replacement.

**CAUTION:**
- **Do not operate the wipers on dry glass since rapid wear and damage to the windscreen glass may result.**
- **Keep the blade rubber out of contact with petroleum products such as engine oil, gasoline, etc.**

SG090A2-E

## WINDSCREEN WASHER RESERVOIR REPLENISHMENT

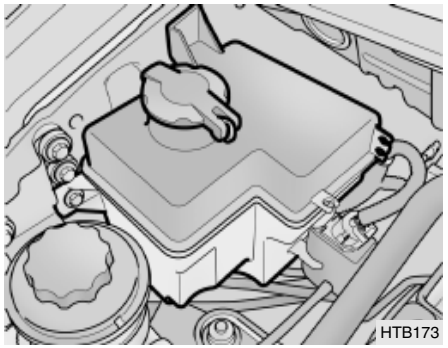


The level of windscreen washer fluid available should be checked on a daily basis. The level of fluid will be visible through the side of the reservoir. When the fluid is to be replenished, only a proprietary screen wash additive should be used and in the concentration recommended by the manufacturer. The windscreen washer reservoir has a total capacity of 3 litres.

**CAUTION:**

**Engine coolant anti freeze must not be used in the windscreen washer system since damage to the paintwork may result.**
**Undiluted windscreen washer additive must not be allowed to come into contact with the paintwork. If spillage occurs, flush the affected area immediately with water. Do not operate the windscreen washer for more than 15 seconds continuously or when the reservoir is empty since damage to the washer pump will result.**

SG100A1-E

## MANUAL TRANSAXLE LUBRICANT

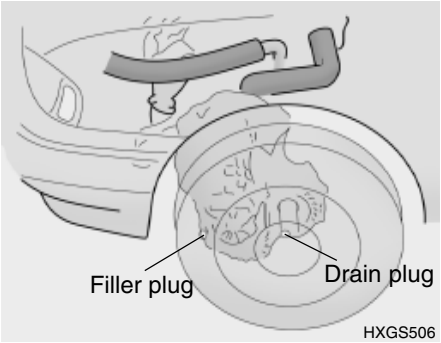


The manual transaxle lubricant must be checked and or changed at the intervals specified in the maintenance schedule. Only those lubricants specified below should be used in order to prevent gear shifting difficulties or transaxle damage.

**WARNING:**

**The transaxle lubricant level should only be checked when the engine is cold to preclude the possibility of personal injury by contact with hot components.**

### Recommended Oil

Use only the approved transaxle lubricant. The recommended lubricants are complete in themselves and the use of additives is neither required nor recommended. The use of additives may invalidate the vehicle warranty.

### Transaxle Lubricant Level Checking

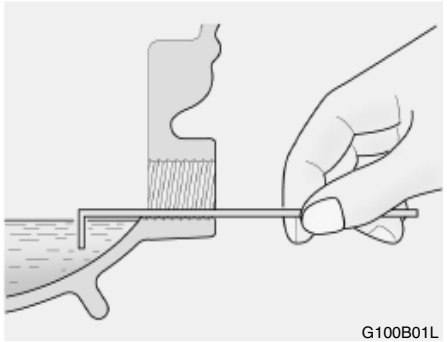


Ensure that the vehicle is parked on level ground with the parking brake firmly applied and the engine cool. Remove the level plug from the transaxle when lubricant should begin to drip from the level hole. If the level is low and no lubricant is seen to drip, add the re-

SG110A1-E

## AUTOMATIC TRANSAXLE FLUID

The automatic transaxle fluid level should be checked and changed at those intervals prescribed in the maintenance schedule. It is of paramount importance that only the specified fluid is used when replenishing or changing the fluid. The use of other fluids may irreparably damage the transaxle and invalidate the manufacturers warranty. In addition the ingress of dirt or lint may prevent correct functioning of the transaxle and care must be exercised to prevent the ingress of such matter.

**CAUTION:**
**The transaxle on fluid level must be checked with the engine running and at normal operating temperature and therefore care must be exercised to prevent injury occurring through contact with rotating or hot parts of the engine.**

G110B03A-AAT

### Recommended Fluid

Your Hyundai automatic transaxle is specially designed to operate with DIAMOND ATF SP-III or SK ATF SP-III. Damage caused by a nonspecified fluid is not covered by your new vehicle limited warranty.

G100B02A-EAT

## TRANSAXLE FLUID LEVEL CHECKING

The vehicle must be parked on level ground with the parking brake firmly applied and the engine at normal operating temperature. (Normal operating temperature will only be achieved when the vehicle has been driven for 6 miles or more).

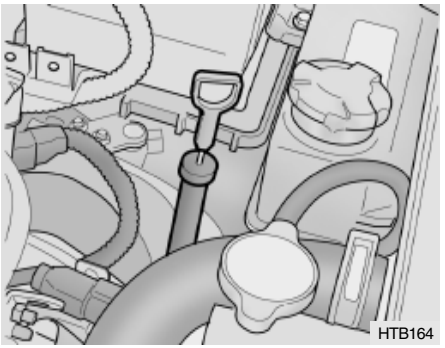


With the engine idling and the footbrake applied, the transaxle selector should be moved from the "P" or "N" position through to the "L" position and back to the "N" or "P" position.
Open the bonnet and remove the transaxle dipstick, remembering that care must be exercised to prevent injury occurring through contact with hot or rotating parts of the engine.

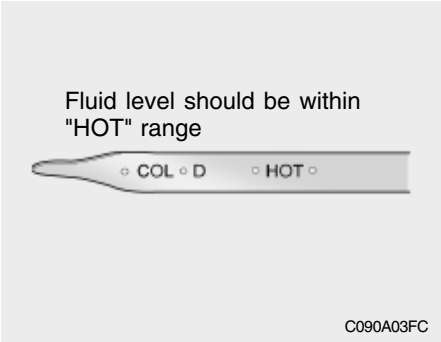


Wipe the dipstick, replace it fully and promptly remove it again. The fluid level should be between the upper and lower marks. Fluid need only be added if the level is at or below the lower mark and must never be increased above the higher mark. If additional fluid is required, this should be poured into the transmission through the dipstick tube with the aid of a suitable funnel.

**WARNING:**
**The cooling fan is controlled by engine coolant temperature and may sometimes operate even when the engine is not running. Use extreme caution when working near the blades of the cooling fan so that you are not injured by a rotating fan blade. As the engine coolant temperature decreases, the fan will automatically shut off. This is a normal condition.**

**WARNING (Diesel only):**
**Never work on injection system with engine running or within 30 seconds after shutting off engine. High pressure pump, rail, injectors and high pressure pipes are subject to high pressure even after the engine stopped. The fuel jet produced by fuel leaks may cause serious injury, if it touch the body. People using pacemakers should not move than 30cm closer to the ECU or wiring harness within the engine room while engine is running, since the high**

**currents in the Common Rail system produce considerable magnetic fields.**

**CAUTION:**
**The automatic transaxle unit is a precision engineered assembly and correct operation is dependant upon the exclusion of dirt and lint from the unit. Therefore, it is imperative that only lint free cloth (eg nylon) is used for wiping the dipstick and that the area around the dipstick is thoroughly clean prior to level checking or adding fluid.**

## Fluid Capacity

### Fluid Capacity

The total fluid capacity of the transaxle unit is 6.1 litres.

SG120A1-E

## BRAKE SYSTEM CHECKING

**CAUTION:**
**Correct operation of the braking system is essential to the safe operation of the vehicle and therefore, any maintenance operations other than those listed below should be entrusted to a Hyundai dealer.**

SG120C2-E

### Brake Fluid Recommendations

Only brake fluid conforming to DOT 3 or DOT 4 specifications or higher may be used in the braking system. Care should be taken to observe the instructions and precautions printed upon the container.

G120E01TB-EAT

### Brake Fluid Level

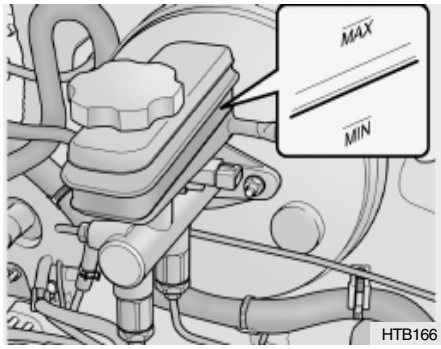


The fluid level in the brake fluid reservoir should be checked periodically. The level should be between the "MIN" and "MAX" marks on the side of the reservoir. If the level is at or below the "MIN" mark, fluid should be added. It should be borne in mind that the brake fluid level will decrease slightly as the friction linings of the pads and shoes become worn and that this is a normal condition.

To add brake fluid;

1) If it is necessary, remove the air cleaner cover.
2) Wipe away any dirt then unscrew the fluid reservoir cap.
3) Slowly pour the recommended fluid into the reservoir using by a funnel. Do not overfill.
4) Carefully replace the cap on the reservoir and tighten.

**WARNING:**
**Brake fluid is hygroscopic and should never be stored in an unsealed container. The presence of water in the braking system will cause vapour locks and increase the possibility of brake fade along with promoting corrosion within the braking system. The brake fluid must be changed at the specified time or mileage interval to ensure continued safe operation of the system. Brake fluid will cause rapid and serious damage to paintwork. If accidental spillage occurs, the affected area must be rinsed with water immediately. Do not allow brake fluid to come into contact with the eyes or to be ingested and ensure that fluid is safely stored away form the reach of children.**

SG140A1-E

## AIR CONDITIONING SYSTEM MAINTENANCE

### Condenser

Ensure that the condenser is periodically inspected and that accumulations of dirt, dead insects and leaves etc, are removed to ensure that the efficiency of the system is not impaired. Care must be exercised to ensure that the condenser fins are not damaged during cleaning.

G140D01TB-EAT

### Compressor Drive Belt

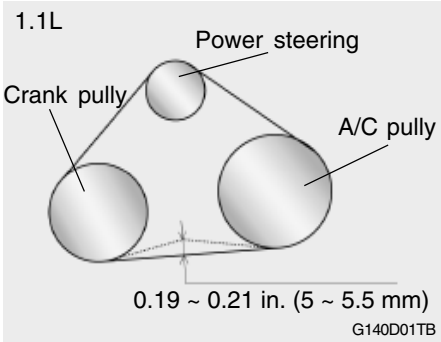


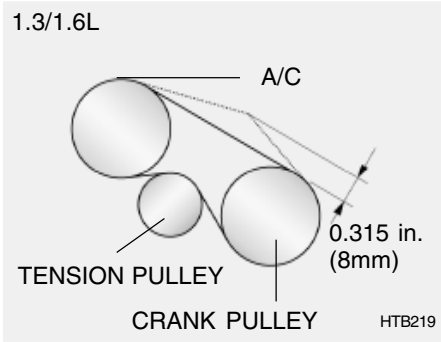

The air conditioning compressor drive belt should be checked to ensure freedom from damage or excessive wear and correct tension. The belt tension is correct when the belt deflects by about 0.3 inches (8 mm) (1.1L: 5 ~ 5.5 mm) when a force of 98 N is applied to the belt halfway between the compressor and crankshaft pulleys. Adjustment of the belt should be entrusted to a Hyundai dealer.

SG140C1-E

## Checking the Refrigerant

1. Start the engine and run at idle for several minutes with the refrigeration system running at the coldest setting.
2. Open the bonnet and inspect the sight glass on the top of the receiver dryer.
3. If the refrigerant charge is insufficient, a flow of bubbles will be observed through the sight glass.
4. If the refrigerant charge is satisfactory, no bubbles will be observed through the sight glass.

**CAUTION:**
**Running the air conditioning system with a low refrigerant level may damage the compressor.**

SG140D1-E

## Off Season Maintenance

The air conditioning must be run for ten minutes or so weekly during periods when the system would not normally be used to ensure that the compressor and seals are lubricated. If this precaution is not observed the compressor seals may become stuck to the compressor shaft and damaged when the system is next used resulting in a loss of refrigerant and damage to the compressor.

B145A01TB-EAT

## CHANGING THE POLLEN FILTER (In Front of evaporator unit) (Not all models)

The pollen filter is located in front of the evaporator unit behind the glove box. It operates to decrease pollutants from entering the car and to filter the air.

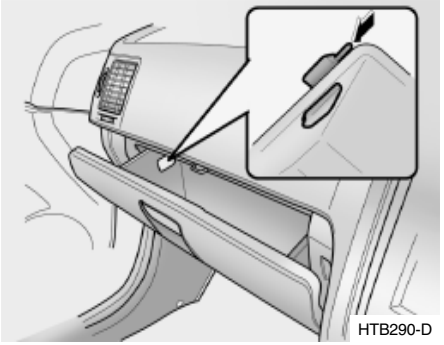
HTB290-D

1. Remove the adjusting pins on both sides of the glove box to open half the glove box.

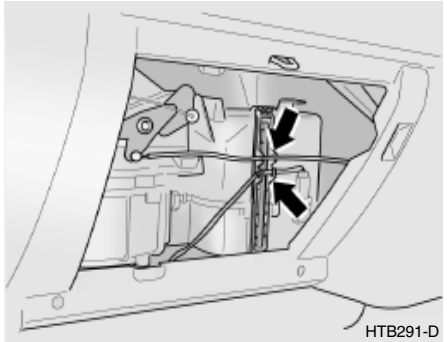
HTB291-D

2. Remove the cable and the wiring from the filter cover.

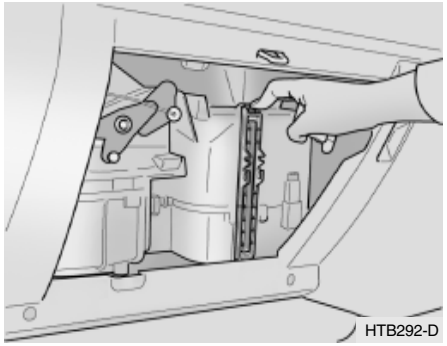
HTB292-D

3. Remove the filter cover to push the upside of the filter cover.

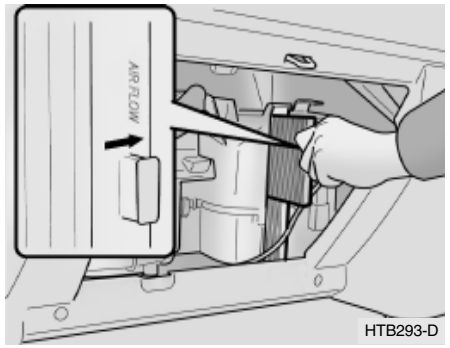

HTB293-D

4. Replace the two filters.

**CAUTION:**
**Be sure to install the pollen filter in the direction of the arrow sign. Unless, it may cause noise or deterioration.**

5. Installation is the reverse order of disassembly.

SG150A1-E

## STEERING WHEEL FREEPLAY

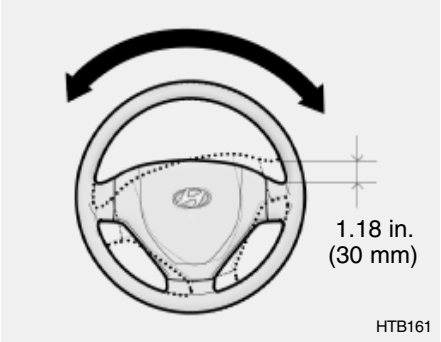

HTB161

Steering wheel freeplay should be checked to ensure that the specified value is not exceeded.

SG160A1-E

## CLUTCH PEDAL FREEPLAY

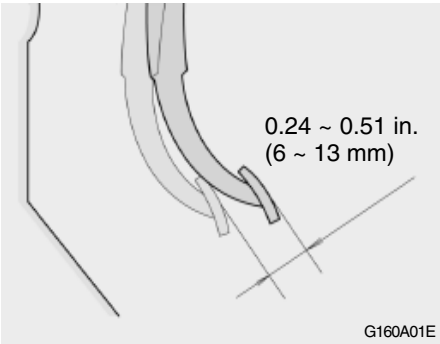


The clutch pedal freeplay should be checked against the specified value. If the freeplay is not correct, the clutch should be adjusted by a Hyundai dealer.

SG170A1-E

## BRAKE PEDAL FREEPLAY

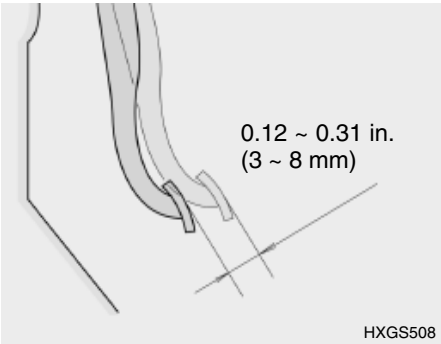


The brake pedal freeplay should be checked with the engine turned off. The pedal to floor clearance should be checked with the engine running and a load of 490 N applied to the pedal. If either value is incorrect, the necessary adjustment should be performed by a Hyundai dealer. Pedal to floor clearance: 1.97 in. (50 mm)

G180A01A-GAT

## CHECKING BRAKE PEDAL CLEARANCE

You need a helper to check the brake pedal clearance. With the engine running, have your helper press down on the brake pedal several times and then hold it down with a force of about 490 N (50 Kg, 110 lbs). The brake pedal clearance is the distance from the top surface of the brake pedal to the asphalt sheeting under the floor mat.

If the brake pedal clearance is not within the limits specified in the illustration, have it inspected by your Hyundai dealer and adjusted or repaired if necessary.

SG190A1-E

## DRIVE BELTS (Gasoline)

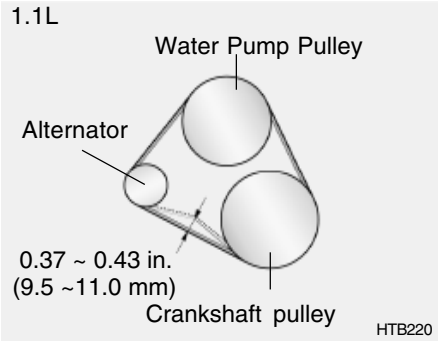


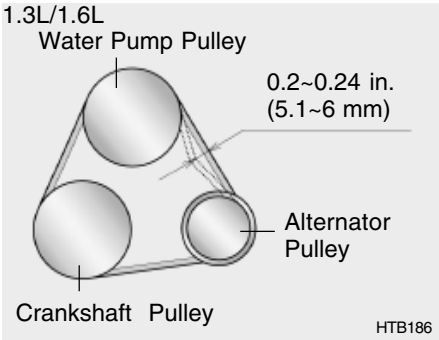


The various engine drive belts must be checked for condition, tension and freedom from damage and excessive wear. The tension of a new belt must be checked after thirty minutes running following fitment of the new belt to allow for the initial belt stretch.

G190B01TB-GAT

## CHECKING DRIVE BELTS (Diesel)

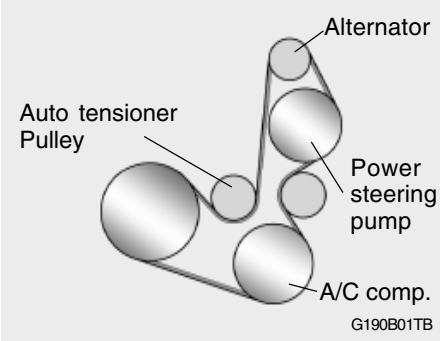


At the scheduled maintenance inspection, belts should be examined for cracks, wear, fraying or other evidence of deterioration and replaced if necessary.

Belt routing should also be checked to be sure there is no interference between the belts and other parts of the engine.

SG200A1-E

## FUSIBLE LINKS

The fusible link prevents damage to the wiring harness in the event of an electrical system malfunction. Failure of a fusiblelink is indicative of a serious overload condition having occurred and therefore the electrical system should be checked by a Hyundai dealer before a replacement link is fitted.

**WARNING:**
**Under no circumstances should a fusible link be replaced with anything other than a new link of the same rating. The use of higher rated links or other means of connecting the circuit will create a potential fire hazard.**

G200B01E-EAT

## INDIVIDUAL CIRCUIT FUSES

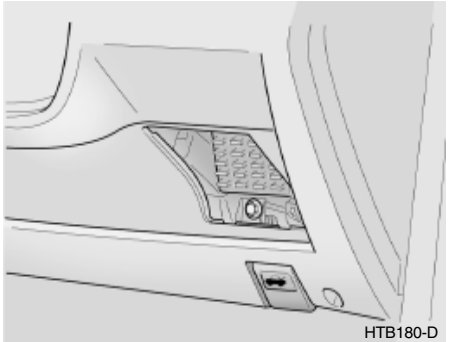
HTB180-D

The fuse box containing the individual circuit fuses will be found in the backside of multi box located in the right side of driver. The multi box is removed by pulling lightly and then releasing the lid. A fuse rating grid will be found on the reverse side of the cover. In the event of fuse failure, the fuse should be replaced with one of equivalent rating. A fuse removal tool is provided within the fuse box to facilitate replacement.
In the event of a replacement fuse failing shortly after installation a malfunction within the circuit protected by that fuse is indicated. The circuit should be checked by a Hyundai dealer at the first available opportunity.

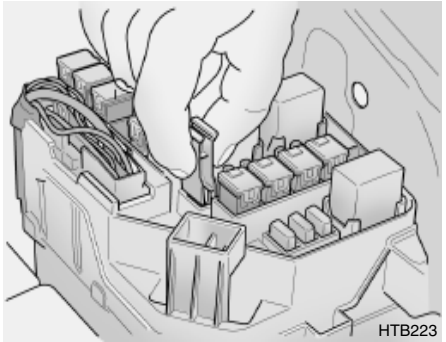
HTB223

**WARNING:**
**The use of replacement fuses having a higher rating than specified or other means of connecting the circuit will create a potential fire hazard.**

SG210A1-E

## BATTERY MAINTENANCE

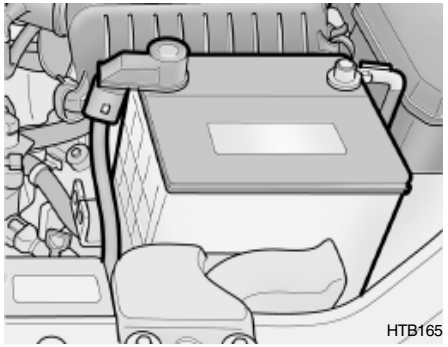


**WARNING:**
**Motor vehicle batteries contain sulphuric acid which is corrosive and poisonous. Hydrogen gas is emitted from the battery which is explosive when combined with oxygen. The following precautions must be strictly observed to avoid personal injury or damage to the vehicle.**

- o If battery electrolyte is spilled onto skin or into eyes, the effected area must be flushed with copious amounts of water and medical assistance sought.
- o If battery electrolyte is ingested, copious amounts of water or milk followed by an ant-acid (raw egg or milk of magnesia) must be drunk. Vomiting should not be induced and medical assistance must be sought.
- o Batteries must only be charged in well venti-lated areas from which naked lights or sources of sparks are excluded.
- o Ensure that children, pets or other unauthorized persons are kept away from batteries.
- o Do not allow anything to bridge the positive (+) and negative (-) terminals of the battery.
- o Never invert the battery.

The battery fitted during production is of the "Maintenance Free" type.

SG220A1-E

## ELECTRIC COOLING FANS

**WARNING:**
**The cooling fan is controlled by engine coolant temperature and may sometimes operate even when the engine is not running. Use extreme caution when working near the blades of the cooling fan so that you are not injured by a rotating fan blade. As the engine coolant temperature decreases, the fan will automatically shut off. This is a normal condition.**

The engine cooling fan should operate before the temperature gauge reaches the upper portion of the scale and the condenser fan should operate whenever the air conditioning is in use.

SG230A1-E

## POWER STEERING FLUID LEVEL

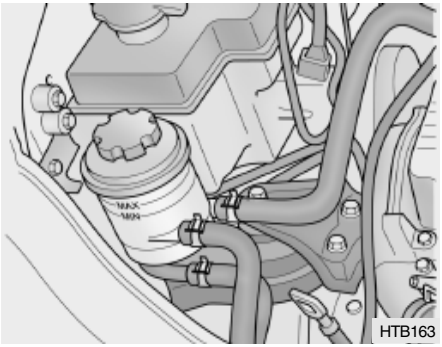

HTB163

The power steering fluid level should be checked daily.
To check the power steering fluid level, be sure the ignition is "OFF", then check to make certain that the power steering fluid level is between the "MAX" and "MIN" level markings on the fluid reservoir.

### NOTE:

**Grinding noise from power steering pump may be heard immediately after the engine is started in extremely cold condition (below -4°F). If the noise stops during warm up, there is no abnormal function in the system. This is due to a power steering fluid characteristic in extremely cold conditions.**

### FLUID RECOMMENDATION

Only automatic transmission fluid meeting the specification of PSF-3 should be used in the power steering system.

SG230B1-E

## POWER STEERING HOSES

Power steering hoses should be checked for damage, deterioration and leakage at each service.

G300A01TB-GAT

## REMOVAL OF WATER FROM THE FUEL FILTER (DIESEL ENGINE)

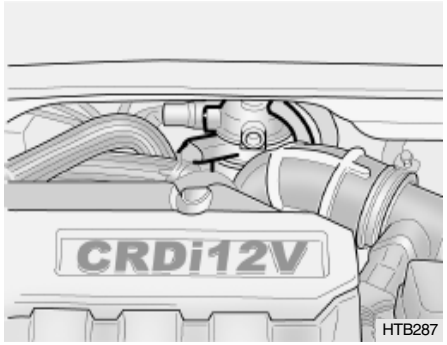

HTB287

If the fuel filter warning lamp illuminates during driving, it indicates that water has accumulated in the fuel filter. If this occurs, remove the water as described.

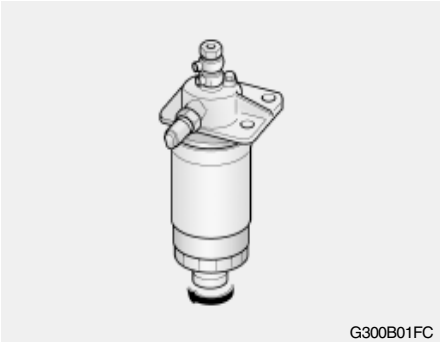


1. Remove the engine cover.
2. Disconnect the air intake hose from air cleaner cover.
3. Loosen the drain plug at the bottom of the fuel filter.
4. Tighten the drain plug when water no longer comes out.
5. Check to be sure that the warning lamp illuminates when the ignition key is turned to "ON", and that it goes off when the engine is started. If in doubt, consult your nearest authorized HYUNDAI dealer.

**WARNING:**
**Be sure to carefully wipe away any water drained out in this manner, because the fuel mixed in the water might be ignited and result in a fire.**

G290A01FC-EAT

## HEADLIGHT AIMING ADJUSTMENT

Before performing aiming adjustment, make sure of the following.

1. Keep all tires inflated to the correct pressure.
2. Place the vehicle on level ground and press the front bumper and rear bumper down several times. Place the vehicle at a distance of 118 in. (3,000 mm) from the test wall.
3. See that the vehicle is unloaded (except for full levels of coolant, engine oil and fuel, and spare tire, jack, and tools).
4. Clean the head lights lens and turn on the headlight (low beam).

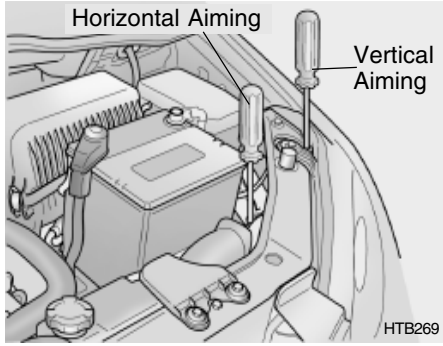


5. Open the hood.
6. Draw the vertical line (through the center of each headlight beam pattern) and the horizontal line (through the center of each headlight beam pattern) on the aiming screen.

   And then, draw the horizontal parallel line at 1.18 in. (30 mm ) under the horizontal line.

7. Adjust each cut-off line of the low beam to the parallel line with a phillips screwdriver - VERTICAL AIMING.
8. Adjust each cut-off line of the low beam to each vertical line with a phillips screwdriver - HORIZONTAL AIMING.

G290B01TB-EAT

## Adjustment After Headlight Assembly Replacement

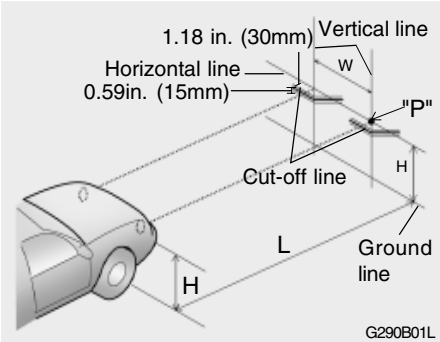


If the vehicle has had front body repair and the headlight assembly has been replaced, the headlight aiming should be checked using the aiming screen as shown in the illustration. Turn on the headlight switch. (Low Beam Position)

1. Adjust headlights so that main axis of light is parallel to center line of the body and is aligned with point "P" shown in the illustration.
2. Dotted lines in the illustration show the center of headlights.

## SPECIFICATIONS:

"H"
Horizontal center line of headlights from ground.
: 26.8 in.(656 mm)

"W"
Distance between each headlight center.
: 43.3 in. (1,100 mm)

"L"
Distance between the headlights and the wall that the lights are tested against.
: 118 in. (3,000 mm).

G270A01TB-EAT

## REPLACING LIGHT BULBS

### Headlight Bulb

In the event of bulb failure being experienced, ensure that the relative lighting circuit is turned off prior to attempting to replace the bulb. The illustrations on the following page will assist in locating and removing the various bulbs. Ensure that the replacement bulb has the same cap configuration and wattage as the original.

**CAUTION:**
**Keep the lamps out of contact with petroleum product, such as oil, gasoline, etc.**

Replacement instructions:

1. Allow the bulb to cool. Wear eye protection.
2. Always grasp the bulb by its plastic base, avoid touching the glass.
3. Disconnect the power cord from the bulb base in the back of the headlight.

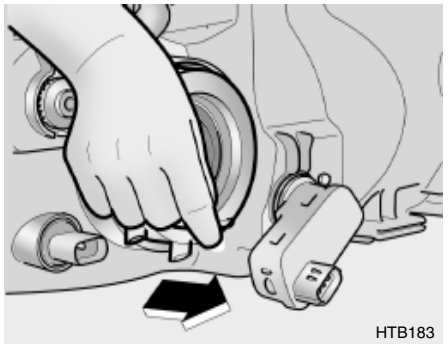


4. Remove the dust cover.

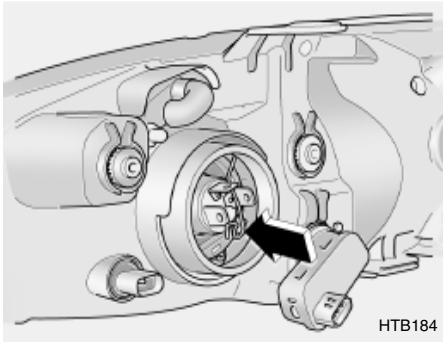


5. Push the bulb spring for removing the headlight bulb.

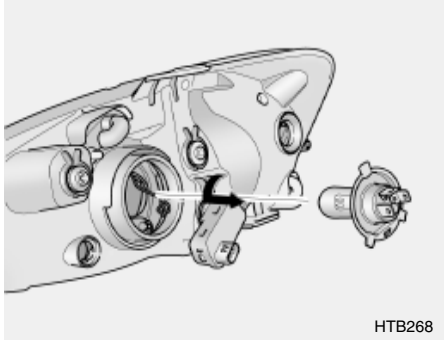


6. Remove the protective cap from the replacement bulb and install the new bulb by matching the plastic base with the headlight hole. Install the dust cover after retightening the bulb spring and reconnect the power cord.
7. Use the protective cap and carton to dispose of the old bulb.
8. Check for proper headlight aim.

**WARNING**

**The halogen bulb contains gas under pressure and if impacted could shatter, resulting in flying fragments. Always wear eye protection when servicing the bulb. Protect the bulb against abrasions or scratches and against liquids when lighted. Turn on the bulb only when installed in a headlight. Replace the headlight if damaged or cracked. Keep the bulb out of the reach of children and dispose of the used bulb with care.**

G270B01TB-GAT

## Front Turn Signal light / Position Light

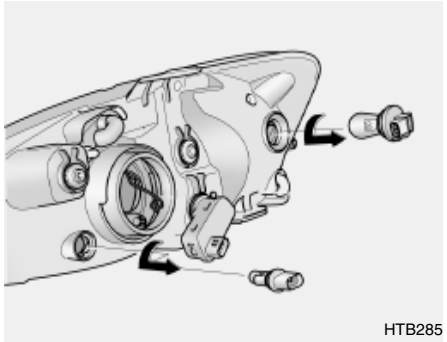


1. Disconnect the power cord from the bulb.
2. Replace to the new bulb.

G270C01TB-GAT

## Luggage Compartment Light

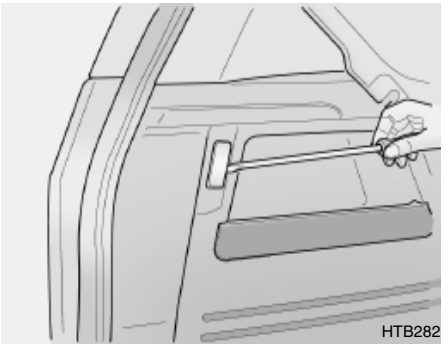


1. Remove the cover with a (-) driver.

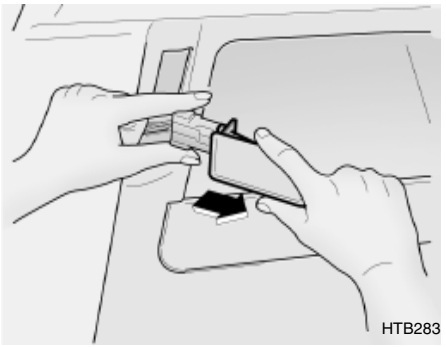


2. Disconnect the power cord.
3. Replace to the new bulb.

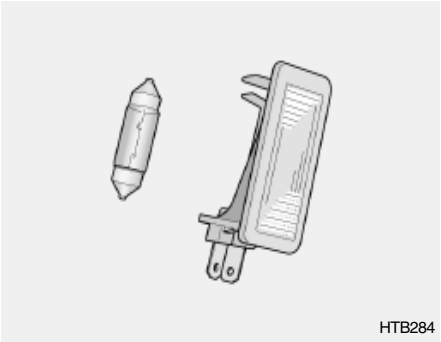


G270D01TB-GAT

## Rear Combination Light

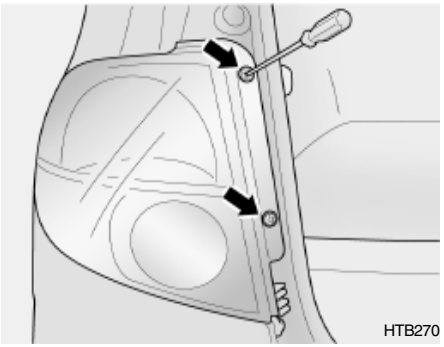

1. Remove the cover with a (+) driver
2. Disconnect the power cord.

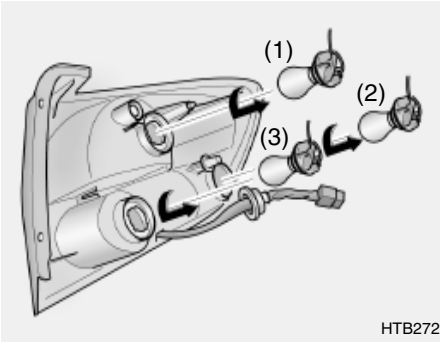


3. Replace to the new bulb.

(1) Stop/Tail Light
(2) Turn Signal Light
(3) Back-up Light

G270E01A-GAT

## Side Repeater (If Installed)

1. Push the cover toward the front of vehicle and remove it.

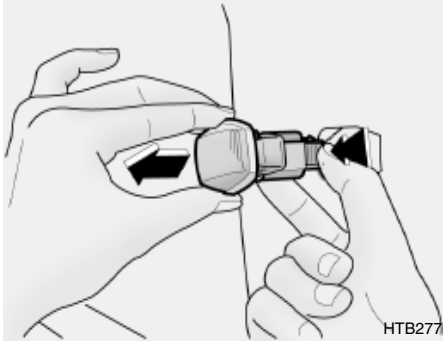


2. Disconnect the power code.

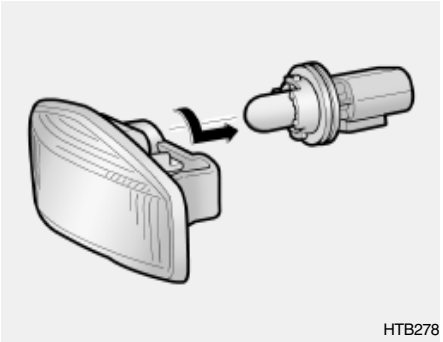


3. Replace to the new bulb.

G270F01TB-GAT

## Rear Fog Light

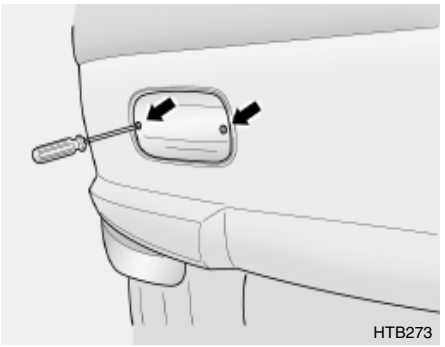


1. Remove the cover with a (+) driver.

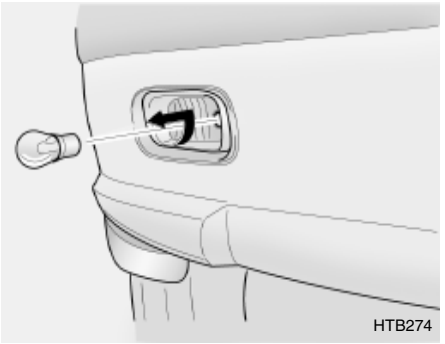


2. Replace to the new bulb.

G270G01TB-GAT

## Interior Light (Not all models)

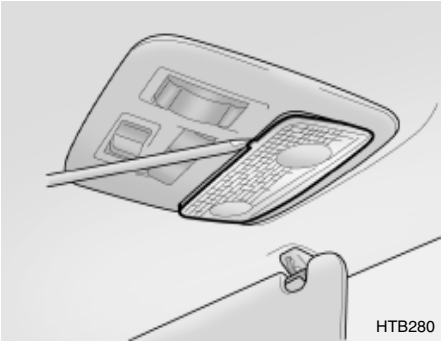


1. Remove the cover with a (-) driver.

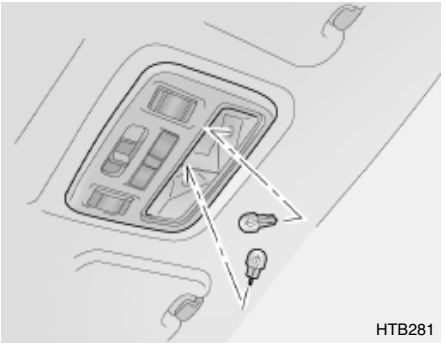


2. Replace to the new bulb.

G280A01TB-EAT

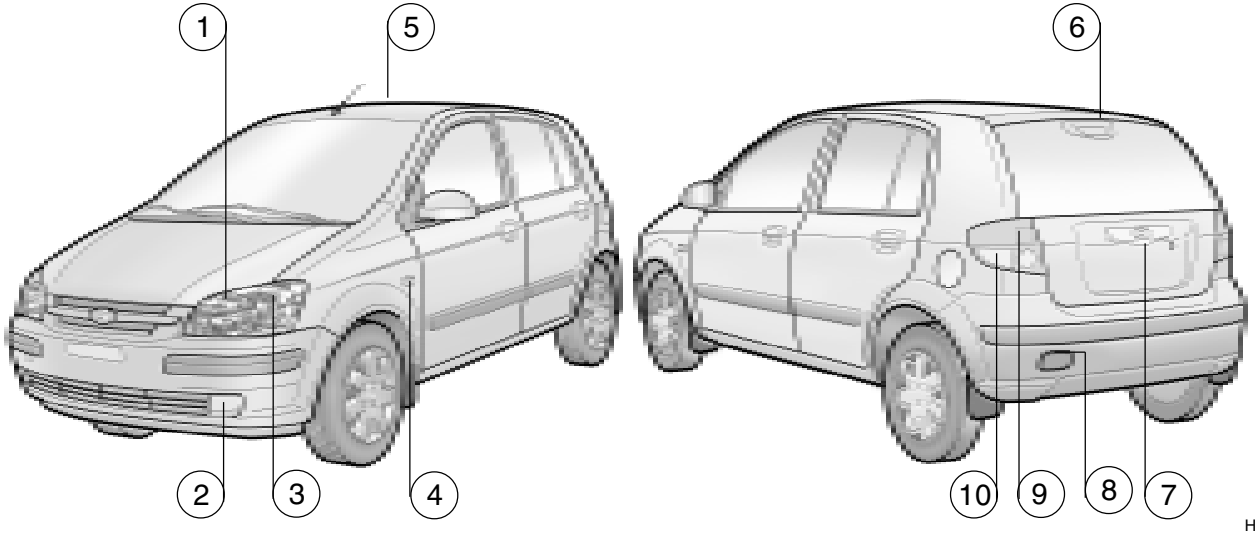


HTB147A

| No. | Part Name | | Wattage | No. | Part Name | | Wattage |
|---|---|---|---|---|---|---|---|
| 1 | Head Light (High/Low) | | 60/55 | 6 | High Mounted Rear Stop Light | | 16 |
| | Front Position Light | | 5 | 7 | License Plate Light | | 5 |
| 2 | Front Fog Light (Not all models) | | 27 | 8 | Rear Fog Light | | 21 |
| 3 | Front Turn Signal Light | | 21 | 9 | Luggage Compartment Light | | 5 |
| 4 | Side Repeater (Not all models) | | 5 | 10 | Rear Combination | Turn Signal Light | 21 |
| 5 | Interior Light | Map Light | 10 | | | Stop/Tail Light | 21/5 |
| | | Room Light | 10 | | | Back -up Light | 21 |

G200C01TB-GAT

# FUSE PANEL DESCRIPTION

## Engine Compartment

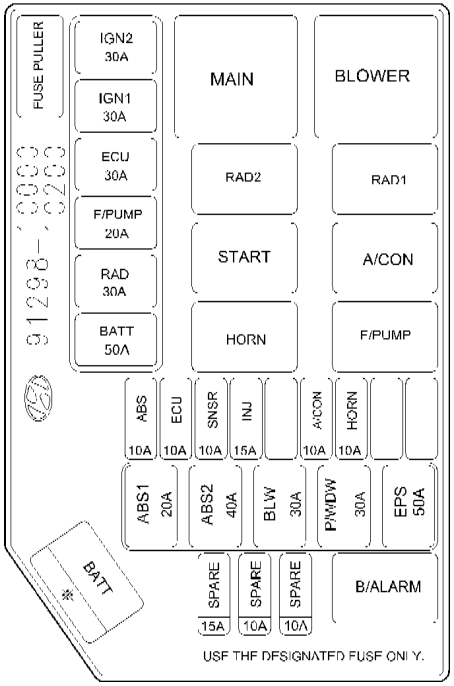


HTB261-E

| DESCRIPTION | FUSE RATING | | PROTECTED COMPONENTS |
|---|---|---|---|
| IGN 2 | 30A | | Ignition Switch |
| IGN 1 | 30A | | Ignition Switch, Start Relay |
| ECU | 30A | | Fuel pump, Alternator, ECM |
| F/PUMP | 20A | | Auto Fuel Cut Switch |
| RAD | 30A | | Radiator Fan |
| BATT | 50A | | Headlight, Defogger Relay |
| ABS | 10A | | ABS |
| ECU | 10A | | ECM |
| SNSR | 10A | | A/CON, Fuel Pump |
| INJ | 15A | | Injector |
| A/CON | 10A | | A/Conditioner |
| HORN | 10A | | Horn |
| ABS1 | 20A | | ABS |
| ABS2 | 40A | | ABS |
| BLW | 30A | | Blower, Blower Motor |
| P/WDW | 30A | | Power Window |
| EPS | 50A | | Electronic power steering |
| BATT(※) | 1.1L | 100A | Alternator |
| | 1.3/1.6L | 120A | |
| SPARE | 15A | | Spare Fuse |
| SPARE | 10A | | Spare Fuse |
| SPARE | 10A | | Spare Fuse |

## NOTE:

**Not all fuse panel descriptions in this manual may be applicable to your vehicle. It is accurate at the time of printing. When you inspect the fuse box on your vehicle, refer to the fuse box label.**

G200E01TB-GAT

## Inner Panel

| | | | |
|---|---|---|---|
| 10A | 10A | 10A | 10A |
| A / C SW | TAIL LH | A / BAG IND | AUDIO |
| 10A | 10A | 10A | 15A |
| T / SIG | TAIL RH | CLUSTER | C / LIGHT |
| 10A | 10A | 20A | 15A |
| ECU1 | A / BAG | D / LOCK | RR / WPR |
| 10A | | | 20A |
| START | | | S / HTD |
| 10A | 15A | 15A | 15A |
| HTD MIR | ECU2 | STOP | HAZARD |
| 20A | 10A | 10A | 10A |
| FRT WPR | R / FOG | IGNITION | BLOWER |
| 30A | 15A | 10A | 15A |
| PR / HTD | H / LP RH | F / FOG | H / LP LH |
| 15A | | 3 | FUSE PULLER |
| POWER CONN & R / LP | | | |
| USE THE DESIGNATED FUSE ONLY | | | |

HTB260-D

| DESCRIPTION | FUSE RATING | PROTECTED COMPONENTS |
|---|---|---|
| A/C SW | 10A | Air conditioner |
| TAIL LH | 10A | Stop/Tail Light (LH) |
| A/BAG IND | 10A | A/Bag Indicator |
| AUDIO | 10A | Audio, Electronic Outside Mirror |
| T/SIG | 10A | Turn signal Light, Back-up Light |
| TAIL RH | 10A | Stop/Tail Light (RH) |
| CLUSTER | 10A | Cluster |
| C/LIGHT | 15A | Cigarette Lighter |
| ECU 1 | 10A | PCM, ABS control |
| A/BAG | 10A | Air Bag |
| D/LOCK | 20A | Door Lock System, Sunroof |
| RR/WPR | 15A | Rear Wiper Motor |
| START | 10A | Start Relay, 9oTheft alarm system |
| S/HTD | 20A | Seat Warmer |
| HTD MIR | 10A | Rear window Defroster |
| ECU2 | 15A | ECM |
| STOP | 15A | Stop Light, Power Window |
| HAZARD | 15A | Hazard Warning Light, ETACM |
| FRT WPR | 20A | Front Wiper Motor |
| R/FOG | 10A | Rear Fog Light |
| IGNITION | 10A | Fog light, ETACM, Power Window, Headlight leveling Device |
| BLOWER | 10A | Blower, Sunroof |
| PR/HTD | 30A | Rear window Defroster |
| H/LP RH | 15A | Headlight (RH) |
| F/FOG | 10A | Front Fog Light |
| H/LP LH | 15A | High Beam Light Indicator, Headlight (LH) |
| POWER CONN & R/LP | 15A | Room Lamp, Audio, Cluster |

# 7. EMISSION CONTROL SYSTEM

Emission control systems ..... 7-2
EGR system ..... 7-4
Catalytic converter ..... 7-4

SH010A1-E

## EMISSION CONTROL SYSTEMS (Not all models)

Depending upon the market for which the vehicle is destined, the emission control system will comprise one or more of the following emission control devices.

1) Crankcase emission control system
2) Evaporative emission control system
z3) Exhaust emission control system

In order that the proper functioning of the emission control systems may be ensured, it is recommended that the vehicle is inspected and maintained by an authorized Hyundai dealer in accordance with the maintenance schedule in this manual.

SH010B1-E

## 1. CRANKCASE EMISSION CONTROLSYSTEM

The positive crankcase ventilation system is employed to prevent air pollution caused by blow-by gases being emitted from the crankcase by introducing fresh air to the crankcase through the air cleaner where this mixes with blow-by gases and then passes through the PCV valve into the intake manifold from where it subsequently enters the combustion chamber and is burned.

SH010C1-E

## 2. EVAPORATIVE EMISSION CONTROL SYSTEM

The Evaporative Emission Control System is designed to prevent fuel vapours from escaping into the atmosphere through the fuel tank ventilation system.
Whilst the engine is not running, fuel vapours generated inside the fuel tank are absorbed and stored in a charcoal canister. When the engine is started, the vapours stored in the canister are drawn into the induction system through the purge control solenoid valve and are subsequently burned.
The purge control solenoid valve is controlled by the ECU; when the engine coolant temperature is low or the engine is idling, the purge control valve is closed and fuel vapours remain stored in the canister. Under normal running conditions when the engine is warm, the valve opens and the vapours are drawn into the inlet tract and subsequently burned in the combustion chamber.

SH010D1-E

## 3. EXHAUST EMISSION CON TROL SYSTEM

The exhaust emission control system is a highly effective system which controls exhaust emission while maintaining good vehicle performance.

SH020A1-E

## CATALYTIC CONVERTOR OPERATION PRECAUTIONS ; For a Petrol engine

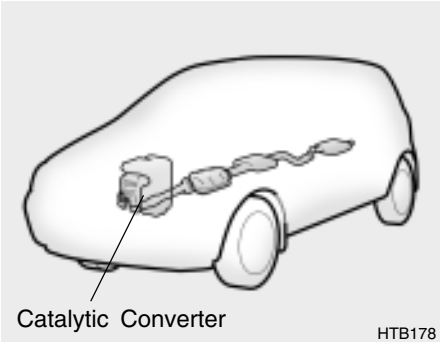


Hyundai Elantra models are fitted with catalytic convertors which require special operating considerations. The catalytic convertor serves to oxidize certain noxious elements of the exhaust gases leaving the engine to reduce the level of pollutants emitted from the vehicle and, provided that care is exercised to prevent damage, the catalyst will operate efficiently for the life of the vehicle.

It is of the utmost importance that the following information is read and understood by the vehicle operator in order to prevent operational problems arising from damage to the catalyst.

Damage to the catalyst will result if contamination occurs through the use of leaded fuel. Whilst the vehicle is fitted with a reduced diameter filler neck to prevent charging of the fuel tank with a leaded fuel pump nozzle, it is possible that the use of funnels or jerry cans will permit leaded fuel to be introduced into the fuel tank.

The catalyst is intolerant of unburnt fuel and therefore if an engine misfire condition exists, damage to the catalyst will occur. It is imperative that if a misfire condition develops, the vehicle is immediately presented to a Hyundai dealer for rectification. Similarly, the practice of certain ignition system diagnosis procedures which involve inducing a misfire (cylinder power balance tests for example) may result in catalyst damage.

For these reasons, it is advisable that the exhaust gas emission be tested at each routine service with a gas analyzer having a Hydrocarbon measuring facility to ensure continued reliability of the catalyst.

Push or tow starting of the vehicle is to be avoided since unburnt fuel may be enter the catalyst and result in damage. (Note, it is impossible to push or tow start a Hyundai model equipped with fuel injection since the fuel pump safety interlock will prevent the pump from operating under these conditions).

Operation of the catalyst involves extremely high temperatures being attained within the catalytic convertor, and although the convertor is fitted with heat shields, it is important that the vehicle is not parked over combustible or volatile material which may result in fire.

If the above precautions are not adhered to and the catalyst becomes inoperative, the resultant increase in core temperature will result in a "melt down" where the catalyst core will melt and subsequently may block the exhaust system.

Due to the fragile nature of the catalyst element, it is important that damage does not occur when the vehicle is raised by means of a garage jack. Care must also be exercised to avoid driving over road hazards or debris which may cause damage to the catalyst element.

H020C01S-GAT

## EGR SYSTEM
## ; For a diesel engine

This system helps control oxides of nitrogen by recirculating a part of the exhaust gas into the engine.

H020D01S-GAT

## CATALYTIC CONVERTER
## ; For a diesel engine

All Hyundai vehicles are equipped with oxidation type catalytic converter to reduce the carbon monoxide, hydrocarbons and particulate contained in the exhaust gas.

# 8. CONSUMER INFORMATION

Vehicle Identification Number (VIN) ..... 8-2
Engine number ..... 8-2
Tyre pressures ..... 8-3
Snow tyres ..... 8-4
Tyre chains ..... 8-4
Tyre rotation ..... 8-4
Tyre balancing ..... 8-5
Tyre Replacement ..... 8-5
Wheel Replacement ..... 8-5
Spare tyre and tools ..... 8-6

I010A01TB-DAT

## VEHICLE IDENTIFICATION NUMBER (VIN)

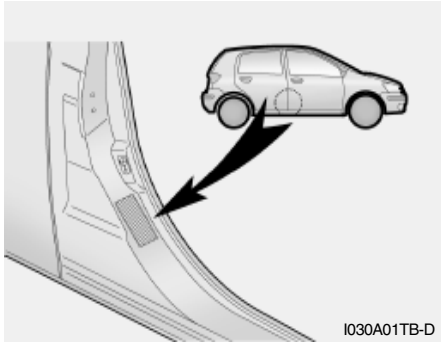


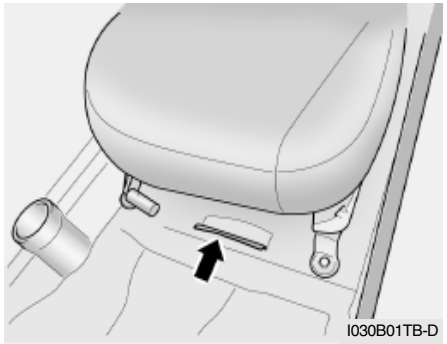


The vehicle identification number (VIN) is the number used in registering your car and in all legal matters pertaining to its ownership, etc.
It can be found on the centre piller of the driver side and the lower side of the front passenger seat.

I010B01A-GAT

## ENGINE NUMBER

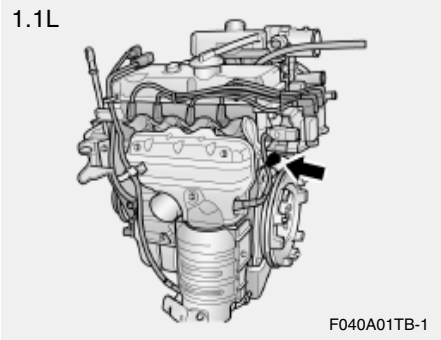


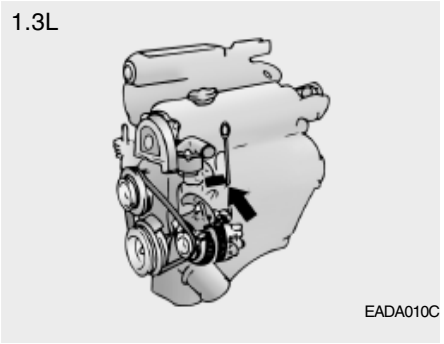


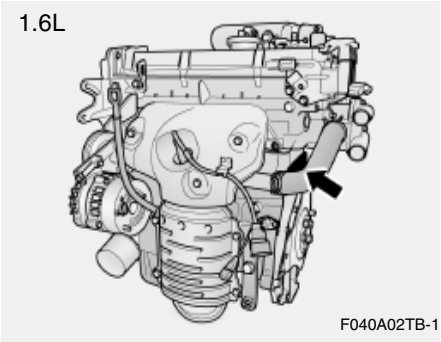

Diesel Engine

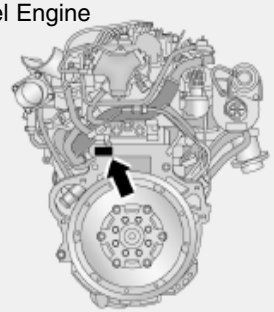

I010B01B

The engine number is stamped on the engine block as shown in the drawing.

I030A02TB-EAT

## TYRE PRESSURES

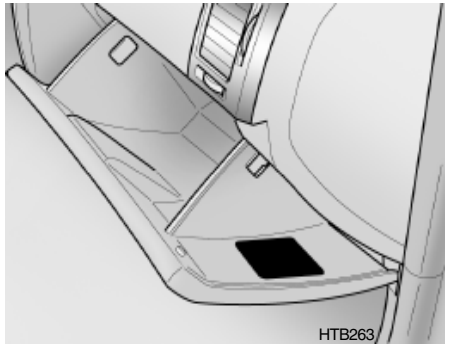

HTB263

In modern high-speed motoring, correct tyre pressures are vitally important.

| RIM SIZE | TYRE SIZE | PRESSURE, kPa (PSI) | | | |
|---|---|---|---|---|---|
| | | UP TO 2 PERSONS | | UP TO MAX. LOAD | |
| | | FRONT | REAR | FRONT | REAR |
| 4.5Jx13 | 165/65R14 | 210(30) | 210(30) | 230(33) | 230(33) |
| 5.0Jx13 | | | | | |
| 5.0Jx14 | 175/65R14 | | | | |
| 5.5Jx14 | | | | | |
| 5.5Jx15 | 185/55R15 | | | | |
| 4.0Tx14 | T105/70D14 | 420(60) | 420(60) | 420(60) | 420(60) |

Incorrect tyre pressures can affect vehicle safety by causing reduced adhesion, steering response and tyre failure through overheating. The tyre pressure must only be checked when the tyres are cold. The correct tyre pressures are indicated on the label affixed in the glove box and below.

Tyre pressures should be increased by 3 psi when the vehicle is driven fully laden or under conditions of sustained high speed motoring.

SI030A2-E
## SNOW TYRES

If it is desired to fit snow tyres to the vehicle, it must be ascertained that the original size and load carrying capacity are met by the replacement tyres. When using snow tyres, the vehicle should not be driven at speeds in excess of 60 MPH.

I050A01TB-EAT
## TYRE CHAINS

Tyre chains, if necessary, should be installed on the front wheels. Be sure that the chains are the proper size and that they are installed in accordance with the manufacturer's instructions.
To minimize tyre and chain wear, do not continue to use tyre chains when they are no longer needed.

**WARNING:**
- **When driving on roads covered with snow or ice, drive at less than 30 km/h (20 mph).**
- **Use the SAE "S" class or wire & plastic chains.**
- **Don't use the tyre chains in 185/55R 15 tyre to prevent body damage.**
- **If you have noise caused by chaws contacting the body, retighten the chain to avoid contact with the vehicle body.**
- **Retighten the chains to prevent from a body damage after driving 0.5 ~ 1 km with equipping chains.**

I060A01FC-EAT
## TYRE ROTATION

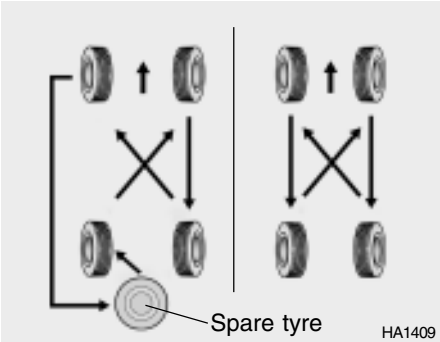


The tyre wear characteristics will vary between each tyre dependant upon the conditions of use. It is normal for the front tyres to wear more rapidly than those fitted to the rear of the vehicle and therefore tyre rotation will provide a means of helping to ensure an even wear rate across the tyre set. For vehicles fitted with radial ply tyres, rotation should be confined to front to rear tyre alternation. It is not recommended that radial ply tyres be rotated from side to side.

**NOTE:**

- **Do not use the temporary spare tyre for tyre rotation.**
- **Aluminium wheels which are not supplied as Original Equipment should not be mixed on the same vehicle with the original steel wheels. However, it is acceptable that the steel spare wheel be used in conjunction with Original Equipment aluminium wheels since the offset of both wheels is compatible. Radial and cross ply tyres should not be mixed on the same vehicle.**

SI060A1-E

## TYRE BALANCING

Incorrect tyre balance will cause steering vibration and uneven tyre wear. The vehicle tyres are balanced during production but may need further balancing throughout the life of the tyres.
It is recommended that the tyres be balanced on the car for best results and that the tyres are balanced whenever they have been removed from the wheel for repair.

SI060B1-E

## TYRE REPLACEMENT

Tyres must be replaced when the wear indicators appear as a solid bar across the tyre tread. At this point, the remaining tread depth will be approximately 0.06 in.(1.6 mm). In addition to this, the tyre must be replaced if any portion of the tread has become bald or if there are any lumps, bulges or deep cuts in the sidewalls or tread.
Replacement tyres must be of the recommended size and rating and should be of the same manufacture and tread pattern on each axle.

SI060D2-E

## WHEEL REPLACEMENT

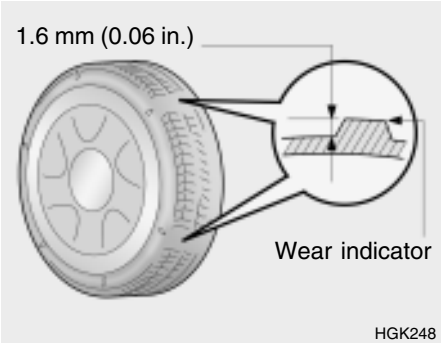


The original wheels may only be replaced with Hyundai Approved wheels.

**WARNING:**
**Driving on worn or defective tyres is dangerous. Worn tyres may cause loss of steering control and a serious deterioration of braking efficiency. Defective tyres may cause vibration and loss of control through blow outs.**

Tyres of different size, construction or tread pattern should not be intermixed on the same axle. Radial and cross ply tyres should not be used on the same vehicle.
The use of tyres and wheels of non approved sizes can be dangerous.

I100A01TB-EAT

## SPARE TIRE AND TOOLS

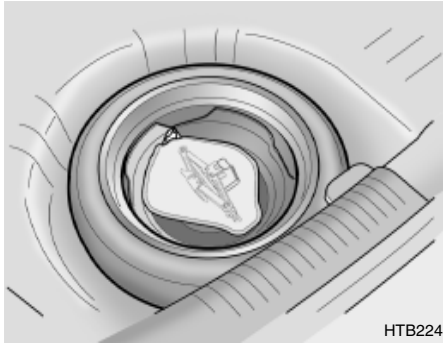


Your Hyundai is delivered with the following:

Spare tyre and wheel
Wheel nut wrench, Wrench bar,
Spanner, Screw driver
Jack, Towing Hook

# 9. VEHICLE SPECIFICATIONS

Measurement ..... 9-2
Engine ..... 9-3
Lubrication chart ..... 9-4

J010A01TB-EAT

## MEASUREMENT

mm (in.)

| | | |
|---|---|---|
| Overall length | | 150 (3,810) |
| Overall width | | 65.6(1,665) |
| Overall height (unladen) | | 58.7(1,490) |
| Wheel base | | 96.7(2,455) |
| Wheel tread | Front | 57.1(1,450) |
| | Rear | 56.7(1,440) |

J020A01TB-EAT

## POWER STEERING

| | | |
|---|---|---|
| Type | | Rack and pinion |
| Wheel free play | | 0 ~ 1.18 in. (0 ~ 30 mm) |
| Rack stroke | Manual | 5.20 in. (132 mm) |
| | Power | 5.5 in. (140 mm) |
| Oil pump type | | Vane type |

J060A01TB-DAT

## FUEL SYSTEM

| Fuel tank | Litre | Imp.gal |
|---|---|---|
| Capacity | 45 | 9.9 |

J030A02TB-EAT

## TYRE

| | |
|---|---|
| Standard | 165/65R14 |
| Option | 175/65R14, 185/55R15 |

J035A02TB-EAT

## SPARE TYRE

| | |
|---|---|
| 1.1L | Temporary tyre (T 150/70 D14) |
| 1.3/1.5/1.6L | Full size |

J040A02TB-EAT

## ELECTRICAL

| Item | PETROL | | | DIESEL |
|---|---|---|---|---|
| | 1.1 L | 1.3 L | 1.6 L | 1.5 L |
| Battery | 45AH | | | 60AH |
| Alternator | 13.5V,70A | 13.5V, 90A | | 12V, 90A |

J050A01FC-GAT

## BRAKE

| | |
|---|---|
| Type | Dual hydraulic with brake booster |
| Front brake type | Ventilated disc |
| Rear brake type | Drum |
| Parking brake | Cable |

J070A01TB-EAT

## ENGINE

| ITEMS | | PETROL | | | DIESEL |
|---|---|---|---|---|---|
| | | 1.1 L | 1.3 L | 1.6 L | 1.5L |
| Engine Type | | 4-Cylinder in -line SOHC | | 4-Cylinder in -line DOHC | 3-Cylinder in -line SOHC |
| Bore x Stroke | | 67 x 77 | 71.5 x 83.5 | 76.5 x 87 | 83 x 92 |
| Displacement (cc) | | 1,086 | 1,341 | 1,599 | 1,493 |
| Firing order/Injection order | | 1-3-4-2 | | | 1-3-2 |
| Valve clearance (Cold Engine 20 ± 5°C) | Intake | 0.13 mm | - | - | - |
| | Exhaust | 0.17 mm | - | - | - |
| Spark plug | NGK | BKR5ES-11 | | | - |
| | CHAMPION | RC10YC4 | | | - |
| Spark plug gap | | 0.039 ~ 0.043 in. (1.0 ~ 1.1 mm) | | | - |
| Idle speed (RPM) | | 850 ± 100 | 700 ± 100 | | - |
| Ignition timing (Base)/Injection timing | | BTDC 6° ± 5° | BTDC 5° ± 5° | | Auto control |

J080A02TB-EAT

## LUBRICATION CHART

| Item | | Oil & Grease Standard | | Q'ty (litre) |
|---|---|---|---|---|
| Engine Oil | Petrol | API SG or ABOVE | SAE 20W-40, 20W-50 (ABOVE -10°C) | Drain and refill (with oil filter) : 3.3 (2.9 Imp.qts) |
| | | | SAE 15W-40, 15W-50 (ABOVE -15°C) | |
| | | | SAE 10W-30 (-25°C ~ 40°C) | |
| | | | SAE 10W-40, 10W-50 (ABOVE -25°C) | |
| | | | SAE 5W-20 (BELOW -10°C) *1, *2 | |
| | | | SAE 5W-30 (BELOW 10°C) *1 | |
| | | | SAE 5W-40 (BELOW 20°C) *1 | |
| | Diesel | API CF-4 or ABOVE, ACEA B4 or ABOVE | SAE 30 (0°C ~ 40°C) | Drain and refill (with oil filter) : 4.8 (4.2 Imp.qts) |
| | | | SAE 20W-40 (ABOVE -10°C) | |
| | | | SAE 15W-40 (ABOVE -15°C) | |
| | | | SAE 10W-30 (-20°C ~ 40°C) | |
| | | | SAE 5W-30 (-25°C ~ 10°C) | |
| | | | SAE 0W-30 (BELOW 10°C) *1, *2 | |
| | | *1. Restricted to driving condition and dealing area | | |
| | | *2. Not recommended for sustained high speed vehicle operation | | |
| Engine Oil Consumption | | Normal driving condition | | MAX. 1L / 1,500 Km |
| | | Severe driving condition | | MAX. 1L / 1,000 Km |
| Transaxle | Manual | HYUNDAI GENUINE PARTS MTF 75W/90 (API GL-4) | | 2.15 (1.86 Imp. qts) |
| | Auto | DIAMOND ATF SP-III, SK ATF SP-III | | 6.1 (5.3 Imp.qts) (Petrol only) |
| Power Steering | | PSF-3 | | As required |
| Brake Fluid | | DOT 3, DOT 4 or equivalent | | As required |
| Coolant | | Ethylene glycol base for aluminum radiator | | Petrol : 5.5(4.8 Imp.qts)<br>Diesel: 5.7 (5.0 Imp.qts) |

# 10.INDEX

**A**
AIR BAG ..... 1-29
AIR CONDITIONING SWITCH ..... 1-74
AIR CONDITIONING SYSTEM MAINTENANCE ..... 6-19
AIR CLEANER FILTER ..... 6-14
ANTENNA ..... 1-81
ANTI-LOCK BRAKE SYSTEM ..... 2-13
ANTI-THEFT ALARM SYSTEM ..... 1-7
ASHTRAY ..... 1-52
AUTO FUEL CUT SWITCH ..... 1-66
AUTOMATIC TRANSAXLE ..... 2-9
AUTOMATIC TRANSAXLE FLUID ..... 6-16

**B**
BATTERY MAINTENANCE ..... 6-25
BEFORE STARTING THE ENGINE ..... 2-3
BONNET RELEASE ..... 1-60
BRAKE PEDAL FREEPLAY ..... 6-22
BRAKE SYSTEM CHECKING ..... 6-18

**C**
CARE OF DISC ..... 1-79
CARE OF SEAT BELTS ..... 1-17
CARGO AREA COVER ..... 1-63
CATALYTIC CONVERTOR OPERATING
PRECAUTIONS ..... 7-3
CENTRAL DOOR LOCKS ..... 1-5
CHANGING A FLAT TYRE ..... 3-6
CHILD-PROOF REAR DOOR LOCK ..... 1-5
CHILD RESTRAINT SYSTEM ..... 1-21
CIGAR LIGHTER ..... 1-51
CLUTCH PEDAL FREEPLAY ..... 6-22
COMBINATION IGNITION SWITCH AND
STEERING LOCK ..... 2-3
CONSOLE TRAY ..... 1-52
COOLANT TEMPERATURE GAUGE ..... 1-42

**D**
DAILY OPERATING CHECKS ..... 6-6
DIGITAL CLOCK ..... 1-51
DOOR LOCKS ..... 1-5
DOOR WINDOWS ..... 1-10
DRINK HOLDER ..... 1-52
DRIVE BELTS ..... 6-23
DRIVING FOR ECONOMY ..... 2-14

**E**
EFFECTIVE BRAKING ..... 2-13
ELECTRIC COOLING FANS ..... 6-25
EMERGENCY TOWING ..... 3-12
EMISSION CONTROL SYSTEM ..... 7-2
ENGINE COMPARTMENT ..... 6-2
ENGINE COOLANT CHECKING AND
REPLACING ..... 6-10
ENGINE OIL AND FILTER REPLACEMENT ..... 6-9
ENGINE OIL CONSUMPTION ..... 6-8

ENGINE OIL REPLENISHMENT ..... 6-8
ENGINE OIL ..... 6-6

**F**
FRONT ASHTRAY ..... 1-52
FRONT SEAT ..... 1-11
FRONT FOG LIGHT SWITCH ..... 1-50
FUEL ECONOMY ..... 2-7
FUEL GAUGE ..... 1-41
FUEL RECOMMENDATIONS ..... 1-1
FUSE PANEL DESCRIPTION ..... 6-34
FUSIBLE LINKS ..... 6-24

**G**
GLOVE BOX ..... 1-57

**H**
HAZARD WARNING SYSTEM ..... 1-49
HEADLIGHT AIMING ADJUSTEMENT ..... 6-27
HEADLIGHT BULB ..... 6-28
HEADLIGHT LEVELING DEVICE SYSTEM ..... 1-53
HEAD RESTRAINT ADJUSTMENT ..... 1-12
HEATED REAR WINDOW ..... 1-50
HEATING AND COOLING CONTROL ..... 1-68
HEIGHT ADJUSTABLE FRONT SEAT
SHOULDER BELT ..... 1-18
HORN ..... 1-67
HOW TO USE LUGGAGE ROOM ..... 1-63

**I**
IF THE ENGINE CANNOT BE CRANKED ..... 3-2
IF THE ENGINE OVERHEATS ..... 3-4
IF THE ENGINE WILL NOT START ..... 3-2
IF THE EVENT OF A PUNCTURE ..... 3-6
IMMOBILIZER SYSTEM ..... 1-4
INDIVIDUAL CIRCUIT FUSES ..... 6-24
INSTRUMENT CLUSTER AND INDICATORS ..... 1-35
INTERIOR LIGHT ..... 1-56
INTERIOR REAR VIEW MIRROR ..... 1-59

**J**
JUMP STARTING ..... 3-3

**K**
KEY POSITIONS ..... 2-3

**L**
LIGHTING SWITCH ..... 1-47
LUGGAGE BOARD ..... 1-65
LUGGAGE NET ..... 1-65
LUGGAGE ROOM ..... 1-63
LUGGAGE UNDER TRAY ..... 1-64
LUMBAR SUPPORT ADJUSTMENT ..... 1-12

**M**
MAINTENANCE AND SERVICING REQUIREMENTS ..... 5-2
MAINTENANCE UNDER SEVERE USAGE CONDITIONS ..... 5-6
MANUAL TRANSAXLE ..... 2-8
MANUAL TRANSAXLE LUBRICANT ..... 6-15
MIRROR ..... 1-57
MULTI FUNCTION SWITCH ..... 1-46

**O**
ODOMETER ..... 1-43
OUTSIDE REAR VIEW MIRROR ..... 1-57 ~ 1-58
OUTSIDE REAR VIEW MIRROR HEAT ..... 1-59
OVERDRIVE SWITCH ..... 2-12

**P**
PARKING BRAKE ..... 1-59
POLISHING ..... 4-3
POLLEN FILTER ..... 1-76, 6-20
POWER STEERING FLUID LEVEL ..... 6-26
POWER STEERING HOSES ..... 6-26
POWER WINDOW ..... 1-10
PROTECTING YOUR HYUNDAI FROM CORROSION ..... 4-2

**R**
REAR FOG LIGHT SWITCH ..... 1-51
REAR SEAT ..... 1-13
REAR SEAT WARNING ..... 1-16
RECOMMENDED SHIFT SPEEDS ..... 2-9
REMOTE FUEL FILLER LID RELEASE ..... 1-61
REMOVAL OF WATER FROM THE FUEL FILTER ..... 6-26
REPLACING LIGHT BULBS ..... 6-28
RUNNING IN ..... 1-3

S
SCHEDULED MAINTENANCE ..... 5-3
SEAT ADJUSTMENT ..... 1-11
SEATBACK HOLDER ..... 1-63
SEAT BELT PRECAUTIONS ..... 1-16
SEAT BELTS ..... 1-18
SEAT POCKET ..... 1-63
SERVICE HISTORY ..... 5-2
SMOOTH CORNERING ..... 2-15
SNOW TYRES ..... 8-1
SPARE TYRE ..... 3-5
SPARE WHEEL ..... 3-6
SPARKING PLUG REPLACEMENT ..... 6-13
SPECTACLE CASE ..... 1-56
SPEEDOMETER ..... 1-42

SUPPLEMENTAL RESTRAINT (AIRBAG) SYSTEM ..... 1-29
STARTING THE ENGINE ..... 2-5
STEERING WHEEL FREEPLAY ..... 6-21
STEERING WHEEL LOCK ..... 2-4
STEERING WHEEL TILT LEVER ..... 1-67
STEREO SOUND SYSTEM ..... 1-77
SUN-VISOR ..... 1-66
SUNROOF ..... 1-53

**T**

TACHOMETER ..... 1-43
TAIL GATE ..... 1-62
TOWING ATTACHMENTS ..... 2-17
TRAILER AND CARAVAN TOWING ..... 2-17
TRIP ODOMETER ..... 1-43
TRIP COMPUTER ..... 1-44
TYPE PRESSURES ..... 8-3
TYRE BALANCING ..... 8-5
TYRE CHAINS ..... 8-4
TYRE REPLACEMENT ..... 8-5
TYRE ROTATION ..... 8-4

**U**

UNDERBODY COATINGS ..... 4-2

**V**

VALETING ..... 4-3
VEHICLE IDENTIFICATION NUMBER ..... 8-2
VEHICLE SPECIFICATION ..... 9-2
VEHICLE TOWING OR RECOVERY ..... 3-11
VENTILATION ..... 1-68

**W**

WHEEL REPLACEMENT ..... 8-5
WINDSCREEN WASHER RESERVOIR REPLENISHMENT ..... 6-15
WINDSCREEN WIPER BLADES ..... 6-14
WINDSHIELD WIPER/WASHER SWITCH ..... 1-48
WINTER MOTORING ..... 2-15