OPEL ZAFIRA TOURER

Owner's Manual

Contents

Introduction 2
In brief 6
Keys, doors and windows 20
Seats, restraints 36
Storage 66
Instruments and controls 96
Lighting 138
Climate control 150
Driving and operating 158
Vehicle care 223
Service and maintenance 269
Technical data 272
Customer information 292
Index 300

Introduction

Fuel	Designation			
Engine oil	Grade			
	Viscosity			
Tyre pressure		Tyre size	Front	Rear
	Summer tyres			
	Winter tyres			
Weights				
	Gross vehicle weight rating			
	- Kerb weight, basic model			
	= Loading			

Vehicle specific data

Please enter your vehicle's data on the previous page to keep it easily accessible. This information is available in the sections "Service and maintenance" and "Technical data" as well as on the identification plate.

Introduction

Your vehicle is a designed combination of advanced technology, safety, environmental friendliness and economy.

This Owner's Manual provides you with all the necessary information to enable you to drive your vehicle safely and efficiently.

Make sure your passengers are aware of the possible risk of accident and injury which may result from improper use of the vehicle.

You must always comply with the specific laws and regulations of the country that you are in. These laws may differ from the information in this Owner's Manual.

Disregarding the description given in this manual may affect your warranty.

When this Owner's Manual refers to a workshop visit, we recommend your Opel Service Partner. For gas vehicles we recommend an Opel Repairer authorised for servicing gas vehicles.

All Opel Service Partners provide first-class service at reasonable prices. Experienced mechanics trained by Opel work according to specific Opel instructions.

The customer literature pack should always be kept ready to hand in the vehicle.

Using this manual

- This manual describes all options and features available for this model. **Certain descriptions, including those for display and menu functions, may not apply to your vehicle due to model variant, country specifications, special equipment or accessories.**
- The "In brief" section will give you an initial overview.
- The table of contents at the beginning of this manual and within each section shows where the information is located.
- The index will enable you to search for specific information.
- This Owner's Manual depicts left-hand drive vehicles. Operation is similar for right-hand drive vehicles.
- The Owner's Manual uses the engine identifier code. The corresponding sales designation and engineering code can be found in the section "Technical data".
- Directional data, e.g. left or right, or front or back, always relate to the direction of travel.
- Displays may not support your specific language.
- Display messages and interior labelling are written in **bold** letters.

Danger, Warnings and Cautions

⚠Danger

Text marked ⚠**Danger** provides information on risk of fatal injury. Disregarding this information may endanger life.

⚠Warning

Text marked ⚠**Warning** provides information on risk of accident or injury. Disregarding this information may lead to injury.

Caution

Text marked **Caution** provides information on possible damage to the vehicle. Disregarding this information may lead to vehicle damage.

Symbols

Page references are indicated with ⇨. ⇨ means "see page".

Page references and index entries refer to the indented headings given in the section table of content.

We wish you many hours of pleasurable driving.

Adam Opel AG

In brief

Initial drive information

Vehicle unlocking

Press 🔓 to unlock the doors and load compartment. Open the doors by pulling the handles. To open the tailgate, push the touchpad switch below the handle.

Radio remote control ⇨ 21, Central locking system ⇨ 22, Load compartment ⇨ 25.

Seat adjustment

Longitudinal adjustment

Pull handle, slide seat, release handle. Try to move the seat back and forth to ensure that the seat is locked in place.

Seat position ⇨ 38, Manual seat adjustment ⇨ 39, Power seat adjustment ⇨ 41.

Backrest inclination

Pull lever, adjust inclination and release lever. Allow the seat to engage audibly.

Seat position ⇨ 38, Manual seat adjustment ⇨ 39, Power seat adjustment ⇨ 41.

Seat height

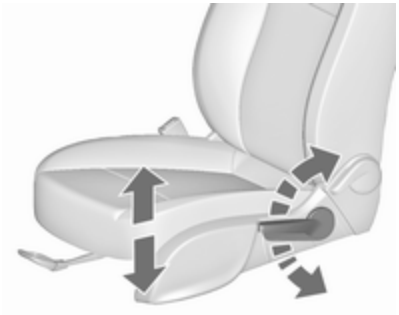

Lever pumping motion

up : seat higher
down : seat lower

Seat position ⇨ 38, Manual seat adjustment ⇨ 39, Power seat adjustment ⇨ 41.

Seat inclination

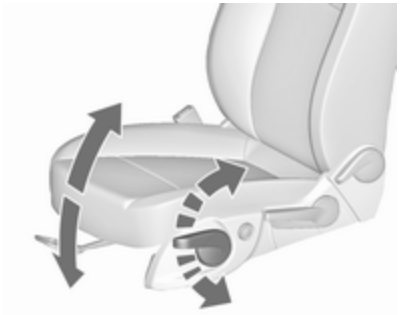

Lever pumping motion

up : front end higher
down : front end lower

Seat position ⇨ 38, Manual seat adjustment ⇨ 39, Power seat adjustment ⇨ 41.

Head restraint adjustment

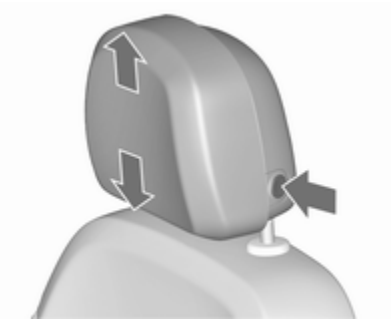

Press release button, adjust height, engage.

Head restraints ⇨ 36.

Seat belt

Pull out the seat belt and engage in belt buckle. The seat belt must not be twisted and must fit close against the body. The backrest must not be tilted back too far (maximum approx. 25 °).

To release belt, press red button on belt buckle.

Seat position ⇨ 38, Seat belts ⇨ 50, Airbag system ⇨ 54.

Mirror adjustment

Interior mirror

To adjust the mirror, move the mirror housing in the desired direction.

Manual anti-dazzle interior mirror ⇨ 30, Automatic anti-dazzle interior mirror ⇨ 31.

Exterior mirrors

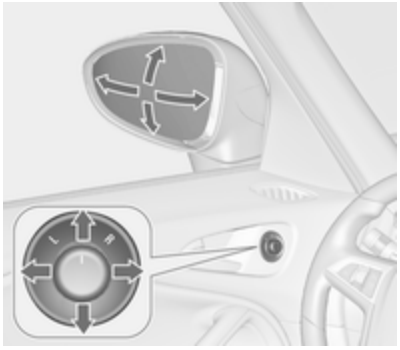

Select the relevant exterior mirror and adjust it.

Convex exterior mirrors ⇨ 29, Electric adjustment ⇨ 29, Folding exterior mirrors ⇨ 29, Heated exterior mirrors ⇨ 30.

Steering wheel adjustment

Unlock the lever, adjust the steering wheel, then engage the lever and ensure it is fully locked.

Do not adjust the steering wheel unless the vehicle is stationary and the steering wheel lock has been released.

Airbag system ⇨ 54, Ignition positions ⇨ 160.

Instrument panel overview

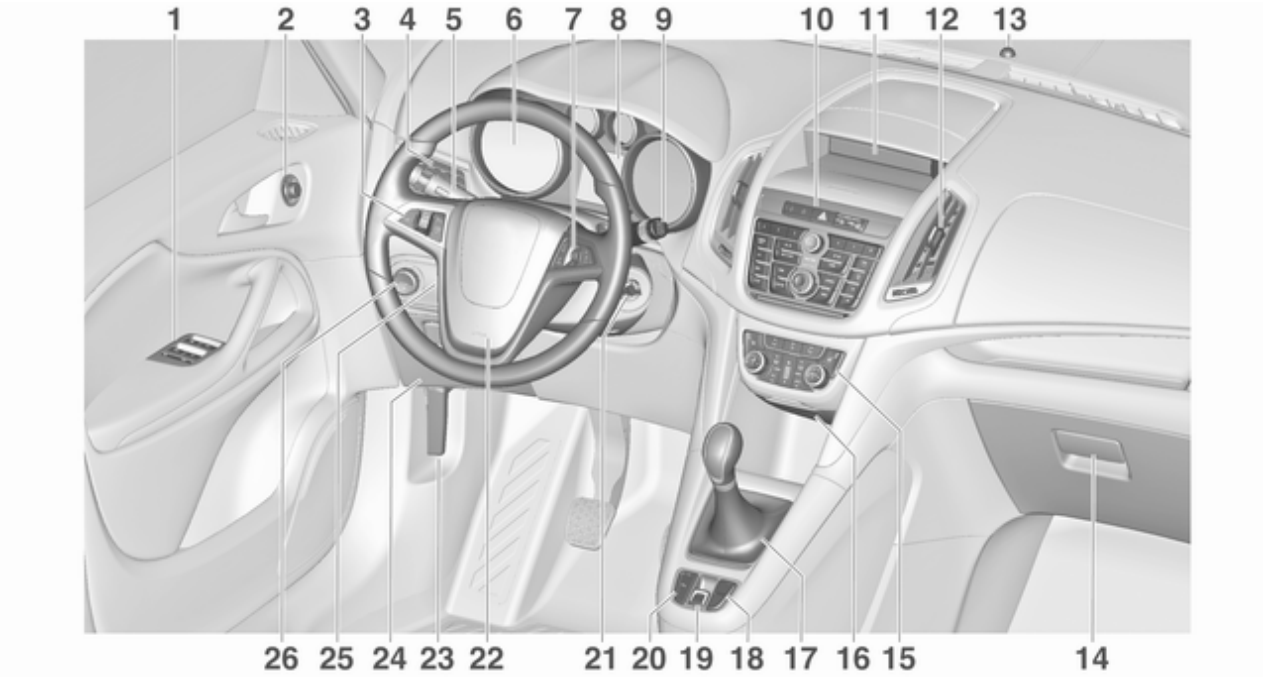

1 Power windows 32
2 Exterior mirrors 29
3 Cruise control 179
Speed limiter 180
Adaptive cruise control 182
Forward collision alert 188
4 Side air vents 156
5 Turn and lane-change signals, headlight flash, low beam and high beam, high beam assist 145
Exit lighting 149
Parking lights 146
Buttons for Driver Information Centre 116
6 Instruments 104
7 Steering wheel controls 97
8 Driver Information Centre 116
9 Windscreen wiper, windscreen washer system, headlight washer system, rear wiper, rear washer system 98
10 Central locking system 22
Hazard warning flashers 145
Sport mode 177
Tour mode 177
Fuel selector 105
Control indicator for airbag deactivation 111
Control indicator for front passenger seat belt 110
11 Info-Display 120
12 Centre air vents 156
13 Anti-theft alarm system status LED 27
14 Glovebox 66
15 Climate control system 150
16 AUX input, USB input, SD card slot 10
Power outlet 102
17 Selector lever, manual transmission 172
Automatic transmission 169
18 Traction Control system 176
Electronic Stability Control . 176
Lane departure warning 207
19 Electric parking brake 174
20 Parking assist systems 194
Eco button for stop-start system 161
21 Ignition switch with steering wheel lock 160
22 Horn 98
Driver airbag 57
23 Bonnet release lever 225
24 Fuse box 243
Storage compartment 68
25 Steering wheel adjustment . . 97
26 Light switch 138
Headlight range adjustment 141
Front fog lights 146
Rear fog light 146
Instrument illumination 147

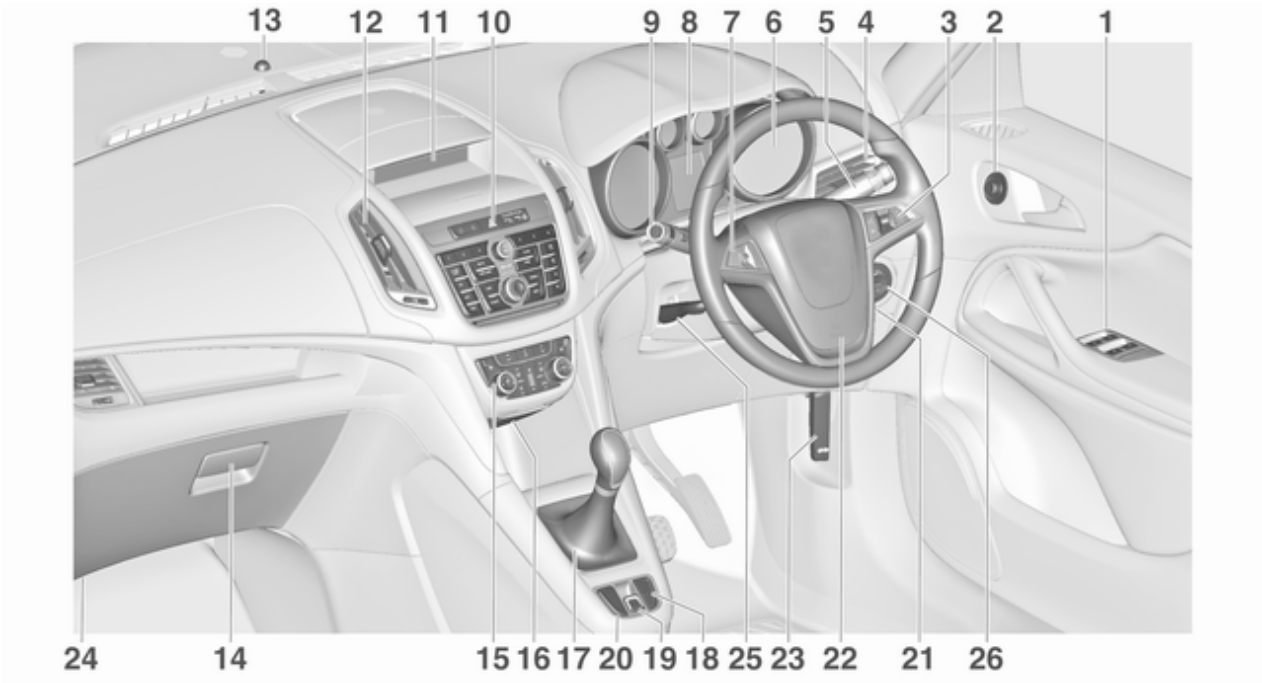
13
12
11
10
9
8
7
6
5
4
3
2
1
24
14
15
16
17
20
19
18
25
23
22
21
26

Exterior lighting

Turn light switch:

0 : lights off
⇛ : sidelights
≣D : low beam

Automatic light control

AUTO : automatic light control: exterior lighting is switched on and off automatically
⏻ : activation or deactivation of the automatic light control
⇛ : sidelights
≣D : low beam

Fog lights

Press light switch:

⇞D : front fog lights
⇟ : rear fog light

Lighting ⇨ 138.

Headlight flash, high beam and low beam

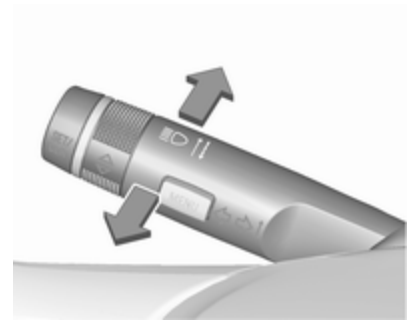

headlight flash : pull lever
high beam : push lever
low beam : push or pull lever

Automatic light control ⇨ 139, High beam ⇨ 140, High beam assist ⇨ 140, Headlight flash ⇨ 140, Adaptive forward lighting ⇨ 142.

Turn and lane-change signals

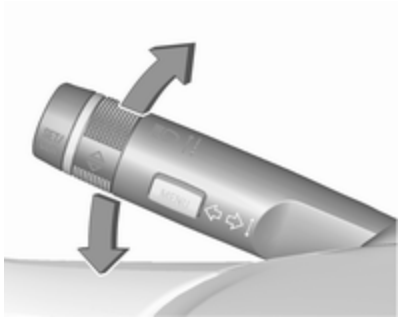

lever up : right turn signal
lever down : left turn signal

Turn and lane-change signals ⇨ 145, Parking lights ⇨ 146.

Hazard warning flashers

Operated by pressing ⚠.

Hazard warning flashers ⇨ 145.

Horn

Press 📯.

Washer and wiper systems

Windscreen wiper

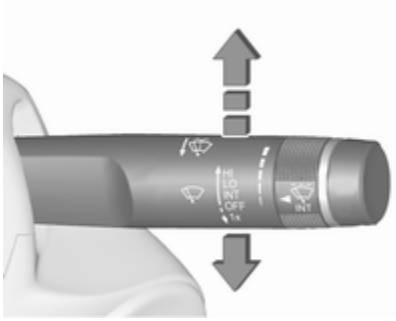

HI : fast
LO : slow
INT : interval wiping or automatic wiping with rain sensor
OFF : off

For a single wipe when the windscreen wiper is off, press the lever down to position **1x**.

Windscreen wiper ⇨ 98, Wiper blade replacement ⇨ 231.

Windscreen and headlight washer

Pull lever.

Windscreen and headlight washer system ⇨ 98, Washer fluid ⇨ 229.

Rear window wiper

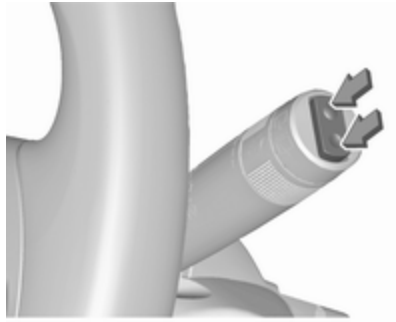

Press the rocker switch to activate the rear window wiper:

upper switch : continuous operation
lower switch : intermittent operation
middle position : off

Rear window washer

Push lever.

Washer fluid is sprayed on the rear window and the wiper wipes a few times.

Rear window wiper/washer ⇨ 100.

Climate control

Heated rear window, heated exterior mirrors

The heating is operated by pressing ⊞.

Heated rear window ⇨ 34.

Demisting and defrosting the windows

Press ⊞.

Set the temperature control to the highest level.

Heated rear window ⊞ on.

Climate control system ⇨ 150.

Transmission

Manual transmission

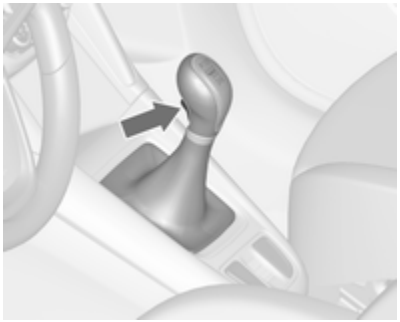

Reverse: with the vehicle stationary, depress clutch pedal, press the release button on the selector lever and engage the gear.

If the gear does not engage, set the lever to neutral, release the clutch pedal and depress again; then repeat gear selection.

Manual transmission ⇨ 172.

Automatic transmission

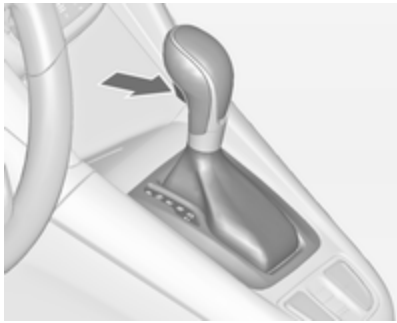

P : park
R : reverse
N : neutral
D : drive

Manual mode: move selector lever from **D** to the left.

+ : higher gear
− : lower gear

The selector lever can only be moved out of **P** when the ignition is on and the brake pedal is applied. To engage **P** or **R**, press the release button.

Automatic transmission ⇨ 169.

Starting off

Check before starting off

- Tyre pressure and condition ⇨ 247, ⇨ 288.
- Engine oil level and fluid levels ⇨ 226.
- All windows, mirrors, exterior lighting and number plates are free from dirt, snow and ice and are operational.
- Proper position of mirrors, seats, and seat belts ⇨ 29, ⇨ 38, ⇨ 51.
- Brake function at low speed, particularly if the brakes are wet.

Starting the engine

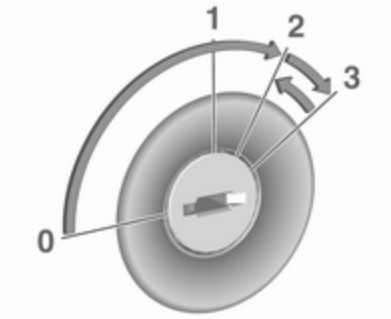

- Turn key to position **1**.
- Move the steering wheel slightly to release the steering wheel lock.
- Operate clutch and brake.
- Automatic transmission in **P** or **N**.
- Do not operate accelerator pedal.
- Diesel engines: turn the key to position **2** for preheating and wait until control indicator extinguishes.
- Turn key to position **3** and release.

Starting the engine ⇨ 160.

Stop-start system

If the vehicle is at a low speed or at a standstill and certain conditions are fulfilled, activate an Autostop as follows:

- Depress the clutch pedal.
- Shift the selector lever to **N**.
- Release the clutch pedal.

An Autostop is indicated by the needle at the **AUTOSTOP** position in the tachometer.

To restart the engine, depress the clutch pedal again.

Stop-start system ⇨ 161.

Parking

⚠Warning

- Do not park the vehicle on an easily ignitable surface. The high temperature of the exhaust system could ignite the surface.
- Always apply the parking brake. Activate the manual parking brake without pressing the release button. Apply as firmly as possible on a downhill slope or uphill slope. Depress brake pedal at the same time to reduce operating force.

  For vehicles with electric parking brake, pull switch Ⓟ for approx. one second.

  The electric parking brake is applied when control indicator Ⓟ illuminates ⇨ 111.
- Switch off the engine.
- If the vehicle is on a level surface or uphill slope, engage first gear or set the selector

lever to position **P** before removing the ignition key. On an uphill slope, turn the front wheels away from the kerb.

If the vehicle is on a downhill slope, engage reverse gear or set the selector lever to position **P** before removing the ignition key. Turn the front wheels towards the kerb.

- Close the windows.
- Remove the ignition key from the ignition switch. Turn the steering wheel until the steering wheel lock is felt to engage.

  For vehicles with automatic transmission, the key can only be removed when the selector lever is in position **P**.

- Lock the vehicle by pressing 🔒 on the radio remote control.
- Activate the anti-theft alarm system ⇨ 27.
- The engine cooling fans may run after the engine has been switched off ⇨ 225.

Caution

After running at high engine speeds or with high engine loads, operate the engine briefly at a low load or run in neutral for approx. 30 seconds before switching off, in order to protect the turbocharger.

Keys, locks ⇨ 20, Laying the vehicle up for a long period of time ⇨ 224.

Keys, doors and windows

Keys, locks **20**
Keys 20
Car Pass 21
Radio remote control 21
Central locking system 22
Memorised settings 24
Automatic locking 24
Child locks 25
Doors **25**
Load compartment 25
Vehicle security **26**
Anti-theft locking system 26
Anti-theft alarm system 27
Immobiliser 28
Exterior mirrors **29**
Convex shape 29
Electric adjustment 29
Folding mirrors 29
Heated mirrors 30
Interior mirrors **30**
Manual anti-dazzle 30
Automatic anti-dazzle 31
Windows **31**
Windscreen 31
Manual windows 31
Power windows 32
Heated rear window 34
Sun visors 34
Roller blinds 34
Roof **34**
Glass panel 34

Keys, locks

Keys

Caution
Do not attach heavy or bulky items to the ignition key.

Replacement keys

The key number is specified in the Car Pass or on a detachable tag.

The key number must be quoted when ordering replacement keys as it is a component of the immobiliser system.

Locks ⇨ 265.

The code number of the adapter for the locking wheel nuts is specified on a card. It must be quoted when ordering a replacement adapter.

Wheel changing ⇨ 256.

Key with foldaway key section

Press button to extend. To fold the key, first press the button.

Car Pass

The Car Pass contains security related vehicle data and should therefore be kept in a safe place.

When the vehicle is taken to a workshop, this vehicle data is needed in order to perform certain operations.

Radio remote control

Used to operate:

- central locking system
- anti-theft locking system
- anti-theft alarm system
- power windows

The radio remote control has a range of approx. 20 metres. It can be restricted by external influences. The hazard warning flashers confirm operation.

Handle with care, protect from moisture and high temperatures and avoid unnecessary operation.

Fault

If the central locking system cannot be operated with the radio remote control, it may be due to the following:

- The range is exceeded.
- The battery voltage is too low.
- Frequent, repeated operation of the radio remote control while not in range, which will require re-synchronisation.
- Overload of the central locking system by operating at frequent intervals, the power supply is interrupted for a short time.
- Interference from higher-power radio waves from other sources.

Unlocking ⇨ 22.

Basic settings

Some settings can be changed in the Settings menu in the Info-Display. Vehicle personalisation ⇨ 129.

Radio remote control battery replacement

Replace the battery as soon as the range reduces.

Batteries do not belong in household waste. They must be disposed of at an appropriate recycling collection point.

Key with foldaway key section

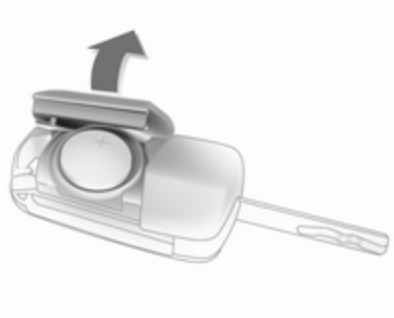

Extend the key and open the unit. Replace the battery (battery type CR 2032), paying attention to the installation position. Close the unit and synchronise.

Radio remote control synchronisation

After replacing the battery, unlock the door with the key in the driver's door lock. The radio remote control will be synchronised when you switch on the ignition.

Central locking system

Unlocks and locks doors, load compartment and fuel filler flap.

A pull on an interior door handle unlocks the respective door. Pulling the handle once more opens the door.

Note
In the event of an accident in which airbags or belt pretensioners are deployed, the vehicle is automatically unlocked.

Note
A short time after unlocking with the remote control, the doors are relocked automatically if no door has been opened.

Unlocking

Press 🔓.

Two settings are selectable:

- To unlock only the driver's door, load compartment and fuel filler flap, press 🔓 once. To unlock all doors, press 🔓 twice.
- Press 🔓 once to unlock all doors, load compartment and fuel filler flap.

The setting can be changed in the Settings menu in the Info-Display. Vehicle personalisation ⇨ 129.

The setting can be saved for the key being used. Memorised settings ⇨ 24.

Locking

Close doors, load compartment and fuel filler flap.

Press 🔒.

If the driver's door is not closed properly, the central locking system will not work.

Unlocking and opening the tailgate

Press 🔓 when the ignition is off. The tailgate is released to be unlocked and opened by pushing the touchpad switch below the handle.

Central locking buttons

Locks or unlocks all doors, the load compartment and fuel filler flap from the passenger compartment.

Press 🔒 to lock.

Press 🔓 to unlock.

Fault in radio remote control system

Unlocking

Manually unlock the driver's door by turning the key in the lock. Switch on the ignition and press 🔓 to unlock all doors, load compartment and fuel filler flap. By switching on the ignition, the anti-theft locking system is deactivated.

Locking

Manually lock the driver's door by turning the key in the lock.

Fault in central locking system

Unlocking

Manually unlock the driver's door by turning the key in the lock. The other doors can be opened by pulling the interior handle twice. The load compartment and fuel filler flap cannot be opened. To deactivate the anti-theft locking system, switch on the ignition ⇨ 27.

Locking

Push inside locking knob of all doors except driver's door. Then close the driver's door and lock it from the outside with the key. The fuel filler flap and tailgate cannot be locked.

Memorised settings

Whenever the key is removed from the ignition switch, the following settings are automatically memorised by the key:

- lighting
- Infotainment system
- central locking system
- Sport mode settings
- comfort settings

The saved settings are automatically used the next time the memorised key is inserted into the ignition switch and turned to position **1** ⇨ 160.

A precondition is that **Personalization by driver** is activated in the personal settings of the Graphic-Info-Display. This must be set for each key used. On vehicles equipped with Colour-Info-Display, the personalisation is permanently activated.

Vehicle personalisation ⇨ 129.

Automatic locking

This security feature can be configured to automatically lock all doors, load compartment and fuel filler flap as soon as a certain speed is exceeded.

Additionally, it is configurable to unlock the driver's door or all doors after the ignition is switched off and the ignition key is removed (manual

transmission) or the selector lever is moved to position **P** (automatic transmission).

Settings can be changed in the Settings menu in the Info-Display. Vehicle personalisation ⇨ 129.

The settings can be saved for the key being used ⇨ 24.

Child locks

⚠ Warning

Use the child locks whenever children are occupying the rear seats.

Using a key or suitable screwdriver, turn the child lock in the rear door to the horizontal position. The door cannot be opened from the inside. For deactivation turn the child lock to the vertical position.

Doors

Load compartment

Tailgate

Opening

After unlocking, push the touchpad switch under the tailgate moulding and open the tailgate.

Central locking system ⇨ 22.

Closing

Use the interior handle.

Do not push the touchpad switch under the tailgate moulding whilst closing as this will unlock the tailgate again.

Central locking system ⇨ 22.

General hints for operating tailgate

⚠ Danger

Do not drive with the tailgate open or ajar, e.g. when transporting bulky objects, since toxic exhaust gases, which cannot be seen or smelled, could enter the vehicle. This can cause unconsciousness and even death.

Caution

Before opening the tailgate, check overhead obstructions, e.g. a garage door, to avoid damage to the tailgate. Always check the moving area above and behind the tailgate.

Note
The installation of certain heavy accessories onto the tailgate may affect its ability to remain open.

Vehicle security

Anti-theft locking system

⚠ Warning

Do not use the system if there are people in the vehicle! The doors cannot be unlocked from the inside.

The system deadlocks all the doors. All doors must be closed otherwise the system cannot be activated.

If the ignition was on, the driver's door must be opened and closed once so that the vehicle can be secured.

Unlocking the vehicle disables the mechanical anti-theft locking system. This is not possible with the central locking button.

Activating

Press 🔒 on the radio remote control twice within 15 seconds.

Anti-theft alarm system

The anti-theft alarm system is combined with the anti-theft locking system.

It monitors:

- doors, tailgate, bonnet
- passenger compartment including adjoining load compartment
- vehicle inclination, e.g. if it is raised
- ignition

Activation

- Self-activated 30 seconds after locking the vehicle (initialisation of the system).

- Directly by pressing 🔒 on the radio remote control once more after locking.

Note
Changes to the vehicle interior such as the use of seat covers, and open windows or sunroof, could impair the function of passenger compartment monitoring.

Activation without monitoring of passenger compartment and vehicle inclination

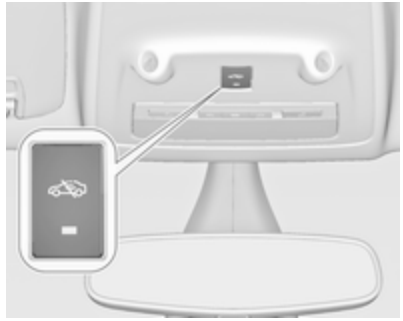

Switch off the monitoring of passenger compartment and vehicle inclination when animals are being left in the vehicle, because of high volume ultrasonic signals or

movements triggering the alarm. Also switch off when the vehicle is on a ferry or train.

1. Close tailgate, bonnet and windows.
2. Press . LED in the button illuminates for a maximum of ten minutes.
3. Close doors.
4. Activate the anti-theft alarm system.

Status message is displayed in the Driver Information Centre.

Status LED

Status LED is integrated into the sensor on top of the instrument panel.

Status during the first 30 seconds of anti-theft alarm system activation:

LED illuminates	:	test, arming delay
LED flashes quickly	:	doors, tailgate or bonnet not completely closed, or system fault

Status after system is armed:

LED flashes slowly	:	system is armed

Seek the assistance of a workshop in the event of faults.

Deactivation

Unlocking the vehicle deactivates the anti-theft alarm system.

Alarm

When triggered, the alarm horn sounds and the hazard warning lights flash simultaneously. The number and duration of alarm signals are stipulated by legislation.

The alarm can be silenced by pressing any button on the radio remote control or by switching on the ignition.

The anti-theft alarm system can be deactivated only by pressing or by switching on the ignition.

A triggered alarm, which has not been interrupted by the driver, will be indicated by the hazard warning lights. They will flash quickly three times when the vehicle is next unlocked with the radio remote control. Additionally, a warning message or a warning code is displayed in the Driver Information Centre after switching on the ignition.

Vehicle messages ⇨ 122.

Immobiliser

The system is part of the ignition switch and checks whether the vehicle is allowed to be started with the key being used.

The immobiliser is activated automatically after the key has been removed from the ignition switch.

If the control indicator flashes when the ignition is on, there is a fault in the system; the engine cannot be started. Switch off the ignition and repeat the start attempt.

If the control indicator continues flashing, attempt to start the engine using the spare key and seek the assistance of a workshop.

Note
The immobiliser does not lock the doors. You should always lock the vehicle after leaving it and switch on the anti-theft alarm system ⇨ 22, ⇨ 27.

Control indicator ⇨ 115.

Exterior mirrors

Convex shape

The convex exterior mirror contains an aspherical area and reduces blind spots. The shape of the mirror makes objects appear smaller, which will affect the ability to estimate distances.

Side blind spot alert ⇨ 201.

Electric adjustment

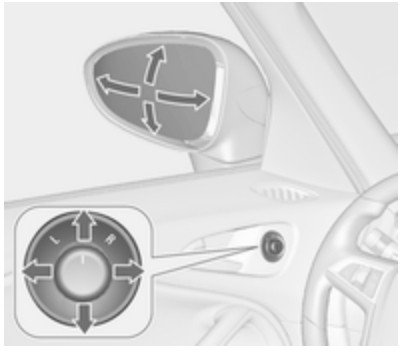

Select the relevant exterior mirror by turning the control to left **(L)** or right **(R)**. Then swivel the control to adjust the mirror.

In position **0** no mirror is selected.

Folding mirrors

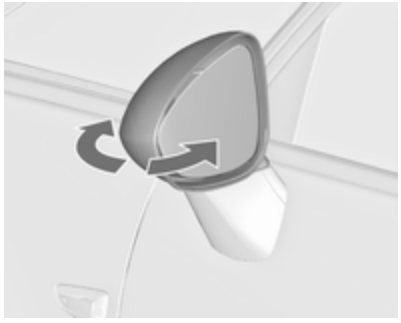

For pedestrian safety, the exterior mirrors will swing out of their normal mounting position if they are struck with sufficient force. Reposition the mirror by applying slight pressure to the mirror housing.

Electric folding

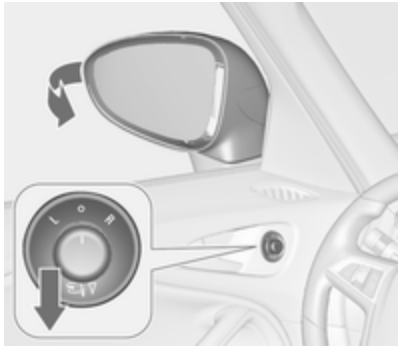

Turn control to **0**, then push the control down. Both exterior mirrors will fold.

Push the control down again - both exterior mirrors return to their original position.

If an electrically folded mirror is manually extended, pressing down the control will only electrically extend the other mirror.

Heated mirrors

Operated by pressing ⊞.

Heating works with the engine running and is switched off automatically after a short time.

Interior mirrors

Manual anti-dazzle

To reduce dazzle, adjust the lever on the underside of the mirror housing.

Automatic anti-dazzle

Dazzle from following vehicles at night is automatically reduced.

Windows

Windscreen

Heat-reflecting windscreen

The heat-reflecting windscreen has a coating which reflects solar radiation. Also data signals, e.g. from toll stations, might be reflected.

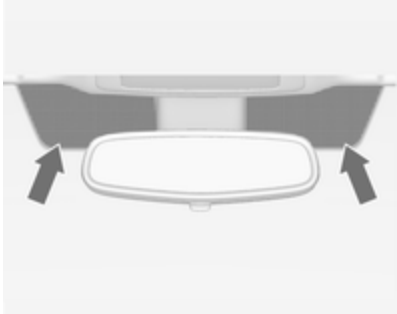

The marked areas on the windscreen are not covered with the coating. Devices for electronic data recording and fee payment must be attached in these areas. Otherwise data recording malfunctions may occur.

Windscreen stickers

Do not attach stickers such as toll road stickers or similar on the windscreen in the area of the interior mirror. Otherwise the detection zone of the sensor and the view area of the camera in the mirror housing could be restricted.

Windscreen replacement

Caution

If the vehicle has a front-looking camera sensor for the driver assistance systems, it is very important that any windscreen replacement is performed accurately according to Opel specifications. Otherwise, these systems may not work properly and there is a risk of unexpected behaviour and/or messages from these systems.

Manual windows

The door windows can be opened or closed with the window cranks.

Power windows

⚠ Warning

Take care when operating the power windows. Risk of injury, particularly to children.

If there are children on the rear seats, switch on the child safety system for the power windows.

Keep a close watch on the windows when closing them. Ensure that nothing becomes trapped in them as they move.

Switch on ignition to operate power windows. Retained power off ⇨ 160.

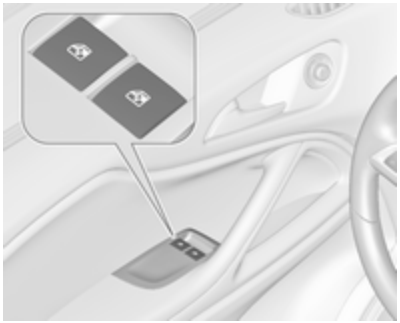

Operate the switch for the respective window by pushing to open or pulling to close.

Pushing or pulling gently to the first detent: window moves up or down as long as the switch is operated.

Pushing or pulling firmly to the second detent and then releasing: window moves up or down automatically with safety function enabled. To stop movement, operate the switch once more in the same direction.

Safety function

If the window glass encounters resistance above the middle of the window during automatic closing, it is immediately stopped and opened again.

Override safety function

In the event of closing difficulties due to frost or the like, switch on the ignition, then pull the switch to the first detent and hold. The window moves up without safety function enabled. To stop movement, release the switch.

Child safety system for rear windows

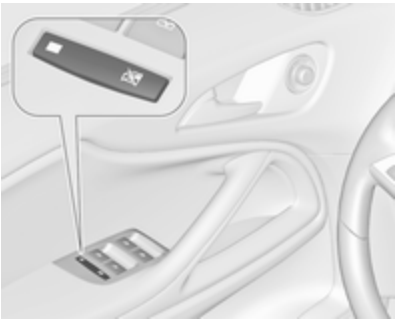

Press ⊠ to deactivate rear door power windows, the LED illuminates. To activate, press ⊠ again.

Operating windows from outside

The windows can be operated remotely from outside the vehicle.

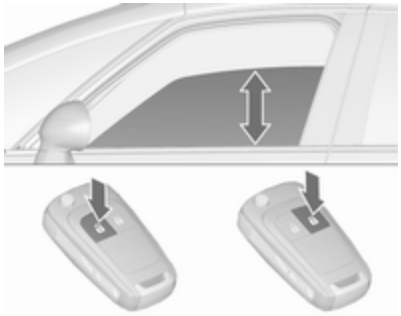

Press and hold 🔓 to open windows.

Press and hold 🔒 to close windows.

Release button to stop window movement.

If the windows are fully opened or closed, the hazard warning lights will flash twice.

Overload

If the windows are repeatedly operated within short intervals, the window operation is disabled for some time.

Initialising the power windows

If the windows cannot be closed automatically (e.g. after disconnecting the vehicle battery), a warning message or a warning code is displayed in the Driver Information Centre.

Vehicle messages ⇨ 122.

Activate the window electronics as follows:

1. Close doors.
2. Switch on ignition.
3. Pull switch until the window is closed and keep pulling for additional two seconds.
4. Repeat for each window.

Heated rear window

Operated by pressing ⊞.

Heating works with the engine running and is switched off automatically after a short time.

Depending on the engine type, the heated rear window comes on automatically when the diesel particle filter is being cleaned.

Sun visors

The sun visors can be folded down or swivelled to the side to prevent dazzling.

If the sun visors have integral mirrors, the mirror covers should be closed when driving.

A ticket holder is located on the backside of the sun visor.

Roller blinds

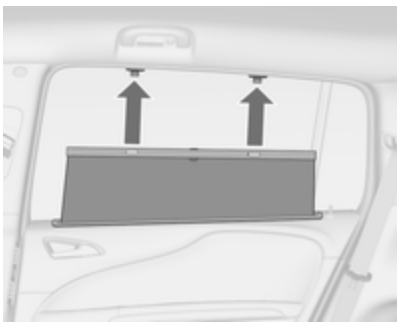

To reduce sunlight at the second row seats, pull the blind upwards using the grip and engage it at the top of the door frame.

Roof

Glass panel

Panorama roof

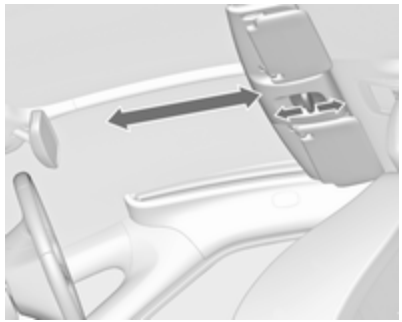

Pull the slider to open the cover of the panorama roof.

Push the slider to cover the panorama roof.

Sunblind

The sunblind above the rear seats is electrically operated.

: open
: close

Press or gently to the first detent: the sunblind is opened or closed as long as the switch is operated.

Press or firmly to the second detent and then release: the sunblind is opened or closed automatically. To stop movement, operate the switch once more.

Safety function

If the sunblind encounters resistance during automatic closing, it is immediately stopped and opened again.

Function standby

In ignition switch position **1** the sunblind is operational ⇨ 160.

Initialising after a power failure

After a power failure, it may only be possible to operate the sunblind to a limited extent. Initialise the system as follows:

1. Turn key in ignition switch to position **1**.
2. Press (open) twice gently to the first detent, the sunblind opens slightly.
3. Immediately press (close) twice gently to the first detent, the sunblind closes slightly.

   After step 3 the sunblind is in initialising mode without safety function.
4. Press (open) gently to the first detent until the sunblind is completely opened.
5. Press (close) gently to the first detent until the sunblind is completely closed.

After this procedure, the sunblind is initialised with safety function activated.

When or is pressed firmly to the second detent during initialising, the procedure is cancelled.

Seats, restraints

Head restraints **36**
Active head restraints 37
Front seats **38**
Seat position 38
Manual seat adjustment 39
Power seat adjustment 41
Armrest 42
Heating 43
Rear seats **44**
Second row seats 44
Third row seats 48
Seat belts **50**
Three-point seat belt 51
Airbag system **54**
Front airbag system 57
Side airbag system 57
Curtain airbag system 58
Airbag deactivation 58
Child restraints **60**
Child restraint systems 60
Child restraint installation locations 62
ISOFIX child restraint systems . . 65
Top-tether fastening eyes 65

Head restraints

Position

⚠Warning

Only drive with the head restraint set to the proper position.

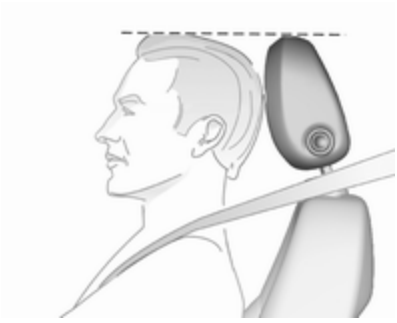

The upper edge of the head restraint should be at upper head level. If this is not possible for extremely tall people, set to highest position, and set to lowest position for small people.

Adjustment

Head restraints on front seats

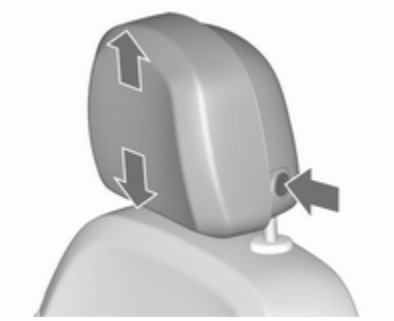

Height adjustment
Press release button, adjust height, engage.

Horizontal adjustment

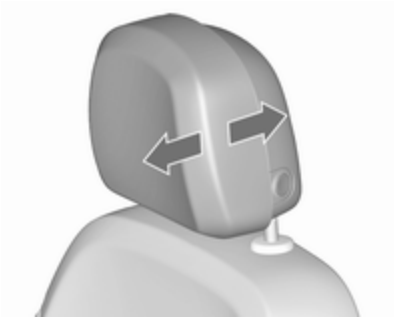

To adjust horizontally, pull the head restraint forwards. It engages in several positions.

To return to its rearmost position, pull fully forwards and release.

Head restraints on rear seats

Height adjustment

Pull the head restraint upwards or press the catch to release and push the head restraint downwards.

Removal

Press both catches, pull the head restraint upwards and remove.

Active head restraints

In the event of a rear-end impact, the front parts of the active head restraints are moved slightly forwards. Thus the head is supported so that the risk of whiplash injury is reduced.

Note
Approved accessories may only be attached if the seat is not in use.

Front seats

Seat position

⚠ Warning

Only drive with the seat correctly adjusted.

⚠ Warning

Never adjust seats while driving as they could move uncontrollably.

⚠ Danger

Do not sit nearer than 25 cm from the steering wheel, to permit safe airbag deployment.

⚠ Warning

Never store any objects under the seats.

- Sit with buttocks as far back against the backrest as possible. Adjust the distance between the seat and the pedals so that legs are slightly angled when pressing the pedals. Slide the front passenger seat as far back as possible.
- Set seat height high enough to have a clear field of vision on all sides and of all display instruments. There should be at least one hand of clearance between head and the roof frame. Your thighs should rest lightly on the seat without pressing into it.
- Sit with shoulders as far back against the backrest as possible. Set the backrest rake so that it is possible to easily reach the steering wheel with arms slightly bent. Maintain contact between shoulders and the backrest when turning the steering wheel. Do not angle the backrest too far back. We recommend a maximum rake of approx. 25°.
- Adjust seat and steering wheel in a way that the wrist rests on top of the steering wheel while the arm is fully extended and shoulders are on the backrest.
- Adjust the steering wheel ⇨ 97.
- Adjust the head restraint ⇨ 36.
- Adjust the height of the seat belt ⇨ 51.
- Adjust the thigh support so that there is a space approx. two fingers wide between the edge of the seat and the hollow of the knee.
- Adjust the lumbar support so that it supports the natural shape of the spine.

Manual seat adjustment

Drive only with engaged seats and backrests.

Longitudinal adjustment

Pull handle, slide seat, release handle. Try to move the seat back and forth to ensure that the seat is locked in place.

Backrest inclination

Pull lever, adjust inclination and release lever. Allow the backrest to engage audibly.

Folding passenger seat backrest ⇨ 79.

Seat height

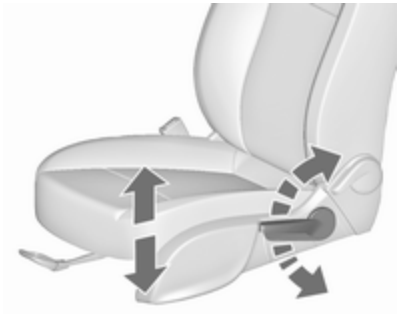

Lever pumping motion

up : seat higher
down : seat lower

Seat inclination

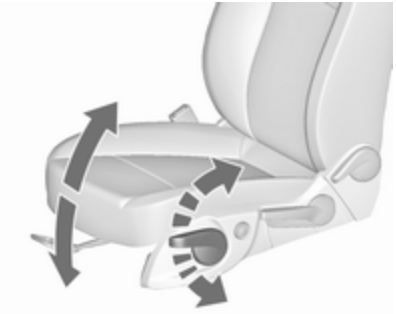

Lever pumping motion

up : front end higher
down : front end lower

Lumbar support

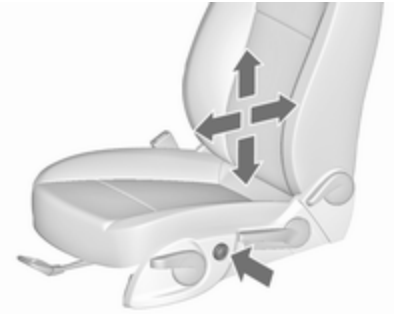

Adjust lumbar support using the four-way switch to suit personal requirements.

Moving support up and down: push switch up or down.

Increasing and decreasing support: push switch forwards or backwards.

Adjustable thigh support

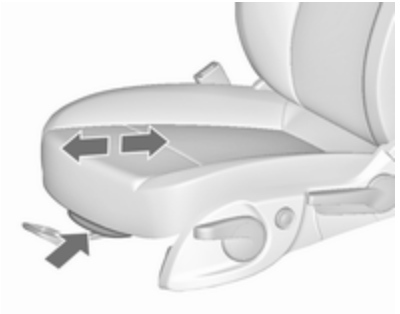

Pull the lever and slide the thigh support.

Power seat adjustment

⚠ Warning

Care must be taken when operating the power seats. There is a risk of injury, particularly for children. Objects could become trapped.

Keep a close watch on the seats when adjusting them. Vehicle passengers should be informed accordingly.

Longitudinal adjustment

Move switch forwards/backwards.

Seat height

Move switch upwards/downwards.

Seat inclination

Move front of switch upwards/ downwards.

Backrest inclination

Turn switch forwards/backwards.

Lumbar support

Adjust lumbar support using the four-way switch to suit personal requirements.

Moving support up and down: push switch up or down.

Increasing and decreasing support: push switch forwards or backwards.

Adjustable thigh support

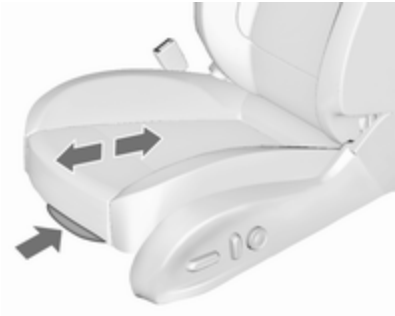

Pull the lever and slide the thigh support.

Overload
If the seat setting is electrically overloaded, the power supply is automatically cut-off for a short time.

Armrest

Base armrest

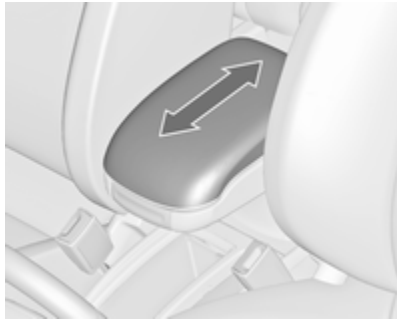

The armrest can be slid forwards. Under the armrest there is a storage drawer.

Armrest storage ⇨ 69.

FlexConsole armrest

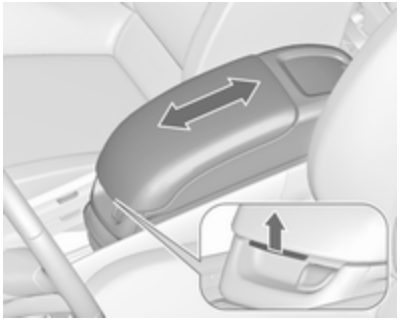

The armrest can be moved in a centre console. Pull the handle to slide the armrest.

There are two storages, a storage drawer and a movable cupholder in the armrest console.

Armrest storage ⇨ 69.

Removing the armrest

Flex console armrest can be removed.

Press fastenings inward and fold down locking mechanism at the rear end of the armrest.

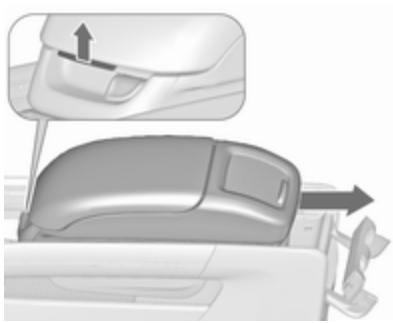

Pull the handle in front of the armrest and slide armrest rearwards out of the console.

Installation in reverse order.

Heating

Adjust heating to the desired setting by pressing for the respective seat one or more times. The control indicator in the button indicates the setting.

Prolonged use of the highest setting for people with sensitive skin is not recommended.

Seat heating is operational when engine is running and during an Autostop.

Stop-start system ⇨ 161.

Rear seats

Second row seats

⚠ Warning

When seats or backrests of second and third seat row are being adjusted or folded, keep hands and feet away from the moving area.

Never store objects under the seats.

Never adjust seats while driving as they could move uncontrollably.

Drive only with engaged seats and backrests.

Base seats

Seat positioning

Each seat of the second seat row can be individually moved forward or backward.

Pull handle, slide seat, release handle and allow seat to engage.

The seats can be engaged in intermediate positions.

Seat backrests

The backrest inclination of each seat can be individually adjusted in three positions.

Pull the loop, adjust inclination, release strap and allow backrest to engage.

⚠ Warning

Use vertical position of the backrest only for increased luggage volume and not as seating position.

Load compartment, folding down the backrests ⇨ 79.

Easy entry function

To permit an easy entrance to the seats of the third row, the outer seats of the second row can be tilted.

Pull release lever, fold backrest and move the seat to the front.

Folding back easy entry

First move seat to desired position and then raise backrest.

⚠ Warning

When folding up, ensure that the seat is securely locked in position before driving. Failure to do so may result in personal injury in the event of hard braking or a collision.

Lounge seats

Two types of use are possible:

Normal seats, all three seats are usable and individually adjustable.

Lounge seats, only outer seats are usable but with most comfortable adjustment.

Seat positioning

In normal position, the three seats of the second seat row can be individually moved in longitudinal direction.

Pull handle under the seat, slide seat, release handle and allow seat to engage.

In lounge position, the outer seats are additionally movable in transverse direction when the centre seat backrest is folded to an armrest.

The seats can be engaged in intermediate positions.

Change from normal seat position to lounge seat position

- Push down head restraint of centre seat by pressing the catch ⇨ 36.

- Fold down the centre backrest by pulling the loop.

- Push the left and right buttons near the centre head restraint and fold in the outer backrest parts, to be used as an armrest. Engage backrest parts in armrest position.
- Pull the handle under each outer seat and slide seats backwards. In the rear area the seats move in transverse direction. Allow seat to engage.

  This is the most comfortable seating position for the outer seats.

Caution

With seats in lounge position:

- Do not use easy entry function ⇨ 44.
- Do not fold down backrests of the outer seats.
- Do not fold up centre backrest.
- Do not fold up or down the seats in the third row ⇨ 48.

This would damage the seats.

⚠ Warning

Move seats only to lounge position if seats in the third row are not occupied.

Change from lounge seat position to normal seat position

- Pull the handle under each outer seat and slide seats to forward position.

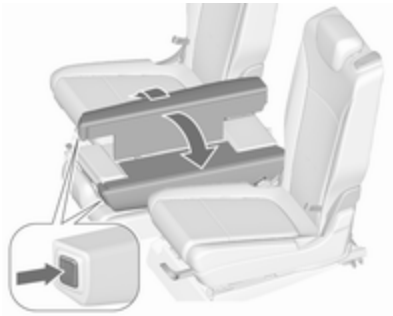

- Push the left and right buttons near the centre head restraint and fold back both armrest parts to the centre backrest.
- Fold up centre backrest. Adjust position by pulling the strap.

Caution

Before folding up the centre seat backrest make sure that the armrest parts are folded down.

Ensure that all positions are engaged correctly.

Seat backrests

The backrest inclination can be individually adjusted to three positions.

Pull the loop, adjust inclination, release strap and allow backrest to engage.

⚠ Warning

Use vertical position of the backrest only for increased luggage volume and not as seating position.

Load compartment, folding down the backrests ⇨ 79.

Easy entry function

To permit an easy entrance to the seats of the third row, the outer seats of the second row can be tilted.

Pull release lever, fold backrest and move the seat towards the front.

Caution

With seats in lounge position:

- Do not use easy entry function.
- Do not pull strap to adjust backrest inclination.

This would damage the seats.

Folding back easy entry

First move seat to desired position and then raise backrest.

⚠ Warning

When folding up, ensure that the seat is securely locked in position before driving. Failure to do so may result in personal injury in the event of heavy braking or collision.

Third row seats

⚠ Warning

When seats or backrests of second and third seat row are being adjusted or folded, keep hands and feet away from the moving area.

Never store objects under the seats.

Never adjust seats while driving as they could move uncontrollably.

Drive only with engaged seats and backrests.

Caution

Before setting up or folding down seats, all components must be removed from the side rails and from the lashing eyes.

Lashing eyes must be in stored position.

The seats in the third row can be folded down to the vehicle floor if they are not required, or for increasing the size of the load compartment.

The seats in the third row can only be used if the second seat row is not in the lounge position.

Setting up the seats

- Fold in interior protection mat ⇨ 84 and remove load compartment cover ⇨ 82.

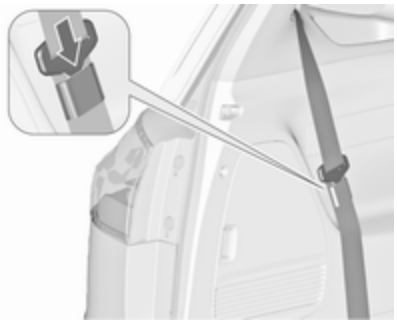

- Insert the latch plate of the seat belt on each side into the pocket that is mounted at the belt.

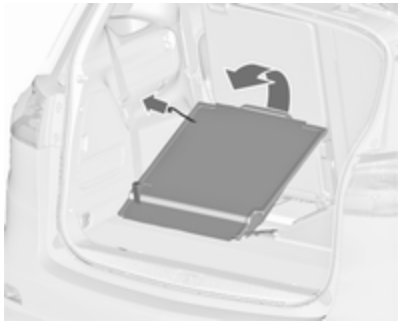

- Pull up the seat by the upper loop, fold out and allow seat to engage in upright position.

Folding down the seats in the vehicle floor

- Push down head restraint by pressing the catch ⇨ 36.
- Insert the latch plate of the seat belt on each side into the pocket that is mounted at the belt.

- Pull the lower loop, simultaneously swing the backrest forwards until the seat is lowered into the vehicle floor.
- Install the interior protection mat ⇨ 84 and load compartment cover ⇨ 82.

Seat belts

The seat belts are locked during heavy acceleration or deceleration of the vehicle holding the occupants in the sitting position. Therefore the risk of injury is considerably reduced.

⚠ Warning

Fasten seat belt before each trip.

In the event of an accident, people not wearing seat belts endanger their fellow occupants and themselves.

Seat belts are designed to be used by only one person at a time. Child restraint system ⇨ 60.

Periodically check all parts of the belt system for damage, pollution and proper functionality.

Have damaged components replaced. After an accident, have the belts and triggered belt pretensioners replaced by a workshop.

Note
Make sure that the belts are not damaged by shoes or sharp-edged objects or trapped. Prevent dirt from getting into the belt retractors.

Seat belt reminder

Each seat is equipped with a seat belt reminder, indicated for front seats by control indicator in the tachometer ⇨ 110, or for rear seats by symbols or in the Driver Information Centre ⇨ 116.

Belt force limiters

On the front seats, stress on the body is reduced by the gradual release of the belt during a collision.

Belt pretensioners

In the event of a head-on or rear-end collision of a certain severity, the front seat belts are tightened.

⚠ Warning

Incorrect handling (e.g. removal or fitting of belts) can trigger the belt pretensioners.

Deployment of the belt pretensioners is indicated by continuous illumination of control indicator ⇨ 110.

Triggered belt pretensioners must be replaced by a workshop. Belt pretensioners can only be triggered once.

Note
Do not affix or install accessories or other objects that may interfere with the operation of the belt pretensioners. Do not make any modifications to belt pretensioner components as this will invalidate the vehicle type approval.

Three-point seat belt

Fasten

Withdraw the belt from the retractor, guide it untwisted across the body and insert the latch plate into the buckle. Tighten the lap belt regularly whilst driving by pulling the shoulder belt.

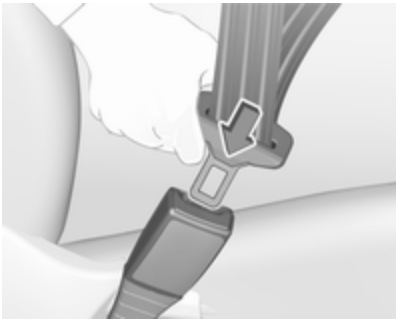

Loose or bulky clothing prevents the belt from fitting snugly. Do not place objects such as handbags or mobile phones between the belt and your body.

⚠ Warning

The belt must not rest against hard or fragile objects in the pockets of your clothing.

Seat belt reminder, ⇨ 110, ⇨ 116

Height adjustment

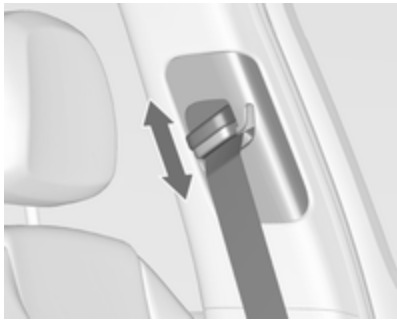

1. Pull belt out slightly.
2. Shift the height adjuster upwards or press button to disengage and push the height adjuster downwards.

Adjust the height so that the belt lies across the shoulder. It must not lie across the throat or upper arm.

Do not adjust while driving.

Unfasten

To release belt, press red button on belt buckle.

Centre seat belt of the second seat row

The centre seat is equipped with a particular three-point seat belt.

Pull latch plates with the belt out of belt holder in the roof.

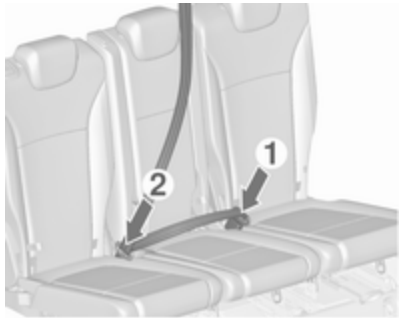

Remove lower latch plate from retainer and click it into left-hand buckle (**1**) at the centre seat. Guide the upper latch plate with the belt over the lap area and the shoulder (do not twist) and click into right-hand buckle (**2**) at centre seat.

To unfasten the seat belt, first press the button on the right-hand buckle (**2**) and remove upper latch plate. Then press the button on the left-hand buckle (**1**) and remove lower latch plate. The seat belt retracts automatically.

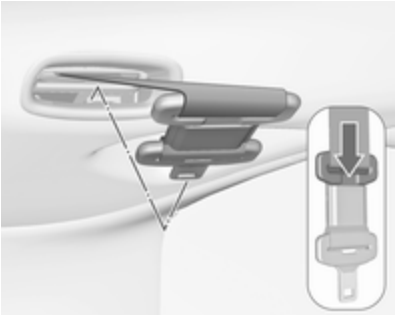

Push the top latch plate into the retainer. Fold over locked together latch plates against the seat belt.

Insert in the seat belt holder in the roof with the lower latch plate pointing forward.

Seat belts on the third seat row

The seat belts on the third seat row are equipped with three point seat belts.

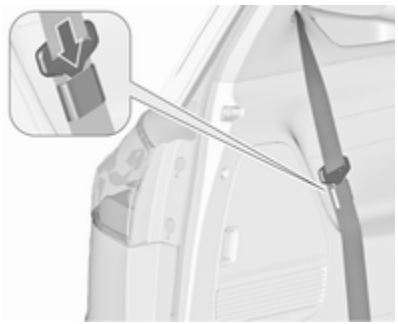

When seat belts are not used or when folding the seats, insert the latch plate of the seat belt on each side into the pocket that is mounted at the belt.

If the centre seat of the second seat row is occupied and the seat belt is fastened, only persons with a body height up to max. 150 cm are allowed to use the left seat of the third seat row.

There is a warning label on the rear side of the centre belt, when it is pulled out, to inform the passenger on the left seat of the third seat row.

Using seat belts while pregnant

⚠ Warning

The lap belt must be positioned as low as possible across the pelvis to prevent pressure on the abdomen.

Airbag system

The airbag system consists of a number of individual systems depending on the scope of equipment.

When triggered the airbags inflate within milliseconds. They also deflate so quickly that it is often unnoticeable during the collision.

⚠ Warning
If handled improperly the airbag systems can be triggered in an explosive manner.

Note
The airbag systems and belt pretensioner control electronics are located in the centre console area. Do not put any magnetic objects in this area.

Do not stick anything on the airbag covers and do not cover them with other materials.

Each airbag is triggered only once. Have deployed airbags replaced by a workshop. Furthermore, it might be necessary to have the steering wheel, the instrument panel, parts of the panelling, the door seals, handles and the seats replaced.

Do not make any modifications to the airbag system as this will invalidate the vehicle type approval.

When the airbags inflate, escaping hot gases may cause burns.

Control indicator for airbag systems ⇨ 110.

Child restraint systems on front passenger seat with airbag systems

Warning according to ECE R94.02:

EN: NEVER use a rearward-facing child restraint on a seat protected by an ACTIVE AIRBAG in front of it; DEATH or SERIOUS INJURY to the CHILD can occur.

DE: Nach hinten gerichtete Kindersitze NIEMALS auf einem Sitz verwenden, der durch einen davor befindlichen AKTIVEN AIRBAG geschützt ist, da dies den TOD oder SCHWERE VERLETZUNGEN DES KINDES zur Folge haben kann.

FR: NE JAMAIS utiliser un siège d'enfant orienté vers l'arrière sur un siège protégé par un COUSSIN GONFLABLE ACTIF placé devant lui, sous peine d'infliger des BLESSURES GRAVES, voire MORTELLES à l'ENFANT.

ES: NUNCA utilice un sistema de retención infantil orientado hacia atrás en un asiento protegido por un AIRBAG FRONTAL ACTIVO. Peligro de MUERTE o LESIONES GRAVES para el NIÑO.

RU: ЗАПРЕЩАЕТСЯ устанавливать детское удерживающее устройство лицом назад на сиденье автомобиля,

оборудованном фронтальной подушкой безопасности, если ПОДУШКА НЕ ОТКЛЮЧЕНА! Это может привести к СМЕРТИ или СЕРЬЕЗНЫМ ТРАВМАМ РЕБЕНКА.

NL: Gebruik NOOIT een achterwaarts gericht kinderzitje op een stoel met een ACTIEVE AIRBAG ervoor, om DODELIJK of ERNSTIG LETSEL van het KIND te voorkomen.

DA: Brug ALDRIG en bagudvendt autostol på et forsæde med AKTIV AIRBAG, BARNET kan komme i LIVSFARE eller komme ALVORLIGT TIL SKADE.

SV: Använd ALDRIG en bakåtvänd barnstol på ett säte som skyddas med en framförvarande AKTIV AIRBAG. DÖDSFALL eller ALLVARLIGA SKADOR kan drabba BARNET.

FI: ÄLÄ KOSKAAN sijoita taaksepäin suunnattua lasten turvaistuinta istuimelle, jonka edessä on AKTIIVINEN TURVATYYNY, LAPSI VOI KUOLLA tai VAMMAUTUA VAKAVASTI.

NO: Bakovervendt barnesikringsutstyr må ALDRI brukes på et sete med AKTIV KOLLISJONSPUTE foran, da det kan føre til at BARNET utsettes for LIVSFARE og fare for ALVORLIGE SKADER.

PT: NUNCA use um sistema de retenção para crianças voltado para trás num banco protegido com um AIRBAG ACTIVO na frente do mesmo, poderá ocorrer a PERDA DE VIDA ou FERIMENTOS GRAVES na CRIANÇA.

IT: Non usare mai un sistema di sicurezza per bambini rivolto all'indietro su un sedile protetto da AIRBAG ATTIVO di fronte ad esso: pericolo di MORTE o LESIONI GRAVI per il BAMBINO!

EL: ΠΟΤΕ μη χρησιμοποιείτε παιδικό κάθισμα ασφαλείας με φορά προς τα πίσω σε κάθισμα που προστατεύεται από μετωπικό ΕΝΕΡΓΟ ΑΕΡΟΣΑΚΟ, διότι το παιδί μπορεί να υποστεί ΘΑΝΑΣΙΜΟ ή ΣΟΒΑΡΟ ΤΡΑΥΜΑΤΙΣΜΟ.

PL: NIE WOLNO montować fotelika dziecięcego zwróconego tyłem do kierunku jazdy na fotelu, przed którym znajduje się WŁĄCZONA PODUSZKA POWIETRZNA. Niezastosowanie się do tego zalecenia może być przyczyną ŚMIERCI lub POWAŻNYCH OBRAŻEŃ u DZIECKA.

TR: Arkaya bakan bir çocuk emniyet sistemini KESİNLİKLE önünde bir AKTİF HAVA YASTIĞI ile korunmakta olan bir koltukta kullanmayınız. ÇOCUK ÖLEBİLİR veya AĞIR ŞEKİLDE YARALANABİLİR.

UK: НІКОЛИ не використовуйте систему безпеки для дітей, що встановлюється обличчям назад, на сидінні з УВІМКНЕНОЮ ПОДУШКОЮ БЕЗПЕКИ, інакше це може призвести до СМЕРТІ чи СЕРЙОЗНОГО ТРАВМУВАННЯ ДИТИНИ.

HU: SOHA ne használjon hátrafelé néző biztonsági gyerekülést előlről AKTÍV LÉGZSÁKKAL védett ülésen, mert a GYERMEK HALÁLÁT vagy KOMOLY SÉRÜLÉSÉT okozhatja.

HR: NIKADA nemojte koristiti sustav zadržavanja za djecu okrenut prema natrag na sjedalu s AKTIVNIM ZRAČNIM JASTUKOM ispred njega, to bi moglo dovesti do SMRTI ili OZBILJNJIH OZLJEDA za DIJETE.

SL: NIKOLI ne nameščajte otroškega varnostnega sedeža, obrnjenega v nasprotni smeri vožnje, na sedež z AKTIVNO ČELNO ZRAČNO BLAZINO, saj pri tem obstaja nevarnost RESNIH ali SMRTNIH POŠKODB za OTROKA.

SR: NIKADA ne koristiti bezbednosni sistem za decu u kome su deca okrenuta unazad na sedištu sa AKTIVNIM VAZDUŠNIM JASTUKOM ispred sedišta zato što DETE može da NASTRADA ili da se TEŠKO POVREDI.

MK: НИКОГАШ не користете детско седиште свртено наназад на седиште заштитено со АКТИВНО ВОЗДУШНО ПЕРНИЧЕ пред него, затоа што детето може ДА ЗАГИНЕ или да биде ТЕШКО ПОВРЕДЕНО.

BG: НИКОГА не използвайте детска седалка, гледаща назад, върху седалка, която е защитена чрез АКТИВНА ВЪЗДУШНА ВЪЗГЛАВНИЦА пред нея - може да се стигне до СМЪРТ или СЕРИОЗНО НАРАНЯВАНЕ на ДЕТЕТО.

RO: Nu utilizați NICIODATĂ un scaun pentru copil îndreptat spre partea din spate a mașinii pe un scaun protejat de un AIRBAG ACTIV în fața sa; acest lucru poate duce la DECESUL sau VĂTĂMAREA GRAVĂ a COPILULUI.

CS: NIKDY nepoužívejte dětský zádržný systém instalovaný proti směru jízdy na sedadle, které je chráněno před sedadlem AKTIVNÍM AIRBAGEM. Mohlo by dojít k VÁŽNÉMU PORANĚNÍ nebo ÚMRTÍ DÍTĚTE.

SK: NIKDY nepoužívajte detskú sedačku otočenú vzad na sedadle chránenom AKTÍVNYM AIRBAGOM, pretože môže dôjsť k SMRTI alebo VÁŽNYM ZRANENIAM DIEŤAŤA.

LT: JOKIU BŪDU nemontuokite atgal atgręžtos vaiko tvirtinimo sistemos sėdynėje, prieš kurią įrengta AKTYVI ORO PAGALVĖ, nes VAIKAS GALI ŽŪTI arba RIMTAI SUSIŽALOTI.

LV: NEKĀDĀ GADĪJUMĀ neizmantojiet uz aizmuguri vērstu bērnu sēdeklīti sēdvietā, kas tiek aizsargāta ar tās priekšā uzstādītu AKTĪVU DROŠĪBAS SPILVENU, jo pretējā gadījumā BĒRNS var gūt SMAGAS TRAUMAS vai IET BOJĀ.

ET: ÄRGE kasutage tahapoole suunatud lapseturvaistet istmel, mille ees on AKTIIVSE TURVAPADJAGA kaitstud iste, sest see võib põhjustada LAPSE SURMA või TÕSISE VIGASTUSE.

MT: QATT tuża trażżin għat-tfal li jħares lejn in-naħa ta' wara fuq sit protett b'AIRBAG ATTIV quddiemu; dan jista' jikkawża l-MEWT jew ĠRIEĦI SERJI lit-TFAL.

Beyond the warning required by ECE R94.02, for safety reasons never use a forward-facing child restraint system on the passenger seat with an active front airbag.

⚠ Danger

Do not use a child restraint system on the passenger seat with active front airbag.

The airbag label is located on both sides of the front passenger sun visor.

Airbag deactivation ⇨ 58.

Front airbag system

The front airbag system consists of one airbag in the steering wheel and one in the instrument panel on the front passenger side. These can be identified by the word **AIRBAG**.

The front airbag system is triggered in the event of a front-end impact of a certain severity. The ignition must be switched on.

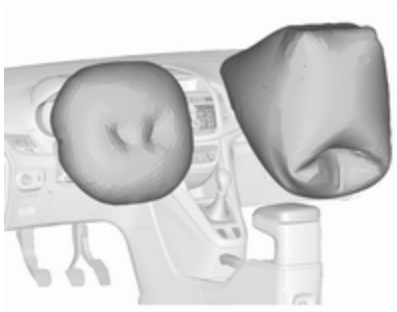

The inflated airbags cushion the impact, thereby reducing the risk of injury to the upper body and head of the front seat occupants considerably.

⚠ Warning

Optimum protection is only provided when the seat is in the proper position.

Seat position ⇨ 38.

Keep the area in which the airbag inflates clear of obstructions.

Fit the seat belt correctly and engage securely. Only then is the airbag able to protect.

Side airbag system

The side airbag system consists of an airbag in each front seat backrest. This can be identified by the word **AIRBAG**.

The side airbag system is triggered in the event of a side impact of a certain severity. The ignition must be switched on.

The inflated airbags cushion the impact, thereby reducing the risk of injury to the upper body and pelvis in the event of a side-on collision considerably.

⚠ Warning

Keep the area in which the airbag inflates clear of obstructions.

Note
Only use protective seat covers that have been approved for the vehicle. Be careful not to cover the airbags.

Curtain airbag system

The curtain airbag system consists of an airbag in the roof frame on each side. This can be identified by the word **AIRBAG** on the roof pillars.

The curtain airbag system is triggered in the event of a side-on impact of a certain severity. The ignition must be switched on.

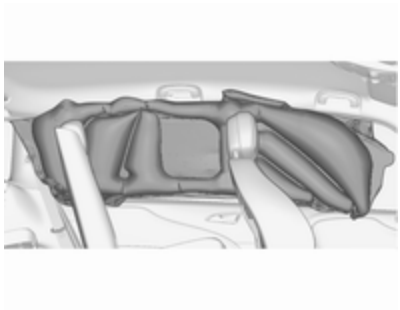

The inflated airbags cushion the impact, thereby reducing the risk of injury to the head in the event of a side-on impact considerably.

The curtain airbag system does not protect passengers on the third seat row.

⚠ Warning

Keep the area in which the airbag inflates clear of obstructions.

The hooks on the handles in the roof frame are only suitable for hanging up light articles of clothing, without coat hangers. Do not keep any items in these clothes.

Airbag deactivation

The front passenger airbag system has to be deactivated if a child restraint system is to be fitted on this seat. The side airbag and curtain airbag systems, the belt pretensioners and all driver airbag systems will remain active.

The front passenger airbag system can be deactivated via a key-operated switch on the right side of the instrument panel.

Use the ignition key to choose the position:

OFF : front passenger airbag is deactivated and will not inflate in the event of a collision. Control indicator OFF illuminates continuously in the centre console. A child restraint system can be installed in accordance with the chart **Child restraint installation locations** ⇨ 62. No adult person is allowed to occupy the front passenger seat

ON : front passenger airbag is active. A child restraint system must not be installed

⚠ Danger

Risk of fatal injury for a child using a child restraint system on a seat with activated front passenger airbag.

Risk of fatal injury for an adult person on a seat with deactivated front passenger airbag.

If the control indicator ON illuminates for approx. 60 seconds after the ignition is switched on, the front passenger airbag system will inflate in the event of a collision.

If both control indicators are illuminated at the same time, there is a system failure. The status of the system is not discernible, therefore no person is allowed to occupy the front passenger seat. Contact a workshop immediately.

Change status only when the vehicle is stopped with the ignition off.

Status remains until the next change.

Control indicator for airbag deactivation ⇨ 111.

Child restraints

Child restraint systems

We recommend the Opel child restraint system which is tailored specifically to the vehicle.

When a child restraint system is being used, pay attention to the following usage and installation instructions and also those supplied with the child restraint system.

Always comply with local or national regulations. In some countries, the use of child restraint systems is forbidden on certain seats.

⚠ Warning

When using a child restraint system on the front passenger seat, the airbag systems for the front passenger seat must be deactivated; if not, the triggering of the airbags poses a risk of fatal injury to the child.

This is especially the case if rear-facing child restraint systems are used on the front passenger seat.

Airbag deactivation ⇨ 58.

Airbag label ⇨ 54.

Selecting the right system

The rear seats are the most convenient location to fasten a child restraint system.

Children should travel facing rearwards in the vehicle as long as possible. This makes sure that the child's backbone, which is still very weak, is under less strain in the event of an accident.

Suitable are child restraint systems that comply with valid UN ECE regulations. Check local laws and regulations for mandatory use of child restraint systems.

Ensure that the child restraint system to be installed is compatible with the vehicle type.

Ensure that the mounting location of the child restraint system within the vehicle is correct, see following tables.

Allow children to enter and exit the vehicle only on the side facing away from the traffic.

When the child restraint system is not in use, secure the seat with a seat belt or remove it from the vehicle.

Note
Do not affix anything on the child restraint systems and do not cover them with any other materials.

A child restraint system which has been subjected to stress in an accident must be replaced.

Child restraint installation locations

Permissible options for fitting a child restraint system

Weight and age class	On front passenger seat activated airbag	On front passenger seat deactivated airbag	On outboard seats in the second row	On centre seat in the second row	On seats in the third row
Group 0: up to 10 kg or approx. 10 months	X	U[1]	U	X	U
Group 0+: up to 13 kg or approx. 2 years	X	U[1]	U	X	U
Group I: 9 to 18 kg or approx. 8 months to 4 years	X	U[1]	U	X	U
Group II: 15 to 25 kg or approx. 3 to 7 years	X	X	U	X	U
Group III: 22 to 36 kg or approx. 6 to 12 years	X	X	U	X	U

[1] : if the child restraint system is being secured using a three-point seat belt, move seat height adjustment to uppermost position and ensure that vehicle seat belt runs forwards from the upper anchorage point. Adjust seat backrest inclination as far as necessary to a vertical position to ensure that the belt is tight on the buckle side.

U : universal suitability in conjunction with three-point seat belt.

X : no child restraint system permitted in this weight class.

Permissible options for fitting an ISOFIX child restraint system

Weight class	Size class	Fixture	On front passenger seat	On outboard seats in the second row	On centre seat in the second row	On the seats in the third row
Group 0: up to 10 kg or approx. 10 months	E	ISO/R1	X	IL	X	X
Group 0+: up to 13 kg or approx. 2 years	E	ISO/R1	X	IL	X	X
	D	ISO/R2	X	IL	X	X
	C	ISO/R3	X	IL	X	X
Group I: 9 to 18 kg or approx. 8 months to 4 years	D	ISO/R2	X	IL	X	X
	C	ISO/R3	X	IL	X	X
	B	ISO/F2	X	IL, IUF	X	X
	B1	ISO/F2X	X	IL, IUF	X	X
	A	ISO/F3	X	IL, IUF	X	X
Group II: 15 to 25 kg or approx. 3 to 7 years			X	IL	X	X
Group III: 22 to 36 kg or approx. 6 to 12 years			X	IL	X	X

IL : suitable for particular ISOFIX restraint systems of the 'specific-vehicle', 'restricted' or 'semi-universal' categories. The ISOFIX restraint system must be approved for the specific vehicle type.
IUF : suitable for ISOFIX forward-facing child restraint systems of universal category approved for use in this weight class.
X : no ISOFIX child restraint system approved in this weight class.

ISOFIX size class and seat device

A – ISO/F3	:	forward-facing child restraint system for children of maximum size in the weight class 9 to 18 kg.
B – ISO/F2	:	forward-facing child restraint system for smaller children in the weight class 9 to 18 kg.
B1 – ISO/F2X	:	forward-facing child restraint system for smaller children in the weight class 9 to 18 kg.
C – ISO/R3	:	rear-facing child restraint system for children of maximum size in the weight class up to 18 kg.
D – ISO/R2	:	rear-facing child restraint system for smaller children in the weight class up to 18 kg.
E – ISO/R1	:	rear-facing child restraint system for young children in the weight class up to 13 kg.

ISOFIX child restraint systems

Fasten vehicle-approved ISOFIX child restraint systems to the ISOFIX mounting brackets. Specific vehicle ISOFIX child restraint system positions are marked in the table by IL.

ISOFIX mounting brackets are indicated by a label on the backrest.

Before fastening a child seat adjust the head restraint to use position ⇨ 36.

When using ISOFIX fastened child restraint systems on the second seat row, we recommend to adjust the accordant outer seat in third notch from rear end position, regarding to base seats. Lounge seat, if equipped, must be in normal position ⇨ 44.

Top-tether fastening eyes

Top-Tether fastening eyes are marked with the symbol for a child seat.

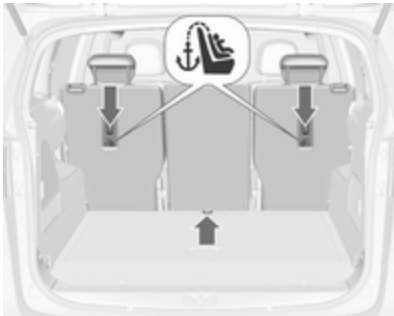

Depending on country-specific equipment, the vehicle may have two or three fastening eyes.

In addition to the ISOFIX mounting, fasten the Top-Tether strap to the Top-Tether fastening eyes. The strap must run between the two guide rods of the head restraint.

ISOFIX child restraint systems of universal category positions are marked in the table by IUF.

Storage

Storage compartments **66**
Instrument panel storage 66
Glovebox 66
Cupholders 67
Front storage 68
Door panel storage 68
Overhead console 68
Underseat storage 68
Armrest storage 69
Centre console storage 70
Rear carrier system 70
Load compartment **79**
Rear storage 81
Load compartment cover 82
Rear floor storage cover 84
Load rails and hooks 88
Lashing eyes 88
Cargo management system 88
Safety net 90
Folding tray 92
Warning triangle 92
First aid kit 92
Roof rack system **93**
Roof rack 93
Loading information **94**

Storage compartments

⚠ Warning

Do not store heavy or sharp objects in the storage compartments. Otherwise, the storage compartment lid could open and vehicle occupants could be injured by objects being thrown around in the event of hard braking, a sudden change in direction or an accident.

Instrument panel storage

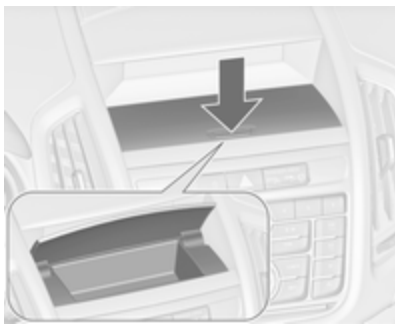

In the instrument panel in front of the Info-Display is a storage compartment. Push to open the lid.

Glovebox

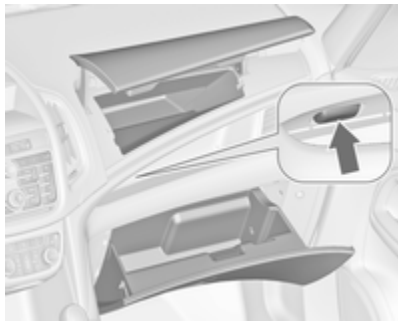

There are two gloveboxes on the front passenger side.

To open the upper glovebox, press button on the left side in the open storage.

To open the lower glovebox, pull the handle.

The glovebox features an adapter for the locking wheel nuts.

Both gloveboxes should be closed whilst driving.

Cupholders

Front cupholder

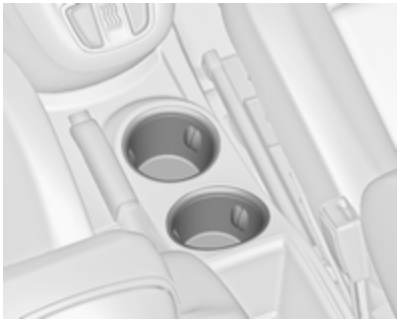

Cupholders are located in the centre console between the front seats.

Slidable cupholder in FlexConsole armrest

The cupholder can be moved in guide rails in the FlexConsole armrest or completely removed.

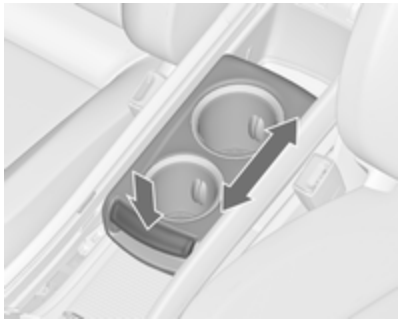

Push the handle in front of cupholder to slide.

Armrest ⇨ 42.

Remove cupholder

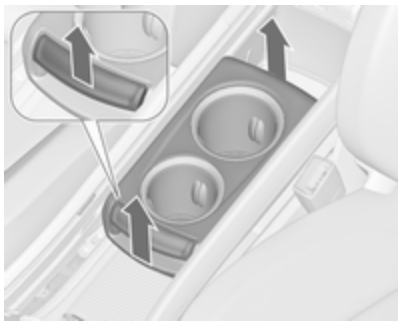

Pull the handle in front of cupholder and remove it vertically out of the console.

Installation in reverse order.

Note
Install the cupholder in the direction as shown in the illustration. Otherwise the cupholder may not engage properly.

Rear cupholder

Additional cupholder are located between the seats in the third row.

Bottleholder

The door pockets of front and rear doors are designed to carry bottles.

Front storage

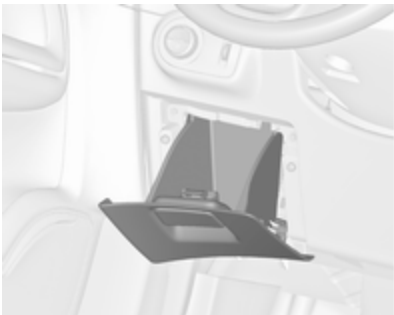

A storage compartment is located next to the steering wheel.

Door panel storage

On front door trim there are small pockets for e. g. mobile phones.

Overhead console

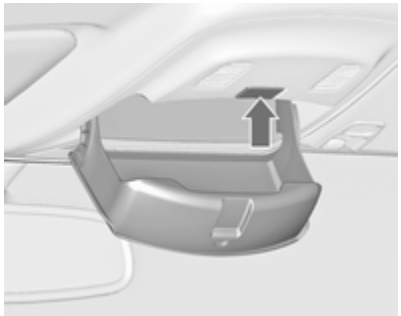

Press button to open storage box.

The box may be loaded with max. 0.2 kg.

Underseat storage

Storage box

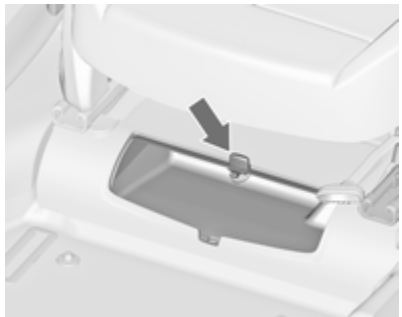

There is a storage box under the passenger's seat. Slide the rollo to open or close the box. Maximum load: 1.5 kg.

Underseat drawer

Press button in the recess and pull out drawer. Maximum load: 3 kg. To close, push in and engage.

Armrest storage

Storage in base armrest

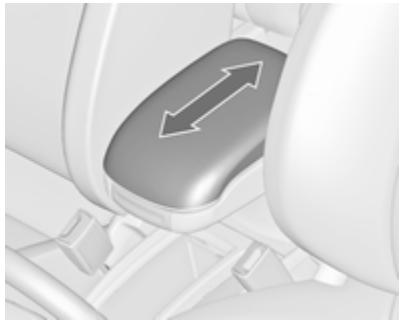

The armrest console contains a storage compartment. To open, slide armrest forwards.

Storage in FlexConsole armrest

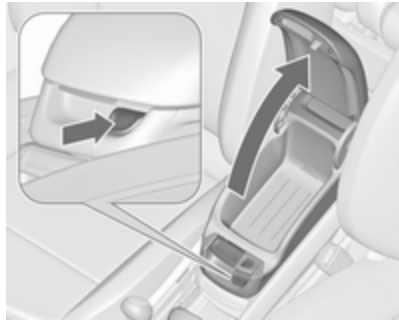

Press button to open storage compartment in the armrest.

Behind the armrest there is another storage compartment. Slide the lid to open.

Centre console storage

Centre console

The storage container can be used to store small items.

Slide cover backwards to open.

Rear console

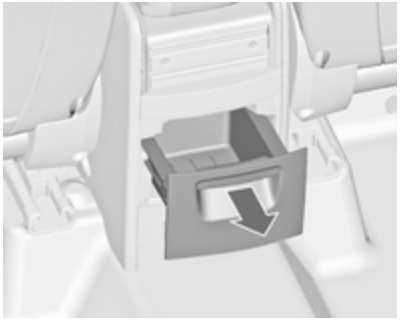

At the rear side of the FlexConsole there is a storage drawer. Pull out to open.

Caution
Do not use for ashes or for other glowing items.

Rear carrier system

Rear carrier system for four bicycles

The rear carrier system (Flex-Fix system) allows two bicycles to be attached to a pull-out carrier integrated into the vehicle floor. It is possible to attach two further bicycles on an adapter. The transportation of other objects is not permitted.

The maximum load of the rear carrier system is 80 kg with attached adapter and 60 kg without attached adapter. The maximum load per bicycle on the pull-out carrier is 30 kg. This allows

the attachment of electrically-powered bicycles to the pull-out carrier. The maximum load per bicycle on the adapter is 20 kg.

The wheelbase of a bicycle must not exceed 1.15 metres. Otherwise the secure fastening of a bicycle is not possible.

If not in use, the rear carrier system must be slid back into the vehicle floor.

There must not be any objects on the bicycles that could become loose during transportation.

Caution

If the rear carrier system is extended and the vehicle is fully loaded, the chassis clearance will be reduced.

Drive carefully whenever the road has a steep inclination or when driving over a ramp, bump, etc.

Caution

Consult your bicycle dealer before attaching bicycles with carbon frames. The bicycles might get damaged.

Extending

Open the tailgate.

⚠Warning

No-one should be in the extension zone of the rear carrier system, risk of injury.

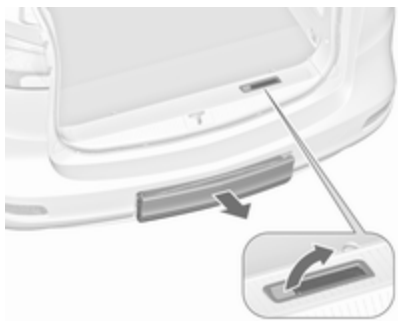

Pull release lever up. The rear carrier system disengages and travels quickly out of the rear bumper.

Completely pull out the rear carrier system until you hear it engage.

Ensure that it is not possible to push in the rear carrier system without pulling the release lever again.

⚠Warning

It is only permissible to fit objects to the rear carrier system if the system has been correctly engaged. If the rear carrier system

will not engage correctly, do not fit objects to the system and slide the system back. Seek the assistance of a workshop.

Unfold number plate holder

Lift the number plate holder and fold it backwards.

Fold out tail lamps

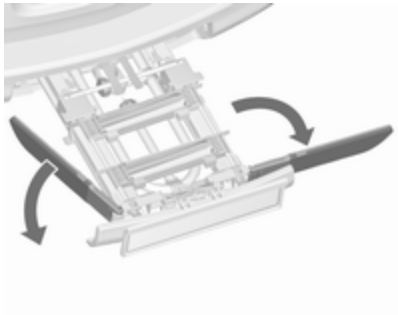

Fold out both tail lamps.

Lock the rear carrier system

Swivel both clamping levers sideways as far as they will go.

Otherwise safe functionality is not guaranteed.

Fold out wheel recesses

Fold out both wheel recesses.

Assembling the bicycle rack

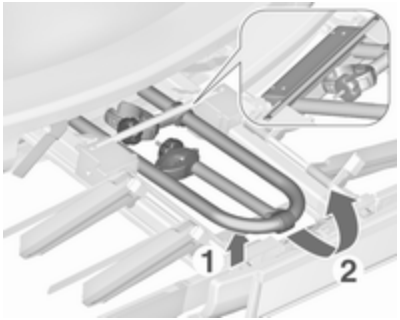

Lift the rack at the rear (1) and pull it backwards.

Fold up the rack (2).

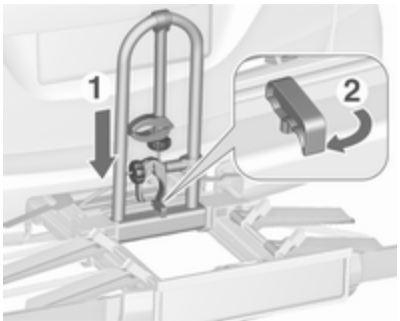

Push down the rack (1) and swivel handle (2) backwards to engage.

Attaching the first bicycle

1. Rotate the pedals into position as shown in the illustration and put the bicycle on the foremost wheel recess.

   Make sure that the bicycle stands centrally on the wheel recesses.

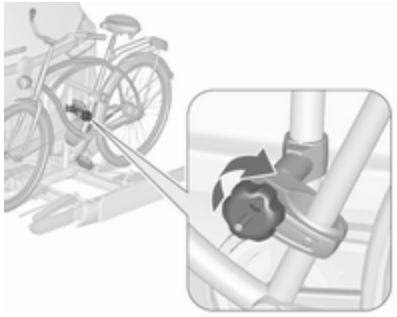

2. Attach the short mounting bracket to the bicycle frame. Turn the knob clockwise to fasten.

3. Secure both bicycle wheels to the wheel recesses using the strap retainers.
4. Check the bicycle to make sure it is secure.

Caution
Ensure gap between bicycle and vehicle is at least 5 cm. If necessary, loosen handlebar and swivel sideways.

Attaching the adapter

When carrying more than two bicycles, the adapter must be fixed before the second bicycle is attached.

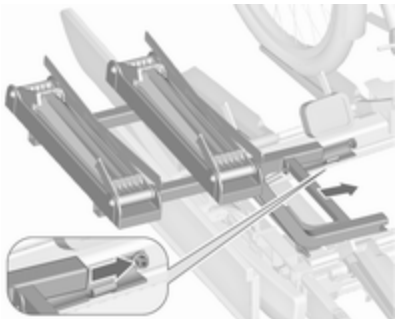

1. Attach the adapter to the rear carrier system as shown in the illustration.

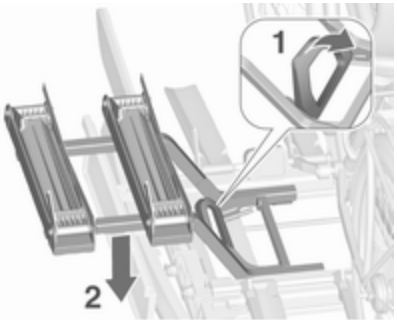

2. Turn the lever (1) forwards and hold, then lower the adapter (2) at the rear.
3. Release lever and check if the adapter is engaged securely.

4. Guide the strap attached to the adapter underneath the lever to fold back the rear carrier system. Fasten the strap.

Attaching further bicycles

The attachment of further bicycles is similar to the attachment of the first bicycle. Additionally some steps must be considered:

1. Before putting on the bicycle, always unfold the wheel recesses for the next bicycle, if necessary.
2. Always rotate the pedals into an appropriate position before putting on the bicycle.

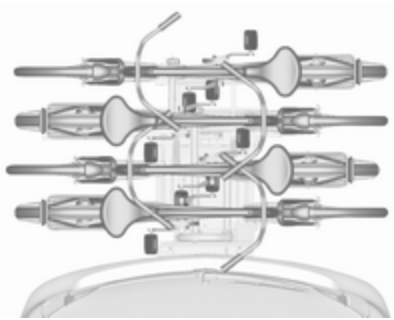

3. Position the bicycles on the rear carrier system alternately aligned to the left and to the right.
4. Align the bicycles to the one attached before. The wheel hubs of the bicycles must not touch each other.
5. Attach the bicycles with mounting brackets and strap retainers as described for the first bicycle. The mounting brackets should be fixed in parallel.

   Use the long mounting bracket to attach the second bicycle to the rack.

   Use the longer accessory mounting bracket to attach the third bicycle to the rack.

   Use the short accessory mounting bracket to attach the fourth bicycle. The bracket must be fixed between the frames of the third and fourth bicycle.

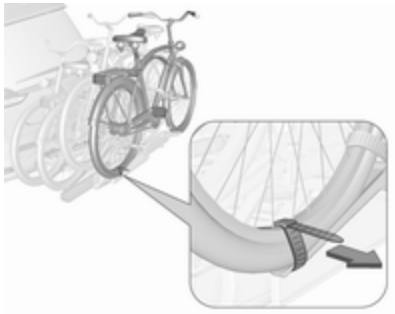

6. Additionally secure both bicycle wheels of the fourth bicycle to the wheel recesses using the tensioning straps.

It is recommended to attach a warning sign to the rearmost bicycle to increase visibility.

Fold the rear carrier system backwards

The rear carrier system can be folded backwards to gain access to the load compartment.

- Without attached adapter:

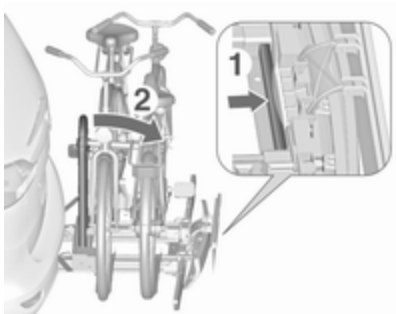

Push the lever (1) to disengage and hold.

Pull the rack (2) backwards to fold the rear carrier system.

- With attached adapter:

⚠ Warning

Take care when disengaging the rear carrier system as it will tilt backwards. Risk of injury.

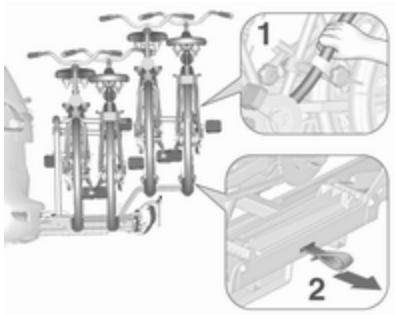

Hold frame (1) of rearmost bicycle with one hand and pull the loop (2) to disengage.

Hold rearmost bicycle with both hands and fold the rear carrier system backwards.

To increase visibility, the tail lights of the vehicle are activated when the rear carrier system is folded back.

⚠ Warning

When folding the rear carrier system forwards again, take care that the system is engaged securely.

Removing bicycles

Undo strap retainers on bicycle tyres.

Turn knob anti-clockwise and remove mounting brackets.

Detaching adapter

Detach the adapter before removing the last bicycle remaining on the rear carrier system.

1. Fold in wheel recesses.

2. Unbutton the strap.

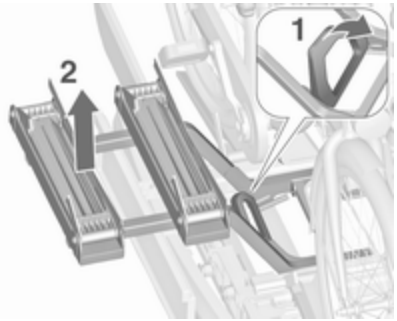

3. Turn the lever (1) forwards and hold.
4. Lift the adapter (2) at the rear and remove.

Disassembling the bicycle rack

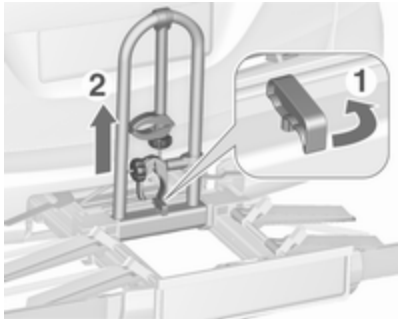

Arrange mounting brackets as shown in the illustration.

Swivel handle (1) forwards to disengage and lift the rack (2).

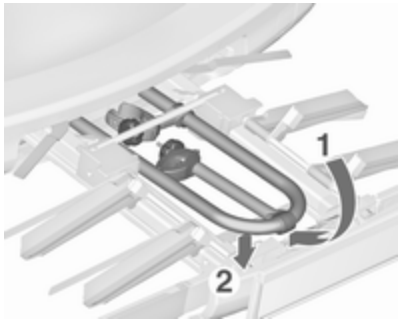

Fold the rack backwards, then push forwards until it stops (1).

Press the rack down at the rear (2).

Fold in wheel recesses

Fold in both wheel recesses.

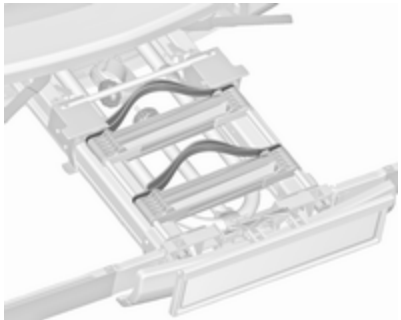

Stow the strap retainers accurately.

Unlock the rear carrier system

Swivel both clamping levers inwards as far as they will go.

Fold in tail lamps
Swivel in both tail lamps.

Fold in number plate holder
Lift the number plate holder and fold it forwards.

Retracting the rear carrier system

Caution
Take care that all foldable parts, e.g. wheel recesses and mounting brackets, are stowed accurately. Otherwise the rear carrier system might get damaged when trying to retract it.

Push the release lever up and hold. Lift the rear carrier system slightly and push it into the bumper until it engages.

Release lever must return to original position.

⚠Warning
If the system cannot be correctly engaged, please seek the assistance of a workshop.

Load compartment

The seats in the third row can be folded down separately into the vehicle floor. The seat backrests of the second row can be folded forward separately. Additionally, the backrest of the passenger seat can be folded.

A completely flat load bay is created if all rear seats and backrests and passenger backrest are folded down. Depending on the loading, only single seats or backrests can be folded.

Rear floor storage cover ⇨ 84.

⚠ Warning

When seats or backrests are being adjusted or folded, keep hands and feet away from the moving area.

Never store objects under the seats.

Drive only with engaged seats and backrests.

Caution

Before setting up or folding down seats, all components must be removed from the side rails and from the lashing eyes.

Lashing eyes must be in stored position.

Folding down the seats of the third row

- Push down head restraint by pressing the catch ⇨ 36.

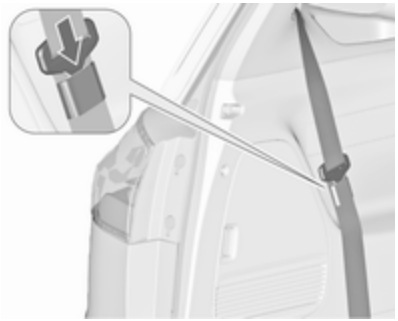

- Insert the latch plate of the seat belt on each side into the pocket that is mounted at the belt.

- Pull the lower loop and simultaneously swing the backrest forwards until the seat is lowered into the vehicle floor.
- Install interior floor mat ⇨ 84 and load compartment cover ⇨ 82 if necessary.

Setting up the seats

Pull up the seat by the upper loop, fold out and allow seat to engage in upright position.

Folding the seat backrests of the second row

- Remove the load compartment cover if necessary ⇨ 82.
- Push down head restraints by pressing the catch ⇨ 36.
- Move front passenger seat to a position that avoids contact with the head restraints of the folded backrests.

- Pull the loop and fold down the backrest onto the seat cushion.

Caution

- Do not fold the outer seatbacks while the seats are in the lounge seat position ⇨ 44.
- Do not pull release lever of the easy entry function when the backrest is folded down.

The seats could be damaged.

- Alternatively pull the loop and adjust backrest to vertical position as cargo position.

⚠Warning

Use vertical position of the backrest only for increased luggage volume and not as a seating position.

Folding up backrest

Raise backrest to vertical position. Adjust inclination by pulling the loop.

Ensure that all positions are engaged correctly.

⚠ Warning

Only drive the vehicle if the backrests are securely locked into position. Otherwise there is a risk of personal injury or damage to the load or vehicle in the event of heavy braking or a collision.

Folding backrest of front passenger seat

If the vehicle is equipped with a release mechanism on the front passenger seat, the seat backrest can be folded down to horizontal position, e.g. for very long objects.

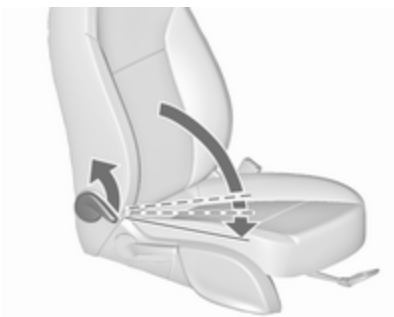

- Push down head restraint by pressing the catch ⇨ 36.
- Move passenger front seat in a position that avoids contact of the head restraint with the instrument panel.
- Pull lever and fold down the backrest on the seat, then release lever. The backrest can be engaged in two positions before horizontal position. Allow the backrest to engage audibly.

Folding up backrest

- Pull lever and fold up backrest in desired seat position, then release lever. Allow the backrest to engage audibly.
- Adjust seat and head restraint.

Rear storage

On both sides of the load compartment there are storage shelves.

To open, release cover in side trim panel and remove.

Floor storage

On version without third seat row, there are storage boxes under the floor cover. Lift up the cover to open.

Load compartment cover

Do not place any heavy or sharp-edged objects on the load compartment cover.

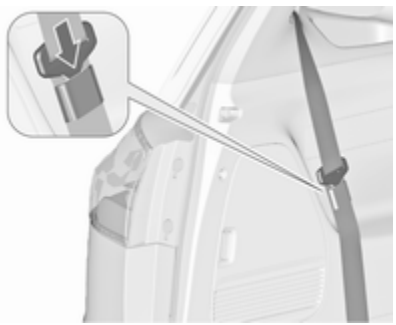

Before operating the load compartment cover, insert the latch plate of the seat belt on each side into the pocket that is mounted at the belt.

Closing

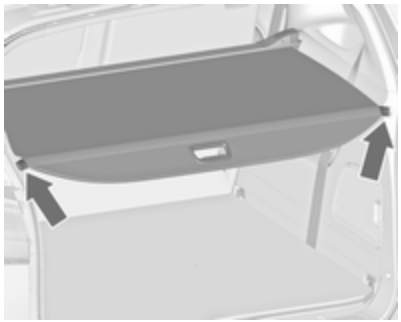

Pull the load compartment cover towards the rear using the handle and engage it in the retainers at the sides.

Opening

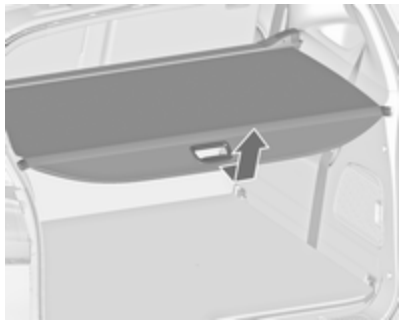

Remove load compartment cover from side brackets. Hold the handle and guide the load compartment cover until it is fully rolled up.

Removing

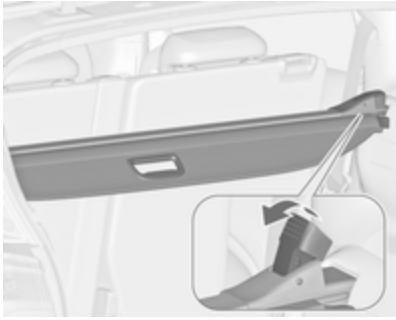

Open the load compartment cover.

Pull the release lever up and hold. Lift load compartment cover on right side and remove from retainers.

Stowing in the load compartment

If the load compartment cover is not used, stow it in the storage in the vehicle floor.

Open the cover of the storage in front of the tailgate.

Remove the load compartment cover and turn it so that the release lever is directed to the left.

Place the housing so that the upper side is facing to the front and the part with the handle points upwards.

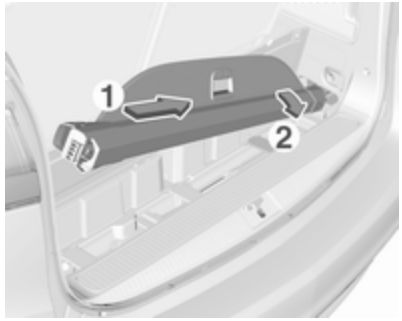

Insert the load compartment cover into the opening on the right side of the storage (1) and turn it until the handle rests flat on the housing (2).

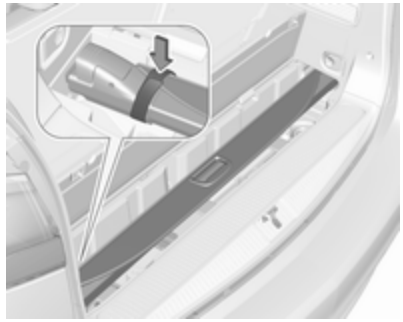

Fasten the load compartment cover in the storage with the Velcro tape.

Installing

Insert the left side of the load compartment cover into the recess, pull the release lever up and hold, insert the right side of the load compartment cover and engage.

Rear floor storage cover

Floor cover

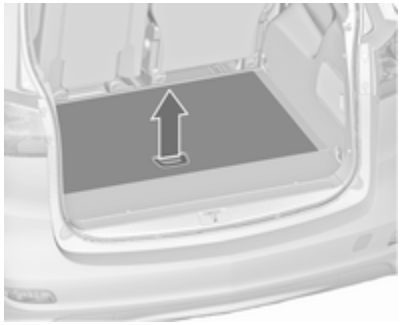

On versions without third seat row, there are storage boxes under the floor cover. To open lift up the cover and fold it upright behind rear seats.

Interior protection mat

Interior protection mat is a covering and protection feature for the load compartment, to be used when all or single seats/backrests are folded down.

By folding and expanding the mat there are a range of individual applications possible.

The interior protection mat is available in two versions:

- **Standard protection mat** covers the area between tailgate and second seat row, when third row is complete or if one seat is folded down.
- **Flex cover interior protection mat** is double size of standard protection mat, connected by a zipper. It covers the load compartment fully, when all or single seats of third and second row are folded down.

Protection mat is foldable longitudinally in 4 parts (standard) or 8 parts (Flex cover) with a central zipper and transversely foldable in 4 parts.

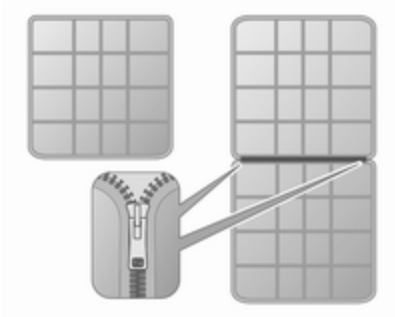

Following only a few examples of using the mats are described.

Before folding and expanding the mat, all components must be removed from the side rails and from the lashing eyes. Lashing eyes must be in stored position.

Covering the load compartment between tailgate and second seat row possible with both **Standard protection mat** or **Flex cover interior protection mat** being folded at the zipper to half size (double layer).

Mat is located fourfold flapped behind the raised up seats of the third row.

- Fold down third row seats.

- Expand the parts of the folded mat, so that first part is raised up at second row backrest.
- When folding down second row backrests, the mat expands automatically and covers the space between both seat rows.
- To allow one seat in the third row to be raised up, fold mat in half lengthways.

- Pull out the mat a little to protect load compartment sill when loading heavy objects. Raise up the overlaying part of the mat before closing the tailgate.

Covering the load compartment up to the backrests of the front seats

Only possible with **Flex cover interior protection mat** being folded at the zipper to half size (double layer).

Mat is expanded up to the second row seats, as described previously.

- Fold down second row backrests.
- Expand the upper parts of the double layer mat, so that the load compartment is fully covered. The first part of the mat is now raised up at the backrests of front seats.

- Fold the overlaying rear part under the mat before closing the tailgate.

Covering the load compartment partially

Only possible with **Flex cover interior protection mat** being folded at the zipper to half size (double layer).

e.g. left outer backrest is not folded down

Mat is expanded up to the second row seats, as described in first section.

- Fold down the backrests that shall be covered.

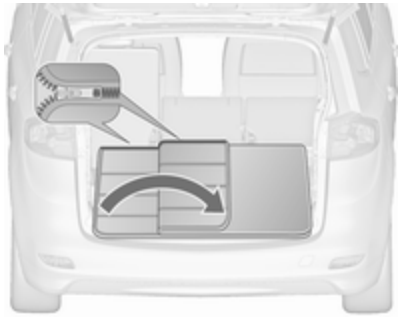

- Open the zipper behind the raised up backrest.
- Pull out the mat until the first part is flat on the load compartment floor.
- Raise up lengthways the part that is opened by the zipper, and fold it to the centre.

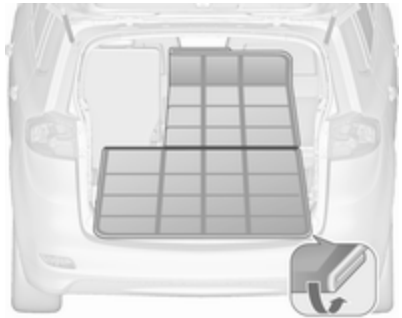

- Expand the upper part of double layer mat over the folded backrests.
- Fold the overlaying rear part under the mat before closing the tailgate.

Proceed in the same way when one outer backrest and the centre backrest are not folded down.

e.g. only centre backrest is folded down

Mat is expanded up to the second row seats, as described in first section.

- Fold down centre backrest to be covered.

- Open the zipper from both sides behind the left and right backrest.
- Pull out the mat until the first part is flat on the load compartment floor.
- Raise up lengthways both parts that are opened by the zipper, and fold them to the centre.

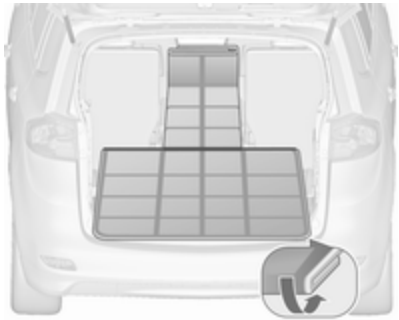

- Then expand the small upper part of double layer mat over the centre backrest.
- Fold the overlaying rear part under the mat before closing the tailgate.

The following illustrations show some further examples.

Example for long small objects, e.g. skis.

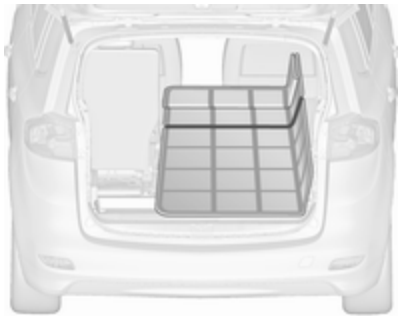

Example for side cover protection.

Example for covering folded backrest on second row and one folded seat on third row.

Load rails and hooks

Install the hooks in the desired position in the rails: insert the hook in the upper groove on the rail and press in the lower groove.

Lashing eyes

The lashing eyes are designed to secure items against slippage, e.g. using lashing straps or luggage net.

Cargo management system

The FlexOrganizer is a flexible system for dividing up the load compartment.

The system consists of:

- adapters
- mesh pockets
- hooks
- variable partition net

The components are fitted in rails on both side panels using adapters and hooks.

Installation of adapters in the rails

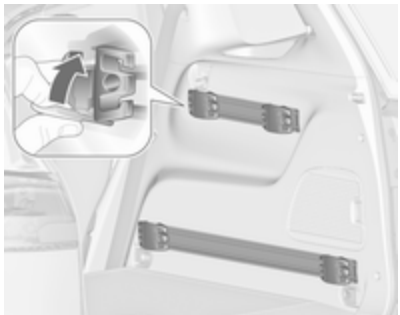

Fold open the handle plate, insert the adapter into the upper and lower groove of the rail and move to the required position. Turn the handle plate upwards to lock the adapter. To remove, turn the handle plate down and move out of the rail.

Variable partition net

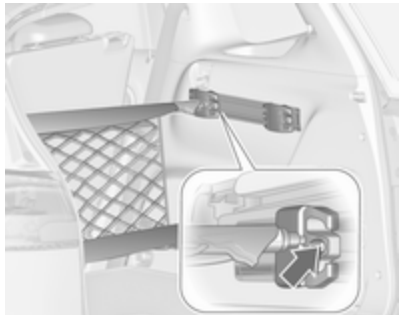

Insert adapters into the required position in the rails. Stick together the halves of the net rods.

To install, push rods together a little and insert into the relevant openings in the adapters.

To remove, press the net rods together and remove from the adapters.

Net pocket

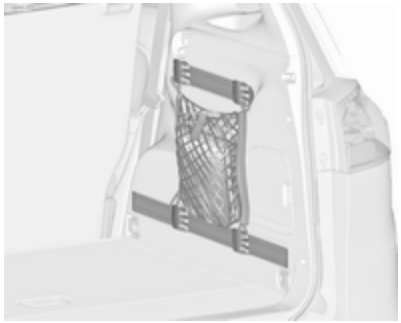

Insert adapters into the required position in the rails. The net pocket can be suspended from the adapters.

Installation of hooks in the rails

Insert the hook in the desired position first in the upper groove of the rail and then press in the lower groove. To remove, first pull out of the upper groove.

Partitioning net in front of tailgate

Install directly in front of the tailgate.

Before installation push in the four end pieces of the net rod by rotating each end piece anticlockwise.

To install, push the net rods together and insert into the openings of the tailgate frame. The longer rod must be inserted at the top.

To remove, push the net rods together and remove.

Safety net

The safety net can be installed behind the seats of the second row or the front seats.

Passengers must not be transported behind the safety net.

Installation behind second row seats

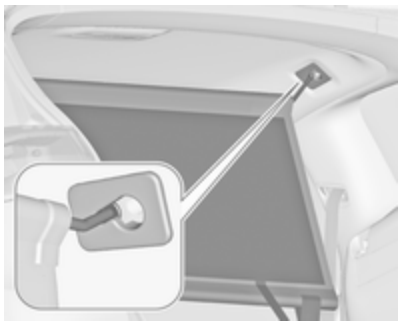

- There are installation openings on both sides in the roof frame above second row seats: suspend and engage rod of net at one side, compress rod and suspend and engage at the other side.

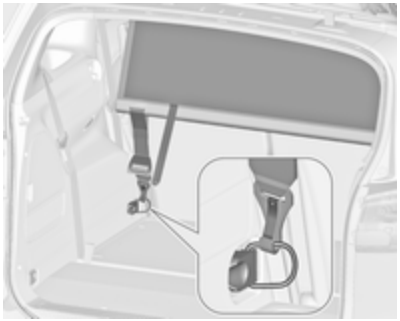

- Attach hooks of safety net straps to front lashing eyes on both sides in the load compartment.
- Tension both straps by pulling at the loose end.

Installation behind front seats

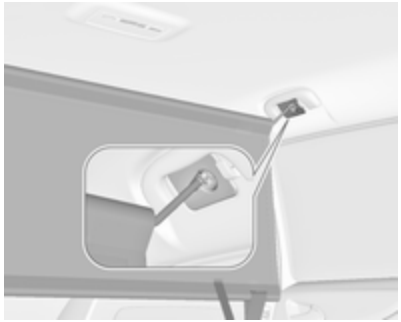

- There are installation openings on both sides in the roof frame above the front seats: suspend and engage rod of net at one side, compress rod and suspend and engage at the other side.

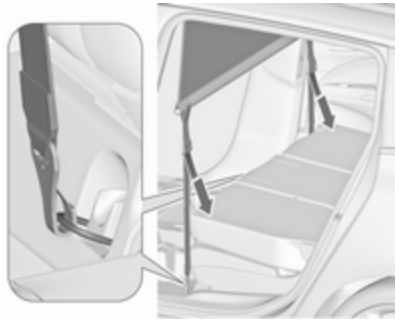

- Attach hooks of safety net straps to the lashing eyes on both sides in the floor in front of the seats.
- Tension both straps by pulling at the loose end.

Removal

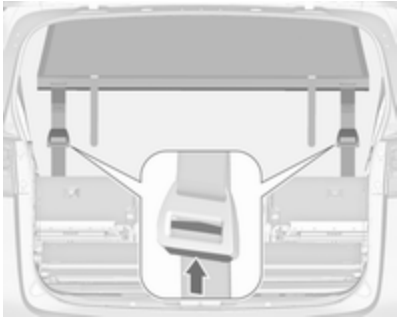

Push button on the tightener to release the strap on both sides. Detach hooks from the eyes. Unhook the safety net rods from the brackets in the roof frame. Roll up the net and secure with a strap.

Stowing

Open the cover of the storage in the load compartment floor in front of the tailgate.

Insert the safety net in the storage and close cover.

Folding tray

Located in the front seat backrests.

Open by pulling upwards until it engages.

Fold away by pressing down past the resistance point.

Do not place any heavy objects on the folding tray.

Warning triangle

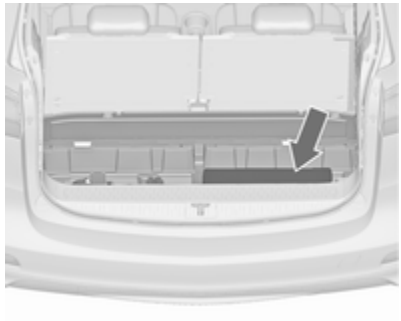

Stow the warning triangle in the storage of the load compartment floor in front of the tailgate.

First aid kit

Stow the first aid kit and the high visibility vest under the driver's seat.

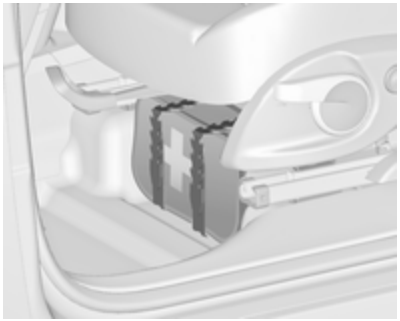

Use the straps to fix.

On another version, first aid kit is located in a storage box under the driver's seat. Slide the rollo to open or close the box.

Roof rack system

Roof rack

For safety reasons and to avoid damage to the roof, the vehicle approved roof rack system is recommended. For further information contact your workshop.

Follow the installation instructions and remove the roof rack when not in use.

Mounting roof rack

Vehicles with roof railing

Fasten the roof rack in the area of the holes, indicated by the arrows in the illustration.

Vehicles without roof railing

To fasten a roof rack, open the caps in the roof strips. Insert the mounting provisions, as instructed, in the retainer indicated in the illustration.

Loading information

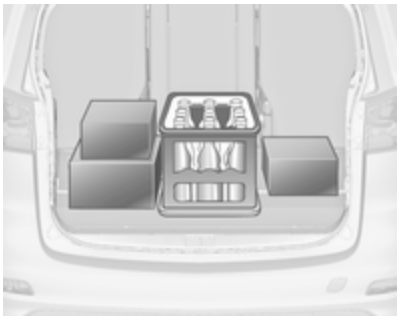

- Heavy objects in the load compartment should be placed against the seat backrests. Ensure the backrests are securely engaged. If objects can be stacked, the heavier objects should be placed at the bottom.
- Secure objects with lashing straps attached to lashing eyes ⇨ 88.
- Secure loose objects in load compartment to prevent sliding.
- Do not allow the load to protrude above the upper edge of the backrests.
- Do not place any objects on the load compartment cover or the instrument panel.
- The load must not obstruct the operation of the pedals, parking brake and gear selector lever, or hinder the freedom of movement of the driver. Do not place any unsecured objects in the interior.
- Do not drive with an open load compartment.

⚠Warning

Always make sure that the load in the vehicle is securely stowed. Otherwise objects can be thrown around inside the vehicle and cause personal injury or damage to the load or car.

- The payload is the difference between the permitted gross vehicle weight (see identification plate ⇨ 272) and the EC kerb weight.

To calculate the payload, enter the data for your vehicle in the weights table at the front of this manual.

The EC kerb weight includes weights for the driver (68 kg), luggage (7 kg) and all fluids (fuel tank 90% full).

Optional equipment and accessories increase the kerb weight.

- Driving with a roof load increases the sensitivity of the vehicle to cross-winds and has a detrimental effect on vehicle handling due to the vehicle's higher centre of gravity. Distribute the load evenly and secure it properly with retaining straps. Adjust the tyre pressure and vehicle speed according to the load conditions. Check and retighten the straps frequently.

  Do not drive faster than 120 km/h.

  The permissible roof load is 75 kg for vehicles without roof railing and 100 kg for vehicles with roof railing. The roof load is the combined weight of the roof rack and the load.

Instruments and controls

Controls **97**
Steering wheel adjustment 97
Steering wheel controls 97
Heated steering wheel 97
Horn 98
Windscreen wiper/washer 98
Rear window wiper/washer 100
Outside temperature 100
Clock 101
Power outlets 102
Cigarette lighter 103
Ashtrays 103
Warning lights, gauges and indicators **104**
Instrument cluster 104
Speedometer 104
Odometer 104
Trip odometer 104
Tachometer 104
Fuel gauge 105
Fuel selector 105
Engine coolant temperature gauge 106
Service display 106
Control indicators 107
Turn signal 110
Seat belt reminder 110
Airbag and belt tensioners 110
Airbag deactivation 111
Charging system 111
Malfunction indicator light 111
Service vehicle soon 111
Brake and clutch system 111
Operate pedal 112
Electric parking brake 112
Electric parking brake fault 112
Antilock brake system (ABS) ... 112
Upshift 113
Power steering 113
Lane departure warning 113
Ultrasonic parking assist 113
Electronic Stability Control off . 113
Electronic Stability Control and Traction Control system 113
Traction Control system off 114
Preheating 114
Diesel particle filter 114
AdBlue 114
Tyre pressure monitoring system 114
Engine oil pressure 114
Low fuel 115
Immobiliser 115
Reduced engine power 115
Exterior light 115
High beam 115
High beam assist 115
Adaptive forward lighting 115
Fog light 116
Rear fog light 116
Low washer fluid 116
Cruise control 116
Adaptive cruise control 116
Vehicle detected ahead 116
Door open 116
Information displays **116**
Driver Information Centre 116
Graphic-Info-Display, Colour-Info-Display 120
Vehicle messages **122**
Warning chimes 125
Battery voltage 126
Trip computer **126**
Vehicle personalisation **129**
OnStar **133**

Controls

Steering wheel adjustment

Unlock lever, adjust steering wheel, then engage lever and ensure it is fully locked.

Do not adjust steering wheel unless vehicle is stationary and steering wheel lock has been released.

Steering wheel controls

The Infotainment system, some driver assistance systems and a connected mobile phone can be operated via the controls on the steering wheel.

Further information is available in the Infotainment manual.

Driver assistance systems ⇨ 179.

Heated steering wheel

Activate heating by pressing ♨. Activation is indicated by the LED in the button.

The recommended grip areas of the steering wheel are heated quicker and to a higher temperature than the other areas.

Heating is operational when the engine is running and during an Autostop.

Stop-start system ⇨ 161.

Horn

Press ⚑.

Windscreen wiper/washer

Windscreen wiper

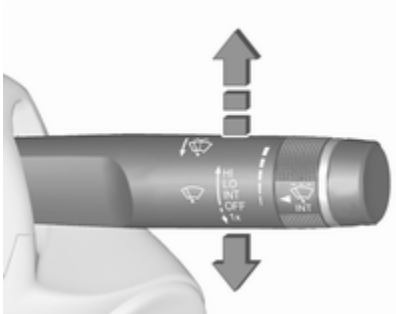

HI	:	fast
LO	:	slow
INT	:	interval wiping or automatic wiping with rain sensor
OFF	:	off

For a single wipe when the windscreen wiper is off, press the lever down to position **1x**.

Do not use if the windscreen is frozen.

Switch off in car washes.

Adjustable wiper interval

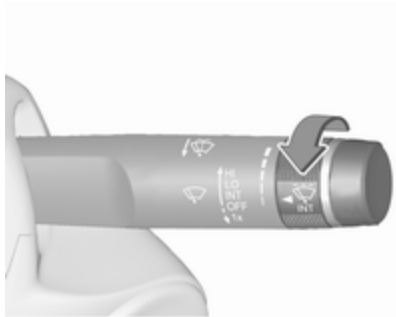

Wiper lever in position **INT**.

Turn the adjuster wheel to adjust the desired wipe interval:

short interval	:	turn adjuster wheel upwards
long interval	:	turn adjuster wheel downwards

Automatic wiping with rain sensor

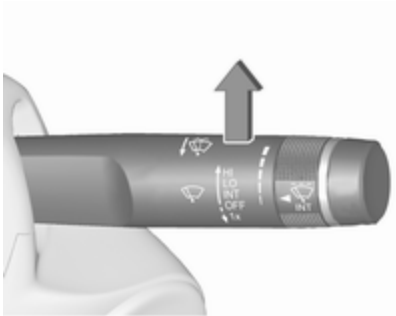

INT : automatic wiping with rain sensor

The rain sensor detects the amount of water on the windscreen and automatically regulates the frequency of the windscreen wiper.

If the wiper frequency is above 20 seconds, the wiper arm moves slightly down to the park position.

Adjustable sensitivity of the rain sensor

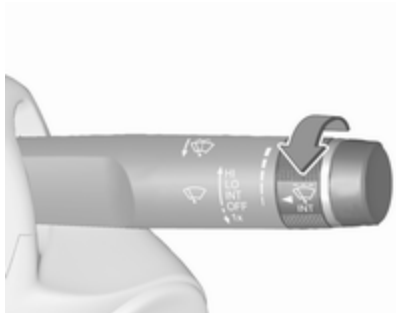

Turn the adjuster wheel to adjust the sensitivity:

low sensitivity : turn adjuster wheel downwards

high sensitivity : turn adjuster wheel upwards

Keep the sensor free from dust, dirt and ice.

Windscreen and headlight washer

Pull lever. Washer fluid is sprayed onto the windscreen and the wiper wipes a few times.

If the headlights are on, washer fluid is also sprayed onto the headlights, provided that the lever is pulled sufficiently long. Afterwards the headlight washer system is inoperable for 5 wash cycles or until engine or headlights have been switched off and on again.

Rear window wiper/washer

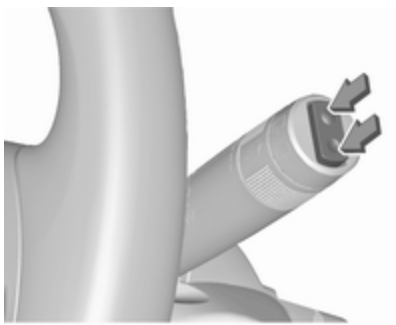

Press the rocker switch to activate the rear window wiper:

upper position : continuous operation
lower position : intermittent operation
middle position : off

Push lever. Washer fluid is sprayed onto the rear window and the wiper wipes a few times.

Do not use if the rear window is frozen.

Switch off in car washes.

The rear window wiper comes on automatically when the windscreen wiper is switched on and reverse gear is engaged.

Activation or deactivation of this function can be changed in the Settings menu in the Info-Display.

Vehicle personalisation ⇨ 129.

The rear window washer system is deactivated when the fluid level is too low.

Outside temperature

20153

A drop in temperature is indicated immediately and a rise in temperature after a time delay.

If outside temperature drops to 3 °C, a warning message is displayed in the Driver Information Centre with Uplevel-Combi-Display.

⚠ Warning
The road surface may already be icy even though the display indicates a few degrees above 0 °C.

Clock

Date and time are shown in the Info-Display.

Time and date settings

CD 400plus/CD 400/CD 300

Press **CONFIG**. The menu **Settings** is displayed.

Select **Time Date**.

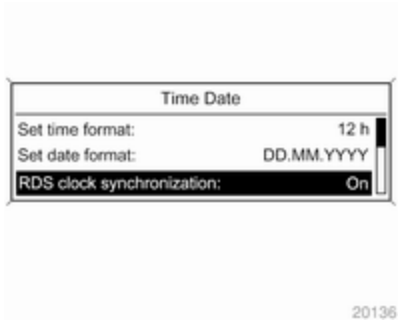

Selectable setting options:

- **Set time:** Changes the time shown on the display.
- **Set date:** Changes the date shown on the display.
- **Set time format**: Changes indication of hours between **12 h** and **24 h**.
- **Set date format**: Changes indication of date between **MM/DD/YYYY** and **DD.MM.YYYY**.
- **RDS clock synchronization**: The RDS signal of most VHF transmitters automatically sets the time. RDS time synchronisation can take a few minutes. Some transmitters do not send a correct time signal. In such cases, it is recommended to switch off automatic time synchronisation.

Vehicle personalisation ⇨ 129.

Time and date settings

Navi 950/Navi 650/CD 600

Press **CONFIG** and then select the **Time and Date** menu item to display the respective submenu.

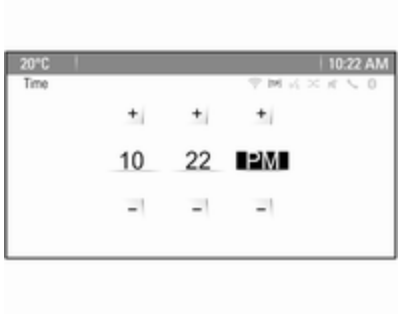

Note
If **RDS Auto Time Adjust** is activated, time and date are automatically set by the system.

See Infotainment manual for further information.

Set time
To adjust the time settings, select the **Set Time** menu item. Turn the multifunction knob to adjust the first setting.

Press the multifunction knob to confirm the input. The coloured background moves to the next setting.

Adjust all settings.

Set date
To adjust the time settings, select the **Set Date** menu item. Turn the multifunction knob to adjust the first setting.

Press the multifunction knob to confirm the input. The coloured background moves to the next setting.

Adjust all settings.

Time format
To choose the desired time format, select **12 hr / 24 hr Format**. Activate **12 Hour** or **24 Hour**.

Vehicle personalisation ⇨ 129.

Power outlets

A 12 Volt power outlet is located in the front console. Fold the cover downwards.

Further 12 Volt power outlets are located in the rear console

and at the left sidewall in the load compartment.

Do not exceed the maximum power consumption of 120 watts.

With ignition off, the power outlets are deactivated. Additionally the power outlets are deactivated in the event of low vehicle battery voltage.

Electrical accessories that are connected must comply with the electromagnetic compatibility requirements laid down in DIN VDE 40 839.

Do not connect any current-delivering accessories, e.g. electrical charging devices or batteries.

Do not damage the outlet by using unsuitable plugs.

Stop-start system ⇨ 161.

Cigarette lighter

The cigarette lighter is located in the front console. Fold the cover downwards.

Press in cigarette lighter. It switches off automatically once the element is glowing. Pull out lighter.

Ashtrays

Caution
To be used only for ash and not for combustible rubbish.

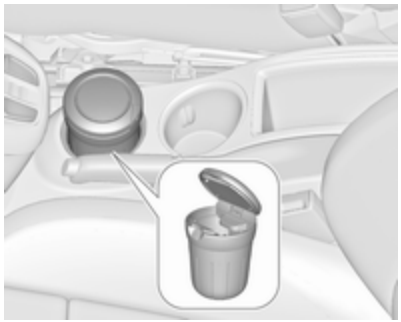

The portable ashtray can be placed in the cupholders.

Warning lights, gauges and indicators

Instrument cluster

In some versions, the needles of the instruments briefly rotate to the end position when the ignition is switched on.

Speedometer

Indicates vehicle speed.

Odometer

The bottom line displays the recorded distance in km.

Trip odometer

The top line displays the recorded distance since the last reset.

To reset, press **SET/CLR** on the turn signal lever for a few seconds ⇨ 116.

Some versions are equipped with a reset knob between speedometer and Driver Information Centre: to reset, press and hold the knob for a few seconds with the ignition on.

Trip odometer counts up to a distance of 2000 km and then restarts at 0.

Tachometer

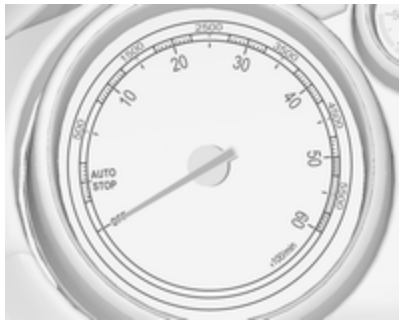

Displays the engine speed.

Drive in a low engine speed range for each gear as much as possible.

Caution
If the needle is in the red warning zone, the maximum permitted engine speed is exceeded. Engine at risk.

Fuel gauge

Displays the fuel level or gas pressure in the tank depending on the operation mode.

Control indicator ⬬ illuminates if the level in the tank is low. Refuel immediately if it flashes.

During liquid gas operation, the system automatically switches over to petrol operation when gas tanks are empty ⇨ 105.

Never run the tank dry.

Because of the fuel remaining in the tank, the top-up quantity may be less than the specified tank capacity.

Fuel selector

Natural gas operation

Press ⛽ to switch between petrol and natural gas operation. The LED ▬ status shows the current operating mode.

▬ off	:	natural gas operation
▬ illuminates	:	petrol operation
▬ flashes	:	no switching is possible, one type of fuel is empty

As soon as the natural gas tank is empty, petrol operation is automatically engaged until the ignition is switched off.

Fuel for natural gas operation ⇨ 209.

Liquid gas operation

Press **LPG** to switch between petrol and liquid gas operation. The LED ▬ status shows the current operating mode.

▬ off	:	petrol operation
▬ flashes	:	checking conditions for fuel transition to liquid gas operation. Illuminates if conditions are fulfilled.
▬ illuminates	:	liquid gas operation
▬ flashes 5 times and extinguishes	:	liquid gas tank is empty or failure in liquid gas system. A message is displayed in the Driver Information Centre.

As soon as the liquid gas tank is empty, petrol operation is automatically engaged until the ignition is switched off.

Fuel for liquid gas operation ⇨ 210.

Engine coolant temperature gauge

Displays the coolant temperature.

left area	:	engine operating temperature not yet reached
central area	:	normal operating temperature
right area	:	temperature too high

Caution

If engine coolant temperature is too high, stop vehicle, switch off engine. Danger to engine. Check coolant level.

Service display

The engine oil life system lets you know when to change the engine oil and filter. Based on driving conditions, the interval at which an engine oil and filter change will be indicated can vary considerably.

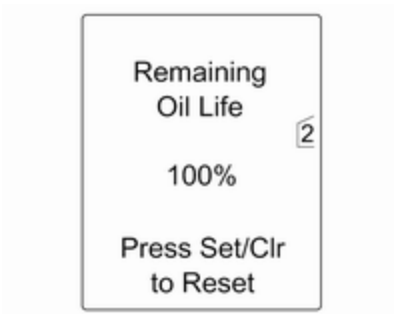

In the Uplevel-Combi-Display, the remaining oil life duration is displayed in the **Vehicle Information Menu**.

In the Midlevel-Display, the remaining engine oil life duration is displayed by control indicator ⛁, therefore the ignition must be switched on, with the engine not running.

The menu and function can be selected via the buttons on the turn signal lever.

To display the remaining engine oil life duration:

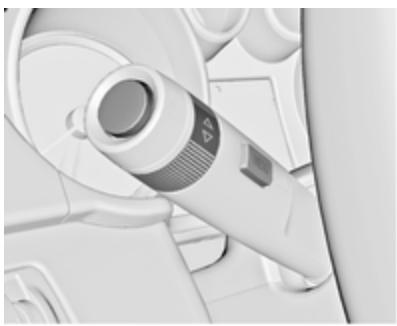

Press **MENU** to select the **Vehicle Information Menu**.

Turn the adjuster wheel to select **Remaining Oil Life**.

The system must be reset every time the engine oil is changed, to allow proper functionality. Seek the assistance of a workshop.

Press **SET/CLR** to reset. Therefore the ignition must be switched on, with the engine not running.

When the system has calculated that engine oil life has been diminished, **Change Engine Oil Soon** or a warning code appears in the Driver Information Centre. Have engine oil and filter changed by a workshop within one week or 500 km (whichever occurs first).

Driver Information Centre ⇨ 116.

Service information ⇨ 269.

Control indicators

The control indicators described are not present in all vehicles. The description applies to all instrument versions. Depending on the equipment, the position of the control indicators may vary. When the ignition is switched on, most control indicators will illuminate briefly as a functionality test.

The control indicator colours mean:

red	:	danger, important reminder
yellow	:	warning, information, fault
green	:	confirmation of activation
blue	:	confirmation of activation
white	:	confirmation of activation

Control indicators in the instrument cluster

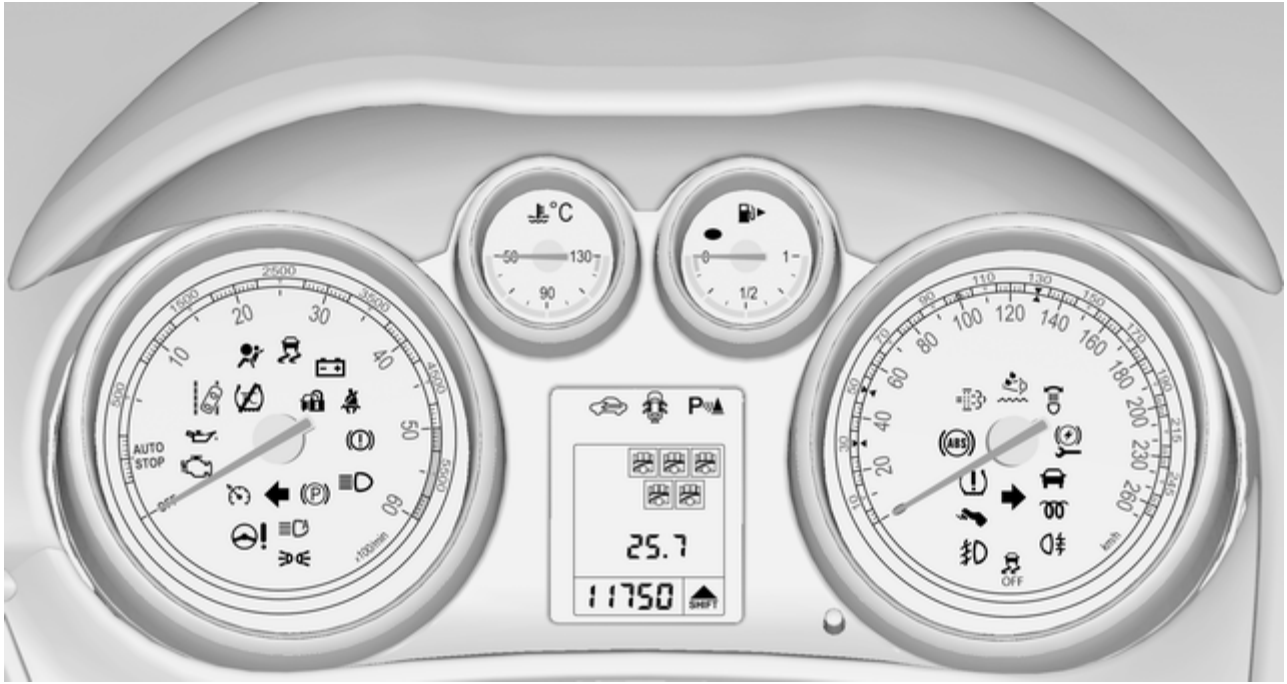

Control indicators in the centre console

Overview

- Turn signal ⇨ 110
- Seat belt reminder ⇨ 110
- Airbag and belt tensioners ⇨ 110
- Airbag deactivation ⇨ 111
- Charging system ⇨ 111
- Malfunction indicator light ⇨ 111
- Service vehicle soon ⇨ 111
- Brake and clutch system ⇨ 111
- Operate pedal ⇨ 112
- Electric parking brake ⇨ 112
- Electric parking brake fault ⇨ 112
- Antilock brake system (ABS) ⇨ 112
- Upshift ⇨ 113
- Power steering ⇨ 113
- Lane departure warning ⇨ 113
- Ultrasonic parking assist ⇨ 113
- Electronic Stability Control off ⇨ 113
- Electronic Stability Control and Traction Control system ⇨ 113
- Traction Control system off ⇨ 114
- Preheating ⇨ 114
- Diesel particle filter ⇨ 114
- AdBlue ⇨ 114
- Tyre pressure monitoring system ⇨ 114
- Engine oil pressure ⇨ 114
- Low fuel ⇨ 115
- Immobiliser ⇨ 115
- Reduced engine power ⇨ 115
- Exterior light ⇨ 115
- High beam ⇨ 115
- High beam assist ⇨ 115
- Adaptive forward lighting ⇨ 115
- Fog light ⇨ 116
- Rear fog light ⇨ 116
- Low washer fluid ⇨ 116
- Cruise control ⇨ 116 / Adaptive cruise control ⇨ 116

Vehicle detected ahead ⇨ 116

Door open ⇨ 116

Turn signal

⇦⇨ illuminates or flashes green.

Illuminates briefly

The parking lights are switched on.

Flashes

A turn signal or the hazard warning flashers are activated.

Rapid flashing: failure of a turn signal light or associated fuse, failure of turn signal light on trailer.

Bulb replacement ⇨ 232, Fuses ⇨ 240.

Turn signals ⇨ 145.

Seat belt reminder

Seat belt reminder on front seats

for driver's seat or for front passenger seat illuminates or flashes red.

Illuminates
After the ignition has been switched on until the seat belt has been fastened.

Flashes
After having started the engine, for a maximum of 100 seconds until the seat belt has been fastened.

Fastening the seat belt ⇨ 51.

Seat belt status on rear seats

or in the Driver Information Centre flashes or illuminates.

Illuminates
After having started the engine, for a minimum of 35 seconds until the seat belt has been fastened.

If an unfastened seat belt is fastened whilst driving.

Flashes
After starting-off, when the seat belt is unfastened.

Fastening the seat belt ⇨ 51.

Airbag and belt tensioners

illuminates red.

When the ignition is switched on, the control indicator illuminates for approx. four seconds. If it does not illuminate, does not extinguish after four seconds or illuminates whilst driving, there is a fault in the airbag system. Seek the assistance of a workshop. The airbags and belt pretensioners may fail to trigger in the event of an accident.

Deployment of the belt pretensioners or airbags is indicated by continuous illumination of .

⚠ Warning

Have the cause of the fault remedied immediately by a workshop.

Belt pretensioners, airbag system ⇨ 50, ⇨ 54.

Airbag deactivation

ON illuminates yellow.

Illuminates for approx. 60 seconds after the ignition is switched on. The front passenger airbag is activated.

OFF illuminates yellow.

The front passenger airbag is deactivated ⇨ 58.

⚠ Danger

Risk of fatal injury for a child using a child restraint system together with activated front passenger airbag.

Risk of fatal injury for an adult person with deactivated front passenger airbag.

Charging system

illuminates red.

Illuminates when the ignition is switched on and extinguishes shortly after the engine starts.

Illuminates when the engine is running

Stop, switch off engine. Vehicle battery is not charging. Engine cooling may be interrupted. The brake servo unit may cease to be effective. Seek the assistance of a workshop.

Malfunction indicator light

illuminates or flashes yellow.

Illuminates when the ignition is switched on and extinguishes shortly after the engine starts.

Illuminates when the engine is running

Fault in the emission control system. The permitted emission limits may be exceeded. Seek the assistance of a workshop immediately.

Flashes when the engine is running

Fault that could lead to catalytic converter damage. Ease up on the accelerator until the flashing stops. Seek the assistance of a workshop immediately.

Service vehicle soon

illuminates yellow.

Additionally a warning message or a warning code is displayed.

The vehicle needs a service.

Seek the assistance of a workshop.

Vehicle messages ⇨ 122.

Brake and clutch system

illuminates red.

The brake and clutch fluid level is too low ⇨ 229.

⚠Warning

Stop. Do not continue your journey. Consult a workshop.

Illuminates after the ignition is switched on if the manual parking brake is applied ⇨ 174.

Operate pedal

illuminates or flashes yellow.

Illuminates

Brake pedal must be depressed to release the electric parking brake ⇨ 174.

Clutch pedal must be depressed to start the engine in Autostop mode. Stop-start system ⇨ 161.

Flashes

Clutch pedal must be depressed for a normal start of the engine ⇨ 17, ⇨ 160.

On some versions, the 'operate pedal' message is indicated in the Driver Information Centre ⇨ 122.

Electric parking brake

(P) illuminates or flashes red.

Illuminates

Electric parking brake is applied ⇨ 174.

Flashes

Electric parking brake is not fully applied or released. Switch on ignition, depress brake pedal and attempt to reset the system by first releasing and then applying the electric parking brake. If (P) remains flashing, do not drive and seek the assistance of a workshop.

Electric parking brake fault

illuminates or flashes yellow.

Illuminates

Electric parking brake is operating with degraded performance ⇨ 174.

Flashes

Electric parking brake is in service mode. Stop vehicle, apply and release the electric parking brake to reset.

⚠Warning

Have the cause of the fault remedied immediately by a workshop.

Antilock brake system (ABS)

(ABS) illuminates yellow.

Illuminates for a few seconds after the ignition is switched on. The system is ready for operation when the control indicator extinguishes.

If the control indicator does not extinguish after a few seconds, or if it illuminates while driving, there is a fault in the ABS. The brake system remains operational but without ABS regulation.

Antilock brake system ⇨ 173.

Upshift

illuminates green as a control indicator, or is shown as a symbol in the Driver Information Centre with Uplevel-Combi-Display, when upshifting is recommended for fuel saving reasons.

On some versions, gearshift indication is popped-up as a full page in the Driver Information Centre.

EcoFlex drive assistant ⇨ 126.

Power steering

! illuminates yellow.

Illuminates with power steering reduced

Power steering is reduced due to overheating of the system. Control indicator extinguishes when the system has cooled down.

Stop-start system ⇨ 161.

Illuminates with power steering disabled

Failure in the power steering system. Consult a workshop.

Lane departure warning

illuminates green or flashes yellow.

Illuminates green

System is switched on and ready to operate.

Flashes yellow

System recognizes an unintended lane change.

Ultrasonic parking assist

P illuminates yellow.

Fault in system

or

Fault due to sensors that are dirty or covered by ice or snow

or

Interference due to external sources of ultrasound. Once the source of interference is removed, the system will operate normally.

Have the cause of the fault in the system remedied by a workshop.

Ultrasonic parking assist ⇨ 194.

Electronic Stability Control off

illuminates yellow.

The system is deactivated.

Electronic Stability Control and Traction Control system

illuminates or flashes yellow.

Illuminates

A fault in the system is present. Continued driving is possible. Driving stability, however, may deteriorate depending on road surface conditions.

Have the cause of the fault remedied by a workshop.

Flashes

The system is actively engaged. Engine output may be reduced and the vehicle may be braked automatically to a small degree.

Electronic Stability Control ⇨ 176, Traction Control system ⇨ 176.

Traction Control system off

illuminates yellow.

The system is deactivated.

Preheating

illuminates yellow.

Preheating is activated. Only activates when outside temperature is low.

Diesel particle filter

illuminates or flashes yellow.

The diesel particle filter requires cleaning.

Continue driving until extinguishes. If possible, do not allow engine speed to drop below 2000 rpm.

Illuminates

The diesel particle filter is full. Start cleaning process as soon as possible.

Flashes

The maximum filling level of the filter is reached. Start cleaning process immediately to avoid damage to the engine.

Diesel particle filter ⇨ 164, Stop-start system ⇨ 161.

AdBlue

flashes yellow.

AdBlue level is low. Refill AdBlue soon to avoid prevention of the engine start.

AdBlue ⇨ 166.

Tyre pressure monitoring system

illuminates or flashes yellow.

Illuminates

Tyre pressure loss. Stop immediately and check tyre pressure.

Flashes

Fault in system or tyre without pressure sensor mounted (e.g. spare wheel). After 60-90 seconds the control indicator illuminates continuously. Consult a workshop.

Engine oil pressure

illuminates red.

Illuminates when the ignition is switched on and extinguishes shortly after the engine starts.

Illuminates when the engine is running

Caution
Engine lubrication may be interrupted. This may result in damage to the engine and/or locking of the drive wheels.

1. Depress clutch.
2. Select neutral gear, set selector lever to **N**.

3. Move out of the flow of traffic as quickly as possible without impeding other vehicles.
4. Switch off ignition.

⚠ Warning

When the engine is off, considerably more force is needed to brake and steer. During an Autostop the brake servo unit will still be operational.

Do not remove key until vehicle is stationary, otherwise the steering wheel lock could engage unexpectedly.

Check oil level before seeking the assistance of a workshop ⇨ 226.

Low fuel

● illuminates or flashes yellow.

Illuminates

Level in fuel tank is too low.

Flashes

Fuel used up. Refuel immediately. Never run the tank dry.

Catalytic converter ⇨ 165.

Bleeding the diesel fuel system ⇨ 231.

Immobiliser

🔒 flashes yellow.

Fault in the immobiliser system. The engine cannot be started.

Reduced engine power

illuminates yellow.

The engine power is limited. Consult a workshop.

Exterior light

illuminates green.

The exterior lights are on ⇨ 138.

High beam

illuminates blue.

Illuminates when high beam is on, during headlight flash ⇨ 140, or when high beam is on with high beam assist or intelligent light range ⇨ 142.

High beam assist

illuminates green.

The high beam assist or intelligent light range is activated ⇨ 140, ⇨ 142.

Adaptive forward lighting

illuminates or flashes yellow.

Illuminates

Fault in system.

Seek the assistance of a workshop.

Flashes

System switched to symmetrical low beam.

Control indicator flashes for approx. four seconds after the ignition is switched on as a reminder that the system has been activated ⇨ 141.

Automatic light control ⇨ 139.

Fog light

illuminates green.

The front fog lights are on ⇨ 146.

Rear fog light

illuminates yellow.

The rear fog light is on ⇨ 146.

Low washer fluid

illuminates yellow.

The washer fluid level is low.

Washer fluid ⇨ 229.

Cruise control

illuminates white or green.

Illuminates white

The system is on.

Illuminates green

Cruise control is active.

Cruise control ⇨ 179.

Adaptive cruise control

illuminates white or green.

Illuminates white

The system is on.

Illuminates green

Adaptive cruise control is active.

Adaptive cruise control ⇨ 182.

Vehicle detected ahead

illuminates green.

A vehicle ahead is detected in the same lane.

Adaptive cruise control ⇨ 182, Forward collision alert ⇨ 188.

Door open

illuminates red.

A door or the tailgate is open.

Information displays

Driver Information Centre

The Driver Information Centre is located in the instrument cluster between speedometer and tachometer. It is available as Midlevel-Display or Uplevel-Combi-Display.

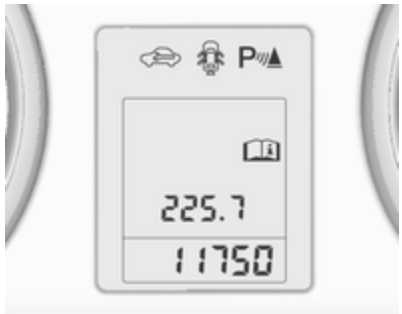

Midlevel-Display indicates:

- overall odometer
- trip odometer
- some control indicators
- vehicle information

- trip/fuel information
- vehicle messages, displayed as code numbers ⇨ 122.

In the Uplevel-Combi-Display, menu pages can be selected by pressing **MENU** on the turn signal lever. Menu symbols are indicated in the top line of the display:

- **Vehicle Information Menu**
- **Trip/Fuel Information Menu**
- **ECO ECO Information Menu**

Some of the displayed functions differ when the vehicle is being driven or at a standstill. Some functions are only available when the vehicle is being driven.

Vehicle personalisation ⇨ 129.
Memorised settings ⇨ 24.

Selecting menus and functions

The menus and functions can be selected via the buttons on the turn signal lever.

Press **MENU** to switch between the menus or to return from a submenu to the next higher menu level.

Turn the adjuster wheel to highlight a menu option or to set a numeric value.

Press **SET/CLR** to select a function or confirm a message.

Vehicle Information Menu

Press **MENU** to select the **Vehicle Information Menu**, or on Uplevel-Combi-Display select .

Turn the adjuster wheel to select a submenu. Press **SET/CLR** to confirm.

Follow the instructions given in the submenus.

Possible submenus can include, depending on the version:

- **Unit**: Displayed units can be changed.
- **Tyre Pressure**: Checks tyre pressure of all wheels during driving ⇨ 248.
- **Tyre Load**: Select tyre pressure category according to the actual tyre inflation pressure ⇨ 248.

- **Remaining Oil Life**: Indicates when to change the engine oil and filter ⇨ 106.

- **Speed Warning**: If exceeding the preset speed a warning chime will be activated.
- **Traffic Sign Assistant**: Displays detected traffic signs for the current route section ⇨ 204.

- **Following Dist.**: Displays the distance to a moving vehicle ahead ⇨ 192.

Selection and indication can be different between Midlevel-Display and Uplevel-Combi-Display.

Trip/Fuel Information Menu

Press **MENU** to select the **Trip/Fuel Information Menu**, or select /⁝\ on Uplevel-Combi-Display.

Turn the adjuster wheel to select a submenu. Press **SET/CLR** to confirm.

- trip odometer 1
- trip odometer 2
- digital speed

Trip odometer 2 and digital speed are only available on vehicles with Uplevel-Combi-Display.

Reset trip odometer by pressing **SET/CLR** on the turn signal lever for a few seconds or by pressing the reset knob between speedometer and Driver Information Centre with the ignition on.

On vehicles with trip computer, more submenus are available.

Selection and indication can be different between Midlevel-Display and Uplevel-Combi-Display.

Trip/Fuel Information Menu, Trip Computer ⇨ 126.

ECO Information Menu

Press **MENU** to select eco in the top line of the Uplevel-Combi-Display.

Turn the adjuster wheel to select a submenu. Press **SET/CLR** to confirm.

Submenus are:

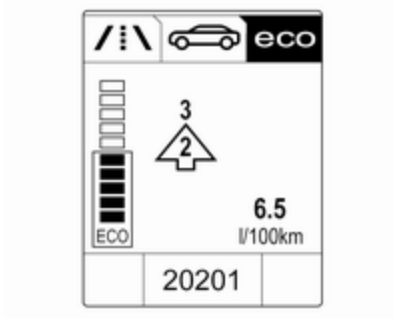

- **Shift indication**: Current gear is indicated inside an arrow. The figure above recommends upshifting for fuel saving reasons.

  Eco index display: The current fuel consumption is indicated on a segment display. For economical driving, adapt your driving style to keep the filled segments within the Eco area. The more segments are filled, the higher the fuel consumption. Simultaneously the current consumption value is indicated.

- **Top Consumers**: List of top comfort consumers currently switched on is displayed in descending order. Fuel saving potential is indicated. A switched-off consumer disappears from the list and the consumption value will be updated.

  During sporadic driving conditions, the engine will activate the heated rear window automatically to increase the engine load. In that event, rear window heating is indicated as one of the top consumers, without activation by the driver.

- **Economy Trend**: Displays the average consumption development over a distance of 50 km. Filled segments display the consumption in 5 km steps and shows the effect of topography or driving behaviour on fuel consumption.

Graphic-Info-Display, Colour-Info-Display

Depending on the vehicle configuration the vehicle has a Graphic-Info-Display or Colour-Info-Display. The Info-Display is located in the instrument panel above the Infotainment system.

Graphic-Info-Display

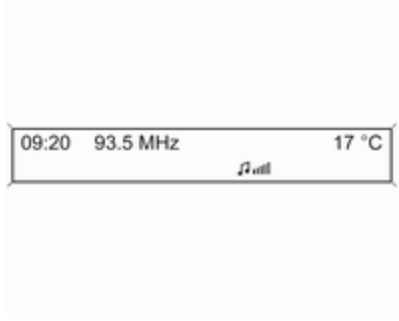

Depending on the Infotainment system, the Graphic-Info-Display is available in two versions.

20153

Graphic-Info-Display indicates:

- time ⇨ 101
- outside temperature ⇨ 100
- date ⇨ 101
- Infotainment system, see description in the Infotainment manual
- settings for vehicle personalisation ⇨ 129

Colour-Info-Display

The Colour-Info-Display indicates in colour:

- time ⇨ 101
- outside temperature ⇨ 100
- date ⇨ 101
- Infotainment system, see description in the Infotainment manual
- navigation, see description in the Infotainment manual
- rear view camera
- system settings
- vehicle messages ⇨ 122
- settings for vehicle personalisation ⇨ 129

The type of information and how it is displayed depends on the equipment of the vehicle and the settings made.

Selecting menus and settings

Menus and settings are accessed via the display.

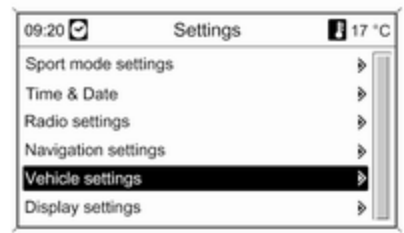

Selections are made via:

- menus
- function buttons and multifunction knob of the Infotainment system

Selecting with the Infotainment system

Select a function via the Infotainment system buttons. The menu of the selected function is displayed.

The multifunction knob is used to select an item and to confirm.

Multifunction knob

The multifunction knob is the central control element for the menus:

Turn

- to highlight a menu option
- to set a numeric value or to display a menu option

Press (the outer ring)

- to select or activate the highlighted option
- to confirm a set value
- to switch a system function on/off

BACK

Press **BACK** to:

- exit a menu without changing settings
- return from a submenu to a higher menu level
- delete the last character in a character sequence

Press and hold **BACK** for a few seconds to delete the entire entry.

Vehicle personalisation ⇨ 129.

Memorised settings ⇨ 24.

Vehicle messages

Messages are indicated mainly in the Driver Information Centre, in some cases together with a warning and signal buzzer.

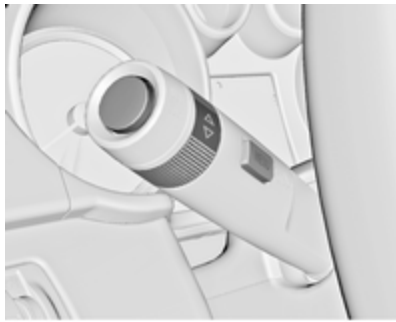

Press **SET/CLR**, **MENU** or turn the adjuster wheel to confirm a message.

Vehicle messages on the Midlevel-Display

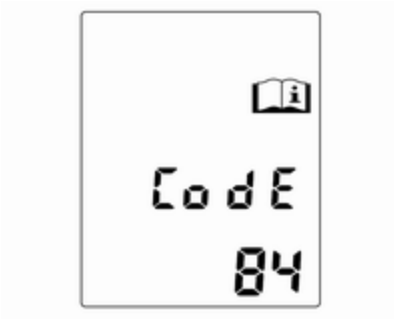

The vehicle messages are displayed as code numbers.

No.	Vehicle message
2	No radio remote control detected, depress clutch pedal to restart
4	Air conditioning off
5	Steering wheel is locked
6	Depress brake pedal to release electric parking brake
7	Turn steering wheel, switch ignition off then on
9	Turn steering wheel, restart engine
12	Vehicle overloaded
13	Compressor overheated
15	Centre high-mounted brake light failure
16	Brake light failure
17	Headlight levelling malfunction
18	Left low beam failure
19	Rear fog light failure
20	Right low beam failure
21	Left sidelight failure
22	Right sidelight failure
23	Reversing light failure
24	Number plate light failure
25	Left front turn signal failure
26	Left rear turn signal failure
27	Right front turn signal failure
28	Right rear turn signal failure
29	Check trailer brake light
30	Check trailer reversing light
31	Check left trailer turn signal
32	Check right trailer turn signal
33	Check trailer rear fog light
34	Check trailer rear light
35	Replace battery in radio remote control
48	Clean side blind spot alert system
49	Lane departure warning unavailable
53	Tighten fuel filler cap
54	Water in diesel fuel filter
55	Diesel particle filter is full ⇨ 164

No.	Vehicle message
56	Tyre pressure imbalance on front axle
57	Tyre pressure imbalance on rear axle
58	Tyres without TPMS sensors detected
59	Open then close driver window
60	Open then close front passenger window
61	Open then close rear left window
62	Open then close rear right window
65	Theft attempted
66	Service anti-theft alarm system
67	Service steering wheel lock
68	Service power steering
69	Service suspension system
70	Service level control system

No.	Vehicle message
71	Service rear axle
74	Service AFL
75	Service air conditioning
76	Service side blind spot alert system
77	Service lane departure warning
79	Top up engine oil
81	Service transmission
82	Change engine oil soon
83	Service adaptive cruise control
84	Engine power is reduced
89	Service vehicle soon
94	Shift to park position before exiting
95	Service airbag
128	Bonnet open
134	Park assist fault, clean bumper
136	Service parking assist

No.	Vehicle message
145	Check washer fluid level
174	Low vehicle battery
258	Parking assist off

Vehicle messages on the Uplevel-Combi-Display

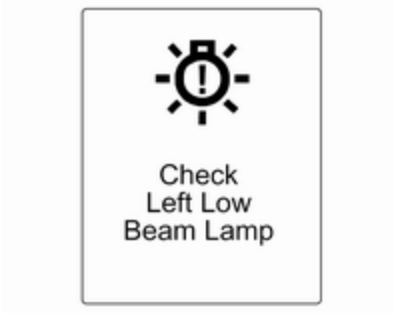

The vehicle messages are displayed as text. Follow the instructions given in the messages.

The system displays messages regarding the following topics:

- service messages
- fluid levels
- anti-theft alarm system
- brakes
- driver assistance systems
- ride control systems
- speed limiter
- cruise control
- adaptive cruise control
- forward collision alert
- collision imminent braking system
- parking assistant systems
- lighting, bulb replacement
- adaptive forward lighting
- wiper/washer system
- doors, windows
- side blind spot alert
- traffic sign assistant
- lane departure warning
- radio remote control
- seat belts
- airbag systems
- engine and transmission
- tyre pressure
- diesel particle filter ⇨ 164
- vehicle battery status
- selective catalytic reduction, Diesel Exhaust Fluid (DEF), AdBlue ⇨ 166

Vehicle messages on the Colour-Info-Display

Some important messages appear additionally in the Colour-Info-Display. Press the multifunction knob to confirm a message. Some messages only pop-up for a few seconds.

Warning chimes

When starting the engine or whilst driving

Only one warning chime will sound at a time.

The warning chime regarding unfastened seat belts has priority over any other warning chime.

- If seat belt is not fastened.
- If a door or the tailgate is not fully closed when starting-off.
- If a certain speed is exceeded with parking brake applied.
- If adaptive cruise control deactivates automatically.
- If approaching a vehicle ahead too closely.
- If a programmed speed or speed limit is exceeded.
- If a warning message or a warning code appears in the Driver Information Centre.
- If the parking assist detects an object.
- If an unintended lane change occurs.
- If reverse gear is engaged and the rear carrier system is extended.
- If the diesel particle filter has reached the maximum filling level.
- If AdBlue needs to be refilled.

When the vehicle is parked and/or the driver's door is opened

- With exterior lights on.

During an Autostop

- If the driver's door is opened.

Battery voltage

When the vehicle battery voltage is running low, a warning message or warning code 174 will appear in the Driver Information Centre.

1. Switch off immediately any electrical consumers which are not required for a safe ride, e.g. seat heating, heated rear window or other main consumers.
2. Charge the vehicle battery by driving continuously for a while or by using a charging device.

The warning message or warning code will disappear after the engine has been started two times consecutively without a voltage drop.

If the vehicle battery cannot be recharged, have the cause of the fault remedied by a workshop.

Trip computer

The menus and functions can be selected via the buttons on the turn signal lever ⇨ 116.

Press **MENU** to select the **Trip/Fuel Information Menu**, or select ⁄⁝\ on the Uplevel-Combi-Display.

Trip/Fuel Information Menuon Uplevel-Combi-Display
Turn the adjuster wheel to select the submenus:

- trip odometer 1
- average consumption 1
- average speed 1

- trip odometer 2
- average consumption 2
- average speed 2

- digital speed
- range
- instantaneous consumption
- route guidance

Trip computer 1 and 2

The information of two trip computers can be reset separately for odometer, average consumption and average speed by pressing **SET/CLR**, making it possible to display different trip information for different drivers.

Trip odometer

Trip odometer displays the recorded distance since a certain reset.

Trip odometer counts up to a distance of 2000 km then restarts at 0.

To reset, press **SET/CLR** for a few seconds.

Range

Range is calculated from current fuel tank content and current consumption. The display shows average values.

After refuelling, the range is updated automatically after a brief delay.

When the fuel level in the tank is low, a message appears on vehicles with Uplevel-Combi-Display.

When the tank needs to be refuelled immediately, a warning code or warning message is displayed on vehicles with Midlevel-Display or Uplevel-Combi-Display.

Additionally control indicator ⬬ illuminates or flashes in the fuel gauge ⇨ 115.

Average consumption

Display of average consumption. The measurement can be reset at any time and starts with a default value.

To reset, press **SET/CLR** for a few seconds.

Instantaneous consumption

Display of the instantaneous consumption.

Average speed

Display of average speed. The measurement can be reset at any time.

To reset, press **SET/CLR** for a few seconds.

Digital speed

Digital display of the instantaneous speed.

Traffic sign assistant

Indicates detected traffic signs for the current route section ⇨ 204.

Route guidance

In addition to the navigation information in the Color-Info-Display, route guidance is displayed in the Driver Information Centre.

Different indication on vehicles with natural gas engine:

Range

Range is indicated for petrol mode and natural gas mode.

Both modes can be indicated in combination.

Average consumption

Average consumption is always indicated in the selected mode.

Fuel selector ⇨ 105.

Instantaneous consumption

Instantaneous consumption is always indicated in the selected mode.

Fuel selector ⇨ 105.

Vehicle personalisation

The vehicle's behaviour can be personalised by changing the settings in the Info-Display.

Some of the personal settings for different drivers can be memorised individually for each vehicle key. Memorised settings ⇨ 24.

Depending on vehicle equipment and country-specific regulations, some of the functions described below may not be available.

Some functions are only displayed or active when the engine is running.

Personalised settings in the Graphic-Info-Display

CD 400plus/CD 400/CD 300

Press **CONFIG**. The menu **Settings** is displayed.

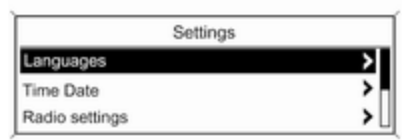

The following settings can be selected by turning and pressing the multifunction knob:

- **Sport mode settings**
- **Languages**
- **Time Date**
- **Radio settings**
- **Phone settings**
- **Vehicle settings**

In the corresponding submenus, the following settings can be changed:

Sport mode settings

The driver can select the functions which will be activated in Sport mode ⇨ 177.

- **Sport suspension**: Damping becomes harder.
- **Sport powertrain performance**: Accelerator pedal and gear change characteristics become more responsive.
- **Sport steering**: Steering support is reduced.
- **Swap backlight colour main instr.**: Changes the instrument illumination colour.

Languages
Selection of the desired language.

Time Date
See Clock ⇨ 101.

Radio settings
See Infotainment manual for further information.

Phone settings
See Infotainment manual for further information.

Vehicle settings

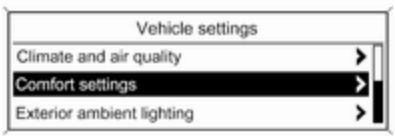

- **Climate and air quality**

  Auto fan speed: Modifies the fan regulation. Changed setting will be active after switching the ignition off and on again.

  Climate control mode: Activates or deactivates the cooling every time the ignition is switched on or uses the last chosen setting.

  Auto rear demist: Activates heated rear window automatically.

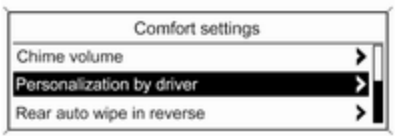

20340

- **Comfort settings**

  Chime volume: Changes the volume of warning chimes.

  Personalization by driver: Activates or deactivates the personalisation function.

  Rear auto wipe in reverse: Activates or deactivates automatic switching on of the rear window wiper when reverse gear is engaged.

- **Park assist / Collision detection**

  Park assist: Activates or deactivates the ultrasonic parking assist. Activation is selectable with or without attached trailer coupling.

  Auto collision preparation: Activates or deactivates the automatic brake functionality of the vehicle in the event of imminent collision danger. The following is selectable: the system will take over brake control, warn by chimes only or is deactivated completely.

  Side blind zone alert: Changes the settings for the side blind spot alert system.

- **Exterior ambient lighting**

  Duration upon exit of vehicle: Activates or deactivates and changes the duration of exit lighting.

  Exterior lighting by unlocking: Activates or deactivates the welcome lighting.
- **Power door locks**

  Auto door lock: Activates or deactivates the automatic door unlocking function after switching off ignition. Activates or deactivates the automatic door locking function after driving-off.

  Stop door lock if door open: Activates or deactivates the automatic door locking function while a door is open.

  Delayed door lock: Activates or deactivates the delayed door locking function.
- **Remote locking, unlocking, starting**

  Remote unlock feedback: Activates or deactivates the hazard warning flasher feedback whilst unlocking.

  Remote door unlock: Changes the configuration to unlock only the driver's door or the entire vehicle whilst unlocking.

  Auto relock doors: Activates or deactivates the automatic relock function after unlocking without opening the vehicle.
- **Restore factory settings**

  Restore factory settings: Resets all settings to the default settings.

Personalised settings in the Colour-Info-Display

Navi 950/Navi 650/CD 600

Press **CONFIG** on the Infotainment system faceplate to enter the Configuration Settings menu.

Turn the multifunction knob to scroll upwards or downwards in the list. Press the multifunction knob (Navi 950 / Navi 650: press the outer ring) to select a menu item.

- **Sport Mode Profile**
- **Languages**
- **Time and Date**
- **Radio Settings**
- **Phone Settings**
- **Navigation Settings**
- **Display Settings**
- **Vehicle Settings**

In the corresponding submenus, the following settings can be changed:

Sport Mode Profile

- **Engine Sport Performance**:

  Accelerator pedal and gear change characteristics become more responsive.
- **Sport Mode Back Lighting**:

  Changes the instrument illumination colour.
- **Sport Suspension**: Damping becomes harder.
- **Sport Steering**: Steering support is reduced.

Languages

Selection of the desired language.

Time and Date

See Infotainment manual for further information.

Radio Settings

See Infotainment manual for further information.

Phone Settings

See Infotainment manual for further information.

Navigation Settings

See Infotainment manual for further information.

Display Settings

- **Home Page Menu**:

  See Infotainment manual for further information.
- **Rear Camera Options**:

  Press to adjust the rear camera options ⇨ 202.
- **Display Off**:

  See Infotainment manual for further information.
- **Map Settings**:

  See Infotainment manual for further information.

Vehicle Settings

- **Climate and Air Quality**

  Auto Fan Speed: Modifies the fan regulation. Changed setting will be active after switching the ignition off and on again.

  Air Conditioning Mode: Activates or deactivates cooling when switching on the ignition or uses the last chosen setting.

  Auto Demist: Activates or deactivates auto demist.

  Auto Rear Demist: Activates the heated rear window automatically.
- **Comfort and Convenience**

  Chime Volume: Changes the volume of warning chimes.

  Personalisation by Driver: Activates or deactivates the personalisation function.

  Auto Reverse Gear Wiper: Activates or deactivates automatic switching on of the rear window wiper when reverse gear is engaged.
- **Collision Detection Systems**

  Park Assist: Activates or deactivates the ultrasonic sensors. Activation is selectable with or without attached trailer coupling.

  Automatic Collision Preparation: Activates or deactivates the automatic brake functionality of the vehicle in the event of imminent collision danger. The following is selectable: the

system will take over brake control, warn by chimes only or is deactivated completely.

Side Blind Zone Alert: Activates or deactivates the side blind spot alert system.

- **Lighting**

  Vehicle Locator Lights: Activates or deactivates the entry lighting.

  Exit Lighting: Activates or deactivates and changes the duration of exit lighting.

- **Power Door Locks**

  Open Door Anti Lock Out: Activates or deactivates the automatic door locking function while a door is open.

  Auto Door Lock: Activates or deactivates the automatic door unlocking function after switching off ignition. Activates or deactivates the automatic door locking function after driving-off.

  Delay Door Lock: Activates or deactivates the delayed door locking function.

- **Remote Lock/Unlock/Start**

  Remote Lock Feedback: Activates or deactivates the hazard warning flasher feedback whilst locking.

  Remote Unlock Feedback: Activates or deactivates the hazard warning flasher feedback whilst unlocking.

  Remote Door Unlock: Changes the configuration to unlock only the driver's door or the entire vehicle whilst unlocking.

  Relock Remotely Unlocked Doors: Activates or deactivates the automatic relock function after unlocking without opening the vehicle.

- **Return to Factory Settings?**: Resets all settings to the default settings.

OnStar

OnStar is a personal connectivity and service assistant with integrated Wi-Fi hotspot. The OnStar service is available 24 hours a day, seven days a week.

Note
OnStar is not available for all markets. For further information, contact your workshop.

Note
In order to be available and operational, OnStar needs a valid OnStar subscription, functioning vehicle electrics, mobile service and GPS satellite link.

To activate the OnStar services and set up an account, press ⓞ and speak with an advisor.

Depending on the equipment of the vehicle, the following services are available:

- Emergency services and support in the case of a vehicle breakdown
- Wi-Fi hotspot

- Smartphone application
- Remote control, e.g. location of the vehicle, activation of horn and lights, control of central locking system
- Stolen vehicle assistance
- Vehicle diagnostics
- Destination download

Note
The OnStar module of the vehicle is deactivated after ten days without an ignition cycle. Functions requiring a data connection will be available again after switching on the ignition.

OnStar buttons

Note
Depending on the equipment, the OnStar buttons can also be integrated in the rear view mirror.

Privacy button

Press and hold until an audio message is heard to activate or deactivate the transmission of the vehicle location.

Press to answer a call or to end a call to an OnStar advisor.

Press to access the Wi-Fi settings.

OnStar button

Press to establish a connection to an OnStar advisor.

SOS button

Press to establish a priority emergency connection to a specially trained emergency advisor.

Status light

Green: The system is ready.

Green flashing: The system is on a call.

Red: A problem arose.

Off: System is off.

Red / green flashing for a short period of time: Transmission of the vehicle location has been deactivated.

OnStar services

OnStar emergency services

OnStar emergency provides a service with specially trained emergency advisors for contact, assistance and information during an emergency.

In the case of an emergency situation including vehicle breakdown, a flat tyre or empty fuel tank, press and talk to the advisor. The advisor then contacts emergency or assistance service providers and directs them to your vehicle.

In the case of an accident with activation of airbags or belt tensioners, an automatic emergency call is established. The advisor is immediately connected to your vehicle to see whether help is needed.

OnStar Wi-Fi hotspot

The Wi-Fi hotspot of the vehicle provides internet connectivity through the 4G/LTE mobile network.

Note
The Wi-Fi hotspot functionality is not available for all markets.

Up to seven devices may be connected.

To connect a mobile device with the OnStar Wi-Fi hotspot:

1. Press ⊘ and then select Wi-Fi settings on the Info-Display. The settings displayed include the Wi-Fi hotspot name (SSID), password and connection type.
2. Start a Wi-Fi network search on your mobile device.
3. Select your vehicle hotspot (SSID) when listed.
4. When prompted, enter the password on your mobile device.

Note
To change the SSID or password, select ⓞ and talk to an OnStar advisor or logon to your account.

To switch off the Wi-Fi hotspot functionality, press ⓞ to call an OnStar advisor.

Smartphone app
With the myOpel smartphone app, some vehicle functions can be operated via a smartphone.

The following functions are available:

- Lock or unlock doors.
- Honk horn or flash lights.
- Check fuel level, engine oil life and tyre pressure (only with tyre pressure monitoring system).
- Send navigation destination to the vehicle, if equipped with a built-in navigation system.
- Locate vehicle on a map.
- Manage Wi-Fi settings.

To operate these functions, download the app from the respective app store.

Remote service
If desired, use any phone to call an OnStar advisor, who can remotely operate specific vehicle functions. Find the respective OnStar phone number on our country-specific website.

The following functions are available:

- Lock or unlock doors.
- Provide information on the vehicle location.
- Honk horn or flash lights.

Stolen vehicle assistance
If a vehicle is stolen, the OnStar stolen vehicle assistance service can provide support in locating and recovering the vehicle.

Theft alert
When the anti-theft alarm system is triggered, a notification is sent to OnStar. You are then informed about this event by text message or email.

If required, report the theft to the authorities and request OnStar stolen vehicle assistance. Use any phone to call an OnStar advisor. Find the respective OnStar phone number on our country-specific website.

Remote ignition block
By sending remote signals, OnStar can block the ignition cycle preventing the vehicle from restarting once it has been turned off.

On-demand diagnostics

At any time e.g. if the vehicle displays a service message, press ⓞⓝ to contact an OnStar advisor and ask to complete a real-time diagnostic check to directly determine the issue. Depending on the results, the advisor will provide further support.

Monthly vehicle diagnostics

The vehicle automatically transmits diagnostic data to OnStar which sends a monthly email report to you and your preferred workshop.

Note
The workshop notification function can be disabled in your account.

The report contains the status of key operating systems of the vehicle like engine, transmission, airbags, antilock brakes, and other major systems. It also provides information on possible maintenance items and tyre pressure (only with tyre pressure monitoring system).

To look at the information in greater detail, select the link within the email and log into your account.

Destination download

A desired destination can be directly downloaded to the navigation system.

Press ⓞⓝ to call an OnStar advisor and describe the destination or point of interest.

The OnStar advisor can look up any address or point of interest and directly download the destination to the built-in navigation system.

OnStar settings

OnStar PIN

To have full access to all OnStar services, a four-digit PIN is required. The PIN has to be personalised when first talking to an OnStar advisor.

To change the PIN, press ⓞⓝ to call an OnStar advisor.

Account data

An OnStar subscriber has an account, where all the data is stored. To request a change of the account information, press ⓞⓝ and talk to an OnStar advisor or logon to your account.

If the OnStar service is used on another vehicle, press ⓞⓝ and request that the account be transferred to the new vehicle.

Note
In any case, if the vehicle is disposed of, sold or otherwise transferred, immediately inform OnStar about the changes and terminate the OnStar service on this vehicle.

Vehicle location

The vehicle location is transmitted to OnStar when service is requested or triggered. A message on the Info-Display informs about this transmission.

To activate or deactivate the transmission of the vehicle location, press and hold ⓣ until an audio message is heard.

The deactivation is indicated by the status light flashing red and green for a short period of time and each time the vehicle is started.

Note
If the transmission of the vehicle location is deactivated, some services are no longer available.

Note
The vehicle location always remains accessible to OnStar in the case of an emergency.

Find the privacy policy in your account.

Software updates
OnStar may remotely carry out software updates without further notice or consent. These updates are to enhance or maintain safety and security or the operation of the vehicle.

These updates may concern privacy issues. Find the privacy policy in your account.

Lighting

Exterior lighting **138**
Light switch 138
Automatic light control 139
High beam 140
High beam assist 140
Headlight flash 140
Headlight range adjustment 141
Headlights when driving abroad 141
Daytime running lights 142
Adaptive forward lighting 142
Hazard warning flashers 145
Turn and lane-change signals . 145
Front fog lights 146
Rear fog light 146
Parking lights 146
Reversing lights 147
Misted light covers 147
Interior lighting **147**
Instrument panel illumination control 147
Interior lights 147
Reading lights 148
Sunvisor lights 148
Lighting features **148**
Centre console lighting 148
Entry lighting 148
Exit lighting 149
Battery discharge protection 149

Exterior lighting

Light switch

Turn light switch:

0 : lights off
⇛ : sidelights
≣D : headlights

Control indicator ⇛ ⇨ 115.

Light switch with Automatic light control

Turn light switch:

AUTO : automatic light control: Headlights are switched on and off automatically depending on external lighting conditions

⏻ : activation or deactivation of the automatic light control. Switch turns back to AUTO

≡D : sidelights

≡D : headlights

In the Driver Information Centre with Uplevel-Combi-Display, the current status of the automatic light control is displayed.

When switching on the ignition, automatic light control is active.

When headlights are on, ≡D illuminates. Control indicator ≡D ⇨ 115.

Tail lights

Tail lights are illuminated together with headlights and sidelights.

Automatic light control

When the automatic light control function is switched on and the engine is running, the system switches between daytime running light and headlights automatically depending on the lighting conditions and information given by the rain sensor system.

Daytime running light ⇨ 142.

Automatic headlight activation

During poor lighting conditions the headlights are switched on.

Furthermore the headlights are switched on if the windscreen wipers have been activated for several wipes.

Tunnel detection

When a tunnel is entered the headlights are switched on immediately.

Adaptive forward lighting ⇨ 142.

High beam

To switch from low to high beam, push lever.

To switch to low beam, push lever again or pull.

High beam assist

Version with halogen headlights

This feature allows high beam as main driving light by night and when vehicle speed is faster than 40 km/h.

It switches to low beam when:

- A sensor detects the lights of oncoming or preceding vehicles.
- The vehicle speed is slower than 20 km/h.
- It is foggy or snowy.
- Driving in urban areas.

If there are no restrictions detected, the system switches back to high beam.

Activation

The high beam assist is activated by pushing the indicator lever twice with a speed above 40 km/h.

The green control indicator ≡D illuminates continuously when the assist is activated, the blue one ≡D illuminates when high beam is on.

Control indicator ≡D ⇨ 115.

Deactivation

Push indicator lever once. It is also deactivated when front fog lights are switched on.

If a headlight flash is activated when the high beam is on, the high beam assist will be deactivated.

If a headlight flash is activated when the high beam is off, the high beam assist will stay activated.

The latest setting of the high beam assist will remain after the ignition is switched on again.

High beam assist with adaptive forward lighting ⇨ 142.

Headlight flash

To activate the headlight flash, pull lever.

Headlight range adjustment

Manual headlight range adjustment

To adapt headlight range to the vehicle load to prevent dazzling: turn thumb wheel to required position.

0 : front seats occupied
1 : all seats occupied
2 : all seats occupied and load compartment laden
3 : driver's seat occupied and load compartment laden

Dynamic automatic headlight levelling ⇨ 142.

Headlights when driving abroad

The asymmetrical headlight beam extends visibility at the edge of the road at the passenger side.

However, when driving in countries where traffic drives on the opposite side of the road, adjust the headlights to prevent dazzling of oncoming traffic.

Vehicles with halogen headlight system

The headlights do not have to be adjusted.

Vehicles with Xenon headlight system

1. Key in ignition switch.
2. Pull turn signal lever and hold (headlight flash).
3. Switch on ignition.
4. After approx. five seconds the control indicator starts flashing and an acoustic signal sounds.

Control indicator ⇨ 115.

Every time the ignition is switched on, flashes for approx. four secondsas a reminder.

For deactivation, operate the same procedure as described above. Control indicator ⦿ will not flash when function is deactivated.

Daytime running lights

Daytime running light increases visibility of the vehicle during daylight.

They are switched on automatically when ignition is on.

If the vehicle is equipped with automatic light control function, the system switches between daytime running light and low/high beam automatically depending on the lighting conditions and information given by the rain sensor system. Automatic light control ⇨ 139.

Adaptive forward lighting

The Adaptive forward lighting functions are only available with Bi-Xenon headlights. Light range, light distribution and intensity of light are variably triggered depending on the light conditions, weather and road type.

With the light switch in position **AUTO** all lighting functions are available.

The following functions are available also with light switch in position ≡D:

- dynamic curve lighting
- corner lighting
- reversing function
- dynamic automatic headlight levelling

Playstreet lighting

Activated automatically at low speed up to approx. 30 km/h. The light beam is turned at an angle of 8° to the roadside.

Town lighting

Activated automatically at a speed range between approx. 40 and 55 km/h and when street lights are detected by the light sensor. The light range is reduced by an extended light distribution.

Country lighting

Activated automatically at a speed range between approx. 55 and 115 km/h. The beam of light and the brightness is different between the left and the right side.

Motorway lighting

Activated automatically at a speed above approx. 115 km/h and minimal steering movements. It switches on after a delay or directly when the vehicle is powerfully accelerated. The light beam is longer and brighter.

Adverse weather lighting

Activated automatically up to a speed of approx. 70 km/h, when the rain sensor recognises condensation or the wiper operates continuously. The range, distribution and light intensity is regulated variably depending on visibility.

Dynamic curve lighting

The light beam pivots based on steering wheel angle and speed, improving lighting in curves.

Control indicator ⚙ ⇨ 115.

Corner lighting

On tight bends or when turning off, depending on the steering angle or the turn signal light, an additional left or right reflector is switched on which illuminates the road at an right angle to the direction of travel. It is activated up to a speed of 40 km/h.

Control indicator ⚙ ⇨ 115.

Reversing function

If the headlights are on and reverse gear is engaged, both corner lights are switched on. They remain illuminated for 20 seconds after disengaging reverse gear or until driving faster than 17 km/h in a forward gear.

High beam assist

This feature allows high beam as main driving light by night and when vehicle speed is faster than 40 km/h.

It switches to low beam when:

- The camera in the windscreen detects the lights of oncoming or preceding vehicles.
- The vehicle speed is slower than 20 km/h.
- It is foggy or snowy.
- Driving in urban areas.

If there are no restrictions detected, the system switches back to high beam.

Activation

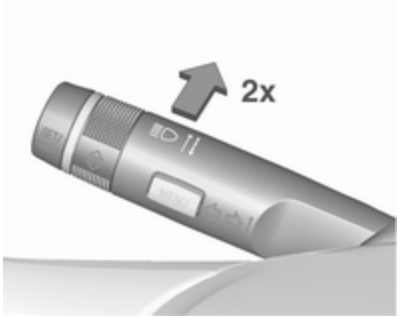

The high beam assist is activated by pushing the indicator lever twice with a speed above 40 km/h.

The green control indicator ≣D illuminates continuously when the assist is activated, the blue one ≣D illuminates when high beam is on.

Control indicator ≣D ⇨ 115.

Deactivation

Push indicator lever once. It is also deactivated when front fog lights are switched on.

If a headlight flash is activated when the high beam is on, the high beam assist will be deactivated.

If a headlight flash is activated when the high beam is off, the high beam assist will stay activated.

High beam assist is always active after the ignition is switched on.

Intelligent light ranging with automatic high beam activation

Intelligent light ranging uses the properties of Bi-Xenon headlights to extend the light range of the low beams by up to 400 metres and additionally activates automatic high beam without dazzling or disturbing oncoming or preceding traffic.

High beam is deactivated and the low beam light range will be reduced to avoid dazzling when the following restrictions are detected by the front camera in the windscreen:

- A preceding vehicle is recognised.
- An oncoming vehicle is recognised.
- Urban areas are entered.
- Iit is foggy or snowy.

If there are no restrictions detected, the system switches back to high beam.

When the system is active, the front camera monitors the area ahead of the vehicle and ensures an optimum light distribution for maximum driver vision during almost all conditions

Intelligent light ranging with automatic high beam activation therefore reduces the difference between conventional low and high beam without drastic changes in light-range, distribution and intensity.

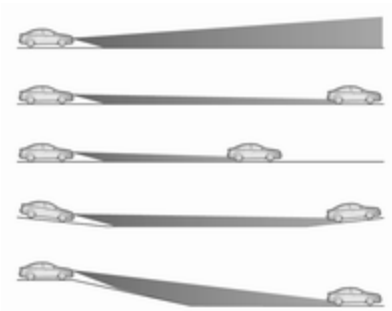

A special topographical evaluation function detects preceding vehicles on hills or slopes by recognising the rear light moving ahead. The system adjusts the height of the light range to ensure optimum illumination on the road ahead without dazzling.

Activation

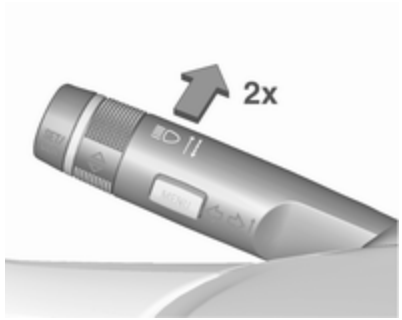

Intelligent light ranging and automatic high beam activation are switched on together by pushing the indicator lever twice. They can be switched on with ignition on.

Automatic high beam activation operates at a speed above 40 km/h and deactivates below 20 km/h. Intelligent light ranging operates above 55 km/h.

The green control indicator illuminates continuously when the function is activated, the blue one illuminates when high beam switches on automatically.

Deactivation

Push indicator lever once. It is also deactivated when front fog lights are switched on.

Dynamic automatic headlight levelling

To prevent oncoming traffic from dazzle, headlight levelling is automatically adjusted based on inclination information measured by front and rear axle, acceleration or deceleration and vehicle speed.

Fault in Adaptive forward lighting system

When the system detects a failure in the Adaptive forward lighting system, the system moves to a preset position to avoid dazzling of oncoming traffic. If this is not possible, the affected headlight will be automatically switched off. In any case, one headlight will stay on. A warning is displayed in the Driver Information Centre.

Hazard warning flashers

Operated by pressing .

In the event of an accident with airbag deployment the hazard warning flashers are activated automatically.

Turn and lane-change signals

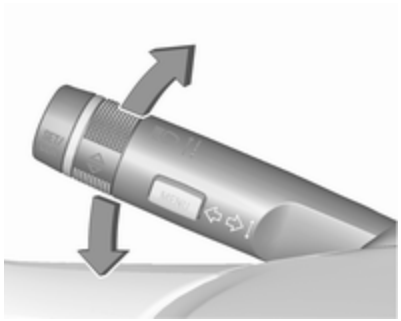

lever up : right turn signal
lever down : left turn signal

If the lever is moved past the resistance point, the turn signal is switched on constantly. When the steering wheel moves back, the turn signal is automatically deactivated.

For three flashes, e.g. when changing lanes, press the lever until resistance is felt and then release.

When a trailer is connected, turn signal flashes six times when pressing the lever until resistance is felt and then releasing.

Move the lever to the resistance point and hold for longer indication.

Switch the turn signal off manually by moving the lever to its original position.

Front fog lights

Operated by pressing ⚡D.

Light switch in position **AUTO**: switching on front fog lights will switch headlights on automatically.

Rear fog light

Operated by pressing ⊂⚡.

Light switch in position **AUTO**: switching on rear fog light will switch headlights on automatically.

Light switch in position ⊃⊂: rear fog light can only be switched on with front fog lights.

The vehicle rear fog light is deactivated when towing.

Parking lights

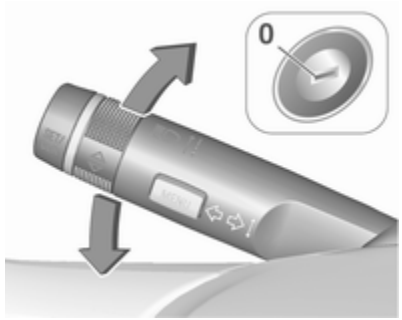

When the vehicle is parked, the parking lights on one side can be activated:

1. Switch off ignition.
2. Move turn signal lever all the way up (right parking lights) or down (left parking lights).

Confirmed by a signal and the corresponding turn signal control indicator.

Reversing lights

The reversing light comes on when the ignition is on and reverse gear is selected.

Misted light covers

The inside of the light housing may mist up briefly in poor, wet and cold weather conditions, in heavy rain or after washing. The mist disappears quickly by itself; to help switch on the headlights.

Interior lighting

Instrument panel illumination control

Brightness of the following lights can be adjusted when the exterior lights are on:

- instrument panel illumination
- Info-Display
- illuminated switches and operation elements

Turn thumb wheel ⚙ and hold until the desired brightness is obtained.

On vehicles with light sensor, the brightness can only be adjusted when the exterior lights are on and the light sensor detects night conditions.

Interior lights

During entry and exit of the vehicle, the front and rear courtesy lights automatically switch on and then off after a delay.

Note
In the event of an accident with airbag deployment the courtesy lights are turned on automatically.

Front courtesy light

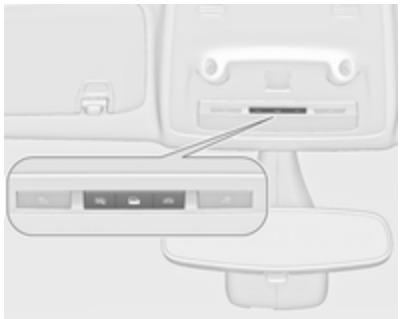

Operate rocker switch:

	:	automatic switching on and off
press	:	on
press	:	off

Rear courtesy lights

Illuminate in conjunction with the front courtesy light depending on rocker switch position.

Reading lights

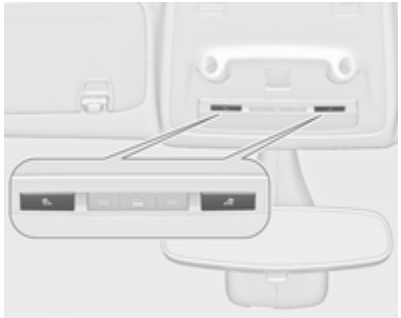

Operated by pressing and in front and rear courtesy lights.

Sunvisor lights

Illuminates when the cover is opened.

Lighting features

Centre console lighting

Spotlight incorporated in the interior lighting comes on when headlights are switched on.

Entry lighting

Welcome lighting

Headlights, tail lights, number plate lights, instrument panel light, interior lights and the light pipes in doors and FlexConsole are switched on for a short time by unlocking the vehicle with the radio remote control. This function works only in the dark and facilitates locating the vehicle.

The lighting switches off immediately when the ignition key is turned to position **1** ⇨ 160.

Activation or deactivation of this function can be changed in the Settings menu in the Info-Display. Vehicle personalisation ⇨ 129.

The settings can be saved for the key being used ⇨ 24.

The following lights will additionally switch on when the driver's door is opened:

- illumination of some switches
- Driver Information Centre
- door pocket lights

Exit lighting

The following lights switch on if the key is removed from the ignition switch:

- interior lights
- instrument panel light (only when it is dark)
- light tubes in doors
- number plate lights (puddle lights)

They will switch off automatically after a delay and will be activated again if the driver's door is opened.

Path lighting

Headlights, tail lights and number plate lights illuminate the surrounding area for an adjustable time after leaving the vehicle.

Activating

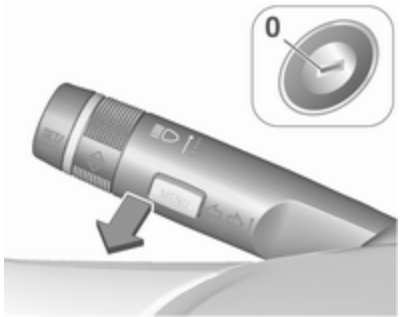

1. Switch off ignition.
2. Remove ignition key.
3. Open driver's door.
4. Pull turn signal lever.
5. Close driver's door.

If the driver's door is not closed, the lights switch off after two minutes.

Exit lighting is switched off immediately if the turn signal lever is pulled while the driver's door is open.

Activation, deactivation and duration of this function can be changed in the Settings menu in the Info-Display. Vehicle personalisation ⇨ 129.

The settings can be saved for the key being used ⇨ 24.

Battery discharge protection

To prevent discharge of the vehicle battery when the ignition is switched off, some interior lights are switched off automatically after some time.

Climate control

Climate control systems **150**
Heating and ventilation system 150
Air conditioning system 151
Electronic climate control system 152
Auxiliary heater 156
Air vents **156**
Adjustable air vents 156
Fixed air vents 157
Maintenance **157**
Air intake 157
Pollen filter 157
Air conditioning regular operation 157
Service 157

Climate control systems

Heating and ventilation system

Controls for:

- temperature
- air distribution
- fan speed
- demisting and defrosting

Heated rear window ⇨ 34.

Temperature

red : warm
blue : cold

Heating will not be fully effective until the engine has reached normal operating temperature.

Air distribution

: to windscreen and front door windows
: to head area via adjustable air vents
: to foot well and windscreen

All combinations are possible.

Fan speed

Adjust the air flow by switching the fan to the desired speed.

Demisting and defrosting

- Press : fan automatically switches to higher speed, the air distribution is directed towards the windscreen.
- Set temperature control to warmest level.
- Switch on heated rear window .
- Open side air vents as required and direct them towards the door windows.

Air conditioning system

In addition to the heating and ventilation system, the air conditioning system has controls for:

: cooling
: air recirculation

Heated seats 43, Heated steering wheel 97.

Cooling

Press to switch on cooling. The LED in the button illuminates to indicate activation. Cooling is only functional when the engine is running and climate control fan is switched on.

Press again to switch off cooling.

The air conditioning system cools and dehumidifies (dries) as soon as the outside temperature is slightly above the freezing point. Therefore condensation may form and drip from under the vehicle.

If no cooling or drying is required, switch off the cooling system for fuel saving reasons. Activated cooling may inhibit autostops.

Stop-start system 161.

Air recirculation system

Press to activate air recirculation mode. The LED in the button illuminates to indicate activation.

Press again to deactivate air recirculation mode.

⚠ Warning

The exchange of fresh air is reduced in air recirculation mode. In operation without cooling the air humidity increases, so the windows may mist up from inside. The quality of the passenger compartment air deteriorates, which may cause the vehicle occupants to feel drowsy.

In warm and very humid ambient air conditions, the windscreen may mist up from outside when cold air is directed towards it. If windscreen mists up from outside, activate windscreen wiper and deactivate .

Maximum cooling

Briefly open the windows so that hot air can disperse quickly.

- Switch on cooling .
- Air recirculation system on.
- Press air distribution switch .
- Set temperature control to coldest level.
- Set fan speed to highest level.
- Open all vents.

Demisting and defrosting the windows

- Press : fan automatically switches to higher speed, the air distribution is directed towards the windscreen.
- Set temperature control to warmest level.
- Switch on heated rear window .
- Open side air vents as required and direct them towards the door windows.

Note

If is pressed while the engine is running, an Autostop will be inhibited until is pressed again.

If is pressed with the fan switched on and the engine running, an Autostop will be inhibited until is pressed again or until the fan is switched off.

If is pressed while the engine is in an Autostop, the engine will restart automatically.

If is pressed with the fan switched on while the engine is in an Autostop, the engine will restart automatically.

Stop-start system ⇨ 161.

Electronic climate control system

The dual zone climate control allows different climatisation temperatures for driver side and front passenger side.

In automatic mode, temperature, fan speed and air distribution are regulated automatically.

Controls for:

- temperature on driver side
- air distribution
- fan speed
- temperature on front passenger side

: cooling
AUTO : automatic mode
: manual air recirculation
: demisting and defrosting

Heated rear window ⇨ 34, Heated seats ⇨ 43, Heated steering wheel ⇨ 97.

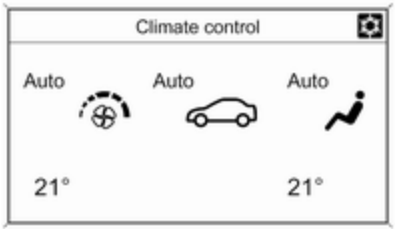

Climate control settings are shown on the Graphic-Info-Display, or depending on the version, on the Colour-Info-Display. Setting modifications are briefly popped-up in both displays, superimposed over the currently displayed menu.

The electronic climate control system is only fully operational when the engine is running.

Automatic mode AUTO

Basic setting for maximum comfort:

- Press **AUTO**. The LED in the button illuminates to indicate activation. The air distribution and fan speed are regulated automatically.
- Open all air vents to allow optimised air distribution in automatic mode.
- Press ☼ to switch on optimal cooling and demisting. The LED in the button illuminates to indicate activation.
- Set the preselected temperatures for driver and front passenger using the left and right rotary knobs. Recommended temperature is 22 °C.

The fan speed regulation in automatic mode can be changed in the **Settings** menu in the Info-Display.

Vehicle personalisation ⇨ 129.

All air vents are actuated automatically in automatic mode. The air vents should therefore always be open.

Temperature preselection

Temperatures can be set to a desired value between 16 °C and 28 °C.

If the minimum temperature **Lo** is set, the climate control system runs at maximum cooling, if cooling ❄ is switched on.

If the maximum temperature **Hi** is set, the climate control system runs at maximum heating.

Note
If ❄ is switched on, reducing the set cabin temperature can cause the engine to restart from an Autostop or inhibit an Autostop.

Stop-start system ⇨ 161.

Demisting and defrosting the windows

- Press . The LED in the button illuminates to indicate activation.
- Temperature and air distribution are set automatically and the fan runs at high speed.
- Switch on heated rear window .
- To return to previous mode: press . To return to automatic mode: press **AUTO**.

Setting of automatic rear window heating can be changed in the Settings menu in the Info-Display. Vehicle personalisation ⇨ 129.

Note
If is pressed while the engine is running, an Autostop will be inhibited until is pressed again.

If is pressed with the fan switched on and the engine running, an Autostop will be inhibited until is pressed again or until the fan is switched off.

If is pressed while the engine is in an Autostop, the engine will restart automatically.

If is pressed with the fan switched on while the engine is in an Autostop, the engine will restart automatically.

Stop-start system ⇨ 161.

Manual settings

Climate control system settings can be changed by activating the buttons and rotary knobs as follows. Changing a setting will deactivate the automatic mode.

Fan speed

Press the lower button to decrease or upper button to increase fan speed as shown in the illustration. The fan speed is indicated by the number of segments in the display.

Pressing and holding the lower button: fan and cooling are switched off.

Pressing and holding the upper button: the fan runs at maximum speed.

To return to automatic mode: Press **AUTO**.

Air distribution

Press appropriate button for desired adjustment. The LED in the button illuminates to indicate activation.

- : to windscreen and front door windows (air conditioning is activated in the background to help preventing windows from fogging)
- : to head area via adjustable air vents
- : to foot well and windscreen

All combinations are possible.

Return to automatic air distribution: press **AUTO**.

Cooling

Press to switch on cooling. Activation is indicated by the LED in the button. Cooling is only functional when the engine is running and climate control fan is switched on.

Press again to switch off cooling.

The air conditioning system cools and dehumidifies (dries) when outside temperature is above a specific level. Therefore condensation may form and drip from under the vehicle.

If no cooling or drying is required, switch off the cooling system for fuel saving reasons. When the cooling system is switched off, no engine restart will be requested by the climate control system during an Autostop. Exception: defrost system is activated and outside temperature above 0 °C. Stop-start system ⇨ 161.

The display will indicate **ACON** when cooling is activated or **ACOFF** when the cooling is deactivated.

Activation or deactivation of cooling operation after engine start can be changed in the Settings menu in the Info-Display. Vehicle personalisation ⇨ 129.

Air recirculation mode

Press to activate air recirculation mode. The LED in the button illuminates to indicate activation.

Press again to deactivate recirculation mode.

⚠ Warning

The exchange of fresh air is reduced in air recirculation mode. In operation without cooling the air humidity increases, so the windows may mist up from inside. The quality of the passenger compartment air deteriorates, which may cause the vehicle occupants to feel drowsy.

In warm and very humid ambient air conditions, the windscreen may mist up from outside when cold air is

directed towards it. If windscreen mists up from outside, activate windscreen wiper and deactivate .

Basic settings

Some settings can be changed in the **Settings** menu in the Info-Display. Vehicle personalisation ⇨ 129.

Auxiliary heater

Air heater

Quickheat is an electric auxiliary air heater which automatically warms up the passenger compartment more quickly.

Air vents

Adjustable air vents

At least one air vent must be open while the cooling is on.

To open the vent, turn the adjuster wheel to **I**. Adjust the air amount at the vent outlet by turning the adjuster wheel.

Direct the flow of air by tilting and swivelling the slats.

To close the vent, turn the adjuster wheel to **O**.

Air vents for rear passenger are left and right side behind the front seats.

⚠ Warning

Do not attach any objects to the slats of the air vents. Risk of damage and injury in case of an accident.

Fixed air vents

Additional air vents are located beneath the windscreen and door windows and in the foot wells.

Maintenance

Air intake

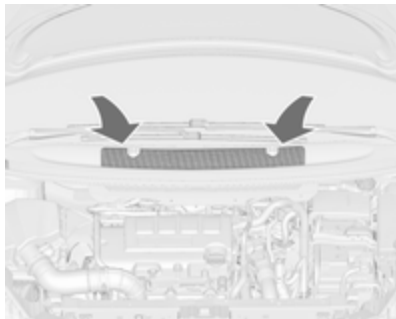

The air intake in front of the windscreen in the engine compartment must be kept clear to allow air intake. Remove any leaves, dirt or snow.

Pollen filter

The pollen filter cleans dust, soot, pollen and spores from the air entering the vehicle through the air intake.

Air conditioning regular operation

In order to ensure continuously efficient performance, cooling must be operated for a few minutes once a month, irrespective of the weather and time of year. Operation with cooling is not possible when the outside temperature is too low.

Service

For optimal cooling performance, it is recommended to annually check the climate control system, starting three years after initial vehicle registration, including:

- functionality and pressure test
- heating functionality
- leakage check
- check of drive belts
- cleaning of condenser and evaporator drainage
- performance check

Driving and operating

Driving hints **159**
Control of the vehicle 159
Steering 159
Starting and operating **159**
New vehicle running-in 159
Ignition switch positions 160
Retained power off 160
Starting the engine 160
Overrun cut-off 161
Stop-start system 161
Parking 163
Engine exhaust **164**
Diesel particle filter 164
Catalytic converter 165
AdBlue 166
Automatic transmission **169**
Transmission display 169
Selector lever 169
Manual mode 170
Electronic driving programmes 171
Fault 171
Interruption of power supply 171
Manual transmission **172**
Brakes **173**
Antilock brake system 173
Parking brake 174
Brake assist 175
Hill start assist 175
Ride control systems **176**
Traction Control system 176
Electronic Stability Control 176
Interactive driving system 177
Driver assistance systems **179**
Cruise control 179
Speed limiter 180
Adaptive cruise control 182
Forward collision alert 188
Following distance indication ... 192
Active Emergency Braking 192
Parking assist 194
Side blind spot alert 201
Rear view camera 202
Traffic sign assistant 204
Lane departure warning 207
Fuel **209**
Fuel for petrol engines 209
Fuel for diesel engines 209
Fuel for natural gas operation . 209
Fuel for liquid gas operation 210
Refuelling 212
Fuel consumption - CO_2-Emissions 217
Trailer hitch **218**
General information 218
Driving characteristics and towing tips 219
Trailer towing 219
Towing equipment 220
Trailer stability assist 222

Driving hints

Control of the vehicle

Never coast with engine not running (except during Autostop)

Many systems will not function in this situation (e.g. brake servo unit, power steering). Driving in this manner is a danger to yourself and others. All systems function during an Autostop, but there will be a controlled reduction in power steering assist and vehicle speed is reduced.

Stop-start system ⇨ 161.

Idle boost

If charging of the vehicle battery is required due to battery condition, the power output of the generator must be increased. This will be achieved by an idle boost which may be audible.

On vehicles with Uplevel-Combi-Display, a message is displayed in the Driver Information Centre.

Pedals

To ensure the pedal travel is uninhibited, there must be no mats in the area of the pedals.

Use only floor mats which fit properly and are fixed by the retainers on the driver's side.

Steering

If power steering assist is lost because the engine stops or due to a system malfunction, the vehicle can be steered but may require increased effort.

Control indicator ⊖! ⇨ 113.

Caution
Vehicles equipped with hydraulic power steering: If the steering wheel is turned until it reaches the end of its travel, and is held in that position for more than 15 seconds, damage may occur to the power steering system and there may be loss of power steering assist.

Starting and operating

New vehicle running-in

Do not brake unnecessarily hard for the first few journeys.

During the first drive, smoke may occur because of wax and oil evaporating off the exhaust system. Park the vehicle in the open for a while after the first drive and avoid inhaling the fumes.

During the running-in period, fuel and engine oil consumption may be higher and the cleaning process of the diesel particle filter may take place more often. Autostop may be inhibited to allow for charging of the vehicle battery.

Diesel particle filter ⇨ 164.

Ignition switch positions

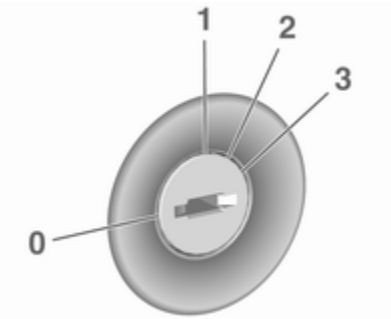

0 : ignition off
1 : steering wheel lock released, ignition off
2 : ignition on, for diesel engine: preheating
3 : starting

Retained power off

The following electronic systems can work until the driver's door is opened or at the latest for ten minutes after the ignition is switched off:

- power windows
- power outlets

Power to the Infotainment system will continue to operate for 30 minutes or until the key is removed from the ignition switch, regardless of whether any door is opened.

Starting the engine

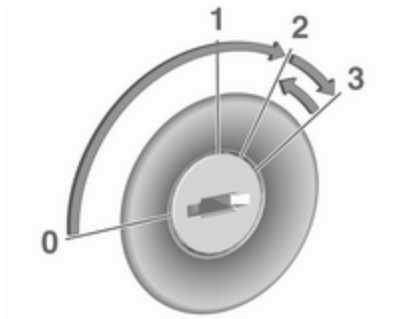

Manual transmission: operate clutch.

Automatic transmission: operate brake and move the selector lever to **P** or **N**.

Do not operate the accelerator pedal.

Diesel engine: turn the key to position **2** for preheating until control indicator ⚲ extinguishes.

Turn the key briefly to position **3** and release: an automatic procedure operates the starter after a brief delay as long as the engine is running, see Automatic Starter Control.

Before restarting or to switch off the engine, turn the key back to position **0**.

During an Autostop, the engine can be started by depressing the clutch pedal.

Starting the vehicle at low temperatures

The start of the engine without additional heaters is possible down to -25 °C for diesel engines and -30 °C for petrol engines. Required is an engine oil with the correct viscosity, the correct fuel, performed services and a sufficiently charged battery. With temperatures below -30 °C the automatic transmission need a warming phase of approx. five minutes. The selector lever must be in position **P**.

Automatic Starter Control

This function controls the engine starting procedure. The driver does not have to hold the key in position **3**. Once applied, the system will go on starting automatically until the engine is running. Because of the checking procedure, the engine starts running after a brief delay.

Possible reasons for a non-starting engine:

- Clutch pedal not operated (manual transmission).
- Brake pedal not operated or selector lever not in **P** or **N** (automatic transmission).
- Timeout occurred.

Turbo engine warm-up

Upon start-up, engine available torque may be limited for a short time, especially when the engine temperature is cold. The limitation is to allow the lubrication system to fully protect the engine.

Overrun cut-off

The fuel supply is automatically cut off during overrun, i.e. when the vehicle is driven with a gear engaged but accelerator is released.

Stop-start system

The stop-start system helps to save fuel and to reduce the exhaust emissions. When conditions allow, it switches off the engine as soon as the vehicle is at a low speed or at a standstill, e.g. at a traffic light or in a traffic jam. It starts the engine automatically as soon as the clutch is depressed. A vehicle battery sensor ensures that an Autostop is only performed if the vehicle battery is sufficiently charged for a restart.

Activation

The stop-start system is available as soon as the engine is started, the vehicle starts-off and the conditions as stated below in this section are fulfilled.

Deactivation

Deactivate the stop-start system manually by pressing **eco**. The LED in the button extinguishes to indicate deactivation.

Autostop

If the vehicle is at a low speed or at a standstill, activate an Autostop as follows:

- Depress the clutch pedal.
- Move the selector lever to neutral.
- Release the clutch pedal.

The engine will be switched off while the ignition stays on.

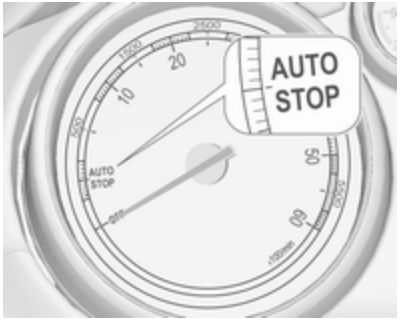

An Autostop is indicated by the needle at the **AUTOSTOP** position in the tachometer.

During an Autostop, the heating and brake performance will be maintained.

Caution
The power steering assist may be reduced during an Autostop.

Conditions for an Autostop

The stop-start system checks if each of the following conditions is fulfilled.

- The stop-start system is not manually deactivated.
- The bonnet is fully closed.
- The driver's door is closed or the driver's seat belt is fastened.
- The vehicle battery is sufficiently charged and in good condition.
- The engine is warmed-up.
- The engine coolant temperature is not too high.
- The engine exhaust temperature is not too high, e.g. after driving with high engine load.
- The ambient temperature is above -5 °C.
- The climate control system allows an Autostop.
- The brake vacuum is sufficient.
- The self-cleaning function of the diesel particle filter is not active.
- The vehicle was driven at least at walking speed since the last Autostop.

Otherwise an Autostop will be inhibited.

Certain settings of the climate control system may inhibit an Autostop. See Climate control chapter for more details ⇨ 152.

Immediately after motorway driving, an Autostop may be inhibited.

New vehicle running-in ⇨ 159.

Vehicle battery discharge protection

To ensure reliable engine restarts, several battery discharge protection features are implemented as part of the stop-start system.

Power saving measures

During an Autostop, several electrical features such as auxiliary electric heater or rear window heating are disabled or switched into a power-saving mode. The fan speed of the climate control system is reduced to save power.

Restart of the engine by the driver

Depress the clutch pedal to restart the engine.

The engine start is indicated by the needle at the idle speed position in the tachometer.

If the selector lever is shifted out of neutral before depressing the clutch first, control indicator illuminates or is shown as a symbol in the Driver Information Centre.

Control indicator ⇨ 111.

Restart of the engine by the stop-start system

The selector lever must be in neutral to enable an automatic restart.

If one of the following conditions occurs during an Autostop, the engine will be restarted automatically by the stop-start system.

- The stop-start system is manually deactivated.
- The bonnet is opened.
- The driver's seat belt is unfastened and the driver's door is opened.
- The engine temperature is too low.
- The charge level of the vehicle battery is below a defined level.
- The brake vacuum is not sufficient.
- The vehicle is driven at least at walking speed.
- The climate control system requests an engine start.
- The air conditioning is manually switched on.

If the bonnet is not fully closed, a warning message is displayed in the Driver Information Centre.

If an electrical accessory, e.g. a portable CD player, is connected to the power outlet, a brief power drop during engine restart may be noticeable.

Parking

⚠ Warning

- Do not park the vehicle on an easily ignitable surface. The high temperature of the exhaust system could ignite the surface.
- Always apply the parking brake. Activate the manual parking brake without pressing the release button. Apply as firmly as possible on a downhill slope or uphill slope. Depress brake pedal at the same time to reduce operating force.

  For vehicles with electric parking brake, pull switch Ⓟ for approx. one second.

  The electric parking brake is applied when control indicator Ⓟ illuminates ⇨ 111.
- Switch off the engine.
- If the vehicle is on a level surface or uphill slope, engage first gear or set the selector

lever to position **P** before removing the ignition key. On an uphill slope, turn the front wheels away from the kerb.

If the vehicle is on a downhill slope, engage reverse gear or set the selector lever to position **P** before removing the ignition key. Turn the front wheels towards the kerb.

- Close the windows.
- Remove the ignition key from the ignition switch. Turn the steering wheel until the steering wheel lock is felt to engage.

  For vehicles with automatic transmission, the key can only be removed when the selector lever is in position **P**.

- Lock the vehicle.
- Activate the anti-theft alarm system.

Note
In the event of an accident with airbag deployment, the engine is turned off automatically if the vehicle comes to a standstill within a certain time.

Engine exhaust

⚠ Danger

Engine exhaust gases contain poisonous carbon monoxide, which is colourless and odourless and could be fatal if inhaled.

If exhaust gases enter the interior of the vehicle, open the windows. Have the cause of the fault rectified by a workshop.

Avoid driving with an open load compartment, otherwise exhaust gases could enter the vehicle.

Diesel particle filter

The diesel particle filter system filters harmful soot particles out of the exhaust gases. The system includes a self-cleaning function that runs automatically during driving without any notification. The filter is cleaned by periodically burning off the soot particles at high temperature. This process takes place automatically under set driving conditions and may take up to 25 minutes. Typically it

needs between seven and twelve minutes. Autostop is not available and fuel consumption may be higher during this period. The emission of smells and smoke during this process is normal.

Under certain driving conditions, e.g. short distances, the system cannot clean itself automatically.

If the cleaning of the filter is required and if previous driving conditions did not enable automatic cleaning, it will be indicated by control indicator . Simultaneously **Diesel partic. filter is full continue driving** or warning code 55 appears in the Driver Information Centre.

 illuminates when diesel particle filter is full. Start cleaning process as soon as possible.

 flashes when diesel particle filter has reached the maximum filling level. Start cleaning process immediately to avoid damage to the engine.

Cleaning process

To activate cleaning process, continue driving, keep engine speed above 2000 revolutions per minute. Shift down if necessary. Diesel particle filter cleaning is then started.

If illuminates additionally, cleaning is not possible. Seek the assistance of a workshop.

Caution
If the cleaning process is interrupted, there is a risk of provoking severe engine damage.

Cleaning takes place quickest at high engine speeds and loads.

The control indicator extinguishes as soon as the self-cleaning operation is complete.

Catalytic converter

The catalytic converter reduces the amount of harmful substances in the exhaust gases.

Caution
Fuel grades other than those listed on pages ⇨ 209, ⇨ 277 could damage the catalytic converter or electronic components. Unburnt petrol will overheat and damage the catalytic converter. Therefore avoid excessive use of the starter, running the fuel tank dry and starting the engine by pushing or towing.

In the event of misfiring, uneven engine running, a reduction in engine performance or other unusual problems, have the cause of the fault rectified by a workshop as soon as possible. In an emergency, driving

can be continued for a short period, keeping vehicle speed and engine speed low.

AdBlue

General information

The selective catalytic reduction (BlueInjection) is a method to substantially reduce the nitrogen oxides in the exhaust emission. This is achieved by injecting a Diesel Exhaust Fluid (DEF) into the exhaust system.

The designation of this fluid is AdBlue ®[1]. It is a non-toxic, non-flammable, colourless and odourless fluid which consists of 32% urea and 68% water.

⚠ Warning

Avoid contact of your eyes or skin with AdBlue.

In case of eye or skin contact, rinse off with water.

Caution

Avoid contact of the paintwork with AdBlue.

In case of contact, rinse off with water.

AdBlue freezes at a temperature of approx. -11 °C. As the vehicle is equipped with an AdBlue pre-heater, the emissions reduction at low temperatures is ensured. The AdBlue pre-heater works automatically.

Level warnings

The AdBlue consumption is approx. 0.7 litres per 1000 km and depends on the driving behaviour.

If the AdBlue level falls below a certain value, a level warning **AdBlue Range: 2400 km** will be displayed in the Driver Information Centre.

A volume of at least 5 litres of AdBlue must be refilled as soon as possible.

Driving is possible without any restrictions.

If AdBlue is not refilled within a certain distance, further level warnings are displayed in the Driver Information Centre depending on the current AdBlue level. Later on requests to refill AdBlue and finally the

[1] Registered trademark of the Verband der Automobilindustrie e.V. (VDA).

announcement to prevent an engine restart are displayed. These restrictions are a legal requirement.

At an AdBlue range of 900 km, the following warning messages are alternately displayed in the Driver Information Centre:

- **AdBlue Low Refill Now**
- **Engine Restart Prevented in 900 km**

Additionally, the control indicator flashes continuously and a warning chime sounds four times every three minutes.

Before the prevention of the engine restart is activated, the following warning messages are alternately displayed in the Driver Information Centre:

- **AdBlue Empty Refill Now**
- **Engine Will Not Restart**

Additionally, the control indicator flashes continuously and a warning chime sounds four times every three minutes.

After the prevention of the engine start, the following message will be displayed:

Refill AdBlue To Start Vehicle .

To restart the engine, the tank must be filled with AdBlue first.

High emission warnings

If the exhaust emission rises above a certain value, warnings similar to the range warnings as described above will be displayed in the Driver Information Centre.

Requests to have the exhaust system checked and finally the announcement to prevent an engine restart are displayed. These restrictions are a legal requirement.

Seek your workshop for assistance.

Refilling AdBlue

Caution
Only use AdBlue that complies with European standards DIN 70 070 and ISO 22241-1. Do not use additives. Do not dilute AdBlue. Otherwise the selective catalytic reduction system could be damaged.

Note
Only use the designated AdBlue canisters for refilling, to prevent a topping-up of too much AdBlue. Additionally, the fumes in the tank are captured in the canister and do not emerge.

Since AdBlue has a limited durability, check the date of expiry before refilling.

Note
A volume of at least 5 litres of AdBlue must be added when refilling. Otherwise the refilling of AdBlue may not be detected by the system.

In case AdBlue refill is not successfully detected:

1. Continuously drive the vehicle for 10 minutes making sure that vehicle speed is always higher than 20 km/h.
2. If AdBlue refill is detected successfully, AdBlue supply driven limitations will disappear.

If AdBlue refill is still not detected seek the assistance of a workshop.

If AdBlue must be refilled at temperatures below -11 °C, the refilling of AdBlue may not be detected by the system. In this event, park the vehicle in a space with a higher ambient temperature until AdBlue is liquefied.

Note
When unscrewing the protective cap from the filler neck, ammonia fumes may emerge. Do not inhale as the fumes have a pungent smell. The fumes are not harmful by inhalation.

The vehicle must be parked on a level surface.

The filler neck for AdBlue is located behind the fuel filler flap.

The fuel filler flap is located at right rear side of the vehicle.

The fuel filler flap can only be opened if the vehicle is unlocked.

1. Remove key from ignition lock.
2. Close all doors to avoid ammonia fumes entering the interior of the vehicle.
3. Pull fuel filler flap at the recess and open ⇨ 212.

4. Unscrew protective cap from the filler neck.
5. Open AdBlue canister.
6. Mount one end of the hose on the canister and screw the other end on the filler neck.
7. Lift the canister until it is empty.
8. Unscrew the hose from the filler neck.
9. Mount the protective cap and turn clockwise until it engages.

Note
Dispose of AdBlue canister and hose according to environmental requirements.

Exchanging AdBlue

If less than five litres of AdBlue have been refilled during the last two years, the remaining fluid should be exchanged since AdBlue has a limited durability. Seek the assistance of a workshop.

Caution
Disregard could lead to damage to the selective catalytic reduction system.

Automatic transmission

The automatic transmission permits automatic gearshifting (automatic mode) or manual gearshifting (manual mode).

Transmission display

The mode or selected gear is shown in the transmission display.

Selector lever

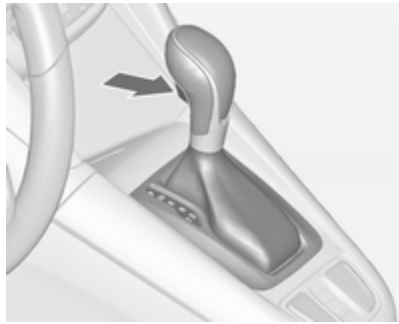

P : park position, wheels are locked, engage only when the vehicle is stationary and the parking brake is applied
R : reverse gear, engage only when the vehicle is stationary
N : neutral
D : automatic mode with all gears

The selector lever is locked in **P** and can only be moved when the ignition is on and the brake pedal is applied.

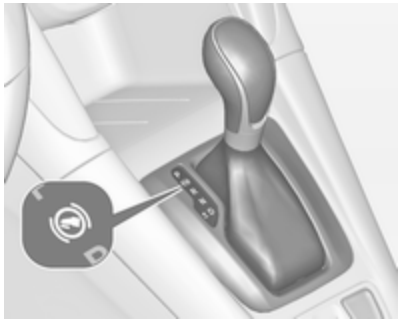

Without brake pedal applied, the control indicator illuminates.

If the selector lever is not in **P** when the ignition is switched off, the control indicators and **P** flash.

To engage **P** or **R**, press the release button.

The engine can only be started with the lever in position **P** or **N**. When position **N** is selected, press the brake pedal or apply the parking brake before starting.

Do not accelerate while engaging a gear. Never depress the accelerator pedal and brake pedal at the same time.

When a gear is engaged, the vehicle slowly begins to creep when the brake is released.

Engine braking

To utilise the engine braking effect, select a lower gear in good time when driving downhill, see manual mode.

Rocking the vehicle

Rocking the vehicle is only permissible if the vehicle is stuck in sand, mud or snow. Move the selector lever between **D** and **R** in a repeat pattern. Do not race the engine and avoid sudden acceleration.

Parking

Apply the parking brake and engage **P**.

The ignition key can only be removed when the selector lever is in position **P**.

Manual mode

Move selector lever out of position **D** towards the left and then forwards or backwards.

+ : shift to a higher gear

– : shift to a lower gear

If a higher gear is selected when vehicle speed is too low, or a lower gear when vehicle speed is too high, the shift is not executed. This can cause a message in the Info-Display.

In manual mode no automatic shifting to a higher gear takes place at high engine revolutions.

Electronic driving programmes

- Following a cold start, the operating temperature programme increases engine speed to quickly bring the catalytic converter to the required temperature.
- The automatic neutral shift function automatically shifts gear to idling when the vehicle is stopped with a forward gear engaged and the brake pedal is pressed.
- When SPORT mode is engaged, the vehicle shifts at higher engine speeds (unless cruise control is on). SPORT mode ⇨ 177.
- Special programmes automatically adapt the gearshift points when driving up inclines or down hills.
- When starting-off in snowy or icy conditions or on other slippery surfaces, the electronic transmission control selects a higher gear automatically.

Kickdown

If the accelerator pedal is pressed down completely in automatic mode, the transmission shifts to a lower gear depending on engine speed.

Fault

In the event of a fault, illuminates. Additionally a code number or a vehicle message is displayed in the Driver Information Centre. Vehicle messages ⇨ 122.

The transmission no longer shifts automatically. Continued travel is possible with manual shifting.

Only the highest gear is available. Depending on the fault, 2nd gear may also be available in manual mode. Shift only when vehicle is at a standstill.

Have the cause of the fault remedied by a workshop.

Interruption of power supply

In the event of an interruption of power supply, the selector lever cannot be moved out of the **P** position. The ignition key cannot be removed from the ignition switch.

If the vehicle battery is discharged, start the vehicle using jump leads ⇨ 262.

If the vehicle battery is not the cause of the fault, release the selector lever.

1. Apply the parking brake.

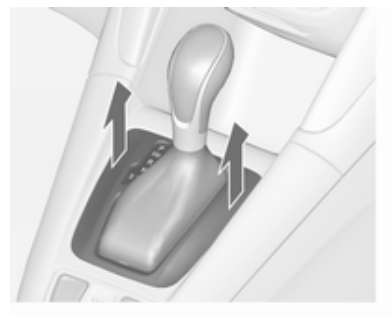

2. Release the selector lever trim from the centre console at the front, fold it upwards and rotate it to the left.

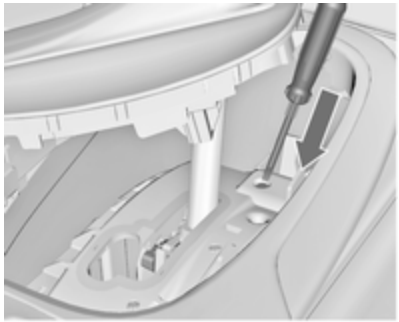

3. Insert a screwdriver into the opening as far as it will go and move the selector lever out of **P** or **N**. If **P** or **N** is engaged again, the selector lever will be locked in position again. Have the cause of the power supply interruption remedied by a workshop.
4. Mount the selector lever trim onto the centre console and refit.

Manual transmission

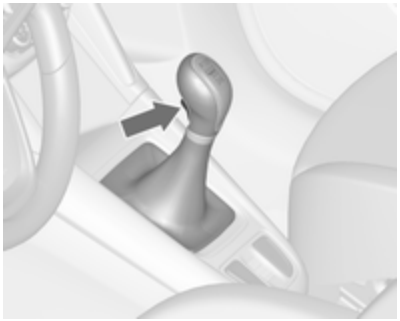

To engage reverse, with the vehicle stationary, depress clutch pedal, press the release button on the selector lever and engage the gear.

If the gear does not engage, set the lever to neutral, release the clutch pedal and depress again; then repeat gear selection.

Do not slip the clutch unnecessarily.

When operating, depress the clutch pedal completely. Do not use the pedal as a foot rest.

Caution
It is not advisable to drive with the hand resting on the selector lever.

Brakes

The brake system comprises two independent brake circuits.

If a brake circuit fails, the vehicle can still be braked using the other brake circuit. However, braking effect is achieved only when the brake pedal is depressed firmly. Considerably more force is needed for this. The braking distance is extended. Seek the assistance of a workshop before continuing your journey.

When the engine is not running, the support of the brake servo unit disappears once the brake pedal has been depressed once or twice. Braking effect is not reduced, but braking requires significantly greater force. It is especially important to bear this in mind when being towed.

Control indicator ⓘ ⇨ 111.

Antilock brake system

Antilock brake system (ABS) prevents the wheels from locking.

ABS starts to regulate brake pressure as soon as a wheel shows a tendency to lock. The vehicle remains steerable, even during hard braking.

ABS control is made apparent through a pulse in the brake pedal and the noise of the regulation process.

For optimum braking, keep the brake pedal fully depressed throughout the braking process, despite the fact that the pedal is pulsating. Do not reduce the pressure on the pedal.

After starting off the system performs a self-test which may be audible.

Control indicator ⓐ ⇨ 112.

Adaptive brake light

During full braking, all three brake lights flash for the duration of ABS control.

Fault

⚠ Warning

If there is a fault in the ABS, the wheels may be liable to lock due to braking that is heavier than normal. The advantages of ABS are no longer available. During hard braking, the vehicle can no longer be steered and may swerve.

Have the cause of the fault remedied by a workshop.

Parking brake

Manual parking brake

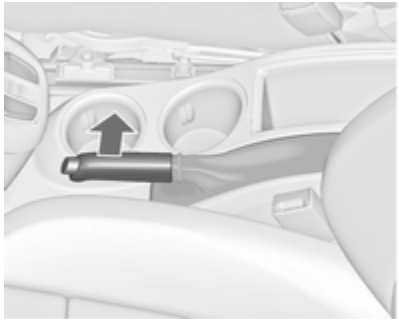

⚠ Warning

Always apply parking brake firmly without operating the release button, and apply as firmly as possible on a downhill or uphill slope.

To release the parking brake, pull the lever up slightly, press the release button and fully lower the lever.

To reduce the operating forces of the parking brake, depress the foot brake at the same time.

Control indicator (!) ⇨ 111.

Electric parking brake

Applying when vehicle is stationary

⚠ Warning

Pull switch Ⓟ for approx. one second, the electric parking brake operates automatically with adequate force. For maximum force, e.g. parking with trailer or on inclines, pull switch Ⓟ twice.

The electric parking brake is applied when control indicator Ⓟ illuminates ⇨ 112.

The electric parking brake can always be activated, even if the ignition is off.

Do not operate electric parking brake system too often with engine not running, as this will discharge the vehicle battery.

Before leaving the vehicle, check the electric parking brake status. Control indicator Ⓟ ⇨ 112.

Releasing

Switch on ignition. Keep brake pedal depressed and then press switch Ⓟ.

Drive away function

Vehicles with manual transmission: Depressing the clutch pedal and then slightly releasing the clutch pedal and slightly depressing the accelerator pedal releases the electric parking

brake automatically. This is not possible when the switch Ⓟ is pulled at the same time.

Vehicles with automatic transmission: Engaging **D** and then depressing the accelerator pedal releases the electric parking brake automatically. This is not possible when the switch Ⓟ is pulled at the same time.

Dynamic braking when vehicle is moving

When the vehicle is moving and the switch Ⓟ is kept pulled, the electric parking brake system will decelerate the vehicle, but will not apply statically.

As soon as the switch Ⓟ is released, dynamic braking will be stopped.

Fault

Failure mode of electric parking brake is indicated by control indicator ⓟ and by a code number or a vehicle message which is displayed in the Driver Information Centre. Vehicle messages ⇨ 122.

Apply electric parking brake: pull and hold switch Ⓟ for more than five seconds. If control indicator Ⓟ illuminates, electric parking brake is applied.

Release electric parking brake: press and hold switch Ⓟ for more than two seconds. If control indicator Ⓟ extinguishes, electric parking brake is released.

Control indicator Ⓟ flashes: electric parking brake is not fully applied or released. When continuously flashing, release electric parking brake and retry applying.

Brake assist

If the brake pedal is depressed quickly and forcefully, maximum brake force is automatically applied (full braking).

Maintain steady pressure on the brake pedal for as long as full braking is required. Maximum brake force is automatically reduced when the brake pedal is released.

Hill start assist

The system helps prevent unintended movement when driving away on inclines.

When releasing the foot brake after stopping on an incline, the brakes remain on for a further two seconds. The brakes release automatically as soon as the vehicle begins to accelerate.

The hill start assist is not active during an Autostop.

Ride control systems

Traction Control system

The Traction Control system (TC) is a component of the Electronic Stability Control.

TC improves driving stability when necessary, regardless of the type of road surface or tyre grip, by preventing the drive wheels from spinning.

As soon as the drive wheels starts to spin, engine output is reduced and the wheel spinning the most is braked individually. This considerably improves the driving stability of the vehicle on slippery road surfaces.

TC is operational as soon as the control indicator extinguishes.

When TC is active flashes.

⚠ Warning

Do not let this special safety feature tempt you into taking risks when driving.

Adapt speed to the road conditions.

Control indicator ⇨ 113.

Deactivation

TC can be switched off when spinning of drive wheels is required: press briefly.

Control indicator illuminates.

TC is reactivated by pressing again.

TC is also reactivated the next time the ignition is switched on.

Electronic Stability Control

Electronic Stability Control (ESC) improves driving stability when necessary, regardless of the type of road surface or tyre grip. It also prevents the drive wheels from spinning.

As soon as the vehicle starts to swerve (understeer/oversteer), engine output is reduced and the wheels are braked individually. This considerably improves the driving stability of the vehicle on slippery road surfaces.

ESC is operational as soon as the control indicator extinguishes.

When ESC is active flashes.

⚠Warning

Do not let this special safety feature tempt you into taking risks when driving.

Adapt speed to the road conditions.

Control indicator ⇨ 113.

Deactivation

For very high-performance driving, ESC can be deactivated: press and hold for approx. five seconds.

Control indicator illuminates.

ESC is reactivated by pressing again. If the TC system was previously disabled, both TC and ESC are reactivated.

ESC is also reactivated the next time the ignition is switched on.

Interactive driving system

Flex Ride

Flex Ride driving system allows the driver to select between three driving modes:

- SPORT mode: press **SPORT**, LED illuminates.
- TOUR mode: press **TOUR**, LED illuminates.
- Normal mode: neither **SPORT** or **TOUR** are pressed, no LED illuminates.

Deactivate SPORT mode and TOUR mode by pressing the corresponding button once more.

In each driving mode Flex Ride networks the following electronic systems:

- Continuous Damping Control
- Accelerator Pedal Control
- Steering Control
- Automatic transmission

SPORT mode

The settings of the systems are adapted to a sportier driving style:

- Damping of shock absorbers reacts more stiffly to provide better contact with the road surface.
- The engine reacts more quickly to the accelerator pedal.
- Steering support is reduced.
- Shift points of automatic transmission occur later.
- With SPORT mode activated, the illumination of main instruments changes from white to red.

TOUR mode

The settings of the systems are adapted to a comfort driving style:

- Damping of shock absorbers reacts more softly.
- Accelerator pedal reacts with standard settings.
- Steering support is in standard mode.
- Shift points of automatic transmission occur in a comfort mode.
- Illumination of main instruments is white.

Normal mode

All settings of the systems are adapted to standard values.

Drive mode control

Within each manual selected driving mode SPORT, TOUR or Normal, the Drive Mode Control (DMC) detects and analyses continuously the real driving characteristics, responses by the driver, and the active dynamic state of the vehicle. If necessary, the control unit of DMC automatically changes the settings within the selected driving mode or, when recognising greater variations, the driving mode is changed for the length of variation.

If, for example, Normal mode is selected and DMC detects a sporty driving behaviour, DMC changes several settings of the Normal mode into sporty settings. The DMC changes to SPORT mode in case of very sporty driving behaviour.

If, for example, TOUR mode is selected and whilst driving on a winding road a sudden hard brake is necessary, DMC will detect the dynamic vehicle condition and changes the settings for suspension to SPORT mode to increase vehicle stability.

When the driving characteristic or the dynamic vehicle state returns to former state, DMC will change the settings to the preselected driving mode.

Personalised settings in the Sport mode

The driver can select the functions of the SPORT mode when **SPORT** is pressed. These settings can be changed in the Settings menu in the Info-Display. Vehicle personalisation ⇨ 129.

Driver assistance systems

⚠ Warning

Driver assistance systems are developed to support the driver and not to replace the driver's attention.

The driver accepts full responsibility when driving the vehicle.

When using driver assistance systems, always take care regarding the current traffic situation.

Cruise control

The cruise control can store and maintain speeds of approx. 30 to 200 km/h. Deviations from the stored speeds may occur when driving uphill or downhill.

For safety reasons, the cruise control cannot be activated until the foot brake has been operated once. Activation in first gear is not possible.

Do not use the cruise control if it is not advisable to maintain a constant speed.

With automatic transmission, only activate cruise control in automatic mode.

Control indicator ⇨ ⇨ 116.

Switching on

Press , control indicator in instrument cluster illuminates white.

Activation

Accelerate to the desired speed and turn thumb wheel to **SET/-**, the current speed is stored and

maintained. Control indicator in instrument cluster illuminates green. Accelerator pedal can be released.

Vehicle speed can be increased by depressing the accelerator pedal. When the accelerator pedal is released, the previously stored speed is resumed.

Cruise control remains activated while gearshifting.

Increase speed

With cruise control active, hold thumb wheel turned to **RES/+** or briefly turn to **RES/+** repeatedly: speed increases continuously or in small increments.

Alternatively accelerate to the desired speed and store by turning to **SET/-**.

Reduce speed

With cruise control active, hold thumb wheel turned to **SET/-** or briefly turn to **SET/-** repeatedly: speed decreases continuously or in small increments.

Deactivation

Press , control indicator in instrument cluster illuminates white. Cruise control is deactivated. Last stored speed remains in memory for later speed resume.

Automatic deactivation:

- Vehicle speed is below approx. 30 km/h.
- Vehicle speed is above approx. 200 km/h.
- The brake pedal is depressed.
- The clutch pedal is depressed for a few seconds.
- Selector lever is in **N**.
- Engine speed is in a very low range.
- The Traction Control system or Electronic Stability Control is operating.

Resume stored speed

Turn thumb wheel to **RES/+** at a speed above 30 km/h. The stored speed will be obtained.

Switching off

Press , control indicator in instrument cluster extinguishes. The stored speed is deleted.

Pressing for activating speed limiter or switching off the ignition also switches off cruise control and deletes the stored speed.

Speed limiter

The speed limiter prevents the vehicle exceeding a preset maximum speed.

The maximum speed can be set at a speed above 25 km/h.

The driver can only accelerate up to the preset speed. Deviations from the limited speed may occur when driving downhill.

The preset speed limit is displayed in the top line of the Driver Information Centre when the system is active.

Activation

Press . If cruise control or adaptive cruise control has been activated before, it is switched off when speed limiter is activated and the control indicator extinguishes.

Set speed limit

With speed limiter active, hold thumb wheel turned to **RES/+** or briefly turn to **RES/+** repeatedly until the desired maximum speed is displayed in the Driver Information Centre.

Alternatively accelerate to the desired speed and briefly turn thumb wheel to **SET/-**: the current speed is stored as maximum speed. Speed limit is displayed in the Driver Information Centre.

Change speed limit

With speed limiter active, turn thumb wheel to **RES/+** to increase or **SET/-** to decrease the desired maximum speed.

Exceeding the speed limit

In the event of an emergency it is possible to exceed the speed limit by depressing the accelerator pedal firmly beyond the point of resistance.

The limited speed will flash in the Driver Information Centre and a chime sounds during this period.

Release the accelerator pedal and the speed limiter function is reactivated once a speed lower than the limit speed is obtained.

Deactivation

Press : speed limiter is deactivated and the vehicle can be driven without speed limit.

The limited speed is stored and a corresponding message appears in the Driver Information Centre.

Resume limit speed

Turn thumb wheel to **RES/+**. The stored speed limit will be obtained.

Switching off

Press , the speed limit indication in the Driver Information Centre extinguishes. The stored speed is deleted.

By pressing to activate cruise control or adaptive cruise control or by switching off the ignition, speed limiter is also deactivated and the stored speed is deleted.

Adaptive cruise control

Adaptive cruise control is an enhancement to traditional cruise control with the additional feature of maintaining a certain distance behind the vehicle ahead.

Adaptive cruise control automatically decelerates the vehicle when approaching a slower moving vehicle. It then adjusts the vehicle speed to follow the vehicle ahead at the selected following distance. The vehicle speed increases or decreases to follow the vehicle in front, but will not exceed the set speed. It may apply limited braking with activated brake lights.

The adaptive cruise control can store and maintain speeds over approx. 50 km/h and brakes automatically to follow a slower vehicle driving ahead down to a minimum speed of 30 km/h.

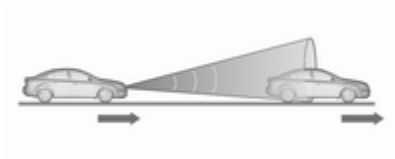

Adaptive cruise control uses a radar sensor to detect the vehicles ahead. If no vehicle is detected in the driving path, the adaptive cruise control will behave like a traditional cruise control.

For safety reasons, the system cannot be activated before the brake pedal has been depressed once after switching on ignition. Activation in first gear is not possible.

Adaptive cruise control is mainly advised to be used on long straight roads, e.g. highways or country roads with steady traffic. Do not use the system if it is not advisable to maintain a constant speed.

Control indicator ⇨ 116, ⇨ 116.

⚠Warning

The complete driver attention is always required while driving with adaptive cruise control. The driver stays fully in control of the vehicle because the brake pedal, the accelerator pedal and the cancel switch have priority over any adaptive cruise control operation.

Switching on

Press to switch on adaptive cruise control. The control indicator illuminates white.

Activation by setting the speed

Adaptive cruise control can be activated between 50 km/h and 180 km/h.

Accelerate to the desired speed and turn thumb wheel to **SET/-**; the current speed is stored and maintained. Control indicator illuminates green.

The adaptive cruise control symbol, the following distance setting and set speed are indicated in the top line of the Driver Information Centre.

The accelerator pedal can be released. Adaptive cruise control remains activated while gearshifting.

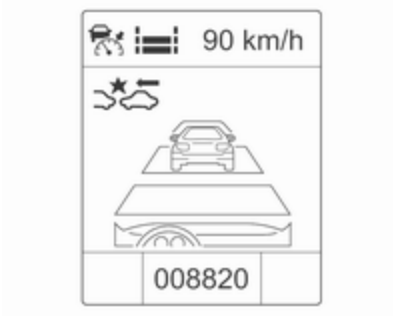

Overriding set speed

It is always possible to drive faster than the selected set speed by depressing the accelerator pedal. When the accelerator pedal is released, the vehicle returns to the desired distance if a slower vehicle is ahead. Otherwise it returns to the stored speed.

Once the system is activated, adaptive cruise control decelerates or brakes if it detects a vehicle ahead which is slower or closer than the desired following distance.

⚠Warning

Accelerating by the driver deactivates automatic braking by the system. This is indicated as a pop-up warning in the Driver Information Centre.

Increase speed

With adaptive cruise control active, hold thumb wheel turned to **RES/+**: speed increases continuously in large increments, or activate **RES/+** repeatedly: speed increases in small increments.

With adaptive cruise control active, if the vehicle is driven much faster than the desired speed, e.g. after depressing the accelerator pedal, then the current speed can be stored and maintained by turning the thumb wheel to **SET/-**.

Reduce speed

With adaptive cruise control active, hold thumb wheel turned to **SET/-**: speed decreases continuously in

large increments, or activate **SET/-** repeatedly: speed decreases in small increments.

With adaptive cruise control active, if the vehicle is driven much slower than the desired speed, e.g. because of a slower vehicle ahead, then the current speed can be stored and maintained by turning the thumb wheel to **SET/-**.

Resume stored speed

If the system is switched on but inactive, then turn thumb wheel to **RES/+** at a speed above 50 km/h to resume the stored speed.

Setting the following distance

When adaptive cruise control detects a slower moving vehicle in the driving path, it will adjust the vehicle speed to maintain the following distance selected by the driver.

The following distance can be set to near, medium or far.

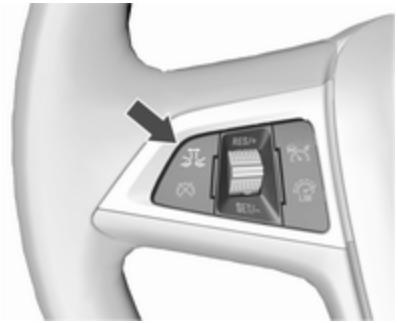

Press , the current setting is shown on the Driver Information Centre. Press again to change the following distance. The setting is also displayed in the top line of the Driver Information Centre.

The selected following distance is indicated by filled distance bars on the adaptive cruise control page.

Note that the following distance setting is shared with the sensitivity setting of forward collision alert.

Example: If setting 3 (far) is selected, then the driver is warned sooner before a possible collision, also if adaptive cruise control is inactive or switched off.

⚠Warning

The driver accepts full responsibility for the appropriate following distance based on traffic, weather and visibility conditions. Following distance must be adjusted or the system switched off when required by the prevailing conditions.

Detecting the vehicle ahead

The green illuminated "vehicle ahead" control indicator is displayed in the speedometer when the system detects a vehicle in the driving path.

If this symbol does not appear, or appears briefly, adaptive cruise control will not respond to vehicles ahead.

Deactivation

Adaptive cruise control is deactivated by the driver when:

- is pressed.
- Brake pedal is applied.
- Clutch pedal is depressed for more than four seconds.
- Gear selector lever of automatic transmission is moved to **N**.

The system is also automatically deactivated when:

- Vehicle speed slows down below 45 km/h or accelerates above 190 km/h.
- Traction Control system is operating for more than 20 seconds.
- Electronic Stability Control is operating.
- There is no traffic and nothing detected on the road sides for several minutes. In this case there are no radar echoes and the sensor may report that it is blocked.
- Collision imminent braking system is applying the brakes.
- Radar sensor is blocked by an ice or water film.
- A fault is detected in the radar, engine or brake system.

When adaptive cruise control is deactivated automatically, the control indicator illuminates white and a warning symbol is displayed as a pop-up in the Driver Information Centre.

The stored speed is maintained.

⚠Warning

When adaptive cruise control is deactivated, the driver must take over full brake and engine control.

Switching off

Press to switch off adaptive cruise control. The control indicator extinguishes. The stored speed is deleted.

Switching off the ignition also switches off adaptive cruise control and deletes the stored speed.

Driver's attention

- Use adaptive cruise control carefully on bends or mountain roads, as it can lose the vehicle ahead and require time to detect it again.
- Do not use the system on slippery roads as it can create rapid changes in tyre traction (wheel spinning), so that you could lose control.
- Do not use adaptive cruise control during rain, snow or heavy dirt, as the radar sensor can be covered by a water film, dust, ice or snow. This reduces or completely suppresses the visibility. In case of sensor blockage, clean the sensor cover.

System limits

- The system's automatic brake force does not permit hard braking and the braking level may not be sufficient to avoid a collision.
- After a sudden lane change, the system needs a certain time to detect the next preceding vehicle. So if a new vehicle is detected, the system may accelerate instead of braking.
- Adaptive cruise control does ignore the oncoming traffic.
- Adaptive cruise control does not brake for stopped vehicles, pedestrians or animals.

Bends

The adaptive cruise control calculates a predicted path based on the centrifugal force. This predicted path considers the current bend characteristic, but cannot consider a future bend change. The system may lose the current vehicle ahead or consider a vehicle which is not in the actual lane. This can happen when

entering or exiting a bend or if the bend gets stronger or weaker. If it no longer detects any vehicle ahead, then control indicator 🚗 will extinguish.

If the centrifugal force is too high in a bend, the system slows down the vehicle slightly. This braking level is not designed to avoid spinning off the bend. The driver is responsible for reducing the selected speed before entering a bend and in general to adapt the speed to the road type and to existing speed limits.

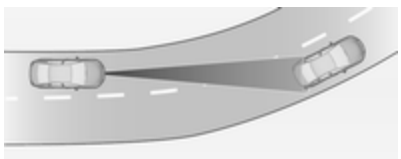

Motorways

On motorways, adapt the set speed to the situation and the weather. Always consider that adaptive cruise control has a limited visibility range, a limited braking level and a certain reaction time to verify if a vehicle is in the driving path or not. Adaptive cruise control may not be able to brake the vehicle in time to avoid a collision with a much slower vehicle or after a lane change. This is particularly true if driving fast or if the visibility is reduced due to weather conditions.

While entering or exiting a motorway, adaptive cruise control may lose the vehicle ahead and accelerate up to the set speed. For this reason, decrease the set speed before the exit or before the entry.

Vehicle path changes

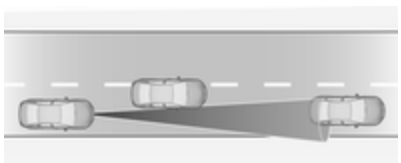

If another vehicle enters your driving path, adaptive cruise control will first consider the vehicle when it is completely in your path. Be ready to take action and depress the brake pedal, if you need to brake more quickly.

Hill and trailer considerations

System performance on hills and when towing a trailer depends on vehicle speed, vehicle load, traffic conditions and the road gradient. It may not detect a vehicle in your path while driving on hills. On steep hills, you may have to use the accelerator pedal to maintain your vehicle speed. When going downhill, especially when towing a trailer, you may have to brake to maintain or reduce your speed.

Note that applying the brake deactivates the system. It is not recommended to use adaptive cruise control on steep hills especially when towing a trailer.

Radar unit

The radar unit is mounted behind the radiator grille below the brand emblem.

⚠Warning

The radar unit was aligned carefully during manufacture. Therefore, after a frontal accident, do not use the system. The front bumper may appear to be intact, however the sensor behind can be out of position and react incorrectly. After an accident, consult a workshop to verify and correct the adaptive cruise control sensor position.

Settings

Settings can be changed in the **Auto collision preparation** menu in the vehicle personalisation ⇨ 129.

Fault

If the adaptive cruise control does not work due to temporary conditions (e.g. blockage by ice) or if there is a permanent system error, then a message is displayed in the Driver Information Centre.

Vehicle messages ⇨ 122.

Forward collision alert

The forward collision alert can help to avoid or reduce the damage caused by front-end crashes.

A vehicle ahead is indicated by a control indicator 🚗.

If a vehicle directly ahead is approached too quickly, a warning chime and alert in the Driver Information Centre is provided.

A precondition is that forward collision alert is activated in the vehicle personalisation menu ⇨ 129 or that it is not deactivated by pressing (depending on the system, see following).

Depending on the vehicle's equipment, there are two variants of the forward collision alert available:

- **Forward collision alert based on radar system**
  on vehicles equipped with adaptive cruise control ⇨ 182.
- **Forward collision alert based on front camera system**
  on vehicles with traditional cruise control or none ⇨ 179.

Forward collision alert based on radar system

The system uses the radar sensor behind the radiator grille to detect a vehicle directly ahead, in your path, within a distance of max. 150 metres.

Activation

Forward collision alert operates automatically above walking speed, provided that **Auto collision preparation** setting is not deactivated in the vehicle personalisation menu ⇨ 129.

Selecting the alert sensitivity

The alert sensitivity can be set to near, medium or far.

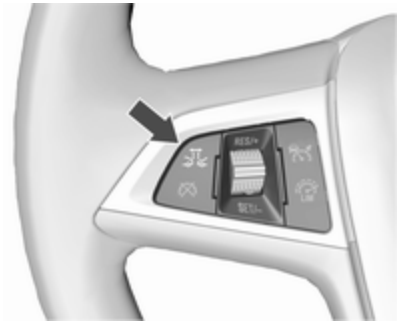

Press ; the current setting is shown in the Driver Information Centre. Press again to change the alert sensitivity. The setting is also displayed in the top line of the Driver Information Centre.

Note that the alert timing sensitivity setting is shared with the following distance setting of the adaptive cruise control. So changing the alert timing sensitivity changes the adaptive cruise control following distance setting.

Alerting the driver

A green illuminated vehicle ahead control indicator illuminates in the instrument cluster when the system has detected a vehicle in the driving path. When the distance to a preceding moving vehicle gets too small or when approaching another vehicle too rapidly and a collision is imminent, the collision alert symbol pops-up in the Driver Information Centre. Simultaneously a warning chime sounds.

Depress the brake pedal, if it is required by the situation.

Settings

Settings can be changed in the **Auto collision preparation** menu in the vehicle personalisation ⇨ 129.

Forward collision alert based on front camera system

Forward collision alert uses the front camera system in the windscreen to detect a vehicle directly ahead, in your path, within a distance of approx. 60 metres.

Activation

Forward collision alert operates automatically above 40 km/h, if it is not deactivated by pressing , see below.

Selecting the alert sensitivity

The alert sensitivity can be set to near, medium or far.

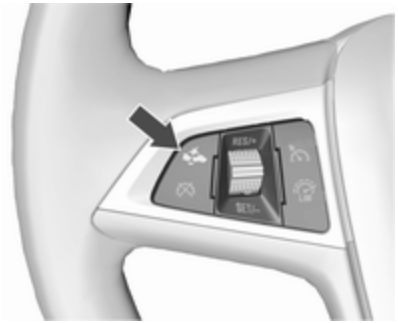

Press ⚙; the current setting is shown in the Driver Information Centre. Press ⚙ again to change the alert sensitivity.

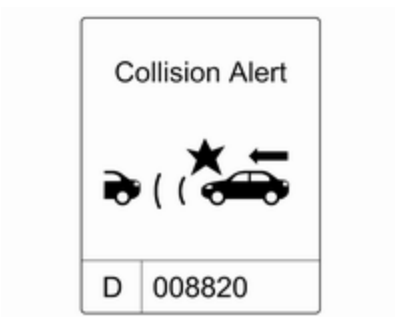

Alerting the driver

A green illuminated vehicle ahead control indicator 🚗 illuminates in the instrument cluster when the system has detected a vehicle in the driving path.

When the distance to a preceding moving vehicle gets too small or when approaching another vehicle too rapidly and a collision is imminent, the collision alert symbol pops-up in the Driver Information Centre.

Simultaneously a warning chime sounds. Depress the brake pedal, if it is required by the situation.

Deactivation

The system can be deactivated. Press ⚙ repeatedly until the following message appears in the Driver Information Centre.

General information for both variants of forward collision alert

⚠Warning

Forward collision alert is just a warning system and does not apply the brakes. When

approaching a vehicle ahead too rapidly, it may not provide you enough time to avoid a collision.

The driver accepts full responsibility for the appropriate following distance based on traffic, weather and visibility conditions.

The complete attention of the driver is always required while driving. The driver must always be ready to take action and apply the brakes.

System limitations

The system is designed to warn only for vehicles, but may react also on other metallic objects.

In the following cases, forward collision alert may not detect a vehicle ahead or sensor performance is limited:

- on winding roads
- when weather limits visibility, such as fog, rain, or snow
- when the sensor is blocked by snow, ice, slush, mud, dirt, or windscreen damage

Following distance indication

The following distance indication displays the distance to a preceding moving vehicle. The system uses, depending on the vehicle equipment, either the radar behind the radiator grille or the front camera in the windscreen to detect the distance of a vehicle directly ahead in your path. It is active at speeds above 40 km/h.

When a preceding vehicle is detected ahead, the distance is indicated in seconds, displayed on a page in the Driver Information Centre ⇨ 116. Press **MENU** on the turn signal lever to select **Vehicle Information Menu** and turn the adjuster wheel to choose following distance indication page.

The minimum indicated distance is 0.5 s.

If there is no vehicle ahead or the vehicle ahead is out of range, two dashes will be displayed: -.- s.

Active Emergency Braking

Active emergency braking can help to reduce the damage from crashes with vehicles and obstacles directly ahead, when a collision can no longer be avoided either by manual braking or by steering. Before the active emergency braking applies, the driver is warned by the forward collision alert ⇨ 188.

The feature uses various inputs (e.g. radar sensor, brake pressure, vehicle speed) to calculate the probability of a frontal collision.

Active emergency braking operates automatically above walking speed, provided that **Auto collision preparation** setting is not deactivated in the vehicle personalisation menu ⇨ 129.

The system includes:

- **brake preparation system**
- **emergency automatic braking**
- **forward looking brake assist**

⚠ Warning

This system is not intended to replace the driver responsibility of driving the vehicle and looking ahead. Its function is limited to supplemental use only. The driver shall continue to apply the brake pedal as the driving situation dictates.

Brake preparation system

When approaching a vehicle ahead so quickly that a collision is likely, the brake preparation system slightly pressurises the brakes. This reduces the response time, when a manual or automatic braking is requested.

The brake system is prepared so that braking can occur more rapidly.

Emergency automatic braking

After the brake preparation and just before the imminent collision, this function automatically applies limited braking to reduce the impact speed of the collision.

Forward looking brake assist

In addition to brake preparation system and emergency automatic braking, the forward looking brake assist function makes the brake assist more sensitive. In this way, depressing the brake pedal slightly results immediately in a strong braking. This function helps the driver brake quicker and stronger before the imminent collision.

⚠ Warning

Active emergency braking is not designed to apply strong autonomous braking or to avoid automatically a collision. It is designed to reduce the vehicle speed before collision. It may not react on stopped vehicles, pedestrians or animals. After a sudden lane change, the system needs a certain time to detect the next preceding vehicle.

The complete attention of the driver is always required while driving. The driver shall always be ready to take action and apply the brakes and steer to avoid collisions. The system is designed to work with all occupants wearing their seat belts.

System limitations

The active emergency braking has limited or no function during rain, snow or heavy dirt, as the radar sensor can be covered by a water

film, dust, ice or snow. In case of sensor blockage, clean the sensor cover.

In some seldom cases the active emergency braking system may provide a short automatic braking in situations that seem to be unnecessary, for instance due to traffic signs in a curve or due to vehicles in another lane. This is acceptable operation, the vehicle does not need service. Firmly apply the accelerator pedal to override the automatic braking.

Settings

Settings can be changed in the **Auto collision preparation** menu in the vehicle personalisation, ⇨ 129.

Fault

In the event of a system service requirement, a message is displayed in the Driver Information Centre.

If the system does not work as it should, vehicle messages are displayed in the Driver Information Centre.

Vehicle messages ⇨ 122.

Parking assist

Front-rear parking assist

⚠Warning

The driver bears full responsibility for the parking manoeuvre.

Always check the surrounding area when driving backwards or forwards while using parking assist system.

The front-rear parking assist measures the distance between the vehicle and obstacles in front of and behind the vehicle. The system gives acoustic signals and display messages.

The system has four ultrasonic parking sensors each in the rear and front bumper.

It uses two different acoustic warning signals for the front and rear monitoring areas, each with a different tone frequency. The signal for front obstacles sounds via the front speakers, for rear obstacles it sounds via the rear speakers.

Parking assist button and operation logic

Front-rear parking assist is equipped with . If the vehicle is additionally equipped with advanced parking assist (see the following separate description), both systems will be operated by pressing .

Short press on deactivates or activates the front parking assist.

Long press on (approx. one second) activates or deactivates the advanced parking assist.

Button logic to operate the systems is as follows:

- Front-rear parking assist is active: short press deactivates front-rear parking assist.
- Front-rear parking assist is active: long press activates advanced parking assist if a forward gear is engaged.
- Advanced parking assist is active: short press activates front-rear parking assist.
- Advanced parking assist is active: long press deactivates advanced parking assist.
- Advanced parking assist and front-rear parking assist are active: short press deactivates both systems.

Activation

When reverse gear is engaged, the front and rear parking assist is ready to operate.

The front parking assist is also activated automatically at a speed up to 11 km/h.

An illuminated LED in the parking assist button indicates that the system is ready to operate.

If the vehicle exceeds a speed of 11 km/h, the front parking assist is deactivated. The front parking assist is always reactivated when vehicle speed drops below 11 km/h.

Indication

The system warns the driver with acoustic signals against potentially hazardous obstacles behind and in front of the vehicle. Depending on which side of the vehicle is closer to an obstacle, you will hear acoustic warning signals on the respective side of the vehicle. The interval between the sounds becomes shorter as the vehicle gets closer to that obstacle. When the distance is less than approx. 30 cm, the sound is continuous.

Additionally, the distance to obstacles may be shown in the Driver Information Centre ⇨ 116.

The distance to a front and rear obstacle is indicated by changing distance lines around the vehicle.

Rear obstacles are indicated acoustically and visually at the same time.

Front obstacles are indicated visually first. At distances less than 80 cm an acoustic signal also sounds.

The distance indication in the Driver Information Centre can be inhibited by vehicle messages with a higher priority. After approving the message by pressing **SET/CLR** on the turn signal lever, distance indication appears again.

Deactivation

The rear parking assist automatically switches off when reverse gear is disengaged.

The front parking assist is deactivated automatically at a speed above 11 km/h.

Manual deactivation is possible by pressing briefly.

When the system is deactivated, the LED in the button extinguishes.

Additionally, **Park Assist Off** pops-up in the Driver Information Centre when the system is deactivated manually.

After a manual deactivation, the front parking assist is activated again if P⚠ is pressed or if reverse gear is engaged.

Fault

In the event of a fault in the system or if the system does not work due to temporary conditions, e.g. ice covered sensors, control indicator P⚠ illuminates or a message is displayed in the Driver Information Centre.

Vehicle messages ⇨ 122.

Control indicator P⚠ ⇨ 113.

Advanced parking assist

⚠ Warning

The driver bears full responsibility for accepting the parking slot suggested by the system and the parking manoeuvre.

Always check the surrounding area in all directions when using advanced parking assist.

The advanced parking assist system manoeuvres the driver into a parking slot by giving instructions on the Driver Information Centre and via acoustic signals. The driver must control acceleration, braking, steering and gearshifting.

The system uses the sensors of the front-rear parking assist in combination with two additional sensors on both sides of the front and rear bumper.

Parking assist button P⚠ and operation logic

Advanced parking assist and front-rear parking assist (see previous description) are both operated by pressing P⚠.

Short press on P⚠ deactivates or activates the front parking assist.

Long press on P⚠ (approx. one second) activates or deactivates the advanced parking assist.

Button logic to operate the systems is as follows:

- Front-rear parking assist is active: short press deactivates front-rear parking assist.
- Front-rear parking assist is active: long press activates advanced parking assist if a forward gear is engaged.
- Advanced parking assist is active: short press activates front-rear parking assist.

- Advanced parking assist is active: long press deactivates advanced parking assist.
- Advanced parking assist and front-rear parking assist are active: short press deactivates both systems.

Activation

When looking for a parking slot, the system must be activated by pressing ⊟P⊿ for approx. one second.

The system can only be activated and can only search for a parking slot at a speed up to 30 km/h and the system searches for a parking slot at a speed up to 30 km/h.

The maximum allowed parallel distance between the vehicle and a row of parked cars is 1.8 metres.

Functionality

When the vehicle passes a row of cars and the system is activated, the advanced parking assist system begins searching for a suitable parking slot. When a suitable slot is detected, visual feedback on the Driver Information Centre and an acoustic signal are given.

If the driver does not stop the vehicle within ten metres after a parking slot is proposed, the system starts to search for another suitable parking slot.

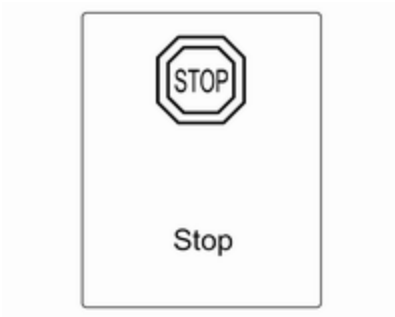

The parking slot suggestion of the system is accepted when the vehicle is stopped by the driver within ten metres after the "Stop" message is given. The system calculates the optimal route into the parking slot. Then it manoeuvres the driver into the slot by giving detailed instructions.

The instructions in the display show:

- A hint when driving faster than 30 km/h.
- The demand to stop the vehicle, when a parking slot is detected.
- The direction of driving during the parking manoeuvre.
- The steering wheel position during parking.
- For some of the instructions a progress bar is shown.

A successful parking manoeuvre is indicated by the End position symbol.

Always pay attention to the sound of the front-rear parking assist. Continuous sound means that the distance to an obstacle is less than approx. 30 cm.

Changing the parking side

The system is configured to detect parking slots by default on the passenger side. To detect parking slots on the driver side, switch on turn indicator to the driver side for the duration of searching.

As soon as turn indicator is switched off, the system searches for parking slots on the passenger side again.

Display priorities

After activating the advanced parking assist, a message appears in the Driver Information Centre. Advanced parking assist indication in the Driver Information Centre can be inhibited by vehicle messages with a higher priority. After approving the message by pressing **SET/CLR** on the turn signal lever, advanced parking assist instructions appear again and the parking manoeuvre can be continued.

Deactivation

The system is deactivated by:

- short press on P/A if advanced parking assist and front-rear parking assist are activated
- long press on P/A if advanced parking assist is activated
- successfully ending parking manoeuvre
- driving faster than 30 km/h
- switching off the ignition

Deactivation by the driver or by the system during manoeuvring will be indicated by **Parking Deactivated** in the Driver Information Centre.

Fault
A message appears in the Driver Information Centre when:

- There is a fault in the system.
- The driver did not successfully complete the parking manoeuvre.
- The system is not operational.

If an object is detected during parking instructions, **Stop** is indicated in the Driver Information Centre. Removing the object will resume the parking manoeuvre. If the object is not removed, the system will be deactivated. Press ⊡P⚠ for approx. one second to activate the system and search for a new parking slot.

Basic notes on parking assist systems

⚠ Warning

Under certain circumstances, various reflective surfaces on objects or clothing as well as external noise sources may cause the system to fail to detect obstacles.

Special attention must be paid to low obstacles which can damage the lower part of the bumper.

Caution

Performance of the system can be reduced when sensors are covered, e.g. by ice or snow.

Performance of the parking assist system can be reduced due to heavy loading.

Special conditions apply if there are taller vehicles in the vicinity (e.g. off-road vehicles, mini vans, vans). Object identification and correct distance indication in the upper part of these vehicles cannot be guaranteed.

Objects with a very small reflection cross-section, e.g. objects of narrow size or soft materials, may not be detected by the system.

Parking assist systems do not detect objects outside the detection range.

Note
The parking assist system can be activated and deactivated by changing the settings in the Info-Display. If a trailer coupling is attached, it must be selected in the menu.

Vehicle personalisation ⇨ 129.

Note
The parking assist system automatically detects factory-fitted towing equipment. It is deactivated when the connector is plugged in.

It is possible that the sensor detects a non-existing object (echo disturbance) caused by external acoustical or mechanic disturbances.

Advanced parking assist system may not respond to changes in the parking space after initiating a parallel parking manoeuvre.

Note
If engaging a forward gear and exceeding a certain speed, the rear parking assist will be deactivated when the rear carrier system is extended.

If engaging reverse gear first, the parking assist will detect the rear carrier system and provide a buzzing sound. Press briefly to deactivate the parking assist.

Note
After production, the advanced parking assist requires a calibration. For optimal parking guidance, a driving distance of at least 35 km, including a number of bends, is required.

Side blind spot alert

The side blind spot alert system detects and reports objects on either side of the vehicle, within a specified "blind spot" zone. The system alerts visually in each exterior mirror, when detecting objects that may not be visible in the interior and exterior mirrors.

The system's sensors are located in the bumper on the left and right side of the vehicle.

⚠ Warning

Side blind spot alert does not replace driver vision.

The system does not detect:

- vehicles outside the side blind zones which may be rapidly approaching
- pedestrians, cyclists or animals

Before changing a lane, always check all mirrors, look over the shoulder and use the turn signal.

When the system detects a vehicle in the side blind zone while driving forward, either while passing a vehicle or being passed, an amber warning symbol will illuminate in the relevant exterior mirror. If the driver then activates the turn signal, the warning symbol starts flashing amber as a warning not to change lanes.

Note
If the passing vehicle is at least 10 km/h faster than the passed vehicle, the warning symbol in the relevant exterior mirror may not illuminate.

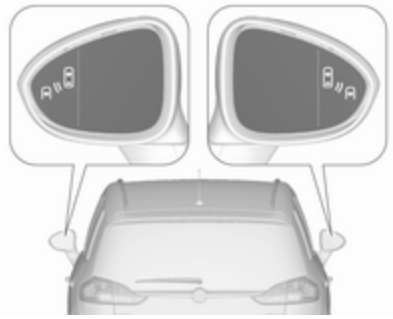

Side blind spot alert is active from speeds of 10 km/h up to 140 km/h. Driving faster than 140 km/h deactivates the system, indicated by low lighting warning symbols in both exterior mirrors. Reducing the speed again will extinguish the warning symbols. If a vehicle is then detected in the blind zone, the warning symbols will illuminate as normal on the relevant side.

When the vehicle is started, both exterior mirror displays will briefly come on to indicate that the system is operating.

The system can be activated or deactivated in the menu **Settings** in the Info-Display, vehicle personalisation ⇨ 129.

Deactivation is indicated by a message in the Driver Information Centre.

Detection zones

The system sensor covers a zone of approx. three metres on both sides of the vehicle. This zone starts at each exterior mirror and extends rearwards by approx. three metres. The height of the zone is approx. between 0.5 metres and two metres off the ground.

The system is deactivated if the vehicle is towing a trailer.

Side blind spot alert is designed to ignore stationary objects such as guardrails, posts, curbs, walls and beams. Parked vehicles or oncoming vehicles are not detected.

Fault

Occasional missed alerts can occur under normal circumstances and will increase in wet conditions.

Side blind spot alert does not operate when the left or right corners of the rear bumper are covered with mud, dirt, snow, ice, slush, or in heavy rainstorms. Cleaning instructions ⇨ 265.

In the event of a fault in the system or if the system does not work due to temporary conditions, a message is displayed in the Driver Information Centre. Seek the assistance of a workshop in case of a permanent fault.

Rear view camera

The rear view camera assists the driver when reversing by displaying a view of the area behind the vehicle.

The view of the camera is displayed in the Colour-Info-Display.

⚠ Warning

The rear view camera does not replace driver vision. Note that objects that are outside the camera's field of view and the advanced parking assist sensors, e.g. below the bumper or underneath the vehicle, are not displayed.

Do not reverse the vehicle by only looking at the Info-Display and check the surrounding area behind and around the vehicle before reversing.

Activation

Rear view camera is automatically activated when reverse gear is engaged.

Functionality

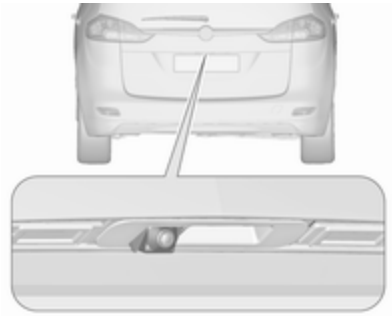

The camera is mounted in the tailgate handle and has a viewing angle of 130°.

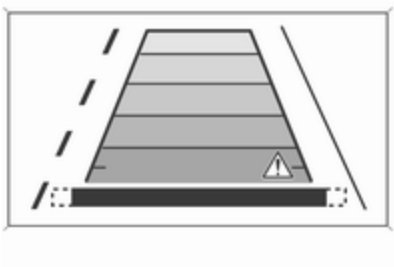

Due to the high position of the camera, the rear bumper can be seen on the display as a guide to position.

The area displayed by the camera is limited. The distance of the image that appears on the display differs from the actual distance.

Guiding lines

Dynamic guiding lines are horizontal lines in one metre intervals projected on the picture to define the distance to shown objects.

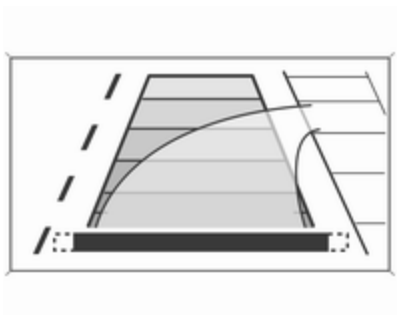

Trajectory lane of the vehicle is shown in accordance with the steering angle.

The function can be deactivated in the Settings menu in the Info-Display. Vehicle personalisation ⇨ 129.

Warning symbols

Warning symbols are indicated as triangles ⚠on the picture which shows obstacles detected by the rear sensors of the advanced parking assist.

Display settings

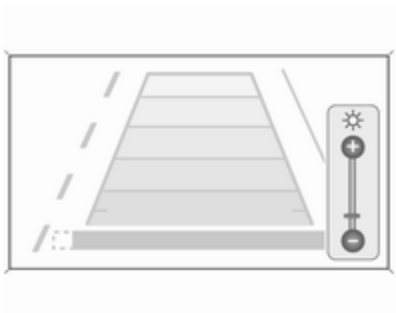

Navi 650/Navi 950: Brightness can be set with the up/down buttons of the multifunction knob.

CD 600: Brightness can be set by first pressing and then turning the multifunction knob.

Deactivation

The camera is deactivated when a certain forward speed is exceeded or if reverse gear is not engaged for approx. ten seconds.

Activation or deactivation of the rear view camera can be changed in the Settings menu in the Info-Display. Vehicle personalisation ⇨ 129.

Fault

Fault messages are displayed with a ⚠on the top line of the Info-Display.

The rear view camera may not operate properly when:

- The surrounding area is dark.
- The sun or the beam of headlights is shining directly into the camera lens.
- Ice, snow, mud, or anything else covers the camera lens. Clean the lens, rinse it with water, and wipe it with a soft cloth.
- The tailgate is not closed correctly.
- The vehicle had a rear-end accident.
- There are extreme temperature changes.

Traffic sign assistant

Functionality

The traffic sign assistant system detects designated traffic signs via a front camera and displays them in the Driver Information Centre.

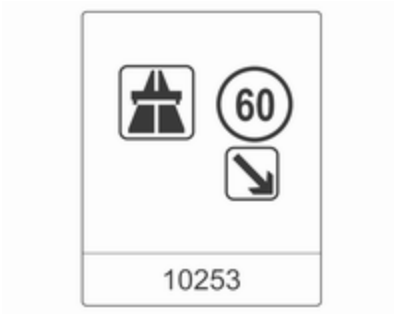

Traffic signs which will be detected are:

Limit and no passing signs

- speed limit
- no passing
- end of speed limit
- end of no passing

Road signs

beginning and end of:

- motorways
- A-roads
- play streets

Add-on signs

- additional hints to traffic signs
- restriction of trailer towing
- wet warning
- ice warning
- direction arrows

Speed limit signs are displayed in the Driver Information Centre until the next speed limit sign or end of speed limit is detected or up to a defined sign timeout.

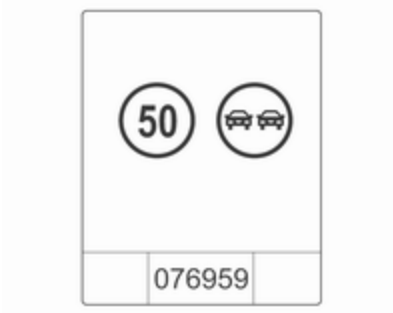

Combinations of multiple signs in the display are possible.

An exclamation mark in a frame indicates that there is an additional sign detected which is not recognised by the system.

The system is active up to a speed of 200 km/h depending on the lighting conditions. At night the system is active up to a speed of 160 km/h.

As soon as vehicle speed becomes slower than 55 km/h the display will be reset and the content of the traffic sign page will be cleared, e.g. when entering a city zone. The next recognized speed indication will be displayed.

Display indication

Traffic signs are displayed on the page **Traffic sign detection** in the Driver Information Centre, chosen via the adjuster wheel on the turn signal lever ⇨ 116.

When another function in the Driver Information Centre menu was selected and then **Traffic sign detection** page is chosen again, the last recognised traffic sign will be displayed.

After the traffic sign page is cleared by the system, the following symbol is indicated:

The content of the traffic sign page is also cleared during driving by pressing and holding **SET/CLR** on the turn signal lever.

Pop-up function

Speed limits and no passing signs are displayed as pop-ups on each page of the Driver Information Centre.

The pop-up function can be deactivated on the traffic sign page by pressing **SET/CLR** on the turn signal lever.

Once the Settings page is displayed, select **Off** to deactivate pop-up function. Reactivate by selecting **On**. When switching on the ignition, pop-up function is deactivated.

Pop-up indication is displayed for approx. eight seconds in the Driver Information Centre.

Fault

The traffic sign assistant system may not operate correctly when:

- The area of the windscreen, where the front camera is located, is not clean.
- Traffic signs are completely or partially covered or difficult to discern.
- There are adverse environmental conditions, e.g. heavy rain, snow, direct sunlight or shadows. In this event **No Traffic Sign Detection due to Weather** is indicated in the Driver Information Centre.
- Traffic signs are incorrectly mounted or damaged.
- Traffic signs do not comply with the Vienna Convention on traffic signs (Wiener Übereinkommen über Straßenverkehrszeichen).

Caution

The system is intended to help the driver within a defined speed range to discern certain traffic signs. Do not ignore traffic signs which are not displayed by the system.

The system does not discern any other than the conventional traffic signs that might give or end a speed limit.

Do not let this special feature tempt you into taking risks when driving.

Always adapt speed to the road conditions.

The driver assistance systems do not relieve the driver from full responsibility for vehicle operation.

Lane departure warning

The lane departure warning system observes the lane markings between which the vehicle is driving via a front camera. The system detects lane changes and warns the driver in the event of an unintended lane change via visual and acoustic signals.

Criteria for the detection of an unintended lane change are:

- No operation of turn signals.
- No brake pedal operation.
- No active accelerator operation or speeding-up.
- No active steering.

If the driver is active, no warning will be issued.

Activation

The lane departure warning system is activated by pressing . The illuminated LED in the button indicates that the system is switched on. When the control indicator in the instrument cluster illuminates green, the system is ready to operate.

The system is only operable at vehicle speeds above 56 km/h and if lane markings are available.

When the system recognises an unintended lane change, the control indicator changes to yellow and flashes. Simultaneously a chime sound is activated.

Deactivation

The system is deactivated by pressing , the LED in the button extinguishes.

At speeds below 56 km/h the system is inoperable.

Fault

The lane departure warning system may not operate properly when:

- The windscreen is not clean.
- There are adverse environmental conditions like heavy rain, snow, direct sunlight or shadows.

The system can not operate when no lane marking is detected.

Fuel

Fuel for petrol engines

Only use unleaded fuel that complies with European standard EN 228 or E DIN 51626-1 or equivalent.

The engine is capable of running with fuel that contains up to 10% ethanol (e.g. named E10).

Use fuel with the recommended octane rating. The engine specific requirements are given in the engine data overview ⇨ 277. A country specific label at the fuel filler flap can supersede the requirement.

Caution

Do not use fuel or fuel additives that contain metallic compounds such as manganese-based additives. This may cause engine damage.

Caution

Use of fuel that does not comply to EN 228 or E DIN 51626-1 or equivalent can lead to deposits or engine damage and may affect your warranty.

Caution

Use of fuel with too low an octane rating could lead to uncontrolled combustion and engine damage.

Fuel for diesel engines

Only use diesel fuel that complies with EN 590.

In countries outside the European Union use Euro-Diesel fuel with a sulphur concentration below 50 ppm.

Caution

Use of fuel that does not comply to EN 590 or similar can lead to engine powerloss, increased wear or engine damage and may affect your warranty.

Do not use marine diesel oils, heating oils, Aquazole and similar diesel-water emulsions. Diesel fuels must not be diluted with fuels for petrol engines.

Fuel for natural gas operation

Use natural gas with a methane content of approx. 78 - 99%. L-gas (low) has approx. 78 - 87% and H-gas (high) has approx. 87 - 99%. Biogas with the same methane content can also be used if it has been chemically prepared and desulphurised.

Only use natural gas or biogas that complies with DIN 51624.

Liquid gas or LPG must not be used.

Fuel selector

Pressing ⛽ switches between petrol and natural gas operation. Switching is not possible at high loads (e.g. powerful acceleration, driving at full throttle). The LED status shows the current operating mode.

- off : natural gas operation
- illuminates : petrol operation
- flashes : no switching is possible, one type of fuel is empty

As soon as the natural gas tank is empty, petrol operation is automatically engaged until the ignition is switched off.

If the natural gas tank is not refuelled, the system must be manually switched to petrol operation before the engine is restarted. This will prevent damage to the catalytic converter (overheating caused by irregular fuel supply).

If the selector switch is operated several times within a short time, a switchover inhibitor is activated. The engine remains in the current operating mode. The inhibitor remains active until the ignition is switched off.

A slight loss of power and torque can be expected during petrol operation. You must therefore adapt your driving style (e.g. during overtaking manoeuvres) and high vehicle loads (e.g. towing loads) accordingly.

Every six months run the petrol tank down until control indicator ⛽ illuminates, then refuel. This is necessary to maintain fuel quality as well as system function necessary for petrol operation.

Fill the tank completely at regular intervals to prevent corrosion in the tank.

Fuel for liquid gas operation

Liquid gas is known as LPG (Liquefied Petroleum Gas) or under its French name GPL (Gaz de Pétrole Liquéfié). LPG is also known as Autogas.

LPG consists mainly of propane and butane. The octane rating is between 105 and 115, depending on the butane proportion. LPG is stored as a liquid at a pressure of approximately five to ten bar.

The boiling point depends on the pressure and the mixing ratio. At ambient pressure, it is between -42 °C (pure propane) and -0.5 °C (pure butane).

Caution
The system works at an ambient temperature of approx. -8 °C to 100 °C.

Full functioning of the LPG system can only be guaranteed with liquid gas which complies with the minimum requirements of DIN EN 589.

Fuel selector

Pressing **LPG** switches between petrol and liquid gas operation as soon as the required parameters (coolant temperature, gas temperature and minimum engine speed) have been reached. The requirements are usually fulfilled after approximately 60 seconds (depending on exterior temperature) and the first firm press on the accelerator. The status LED shows the current operating mode.

▬ off	:	petrol operation
▬ flashes	:	checking conditions for fuel transition to liquid gas operation. Illuminates if conditions are fulfilled.
▬ illuminates	:	liquid gas operation
▬ flashes 5 times and extinguishes	:	liquid gas tank is empty or failure in liquid gas system. A message is displayed in the Driver Information Centre.

If the fuel tank is empty, the engine will not start.

The selected fuel mode is stored and reactivated at the next ignition cycle if conditions allow.

As soon as the liquid gas tank is empty, petrol operation is automatically engaged until the ignition is switched off.

When switching automatically between petrol or gas operation, a brief delay of engine tractive power may be noticeable.

Every six months, run the petrol tank down until control indicator Insignia illuminates, then refuel. This helps maintain fuel quality and system function for petrol operation.

Fill the tank completely at regular intervals to prevent corrosion in the tank.

Faults and remedies

If gas mode is not possible, check the following:

- Is there enough liquid gas present?
- Is there enough petrol present for starting?

Due to extreme temperatures in combination with the gas composition, it may take slightly longer before the system switches from petrol to gas mode.

In extreme situations, the system may also switch back to petrol mode if the minimum requirements are not fulfilled. If conditions allow, it may be possible to manually switch back to liquid gas operation.

Seek the assistance of a workshop in the event of all other faults.

Caution

Repairs and adjustments may only be made by trained specialists in order to maintain the safety and warranty on the LPG system.

Liquid gas is given a particular odour (odorised) so that any leaks can be detected easily.

⚠ Warning

If you smell gas in the vehicle or in the immediate vicinity, switch to petrol mode immediately. No smoking. No naked flames or ignition sources.

If the gas odour persists, do not start the engine. Have the cause of the fault remedied by a workshop.

When using underground car parks, follow the instructions of the operator and local laws.

Note
In the event of an accident, switch off the ignition and lights.

Refuelling

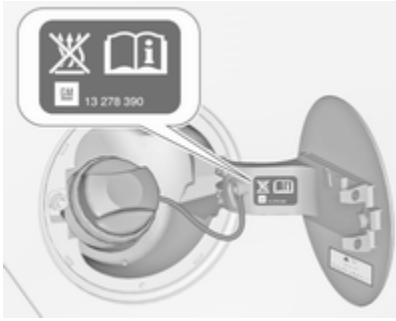

⚠ Danger

Before refuelling, switch off ignition and any external heaters with combustion chambers. Switch off any mobile phones.

Follow the operating and safety instructions of the filling station when refuelling.

⚠ Danger

Fuel is flammable and explosive. No smoking. No naked flames or sparks.

If you can smell fuel in your vehicle, have the cause of this remedied immediately by a workshop.

Caution

In case of misfuelling, do not switch on ignition.

Fuel filler flap is located at right rear side of the vehicle.

The fuel filler flap can only be opened if the vehicle is unlocked. Release the fuel filler flap by pushing the flap.

Petrol and Diesel refuelling

To open, turn the cap slowly anticlockwise.

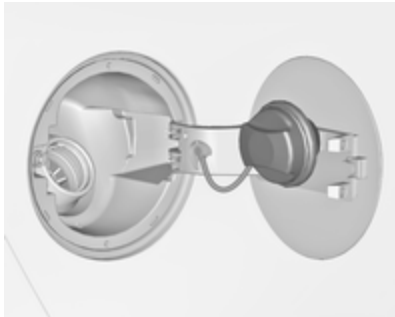

The fuel filler cap can be retained in the bracket on the fuel filler flap.

To refuel, fully insert the pump nozzle and switch it on.

After the automatic cut-off, the tank can be topped up by operating the pump nozzle a maximum of two more times.

Caution

Wipe off any overflowing fuel immediately.

To close, turn the fuel filler cap clockwise until it clicks.

Close the flap and allow it to engage.

Vehicles with misfuel inhibitor

⚠Warning

Do not try to open the flap of the fuel filler neck manually on vehicles with misfuel inhibitor.

Disregarding this could lead to trapping of the fingers.

Vehicles with a selective catalytic reduction system are equipped with a misfuel inhibitor.

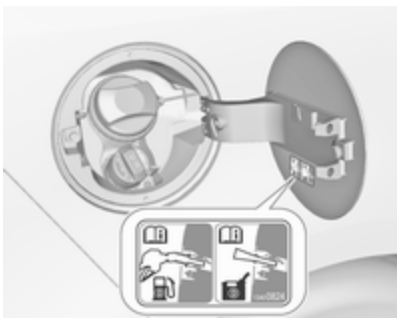

The misfuel inhibitor ensures that the flap of the fuel filler neck can only be opened by using a nozzle for diesel fuel or a funnel for emergency refilling.

Turn the fuel filler cap slowly anticlockwise.

The cap can be retained in the bracket on the fuel filler flap.

Place the nozzle in a straight line to the filler neck and press with slight force to insert.

In case of an emergency, refill with a canister. A funnel must be used to open the cap of the filler neck.

The funnel is located on the right-hand side storage compartment in the load compartment.

Place the funnel in a straight line to the filler neck and press with slight force to insert.

Use the funnel to fill the diesel fuel into the filler neck.

After topping-up, put the funnel into the plastic bag and stow it in the storage compartment.

Selective catalytic reduction system ⇨ 166.

Natural gas refuelling

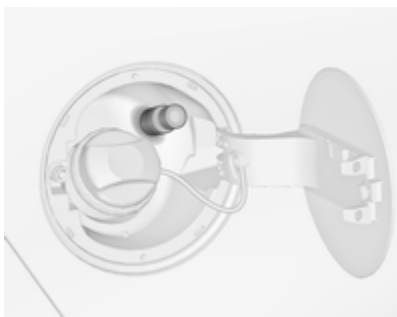

The fuel filler flap can only be opened if the vehicle is unlocked. Release the fuel filler flap by pushing the flap.

⚠ Warning

Refuel only with a maximum output pressure of 250 bar. Use only temperature-compensated filling stations.

The refuelling procedure must be completed, i.e. the filler neck must be vented.

The capacity of the natural gas tank depends on outside temperature, filling pressure and type of refuelling system. Capacities ⇨ 286.

Close the flap and allow it to engage.

Terms for "natural gas vehicles" abroad:

German	Erdgasfahrzeuge
English	NGVs = Natural Gas Vehicles
French	Véhicules au gaz naturel - or - Véhicules GNV
Italian	Metano auto

Terms for "natural gas" abroad:

German	Erdgas
English	CNG = Compressed Natural Gas
French	GNV = Gaz Naturel (pour) Véhicules - or - CGN = carburantgaz naturel
Italian	Metano (per auto)

Liquid gas refuelling

Follow the operating and safety instructions of the filling station when refuelling.

The filling valve for the liquid gas is behind the fuel filler cap.

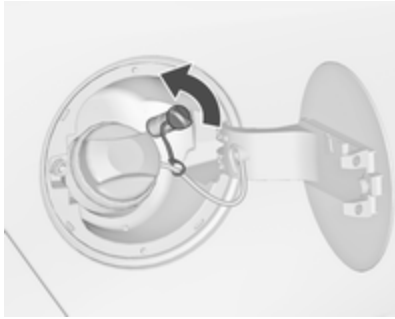

Unscrew protective cap from the filler neck.

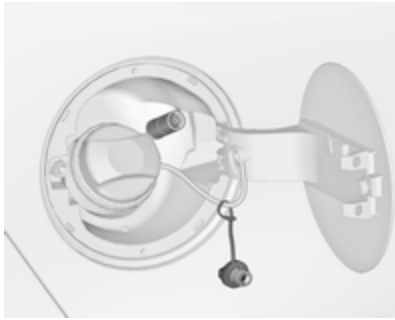

Screw the required adapter hand-tight onto the filler neck.

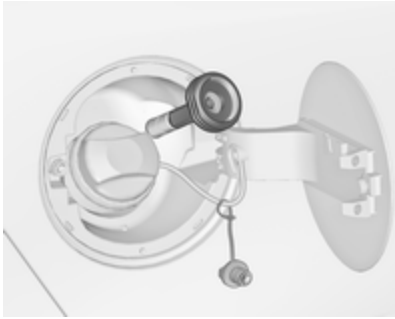

ACME Adapter: Screw the nut of the filling nozzle onto the adapter. Press locking lever on filler nozzle down.

DISH filler neck: Place the filler nozzle into the adapter. Press locking lever on filler nozzle down.

Bayonet filler neck: Place filler nozzle on the adapter and turn clockwise or anticlockwise through one quarter turn. Pull locking lever of filler nozzle fully.

EURO filler neck: Press the filler nozzle onto the adapter until it engages.

Press the button at the liquid gas supply point. The filling system stops or begins to run slowly when 80% of the tank volume is reached (maximum fill level).

Release button on filling system to stop the filling process. Release the locking lever and remove the filler nozzle. A small quantity of liquid gas may escape.

Remove adapter and stow in vehicle.

Fit protective cap to prevent the penetration of foreign bodies into the filler opening and the system.

⚠ Warning

Due to the system design, an escape of liquid gas after releasing the locking lever is unavoidable. Avoid inhaling.

⚠ Warning

The liquid gas tank should only be filled to 80% capacity, for safety reasons.

The multivalve on the liquid gas tank automatically limits the fill quantity. If a larger quantity is added, we recommend not exposing the vehicle to the sun until the excess amount has been used up.

Filling adapter

As filling systems are not standardised, different adapters are required which are available from Opel Distributors and from Opel Authorised Repairers.

ACME adapter: Belgium, Germany, Ireland, Luxembourg, Switzerland

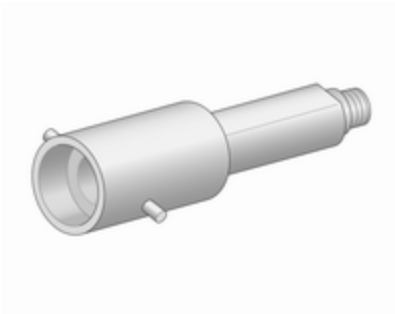

Bayonet adapter: Netherlands, Norway, Spain, United Kingdom

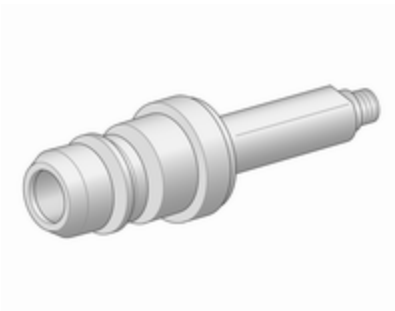

EURO adapter: Spain

DISH adapter: Austria, Bosnia-Herzegovina, Bulgaria, Croatia, Czech Republic, Denmark, Estonia, France, Greece, Hungary, Italy, Latvia, Lithuania, Macedonia, Poland, Portugal, Romania, Serbia, Slovakia, Slovenia, Sweden, Switzerland, Turkey, Ukraine,

Fuel filler cap

Only use genuine fuel filler caps. Diesel-engined vehicles have special fuel filler caps.

Fuel consumption - CO_2-Emissions

Petrol and Diesel engines

The fuel consumption (combined) of the model Opel Zafira is within a range of 9.0 to 4.1 l/100 km.

The CO_2 emission (combined) is within a range of 177 to 109 g/km.

For the values specific to your vehicle, refer to the EEC Certificate of Conformity provided with your vehicle or other national registration documents.

Natural gas engines

The gas consumption (combined) of the model Opel Zafira is 4.7 kg/100 km.

The CO_2 emission (combined) is 129 g/km.

For the values specific to your vehicle, refer to the EEC Certificate of Conformity provided with your vehicle or other national registration documents.

General information

The official fuel consumption and specific CO_2 emission figures quoted relate to the EU base model with standard equipment.

Fuel consumption data and CO_2 emission data are determined according to regulation R (EC) No. 715/2007 (in the version respectively applicable), taking into consideration the vehicle weight in running order, as specified by the regulation.

The figures are provided only for the purpose of comparison between different vehicle variants and must not be taken as a guarantee for the actual fuel consumption of a particular vehicle. Additional equipment may result in slightly higher results than the stated consumption and CO_2 figures.

Furthermore, fuel consumption is dependent on personal driving style as well as road and traffic conditions.

Natural gas

The fuel consumption information was obtained using reference fuel G20 (methane proportion 99 - 100 mol%) under prescribed driving conditions. When using natural gas with a lower proportion of methane, the fuel consumption can differ from the specified values.

Trailer hitch

General information

Only use towing equipment that has been approved for your vehicle. Vehicles with natural gas engines require special towing equipment.

Entrust retrofitting of towing equipment to a workshop. It may be necessary to make changes that affect the cooling system, heat shields or other equipment.

The bulb outage detection function for trailer brake light cannot detect a partial bulb outage. E.g. in case of 4x 5 Watt bulbs, the function only detects lamp outage when only a single 5 Watt lamp remains or none remain.

Fitting of towing equipment could cover the opening of the towing eye. If this is the case use the coupling ball bar for towing. Always keep the coupling ball bar in the vehicle.

Driving characteristics and towing tips

Before attaching a trailer, lubricate the coupling ball. However, do not do so if a stabiliser, which acts on the coupling ball, is being used to reduce snaking movements.

For trailers with low driving stability and caravan trailers with a permitted gross vehicle weight of more than 1300 kg the use of a stabiliser is strongly recommended when driving above 80 km/h.

If the trailer starts snaking, drive more slowly, do not attempt to correct the steering and brake sharply if necessary.

When driving downhill, drive in the same gear as if driving uphill and drive at a similar speed.

Adjust tyre pressure to the value specified for full load ⇨ 288.

Trailer towing

Trailer loads

The permissible trailer loads are vehicle and engine-dependent maximum values which must not be exceeded. The actual trailer load is the difference between the actual gross weight of the trailer and the actual coupling socket load with the trailer coupled.

The permissible trailer loads are specified in the vehicle documents. In general, they are valid for gradients up to max. 12%.

The permitted trailer load applies up to the specified incline and up to an altitude of 1000 metres above sea level. Since engine power decreases as altitude increases due to the air becoming thinner, therefore reducing climbing ability, the permissible gross train weight also decreases by 10% for every 1000 metres of additional altitude. The gross train weight does not have to be reduced when driving on roads with slight inclines (less than 8%, e.g. motorways).

The permissible gross train weight must not be exceeded. This weight is specified on the identification plate ⇨ 272.

Vertical coupling load

The vertical coupling load is the load exerted by the trailer on the coupling ball. It can be varied by changing the weight distribution when loading the trailer.

The maximum permissible vertical coupling load (75 kg) is specified on the towing equipment identification plate and in the vehicle documents.

Note
Engines B16DTH, B16DTJ, B20DTH and B20DTJ: Depending on the equipment the maximum permissible vertical coupling load can be 75 kg or 60 kg.

Always aim for the maximum load, especially in the case of heavy trailers. The vertical coupling load should never fall below 25 kg.

Rear axle load

When the trailer is coupled and the towing vehicle fully loaded, the permissible rear axle load (see identification plate or vehicle documents) may be exceeded by 60 kg, the gross vehicle weight rating may be exceeded by 60 kg. If the permissible rear axle load is exceeded, a maximum speed of 100 km/h applies.

Towing equipment

Caution
When operating without a trailer, remove the coupling ball bar.

Stowage of coupling ball bar

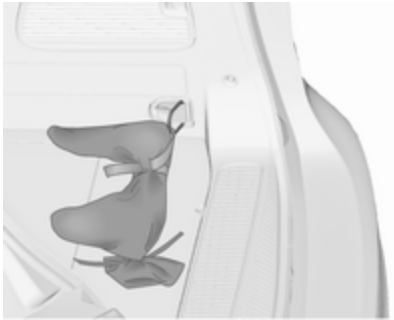

The bag with the coupling ball bar is stowed in the load compartment.

Place the strap through the right rear lashing eye, wrap around twice and tighten the strap to secure the bag.

Fitting the coupling ball bar

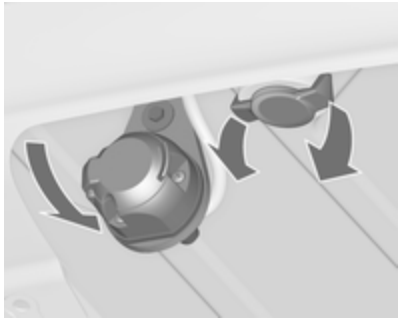

Disengage and fold down the socket. Remove the sealing plug from the opening for the coupling ball bar and stow it.

Checking the tensioning of the coupling ball bar

- Red marking on rotary knob must point towards green marking on coupling ball bar.
- The gap between the rotary knob and the coupling ball bar must be approx. 6 mm.
- The key must be in position 🔓.

Otherwise, the coupling ball bar must be tensioned before being inserted:

- Unlock coupling ball bar by turning key to position 🔓.

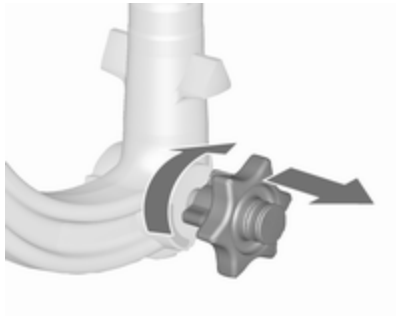

- Pull out rotary knob and turn clockwise as far as it will go.

Inserting the coupling ball bar

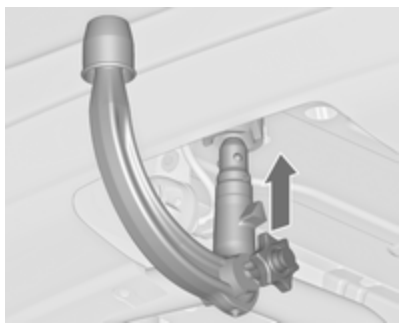

Insert the tensioned coupling ball bar in the opening and push firmly upwards until it audibly engages.

The rotary handle snaps back into its original position resting against the coupling ball bar without a gap.

⚠ Warning
Do not touch rotary handle during insertion.

Lock the coupling ball bar by turning the key to position 🔒. Remove the key and close the protective flap.

Eye for break-away stopping cable

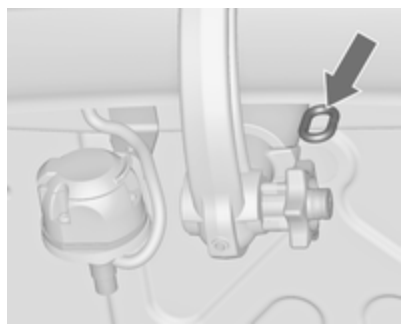

Attach breakaway stopping cable to eye.

Check that the coupling ball bar is correctly installed

- Green marking on rotary knob must point towards green marking on coupling ball bar.
- There must be no gap between the rotary handle and the coupling ball bar.
- The coupling ball bar must be firmly engaged in the opening.
- The coupling ball bar must be locked and the key removed.

⚠Warning

Towing a trailer is permitted only when a coupling ball bar is fitted correctly. If the coupling ball bar does not engage correctly, seek the assistance of a workshop.

Dismounting the coupling ball bar

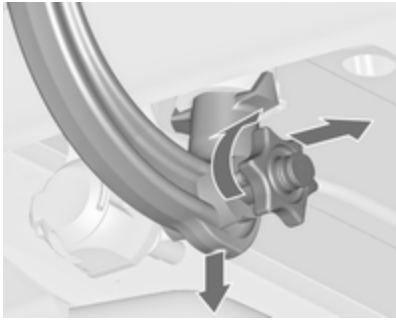

Open the protective flap and turn the key to position 🔓 to unlock the coupling ball bar.

Pull out rotary handle and turn clockwise as far as it will go. Pull out coupling ball bar downwards.

Insert sealing plug in opening. Fold away socket.

Trailer stability assist

If the system detects snaking movements, engine power is reduced and the vehicle/trailer combination is selectively braked until the snaking ceases. While system is working keep steering wheel as still as possible.

Trailer stability assist (TSA) is a function of the Electronic Stability Control ⇨ 176.

Vehicle care

General Information **224**
Accessories and vehicle modifications 224
Vehicle storage 224
End-of-life vehicle recovery 224
Vehicle checks **225**
Performing work 225
Bonnet 225
Engine oil 226
Engine coolant 227
Power steering fluid 228
Washer fluid 229
Brakes 229
Brake fluid 229
Vehicle battery 229
Diesel fuel system bleeding 231
Wiper blade replacement 231
Bulb replacement **232**
Halogen headlights 232
Adaptive forward lighting 234
Fog lights 235
Tail lights 236
Side turn signal lights 238
Number plate light 239
Interior lights 239
Instrument panel illumination ... 240
Electrical system **240**
Fuses 240
Engine compartment fuse box . 241
Instrument panel fuse box 243
Load compartment fuse box 244
Vehicle tools **246**
Tools 246
Wheels and tyres **247**
Winter tyres 247
Tyre designations 247
Tyre pressure 247
Tyre pressure monitoring system 248
Tread depth 251
Changing tyre and wheel size . 252
Wheel covers 252
Tyre chains 253
Tyre repair kit 253
Wheel changing 256
Spare wheel 258
Jump starting **262**
Towing **263**
Towing the vehicle 263
Towing another vehicle 264
Appearance care **265**
Exterior care 265
Interior care 267

General Information

Accessories and vehicle modifications

We recommend the use of genuine parts and accessories and factory approved parts specific for your vehicle type. We cannot assess or guarantee reliability of other products - even if they have a regulatory or otherwise granted approval.

Do not make any modifications to the electrical system, e.g. changes of electronic control units (chip tuning).

Caution
When transporting the vehicle on a train or on a recovery vehicle, the mud flaps might be damaged.

Vehicle storage

Storage for a long period of time

If the vehicle is to be stored for several months:

- Wash and wax the vehicle.
- Have the wax in the engine compartment and underbody checked.
- Clean and preserve the rubber seals.
- Fill up fuel tank completely.
- Change the engine oil.
- Drain the washer fluid reservoir.
- Check the coolant antifreeze and corrosion protection.
- Adjust tyre pressure to the value specified for full load.
- Park the vehicle in a dry, well ventilated place. Engage first or reverse gear or set selector lever to **P**. Prevent the vehicle from rolling.
- Do not apply the parking brake.
- Open the bonnet, close all doors and lock the vehicle.
- Disconnect the clamp from the negative terminal of the vehicle battery. Beware that all systems are not functional, e.g. anti-theft alarm system.

Putting back into operation

When the vehicle is to be put back into operation:

- Connect the clamp to the negative terminal of the vehicle battery. Activate the electronics of the power windows.
- Check tyre pressure.
- Fill up the washer fluid reservoir.
- Check the engine oil level.
- Check the coolant level.
- Fit the number plate if necessary.

End-of-life vehicle recovery

Information on end-of-life vehicle recovery centres and the recycling of end-of-life vehicles is available on our

website, where legally required. Only entrust this work to an authorised recycling centre.

Gas vehicles must be recycled by a service centre authorised for gas vehicles.

Vehicle checks

Performing work

⚠ Warning

Only perform engine compartment checks when the ignition is off.

The cooling fan may start operating even if the ignition is off.

⚠ Danger

The ignition system and Xenon headlights use extremely high voltage. Do not touch.

Bonnet

Opening

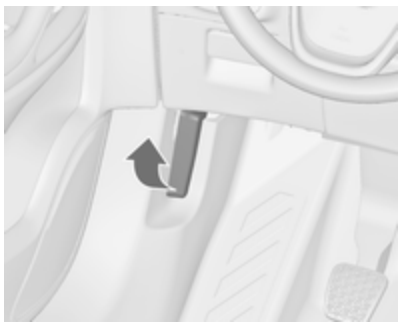

Pull the release lever and return it to its original position.

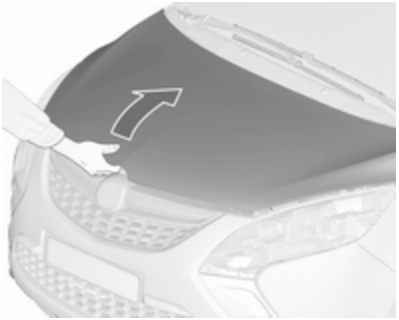

Move the safety catch sideways to the left vehicle side and open the bonnet.

The bonnet is held open automatically by a lifter.

If the bonnet is opened during an Autostop, the engine will be restarted automatically for safety reasons.

Closing

Before closing the bonnet, press the support into the holder.

Lower the bonnet and allow it to fall into the latch from a low height (20-25 cm). Check that the bonnet is engaged.

Caution
Do not press the bonnet into the latch, to avoid dents.

Engine oil

Check the engine oil level manually on a regular basis to prevent damage to the engine. Ensure that the correct specification of oil is used. Recommended fluids and lubricants ⇨ 270.

The maximum engine oil consumption is 0.6 litres per 1000 km.

Check with the vehicle on a level surface. The engine must be at operating temperature and switched off for at least five minutes.

Pull out the dipstick, wipe it clean, insert it to the stop on the handle, pull out and read the engine oil level.

Insert dipstick to the stop on the handle and make half a turn.

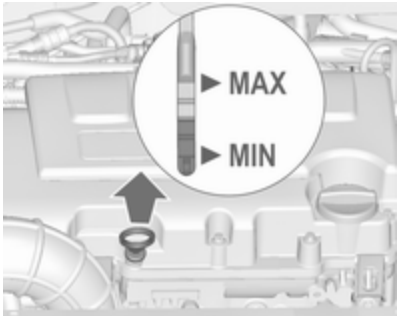

Different dipsticks are used depending on engine variant.

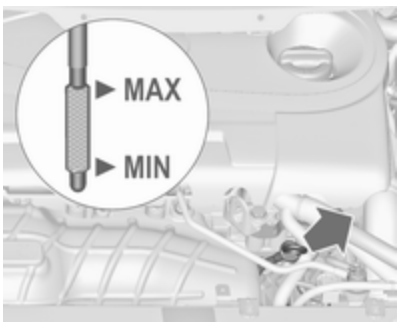

When the engine oil level has dropped to the **MIN** mark, top-up engine oil.

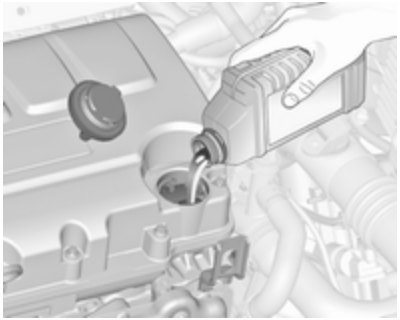

We recommend the use of the same grade of engine oil that was used at last change.

The engine oil level must not exceed the **MAX** mark on the dipstick.

On some engines, a funnel is needed to top-up engine oil.

The funnel is located on the right side storage in the load compartment.

Use the funnel to fill in the engine oil into the engine oil opening.

After topping-up, put the funnel into the plastic bag and stow it in the storage compartment.

Caution
Overfilled engine oil must be drained or suctioned out.

Capacities ⇨ 286.

Fit the cap on straight and tighten it.

Engine coolant

The coolant provides freeze protection down to approx. -28 °C. In northern countries with very low temperatures, the factory filled coolant provides frost protection down to approx. -37 °C.

Caution
Only use approved antifreeze.

Coolant level

Caution
Too low a coolant level can cause engine damage.

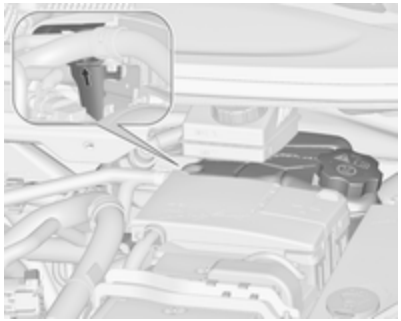

If the cooling system is cold, the coolant level should be above the filling line mark. Top-up if the level is low.

⚠ Warning

Allow the engine to cool before opening the cap. Carefully open the cap, relieving the pressure slowly.

To top-up, use a 1:1 mixture of approved coolant concentrate mixed with clean tap water. If no coolant concentrate is available, use clean tap water. Install the cap tightly.

Engine B16DTH: After starting the engine, set the heating to warmest temperature and the fan speed to at least first level for approx. five minutes. This will ensure that the air within the cooling system escapes.

Have the coolant concentration checked and have the cause of the coolant loss remedied by a workshop.

Power steering fluid

Caution

Extremely small amounts of contamination can cause steering system damage and cause it to not work properly. Do not allow contaminates to contact the fluid side of the reservoir cap/dipstick or from entering the reservoir.

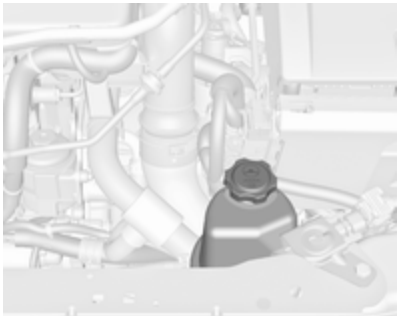

Power steering fluid level normally does not have to be checked. If an unusual noise sounds during steering or the power steering reacts unusually, seek the assistance of a workshop.

Washer fluid

Fill with clean water mixed with a suitable quantity of approved windscreen washer fluid which contains antifreeze.

Caution
Only washer fluid with a sufficient antifreeze concentration provides protection at low temperatures or a sudden drop in temperature.

Brakes

In the event of minimum thickness of the brake lining, a squealing noise sounds during braking.

Continued driving is possible but have the brake lining replaced as soon as possible.

Once new brake linings are installed, do not brake unnecessarily hard for the first few journeys.

Brake fluid

⚠Warning
Brake fluid is poisonous and corrosive. Avoid contact with eyes, skin, fabrics and painted surfaces.

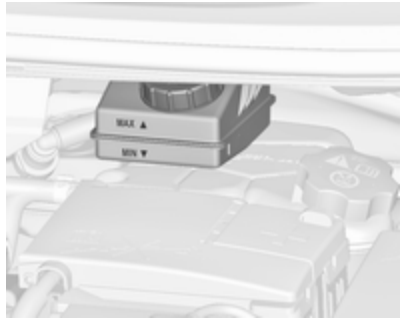

The brake fluid level must be between the **MIN** and **MAX** marks.

If fluid level is below **MIN** seek the assistance of a workshop.

Brake and clutch fluid ⇨ 270.

Vehicle battery

The vehicle battery is maintenance-free, provided that the driving profile allows sufficient charging of the battery. Short-distance-driving and frequent engine starts can discharge the battery. Avoid the use of unnecessary electrical consumers.

Batteries do not belong in household waste. They must be disposed of at an appropriate recycling collection point.

Laying up the vehicle for more than four weeks can lead to battery discharge. Disconnect the clamp from the negative terminal of the vehicle battery.

Ensure the ignition is switched off before connecting or disconnecting the vehicle battery.

Vehicle battery discharge protection ⇨ 149.

Replacing the vehicle battery

Note
Any deviation from the instructions given in this section may lead to temporary deactivation of the stop-start system.

When the vehicle battery is being replaced, please ensure that there are no open ventilation holes in the vicinity of the positive terminal. If a ventilation hole is open in this area, it must be closed off with a dummy cap, and the ventilation in the vicinity of the negative terminal must be opened.

Only use vehicle batteries that allow the fuse box to be mounted above the vehicle battery.

In vehicles with an AGM (Absorptive Glass Mat) battery, make sure to have the battery replaced with another AGM battery.

An AGM battery can be identified by the label on the battery. We recommend the use of an original Opel vehicle battery.

Note
Using an AGM vehicle battery different from the original Opel vehicle battery may result in a lower performance of the stop-start system.

We recommend that you have the vehicle battery replaced by a workshop.

Stop-start system ⇨ 161.

Charging the vehicle battery

⚠ Warning

On vehicles with stop-start system, ensure that the charging potential does not exceed 14.6 volts when using a battery charger. Otherwise the vehicle battery might be damaged.

Jump starting ⇨ 262.

Warning label

Meaning of symbols:

- No sparks, naked flames or smoking.
- Always shield eyes. Explosive gases can cause blindness or injury.
- Keep the vehicle battery out of reach of children.
- The vehicle battery contains sulphuric acid which could cause blindness or serious burn injuries.
- See the Owner's Manual for further information.
- Explosive gas may be present in the vicinity of the vehicle battery.

Diesel fuel system bleeding

If the tank has been run dry, the diesel fuel system must be bled. Switch on the ignition three times for 15 seconds at a time. Then crank the engine for a maximum of 40 seconds. Repeat this process after no less than five seconds. If the engine fails to start, seek the assistance of a workshop.

Wiper blade replacement

Lift the wiper arm until it stays in the raised position, press button to disengage the wiper blade and remove.

Attach the wiper blade slightly angled to the wiper arm and push until it engages.

Lower wiper arm carefully.

Wiper blade on the rear window

Lift wiper arm. Disengage wiper blade as shown in illustration and remove.

Attach the wiper blade slightly angled to the wiper arm and push until it engages.

Lower wiper arm carefully.

Bulb replacement

Switch off the ignition and switch off the relevant switch or close the doors.

Only hold a new bulb at the base. Do not touch the bulb glass with bare hands.

Use only the same bulb type for replacement.

Replace headlight bulbs from within the engine compartment.

Halogen headlights

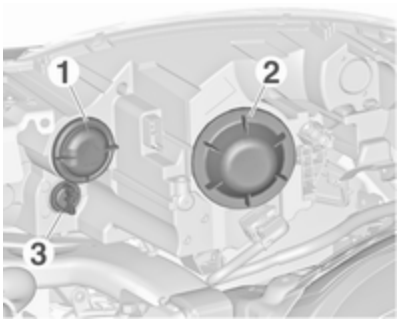

Bi-Halogen headlight (1) with one bulb for low and high beam.

Front turn signal (2).

Sidelight/Daytime running light (3).

Low/High beam (1)

1. Rotate the cap (1) anticlockwise and remove it.

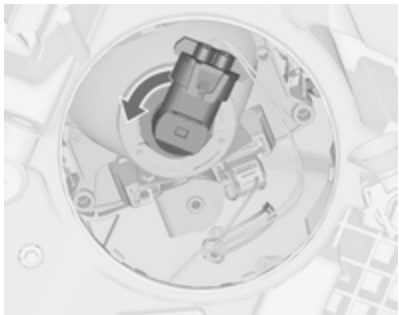

2. Rotate the bulb holder anticlockwise to disengage. Withdraw the bulb holder from the reflector.

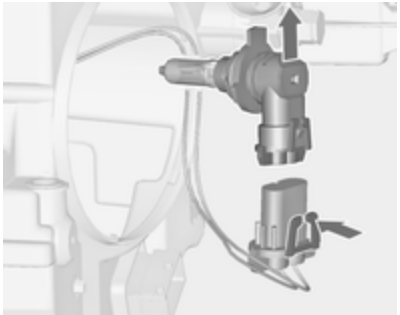

3. Disengage the bulb holder from the plug connector by pressing the retaining lug.
4. Replace the bulb and connect bulb holder to the plug connector.
5. Insert the bulb holder, engaging the two lugs into the reflector and rotate clockwise to secure.
6. Fit the cap and rotate clockwise.

Front turn signal (2)

1. Rotate bulb socket (2) anticlockwise to disengage. Withdraw the bulb socket from the reflector.

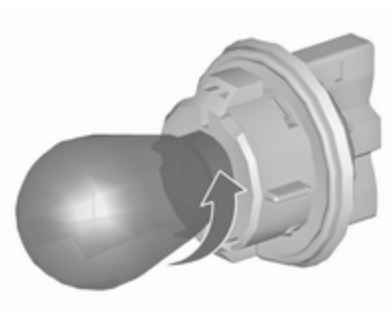

2. Remove the bulb from the socket by turning anticlockwise.
3. Replace and insert new bulb into socket by turning clockwise.
4. Insert the bulb socket into the reflector and turn clockwise.

Sidelight/Daytime running light (3)

1. Rotate bulb socket (3) anticlockwise to disengage. Withdraw the bulb socket from the reflector.

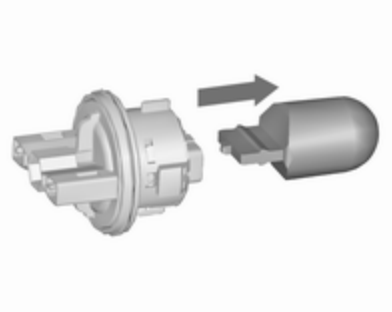

2. Remove the bulb from the socket by pulling.
3. Replace and insert new bulb into socket.
4. Insert the bulb socket into the reflector and turn clockwise.

Adaptive forward lighting

⚠ Danger

Adaptive forward lighting system uses Xenon headlights.

Xenon headlights work under extremely high electrical voltage. Do not touch. Have bulbs replaced by a workshop.

Bulbs for front turn signal and corner lighting can be replaced.

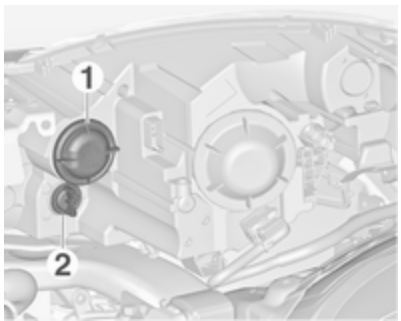

Corner lighting (1).

Front turn signal (2).

Sidelight/Daytime running lights are designed as Light Emitting Diodes (LEDs) and cannot be replaced.

Corner lighting (1)

1. Rotate the cap (1) anticlockwise and remove it.

2. Rotate the bulb holder anticlockwise to disengage. Withdraw the bulb holder from the reflector.

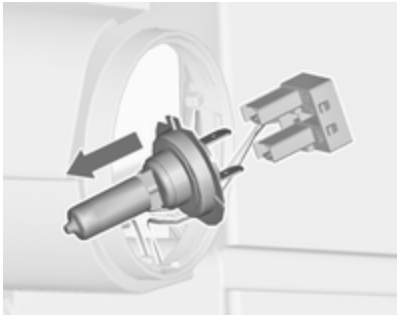

3. Disengage the bulb from the plug connector by pulling.
4. Replace the bulb and connect bulb holder to the plug connector.
5. Insert the bulb holder, engaging the two lugs into the reflector and rotate clockwise to secure.
6. Fit the cap and rotate clockwise.

Front turn signal (2)

1. Rotate bulb socket (2) anticlockwise to disengage. Withdraw the bulb socket from the reflector.

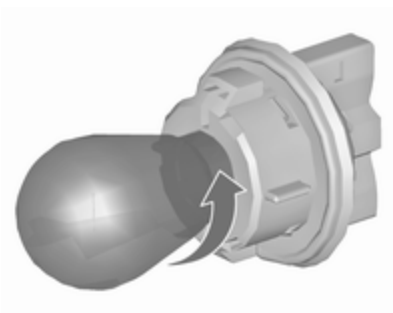

2. Remove the bulb from the socket by turning anticlockwise.
3. Replace and insert new bulb into socket by turning clockwise.
4. Insert the bulb socket into the reflector and turn clockwise.

Fog lights

The bulbs are accessible from beneath the vehicle.

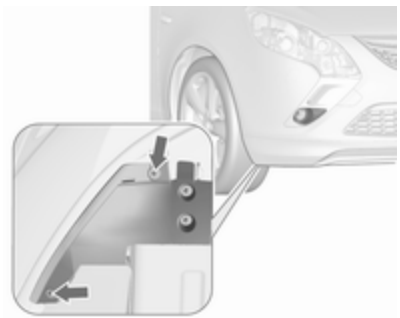

1. Remove the outer screws of the cover, marked by the arrows.

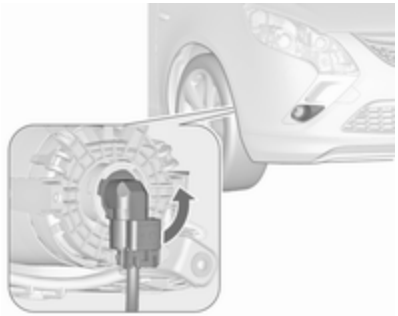

2. Hinge away the cover.

   Turn the bulb socket anticlockwise and remove it from the reflector.

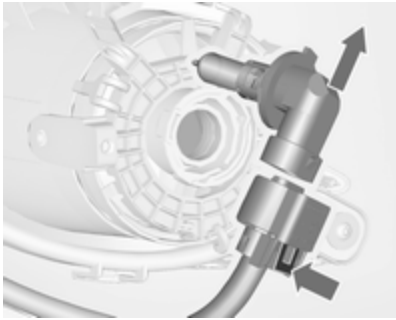

3. Disengage the bulb socket from the plug connector by pressing the retaining lug.
4. Remove and replace the bulb socket with bulb and attach to the plug connector.
5. Insert the bulb socket into the reflector, turn clockwise and engage.
6. Mount the cover with the screws.

Tail lights

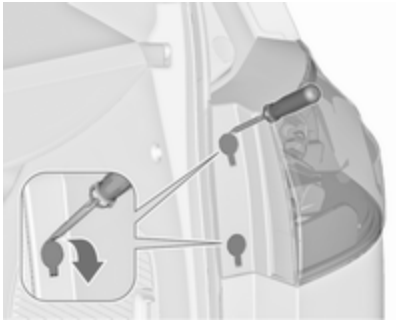

1. Hinge out the screw cover.

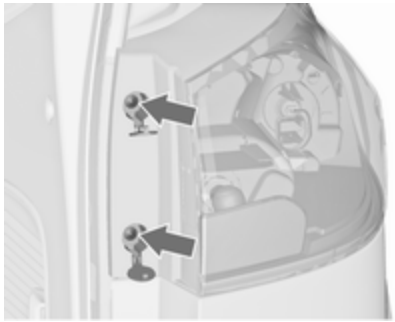

2. Remove the screws, marked by the arrows.

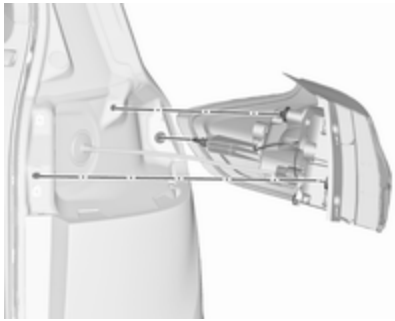

3. Carefully withdraw the light assembly from the retaining pins and remove.

4. Detach the plug connector from the light assembly.

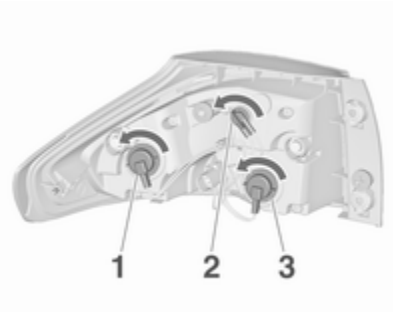

5. Remove and replace the bulb by turning the bulb socket.

   Turn signal light (**1**)

   Tail lights (**2**)

   Brake light (**3**)

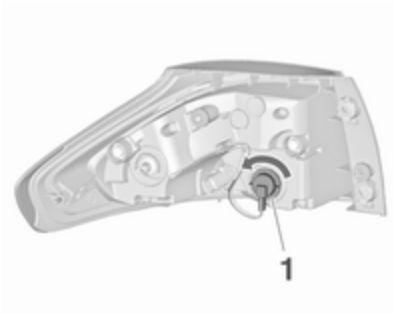

Tail lights with Light Emitting Diode (LED) for tail and brake light

Only the turn signal light (**1**) can be replaced.

Remove and replace the bulb by turning the bulb socket.

6. Connect the plug connector to the light assembly.
7. Fit light assembly onto retaining pins and mount the light assembly using the screws.
8. Plug in screw cover.

Reverse lights (4) in the tailgate

1. Open the tailgate and remove the cover.

2. Turn the bulb holder anticlockwise and remove it from the reflector.

3. Remove the bulb from the socket by pulling.
4. Replace and insert new bulb into socket.
5. Insert the bulb socket into the reflector and turn clockwise.
6. Install the cover.

Rear fog light

The bulbs are accessible from beneath the vehicle.

1. Turn the bulb socket anticlockwise and remove it from the reflector.

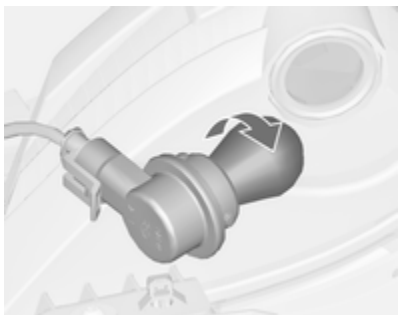

2. Remove the bulb from the socket by turning anticlockwise.
3. Replace and insert new bulb into the socket by turning clockwise.
4. Insert the bulb socket into the reflector, turn clockwise and engage.

Bulb check

Switch on the ignition, operate and check all lights.

Side turn signal lights

To replace bulb, remove lamp housing:

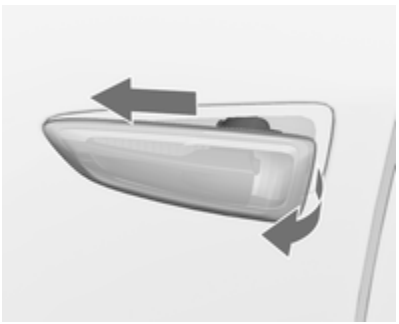

1. Slide lamp to its left side and remove with its right end.

2. Turn bulb holder anticlockwise and remove from housing.

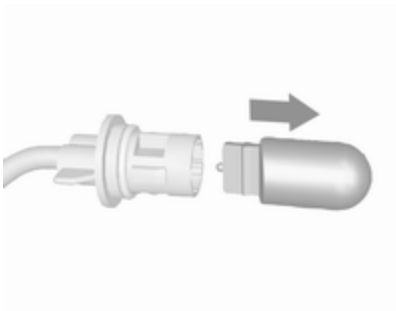

3. Pull bulb from bulb holder and replace it.
4. Insert bulb holder and turn clockwise.
5. Insert left end of the lamp, slide to the left and insert right end.

Number plate light

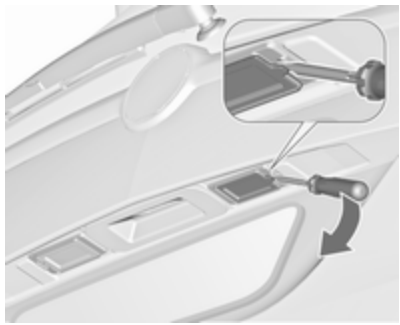

1. Insert screwdriver in recess of the cover, press to the side and release spring. Remove cover.

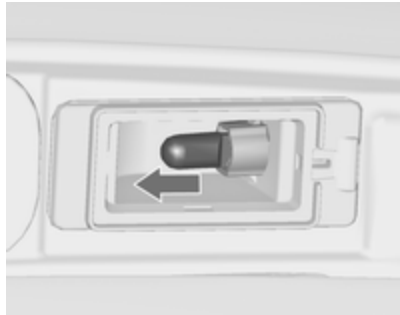

2. Remove the bulb from the socket by pulling.
3. Replace the bulb and insert it into the socket.
4. Push the cover into the housing.

Interior lights

Courtesy lights, reading lights

Have bulbs replaced by a workshop.

Load compartment light

Have bulbs replaced by a workshop.

Instrument panel illumination

Have bulbs replaced by a workshop.

Electrical system

Fuses

Data on the replacement fuse must match the data on the defective fuse.

There are three fuse boxes in the vehicle:

- in the front left of the engine compartment
- in left-hand drive vehicles, in the interior behind the storage compartment, or, in right-hand drive vehicles, behind the glovebox
- behind a cover on the left side of the load compartment

Before replacing a fuse, turn off the respective switch and the ignition.

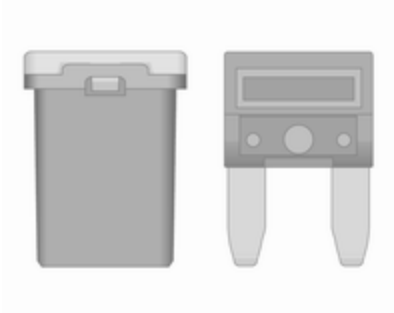

There are different kinds of fuses in the vehicle.

Depending on the type of fuse, a blown fuse can be recognized by its melted wire. Do not replace the fuse until the cause of the fault has been remedied.

Some functions are protected by several fuses.

Fuses may also be inserted without existence of a function.

Fuse extractor

A fuse extractor may be located in the fuse box in the engine compartment.

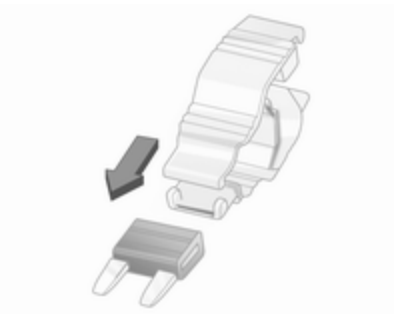

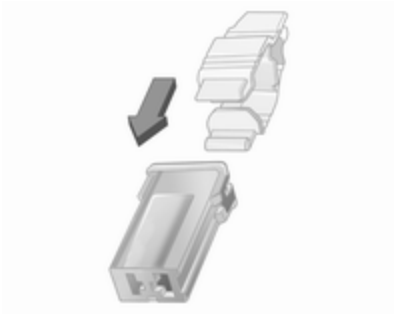

Place the fuse extractor on the various types of fuse from the top or side, and withdraw fuse.

Engine compartment fuse box

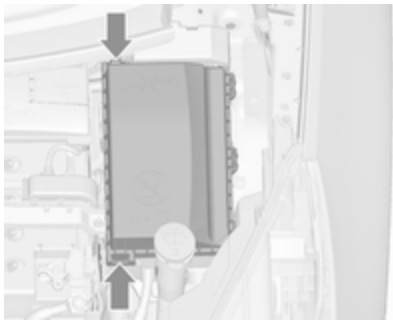

The fuse box is in the front left of the engine compartment.

Disengage the cover and fold it upwards until it stops. Remove the cover vertically upwards.

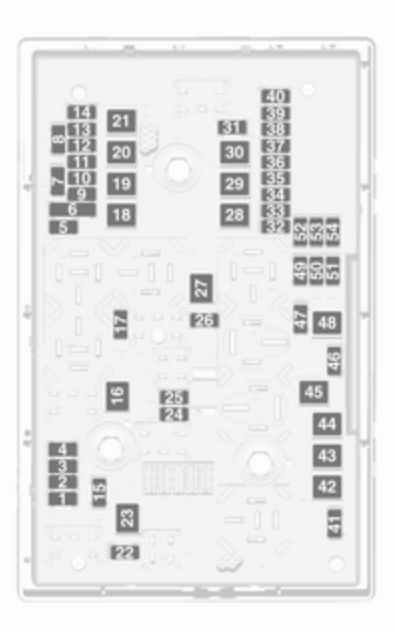

No.	Circuit
1	Engine control module
2	Lambda sensor
3	Fuel injection/Ignition system
4	Fuel injection/Ignition system
5	–
6	Exterior mirror heating/Anti-theft alarm system
7	Fan control/Engine control module/Transmission control module
8	Lambda sensor/Engine cooling
9	Rear window sensor
10	Battery sensor
11	Tailgate release
12	Adaptive forward lighting/Automatic light control
13	ABS
14	Rear window wiper
15	Engine control module

No.	Circuit
16	Starter
17	Transmission control module
18	Heated rear window
19	Front power windows
20	Rear power windows
21	Rear electrical centre
22	Left high beam (Halogen)
23	Headlamp washer system
24	Right low beam (Xenon)
25	Left low beam (Xenon)
26	Front fog lights
27	Diesel fuel heating
28	Stop-start system
29	Electric parking brake
30	ABS
31	Adaptive cruise control
32	Airbag

No.	Circuit
33	Adaptive forward lighting/Automatic light control
34	Exhaust gas recirculation
35	Exterior mirror/Rain sensor
36	Climate control
37	Canister vent solenoid
38	Vacuum pump
39	Central control module
40	Windscreen washer/Rear window washer system
41	Right high beam (Halogen)
42	Radiator fan
43	Windscreen wiper
44	Windscreen wiper
45	Radiator fan
46	–
47	Horn
48	Radiator fan

No.	Circuit
49	Fuel pump
50	Headlamp levelling/Adaptive forward lighting
51	Air shutter
52	Auxiliary heater/Diesel engine
53	Transmission control module/ Engine control module
54	Vacuum pump/Instrument panel cluster/Heating ventilation/Air conditioning system

After having changed defective fuses, close the fuse box cover and press until it engages.

If the fuse box cover is not closed correctly, malfunctions may occur.

Instrument panel fuse box

In left-hand drive vehicles, the fuse box is behind the storage compartment in the instrument panel.

Open the compartment and push it to the left to unlock. Fold the compartment down and remove it.

In right-hand drive vehicles, the fuse box is located behind a cover in the glovebox. Open the glovebox, then open the cover and fold it down.

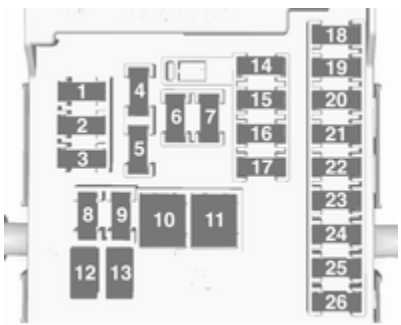

No.	Circuit
1	Cruise control/Speed limiter/ Adaptive cruise control/Steering wheel controls
2	Exterior lights/Body control module
3	Exterior lights/Body control module
4	Infotainment system
5	Infotainment system/Instrument
6	Power outlet/Cigarette lighter
7	Power outlet
8	Left low beam/Body control module
9	Right low beam/Body control module/Airbag module
10	Door locks/Body control module
11	Interior fan
12	–
13	–
14	Diagnostic connector

No.	Circuit
15	Airbag
16	Power outlet
17	Air conditioning system
18	Logistics
19	Body control module
20	Body control module
21	Instrument panel cluster/Anti-theft alarm system
22	Ignition sensor
23	Body control module
24	Body control module
25	–
26	–

Load compartment fuse box

The fuse box is on the left side of the load compartment behind a cover.

Remove the cover.

If equipped with tyre repair kit, remove the complete box.

Fuse assignments

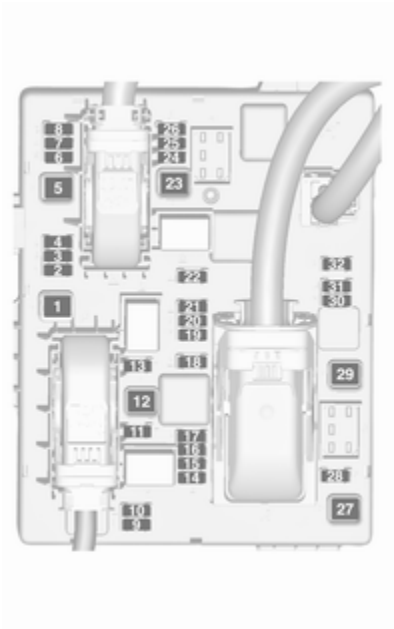

No.	Circuit
1	–
2	Trailer outlet
3	Parking assist
4	Selective catalytic reduction system
5	–
6	–
7	Power seat
8	–
9	Selective catalytic reduction system
10	Nitrogen oxide sensor
11	Trailer module/Trailer socket
12	Trailer module
13	Trailer outlet
14	–
15	–

No.	Circuit
16	Interior mirror/Rear view camera
17	Power outlet
18	–
19	Steering wheel heating
20	Sunblind
21	Heated front seats
22	–
23	–
24	Selective catalytic reduction system
25	–
26	–
27	–
28	–
29	–
30	–

No.	Circuit
31	–
32	Active damping system/Lane departure warning

Vehicle tools

Tools

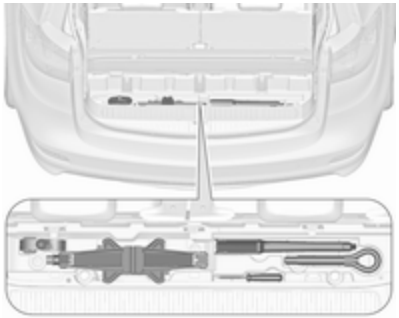

Some tools, the towing eye and (only on vehicles with spare wheel) the vehicle jacking equipment are placed in the rear storage in the load compartment floor.

Open the cover in front of the tailgate.

Wheels and tyres

Tyre condition, wheel condition

Drive over edges slowly and at right angles if possible. Driving over sharp edges can cause tyre and wheel damage. Do not trap tyres on the kerb when parking.

Regularly check the wheels for damage. Seek the assistance of a workshop in the event of damage or unusual wear.

Winter tyres

Winter tyres improve driving safety at temperatures below 7 °C and should therefore be fitted on all wheels.

In accordance with country-specific regulations, affix the speed sticker in the driver's field of view.

Tyre designations

E.g. **215/60 R 16 95 H**

215 : tyre width, mm
60 : cross-section ratio (tyre height to tyre width), %
R : belt type: Radial
RF : type: RunFlat
16 : wheel diameter, inches
95 : load index e.g. 95 is equivalent to 690 kg
H : speed code letter

Speed code letter:

Q : up to 160 km/h
S : up to 180 km/h
T : up to 190 km/h
H : up to 210 km/h
V : up to 240 km/h
W : up to 270 km/h

Choose a tyre appropriate for the maximum speed of your vehicle.

The maximum speed is achievable at kerb weight with driver (75 kg) plus 125 kg payload. Optional equipment could reduce the maximum speed of the vehicle.

Performance ⇨ 281.

Directional tyres

Fit directional tyres such that they roll in the direction of travel. The rolling direction is indicated by a symbol (e.g. an arrow) on the sidewall.

Tyre pressure

Check the pressure of cold tyres at least every 14 days and before any long journey. Do not forget the spare wheel. This also applies to vehicles with tyre pressure monitoring system.

Unscrew the valve cap.

Tyre pressure ⇨ 288.

The tyre pressure information label on the front left or right door frame indicates the original equipment tyres and the correspondent tyre pressures.

The tyre pressure data refers to cold tyres. It applies to summer and winter tyres.

Always inflate the spare tyre to the pressure specified for full load.

The ECO tyre pressure serves to achieve the smallest amount of fuel consumption possible.

Incorrect tyre pressures will impair safety, vehicle handling, comfort and fuel economy and will increase tyre wear.

Tyre pressures differ depending on various options. For the correct tyre pressure value, follow the procedure below:

1. Identify the engine identifier code. Engine data ⇨ 277.
2. Identify the respective tyre.

The tyre pressure tables show all possible tyre combinations ⇨ 288.

For the tyres approved for your vehicle, refer to the EEC Certificate of Conformity provided with your vehicle or other national registration documents.

The driver is responsible for correct adjustment of tyre pressure.

⚠ Warning

If the pressure is too low, this can result in considerable tyre warm-up and internal damage, leading to tread separation and even to tyre blow-out at high speeds.

⚠ Warning

For specific tyres the recommended tyre pressure as shown in the tyre pressure table may exceed the maximum tyre pressure as indicated on the tyre. Never exceed the maximum tyre pressure as indicated on the tyre.

If the tyre pressure must be reduced or increased on a vehicle with tyre pressure monitoring system, switch off ignition. After adjusting tyre pressure, switch on ignition and select the appropriate setting on the page **Tyre load** in the Driver Information Centre, ⇨ 116.

Temperature dependency

The tyre pressure depends on the temperature of the tyre. During driving, tyre temperature and pressure increase. Tyre pressure values provided on the tyre information label and tyre pressure chart are valid for cold tyres, which means at 20 °C.

The pressure increases by nearly 10 kPa for a 10 °C temperature increase. This must be considered when warm tyres are checked.

The tyre pressure value displayed in the Driver Information Centre shows the real tyre pressure. A cooled down tyre will show a decreased value, which does not indicate an air leak.

Tyre pressure monitoring system

The tyre pressure monitoring system (TPMS) checks the pressure of all four tyres once a minute when vehicle speed exceeds a certain limit.

Caution

Tyre pressure monitoring system warns only about low tyre pressure condition and does not replace regular tyre maintenance by the driver.

All wheels must be equipped with pressure sensors and the tyres must have the prescribed pressure.

Note
In countries where the tyre pressure monitoring system is legally required, the use of wheels without pressure sensors will invalidate the vehicle type approval.

The current tyre pressures can be shown in the **Vehicle Information Menu** in the Driver Information Centre.

The menu can be selected by the buttons on the turn signal lever.

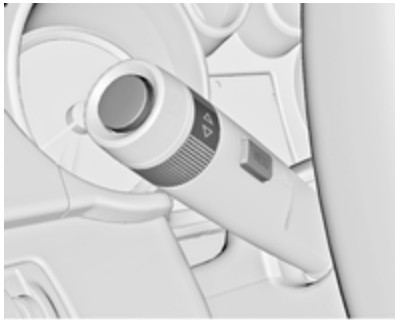

Press **MENU** to select the **Vehicle Information Menu** 🚗.

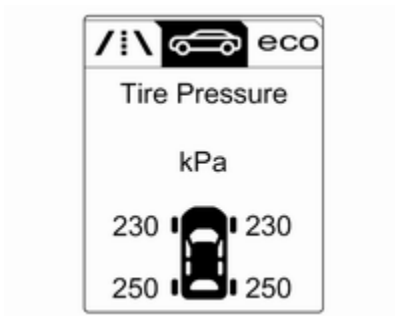

Turn the adjuster wheel to select the tyre pressure monitoring system.

System status and pressure warnings are displayed by a message with the corresponding tyre flashing in the Driver Information Centre.

The system considers the tyre temperature for the warnings.

A detected low tyre pressure condition is indicated by control indicator (!) ⇨ 114.

If (!) illuminates, stop as soon as possible and inflate the tyres as recommended ⇨ 288.

If (!) flashes for 60-90 seconds and then illuminates continuously, there is a fault in the system. Consult a workshop.

After inflating, some driving may be required to update the tyre pressure values in the Driver Information Centre. During this time (!) may illuminate.

If (!) illuminates at lower temperatures and extinguishes after some driving, this could be an indicator for approaching a low tyre pressure condition. Check tyre pressure.

Vehicle messages ⇨ 122.

If the tyre pressure must be reduced or increased, switch off ignition.

Only mount wheels with pressure sensors, otherwise the tyre pressure will not be displayed and (!) illuminates continuously.

A temporary spare wheel is not equipped with pressure sensors. The tyre pressure monitoring system is not operational for these wheels. Control indicator (!) illuminates. For the further three wheels the system remains operational.

The use of commercially available liquid tyre repair kits can impair the function of the system. Factory-approved repair kits can be used.

Operating electronic devices or being close to facilities using similar wave frequencies could disrupt the tyre pressure monitoring system.

Each time the tyres are replaced, tyre pressure monitoring system sensors must be dismounted and serviced. For the screwed sensor: replace valve core and sealing ring. For clipped sensor: replace complete valve stem.

Vehicle loading status

Adjust tyre pressure to load condition according to the tyre information label or tyre pressure chart ⇨ 288, and select the appropriate setting in the **Tyre load** menu in the Driver Information Centre ⇨ 116. This setting is the reference for the tyre pressure warnings.

The menu **Tyre Load** only appears if the vehicle is at a standstill and the parking brake is applied. On vehicles with automatic transmission the selector lever must be in position **P**.

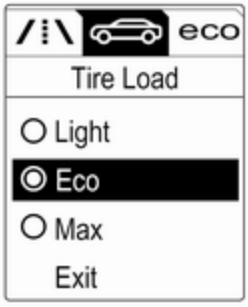

Select:

- **Light** for comfort pressure up to 3 people.
- **Eco** for Eco pressure up to 3 people.
- **Max** for full load.

Tyre pressure sensor matching process

Each tyre pressure sensor has a unique identification code. The identification code must be matched to a new wheel position after rotating the wheels or exchanging the complete wheel set and if one or more tyre pressure sensors were replaced.

The tyre pressure sensor matching process should also be performed after replacing a spare wheel with a road wheel containing the tyre pressure sensor.

The malfunction light (!) and the warning message or code should go off at the next ignition cycle. The sensors are matched to the wheel positions, using a relearn tool, in the following order: left side front wheel, right side front wheel, right side rear wheel and left side rear wheel. The turn signal light at the current active position is illuminated until sensor is matched.

Consult your workshop for service or to purchase a relearn tool. There are two minutes to match the first wheel position, and five minutes overall to match all four wheel positions. If it takes longer, the matching process stops and must be restarted.

The tyre pressure sensor matching process is:

1. Apply the parking brake.
2. Turn the ignition on.
3. On vehicles with automatic transmission: set the selector lever to **P**.

   On vehicles with manual transmission: select neutral.
4. Press **MENU** on the turn signal lever to select the **Vehicle Information Menu** in the Driver Information Centre.
5. Turn the adjuster wheel to scroll to the tyre pressure menu.
6. Press **SET/CLR** to begin the sensor matching process. A message requesting acceptance of the process should be displayed.
7. Press **SET/CLR** again to confirm the selection. The horn sounds twice to indicate the receiver is in relearn mode.
8. Start with the left side front wheel.
9. Place the relearn tool against the tyre sidewall, near the valve stem. Then press the button to activate the tyre pressure sensor. A horn chirp confirms that the sensor identification code has been matched to this wheel position.
10. Proceed to the right side front wheel, and repeat the procedure in Step 9.
11. Proceed to the right side rear wheel, and repeat the procedure in Step 9.
12. Proceed to the left side rear wheel, and repeat the procedure in Step 9. The horn sounds twice to indicate the sensor identification code has been matched to the left side rear tyre, and the tyre pressure sensor matching process is no longer active.
13. Turn off the ignition.
14. Set all four tyres to the recommended air pressure level as indicated on the tyre pressure label.
15. Ensure the tyre loading status is set according to the selected pressure ⇨ 116.

Tread depth

Check tread depth at regular intervals.

Tyres should be replaced for safety reasons at a tread depth of 2-3 mm (4 mm for winter tyres).

For safety reasons, it is recommended that the tread depth of the tyres on one axle should not vary by more than 2 mm.

The legally permissible minimum tread depth (1.6 mm) has been reached when the tread has worn down as far as one of the tread wear indicators (TWI). Their position is indicated by markings on the sidewall.

If there is more wear at the front than the rear, swap round front wheels and rear wheels periodically. Ensure that the direction of rotation of the wheels remains the same.

Tyres age, even if they are not used. We recommend tyre replacement every 6 years.

Changing tyre and wheel size

If tyres of a different size than those fitted at the factory are used, it may be necessary to reprogramme the speedometer as well as the nominal tyre pressure and make other vehicle modifications.

After converting to a different tyre size, have the label with tyre pressures replaced.

⚠ Warning

Use of unsuitable tyres or wheels may lead to accidents and will invalidate the vehicle type approval.

Wheel covers

Wheel covers and tyres that are factory approved for the respective vehicle and comply with all of the relevant wheel and tyre combination requirements must be used.

If the wheel covers and tyres used are not factory approved, the tyres must not have a rim protection ridge.

Wheel covers must not impair brake cooling.

⚠ Warning

Use of unsuitable tyres or wheel covers could lead to sudden pressure loss and thereby accidents.

Vehicles with steel wheels: When using locking wheel nuts, do not attach wheel covers.

Tyre chains

Tyre chains are only permitted on the front wheels.

Always use fine mesh chains that add no more than 10 mm to the tyre tread and the inboard sides (including chain lock).

⚠ Warning
Damage may lead to tyre blowout.

Tyre chains are only permitted on tyres of size 215/60 R16 and 225/50 R17.

The use of tyre chains is not permitted on the temporary spare wheel.

Tyre repair kit

Minor damage to the tyre tread can be repaired with the tyre repair kit.

Do not remove foreign bodies from the tyres.

Tyre damage exceeding 4 mm or that is at the tyre's sidewall cannot be repaired with the tyre repair kit.

⚠ Warning
Do not drive faster than 80 km/h. Do not use for a lengthy period. Steering and handling may be affected.

If you have a flat tyre:

Apply the parking brake and engage first gear, reverse gear or **P**.

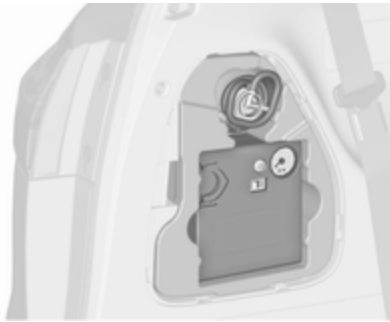

The tyre repair kit is on the left side in the load compartment behind a cover.

1. Take the tyre repair kit from the compartment.
2. Remove the compressor.

3. Remove the electrical connection cable and air hose from the stowage compartments on the underside of the compressor.

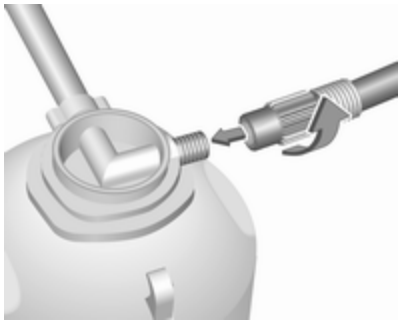

4. Screw the compressor air hose to the connection on the sealant bottle.
5. Fit the sealant bottle into the retainer on the compressor.

   Set the compressor near the tyre in such a way that the sealant bottle is upright.

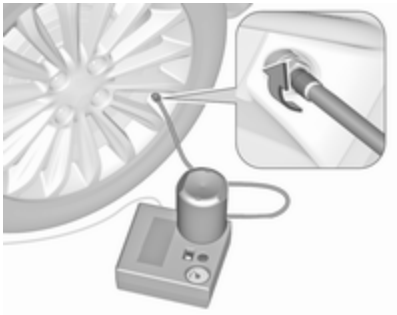

6. Unscrew valve cap from defective tyre.
7. Screw the filler hose to the tyre valve.
8. The switch on the compressor must be set to O.
9. Connect the compressor plug to the power outlet or cigarette lighter socket.

   To avoid discharging the battery, we recommend running the engine.

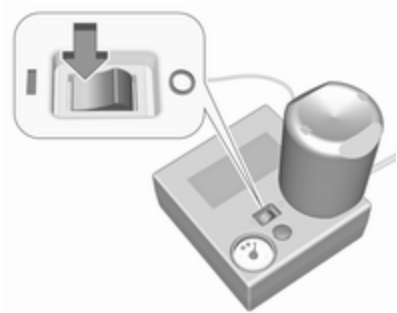

10. Set the rocker switch on the compressor to I. The tyre is filled with sealant.
11. The compressor pressure gauge briefly indicates up to six bar whilst the sealant bottle is emptying (approx. 30 seconds). Then the pressure starts to drop.
12. All of the sealant is pumped into the tyre. Then the tyre is inflated.
13. The prescribed tyre pressure should be obtained within ten minutes. Tyre pressure ⇨ 288. When the correct pressure is obtained, switch off the compressor.

If the prescribed tyre pressure is not obtained within ten minutes, remove the tyre repair kit. Move the vehicle one tyre rotation. Reattach the tyre repair kit and continue the filling procedure for ten minutes. If the prescribed tyre pressure is still not obtained, the tyre is too badly damaged. Seek the assistance of a workshop.

Drain excess tyre pressure with the button over the pressure indicator.

Do not run the compressor longer than ten minutes.

14. Detach the tyre repair kit. Push catch on bracket to remove sealant bottle from bracket. Screw the tyre inflation hose to the free connection of the sealant bottle. This prevents sealant from escaping. Stow tyre repair kit in load compartment.
15. Remove any excess sealant using a cloth.
16. Take the label indicating maximum permitted speed from the sealant bottle and affix in the driver's field of view.
17. Continue driving immediately so that sealant is evenly distributed in the tyre. After driving approx. 10 km (but no more than ten minutes), stop and check tyre pressure. Screw compressor air hose directly onto tyre valve and compressor when doing this.

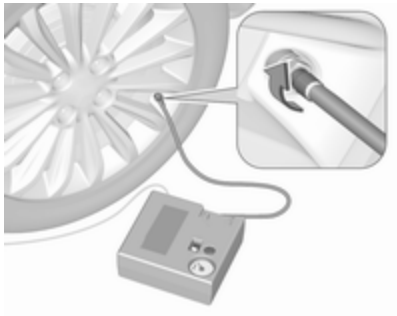

If tyre pressure is more than 1.3 bar, set it to the correct value. Repeat the procedure until there is no more loss of pressure.

If the tyre pressure has fallen below 1.3 bar, the vehicle must not be used. Seek the assistance of a workshop.

18. Stow away tyre repair kit in load compartment.

Note
The driving characteristics of the repaired tyre are severely affected, therefore have this tyre replaced.

If unusual noise is heard or the compressor becomes hot, turn compressor off for at least 30 minutes.

The built-in safety valve opens at a pressure of seven bar.

Note the expiry date of the kit. After this date its sealing capability is no longer guaranteed. Pay attention to storage information on sealant bottle.

Replace the used sealant bottle. Dispose of the bottle as prescribed by applicable laws.

The compressor and sealant can be used from approx. -30 °C.

The adapters supplied can be used to pump up other items e.g. footballs, air mattresses, inflatable dinghies etc. They are located on the underside of the compressor. To remove, screw on compressor air hose and withdraw adapter.

Wheel changing

Some vehicles are equipped with a tyre repair kit instead of a spare wheel ⇨ 253.

Make the following preparations and observe the following information:

- Park the vehicle on a level, firm and non-skid surface. The front wheels must be in the straight-ahead position.
- Apply the parking brake and engage first gear, reverse gear or **P**.
- Remove the spare wheel ⇨ 258.
- Never change more than one wheel at once.
- Use the jack only to change wheels in case of puncture, not for seasonal winter or summer tyre change.
- The jack is maintenance-free.
- If the ground on which the vehicle is standing is soft, a solid board (max. 1 cm thick) should be placed under the jack.
- Take heavy objects out of the vehicle before jacking up.
- No people or animals may be in the vehicle when it is jacked-up.
- Never crawl under a jacked-up vehicle.
- Do not start the vehicle when it is raised on the jack.
- Clean wheel nuts and thread with a clean cloth before mounting the wheel.

⚠ Warning

Do not grease wheel bolt, wheel nut and wheel nut cone.

1. Disengage wheel nut caps with a screwdriver and remove. Pull off the wheel cover. Vehicle tools ⇨ 246.

   Alloy wheels: Disengage wheel nut caps with a screwdriver and remove. To protect the wheel, place a soft cloth between the screwdriver and the alloy wheel.

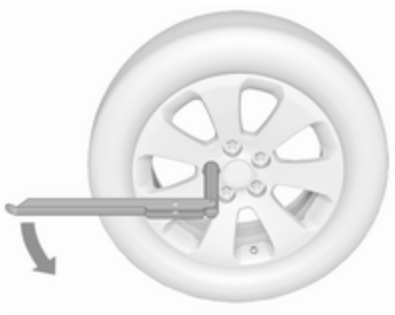

2. Fold out the wheel wrench and install ensuring that it locates securely and loosen each wheel nut by half a turn.

   The wheels might be protected by locking wheel nuts. To loosen these specific nuts first attach the adapter onto the head of the nut before installing the wheel wrench. The adapter is located in the glovebox.

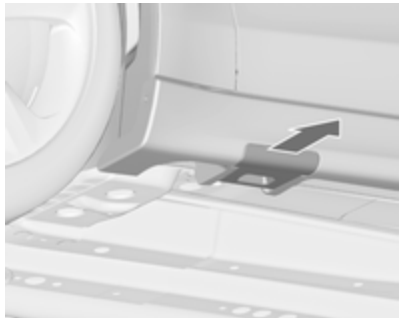

3. Some versions may have covered the vehicle jacking point. Pull out the cover sideways.

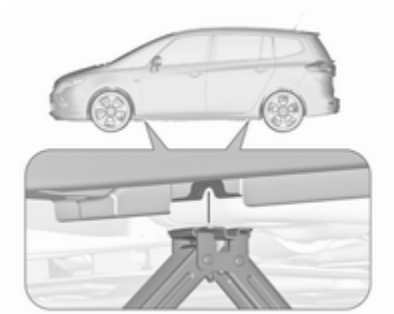

4. Ensure the jack is correctly positioned under the relevant vehicle jacking point.

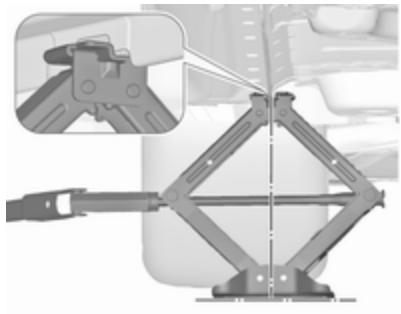

5. Set the jack to the necessary height. Position it directly below the jacking point in a manner that prevents it from slipping.

Attach wheel wrench and with the jack correctly aligned rotate wheel wrench until wheel is clear of the ground.

6. Unscrew the wheel nuts.
7. Change the wheel. Spare wheel ⇨ 258
8. Screw on the wheel nuts.
9. Lower vehicle.
10. Install the wheel wrench ensuring that it locates securely and tighten each nut in a crosswise sequence. Tightening torque is 140 Nm.
11. Align the valve hole in the wheel cover with the tyre valve before installing.

    Install wheel nut caps.
12. Install vehicle jacking point cover.
13. Stow the replaced wheel ⇨ 258, the vehicle tools ⇨ 246 and the adapter for the locking wheel nuts ⇨ 66.
14. Check the tyre pressure of the installed tyre and the wheel nut torque as soon as possible.

Have the defective tyre renewed or repaired as soon as possible.

Jacking position for lifting platform

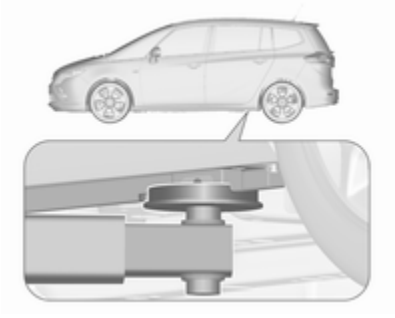

Rear arm position of the lifting platform centrically under the recess of the sill.

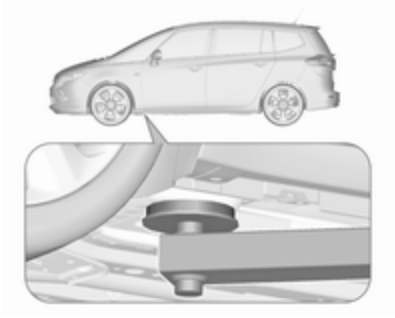

Front arm position of the lifting platform at the underbody.

Spare wheel

Some vehicles are equipped with a tyre repair kit instead of a spare wheel ⇨ 253.

If mounting a spare wheel which is different from the other wheels, this wheel might be classified as a temporary spare wheel and the corresponding speed limits apply,

even though no label indicates this. Seek the assistance of a workshop to check the applicable speed limit.

The spare wheel has a steel rim.

Caution
The use of a spare wheel that is smaller than the other wheels or in combination with winter tyres could affect driveability. Have the defective tyre replaced as soon as possible.

The spare wheel is located in a holder beneath the vehicle floor.

1. Open the storage in the load compartment ⇨ 246.
2. Remove both caps above the hexagon bolts.

3. Fit the wheel wrench on one hexagon bolt and turn it anticlockwise until a resistance is noticeable.
4. Proceed with the other hexagon bolt in the same way.

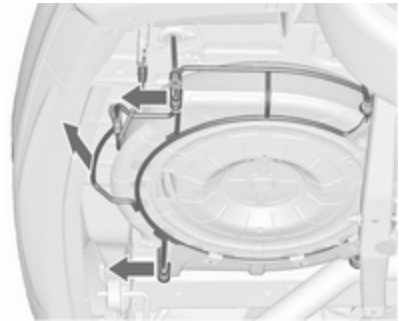

5. Lift the spare wheel holder and unhook both catches.
6. Lower the spare wheel holder.

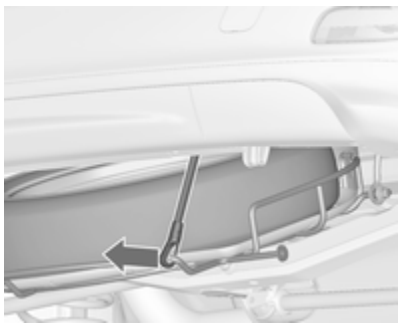

7. Detach the safety cable.

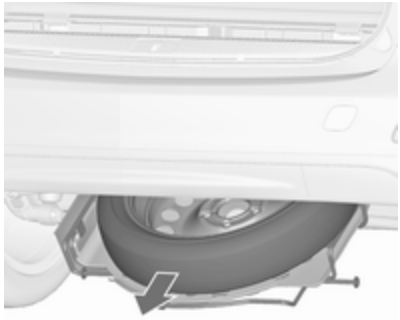

8. Lower holder all the way and remove spare wheel.
9. Change the wheel.

   The damaged wheel must be secured in the load compartment, see below.
10. Lift the empty spare wheel holder and insert the safety cable.
11. Lift the spare wheel holder further and engage in both catches. The open sides of the catches must point in the direction of travel.
12. Close the empty spare wheel holder by turning both hexagon bolts clockwise using the wheel wrench.
13. Fit the caps above both hexagon bolts.
14. Stow wheel wrench and the jack in the storage in front of the tailgate.
15. Close the storage compartment cover.

When stowing the spare wheel in the spare wheel holder, note that the wheel is positioned with the tyre valve above the recess of the wheel holder.

Stowing a damaged wheel in the load compartment

The spare wheel holder is not designed for other tyre sizes than the spare wheel.

A damaged wheel wider than the spare wheel must be stowed in the load compartment and secured with a strap. Vehicle tools ⇨ 246.

The seats of the third row must be folded down ⇨ 79.

1. Position the wheel close to the left sidewall of the load compartment.

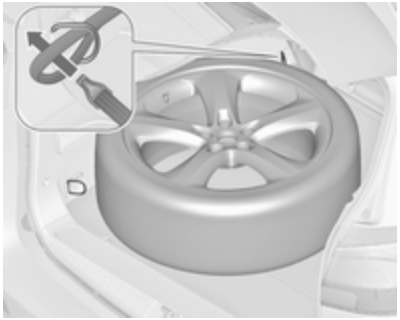

2. Place the loop end of the strap through the front lashing eye on the left side.
3. Place the hook end of the strap through the loop and pull it until the strap is fastened securely to the lashing eye.

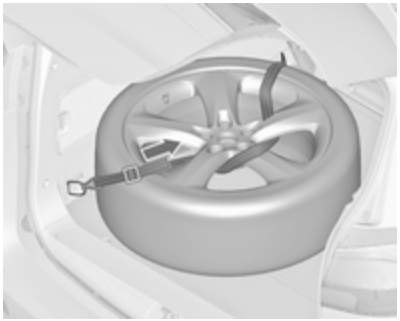

4. Insert the strap through the spokes of the wheel as shown in the illustration.
5. Mount the hook to the rear left lashing eye.
6. Tighten the strap and secure it using the buckle.

⚠ Danger

Always drive with folded up and engaged rear seat backrests when stowing a damaged full size wheel in the load compartment.

⚠ Warning

Storing a jack, a wheel or other equipment in the load compartment could cause injury if they are not fixed properly. During a sudden stop or a collision, loose equipment could strike someone.

Always store jack and tools in the respective storage compartments and secure them by fixing.

Damaged wheel placed in the load compartment must always be secured with the strap.

Temporary spare wheel

The use of the temporary spare wheel could affect driveability. Have the defective tyre renewed or repaired as soon as possible and fit it instead of the spare wheel.

Only mount one temporary spare wheel. Do not drive faster than 80 km/h. Take curves slowly. Do not use for a long period of time.

If your vehicle gets a flat tyre on the rear while towing another vehicle, mount the temporary spare wheel at the front and the full tyre at the rear.

Tyre chains ⇨ 253.

Spare wheel with directional tyre

Fit directional tyres such that they roll in the direction of travel. The rolling direction is indicated by a symbol (e.g. an arrow) on the sidewall.

The following applies to tyres fitted opposing the rolling direction:

- Driveability may be affected. Have the defective tyre renewed or repaired as soon as possible.
- Drive particularly carefully on wet and snow-covered road surfaces.

Jump starting

Do not start with quick charger.

A vehicle with a discharged battery can be started using jump leads and the battery of another vehicle.

⚠Warning

Be extremely careful when starting with jump leads. Any deviation from the following instructions can lead to injuries or damage caused by battery explosion or damage to the electrical systems of both vehicles.

⚠Warning

Avoid contact of the battery with eyes, skin, fabrics and painted surfaces. The fluid contains sulphuric acid which can cause injuries and damage in the event of direct contact.

- Never expose the battery to naked flames or sparks.
- A discharged battery can already freeze at a temperature of 0 °C. Defrost the frozen battery before connecting jump leads.
- Wear eye protection and protective clothing when handling a battery.
- Use a booster battery with the same voltage (12 Volts). Its capacity (Ah) must not be much less than that of the discharged battery.
- Use jump leads with insulated terminals and a cross section of at least 16 mm^2 (25 mm^2 for diesel engines).
- Do not disconnect the discharged battery from the vehicle.
- Switch off all unnecessary electrical consumers.
- Do not lean over the battery during jump starting.
- Do not allow the terminals of one lead to touch those of the other lead.
- The vehicles must not come into contact with each other during the jump starting process.
- Apply the parking brake, transmission in neutral, automatic transmission in **P**.
- Open the positive terminal protection caps of both batteries.

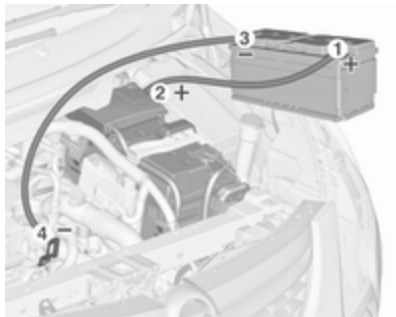

Lead connection order:

1. Connect the red lead to the positive terminal of the booster battery.
2. Connect the other end of the red lead to the positive terminal of the discharged battery.

3. Connect the black lead to the negative terminal of the booster battery.
4. Connect the other end of the black lead to a vehicle grounding point, such as the engine block or an engine mounting bolt. Connect as far away from the discharged battery as possible, however at least 60 cm.

Route the leads so that they cannot catch on rotating parts in the engine compartment.

To start the engine:

1. Start the engine of the vehicle providing the jump.
2. After five minutes, start the other engine. Start attempts should be made for no longer than 15 seconds at an interval of one minute.
3. Allow both engines to idle for approx. three minutes with the leads connected.
4. Switch on electrical consumers (e.g. headlights, heated rear window) of the vehicle receiving the jump start.
5. Reverse above sequence exactly when removing leads.

Towing

Towing the vehicle

Insert a screwdriver in the slot at the short edge of the cap. Release the cap by carefully moving the screwdriver sidewards. To prevent damage it is recommended to place a cloth between the screwdriver and the frame.

The towing eye is stowed with the vehicle tools ⇨ 246.

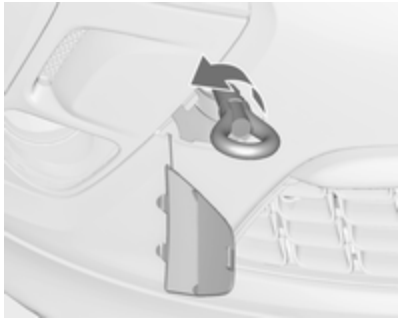

Screw in the towing eye as far as it will go until it stops in a horizontal position.

Attach a tow rope – or better still a tow rod – to the towing eye.

The towing eye must only be used for towing and not for recovering the vehicle.

Switch on ignition to release steering wheel lock and to permit operation of brake lights, horn and windscreen wiper.

Transmission in neutral.

Caution

Drive slowly. Do not drive jerkily. Excessive tractive force can damage the vehicle.

When the engine is not running, considerably more force is needed to brake and steer.

To prevent the entry of exhaust gases from the towing vehicle, switch on the air recirculation and close the windows.

Vehicles with automatic transmission: The vehicle must be towed facing forwards, not faster than 80 km/h nor further than 100 km. In all other cases and when the transmission is defective, the front axle must be raised off the ground.

Seek the assistance of a workshop.

After towing, unscrew the towing eye.

Insert cap at the bottom and close.

Towing another vehicle

Insert a screwdriver in the slot at the lower edge of the cap. Release the cap by carefully moving the screwdriver downwards. To prevent damage it is recommended to place a cloth between the screwdriver and the frame.

The towing eye is stowed with the vehicle tools ⇨ 246.

Screw in the towing eye as far as it will go until it stops in a horizontal position.

The lashing eye at the rear underneath the vehicle must never be used as a towing eye.

Attach a tow rope – or even better a tow bar – to the towing eye.

The towing eye must only be used for towing and not for recovering a vehicle.

Caution

Drive slowly. Do not drive jerkily. Excessive tractive force can damage the vehicle.

After towing, unscrew the towing eye.

Insert cap at the bottom and engage.

Appearance care

Exterior care

Locks

The locks are lubricated at the factory using a high quality lock cylinder grease. Use de-icing agent only when absolutely necessary, as this has a degreasing effect and impairs lock function. After using a de-icing agent, have the locks regreased by a workshop.

Washing

The paintwork of your vehicle is exposed to environmental influences. Wash and wax your vehicle regularly. When using automatic vehicle washes, select a programme that includes waxing.

Bird droppings, dead insects, resin, pollen and the like should be cleaned off immediately, as they contain aggressive constituents which can cause paint damage.

If using a vehicle wash, comply with the vehicle wash manufacturer's instructions. The windscreen wiper and rear window wiper must be switched off. Remove antenna and external accessories such as roof racks etc.

If you wash your vehicle by hand, make sure that the insides of the wheel housings are also thoroughly rinsed out.

Clean edges and folds on opened doors and the bonnet as well as the areas they cover.

Clean bright metal mouldings with a cleaning solution approved for aluminium to avoid damages.

Caution
Always use a cleaning agent with a pH value of four to nine. Do not use cleaning agents on hot surfaces.

Have the door hinges of all doors greased by a workshop.

Do not clean the engine compartment with a steam-jet or high-pressure jet cleaner.

Thoroughly rinse and leather-off the vehicle. Rinse leather frequently. Use separate leathers for painted and glass surfaces: remnants of wax on the windows will impair vision.

Do not use hard objects to remove spots of tar. Use tar removal spray on painted surfaces.

Exterior lights

Headlight and other light covers are made of plastic. Do not use any abrasive or caustic agents, do not use an ice scraper, and do not clean them dry.

Polishing and waxing

Wax the vehicle regularly (at the latest when water no longer beads). Otherwise, the paintwork will dry out.

Polishing is necessary only if the paint has become dull or if solid deposits have become attached to it.

Paintwork polish with silicone forms a protective film, making waxing unnecessary.

Plastic body parts must not be treated with wax or polishing agents.

Windows and windscreen wiper blades

Use a soft lint-free cloth or chamois leather together with window cleaner and insect remover.

When cleaning the rear window from inside, always wipe in parallel to the heating element to prevent damage.

For mechanical removal of ice, use a sharp-edged ice scraper. Press the scraper firmly against the glass so that no dirt can get under it and scratch the glass.

Remove dirt residues from smearing wiper blades by using a soft cloth and window cleaner. Also make sure to remove any residues such as wax, insect residues and similar from the window.

Ice residues, pollution and continuous wiping on dry windows will damage or even destroy the wiper blades.

Glass panel

Never clean with solvents or abrasive agents, fuels, aggressive media (e.g. paint cleaner, acetone-containing solutions etc.), acidic or highly alkaline media or abrasive pads.

Wheels and tyres

Do not use high-pressure jet cleaners.

Clean rims with a pH-neutral wheel cleaner.

Rims are painted and can be treated with the same agents as the body.

Paintwork damage

Rectify minor paintwork damage with a touch-up pen before rust forms. Have more extensive damage or rust areas repaired by a workshop.

Underbody

Some areas of the vehicle underbody have a PVC undercoating while other critical areas have a durable protective wax coating.

After the underbody is washed, check the underbody and have it waxed if necessary.

Bitumen/rubber materials could damage the PVC coating. Have underbody work carried out by a workshop.

Before and after winter, wash the underbody and have the protective wax coating checked.

Liquid gas system

⚠ Danger

Liquid gas is heavier than air and can collect in sink points.

Take care when performing work at the underbody in a pit.

For painting work and when using a drying booth at a temperature above 60 °C, the liquid gas tank must be removed.

Do not make any modifications to the liquid gas system.

Towing equipment

Do not clean the coupling ball bar with a steam-jet or high-pressure jet cleaner.

Rear carrier system

Clean the rear carrier system with a steam-jet or high-pressure jet cleaner at least once a year.

Operate the rear carrier system periodically if not in regular use, in particular during winter.

Air shutter

Clean the shutter system in the front bumper to maintain correct functionality.

Interior care

Interior and upholstery

Only clean the vehicle interior, including the instrument panel fascia and panelling, with a dry cloth or interior cleaner.

Clean the leather upholstery with clear water and a soft cloth. In case of heavy soiling, use leather care.

The instrument cluster and the displays should only be cleaned using a soft damp cloth. If necessary use a weak soap solution.

Clean fabric upholstery with a vacuum cleaner and brush. Remove stains with an upholstery cleaner.

Clothing fabrics may not be colourfast. This could cause visible discolourations, especially on light-coloured upholstery. Removable stains and discolourations should be cleaned as soon as possible.

Clean seat belts with lukewarm water or interior cleaner.

Caution

Close Velcro fasteners as open Velcro fasteners on clothing could damage seat upholstery.

The same applies to clothing with sharp-edged objects, like zips or belts or studded jeans.

Plastic and rubber parts

Plastic and rubber parts can be cleaned with the same cleaner as used to clean the body. Use interior cleaner if necessary. Do not use any other agent. Avoid solvents and petrol in particular. Do not use high-pressure jet cleaners.

Service and maintenance

General information **269**
Service information 269
Recommended fluids, lubricants and parts **270**
Recommended fluids and lubricants 270

General information

Service information

In order to ensure economical and safe vehicle operation and to maintain the value of your vehicle, it is of vital importance that all maintenance work is carried out at the proper intervals as specified.

The detailed, up-to-date service schedule for your vehicle is available at the workshop.

Service display ⇨ 106.

European service intervals

Maintenance of your vehicle is required every 30,000 km or after 1 year, whichever occurs first, unless otherwise indicated in the service display.

A shorter service interval can be valid for severe driving behaviour, e.g. for taxis and police vehicles.

The European service intervals are valid for the following countries: Andorra, Austria, Belgium, Bosnia-Herzegovina, Bulgaria, Croatia, Cyprus, Czech Republic, Denmark, Estonia, Finland, France, Germany, Greece, Greenland, Hungary, Iceland, Ireland, Italy, Latvia, Liechtenstein, Lithuania, Luxembourg, Macedonia, Malta, Monaco, Montenegro, Netherlands, Norway, Poland, Portugal, Romania, San Marino, Serbia, Slovakia, Slovenia, Spain, Sweden, Switzerland, United Kingdom.

Service display ⇨ 106.

International service intervals

Maintenance of your vehicle is required every 15,000 km or after 1 year, whichever occurs first, unless otherwise indicated in the service display.

The international service intervals are valid for the countries which are not listed in the European service intervals.

Service display ⇨ 106.

Confirmations

Confirmation of service is recorded in the Service and Warranty Booklet. The date and mileage is completed with the stamp and signature of the servicing workshop.

Make sure that the Service and Warranty Booklet is completed correctly as continuous proof of service is essential if any warranty or goodwill claims are to be met, and is also a benefit when selling the vehicle.

Service interval with remaining engine oil life duration

The service interval is based on several parameters depending on usage.

The service display lets you know when to change the engine oil.

Service display ⇨ 106.

Recommended fluids, lubricants and parts

Recommended fluids and lubricants

Only use products that meet the recommended specifications.

⚠ Warning

Operating materials are hazardous and could be poisonous. Handle with care. Pay attention to information given on the containers.

Engine oil

Engine oil is identified by its quality and its viscosity. Quality is more important than viscosity when selecting which engine oil to use. The oil quality ensures e.g. engine cleanliness, wear protection and oil ageing control, whereas viscosity grade gives information on the oil's thickness over a temperature range.

Dexos is the newest engine oil quality that provides optimum protection for gasoline and diesel engines. If it is unavailable, engine oils of other listed qualities have to be used. Recommendations for gasoline engines are also valid for Compressed Natural Gas (CNG), Liquified Petroleum Gas (LPG) and Ethanol (E85) fuelled engines.

Select the appropriate engine oil based on its quality and on the minimum ambient temperature ⇨ 274.

Topping up engine oil

Engine oils of different manufacturers and brands can be mixed as long as they comply with the required engine oil quality and viscosity.

Use of engine oil with only ACEA A1/B1 or only A5/B5 quality is prohibited, since it can cause long-term engine damage under certain operating conditions.

Select the appropriate engine oil based on its quality and on the minimum ambient temperature ⇨ 274.

Additional engine oil additives

The use of additional engine oil additives could cause damage and invalidate the warranty.

Engine oil viscosity grades

The SAE viscosity grade gives information of the thickness of the oil.

Multigrade oil is indicated by two figures, e.g. SAE 5W-30. The first figure, followed by a W, indicates the low temperature viscosity and the second figure the high temperature viscosity.

Select the appropriate viscosity grade depending on the minimum ambient temperature ⇨ 274.

All of the recommended viscosity grades are suitable for high ambient temperatures.

Coolant and antifreeze

Use only organic acid type-long life coolant (LLC) antifreeze approved for the vehicle. Consult a workshop.

The system is factory filled with coolant designed for excellent corrosion protection and frost protection down to approx. -28 °C. In northern countries with very low temperatures the factory filled coolant provides frost protection down to approx. -37 °C. This concentration should be maintained all year round. The use of additional coolant additives that intend to give additional corrosion protection or seal against minor leaks can cause function problems. Liability for consequences resulting from the use of additional coolant additives will be rejected.

Brake and clutch fluid

Over time, brake fluid absorbs moisture which will reduce braking effectiveness. The brake fluid should therefore be replaced at the specified interval.

AdBlue

Only use AdBlue to reduce the nitrogen oxides in the exhaust emission ⇨ 166.

Technical data

Vehicle identification **272**
Vehicle Identification Number .. 272
Identification plate 272
Engine identification 273
Vehicle data **274**
Recommended fluids and lubricants 274
Engine data 277
Performance 281
Vehicle weight 283
Vehicle dimensions 285
Capacities 286
Tyre pressures 288

Vehicle identification

Vehicle Identification Number

The Vehicle Identification Number may be stamped on the identification plate and on the floor pan, under the floor covering, visible under a cover.

The Vehicle Identification Number may be embossed on the instrument panel, visible through the windscreen, or in the engine compartment on the right body panel.

Identification plate

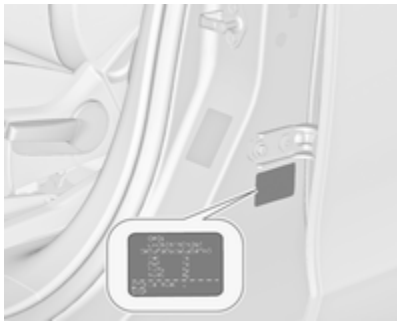

The identification plate is located on the front left or right door frame.

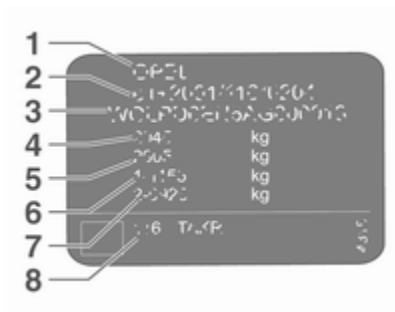

Information on identification label:

1 : manufacturer
2 : type approval number
3 : vehicle identification number
4 : permissible gross vehicle weight rating in kg
5 : permissible gross train weight in kg
6 : maximum permissible front axle load in kg
7 : maximum permissible rear axle load in kg
8 : vehicle-specific or country-specific data

The combined total of front and rear axle loads must not exceed the permissible gross vehicle weight. For example, if the front axle is bearing its maximum permissible load, the rear axle can only bear a load that is equal to the gross vehicle weight minus the front axle load.

The technical data is determined in accordance with European Community standards. We reserve the right to make modifications. Specifications in the vehicle documents always have priority over those given in this manual.

Engine identification

The technical data tables show the engine identifier code. Engine data ⇨ 277.

To identify the respective engine, refer to the engine power in the EEC Certificate of Conformity provided with your vehicle or other national registration documents.

Vehicle data

Recommended fluids and lubricants

European service schedule

Required engine oil quality

	All European countries with European service interval ⇨ 269	
Engine oil quality	Petrol engines (including CNG, LPG, E85)	Diesel engines
dexos 1	–	–
dexos 2	✓	✓

In case dexos quality is unavailable you may use max. 1 litre engine oil quality ACEA C3 once between each oil change.

Engine oil viscosity grades

	All European countries with European service interval ⇨ 269
Ambient temperature	Petrol and diesel engines
down to -25 °C	SAE 5W-30 or SAE 5W-40
below -25 °C	SAE 0W-30 or SAE 0W-40

International service schedule

Required engine oil quality

	All countries with international service interval ⇨ 269	
Engine oil quality	Petrol engines (including CNG, LPG, E85)	Diesel engines
dexos 1 (if available)	✓	–
dexos 2	✓	✓

In case dexos quality is unavailable you may use the oil qualities listed below:

	All countries with international service interval ⇨ 269	
Engine oil quality	Petrol engines (including CNG, LPG, E85)	Diesel engines
GM-LL-A-025	✓	–
GM-LL-B-025	–	✓

	All countries with international service interval ⇨ 269	
Engine oil quality	Petrol engines (including CNG, LPG, E85)	Diesel engines
ACEA A3/B3	✓	–
ACEA A3/B4	✓	✓

	All countries with international service interval ⇨ 269	
ACEA C3	✓	✓
API SM	✓	–
API SN resource conserving	✓	–

Engine oil viscosity grades

	All countries with international service interval ⇨ 269
Ambient temperature	Petrol and diesel engines
down to -25 °C	SAE 5W-30 or SAE 5W-40
below -25 °C	SAE 0W-30 or SAE 0W-40
down to -20 °C	SAE 10W-30[1] or SAE 10W-40[1]

[1] Permitted, but usage of SAE 5W-30 or SAE 5W-40 with dexos quality is recommended.

Engine data

Engine identifier code	B14NEL	B14NET	B14NET	B16XNT
Sales designation	1.4	1.4	1.4 LPG	1.6 CNG
Engineering code	B14NET	B14NET	B14NET	B16XNT
Piston displacement [cm^3]	1364	1364	1364	1598
Engine power [kW]	88	103	103	110
at rpm	4200-6000	4900-6000	4900	5000
Torque [Nm]	200	200	200	210
at rpm	1850-4200	1850-4900	1850-4900	2300
Fuel type	Petrol	Petrol	Liquid gas/Petrol	Natural gas/Petrol
Octane rating RON[2)]				
recommended	95	95	95	95
possible	98	98	98	98
possible	91	91	91	91
Additional fuel type	–	–	Liquid gas (LPG)	Natural gas (CNG)

2) A country specific label at the fuel filler flap can supersede the engine specific requirement.

Engine identifier code	B16SHT	B16SHL	A18XEL	A18XER
Sales designation	1.6	1.6	1.8	1.8
Engineering code	B16SHT	B16SHT	A18XER	A18XER
Piston displacement [cm^3]	1598	1598	1796	1796
Engine power [kW]	147	125	85	103
at rpm	5500	4750-6000	5600	6300
Torque [Nm]	280	260	175	175
at rpm	1650-5000	1650-4500	3800	3800
Fuel type	Petrol	Petrol	Petrol	Petrol
Octane rating RON[2)]				
recommended	98	98	95	95
possible	95	95	98	98
possible	91	91	91	91
Additional fuel type	–	–	–	–

2) A country specific label at the fuel filler flap can supersede the engine specific requirement.

Engine identifier code	B16DTH	B16DTJ	A20DTL	A20DT
Sales designation	1.6 Turbo	1.6 Turbo	2.0 Turbo	2.0 Turbo
Engineering code	B16DTH	B16DTH	A20DTL	A20DT
Piston displacement [cm^3]	1598	1598	1956	1956
Engine power [kW]	100	88	81	96
at rpm	3500-4000	4000	4000	4000
Torque [Nm]	320	320	260	300
at rpm	2000	2000	1750-2500	1750-2500
Fuel type	Diesel	Diesel	Diesel	Diesel

Engine identifier code	A20DTH	A20DTH	B20DTJ	B20DTH	A20DTR
Sales designation	2.0 Turbo	2.0 Turbo	2.0 Turbo	2.0 Turbo	2.0 BiTurbo
Engineering code	A20DTH	A20DTH	B20DTH	B20DTH	A20DTR
Piston displacement [cm^3]	1956	1956	1956	1956	1956
Engine power [kW]	121	96	96	125	143
at rpm	4000	4000	3750	3750	4000

Engine identifier code	A20DTH	A20DTH	B20DTJ	B20DTH	A20DTR
Sales designation	2.0 Turbo	2.0 Turbo	2.0 Turbo	2.0 Turbo	2.0 BiTurbo
Engineering code	A20DTH	A20DTH	B20DTH	B20DTH	A20DTR
Torque [Nm]	350	300	300	400	400
at rpm	1750-2500	1750-2500	1500-2750	1750-2500	1750-2500
Fuel type	Diesel	Diesel	Diesel	Diesel	Diesel

Performance

Engine	B14NEL	B14NET	B14NET LPG	B16XNT CNG	B16SHT	B16SHL
Maximum speed[3] [km/h]						
Manual transmission	190	200	195	200	–	–
with Stop-start system	192	202	–	–	220	–
Automatic transmission	–	197	–	–	–	208

3) The maximum speed indicated is achievable at kerb weight (without driver) plus 200 kg payload. Optional equipment could reduce the specified maximum speed of the vehicle.

Engine	A18XEL	A18XER	B16DTH	B16DTJ	A20DTL	A20DT
Maximum speed[3] [km/h]						
Manual transmission	185	195	–	–	183	191
with Stop-start system	–	–	193	186	–	193
Automatic transmission	–	–	–	–	–	–

3) The maximum speed indicated is achievable at kerb weight (without driver) plus 200 kg payload. Optional equipment could reduce the specified maximum speed of the vehicle.

Engine	A20DTH 121 kW	A20DTH 96 kW	B20DTJ	B20DTH	A20DTR
Maximum speed[3] [km/h]					
Manual transmission	208	–	–	–	–
with Stop-start system	209	–	–	208	218
Automatic transmission	205	192	190	205	–

3) The maximum speed indicated is achievable at kerb weight (without driver) plus 200 kg payload. Optional equipment could reduce the specified maximum speed of the vehicle.

Vehicle weight

Kerb weight, basic model without any optional equipment

	Engine	Manual transmission	Automatic transmission
5-seats/7-seats [kg]	B14NEL	1613/1640	–
	B14NET	1613/1640	1613/1640
	B14NET LPG	1664/1691	–
	B16SHT	1664/1691	–
	B16XNT CNG	1701/1728	–
	B16SHL	–	1701/1728
	A18XEL	1571/1598	–
	A18XER	1571/1598	–

Optional equipment and accessories increase the kerb weight.

Loading information ⇨ 94.

	Engine	Manual transmission	Automatic transmission
5-seats/7-seats [kg]	B16DTH	1701/1728	–
	B16DTJ	1701/1728	–
	A20DTL	1701/1728	–
	A20DT	1701/1728	–
	A20DTH 121 kW	1733/1760	1733/1760
	A20DTH 96 kW	–	1733/1760
	B20DTJ	–	1788/1815
	B20DTH	1733/1760	1788/1815
	A20DTR	1733/1760	–

Optional equipment and accessories increase the kerb weight.

Loading information ⇨ 94.

Vehicle dimensions

	Zafira Tourer
Length [mm]	4656
Width without exterior mirrors [mm]	1884
Width with two exterior mirrors [mm]	2100
Height (without antenna) [mm]	1685
Length of load compartment floor with folded third row [mm]	1094
Length of load compartment with folded second and third row [mm]	1842
Load compartment width [mm]	1057
Load compartment height at tailgate [mm]	840
Wheelbase [mm]	2760
Turning circle diameter [m]	11.9

Capacities

Engine oil

Engine	B14NEL	B14NET, B14NET LPG	B16XNT CNG	B16SHT, B16SHL	A18XEL, A18XER
including Filter [l]	4.0	4.0	4.5	5.5	4.5
between MIN and MAX [l]	1.0	1.0	1.0	1.0	1.0

Engine	B16DTH, B16DTJ	A20DT, A20DTL	A20DTH	B20DTH, B20DTJ	A20DTR
including Filter [l]	5.0	4.5	4.5	5.25	4.5
between MIN and MAX [l]	1.0	1.0	1.0	1.0	1.0

Fuel tank

Petrol/diesel, refilling quantity [l]	58
Natural gas CNG, refilling quantity [kg] or [l] Petrol, refilling quantity [l]	25 kg[4] or 144 l 14
Liquid gas LPG, refilling quantity [l]	60

4) At 20 MPa/200 bar/2900 psi and 15 °C.

AdBlue tank

AdBlue, refilling quantity [l]	7.5

Tyre pressures

Engine	Tyres	Comfort with up to 3 people		ECO with up to 3 people		With full load	
		front	rear	front	rear	front	rear
		[kPa/bar] ([psi])	[kPa/bar] ([psi])	[kPa/bar] ([psi])	[kPa/bar] ([psi])	[kPa/bar] ([psi])	[kPa/bar] ([psi])
B14NEL, B14NET	215/60 R16,	220/2.2 (32)	220/2.2 (32)	260/2.6 (38)	260/2.6 (38)	230/2.3 (33)	300/3.0 (43)
	225/50 R17,						
	235/45 R18,						
	235/40 R19						
B14NET LPG	225/50 R17,	220/2.2 (32)	220/2.2 (32)	260/2.6 (38)	260/2.6 (38)	230/2.3 (33)	300/3.0 (43)
	235/45 R18,						
	235/40 R19						
B16XNT CNG	225/50 R17	220/2.2 (32)	220/2.2 (32)	260/2.6 (38)	260/2.6 (38)	230/2.3 (33)	280/2.8 (41)

Engine	Tyres	Comfort with up to 3 people		ECO with up to 3 people		With full load	
		front	rear	front	rear	front	rear
		[kPa/bar] ([psi])	[kPa/bar] ([psi])	[kPa/bar] ([psi])	[kPa/bar] ([psi])	[kPa/bar] ([psi])	[kPa/bar] ([psi])
B16SHT, B16SHL	225/50 R17,	260/2.6 (38)	240/2.4 (35)	280/2.8 (41)	280/2.8 (41)	270/2.7 (39)	320/3.2 (46)
	235/45 R18,						
	235/40 R19						
A18XEL, A18XER	215/60 R16,	220/2.2 (32)	220/2.2 (32)	260/2.6 (38)	260/2.6 (38)	230/2.3 (33)	280/2.8 (41)
	225/50 R17						
B16DTH, B16DTJ	215/60 R16,	240/2.4 (35)	240/2.4 (35)	280/2.8 (41)[5)]	280/2.8 (41)[5)]	260/2.6 (38)	300/3.0 (43)
	225/50 R17,						
	235/45 R18,						
	235/40 R19						

Engine	Tyres	Comfort with up to 3 people		ECO with up to 3 people		With full load	
		front	rear	front	rear	front	rear
		[kPa/bar] ([psi])	[kPa/bar] ([psi])	[kPa/bar] ([psi])	[kPa/bar] ([psi])	[kPa/bar] ([psi])	[kPa/bar] ([psi])
A20DTL	215/60 R16,	240/2.4 (35)	240/2.4 (35)	280/2.8 (41)	280/2.8 (41)	250/2.5 (36)	300/3.0 (43)
	225/50 R17,						
	235/45 R18,						
	235/40 R19						
A20DT	215/60 R16,	240/2.4 (35)	240/2.4 (35)	280/2.8 (41)	280/2.8 (41)	260/2.6 (38)	300/3.0 (43)
	225/50 R17,						
	235/45 R18,						
	235/40 R19						
B20DTH, B20DTJ	225/50 R17,	260/2.6 (38)	240/2.4 (35)	280/2.8 (41)	280/2.8 (41)	280/2.8 (41)	320/3.2 (46)
	235/45 R18,						
	235/40 R19,						

Engine	Tyres	Comfort with up to 3 people		ECO with up to 3 people		With full load	
		front	rear	front	rear	front	rear
		[kPa/bar] ([psi])	[kPa/bar] ([psi])	[kPa/bar] ([psi])	[kPa/bar] ([psi])	[kPa/bar] ([psi])	[kPa/bar] ([psi])
A20DTR, A20DTH	225/50 R17,	260/2.6 (38)	240/2.4 (35)	280/2.8 (41)	280/2.8 (41)	280/2.8 (41)	320/3.2 (46)
	235/45 R18,						
	235/40 R19,						
	225/45 R18						
All	Temporary spare wheel 125/70 R17	420/4.2 (61)	420/4.2 (61)	–	–	420/4.2 (61)	420/4.2 (61)

5) In combination with ultra low rolling resistance tyres 300 kPa.

Customer information

Customer information **292**
Declaration of conformity 292
Collision damage repair 295
Software acknowledgement 295
Vehicle data recording and privacy **297**
Event data recorders 297
Radio Frequency Identification (RFID) 298

Customer information

Declaration of conformity

Transmission systems

This vehicle has systems that transmit and/or receive radio waves subject to Directive 1999/5/EC. These systems are in compliance with the essential requirements and other relevant provisions of Directive 1999/5/EC. Copies of the original Declarations of Conformity can be obtained on our website.

Radar systems

Country-specific Declarations of Conformity for radar systems are shown on the following page:

European Union
EC Directive: 1999/5/EC
Manufacturer: Delphi Electronics & Safety
Model / Type Designation: L2C0038TR
Description / Intended Use:
Electronically Scanned Radar (ESR),
a 76.5GHz adaptive cruise control system radar fitted to motor vehicles at vehicle manufacture
Applied Standards:
47 CFR Part 15
CEPT ERC Recommendation 70-03
EN 60950
EN 301 091
European Commission Directive 2006/28/EC
I declare that the product referenced above is in compliance with the essential requirements and other relevant provisions of Directive 1999/5/EC, on the approximation of the laws of the member states relating to Directive 1999/5/EC.

Brazil

Este equipamento opera em caráter secundário, isto é, não tem direito a proteção contra interferência prejudicial, mesmo de estações do mesmo tipo, e não pode causar interferência a sistemas operando em caráter primário

Indonesia
14785/POSTEL/2010
1982

Jordan
Type Approval No.: TRC/LPD/2009/87
Equipment Type: Low Power Device (LPD)

Malaysia

Approval #: B 05358

Moldova

8526

Morocco
AGREE PAR L'ANRT MAROC
Numéro d'agrément :
MR 4838 ANRT 2009
Date d'agrément : 22/5/2009

Singapore
Complies with
IDA Standards
DA105753

South Africa

TA-2009/163
APPROVED

South Korea

Taiwan
CCAB09LP4590T3

UAE
TRA
REGISTERED No:
0018923/09
DEALER No:
DA0047809/10

United States of America and Canada
Model / FCC ID: L2C0038TR IC: 3432A-0038TR

This device complies with Part 15 of the FCC Rules and with Industry Canada license-exempt RSS standard(s). Operation is subject to the following two conditions: (1) This device may not cause harmful interference, and (2) This device must accept any interference received, including interference that may cause undesired operation.

Le présent appareil est conforme aux CNR d'Industrie Canada applicables aux appareils radio exempts de licence. L'exploitation est autorisée aux deux conditions suivantes: (1) l'appareil ne doit pas produire de brouillage, et (2) l'utilisateur de l'appareil doit accepter tout brouillage radioélectrique subi, même si le brouillage est susceptible d'en compromettre le fonctionnement.

Note: Changes or modifications not expressively approved by the party responsible for compliance could void the user's authority to operate the equipment. The term "IC:" before the radio certification number only signifies that Industry Canada technical specifications were met.

Note: This equipment complies with radiation exposure limits set forth for an uncontrolled environment. This equipment should be installed and operated with minimum distance of 20 cm between the radiator and your body.

Wir leben Autos.

Konformitätserklärung

nach EG Richtlinie 2006/42/EG

Hiermit erklären wir, dass das Produkt:

Produktbezeichnung: Wagenheber

Typ/GM-Teilenummern: 13348505, 13504504

den Bestimmungen der Richtlinie 2006/42/EG entspricht.

Angewendete technische Normen:

GMN9737	Jacking
GM 14337	Standard Equipment Jack - Hardware Tests
GMN5127	Vehicle Integrity-Hoisting and Service Station Jacking
GMW15005	Standard Equipment Jack and Spare Tire, Vehicle Test
ISO TS 16949	Qualitätsmanagementsystem

Der Unterzeichner ist Bevollmächtigter für die Zusammenstellung der technischen Unterlagen.

Rüsselsheim, 31. Januar 2014

Hans-Peter Metzger
Engineering Group Manager Chassis & Structure
Adam Opel AG

Adam Opel AG
Bahnhofsplatz
65423 Rüsselsheim
T (0 61 42) 7-70, F (0 61 42) 7-7 88 00
www.opel.de

Vorstand:
Dr. Karl-Thomas Neumann (Vorsitzender),
Michael F. Ableson, Holger Kimmes,
Michael Lohscheller, Dr. Thomas Sedran,
Peter Thom, Susanna Webber, Johan Willems

Aufsichtsrat:
Stephen J. Girsky (Vorsitzender)

Sitz der Gesellschaft: Rüsselsheim
Handelsregister:
Amtsgericht Darmstadt, HRB 89158

Ein Unternehmen der GM Gruppe

Translation of the original declaration of conformity

Declaration of conformity according to EC Directive 2006/42/EC

We declare that the product:

Product designation: Jack

Type/GM part number: 13348505, 13504504

is in compliance with the provisions of Directive 2006/42/EC.

Applied technical standards:

GMN9737	:	jacking
GM 14337	:	standard equipment jack – hardware tests
GMN5127	:	vehicle integrity – hoisting and service station jacking
GMW15005	:	standard equipment jack and spare tire, vehicle test
ISO TS 16949	:	quality management systems

The signatory is authorised to compile the technical documentation.

Rüsselsheim, 31st January 2014

signed by

Hans-Peter Metzger

Engineering Group Manager Chassis & Structure

Adam Opel AG

D-65423 Rüsselsheim

Collision damage repair

Paint thickness

Due to production techniques, the thickness of the paint can vary between 50 and 400 µm.

Therefore, different paint thickness is no indicator for a collision damage repair.

Software acknowledgement

Certain OnStar components include libcurl and unzip software and other third party software. Below are the notices and licenses associated with libcurl and unzip and for other third party software please see http://www.lg.com/global/support/opensource/index.

libcurl

Copyright and permission notice

Copyright (c) 1996 - 2010, Daniel Stenberg, <daniel@haxx.se>.

All rights reserved.

Permission to use, copy, modify, and distribute this software for any purpose with or without fee is hereby granted, provided that the above copyright notice and this permission notice appear in all copies.

The software is provided "as is", without warranty of any kind, express or implied, including but not limited to the warranties of merchantability, fitness for a particular purpose and noninfringement of third party rights. In no event shall the authors or

copyright holders be liable for any claim, damages or other liability, whether in an action of contract, tort or otherwise, arising from, out of or in connection with the software or the use or other dealings in the software.

Except as contained in this notice, the name of a copyright holder shall not be used in advertising or otherwise to promote the sale, use or other dealings in this Software without prior written authorization of the copyright holder.

unzip

This is version 2005-Feb-10 of the Info-ZIP copyright and license. The definitive version of this document should be available at ftp://ftp.info-zip.org/pub/infozip/license.html indefinitely.

Copyright (c) 1990-2005 Info-ZIP. All rights reserved.

For the purposes of this copyright and license, “Info-ZIP” is defined as the following set of individuals:

Mark Adler, John Bush, Karl Davis, Harald Denker, Jean-Michel Dubois, Jean-loup Gailly, Hunter Goatley, Ed Gordon, Ian Gorman, Chris Herborth, Dirk Haase, Greg Hartwig, Robert Heath, Jonathan Hudson, Paul Kienitz, David Kirschbaum, Johnny Lee, Onno van der Linden, Igor Mandrichenko, Steve P. Miller, Sergio Monesi, Keith Owens, George Petrov, Greg Roelofs, Kai Uwe Rommel, Steve Salisbury, Dave Smith, Steven M. Schweda, Christian Spieler, Cosmin Truta, Antoine Verheijen, Paul von Behren, Rich Wales, Mike White.

This software is provided “as is,” without warranty of any kind, express or implied. In no event shall Info-ZIP or its contributors be held liable for any direct, indirect, incidental, special or consequential damages arising out of the use of or inability to use this software.

Permission is granted to anyone to use this software for any purpose, including commercial applications, and to alter it and redistribute it freely, subject to the following restrictions:

1. Redistributions of source code must retain the above copyright notice, definition, disclaimer, and this list of conditions.
2. Redistributions in binary form (compiled executables) must reproduce the above copyright notice, definition, disclaimer, and this list of conditions in documentation and/or other materials provided with the distribution. The sole exception to this condition is redistribution of a standard UnZipSFX binary (including SFXWiz) as part of a self-extracting archive; that is permitted without inclusion of this license, as long as the normal SFX banner has not been removed from the binary or disabled.
3. Altered versions--including, but not limited to, ports to new operating systems, existing ports with new graphical interfaces, and dynamic, shared, or static library versions--must be plainly marked as such and must not be misrepresented as being the

original source. Such altered versions also must not be misrepresented as being Info-ZIP releases--including, but not limited to, labeling of the altered versions with the names “Info-ZIP” (or any variation thereof, including, but not limited to, different capitalizations), “Pocket UnZip,” “WiZ” or “MacZip” without the explicit permission of Info-ZIP. Such altered versions are further prohibited from misrepresentative use of the Zip-Bugs or Info-ZIP e-mail addresses or of the Info-ZIP URL(s).

4. Info-ZIP retains the right to use the names “Info-ZIP,” “Zip,” “UnZip,” “UnZipSFX,” “WiZ,” “Pocket UnZip,” “Pocket Zip,” and “MacZip” for its own source and binary releases.

Vehicle data recording and privacy

Event data recorders

Data storage modules in the vehicle

A large number of electronic components of your vehicle contain data storage modules temporarily or permanently storing technical data about the condition of the vehicle, events and errors. In general, this technical information documents the condition of parts, modules, systems or the environment:

- operating conditions of system components (e.g. filling levels)
- status messages of the vehicle and its single components (e.g. number of wheel revolutions / rotational speed, deceleration, lateral acceleration)
- dysfunctions and defects in important system components
- vehicle reactions in particular driving situations (e.g. inflation of an airbag, activation of the stability regulation system)
- environmental conditions (e.g. temperature)

These data are exclusively technical and help identifying and correcting errors as well as optimising vehicle functions.

Motion profiles indicating travelled routes cannot be created with these data.

If services are used (e.g. repair works, service processes, warranty cases, quality assurance), employees of the service network (manufacturer included) are able to read out this technical information from the event and error data storage modules applying special diagnostic devices. If required, you will receive further information at these workshops. After an error has been corrected, the data are deleted from the error storage module or they are constantly overwritten.

When using the vehicle, situations may occur in which these technical data related to other information (accident report, damages on the vehicle, witness statements etc.) may be associated with a specific person - possibly, with the assistance of an expert.

Additional functions contractually agreed upon with the client (e.g. vehicle location in emergency cases) allow the transmission of particular vehicle data from the vehicle.

Radio Frequency Identification (RFID)

RFID technology is used in some vehicles for functions such as tyre pressure monitoring and ignition system security. It is also used in connection with conveniences such as radio remote controls for door locking/unlocking and starting, and in-vehicle transmitters for garage door openers. RFID technology in Opel vehicles does not use or record personal information or link with any other Opel system containing personal information.

Index

A

Accessories and vehicle modifications 224
Active Emergency Braking..... 192
Active head restraints..... 37
Adaptive cruise control..... 116, 182
Adaptive forward lighting . . 115, 142, 234
AdBlue..... 114, 166, 270
Adjustable air vents 156
Airbag and belt tensioners 110
Airbag deactivation 58, 111
Airbag label..... 54
Airbag system 54
Air conditioning regular operation 157
Air conditioning system 151
Air intake 157
Air vents..... 156
Antilock brake system 173
Antilock brake system (ABS) 112
Anti-theft alarm system 27
Anti-theft locking system 26
Appearance care..... 265
Armrest..... 42
Armrest storage 69
Ashtrays 103
Automatic anti-dazzle 31
Automatic light control 139
Automatic locking 24
Automatic transmission 169
Autostop..... 161
Auxiliary heater..... 156

B

Battery discharge protection 149
Battery voltage 126
Bicycle rack..... 70
BlueInjection..... 166
Bonnet 225
Brake and clutch fluid..... 270
Brake and clutch system 111
Brake assist 175
Brake fluid 229
Brakes 173, 229
Breakdown..... 263
Bulb replacement 232

C

Capacities 286
Cargo management system 88
Car Pass 21
Catalytic converter 165
Central locking system 22
Centre console lighting 148
Centre console storage 70
Changing tyre and wheel size ... 252
Charging system 111
Child locks 25
Child restraint installation locations 62

Child restraints..... 60
Child restraint systems 60
Cigarette lighter 103
Climate control 16
Climate control systems..... 150
Clock..... 101
Code..... 122
Collision damage repair..... 295
Control indicators..... 107
Control of the vehicle 159
Controls..... 97
Convex shape 29
Coolant and antifreeze..... 270
Cruise control 116, 179
Cupholders 67
Curtain airbag system 58
Curve lighting..... 142

D

Danger, Warnings and Cautions ... 4
Daytime running lights 142
Declaration of conformity..... 292
DEF..... 166
Diesel exhaust fluid..... 166
Diesel fuel system bleeding 231
Diesel particle filter..... 114, 164
Door open 116
Door panel storage..... 68
Doors..... 25
Driver assistance systems..... 179
Driver Information Centre..... 116
Driving characteristics and towing tips 219
Driving hints..... 159

E

Electric adjustment 29
Electrical system..... 240
Electric parking brake..... 112, 174
Electric parking brake fault..... 112
Electronic climate control system 152
Electronic driving programmes .. 171
Electronic Stability Control..... 176
Electronic Stability Control and Traction Control system..... 113
Electronic Stability Control off..... 113
End-of-life vehicle recovery 224
Engine compartment fuse box ... 241
Engine coolant 227
Engine coolant temperature gauge 106
Engine data 277
Engine exhaust 164
Engine identification..... 273
Engine oil 226, 270, 274
Engine oil pressure 114
Entry lighting 148
Event data recorders..... 297
Exit lighting 149
Exterior care 265
Exterior light 115
Exterior lighting 13, 138
Exterior mirrors..... 29

F

Fault 171
First aid kit 92
Fixed air vents 157
Flex-Fix system..... 70
Fog light 116
Fog lights 235
Folding mirrors 29
Folding tray 92
Following distance indication..... 192
Forward collision alert..... 188
Front airbag system 57
Front fog lights 146
Front seats..... 38
Front storage..... 68
Fuel..... 209
Fuel consumption - CO_2-Emissions 217
Fuel for diesel engines 209
Fuel for liquid gas operation..... 210
Fuel for natural gas operation ... 209
Fuel for petrol engines 209
Fuel gauge 105
Fuel selector 105
Fuses 240

G

Gauges..... 104
General information 218
Glass panel 34
Glovebox 66
Graphic-Info-Display, Colour-Info-Display 120

H

Halogen headlights 232
Hand brake..... 173, 174
Hazard warning flashers 145
Headlight flash 140
Headlight range adjustment 141
Headlights..... 138
Headlights when driving abroad 141
Head restraint adjustment 8
Head restraints 36
Heated mirrors 30
Heated rear window 34
Heated steering wheel 97
Heating 43
Heating and ventilation system . 150
High beam 115, 140
High beam assist..... 115, 140
Hill start assist 175
Horn 14, 98

I

Identification plate 272
Ignition switch positions 160
Immobiliser 28, 115
Indicators..... 104
Information displays..... 116
Instrument cluster 104
Instrument panel fuse box 243
Instrument panel illumination 240
Instrument panel illumination control 147
Instrument panel overview 10
Instrument panel storage..... 66
Interactive driving system..... 177
Interior care 267
Interior lighting..... 147
Interior lights 147, 239
Interior mirrors..... 30
Interruption of power supply 171
Introduction 3
ISOFIX child restraint systems 65

J

Jump starting 262

K

Keys 20
Keys, locks..... 20

L

Lane departure warning..... 113, 207
Lashing eyes 88
Lighting features..... 148
Light switch 138
Load compartment 25, 79
Load compartment cover 82
Load compartment fuse box 244
Loading information 94
Load rails and hooks 88
Low fuel 115
Low washer fluid 116

M

Malfunction indicator light 111
Manual anti-dazzle 30
Manual mode 170
Manual seat adjustment..... 39
Manual transmission 172
Manual windows 31
Memorised settings..... 24
Midlevel-Display..... 116
Mirror adjustment 8
Misted light covers 147

N

New vehicle running-in 159
Number plate light 239

O

Object detection systems..... 194
Odometer 104
Oil, engine..... 226, 270, 274
OnStar..... 133
Operate pedal..... 112
Outside temperature 100

Overhead console 68
Overrun cut-off 161

P

Parking 18, 163
Parking assist 194
Parking brake 174
Parking lights 146
Particulate filter..... 164
Performance 281
Performing work 225
Pollen filter 157
Power outlets 102
Power seat adjustment 41
Power steering..... 113
Power steering fluid..... 228
Power windows 32
Preheating 114
Puncture..... 256

Q

Quickheat..... 156

R

Radio Frequency Identification (RFID)..... 298
Radio remote control 21
Reading lights 148
Rear carrier system..... 70
Rear floor storage cover 84
Rear fog light 116, 146
Rear seats..... 44
Rear storage..... 81
Rear view camera 202
Rear window wiper/washer 100
Recommended fluids and lubricants 270, 274
Reduced engine power..... 115
Refuelling 212
Retained power off..... 160
Reversing lights 147
Ride control system..... 176
Roller blinds 34
Roof..... 34
Roof load..... 94
Roof rack 93

S

Safety net 90
Seat adjustment 6
Seat belt 8
Seat belt reminder 110
Seat belts 50
Seat heating..... 43
Seat position 38
Second row seats 44
Selective catalytic reduction..... 166
Selector lever 169
Service 157, 269
Service display 106
Service information 269
Service vehicle soon 111
Side airbag system 57
Side blind spot alert..... 201
Sidelights..... 138
Side turn signal lights 238
Software acknowledgement..... 295
Spare wheel 258
Speed limiter..... 180
Speedometer 104
Starting and operating..... 159
Starting off 17
Starting the engine 160
Steering..... 159
Steering wheel adjustment 9, 97
Steering wheel controls 97
Stop-start system..... 161
Storage..... 66
Storage compartment..... 66
Storage compartments..... 66
Sunvisor lights 148
Sun visors 34
Symbols 4

T

Tachometer 104
Tail lights 236
Third row seats 48
Three-point seat belt 51
Tools 246
Top-tether fastening eyes 65

Tow bar..... 218
Towing..... 218, 263
Towing another vehicle 264
Towing equipment 220
Towing the vehicle 263
Traction Control system 176
Traction Control system off..... 114
Traffic sign assistant..... 204
Trailer coupling..... 218
Trailer stability assist 222
Trailer towing 219
Transmission 17
Transmission display 169
Tread depth 251
Trip computer 126
Trip odometer 104
Turn and lane-change signals ... 145
Turn signal 110
Tyre chains 253
Tyre designations 247
Tyre pressure 247
Tyre pressure monitoring system..... 114, 248
Tyre pressures 288
Tyre repair kit 253

U

Ultrasonic parking assist ... 113, 194
Underseat storage 68
Upholstery..... 267
Uplevel-Combi-Display..... 116
Upshift..... 113
Using this manual 3

V

Vehicle battery 229
Vehicle checks..... 225
Vehicle data..... 274
Vehicle data recording and privacy..... 297
Vehicle detected ahead..... 116
Vehicle dimensions 285
Vehicle Identification Number 272
Vehicle jack..... 246
Vehicle messages 122
Vehicle personalisation 129
Vehicle security..... 26
Vehicle specific data 3
Vehicle storage..... 224
Vehicle tools..... 246
Vehicle unlocking 6
Vehicle weight 283
Ventilation..... 150

W

Warning chimes 125
Warning lights..... 104
Warning triangle 92
Washer and wiper systems 15
Washer fluid 229
Wheel changing 256
Wheel covers 252
Wheels and tyres 247
Windows..... 31
Windscreen..... 31
Windscreen wiper/washer 98
Winter tyres 247
Wiper blade replacement 231

www.opel.com

Copyright by ADAM OPEL AG, Rüsselsheim, Germany.

The information contained in this publication is effective as of the date indicated below. Adam Opel AG reserves the right to make changes to the technical specifications, features and design of the vehicles relative to the information in this publication as well as changes to the publication itself.

Edition: January 2016, ADAM OPEL AG, Rüsselsheim.

Printed on chlorine-free bleached paper.

KTA-2722/10-en 01/2016