# FIAT® 500L

2018

OWNER'S MANUAL

## VEHICLES SOLD IN CANADA

With respect to any Vehicles Sold in Canada, the name FCA US LLC shall be deemed to be deleted and the name FCA Canada Inc. used in substitution therefore.

## DRIVING AND ALCOHOL

Drunken driving is one of the most frequent causes of accidents.

Your driving ability can be seriously impaired with blood alcohol levels far below the legal minimum. If you are drinking, don't drive. Ride with a designated non-drinking driver, call a cab, a friend, or use public transportation.

| WARNING! |
| --- |
| **Driving after drinking can lead to an accident. Your perceptions are less sharp, your reflexes are slower, and your judgment is impaired when you have been drinking. Never drink and then drive.** |

This manual illustrates and describes the operation of features and equipment that are either standard or optional on this vehicle. This manual may also include a description of features and equipment that are no longer available or were not ordered on this vehicle. Please disregard any features and equipment described in this manual that are not on this vehicle.

FCA US LLC reserves the right to make changes in design and specifications, and/or make additions to or improvements to its products without imposing any obligation upon itself to install them on products previously manufactured.

Copyright © 2017 FCA US LLC

# TABLE OF CONTENTS


| SECTION | | PAGE |
|---|---|---|
| 1 | INTRODUCTION | 3 |
| 2 | GRAPHICAL TABLE OF CONTENTS | 7 |
| 3 | GETTING TO KNOW YOUR VEHICLE | 13 |
| 4 | GETTING TO KNOW YOUR INSTRUMENT PANEL | 87 |
| 5 | SAFETY | 111 |
| 6 | STARTING AND OPERATING | 169 |
| 7 | IN CASE OF EMERGENCY | 203 |
| 8 | SERVICING AND MAINTENANCE | 237 |
| 9 | TECHNICAL SPECIFICATIONS | 289 |
| 10 | MULTIMEDIA | 299 |
| 11 | CUSTOMER ASSISTANCE | 323 |
| 12 | INDEX | 329 |

# INTRODUCTION



## CONTENTS

■ INTRODUCTION . . . . . .4
■ HOW TO USE THIS MANUAL . . . . . .5
□ Essential Information . . . . . .5
□ Symbols . . . . . .5
■ WARNINGS AND CAUTIONS . . . . . .6
■ VEHICLE MODIFICATIONS/ALTERATIONS . . . . .6

## INTRODUCTION

Dear Customer,

Congratulations on selecting your new vehicle. Be assured that it represents precision workmanship, distinctive styling, and high quality. This Owner's Manual has been prepared with the assistance of service and engineering specialists to acquaint you with the operation and maintenance of your vehicle. It is supplemented by Warranty Information, and customer oriented documents. In the attached Warranty Booklet you will find a description of the services that FCA offers to its customers, the Warranty Certificate and the details of the terms and conditions for maintaining its validity. Please take the time to read all of these publications carefully before driving your vehicle for the first time. Following the instructions, recommendations, tips, and important warnings in this manual will help assure safe and enjoyable operation of your vehicle. Be sure you are familiar with all vehicle controls, particularly those used for braking, steering, transmission, and transfer case shifting. Learn how your vehicle handles on different road surfaces. Your driving skills will improve with experience.

This Owner's Manual describes all versions of this vehicle. Options and equipment dedicated to specific markets or versions are not expressly indicated in the text. Therefore, you should only consider the information which is related to the trim level, engine, and version that you have purchased. Any content introduced throughout the Owner's Information, that may or may not be applicable to your vehicle, will be identified with the wording "If Equipped". All data contained in this publication are intended to help you use your vehicle in the best possible way. FCA aims at a constant improvement of the vehicles produced. For this reason, it reserves the right to make changes to the model described for technical and/or commercial reasons. For further information, contact an authorized dealer.

**NOTE:** After reviewing the Owner's Information, it should be stored in the vehicle for convenient referencing, and remain with the vehicle when sold.

When it comes to service, remember that your authorized dealer knows your vehicle best, has factory-trained technicians and genuine MOPAR® parts, and cares about your satisfaction.

## HOW TO USE THIS MANUAL

### Essential Information

Consult the Table of Contents to determine which section contains the information you desire.

Since the specification of your vehicle depends on the items of equipment ordered, certain descriptions and illustrations may differ from your vehicle's equipment.

The detailed index at the back of this Owner's Manual contains a complete listing of all subjects.

### Symbols

Consult the following table for a description of the symbols that may be used on your vehicle or throughout this Owner's Manual:

## WARNINGS AND CAUTIONS

This Owner's Manual contains **WARNINGS** against operating procedures that could result in a collision or bodily injury. It also contains **CAUTIONS** against procedures that could result in damage to your vehicle. If you do not read this entire Owner's Manual, you may miss important information. Observe all Warnings and Cautions.

## VEHICLE MODIFICATIONS/ALTERATIONS

**WARNING!**

**Any modifications or alterations to this vehicle could seriously affect its roadworthiness and safety and may lead to a collision resulting in serious injury or death.**

# GRAPHICAL TABLE OF CONTENTS



## CONTENTS


- FRONT VIEW . . . . . .8
- REAR VIEW . . . . . .9
- INSTRUMENT PANEL . . . . . .10
- INTERIOR . . . . . .11

## FRONT VIEW

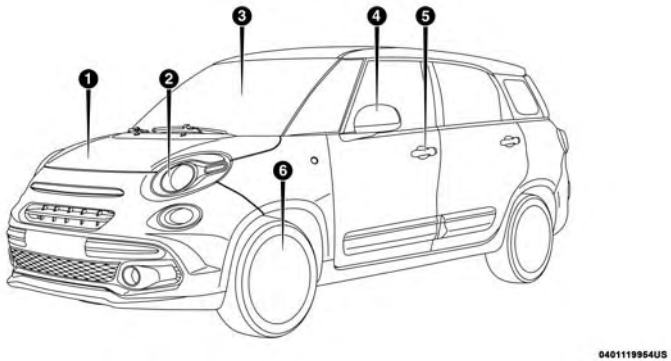


**Front View**

1 — Hood/Engine Compartment
2 — Headlights
3 — Windshield
4 — Exterior Mirrors
5 — Doors
6 — Wheels/Tires

## REAR VIEW



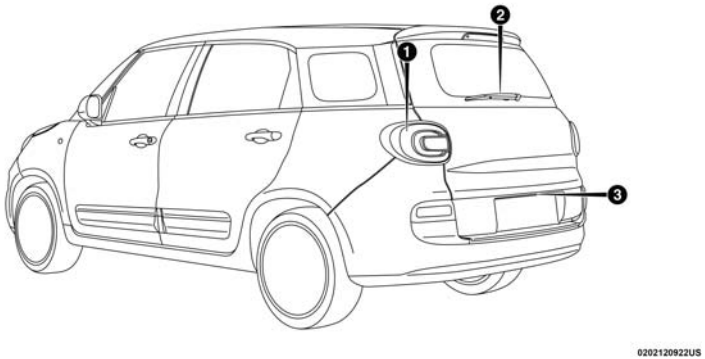


**Rear View**

1 — Rear Lights
2 — Rear Windshield Wiper
3 — Liftgate

## INSTRUMENT PANEL

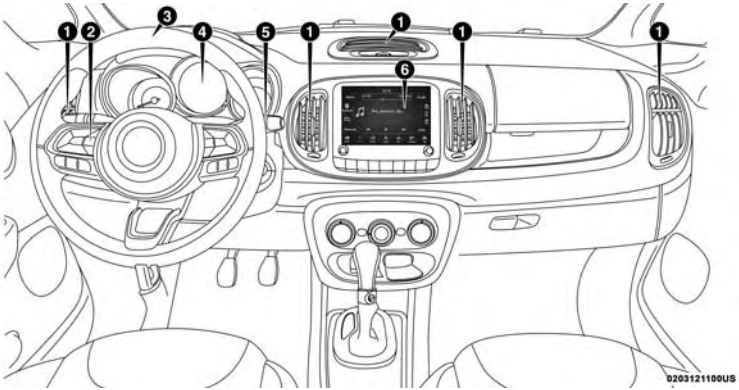


**Instrument Panel**

1 — Air Vents
2 — Multifunction Lever (Behind Steering Wheel)
3 — Steering Wheel
4 — Instrument Cluster
5 — Windshield Wiper Lever
6 — Radio

## INTERIOR



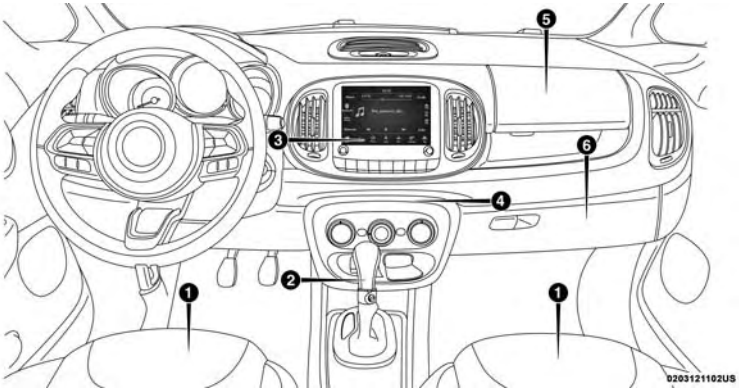


**Interior**

1 — Seats
2 — Gear Selector
3 — Switch Panel
4 — Climate Controls
5 — Upper Glove Compartment
6 — Lower Glove Compartment

# GETTING TO KNOW YOUR VEHICLE

## CONTENTS




■ KEYS . . . . . .16
- □ Key With Remote Control. . . . . .16

■ IGNITION SWITCH . . . . . .18
- □ Ignition Switch . . . . . .18
- □ Key-In-Ignition Reminder . . . . . .20

■ SENTRY KEY . . . . . .20
- □ Customer Key Programming . . . . . .20
- □ Replacement Keys . . . . . .20
- □ General Information . . . . . .21

■ VEHICLE SECURITY ALARM . . . . . .21
- □ To Arm The System . . . . . .21
- □ To Disarm The System . . . . . .22
- □ Central Lock/Unlock (Switch Safe Lock Device) — If Equipped. . . . . .22

■ DOORS . . . . . .23
- □ Power Door Locks . . . . . .23
- □ Doors Lock With One Or More Doors Open. . . . .25
- □ Auto-Relocking (Only For Rear Doors). . . . . .25
- □ Child-Protection Door Lock System (Rear Doors) .25

■ SEATS . . . . . .26
- □ Manual Adjustment (Front Seats) . . . . . .26
- □ Manual Adjustment (Rear Seats) . . . . . .29
- □ Power Adjustment (Front Seats) — If Equipped . .30
- □ Heated Seats — If Equipped. . . . . .31
- □ Fold And Tumble Rear Seat . . . . . .31
- □ Rear Armrest — If Equipped . . . . . .34

■ HEAD RESTRAINTS . . . . . .34
- □ Reactive Head Restraints — Front Seats . . . . . .34

- Rear Head Restraint Adjustment . . . . . .35
- Front Head Restraint Removal . . . . . .36
- Rear Head Restraint Removal . . . . . .36

■ STEERING WHEEL . . . . . .37
- Tilt/Telescoping Steering Column . . . . . .37

■ MIRRORS . . . . . .38
- Inside Day/Night Mirror . . . . . .38
- Automatic Dimming Mirror — If Equipped . . . . .38
- Conversation Mirror — If Equipped . . . . . .39
- Power Mirrors . . . . . .40
- Folding Mirrors . . . . . .41
- Heated Mirrors — If Equipped . . . . . .41
- Illuminated Vanity Mirrors — If Equipped . . . . .41

■ EXTERIOR LIGHTS . . . . . .42
- Headlights . . . . . .42
- Daytime Running Lights — If Equipped . . . . . .43
- High Beams . . . . . .44
- Flash-To-Pass . . . . . .44
- Parking Lights . . . . . .44
- Follow Me Home/Headlight Delay . . . . . .44
- Front Fog Lights — If Equipped . . . . . .45
- Courtesy Lights/Approaching Lights. . . . . .45

■ INTERIOR LIGHTS . . . . . .45
- Interior Lights Controls . . . . . .45

■ WIPERS AND WASHERS . . . . . .48
- Front Wiper Operation . . . . . .48
- Rear Wiper/Washer Operation . . . . . .50

■ CLIMATE CONTROLS . . . . . .51
- Manual Climate Control Overview . . . . . .51
- Automatic Climate Control Overview . . . . . .55
- Climate Control Functions . . . . . .59
- Automatic Temperature Control (ATC) — If Equipped . . . . . .60
- Operating Tips . . . . . .61

■ WINDOWS . . . . . .62
□ Power Windows . . . . . .62
□ Wind Buffeting . . . . . .64
■ POWER SUNROOF — IF EQUIPPED . . . . . .64
□ Opening . . . . . .65
□ Closing . . . . . .66
□ Anti-Pinch Protect Feature . . . . . .66
□ Sunroof Reinitialization . . . . . .66
□ Wind Buffeting . . . . . .66
□ Power Sun Blind . . . . . .67
■ HOOD . . . . . .67
□ Opening . . . . . .67
□ Closing . . . . . .68
■ LIFTGATE . . . . . .69
□ Opening . . . . . .69
□ Cargo Area Features . . . . . .70
■ GARAGE DOOR OPENER — IF EQUIPPED . . . . .76
□ Before You Begin Programming HomeLink . . . . .76
□ Programming A Rolling Code . . . . . .77
□ Programming A Non-Rolling Code . . . . . .78
□ Canadian/Gate Operator Programming . . . . . .79
□ Using HomeLink . . . . . .80
□ Security . . . . . .80
□ Troubleshooting Tips . . . . . .80
□ General Information . . . . . .81
■ INTERNAL EQUIPMENT . . . . . .82
□ Storage . . . . . .82
□ Cupholders . . . . . .83
□ Power Outlets . . . . . .84
□ Cigar Lighter — If Equipped . . . . . .85
■ ROOF LUGGAGE RACK — IF EQUIPPED . . . . . .86

# KEYS

## Key With Remote Control

The Remote Keyless Entry (RKE) key fob contains an integrated key. To use the mechanical key, simply push the mechanical key release button.

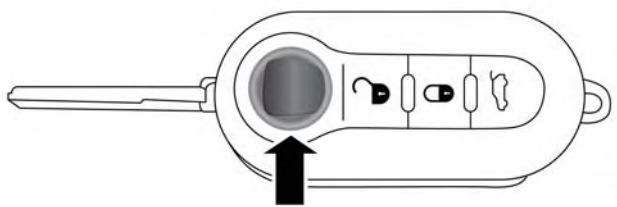

**Mechanical Key Release Button**

**NOTE:** The authorized dealer that sold you your vehicle has the key code numbers for your vehicle locks. These numbers can be used to order duplicate keys from your authorized dealer.

### To Unlock The Doors, And Liftgate

Push and release the unlock button on the key fob once to unlock the driver's door or twice, within five seconds, to unlock all doors, and liftgate. The turn signal lights will flash to acknowledge the unlock signal. The illuminated entry system will also turn on.

### To Lock The Doors And Liftgate

Push and release the lock button on the key fob to lock all doors and the liftgate. The turn signal lights will flash and the horn will chirp to acknowledge the signal.

### Locking Doors With A Key

1. Insert the key with either side up.
2. Turn the key to the right to lock the door.
3. Turn the key to the left to unlock the door.

### Replacing The Battery In The Key With Remote Control

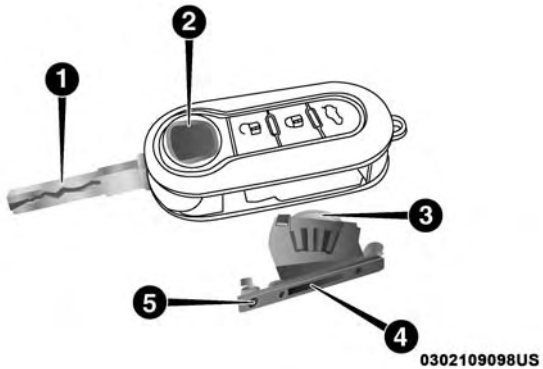


**Key Fob Components**

1 — Mechanical Key
2 — Mechanical Key Release Button
3 — Battery
4 — Battery Case
5 — Screw

To replace the battery, proceed as follows:

1. Push mechanical release button to open the mechanical key.
2. Turn the screw to unlock using a small screwdriver.
3. Take out the battery case and replace the battery making sure that polarities are correct.
4. Refit the battery case inside the key and lock it turning the screw to lock.

**NOTE:** Used batteries should be properly disposed of as specified by law, see your authorized dealer for assistance needed.

### Programming Additional Key Fobs

Refer to “Sentry Key” in this section for further information.

If you do not have a programmed key fob, contact your authorized dealer for details.

### Request For Additional Remote Controls

The system can recognize up to eight remote controls. Should a new remote control be necessary, go to an authorized dealer, taking an ID document and the car ownership documents.

### General Information

The following regulatory statement applies to all radio frequency (RF) devices equipped in this vehicle:

This device complies with Part 15 of the FCC Rules and with Industry Canada license-exempt RSS standard(s). Operation is subject to the following two conditions:

1. This device may not cause harmful interference, and
2. This device must accept any interference received, including interference that may cause undesired operation.

**NOTE:** Changes or modifications not expressly approved by the party responsible for compliance could void the user's authority to operate the equipment.

## IGNITION SWITCH

### Ignition Switch

The ignition switch can be turned to three different positions:

- STOP: engine off, key can be removed. Some electrical devices (e.g. sound system, central door locking system, etc.) can operate.

**NOTE:** The transmission must be shifted into PARK before the key is turned to the OFF position. Then, the key can be removed.

- AVV: engine start-up.
- MAR: driving position. All electrical devices are enabled.

If the key is turned to the OFF/LOCK position before shifting into park, the key will have to be moved to the driving (MAR) position and back to OFF/LOCK. Then, the key can be removed.

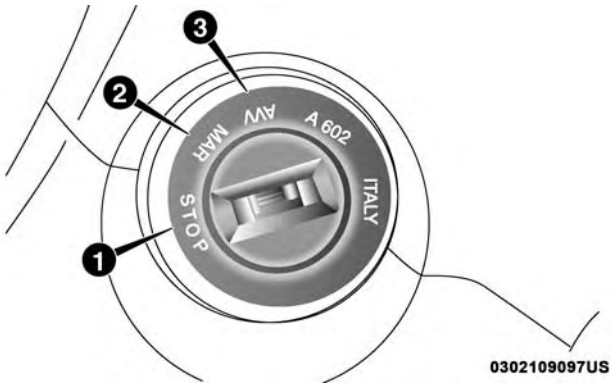


Ignition Switch

1 — STOP (OFF/LOCK)
2 — MAR (ACC/ON/RUN)
3 — AVV (START)

**WARNING!**

- **Before exiting a vehicle, always shift the automatic transmission into PARK or the manual transmission**

*(Continued)*

**WARNING!** *(Continued)*

**into FIRST gear or REVERSE, apply the parking brake, then turn the engine OFF, remove the key fob from the vehicle and lock your vehicle.**

- **Never leave children alone in a vehicle, or with access to an unlocked vehicle.**
- **Allowing children to be in a vehicle unattended is dangerous for a number of reasons. A child or others could be seriously or fatally injured. Children should be warned not to touch the parking brake, brake pedal or the gear selector.**
- **Do not leave the key fob in or near the vehicle, or in a location accessible to children. A child could operate power windows, other controls, or move the vehicle.**
- **Do not leave children or animals inside parked vehicles in hot weather. Interior heat build-up may cause serious injury or death.**

**CAUTION!**

**An unlocked vehicle is an invitation. Always remove the key from the ignition and lock all doors when leaving the vehicle unattended.**

### Key-In-Ignition Reminder

Opening the driver's door when the key is in the ignition and the ignition switch position is in the OFF/LOCK position, a signal sounds to remove the key.

## SENTRY KEY

The Sentry Key Immobilizer System prevents unauthorized vehicle operation by disabling the engine. The system does not need to be armed or activated. Operation is automatic, regardless of whether the vehicle is locked or unlocked.

The system uses ignition keys which have an embedded electronic chip (transponder) to prevent unauthorized vehicle operation. Therefore, only keys that are programmed to the vehicle can be used to start and operate the vehicle.

**NOTE:** A key which has not been programmed is also considered an invalid key, even if it is cut to fit the ignition switch lock cylinder for that vehicle.

If the vehicle security light is on after the key is turned to the MAR (ACC/ON/RUN) position, it indicates that there is a problem with the electronics.

**CAUTION!**

- **Always remove the Sentry Key from the vehicle and lock all doors when leaving the vehicle unattended.**
- **The Sentry Key Immobilizer system is not compatible with some aftermarket remote starting systems. Use of these systems may result in vehicle starting problems and loss of security protection.**

All of the keys provided with your new vehicle have been programmed to the vehicle electronics.

### Customer Key Programming

Programming key fobs may be performed at an authorized dealer.

### Replacement Keys

**NOTE:** Only keys that have been programmed to the vehicle electronics can be used to start the vehicle. Once a Sentry Key has been programmed to a vehicle, it cannot be programmed to any other vehicle. **When having the Sentry Key Immobilizer System serviced, bring all vehicle keys with you to an authorized dealer.**

### General Information

The following regulatory statement applies to all radio frequency (RF) devices equipped in this vehicle:

This device complies with Part 15 of the FCC Rules and with Industry Canada license-exempt RSS standard(s). Operation is subject to the following two conditions:

1. This device may not cause harmful interference, and
2. This device must accept any interference received, including interference that may cause undesired operation.

**NOTE:** Changes or modifications not expressly approved by the party responsible for compliance could void the user's authority to operate the equipment.

## VEHICLE SECURITY ALARM

The vehicle security alarm monitors the vehicle doors for unauthorized entry and the ignition switch for unauthorized operation. While the vehicle security alarm is armed, interior switches for door locks and liftgate release are disabled. If something triggers the alarm, the vehicle security alarm will provide the following audible and visible signals: the horn will pulse, the park lamps and/or turn signals will flash, and the vehicle security light on the instrument panel will flash.

### To Arm The System

1. Remove the key from the ignition switch and get out of the vehicle.
2. Lock the door using either the Central Lock/Unlock switch or the Remote Keyless Entry key fob and close all doors.
3. The horn will sound and the vehicle security light in the instrument cluster will switch on for approximately three seconds. This shows that the vehicle security alarm is arming. During this period, if a door is opened, the ignition switch is turned to ON/RUN, or the power door locks are unlocked in any manner, the vehicle security alarm will automatically disarm. After approximately three seconds, the vehicle security light will flash. This shows that the vehicle security alarm is fully armed.

The activation of the vehicle security alarm is followed by a self-diagnosis stage. If a fault is detected during the self-diagnosis stage, the horn will sound a second time.

If the horn sounds a second time, check that all doors, hood and liftgate are closed correctly, then rearm the system.

If the vehicle security alarm sounds the horn a second time even when all doors, hood and liftgate are correctly closed, a fault has occurred in the operation of the system. Contact your authorized dealer.

### To Disarm The System

Push unlock on the key fob, or insert the key into the ignition switch and turn the ignition switch to the ON/RUN position.

**NOTE:** The vehicle security alarm will not disarm when the metal insert of the key is used on a single door lock cylinder.

The vehicle security alarm is designed to protect your vehicle; however, you can create conditions where the vehicle security alarm will arm unexpectedly. If you remain in the vehicle and lock the doors with the key fob, once the vehicle security alarm is armed, when you pull the door handle to exit, the alarm will sound. If this occurs, push the unlock button on the key fob to disarm the vehicle security alarm.

### Central Lock/Unlock (Switch Safe Lock Device) — If Equipped

This safety device prevents the operation of the interior door handles and the door locking/unlocking button.

It prevents the opening of the doors from inside the passenger compartment, serving as an obstacle to break-in attempts (e.g. broken window).

We recommend that you activate the Safe Lock device each time you park your car.

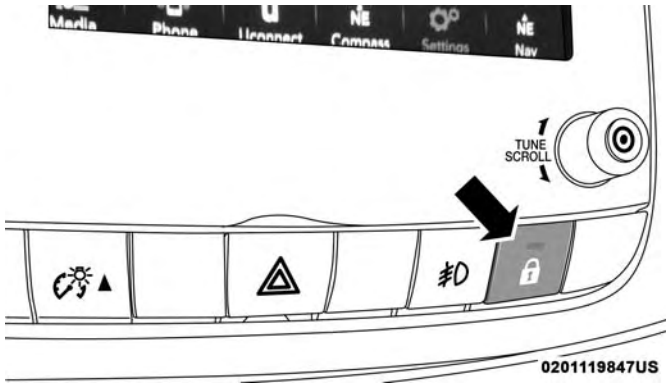


**Safe Lock Device Location**

### Activating The Safe Lock Device

The Safe Lock device is enabled on all the doors by quickly double-pushing the lock button on the key fob.

The direction indicators flash three times and the LED above the button flashes to indicate that the Safe Lock device has been activated. If one or more of the doors are not closed correctly, the Safe Lock device will not activate, preventing a person from getting stuck inside the passenger compartment by entering the car through, and then closing, the open door.

### Deactivating The Safe Lock Device

The Safe Lock device deactivates automatically:

1. By pushing the unlock button on the key fob.
2. By turning the ignition key to the MAR position.

## DOORS

### Power Door Locks

Push the central lock/unlock button located on the instrument panel, in the switch bank below the radio. The button has an LED that indicates whether the doors are locked or unlocked.

- **LED ON:** Doors locked. Pushing the central lock/unlock button once will unlock all doors. The LED will switch off once the doors are unlocked.
- **LED OFF:** Doors unlocked. Pushing the central lock/unlock button once will lock all doors. The LED will switch on once the doors are locked.

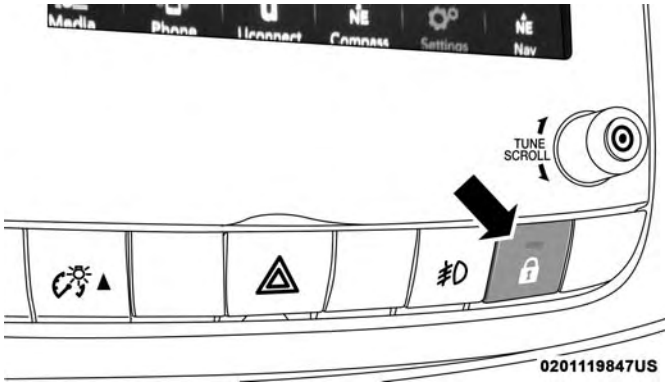


**Central Lock/Unlock Button**

Once the doors have been locked with the key fob, it will no longer be possible to unlock them by pushing central lock/unlock button.

**NOTE:** With central locking active (LED ON), opening one of the front doors, it is possible to perform a central unlocking (LED OFF). With central locking active (LED ON), in order to open one of the rear passenger doors, it is necessary pulling the internal door handle twice. With one of the rear door open (LED OFF), the unlocking is performed only for that door, not for all the vehicle.

To unlock the front doors, pull the inside door handle to the first detent. If the rear doors are locked, you must pull the door handle once to unlock the door and pull the door handle a second time to open the door.

**WARNING!**

- **Do not leave children or animals inside parked vehicles in hot weather. Interior heat build-up may cause serious injury or death.**
- **For personal security and safety in the event of a collision, lock the vehicle doors as you drive as well as when you park and leave the vehicle.**
- **Before exiting a vehicle, always shift the automatic transmission into PARK or the manual transmission into FIRST gear or REVERSE, apply the parking brake, turn the vehicle OFF, remove the key fobs**

*(Continued)*

**WARNING!** ***(Continued)***

**from vehicle, and lock all doors. and lock your vehicle.**

- **Never leave children alone in a vehicle, or with access to an unlocked vehicle. Leaving children in a vehicle unattended is dangerous for a number of reasons. A child or others could be seriously or fatally injured. Children should be warned not to touch the parking brake, brake pedal or the gear selector.**
- **Allowing children to be in a vehicle unattended is dangerous for a number of reasons. A child or others could be seriously or fatally injured. Children should be warned not to touch the parking brake, brake pedal or the gear selector.**
- **Do not leave the key fob in or near the vehicle, or in a location accessible to children. A child could operate power windows, other controls, or move the vehicle.**

**CAUTION!**

**An unlocked vehicle is an invitation. Always remove the key from the ignition and lock all doors when leaving the vehicle unattended.**

### Doors Lock With One Or More Doors Open

It is possible to lock the vehicle using the Remote Keyless Entry, internal button, or external key fob. The vehicle can also be locked if one or more doors are open. At lock command request, LED is switched ON. At closing of the last door, the vehicle maintains the central locking status if key is not inserted in Ignition Device, otherwise the vehicle will be unlocked and the LED will be switched OFF.

**NOTE:** If the key is not inserted in the ignition switch, but is inside the vehicle, the system does not recognize the presence of the key and after the closing of last door, the vehicle remains locked.

### Auto-Relocking (Only For Rear Doors)

With the vehicle locked and all doors closed (LED ON), if a passenger opens one of the rear doors (LED OFF), as soon as the door is closed, it will be locked again (LED ON).

### Child-Protection Door Lock System (Rear Doors)

To provide a safer environment for small children riding in the rear seats, the rear doors are equipped with Child-Protection Door Lock system.

**To Engage Or Disengage The Child-Protection Door Lock System**

1. Open the rear door.
2. Insert the tip of the key into the lock and rotate clockwise to the lock position or counter clockwise to unlock position.
3. Repeat steps 1 and 2 for the opposite rear door.

**WARNING!**

**Avoid trapping anyone in a vehicle in a collision. Remember that the rear doors can only be opened from the outside with the Child-Protection locks are engaged (locked).**

**NOTE:** For emergency exit from the rear seats when the Child-Protection Door Lock System is engaged, unlock the doors using the central unlock button, roll down the window and open the door using the exterior handle.

## SEATS

Seats are a part of the Occupant Restraint System of the vehicle.

**WARNING!**

- **It is dangerous to ride in a cargo area, inside or outside of a vehicle. In a collision, people riding in these areas are more likely to be seriously injured or killed.**
- **Do not allow people to ride in any area of your vehicle that is not equipped with seats and seat belts. In a collision, people riding in these areas are more likely to be seriously injured or killed.**
- **Be sure everyone in your vehicle is in a seat and using a seat belt properly.**

### Manual Adjustment (Front Seats)

**WARNING!**

- **Adjusting a seat while the vehicle is moving is dangerous. The sudden movement of the seat could cause you to lose control. The seat belt might not be adjusted properly and you could be injured. Adjust the seat only while the vehicle is parked.**
- **Do not ride with the seatback reclined so that the shoulder belt is no longer resting against your chest. In a collision you could slide under the seat belt and be seriously or even fatally injured. Use the recliner only when the vehicle is parked.**

### Forward/Rearward Adjustment

The adjusting bar is located at the front of the seats, near the floor.

While sitting in the seat, lift up on the bar and move the seat forward or rearward. Release the bar once the desired position is reached. Then, using body pressure, move forward and rearward on the seat to be sure that the seat adjusters have latched.

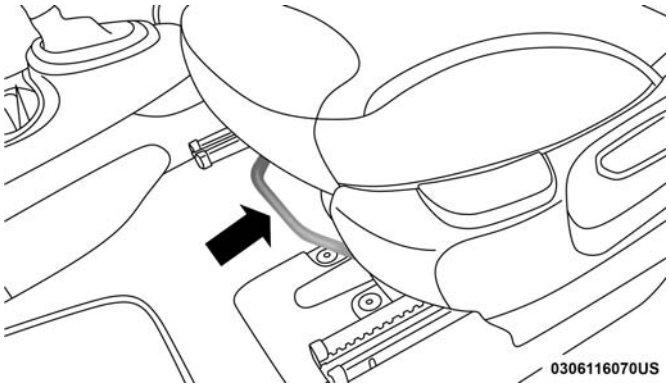


**Adjusting Bar**

### Seat Height Adjustment

The seat height adjustment lever is located on the outboard side of the seat. Pull upward on the lever to raise the seat height or push downward on the lever to lower the seat height.

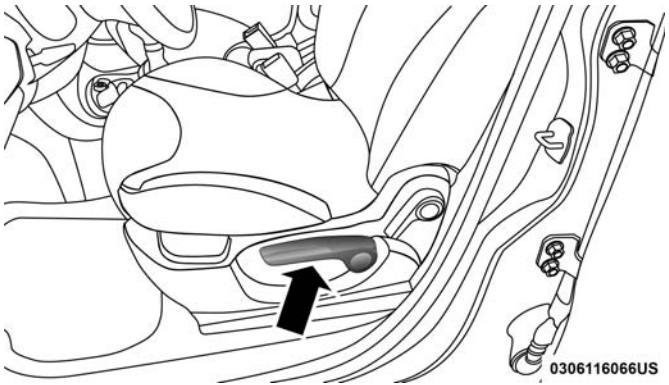


**Height Adjustment Lever**

### Recliner Adjustment

The recline lever is located on the outboard side of the seat. To recline the seat, lean forward slightly, lift the lever, lean back to the desired position and release the lever. To return the seatback to its normal upright position, lean forward and lift the lever. Release the lever once the seatback is in the upright position.

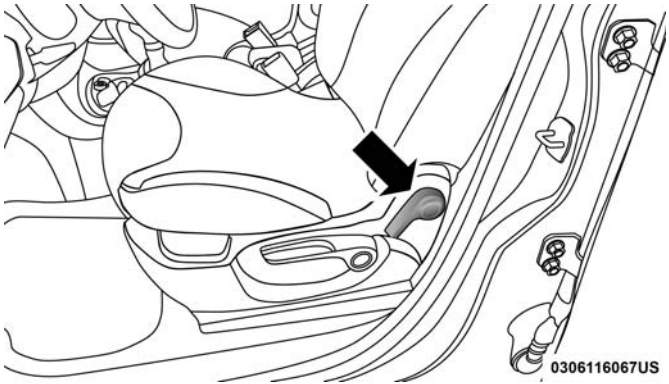


**Recline Lever**

**WARNING!**

- **Adjusting a seat while the vehicle is moving is dangerous. The sudden movement of the seat could cause you to lose control. The seat belt might not be properly adjusted, and you could be severely injured or killed. Only adjust a seat while the vehicle is parked.**
- **Do not ride with the seatback reclined so that the seat belt is no longer resting against your chest. In a collision, you could slide under the seat belt and be severely injured or killed. Use the recliner only when the vehicle is parked.**

## Manual Adjustment (Rear Seats)

### Rear Seats Forward/Rearward Adjustment

The adjusting bar is located at the front of the seats, near the floor.

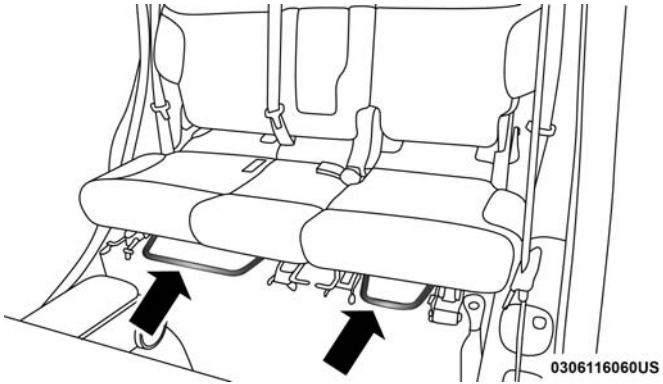


**Adjusting Bar**

While sitting in the seat, lift up on the bar and move the seat forward or rearward. Release the bar once the desired position is reached. Then, using body pressure, move forward and rearward on the seat to be sure that the seat adjusters have latched.



**WARNING!**

- **Adjusting a seat while driving may be dangerous. Moving a seat while driving could result in loss of control which could cause a collision and serious injury or death.**
- **Seats should be adjusted before fastening the seat belts and while the vehicle is parked. Serious injury or death could result from a poorly adjusted seat belt.**

### Reclining Rear Seats

The recliner handle is located on the outside of the seat cushion. To adjust the seatback, lift upward on the handle, lean back on the seatback and when you reach the desired position, release the handle.

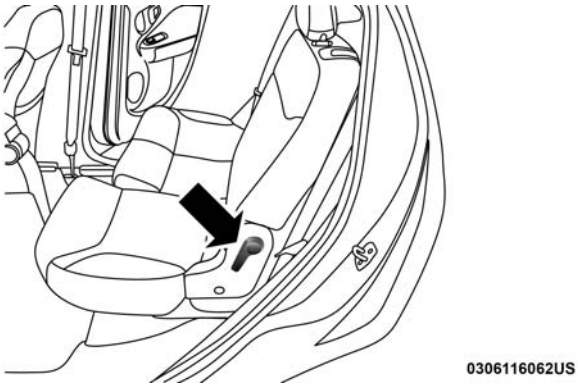


**Rear Seat Recliner Handle**

**WARNING!**

**Do not ride with the seatback reclined so that the shoulder belt is no longer resting against your chest. In a collision you could slide under the seat belt, which could result in serious injury or death.**

## Power Adjustment (Front Seats) — If Equipped

### Power Lumbar — If Equipped

Push the power lumbar switch to adjust the lumbar support. Release the switch when you reach the desired position.

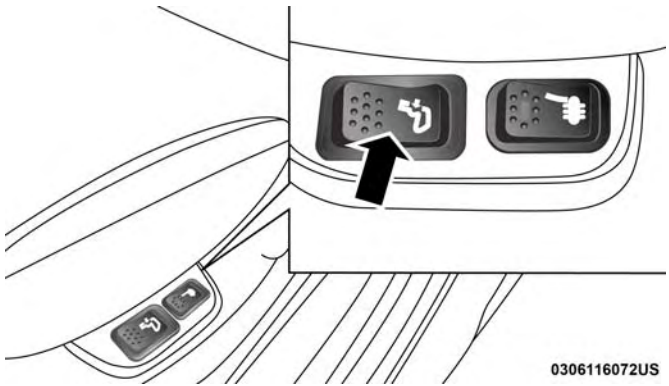


**Power Lumbar Switch**

## Heated Seats — If Equipped

On some models, the front driver and passenger seats may be equipped with heaters in both the seat cushions and seatbacks. The controls for the front heated seats are located on the outer side of the seat.

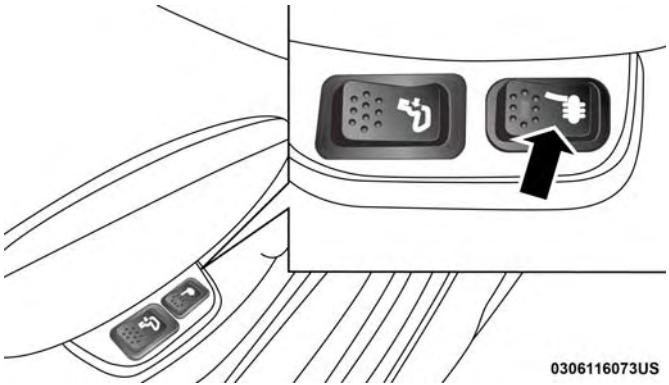


**Heated Seat Switch**

**NOTE:** Once a heat setting is selected, heat will be felt within two to five minutes.

**WARNING!**

- **Persons who are unable to feel pain to the skin because of advanced age, chronic illness, diabetes, spinal cord injury, medication, alcohol use, exhaustion or other physical condition must exercise care when using the seat heater. It may cause burns even at low temperatures, especially if used for long periods of time**
- **Do not place anything on the seat or seatback that insulates against heat, such as a blanket or cushion. This may cause the seat heater to overheat. Sitting in a seat that has been overheated could cause serious burns due to the increased surface temperature of the seat.**

## Fold And Tumble Rear Seat

**NOTE:**

- Prior to folding the rear seat, it may be necessary to reposition the front seats.
- Be sure that the front seats are fully upright and positioned forward. This will allow the rear seat to fold down easily.

1. Lift the seatback release lever located on the upper outboard side of the seat.

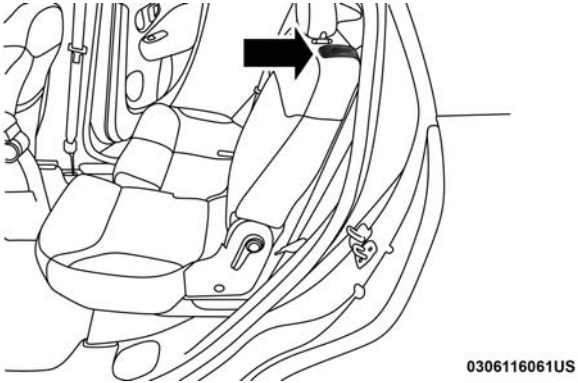


**Seatback Release Lever**

2. Fold the seatback forward.

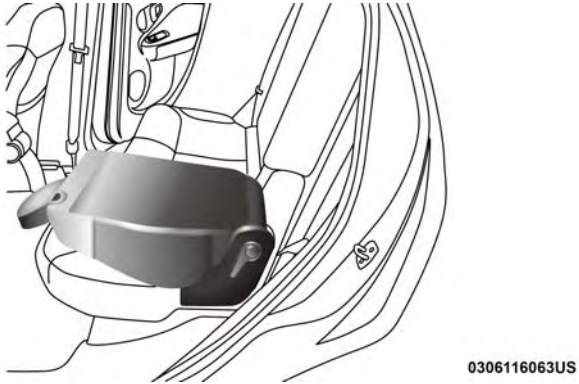


**Seatback Folded**

**NOTE:** You may experience deformation in the seat cushion from the seat belt buckles if the seats are left folded for an extended period of time. This is normal and by simply opening the seats to the open position, over time the seat cushion will return to its normal shape.

3. Locate the seatback recline lever on the outboard side of the seat and lift upward on the lever.

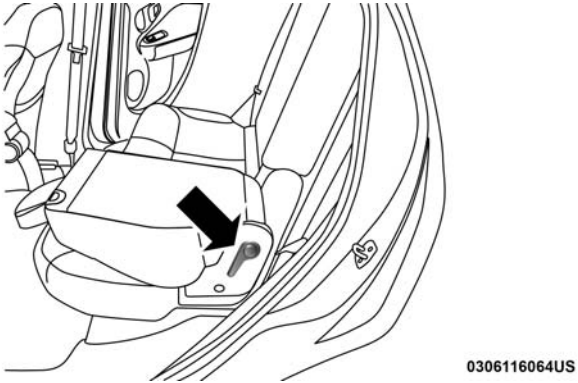


**Seatback Recline Lever**

4. Slowly flip the entire seat forward.

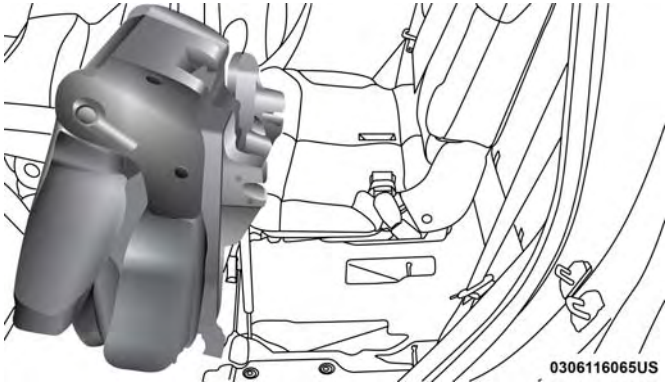


**Folding Rear Seat**

5. Slowly flip the entire seat rearward and firmly lock the seat into position.
6. Raise the rear seatback and firmly lock the seatback into position.

### Rear Armrest — If Equipped

To use the armrest, fold it downward.

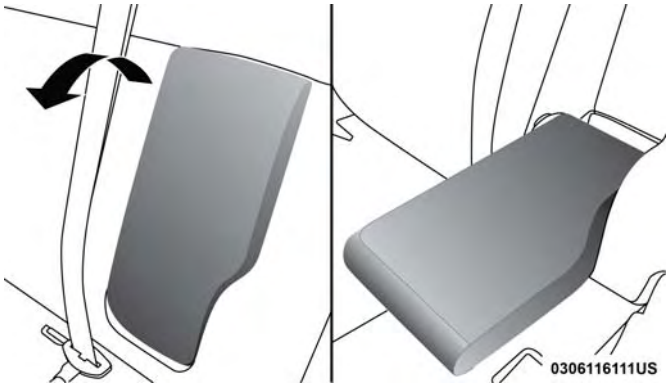


**Folding Rear Seat Armrest**

## HEAD RESTRAINTS

Head restraints are designed to reduce the risk of injury by restricting head movement in the event of a rear impact. Head restraints should be adjusted so that the top of the head restraint is located above the top of your ear.

**WARNING!**

- **All occupants, including the driver, should not operate a vehicle or sit in a vehicle's seat until the head restraints are placed in their proper positions in order to minimize the risk of neck injury in the event of a crash.**
- **Head restraints should never be adjusted while the vehicle is in motion. Driving a vehicle with the head restraints improperly adjusted or removed could cause serious injury or death in the event of a collision.**

### Reactive Head Restraints — Front Seats

The front driver and passenger seats are equipped with Reactive Head Restraints. In the event of a rear impact, the Reactive Head Restraints will automatically extend forward, minimizing the gap between the back of the occupant's head and the Reactive Head Restraint.

To raise the head restraint, pull upward on the head restraint. To lower the head restraint, push the adjustment button located at the base of the head restraint, and push downward on the head restraint.

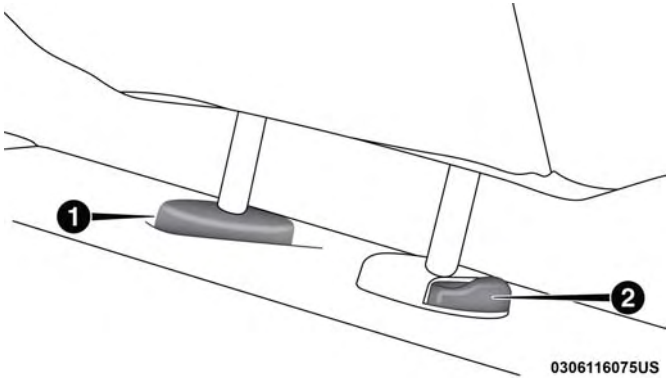


**Head Restraint**

1 — Release Button
2 — Adjustment Button

The Reactive Head Restraints will automatically return to their normal position following a rear impact. If the Reactive Head Restraints do not return to their normal position, see your authorized dealership immediately.

**NOTE:** Do not reposition the head restraint 180 degrees to the incorrect position in an attempt to gain additional clearance to the back of the head.

**WARNING!**

- **A loose head restraint thrown forward in a collision or hard stop could cause serious injury or death to occupants of the vehicle. Always securely stow removed head restraints in a location outside the occupant compartment.**
- **ALL the head restraints MUST be reinstalled in the vehicle to properly protect the occupants. Follow the re-installation instructions above prior to operating the vehicle or occupying a seat.**
- **Do not place items over the top of the Reactive Head Restraint, such as coats, seat covers or portable DVD players. These items may interfere with the operation of the Reactive Head Restraint in the event of a collision and could result in serious injury or death.**

### Rear Head Restraint Adjustment

The rear seats are equipped with adjustable head restraints, the outboard head restraints have two comfort positions, while the central head restraint has to be used in the raised position. When there are no occupants in the center seat, the head restraint can be lowered for maximum visibility for the driver. When the center seat is being occupied, the head restraint has to be in the raised position.

To raise the outboard head restraints, pull upward on the head restraint. To lower the head restraints, push the adjustment button located at the base of the head restraint, and push downward on the head restraint.

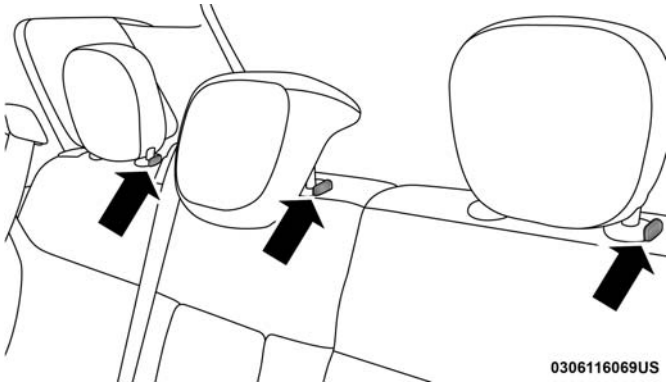


**Adjustment Buttons**

For proper routing of a Child Seat Tether, refer to "Occupant Restraints System" in "Safety."

### Front Head Restraint Removal

To remove the head restraint, raise it as far as it can go then push the adjustment button, and the release button at the base of each post while pulling the head restraint up. To reinstall the head restraint, put the head restraint posts into the holes and push downward. Then adjust it to the appropriate height.

**NOTE:** Do not reposition the head restraint 180 degrees to the incorrect position in an attempt to gain additional clearance to the back of the head.

**WARNING!**

- **A loose head restraint thrown forward in a collision or hard stop could cause serious injury or death to occupants of the vehicle. Always securely stow removed head restraints in a location outside the occupant compartment.**
- **ALL the head restraints MUST be reinstalled in the vehicle to properly protect the occupants. Follow the re-installation instructions above prior to operating the vehicle or occupying a seat.**

### Rear Head Restraint Removal

**NOTE:** If the center rear head restraint requires removal, see your authorized dealer.

To remove the outboard head restraints, raise it as far as it can go. Then, push the adjustment button and the release button at the base of each post while pulling the head restraint up. To reinstall the head restraint, put the head restraint posts into the holes and push downward. Then, adjust it to the appropriate height.

**WARNING!**

- **A loose head restraint thrown forward in a collision or hard stop could cause serious injury or death to occupants of the vehicle. Always securely stow removed head restraints in a location outside the occupant compartment.**
- **ALL the head restraints MUST be reinstalled in the vehicle to properly protect the occupants. Follow the re-installation instructions above prior to operating the vehicle or occupying a seat.**

## STEERING WHEEL

### Tilt/Telescoping Steering Column

This feature allows you to tilt the steering column upward or downward. It also allows you to lengthen or shorten the steering column. The tilt/telescoping control handle is located on the steering column, below the turn signal lever.

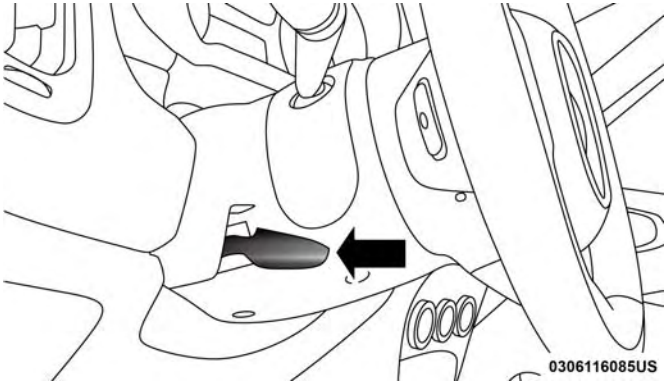


**Tilt/Telescoping Control Handle**

To unlock the steering column, pull the control handle down. To tilt the steering column, move the steering wheel upward or downward as desired. To lengthen or shorten the steering column, pull the steering wheel outward or push it inward as desired. To lock the steering column in position, push the control handle up until fully engaged.

**WARNING!**

**Do not adjust the steering column while driving. Adjusting the steering column while driving or driving with the steering column unlocked, could cause the driver to lose control of the vehicle. Failure to follow this warning may result in serious injury or death.**

## MIRRORS

### Inside Day/Night Mirror

A single ball joint mirror is provided in the vehicle. It is a twist on mirror that has a fixed position at the windshield. The mirror installs on the windshield button with a counterclockwise rotation and requires no tools for mounting. The mirror head can be adjusted up, down, left, and right for various drivers. The mirror should be adjusted to center on the view through the rear window.

Headlight glare from vehicles behind you can be reduced by moving the small control under the mirror to the night position (toward the rear of the vehicle). The mirror should be adjusted while the small control under the mirror is set in the day position (toward the windshield).

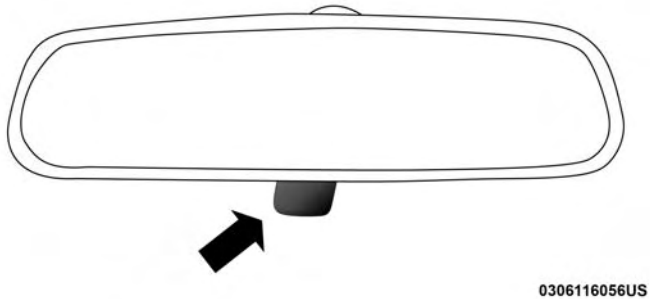


**Adjusting Rearview Mirror**

### Automatic Dimming Mirror — If Equipped

This mirror automatically adjusts for headlight glare from vehicles behind you. You can turn the feature on or off by pushing the button at the base of the mirror. A light to the left of the button will illuminate to indicate when the dimming feature is activated. The sensor to the right of the button does not illuminate.

**NOTE:** This feature is disabled when the vehicle is moving in REVERSE.

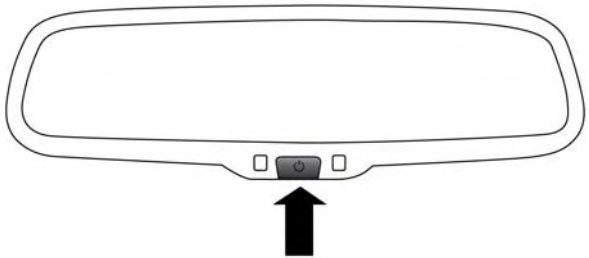


Automatic Dimming Mirror

**CAUTION!**

**To avoid damage to the mirror during cleaning, never spray any cleaning solution directly onto the mirror. Apply the solution onto a clean cloth and wipe the mirror clean.**

## Conversation Mirror — If Equipped

There is a conversation mirror located at the top of the overhead console.

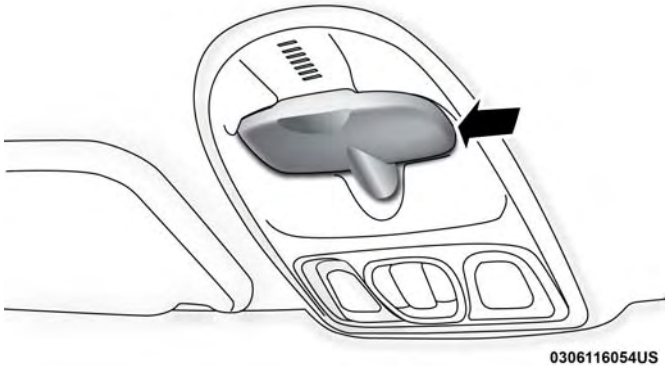


Conversation Mirror Location

To gain access to the conversation mirror, pull downward on the mirror to the open position.

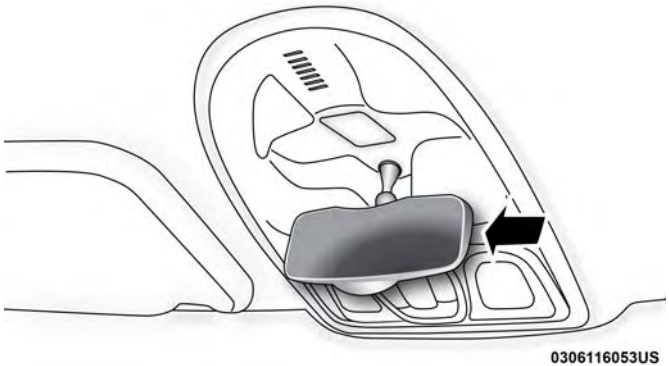


**Conversation Mirror**

## Power Mirrors

The power mirror controls are located on the driver's door trim panel. To adjust a mirror, turn the control knob toward the left or right mirror positions indicated. Tilt the control wand in the direction you want the mirror to move. When you are finished adjusting the mirror, turn the control to the center position to prevent accidentally moving a mirror.

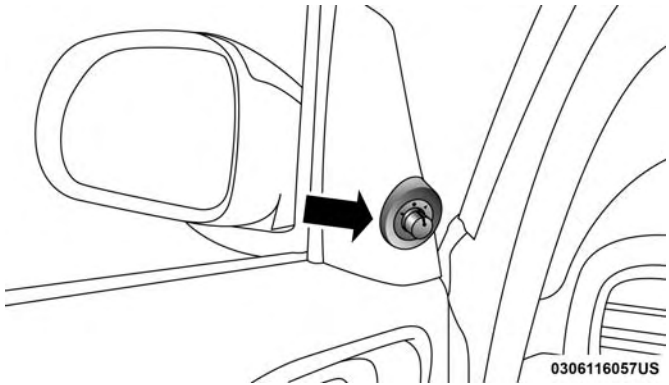


**Power Mirror Controls**

### Folding Mirrors

The exterior mirrors are hinged to allow the mirror to pivot forward or rearward to help avoid damage. The mirror has three detent positions: full forward, normal and full rearward.

### Heated Mirrors — If Equipped

These mirrors are heated to melt frost or ice. This feature will be activated whenever you turn on the rear window defroster (if equipped). Refer to "Climate Controls" in "Getting To Know Your Vehicle" for further information.

### Illuminated Vanity Mirrors — If Equipped

An illuminated vanity mirror is located on the sun visor. To use the mirror, rotate the sun visor downward and swing the mirror cover upward. The light turns on automatically. Closing the mirror cover turns off the light.

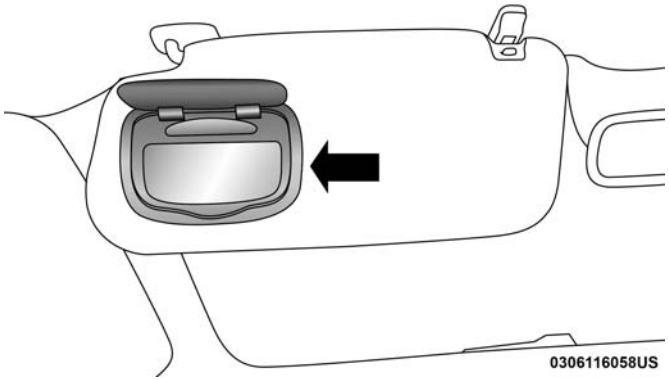


**Illuminated Vanity Mirror**

### Sun Visor "Slide-On-Rod" Feature

The sun visor "Slide-On-Rod" feature allows for additional flexibility in positioning the visor to block out the sun.

To use the "Slide-On-Rod" feature, rotate the sun visor downward and unclip it. Pull the sun visor along the "Slide-On-Rod" until the sun visor is in the desired position.

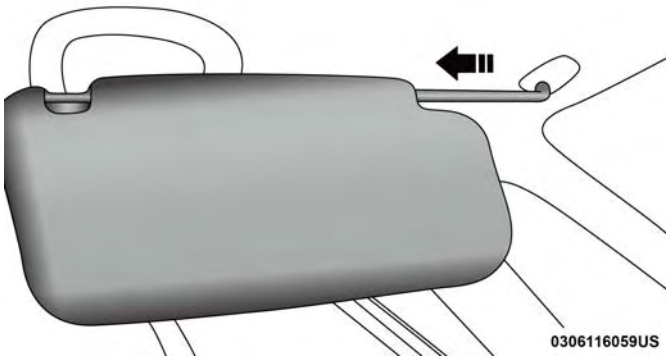


**"Slide-On-Rod" Feature**

## EXTERIOR LIGHTS

### Headlights

The multifunction lever, located on the left side of the steering wheel, controls the operation of the headlights, headlight high beams, lane change assist and turn signals.

**NOTE:** The external lights can only be turned on with the ignition in the MAR (ACC/ON/RUN) position.

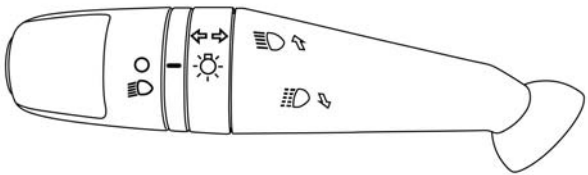

0312120803US

**Multifunction Lever**

Rotate the end of the multifunction lever upward to the first detent for headlight operation.

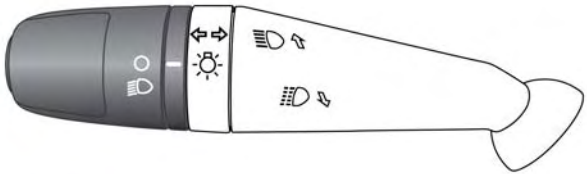

0312120804US

**Headlight Operation**

**NOTE:** When the headlights are turned on, the Daytime Running Lights will be deactivated.

## Daytime Running Lights — If Equipped

To activate the Daytime Running Lights (DRL), rotate the end of the multifunction lever to the **O** symbol.

**NOTE:** The low beams and side/tail lights will not be on with DRL.

The DRL function can be turned on or off through the touchscreen. Refer to your Uconnect Supplement Manual for further information.

## High Beams

With the low beams activated, push the multifunction lever forward (toward the front of the vehicle) to turn on the high beams. The lever will remain forward in a fixed position and the telltale will illuminate in the instrument cluster display. Pull the multifunction lever rearward (toward the rear of the vehicle) to turn off the high beams.

## Flash-To-Pass

You can signal another vehicle with your headlights by lightly pulling the multifunction lever toward you. This will cause the headlights to turn on at high beam and remain on until the lever is released.

## Parking Lights

To turn on the parking lights, remove the key or turn the ignition to STOP (OFF/LOCK) position and turn on the headlights.

**NOTE:** If the parking lights are left on and the key is in the stop position with the door open, an audible chime will sound and a message will show in the instrument cluster display. The chime will stop as soon as the door is closed or the lights are switched off.

## Follow Me Home/Headlight Delay

When this feature is selected, the driver can choose to have the headlights remain on for a preset period of time after the engine is turned OFF.

### Activation

Remove the key or turn the ignition to the STOP (OFF/LOCK) position, and pull the multifunction lever toward the steering wheel within two minutes. Each time the lever is pulled, the activation of the lights will be extended by 30 seconds. The activation of the lights can be extended to a maximum of 210 seconds.

### Deactivation

Pull the multifunction lever toward the steering wheel and hold it for more than two seconds.

### Front Fog Lights — If Equipped

The fog light switch is located on the center stack of the instrument panel, just below the radio. Push the switch once to turn the front fog lights on. Push the switch a second time to turn the front fog lights off.

### Courtesy Lights/Approaching Lights

This feature allows the driver to locate the vehicle when parked in dark areas. It can be enabled through the Uconnect system.

Through the Uconnect menu, the driver can choose between the following activation times: 0, 30, 60, or 90 seconds.

To switch off the feature, select 0 seconds.

When the vehicle is unlocked, the low beams and parking lights will turn on for the time specified. Once the door is opened, the lights will remain on for an additional three minutes, or until all doors are closed. Once all doors are closed, the lights will turn off after ten seconds.

The lights can also be turned off by:

- Locking the door.
- Placing the ignition in the “START” or “RUN” position.

Refer to “Uconnect Settings” in “Multimedia” for further information.



## INTERIOR LIGHTS

### Interior Lights Controls

The interior light switches are located in the overhead console. The interior lights can be set to three different positions (Off/Left Position, Center Position, On/Right Position).

Using the switch on the bottom of the overhead console, push the switch to the on/right position from its center position and the lights are always on.

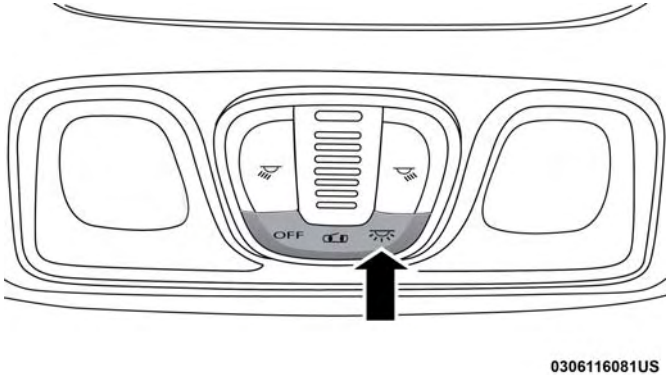


**On/Right Position**

Push the switch to the off/left position from its center position and the lights are always off.

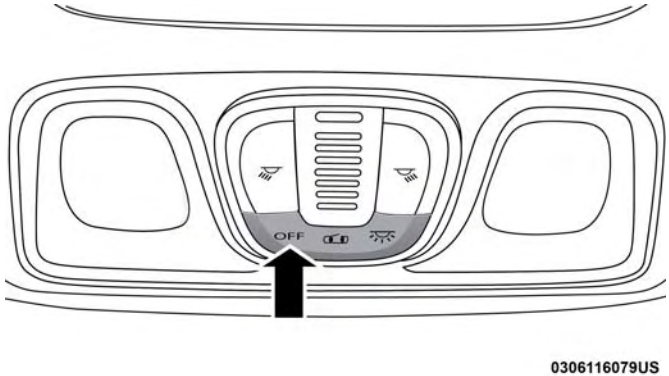


**Off/Left Position**

Leave the switch in the center position, and the lights are turned on and off when the doors are opened or closed.

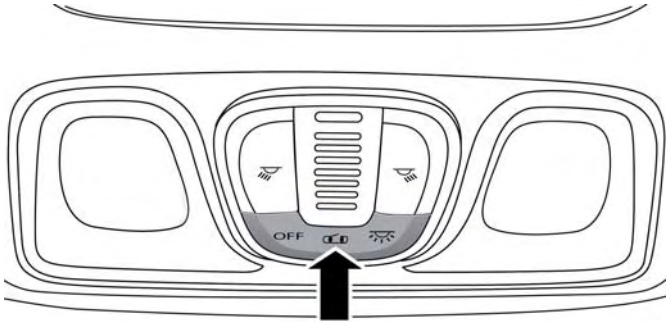


0306116080US

**Center Position**

The switches on the left and right sides of the overhead console controls the map or reading function of the lights. Push the switch to the right to turn on the right light and push the switch to the left to turn on the left light.

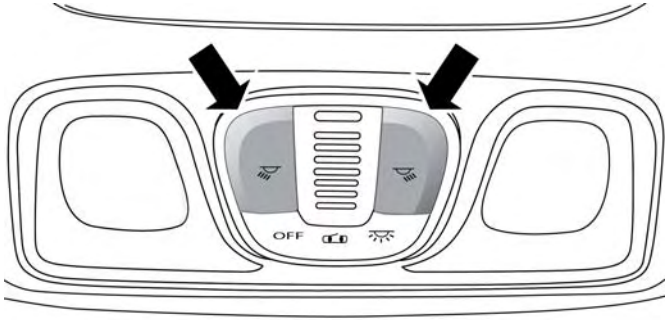


0306116078US

**Map/Reading Light Switches**

**CAUTION!**

**Before getting out of the vehicle be sure that the switch is in the center position or that the lights are off to avoid draining the battery.**

**Interior Light Timing (Center Position)**

There are four different modes of operation that can be activated in this position:

- When one door is opened, a three minute timer is activated.
- When the key is removed from the ignition (within two minutes of the ignition being turned OFF), a 10 second timer is activated.
- When the doors are unlocked with the key fob, a 10 second timer is activated.
- When the doors are locked with the key fob, the lights will turn off.

**Interior Light Timing (On/Right Position)**

When all doors are closed a 15-minute timer is activated.

**NOTE:** The timer is deactivated when the key is moved into the ON/RUN position.

## WIPERS AND WASHERS

The windshield wiper/washer lever is located on the right side of the steering column.

**NOTE:** The windshield wipers/washers will only operate with the ignition in the ON/RUN position.

### Front Wiper Operation

There are five different modes of operation for the front windshield wipers. The windshield wiper lever can be raised or lowered to access these modes.

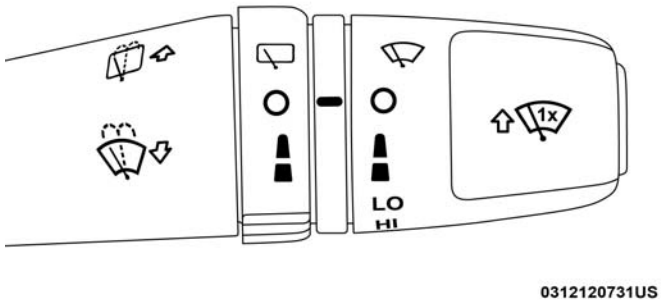


**Windshield Wiper Lever**

**Windshield Wiper Off**

O This is the normal position of the wiper lever.

### Intermittent Wiper System

#### Intermittent Low Speed

Rotate the end of the lever upward to the first detent for low intermittent speed to operate the wipers with a fixed pause of ten seconds.

#### Intermittent High Speed

Rotate the end of the lever upward to the second detent for high intermittent speed to operate the wipers with a delay that is dependent on the speed of the vehicle.

#### Low Continuous Speed

Rotate the end of the lever upward to the third detent to operate the wipers at a low continuous speed.

#### High Continuous Speed

Rotate the end of the lever upward to the fourth detent to operate the wipers at a high continuous speed.

#### Front Windshield Washer Operation

Pull the windshield wiper/washer lever toward the steering wheel to activate the washers. The wipers will activate automatically for three cycles after the lever is released.

0312121340US

Front Windshield Washer Operation

**CAUTION!**

- **Turn the windshield wipers off when driving through an automatic car wash. Damage to the windshield wipers may result if the wiper control is left in any position other than off.**
- **In cold weather, always turn off the wiper switch and allow the wipers to return to the park position before turning off the engine. If the wiper switch is left on and the wipers freeze to the windshield, damage to**

*(Continued)*

**CAUTION!** ***(Continued)***

**the wiper motor may occur when the vehicle is restarted.**

- **Always remove any buildup of snow that prevents the windshield wiper blades from returning to the off position. If the windshield wiper control is turned off and the blades cannot return to the off position, damage to the wiper motor may occur.**

### Manual High Speed/Mist

Push the lever upward from the off position. The wipers will operate at high speed to clear off road mist or spray from a passing vehicle. This operation will continue until the lever is released. When the lever is released, the wipers will return to the off position and automatically shut off.

## Rear Wiper/Washer Operation

### Activation

Rotate the windshield wiper lever center ring upward to operate the rear window wiper as follows:

- In intermittent mode, when the front windshield wiper is not operating and the lever is in the "intermittent" position.
- In synchronous mode (at half the speed of the front window wiper), when the front windshield wiper is operating and the lever is in the "intermittent" position, or when the reverse gear is engaged, the front windshield wiper is operating, and the lever is in the "off" **O** position.
- In continuous mode, when the lever is in the "continuous" position.

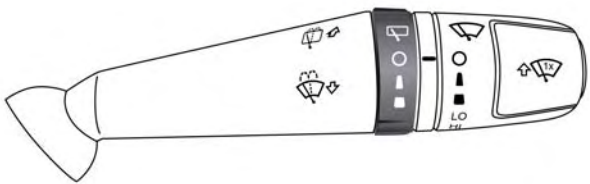


0312121341US

**Rear Window Wiper Operation**

Pushing the windshield wiper lever forward activates the rear window washer. Keep the windshield wiper lever pushed for more than half a second to activate the rear

window wiper as well. Releasing the windshield wiper lever will activate the smart washing function, as described for the windscreen wiper.

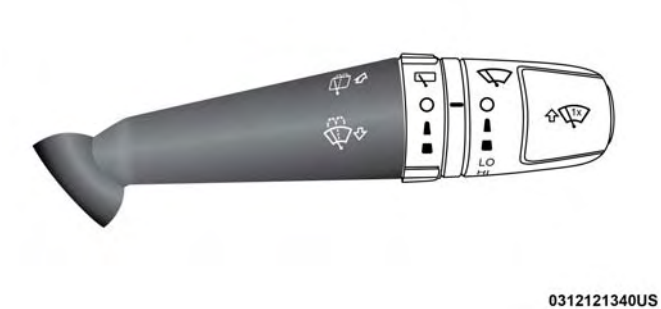


**Rear Window Washer Operation**

**Deactivation**

The function stops when the windshield wiper lever is released.

## CLIMATE CONTROLS

### Manual Climate Control Overview



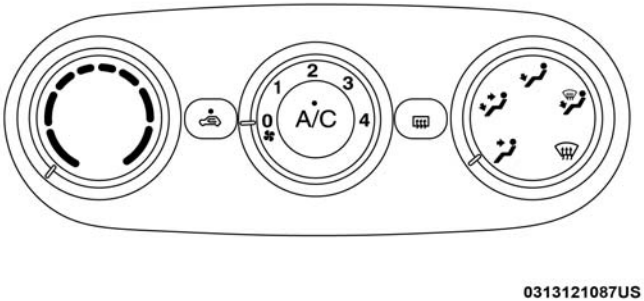


**Manual Climate Controls**

## Manual Climate Control Descriptions

| Icon | Description |
|---|---|
| A/C | **A/C Button**<br>Push the A/C button to engage the Air Conditioning (A/C). A LED will illuminate when the A/C system is engaged. |
| | **Recirculation Button**<br>Push and release this button to change the system between recirculation mode and outside air mode. Recirculation can be used when outside conditions such as smoke, odors, dust, or high humidity are present.<br>**NOTE:**<br>• Continuous use of the Recirculation mode may make the inside air stuffy and window fogging may occur. Extended use of this mode is not recommended.<br>• The use of the Recirculation mode in cold or damp weather could cause windows to fog on the inside, because of moisture buildup inside the vehicle. Select the outside air position for maximum defogging.<br>• Recirculation can be used in all modes except for Defrost.<br>• The A/C can be deselected manually without disturbing the mode control selection. |
| REAR | **Rear Defrost Button**<br>Push and release the Rear Defrost Control button to turn on the rear window defroster and the heated outside mirrors (if equipped). An indicator will illuminate when the rear window defroster is on. The rear window defroster automatically turns off after ten minutes. |

| Icon | Description |
|---|---|
| | **Temperature Control**<br>Use this control to regulate the temperature of the air inside the passenger compartment. Rotating the knob counterclockwise, from top center into the blue area of the scale, indicates cooler temperatures. Rotating the knob clockwise, into the red area, indicates warmer temperatures. |
| | **Blower Control**<br>There are seven blower speeds. Use this control to regulate the amount of air forced through the system in any mode you select. The blower speed increases as you move the control clockwise from the off position.<br>**NOTE:** Depending on the configuration, your vehicle may be equipped with four blower speeds. |
| **Panel Mode** | **Panel Mode**<br>Air comes from the outlets in the instrument panel. Each of these outlets can be individually adjusted to direct the flow of air. The air vanes of the center outlets and outboard outlets can be moved up and down or side to side to regulate airflow direction. There is a shut off wheel located below the air vanes to shut off or adjust the amount of airflow from these outlets. |
| **Bi-Level Mode** | **Bi-Level Mode**<br>Air comes from the instrument panel outlets and floor outlets. A slight amount of air is directed through the defrost and side window demister outlets.<br>**NOTE:** BI-LEVEL mode is designed under comfort conditions to provide cooler air out of the panel outlets and warmer air from the floor outlets. |

| Icon | Description |
|---|---|
| Floor Mode | **Floor Mode**<br>Air comes from the floor outlets. A slight amount of air is directed through the defrost and side window demister outlets. |
| Mix Mode | **Mix Mode**<br>Air is directed through the floor, defrost, and side window demister outlets. This setting works best in cold or snowy conditions that require extra heat to the windshield. This setting is good for maintaining comfort while reducing moisture on the windshield. |
| Front Defrost Mode<br>FRONT | **Front Defrost Mode**<br>Turn the knob clockwise to change the current airflow setting to Defrost mode. Air comes from the windshield and side window demist outlets. When the defrost button is selected, the blower level will increase. Use Defrost mode with maximum temperature settings for best windshield and side window defrosting and defogging. |

**Additional Electric Heater — If Equipped**

The additional electric heater ensures more rapid passenger compartment heating.

It activates in cold weather conditions, if the following conditions are verified:

- Outside temperature low;
- Engine coolant temperature low;
- Engine on;
- Fan speed set to 1st speed;
- Temperature Control knob turned completely clockwise to red section.

The heater is switched off when at least one of the conditions above is no longer verified.

**NOTE:** The power of the electric heater is modulated according to the battery voltage.

**CAUTION!**

**Failure to follow these cautions can cause damage to the heating elements:**

- **Use care when washing the inside of the rear window. Do not use abrasive window cleaners on the interior surface of the window. Use a soft cloth and a mild washing solution, wiping parallel to the heating elements. Labels can be peeled off after soaking with warm water.**
- **Do not use scrapers, sharp instruments, or abrasive window cleaners on the interior surface of the window.**
- **Keep all objects a safe distance from the window.**

## Automatic Climate Control Overview



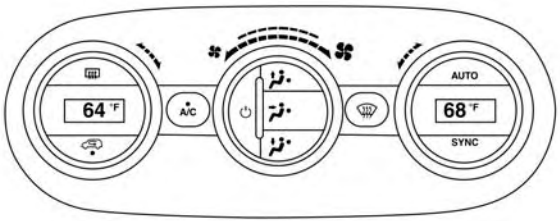


1004114090US

Automatic Climate Controls

## Automatic Climate Control Descriptions

| Icon | Description |
|---|---|
| A/C | **A/C Button**<br>Push and release to change the current setting, the indicator illuminates when A/C is on. Performing this function again will cause the A/C operation to switch into manual mode and the A/C indicator will turn off. |

| Icon | Description |
|---|---|
| | **Recirculation Button**<br>Push and release this button to change the system between recirculation mode and outside air mode. Recirculation can be used when outside conditions such as smoke, odors, dust, or high humidity are present.<br>**NOTE:**<br>• Continuous use of the Recirculation mode may make the inside air stuffy and window fogging may occur. Extended use of this mode is not recommended.<br>• The use of the Recirculation mode in cold or damp weather could cause windows to fog on the inside, because of moisture buildup inside the vehicle. Select the outside air position for maximum defogging.<br>• Recirculation can be used in all modes except for Defrost.<br>• The A/C can be deselected manually without disturbing the mode control selection. |
| AUTO | **AUTO Button — If Equipped**<br>Automatically controls the interior cabin temperature by adjusting airflow distribution and amount. Performing this function will cause the system to switch between manual mode and automatic modes. Refer to “Automatic Operation” for more information. |
| FRONT | **Front Defrost Button**<br>Push and release to change the current airflow setting to Defrost mode. The indicator illuminates when this feature is on. Air comes from the windshield and side window demist outlets. When the defrost button is selected, the blower level will increase. Use Defrost mode with maximum temperature settings for best windshield and side window defrosting and defogging. Performing this function will cause the ATC to switch into manual mode. If the front defrost mode is turned off the climate system will return the previous setting. |

| Icon | Description |
|---|---|
| REAR | **Rear Defrost Button**<br>Push and release the Rear Defrost Control button to turn ON the rear window defroster and the heated outside mirrors (if equipped). An indicator will illuminate when the rear window defroster is on. The rear window defroster automatically turns off after ten minutes. |
| AUTO 68° SYNC | **Passenger Temperature Knob**<br>Provides the passenger with independent temperature control. Rotate the knob clockwise for warmer temperature settings. Rotate the knob counterclockwise for cooler temperature settings. When the SYNC feature is active, the passenger's temperature will move up with the driver's temperature, when it is increased. |
| | **Blower Control Knob**<br>Blower Control is used to regulate the amount of air forced through the climate system. There are seven blower speeds available. The speeds can be selected using the blower control knob on the faceplate. The blower speed increases as you turn the blower control knob clockwise from the lowest blower setting. The blower speed decreases as you turn the blower control knob counterclockwise. |
| Panel Mode | **Panel Mode**<br>Air comes from the outlets in the instrument panel. Each of these outlets can be individually adjusted to direct the flow of air. The air vanes of the center outlets and outboard outlets can be moved up and down or side to side to regulate airflow direction. There is a shut off wheel located below the air vanes to shut off or adjust the amount of airflow from these outlets. |

| Icon | Description |
|---|---|
| **Bi-Level Mode** | **Bi-Level Mode**<br>Air comes from the instrument panel outlets and floor outlets. A slight amount of air is directed through the defrost and side window demister outlets.<br>**NOTE:** BI-LEVEL mode is designed under comfort conditions to provide cooler air out of the panel outlets and warmer air from the floor outlets. |
| **Floor Mode** | **Floor Mode**<br>Air comes from the floor outlets. A slight amount of air is directed through the defrost and side window demister outlets. |
| **Mix Mode** | **Mix Mode**<br>Air is directed through the floor, defrost, and side window demister outlets. This setting works best in cold or snowy conditions that require extra heat to the windshield. This setting is good for maintaining comfort while reducing moisture on the windshield. |
| | **Climate Control Power Button**<br>Push and release this button to turn the Climate Control on/off. |
| | **Driver Temperature Knob**<br>Provides the driver with independent temperature control. Rotate the knob clockwise for warmer temperature settings. Rotate the knob counterclockwise for cooler temperature settings. When the SYNC feature is active, the driver's temperature will move down with the passenger's temperature, when it is decreased. |

**CAUTION!**

**Failure to follow these cautions can cause damage to the heating elements:**

- **Use care when washing the inside of the rear window. Do not use abrasive window cleaners on the interior surface of the window. Use a soft cloth and a mild washing solution, wiping parallel to the heating elements. Labels can be peeled off after soaking with warm water.**
- **Do not use scrapers, sharp instruments, or abrasive window cleaners on the interior surface of the window.**
- **Keep all objects a safe distance from the window.**

### System Maintenance

In winter, the climate control system must be turned on at least once a month for about ten minutes.

Have the system inspected at an authorized dealership before the summer.

**NOTE:** The system uses R-1234yf coolant which does not pollute the environment in the event of accidental leakage. Under no circumstances is the use of R-134a allowed.

## Climate Control Functions

### A/C (Air Conditioning)

The Air Conditioning (A/C) button allows the operator to manually activate or deactivate the air conditioning system. When the air conditioning system is turned on, cool dehumidified air will flow through the outlets into the cabin. For improved fuel economy, push the A/C button to turn off the air conditioning and manually adjust the blower and airflow mode settings. Also, make sure to select only Panel, Bi-Level or Floor modes.

**NOTE:**

- If fog or mist appears on the windshield or side glass, select Defrost mode and increase blower speed if needed.
- If your air conditioning performance seems lower than expected, check the front of the A/C condenser (located in front of the radiator), for an accumulation of dirt or insects. Clean with a gentle water spray from the front of the radiator and through the condenser.

### Recirculation

When outside air contains smoke, odors, or high humidity, or if rapid cooling is desired, you may wish to recirculate

interior air by pushing the Recirculation control button. The recirculation indicator will illuminate when this button is selected. Push the button a second time to turn off the Recirculation mode and allow outside air into the vehicle.

**NOTE:** In cold weather, use of recirculation mode may lead to excessive window fogging. The recirculation feature may be unavailable (button on the touchscreen greyed out) if conditions exist that could create fogging on the inside of the windshield. On systems with Manual Climate Controls, the Recirculation mode is not allowed in Defrost mode to improve window clearing operation. Recirculation will be disabled automatically if this mode is selected. Attempting to use Recirculation while in this mode will cause the LED in the control button to blink and then turn off.

## Automatic Temperature Control (ATC) — If Equipped

### Automatic Operation

1. Push the AUTO button on the faceplate.
2. Next, adjust the temperature you would like the system to maintain by adjusting the driver and passenger temperature control buttons. Once the desired temperature is displayed, the system will achieve and automatically maintain that comfort level.
3. When the system is set up for your comfort level, it is not necessary to change the settings. You will experience the greatest efficiency by simply allowing the system to function automatically.

**NOTE:**

- It is not necessary to move the temperature settings for cold or hot vehicles. The system automatically adjusts the temperature, mode, and blower speed to provide comfort as quickly as possible.
- The temperature can be displayed in U.S. or Metric units by selecting the US/Metric customer-programmable feature.

To provide you with maximum comfort in the Automatic mode during cold start-ups, the blower fan will remain on low until the engine warms up. The blower will increase in speed and transition into Auto mode.

### Manual Operation Override

This system offers a full complement of manual override features. The AUTO symbol in the front ATC display will be turned off when the system is being used in the manual mode.

**NOTE:** The system will not automatically sense the presence of fog, mist or ice on the windshield. DEFROST mode must be manually selected to clear the windshield and side glass.

## Operating Tips

**NOTE:** Refer to the chart at the end of this section for suggested control settings for various weather conditions.

### Summer Operation

The engine cooling system must be protected with a high-quality antifreeze coolant to provide proper corrosion protection and to protect against engine overheating. OAT coolant (conforming to MS.90032) is recommended.

### Winter Operation

To ensure the best possible heater and defroster performance, make sure the engine cooling system is functioning properly and the proper amount, type, and concentration of coolant is used. Use of the Air Recirculation mode during Winter months is not recommended, because it may cause window fogging.

### Vacation/Storage

Before you store your vehicle, or keep it out of service (i.e., vacation) for two weeks or more, run the air conditioning system at idle for about five minutes, in fresh air with the blower setting on high. This will ensure adequate system lubrication to minimize the possibility of compressor damage when the system is started again.

### Window Fogging

Vehicle windows tend to fog on the inside in mild, rainy, and/or humid weather. To clear the windows, select Defrost or Mix mode and increase the front blower speed. Do not use the Recirculation mode without A/C for long periods, as fogging may occur.

### Outside Air Intake

Make sure the air intake, located directly in front of the windshield, is free of obstructions, such as leaves. Leaves collected in the air intake may reduce airflow, and if they enter the plenum, they could plug the water drains. In winter months, make sure the air intake is clear of ice, slush, and snow.

### Cabin Air Filter

The climate control system filters out dust and pollen from the air. Contact an authorized dealer to service your cabin air filter, and to have it replaced when needed.

## Operating Tips Chart

| WEATHER | CONTROL SETTINGS |
|---|---|
| Hot weather and vehicle interior is very hot | Set the mode control to , on, and blower on high. Roll down the windows for a minute to flush out the hot air. Once comfort is achieved adjust controls for comfort. |
| Warm weather | Turn on and set the mode control to the position. |
| Cool Sunny | Operate in position. |
| Cool & Humid conditions | Set the mode control to and turn on to keep windows clear. |
| Cold Weather | Set the mode control to the position. If windshield fogging starts to occur, move the control towards the position. |

8000cb71

# WINDOWS

## Power Windows

### Power Window Controls

The power window controls are located on the driver's door trim panel. There is a single switch on the front passenger door, which operate the front passenger window and a single switch on each rear door that operates the rear passenger door window. The window controls will operate only when the ignition switch is in the ON/RUN position.

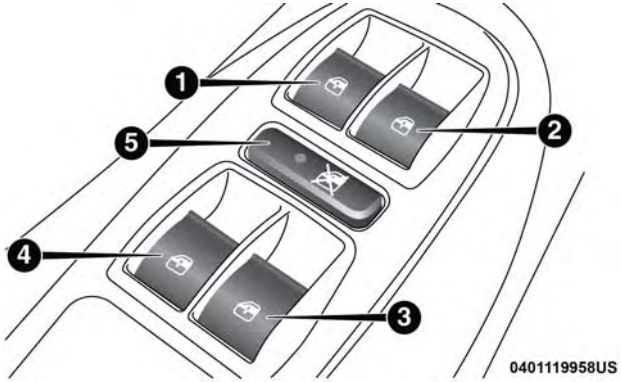


**Power Window Switch Panel**

1 — Driver Side Front Window Switch
2 — Passenger Side Front Window Switch
3 — Passenger Side Rear Window Switch
4 — Driver Side Rear Window Switch
5— Window Lockout Switch

**NOTE:** The power window switches will remain active for up to three minutes after the ignition switch is cycled to the OFF position. Opening either front door will cancel this feature.

**WARNING!**

**Never leave children unattended in a vehicle, and do not let children play with power windows. Do not leave the key fob in or near the vehicle, or in a location accessible to children. Occupants, particularly unattended children, can become entrapped by the windows while operating the power window switches. Such entrapment may result in serious injury or death.**

### Auto-Down

The window switches have an Auto-Down feature. Push the window switch for approximately one second, release, and the window will go down automatically. To cancel the Auto-Down movement, operate the switch in either the up or down direction and release the switch. To open the window part way, pull the window switch briefly, and release the switch when the window is in the desired position.

### Auto-Up Feature With Auto-Reverse Protection — If Equipped

Pull the window switch for approximately one second, release and the window will go up automatically.

To stop the window during an Auto-Up operation, push or pull again the window switch.

To close the window part way, pull the window switch briefly and release it when you want the window to stop.

**NOTE:**

- If the window runs into any obstacle during Auto-Closure, it will reverse direction and then go back down. Remove the obstacle and use the window switch again to close the window.
- Any impact due to rough road conditions may trigger the Auto-Reverse function unexpectedly during Auto-Closure. If this happens, pull the switch and hold to close the window manually.

**WARNING!**

**There is no auto-reverse protection when the window is almost closed. Be sure to clear all objects from the window before closing.**

**Resetting The Auto-Up Feature**

Should the Auto-Up feature stop working, the window probably needs to be reset. To reset Auto-Up:

1. Pull the window switch up to close the window completely and continue to hold the switch up for an additional two seconds after the window is closed.
2. Push the window switch down to open the window completely and continue to hold the switch down for an additional two seconds after the window is fully open.

### Wind Buffeting

Wind buffeting can be described as the perception of pressure on the ears or a helicopter-type sound in the ears. Your vehicle may exhibit wind buffeting with the windows down, or the sunroof (if equipped) in certain open or partially open positions. This is a normal occurrence and can be minimized. If the buffeting occurs with the rear windows open, open the front and rear windows together to minimize the buffeting. If the buffeting occurs with the sunroof open, adjust the sunroof opening to minimize the buffeting or open any window.

## POWER SUNROOF — IF EQUIPPED

The sunroof has two glass panels (the front one is operational and the rear one fixed) and is equipped with an electrically operated sun blind.

The power sunroof and the power sun blind can be operated only with the ignition key turned to the MAR position.

The power sunroof and power sun blind switches are located in the overhead console.

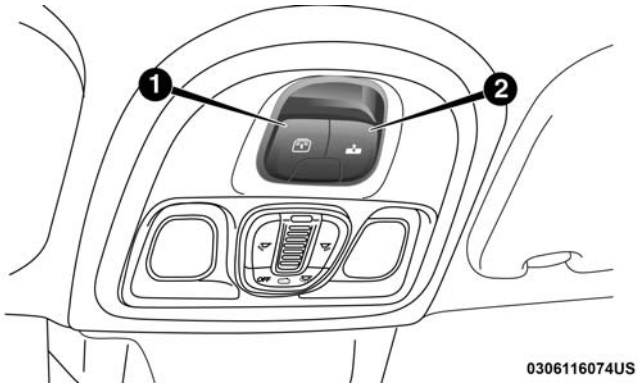


**Power Sunroof Switches**

1 — Power Sun Blind Switch
2 — Power Sunroof Switch

**WARNING!**

- **Never leave children alone in a vehicle, or with access to an unlocked vehicle. Never leave the key fob in or near the vehicle or in a location accessible to children. Occupants, particularly unattended children, can become entrapped by the power sunroof while operating the power sunroof switch. Such entrapment may result in serious injury or death.**
- **In a collision, there is greater risk of being thrown from a vehicle with an open sunroof. You could also be seriously injured or killed. Always fasten your seat belt properly and make sure all passengers are properly secured too.**
- **Do not allow small children to operate the sunroof. Never allow your fingers, other body parts, or any object to project through the sunroof opening. Injury may result.**

## Opening

Pull the power sunroof switch for approximately one second and the sunroof will stop at the vented position. Pull the power sunroof switch a second time for approximately one second and release, the sunroof will open fully, then stop automatically. This is called “Express Open”. To

open the sunroof partway, pull the power sunroof switch briefly and release it when you want the sunroof to stop.

**NOTE:** During Express Open operation, any movement of the sunroof switch will stop the sunroof.

### Closing

With the sunroof in the full open position, pull and hold the power sunroof switch for approximately one second and release. The sunroof will close completely, then stop automatically. This is called "Express Close." To close the sunroof partway, pull the power sunroof switch briefly and release it when you want the sunroof to stop.

**NOTE:** During Express Close operation, any movement of the sunroof switch will stop the sunroof.

### Anti-Pinch Protect Feature

This feature will detect an obstruction in the closing of the sunroof during the Express Close operation. If an obstruction in the path of the sunroof is detected, the sunroof will automatically retract. Remove the obstruction if this occurs.

### Sunroof Reinitialization

1. Place the ignition in the ON/RUN mode.
2. Push and hold the power sunroof close switch until the sunroof is completely closed and you hear an audible click.
3. Push and hold the power sunroof close switch again within five seconds. Do not release the switch.
4. As the power sunroof close switch is held, the sunroof panel will open completely and then close again.
5. Once all sunroof motion has stopped, release the power sunroof close switch.

**NOTE:** If the switch is released prior to completion of this procedure, the procedure must be repeated.

6. Confirm that express operation is functional for open and close operations.

### Wind Buffeting

Wind buffeting can be described as the perception of pressure on the ears or a helicopter-type sound in the ears. Your vehicle may exhibit wind buffeting with the windows down, or the sunroof (if equipped) in certain open or partially open positions. This is a normal occurrence and can be minimized. If the buffeting occurs with the rear windows open, then open the front and rear windows together to minimize the buffeting. If the buffeting occurs

with the sunroof open, adjust the sunroof opening to minimize the buffeting or open any window.

### Power Sun Blind

#### Opening

Pull the sun blind switch for approximately one second and the sun blind will open completely, then stop automatically. This is called "Express Open."

To open the sun blind partway, pull the sun blind switch briefly and release it when you want the sun blind to stop.

With the blind fully open pull the power sun blind switch and the blind will move towards the front part of the vehicle, until it is fully closed.

**NOTE:** During the automatic opening and closing stages, if the power sun blind switch is pulled again it will stop the blind movement.

#### Closing

With the sun blind fully open, pull and hold the power sun blind switch for approximately one second and release. The sun blind will close completely, then stop automatically. This is called "Express Close."

To close the sun blind partway, pull the sun blind switch briefly and release it when you want the sun blind to stop.

## HOOD

### Opening

To open the hood, two latches must be released to open the hood.



1. Pull the hood release lever located under the left side of the instrument panel.

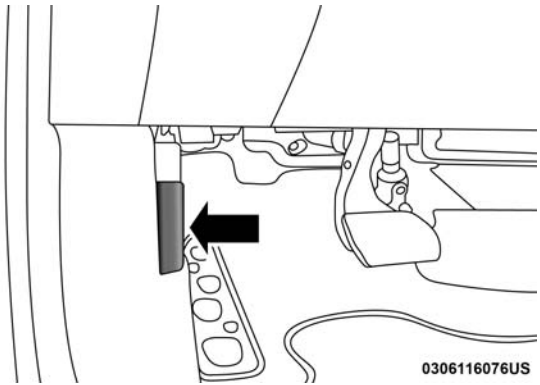


**Hood Release Lever**

2. Move to the outside of the vehicle and push the red safety catch lever to the left and raise the hood. The safety catch lever is located under the center front edge of the hood.

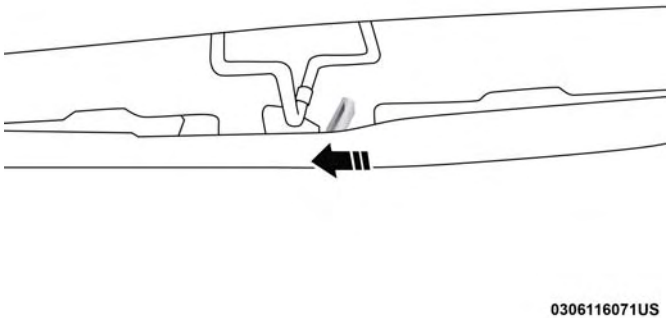


**Safety Catch Lever**

## Closing

**WARNING!**

**Be sure the hood is fully latched before driving your vehicle. If the hood is not fully latched, it could open when the vehicle is in motion and block your vision. Failure to follow this warning could result in serious injury or death.**

**CAUTION!**

**To prevent possible damage, do not slam the hood to close it. Lower hood to approximately 12 inches (30 cm) and drop the hood to close. Make sure hood is fully closed for both latches. Never drive vehicle unless hood is fully closed, with both latches engaged.**

## LIFTGATE

### Opening

To unlock the liftgate, use the key fob or activate the central locking button located on the instrument panel below the radio.

To open the liftgate, push the liftgate electronic release and pull the liftgate open with one fluid motion.

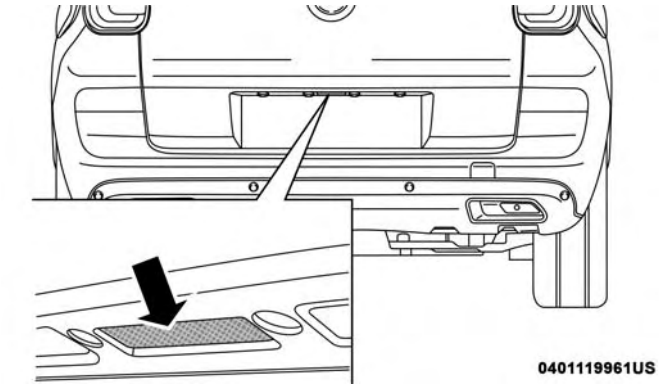


**Liftgate Electronic Release**

**WARNING!**

- **Driving with the liftgate open can allow poisonous exhaust gases into your vehicle. You and your passengers could be injured by these fumes. Keep the liftgate closed when you are operating the vehicle.**
- **If you are required to drive with the liftgate open, make sure that all windows are closed, and the climate control blower switch is set at high speed. Do not use the recirculation mode.**

Gas props support the liftgate in the open position. However, because the gas pressure drops with temperature, it may be necessary to assist the props when opening the liftgate in cold weather.

### Liftgate Emergency Release

As a security measure, a liftgate emergency release is built into the liftgate latching mechanism. To access the liftgate emergency release, proceed as follows:

1. Remove the rear headrests and fold down the seats completely.
2. Take the screwdriver from the tool box supplied.
3. With the screwdriver, remove the yellow tab.

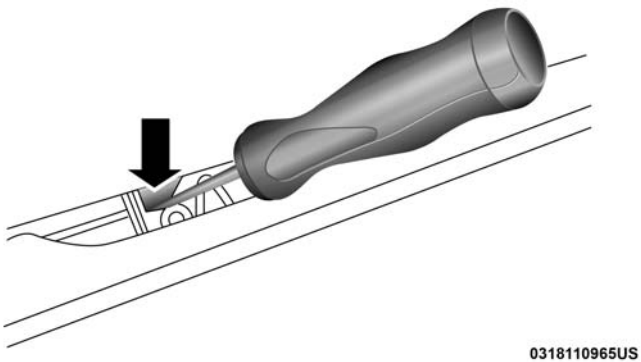


**Liftgate Emergency Release Yellow Tab Location**

4. Press the screwdriver into the seat in order to trigger the release trunk tab (follow the direction arrow to open).

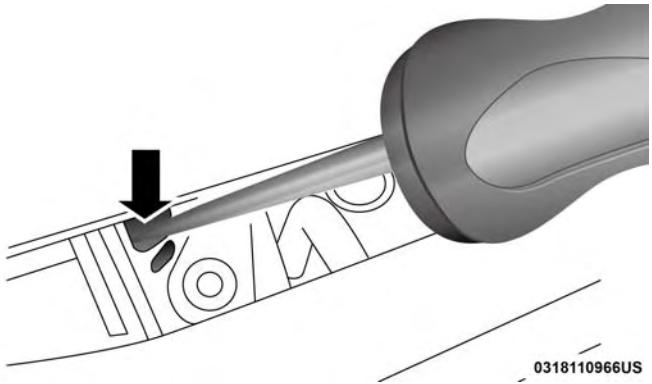


**Liftgate Emergency Release Tab**

## Cargo Area Features

### Rear Cargo Storage Features

This vehicle features a load platform which can be adjusted to three different heights, permitting modular luggage compartment volume:

- Position 1 (platform completely lowered) permits maximum luggage compartment capacity.

- Position 2 (platform at threshold level) permits a level load threshold to facilitate loading/unloading of objects in the luggage compartment. It also allows the space underneath to be used as a additional compartment for stowing objects which are more fragile or small.
- Position 3 (platform completely raised) in conjunction with the lowering of the rear seat and front passenger side seat backrests, permits long objects to be loaded. It is advisable to use this position only for the actual period in which the objects are transported, then return the platform to position 1 or 2.

**Tilt Of Cargo Floor**

The cargo floor can also be arranged at an angle (tilted toward the rear seat backs), in order to facilitate access to the area below the luggage compartment. In this position also the plan guarantees the correct locking of any objects present inside the cargo area, avoiding that they move in the event of sudden braking.

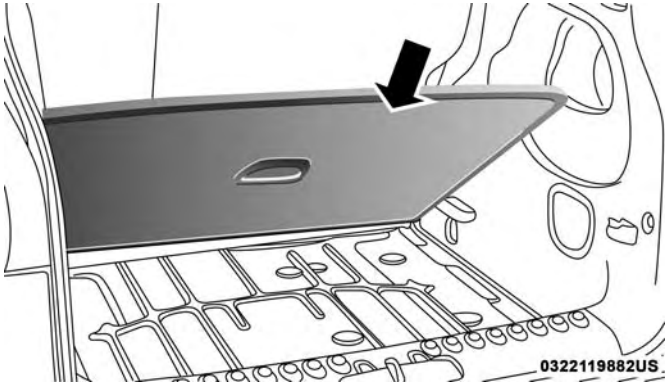


**Tilt Floor Feature**

**CAUTION!**

**The dimension of the cargo floor permit a maximum capacity of a distributed weight of 154 lbs (70kg) (if positioned at threshold level) or 88 lbs (40 kg) (if positioned at raised level) do not add objects with a higher weight.**

### Access To Double Load Compartment

To access the double load compartment, proceed as follows:

1. Grip handle and raise platform, holding it with one hand.

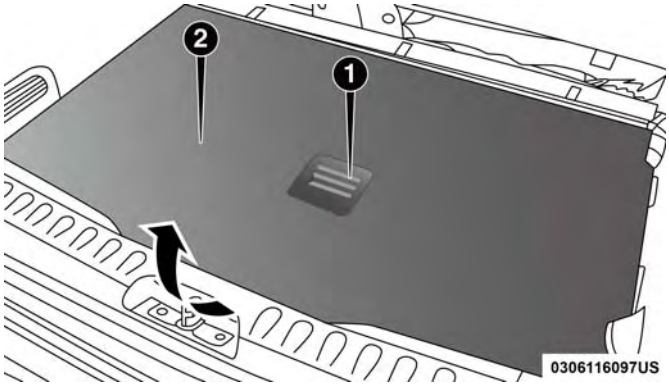


**Load Platform**

1 — Handle
2 — Platform

2. Place the desired objects in compartment.

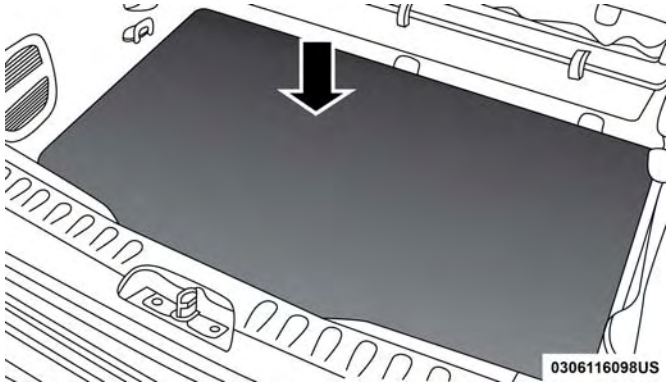


**Load Compartment**

3. Then reposition the platform correctly in the housings on the side panels and rear crossmember.

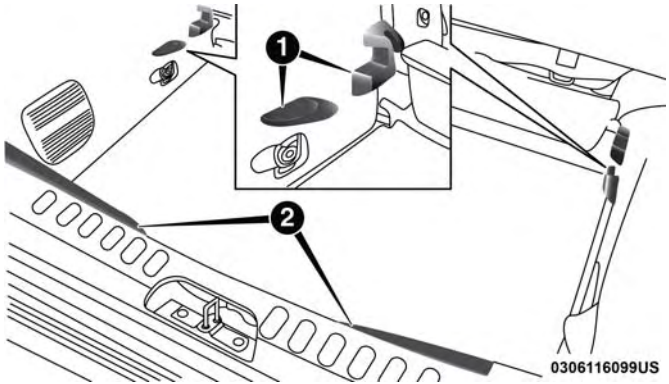


**Platform Housings**

1 — Front Locations
2 — Rear Locations

**NOTE:** Movements of the load platform must take place in a central position relative to the luggage compartment.

**Moving The Load Platform**

To move the load platform from lower to upper position, proceed as follows:

1. Grip handle and raise the platform, holding it with one hand.

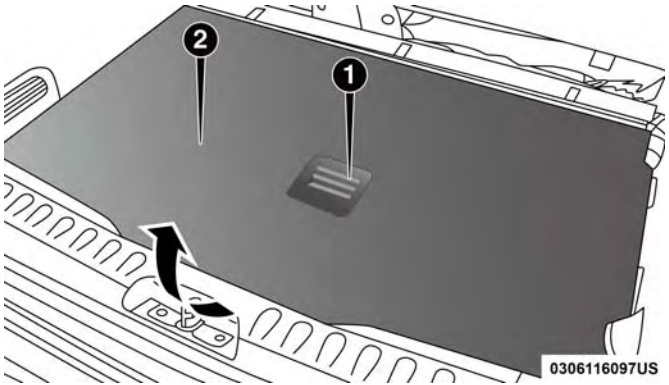


**Load Platform**

1 — Handle
2 — Platform

2. Position the platform correctly on housing on the side panels.

**Raised Position**

1 — Front Housing Locations
2 — Rear Housing Locations

## Cargo Area Tie Downs

There are two tie downs inside the luggage compartment for attaching cables which can secure the load carried.

Two additional tie downs located on the rear crossmember.

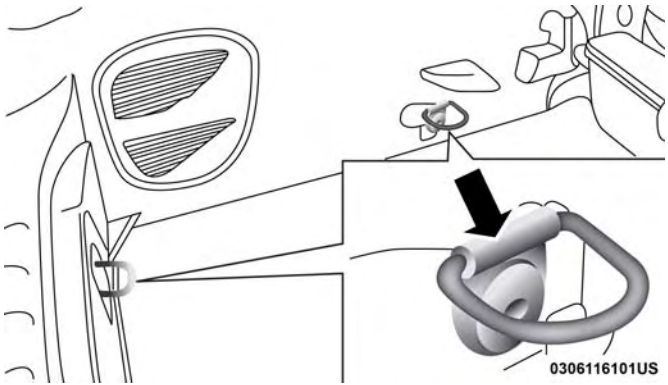


**Cargo Tie Down Locations**

Cargo hooks are also available on the side panels to fix loads which are not excessively heavy (e.g. bags).

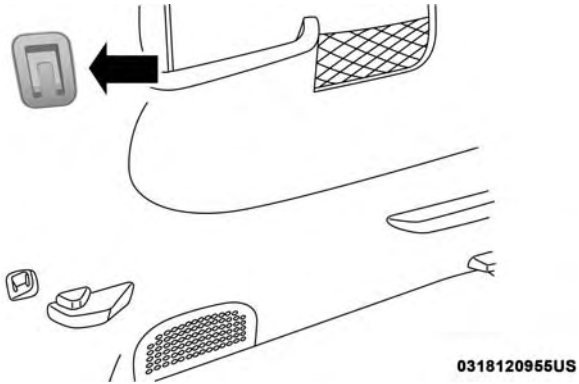


**Cargo Side Panel Hook Location**

| CAUTION! |
| --- |
| **The maximum load admitted per each bag hook is 22 lbs (10 kg).** |

## Storage Compartments

There are two storage compartments located on the rear side panels.

**Storage Compartment**

## GARAGE DOOR OPENER — IF EQUIPPED

HomeLink replaces up to three remote controls (hand-held transmitters) that operate devices such as garage door openers, motorized gates, lighting or home security systems. The HomeLink unit operates off your vehicles battery.

The HomeLink buttons that are located in the sunvisor designate the three different HomeLink channels. The HomeLink indicator is located above the center button.

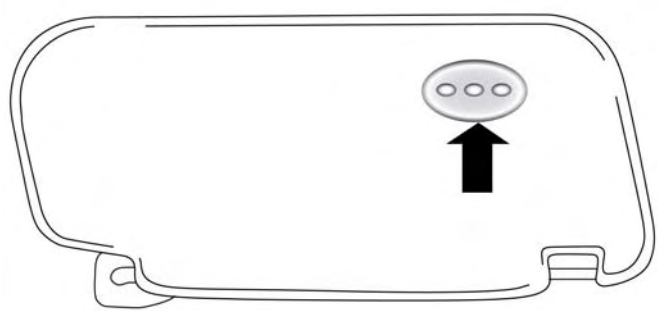

**HomeLink Buttons/Sunvisor**

**NOTE:** HomeLink is disabled when the Vehicle Security Alarm is active.

### Before You Begin Programming HomeLink

Be sure that your vehicle is parked outside of the garage before you begin programming.

For more efficient programming and accurate transmission of the radio-frequency signal, it is recommended that a new battery be placed in the hand-held transmitter of the device that is being programmed to the HomeLink system.

To erase the channels, place the ignition in the ON/RUN position and push and hold the two outside HomeLink buttons (I and III) for up 20 seconds or until the red indicator flashes.

**NOTE:**

- Erasing all channels should only be performed when programming HomeLink for the first time. Do not erase channels when programming additional buttons.
- If you have any problems, or require assistance, please call toll-free 1-800-355-3515 or, on the Internet at HomeLink.com for information or assistance.

## Programming A Rolling Code

For programming garage door openers that were manufactured after 1995:

These garage door openers can be identified by the "LEARN" or "TRAIN" button located where the hanging antenna is attached to the garage door opener. It is NOT the button that is normally used to open and close the door. The name and color of the button may vary by manufacturer.

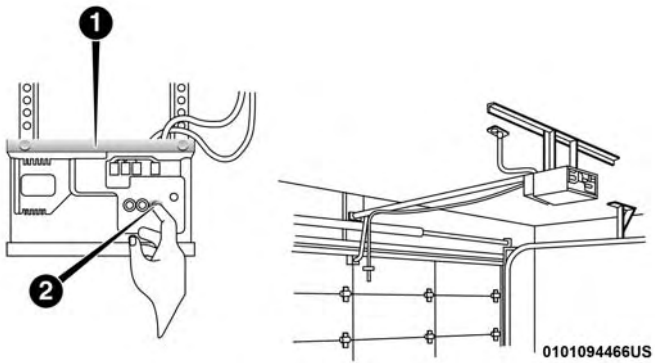


**Training The Garage Door Opener**

1 — Door Opener
2 — Training Button

1. Place the ignition in the ON/RUN position.

**NOTE:** For vehicles equipped with Keyless Enter-N-Go, place the ignition in the RUN position with the engine ON. Make sure while programming HomeLink with the engine ON that your vehicle is outside of your garage, or that the garage door remains open at all times.

2. Place the hand-held transmitter 1 to 3 inches (3 to 8 cm) away from the HomeLink button you wish to program while keeping the HomeLink indicator light in view.
3. Push and hold the HomeLink button you want to program while you push and hold the hand-held transmitter button.
4. Continue to hold both buttons and observe the indicator light. The HomeLink indicator will flash slowly and then rapidly after HomeLink has received the frequency signal from the hand-held transmitter. Release both buttons after the indicator light changes from slow to rapid.
5. At the garage door opener motor (in the garage), locate the "LEARN" or "TRAINING" button. This can usually be found where the hanging antenna wire is attached to the garage door opener/device motor. Firmly push and release the "LEARN" or "TRAINING" button. On some

garage door openers/devices there may be a light that blinks when the garage door opener/device is in the LEARN/TRAIN mode.

**NOTE:** You have 30 seconds in which to initiate the next step after the LEARN button has been pushed.

6. Return to the vehicle and push the programmed HomeLink button twice (holding the button for two seconds each time). If the garage door opener/device activates, programming is complete.

**NOTE:** If the garage door opener/device does not activate, push the button a third time (for two seconds) to complete the training.

To program the remaining two HomeLink buttons, repeat each step for each remaining button. DO NOT erase the channels.

### Programming A Non-Rolling Code

For programming Garage Door Openers manufactured before 1995:

1. Place the ignition in the ON/RUN position.

**NOTE:** For vehicles equipped with Keyless Enter-N-Go, place the ignition in the RUN position with the engine ON. Make sure while programming HomeLink with the engine ON that your vehicle is outside of your garage, or that the garage door remains open at all times.

2. Place the hand-held transmitter 1 to 3 inches (3 to 8 cm) away from the HomeLink button you wish to program while keeping the HomeLink indicator light in view.

3. Push and hold the Homelink button you want to program while you push and hold the hand-held transmitter button.

4. Continue to hold both buttons and observe the indicator light. The Homelink indicator will flash slowly and then rapidly after HomeLink has received the frequency signal from the hand-held transmitter. Release both buttons after the indicator light changes from slow to rapid.

5. Push and hold the programmed HomeLink button and observe the indicator light.
   - If the indicator light stays on constantly, programming is complete and the garage door/device should activate when the HomeLink button is pushed.

- To program the two remaining HomeLink buttons, repeat each step for each remaining button. DO NOT erase the channels.

### Canadian/Gate Operator Programming

For programming transmitters in Canada/United States that require the transmitter signals to "time-out" after several seconds of transmission:

Canadian radio frequency laws require transmitter signals to time-out (or quit) after several seconds of transmission, which may not be long enough for HomeLink to pick up the signal during programming. Similar to this Canadian law, some U.S. gate operators are designed to time-out in the same manner.

It may be helpful to unplug the device during the cycling process to prevent possible overheating of the garage door or gate motor.

1. Cycle the ignition to the ON/RUN position.

**NOTE:** For vehicles equipped with Keyless Enter-N-Go, place the ignition in the RUN position with the engine ON. Make sure while programming HomeLink with the engine ON that your vehicle is outside of your garage, or that the garage door remains open at all times.

2. Place the hand-held transmitter 1 to 3 inches (3 to 8 cm) away from the HomeLink button you wish to program while keeping the HomeLink indicator light in view.
3. Continue to push and hold the HomeLink button while you push and release ("cycle") your hand-held transmitter every two seconds until HomeLink has successfully accepted the frequency signal. The indicator light will flash slowly and then rapidly when fully trained.
4. Watch for the HomeLink indicator to change flash rates. When it changes, it is programmed. It may take up to 30 seconds or longer in rare cases. The garage door may open and close while you are programming.
5. Push and hold the programmed HomeLink button and observe the indicator light.

**NOTE:**

- If the indicator light stays on constantly, programming is complete and the garage door/device should activate when the HomeLink button is pushed.
- To program the two remaining HomeLink buttons, repeat each step for each remaining button. DO NOT erase the channels.

If you unplugged the garage door opener/device for programming, plug it back in at this time.

### Using HomeLink

To operate, switch the ignition to the ON/RUN position and the press and release the programmed HomeLink button. Activation will now occur for the programmed device (i.e., garage door opener, gate operator, security system, entry door lock, home/office lighting, etc.,). The hand-held transmitter of the device may also be used at any time. If the ignition is switched to the OFF position, HomeLink will remain active for three minutes. During this time, if the vehicle is locked, HomeLink is disabled.

### Security

It is advised to erase all channels before you sell or turn in your vehicle.

To do this, push and hold the two outside buttons for 20 seconds until the red indicator flashes.

**NOTE:** All channels will be erased. Individual channels cannot be erased.

The HomeLink Universal Transceiver is disabled when the Vehicle Security Alarm is active.

### Troubleshooting Tips

If you are having trouble programming HomeLink, here are some of the most common solutions:

- Replace the battery in the Garage Door Opener hand-held transmitter.
- Push the LEARN button on the Garage Door Opener to complete the training for a Rolling Code.
- Did you unplug the device for programming and remember to plug it back in?

If you have any problems, or require assistance, please call toll-free 1-800-355-3515 or, on the Internet at HomeLink.com for information or assistance.

**WARNING!**

- **Vehicle exhaust contains carbon monoxide, a dangerous gas. Do not run your vehicle in the garage while programming the transceiver. Exhaust gas can cause serious injury or death.**
- **Your motorized door or gate will open and close while you are programming the universal transceiver. Do not program the transceiver if people, pets or other objects are in the path of the door or gate. Only use this transceiver with a garage door opener that has a "stop and reverse" feature as required by Federal safety standards. This includes most garage door opener models manufactured after 1982. Do not use a garage door opener without these safety features. Call toll-free 1-800-355-3515 or, on the Internet at HomeLink.com for safety information or assistance.**

## General Information

The following regulatory statement applies to all Radio Frequency (RF) devices equipped in this vehicle:

This device complies with Part 15 of the FCC Rules and with Industry Canada license-exempt RSS standard(s). Operation is subject to the following two conditions:

1. This device may not cause harmful interference, and
2. This device must accept any interference received, including interference that may cause undesired operation.

**NOTE:** Changes or modifications not expressly approved by the party responsible for compliance could void the user's authority to operate the equipment.

# INTERNAL EQUIPMENT

## Storage

### Glove Compartment

The glove compartment is located on the passenger side of the instrument panel and features both an upper and lower storage area.

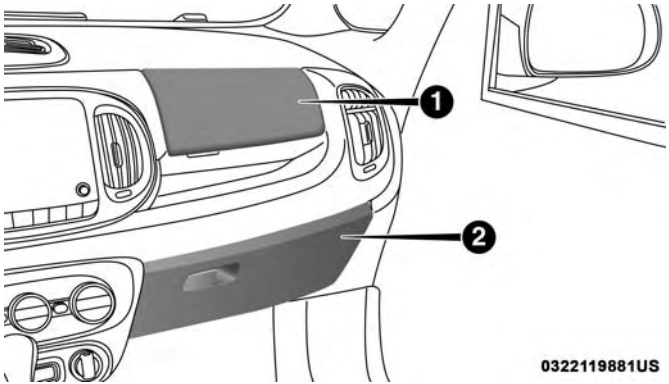


**Glove Compartment Storage**

1 — Upper Glove Compartment
2 — Lower Glove Compartment

To open the upper glove compartment, push upward on the handle release. The glove compartment door will automatically open.

To open the lower glove compartment, pull the release handle.

### Front Center Armrest Storage — If Equipped

The front center armrest contains a storage compartment. To open the storage compartment push in the upper release latch on the front of the armrest.

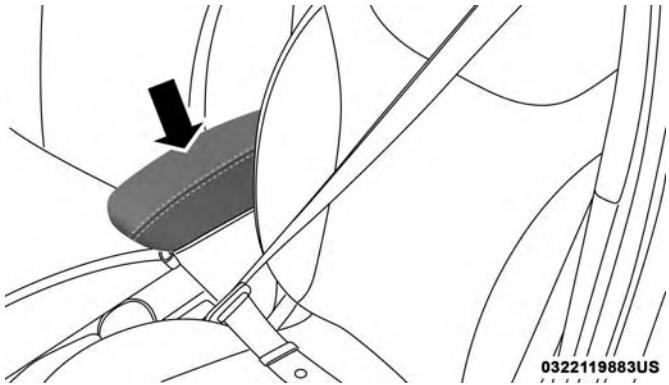


**Front Center Armrest**

Lift upward on the armrest to gain access to the storage area.

The front center armrest can also be lifted up and adjusted in three positions, this is done by pulling up on the armrest, push the latch down to adjust the armrest down.

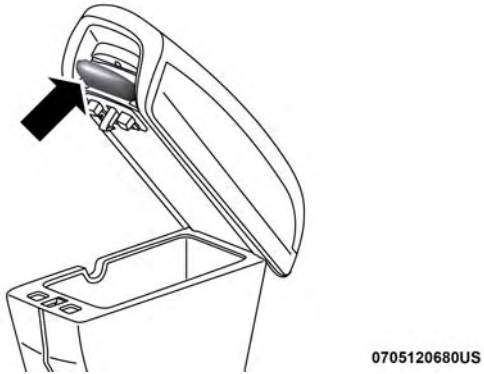


**Armrest Storage Release Latch**

## Cupholders

For the driver and front passenger, cupholders are located on the floor console between the front seats.

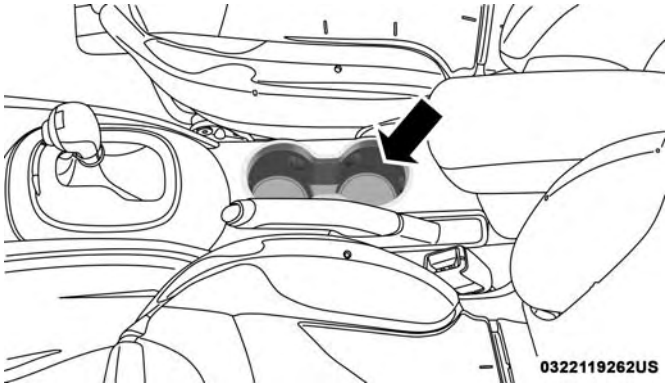


**Front Cupholders**

For the rear seat passengers their is one cupholder located in the center armrest (if equipped).

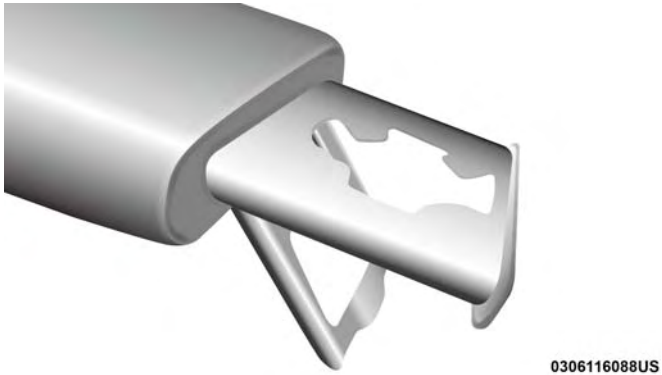


**Rear Cupholder**

## Power Outlets

### Passenger Compartment Power Outlet

The power outlet is located on the instrument panel, below the climate controls. It only operates with the ignition key at MAR/ON.

On models with optional "smoker's kit," the cigar lighter takes the place of the power socket. Refer to "Cigar Lighter" in "Getting To Know Your Vehicle" for further information.

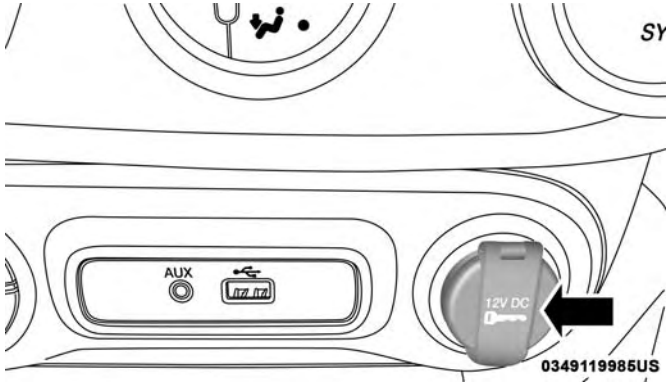


**Passenger Compartment Power Outlet**

**NOTE:** Do not connect devices with power higher than 180 W to the socket. Do not damage the socket by using unsuitable adaptors.

**Rear Seat Charge Only USB**

There is also a Rear Seat USB port located on the back of the center console that can be used to charge USB devices.

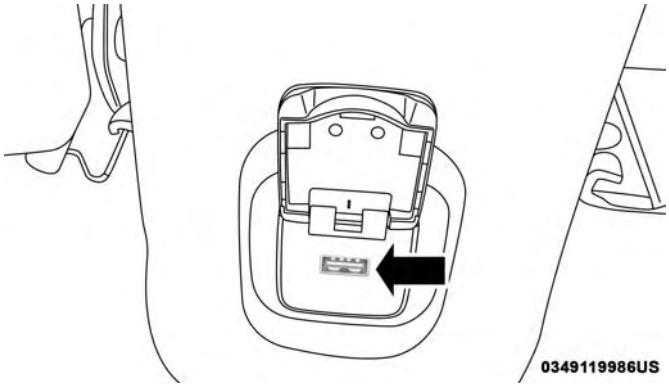


**Rear Seat USB**

## Cigar Lighter — If Equipped

This is located on the instrument panel, below the climate controls. To activate the cigar lighter, push and release the knob. After a few seconds the knob automatically returns to its initial position, and the cigar lighter is ready for use.

**WARNING!**

**When the cigar lighter is in use it becomes very hot. To avoid serious injury, handle the cigar lighter with care. Always check that the cigar lighter has turned off.**

**NOTE:**

- Always check that the cigar lighter is switched off.
- Do not connect devices with power higher than 180 W to the socket. Do not damage the socket by using unsuitable adaptors.

## ROOF LUGGAGE RACK — IF EQUIPPED

The crossbars and siderails are designed to carry the weight on vehicles equipped with a luggage rack. The load must not exceed 110 lbs (50 kg), and should be uniformly distributed over the luggage rack crossbars.

Their are two attachment points inside the door jambs that the roof rack crossbars attach to.

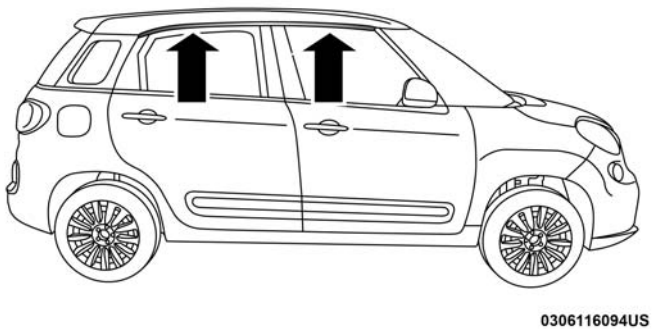


**Roof Rack Attachment Points**

Distribute cargo weight evenly on the roof rack crossbars. The roof rack does not increase the total load carrying capacity of the vehicle. Be sure the total load of cargo inside the vehicle plus that on the external rack does not exceed the maximum vehicle load capacity.

**WARNING!**

**Cargo must be securely tied down before driving your vehicle. Improperly secured loads can fly off the vehicle, particularly at high speeds, resulting in personal injury or property damage. Follow the roof rack cautions when carrying cargo on your roof rack.**

# GETTING TO KNOW YOUR INSTRUMENT PANEL

## CONTENTS


■ INSTRUMENT CLUSTER . . . . . .88

□ Instrument Cluster Descriptions . . . . . .88

■ INSTRUMENT CLUSTER DISPLAY . . . . . .89

□ Instrument Cluster Display Control Buttons . . . .90

□ Change Engine Oil Indicator System . . . . . .91

□ Instrument Cluster Display Setup Menu. . . . . .92

■ WARNING LIGHTS AND MESSAGES . . . . . .98

□ Red Warning Lights . . . . . .98

□ Yellow Warning Lights . . . . . .101

□ Yellow Indicator Lights. . . . . .105

□ Green Indicator Lights . . . . . .107

□ White Indicator Lights . . . . . .108

□ Blue Indicator Lights . . . . . .108

■ ONBOARD DIAGNOSTIC SYSTEM — OBD II . . .108

□ Onboard Diagnostic System (OBD II) Cybersecurity . . . . . .109

■ EMISSIONS INSPECTION AND MAINTENANCE PROGRAMS . . . . . .109

## INSTRUMENT CLUSTER

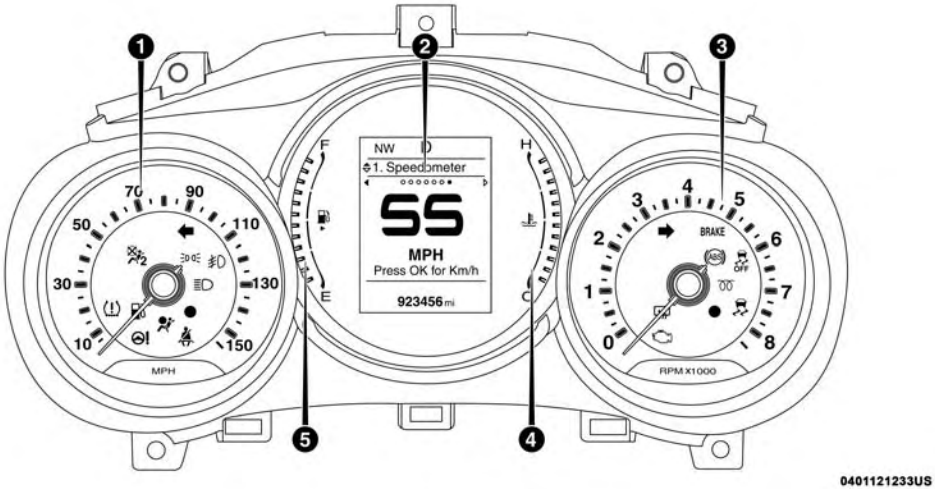


**Instrument Cluster**

### Instrument Cluster Descriptions

1. Speedometer
   - Indicates vehicle speed.
2. Instrument Cluster Display
   - The instrument cluster display shows messages when the appropriate conditions exist. Refer to “Instrument Cluster Display” in “Getting To Know Your Instrument Panel” for further information.

3. Tachometer
   - Indicates the engine speed in revolutions per minute (RPM x 1000).
4. Temperature Gauge
   - The temperature gauge shows engine coolant temperature. Any reading within the normal range indicates that the engine cooling system is operating satisfactorily.
   - The gauge pointer will likely indicate a higher temperature when driving in hot weather or up mountain grades. It should not be allowed to exceed the upper limits of the normal operating range.

**WARNING!**

**A hot engine cooling system is dangerous. You or others could be badly burned by steam or boiling coolant. You may want to call an authorized dealer for service if your vehicle overheats. If you decide to look under the hood yourself, see "Servicing And Maintenance." Follow the warnings under the Cooling System Pressure Cap paragraph.**

**CAUTION!**

**Driving with a hot engine cooling system could damage your vehicle. If the temperature gauge reads "H," pull over and stop the vehicle. Idle the vehicle with the air conditioner turned off until the pointer drops back into the normal range. If the pointer remains on the "H," turn the engine off immediately and call an authorized dealer for service.**



5. Fuel Gauge
   - The pointer shows the level of fuel in the fuel tank when the ignition switch is in the ON/RUN position.
   - The fuel pump symbol points to the side of the vehicle where the fuel door is located.

## INSTRUMENT CLUSTER DISPLAY

Your vehicle may be equipped with an instrument cluster display, which offers useful information to the driver. With the ignition in the STOP/OFF position, opening/closing of a door will activate the display for viewing, and display the total miles (kilometers) in the odometer. Your instrument cluster display is designed to display important information about your vehicle's systems and features.

Using a driver interactive display located on the instrument panel, your instrument cluster display can show you how systems are working and give you warnings when they aren't. The steering wheel mounted controls allow you to scroll through and enter the main menus and submenus. You can access the specific information you want and make selections and adjustments.

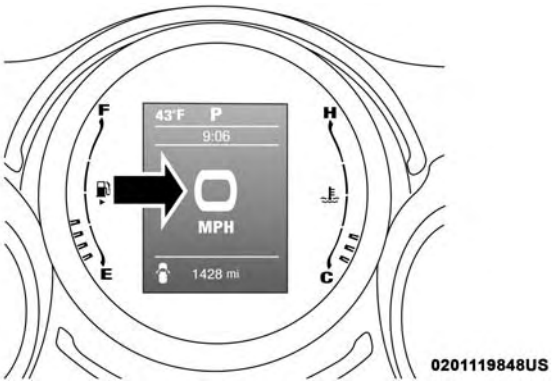


**Instrument Cluster Display**

## Instrument Cluster Display Control Buttons

The system allows the driver to select information by pushing the following buttons mounted on the steering wheel:

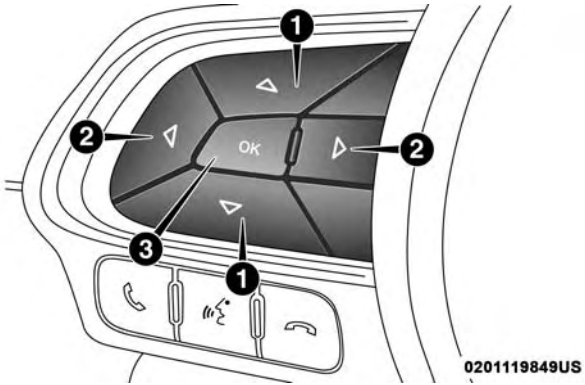


**Instrument Cluster Display Control Buttons**

1 — Arrow Up/Down Scroll Through Menus And Submenus
2 — Arrow Right/Left Access Information/Submenu Screens
3 — OK Button For Selecting And Resetting Information

- *Up Arrow Button*

△ Push and release the up arrow button to scroll upward through the main menu and submenus.

- *Down Arrow Button*

▽ Push and release the down arrow button to scroll downward through the main menu and submenus.

- *Right Arrow Button*

▷ Push and release the right arrow button to access the information screens or submenu screens of a main menu item.

- *Left Arrow Button*

◁ Push and release the left arrow button to access the information screens or submenu screens of a main menu item.

- *OK Button*

The OK button may be used for the following:

- Select
- Reset (hold)

## Change Engine Oil Indicator System

Your vehicle is equipped with an engine oil change indicator system. The "Oil Change Required" message will flash in the instrument cluster display for approximately ten seconds after a single chime has sounded to indicate the next scheduled oil change interval. The engine oil change indicator system is duty cycle based, which means the engine oil change interval may fluctuate, dependent upon your personal driving style.



Unless reset, this message will continue to display each time you turn the ignition is cycled to the ON or RUN position. To reset the oil change indicator system (after performing the scheduled maintenance), refer to the following procedure.

1. Turn the ignition switch to the ON position (do not start the engine).
2. Fully push the accelerator pedal slowly, three times within ten seconds.
3. Turn the ignition switch to the OFF/LOCK position.

**NOTE:** If the indicator message illuminates when you start the vehicle, the oil change indicator system did not reset. If necessary, repeat this procedure.

## Instrument Cluster Display Setup Menu

The menu comprises a series of functions arranged in a cycle. The menu includes the following functions:

- Speedometer
- Trip
  - Trip A
  - Trip B
- Vehicle Info
  - Tire Pressure
  - Service
- Audio
- Phone — If Equipped
- Navigation — If Equipped
- Messages
- Settings
  - Display
  - Safety & Assistance
  - Security

### Speedometer

Push and release the **up** or **down** arrow button until the Speedometer Menu item is displayed in the instrument cluster display. Push and release the **OK** button to change the speedometer scale from MPH to km/h. Push and hold the **OK** to return the speedometer from km/h to MPH.

### Trip

Push and release the **up** or **down** arrow button until the Trip menu item is displayed in the instrument cluster display.

The Trip menu provides the following submenus:

- Trip A
- Trip B

**Trip A**

Trip A submenu is divided into two pages that contain the following information.

| Page | Menu item | Description |
|---|---|---|
| **Trip A First Page** | Distance | Shows the distance traveled during Trip A. |
| | Travel Time | Shows the total travel time for Trip A. |
| | Push the **OK** button on the Steering Wheel to reset the values on this page. | |
| **Trip A Second Page** | Average Consumption | Shows the average fuel usage during Trip A. |
| | Average Speed | Shows the average speed during Trip A. |
| | Push the **OK** button on the Steering Wheel to reset the values on this page. | |

**Trip B**

Trip B submenu is divided into two pages that contain the following information.

| Page | Menu item | Description |
|---|---|---|
| **Trip B First Page** | Distance | Shows the distance traveled during Trip B. |
| | Travel Time | Shows the total travel time for Trip B. |
| | Push the **OK** button on the Steering Wheel to reset the values on this page. | |
| **Trip B Second Page** | Average Consumption | Shows the average fuel usage during Trip B. |
| | Average Speed | Shows the average speed during Trip B. |
| | Push the **OK** button on the Steering Wheel to reset the values on this page. | |

**Vehicle Info**

Push and release the **up** or **down** arrow button until the Vehicle Info menu item is displayed in the instrument cluster display.

The Vehicle Info menu will display the following submenus:

- Tire Pressure
- Service

**Tire Pressure**

The Tire Pressure submenu will indicate an under inflated tire. When a tire goes below the recommended inflation pressure, the TPMS telltale will illuminate in the cluster, and the Tire Pressure submenu will appear in the Instrument Cluster Display. A "Tire Low" message will be present, and the under inflated tire will be highlighted.

To reset the Tire Pressure submenu, push and hold the **OK** button on the Steering Wheel. The system will provide confirmation of the reset. After the reset procedure, if there are no under inflated tires, the system will display tires at the correct pressure value.

Refer to "Tire Pressure Monitoring System (TPMS)" under "Safety" for further information.

**Service**

The Service submenu will display information about scheduled maintenance. A pop-up will appear in the display if service is required.

The following information will display in the pop-up:

- Distance to next service visit
- Days until next service visit

**Audio**

Push and release the **up** or **down** arrow button until the Audio menu title is displayed in the instrument cluster display.

The Audio menu item will display information based on the audio source being listened to.

**Phone**

Push and release the **up** or **down** arrow button until the Phone menu item is displayed in the instrument cluster display. The Phone menu will provide pop-ups during phone calls.

The Phone menu has the following submenus

- **Phone:** Displays information on phone connectivity. Pushing the **OK** button on the Steering Wheel will enter the phone submenus.
- **Recent Calls:** Displays information on the last ten calls made. The information provided includes the phone number / phone book name and type of call (incoming, outgoing, or lost).
- **Message Reader:** Displays text messages received. Push the **OK** button on the Steering Wheel to select a message to read. The system will also display if a message has been read or not.
- **Favorite Numbers:** Displays up to ten favorite numbers. Push the **OK** button on the Steering Wheel to call a favorite number.

**Navigation — If Equipped**

Push and release the **up** or **down** arrow button until the Navigation menu item is displayed in the instrument cluster display. The Navigation menu provides "turn by turn" instructions when using the vehicle's navigation function.

The following information is displayed.

- Distance to the next turn
- The name of the street
- An icon representing the next turn

**Stored Messages**

Push and release the **up** or **down** arrow button until the Messages Menu item is highlighted. This feature shows the number of stored warning messages. Pushing the **left** or **right** arrow button will allow you to scroll through the stored messages.

**Settings**

Push and release the **up** or **down** arrow button until the Settings menu item is displayed in the instrument cluster display. The Settings menu provides a list of settings that affect the display and functionality of the instrument cluster display.

The settings are as follows:

| Setting Menu Item | Setting Name | Description |
|---|---|---|
| **Display** | Backlight | Increase or decrease the brightness of the display. |
| | Screen Setup | Configure display wit the following options:<br>Zone 1:<br>• Temperature (Default)<br>• Time<br>• Date<br>• Compass<br>• None<br>Zone 2:<br>• Time (Default)<br>• Title<br>• Date<br>• Compass<br>• Temperature<br>• Audio Info<br>• None |
| | Phone Repetition | Turn on or off the display of phone related pop-ups. |
| | Nav. repetition | Turn on or off the display of navigation related pop-ups. |
| | Automatic Reset Trip B | Reset the Trip B menu item. |

| Setting Menu Item | Setting Name | Description |
|---|---|---|
| **Security** | Park Assist Volume | Increase or decrease Park Assist volume. |
| | Warning Buzzer Volume | Increase or decrease the volume of the warning buzzer. |

## WARNING LIGHTS AND MESSAGES

### Red Warning Lights

**— Air Bag Warning Light**

This light will turn on for four to eight seconds as a bulb check when the ignition is placed in the ON/RUN or MAR/ON/RUN position. If the light is either not on during startup, stays on, or turns on while driving, have the system inspected at an authorized dealer as soon as possible. This light will illuminate with a single chime when a fault with the Air Bag Warning Light has been detected, it will stay on until the fault is cleared. If the light comes on intermittently or remains on while driving, have an authorized dealer service the vehicle immediately.

**BRAKE — Brake Warning Light**

This light monitors various brake functions, including brake fluid level and parking brake application. If the brake light turns on it may indicate that the parking brake is applied, that the brake fluid level is low, or that there is a problem with the anti-lock brake system reservoir.

If the light remains on when the parking brake has been disengaged, and the fluid level is at the full mark on the master cylinder reservoir, it indicates a possible brake hydraulic system malfunction or that a problem with the Brake Booster has been detected by the Anti-Lock Brake System (ABS) / Electronic Stability Control (ESC) system. In this case, the light will remain on until the condition has been corrected. If the problem is related to the brake booster, the ABS pump will run when applying the brake, and a brake pedal pulsation may be felt during each stop.

The dual brake system provides a reserve braking capacity in the event of a failure to a portion of the hydraulic system. A leak in either half of the dual brake system is indicated by the Brake Warning Light, which will turn on when the brake fluid level in the master cylinder has dropped below a specified level.

The light will remain on until the cause is corrected.

**NOTE:** The light may flash momentarily during sharp cornering maneuvers, which change fluid level conditions. The vehicle should have service performed, and the brake fluid level checked.

If brake failure is indicated, immediate repair is necessary.

**WARNING!**

**Driving a vehicle with the red brake light on is dangerous. Part of the brake system may have failed. It will take longer to stop the vehicle. You could have a collision. Have the vehicle checked immediately.**

Vehicles equipped with the Anti-Lock Brake System (ABS) are also equipped with Electronic Brake Force Distribution (EBD). In the event of an EBD failure, the Brake Warning Light will turn on along with the ABS Light. Immediate repair to the ABS system is required.

Operation of the Brake Warning Light can be checked by turning the ignition switch from the OFF position to the ON/RUN position. The light should illuminate for approximately two seconds. The light should then turn off unless the parking brake is applied or a brake fault is detected. If the light does not illuminate, have the light inspected by your authorized dealer.

The light also will turn on when the parking brake is applied with the ignition switch in the ON/RUN position.

**NOTE:** This light shows only that the parking brake is applied. It does not show the degree of brake application.

**— Electronic Throttle Control (ETC) Warning Light**

This light informs you of a problem with the Electronic Throttle Control (ETC) system. If a problem is detected while the vehicle is running, the light will either stay on or flash depending on the nature of the problem. Cycle the ignition when the vehicle is safely and completely stopped and the transmission is placed in the PARK position. The light should turn off. If the light remains on with the vehicle running, your vehicle will usually be drivable; however, see an authorized dealer for service as soon as possible.

If the light continues to flash when the vehicle is running, immediate service is required and you may experience reduced performance, an elevated/rough idle, or engine stall and your vehicle may require towing. The light will come on when the ignition is placed in the ON/RUN or MAR/ON/RUN position and remain on briefly as a bulb check. If the light does not come on during starting, have the system checked by an authorized dealer.

**— Engine Temperature Warning Light**

This light warns of an overheated engine condition. If the engine coolant temperature is too high, this indicator will illuminate and a single chime will sound. If the temperature reaches the upper limit, a continuous chime will be sound for four minutes or until the engine is allowed to cool whichever comes first.

If the light turns on while driving, safely pull over and stop the vehicle. If the A/C system is on, turn it off. Also, shift the transmission into NEUTRAL and idle the vehicle. If the temperature reading does not return to normal, turn the engine off immediately and call for service. Refer to "If Your Engine Overheats" in "In Case Of Emergency" for further information.

**— Seat Belt Reminder Warning Light**

When the ignition is first placed in the ON/RUN or MAR/ON/RUN position, if the driver's seat belt is unbuckled, a chime will sound and the light will turn on. When driving, if the driver or front passenger seat belt remains unbuckled, the Seat Belt Reminder Light will flash or remain on continuously and a chime will sound. Refer to "Occupant Restraints Systems" in "Safety" for further information.

**— Electric Power Steering Fail Warning Light**

This light will turn on when there's a fault with the EPS (Electric Power Steering)

Refer to "Power Steering" in "Starting And Operating" for further information.

**— Vehicle Security Warning Light — If Equipped**

This light will flash at a fast rate for approximately 15 seconds when the vehicle security alarm is arming, and then will flash slowly until the vehicle is disarmed.

### — Battery Charge Warning Light

This light illuminates when the battery is not charging properly. If it stays on while the engine is running, there may be a malfunction with the charging system. Contact your authorized dealer as soon as possible.

This indicates a possible problem with the electrical system or a related component.

### — Transmission Fault Warning Light

This light will illuminate (together with a message in the instrument cluster display and a buzzer) to indicate a transmission fault. Contact your authorized dealer if the message remains after restarting the engine.

### — Oil Pressure Warning Light

This light indicates low engine oil pressure. If the light turns on while driving, stop the vehicle and shut off the engine as soon as possible. A chime will sound when this light turns on.

Do not operate the vehicle until the cause is corrected. This light does not indicate how much oil is in the engine. The engine oil level must be checked under the hood.

### — Oil Pressure Warning Light

This light will illuminate if there is a failure of the oil pressure sensor. If this light illuminates, take it to an authorized dealer and have them inspect it.

### — Door Open Warning Light

This indicator will illuminate when one or more door(s) are not fully closed.

**NOTE:** If the vehicle is moving and a door is opened, there will also be a single chime.

### — Liftgate Open Warning Light

This indicator will turn on when the liftgate is open.

## Yellow Warning Lights

### — Anti-Lock Brake (ABS) Warning Light

This light monitors the Anti-Lock Brake System (ABS). The light will turn on when the ignition is placed in the ON/RUN or MAR/ON/RUN position and may stay on for as long as four seconds.

If the ABS light remains on or turns on while driving, then the Anti-Lock portion of the brake system is not functioning and service is required. However, the conventional brake system will continue to operate normally if the brake warning light is not on.

If the ABS light is on, the brake system should be serviced as soon as possible to restore the benefits of Anti-Lock Brakes. If the ABS light does not turn on when the ignition is placed in the ON/RUN or MAR/ON/RUN position, have the light inspected by an authorized dealer.

**— Electronic Stability Control (ESC) Warning Light — If Equipped**

The "ESC Indicator Light" in the instrument cluster will come on when the ignition is placed in the ON/RUN or MAR/ON/RUN position, and when ESC is activated. It should go out with the engine running. If the "ESC Indicator Light" comes on continuously with the engine running, a malfunction has been detected in the ESC system. If this light remains on after several ignition cycles, and the vehicle has been driven several miles (kilometers) at speeds greater than 30 mph (48 km/h), see your authorized dealer as soon as possible to have the problem diagnosed and corrected.

- The "ESC Off Indicator Light" and the "ESC Indicator Light" come on momentarily each time the ignition is placed in the ON/RUN or MAR/ON/RUN position.
- Each time the ignition is turned to ON/RUN or MAR/ON/RUN, the ESC system will be on, even if it was turned off previously.
- The ESC system will make buzzing or clicking sounds when it is active. This is normal; the sounds will stop when ESC becomes inactive.
- This light will come on when the vehicle is in an ESC event.

**— Electronic Stability Control (ESC) Off Warning Light — If Equipped**

This light indicates the Electronic Stability Control (ESC) is off.

Each time the ignition is turned to ON/RUN or ACC/ON/RUN, the ESC system will be on, even if it was turned off previously.

**— Loose Fuel Filler Cap Warning Light — If Equipped**

This light will illuminate when the fuel filler cap is loose. Properly close the filler cap to disengage the light. If the light does not turn off, please see your authorized dealer.

### — Low Fuel Indicator Light

When the fuel level reaches approximately 3.0 gal (11.0 L) this light will turn on, and remain on until fuel is added.

### — Engine Check/Malfunction Indicator Warning Light (MIL)

The Engine Check/Malfunction Indicator Light (MIL) is a part of an Onboard Diagnostic System called OBD II that monitors engine and automatic transmission control systems. The light will illuminate when the ignition is in the ON/RUN position before engine start. If the bulb does not come on when turning the key from OFF to ON/RUN, have the condition checked promptly.

Certain conditions, such as a loose or missing gas cap, poor quality fuel, etc., may illuminate the light after engine start. The vehicle should be serviced if the light stays on through several typical driving styles. In most situations, the vehicle will drive normally and will not require towing.

When the engine is running, the MIL may flash to alert serious conditions that could lead to immediate loss of power or severe catalytic converter damage. The vehicle should be serviced as soon as possible if this occurs.

**WARNING!**

**A malfunctioning catalytic converter, as referenced above, can reach higher temperatures than in normal operating conditions. This can cause a fire if you drive slowly or park over flammable substances such as dry plants, wood, cardboard, etc. This could result in death or serious injury to the driver, occupants or others.**

**CAUTION!**

**Prolonged driving with the Malfunction Indicator Light (MIL) on could cause damage to the vehicle control system. It also could affect fuel economy and driveability. If the MIL is flashing, severe catalytic converter damage and power loss will soon occur. Immediate service is required.**

### — Passenger Air Bag Indicator Light

This light should come and remain on for four to eight seconds as a bulb check when the ignition is first turned to the AVV/START or MAR/ON/RUN position. If the light stays on, or comes on while driving it may indicate a problem with a passenger air bag system, if the light

flickers it may indicate an air bag warning light failure. Have an authorized dealer service the air bag system immediately.

**(!) — Tire Pressure Monitoring System (TPMS) Warning Light**

The warning light switches on and a message is displayed to indicate that the tire pressure is lower than the recommended value and/or that slow pressure loss is occurring. In these cases, optimal tire duration and fuel consumption may not be guaranteed.

Should one or more tires be in the condition mentioned above, the display will show the indications corresponding to each tire in sequence.

**CAUTION!**

**Do not continue driving with one or more flat tires as handling may be compromised. Stop the vehicle, avoiding sharp braking and steering. If a tire puncture occurs, repair immediately using the dedicated tire repair kit and contact your authorized dealer as soon as possible.**

Each tire, including the spare (if provided), should be checked monthly when cold and inflated to the inflation pressure recommended by the vehicle manufacturer on the vehicle placard or tire inflation pressure label. (If your vehicle has tires of a different size than the size indicated on the vehicle placard or tire inflation pressure label, you should determine the proper tire inflation pressure for those tires.)

As an added safety feature, your vehicle has been equipped with a tire pressure monitoring system (TPMS) that illuminates a low tire pressure telltale when one or more of your tires is significantly under-inflated. Accordingly, when the low tire pressure telltale illuminates, you should stop and check your tires as soon as possible, and inflate them to the proper pressure. Driving on a significantly under-inflated tire causes the tire to overheat and can lead to tire failure. Under-inflation also reduces fuel efficiency and tire tread life, and may affect the vehicle's handling and stopping ability.

Please note that the TPMS is not a substitute for proper tire maintenance, and it is the driver's responsibility to maintain correct tire pressure, even if under-inflation has not reached the level to trigger illumination of the TPMS low tire pressure telltale.

Your vehicle has also been equipped with a TPMS malfunction indicator to indicate when the system is not operating properly. The TPMS malfunction indicator is combined with the low tire pressure telltale. When the system detects a malfunction, the telltale will flash for approximately one minute and then remain continuously illuminated. This sequence will continue upon subsequent vehicle start-ups as long as the malfunction exists. When the malfunction indicator is illuminated, the system may not be able to detect or signal low tire pressure as intended. TPMS malfunctions may occur for a variety of reasons, including the installation of replacement or alternate tires or wheels on the vehicle that prevent the TPMS from functioning properly. Always check the TPMS malfunction telltale after replacing one or more tires or wheels on your vehicle to ensure that the replacement or alternate tires and wheels allow the TPMS to continue to function properly.

**CAUTION!**

**The TPMS has been optimized for the original equipment tires and wheels. TPMS pressures and warning have been established for the tire size equipped on your vehicle. Undesirable system operation or sensor**

*(Continued)*

**CAUTION!** *(Continued)*

**damage may result when using replacement equipment that is not of the same size, type, and/or style. Aftermarket wheels can cause sensor damage. Using aftermarket tire sealants may cause the Tire Pressure Monitoring System (TPMS) sensor to become inoperable. After using an aftermarket tire sealant it is recommended that you take your vehicle to your authorized dealer to have your sensor function checked.**



### — Vehicle Security Warning Light

This telltale will illuminate when the vehicle security alarm system has detected an attempt was made to break into the vehicle.

## Yellow Indicator Lights

### — External Light Failure Indicator Light — If Equipped

The External Light Failure Indicator will come on when a failure to one of the following lights is detected:

- Direction Indicators
- Backup Lights
- Parking Lights

- Daytime Running Lights
- License Plate Lights

The failure relating to these lights could be:

- One or more blown bulbs
- A blown protection fuse
- A break in the electrical connection

**— Fuel Cutoff Indicator Light — If Equipped**

This telltale will illuminate after an accident has occurred, and the system has shut the fuel off.

**— Fuel Cutoff Failure Light — If Equipped**

This light will illuminate if there is a fuel cutoff failure. If this light illuminates, take it to an authorized dealer and have them inspect it.

**— Fuel Level Sensor Failure**

This light illuminates when there is a fuel level sensor failure. If this light illuminates, take it to an authorized dealer and have them inspect it.

**— Icy Road Condition Indicator Light — If Equipped**

This light will illuminate during an icy road condition.

**— Rear Defrost Light**

This indicator will illuminate when the rear window defroster is on. The rear window defroster automatically turns off after 20 minutes.

**CAUTION!**

**Failure to follow these cautions can cause damage to the heating elements:**

- **Use care when washing the inside of the rear window. Do not use abrasive window cleaners on the interior surface of the window. Use a soft cloth and a mild washing solution, wiping parallel to the heating elements. Labels can be peeled off after soaking with warm water.**
- **Do not use scrapers, sharp instruments, or abrasive window cleaners on the interior surface of the window.**
- **Keep all objects a safe distance from the window.**

**— Transmission Temperature Warning Light**

This light indicates that the transmission fluid temperature is running hot. This may occur with severe usage, such as trailer towing. If this light turns on, safely pull over and stop the vehicle. Then, shift the transmission into PARK

and run the engine at idle or slightly higher until the light turns off.

**WARNING!**

**If you continue operating the vehicle when the Transmission Temperature Warning Light is illuminated you could cause the fluid to boil over, come in contact with hot engine or exhaust components and cause a fire.**

**CAUTION!**

**Continuous driving with the Transmission Temperature Warning Light illuminated will eventually cause severe transmission damage or transmission failure.**

**— Cold Start Inhibitor — If Equipped**

This vehicle will inhibit engine cranking when the ambient temperature is less than –22° F (–30° C) and the oil temperature sensor reading indicates an engine block heater has not been used. The Cold Start Inhibitor light will flash during in cold weather for up to 10 seconds.

If equipped with a block heater harness the message "Engine Heater Recommended", will be displayed in the instrument cluster when the ambient temperature is below 5°F (-15° C) at the time the engine is shut off as a reminder to avoid possible crank delays at the next cold start.

## Green Indicator Lights

**— Cruise Control SET Indicator Light**

This light will turn on when the speed control is set to the desired speed. Refer to "Speed Control" in "Starting And Operating" for further information.

**— Front Fog Indicator Light — If Equipped**

This indicator will illuminate when the front fog lights are on.

**— Park/Headlight On Indicator Light**

This indicator will illuminate when the park lights or headlights are turned on.

**— Turn Signal Indicator Lights**

The turn signal arrows will flash independently when left or right turn signals are selected. Turn signals can be activated when the multifunction lever is moved down (left) or up (right).

**NOTE:**

- A continuous chime will sound if the vehicle is driven more than 1 mile (1.6 km) with either turn signal on.
- Check for an inoperative outside light bulb if either indicator flashes at a rapid rate.

### White Indicator Lights

**● — Light Sensor Failure**

This light illuminates when there is light sensor failure. If this light illuminates, have an authorized dealer inspect it.

**— Cruise Control On Light**

This light will turn on when the cruise control has been turned on, but a speed is not selected. Refer to "Speed Control" in "Starting And Operating" for further information.

### Blue Indicator Lights

**— High Beam Indicator Light**

This indicator shows that the high beam headlights are on. With the low beams activated, push the multifunction lever forward (toward the front of the vehicle) to turn on the high beams. Pull the multifunction lever rearward (toward the rear of the vehicle) to turn off the high beams. Pull the lever toward you for a temporary high beam on, "flash to pass" scenario.

## ONBOARD DIAGNOSTIC SYSTEM — OBD II

Your vehicle is equipped with a sophisticated Onboard Diagnostic system called OBD II. This system monitors the performance of the emissions, engine, and transmission control systems. When these systems are operating properly, your vehicle will provide excellent performance and fuel economy, as well as engine emissions well within current government regulations.

If any of these systems require service, the OBD II system will turn on the Malfunction Indicator Light (MIL). It will also store diagnostic codes and other information to assist your service technician in making repairs. Although your vehicle will usually be drivable and not need towing, see your authorized dealer for service as soon as possible.

**CAUTION!**

- **Prolonged driving with the MIL on could cause further damage to the emission control system. It could also affect fuel economy and driveability. The**

*(Continued)*

**CAUTION!** *(Continued)*

**vehicle must be serviced before any emissions tests can be performed.**

- **If the MIL is flashing while the vehicle is running, severe catalytic converter damage and power loss will soon occur. Immediate service is required.**

### Onboard Diagnostic System (OBD II) Cybersecurity

Your vehicle is required to have an Onboard Diagnostic system (OBD II) and a connection port to allow access to information related to the performance of your emissions controls. Authorized service technicians may need to access this information to assist with the diagnosis and service of your vehicle and emissions system.

**WARNING!**

- **ONLY an authorized service technician should connect equipment to the OBD II connection port in order to diagnose or service your vehicle.**
- **If unauthorized equipment is connected to the OBD II connection port, such as a driver-behavior tracking device, it may:**

*(Continued)*

**WARNING!** *(Continued)*

- **Be possible that vehicle systems, including safety related systems, could be impaired or a loss of vehicle control could occur that may result in an accident involving serious injury or death.**
- **Access, or allow others to access, information stored in your vehicle systems, including personal information.**

For further information, refer to "Cybersecurity" in the "Multimedia" section.

## EMISSIONS INSPECTION AND MAINTENANCE PROGRAMS

In some localities, it may be a legal requirement to pass an inspection of your vehicle's emissions control system. Failure to pass could prevent vehicle registration.

For states that require an Inspection and Maintenance (I/M), this check verifies the "Malfunction Indicator Light (MIL)" is functioning and is not on when the engine is running, and that the OBD II system is ready for testing.

Normally, the OBD II system will be ready. The OBD II system may **not** be ready if your vehicle was recently serviced, recently had a dead battery or a battery replacement. If the OBD II system should be determined not ready for the I/M test, your vehicle may fail the test.

Your vehicle has a simple ignition actuated test, which you can use prior to going to the test station. To check if your vehicle's OBD II system is ready, you must do the following:

1. Cycle the ignition switch to the ON position, but do not crank or start the engine.

**NOTE:** If you crank or start the engine, you will have to start this test over.

2. As soon as you cycle the ignition switch to the ON position, you will see the "Malfunction Indicator Light (MIL)" symbol come on as part of a normal bulb check.
3. Approximately 15 seconds later, one of two things will happen:

- The MIL will flash for about 10 seconds and then return to being fully illuminated until you turn OFF the ignition or start the engine. This means that your vehicle's OBD II system is **not ready** and you should **not** proceed to the I/M station.
- The MIL will not flash at all and will remain fully illuminated until you place the ignition in the off position or start the engine. This means that your vehicle's OBD II system is **ready** and you can proceed to the I/M station.

If your OBD II system is **not ready,** you should see your authorized dealer or repair facility. If your vehicle was recently serviced or had a battery failure or replacement, you may need to do nothing more than drive your vehicle as you normally would in order for your OBD II system to update. A recheck with the above test routine may then indicate that the system is **now ready**.

Regardless of whether your vehicle's OBD II system is ready or not, if the MIL is illuminated during normal vehicle operation you should have your vehicle serviced before going to the I/M station. The I/M station can fail your vehicle because the MIL is on with the engine running.

# SAFETY

## CONTENTS


■ SAFETY FEATURES . . . . . .112
- □ Anti-Lock Brake System (ABS) . . . . . .112
- □ Electronic Brake Control System . . . . . .113

■ AUXILIARY DRIVING SYSTEMS. . . . . .119
- □ Tire Pressure Monitoring System (TPMS) . . . . . .119

■ OCCUPANT RESTRAINT SYSTEMS . . . . . .123
- □ Occupant Restraint Systems Features . . . . . .123
- □ Important Safety Precautions . . . . . .123
- □ Seat Belt Systems . . . . . .124
- □ Supplemental Restraint Systems (SRS) . . . . . .133
- □ Child Restraints . . . . . .147
- □ Transporting Pets . . . . . .163

■ SAFETY TIPS . . . . . .163
- □ Transporting Passengers . . . . . .163
- □ Exhaust Gas . . . . . .164
- □ Safety Checks You Should Make Inside The Vehicle . . . . . .165
- □ Periodic Safety Checks You Should Make Outside The Vehicle . . . . . .167

## SAFETY FEATURES

### Anti-Lock Brake System (ABS)

The Anti-Lock Brake System (ABS) provides increased vehicle stability and brake performance under most braking conditions. The system automatically prevents wheel lock, and enhances vehicle control during braking.

The ABS performs a self-check cycle to ensure that the ABS is working properly each time the vehicle is started and driven. During this self-check, you may hear a slight clicking sound as well as some related motor noises.

ABS is activated during braking when the system detects one or more wheels begin to lock. Road conditions such as ice, snow, gravel, bumps, railroad tracks, loose debris, or panic stops may increase the likelihood of ABS activation(s).

You also may experience the following when ABS activates:

- The ABS motor noise (it may continue to run for a short time after the stop).
- The clicking sound of solenoid valves.
- Brake pedal pulsations.
- A slight drop of the brake pedal at the end of the stop.

These are all normal characteristics of ABS.

**WARNING!**

- **The ABS contains sophisticated electronic equipment that may be susceptible to interference caused by improperly installed or high output radio transmitting equipment. This interference can cause possible loss of anti-lock braking capability. Installation of such equipment should be performed by qualified professionals.**
- **Pumping of the Anti-Lock Brakes will diminish their effectiveness and may lead to a collision. Pumping makes the stopping distance longer. Just press firmly on your brake pedal when you need to slow down or stop.**
- **The ABS cannot prevent the natural laws of physics from acting on the vehicle, nor can it increase braking or steering efficiency beyond that afforded by the condition of the vehicle brakes and tires or the traction afforded.**
- **The ABS cannot prevent collisions, including those resulting from excessive speed in turns, following another vehicle too closely, or hydroplaning.**

*(Continued)*

**WARNING!** *(Continued)*

- **The capabilities of an ABS equipped vehicle must never be exploited in a reckless or dangerous manner that could jeopardize the user's safety or the safety of others.**

ABS is designed to function with the OEM tires. Modification may result in degraded ABS performance.

**Anti-Lock Brake Warning Light**

The yellow "Anti-Lock Brake Warning Light" will turn on when the ignition is turned to the ON/RUN mode and may stay on for as long as four seconds.

If the "Anti-Lock Brake Warning Light" remains on or comes on while driving, it indicates that the anti-lock portion of the brake system is not functioning and that service is required. However, the conventional brake system will continue to operate normally if the "Brake System Warning Light" is not on.

If the "Anti-Lock Brake Warning Light" is on, the brake system should be serviced as soon as possible to restore the benefits of anti-lock brakes. If the "Anti-Lock Brake Warning Light" does not come on when the ignition is turned to the ON/RUN mode, have the light repaired as soon as possible.

## Electronic Brake Control System

Your vehicle is equipped with a advanced electronic brake control system that includes the Anti-Lock Brake System (ABS), Brake Assist System (BAS), Traction Control System (TCS), Hill Start Assist (HSA), Dynamic Steering Torque (DST), and Electronic Stability Control (ESC). All systems work together to enhance vehicle stability and control in various driving conditions and are commonly referred to as ESC.



**Brake Assist System (BAS)**

The BAS is designed to optimize the vehicle's braking capability during emergency braking maneuvers. The system detects an emergency braking situation by sensing the rate and amount of brake application and then applies optimum pressure to the brakes. This can help reduce braking distances. The BAS complements the Anti-Lock Brake System (ABS). Applying the brakes very quickly results in the best BAS assistance. To receive the benefit of the system, you must apply **continuous** braking pressure during the stopping sequence (do not "pump" the brakes).

Do not reduce brake pedal pressure unless braking is no longer desired. Once the brake pedal is released, the BAS is deactivated.

**WARNING!**

- **The Brake Assist System (BAS) cannot prevent the natural laws of physics from acting on the vehicle, nor can it increase the traction afforded by prevailing road conditions.**
- **BAS cannot prevent collisions, including those resulting from excessive speed in turns, driving on very slippery surfaces, or hydroplaning.**
- **The capabilities of a BAS-equipped vehicle must never be exploited in a reckless or dangerous manner, which could jeopardize the user's safety or the safety of others.**

### Traction Control System (TCS)

The Traction Control System (TCS) monitors the amount of wheel spin of each of the driven wheels. If wheel spin is detected, brake pressure is applied to the slipping wheel(s) and engine power is reduced to provide enhanced acceleration and stability. A feature of the TCS system, Brake Limited Differential (BLD), functions similar to a limited slip differential and controls the wheel spin across a driven axle. If one wheel on a driven axle is spinning faster than the other, the system will apply the brake of the spinning wheel. This will allow more engine torque to be applied to the wheel that is not spinning. This feature remains active even if TCS and ESC are in the Partial Off mode or Full Off mode. Refer to "Electronic Stability Control (ESC)" in this section for further information.

### Hill Start Assist (HSA)

The HSA system is designed to assist the driver when starting a vehicle from a stop on a hill. HSA will maintain the level of brake pressure the driver applied for a short period of time after the driver takes his foot off the brake pedal. If the driver does not apply the throttle during this short period of time, the system will release brake pressure and the vehicle will roll down the hill. The system will release brake pressure in proportion to the amount of throttle applied as the vehicle starts to move in the intended direction of travel.

### HSA Activation Criteria

The following criteria must be met in order for HSA to activate:

- Vehicle must be stopped.
- Vehicle must be on a 5% grade or greater hill.

- Gear selection matches vehicle uphill direction (i.e., vehicle in NEUTRAL (manual transmission), vehicle facing uphill is in forward gear; vehicle backing uphill is in REVERSE gear).

**WARNING!**

**There may be situations on minor hills with a loaded vehicle, or while pulling a trailer, when the system will not activate and slight rolling may occur. This could cause a collision with another vehicle or object. Always remember the driver is responsible for braking the vehicle.**

### Disabling/Enabling HSA

If you wish to turn the HSA system on or off, it can be done using the Customer Programmable Features in the Uconnect Settings. Refer to "Uconnect Settings" in for further information.

### Dynamic Steering Torque (DST)

The DST function uses the integration of the ESC system with the electric power steering to increase the safety level of the whole vehicle.

In critical situations (braking with different grip conditions), through the DST function the ESC system controls the steering to implement an additional torque contribution on the steering wheel, to suggest the most correct manoeuvre to the driver.

The coordinated action of brakes and steering increases the safety and vehicle control feeling.

**NOTE:** The DST is a driving aid system and does not replace the driver's actions while driving the vehicle.

### Electronic Stability Control (ESC)

This system enhances directional control and stability of the vehicle under various driving conditions. ESC corrects for oversteering or understeering of the vehicle by applying the brake of the appropriate wheel to assist in counteracting the oversteering or understeering condition. Engine power may also be reduced to help the vehicle maintain the desired path. ESC uses sensors in the vehicle to determine the vehicle path intended by the driver and compares it to the actual path of the vehicle. When the actual path does not match the intended path, ESC applies the brake of the appropriate wheel to assist in counteracting the oversteer or understeer condition.

- Oversteer - when the vehicle is turning more than appropriate for the steering wheel position.
- Understeer - when the vehicle is turning less than appropriate for the steering wheel position.

**WARNING!**

- **The Electronic Stability Control (ESC) cannot prevent the natural laws of physics from acting on the vehicle, nor can it increase the traction afforded by prevailing road conditions. ESC cannot prevent all accidents, including those resulting from excessive speed in turns, driving on very slippery surfaces, or hydroplaning. ESC also cannot prevent collisions resulting from loss of vehicle control due to inappropriate driver input for the conditions. Only a safe, attentive, and skillful driver can prevent accidents. The capabilities of an ESC equipped vehicle must never be exploited in a reckless or dangerous manner which could jeopardize the user's safety or the safety of others.**
- **Vehicle modifications, or failure to properly maintain your vehicle, may change the handling characteristics of your vehicle, and may negatively affect**

*(Continued)*

**WARNING!** *(Continued)*

**the performance of the ESC system. Changes to the steering system, suspension, braking system, tire type and size or wheel size may adversely affect ESC performance. Improperly inflated and unevenly worn tires may also degrade ESC performance. Any vehicle modification or poor vehicle maintenance that reduces the effectiveness of the ESC system can increase the risk of loss of vehicle control, vehicle rollover, personal injury and death.**

**ESC Activation/Malfunction Indicator Light And ESC OFF Indicator Light**

The ESC Activation/Malfunction Indicator Light in the instrument cluster will come on when the ignition switch is turned to the MAR (ACC/ON/RUN) position for four seconds. If the ESC Activation/Malfunction Indicator Light comes on continuously with the engine running, a malfunction has been detected in the ESC system. If this light remains on after several ignition cycles, and the vehicle has been driven several miles (kilometers) at speeds greater than 30 mph

(48 km/h), see your authorized dealer as soon as possible to have the problem diagnosed and corrected.

The ESC Activation/Malfunction Indicator Light (located in the instrument cluster) starts to flash as soon as the tires lose traction and the ESC system becomes active. The ESC Activation/Malfunction Indicator Light also flashes when TCS is active. If the ESC Activation/Malfunction Indicator Light begins to flash during acceleration, ease up on the accelerator and apply as little throttle as possible. Be sure to adapt your speed and driving to the prevailing road conditions.

**NOTE:**

- The ESC Activation/Malfunction Indicator Light and the ESC OFF Indicator Light come on momentarily each time the ignition switch is turned ON.
- Each time the ignition is turned ON, the ESC system will be ON even if it was turned off previously.

The ESC OFF Indicator Light indicates the Electronic Stability Control (ESC) is partially off or full off.

**ESC Operating Modes**

The ESC system has two available operating modes.

**Full On**

This is the normal operating mode for ESC. Whenever the vehicle is started, the system will be in this mode. This mode should be used for most driving situations. ESC should only be turned to “Partial Off” for specific reasons as noted. Refer to “Partial Off” for additional information.

**Partial Off**

The “ESC OFF” button is located in the switch bank above the climate control. To enter the “Partial Off” mode, momentarily push the “ESC OFF” button and the “ESC Activation/Malfunction Indicator Light” will illuminate. To turn the ESC on again, momentarily push the “ESC OFF” button and the “ESC Activation/Malfunction Indicator Light” will turn off. This will restore the normal “ESC On” mode of operation.

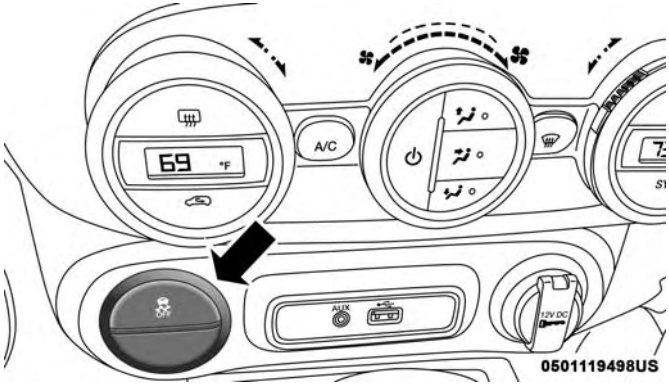


**ESC Off Switch**

**NOTE:** To improve the vehicle's traction when driving with snow chains, or when starting off in deep snow, sand, or gravel, it may be desirable to switch to the "Partial Off" mode by momentarily pushing the "ESC OFF" button. Once the situation requiring "Partial Off" mode is overcome, turn ESC back on by momentarily pushing the "ESC OFF" button. This may be done while the vehicle is in motion.

**WARNING!**

**When in "Partial Off" mode, the TCS functionality of ESC (except for the limited slip feature described in the TCS section) has been disabled and the "ESC Off Indicator Light" will be illuminated. When in "Partial Off" mode, the engine power reduction of TCS is disabled, and the enhanced vehicle stability offered by the ESC system is reduced.**

**Electronic Roll Mitigation (ERM)**

This system anticipates the potential for wheel lift by monitoring the driver's steering wheel input and the speed of the vehicle. When ERM determines that the rate of change of the steering wheel angle and vehicle's speed are sufficient to potentially cause wheel lift, it then applies the appropriate brake and may also reduce engine power to lessen the chance that wheel lift will occur. ERM will only intervene during very severe or evasive driving maneuvers.

ERM can only reduce the chance of wheel lift occurring during severe or evasive driving maneuvers. It cannot prevent wheel lift due to other factors, such as road

conditions, leaving the roadway, or striking objects or other vehicles.

**WARNING!**

**Many factors, such as vehicle loading, road conditions, and driving conditions, influence the chance that wheel lift or rollover may occur. ERM cannot prevent all wheel lift or rollovers, especially those that involve leaving the roadway or striking objects or other vehicles. The capabilities of an ERM-equipped vehicle must never be exploited in a reckless or dangerous manner, which could jeopardize the user's safety or the safety of others.**

## AUXILIARY DRIVING SYSTEMS

### Tire Pressure Monitoring System (TPMS)

The Tire Pressure Monitor System (TPMS) will warn the driver of a low tire pressure based on the vehicle recommended cold tire pressure.

The tire pressure will vary with temperature by about 1 psi (7 kPa) for every 12°F (6.5°C). This means that when the outside temperature decreases, the tire pressure will decrease. Tire pressure should always be set based on cold inflation tire pressure. This is defined as the tire pressure after the vehicle has not been driven for at least three hours, or driven less than 1 mile (1.6 km) after a three hour period. The cold tire inflation pressure must not exceed the maximum inflation pressure molded into the tire sidewall. Refer to "Tires – General Information" in "Servicing And Maintenance" for information on how to properly inflate the vehicle's tires. The tire pressure will also increase as the vehicle is driven, this is normal and there should be no adjustment for this increased pressure.



The TPMS will warn the driver of a low tire pressure if the tire pressure falls below the low pressure warning limit for any reason, including low temperature effects, or natural pressure loss through the tire.

The TPMS will continue to warn the driver of low tire pressure as long as the condition exists, and will not turn off until the tire pressure is at or above the recommended cold tire pressure on the placard. Once the low tire pressure warning (Tire Pressure Monitoring Telltale Light) illuminates, you must increase the tire pressure to the recommended cold tire pressure in order for the Tire Pressure Monitoring Telltale Light to turn off. The system will automatically update and the Tire Pressure Monitoring Telltale Light will turn off once the system receives the

updated tire pressures. The vehicle may need to be driven for up to 20 minutes above 15 mph (24 km/h) in order for the TPMS to receive this information.

For example, your vehicle may have a recommended cold (parked for more than three hours) tire pressure of 30 psi (207 kPa). If the ambient temperature is 68°F (20°C) and the measured tire pressure is 27 psi (186 kPa), a temperature drop to 20°F (-7°C) will decrease the tire pressure to approximately 23 psi (159 kPa). This tire pressure is sufficiently low enough to turn on the Tire Pressure Monitoring Telltale Light. Driving the vehicle may cause the tire pressure to rise to approximately 27 psi (186 kPa), but the Tire Pressure Monitoring Telltale Light will still be on. In this situation, the Tire Pressure Monitoring Telltale Light will turn off only after the tires are inflated to the vehicle's recommended cold tire pressure value.

**CAUTION!**

- **The TPMS has been optimized for the original equipment tires and wheels. TPMS pressures and warnings have been established for the tire size equipped on your vehicle. Undesirable system operation or sensor damage may result when using**

*(Continued)*

**CAUTION!** *(Continued)*

**replacement equipment that is not of the same size, type, and/or style. Aftermarket wheels can cause sensor damage. Using aftermarket tire sealants may cause the Tire Pressure Monitoring System (TPMS) sensor to become inoperable. After using an aftermarket tire sealant it is recommended that you take your vehicle to an authorized dealership to have your sensor function checked.**

- **After inspecting or adjusting the tire pressure, always reinstall the valve stem cap. This will prevent moisture and dirt from entering the valve stem, which could damage the Tire Pressure Monitoring Sensor.**

**NOTE:**

- The TPMS is not intended to replace normal tire care and maintenance, or to provide warning of a tire failure or condition.
- The TPMS should not be used as a tire pressure gauge while adjusting your tire pressure.

- Driving on a significantly under-inflated tire causes the tire to overheat and can lead to tire failure. Under-inflation also reduces fuel efficiency and tire tread life, and may affect the vehicle's handling and stopping ability.
- The TPMS is not a substitute for proper tire maintenance, and it is the driver's responsibility to maintain correct tire pressure using an accurate tire gauge, even if under-inflation has not reached the level to trigger illumination of the Tire Pressure Monitoring Telltale Light.
- Seasonal temperature changes will affect tire pressure, and the TPMS will monitor the actual tire pressure in the tire.

**Base System**

This is the TPMS warning indicator located in the instrument cluster.

The TPMS uses wireless technology with wheel rim mounted electronic sensors to monitor tire pressure levels. Sensors, mounted to each wheel as part of the valve stem, transmit tire pressure readings to the Receiver Module.

**NOTE:** It is particularly important for you to check the tire pressure in all of the tires on your vehicle regularly and to maintain the proper pressure.

The TPMS consists of the following components:

- Receiver Module.
- Four Tire Pressure Monitoring Sensors.
- Tire Pressure Monitoring Telltale Light.



***Tire Pressure Monitoring Low Pressure Warnings***

The Tire Pressure Monitoring Telltale Light will illuminate in the instrument cluster, an acoustic signal will be activated, and the "Check left or right front/rear tire" text message will display when one or more of the four active road tire pressures are low. Should this occur, you should stop as soon as possible, check the inflation pressure of each tire on your vehicle, and inflate each tire to the vehicle's recommended cold placard pressure value. The system will automatically update and the Tire Pressure Monitoring Light will extinguish once the updated tire pressures have been received. The vehicle may need to be driven for up to 20 minutes above 15 mph (24 km/h) to receive this information.

*Check TPMS Warnings*

The Tire Pressure Monitoring Telltale Light will flash on and off for 75 seconds and remain on solid when a system fault is detected, an audible chime will be activated and the "Service Tire Pressure Monitoring System" text message will display. If the ignition is cycled, this sequence will repeat providing the system fault still exists. The Tire Pressure Monitoring Telltale Light will turn off when the fault condition no longer exists. A system fault can occur with any of the following scenarios:

- Jamming due to electronic devices or driving next to facilities emitting the same radio frequencies as the TPM sensors.
- Installing some form of aftermarket window tinting that affects radio wave signals.
- Snow or ice around the wheels or wheel housings.
- Using tire chains on the vehicle.
- Using wheels/tires not equipped with TPM sensors.

**NOTE:** Your vehicle may be equipped with a compact spare wheel and tire assembly.

- The compact spare tire does not have a tire pressure monitoring sensor. Therefore, the TPMS will not monitor the tire pressure in the compact spare tire.
- If you install the compact spare tire in place of a road tire that has a pressure below the low-pressure warning limit, upon the next ignition cycle, a chime will sound and the Tire Pressure Monitoring Telltale Light will still turn ON due to the low tire.
- However, after driving the vehicle for up to 20 minutes above 15 mph (24 km/h), the Tire Pressure Monitoring Telltale Light will flash on and off for 75 seconds and then remain on solid.
- This occurs for each subsequent ignition cycle, a chime will sound and the Tire Pressure Monitoring Telltale Light will flash on and off for 75 seconds and then remain on solid.
- Once you repair or replace the original road tire and reinstall it on the vehicle in place of the compact spare tire, the TPMS will update automatically and the Tire Pressure Monitoring Telltale Light will turn OFF, as long as no tire pressure is below the low-pressure warning limit in any of the four active road tires. The vehicle may need to be driven for up to 20 minutes above 15 mph (24 km/h) in order for the TPMS to receive this information.

### General Information

The following regulatory statement applies to all radio frequency (RF) devices equipped in this vehicle:

This device complies with Part 15 of the FCC Rules and with Industry Canada license-exempt RSS standard(s). Operation is subject to the following two conditions:

(1) This device may not cause harmful interference, and

(2) This device must accept any interference received, including interference that may cause undesired operation.

**NOTE:** Changes or modifications not expressly approved by the party responsible for compliance could void the user's authority to operate the equipment.

## OCCUPANT RESTRAINT SYSTEMS

Some of the most important safety features in your vehicle are the restraint systems:

### Occupant Restraint Systems Features

- Seat Belt Systems
- Supplemental Restraint Systems (SRS) Air Bags
- Child Restraints

Some of the safety features described in this section may be standard equipment on some models, or may be optional equipment on others. If you are not sure, ask your authorized dealer.

### Important Safety Precautions

Please pay close attention to the information in this section. It tells you how to use your restraint system properly, to keep you and your passengers as safe as possible.



Here are some simple steps you can take to minimize the risk of harm from a deploying air bag:

1. Children 12 years old and under should always ride buckled up in a vehicle with a rear seat.
2. If a child from 2 to 12 years old (not in a rear-facing child restraint) must ride in the front passenger seat, move the seat as far back as possible and use the proper child restraint (refer to "Child Restraints" in this section for further information).
3. Children that are not big enough to wear the vehicle seat belt properly (refer to "Child Restraints" in this section for further information) should be secured in a vehicle with a rear seat in child restraints or belt-positioning booster seats. Older children who do not use child

restraints or belt-positioning booster seats should ride properly buckled up in a vehicle with a rear seat.

4. Never allow children to slide the shoulder belt behind them or under their arm.
5. You should read the instructions provided with your child restraint to make sure that you are using it properly.
6. All occupants should always wear their lap and shoulder belts properly.
7. The driver and front passenger seats should be moved back as far as practical to allow the front air bags room to inflate.
8. Do not lean against the door or window. If your vehicle has side air bags, and deployment occurs, the side air bags will inflate forcefully into the space between occupants and the door and occupants could be injured.
9. If the air bag system in this vehicle needs to be modified to accommodate a disabled person, refer to the "Customer Assistance" section for customer service contact information.

**WARNING!**

- **Never place a rear-facing child restraint in front of an air bag. A deploying passenger front air bag can cause death or serious injury to a child 12 years or younger, including a child in a rear-facing child restraint.**
- **Only use a rear-facing child restraint in a vehicle with a rear seat.**

## Seat Belt Systems

Buckle up even though you are an excellent driver, even on short trips. Someone on the road may be a poor driver and could cause a collision that includes you. This can happen far away from home or on your own street.

Research has shown that seat belts save lives, and they can reduce the seriousness of injuries in a collision. Some of the worst injuries happen when people are thrown from the vehicle. Seat belts reduce the possibility of ejection and the risk of injury caused by striking the inside of the vehicle. Everyone in a motor vehicle should be belted at all times.

## Enhanced Seat Belt Use Reminder System (BeltAlert)

### Driver and Passenger BeltAlert (if equipped)

BeltAlert is a feature intended to remind the driver and outboard front seat passenger (if equipped with outboard front passenger seat BeltAlert) to buckle their seat belts. The Belt Alert feature is active whenever the ignition switch is in the START or ON/RUN position.

### Initial Indication

If the driver is unbuckled when the ignition switch is first in the START or ON/RUN position, a chime will signal for a few seconds. If the driver or outboard front seat passenger (if equipped with outboard front passenger seat BeltAlert) is unbuckled when the ignition switch is first in the START or ON/RUN position the Seat Belt Reminder Light will turn on and remain on until both outboard front seat belts are buckled. The outboard front passenger seat BeltAlert is not active when an outboard front passenger seat is unoccupied.

### BeltAlert Warning Sequence

The BeltAlert warning sequence is activated when the vehicle is moving above a specified vehicle speed range and the driver or outboard front seat passenger is unbuckled (if equipped with outboard front passenger seat BeltAlert) (the outboard front passenger seat BeltAlert is not active when the outboard front passenger seat is unoccupied). The BeltAlert warning sequence starts by blinking the Seat Belt Reminder Light and sounding an intermittent chime. Once the BeltAlert warning sequence has completed, the Seat Belt Reminder Light will remain on until the seat belts are buckled. The BeltAlert warning sequence may repeat based on vehicle speed until the driver and occupied outboard front seat passenger seat belts are buckled. The driver should instruct all occupants to buckle their seat belts.

### Change of Status

If the driver or outboard front seat passenger (if equipped with outboard front passenger seat BeltAlert) unbuckles their seat belt while the vehicle is traveling, the BeltAlert warning sequence will begin until the seat belts are buckled again.

The outboard front passenger seat BeltAlert is not active when the outboard front passenger seat is unoccupied. BeltAlert may be triggered when an animal or other items are placed on the outboard front passenger seat or when the seat is folded flat (if equipped). It is recommended that pets be restrained in the rear seat (if equipped) in pet harnesses or pet carriers that are secured by seat belts, and cargo is properly stowed.

BeltAlert can be activated or deactivated by your authorized dealer. FCA US LLC does not recommend deactivating BeltAlert.

**NOTE:** If BeltAlert has been deactivated and the driver or outboard front seat passenger (if equipped with outboard front passenger seat BeltAlert) is unbuckled the Seat Belt Reminder Light will turn on and remain on until the driver and outboard front seat passenger seat belts are buckled.

**Lap/Shoulder Belts**

All seating positions in your vehicle are equipped with lap/shoulder belts.

The seat belt webbing retractor will lock only during very sudden stops or collisions. This feature allows the shoulder part of the seat belt to move freely with you under normal conditions. However, in a collision the seat belt will lock and reduce your risk of striking the inside of the vehicle or being thrown out of the vehicle.

**WARNING!**

- **Relying on the air bags alone could lead to more severe injuries in a collision. The air bags work with**

*(Continued)*

**WARNING!** ***(Continued)***

**your seat belt to restrain you properly. In some collisions, the air bags won't deploy at all. Always wear your seat belt even though you have air bags.**
- **In a collision, you and your passengers can suffer much greater injuries if you are not properly buckled up. You can strike the interior of your vehicle or other passengers, or you can be thrown out of the vehicle. Always be sure you and others in your vehicle are buckled up properly.**
- **It is dangerous to ride in a cargo area, inside or outside of a vehicle. In a collision, people riding in these areas are more likely to be seriously injured or killed.**
- **Do not allow people to ride in any area of your vehicle that is not equipped with seats and seat belts.**
- **Be sure everyone in your vehicle is in a seat and using a seat belt properly. Occupants, including the driver, should always wear their seat belts whether or not an air bag is also provided at their seating position to minimize the risk of severe injury or death in the event of a crash.**

*(Continued)*

**WARNING! *(Continued)***

- Wearing your seat belt incorrectly could make your injuries in a collision much worse. You might suffer internal injuries, or you could even slide out of the seat belt. Follow these instructions to wear your seat belt safely and to keep your passengers safe, too.
- Two people should never be belted into a single seat belt. People belted together can crash into one another in a collision, hurting one another badly. Never use a lap/shoulder belt or a lap belt for more than one person, no matter what their size.

**WARNING!**

- A lap belt worn too high can increase the risk of injury in a collision. The seat belt forces won't be at the strong hip and pelvic bones, but across your abdomen. Always wear the lap part of your seat belt as low as possible and keep it snug.
- A twisted seat belt may not protect you properly. In a collision, it could even cut into you. Be sure the seat belt is flat against your body, without twists. If you can't straighten a seat belt in your vehicle, take it to

*(Continued)*

**WARNING! *(Continued)***

your authorized dealer immediately and have it fixed.

- A seat belt that is buckled into the wrong buckle will not protect you properly. The lap portion could ride too high on your body, possibly causing internal injuries. Always buckle your seat belt into the buckle nearest you.
- A seat belt that is too loose will not protect you properly. In a sudden stop, you could move too far forward, increasing the possibility of injury. Wear your seat belt snugly.
- A seat belt that is worn under your arm is dangerous. Your body could strike the inside surfaces of the vehicle in a collision, increasing head and neck injury. A seat belt worn under the arm can cause internal injuries. Ribs aren't as strong as shoulder bones. Wear the seat belt over your shoulder so that your strongest bones will take the force in a collision.

*(Continued)*

**WARNING!** ***(Continued)***

- **A shoulder belt placed behind you will not protect you from injury during a collision. You are more likely to hit your head in a collision if you do not wear your shoulder belt. The lap and shoulder belt are meant to be used together.**
- **A frayed or torn seat belt could rip apart in a collision and leave you with no protection. Inspect the seat belt system periodically, checking for cuts, frays, or loose parts. Damaged parts must be replaced immediately. Do not disassemble or modify the seat belt system. Seat belt assemblies must be replaced after a collision.**

**Lap/Shoulder Belt Operating Instructions**

1. Enter the vehicle and close the door. Sit back and adjust the seat.
2. The seat belt latch plate is above the back of the front seat, and next to your arm in the rear seat (for vehicles equipped with a rear seat). Grasp the latch plate and pull out the seat belt. Slide the latch plate up the webbing as far as necessary to allow the seat belt to go around your lap.

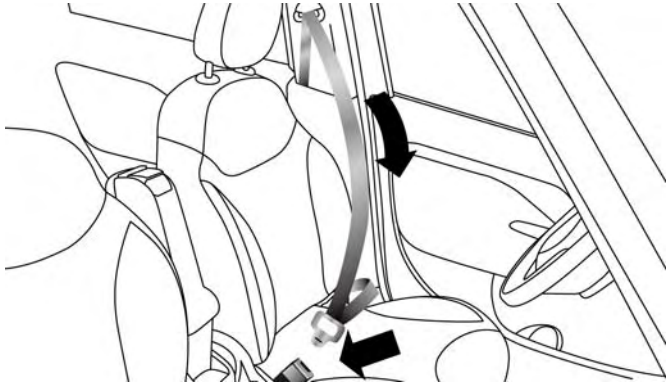

**Pulling Out The Latch Plate**

3. When the seat belt is long enough to fit, insert the latch plate into the buckle until you hear a “click.”

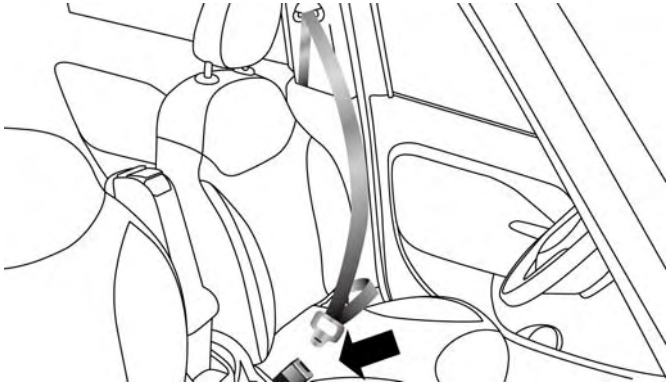

**Inserting Latch Plate Into Buckle**

4. Position the lap belt so that it is snug and lies low across your hips, below your abdomen. To remove slack in the lap belt portion, pull up on the shoulder belt. To loosen the lap belt if it is too tight, tilt the latch plate and pull on the lap belt. A snug seat belt reduces the risk of sliding under the seat belt in a collision.

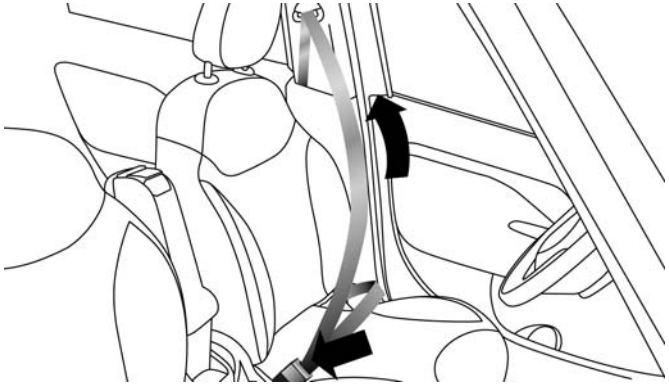

**Positioning The Lap Belt**

5. Position the shoulder belt across the shoulder and chest with minimal, if any slack so that it is comfortable and not resting on your neck. The retractor will withdraw any slack in the shoulder belt.

6. To release the seat belt, push the red button on the buckle. The seat belt will automatically retract to its stowed position. If necessary, slide the latch plate down the webbing to allow the seat belt to retract fully.

### Lap/Shoulder Belt Untwisting Procedure

Use the following procedure to untwist a twisted lap/shoulder belt.

1. Position the latch plate as close as possible to the anchor point.
2. At about 6 to 12 inches (15 to 30 cm) above the latch plate, grasp and twist the seat belt webbing 180 degrees to create a fold that begins immediately above the latch plate.
3. Slide the latch plate upward over the folded webbing. The folded webbing must enter the slot at the top of the latch plate.
4. Continue to slide the latch plate up until it clears the folded webbing and the seat belt is no longer twisted.

### Seat Belts And Pregnant Women

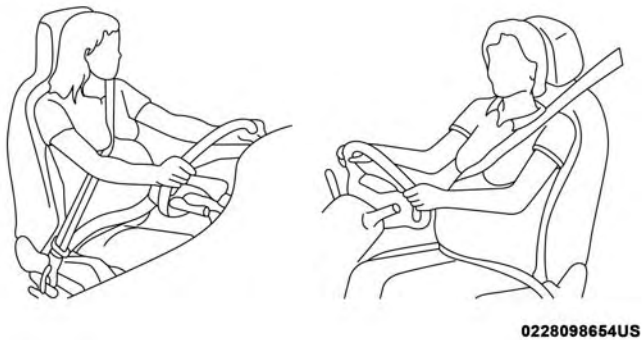


**Pregnant Women And Seat Belts**

Seat belts must be worn by all occupants including pregnant women: the risk of injury in the event of an accident is reduced for the mother and the unborn child if they are wearing a seat belt.

Position the lap belt snug and low below the abdomen and across the strong bones of the hips. Place the shoulder belt across the chest and away from the neck. Never place the shoulder belt behind the back or under the arm.

### Seat Belt Pretensioner

The front seat belt system is equipped with pretensioning devices that are designed to remove slack from the seat belt in the event of a collision. These devices may improve the performance of the seat belt by removing slack from the seat belt early in a collision. Pretensioners work for all size occupants, including those in child restraints.

**NOTE:** These devices are not a substitute for proper seat belt placement by the occupant. The seat belt still must be worn snugly and positioned properly.

The pretensioners are triggered by the Occupant Restraint Controller (ORC). Like the air bags, the pretensioners are single use items. A deployed pretensioner or a deployed air bag must be replaced immediately.

### Energy Management Feature

The front seat belt system is equipped with an Energy Management feature that may help further reduce the risk of injury in the event of a collision. The seat belt system has a retractor assembly that is designed to release webbing in a controlled manner.

### Switchable Automatic Locking Retractor (ALR)

The seat belts in the passenger seating positions are equipped with a Switchable Automatic Locking Retractor (ALR) which is used to secure a child restraint system. For additional information, refer to "Installing Child Restraints Using The Vehicle Seat Belt" under the "Child Restraints" section of this manual. The figure below illustrates the locking feature for each seating position.



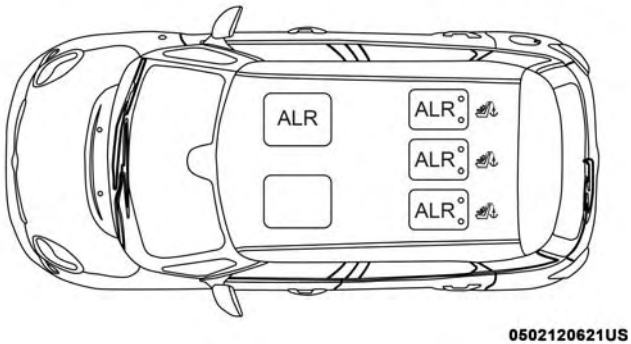


**ALR — Switchable Automatic Locking Retractor**

If the passenger seating position is equipped with an ALR and is being used for normal usage, only pull the seat belt webbing out far enough to comfortably wrap around the occupant's mid-section so as to not activate the ALR. If the ALR is activated, you will hear a clicking sound as the seat belt retracts. Allow the webbing to retract completely in this case and then carefully pull out only the amount of webbing necessary to comfortably wrap around the occupant's mid-section. Slide the latch plate into the buckle until you hear a "click."

In Automatic Locking Mode, the shoulder belt is automatically pre-locked. The seat belt will still retract to remove any slack in the shoulder belt. Use the Automatic Locking Mode anytime a child restraint is installed in a seating position that has a seat belt with this feature. Children 12 years old and under should always be properly restrained in a vehicle with a rear seat.

**WARNING!**

- **Never place a rear-facing child restraint in front of an air bag. A deploying passenger front air bag can cause death or serious injury to a child 12 years or younger, including a child in a rear-facing child restraint.**
- **Only use a rear-facing child restraint in a vehicle with a rear seat.**

**How To Engage The Automatic Locking Mode**

1. Buckle the combination lap and shoulder belt.
2. Grasp the shoulder portion and pull downward until the entire seat belt is extracted.
3. Allow the seat belt to retract. As the seat belt retracts, you will hear a clicking sound. This indicates the seat belt is now in the Automatic Locking Mode.

### How To Disengage The Automatic Locking Mode

Unbuckle the combination lap/shoulder belt and allow it to retract completely to disengage the Automatic Locking Mode and activate the vehicle sensitive (emergency) locking mode.

**WARNING!**

- **The seat belt assembly must be replaced if the switchable Automatic Locking Retractor (ALR) feature or any other seat belt function is not working properly when checked according to the procedures in the Service Manual.**
- **Failure to replace the seat belt assembly could increase the risk of injury in collisions.**
- **Do not use the Automatic Locking Mode to restrain occupants who are wearing the seat belt or children who are using booster seats. The locked mode is only used to install rear-facing or forward-facing child restraints that have a harness for restraining the child.**

## Supplemental Restraint Systems (SRS)

Some of the safety features described in this section may be standard equipment on some models, or may be optional equipment on others. If you are not sure, ask your authorized dealer.

The air bag system must be ready to protect you in a collision. The Occupant Restraint Controller (ORC) monitors the internal circuits and interconnecting wiring associated with the electrical Air Bag System Components. Your vehicle may be equipped with the following Air Bag System Components:



### Air Bag System Components

- Occupant Restraint Controller (ORC)
- Air Bag Warning Light
- Steering Wheel and Column
- Instrument Panel
- Knee Impact Bolsters
- Driver and Front Passenger Air Bags
- Seat Belt Buckle Switch
- Supplemental Side Air Bags

- Supplemental Knee Air Bags
- Front and Side Impact Sensors
- Seat Belt Pretensioners
- Seat Track Position Sensors

**Air Bag Warning Light**

The ORC monitors the readiness of the electronic parts of the air bag system whenever the ignition switch is in the AVV/START or MAR/ACC/ON/RUN position. If the ignition switch is in the STOP/OFF/LOCK position the air bag system is not on and the air bags will not inflate.

The ORC contains a backup power supply system that may deploy the air bag system even if the battery loses power or it becomes disconnected prior to deployment.

The ORC turns on the Air Bag Warning Light in the instrument panel for approximately four to eight seconds for a self-check when the ignition switch is in the MAR/ACC/ON/RUN position. After the self-check, the Air Bag Warning Light will turn off. If the ORC detects a malfunction in any part of the system, it turns on the Air Bag Warning Light, either momentarily or continuously. A single chime will sound to alert you if the light comes on again after initial startup.

The ORC also includes diagnostics that will illuminate the instrument panel Air Bag Warning Light if a malfunction is detected that could affect the air bag system. The diagnostics also record the nature of the malfunction. While the air bag system is designed to be maintenance free, if any of the following occurs, have an authorized dealer service the air bag system immediately.

- The Air Bag Warning Light does not come on during the four to eight seconds when the ignition switch is first in the MAR/ACC/ON/RUN position.
- The Air Bag Warning Light remains on after the four to eight-second interval.
- The Air Bag Warning Light comes on intermittently or remains on while driving.

**NOTE:** If the speedometer, tachometer, or any engine related gauges are not working, the Occupant Restraint Controller (ORC) may also be disabled. In this condition the air bags may not be ready to inflate for your protection. Have an authorized dealer service the air bag system immediately.

**WARNING!**

**Ignoring the Air Bag Warning Light in your instrument panel could mean you won't have the air bag system to protect you in a collision. If the light does not come on as a bulb check when the ignition is first turned on, stays on after you start the vehicle, or if it comes on as you drive, have an authorized dealer service the air bag system immediately.**

**Front Air Bags**

This vehicle has front air bags and lap/shoulder belts for both the driver and front passenger. The front air bags are a supplement to the seat belt restraint systems. The driver front air bag is mounted in the center of the steering wheel. The passenger front air bag is mounted in the instrument panel, above the glove compartment. The words "SRS AIRBAG" or "AIRBAG" are embossed on the air bag covers.

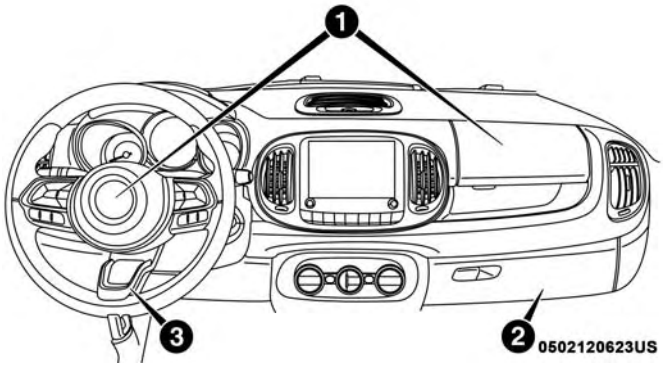


**Front Air Bag/Knee Bolster Locations**

1 — Driver And Passenger Front Air Bags
2 — Passenger Knee Impact Bolster
3 — Supplemental Driver Knee Air Bag/Driver Knee Impact Bolster

**WARNING!**

- **Being too close to the steering wheel or instrument panel during front air bag deployment could cause serious injury, including death. Air bags need room to inflate. Sit back, comfortably extending your arms to reach the steering wheel or instrument panel.**

*(Continued)*

**WARNING!** *(Continued)*

- **Never place a rear-facing child restraint in front of an air bag. A deploying passenger front air bag can cause death or serious injury to a child 12 years or younger, including a child in a rear-facing child restraint.**
- **Only use a rear-facing child restraint in a vehicle with a rear seat.**

### Driver And Passenger Front Air Bag Features

The Advanced Front Air Bag system has multistage driver and front passenger air bags. This system provides output appropriate to the severity and type of collision as determined by the Occupant Restraint Controller (ORC), which may receive information from the front impact sensors (if equipped) or other system components.

The first stage inflator is triggered immediately during an impact that requires air bag deployment. A low energy output is used in less severe collisions. A higher energy output is used for more severe collisions.

This vehicle may be equipped with a driver and/or front passenger seat belt buckle switch that detects whether the driver or front passenger seat belt is buckled. The seat belt buckle switch may adjust the inflation rate of the Advanced Front Air Bags.

This vehicle may be equipped with driver and/or front passenger seat track position sensors that may adjust the inflation rate of the Advanced Front Air Bags based upon seat position.

**WARNING!**

- **No objects should be placed over or near the air bag on the instrument panel or steering wheel because any such objects could cause harm if the vehicle is in a collision severe enough to cause the air bag to inflate.**
- **Do not put anything on or around the air bag covers or attempt to open them manually. You may damage the air bags and you could be injured because the air bags may no longer be functional. The protective covers for the air bag cushions are designed to open only when the air bags are inflating.**
- **Relying on the air bags alone could lead to more severe injuries in a collision. The air bags work with your seat belt to restrain you properly. In some**

*(Continued)*

**WARNING! *(Continued)***

**collisions, air bags won't deploy at all. Always wear your seat belts even though you have air bags.**

### Front Air Bag Operation

Front Air Bags are designed to provide additional protection by supplementing the seat belts. Front air bags are not expected to reduce the risk of injury in rear, side, or rollover collisions. The front air bags will not deploy in all frontal collisions, including some that may produce substantial vehicle damage — for example, some pole collisions, truck underrides, and angle offset collisions.

On the other hand, depending on the type and location of impact, front air bags may deploy in crashes with little vehicle front-end damage but that produce a severe initial deceleration.

Because air bag sensors measure vehicle deceleration over time, vehicle speed and damage by themselves are not good indicators of whether or not an air bag should have deployed.

Seat belts are necessary for your protection in all collisions, and also are needed to help keep you in position, away from an inflating air bag.

When the ORC detects a collision requiring the front air bags, it signals the inflator units. A large quantity of non-toxic gas is generated to inflate the front air bags.

The steering wheel hub trim cover and the upper right side of the instrument panel separate and fold out of the way as the air bags inflate to their full size. The front air bags fully inflate in less time than it takes to blink your eyes. The front air bags then quickly deflate while helping to restrain the driver and front passenger.



### Knee Impact Bolsters

The Knee Impact Bolsters help protect the knees of the driver and front passenger, and position the front occupants for improved interaction with the front air bags.

**WARNING!**

- **Do not drill, cut, or tamper with the knee impact bolsters in any way.**
- **Do not mount any accessories to the knee impact bolsters such as alarm lights, stereos, citizen band radios, etc.**

## Supplemental Driver Knee Air Bag

This vehicle is equipped with a Supplemental Driver Knee Air Bag mounted in the instrument panel below the steering column. The Supplemental Driver Knee Air Bag provides enhanced protection during a frontal impact by working together with the seat belts, pretensioners, and front air bags.

## Supplemental Side Air Bags

### Supplemental Seat-Mounted Side Air Bags (SABs)

This vehicle is equipped with Supplemental Seat-Mounted Side Air Bags (SABs).

Supplemental Seat-Mounted Side Air Bags (SABs) are located in the outboard side of the front seats. The SABs are marked with a "SRS AIRBAG" or "AIRBAG" label sewn into the outboard side of the seats.

The SABs may help to reduce the risk of occupant injury during certain side impacts, in addition to the injury reduction potential provided by the seat belts and body structure.

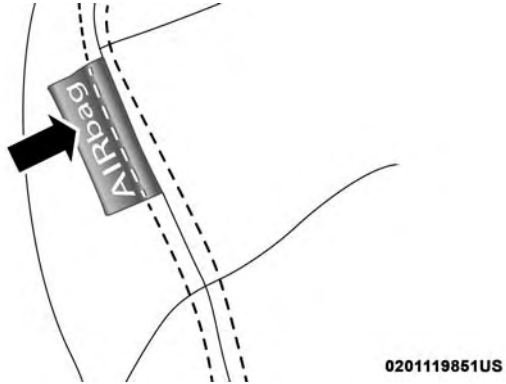


**Front Supplemental Seat-Mounted Side Air Bag Label**

When the SAB deploys, it opens the seam on the outboard side of the seatback's trim cover. The inflating SAB deploys through the seat seam into the space between the occupant and the door. The SAB moves at a very high speed and with such a high force that it could injure occupants if they are not seated properly, or if items are positioned in the area where the SAB inflates. Children are at an even greater risk of injury from a deploying air bag.

**WARNING!**

**Do not use accessory seat covers or place objects between you and the Side Air Bags; the performance could be adversely affected and/or objects could be pushed into you, causing serious injury.**

**Supplemental Side Air Bag Inflatable Curtains (SABICs)**

This vehicle is equipped with Supplemental Side Air Bag Inflatable Curtains (SABICs).

Supplemental Side Air Bag Inflatable Curtains (SABICs) are located above the side windows. The trim covering the SABICs is labeled “SRS AIRBAG” or “AIRBAG.”

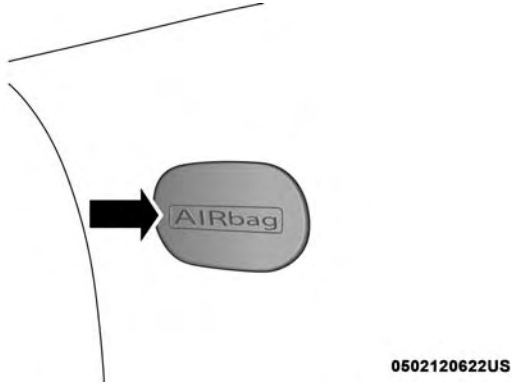


**Supplemental Side Air Bag Inflatable Curtain (SABIC) Label Location**

SABICs may help reduce the risk of head and other injuries to front and rear seat outboard occupants in certain side impacts, in addition to the injury reduction potential provided by the seat belts and body structure.

The SABIC deploys downward, covering the side windows. An inflating SABIC pushes the outside edge of the headliner out of the way and covers the window. The SABICs inflate with enough force to injure occupants if they are not belted and seated properly, or if items are

positioned in the area where the SABICs inflate. Children are at an even greater risk of injury from a deploying air bag.

The SABICs may help reduce the risk of partial or complete ejection of vehicle occupants through side windows in certain side impact events.

**WARNING!**

- **Do not mount equipment, or stack luggage or other cargo up high enough to block the deployment of the SABICs. The trim covering above the side windows where the SABIC and its deployment path are located should remain free from any obstructions.**
- **In order for the SABICs to work as intended, do not install any accessory items in your vehicle which could alter the roof. Do not add an aftermarket sunroof to your vehicle. Do not add roof racks that require permanent attachments (bolts or screws) for installation on the vehicle roof. Do not drill into the roof of the vehicle for any reason.**

**Side Impacts**

The Side Air Bags are designed to activate in certain side impacts. The Occupant Restraint Controller (ORC) determines whether the deployment of the Side Air Bags in a particular impact event is appropriate, based on the severity and type of collision. The side impact sensors aid the ORC in determining the appropriate response to impact events. The system is calibrated to deploy the Side Air Bags on the impact side of the vehicle during impacts that require Side Air Bag occupant protection. In side impacts, the Side Air Bags deploy independently; a left side impact deploys the left Side Air Bags only and a right-side impact deploys the right Side Air Bags only. Vehicle damage by itself is not a good indicator of whether or not Side Air Bags should have deployed.

The Side Air Bags will not deploy in all side collisions, including some collisions at certain angles, or some side collisions that do not impact the area of the passenger compartment. The Side Air Bags may deploy during angled or offset frontal collisions where the front air bags deploy.

Side Air Bags are a supplement to the seat belt restraint system. Side Air Bags deploy in less time than it takes to blink your eyes.

**WARNING!**

- **Occupants, including children, who are up against or very close to Side Air Bags can be seriously injured or killed. Occupants, including children, should never lean on or sleep against the door, side windows, or area where the side air bags inflate, even if they are in an infant or child restraint.**
- **Seat belts (and child restraints where appropriate) are necessary for your protection in all collisions. They also help keep you in position, away from an inflating Side Air Bag. To get the best protection from the Side Air Bags, occupants must wear their seat belts properly and sit upright with their backs against the seats. Children must be properly restrained in a child restraint or booster seat that is appropriate for the size of the child.**

**WARNING!**

- **Side Air Bags need room to inflate. Do not lean against the door or window. Sit upright in the center of the seat.**
- **Being too close to the Side Air Bags during deployment could cause you to be severely injured or killed.**
- **Relying on the Side Air Bags alone could lead to more severe injuries in a collision. The Side Air Bags work with your seat belt to restrain you properly. In some collisions, Side Air Bags won't deploy at all. Always wear your seat belt even though you have Side Air Bags.**

**NOTE:** Air bag covers may not be obvious in the interior trim, but they will open during air bag deployment.

**Rollover Events**

Side Air Bags are designed to activate in certain rollover events. The ORC determines whether the deployment of the Side Air Bags in a particular rollover event is appropriate, based on the severity and type of collision. Vehicle damage by itself is not a good indicator of whether or not Side Air Bags should have deployed.

The Side Air Bags will not deploy in all rollover events. The rollover sensing system determines if a rollover event may be in progress and whether deployment is appropriate. In the event the vehicle experiences a rollover or near rollover event, and deployment of the Side Air Bags is appropriate, the rollover sensing system will also deploy the seat belt pretensioners on both sides of the vehicle.

The SABICs may help reduce the risk of partial or complete ejection of vehicle occupants through side windows in certain rollover or side impact events.

**Air Bag System Components**

**NOTE:** The Occupant Restraint Controller (ORC) monitors the internal circuits and interconnecting wiring associated with electrical Air Bag System Components listed below:

- Occupant Restraint Controller (ORC)
- Air Bag Warning Light
- Steering Wheel and Column
- Instrument Panel
- Knee Impact Bolsters
- Driver and Front Passenger Air Bags
- Seat Belt Buckle Switch
- Supplemental Side Air Bags
- Supplemental Knee Air Bags
- Front and Side Impact Sensors
- Seat Belt Pretensioners
- Seat Track Position Sensors

**If A Deployment Occurs**

The front air bags are designed to deflate immediately after deployment.

**NOTE:** Front and/or side air bags will not deploy in all collisions. This does not mean something is wrong with the air bag system.

If you do have a collision which deploys the air bags, any or all of the following may occur:

- The air bag material may sometimes cause abrasions and/or skin reddening to the occupants as the air bags deploy and unfold. The abrasions are similar to friction rope burns or those you might get sliding along a carpet or gymnasium floor. They are not caused by contact with chemicals. They are not permanent and normally heal quickly. However, if you haven't healed significantly within a few days, or if you have any blistering, see your doctor immediately.

- As the air bags deflate, you may see some smoke-like particles. The particles are a normal by-product of the process that generates the non-toxic gas used for air bag inflation. These airborne particles may irritate the skin, eyes, nose, or throat. If you have skin or eye irritation, rinse the area with cool water. For nose or throat irritation, move to fresh air. If the irritation continues, see your doctor. If these particles settle on your clothing, follow the garment manufacturer's instructions for cleaning.

Do not drive your vehicle after the air bags have deployed. If you are involved in another collision, the air bags will not be in place to protect you.

**WARNING!**

**Deployed air bags and seat belt pretensioners cannot protect you in another collision. Have the air bags, seat belt pretensioners, and the seat belt retractor assemblies replaced by an authorized dealer immediately. Also, have the Occupant Restraint Controller System serviced as well.**

**NOTE:**

- Air bag covers may not be obvious in the interior trim, but they will open during air bag deployment.
- After any collision, the vehicle should be taken to an authorized dealer immediately.

**Enhanced Accident Response System**



In the event of an impact, if the communication network remains intact, and the power remains intact, depending on the nature of the event, the ORC will determine whether to have the Enhanced Accident Response System perform the following functions:

- Cut off fuel to the engine.
- Flash hazard lights as long as the battery has power or until the hazard light button is pressed. The hazard lights can be deactivated by pressing the hazard light button.
- Turn on the interior lights, which remain on as long as the battery has power or for 15 minutes from the intervention of the Enhanced Accident Response System.
- Unlock the power door locks.

### Enhanced Accident Response System Reset Procedure

After the event occurs, when the system is active, a message regarding fuel cutoff is displayed. Turn the ignition switch from ignition AVV/START or MAR/ACC/ON/RUN to ignition STOP/OFF/LOCK. Carefully check the vehicle for fuel leaks in the engine compartment and on the ground near the engine compartment and fuel tank before resetting the system and starting the engine.

Depending on the nature of the event the left and right turn signal lights, located in the instrument panel, may both be blinking and will continue to blink. In order to move your vehicle to the side of the road, you must follow the system reset procedure.

| Customer Action | Customer Will See |
|---|---|
| **NOTE:** Each step MUST BE held for at least two seconds | |
| 1. Turn ignition STOP/OFF/LOCK. (Turn Signal Must be placed in Neutral State). | |
| 2. Turn ignition MAR/ACC/ON/RUN. | Right turn light BLINKS. Left turn light is OFF. |
| 3. Turn right turn signal switch ON. | Right turn light is ON SOLID. Left turn light BLINKS. |
| 4. Place turn signal in neutral state. | Right turn light is OFF. Left turn light BLINKS. |
| 5. Turn left turn signal switch ON. | Right turn light BLINKS. Left turn light is ON SOLID. |
| 6. Place turn signal in neutral state. | Right turn light BLINKS. Left turn light is OFF. |
| 7. Turn right turn signal switch ON. | Right turn light is ON SOLID. Left turn light BLINKS. |
| 8. Place turn signal in neutral state. | Right turn light is OFF. Left turn light BLINKS. |
| 9. Turn left turn signal switch ON. | Right turn light is ON SOLID. Left turn light is ON |

| Customer Action | Customer Will See |
|---|---|
| **NOTE:** Each step MUST BE held for at least two seconds | |
| | SOLID. |
| 10. Turn left turn signal switch OFF. (Turn Signal Switch Must be placed in Neutral State). | Right turn light is OFF. Left turn light is OFF. |
| 11. Turn ignition STOP/OFF/LOCK. | |
| 12. Turn ignition MAR/ACC/ON/RUN. (Entire sequence needs to be completed within one minute or sequence will need to be repeated). | System is now reset and the engine may be started. |
| Turn hazard flashers OFF (Manually). | |

If a reset procedure step is not completed within 60 seconds, then the turn signal lights will blink and the reset procedure must be performed again in order to be successful.

## Maintaining Your Air Bag System

**WARNING!**

- **Modifications to any part of the air bag system could cause it to fail when you need it. You could be injured if the air bag system is not there to protect you. Do not modify the components or wiring, including adding any kind of badges or stickers to the steering wheel hub trim cover or the upper right side of the instrument panel. Do not modify the front bumper, vehicle body structure, or add aftermarket side steps or running boards.**
- **It is dangerous to try to repair any part of the air bag system yourself. Be sure to tell anyone who works on your vehicle that it has an air bag system.**
- **Do not attempt to modify any part of your air bag system. The air bag may inflate accidentally or may not function properly if modifications are made. Take your vehicle to an authorized dealer for any air bag system service. If your seat, including your trim cover and cushion, needs to be serviced in any way (including removal or loosening/tightening of seat attachment bolts), take the vehicle to your authorized**

*(Continued)*

**WARNING!** ***(Continued)***

**dealer. Only manufacturer approved seat accessories may be used. If it is necessary to modify the air bag system for persons with disabilities, contact your authorized dealer.**

**Event Data Recorder (EDR)**

This vehicle is equipped with an event data recorder (EDR). The main purpose of an EDR is to record, in certain crash or near crash-like situations, such as an air bag deployment or hitting a road obstacle, data that will assist in understanding how a vehicle's systems performed. The EDR is designed to record data related to vehicle dynamics and safety systems for a short period of time, typically 30 seconds or less. The EDR in this vehicle is designed to record such data as:

- How various systems in your vehicle were operating;
- Whether or not the driver and passenger safety belts were buckled/fastened;
- How far (if at all) the driver was depressing the accelerator and/or brake pedal; and,
- How fast the vehicle was traveling.

These data can help provide a better understanding of the circumstances in which crashes and injuries occur.

**NOTE:** EDR data are recorded by your vehicle only if a non-trivial crash situation occurs; no data are recorded by the EDR under normal driving conditions and no personal data (e.g., name, gender, age, and crash location) are recorded. However, other parties, such as law enforcement, could combine the EDR data with the type of personally identifying data routinely acquired during a crash investigation.

To read data recorded by an EDR, special equipment is required, and access to the vehicle or the EDR is needed. In addition to the vehicle manufacturer, other parties, such as law enforcement, that have the special equipment, can read the information if they have access to the vehicle or the EDR.

## Child Restraints

Everyone in your vehicle needs to be buckled up at all times, including babies and children. Every state in the United States, and every Canadian province, requires that small children ride in proper restraint systems. This is the law, and you can be prosecuted for ignoring it.

Children 12 years or younger should ride properly buckled up in a rear seat, if available. According to crash statistics, children are safer when properly restrained in the rear seats rather than in the front.

**WARNING!**

**In a collision, an unrestrained child can become a projectile inside the vehicle. The force required to hold even an infant on your lap could become so great that you could not hold the child, no matter how strong you are. The child and others could be badly injured or killed. Any child riding in your vehicle should be in a proper restraint for the child's size.**

There are different sizes and types of restraints for children from newborn size to the child almost large enough for an adult safety belt. Always check the child seat Owner's Manual to make sure you have the correct seat for your child. Carefully read and follow all the instructions and warnings in the child restraint Owner's Manual and on all the labels attached to the child restraint.

Before buying any restraint system, make sure that it has a label certifying that it meets all applicable Safety Standards. You should also make sure that you can install it in the vehicle where you will use it.

**NOTE:**

- For additional information, refer to www.safercar.gov/parents/index.htm or call: 1–888–327–4236
- Canadian residents should refer to Transport Canada's website for additional information: http://www.tc.gc.ca/eng/motorvehiclesafety/safedrivers-childsafety-index-53.htm

**Summary Of Recommendations For Restraining Children In Vehicles**

| | Child Size, Height, Weight Or Age | Recommended Type Of Child Restraint |
|---|---|---|
| Infants and Toddlers | Children who are two years old or younger and who have not reached the height or weight limits of their child restraint | Either an Infant Carrier or a Convertible Child Restraint, facing rearward in the rear seat of the vehicle |
| Small Children | Children who are at least two years old or who have outgrown the height or weight limit of their rear-facing child restraint | Forward-Facing Child Restraint with a five-point Harness, facing forward in the rear seat of the vehicle |
| Larger Children | Children who have outgrown their forward-facing child restraint, but are too small to properly fit the vehicle's seat belt | Belt Positioning Booster Seat and the vehicle seat belt, seated in the rear seat of the vehicle |
| Children Too Large for Child Restraints | Children 12 years old or younger, who have outgrown the height or weight limit of their booster seat | Vehicle Seat Belt, seated in the rear seat of the vehicle |

**Infant And Child Restraints**

Safety experts recommend that children ride rear-facing in the vehicle until they are two years old or until they reach either the height or weight limit of their rear-facing child restraint. Two types of child restraints can be used rear-facing: infant carriers and convertible child seats.

The infant carrier is only used rear-facing in the vehicle. It is recommended for children from birth until they reach the weight or height limit of the infant carrier. Convertible

child seats can be used either rear-facing or forward-facing in the vehicle. Convertible child seats often have a higher weight limit in the rear-facing direction than infant carriers do, so they can be used rear-facing by children who have outgrown their infant carrier but are still less than at least two years old. Children should remain rear-facing until they reach the highest weight or height allowed by their convertible child seat.

**WARNING!**

- **Never place a rear-facing child restraint in front of an air bag. A deploying passenger front air bag can cause death or serious injury to a child 12 years or younger, including a child in a rear-facing child restraint.**
- **Only use a rear-facing child restraint in a vehicle with a rear seat.**

### Older Children And Child Restraints

Children who are two years old or who have outgrown their rear-facing convertible child seat can ride forward-facing in the vehicle. Forward-facing child seats and convertible child seats used in the forward-facing direction are for children who are over two years old or who have outgrown the rear-facing weight or height limit of their rear-facing convertible child seat. Children should remain in a forward-facing child seat with a harness for as long as possible, up to the highest weight or height allowed by the child seat.

All children whose weight or height is above the forward-facing limit for the child seat should use a belt-positioning booster seat until the vehicle's seat belts fit properly. If the child cannot sit with knees bent over the vehicle's seat cushion while the child's back is against the seatback, they should use a belt-positioning booster seat. The child and belt-positioning booster seat are held in the vehicle by the seat belt.



**WARNING!**

- **Improper installation can lead to failure of an infant or child restraint. It could come loose in a collision. The child could be badly injured or killed. Follow the child restraint manufacturer's directions exactly when installing an infant or child restraint.**
- **After a child restraint is installed in the vehicle, do not move the vehicle seat forward or rearward because it can loosen the child restraint attachments.**

*(Continued)*

**WARNING! *(Continued)***

**Remove the child restraint before adjusting the vehicle seat position. When the vehicle seat has been adjusted, reinstall the child restraint.**

- **When your child restraint is not in use, secure it in the vehicle with the seat belt or LATCH anchorages, or remove it from the vehicle. Do not leave it loose in the vehicle. In a sudden stop or accident, it could strike the occupants or seatbacks and cause serious personal injury.**

**Children Too Large For Booster Seats**

Children who are large enough to wear the shoulder belt comfortably, and whose legs are long enough to bend over the front of the seat when their back is against the seatback, should use the seat belt in a rear seat. Use this simple 5-step test to decide whether the child can use the vehicle's seat belt alone:

1. Can the child sit all the way back against the back of the vehicle seat?
2. Do the child's knees bend comfortably over the front of the vehicle seat – while the child is still sitting all the way back?
3. Does the shoulder belt cross the child's shoulder between their neck and arm?
4. Is the lap part of the belt as low as possible, touching the child's thighs and not the stomach?
5. Can the child stay seated like this for the whole trip?

If the answer to any of these questions was "no," then the child still needs to use a booster seat in this vehicle. If the child is using the lap/shoulder belt, check seat belt fit periodically and make sure the seat belt buckle is latched. A child's squirming or slouching can move the belt out of position. If the shoulder belt contacts the face or neck, move the child closer to the center of the vehicle, or use a booster seat to position the seat belt on the child correctly.

**WARNING!**

**Never allow a child to put the shoulder belt under an arm or behind their back. In a crash, the shoulder belt will not protect a child properly, which may result in serious injury or death. A child must always wear both the lap and shoulder portions of the seat belt correctly.**

## Recommendations For Attaching Child Restraints

| Restraint Type | Combined Weight of the Child + Child Restraint | Use Any Attachment Method Shown With An "X" Below | | | |
|---|---|---|---|---|---|
| | | LATCH – Lower Anchors Only | Seat Belt Only | LATCH – Lower Anchors + Top Tether Anchor | Seat Belt + Top Tether Anchor |
| Rear-Facing Child Restraint | Up to 65 lbs (29.5 kg) | X | X | | |
| Rear-Facing Child Restraint | More than 65 lbs (29.5 kg) | | X | | |
| Forward-Facing Child Restraint | Up to 65 lbs (29.5 kg) | | | X | X |
| Forward-Facing Child Restraint | More than 65 lbs (29.5 kg) | | | | X |

## Lower Anchors And Tethers For CHildren (LATCH) Restraint System

**LATCH Label**

Your vehicle is equipped with the child restraint anchorage system called LATCH, which stands for Lower Anchors and Tethers for CHildren. The LATCH system has three vehicle anchor points for installing LATCH-equipped child seats. There are two lower anchorages located at the back of the seat cushion where it meets the seatback and one top tether anchorage located behind the seating position. These anchorages are used to install LATCH-equipped child seats without using the vehicle's seat belts. Some seating positions may have a top tether anchorage but no lower anchorages. In these seating positions, the seat belt must be used with the top tether anchorage to install the child restraint. Please see the following table for more information.

## LATCH Positions For Installing Child Restraints In This Vehicle

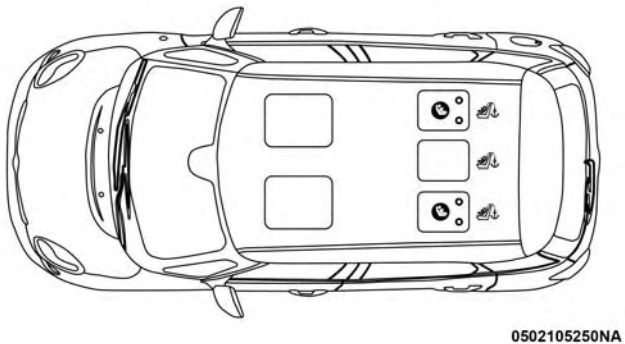


**LATCH Positions**

Lower Anchorage Symbol (2 Anchorages Per Seating Position)
Top Tether Anchorage Symbol

| Frequently Asked Questions About Installing Child Restraints With LATCH | | |
|---|---|---|
| What is the weight limit (child's weight + weight of the child restraint) for using the LATCH anchorage system to attach the child restraint? | 65 lbs (29.5 kg) | Use the LATCH anchorage system until the combined weight of the child and the child restraint is 65 lbs (29.5 kg). Use the seat belt and tether anchor instead of the LATCH anchorage system once the combined weight is more than 65 lbs (29.5 kg). |
| Can the LATCH anchorages and the seat belt be used together to attach a rear-facing or forward-facing child restraint? | No | Do not use the seat belt when you use the LATCH anchorage system to attach a rear-facing or forward-facing child restraint.<br>Booster seats may be attached to the LATCH anchorages if allowed by the booster seat manufacturer. See your booster seat owner's manual for more information. |
| Can a child seat be installed in the center position using the inner LATCH lower anchorages? | No | Use the seat belt and tether anchor to install a child seat in the center seating position. |

| Frequently Asked Questions About Installing Child Restraints With LATCH | | |
|---|---|---|
| Can two child restraints be attached using a common lower LATCH anchorage? | No | Never “share” a LATCH anchorage with two or more child restraints. If the center position does not have dedicated LATCH lower anchorages, use the seat belt to install a child seat in the center position next to a child seat using the LATCH anchorages in an outboard position. |
| Can the rear-facing child restraint touch the back of the front passenger seat? | Yes | The child seat may touch the back of the front passenger seat if the child restraint manufacturer also allows contact. See your child restraint owner’s manual for more information. |
| Can the head restraints be removed? | Yes | The rear outboard head restraints are removable. If the center rear head restraint requires removal, see your authorized dealer. |

## Locating The LATCH Anchorages

The lower anchorages are round bars that are found at the rear of the seat cushion where it meets the seatback. They are just visible when you lean into the rear seat to install the child restraint. You will easily feel them if you run your finger along the gap between the seatback and seat cushion.

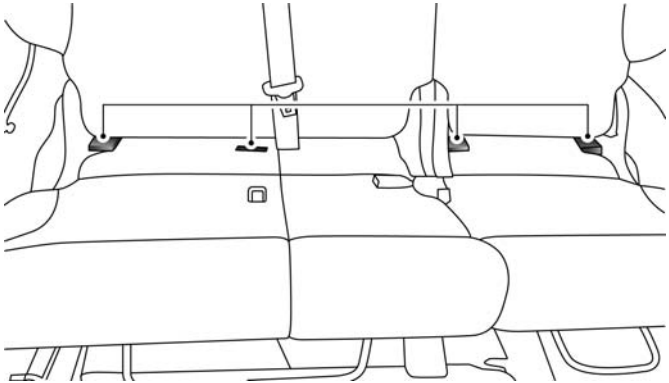

**LATCH Lower Anchorages**

## Locating The Upper Tether Anchorages

There are tether strap anchorages behind each rear seating position located on the back of the seat, near the floor.

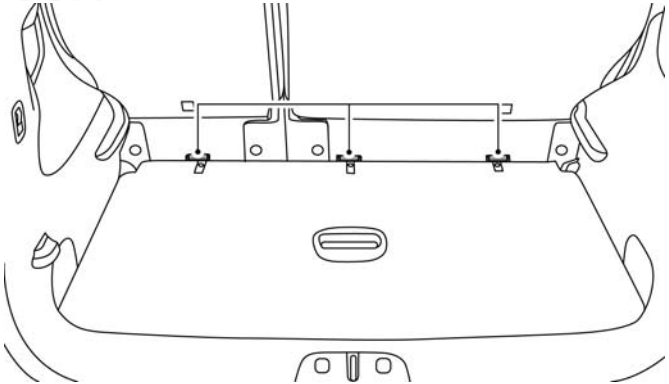

**Upper Tether Anchorages**

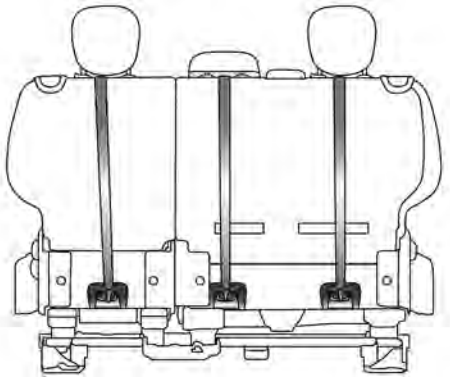

**Tether Anchorage Routing Position**

LATCH-compatible child restraint systems will be equipped with a rigid bar or a flexible strap on each side. Each will have a hook or connector to attach to the lower anchorage and a way to tighten the connection to the anchorage. Forward-facing child restraints and some rear-facing child restraints will also be equipped with a tether strap. The tether strap will have a hook at the end to attach to the top tether anchorage and a way to tighten the strap after it is attached to the anchorage.

### Center Seat LATCH

**WARNING!**

- **Do not install a child restraint in the center position using the LATCH system. This position is not approved for installing child seats using the LATCH attachments. You must use the seat belt and tether anchor to install a child seat in the center seating position.**
- **Never use the same lower anchorage to attach more than one child restraint. Please refer to "To Install A LATCH-Compatible Child Restraint" for typical installation instructions.**

Always follow the directions of the child restraint manufacturer when installing your child restraint. Not all child restraint systems will be installed as described here.

### To Install A LATCH-Compatible Child Restraint

If the selected seating position has a Switchable Automatic Locking Retractor (ALR) seat belt, stow the seat belt, following the instructions below. See the section "Installing Child Restraints Using the Vehicle Seat Belt" to check what type of seat belt each seating position has.

1. Loosen the adjusters on the lower straps and on the tether strap of the child seat so that you can more easily attach the hooks or connectors to the vehicle anchorages.
2. Place the child seat between the lower anchorages for that seating position. For some second row seats, you may need to recline the seat and / or raise the head restraint to get a better fit. If the rear seat can be moved forward and rearward in the vehicle, you may wish to move it to its rear-most position to make room for the child seat. You may also move the front seat forward to allow more room for the child seat.
3. Attach the lower hooks or connectors of the child restraint to the lower anchorages in the selected seating position.
4. If the child restraint has a tether strap, connect it to the top tether anchorage. See the section "Installing Child Restraints Using the Top Tether Anchorage" for directions to attach a tether anchor.
5. Tighten all of the straps as you push the child restraint rearward and downward into the seat. Remove slack in the straps according to the child restraint manufacturer's instructions.
6. Test that the child restraint is installed tightly by pulling back and forth on the child seat at the belt path. It should not move more than 1 inch (25.4 mm) in any direction.

**How To Stow An Unused Switchable-ALR (ALR) Seat Belt:**

When using the LATCH attaching system to install a child restraint, stow all ALR seat belts that are not being used by other occupants or being used to secure child restraints. An unused belt could injure a child if they play with it and accidentally lock the seat belt retractor. Before installing a child restraint using the LATCH system, buckle the seat belt behind the child restraint and out of the child's reach. If the buckled seat belt interferes with the child restraint installation, instead of buckling it behind the child restraint, route the seat belt through the child restraint belt path and then buckle it. Do not lock the seat belt. Remind all children in the vehicle that the seat belts are not toys and that they should not play with them.

**WARNING!**

- **Improper installation of a child restraint to the LATCH anchorages can lead to failure of the restraint. The child could be badly injured or killed. Follow the child restraint manufacturer's directions exactly when installing an infant or child restraint.**
- **Child restraint anchorages are designed to withstand only those loads imposed by correctly-fitted child restraints. Under no circumstances are they to be used for adult seat belts, harnesses, or for attaching other items or equipment to the vehicle.**

**Installing Child Restraints Using The Vehicle Seat Belt**

Child restraint systems are designed to be secured in vehicle seats by lap belts or the lap belt portion of a lap/shoulder belt.

**WARNING!**

- **Improper installation or failure to properly secure a child restraint can lead to failure of the restraint. The child could be badly injured or killed.**

*(Continued)*

**WARNING!** *(Continued)*

- **Follow the child restraint manufacturer's directions exactly when installing an infant or child restraint.**

The seat belts in the passenger seating positions are equipped with a Switchable Automatic Locking Retractor (ALR) that is designed to keep the lap portion of the seat belt tight around the child restraint so that it is not necessary to use a locking clip. The ALR retractor can be "switched" into a locked mode by pulling all of the webbing out of the retractor and then letting the webbing retract back into the retractor. If it is locked, the ALR will make a clicking noise while the webbing is pulled back into the retractor. Refer to the "Automatic Locking Mode" description in "Switchable Automatic Locking Retractors (ALR)" under "Occupant Restraint Systems" for additional information on ALR.

Please see the table below and the following sections for more information.

## Lap/Shoulder Belt Systems For Installing Child Restraints In This Vehicle

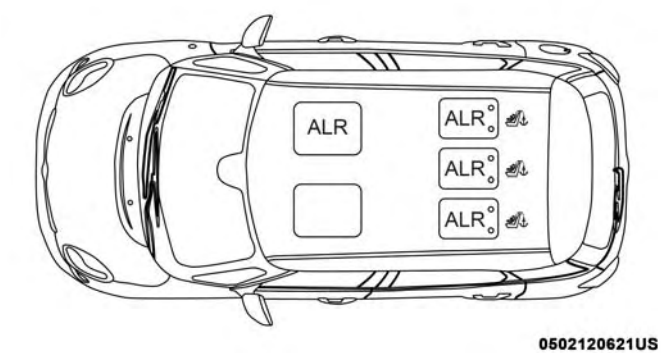


**Automatic Locking Retractor (ALR) Locations**

ALR = Switchable Automatic Locking Retractor
Top Tether Anchorage Symbol

| Frequently Asked Questions About Installing Child Restraints With Seat Belts | | |
|---|---|---|
| What is the weight limit (child's weight + weight of the child restraint) for using the Tether Anchor with the seat belt to attach a forward facing child restraint? | Weight limit of the Child Restraint | Always use the tether anchor when using the seat belt to install a forward facing child restraint, up to the recommended weight limit of the child restraint. |
| Can the rear-facing child restraint touch the back of the front passenger seat? | Yes | Contact between the front passenger seat and the child restraint is allowed, if the child restraint manufacturer also allows contact. |
| Can the head restraints be removed? | Yes | The rear outboard head restraints are removable. If the center rear head restraint requires removal, see your authorized dealer. |
| Can the buckle stalk be twisted to tighten the seat belt against the belt path of the child restraint? | No | Do not twist the buckle stalk in a seating position with an ALR retractor. |

**Installing A Child Restraint With A Switchable Automatic Locking Retractor (ALR):**

Child restraint systems are designed to be secured in vehicle seats by lap belts or the lap belt portion of a lap/shoulder belt.

**WARNING!**

- **Improper installation or failure to properly secure a child restraint can lead to failure of the restraint. The child could be badly injured or killed.**

*(Continued)*

**WARNING!** ***(Continued)***

- **Follow the child restraint manufacturer's directions exactly when installing an infant or child restraint.**

1. Place the child seat in the center of the seating position. For some second row seats, you may need to recline the seat and/or raise the head restraint to get a better fit. If the rear seat can be moved forward and rearward in the vehicle, you may wish to move it to its rear-most position to make room for the child seat. You may also move the front seat forward to allow more room for the child seat.
2. Pull enough of the seat belt webbing from the retractor to pass it through the belt path of the child restraint. Do not twist the belt webbing in the belt path.
3. Slide the latch plate into the buckle until you hear a "click."
4. Pull on the webbing to make the lap portion tight against the child seat.
5. To lock the seat belt, pull down on the shoulder part of the belt until you have pulled all the seat belt webbing out of the retractor. Then, allow the webbing to retract back into the retractor. As the webbing retracts, you will hear a clicking sound. This means the seat belt is now in the Automatic Locking mode.
6. Try to pull the webbing out of the retractor. If it is locked, you should not be able to pull out any webbing. If the retractor is not locked, repeat step 5.
7. Finally, pull up on any excess webbing to tighten the lap portion around the child restraint while you push the child restraint rearward and downward into the vehicle seat.
8. If the child restraint has a top tether strap and the seating position has a top tether anchorage, connect the tether strap to the anchorage and tighten the tether strap. See the section "Installing Child Restraints Using the Top Tether Anchorage" for directions to attach a tether anchor.
9. Test that the child restraint is installed tightly by pulling back and forth on the child seat at the belt path. It should not move more than 1 inch (25.4 mm) in any direction.

Any seat belt system will loosen with time, so check the belt occasionally, and pull it tight if necessary.

**Installing Child Restraints Using The Top Tether Anchorage:**

**WARNING!**

**Do not attach a tether strap for a rear-facing car seat to any location in front of the car seat, including the seat frame or a tether anchorage. Only attach the tether strap of a rear-facing car seat to the tether anchorage that is approved for that seating position, located behind the top of the vehicle seat. See the section "Lower Anchors and Tethers for CHildren (LATCH) Restraint System" for the location of approved tether anchorages in your vehicle.**

1. Look behind the seating position where you plan to install the child restraint to find the tether anchorage. You may need to move the seat forward to provide better access to the tether anchorage. If there is no top tether anchorage for that seating position, move the child restraint to another position in the vehicle if one is available.
2. Route the tether strap to provide the most direct path for the strap between the anchor and the child seat. If your vehicle is equipped with adjustable rear head restraints, raise the head restraint, and where possible, route the tether strap under the head restraint and between the two posts. If not possible, lower the head restraint and pass the tether strap around the outboard side of the head restraint.
3. Attach the tether strap hook of the child restraint to the top tether anchorage as shown in the diagram.

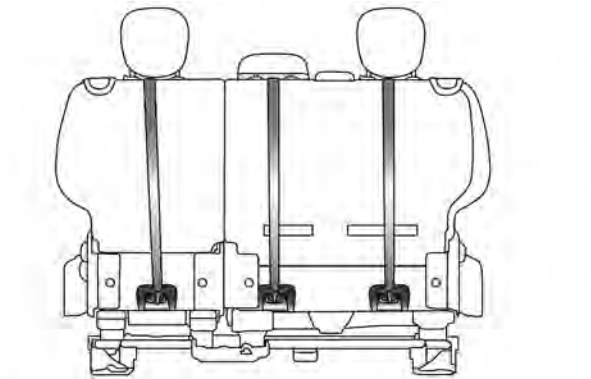

**Rear Seat Tether Strap Mounting**

4. Remove slack in the tether strap according to the child restraint manufacturer's instructions.

**WARNING!**

- **An incorrectly anchored tether strap could lead to increased head motion and possible injury to the child. Use only the anchorage position directly behind the child seat to secure a child restraint top tether strap.**

*(Continued)*

**WARNING!** *(Continued)*

- **If your vehicle is equipped with a split rear seat, make sure the tether strap does not slip into the opening between the seatbacks as you remove slack in the strap.**

### Transporting Pets

Air Bags deploying in the front seat could harm your pet. An unrestrained pet will be thrown about and possibly injured, or injure a passenger during panic braking or in a collision.

Pets should be restrained in the rear seat in pet harnesses or pet carriers that are secured by seat belts.

## SAFETY TIPS

### Transporting Passengers

NEVER TRANSPORT PASSENGERS IN THE CARGO AREA.

**WARNING!**

- **Do not leave children or animals inside parked vehicles in hot weather. Interior heat build-up may cause serious injury or death.**
- **It is extremely dangerous to ride in a cargo area, inside or outside of a vehicle. In a collision, people riding in these areas are more likely to be seriously injured or killed.**
- **Do not allow people to ride in any area of your vehicle that is not equipped with seats and seat belts.**
- **Be sure everyone in your vehicle is in a seat and using a seat belt properly.**

## Exhaust Gas

**WARNING!**

**Exhaust gases can injure or kill. They contain carbon monoxide (CO), which is colorless and odorless. Breathing it can make you unconscious and can eventually poison you. To avoid breathing (CO), follow these safety tips:**

- **Do not run the engine in a closed garage or in confined areas any longer than needed to move your vehicle in or out of the area.**

*(Continued)*

**WARNING!** ***(Continued)***

- **If you are required to drive with the trunk/liftgate/rear doors open, make sure that all windows are closed and the climate control BLOWER switch is set at high speed. DO NOT use the recirculation mode.**
- **If it is necessary to sit in a parked vehicle with the engine running, adjust your heating or cooling controls to force outside air into the vehicle. Set the blower at high speed.**

The best protection against carbon monoxide entry into the vehicle body is a properly maintained engine exhaust system.

Whenever a change is noticed in the sound of the exhaust system, when exhaust fumes can be detected inside the vehicle, or when the underside or rear of the vehicle is damaged, have a competent mechanic inspect the complete exhaust system and adjacent body areas for broken, damaged, deteriorated, or mispositioned parts. Open seams or loose connections could permit exhaust fumes to seep into the passenger compartment. In addition, inspect the exhaust system each time the vehicle is raised for lubrication or oil change. Replace as required.

## Safety Checks You Should Make Inside The Vehicle

### Seat Belts

Inspect the seat belt system periodically, checking for cuts, frays, and loose parts. Damaged parts must be replaced immediately. Do not disassemble or modify the system.

Front seat belt assemblies must be replaced after a collision. Rear seat belt assemblies must be replaced after a collision if they have been damaged (i.e., bent retractor, torn webbing, etc.). If there is any question regarding seat belt or retractor condition, replace the seat belt.

### Air Bag Warning Light

The Air Bag warning light will turn on for four to eight seconds as a bulb check when the ignition switch is first turned to ON/RUN. If the light is either not on during starting, stays on, or turns on while driving, have the system inspected at your authorized dealer as soon as possible. After the bulb check, this light will illuminate with a single chime when a fault with the Air Bag System has been detected. It will stay on until the fault is cleared. If the light comes on intermittently or remains on while driving, have your authorized dealer service the vehicle immediately. Refer to "Occupant Restraint Systems" in "Safety" for further information.

### Defroster

Check operation by selecting the defrost mode and place the blower control on high speed. You should be able to feel the air directed against the windshield. See your authorized dealer for service if your defroster is inoperable.

### Floor Mat Safety Information

Always use floor mats designed to fit your vehicle. Only use a floor mat that does not interfere with the operation of the accelerator, brake or clutch pedals. Only use a floor mat that is securely attached using the floor mat fasteners so it cannot slip out of position and interfere with the accelerator, brake or clutch pedals or impair safe operation of your vehicle in other ways.

**WARNING!**

**An improperly attached, damaged, folded, or stacked floor mat, or damaged floor mat fasteners may cause your floor mat to interfere with the accelerator, brake, or clutch pedals and cause a loss of vehicle control. To prevent SERIOUS INJURY or DEATH:**

- **ALWAYS securely attach your floor mat using the floor mat fasteners. DO NOT install your floor mat**

*(Continued)*

**WARNING!** *(Continued)*

upside down or turn your floor mat over. Lightly pull to confirm mat is secured using the floor mat fasteners on a regular basis.

- ALWAYS REMOVE THE EXISTING FLOOR MAT FROM THE VEHICLE before installing any other floor mat. NEVER install or stack an additional floor mat on top of an existing floor mat.
- ONLY install floor mats designed to fit your vehicle. NEVER install a floor mat that cannot be properly attached and secured to your vehicle. If a floor mat needs to be replaced, only use a FCA approved floor mat for the specific make, model, and year of your vehicle.
- ONLY use the driver's side floor mat on the driver's side floor area. To check for interference, with the vehicle properly parked with the engine off, fully depress the accelerator, the brake, and the clutch pedal (if present) to check for interference. If your floor mat interferes with the operation of any pedal, or is not secure to the floor, remove the floor mat from the vehicle and place the floor mat in your trunk.

*(Continued)*

**WARNING!** *(Continued)*

- ONLY use the passenger's side floor mat on the passenger's side floor area.
- ALWAYS make sure objects cannot fall or slide into the driver's side floor area when the vehicle is moving. Objects can become trapped under accelerator, brake, or clutch pedals and could cause a loss of vehicle control.
- NEVER place any objects under the floor mat (e.g., towels, keys, etc.). These objects could change the position of the floor mat and may cause interference with the accelerator, brake, or clutch pedals.
- If the vehicle carpet has been removed and re-installed, always properly attach carpet to the floor and check the floor mat fasteners are secure to the vehicle carpet. Fully depress each pedal to check for interference with the accelerator, brake, or clutch pedals then re-install the floor mats.
- It is recommended to only use mild soap and water to clean your floor mats. After cleaning, always check your floor mat has been properly installed and is secured to your vehicle using the floor mat fasteners by lightly pulling mat.

## Periodic Safety Checks You Should Make Outside The Vehicle

### Tires

Examine tires for excessive tread wear and uneven wear patterns. Check for stones, nails, glass, or other objects lodged in the tread or sidewall. Inspect the tread for cuts and cracks. Inspect sidewalls for cuts, cracks, and bulges. Check the wheel nuts for tightness. Check the tires (including spare) for proper cold inflation pressure.

### Lights

Have someone observe the operation of brake lights and exterior lights while you work the controls. Check turn signal and high beam indicator lights on the instrument panel.

### Door Latches

Check for proper closing, latching, and locking.

### Fluid Leaks

Check area under the vehicle after overnight parking for fuel, coolant, oil, or other fluid leaks. Also, if gasoline fumes are detected or if fuel, or brake fluid leaks are suspected. The cause should be located and corrected immediately.

# STARTING AND OPERATING

## CONTENTS


■ STARTING THE ENGINE . . . . . .171
- □ Normal Starting . . . . . .171
- □ Cold Weather Operation . . . . . .171
- □ Extended Park Starting . . . . . .172
- □ If Engine Fails To Start . . . . . .172
- □ After Starting . . . . . .173
- □ Turbo Charger "Cool Down" . . . . . .173

■ ENGINE BREAK-IN RECOMMENDATIONS . . . .173

■ PARKING BRAKE . . . . . .174

■ AUTOMATIC TRANSMISSION . . . . . .175
- □ Key Ignition Park Interlock . . . . . .176
- □ Brake/Transmission Shift Interlock System . . . .176
- □ Six-Speed Automatic Transmission . . . . . .176

■ AUTOSTICK . . . . . .181
- □ Operation . . . . . .181

■ MODE SELECTOR – IF EQUIPPED . . . . . .182
- □ Operating Modes . . . . . .183

■ ELECTRIC POWER STEERING . . . . . .185

■ SPEED CONTROL . . . . . .185
- □ To Activate . . . . . .186
- □ To Set A Desired Speed . . . . . .186
- □ To Vary The Speed Setting . . . . . .186
- □ To Accelerate For Passing . . . . . .187
- □ To Resume Speed . . . . . .188
- □ To Deactivate . . . . . .188

■ REAR PARK ASSIST — IF EQUIPPED . . . . . .188
- □ Rear Park Assist Sensors . . . . . .188
- □ Rear Park Assist Audible Alerts . . . . . .188

- Failure Indications . . . . . .190
- Cleaning The Rear Park Assist System . . . . . .190
- Park Assist System Usage Precautions . . . . . .190

■ PARKVIEW REAR BACK UP CAMERA — IF EQUIPPED . . . . . .192

■ ADDING FUEL . . . . . .194

■ VEHICLE LOADING . . . . . .196
- Certification Label . . . . . .196

■ TRAILER TOWING . . . . . .198

■ RECREATIONAL TOWING (BEHIND MOTORHOME, ETC.) . . . . . .198
- Towing This Vehicle Behind Another Vehicle . . .198

■ DRIVING TIPS . . . . . .199
- Driving On Slippery Surfaces . . . . . .199
- Driving Through Water . . . . . .200

## STARTING THE ENGINE

Before starting your vehicle, adjust your seat, adjust both inside and outside mirrors, and fasten your seat belts.

**WARNING!**

- **When exiting the vehicle, always remove the key fob from the ignition and lock your vehicle.**
- **Never leave children alone in a vehicle, or with access to an unlocked vehicle.**
- **Allowing children to be in a vehicle unattended is dangerous for a number of reasons. A child or others could be seriously or fatally injured. Children should be warned not to touch the parking brake, brake pedal or the gear selector.**
- **Do not leave the key fob in or near the vehicle, or in a location accessible to children. A child could operate power windows, other controls, or move the vehicle.**
- **Do not leave children or animals inside parked vehicles in hot weather. Interior heat build-up may cause serious injury or death.**

### Normal Starting

**NOTE:** Normal starting of either a cold or a warm engine is obtained without pumping or pressing the accelerator pedal.

Turn the ignition switch to the AVV/ACC (START) position and release it when the engine starts. If the engine fails to start within 10 seconds, turn the ignition switch to the STOP (OFF/LOCK) position, wait 10 to 15 seconds, then repeat the “Normal Starting” procedure.



#### Automatic Transmission

The gear selector must be in the PARK or NEUTRAL position before you can start the engine. Depress the brake pedal before shifting to any driving gear.

**NOTE:** You must press the brake pedal before shifting out of PARK.

### Cold Weather Operation

To prevent possible engine damage while starting at low temperatures, this vehicle will inhibit engine cranking when the ambient temperature is less than –22°F (–30°C) and the oil temperature sensor reading indicates an engine

block heater has not been used. An externally powered electric engine block heater is available as a factory installed option.

At the time the engine is shut off, the message "plug in engine heater" will be displayed in the instrument cluster when the ambient temperature is below 5°F (–15°C). This acts as a reminder to avoid possible crank delays at the next cold start.

**CAUTION!**

**Use of the recommended SAE 5W-40 Synthetic oil and adhering to the prescribed oil change intervals is important to prevent engine damage and ensure satisfactory starting in cold conditions.**

### Extended Park Starting

**NOTE:** Extended Park condition occurs when the vehicle has not been started or driven for at least 30 days.

1. Install a battery charger or jumper cables to the battery to ensure a full battery charge during the crank cycle.
2. Cycle the ignition to the START mode and release it when the engine starts.
3. If the engine fails to start within 10 to 15 seconds, cycle the ignition to the OFF mode, wait five seconds to allow the starter to cool, then repeat the Extended Park Starting procedure.
4. If the engine fails to start after eight attempts, allow the starter to cool for at least 10 minutes, then repeat the procedure.

**CAUTION!**

**To prevent damage to the starter, do not crank continuously for more than 10 seconds at a time. Wait 10 to 15 seconds before trying again.**

### If Engine Fails To Start

**WARNING!**

**Never pour fuel or other flammable liquid into the throttle body air inlet opening in an attempt to start the vehicle. This could result in flash fire causing serious personal injury.**

**CAUTION!**

**To prevent damage to the starter, do not continuously crank the engine for more than 15 seconds at a time. Wait 10 to 15 seconds before trying again.**

### After Starting

The idle speed is controlled automatically, and it will decrease as the engine warms up.

### Turbo Charger "Cool Down"

This vehicle is equipped with an after-run pump to cool the turbocharger after the engine is shut off. Depending on the type of driving and the amount of cargo, the pump will run for up to 10 minutes after the engine has been shut off to circulate coolant through the turbocharger.

Although the pump is rubber-mounted for quiet operation, it is normal to hear it running during this time.

## ENGINE BREAK-IN RECOMMENDATIONS

A long break-in period is not required for the engine and drivetrain (transmission and axle) in your vehicle.

Drive moderately during the first 300 miles (500 km). After the initial 60 miles (100 km), speeds up to 50 or 55 mph (80 or 90 km/h) are desirable.

While cruising, brief full-throttle acceleration within the limits of local traffic laws contributes to a good break-in. Wide-open throttle acceleration in low gear can be detrimental and should be avoided.

The engine oil installed in the engine at the factory is a high-quality energy conserving type lubricant. Oil changes should be consistent with anticipated climate conditions under which vehicle operations will occur. For the recommended viscosity and quality grades, refer to "Dealer Service" in "Servicing And Maintenance".



**CAUTION!**

**Never use Non-Detergent Oil or Straight Mineral Oil in the engine or damage may result.**

**NOTE:** A new engine may consume some oil during its first few thousand miles (kilometers) of operation. This should be considered a normal part of the break-in and not interpreted as a problem.

## PARKING BRAKE

Before leaving the vehicle, make sure that the parking brake is fully applied.

The parking brake lever is located in the center console. To apply the parking brake, pull the lever up as firmly as possible. To release the parking brake, pull the lever up slightly, push the front button with your thumb, then lower the lever completely.

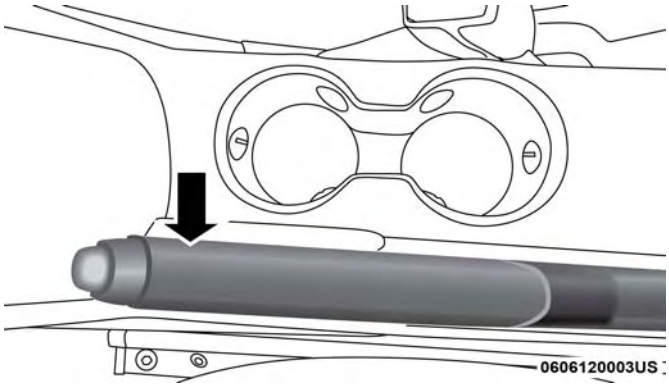


**Parking Brake Lever**

When the parking brake is applied with the ignition switch in the MAR (ACC/ON/RUN) position, the Brake Warning Light in the instrument cluster will illuminate.

When parking on a hill, it is important to turn the front wheels toward the curb on a downhill grade and away from the curb on an uphill grade. The parking brake should always be applied whenever the driver is not in the vehicle.

**WARNING!**

- **Never leave children alone in a vehicle, or with access to an unlocked vehicle.**
- **Allowing children to be in a vehicle unattended is dangerous for a number of reasons. A child or others could be seriously or fatally injured. Children should be warned not to touch the parking brake, brake pedal or the gear selector.**
- **Do not leave the key fob in or near the vehicle or in a location accessible to children. A child could operate power windows, other controls, or move the vehicle.**
- **Be sure the parking brake is fully disengaged before driving; failure to do so can lead to brake failure and a collision.**
- **Always fully apply the parking brake when leaving your vehicle, or it may roll and cause damage or injury.**

**CAUTION!**

**If the Brake Warning Light remains on with the parking brake released, a brake system malfunction is indicated. Have the brake system serviced by an authorized dealer immediately.**

## AUTOMATIC TRANSMISSION

**CAUTION!**

**Damage to the transmission may occur if the following precautions are not observed:**

- **Shift into or out of PARK or REVERSE only after the vehicle has come to a complete stop.**
- **Do not shift between PARK, REVERSE, NEUTRAL, or DRIVE when the engine is above idle speed.**
- **Before shifting into any gear, make sure your foot is firmly pressing the brake pedal.**

**NOTE:** You must press and hold the brake pedal while shifting out of PARK.

**WARNING!**

- **It is dangerous to shift out of PARK or NEUTRAL if the engine speed is higher than idle speed. If your foot is not firmly pressing the brake pedal, the vehicle could accelerate quickly forward or in reverse. You could lose control of the vehicle and hit someone or something. Only shift into gear when the engine is idling normally and your foot is firmly pressing the brake pedal.**
- **Unintended movement of a vehicle could injure those in or near the vehicle. As with all vehicles, you should never exit a vehicle while the engine is running. Before exiting a vehicle always come to a complete stop, then apply the parking brake, shift the transmission into PARK, turn the engine OFF, and remove the ignition key. Once the key is removed, the transmission is locked in PARK, securing the vehicle against unwanted movement.**
- **When leaving the vehicle, always remove the ignition key from the vehicle and lock the vehicle.**
- **Never leave children alone in a vehicle, or with access to an unlocked vehicle. Allowing children to be in a vehicle unattended is dangerous for a number**

*(Continued)*

**WARNING!** ***(Continued)***

**of reasons. A child or others could be seriously or fatally injured. Children should be warned not to touch the parking brake, brake pedal or the transmission gear selector.**

- **Do not leave the ignition key in or near the vehicle (or in a location accessible to children). A child could operate power windows, other controls, or move the vehicle.**

### Key Ignition Park Interlock

This vehicle is equipped with a Key Ignition Park Interlock which requires the transmission to be in PARK before the ignition can be turned to the LOCK/OFF (key removal) position. The key can only be removed from the ignition when the ignition is in the LOCK/OFF position, and once removed, the transmission is locked in PARK.

### Brake/Transmission Shift Interlock System

This vehicle is equipped with a Brake Transmission Shift Interlock System (BTSI) that holds the transmission gear selector in PARK unless the brakes are applied. To shift the transmission out of PARK, the ignition must be in the ON/RUN mode (engine running or not), and the brake pedal (and the lock button on the gear selector) must be pressed.

### Six-Speed Automatic Transmission

The transmission gear range (PRND) is displayed both beside the gear selector and in the instrument cluster. To select a gear range, press the lock button on the gear selector and move the selector rearward or forward. You must also press the brake pedal to shift the transmission out of PARK. Select the DRIVE range for normal driving.

The electronically-controlled transmission adapts its shift schedule based on driver inputs, along with environmental and road conditions. The transmission electronics are self-calibrating; therefore, the first few shifts on a new vehicle may be somewhat abrupt. This is a normal condition, and precision shifts will develop within a few hundred miles (kilometers).

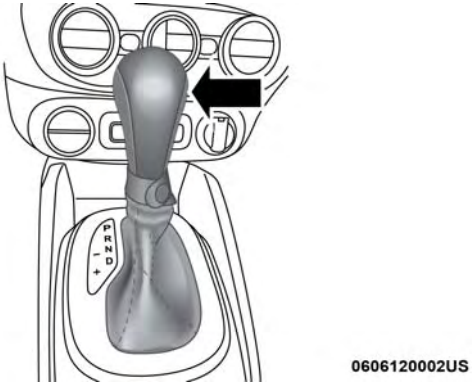


**Transmission Gear Selector**

Only shift from DRIVE to PARK or REVERSE when the accelerator pedal is released and the vehicle is stopped. Be sure to keep your foot on the brake pedal when shifting between these gears.

The transmission gear selector provides PARK, REVERSE, NEUTRAL, DRIVE, and AutoStick (+/-) shift positions. Manual shifts can be made using the AutoStick shift control. Moving the gear selector into the AutoStick (+/-) position (beside the DRIVE position) activates AutoStick mode, providing manual shift control and displaying the current gear in the instrument cluster (as 1, 2, 3, etc). Toggling the gear selector forward (-) or rearward (+) while in the Autostick position will manually select the transmission gear. Refer to "AutoStick" in this section for further information.

**NOTE:** If the gear selector cannot be moved to the PARK, REVERSE, or NEUTRAL position (when pushed forward) it is probably in the AutoStick (+/-) position (beside the DRIVE position). In AutoStick mode, the transmission gear (1, 2, 3, etc.) is displayed in the instrument cluster. Move the gear selector to the right (into the DRIVE [D] position) for access to PARK, REVERSE, and NEUTRAL.



## Gear Ranges

Do not depress the accelerator pedal when shifting from PARK or NEUTRAL into another gear range.

**NOTE:** After selecting any gear range, wait a moment to allow the selected gear to engage before accelerating. This is especially important when the engine is cold.

### *PARK (P)*

This range supplements the parking brake by locking the transmission. The engine can be started in this range. Never attempt to use PARK while the vehicle is in motion. Apply the parking brake when exiting the vehicle in this range.

When parking on a level surface, you may shift the transmission into PARK first, and then apply the parking brake.

When parking on a hill, apply the parking brake before shifting the transmission to PARK, otherwise the load on the transmission locking mechanism may make it difficult to move the gear selector out of PARK. As an added precaution, turn the front wheels toward the curb on a downhill grade and away from the curb on an uphill grade.

When exiting the vehicle, always:

- Apply the parking brake.
- Shift the transmission into PARK.
- Turn the engine OFF.
- Remove the ignition key.

**WARNING!**

- **Never use the PARK position as a substitute for the parking brake. Always apply the parking brake fully when exiting the vehicle to guard against vehicle movement and possible injury or damage.**
- **Your vehicle could move and injure you and others if it is not in PARK. Check by trying to move the gear**

*(Continued)*

**WARNING!** ***(Continued)***

**selector out of PARK with the brake pedal released. Make sure the transmission is in PARK before exiting the vehicle.**

- **It is dangerous to shift out of PARK or NEUTRAL if the engine speed is higher than idle speed. If your foot is not firmly pressing the brake pedal, the vehicle could accelerate quickly forward or in reverse. You could lose control of the vehicle and hit someone or something. Only shift into gear when the engine is idling normally and your foot is firmly pressing the brake pedal.**
- **Unintended movement of a vehicle could injure those in or near the vehicle. As with all vehicles, you should never exit a vehicle while the engine is running. Before exiting a vehicle always come to a complete stop, then apply the parking brake, shift the transmission into PARK, turn the engine OFF, and remove the ignition key. Once the key is removed, the transmission is locked in PARK, securing the vehicle against unwanted movement.**
- **When exiting the vehicle, always remove the ignition key from the vehicle and lock the vehicle.**

*(Continued)*

**WARNING! *(Continued)***

- **Never leave children alone in a vehicle, or with access to an unlocked vehicle. Allowing children to be in a vehicle unattended is dangerous for a number of reasons. A child or others could be seriously or fatally injured. Children should be warned not to touch the parking brake, brake pedal or the transmission gear selector.**
- **Do not leave the ignition key in or near the vehicle (or in a location accessible to children). A child could operate power windows, other controls, or move the vehicle.**

**CAUTION!**

- **Before moving the transmission gear selector out of PARK, you must turn the ignition to the ON/RUN mode, and also press the brake pedal. Otherwise, damage to the gear selector could result.**
- **DO NOT race the engine when shifting from PARK or NEUTRAL into another gear range, as this can damage the drivetrain.**

The following indicators should be used to ensure that you have properly engaged the transmission into the PARK position:

- When shifting into PARK, push the lock button on the gear selector and firmly move the gear selector all the way forward until it stops and is fully seated.
- Look at the transmission gear position display and verify that it indicates the PARK position (P).
- With brake pedal released, verify that the gear selector will not move out of PARK.



*REVERSE (R)*

This range is for moving the vehicle backward. Shift into REVERSE only after the vehicle has come to a complete stop.

*NEUTRAL (N)*

Use this range when the vehicle is standing for prolonged periods with the engine running. The engine may be started in this range. Apply the parking brake and shift the transmission into PARK if you must exit the vehicle.

**WARNING!**

**Do not coast in NEUTRAL and never turn off the ignition to coast down a hill. These are unsafe practices that limit your response to changing traffic or road conditions. You might lose control of the vehicle and have a collision.**

**CAUTION!**

**Towing the vehicle, coasting, or driving for any other reason with the transmission in NEUTRAL can cause severe transmission damage. Refer to "Recreational Towing" in "Starting And Operating" and "Towing A Disabled Vehicle" in "In Case Of Emergency" for further information.**

*DRIVE (D)*

This range should be used for most city and highway driving. It provides the smoothest upshifts and downshifts, and the best fuel economy. The transmission automatically upshifts through all forward gears. The DRIVE position provides optimum driving characteristics under all normal operating conditions.

When frequent transmission shifting occurs (such as when operating the vehicle under heavy loading conditions, in hilly terrain, or traveling into strong head winds), use the AutoStick shift control (refer to AutoStick in this section for further information) to select a lower gear. Under these conditions, using a lower gear will improve performance and extend transmission life by reducing excessive shifting and heat buildup.

If the transmission temperature exceeds normal operating limits, the transmission controller will expand the range of torque converter clutch engagement. This is done to prevent transmission damage due to overheating.

During cold temperatures, transmission operation may be modified depending on engine coolant temperature. Normal operation will resume once the engine temperature has risen to a suitable level.

**Instrument Cluster Messages**

Dedicated messages will be displayed in the instrument cluster to alert the driver when certain unusual conditions occur.

***Transmission Limp Home Mode***

Transmission function is monitored electronically for abnormal conditions. If a condition is detected that could

result in transmission damage, Transmission Limp Home Mode is activated. In this mode, the transmission remains in a fixed gear regardless of which forward gear is selected. PARK, REVERSE, and NEUTRAL will continue to operate. The Malfunction Indicator Light (MIL) may be illuminated. Limp Home Mode allows the vehicle to be driven to an authorized dealer for service without damaging the transmission.

In the event of a momentary problem, the transmission can be reset to regain all forward gears by performing the following steps:

1. Stop the vehicle.
2. Shift the transmission into PARK.
3. Turn the ignition OFF.
4. Wait approximately 10 seconds.
5. Restart the engine.
6. Shift into the desired gear range. If the problem is no longer detected, the transmission will return to normal operation.

**NOTE:** Even if the transmission can be reset, we recommend that you visit your authorized dealer at your earliest possible convenience. Your authorized dealer has diagnostic equipment to assess the condition of your transmission. If the transmission cannot be reset, authorized dealer service is required.

## AUTOSTICK

AutoStick is a driver-interactive transmission feature providing manual shift control, giving you more control of the vehicle. AutoStick allows you to maximize engine braking, eliminate undesirable upshifts and downshifts, and improve overall vehicle performance. This system can also provide you with more control during passing, city driving, cold slippery conditions, mountain driving, and many other situations.



### Operation

When the gear selector is in the AutoStick position (beside the Drive position), it can be moved forward and rearward. This allows the driver to manually select the transmission gear being used. Moving the gear selector forward (-) triggers a downshift, and rearward (+) an upshift. The current gear is displayed in the instrument cluster.

**NOTE:** In AutoStick mode, the transmission will only shift up or down when the driver moves the gear selector rearward (+) or forward (-), except as described below.

- The transmission will automatically upshift when necessary to prevent engine over-speed.
- The transmission will automatically downshift as the vehicle slows (to prevent engine lugging) and will display the current gear.
- The transmission will automatically downshift to first gear when coming to a stop. After a stop, the driver should manually upshift (+) the transmission as the vehicle is accelerated.
- You can start out (from a stop) in first, second, or third gear. Starting out in second or third gear can be helpful in snow or icy conditions. To select second or third gear after the vehicle is brought to a stop, tap the gear selector rearward (+) once or twice.
- If a requested downshift would cause the engine to over-speed, that shift will not occur.
- The system will ignore attempts to upshift at too low of a vehicle speed.
- Avoid using speed control when AutoStick is engaged because the transmission will not shift automatically.
- Transmission shifting will be more noticeable when AutoStick is enabled.
- The system may revert to automatic shift mode if a fault or overheat condition is detected.

To disengage AutoStick mode, return the gear selector to the DRIVE position. You can shift in or out of the AutoStick position at any time without taking your foot off the accelerator pedal.

**WARNING!**

**Do not downshift for additional engine braking on a slippery surface. The drive wheels could lose their grip and the vehicle could skid, causing a collision or personal injury.**

## MODE SELECTOR – IF EQUIPPED

This system allows for three selectable modes, according to driving style and road conditions.

- Normal Mode
- Traction+ Mode
- Gravity Control Function

The mode selector always remains in the center position. The selected driving mode is indicated by the corresponding LED light on the selector, and an indication in the display.

## Operating Modes

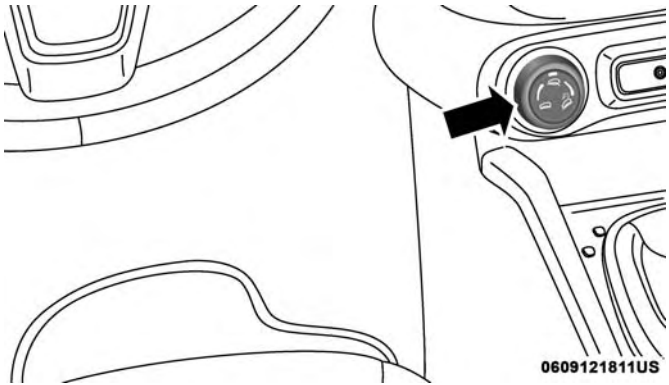


**Mode Selector**

### Normal Mode

This mode is aimed at comfort and safety in normal traction and driving conditions.

### Traction+ Mode

This mode is intend to be used on low traction road surfaces (e.g. snow, ice, mud, etc.).

Activation:

Rotate the selector and hold in this position for approximately half of a second, the corresponding LED will light up and “Traction+” mode indicator appears on the display with a dedicated message.

Deactivation:

To ″Normal″ mode, rotate the mode selector counterclockwise and hold in this position for half a second. The LED corresponding to “Normal” mode will light up and the “Traction+” mode deactivation indication will appear in the display.

**NOTE:** If “Traction+” or “Normal” mode was active when the engine was stopped, the next time it is started the mode that was selected will be reactivated.

### “Gravity Control” Function

This function allows for a constant vehicle speed to be maintained while travelling downhill. Noise and vibrations coming from the brakes when the system is activated are normal. To activate the system reach a speed slower

than 15 mph (25 km/h). After reaching the desired speed, release the accelerator and brake pedals completely. If you want to increase/decrease the speed, press the accelerator/brake pedals again

**NOTE:** System intervention set-up can only be engaged with "Traction+" mode activated.

Activation:

With "Traction+" mode on, rotate the selector clockwise and hold in this position for half a second, until the corresponding LED lights up and "Gravity Control" functionality appears on the display with a dedicated message.

Deactivation:

To deactivate the "Gravity Control" functionality rotate the selector counterclockwise and hold in this position for half a second. The LED corresponding to "Gravity Control" functionality will shut off and the "Gravity Control" functionality deactivation indication will appear on the display.

**NOTE:**

- To prevent engine stalling do not use the system if the transmission is in NEUTRAL.
- The system is available when the speed between 4 mph (7 km/h) and 15 mph (25 km/h).
- The Gravity Control system must be used with a gear that is suitable for the set speed, in order to prevent possible engine stalling. While the Gravity Control system is operating it is also possible to take control of the vehicle again by pressing the brake and accelerator pedals. If the Gravity Control is not available when system intervention set-up is engaged, this could be due to brake overheating. If this happens, wait for a few minutes.
- If the braking system overheats the system will deactivate through a gradual release of the braking pressure, leaving vehicle control to the driver. Deactivation of the Gravity Control system is accompanied by flashing of the warning light, by a dedicated message in the display and an acoustic warning. To reactivate the system intervention set-up wait for the system to cool down and turn the selector again.
- If the speed exceeds 15 mph (25 km/h) and is below 31 mph (50 km/h), the Gravity Control system intervention set-up is deactivated but is ready for being reactivated when the speed drops back below 15 mph (25 km/h). The indicator in the instrument panel turns off and the LED on the mode selector stays on. If vehicle speed exceeds 31 mph (50 km/h), the Gravity Control

system completely deactivates. To reactivate it, turn the selector again when the speed is again below 15 mph (25 km/h).

- On level ground in urban areas it is advised to deactivate the Gravity Control system intervention, since for speeds below 15 mph (25 km/h) in certain conditions, such as when, shifting gears or driving over bumps without using the accelerator pedal, the system might activate.

## ELECTRIC POWER STEERING

This only operates with the key turned to MAR/ON and the engine started. The steering allows the force required at the steering wheel to be adjusted to suit driving conditions.

**NOTE:** When turning the ignition key quickly, full power steering functionality can be achieved after a few seconds.

## SPEED CONTROL

When engaged, the Speed Control takes over accelerator operations at speeds greater than 25 mph (40 km/h).

The Speed Control buttons are located on the right side of the steering wheel.

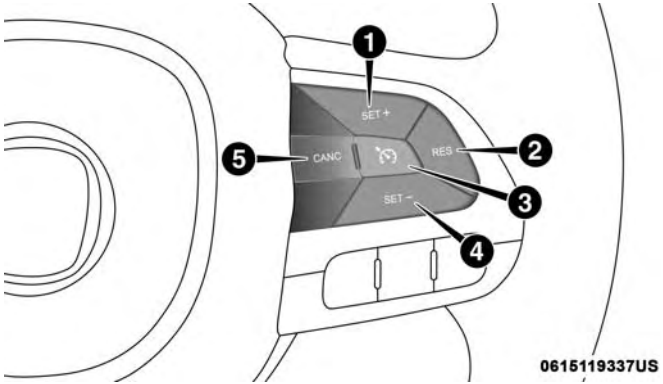


**Speed Control Buttons**

1 — SET+/Accel
2 — RES/Resume
3 — On/Off
4 — SET-/Decel
5 — CANC/Cancel

**NOTE:** In order to ensure proper operation, the Speed Control system has been designed to shut down if multiple Speed Control functions are operated at the same time. If this occurs, the Speed Control system can be reactivated by pushing the Speed Control on/off button and resetting the desired vehicle set speed.

## To Activate

Push the on/off button to activate the Speed Control. The cruise indicator light in the instrument cluster display will illuminate. To turn the system off, push the on/off button a second time. The cruise indicator light will turn off. The system should be turned off when not in use.

**WARNING!**

**Leaving the Speed Control system on when not in use is dangerous. You could accidentally set the system or cause it to go faster than you want. You could lose control and have an accident. Always leave the system off when you are not using it.**

## To Set A Desired Speed

Turn the Speed Control on. When the vehicle has reached the desired speed, push the SET (+) or SET (-) button and release. Release the accelerator and the vehicle will operate at the selected speed.

**NOTE:** The vehicle should be traveling at a steady speed and on level ground before setting the speed.

## To Vary The Speed Setting

### To Increase Speed

When the Speed Control is set, you can increase speed by pushing the SET (+) button.

The driver's preferred units can be selected through the Uconnect settings if equipped. Refer to "Uconnect Settings" in "Multimedia" for more information. The speed increment shown is dependent on the selected speed unit of U.S. (mph) or Metric (km/h):

*U.S. Speed (mph)*

- Pushing the SET (+) button once will result in a 1 mph increase in set speed. Each subsequent tap of the button results in an increase of 1 mph.
- If the button is continually pushed, the set speed will continue to increase until the button is released, then the new set speed will be established.

*Metric Speed (km/h)*

- Pushing the SET (+) button once will result in a 1 km/h increase in set speed. Each subsequent tap of the button results in an increase of 1 km/h.

- If the button is continually pushed, the set speed will continue to increase until the button is released, then the new set speed will be established.

**To Decrease Speed**

When the Speed Control is set, you can decrease speed by pushing the SET (-) button.

The driver's preferred units can be selected through the Uconnect settings if equipped. Refer to "Uconnect Settings" in "Multimedia" for more information. The speed decrement shown is dependant on the selected speed unit of U.S. (mph) or Metric (km/h):

***U.S. Speed (mph)***

- Pushing the SET (-) button once will result in a 1 mph decrease in set speed. Each subsequent tap of the button results in a decrease of 1 mph.
- If the button is continually pushed, the set speed will continue to decrease until the button is released, then the new set speed will be established.

***Metric Speed (km/h)***

- Pushing the SET (-) button once will result in a 1 km/h decrease in set speed. Each subsequent tap of the button results in a decrease of 1 km/h.
- If the button is continually pushed, the set speed will continue to decrease until the button is released, then the new set speed will be established.

## To Accelerate For Passing

Press the accelerator as you would normally. When the pedal is released, the vehicle will return to the set speed.

**Using Speed Control On Hills**

The transmission may downshift on hills to maintain the vehicle set speed.

**NOTE:** The Speed Control system maintains speed up and down hills. A slight speed change on moderate hills is normal.

On steep hills, a greater speed loss or gain may occur so it may be preferable to drive without Speed Control.

**WARNING!**

**Speed Control can be dangerous where the system cannot maintain a constant speed. Your vehicle could go too fast for the conditions, and you could lose control and have an accident. Do not use Speed Control in heavy traffic or on roads that are winding, icy, snow-covered or slippery.**

### To Resume Speed

To resume a previously set speed, push the RES button and release. Resume can be used at any speed above 25 mph (40 km/h).

### To Deactivate

A soft tap on the brake pedal, pushing the CANC button, or normal brake pressure while slowing the vehicle will deactivate the Speed Control without erasing the set speed from memory.

Pushing the on/off button or turning the ignition switch OFF erases the set speed from memory.

## REAR PARK ASSIST — IF EQUIPPED

The Rear Park Assist system provides an audible indication of the distance between the rear fascia/bumper and a detected obstacle when backing up, e.g. during a parking maneuver. Refer to the "Park Assist System Usage Precautions" for the limitations of this system and recommendations.

Rear Park Assist is automatically activated when the transmission is placed into REVERSE. As the distance from an obstacle behind the vehicle decreases, the audible alert becomes more frequent.

### Interaction With Trailer Towing

The Rear Park Assist system is automatically deactivated when a trailer is hitched to the vehicle. The system will be automatically activated as soon as the trailer is removed.

### Rear Park Assist Sensors

The four Rear Park Assist sensors, located in the rear fascia/bumper, monitor the area behind the vehicle that is within the sensors' field of view. The sensors can detect obstacles, in the horizontal direction, from approximately 12 inches (30 cm) up to 55 inches (140 cm) from the center of the rear fascia/bumper and up to 24 inches (60 cm) from the corners of the rear fascia/bumper, depending on the location, type and orientation of the obstacle.

If several obstacles are detected, the Rear Park Assist system indicates the nearest obstacle.

The minimum height of a detectable obstacle corresponds to the maximum height of an obstacle that would clear the underside of the vehicle during the parking maneuver.

### Rear Park Assist Audible Alerts

If an obstacle is behind the vehicle when the transmission is placed into REVERSE, an audible alert is activated.

The tones emitted by the loudspeaker inform the driver that the vehicle is approaching an obstacle. The pauses between the tones are directly proportional to the distance from the obstacle. Pulses emitted in quick succession indicate the presence of a very close obstacle. A continuous tone indicates that the obstacle is less than 12 inches (30 cm) away.

**Audible And Visual Signals Supplied By The Rear Park Assist System**

| SIGNAL | MEANING | INDICATION |
|---|---|---|
| **Obstacle Distance** | An obstacle is present within the sensors' field of view | **Audible Signal** (dashboard loudspeaker)<br>• Sound pulses emitted at a rate that increases as the distance decreases.<br>• Emits continuous tone at 12 inches (30 cm).<br>• Adjustable volume level. (Refer to "Instrument Cluster Display" in "Getting To Know Your Instrument Panel" for further information). |
| **Failure** | Sensor or System failures | **Visual Signal** (instrument panel)<br>• Icon appears on display.<br>• Message is displayed on the instrument cluster display (where provided). |

While audible signals are emitted, the audio system is not muted.

The audible signal is turned off immediately if the distance increases. The tone cycle remains constant if the distance measured by the inner sensors is constant. If this condition occurs for the external sensors, the signal is turned off after 3 seconds (stopping warnings during maneuvers parallel to walls).

### Failure Indications

A malfunction of the Rear Park Assist sensors or system is indicated, during REVERSE gear engagement, by the instrument panel warning icon and message appearing on the instrument cluster display.

The warning icon is illuminated and a message appearing on the instrument cluster display. Refer to "Instrument Cluster Display" in "Getting To Know Your Instrument Panel" for further information.

The sensors and wiring are tested continuously when the ignition is in the ON/RUN position. Failures are indicated immediately if they occur when the system is on.

Even if the system is able to identify that a specific sensor is in failure condition, the instrument cluster display shall indicate that the Rear Park Assist system is unavailable, without reference to the sensor in failure condition. If even a single sensor fails, the entire system must be disabled. The system is turned off automatically.

### Cleaning The Rear Park Assist System

Clean the Rear Park Assist sensors with water, car wash soap and a soft cloth. Do not use rough or hard cloths. In washing stations, clean sensors quickly keeping the vapor jet/high pressure washing nozzles at least 4 inches (10 cm) from the sensors. Do not scratch or poke the sensors. Otherwise, you could damage the sensors.

### Park Assist System Usage Precautions

**NOTE:**

- Ensure that the outer surface and the underside of the rear bumper is clean and clear of snow, ice, mud, dirt or other obstruction to keep the Rear Park Assist system operating properly.
- Jackhammers, large trucks, and other vibrations could affect the performance of Rear Park Assist.
- Clean the Rear Park Assist sensors regularly, taking care not to scratch or damage them. The sensors must not be covered with ice, snow, slush, mud, dirt or debris.

Failure to do so can result in the system not working properly. The Rear Park Assist system might not detect an obstacle behind the fascia/bumper, or it could provide a false indication that an obstacle is behind the fascia/bumper.

- Objects such as bicycle carriers, etc., must not be placed within 12 inches (30 cm) from the rear fascia/bumper while driving the vehicle. Failure to do so can result in the system misinterpreting a close object as a sensor problem, causing a failure indication to be displayed in the instrument cluster.

**WARNING!**

- **Drivers must be careful when backing up even when using Rear Park Assist. Always check carefully behind your vehicle, look behind you, and be sure to check for pedestrians, animals, other vehicles, obstructions, and blind spots before backing up. You are responsible for safety and must continue to pay attention to your surroundings. Failure to do so can result in serious injury or death.**
- **Before using Rear Park Assist, it is strongly recommended that the ball mount and hitch ball assembly**

*(Continued)*

**WARNING!** ***(Continued)***

**is disconnected from the vehicle when the vehicle is not used for towing. Failure to do so can result in injury or damage to vehicles or obstacles because the hitch ball will be much closer to the obstacle than the rear fascia when the loudspeaker sounds the continuous tone. Also, the sensors could detect the ball mount and hitch ball assembly, depending on its size and shape, giving a false indication that an obstacle is behind the vehicle.**

**CAUTION!**

- **Rear Park Assist is only a parking aid and it is unable to recognize every obstacle, including small obstacles. Parking curbs might be temporarily detected or not detected at all. Obstacles located above or below the sensors will not be detected when they are in close proximity.**
- **The vehicle must be driven slowly when using Rear Park Assist in order to be able to stop in time when an obstacle is detected. It is recommended that the driver looks over his/her shoulder when using Rear Park Assist.**

If it's necessary to keep the ball mount and hitch ball assembly mounted for a long period, it is possible to filter out the ball mount and hitch ball assembly presence in sensor field of view. The filtering operation must be performed only by an authorized dealer.

## PARKVIEW REAR BACK UP CAMERA — IF EQUIPPED

Your vehicle may be equipped with the ParkView Rear Back Up Camera that allows you to see an on-screen image of the rear surroundings of your vehicle whenever the gear selector is put into REVERSE. The image will be displayed in the touchscreen display along with a caution note to "check entire surroundings" across the top of the screen. After five seconds, this note will disappear. The ParkView camera is located on the rear of the vehicle above the rear license plate.

When the vehicle is shifted out of REVERSE, the rear camera mode is exited and the last selected touchscreen appears again.

If your vehicle is equipped with the Camera Delay feature and it is turned on, the rear camera image will be displayed for up to 10 seconds when the vehicle is shifted out of REVERSE unless the forward vehicle speed exceeds 8 mph (13 km/h), the transmission is shifted into PARK or the vehicle's ignition is cycled to the OFF position.

When enabled, active guide lines are overlaid on the image to illustrate the width of the vehicle and its projected backup path based on the steering wheel position. A dashed center line overlay indicates the center of the vehicle to assist with parking.

When enabled, fixed guide lines are overlaid on the image to illustrate the width of the vehicle.

**NOTE:** The ParkView Rear Back Up Camera has programmable modes of operation that may be selected through the Uconnect System. Refer to your Uconnect Supplement Manual for further information.

Different colored zones indicate the distance to the rear of the vehicle.

The following table shows the approximate distances for each zone:

| Zone | Distance To The Rear Of The Vehicle |
|---|---|
| Red | 0 - 1 ft (0 - 30 cm) |
| Yellow | 1 ft - 3 ft (30 cm - 1 m) |
| Green | 3 ft or greater (1 m or greater) |

**WARNING!**

**Drivers must be careful when backing up even when using the ParkView Rear Back Up Camera. Always check carefully behind your vehicle, and be sure to check for pedestrians, animals, other vehicles, obstructions, or blind spots before backing up. You are responsible for the safety of your surroundings and must continue to pay attention while backing up. Failure to do so can result in serious injury or death.**

**CAUTION!**

- **To avoid vehicle damage, ParkView should only be used as a parking aid. The ParkView camera is**

*(Continued)*

**CAUTION!** ***(Continued)***

**unable to view every obstacle or object in your drive path.**

- **To avoid vehicle damage, the vehicle must be driven slowly when using ParkView to be able to stop in time when an obstacle is seen. It is recommended that the driver look frequently over his/her shoulder when using ParkView.**

**NOTE:** If snow, ice, mud, or any foreign substance builds up on the camera lens, clean the lens, rinse with water, and dry with a soft cloth. Do not cover the lens.

## ADDING FUEL

1. Open the fuel filler door.
2. There is no fuel filler cap. A flapper door inside the pipe seals the system.
3. Insert the fuel nozzle fully into the filler pipe – the nozzle opens and holds the flapper door while refueling.

**NOTE:** Only the correct size nozzle opens the latches allowing the flapper door to open.

4. Fill the vehicle with fuel – when the fuel nozzle "clicks" or shuts off the fuel tank is full.
5. Remove the fuel nozzle and close the fuel door.

**NOTE:** A funnel is provided (located in the tool bag or cargo floor area in the rear cargo area) to open the flapper door to allow for emergency refueling with a gas can.

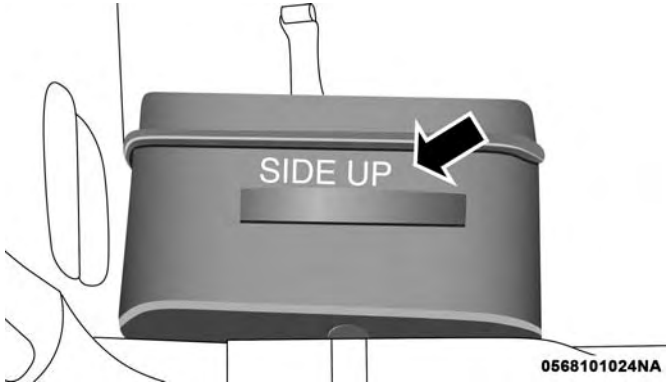


**Funnel Location Inside Of Tool Kit**

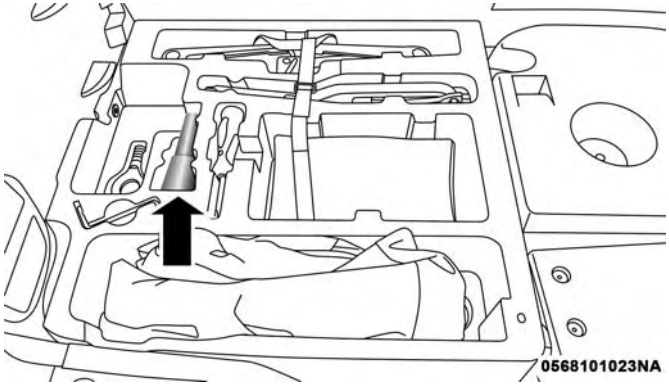


Funnel Location For Vehicle With Optional Spare Tire

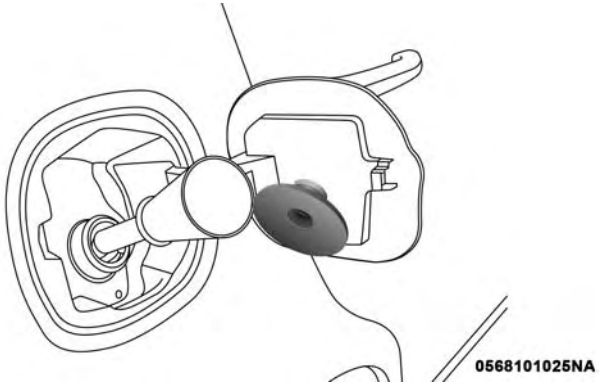


Emergency Fuel Filling Procedure

**WARNING!**

- **Never have any smoking materials lit in or near the vehicle when the fuel door is open or the tank is being filled.**
- **Never add fuel when the engine is running. This is in violation of most state and federal fire regulations and may cause the "Malfunction Indicator Light" to turn on.**
- **A fire may result if fuel is pumped into a portable container that is inside of a vehicle. You could be**

*(Continued)*

**WARNING!** *(Continued)*

**burned. Always place fuel containers on the ground while filling.**

**CAUTION!**

**To avoid fuel spillage and overfilling, do not "top off" the fuel tank after filling.**

## VEHICLE LOADING

### Certification Label

As required by National Highway Traffic Safety Administration regulations, your vehicle has a certification label affixed to the driver's side door or pillar.

This label contains the month and year of manufacture, Gross Vehicle Weight Rating (GVWR), Gross Axle Weight Rating (GAWR) front and rear, and Vehicle Identification Number (VIN). A Month-Day-Hour (MDH) number is included on this label and indicates the Month, Day and Hour of manufacture. The bar code that appears on the bottom of the label is your VIN.

**Gross Vehicle Weight Rating (GVWR)**

The GVWR is the total permissible weight of your vehicle including driver, passengers, vehicle, options and cargo. The label also specifies maximum capacities of front and rear axle systems (GAWR). Total load must be limited so GVWR and front and rear GAWR are not exceeded.

**Payload**

The payload of a vehicle is defined as the allowable load weight a truck can carry, including the weight of the driver, all passengers, options and cargo.

**Gross Axle Weight Rating (GAWR)**

The GAWR is the maximum permissible load on the front and rear axles. The load must be distributed in the cargo area so that the GAWR of each axle is not exceeded.

Each axle GAWR is determined by the components in the system with the lowest load carrying capacity (axle, springs, tires or wheels). Heavier axles or suspension components sometimes specified by purchasers for increased durability does not necessarily increase the vehicle's GVWR.

### Tire Size

The tire size on the Vehicle Certification Label represents the actual tire size on your vehicle. Replacement tires must be equal to the load capacity of this tire size.

### Rim Size

This is the rim size that is appropriate for the tire size listed.

### Inflation Pressure

This is the cold tire inflation pressure for your vehicle for all loading conditions up to full GAWR.

### Curb Weight

The curb weight of a vehicle is defined as the total weight of the vehicle with all fluids, including vehicle fuel, at full capacity conditions, and with no occupants or cargo loaded into the vehicle. The front and rear curb weight values are determined by weighing your vehicle on a commercial scale before any occupants or cargo are added.

### Loading

The actual total weight and the weight of the front and rear of your vehicle at the ground can best be determined by weighing it when it is loaded and ready for operation.

The entire vehicle should first be weighed on a commercial scale to insure that the GVWR has not been exceeded. The weight on the front and rear of the vehicle should then be determined separately to be sure that the load is properly distributed over the front and rear axle. Weighing the vehicle may show that the GAWR of either the front or rear axles has been exceeded but the total load is within the specified GVWR. If so, weight must be shifted from front to rear or rear to front as appropriate until the specified weight limitations are met. Store the heavier items down low and be sure that the weight is distributed equally. Stow all loose items securely before driving.



Improper weight distributions can have an adverse effect on the way your vehicle steers and handles and the way the brakes operate.

**CAUTION!**

**Do not load your vehicle any heavier than the GVWR or the maximum front and rear GAWR. If you do, parts on your vehicle can break, or it can change the way your vehicle handles. This could cause you to lose control. Also overloading can shorten the life of your vehicle.**

## TRAILER TOWING

Trailer towing with this vehicle is not recommended.

## RECREATIONAL TOWING (BEHIND MOTORHOME, ETC.)

### Towing This Vehicle Behind Another Vehicle

| Towing Condition | Wheels OFF The Ground | Automatic Transmission |
|---|---|---|
| Flat Tow | NONE | NOT ALLOWED |
| Dolly Tow | Front | OK |
| | Rear | NOT ALLOWED |
| On Trailer | ALL | OK |

**NOTE:** When towing your vehicle, always follow applicable state and provincial laws. Contact state and provincial Highway Safety offices for additional details.

This vehicle may be towed on a flatbed or vehicle trailer provided all four wheels are OFF the ground.

This vehicle may also be towed using a tow dolly (with the front wheels OFF the ground).

**CAUTION!**

- **DO NOT flat tow any vehicle equipped with an automatic transmission. Damage to the drivetrain will result. If these vehicles require towing, make sure all drive wheels are OFF the ground.**
- **Towing this vehicle in violation of the above requirements can cause severe transmission damage. Damage from improper towing is not covered under the New Vehicle Limited Warranty.**

## DRIVING TIPS

### Driving On Slippery Surfaces

Information in this section will aid in safe controlled launches in adverse conditions.

#### Acceleration

Rapid acceleration on snow covered, wet, or other slippery surfaces may cause the driving wheels to pull erratically to the right or left. This phenomenon occurs when there is a difference in the surface traction under the front (driving) wheels.

**WARNING!**

**Rapid acceleration on slippery surfaces is dangerous. Unequal traction can cause sudden pulling of the front wheels. You could lose control of the vehicle and possibly have a collision. Accelerate slowly and carefully whenever there is likely to be poor traction (ice, snow, wet, mud, loose sand, etc.).**

#### Traction

When driving on wet or slushy roads, it is possible for a wedge of water to build up between the tire and road surface. This is hydroplaning and may cause partial or complete loss of vehicle control and stopping ability. To reduce this possibility, the following precautions should be observed:

- Slow down during rainstorms or when the roads are slushy.
- Slow down if the road has standing water or puddles.
- Replace the tires when tread wear indicators first become visible.
- Keep tires properly inflated.
- Maintain sufficient distance between your vehicle and the vehicle in front of you to avoid a collision in a sudden stop.

## Driving Through Water

Driving through water more than a few inches/centimeters deep will require extra caution to ensure safety and prevent damage to your vehicle.

### Flowing/Rising Water

**WARNING!**

**Do not drive on or across a road or path where water is flowing and/or rising (as in storm run-off). Flowing water can wear away the road or path's surface and cause your vehicle to sink into deeper water. Furthermore, flowing and/or rising water can carry your vehicle away swiftly. Failure to follow this warning may result in injuries that are serious or fatal to you, your passengers, and others around you.**

### Shallow Standing Water

Although your vehicle is capable of driving through shallow standing water, consider the following Cautions and Warnings before doing so.

**WARNING!**

- **Driving through standing water limits your vehicle's traction capabilities. Do not exceed 5 mph (8 km/h) when driving through standing water.**
- **Driving through standing water limits your vehicle's braking capabilities, which increases stopping distances. Therefore, after driving through standing water, drive slowly and lightly press on the brake pedal several times to dry the brakes.**
- **Failure to follow these warnings may result in injuries that are serious or fatal to you, your passengers, and others around you.**

**CAUTION!**

- **Always check the depth of the standing water before driving through it. Never drive through standing water that is deeper than the bottom of the tire rims mounted on the vehicle.**
- **Determine the condition of the road or the path that is under water and if there are any obstacles in the way before driving through the standing water.**

*(Continued)*

**CAUTION!** *(Continued)*

- **Do not exceed 5 mph (8 km/h) when driving through standing water. This will minimize wave effects.**
- **Driving through standing water may cause damage to your vehicle's drivetrain components. Always inspect your vehicle's fluids (i.e., engine oil, transmission, axle, etc.) for signs of contamination (i.e., fluid that is milky or foamy in appearance) after driving through standing water. Do not continue to operate the vehicle if any fluid appears contaminated, as this may result in further damage. Such damage is not covered by the New Vehicle Limited Warranty.**
- **Getting water inside your vehicle's engine can cause it to lock up and stall out, and cause serious internal damage to the engine. Such damage is not covered by the New Vehicle Limited Warranty.**

# IN CASE OF EMERGENCY

## CONTENTS


- HAZARD WARNING FLASHERS . . . . . .204
- BULB REPLACEMENT . . . . . .204
  - Replacement Bulbs . . . . . .204
  - Replacing Exterior Bulbs . . . . . .206
- FUSES . . . . . .209
  - General Information . . . . . .209
  - Underhood Fuses . . . . . .210
  - Interior Fuses. . . . . .212
  - Rear Interior Fuses . . . . . .215
- JACKING AND TIRE CHANGING — IF EQUIPPED . . . . . .216
  - Jack Location . . . . . .217
  - Spare Tire Removal/Stowage . . . . . .217
  - Preparations For Jacking . . . . . .218
  - Jacking Instructions . . . . . .219
- TIRE SERVICE KIT . . . . . .222
- JUMP STARTING PROCEDURES . . . . . .226
  - Preparations For Jump Start . . . . . .226
  - Jump Starting Procedure . . . . . .227
- IF YOUR ENGINE OVERHEATS . . . . . .229
- IGNITION KEY REMOVAL OVERRIDE . . . . . .230
- GEAR SELECTOR OVERRIDE . . . . . .231
- FREEING A STUCK VEHICLE . . . . . .232
- TOWING A DISABLED VEHICLE . . . . . .233
- ENHANCED ACCIDENT RESPONSE SYSTEM (EARS) . . . . . .235
- EVENT DATA RECORDER (EDR) . . . . . .235

## HAZARD WARNING FLASHERS

The Hazard Warning flasher switch is located on the instrument panel, below the radio.

Push the switch to turn on the Hazard Warning flasher. When the switch is activated, all directional turn signals will flash on and off to warn oncoming traffic of an emergency. Push the switch a second time to turn off the Hazard Warning flashers.

This is an emergency warning system and it should not be used when the vehicle is in motion. Use it when your vehicle is disabled and it is creating a safety hazard for other motorists.

When you must leave the vehicle to seek assistance, the Hazard Warning flashers will continue to operate even though the ignition is placed in the OFF position.

**NOTE:** With extended use, the Hazard Warning flashers may wear down your battery.

## BULB REPLACEMENT

### Replacement Bulbs

**Interior Bulbs**

| | **Bulb Number** |
|---|---|
| Overhead Lamp | C5W |
| Sun Visors | C5W |
| Courtesy Lamp | W5W |
| Glove Compartment | C5W |
| Rear Courtesy Lamp | C5W |

**Exterior Bulbs**

| | **Bulb Number** |
|---|---|
| Front Low and High Beam Headlamp | HIR2LL |
| Front Turn Signal Lamps | WY21W |
| Front Parking | LED (See Authorized Dealer) |
| Daytime Running Lamps | W21W |
| Front Side Marker Lamps | LED (See Authorized Dealer) |
| Rear Tail/Stop Lamps | P21/5W |
| Rear Tail Lamp | LED (See Authorized Dealer) |
| Rear Turn Signal Lamps | P21W |
| Rear Backup Lamps | W16W |
| Rear Side Marker Lamps | LED (See Authorized Dealer) |
| Center High Mounted Stop Lamp | LED (See Authorized Dealer) |
| Front Fog Lamps | H11 |
| Rear Fog Lamps - If Equipped | W16W |
| License Plate Lamps | W5W |
| **NOTE:** Numbers refer to commercial bulb types that can be purchased from your authorized dealer. | |
| If a bulb needs to be replaced, visit your authorized dealer or refer to the applicable Service Manual. | |

## Replacing Exterior Bulbs

### Headlamps Low Beam And High Beam

1. Remove the plastic sealing cap from the back of the headlamp housing by turning it counterclockwise.

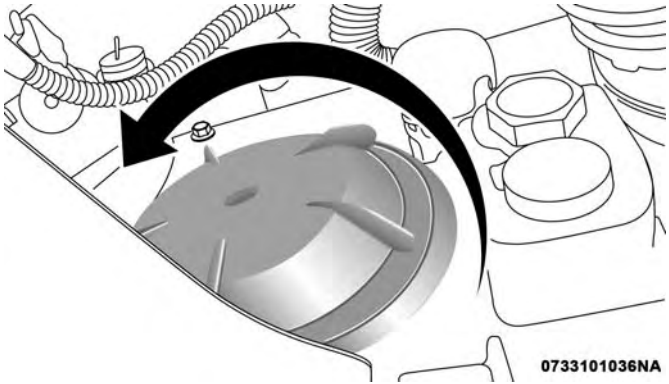


**Headlamp Sealing Cap Removal**

2. Rotate the bulb counterclockwise.

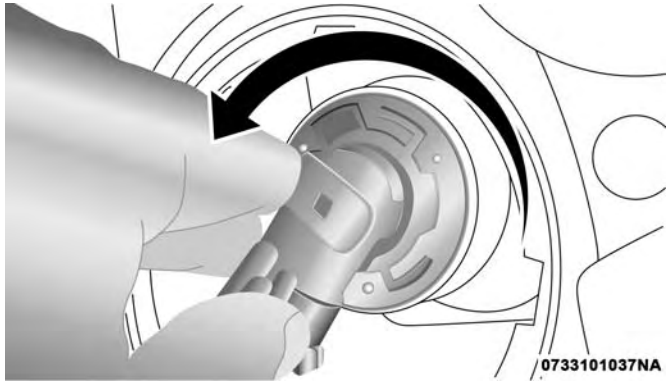


**Bulb Removal Procedure**

3. Remove the bulb when all the tabs are aligned with the openings in the metal holder.
4. Disconnect the electrical connector from the bulb.

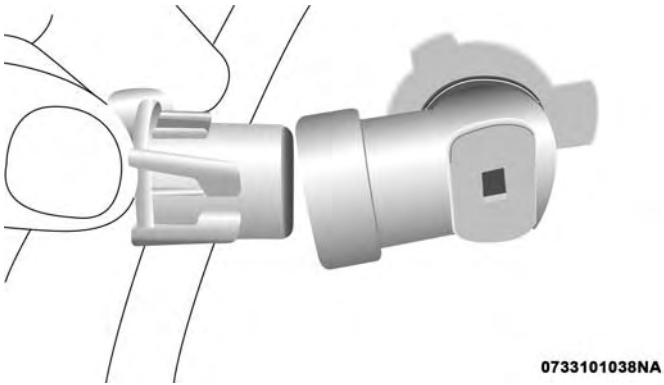


**Electrical Connector Removal**

5. Install the new bulb and rotate clockwise to lock in place.

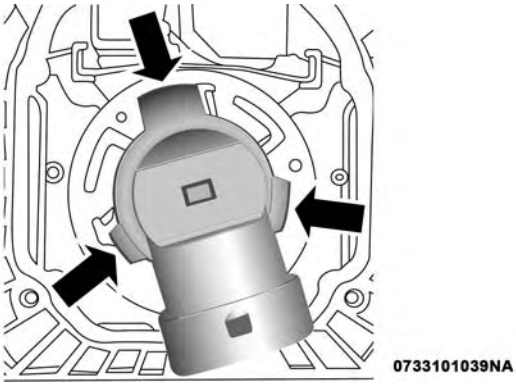


**New Bulb Installation**

6. Reinstall the plastic cap.

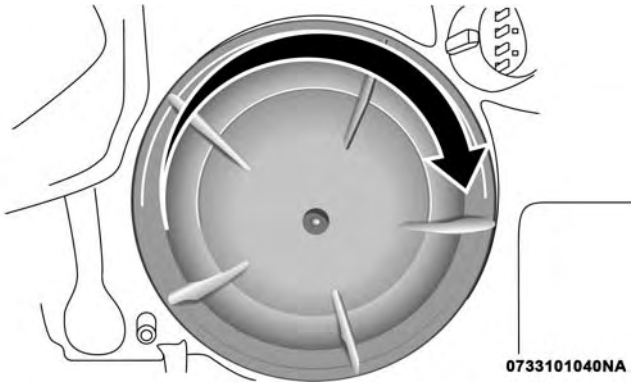


**Headlamp Sealing Cap Installation**

### Front Turn Signal And Daytime Running Lamps

1. Turn front wheels inboard to access upper cover in wheel liner.
2. Open the upper cover on the front of the wheel liner.
3. Remove the cap from the back of the lower headlamp housing.
4. Rotate the bulb counterclockwise and remove.
5. Install the bulb into socket, and rotate bulb/socket clockwise into lamp locking it in place.
6. Reinstall the plastic cap and close the cover on the wheel liner.

### Front Fog Lamps

To replace the front fog lights, see your authorized dealer.

### Front/Rear Side Marker Lamps

The front/rear side marker lamps are LED and not serviced separately. See your authorized dealer for replacement of these lights.

### Rear Tail, Stop, Backup And Turn Signal Lamps

1. Open the liftgate.
2. Remove the tail lamp access panel.
3. Remove the two screws that secure the tail lamp to the body of the vehicle.
4. Remove the tail lamp assembly.
5. Remove the two screws that secure the backplate to the tail lamp housing.
6. Separate the backplate from the tail lamp housing.

7. Remove the tail, stop, or turn signal bulbs by pushing them slightly and turning counterclockwise.
8. Remove the backup lamp bulb by pulling straight out.
9. Replace lamps as required and reinstall lamp.

**Center High-Mounted Stop Lamp (CHMSL)**

This light is an LED assembly. See your authorized dealer for replacement.

## FUSES

**WARNING!**

- **When replacing a blown fuse, always use an appropriate replacement fuse with the same amp rating as the original fuse. Never replace a fuse with another fuse of higher amp rating. Never replace a blown fuse with metal wires or any other material. Do not place a fuse inside a circuit breaker cavity or vice**

*(Continued)*

**WARNING!** *(Continued)*

**versa. Failure to use proper fuses may result in serious personal injury, fire and/or property damage.**
- **Before replacing a fuse, make sure that the ignition is off and that all the other services are switched off and/or disengaged.**
- **If the replaced fuse blows again, contact an authorized dealer.**
- **If a general protection fuse for safety systems (air bag system, braking system), power unit systems (engine system, transmission system) or steering system blows, contact an authorized dealer.**

### General Information

The fuses protect electrical systems against excessive current.

When a device does not work, you must check the fuse element inside the blade fuse for a break/melt.

Also, please be aware that when using power outlets for extended periods of time with the engine off may result in vehicle battery discharge.

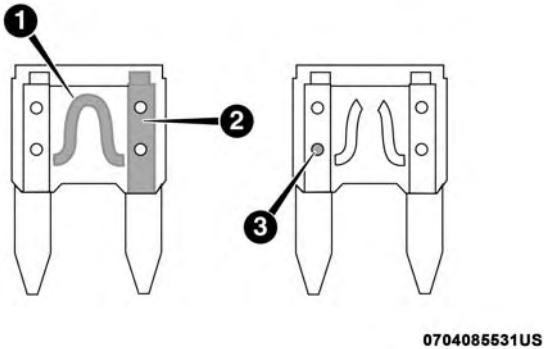


**Blade Fuses**

1 — Fuse Element
2 — Blade Fuse with a good/functional fuse element.
3 — Blade fuse with a NOT functional / BAD fuse element (blown fuse).

## Underhood Fuses

The Front Distribution Unit is located on the right side of the engine compartment, next to the battery. To access the fuses, push the release tabs and remove the cover.

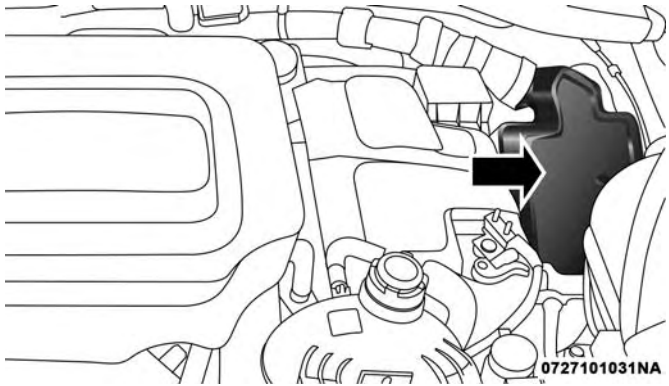


**Front Distribution Unit**

The ID number of the electrical component corresponding to each fuse can be found on the back of the cover.

| Cavity | Maxi Fuse | Mini Fuse | Description |
|---|---|---|---|
| F01 | 70 Amp Tan | – | Body Controller |
| F02 | 60 Amp Blue | – | Body Controller Rear Distribution Unit |

| Cavity | Maxi Fuse | Mini Fuse | Description |
|---|---|---|---|
| F03 | 20 Amp Yellow | – | Ignition Switch |
| F04 | 40 Amp Orange | – | Anti-Lock Brake Pump |
| F05 | 70 Amp Tan | – | Electric Power Steering |
| F06 | 30 Amp Green | – | Radiator Fan - Low Speed |
| F07 | 50 Amp Red | – | Radiator Fan - High Speed |
| F08 | 40 Amp Orange | – | Blower Motor |
| F09 | – | 7.5 Amp Brown | Transmission (Aisin) |
| F10 | – | 15 Amp Blue | Horn |
| F11 | – | 10 Amp Red | Powertrain |
| F14 | – | 20 Amp Yellow | Power Outlet 115V |
| F15 | – | – | Not Used |
| F15 | – | 10 Amp Red | Transmission (Aisin) |
| F16 | – | 7.5 Amp Brown | Transmission Powertrain |
| F17 | – | 10 Amp Red | Powertrain |
| F18 | – | 5 Amp Tan | Powertrain (Multiair – If Equipped) |
| F19 | – | 7.5 Amp Brown | Air Conditioning |
| F20 | – | 30 Amp Green | Rear Defroster |
| F21 | – | 15 Amp Blue | Fuel Pump |
| F22 | – | 20 Amp Yellow | Powertrain |
| F23 | – | 20 Amp Yellow | Anti-Lock Brake Valves |

| Cavity | Maxi Fuse | Mini Fuse | Description |
|---|---|---|---|
| F30 | – | 5 Amp Tan | After Run Pump |
| F81 | 70 Amp Tan | – | PTC (Secondary) |
| F83 | 40 Amp Orange | – | PTC (Primary) |
| F85 | – | 15 Amp Blue | Front Power Outlet 12V |
| F86 | – | 7.5 Amp Brown | USB Charger Sockets |
| F88 | – | 7.5 Amp Brown | Heated Mirrors |

## Interior Fuses

The interior fuse panel is part of the Body Control Module (BCM) and is located on the driver's side under the instrument panel.

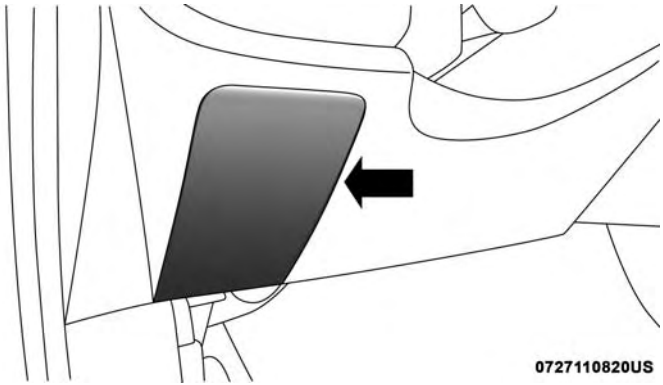


**Interior Fuse Panel**

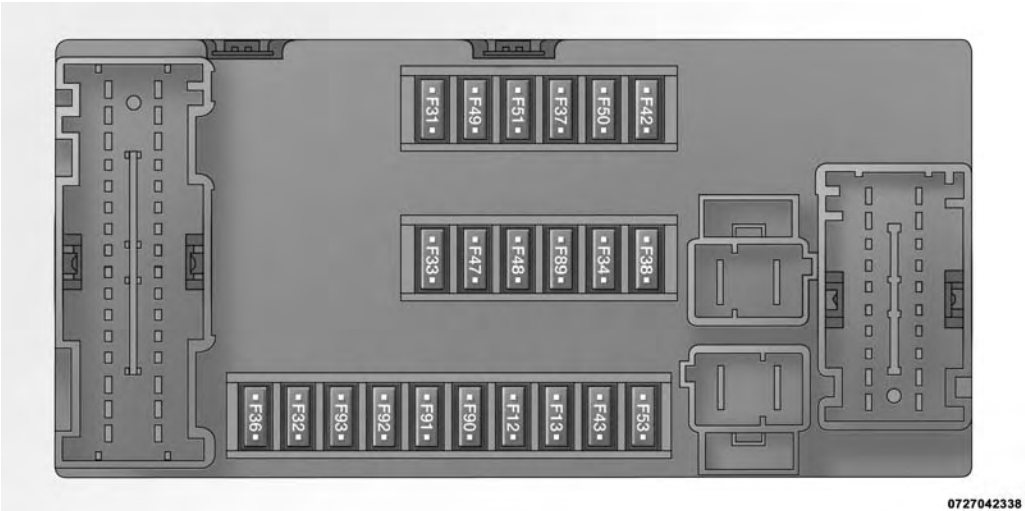


**Fuse Panel Cavity Locations**

| Cavity | Vehicle Fuse Number | Mini Fuse | Description |
|---|---|---|---|
| 1 | F12 | 7.5 Amp Brown | Right Low Beam |
| 2 | F32 | 7.5 Amp Brown | Front and Rear Ceiling Lights Trunk and Door Courtesy Lights |

| Cavity | Vehicle Fuse Number | Mini Fuse | Description |
|---|---|---|---|
| 3 | F53 | 7.5 Amp Brown | Instrument Panel Node |
| 4 | F38 | 20 Amp Yellow | Central Door Locking |
| 5 | F36 | 15 Amp Blue | Diagnostic Socket, Vehicle Radio, Climate Control System, TPMS, Sunroof |
| 6 | F90 | 7.5 Amp Brown | Left High Beam |
| 7 | F91 | 7.5 Amp Brown | Right High Beam |
| 8 | F92 | 7.5 Amp Brown | Left Fog Light |
| 9 | F93 | 7.5 Amp Brown | Right Fog Light |
| 10 | F42 | 5 Amp Tan | BSM, ESP |
| 11 | F33 | 20 Amp Yellow | Rear Left Passenger Window |
| 12 | F34 | 20 Amp Yellow | Rear Right Passenger Window |
| 13 | F43 | 20 Amp Yellow | Bi-Directional Washer |
| 14 | F48 | 20 Amp Yellow | Passenger Power Window |
| 15 | F13 | 7.5 Amp Brown | Left Low Beam, Headlamp Leveling |
| 16 | F50 | 7.5 Amp Brown | Airbag |
| 17 | F51 | 5 Amp Tan | Vehicle Radio Switch, Climate Control System, Stop Light, Reverse Gear, Sunroof, Parking Sensor, Rear Camera |
| 18 | F37 | 7.5 Amp Brown | Stop Light Switch, Instrument Panel Node |

| Cavity | Vehicle Fuse Number | Mini Fuse | Description |
|---|---|---|---|
| 19 | F49 | 5 Amp Tan | Exterior Mirror, GPS, Electric Mirror, Parking Sensor |
| 20 | F31 | 5 Amp Tan | Climate Control, Seat Regulation |
| 21 | F47 | 20 Amp Yellow | Driver Power Window |

## Rear Interior Fuses

The rear interior fuse panel is located on the driver's side in the rear compartment.

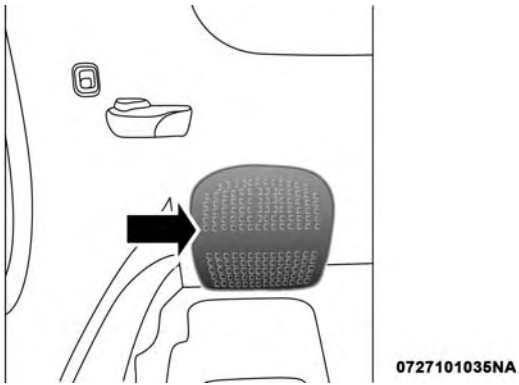


**Rear Fuse Panel**

| Cavity | Vehicle Fuse Number | Mini Fuse | Description |
|---|---|---|---|
| 1 | F61 | 15 Amp Blue | Lumbar Regulation Seats |
| 2 | F62 | 15 Amp Blue | Heated Seats |

| Cavity | Vehicle Fuse Number | Mini Fuse | Description |
|---|---|---|---|
| 3 | F63 | 20 Amp Yellow | Hi Fi System |
| 4 | F65 | 20 Amp Yellow | Sun Blind |
| 5 | F66 | 20 Amp Yellow | Sunroof |

## JACKING AND TIRE CHANGING — IF EQUIPPED

**WARNING!**

- **Do not attempt to change a tire on the side of the vehicle close to moving traffic. Pull far enough off the road to avoid the danger of being hit when operating the jack or changing the wheel.**
- **Being under a jacked-up vehicle is dangerous. The vehicle could slip off the jack and fall on you. You could be crushed. Never put any part of your body**

*(Continued)*

**WARNING!** ***(Continued)***

**under a vehicle that is on a jack. If you need to get under a raised vehicle, take it to a service center where it can be raised on a lift.**
- **Never start or run the engine while the vehicle is on a jack.**
- **The jack is designed to be used as a tool for changing tires only. The jack should not be used to lift the vehicle for service purposes. The vehicle should be jacked on a firm level surface only. Avoid ice or slippery areas.**

## Jack Location

The spare tire jack is located in the rear cargo area underneath the cargo floor.

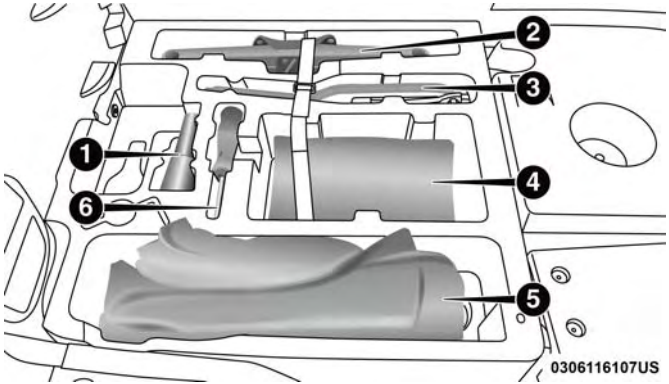


**Jack Location**

1 — Emergency Fuel Fill Funnel
2 — Jack
3 — Jack Handle
4 — Emergency Allen Key
5 — Emergency Spare Tire Bag
6 — Emergency Screwdriver

## Spare Tire Removal/Stowage

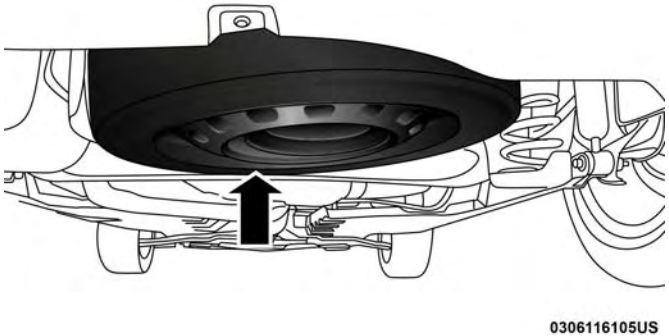


**Spare Tire Location**

The spare tire is stowed in underneath the rear cargo area on the outside of the vehicle.

1. Remove the cargo floor to access the winch.
2. Remove the jack handle and use the wrench end to lower the spare tire.
3. When the spare is clear, replace the jack tools.

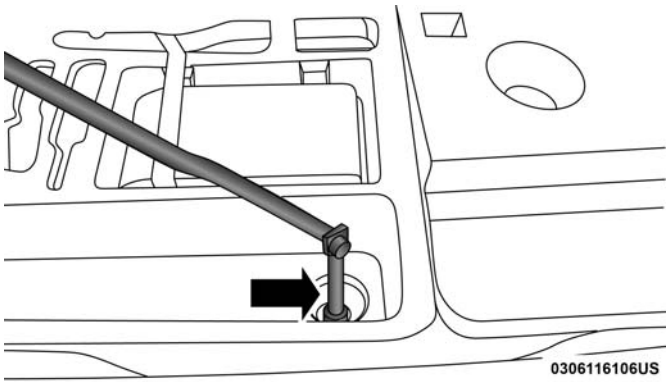


**Winch Location**

**Spare Tire Stowage**

Rotate the jack wrench tool on the winch drive nut clockwise (the flat tire must not be connected to the winch) until effort becomes heavy and an audible click is heard indicating the winch is properly stowed.

Cover the flat tire with the Emergency Spare Tire Bag and stow the flat tire into the trunk.

**CAUTION!**

**The winch mechanism is designed for use with the jack wrench extension tool only. Use of air wrench or power tool may damage the winch.**

## Preparations For Jacking

1. Park the vehicle on a firm, level surface. Avoid ice or slippery areas.

**WARNING!**

**Do not attempt to change a tire on the side of the vehicle close to moving traffic, pull far enough off the road to avoid being hit when operating the jack or changing the wheel.**

2. Turn on the Hazard Warning flasher.
3. Apply the parking brake.
4. Place the gear selector into PARK.
5. Place the ignition in OFF mode.
6. Block both the front and rear of the wheel diagonally opposite of the jacking position. For example, if changing the right front tire, block the left rear wheel.

**NOTE:** Passengers should not remain in the vehicle when the vehicle is being jacked.

### Jacking Instructions

**WARNING!**

**Carefully follow these tire changing warnings to help prevent personal injury or damage to your vehicle:**

- **Always park on a firm, level surface as far from the edge of the roadway as possible before raising the vehicle.**
- **Turn on the Hazard Warning flasher.**

*(Continued)*

**WARNING!** ***(Continued)***

- **Block the wheel diagonally opposite the wheel to be raised.**
- **Set the parking brake firmly and set the transmission in PARK.**
- **Never start or run the engine with the vehicle on a jack.**
- **Do not let anyone sit in the vehicle when it is on a jack.**
- **Do not get under the vehicle when it is on a jack. If you need to get under a raised vehicle, take it to a service center where it can be raised on a lift.**
- **Only use the jack in the positions indicated and for lifting this vehicle during a tire change.**
- **If working on or near a roadway, be extremely careful of motor traffic.**
- **To assure that spare tires, flat or inflated, are securely stowed, spares must be stowed with the valve stem facing the ground.**

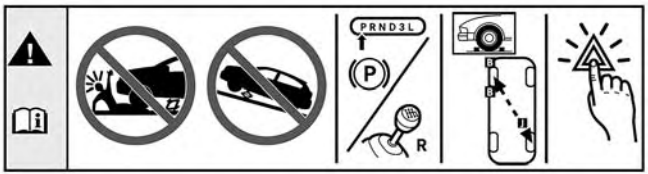


060600714

Jack Warning Label

**CAUTION!**

**Do not attempt to raise the vehicle by jacking on locations other than those indicated in the Jacking Instructions for this vehicle.**

1. Remove the spare tire, jack and wheel bolt wrench.
2. If equipped with aluminum wheels where the center cap covers the wheel bolts, use the wheel bolt wrench to pry the center cap off carefully before raising the vehicle.
3. Before raising the vehicle, use the wheel bolt wrench to loosen, but not remove, the wheel bolts on the wheel with the flat tire. Turn the wheel bolts counterclockwise one turn while the wheel is still on the ground.

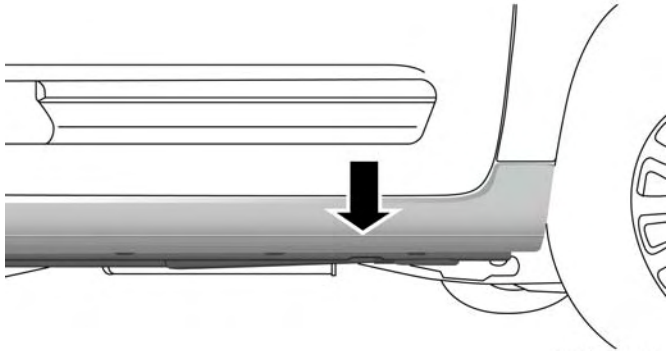

0705120666US

Front Jacking Location

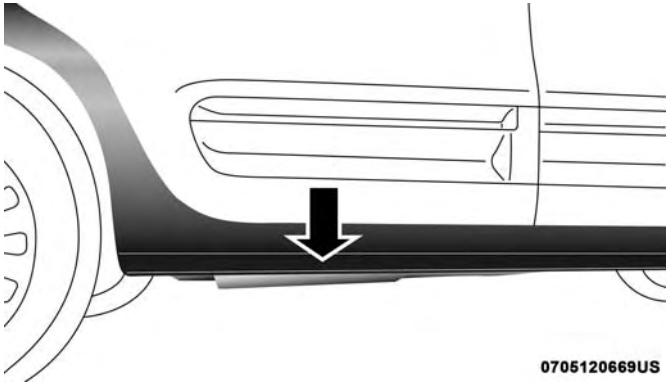


**Rear Jacking Location**

**NOTE:** There are front and rear jacking locations on each side of the body (as indicated by the triangular lift point symbols on the sill molding).

4. Place the jack underneath the lift area that is closest to the flat tire. Turn the jack screw clockwise to firmly engage the jack saddle with the lift area of the sill flange, centering the jack saddle between the locating notches on the sill flange.
5. Raise the vehicle just enough to remove the flat tire and install the spare tire.

**WARNING!**

**Raising the vehicle higher than necessary can make the vehicle less stable. It could slip off the jack and hurt someone near it. Raise the vehicle only enough to remove the tire.**

6. Remove the wheel bolts and tire.
7. Mount the spare tire.

**CAUTION!**

**Be sure to mount the spare tire with the valve stem facing outward. The vehicle could be damaged if the spare tire is mounted incorrectly.**

**NOTE:**

- For vehicles so equipped, do not attempt to install a center cap or wheel cover on the compact spare.
- Refer to “Compact Spare Tire” and to “Limited-Use Spare” under “Tires—General Information” in “Servicing And Maintenance” for additional warnings, cautions, and information about the spare tire, its use, and operation.

8. Install the wheel bolts with the threaded end of the wheel bolt toward the wheel. Lightly tighten the wheel bolts.

**WARNING!**

- **To avoid the risk of forcing the vehicle off the jack, do not tighten the wheel bolts fully until the vehicle has been lowered. Failure to follow this warning may result in personal injury.**
- **To avoid possible personal injury, handle the wheel covers with care to avoid contact with any sharp edges.**

9. Lower the vehicle to the ground by turning the jack handle counterclockwise.

10. Finish tightening the wheel bolts. Push down on the wrench while at the end of the handle for increased leverage. Tighten the wheel bolts in a star pattern until each wheel bolt has been tightened twice. Refer to "Wheel And Tire Torque Specifications" in "Technical Specifications" for proper lug nut torque. If in doubt about the correct tightness, have them checked with a torque wrench by your authorized dealer or at a service station.

11. Stow the jack, tools and flat tire.

**WARNING!**

**A loose tire or jack thrown forward in a collision or hard stop could endanger the occupants of the vehicle. Always stow the jack parts and the spare tire in the places provided. Have the deflated (flat) tire repaired or replaced immediately.**

## TIRE SERVICE KIT

If a tire is punctured, you can make a first emergency repair using the Tire Service Kit located in the rear storage area under the cargo floor.

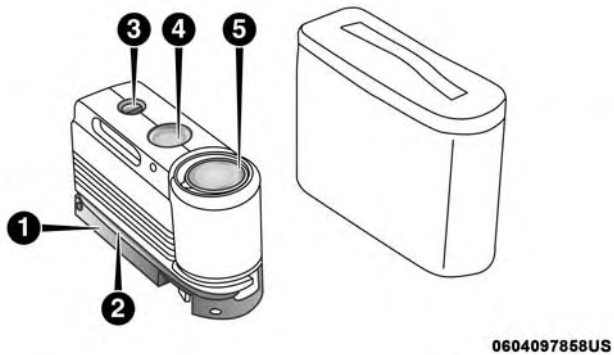


**Tire Service Kit Components**

1 — Power Plug (located on bottom side of Tire Service Kit)
2 — Sealant Hose (Clear)
3 — Power Button
4 — Pressure Gauge
5 — Sealant Bottle

Tire punctures of up to 1/4 of an inch (6mm) can be repaired; the kit can be used in all weather conditions. Do not remove the foreign object from the punctured tire, i.e., screw or nail.

Remove the Tire Service Kit from the vehicle, take it out from the bag and place it near the punctured tire. Screw the clear flexible filling tube to the tire valve.

**WARNING!**

- **Do not attempt to seal a tire on the side of the vehicle closest to traffic. Pull far enough off the road to avoid the danger of being hit when using the Tire Service Kit.**
- **Do not use Tire Service Kit or drive the vehicle under the following circumstances:**
  - **If the puncture in the tire tread is approximately 1/4 inch (6 mm) or larger.**
  - **If the tire has any sidewall damage.**
  - **If the tire has any damage from driving with extremely low tire pressure.**
  - **If the tire has any damage from driving on a flat tire.**
  - **If the wheel has any damage.**
  - **If you are unsure of the condition of the tire or the wheel.**
- **Keep Tire Service Kit away from open flames or heat source.**

*(Continued)*

**WARNING!** ***(Continued)***

- **A loose Tire Service Kit thrown forward in a collision or hard stop could endanger the occupants of the vehicle. Always stow the Tire Service Kit in the place provided. Failure to follow these warnings can result in injuries that are serious or fatal to you, your passengers, and others around you.**
- **Take care not to allow the contents of Tire Service Kit to come in contact with hair, eyes, or clothing. Tire Service Kit sealant is harmful if inhaled, swallowed, or absorbed through the skin. It causes skin, eye, and respiratory irritation. Flush immediately with plenty of water if there is any contact with eyes or skin. Change clothing as soon as possible, if there is any contact with clothing.**
- **Tire Service Kit Sealant solution contains latex. In case of an allergic reaction or rash, consult a physician immediately. Keep Tire Service Kit out of reach of children. If swallowed, rinse mouth immediately with plenty of water and drink plenty of water. Do not induce vomiting! Consult a physician immediately.**

Insert the power plug into the vehicle power outlet socket. Start the vehicle engine.

Push the Tire Service Kit power button to the "I" position. The electric compressor will be turned on, sealant and air will inflate the tire.

Minimum 26 psi (1.8 bar) of pressure should be reached within 20 minutes. If the pressure has not been reached, turn off and remove the Tire Service Kit, drive the vehicle 30 feet (10 meters) back and forth, to better distribute the sealant inside the tire.

Attach the clear flexible sealant hose of the compressor directly to the tire valve and repeat the inflation process.

When the correct pressure has been reached, start driving the vehicle to uniformly distribute the sealant inside the tire. After 10 minutes, stop and check the tire pressure. If the pressure is below 19 psi (1.3 bar), do not drive the vehicle, as the tire is too damaged, contact the nearest authorized dealer.

**WARNING!**

**Tire Service Kit is not a permanent flat tire repair. Have the tire inspected and repaired or replaced after using Tire Service Kit. Do not exceed 65 mph (110 km/h) until the tire is repaired or replaced. Failure to follow this**

***(Continued)***

**WARNING!** *(Continued)*

**warning can result in injuries that are serious or fatal to you, your passengers, and others around you. Have the tire checked as soon as possible at an authorized dealer.**

If the pressure is at 19 psi (1.3 bar) or above, repeat the inflation process to reach the correct tire pressure and continue driving.

Peel off the warning label from the bottle and place it on the dashboard as a reminder to the driver that the tire has been treated with the Tire Service Kit.

**WARNING!**

**The metal end fitting from Power Plug may get hot after use, so it should be handled carefully.**

**NOTE:** Replace the sealant canister prior to the expiration date at your authorized dealer.

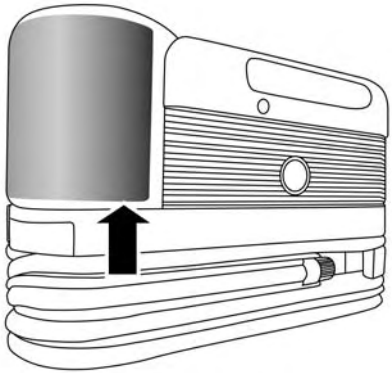


**Tire Service Kit Expiration Date Location**

**WARNING!**

**Store the sealant canister in its special compartment, away from sources of heat. Failure to follow this WARNING may result in sealant canister rupture and serious injury or death.**

## JUMP STARTING PROCEDURES

If your vehicle has a discharged battery, it can be jump started using a set of jumper cables and a battery in another vehicle or by using a portable battery booster pack. Jump starting can be dangerous if done improperly, so please follow the procedures in this section carefully.

**NOTE:** When using a portable battery booster pack, follow the manufacturer's operating instructions and precautions.

**WARNING!**

**Do not attempt jump starting if the battery is frozen. It could rupture or explode and cause personal injury.**

**CAUTION!**

**Do not use a portable battery booster pack or any other booster source with a system voltage greater than 12 Volts or damage to the battery, starter motor, alternator or electrical system may occur.**

### Preparations For Jump Start

The battery in your vehicle is located on the driver's side of the engine compartment.

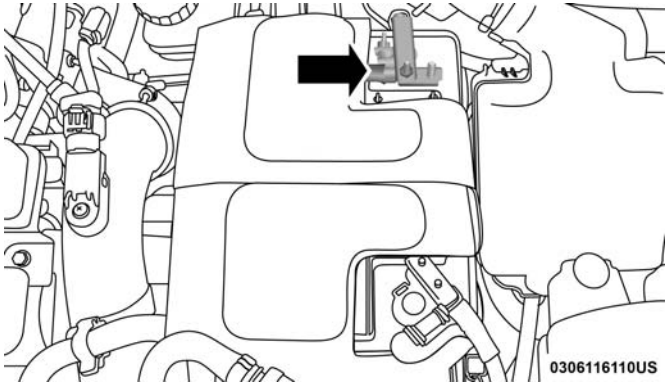


**Positive Terminal**

**WARNING!**

- **Take care to avoid the radiator cooling fan whenever the hood is raised. It can start anytime the ignition switch is ON. You can be injured by moving fan blades.**
- **Remove any metal jewelry such as rings, watch bands and bracelets that could make an inadvertent electrical contact. You could be seriously injured.**
- **Batteries contain sulfuric acid that can burn your skin or eyes and generate hydrogen gas which is**

*(Continued)*

**WARNING!** *(Continued)*

**flammable and explosive. Keep open flames or sparks away from the battery.**

1. Apply the parking brake, place the transmission in PARK and turn the ignition OFF.
2. Turn off the heater, radio and all unnecessary electrical accessories.
3. Remove the protective cover over the remote positive **(+)** battery post. To remove the cover, pull upward on the cover.
4. If using another vehicle to jump start the battery, park the vehicle within the jumper cables reach, set the parking brake and make sure the ignition is OFF.

**WARNING!**

**Do not allow vehicles to touch each other as this could establish a ground connection and personal injury could result.**

## Jump Starting Procedure

**WARNING!**

**Failure to follow this jump starting procedure could result in personal injury or property damage due to battery explosion.**

**CAUTION!**

**Failure to follow these procedures could result in damage to the charging system of the booster vehicle or the discharged vehicle.**

**NOTE:** Before connecting the jumper cables to the discharged battery, the negative **(-)** battery cable must be disconnected from the discharged battery. This is the only way to successfully jump start the vehicle.

Follow these steps to disconnect the negative **(-)** battery cable:

1. Pull outward on the negative **(-)** battery cable terminal release lever to the open position.
2. Lift up on the negative **(-)** battery cable terminal and set aside.

**Connecting The Jumper Cables**

1. Connect the positive **(+)** end of the jumper cable to the positive **(+)** post of the discharged vehicle.
2. Connect the opposite end of the positive **(+)** jumper cable to the positive **(+)** post of the booster battery.
3. Connect the negative **(-)** end of the jumper cable to the negative **(-)** post of the booster battery.
4. Connect the opposite end of the negative **(-)** jumper cable to the negative **(-)** battery cable terminal of the discharged vehicle.

**WARNING!**

**Do not connect the jumper cable to the negative (-) post of the discharged battery. The resulting electrical spark could cause the battery to explode and could result in personal injury. Only use the specific ground point, do not use any other exposed metal parts.**

5. Start the engine in the vehicle that has the booster battery, let the engine idle a few minutes, and then start the engine in the vehicle with the discharged battery.
6. Once the engine is started, remove the jumper cables in the reverse sequence.

**Disconnecting The Jumper Cables**

1. Disconnect the negative **(-)** jumper cable from the negative **(-)** battery cable terminal of the vehicle with the discharged battery.
2. Disconnect the opposite end of the negative **(-)** jumper cable from the negative **(-)** post of the booster battery.
3. Disconnect the positive **(+)** jumper cable from the positive **(+)** post of the booster battery.
4. Disconnect the opposite end of the positive **(+)** jumper cable from the positive **(+)** post of the discharged vehicle.

**NOTE:** The negative **(-)** battery cable must be connected to the negative **(-)** post of the battery.

Follow these steps to connect the negative **(-)** battery cable:

1. Connect the negative **(-)** battery terminal to the negative **(-)** post of the battery.
2. Push inward on the negative **(-)** battery cable terminal release lever to the closed position.

If frequent jump starting is required to start your vehicle, you should have the battery and charging system inspected at your authorized dealer.

**CAUTION!**

**Accessories plugged into the vehicle power outlets draw power from the vehicle's battery, even when not in use (i.e., cellular devices, etc.). Eventually, if plugged in long enough without engine operation, the vehicle's battery will discharge sufficiently to degrade battery life and/or prevent the engine from starting.**

## IF YOUR ENGINE OVERHEATS

In any of the following situations, you can reduce the potential for overheating by taking the appropriate action.

- On the highways — slow down.
- In city traffic — while stopped, place the transmission in NEUTRAL, but do not increase engine idle speed.

**NOTE:** There are steps that you can take to slow down an impending overheat condition:

- If your air conditioner (A/C) is on, turn it off. The A/C system adds heat to the engine cooling system and turning the A/C off can help remove this heat.
- You can also turn the temperature control to maximum heat, the mode control to floor and the blower control to high. This allows the heater core to act as a supplement to the radiator and aids in removing heat from the engine cooling system.

**WARNING!**

**You or others can be badly burned by hot engine coolant (antifreeze) or steam from your radiator. If you see or hear steam coming from under the hood, do not open the hood until the radiator has had time to cool. Never try to open a cooling system pressure cap when the radiator or coolant bottle is hot.**

**CAUTION!**

**Driving with a hot cooling system could damage your vehicle. If the pointer rises to the H (red) mark, the instrument cluster will sound a chime. When safe, pull over and stop the vehicle with the engine at idle. Turn off the air conditioning and wait until the pointer drops back into the normal range. If the pointer remains on the H (red) mark for more than a minute, turn the engine off immediately and call for service.**

## IGNITION KEY REMOVAL OVERRIDE

This vehicle is equipped with a Key Ignition Park Interlock which requires the transmission to be in PARK before the ignition switch can be turned to the LOCK/OFF (key removal) position. To remove the key manually, proceed as follows:

1. Firmly apply the parking brake.
2. Remove the Allen Key located in the rear cargo area, in the tool bag (if equipped) or on the left side in the cargo box.
3. Unlock the steering column, pull the tilt/telescoping control handle down.
4. Pull the steering wheel outward until it is in the end of the travel position, then lock the steering column in position, push the control handle up until fully engaged.
5. Using the Allen key, undo the lower steering column cover screws, and remove the lower cover.

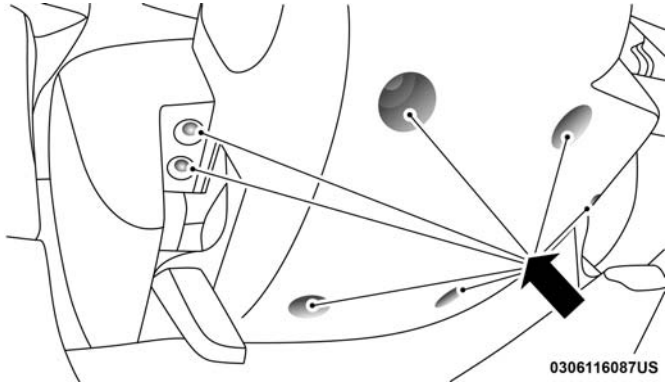


**Lower Steering Column Screw Locations**

6. Pull the release tab downwards using one hand and with the other one remove the key, sliding it outwards.

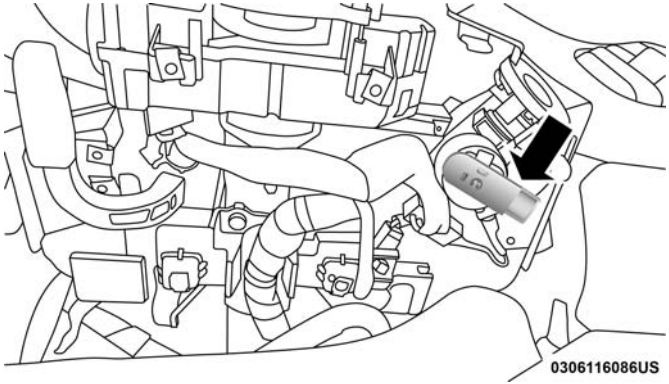


**Release Tab Location**

7. Once the key is removed, reinstall the steering column cover.

**CAUTION!**

**It is advisable to contact your authorized dealer to have the reinstall procedure carried out. If you would like to proceed in performing the reinstall procedure special attention must be paid to the correct coupling of the clips. Otherwise damage to the cover or noise might be heard due to incorrect fastening of the lower cover.**

## GEAR SELECTOR OVERRIDE

If a malfunction occurs and the gear selector cannot be moved out of the PARK position, you can use the following procedure to temporarily move the gear selector:

1. Turn the engine OFF.
2. Firmly apply the parking brake.
3. By pulling the gear selector boot, carefully separate the gear selector bezel and boot assembly from the center console, and raise it up to access the gear selector mechanism.
4. Press and maintain firm pressure on the brake pedal.
5. Insert the equipped screwdriver or similar tool into the gear selector override access hole (at the right front corner of the gear selector assembly) and push and hold the override release lever down.

**NOTE:** When inserting the screwdriver, keep it as vertical as possible during the override operation.

6. Move the gear selector to the NEUTRAL position.
7. The vehicle may then be started in NEUTRAL.
8. Reinstall the gear selector boot.

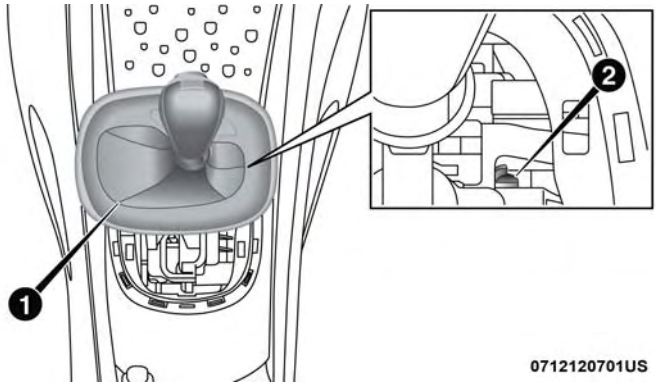


**Gear Selector Override**

1 — Raised Gear Selector Boot
2 — Gear Selector Override Access Hole

## FREEING A STUCK VEHICLE

If your vehicle becomes stuck in mud, sand or snow, it can often be moved using a rocking motion. Turn the steering wheel right and left to clear the area around the front wheels. Push and hold the lock button on the gear selector. Then, shift back and forth between DRIVE and REVERSE, while gently pressing the accelerator. Use the least amount of accelerator pedal pressure that will maintain the rocking motion, without spinning the wheels, or racing the engine.

**NOTE:** Push the "ESC Off" switch, to place the Electronic Stability Control (ESC) system in "Partial Off" mode, before rocking the vehicle. Refer to "Electronic Brake Control System" in "Safety" for further information. Once the vehicle has been freed, push the "ESC Off" switch again to restore "ESC On" mode.

**WARNING!**

**Fast spinning tires can be dangerous. Forces generated by excessive wheel speeds may cause damage, or even failure, of the axle and tires. A tire could explode and injure someone. Do not spin your vehicle's wheels faster than 30 mph (48 km/h) or for longer than 30 seconds continuously without stopping when you are stuck and do not let anyone near a spinning wheel, no matter what the speed.**

**CAUTION!**

- **Racing the engine or spinning the wheels may lead to transmission overheating and failure. Allow the engine to idle with the transmission in NEUTRAL for at least one minute after every five rocking-motion cycles. This will minimize overheating and reduce the risk of transmission failure during prolonged efforts to free a stuck vehicle.**
- **When "rocking" a stuck vehicle by shifting between DRIVE and REVERSE, do not spin the wheels faster than 15 mph (24 km/h), or drivetrain damage may result.**

*(Continued)*

**CAUTION!** *(Continued)*

- **Revving the engine or spinning the wheels too fast may lead to transmission overheating and failure. It can also damage the tires. Do not spin the wheels above 30 mph (48 km/h) while in gear (no transmission shifting occurring).**

## TOWING A DISABLED VEHICLE

**NOTE:** This section describes procedures for towing a disabled vehicle using a commercial towing service.



| **Towing Condition** | **Wheels** OFF The Ground | **AUTOMATIC TRANSMISSION** |
|---|---|---|
| Flat Tow | NONE | **NOT ALLOWED** |
| Dolly Tow | Front | **OK** |
| | Rear | **NOT ALLOWED** |
| Flatbed | **ALL** | **BEST METHOD** |

Proper towing or lifting equipment is required to prevent damage to your vehicle. Use only tow bars and other equipment designed for this purpose, following equipment manufacturer's instructions. Use of safety chains is mandatory. Attach a tow bar or other towing device to main structural members of the vehicle, not to bumpers or associated brackets. State and local laws regarding vehicles under tow must be observed.

**CAUTION!**

- **Do not use sling type equipment when towing. Vehicle damage may occur.**
- **When securing the vehicle to a flat bed truck, do not attach to front or rear suspension components. Damage to your vehicle may result from improper towing.**

If you must use the accessories (wipers, defroster, etc.) while being towed, the key must be in the ON/RUN position.

- Vehicle can be towed with the front wheels elevated.
- Vehicle can be towed on a flatbed truck (all wheels off the ground).

If the ignition key is unavailable, or the vehicle's battery is discharged, refer to "Gear Selector Override" in this section for instructions on shifting the transmission out of PARK in order to move the vehicle.

**CAUTION!**

- **DO NOT flat tow any vehicle equipped with an automatic transmission. Damage to the drivetrain will result. If these vehicles require towing, make sure all drive wheels are OFF the ground.**
- **Towing this vehicle in violation of the above requirements can cause severe transmission damage. Damage from improper towing is not covered under the New Vehicle Limited Warranty.**

## ENHANCED ACCIDENT RESPONSE SYSTEM (EARS)

This vehicle is equipped with an Enhanced Accident Response System.

Please refer to “Occupant Restraint Systems” in “Safety” for further information on the Enhanced Accident Response System (EARS) function.

## EVENT DATA RECORDER (EDR)

This vehicle is equipped with an Event Data Recorder (EDR). The main purpose of an EDR is to record data that will assist in understanding how a vehicle’s systems performed under certain crash or near crash-like situations, such as an air bag deployment or hitting a road obstacle.

Please refer to “Occupant Restraint Systems” in “Safety” for further information on the Event Data Recorder (EDR).

# SERVICING AND MAINTENANCE

## CONTENTS


■ SCHEDULED SERVICING . . . . . .239
- □ Maintenance Plan. . . . . .240
- □ Heavy Duty Use Of The Vehicle . . . . . .242

■ ENGINE COMPARTMENT — 1.4L TURBO . . . . .243
- □ Checking Oil Level . . . . . .244
- □ Adding Washer Fluid . . . . . .244
- □ Maintenance-Free Battery . . . . . .244

■ DEALER SERVICE . . . . . .245
- □ Engine Oil . . . . . .246
- □ Engine Oil Filter . . . . . .247
- □ Engine Air Cleaner Filter . . . . . .248
- □ Air Conditioner Maintenance . . . . . .248
- □ Body Lubrication . . . . . .249
- □ Windshield Wiper Blades . . . . . .249
- □ Exhaust System . . . . . .252
- □ Cooling System . . . . . .254
- □ Brake System . . . . . .258
- □ Automatic Transmission . . . . . .259

■ RAISING THE VEHICLE . . . . . .261

■ TIRES . . . . . .261
- □ Tire Safety Information . . . . . .261
- □ Tires — General Information . . . . . .269
- □ Tire Types . . . . . .275
- □ Spare Tires — If Equipped . . . . . .276
- □ Wheel And Wheel Trim Care . . . . . .279
- □ Tire Chains (Traction Devices) . . . . . .280
- □ Tire Rotation Recommendations . . . . . .281

■ DEPARTMENT OF TRANSPORTATION UNIFORM TIRE QUALITY GRADES . . . . . .281
□ Treadwear . . . . . .282
□ Traction Grades . . . . . .282
□ Temperature Grades . . . . . .282
■ VEHICLE STORAGE . . . . . .283
■ BODYWORK . . . . . .283
□ Protection From Atmospheric Agents . . . . . .283
□ Body And Underbody Maintenance . . . . . .284
□ Preserving The Bodywork . . . . . .284
■ INTERIORS . . . . . .285
□ Seats And Fabric Parts . . . . . .285
□ Plastic And Coated Parts. . . . . .286
□ Leather Parts . . . . . .286
□ Glass Surfaces . . . . . .287

## SCHEDULED SERVICING

Your vehicle is equipped with an automatic oil change indicator system. The oil change indicator system will remind you that it is time to take your vehicle in for scheduled maintenance.

Based on engine operation conditions, the oil change indicator message will illuminate in the instrument cluster. This means that service is required for your vehicle. Operating conditions such as frequent short-trips, trailer tow and extremely hot or cold ambient temperatures will influence when the "Change Oil" or "Oil Change Required" message is displayed. Severe operating conditions can cause the change oil message to illuminate as early as 3,500 miles (5,600 km) since last reset. Have your vehicle serviced as soon as possible, within the next 500 miles (805 km).

Your authorized dealer will reset the oil change indicator message after completing the scheduled oil change. If a scheduled oil change is performed by someone other than your authorized dealer, the message can be reset by referring to the steps described under "Instrument Cluster Display" in "Getting To Know Your Instrument Panel" for further information.

**NOTE:** Under no circumstances should oil change intervals exceed 10,000 miles (16,000 km), twelve months, or 350 hours of engine run time: whichever comes first. The 350 hours of engine run or idle time is generally only a concern for fleet customers.

**Severe Duty All Models**

Change engine oil at 4,000 miles (6,500 km) if the vehicle is operated in a dusty and off-road environment, or is operated predominately at idle or only very low engine RPM's. This type of vehicle use is considered Severe Duty.

**Once A Month Or Before A Long Trip:**

- Check engine oil level.
- Check windshield washer fluid level.
- Check the tire inflation pressures and look for unusual wear or damage.
- Check the fluid levels of the coolant reservoir, and brake master cylinder reservoir, and fill as needed.
- Check function of all interior and exterior lights.

## Maintenance Plan

**Required Maintenance Intervals**.

Refer to the maintenance plan on the following pages for the required maintenance intervals.

| At Every Oil Change Interval As Indicated By Oil Change Indicator System: |
|---|
| • Change oil and filter. |
| • Rotate the tires. **Rotate at the first sign of irregular wear, even if it occurs before the oil indicator system turns on.** |

| At Every Oil Change Interval As Indicated By Oil Change Indicator System: |
|---|
| • Inspect battery and clean and tighten terminals as required. |
| • Inspect brake pads, shoes, rotors, drums, and hoses. |
| • Inspect engine cooling system protection and hoses. |
| • Check and adjust hand brake. |
| • Inspect exhaust system. |
| • Inspect engine air cleaner if using in dusty or off-road conditions. |

| Mileage or time passed (whichever comes first) | 20,000 | 30,000 | 40,000 | 50,000 | 60,000 | 70,000 | 80,000 | 90,000 | 100,000 | 110,000 | 120,000 | 130,000 | 140,000 | 150,000 |
|---|---|---|---|---|---|---|---|---|---|---|---|---|---|---|
| Or Years: | 2 | 3 | 4 | 5 | 6 | 7 | 8 | 9 | 10 | 11 | 12 | 13 | 14 | 15 |
| Or Kilometers: | 32,000 | 48,000 | 64,000 | 80,000 | 96,000 | 112,000 | 128,000 | 144,000 | 160,000 | 176,000 | 192,000 | 208,000 | 224,000 | 240,000 |
| **Additional Inspections** | | | | | | | | | | | | | | |
| Inspect the CV joints. | | X | | | X | | | X | | | X | | | X |
| Inspect front suspension, tie rod ends and boot seals, and replace if necessary. | X | | X | | X | | X | | X | | X | | X | |

| Mileage or time passed (whichever comes first) | 20,000 | 30,000 | 40,000 | 50,000 | 60,000 | 70,000 | 80,000 | 90,000 | 100,000 | 110,000 | 120,000 | 130,000 | 140,000 | 150,000 |
|---|---|---|---|---|---|---|---|---|---|---|---|---|---|---|
| **Or Years:** | **2** | **3** | **4** | **5** | **6** | **7** | **8** | **9** | **10** | **11** | **12** | **13** | **14** | **15** |
| **Or Kilometers:** | **32,000** | **48,000** | **64,000** | **80,000** | **96,000** | **112,000** | **128,000** | **144,000** | **160,000** | **176,000** | **192,000** | **208,000** | **224,000** | **240,000** |
| Inspect the brake linings, parking brake function. | X | | X | | X | | X | | X | | X | | X | |
| **Additional Maintenance** | | | | | | | | | | | | | | |
| Replace engine air filter. | | X | | | X | | | X | | | X | | | X |
| Replace cabin air filter. | X | | X | | X | | X | | X | | X | | X | |
| Replace brake fluid every two years. * | X | | X | | X | | X | | X | | X | | X | |
| Clean and lube sun roof tracks. | X | X | X | X | X | X | X | X | X | X | X | X | X | X |
| Replace spark plugs. ** | | X | | | X | | | X | | | X | | | X |
| Flush and replace the engine coolant at 10 years or 150,000 miles (240,000 km) whichever comes first. | | | | | | | | | X | | | | | X |
| Inspect and replace PCV valve if necessary. | | | | | | | | | X | | | | | |
| Replace the timing belt. | | | | | | | | | | | | | | X |

* The brake fluid change interval is time based only, mileage intervals do not apply.

** The spark plug change interval is mileage based only, yearly intervals do not apply.

**WARNING!**

- **You can be badly injured working on or around a motor vehicle. Do only service work for which you have the knowledge and the right equipment. If you have any doubt about your ability to perform a service job, take your vehicle to a competent mechanic.**
- **Failure to properly inspect and maintain your vehicle could result in a component malfunction and effect vehicle handling and performance. This could cause an accident.**

### Heavy Duty Use Of The Vehicle

Change engine oil at 4,000 miles (6,500 km) if the vehicle is operated in a dusty and off road environment or is operated predominately at idle or only very low engine RPM's. This type of vehicle use is considered Severe Duty.

## ENGINE COMPARTMENT — 1.4L TURBO

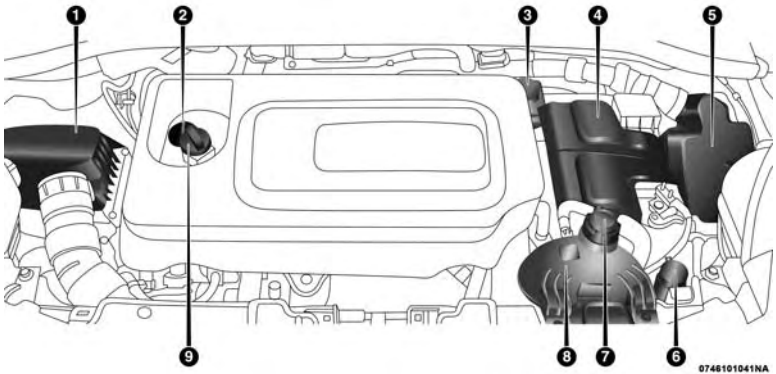


1 — Air Cleaner Filter
2 — Engine Oil Dipstick
3 — Brake Fluid Reservoir
4 — Battery
5 — Front Distribution Unit (Fuses)
6 — Washer Fluid Reservoir
7 — Coolant Pressure Cap
8 — Coolant Pressure Bottle
9 — Oil Fill Cap

## Checking Oil Level

To assure proper engine lubrication, the engine oil must be maintained at the correct level. Check the oil level at regular intervals, such as every fuel stop. The best time to check the engine oil level is approximately five minutes after a fully warmed engine is shut off. Do not check oil level before starting the engine after it has sat overnight. Checking engine oil level when the engine is cold will give you an incorrect reading.

Checking the oil while the vehicle is on level ground, and approximately five minutes after a fully warmed engine is shut off, will improve the accuracy of the oil level readings. Maintain the oil level between the range markings on the dipstick. The safe range is indicated by a crosshatch zone. Adding 1 quart (0.9 Liters) of oil when the reading is at the low end of the indicated range will result in the oil level at the full end of the indicator range.

**CAUTION!**

**Do not overfill the engine with oil. Overfilling the engine with oil will cause oil aeration, which can lead to loss of oil pressure and an increase in oil temperature. This loss of oil pressure and increased oil temperature could damage your engine.**

## Adding Washer Fluid

The windshield washer fluid reservoir is located in the engine compartment, and the fluid level should be checked at regular intervals. Fill the reservoir with windshield washer solvent (not engine coolant/ antifreeze). Refer to “Engine Compartment” in this section for further information.

**WARNING!**

**Commercially available windshield washer solvents are flammable. They could ignite and burn you. Care must be exercised when filling or working around the washer solution.**

## Maintenance-Free Battery

Your vehicle is equipped with a maintenance-free battery. You will never have to add water, nor is periodic maintenance required.

**WARNING!**

- **Battery fluid is a corrosive acid solution and can burn or even blind you. Do not allow battery fluid to contact your eyes, skin, or clothing. Do not lean over a battery when attaching clamps. If acid splashes in eyes or on skin, flush the area immediately with large amounts of water. Refer to "Jump-Starting Procedure" in "In Case Of Emergency" for further information.**
- **Battery gas is flammable and explosive. Keep flame or sparks away from the battery. Do not use a booster battery or any other booster source with an output greater than 12 Volts. Do not allow cable clamps to touch each other.**
- **Battery posts, terminals, and related accessories contain lead and lead compounds. Wash hands after handling.**
- **The battery in this vehicle has a vent hose that should not be disconnected and should only be replaced with a battery of the same type (vented).**

**CAUTION!**

- **It is essential when replacing the cables on the battery that the positive cable is attached to the positive post and the negative cable is attached to the negative post. Battery posts are marked positive (+) and negative (-) and are identified on the battery case. Cable clamps should be tight on the terminal posts and free of corrosion.**
- **If a "fast charger" is used while the battery is in the vehicle, disconnect both vehicle battery cables before connecting the charger to the battery. Do not use a "fast charger" to provide starting voltage.**



## DEALER SERVICE

Your authorized dealer has the qualified service personnel, special tools, and equipment to perform all service operations in an expert manner. Service Manuals are available which include detailed service information for your vehicle. Refer to these Service Manuals before attempting any procedure yourself.

**NOTE:** Intentional tampering with emissions control systems may void your warranty and could result in civil penalties being assessed against you.

**WARNING!**

**You can be badly injured working on or around a motor vehicle. Only do service work for which you have the knowledge and the proper equipment. If you have any doubt about your ability to perform a service job, take your vehicle to a competent mechanic.**

## Engine Oil

### Change Engine Oil

The oil change indicator system will remind you that it is time to take your vehicle in for scheduled maintenance. Refer to the "Maintenance Plan" for further information.

**NOTE:** Under no circumstances should oil change intervals exceed 10,000 miles (16,000 km), twelve months or 350 hours of engine run time, whichever comes first. The 350 hours of engine run or idle time is generally only a concern for fleet customers.

### Engine Oil Selection

For best performance and maximum protection for turbocharged engines under all types of operating conditions, the manufacturer recommends synthetic engine oils that are API Certified and meet the requirements of FCA Material Standard MS-12991.

### American Petroleum Institute (API) Engine Oil Identification Symbol

This symbol means that the oil has been certified by the American Petroleum Institute (API). The manufacturer only recommends API Certified engine oils.

This symbol certifies 0W-20, 5W-20, 0W-30, 5W-30 and 10W-30 engine oils.

**CAUTION!**

**Do not use chemical flushes in your engine oil as the chemicals can damage your engine. Such damage is not covered by the New Vehicle Limited Warranty.**

### Engine Oil Viscosity — 1.4L Turbo Engine (SAE Grade)

Mopar SAE 5W-40 full synthetic engine oil is recommended for all operating temperatures. This engine oil improves low temperature starting and vehicle fuel economy.

Lubricants which do not have both the engine oil certification mark and the correct SAE viscosity grade number should not be used.

The engine oil filler cap also shows the recommended engine oil viscosity for your engine. For information on engine oil filler cap location, refer to "Engine Compartment" in "Servicing And Maintenance" for further information.

### Synthetic Engine Oils

You may use synthetic engine oils provided the recommended oil quality requirements are met, and the recommended maintenance intervals for oil and filter changes are followed.

Synthetic engine oils which do not have both the engine oil certification mark and the correct SAE viscosity grade number should not be used.

### Materials Added To Engine Oil

The manufacturer strongly recommends against the addition of any additives (other than leak detection dyes) to the engine oil. Engine oil is an engineered product and its performance may be impaired by supplemental additives.

### Disposing Of Used Engine Oil And Oil Filters

Care should be taken in disposing of used engine oil and oil filters from your vehicle. Used oil and oil filters, indiscriminately discarded, can present a problem to the environment. Contact your authorized dealer, service station or governmental agency for advice on how and where used oil and oil filters can be safely discarded in your area.



## Engine Oil Filter

The engine oil filter should be replaced with a new filter at every engine oil change.

### Engine Oil Filter Selection

This manufacturer's engines have a full-flow type disposable oil filter. Use a filter of this type for replacement. The quality of replacement filters varies considerably. Only high quality filters should be used to assure most efficient service. Mopar engine oil filters are high quality oil filters and are recommended.

## Engine Air Cleaner Filter

Refer to the "Maintenance Plan" in this section for the proper maintenance intervals.

**NOTE:** Be sure to follow the "Severe Duty Conditions" maintenance interval if applicable.

**WARNING!**

**The air induction system (air cleaner, hoses, etc.) can provide a measure of protection in the case of engine backfire. Do not remove the air induction system (air cleaner, hoses, etc.) unless such removal is necessary for repair or maintenance. Make sure that no one is near the engine compartment before starting the vehicle with the air induction system (air cleaner, hoses, etc.) removed. Failure to do so can result in serious personal injury.**

### Engine Air Cleaner Filter Selection

The quality of replacement engine air cleaner filters varies considerably. Only high quality filters should be used to assure most efficient service. Mopar engine air cleaner filters are a high quality filter and are recommended.

## Air Conditioner Maintenance

For best possible performance, your air conditioner should be checked and serviced by an authorized dealer at the start of each warm season. This service should include cleaning of the condenser fins and a performance test. Drive belt tension should also be checked at this time.

**WARNING!**

- **Use only refrigerants and compressor lubricants approved by the manufacturer for your air conditioning system. Some unapproved refrigerants are flammable and can explode, injuring you. Other unapproved refrigerants or lubricants can cause the system to fail, requiring costly repairs. Refer to Warranty Information Book, located in your owner's information kit, for further warranty information.**
- **The air conditioning system contains refrigerant under high pressure. To avoid risk of personal injury or damage to the system, adding refrigerant or any repair requiring lines to be disconnected should be done by an experienced technician.**

**CAUTION!**

**Do not use chemical flushes in your air conditioning system as the chemicals can damage your air conditioning components. Such damage is not covered by the New Vehicle Limited Warranty.**

**Refrigerant Recovery And Recycling — R–1234yf**

R–1234yf Air Conditioning Refrigerant is a hydrofluoroolefin (HFO) that is endorsed by the Environmental Protection Agency and is an ozone-friendly substance with a low global-warming potential. The manufacturer recommends that air conditioning service be performed by an authorized dealer using recovery and recycling equipment.

**NOTE:** Use only manufacturer approved A/C system PAG compressor oil, and refrigerants.

## Body Lubrication

Locks and all body pivot points, including such items as seat tracks, door hinge pivot points and rollers, liftgate, tailgate, decklid, sliding doors and hood hinges, should be lubricated periodically with a lithium based grease, such as Mopar Spray White Lube to assure quiet, easy operation and to protect against rust and wear. Prior to the application of any lubricant, the parts concerned should be wiped clean to remove dust and grit; after lubricating excess oil and grease should be removed. Particular attention should also be given to hood latching components to ensure proper function. When performing other underhood services, the hood latch, release mechanism and safety catch should be cleaned and lubricated.

The external lock cylinders should be lubricated twice a year, preferably in the Fall and Spring. Apply a small amount of a high quality lubricant, such as Mopar Lock Cylinder Lubricant directly into the lock cylinder.

## Windshield Wiper Blades

Clean the rubber edges of the wiper blades and the windshield periodically with a sponge or soft cloth and a mild nonabrasive cleaner. This will remove accumulations of salt or road film.

Operation of the wipers on dry glass for long periods may cause deterioration of the wiper blades. Always use washer fluid when using the wipers to remove salt or dirt from a dry windshield.

Avoid using the wiper blades to remove frost or ice from the windshield. Keep the blade rubber out of contact with petroleum products such as engine oil, gasoline, etc.

**NOTE:** Life expectancy of wiper blades varies depending on geographical area and frequency of use. Poor performance of blades may be present with chattering, marks, water lines or wet spots. If any of these conditions are present, clean the wiper blades or replace as necessary.

The wiper blades and wiper arms should be inspected periodically, not just when wiper performance problems are experienced. This inspection should include the following points:

- Wear Or Uneven Edges
- Foreign Material
- Hardening Or Cracking
- Deformation Or Fatigue

If a wiper blade or wiper arm is damaged, replace the affected wiper arm or blade with a new unit. Do not attempt to repair a wiper arm or blade that is damaged.

**Service Position Strategy**

The service position allows the wiper blades to be placed in a position that allows the wiper blades to be easily changed.

To enable the Service Position Strategy, the wipers must be in the Park position before placing the ignition in the STOP/OFF position.

Service mode must be activated within two minutes after the ignition is placed in the STOP/OFF position.

To have a correct activation of strategy, the Service Position command (antipanic) must be active for at least half a second.

At every valid activation of Service Position command, the wiper blades are activated for 250 ms.

The Service Position command can be repeated several times to bring the blades into the desired position, up to a maximum of three times.

After three subsequent activations the strategy is disabled.

**Function Deactivation:**

The functionality is reset if:

- The ignition is turned to the MAR/RUN position.
- Number of subsequent activations is three.
- Two minutes timer has expired after turning the ignition OFF.

**NOTE:** When turning the ignition ON, the blades will go into the parking position.

**Front Wiper Blade Removal/Installation**

1. Lift the front wiper arm upward to raise the wiper blade off of the windshield.
2. Push the release button on the arm of the wiper blade.
3. Push the wiper blade up and remove it.

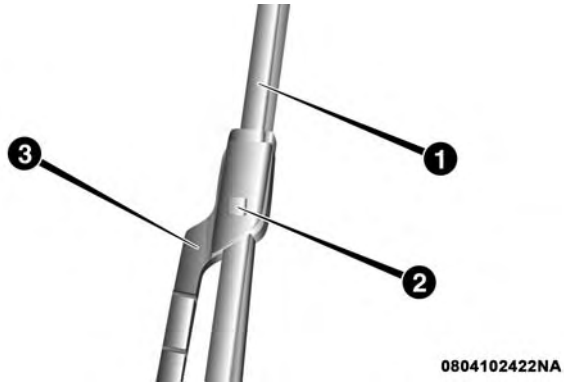


1 — Wiper Blade
2 — Release Button
3 — Wiper Arm

4. Install the wiper blade and firmly push the wiper blade until it snaps into place.

**Rear Wiper Blade Removal/Installation**

1. Lift the rear wiper arm upward to raise the wiper blade off of the liftgate glass.
2. Grab the bottom of the wiper blade and rotate it forward to unsnap the blade pivot pin from the wiper blade holder.

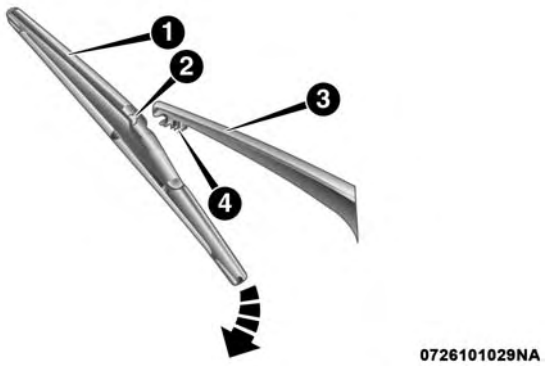


1 — Wiper Blade
2 — Blade Pivot Pin
3 — Wiper Arm
4 — Wiper Blade Holder

3. Install the wiper blade pivot pin into the wiper blade holder at the end of the wiper arm, and firmly push the wiper blade until it snaps into place.

## Exhaust System

The best protection against carbon monoxide entry into the vehicle body is a properly maintained engine exhaust system.

If you notice a change in the sound of the exhaust system; or if the exhaust fumes can be detected inside the vehicle; or when the underside or rear of the vehicle is damaged; have an authorized technician inspect the complete exhaust system and adjacent body areas for broken, damaged, deteriorated, or mispositioned parts. Open seams or loose connections could permit exhaust fumes to seep into the passenger compartment. In addition, have the exhaust system inspected each time the vehicle is raised for lubrication or oil change. Replace as required.

**WARNING!**

- **Exhaust gases can injure or kill. They contain carbon monoxide (CO), which is colorless and odorless. Breathing it can make you unconscious and can eventually poison you. To avoid breathing CO, refer to “Safety Tips” in “Safety” for further information.**
- **A hot exhaust system can start a fire if you park over materials that can burn. Such materials might be grass or leaves coming into contact with your exhaust system. Do not park or operate your vehicle in areas where your exhaust system can contact anything that can burn.**

**CAUTION!**

- **The catalytic converter requires the use of unleaded fuel only. Leaded gasoline will destroy the effectiveness of the catalyst as an emissions control device and may seriously reduce engine performance and cause serious damage to the engine.**
- **Damage to the catalytic converter can result if your vehicle is not kept in proper operating condition. In the event of engine malfunction, particularly involving engine misfire or other apparent loss of performance, have your vehicle serviced promptly. Continued operation of your vehicle with a severe malfunction could cause the converter to overheat, resulting in possible damage to the converter and vehicle.**

Under normal operating conditions, the catalytic converter will not require maintenance. However, it is important to keep the engine properly tuned to assure proper catalyst operation and prevent possible catalyst damage.

**NOTE:** Intentional tampering with emissions control systems can result in civil penalties being assessed against you.

In unusual situations involving grossly malfunctioning engine operation, a scorching odor may suggest severe and abnormal catalyst overheating. If this occurs, stop the vehicle, turn off the engine and allow it to cool. Service, including a tune-up to manufacturer's specifications, should be obtained immediately.

To minimize the possibility of catalytic converter damage:

- Do not interrupt the ignition when the transmission is in gear and the vehicle is in motion.
- Do not try to start the vehicle by pushing or towing the vehicle.
- Do not idle the engine with any ignition components disconnected or removed, such as when diagnostic testing, or for prolonged periods during very rough idle or malfunctioning operating conditions.

## Cooling System

**WARNING!**

- **Turn vehicle off and disconnect the fan motor lead before working near the radiator cooling fan.**
- **You or others can be badly burned by hot engine coolant (antifreeze) or steam from your radiator. If you see or hear steam coming from under the hood, do not open the hood until the radiator has had time to cool. Never open a cooling system pressure cap when the radiator or coolant bottle is hot.**
- **Keep hands, tools, clothing, and jewelry away from the radiator cooling fan when the hood is raised. The fan starts automatically and may start at any time, whether the engine is running or not.**
- **When working near the radiator cooling fan, disconnect the fan motor lead or turn the ignition to the OFF mode. The fan is temperature controlled and can start at any time the ignition is in the ON mode.**
- **You or others can be badly burned by hot engine coolant (antifreeze) or steam from your radiator. If you see or hear steam coming from under the hood, do not open the hood until the radiator has had time to cool. Never try to open a cooling system pressure cap when the radiator is hot.**

### Coolant Checks

Check engine coolant (antifreeze) protection every 12 months (before the onset of freezing weather, where applicable). If the engine coolant (antifreeze) is dirty or rusty in appearance, the system should be drained, flushed and refilled with fresh engine coolant (antifreeze). Check the front of the A/C condenser for any accumulation of bugs, leaves, etc. If dirty, clean by gently spraying water from a garden hose vertically down the face of the condenser.

### Cooling System — Drain, Flush And Refill

**NOTE:** Some vehicles require special tools to add coolant properly. Failure to fill these systems properly could lead to severe internal engine damage. If any coolant is needed to be added to the system please contact your local authorized dealer.

If the engine coolant (antifreeze) is dirty or contains visible sediment, have an authorized dealer clean and flush with OAT coolant (antifreeze) (conforming to MS.90032).

Refer to the “Maintenance Plan” in this section for the proper maintenance intervals.

### Selection Of Coolant

Refer to "Fluids And Lubricants" in "Technical Specifications" for further information.

**CAUTION!**

- **Mixing of engine coolant (antifreeze) other than specified Organic Additive Technology (OAT) engine coolant (antifreeze), may result in engine damage and may decrease corrosion protection. Organic Additive Technology (OAT) engine coolant is different and should not be mixed with Hybrid Organic Additive Technology (HOAT) engine coolant (antifreeze) or any "globally compatible" coolant (antifreeze). If a non-OAT engine coolant (antifreeze) is introduced into the cooling system in an emergency, the cooling system will need to be drained, flushed, and refilled with fresh OAT coolant (conforming to MS.90032), by an authorized dealer as soon as possible.**
- **Do not use water alone or alcohol-based engine coolant (antifreeze) products. Do not use additional rust inhibitors or antirust products, as they may not be compatible with the radiator engine coolant and may plug the radiator.**

*(Continued)*

**CAUTION!** *(Continued)*

- **This vehicle has not been designed for use with propylene glycol-based engine coolant (antifreeze). Use of propylene glycol-based engine coolant (antifreeze) is not recommended.**

### Adding Coolant

Your vehicle has been built with an improved engine coolant (OAT coolant conforming to MS.90032) that allows extended maintenance intervals. This engine coolant (antifreeze) can be used up to ten years or 150,000 miles (240,000 km) before replacement. To prevent reducing this extended maintenance period, it is important that you use the same engine coolant (OAT coolant conforming to MS.90032) throughout the life of your vehicle.

Please review these recommendations for using Organic Additive Technology (OAT) engine coolant (antifreeze) that meets the requirements of FCA Material Standard MS.90032. When adding engine coolant (antifreeze):

- We recommend using Mopar Antifreeze/Coolant 10 Year/150,000 Mile (240,000 km) Formula OAT (Organic Additive Technology) that meets the requirements of FCA Material Standard MS.90032.

- Mix a minimum solution of 50% OAT engine coolant that meets the requirements of FCA Material Standard MS.90032 and distilled water. Use higher concentrations (not to exceed 70%) if temperatures below –34°F (–37°C) are anticipated. Please contact your authorized dealer for assistance.
- Use only high purity water such as distilled or deionized water when mixing the water/engine coolant (antifreeze) solution. The use of lower quality water will reduce the amount of corrosion protection in the engine cooling system.

**NOTE:**

- It is the owner's responsibility to maintain the proper level of protection against freezing according to the temperatures occurring in the area where the vehicle is operated.
- Some vehicles require special tools to add coolant properly. Failure to fill these systems properly could lead to severe internal engine damage. If any coolant is needed to be added to the system, please contact your local authorized dealer.
- Mixing engine coolant (antifreeze) types is not recommended and can result in cooling system damage. If HOAT and OAT coolant are mixed in an emergency, have a authorized dealer drain, flush, and refill with OAT coolant (conforming to MS.90032) as soon as possible.

### Cooling System Pressure Cap

The cap must be fully tightened to prevent loss of engine coolant (antifreeze), and to ensure that engine coolant (antifreeze) will return to the radiator from the coolant expansion bottle/recovery tank if so equipped.

The cap should be inspected and cleaned if there is any accumulation of foreign material on the sealing surfaces.

**WARNING!**

- **Do not open hot engine cooling system. Never add engine coolant (antifreeze) when the engine is overheated. Do not loosen or remove the cap to cool an overheated engine. Heat causes pressure to build up in the cooling system. To prevent scalding or injury, do not remove the pressure cap while the system is hot or under pressure.**
- **Do not use a pressure cap other than the one specified for your vehicle. Personal injury or engine damage may result.**

### Disposal Of Used Coolant

Used ethylene glycol-based coolant (antifreeze) is a regulated substance requiring proper disposal. Check with your local authorities to determine the disposal rules for your community. To prevent ingestion by animals or children, do not store ethylene glycol-based coolant in open containers or allow it to remain in puddles on the ground. If ingested by a child or pet, seek emergency assistance immediately. Clean up any ground spills immediately.

### Coolant Level

The coolant expansion bottle provides a quick visual method for determining that the coolant level is adequate. With the engine off and cold, the level of the coolant (antifreeze) in the bottle should be between the "MAX" and "MIN" lines marked on the bottle.

As long as the engine operating temperature is satisfactory, the coolant bottle need only be checked once a month.

When additional coolant (antifreeze) is needed to maintain the proper level, it should be added to the coolant bottle. Do not overfill.

See your authorized dealer for service

### Points To Remember

**NOTE:** When the vehicle is stopped after a few miles/kilometers of operation, you may observe vapor coming from the front of the engine compartment. This is normally a result of moisture from rain, snow, or high humidity accumulating on the radiator and being vaporized when the thermostat opens, allowing hot engine coolant (antifreeze) to enter the radiator.

If an examination of your engine compartment shows no evidence of radiator or hose leaks, the vehicle may be safely driven. The vapor will soon dissipate.

- Do not overfill the coolant expansion bottle.
- Check the coolant freeze point in the radiator and in the coolant expansion bottle. If engine coolant (antifreeze) needs to be added, the contents of the coolant expansion bottle must also be protected against freezing.
- If frequent engine coolant (antifreeze) additions are required, the cooling system should be pressure tested for leaks.
- Maintain engine coolant (antifreeze) concentration at a minimum of 50% OAT coolant (conforming to

MS.90032) and distilled water for proper corrosion protection of your engine which contains aluminum components.

- Keep the front of the radiator clean. If your vehicle is equipped with air conditioning, keep the front of the condenser clean.
- Do not change the thermostat for Summer or Winter operation. If replacement is ever necessary, install ONLY the correct type thermostat. Other designs may result in unsatisfactory engine coolant (antifreeze) performance, poor gas mileage, and increased emissions.

## Brake System

In order to assure brake system performance, all brake system components should be inspected periodically. Refer to the "Maintenance Plan" in this section for the proper maintenance intervals.

**WARNING!**

**Riding the brakes can lead to brake failure and possibly a collision. Driving with your foot resting or riding on the brake pedal can result in abnormally high brake**

*(Continued)*

**WARNING!** *(Continued)*

**temperatures, excessive lining wear, and possible brake damage. You would not have your full braking capacity in an emergency.**

### Brake Master Cylinder

The fluid in the master cylinder should be checked when performing under hood services or immediately if the "Brake Warning Light" is illuminated.

Be sure to clean the top of the master cylinder area before removing the cap. If necessary, add fluid to bring the fluid level up to the requirements described on the brake fluid reservoir. With disc brakes, fluid level can be expected to fall as the brake pads wear. Brake fluid level should be checked when pads are replaced. However, low fluid level may be caused by a leak and a checkup may be needed.

Use only manufacturer's recommended brake fluid. Refer to "Fluids And Lubricants" in "Technical Specifications" for further information.

**WARNING!**

- **Use only manufacturer's recommended brake fluid. Refer to "Fluids And Lubricants" in "Technical Specifications" for further information. Using the wrong type of brake fluid can severely damage your brake system and/or impair its performance. The proper type of brake fluid for your vehicle is also identified on the original factory installed hydraulic master cylinder reservoir.**
- **To avoid contamination from foreign matter or moisture, use only new brake fluid or fluid that has been in a tightly closed container. Keep the master cylinder reservoir cap secured at all times. Brake fluid in a open container absorbs moisture from the air resulting in a lower boiling point. This may cause it to boil unexpectedly during hard or prolonged braking, resulting in sudden brake failure. This could result in a collision.**
- **Overfilling the brake fluid reservoir can result in spilling brake fluid on hot engine parts, causing the brake fluid to catch fire. Brake fluid can also damage painted and vinyl surfaces, care should be taken to avoid its contact with these surfaces.**

*(Continued)*

**WARNING!** *(Continued)*

- **Do not allow petroleum based fluid to contaminate the brake fluid. Brake seal components could be damaged, causing partial or complete brake failure. This could result in a collision.**

## Automatic Transmission

### Selection Of Lubricant

It is important to use the proper transmission fluid to ensure optimum transmission performance and life. Use only the manufacturer's specified transmission fluid. Refer to "Fluids And Lubricants" in "Technical Specifications" for fluid specifications. It is important to maintain the transmission fluid at the correct level using the recommended fluid.

**NOTE:** No chemical flushes should be used in any transmission; only the approved lubricant should be used.

**CAUTION!**

**Using a transmission fluid other than the manufacturer's recommended fluid may cause deterioration in transmission shift quality and/or torque converter shudder. Refer to "Fluids And Lubricants" in "Technical Specifications" for fluid specifications.**

### Special Additives

The manufacturer strongly recommends against using any special additives in the transmission.

Automatic Transmission Fluid (ATF) is an engineered product and its performance may be impaired by supplemental additives. Therefore, do not add any fluid additives to the transmission. The only exception to this policy is the use of special dyes for diagnosing fluid leaks. Avoid using transmission sealers as they may adversely affect seals.

**CAUTION!**

**Do not use chemical flushes in your transmission as the chemicals can damage your transmission components. Such damage is not covered by the New Vehicle Limited Warranty.**

### Fluid Level Check

The fluid level is preset at the factory and does not require adjustment under normal operating conditions. Routine fluid level checks are not required; therefore the transmission has no dipstick. Your authorized dealer can check your transmission fluid level using special service tools. If you notice fluid leakage or transmission malfunction, visit your authorized dealer immediately to have the transmission fluid level checked. Operating the vehicle with an improper fluid level can cause severe transmission damage.

**CAUTION!**

**If a transmission fluid leak occurs, visit your authorized dealer immediately. Severe transmission damage may occur. Your authorized dealer has the proper tools to adjust the fluid level accurately.**

### Fluid And Filter Changes

Under normal operating conditions, the fluid installed at the factory will provide satisfactory lubrication for the life of the vehicle.

Routine fluid and filter changes are not required. However, change the fluid and filter if the fluid becomes contaminated (with water, etc.), or if the transmission is disassembled for any reason.

## RAISING THE VEHICLE

In the case where it is necessary to raise the vehicle, go to your authorized dealer or service station.

## TIRES

### Tire Safety Information

Tire safety information will cover aspects of the following information: Tire Markings, Tire Identification Numbers, Tire Terminology and Definitions, Tire Pressures, and Tire Loading.

### Tire Markings

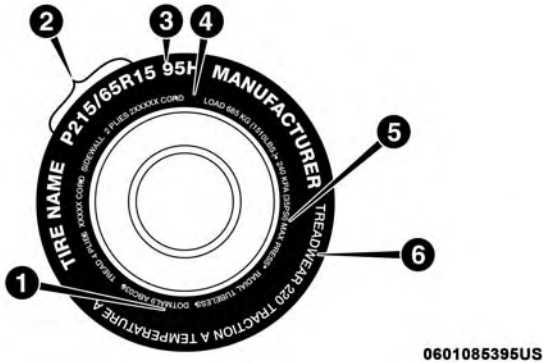


Tire Markings

| | |
|---|---|
| 1 — U.S. DOT Safety Standards Code (TIN) | 4 — Maximum Load |
| 2 — Size Designation | 5 — Maximum Pressure |
| 3 — Service Description | 6 — Treadwear, Traction and Temperature Grades |

**NOTE:**

- P (Passenger) — Metric tire sizing is based on U.S. design standards. P-Metric tires have the letter "P" molded into the sidewall preceding the size designation. Example: P215/65R15 95H.
- European — Metric tire sizing is based on European design standards. Tires designed to this standard have the tire size molded into the sidewall beginning with the section width. The letter "P" is absent from this tire size designation. Example: 215/65R15 96H.
- LT (Light Truck) — Metric tire sizing is based on U.S. design standards. The size designation for LT-Metric tires is the same as for P-Metric tires except for the letters "LT" that are molded into the sidewall preceding the size designation. Example: LT235/85R16.
- Temporary spare tires are designed for temporary emergency use only. Temporary high pressure compact spare tires have the letter "T" or "S" molded into the sidewall preceding the size designation. Example: T145/80D18 103M.
- High flotation tire sizing is based on U.S. design standards and it begins with the tire diameter molded into the sidewall. Example: 31x10.5 R15 LT.

**Tire Identification Number (TIN)**

The TIN may be found on one or both sides of the tire; however, the date code may only be on one side. Tires with white sidewalls will have the full TIN, including the date code, located on the white sidewall side of the tire. Look for the TIN on the outboard side of black sidewall tires as mounted on the vehicle. If the TIN is not found on the outboard side, then you will find it on the inboard side of the tire.

| EXAMPLE: |
| --- |
| DOT MA L9 ABCD 0301 |
| **DOT** = Department of Transportation<br>– This symbol certifies that the tire is in compliance with the U.S. Department of Transportation tire safety standards and is approved for highway use |
| **MA** = Code representing the tire manufacturing location (two digits) |
| **L9** = Code representing the tire size (two digits) |
| **ABCD** = Code used by the tire manufacturer (one to four digits) |
| **03** = Number representing the week in which the tire was manufactured (two digits)<br>– 03 means the 3rd week |
| **01** = Number representing the year in which the tire was manufactured (two digits)<br>– 01 means the year 2001<br>– Prior to July 2000, tire manufacturers were only required to have one number to represent the year in which the tire was manufactured. Example: 031 could represent the 3rd week of 1981 or 1991 |

## Tire Terminology And Definitions

| Term | Definition |
|---|---|
| **B-Pillar** | The vehicle B-Pillar is the structural member of the body located behind the front door. |
| **Cold Tire Inflation Pressure** | Cold tire inflation pressure is defined as the tire pressure after the vehicle has not been driven for at least three hours, or driven less than 1 mile (1.6 km) after sitting for a minimum of three hours. Inflation pressure is measured in units of PSI (pounds per square inch) or kPa (kilopascals). |
| **Maximum Inflation Pressure** | The maximum inflation pressure is the maximum permissible cold tire inflation pressure for this tire. The maximum inflation pressure is molded into the sidewall. |
| **Recommended Cold Tire Inflation Pressure** | Vehicle manufacturer's recommended cold tire inflation pressure as shown on the tire placard. |
| **Tire Placard** | A label permanently attached to the vehicle describing the vehicle's loading capacity, the original equipment tire sizes and the recommended cold tire inflation pressures. |

## Tire Loading And Tire Pressure

**NOTE:** The proper cold tire inflation pressure is listed on the driver's side B-Pillar or the rear edge of the driver's side door.

Check the inflation pressure of each tire, including the spare tire (if equipped), at least monthly and inflate to the recommended pressure for your vehicle.

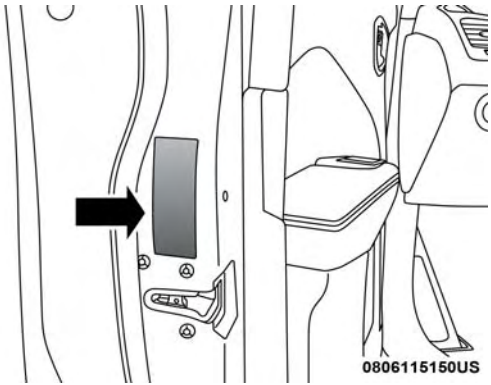


**Example Tire Placard Location (Door)**

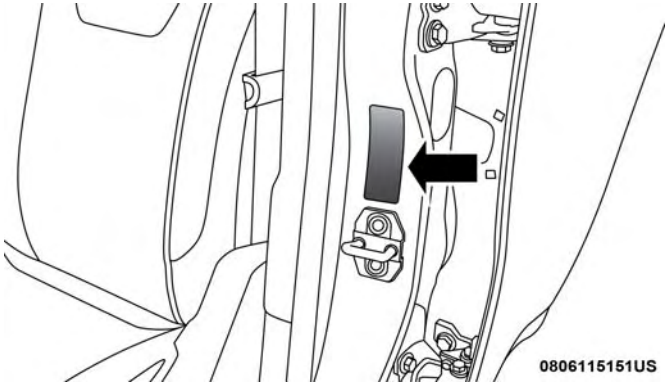


**Example Tire Placard Location (B-Pillar)**

## Tire And Loading Information Placard

**Tire And Loading Information Placard**

This placard tells you important information about the:

1. Number of people that can be carried in the vehicle.
2. Total weight your vehicle can carry.
3. Tire size designed for your vehicle.
4. Cold tire inflation pressures for the front, rear, and spare tires.

## Loading

The vehicle maximum load on the tire must not exceed the load carrying capacity of the tire on your vehicle. You will not exceed the tire's load carrying capacity if you adhere to the loading conditions, tire size, and cold tire inflation pressures specified on the Tire and Loading Information placard in "Vehicle Loading" in the "Starting And Operating" section of this manual.

**NOTE:** Under a maximum loaded vehicle condition, gross axle weight ratings (GAWRs) for the front and rear axles must not be exceeded.

For further information on GAWRs, vehicle loading, and trailer towing, refer to "Vehicle Loading" in the "Starting And Operating" section of this manual.

To determine the maximum loading conditions of your vehicle, locate the statement "The combined weight of occupants and cargo should never exceed XXX kg or XXX lbs" on the Tire and Loading Information placard. The combined weight of occupants, cargo/luggage and trailer tongue weight (if applicable) should never exceed the weight referenced here.

**Steps For Determining Correct Load Limit—**

(1) Locate the statement "The combined weight of occupants and cargo should never exceed XXX kg or XXX lbs." on your vehicle's placard.

(2) Determine the combined weight of the driver and passengers that will be riding in your vehicle.

(3) Subtract the combined weight of the driver and passengers from XXX kg or XXX lbs.

(4) The resulting figure equals the available amount of cargo and luggage load capacity. For example, if "XXX" amount equals 1400 lbs. and there will be five 150 lb passengers in your vehicle, the amount of available cargo and luggage load capacity is 650 lbs. (1400-750 (5x150) = 650 lbs.)

(5) Determine the combined weight of luggage and cargo being loaded on the vehicle. That weight may not safely exceed the available cargo and luggage load capacity calculated in Step 4.

(6) If your vehicle will be towing a trailer, load from your trailer will be transferred to your vehicle. Consult this manual to determine how this reduces the available cargo and luggage load capacity of your vehicle.

**Metric Example For Load Limit**

For example, if "XXX" amount equals 635 kg and there will be five 68 kg passengers in your vehicle, the amount of available cargo and luggage load capacity is 295 kg (635-340 (5x68) = 295 kg) as shown in step 4.

**NOTE:**

- If your vehicle will be towing a trailer, load from your trailer will be transferred to your vehicle. The following table shows examples on how to calculate total load, cargo/luggage, and towing capacities of your vehicle with varying seating configurations and number and size of occupants. This table is for illustration purposes only and may not be accurate for the seating and load carry capacity of your vehicle.
- For the following example, the combined weight of occupants and cargo should never exceed 865 lbs (392 kg).

| Occupants | | | Combined weight of occupants and cargo from Tire Placard | MINUS | Combined Occupant's weight | = | AVAILABLE Cargo/Luggage and Trailer Tongue Weight |
|---|---|---|---|---|---|---|---|
| TOTAL | FRONT | REAR | | | | | |
| EXAMPLE 1 | | | | | | | |
| 5 | 2 | 3 | 865 lbs | minus | Occupant 1: 200 lbs<br>Occupant 2: 130 lbs<br>Occupant 3: 160 lbs<br>Occupant 4: 100 lbs<br>Occupant 5: 80 lbs<br>TOTAL WEIGHT: 670 lbs<br>670 lbs | = | 195 lbs |
| EXAMPLE 2 | | | | | | | |
| 3 | 2 | 1 | 865 lbs | minus | Occupant 1: 210 lbs<br>Occupant 2: 180 lbs<br>Occupant 3: 150 lbs<br>TOTAL WEIGHT: 540 lbs<br>540 lbs | = | 325 lbs |
| EXAMPLE 3 | | | | | | | |
| 2 | 2 | 0 | 865 lbs | minus | Occupant 1: 200 lbs<br>Occupant 2: 200 lbs<br>TOTAL WEIGHT: 400 lbs<br>400 lbs | = | 465 lbs |

EXAMPLE

811a4d11

**WARNING!**

**Overloading of your tires is dangerous. Overloading can cause tire failure, affect vehicle handling, and increase your stopping distance. Use tires of the recommended load capacity for your vehicle. Never overload them.**

## Tires — General Information

### Tire Pressure

Proper tire inflation pressure is essential to the safe and satisfactory operation of your vehicle. Four primary areas are affected by improper tire pressure:

- Safety and Vehicle Stability
- Economy
- Tread Wear
- Ride Comfort

### Safety

**WARNING!**

- **Improperly inflated tires are dangerous and can cause collisions.**
- **Underinflation increases tire flexing and can result in overheating and tire failure.**
- **Overinflation reduces a tire's ability to cushion shock. Objects on the road and chuckholes can cause damage that result in tire failure.**

*(Continued)*

**WARNING!** *(Continued)*

- **Overinflated or underinflated tires can affect vehicle handling and can fail suddenly, resulting in loss of vehicle control.**
- **Unequal tire pressures can cause steering problems. You could lose control of your vehicle.**
- **Unequal tire pressures from one side of the vehicle to the other can cause the vehicle to drift to the right or left.**
- **Always drive with each tire inflated to the recommended cold tire inflation pressure.**



Both under-inflation and over-inflation affect the stability of the vehicle and can produce a feeling of sluggish response or over responsiveness in the steering.

**NOTE:**

- Unequal tire pressures from side to side may cause erratic and unpredictable steering response.
- Unequal tire pressure from side to side may cause the vehicle to drift left or right.

**Fuel Economy**

Underinflated tires will increase tire rolling resistance resulting in higher fuel consumption.

**Tread Wear**

Improper cold tire inflation pressures can cause abnormal wear patterns and reduced tread life, resulting in the need for earlier tire replacement.

**Ride Comfort And Vehicle Stability**

Proper tire inflation contributes to a comfortable ride. Over-inflation produces a jarring and uncomfortable ride.

**Tire Inflation Pressures**

The proper cold tire inflation pressure is listed on the driver's side B-Pillar or rear edge of the driver's side door.

At least once a month:

- Check and adjust tire pressure with a good quality pocket-type pressure gauge. Do not make a visual judgement when determining proper inflation. Tires may look properly inflated even when they are under-inflated.
- Inspect tires for signs of tire wear or visible damage.

**CAUTION!**

**After inspecting or adjusting the tire pressure, always reinstall the valve stem cap. This will prevent moisture and dirt from entering the valve stem, which could damage the valve stem.**

Inflation pressures specified on the placard are always "cold tire inflation pressure". Cold tire inflation pressure is defined as the tire pressure after the vehicle has not been driven for at least three hours, or driven less than 1 mile (1.6 km) after sitting for a minimum of three hours. The cold tire inflation pressure must not exceed the maximum inflation pressure molded into the tire sidewall.

Check tire pressures more often if subject to a wide range of outdoor temperatures, as tire pressures vary with temperature changes.

Tire pressures change by approximately 1 psi (7 kPa) per 12°F (7°C) of air temperature change. Keep this in mind when checking tire pressure inside a garage, especially in the Winter.

Example: If garage temperature = 68°F (20°C) and the outside temperature = 32°F (0°C) then the cold tire inflation

pressure should be increased by 3 psi (21 kPa), which equals 1 psi (7 kPa) for every 12°F (7°C) for this outside temperature condition.

Tire pressure may increase from 2 to 6 psi (13 to 40 kPa) during operation. DO NOT reduce this normal pressure build up or your tire pressure will be too low.

### Tire Pressures For High Speed Operation

The manufacturer advocates driving at safe speeds and within posted speed limits. Where speed limits or conditions are such that the vehicle can be driven at high speeds, maintaining correct tire inflation pressure is very important. Increased tire pressure and reduced vehicle loading may be required for high-speed vehicle operation. Refer to your authorized tire dealer or original equipment vehicle dealer for recommended safe operating speeds, loading and cold tire inflation pressures.

**WARNING!**

**High speed driving with your vehicle under maximum load is dangerous. The added strain on your tires could cause them to fail. You could have a serious collision. Do not drive a vehicle loaded to the maximum capacity at continuous speeds above 75 mph (120 km/h).**

### Radial Ply Tires

**WARNING!**

**Combining radial ply tires with other types of tires on your vehicle will cause your vehicle to handle poorly. The instability could cause a collision. Always use radial ply tires in sets of four. Never combine them with other types of tires.**

### Tire Repair

If your tire becomes damaged, it may be repaired if it meets the following criteria:

- The tire has not been driven on when flat.
- The damage is only on the tread section of your tire (sidewall damage is not repairable).
- The puncture is no greater than a ¼ of an inch (6 mm).

Consult an authorized tire dealer for tire repairs and additional information.

Damaged Run Flat tires, or Run Flat tires that have experienced a loss of pressure should be replaced immediately with another Run Flat tire of identical size and service description (Load Index and Speed Symbol).

### Run Flat Tires — If Equipped

Run Flat tires allow you the capability to drive 50 miles (80 km) at 50 mph (80 km/h) after a rapid loss of inflation pressure. This rapid loss of inflation is referred to as the Run Flat mode. A Run Flat mode occurs when the tire inflation pressure is of/or below 14 psi (96 kPa). Once a Run Flat tire reaches the run flat mode it has limited driving capabilities and needs to be replaced immediately. A Run Flat tire is not repairable.

It is not recommended driving a vehicle loaded at full capacity or to tow a trailer while a tire is in the run flat mode.

See the tire pressure monitoring section for more information.

### Tire Spinning

When stuck in mud, sand, snow, or ice conditions, do not spin your vehicle's wheels above 30 mph (48 km/h) or for longer than 30 seconds continuously without stopping.

Refer to "Freeing A Stuck Vehicle" in "In Case Of Emergency" for further information.

**WARNING!**

**Fast spinning tires can be dangerous. Forces generated by excessive wheel speeds may cause tire damage or failure. A tire could explode and injure someone. Do not spin your vehicle's wheels faster than 30 mph (48 km/h) for more than 30 seconds continuously when you are stuck, and do not let anyone near a spinning wheel, no matter what the speed.**

### Tread Wear Indicators

Tread wear indicators are in the original equipment tires to help you in determining when your tires should be replaced.

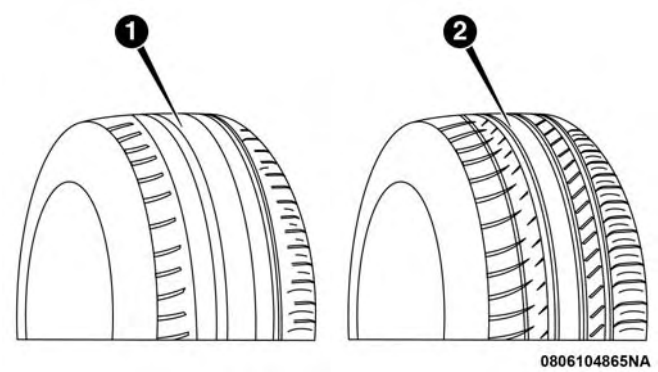


**Tire Tread**

1 — Worn Tire
2 — New Tire

These indicators are molded into the bottom of the tread grooves. They will appear as bands when the tread depth becomes a 1/16 of an inch (1.6 mm). When the tread is worn to the tread wear indicators, the tire should be replaced. Refer to "Replacement Tires" in this section for further information.

### Life Of Tire

The service life of a tire is dependent upon varying factors including, but not limited to:

- Driving style.
- Tire pressure - Improper cold tire inflation pressures can cause uneven wear patterns to develop across the tire tread. These abnormal wear patterns will reduce tread life, resulting in the need for earlier tire replacement.
- Distance driven.
- Performance tires, tires with a speed rating of V or higher, and Summer tires typically have a reduced tread life. Rotation of these tires per the vehicle scheduled maintenance is highly recommended.



**WARNING!**

**Tires and the spare tire should be replaced after six years, regardless of the remaining tread. Failure to follow this warning can result in sudden tire failure. You could lose control and have a collision resulting in serious injury or death.**

Keep dismounted tires in a cool, dry place with as little exposure to light as possible. Protect tires from contact with oil, grease, and gasoline.

**Replacement Tires**

The tires on your new vehicle provide a balance of many characteristics. They should be inspected regularly for wear and correct cold tire inflation pressures. The manufacturer strongly recommends that you use tires equivalent to the originals in size, quality and performance when replacement is needed. Refer to the paragraph on "Tread Wear Indicators" in this section. Refer to the Tire and Loading Information placard or the Vehicle Certification Label for the size designation of your tire. The Load Index and Speed Symbol for your tire will be found on the original equipment tire sidewall.

See the Tire Sizing Chart example found in the "Tire Safety Information" section of this manual for more information relating to the Load Index and Speed Symbol of a tire.

It is recommended to replace the two front tires or two rear tires as a pair. Replacing just one tire can seriously affect your vehicle's handling. If you ever replace a wheel, make sure that the wheel's specifications match those of the original wheels.

It is recommended you contact your authorized tire dealer or original equipment dealer with any questions you may have on tire specifications or capability. Failure to use equivalent replacement tires may adversely affect the safety, handling, and ride of your vehicle.

**WARNING!**

- **Do not use a tire, wheel size, load rating, or speed rating other than that specified for your vehicle. Some combinations of unapproved tires and wheels may change suspension dimensions and performance characteristics, resulting in changes to steering, handling, and braking of your vehicle. This can cause unpredictable handling and stress to steering and suspension components. You could lose control and have a collision resulting in serious injury or death. Use only the tire and wheel sizes with load ratings approved for your vehicle.**
- **Never use a tire with a smaller load index or capacity, other than what was originally equipped on your vehicle. Using a tire with a smaller load index could result in tire overloading and failure. You could lose control and have a collision.**

*(Continued)*

**WARNING!** *(Continued)*

- **Failure to equip your vehicle with tires having adequate speed capability can result in sudden tire failure and loss of vehicle control.**

**CAUTION!**

**Replacing original tires with tires of a different size may result in false speedometer and odometer readings.**

## Tire Types

### All Season Tires — If Equipped

All Season tires provide traction for all seasons (Spring, Summer, Fall, and Winter). Traction levels may vary between different all season tires. All season tires can be identified by the M+S, M&S, M/S or MS designation on the tire sidewall. Use all season tires only in sets of four; failure to do so may adversely affect the safety and handling of your vehicle.

### Summer Or Three Season Tires — If Equipped

Summer tires provide traction in both wet and dry conditions, and are not intended to be driven in snow or on ice. If your vehicle is equipped with Summer tires, be aware these tires are not designed for Winter or cold driving conditions. Install Winter tires on your vehicle when ambient temperatures are less than 40°F (5°C) or if roads are covered with ice or snow. For more information, contact an authorized dealer.

Summer tires do not contain the all season designation or mountain/snowflake symbol on the tire sidewall. Use Summer tires only in sets of four; failure to do so may adversely affect the safety and handling of your vehicle.



**WARNING!**

**Do not use Summer tires in snow/ice conditions. You could lose vehicle control, resulting in severe injury or death. Driving too fast for conditions also creates the possibility of loss of vehicle control.**

### Snow Tires

Some areas of the country require the use of snow tires during the Winter. Snow tires can be identified by a "mountain/snowflake" symbol on the tire sidewall.

If you need snow tires, select tires equivalent in size and type to the original equipment tires. Use snow tires only in sets of four; failure to do so may adversely affect the safety and handling of your vehicle.

Snow tires generally have lower speed ratings than what was originally equipped with your vehicle and should not be operated at sustained speeds over 75 mph (120 km/h). For speeds above 75 mph (120 km/h) refer to original equipment or an authorized tire dealer for recommended safe operating speeds, loading and cold tire inflation pressures.

While studded tires improve performance on ice, skid and traction capability on wet or dry surfaces may be poorer than that of non-studded tires. Some states prohibit studded tires; therefore, local laws should be checked before using these tire types.

## Spare Tires — If Equipped

**NOTE:** For vehicles equipped with Tire Service Kit instead of a spare tire, please refer to "Tire Service Kit" in "In Case Of Emergency" for further information.

**CAUTION!**

**Because of the reduced ground clearance, do not take your vehicle through an automatic car wash with a compact or limited use temporary spare installed. Damage to the vehicle may result.**

### Spare Tire Matching Original Equipped Tire And Wheel — If Equipped

Your vehicle may be equipped with a spare tire and wheel equivalent in look and function to the original equipment tire and wheel found on the front or rear axle of your vehicle. This spare tire may be used in the tire rotation for your vehicle. If your vehicle has this option, refer to an authorized tire dealer for the recommended tire rotation pattern.

### Compact Spare Tire — If Equipped

The compact spare is for temporary emergency use only. You can identify if your vehicle is equipped with a compact

spare by looking at the spare tire description on the Tire and Loading Information Placard located on the driver's side door opening or on the sidewall of the tire. Compact spare tire descriptions begin with the letter "T" or "S" preceding the size designation. Example: T145/80D18 103M.

T, S = Temporary Spare Tire

Since this tire has limited tread life, the original equipment tire should be repaired (or replaced) and reinstalled on your vehicle at the first opportunity.

Do not install a wheel cover or attempt to mount a conventional tire on the compact spare wheel, since the wheel is designed specifically for the compact spare tire. Do not install more than one compact spare tire and wheel on the vehicle at any given time.

**WARNING!**

**Compact and collapsible spares are for temporary emergency use only. With these spares, do not drive more than 50 mph (80 km/h). Temporary use spares have limited tread life. When the tread is worn to the tread wear indicators, the temporary use spare tire**

*(Continued)*

**WARNING!** ***(Continued)***

**needs to be replaced. Be sure to follow the warnings, which apply to your spare. Failure to do so could result in spare tire failure and loss of vehicle control.**

**Collapsible Spare Tire — If Equipped**

The collapsible spare is for temporary emergency use only. You can identify if your vehicle is equipped with a collapsible spare by looking at the spare tire description on the Tire and Loading Information Placard located on the driver's side door opening or on the sidewall of the tire.

Collapsible spare tire description example: 165/80-17 101P.



Since this tire has limited tread life, the original equipment tire should be repaired (or replaced) and reinstalled on your vehicle at the first opportunity.

Inflate collapsible tire only after the wheel is properly installed to the vehicle. Inflate the collapsible tire using the electric air pump before lowering the vehicle.

Do not install a wheel cover or attempt to mount a conventional tire on the collapsible spare wheel, since the wheel is designed specifically for the collapsible spare tire.

**WARNING!**

**Compact and Collapsible spares are for temporary emergency use only. With these spares, do not drive more than 50 mph (80 km/h). Temporary use spares have limited tread life. When the tread is worn to the tread wear indicators, the temporary use spare tire needs to be replaced. Be sure to follow the warnings, which apply to your spare. Failure to do so could result in spare tire failure and loss of vehicle control.**

### Full Size Spare — If Equipped

The full size spare is for temporary emergency use only. This tire may look like the originally equipped tire on the front or rear axle of your vehicle, but it is not. This spare tire may have limited tread life. When the tread is worn to the tread wear indicators, the temporary use full size spare tire needs to be replaced. Since it is not the same as your original equipment tire, replace (or repair) the original equipment tire and reinstall on the vehicle at the first opportunity.

### Limited Use Spare — If Equipped

The limited use spare tire is for temporary emergency use only. This tire is identified by a label located on the limited use spare wheel. This label contains the driving limitations for this spare. This tire may look like the original equipped tire on the front or rear axle of your vehicle, but it is not. Installation of this limited use spare tire affects vehicle handling. Since it is not the same as your original equipment tire, replace (or repair) the original equipment tire and reinstall on the vehicle at the first opportunity.

**WARNING!**

**Limited use spares are for emergency use only. Installation of this limited use spare tire affects vehicle handling. With this tire, do not drive more than the speed listed on the limited use spare wheel. Keep inflated to the cold tire inflation pressures listed on your Tire and Loading Information Placard located on the driver's side B-Pillar or the rear edge of the driver's side door. Replace (or repair) the original equipment tire at the first opportunity and reinstall it on your vehicle. Failure to do so could result in loss of vehicle control.**

## Wheel And Wheel Trim Care

All wheels and wheel trim, especially aluminum and chrome plated wheels, should be cleaned regularly using mild (neutral Ph) soap and water to maintain their luster and to prevent corrosion. Wash wheels with the same soap solution recommended for the body of the vehicle.

Your wheels are susceptible to deterioration caused by salt, sodium chloride, magnesium chloride, calcium chloride, etc., and other road chemicals used to melt ice or control dust on dirt roads. Use a soft cloth or sponge and mild soap to wipe away promptly. Do not use harsh chemicals or a stiff brush. They can damage the wheel's protective coating that helps keep them from corroding and tarnishing.

**CAUTION!**

**Avoid products or automatic car washes that use acidic solutions or strong alkaline additives or harsh brushes. Many aftermarket wheel cleaners and automatic car washes may damage the wheel's protective finish. Such damage is not covered by the New Vehicle Limited Warranty. Only car wash soap, Mopar Wheel Cleaner or equivalent is recommended.**

When cleaning extremely dirty wheels including excessive brake dust, care must be taken in the selection of tire and wheel cleaning chemicals and equipment to prevent damage to the wheels. Mopar Wheel Treatment or Mopar Chrome Cleaner or their equivalent is recommended or select a non-abrasive, non-acidic cleaner for aluminum or chrome wheels.

**CAUTION!**

**Do not use scouring pads, steel wool, a bristle brush, metal polishes or oven cleaner. These products may damage the wheel's protective finish. Such damage is not covered by the New Vehicle Limited Warranty. Only car wash soap, Mopar Wheel Cleaner or equivalent is recommended.**

**NOTE:** If you intend parking or storing your vehicle for an extended period after cleaning the wheels with wheel cleaner, drive your vehicle and apply the brakes to remove the water droplets from the brake components. This activity will remove the red rust on the brake rotors and prevent vehicle vibration when braking.

**Dark Vapor Chrome, Black Satin Chrome, or Low Gloss Clear Coat Wheels**

**CAUTION!**

**If your vehicle is equipped with these specialty wheels, DO NOT USE wheel cleaners, abrasives, or polishing compounds. They will permanently damage this finish and such damage is not covered by the New Vehicle Limited Warranty. HAND WASH ONLY USING MILD SOAP AND WATER WITH A SOFT CLOTH. Used on a regular basis; this is all that is required to maintain this finish.**

### Tire Chains (Traction Devices)

Use of traction devices require sufficient tire-to-body clearance. Follow these recommendations to guard against damage.

- Traction device must be of proper size for the tire, as recommended by the traction device manufacturer.
- Install on Front Tires Only.
- Due to limited clearance, on a 205/55 R16, use reduced size snow chains or traction devices with a maximum projection of 9 mm beyond the tire profile.

**WARNING!**

**Using tires of different size and type (M+S, Snow) between front and rear axles can cause unpredictable handling. You could lose control and have a collision.**

**CAUTION!**

**To avoid damage to your vehicle or tires, observe the following precautions:**

- **Because of restricted traction device clearance between tires and other suspension components, it is important that only traction devices in good condition are used. Broken devices can cause serious damage. Stop the vehicle immediately if noise occurs that could indicate device breakage. Remove the damaged parts of the device before further use.**
- **Install device as tightly as possible and then retighten after driving about ½ mile (0.8 km).**
- **Do not exceed 30 mph (48 km/h).**
- **Drive cautiously and avoid severe turns and large bumps, especially with a loaded vehicle.**
- **Do not drive for a prolonged period on dry pavement.**

*(Continued)*

**CAUTION!** ***(Continued)***

- **Observe the traction device manufacturer's instructions on the method of installation, operating speed, and conditions for use. Always use the suggested operating speed of the device manufacturer's if it is less than 30 mph (48 km/h).**
- **Do not use traction devices on a compact spare tire.**

### Tire Rotation Recommendations

The tires on the front and rear of your vehicle operate at different loads and perform different steering, driving, and braking functions. For these reasons, they wear at unequal rates.

These effects can be reduced by timely rotation of tires. The benefits of rotation are especially worthwhile with aggressive tread designs such as those on all season type tires. Rotation will increase tread life, help to maintain mud, snow and wet traction levels, and contribute to a smooth, quiet ride.

Refer to the "Scheduled Servicing" for the proper maintenance intervals. The reasons for any rapid or unusual wear should be corrected prior to rotation being performed.

The suggested rotation method is the "forward cross" shown in the following diagram. This rotation pattern does not apply to some directional tires that must not be reversed.

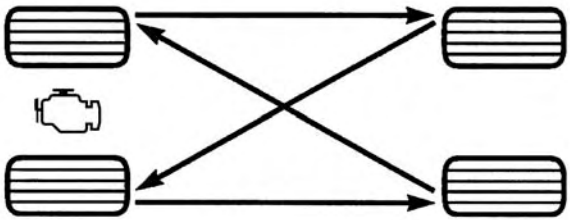


**Tire Rotation**

### DEPARTMENT OF TRANSPORTATION UNIFORM TIRE QUALITY GRADES

The following tire grading categories were established by the National Highway Traffic Safety Administration. The specific grade rating assigned by the tire's manufacturer in each category is shown on the sidewall of the tires on your vehicle.

All passenger vehicle tires must conform to Federal safety requirements in addition to these grades.

### Treadwear

The Treadwear grade is a comparative rating, based on the wear rate of the tire when tested under controlled conditions on a specified government test course. For example, a tire graded 150 would wear one and one-half times as well on the government course as a tire graded 100. The relative performance of tires depends upon the actual conditions of their use, however, and may depart significantly from the norm due to variations in driving habits, service practices, and differences in road characteristics and climate.

### Traction Grades

The Traction grades, from highest to lowest, are AA, A, B, and C. These grades represent the tire's ability to stop on wet pavement, as measured under controlled conditions on specified government test surfaces of asphalt and concrete. A tire marked C may have poor traction performance.

**WARNING!**

**The traction grade assigned to this tire is based on straight-ahead braking traction tests, and does not include acceleration, cornering, hydroplaning, or peak traction characteristics.**

### Temperature Grades

The Temperature grades are A (the highest), B, and C, representing the tire's resistance to the generation of heat and its ability to dissipate heat, when tested under controlled conditions on a specified indoor laboratory test wheel.

Sustained high temperature can cause the material of the tire to degenerate and reduce tire life, and excessive temperature can lead to sudden tire failure. The grade C corresponds to a level of performance, which all passenger vehicle tires must meet under the Federal Motor Vehicle Safety Standard No. 109. Grades B and A represent higher levels of performance on the laboratory test wheel, than the minimum required by law.

**WARNING!**

**The temperature grade for this tire is established for a tire that is properly inflated and not overloaded. Excessive speed, under-inflation, or excessive loading, either separately or in combination, can cause heat buildup and possible tire failure.**

## VEHICLE STORAGE

If you will not be using your vehicle for more than 21 days, you may want to take steps to preserve your battery.

- Disconnect the negative cable from the battery.
- Anytime you store your vehicle, or keep it out of service (i.e., vacation) for two weeks or more, run the air conditioning system at idle for about five minutes in the fresh air and high blower setting. This will ensure adequate system lubrication to minimize the possibility of compressor damage when the system is started again.

**NOTE:** When the vehicle has not been started or driven for at least 30 days, an Extended Park Start Procedure is required to start the vehicle. Refer to "Starting The Engine" in "Starting And Operating" for further information.

## BODYWORK

### Protection From Atmospheric Agents

Vehicle body care requirements vary according to geographic locations and usage. Chemicals that make roads passable in snow and ice and those that are sprayed on trees and road surfaces during other seasons are highly corrosive to the metal in your vehicle. Outside parking, which exposes your vehicle to airborne contaminants, road surfaces on which the vehicle is operated, extreme hot or cold weather and other extreme conditions will have an adverse effect on paint, metal trim, and underbody protection.



The following maintenance recommendations will enable you to obtain maximum benefit from the corrosion resistance built into your vehicle.

**What Causes Corrosion?**

Corrosion is the result of deterioration or removal of paint and protective coatings from your vehicle.

The most common causes are:

- Road salt, dirt and moisture accumulation.
- Stone and gravel impact.
- Insects, tree sap and tar.

- Salt in the air near seacoast localities.
- Atmospheric fallout/industrial pollutants.

## Body And Underbody Maintenance

### Cleaning Headlights

Your vehicle is equipped with plastic headlights and fog lights that are lighter and less susceptible to stone breakage than glass headlights.

Plastic is not as scratch resistant as glass and therefore different lens cleaning procedures must be followed.

To minimize the possibility of scratching the lenses and reducing light output, avoid wiping with a dry cloth. To remove road dirt, wash with a mild soap solution followed by rinsing.

Do not use abrasive cleaning components, solvents, steel wool or other aggressive material to clean the lenses.

## Preserving The Bodywork

### Washing

- Wash your vehicle regularly. Always wash your vehicle in the shade using Mopar Car Wash, or a mild car wash soap, and rinse the panels completely with clear water.
- If insects, tar, or other similar deposits have accumulated on your vehicle, use Mopar Super Kleen Bug and Tar Remover to remove.
- Use a high quality cleaner wax, such as Mopar Cleaner Wax to remove road film, stains and to protect your paint finish. Take care never to scratch the paint.
- Avoid using abrasive compounds and power buffing that may diminish the gloss or thin out the paint finish.

**CAUTION!**

- **Do not use abrasive or strong cleaning materials such as steel wool or scouring powder that will scratch metal and painted surfaces.**
- **Use of power washers exceeding 1,200 psi (8,274 kPa) can result in damage or removal of paint and decals.**

### Special Care

- If you drive on salted or dusty roads or if you drive near the ocean, hose off the undercarriage at least once a month.

- It is important that the drain holes in the lower edges of the doors, rocker panels, and trunk be kept clear and open.
- If you detect any stone chips or scratches in the paint, touch them up immediately. The cost of such repairs is considered the responsibility of the owner.
- If your vehicle is damaged due to a collision or similar cause that destroys the paint and protective coating, have your vehicle repaired as soon as possible. The cost of such repairs is considered the responsibility of the owner.
- If you carry special cargo such as chemicals, fertilizers, de-icer salt, etc., be sure that such materials are well packaged and sealed.
- If a lot of driving is done on gravel roads, consider mud or stone shields behind each wheel.
- Use Mopar Touch Up Paint on scratches as soon as possible. Your authorized dealer has touch up paint to match the color of your vehicle.

## INTERIORS

### Seats And Fabric Parts

Use Mopar Total Clean to clean fabric upholstery and carpeting.

**WARNING!**

**Do not use volatile solvents for cleaning purposes. Many are potentially flammable, and if used in closed areas they may cause respiratory harm.**

#### Seat Belt Maintenance

Do not bleach, dye or clean the belts with chemical solvents or abrasive cleaners. This will weaken the fabric. Sun damage can also weaken the fabric.

If the belts need cleaning, use a mild soap solution or lukewarm water. Do not remove the belts from the vehicle to wash them. Dry with a soft cloth.

Replace the belts if they appear frayed or worn or if the buckles do not work properly.

**WARNING!**

**A frayed or torn belt could rip apart in a collision and leave you with no protection. Inspect the belt system periodically, checking for cuts, frays, or loose parts. Damaged parts must be replaced immediately. Do not disassemble or modify the system. Seat belt assemblies must be replaced after a collision if they have been damaged (i.e., bent retractor, torn webbing, etc.).**

### Plastic And Coated Parts

Use Mopar Total Clean to clean vinyl upholstery.

**CAUTION!**

- **Direct contact of air fresheners, insect repellents, suntan lotions, or hand sanitizers to the plastic, painted, or decorated surfaces of the interior may cause permanent damage. Wipe away immediately.**
- **Damage caused by these type of products may not be covered by your New Vehicle Limited Warranty.**

### Cleaning Plastic Instrument Cluster Lenses

The lenses in front of the instruments in this vehicle are molded in clear plastic. When cleaning the lenses, care must be taken to avoid scratching the plastic.

1. Clean with a wet soft cloth. A mild soap solution may be used, but do not use high alcohol content or abrasive cleaners. If soap is used, wipe clean with a clean damp cloth.
2. Dry with a soft cloth.

### Leather Parts

Mopar Total Clean is specifically recommended for leather upholstery.

Your leather upholstery can be best preserved by regular cleaning with a damp soft cloth. Small particles of dirt can act as an abrasive and damage the leather upholstery and should be removed promptly with a damp cloth. Stubborn soils can be removed easily with a soft cloth and Mopar Total Clean. Care should be taken to avoid soaking your leather upholstery with any liquid. Please do not use polishes, oils, cleaning fluids, solvents, detergents, or ammonia-based cleaners to clean your leather upholstery. Application of a leather conditioner is not required to maintain the original condition.

**NOTE:** If equipped with light colored leather, it tends to show any foreign material, dirt, and fabric dye transfer more so than darker colors. The leather is designed for easy cleaning, and FCA recommends Mopar total care leather cleaner applied on a cloth to clean the leather seats as needed.

**CAUTION!**

**Do not use Alcohol and Alcohol-based and/or Ketone based cleaning products to clean leather seats, as damage to the seat may result.**

### Glass Surfaces

All glass surfaces should be cleaned on a regular basis with Mopar Glass Cleaner, or any commercial household-type glass cleaner. Never use an abrasive type cleaner. Use caution when cleaning the inside rear window equipped with electric defrosters or windows equipped with radio antennas. Do not use scrapers or other sharp instruments that may scratch the elements.

When cleaning the rear view mirror, spray cleaner on the towel or cloth that you are using. Do not spray cleaner directly on the mirror.

# TECHNICAL SPECIFICATIONS

## CONTENTS


■ IDENTIFICATION DATA . . . . . .290
- □ Vehicle Identification Number . . . . . .290

■ BRAKE SYSTEM . . . . . .290

■ WHEEL AND TIRE TORQUE SPECIFICATIONS . .291
- □ Torque Specifications . . . . . .291

■ FUEL REQUIREMENTS . . . . . .292
- □ 1.4L Turbo . . . . . .292
- □ Reformulated Gasoline . . . . . .293
- □ Materials Added To Fuel . . . . . .293
- □ Gasoline/Oxygenate Blends . . . . . .293
- □ Do Not Use E-85 In Non-Flex Fuel Vehicles . . . .294
- □ CNG And LP Fuel System Modifications . . . . . .294
- □ MMT In Gasoline . . . . . .294
- □ Fuel System Cautions . . . . . .295
- □ Carbon Monoxide Warnings . . . . . .295

■ FLUID CAPACITIES . . . . . .296

■ FLUIDS AND LUBRICANTS . . . . . .296
- □ Engine . . . . . .296
- □ Chassis . . . . . .298

## IDENTIFICATION DATA

### Vehicle Identification Number

The Vehicle Identification Number (VIN) is found on the left front corner of the instrument panel, visible through the windshield. This number also appears engraved on the right front floor pan under the passenger seat, on an adhesive label applied to the right door opening on the B-Pillar, on the vehicle registration and title.

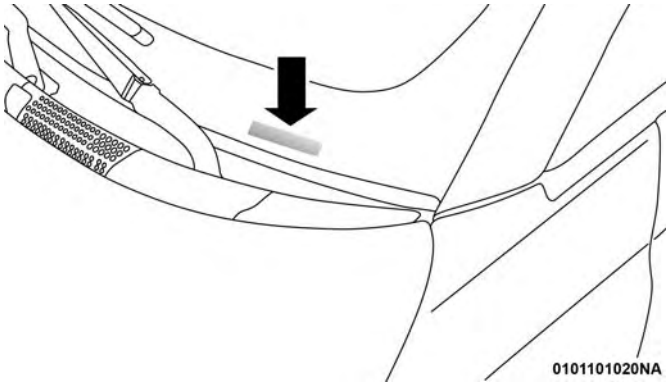


**Vehicle Identification Number**

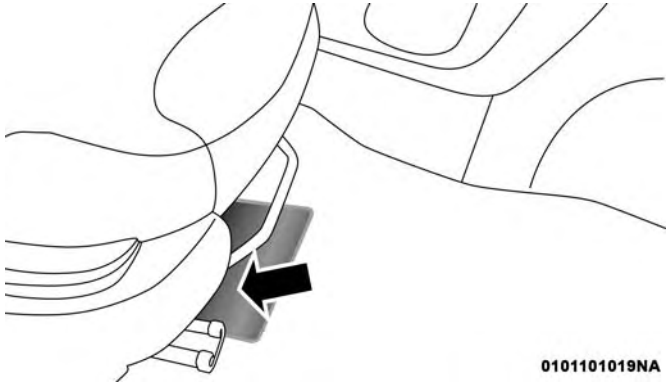


**Stamped VIN Location**

**NOTE:** It is illegal to remove or alter the VIN.

## BRAKE SYSTEM

Your vehicle is equipped with dual hydraulic brake systems. If either of the two hydraulic systems loses normal capability, the remaining system will still function. However, there will be some loss of overall braking effectiveness. You may notice increased pedal travel during application, greater pedal force required to slow or stop, and potential activation of the “Brake System Warning Light.”

In the event power assist is lost for any reason (i.e., repeated brake applications with the engine off) the brakes will still function. However, the effort required to brake the vehicle will be much greater than that required with the power system operating.

## WHEEL AND TIRE TORQUE SPECIFICATIONS

Proper lug nut/bolt torque is very important to ensure that the wheel is properly mounted to the vehicle. Any time a wheel has been removed and reinstalled on the vehicle, the lug nuts/bolts should be torqued using a properly calibrated torque wrench using a high quality six sided (hex) deep wall socket.

### Torque Specifications

| Lug Nut/Bolt Torque | **Lug Nut/ Bolt Size | Lug Nut/ Bolt Socket Size |
|---|---|---|
| 63 Ft-Lbs (86 N·m) **Steel Wheels Only** 89 Ft-Lbs (120 N·m) **Aluminum Wheels Only** | M12 x 1.25 | 17 mm |

**Use only your authorized dealer recommended lug nuts/bolts and clean or remove any dirt or oil before tightening.

Inspect the wheel mounting surface prior to mounting the tire and remove any corrosion or loose particles.

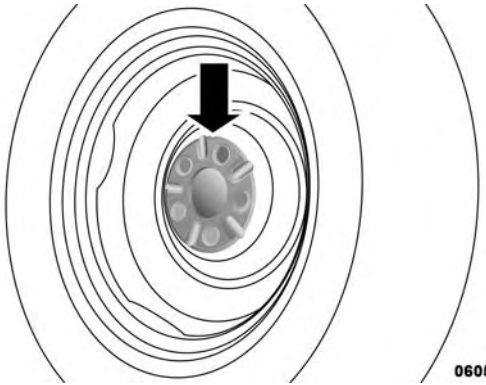


**Wheel Mounting Surface**

Tighten the lug nuts/bolts in a star pattern until each nut/bolt has been tightened twice. Ensure that the socket is fully engaged on the lug nut/bolt (do not insert it halfway).

0605006372

**Torque Patterns**

After 25 miles (40 km), check the lug nut/bolt torque to be sure that all the lug nuts/bolts are properly seated against the wheel.

**WARNING!**

**To avoid the risk of forcing the vehicle off the jack, do not tighten the lug nuts fully until the vehicle has been lowered. Failure to follow this warning may result in personal injury.**

## FUEL REQUIREMENTS

### 1.4L Turbo

This engine is designed to meet all emission regulations, provide satisfactory fuel economy and performance when using high-quality unleaded "Regular" gasoline having a posted octane number of 87 as specified by the (R+M)/2 method. For optimum performance and fuel economy the use of "Premium" 91 octane gasoline or higher is recommended.

While operating on gasoline with an octane number of 87, hearing a light knocking sound from the engine is not a cause for concern. However, if the engine is heard making a heavy knocking sound, see your dealer immediately. Use of gasoline with an octane number lower than 87 can cause engine failure and may void or not be covered by the New Vehicle Limited Warranty.

Poor quality gasoline can cause problems such as hard starting, stalling, and hesitations. If you experience these symptoms, try another brand of gasoline before considering service for the vehicle.

### Reformulated Gasoline

Many areas of the country require the use of cleaner burning gasoline referred to as "Reformulated Gasoline". Reformulated gasoline contains oxygenates and are specifically blended to reduce vehicle emissions and improve air quality.

The use of reformulated gasoline is recommended. Properly blended reformulated gasoline will provide improved performance and durability of engine and fuel system components.

### Materials Added To Fuel

Besides using unleaded gasoline with the proper octane rating, gasolines that contain detergents, corrosion and stability additives are recommended. Using gasolines that have these additives will help improve fuel economy, reduce emissions, and maintain vehicle performance.

Designated TOP TIER Detergent Gasoline contains a higher level of detergents to further aide in minimizing engine and fuel system deposits. When available, the usage of Top Tier Detergent gasoline is recommended. Visit www.toptiergas.com for a list of TOP TIER Detergent Gasoline Retailers.

Indiscriminate use of fuel system cleaning agents should be avoided. Many of these materials intended for gum and varnish removal may contain active solvents or similar ingredients. These can harm fuel system gasket and diaphragm materials.

### Gasoline/Oxygenate Blends

Some fuel suppliers blend unleaded gasoline with oxygenates such as ethanol.

**CAUTION!**

**DO NOT use E-85, gasoline containing methanol, or gasoline containing more than 15% ethanol (E-15). Use of these blends may result in starting and drivability problems, damage critical fuel system components, cause emissions to exceed the applicable standard, and/or cause the "Malfunction Indicator Light" to illuminate. Please observe pump labels as they should clearly communicate if a fuel contains greater than 15% ethanol (E-15).**

Problems that result from using gasoline containing more than 15% ethanol (E-15) or gasoline containing methanol are not the responsibility of the manufacturer and may void or not be covered under New Vehicle Limited Warranty.

### Do Not Use E-85 In Non-Flex Fuel Vehicles

Non-Flex Fuel Vehicles (FFV) are compatible with gasoline containing up to 15% ethanol (E-15). Use of gasoline with higher ethanol content may void the New Vehicle Limited Warranty.

If a Non-FFV vehicle is inadvertently fueled with E-85 fuel, the engine will have some or all of these symptoms:

- Operate in a lean mode.
- OBD II “Malfunction Indicator Light” on.
- Poor engine performance.
- Poor cold start and cold drivability.
- Increased risk for fuel system component corrosion.

### CNG And LP Fuel System Modifications

Modifications that allow the engine to run on compressed natural gas (CNG) or liquid propane (LP) may result in damage to the engine, emissions, and fuel system components. Problems that result from running CNG or LP are not the responsibility of the manufacturer and may void or not be covered under the New Vehicle Limited Warranty.

### MMT In Gasoline

Methylcyclopentadienyl Manganese Tricarbonyl (MMT) is a manganese-containing metallic additive that is blended into some gasoline to increase octane. Gasoline blended with MMT provides no performance advantage beyond gasoline of the same octane number without MMT. Gasoline blended with MMT reduces spark plug life and reduces emissions system performance in some vehicles. The manufacturer recommends that gasoline without MMT be used in your vehicle. The MMT content of gasoline may not be indicated on the gasoline pump; therefore, you should ask your gasoline retailer whether the gasoline contains MMT. MMT is prohibited in Federal and California reformulated gasoline.

## Fuel System Cautions

**CAUTION!**

**Follow these guidelines to maintain your vehicle's performance:**

- **The use of leaded gasoline is prohibited by Federal law. Using leaded gasoline can impair engine performance and damage the emissions control system.**
- **An out-of-tune engine or certain fuel or ignition malfunctions can cause the catalytic converter to overheat. If you notice a pungent burning odor or some light smoke, your engine may be out of tune or malfunctioning and may require immediate service. Contact your authorized dealer for service assistance.**
- **The use of fuel additives, which are now being sold as octane enhancers, is not recommended. Most of these products contain high concentrations of methanol. Fuel system damage or vehicle performance problems resulting from the use of such fuels or additives is not the responsibility of the manufacturer and may void or not be covered under the New Vehicle Limited Warranty.**

**NOTE:** Intentional tampering with the emissions control system can result in civil penalties being assessed against you.

## Carbon Monoxide Warnings

**WARNING!**

**Carbon monoxide (CO) in exhaust gases is deadly. Follow the precautions below to prevent carbon monoxide poisoning:**

- **Do not inhale exhaust gases. They contain carbon monoxide, a colorless and odorless gas, which can kill. Never run the engine in a closed area, such as a garage, and never sit in a parked vehicle with the engine running for an extended period. If the vehicle is stopped in an open area with the engine running for more than a short period, adjust the ventilation system to force fresh, outside air into the vehicle.**
- **Guard against carbon monoxide with proper maintenance. Have the exhaust system inspected every time the vehicle is raised. Have any abnormal conditions repaired promptly. Until repaired, drive with all side windows fully open.**

## FLUID CAPACITIES

| | U.S. | Metric |
|---|---|---|
| **Fuel (Approximate)** | 12.7 Gallons | 48.1 Liters |
| **Engine Oil with Filter** | | |
| 1.4L Turbo Engine | 4 Quarts | 3.8 Liters |
| **Cooling System** | | |
| 1.4L Turbo Engine (Mopar Antifreeze/Engine Coolant 10 Year/ 150,000 Mile Formula). | 6.1 Quarts | 5.8 Liters |

## FLUIDS AND LUBRICANTS

### Engine

| Component | Fluid, Lubricant, or Genuine Part |
|---|---|
| Engine Coolant – 1.4L Turbo Engine | We recommend you use Mopar Antifreeze/Coolant 10 Year/150,000 Mile Formula OAT (Organic Additive Technology) or equivalent meeting the requirements of FCA Material Standard MS-90032. |
| Engine Oil – 1.4L Turbo Engine | We recommend you use SAE 5W-40 API Certified Synthetic Engine Oil, meeting the requirements of FCA Material Standard MS-12991. Refer to your engine oil filler cap for correct SAE grade. |

| Component | Fluid, Lubricant, or Genuine Part |
|---|---|
| Engine Oil Filter – 1.4L Turbo Engine | We recommend you use Mopar Engine Oil Filter. |
| Spark Plugs – 1.4L Turbo Engine | We recommend you use Mopar Spark Plugs. |
| Fuel Selection – 1.4L Turbo Engine | 91 Octane Recommended – 87 Octane Acceptable, 0-15% Ethanol. |

**CAUTION!**

- **Mixing of engine coolant (antifreeze) other than specified Organic Additive Technology (OAT) engine coolant (antifreeze), may result in engine damage and may decrease corrosion protection. Organic Additive Technology (OAT) engine coolant is different and should not be mixed with Hybrid Organic Additive Technology (HOAT) engine coolant (antifreeze) or any "globally compatible" coolant (antifreeze). If a non-OAT engine coolant (antifreeze) is introduced into the cooling system in an emergency, the cooling system will need to be drained, flushed, and refilled with fresh OAT coolant (conforming to MS.90032), by an authorized dealer as soon as possible.**

*(Continued)*

**CAUTION!** ***(Continued)***

- **Do not use water alone or alcohol-based engine coolant (antifreeze) products. Do not use additional rust inhibitors or antirust products, as they may not be compatible with the radiator engine coolant and may plug the radiator.**
- **This vehicle has not been designed for use with propylene glycol-based engine coolant (antifreeze). Use of propylene glycol-based engine coolant (antifreeze) is not recommended.**

## Chassis

| Component | Fluid, Lubricant, or Genuine Part |
|---|---|
| Automatic Transmission | Use only Mopar AW-1 Automatic Transmission Fluid or equivalent. Failure to use the correct fluid may affect the function or performance of your transmission. |
| Brake Master Cylinder | We recommend you use Mopar DOT 4. If DOT 4 brake fluid is not available, then DOT 3 is acceptable.<br>If using DOT 4 brake fluid, the fluid must be changed every 24 months. This interval is time based only, mileage intervals do not apply. |

# MULTIMEDIA

## CONTENTS


- UCONNECT RADIOS . . . . . .300
- PERSONALIZED MENU BAR . . . . . .300
- CYBERSECURITY . . . . . .301
- UCONNECT SETTINGS . . . . . .302
  - Customer Programmable Features — Uconnect 4/4 NAV With 7–inch Display Settings . . . . . .302
- Steering Wheel Audio Controls . . . . . .314
  - Radio Operation. . . . . .314
  - Player Operation . . . . . .314
- IPOD/USB/MEDIA PLAYER CONTROL . . . . . .315
- RADIO OPERATION AND MOBILE PHONES . . .315
  - Regulatory And Safety Information . . . . . .315
- UCONNECT VOICE RECOGNITION QUICK TIPS . . . . . .317
  - Introducing Uconnect . . . . . .317
  - Get Started . . . . . .317
  - Basic Voice Commands . . . . . .318
  - Radio . . . . . .318
  - Media . . . . . .319
  - Phone . . . . . .320
  - Navigation . . . . . .321
  - General Information . . . . . .321
  - Additional Information . . . . . .321
- CD/DVD DISC MAINTENANCE . . . . . .322

## UCONNECT RADIOS

For detailed information about your Uconnect radio, refer to your Uconnect Owner's Manual Supplement.

**NOTE:** Uconnect screen images are for illustration purposes only and may not reflect exact software for your vehicle.

## PERSONALIZED MENU BAR

The Uconnect features and services in the main menu bar are easily changed for your convenience. Simply follow these steps:

**Uconnect 4/4 NAV Main Menu**

1. Press the "Apps " button to open the App screen.
2. Press and hold, then drag the selected App to replace an existing shortcut in the main menu bar.

The new app shortcut, that was dragged down onto the main menu bar, will now be an active App/shortcut.

**NOTE:** This feature is only available if the vehicle is in PARK.

## CYBERSECURITY

Your vehicle may be a connected vehicle and may be equipped with both wired and wireless networks. These networks allow your vehicle to send and receive information. This information allows systems and features in your vehicle to function properly.

Your vehicle may be equipped with certain security features to reduce the risk of unauthorized and unlawful access to vehicle systems and wireless communications. Vehicle software technology continues to evolve over time and FCA US, working with its suppliers, evaluates and takes appropriate steps as needed. Similar to a computer or other devices, your vehicle may require software updates to improve the usability and performance of your systems or to reduce the potential risk of unauthorized and unlawful access to your vehicle systems.

The risk of unauthorized and unlawful access to your vehicle systems may still exist, even if the most recent version of vehicle software (such as Uconnect software) is installed.

**WARNING!**

- **It is not possible to know or to predict all of the possible outcomes if your vehicle's systems are breached. It may be possible that vehicle systems, including safety related systems, could be impaired or a loss of vehicle control could occur that may result in an accident involving serious injury or death.**
- **ONLY insert media (e.g., USB, SD card, or CD) into your vehicle if it came from a trusted source. Media of unknown origin could possibly contain malicious software, and if installed in your vehicle, it may increase the possibility for vehicle systems to be breached.**
- **As always, if you experience unusual vehicle behavior, take your vehicle to your nearest authorized dealer immediately.**

**NOTE:**

- FCA US or your dealer may contact you directly regarding software updates.
- To help further improve vehicle security and minimize the potential risk of a security breach, vehicle owners should:
  - Routinely check www.driveuconnect.com/software-update to learn about available Uconnect software updates.
  - Only connect and use trusted media devices (e.g. personal mobile phones, USBs, CDs).

Privacy of any wireless and wired communications cannot be assured. Third parties may unlawfully intercept information and private communications without your consent. For further information, refer to "Onboard Diagnostic System (OBD II) Cybersecurity" in "Getting To Know Your Instrument Panel".

## UCONNECT SETTINGS

### Customer Programmable Features — Uconnect 4/4 NAV With 7–inch Display Settings

Press the Settings button to display the menu setting screen. In this mode the Uconnect system allows you to access programmable features that may be equipped such as Language, Display, Units, Voice, Clock & Date, Safety/Driving Assistance, Lights, Doors & Locks, Engine Off Options, Phone, SiriusXM Setup, Restore Settings to Default and Clear Personal Data.

**NOTE:**

- Only one touchscreen area may be selected at a time.
- Depending on the vehicles options, feature settings may vary.

When making a selection, press the button on the touchscreen to enter the desired mode. Once in the desired mode, press and release the preferred setting until a check-mark appears next to the setting, showing that setting has been selected. Once the setting is complete, either press the back arrow button on the touchscreen to return to the previous menu, or press the "X" button on the touchscreen to close out of the settings screen. Pressing the Up or Down Arrow button on the right side of the screen will allow you to toggle up or down through the available settings.

### Language

After pressing the "Language" button on the touchscreen, the following settings will be available:

| Setting Name | Selectable Options | | |
|---|---|---|---|
| **Language** | English | Français | Español |

### Display

After pressing the "Display" button on the touchscreen, the following settings will be available:

| Setting Name | Selectable Options | |
|---|---|---|
| **Display Mode** | Auto | Manual |
| **NOTE:** When Day or Night is selected for the Display Mode, the usage of the Parade Mode feature will cause the radio to activate the Display Brightness Day control even though the headlights are on. | | |

| Setting Name | Selectable Options | |
|---|---|---|
| **Display Brightness With Headlights ON** | + | – |
| **Display Brightness With Headlights OFF** | + | – |
| **AutoShow Smartphone Display Upon Connection** | ☐ | ☑ |
| **Touchscreen Beep** | ☐ | ☑ |
| **Display Trip B** | ☐ | ☑ |

**Units**

- *Units*

When in this display, you may select to have the instrument cluster display, odometer, and navigation system changed between US and Metric units of measure. Press "US," "Metric" or "Custom."

- *Custom*

When "Custom" is selected, you may select each unit of measure independently displayed in the instrument cluster display, and navigation system.

| Setting Name | Selectable Options | | | |
|---|---|---|---|---|
| **US** | Distance | Fuel Consumption | Pressure | Temperature |
| **Metric** | Distance | Fuel Consumption | Pressure | Temperature |
| **Custom** | Distance | Fuel Consumption | Pressure | Temperature |

### Voice

After pressing the "Voice" button on the touchscreen, the following settings will be available:

| Setting Name | Selectable Options | | |
|---|---|---|---|
| **Voice Response Length** | Brief | Detailed | |
| **Show Command List** | Never | With Help | Always |

### Clock & Date

After pressing the "Clock" button on the touchscreen, the following settings will be available:

| Setting Name | Selectable Options | |
|---|---|---|
| **Sync Time With GPS** | ☐ | ☑ |
| **NOTE:** This feature will allow you to automatically have the radio set the time. To change the Sync Time setting, press the "Sync Time with Nav" button on the touchscreen. | | |
| **Set Time Hours** | + | – |
| **NOTE:** This feature will allow you to adjust the hours. The "Sync Time with Nav" button on the touchscreen must be unchecked. | | |

| Setting Name | Selectable Options | | | |
|---|---|---|---|---|
| **Set Time Minutes** | + | | – | |
| **NOTE:** This feature will allow you to adjust the minutes. The "Sync Time with Nav" button on the touchscreen must be unchecked. | | | | |
| **Time Format** | 12hrs | 24hrs | AM | PM |
| **Show Time In Status Bar — If Equipped** | ☐ | | ☑ | |
| **NOTE:** This feature will allow you to turn on or shut off the digital clock in the status bar. | | | | |
| **Set Date (MM/DD/YY)** | - | | + | |
| **NOTE:** This feature allows you to set the date, month, and year using the plus and minus buttons. | | | | |

**Safety & Driving Assistance**

After pressing the "Safety & Driving Assistance" button on the touchscreen, the following settings will be available:

| Setting Name | Selectable Options | |
|---|---|---|
| **Rear View Camera Delay** | ☐ | ☑ |

## Lights

After pressing the “Lights” button on the touchscreen, the following settings will be available:

| Setting Name | Selectable Options | |
|---|---|---|
| **Interior Ambient Lights** | + | – |
| **NOTE:** When this feature is selected, it allows the adjustment of the brightness of the interior ambient lighting. | | |
| **Greeting Lights** | - | + |
| **Daytime Running Lights** | ☐ | ☑ |
| **Cornering Lights** | ☐ | ☑ |
| **NOTE:** When this feature is selected, if the steering wheel rotation angle is large or the turn signal indicators are on, a light (incorporated in the fog light) will turn on, on the relevant side to improve visibility at night. | | |

### Doors & Locks

After pressing the "Doors & Locks" button on the touchscreen, the following settings will be available:

| Setting Name | Selectable Options | |
|---|---|---|
| **Auto Door Locks** | ☐ | ☑ |
| **NOTE:** When this feature is selected, all doors will lock automatically when the vehicle reaches a speed of 15 mph (24 km/h). | | |

### Engine Off Options

After pressing the "Engine Off Options" button on the touchscreen, the following settings will be available:

| Setting Name | Selectable Options | |
|---|---|---|
| **Radio Off Delay** | 0 MIN | 20 MIN |

### Audio

After pressing the "Audio" button on the touchscreen, the following settings will be available:

| Setting Name | Selectable Options | |
|---|---|---|
| **Balance/Fade** | Speaker Icon | Arrow Buttons |

| Setting Name | Selectable Options | | |
|---|---|---|---|
| **NOTE:** When in this display you may adjust the Balance and Fade settings. | | | |
| **Equalizer** | + | | – |
| **NOTE:** When in this display you may adjust the Bass, Mid and Treble settings. | | | |
| **AUX Volume Offset** | On | | Off |
| **NOTE:**<br>The "AUX Volume Offset" feature provides the ability to tune the audio level for portable devices connected through the AUX input. | | | |
| **Auto Play** | On | | Off |
| **NOTE:** USB devices will automatically play media when AutoPlay is turned On. | | | |
| **Auto-On Radio** | On | Off | Recall Last |
| **NOTE:** The Radio automatically turns on when vehicle is in run or will recall whether it was on or off at last ignition off. | | | |

### Auto Comfort Systems — If Equipped

After pressing the "Auto-On Comfort & Remote Start" button on the touchscreen, the following settings will be available:

| Setting Name | Selectable Options | |
|---|---|---|
| **Horn With Remote Start** | Yes | No |
| **Auto-On Driver Heated/Ventilated Seat & Steering Wheel With Vehicle Start — If Equipped** | On | Off |

**NOTE:** When this feature is selected the driver's heated seat and heated steering wheel will automatically turn ON when temperatures are below 40° F (4.4° C). When temperatures are above 80° F (26.7° C), the driver vented seat will turn ON. To make your selection, press the "Auto Heated Seats" button on the touchscreen, then select either "Off," "Remote Start" or "All Starts." The button will highlight indicating that the setting has been selected. Press the back arrow button on the touchscreen to return to the previous menu.

### Phone

**WARNING!**

**Any voice commanded system should be used only in safe driving conditions following all applicable laws.**

*(Continued)*

**WARNING!** ***(Continued)***

**Your attention should be focused on safely operating the vehicle. Failure to do so may result in a collision causing serious injury or death.**

After pressing the “Phone” button on the touchscreen, the following settings will be available:

| Setting Name | Selectable Options |
|---|---|
| **Do Not Disturb** | Do Not Disturb Options |
| **NOTE:** The “Do Not Disturb” feature allows the paired phone to send a predetermined call, text or both, to any incoming call, or text, before sending it directly to voicemail. It also allows a choice between a Default or Custom auto reply message. In the Customize Auto Reply Message, a customized message can be typed. It also keeps a counter of all missed calls and texts while on the road. | |
| **Paired Phones and Audio Devices** | Currently Paired Phones and Audio Devices |

**SiriusXM Setup — If Equipped**

After pressing the “SiriusXM Setup” button on the touchscreen, the following settings will be available:

| Setting Name | Selectable Options | |
|---|---|---|
| **Tune Start** | ☐ | ☑ |
| **NOTE:** The “Tune Start” feature begins playing the current song from the beginning when you tune to a music channel using one of the twelve presets, so you can enjoy the complete song. This feature occurs the first time the preset is selected during that current song. Tune Start works in the background, so you will not even realize it’s on, except that you will miss the experience of joining your favorite song with only a few seconds left to play. | | |

| Setting Name | Selectable Options |
|---|---|
| **Channel Skip** | Channel Skip |
| **NOTE:** SiriusXM can be programmed to designate a group of channels that are the most desirable to listen to or to exclude undesirable channels while scanning. To make your selection, press the "Channel Skip" button on the touch-screen, select the channels you would like to skip. | |
| **Subscription Information** | Subscription Info |
| **NOTE:**<br>New vehicle purchasers or lessees will receive a free limited time subscription to SiriusXM Satellite Radio with your radio. Following the expiration of the free services, it will be necessary to access the information on the Subscription Information screen to re-subscribe.<br>1. Press the "Subscription Info" button on the touchscreen to access the Subscription Information screen.<br>2. Write down the SIRIUS ID numbers for your receiver. To reactivate your service, either call the number listed on the screen or visit the provider online. | |

**NOTE:** SiriusXM Travel Link is a separate subscription.

### Restore Settings to Default

After pressing the "Restore Settings" button on the touch-screen, the following settings will be available:

| Setting Name | Selectable Options | |
|---|---|---|
| **Restore Settings** | Yes | No |
| **NOTE:** When this feature is selected, it will reset Display, Clock, Audio, and Radio Settings to their default. | | |

### Clear Personal Data

After pressing the "Clear Personal Data Settings" button on the touchscreen, the following settings will be available:

| Setting Name | Selectable Options | |
|---|---|---|
| **Clear Personal Data** | Yes | No |
| **NOTE:** When this feature is selected, it will remove personal data including Bluetooth devices and presets. | | |

## Steering Wheel Audio Controls

The remote sound system controls are located at the rear of the steering wheel. Reach behind the wheel to access the switches.

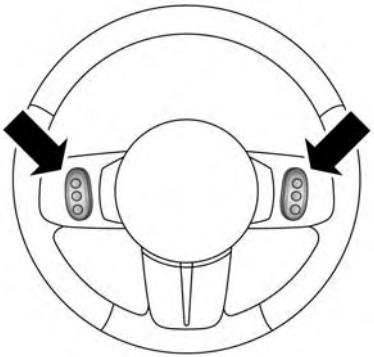


**Remote Sound System Controls (Back View Of Steering Wheel)**

The right-hand control is a rocker-type switch with a pushbutton in the center and controls the volume and mode of the sound system. Pushing the top of the rocker switch will increase the volume, and pushing the bottom of the rocker switch will decrease the volume.

Pushing the center button will make the radio switch between the various modes available (AM/FM/SAT/AUX/Media Player, etc.) and can also be used to select/enter an item while scrolling through menu.

The left-hand control is a rocker-type switch with a push-button in the center. The function of the left-hand control is different depending on which mode you are in.

The following describes the left-hand control operation in each mode.

### Radio Operation

Pushing the top of the switch will “Seek” up for the next listenable station and pushing the bottom of the switch will “Seek” down for the next listenable station.

The button located in the center of the left-hand control will tune to the next preset station that you have programmed in the radio preset button.

### Player Operation

Pushing the top of the switch once will go to the next track on the Player. Pushing the bottom of the switch once will go to the beginning of the current track, or to the beginning of the previous track if it is within one second after the current track begins to play.

If you push the switch up or down twice, it plays the second track; three times, it will play the third, etc.

## IPOD/USB/MEDIA PLAYER CONTROL

This feature allows an iPod or external USB device to be plugged into the AUX Jack or USB port.

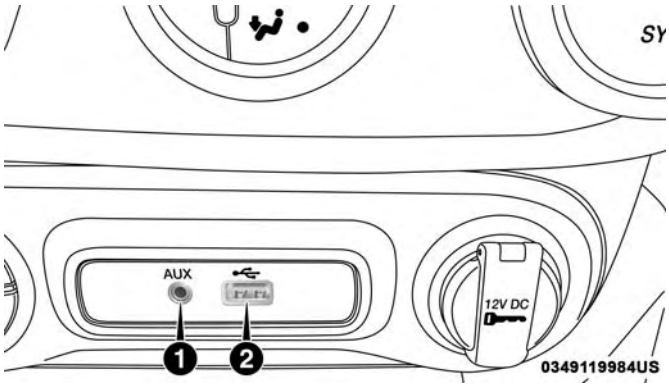


**AUX Jack And USB Port**

1 — AUX Jack
2 — USB Port

Refer to the Uconnect Owner's Manual Supplement for iPod and external USB support capability.

## RADIO OPERATION AND MOBILE PHONES

Under certain conditions, the mobile phone being on in your vehicle can cause erratic or noisy performance from your radio. This condition may be lessened or eliminated by relocating the mobile phone antenna. This condition is not harmful to the radio. If your radio performance does not satisfactorily "clear" by the repositioning of the antenna, it is recommended that the radio volume be turned down or off during mobile phone operation when not using Uconnect (if equipped).

### Regulatory And Safety Information

**USA/CANADA**

Exposure to Radio Frequency Radiation

The radiated output power of the internal wireless radio is far below the FCC and IC radio frequency exposure limits. Nevertheless, the wireless radio will be used in such a manner that the radio is 20 cm or further from the human body.

The internal wireless radio operates within guidelines found in radio frequency safety standards and recommendations, which reflect the consensus of the scientific community.

The radio manufacturer believes the internal wireless radio is safe for use by consumers. The level of energy emitted is far less than the electromagnetic energy emitted by wireless devices such as mobile phones. However, the use of wireless radios may be restricted in some situations or environments, such as aboard airplanes. If you are unsure of restrictions, you are encouraged to ask for authorization before turning on the wireless radio.

The following regulatory statement applies to all Radio Frequency (RF) devices equipped in this vehicle:

This device complies with Part 15 of the FCC Rules and with Industry Canada license-exempt RSS standard(s). Operation is subject to the following two conditions:

1. This device may not cause harmful interference, and
2. This device must accept any interference received, including interference that may cause undesired operation.

**NOTE:** Changes or modifications not expressly approved by the party responsible for compliance could void the user's authority to operate the equipment.

**NOTE:**

- This equipment has been tested and found to comply with the limits for a Class B digital device, pursuant to Part 15 of the FCC Rules. These limits are designed to provide reasonable protection against harmful interference in a residential installation. This equipment generates, uses and can radiate radio frequency energy and, if not installed and used in accordance with the instructions, may cause harmful interference to radio communications. However, there is no guarantee that interference will not occur in a particular installation.
- If this equipment does cause harmful interference to radio or television reception, which can be determined by turning the equipment off and on, the user is encouraged to try to correct the interference by one or more of the following measures:
  1. Increase the separation between the equipment and receiver.
  2. Consult the dealer or an experienced radio technician for help.

## UCONNECT VOICE RECOGNITION QUICK TIPS

### Introducing Uconnect

Start using Uconnect Voice Recognition with these helpful quick tips. It provides the key Voice Commands and tips you need to know to control your Uconnect 4/4 NAV system.

If you see the NAV icon on the bottom bar, or in the Apps menus, of your touchscreen, you have the Uconnect 4 NAV system. If not, you have a Uconnect 4 system.

### Get Started

All you need to control your Uconnect system with your voice are the buttons on your steering wheel.

1. Visit **UconnectPhone.com to check mobile device and feature compatibility and to find phone pairing instructions.**
2. Reduce background noise. Wind and passenger conversations are examples of noise that may impact recognition.
3. Speak clearly at a normal pace and volume while facing straight ahead.
4. Each time you give a Voice Command, you must first push either the VR or Phone button, wait until **after** the beep, then say your Voice Command.
5. You can interrupt the help message or system prompts by pushing the VR or Phone button and saying a Voice Command from current category.

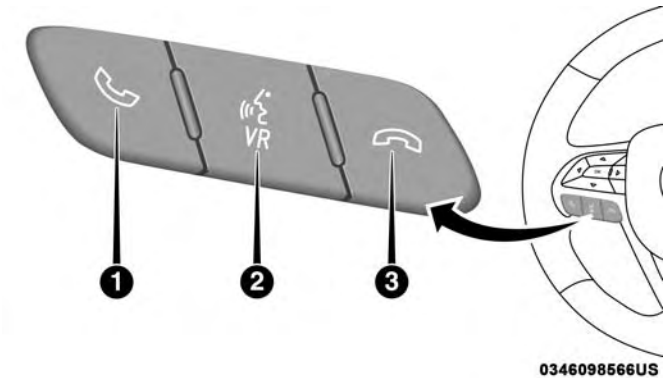


**Uconnect Voice Command**

1 — Push To Initiate Or To Answer A Phone Call, Send Or Receive A Text
2 — Push To Say Vocal Commands
3 — Push To End Call

## Basic Voice Commands

The basic Voice Commands below can be given at any point while using your Uconnect system.

Push the VR button . After the beep, say...

- **Cancel** to stop a current voice session
- **Help** to hear a list of suggested Voice Commands
- **Repeat** to listen to the system prompts again

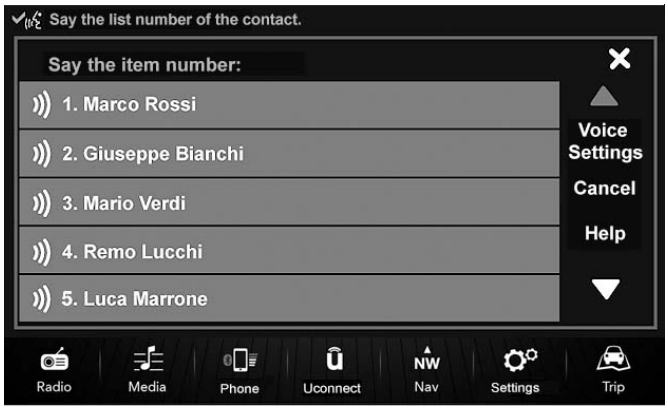


**Uconnect 4/4 NAV Basic Voice Commands**

Notice the visual cues that inform you of your voice recognition system's status. Cues appear on the touch-screen.

## Radio

Use your voice to quickly get to the AM, FM or SiriusXM Satellite Radio stations you would like to hear. (Subscription or included SiriusXM Satellite Radio trial required.)

Push the VR button . After the beep, say...

- **Tune to** ninety-five-point-five FM
- **Tune to Satellite Channel** Hits 1

**TIP:** At any time, if you are not sure of what to say or want to learn a Voice Command, push the VR button and say **"Help."** The system will provide you with a list of commands.

**Uconnect 4/4 NAV Radio**

## Media

Uconnect offers connections via USB, Bluetooth and auxiliary ports (If Equipped). Voice operation is only available for connected USB and AUX devices. (Remote CD player optional and not available on all vehicles.)

Push the VR button . After the beep, say one of the following commands and follow the prompts to switch your media source or choose an artist.

- **Change source to** Bluetooth
- **Change source to** AUX
- **Change source to** USB
- **Play artist** Beethoven; **Play album** Greatest Hits; **Play song** Moonlight Sonata; **Play genre** Classical

**TIP:** Press the Browse button on the touchscreen to see all of the music on your USB device. Your Voice Command must match **exactly** how the artist, album, song and genre information is displayed.

**Uconnect 4/4 NAV Media**

## Phone

Making and answering hands-free phone calls is easy with Uconnect. When the Phonebook button is illuminated on your touchscreen, your system is ready. Check UconnectPhone.com for mobile phone compatibility and pairing instructions.

Push the VR Button . After the beep, say one of the following commands...

- **Call** John Smith
- **Dial** 123-456-7890 and follow the system prompts
- **Redial** (call previous outgoing phone number)
- **Call back** (call previous incoming phone number)

**TIP:** When providing a Voice Command, push the VR button and say **"Call,"** then pronounce the name **exactly** as it appears in your phone book. When a contact has multiple phone numbers, you can say **"Call** John Smith **work."**

**Uconnect 4/4 NAV Phone**

## Navigation

The Uconnect navigation feature helps you save time and become more productive when you know exactly how to get to where you want to go. (Navigation is optional on the Uconnect 4 system.)

1. To enter a destination, push the VR button . After the beep, say:
   - For the 4 Uconnect System, say: **"Enter state."**
   - For the 4 NAV Uconnect System, say: **"Find address** 800 Chrysler Drive Auburn Hills, Michigan."
2. Then follow the system prompts.

**TIP:** To start a POI search, push the VR button . After the beep, say: " **Find nearest** coffee shop."

## General Information

The following regulatory statement applies to all Radio Frequency (RF) devices equipped in this vehicle:

This device complies with Part 15 of the FCC Rules and with Industry Canada license-exempt RSS standard(s). Operation is subject to the following two conditions:

1. This device may not cause harmful interference, and
2. This device must accept any interference received, including interference that may cause undesired operation.

**NOTE:** Changes or modifications not expressly approved by the party responsible for compliance could void the user's authority to operate the equipment.

## Additional Information

© 2017 FCA US LLC. All rights reserved. Mopar and Uconnect are registered trademarks and Mopar Owner Connect is a trademark of FCA US LLC. Android is a trademark of Google Inc. SiriusXM and all related marks and logos are trademarks of SiriusXM Radio Inc.

Uconnect System Support:

- U.S. residents visit DriveUconnect.com or call: 1-877-855-8400(24 hours a day 7 days a week)
- Canadian residents visit DriveUconnect.ca or call: 1-800-465-2001(English) or 1-800-387-9983(French)

## CD/DVD DISC MAINTENANCE

To keep a CD/DVD in good condition, take the following precautions:

1. Handle the disc by its edge; avoid touching the surface.
2. If the disc is stained, clean the surface with a soft cloth, wiping from center to edge.
3. Do not apply paper or tape to the disc; avoid scratching the disc.
4. Do not use solvents such as benzene, thinner, cleaners, or anti-static sprays.
5. Store the disc in its case after playing.
6. Do not expose the disc to direct sunlight.
7. Do not store the disc where temperatures may become too high.

**NOTE:** If you experience difficulty in playing a particular disc, it may be damaged, (e.g., scratched, reflective coating removed, a hair, moisture or dew on the disc) oversized, or have protection encoding. Try a known good disc before considering disc player service.

# CUSTOMER ASSISTANCE

## CONTENTS


- SUGGESTIONS FOR OBTAINING SERVICE FOR YOUR VEHICLE . . . . . .324
  - Prepare For The Appointment . . . . . .324
  - Prepare A List . . . . . .324
  - Be Reasonable With Requests . . . . . .324
- IF YOU NEED ASSISTANCE . . . . . .324
  - FCA US LLC Customer Center . . . . . .325
  - FCA Canada Inc. Customer Center. . . . . .325
  - In Mexico Contact . . . . . .325
  - Puerto Rico And U.S. Virgin Islands. . . . . .325
  - Customer Assistance For The Hearing Or Speech Impaired (TDD/TTY) . . . . . .325
  - Service Contract . . . . . .326
- WARRANTY INFORMATION . . . . . .327
- MOPAR PARTS . . . . . .327
- REPORTING SAFETY DEFECTS . . . . . .327
  - In The 50 United States And Washington, D.C. . .327
  - In Canada . . . . . .327
- PUBLICATION ORDER FORMS . . . . . .328

## SUGGESTIONS FOR OBTAINING SERVICE FOR YOUR VEHICLE

### Prepare For The Appointment

If you are having warranty work done, be sure to have the right papers with you. Take your warranty folder. All work to be performed may not be covered by the warranty. Discuss additional charges with the service manager. Keep a maintenance log of your vehicle's service history. This can often provide a clue to the current problem.

### Prepare A List

Make a written list of your vehicle's problems or the specific work you want done. If you've had an accident or work done that is not on your maintenance log, let the service advisor know.

### Be Reasonable With Requests

If you list a number of items and you must have your vehicle by the end of the day, discuss the situation with the service advisor and list the items in order of priority. At many authorized dealers, you may obtain a rental vehicle at a minimal daily charge. If you need a rental, it is advisable to make these arrangements when you call for an appointment.

## IF YOU NEED ASSISTANCE

The manufacturer and its authorized dealer are vitally interested in your satisfaction. We want you to be happy with our products and services.

Warranty service must be done by an authorized dealer. We strongly recommend that you take the vehicle to an authorized dealer. They know your vehicle the best, and are most concerned that you get prompt and high quality service. The manufacturer's authorized dealer have the facilities, factory-trained technicians, special tools, and the latest information to ensure the vehicle is fixed correctly and in a timely manner.

This is why you should always talk to an authorized dealer service manager first. Most matters can be resolved with this process.

- If for some reason you are still not satisfied, talk to the general manager or owner of the authorized dealer. They want to know if you need assistance.
- If an authorized dealer is unable to resolve the concern, you may contact the manufacturer's customer center.

Any communication to the manufacturer's customer center should include the following information:

- Owner's name and address
- Owner's telephone number (home and office)
- Authorized dealer name
- Vehicle Identification Number (VIN)
- Vehicle delivery date and mileage

### FCA US LLC Customer Center

P.O. Box 21–8004

Auburn Hills, MI 48321–8004

Phone: (888) 242-6342

### FCA Canada Inc. Customer Center

P.O. Box 1621

Windsor, Ontario N9A 4H6

Phone: (800) 465-2001 English / (800) 387-9983 French

### In Mexico Contact

Av. Prolongacion Paseo de la Reforma, 1240

Sante Fe C.P. 05109

Mexico, D. F.

In Mexico City: 5081-7568

Outside Mexico City: 1-800-505-1300

### Puerto Rico And U.S. Virgin Islands

Customer Service Chrysler International Services LLC

P.O. Box 191857

San Juan 00919-1857

Tel.: (787) 782-5757

Fax: (787) 782-3345

### Customer Assistance For The Hearing Or Speech Impaired (TDD/TTY)



To assist customers who have hearing difficulties, the manufacturer has installed special TDD (Telecommunication Devices for the Deaf) equipment at its customer center. Any hearing or speech impaired customer, who has access

to a TDD or a conventional teletypewriter (TTY) in the United States, can communicate with the manufacturer by dialing 1-800-380-CHRY.

Canadian residents with hearing difficulties that require assistance can use the special needs relay service offered by Bell Canada. For TTY teletypewriter users, dial 711 and for Voice callers, dial 1-800-855-0511 to connect with a Bell Relay Service operator.

### Service Contract

You may have purchased a service contract for a vehicle to help protect you from the high cost of unexpected repairs after the manufacturer's New Vehicle Limited Warranty expires. The manufacturer stands behind only the manufacturer's service contracts. If you purchased a manufacturer's service contract, you will receive Plan Provisions and an Owner Identification Card in the mail within three weeks of the vehicle delivery date. If you have any questions about the service contract, call the manufacturer's Service Contract National Customer Hotline at 1-800-521-9922 (Canadian residents, call (800) 465-2001 English / (800) 387-9983 French).

The manufacturer will not stand behind any service contract that is not the manufacturer's service contract. It is not responsible for any service contract other than the manufacturer's service contract. If you purchased a service contract that is not a manufacturer's service contract, and you require service after the manufacturer's New Vehicle Limited Warranty expires, please refer to the contract documents, and contact the person listed in those documents.

We appreciate that you have made a major investment when you purchased the vehicle. An authorized dealer has also made a major investment in facilities, tools, and training to assure that you are absolutely delighted with the ownership experience. You will be pleased with their sincere efforts to resolve any warranty issues or related concerns.

**WARNING!**

**Engine exhaust (internal combustion engines only), some of its constituents, and certain vehicle components contain, or emit, chemicals known to the State of California to cause cancer and birth defects, or other reproductive harm. In addition, certain fluids contained in vehicles and certain products of component wear contain, or emit, chemicals known to the State of**

*(Continued)*

**WARNING!** ***(Continued)***

**California to cause cancer and birth defects, or other reproductive harm.**

## WARRANTY INFORMATION

See the Warranty Information Booklet for the terms and provisions of FCA US LLC warranties applicable to this vehicle and market.

## MOPAR PARTS

Mopar fluids, lubricants, parts, and accessories are available from an authorized dealer. They are recommended for your vehicle in order to help keep the vehicle operating at its best.

## REPORTING SAFETY DEFECTS

### In The 50 United States And Washington, D.C.

If you believe that your vehicle has a defect that could cause a crash or cause injury or death, you should immediately inform the National Highway Traffic Safety Administration (NHTSA) in addition to notifying FCA US LLC.

If NHTSA receives similar complaints, it may open an investigation, and if it finds that a safety defect exists in a group of vehicles, it may order a recall and remedy campaign. However, NHTSA cannot become involved in individual problems between you, your authorized dealer or FCA US LLC.

To contact NHTSA, you may call the Vehicle Safety Hotline toll free at 1-888-327-4236 (TTY: 1-800-424-9153); or go to http://www.safercar.gov; or write to: Administrator, NHTSA, 1200 New Jersey Avenue, SE., West Building, Washington, D.C. 20590. You can also obtain other information about motor vehicle safety from http://www.safercar.gov.

### In Canada

If you believe that your vehicle has a safety defect, you should contact the Customer Service Department immediately. Canadian customers who wish to report a safety defect to the Canadian government should contact Transport Canada, Motor Vehicle Defect Investigations and Recalls at 1-800-333-0510 or go to http://www.tc.gc.ca/roadsafety/.

## PUBLICATION ORDER FORMS

To order the following manuals, you may use either the website or the phone numbers listed below. Visa, Mastercard, American Express, and Discover orders are accepted.

### Service Manuals

These comprehensive Service Manuals provide the information that students and professional technicians need in diagnosing/troubleshooting, problem solving, maintaining, servicing, and repairing FCA US LLC vehicles. A complete working knowledge of the vehicle, system, and/or components is written in straightforward language with illustrations, diagrams, and charts.

### Diagnostic Procedure Manuals

Diagnostic Procedure Manuals are filled with diagrams, charts and detailed illustrations. These practical manuals make it easy for students and technicians to find and fix problems on computer-controlled vehicle systems and features. They show exactly how to find and correct problems the first time, using step-by-step troubleshooting and drivability procedures, proven diagnostic tests and a complete list of all tools and equipment.

### Owner's Manuals

These Owner's Manuals have been prepared with the assistance of service and engineering specialists to acquaint you with specific FCA US LLC vehicles. Included are starting, operating, emergency and maintenance procedures as well as specifications, capabilities and safety tips.

Call toll free at:

- **1-800-890-4038 (U.S.)**
- **1-800-387-1143 (Canada)**

Or

Visit us on the Worldwide Web at:

- www.techauthority.com

# INDEX

About Your Brakes . . . . . .290
Adding Engine Coolant (Antifreeze) . . . . . .255
Adding Fuel . . . . . .194
Adding Washer Fluid . . . . . .244
Additives, Fuel . . . . . .293
Air Bag
  Air Bag Operation . . . . . .137
  Air Bag Warning Light . . . . . .134
  Driver Knee Air Bag . . . . . .138
  Enhanced Accident Response . . . . . .235
  Event Data Recorder (EDR) . . . . . .235
  If A Deployment Occurs . . . . . .142
  Knee Impact Bolsters . . . . . .137
  Maintaining Your Air Bag System . . . . . .145
  Side Air Bags . . . . . .138
  Transporting Pets . . . . . .163
Air Bag Light . . . . . .98, 134, 165
Air Bag Maintenance . . . . . .145
Air Cleaner, Engine (Engine Air Cleaner Filter) . . .248
Air Conditioner Maintenance . . . . . .248
Air Conditioning Filter . . . . . .61
Air Conditioning, Operating Tips . . . . . .61
Air Conditioning Refrigerant . . . . . .248, 249
Air Conditioning System . . . . . .60, 248
Air Filter . . . . . .248
Air Pressure, Tires . . . . . .270
Alarm (Security Alarm) . . . . . .21, 100
Alarm System (Security Alarm) . . . . . .21
Alterations/Modifications, Vehicle . . . . . .6
Antifreeze (Engine Coolant) . . . . . .255, 296
  Capacities . . . . . .296
  Disposal . . . . . .257
Anti-Lock Brake System (ABS) . . . . . .112
Anti-Lock Warning Light . . . . . .101, 106
Arming System (Security Alarm) . . . . . .21
Audio Systems (Radio) . . . . . .300
Automatic Dimming Mirror . . . . . .38
Automatic Temperature Control (ATC) . . . . . .60
Automatic Transmission . . . . . .175, 176, 261
  Adding Fluid . . . . . .261
  Autostick . . . . . .181
  Fluid And Filter Changes . . . . . .261
  Fluid Change . . . . . .261
  Fluid Level Check . . . . . .259, 260
  Fluid Type . . . . . .259, 298
  Special Additives . . . . . .260
Autostick . . . . . .181
Auto Up Power Windows . . . . . .63

Battery . . . . . .101, 244

Charging System Light . . . . . .101
Belts, Seat. . . . . .165
Body Mechanism Lubrication. . . . . .249
B-Pillar Location . . . . . .265
Brake Assist System . . . . . .113
Brake Fluid . . . . . .298
Brake, Parking . . . . . .174
Brake System . . . . . .258, 290
Anti-Lock (ABS) . . . . . .290
Fluid Check . . . . . .258
Master Cylinder . . . . . .258
Parking . . . . . .174
Warning Light . . . . . .98
Brake/Transmission Interlock. . . . . .176
Bulb Replacement . . . . . .204
Bulbs, Light . . . . . .167, 204

Camera, Rear . . . . . .192
Capacities, Antifreeze (Engine Coolant). . . . . .296
Capacities, Fluid . . . . . .296
Caps, Filler
Oil (Engine) . . . . . .247
Radiator (Coolant Pressure) . . . . . .256
Carbon Monoxide Warning . . . . . .164, 295
Cargo Area Features . . . . . .70
Cargo Compartment . . . . . .70
Car Washes . . . . . .284
Cellular Phone . . . . . .315
Center High Mounted Stop Light . . . . . .209
Certification Label. . . . . .196
Chains, Tire . . . . . .280
Changing A Flat Tire . . . . . .216, 261
Check Engine Light (Malfunction Indicator Light) .109
Checking Your Vehicle For Safety . . . . . .163
Checks, Safety . . . . . .163
Child Restraint . . . . . .147
Child Restraints
Booster Seats . . . . . .150
Child Restraints . . . . . .147
Child Seat Installation . . . . . .160
How To Stow An Unused ALR Seat Belt . . . . . .157
Infants And Child Restraints . . . . . .148
Lower Anchors And Tethers For Children . . . . .152
Older Children And Child Restraints . . . . . .149
Seating Positions . . . . . .151
Child Safety Locks . . . . . .25
Cigar Lighter . . . . . .85
Clean Air Gasoline . . . . . .293
Cleaning
Wheels . . . . . .279

Climate Control . . . . . .51
Manual . . . . . .51
Compact Disc (CD) Maintenance . . . . . .322
Compact Spare Tire . . . . . .276
Connector
UCI . . . . . .315
Universal Consumer Interface (UCI) . . . . . .315
Contract, Service . . . . . .326
Coolant (Antifreeze) . . . . . .296
Coolant Pressure Cap (Radiator Cap) . . . . . .256
Cooling System . . . . . .254
Adding Coolant (Antifreeze) . . . . . .255
Coolant Level . . . . . .254, 257
Disposal Of Used Coolant . . . . . .257
Drain, Flush, And Refill . . . . . .254
Inspection . . . . . .257
Points To Remember . . . . . .257
Pressure Cap . . . . . .256
Radiator Cap . . . . . .256
Selection Of Coolant (Antifreeze) . . . . . .255
Corrosion Protection . . . . . .283
Cruise Light . . . . . .107, 108
Cupholders . . . . . .83
Customer Assistance . . . . . .324
Daytime Running Lights . . . . . .43
Dealer Service . . . . . .245
Deck Lid, Emergency Release . . . . . .70
Defroster, Windshield . . . . . .165
Diagnostic System, Onboard . . . . . .108
Disposal
Antifreeze (Engine Coolant) . . . . . .257
Door Ajar . . . . . .101
Door Ajar Light . . . . . .101
Door Opener, Garage . . . . . .76
Driver's Seat Back Tilt . . . . . .26
Driving
Through Flowing, Rising, Or Shallow Standing Water . . . . . .200

Electrical Outlet, Auxiliary (Power Outlet) . . . . . .84
Electrical Power Outlets . . . . . .84
Electric Remote Mirrors . . . . . .40
Electronic Brake Control System . . . . . .113
Anti-Lock Brake System . . . . . .112
Brake Assist System . . . . . .113
Electronic Roll Mitigation (ERM) . . . . . .118
Electronic Speed Control (Cruise Control) . . . . . .185
Electronic Stability Control (ESC) . . . . . .115
Electronic Throttle Control Warning Light . . . . . .99

Emergency Deck Lid Release . . . . . .70
Emergency, In Case Of
Jacking . . . . . .216, 261
Jump Starting . . . . . .226
Towing . . . . . .233
Emergency Trunk Release . . . . . .70
Emission Control System Maintenance . . . . . .109
Engine
Air Cleaner . . . . . .248
Break-In Recommendations . . . . . .173
Checking Oil Level . . . . . .244
Compartment . . . . . .243
Cooling . . . . . .254
Exhaust Gas Caution . . . . . .164, 295
Fails To Start . . . . . .172
Flooded, Starting . . . . . .172
Fuel Requirements . . . . . .292
Jump Starting . . . . . .226
Oil . . . . . .246, 296
Oil Filler Cap . . . . . .247
Oil Filter . . . . . .247
Oil Selection . . . . . .246
Oil Synthetic . . . . . .247
Overheating . . . . . .229
Starting . . . . . .171
Enhanced Accident Response Feature . . . . . .235
Ethanol . . . . . .293
Exhaust Gas Caution . . . . . .164, 295
Exhaust System . . . . . .164, 252
Exterior Lights. . . . . .42, 167

Filters
Air Cleaner . . . . . .248
Air Conditioning . . . . . .61
Engine Fuel . . . . . .296
Engine Oil . . . . . .247
Engine Oil Disposal . . . . . .247
Flashers . . . . . .204
Hazard Warning . . . . . .204
Turn Signal . . . . . .107, 167
Flash-To-Pass . . . . . .44
Flooded Engine Starting . . . . . .172
Fluid, Brake . . . . . .298
Fluid Capacities . . . . . .296
Fluid Leaks . . . . . .167
Fluid Level Checks
Brake . . . . . .258
Fluids And Lubricants. . . . . .296
Fog Lights . . . . . .45
Fold And Tumble Rear Seat. . . . . .31

Folding Rear Seat . . . . . .26, 29
Freeing A Stuck Vehicle . . . . . .232
Fuel. . . . . .292
  Adding . . . . . .194
  Additives . . . . . .293
  Capacity . . . . . .296
  Clean Air . . . . . .293
  Ethanol . . . . . .293
  Gasoline . . . . . .292
  Light . . . . . .103
  Materials Added . . . . . .293
  Methanol . . . . . .293
  Octane Rating . . . . . .292
  Requirements . . . . . .292
  Tank Capacity . . . . . .296
Fueling . . . . . .194
Fuses . . . . . .209

Garage Door Opener (HomeLink) . . . . . .76
Gasoline, Clean Air . . . . . .293
Gasoline (Fuel). . . . . .292, 296
Gasoline, Reformulated . . . . . .293
Gear Ranges. . . . . .177
Gear Select Lever Override . . . . . .231
Glass Cleaning . . . . . .287
GVWR. . . . . .196

Hazard
  Driving Through Flowing, Rising, Or Shallow Standing Water . . . . . .200
Hazard Warning Flasher . . . . . .204
Headlights. . . . . .42
  Cleaning . . . . . .284
  Passing . . . . . .44
Head Restraints . . . . . .34
Heated Mirrors. . . . . .41
Hill Start Assist. . . . . .114
Holder, Cup. . . . . .83
HomeLink (Garage Door Opener) . . . . . .76
Hood Prop. . . . . .67
Hood Release. . . . . .67

Immobilizer (Sentry Key) . . . . . .20
Inside Rearview Mirror . . . . . .38
Instrument Cluster . . . . . .88, 107
Instrument Cluster Display
  Instrument Cluster Display . . . . . .89
Instrument Panel Lens Cleaning . . . . . .286
Interior And Instrument Lights . . . . . .45
Interior Appearance Care. . . . . .285

Interior Lighting . . . . . .45
Interior Lights . . . . . .45
Introduction . . . . . .4

Jacking Instructions . . . . . .219
Jack Location . . . . . .217
Jack Operation . . . . . .216, 219, 261
Jump Starting . . . . . .226

Key Fob
  Programming Additional Key Fobs . . . . . .20
Key-In Reminder . . . . . .20
Keyless Enter-N-Go
  Lock The Vehicle's Doors . . . . . .308
  Passive Entry Programming . . . . . .308
  Unlock Liftgate . . . . . .308
Key, Replacement . . . . . .20
Keys . . . . . .16
Key, Sentry (Immobilizer) . . . . . .20

Lap/Shoulder Belts . . . . . .126
Latches . . . . . .167
  Hood . . . . . .67
Lead Free Gasoline . . . . . .292
Leaks, Fluid . . . . . .167
Life Of Tires . . . . . .273
Liftgate . . . . . .69
Liftgate (Sedan) . . . . . .69
Light Bulbs . . . . . .167, 204
Lighter, Cigar . . . . . .85
Lights . . . . . .42, 167
  Air Bag . . . . . .98, 134, 165
  Brake Assist Warning . . . . . .116
  Brake Warning . . . . . .98
  Bulb Replacement . . . . . .204
  Center Mounted Stop . . . . . .209
  Cruise . . . . . .107, 108
  Engine Temperature Warning . . . . . .100
  Exterior . . . . . .167
  Interior . . . . . .45
  Low Fuel . . . . . .103
  Malfunction Indicator (Check Engine) . . . . . .103
  Park . . . . . .44, 107
  Passing . . . . . .44
  Seat Belt Reminder . . . . . .100
  Security Alarm . . . . . .21, 100
  Service . . . . . .204
  Tire Pressure Monitoring (TPMS) . . . . . .104
  Traction Control . . . . . .116
  Turn Signal . . . . . .107, 167

Vanity Mirror . . . . . .41
Warning (Instrument Cluster Description) . .100, 107
Loading Vehicle . . . . . .196
Tires . . . . . .265
Locks
Child Protection . . . . . .25
Power Door . . . . . .23
Lubrication, Body . . . . . .249
Lug Nuts . . . . . .291

Maintenance Free Battery. . . . . .244
Maintenance Schedule . . . . . .239
Malfunction Indicator Light (Check Engine) . .103, 109
Manual, Service . . . . . .328
Master Cylinder (Brakes) . . . . . .258
Memory Feature (Memory Seat). . . . . .26
Memory Seat . . . . . .26
Memory Seats And Radio . . . . . .26
Methanol . . . . . .293
Mirrors . . . . . .38
Automatic Dimming . . . . . .38
Electric Powered . . . . . .40
Electric Remote . . . . . .40
Heated . . . . . .41
Rearview . . . . . .38
Vanity . . . . . .41
Modifications/Alterations, Vehicle . . . . . .6
Monitor, Tire Pressure System . . . . . .119
Mopar Parts . . . . . .327
Multi-Function Control Lever . . . . . .42

New Vehicle Break-In Period . . . . . .173

Occupant Restraints . . . . . .123
Octane Rating, Gasoline (Fuel) . . . . . .292
Oil Change Indicator . . . . . .91
Oil Change Indicator, Reset . . . . . .91
Oil, Engine . . . . . .246, 296
Capacity . . . . . .296
Change Interval . . . . . .246
Checking . . . . . .244
Disposal . . . . . .247
Filter . . . . . .247
Filter Disposal . . . . . .247
Identification Logo . . . . . .246
Materials Added To . . . . . .247
Pressure Warning Light . . . . . .101
Recommendation . . . . . .246, 296
Synthetic . . . . . .247
Viscosity . . . . . .247

Oil Filter, Change . . . . . .247
Oil Filter, Selection . . . . . .247
Oil Pressure Light . . . . . .101
Onboard Diagnostic System . . . . . .108
Opener, Garage Door (HomeLink) . . . . . .76
Operating Precautions . . . . . .108
Operator Manual (Owner's Manual) . . . . . .5
Overheating, Engine . . . . . .229
Owner's Manual (Operator Manual) . . . . . .5, 328

Paint Care . . . . . .283
Parking Brake . . . . . .174
ParkSense System, Rear . . . . . .188
Personalized Menu Bar . . . . . .300
Pets . . . . . .163
Placard, Tire And Loading Information . . . . . .265
Power
  Brakes . . . . . .290
  Door Locks . . . . . .23
  Mirrors . . . . . .40
  Seats . . . . . .30
  Sunroof . . . . . .64
Power Steering Fluid . . . . . .298
Pregnant Women And Seat Belts . . . . . .130
Preparation For Jacking . . . . . .218
Pretensioners
  Seat Belts . . . . . .131

Radial Ply Tires . . . . . .271
Radiator Cap (Coolant Pressure Cap) . . . . . .256
Radio Frequency
  General Information . . . . . .18, 21
Radio Operation . . . . . .315
Rear Camera . . . . . .192
Rear Liftgate (Sedan) . . . . . .69
Rear Seat, Folding . . . . . .26, 29
Reclining Rear Seats . . . . . .30
Recreational Towing . . . . . .198
Reformulated Gasoline . . . . . .293
Refrigerant . . . . . .249
Release, Hood . . . . . .67
Reminder, Seat Belt . . . . . .125
Remote Keyless Entry
  Programming Additional Key Fobs . . . . . .20
Remote Sound System (Radio) Controls . . . . . .314
Remote Starting
  Uconnect Customer Programmable Features . . .310
  Uconnect Settings . . . . . .310
Replacement Bulbs . . . . . .204
Replacement Keys . . . . . .20

Replacement Tires . . . . . .274
Reporting Safety Defects . . . . . .327
Restraint, Head . . . . . .34
Restraints, Child . . . . . .147
Rotation, Tires . . . . . .281

Safety Checks Inside Vehicle . . . . . .165
Safety Checks Outside Vehicle . . . . . .167
Safety Defects, Reporting . . . . . .327
Safety, Exhaust Gas . . . . . .164
Safety Information, Tire . . . . . .261
Safety Tips . . . . . .163
Schedule, Maintenance . . . . . .239
Seat Belt
  Automatic Locking Retractor (ALR) . . . . . .131
  Energy Management Feature . . . . . .131
  Lap/Shoulder Belts . . . . . .126
  Lap/Shoulder Belt Untwisting . . . . . .130
  Pregnant Women . . . . . .130
  Seat Belt Pretensioner . . . . . .131
  Seat Belt Reminder . . . . . .125
Seat Belt Maintenance . . . . . .285
Seat Belt Reminder . . . . . .125
Seat Belts . . . . . .124, 165
  Child Restraint . . . . . .147
  Front Seat . . . . . .124, 126, 128
  Inspection . . . . . .165
  Operating Instructions . . . . . .128
  Pregnant Women . . . . . .130
  Pretensioners . . . . . .131
  Rear Seat . . . . . .126
  Reminder . . . . . .100
  Untwisting Procedure . . . . . .130
Seats . . . . . .26
  Adjustment . . . . . .26
  Easy Entry . . . . . .26
  Fold And Tumble Rear . . . . . .31
  Heated . . . . . .26
  Memory . . . . . .26
  Power . . . . . .30
  Rear Folding . . . . . .26, 29
  Reclining . . . . . .28
  Seatback Release . . . . . .26
  Tilting . . . . . .26
  Vented . . . . . .26
  Ventilated . . . . . .26
Security Alarm . . . . . .21, 100
Sentry Key
  Key Programming . . . . . .20
Sentry Key (Immobilizer) . . . . . .20

Service Assistance . . . . . .324
Service Contract . . . . . .326
Service Manuals . . . . . .328
Shift Lever Override . . . . . .231
Shoulder Belts . . . . . .126
Signals, Turn . . . . . .107, 167
Snow Chains (Tire Chains). . . . . .280
Snow Tires . . . . . .276
Spare Tire . . . . . .276, 278
Spark Plugs . . . . . .296
Speed Control
  Accel/Decel . . . . . .187
  Cancel . . . . . .188
Speed Control (Cruise Control). . . . . .185
Starting . . . . . .171
  Automatic Transmission . . . . . .171
  Cold Weather . . . . . .171
  Engine Fails To Start . . . . . .172
Steering. . . . . .37
  Tilt Column . . . . . .37
  Wheel, Tilt . . . . . .37
Steering Wheel Audio Controls . . . . . .314
Steering Wheel Mounted Sound System Controls. .314
Storage . . . . . .283
Storage, Vehicle . . . . . .61
Stuck, Freeing. . . . . .232
Sun Roof . . . . . .64
Sun Visor Extension . . . . . .42
Synthetic Engine Oil . . . . . .247

Telescoping Steering Column. . . . . .37
Temperature Control, Automatic (ATC). . . . . .60
Tilt Steering Column. . . . . .37
Tire And Loading Information Placard . . . . . .265
Tire Markings. . . . . .261
Tires . . . . . .167, 269, 276, 281
  Aging (Life Of Tires) . . . . . .273
  Air Pressure . . . . . .269
  Chains . . . . . .280
  Changing . . . . . .216, 261
  Compact Spare . . . . . .276
  General Information . . . . . .269, 276
  High Speed . . . . . .271
  Inflation Pressures . . . . . .270
  Jacking . . . . . .216, 261
  Life Of Tires . . . . . .273
  Load Capacity . . . . . .265, 266
  Pressure Monitor System (TPMS) . . . . . .119
  Pressure Warning Light . . . . . .104
  Quality Grading . . . . . .281

Radial . . . . . .271
Replacement . . . . . .274
Rotation . . . . . .281
Safety . . . . . .261, 269
Snow Tires . . . . . .276
Spare Tire . . . . . .276, 278
Spinning . . . . . .272
Tread Wear Indicators . . . . . .272
Wheel Nut Torque . . . . . .291
Tire Safety Information . . . . . .261
To Open Hood . . . . . .67
Towing . . . . . .198
Disabled Vehicle . . . . . .233
Recreational . . . . . .198
Towing Vehicle Behind A Motorhome . . . . . .198
Traction . . . . . .199
Traction Control . . . . . .114
Trailer Towing . . . . . .198
Transmission
Automatic . . . . . .175, 176, 259
Maintenance . . . . . .259
Transmitter, Garage Door Opener (HomeLink) . . . .76
Transporting Pets . . . . . .163
Tread Wear Indicators . . . . . .272
Trunk Lid (Deck Lid) . . . . . .70
Trunk Release, Emergency . . . . . .70
Turn Signals . . . . . .107

UCI Connector . . . . . .315
Uconnect
Customer Programmable Features . . . . . .310
Uconnect Settings . . . . . .310
Uconnect Settings
Customer Programmable Features . . . . . .308
Passive Entry Programming . . . . . .308
Uconnect Settings . . . . . .308
Uconnect Voice Command . . . . . .317
Uniform Tire Quality Grades . . . . . .281
Universal Consumer Interface (UCI) Connector . . .315
Universal Transmitter . . . . . .76
Unleaded Gasoline . . . . . .292
Untwisting Procedure, Seat Belt . . . . . .130

Vanity Mirrors . . . . . .41
Vehicle Identification Number (VIN) . . . . . .290
Vehicle Loading . . . . . .196, 266
Vehicle Modifications/Alterations . . . . . .6
Vehicle Security Alarm (Security Alarm) . . . . . .21
Vehicle Storage . . . . . .61, 283

Voice Recognition System (VR) . . . . . .317

Warning Lights (Instrument Cluster Description) . .102
Warnings And Cautions . . . . . .6
Warranty Information . . . . . .327
Washer
  Adding Fluid . . . . . .244
Washers, Windshield . . . . . .48
Washing Vehicle . . . . . .284
Water
  Driving Through . . . . . .200
Wheel And Wheel Trim . . . . . .279
Wheel And Wheel Trim Care . . . . . .279
Wind Buffeting . . . . . .64, 66
Window Fogging . . . . . .61
Windows . . . . . .62
Windshield Defroster . . . . . .165
Windshield Washers . . . . . .48
Windshield Wiper Blades . . . . . .249
Windshield Wipers . . . . . .48
Wiper Blade Replacement . . . . . .249

## INSTALLATION OF RADIO TRANSMITTING EQUIPMENT

Special design considerations are incorporated into this vehicle's electronic system to provide immunity to radio frequency signals. Mobile two-way radios and telephone equipment must be installed properly by trained personnel. The following must be observed during installation.

The positive power connection should be made directly to the battery and fused as close to the battery as possible. The negative power connection should be made to body sheet metal adjacent to the negative battery connection. This connection should not be fused.

Antennas for two-way radios should be mounted on the roof or the rear area of the vehicle. Care should be used in mounting antennas with magnet bases. Magnets may affect the accuracy or operation of the compass on vehicles so equipped.

The antenna cable should be as short as practical and routed away from the vehicle wiring when possible. Use only fully shielded coaxial cable.

Carefully match the antenna and cable to the radio to ensure a low Standing Wave Ratio (SWR).

Mobile radio equipment with output power greater than normal may require special precautions.

All installations should be checked for possible interference between the communications equipment and the vehicle's electronic systems.

18BG-126-AA
©2017 FCA US LLC. All Rights Reserved.
FIAT is a registered trademark of FCA Group
Marketing S.p.A., used under license by FCA US LLC.

First Edition
Printed in U.S.A.