ZAFIRA

Owner's Manual

Contents

Introduction 2
In brief 6
Keys, doors and windows 20
Seats, restraints 36
Storage 62
Instruments and controls 82
Lighting 114
Infotainment system 124
Climate control 173
Driving and operating 181
Vehicle care 238
Service and maintenance 284
Technical data 287
Customer information 298
Index 308

Introduction

Fuel	Designation			
Engine oil	Grade			
	Viscosity			
Tyre pressure		Tyre size	Front	Rear
	Summer tyres			
	Winter tyres			
Weights				
	Gross vehicle weight rating			
	- Kerb weight, basic model			
	= Loading			

Vehicle specific data

Please enter your vehicle's data on the previous page to keep it easily accessible. This information is available in the sections "Service and maintenance" and "Technical data" as well as on the identification plate.

Introduction

Your vehicle is a designed combination of advanced technology, safety, environmental friendliness and economy.

This Owner's Manual provides you with all the necessary information to enable you to drive your vehicle safely and efficiently.

Make sure your passengers are aware of the possible risk of accident and injury which may result from improper use of the vehicle.

You must always comply with the specific laws and regulations of the country that you are in. These laws may differ from the information in this Owner's Manual.

Disregarding the description given in this manual may affect your warranty.

When this Owner's Manual refers to a workshop visit, we recommend your Opel Service Partner. For gas vehicles we recommend an Opel Repairer authorised for servicing gas vehicles.

All Opel Service Partners provide first-class service at reasonable prices. Experienced mechanics trained by Opel work according to specific Opel instructions.

The customer literature pack should always be kept ready to hand in the vehicle.

Using this manual

- This manual describes all options and features available for this model. **Certain descriptions, including those for display and menu functions, may not apply to your vehicle due to model variant, country specifications, special equipment or accessories.**
- The "In brief" section will give you an initial overview.
- The table of contents at the beginning of this manual and within each section shows where the information is located.
- The index will enable you to search for specific information.
- This Owner's Manual depicts left-hand drive vehicles. Operation is similar for right-hand drive vehicles.
- The Owner's Manual uses the engine identifier code. The corresponding sales designation and engineering code can be found in the section "Technical data".
- Directional data, e.g. left or right, or front or back, always relate to the direction of travel.
- Displays may not support your specific language.
- Display messages and interior labelling are written in **bold** letters.

Danger, Warnings and Cautions

⚠Danger

Text marked ⚠**Danger** provides information on risk of fatal injury. Disregarding this information may endanger life.

⚠Warning

Text marked ⚠**Warning** provides information on risk of accident or injury. Disregarding this information may lead to injury.

Caution

Text marked **Caution** provides information on possible damage to the vehicle. Disregarding this information may lead to vehicle damage.

Symbols

Page references are indicated with ⇨. ⇨ means "see page".

Page references and index entries refer to the indented headings given in the section table of content.

We wish you many hours of pleasurable driving.

Your Opel Team

In brief

Initial drive information

Vehicle unlocking

Press 🔓 to unlock the doors and load compartment. Open the doors by pulling the handles. To open the tailgate, push the touchpad switch below the handle.

Radio remote control ⇨ 21, Central locking system ⇨ 22, Load compartment ⇨ 25.

Seat adjustment

Longitudinal adjustment

Pull handle, slide seat, release handle. Try to move the seat back and forth to ensure that the seat is locked in place.

Seat position ⇨ 38, Manual seat adjustment ⇨ 39.

Backrest inclination

Pull lever, adjust inclination and release lever. Allow the seat to engage audibly.

Seat position ⇨ 38, Manual seat adjustment ⇨ 39.

Seat height

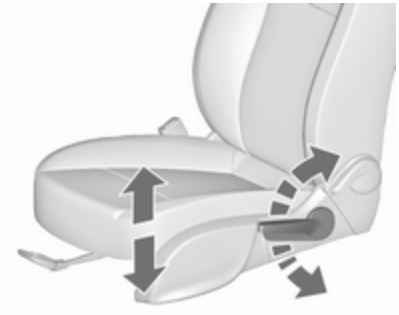

Lever pumping motion

up : seat higher
down : seat lower

Seat position ⇨ 38, Manual seat adjustment ⇨ 39.

Seat inclination

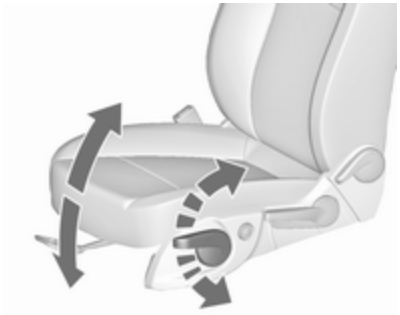

Lever pumping motion

up : front end higher
down : front end lower

Seat position ⇨ 38, Manual seat adjustment ⇨ 39.

Head restraint adjustment

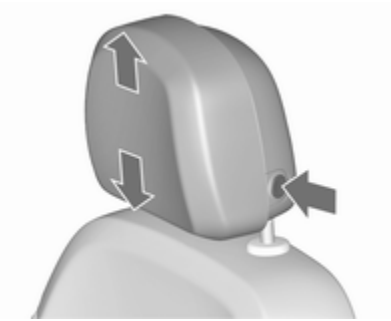

Press release button, adjust height, engage.

Head restraints ⇨ 36.

Seat belt

Pull out the seat belt and fasten in belt buckle. The seat belt must not be twisted and must fit close against the body. The backrest must not be tilted back too far (maximum approx. 25 °).

To unfasten belt, press red button on belt buckle.

Seat position ⇨ 38, Seat belts ⇨ 45, Airbag system ⇨ 49.

Mirror adjustment

Interior mirror

To adjust the mirror, move the mirror housing in the desired direction.

Manual anti-dazzle interior mirror ⇨ 30, Automatic anti-dazzle interior mirror ⇨ 30.

Exterior mirrors

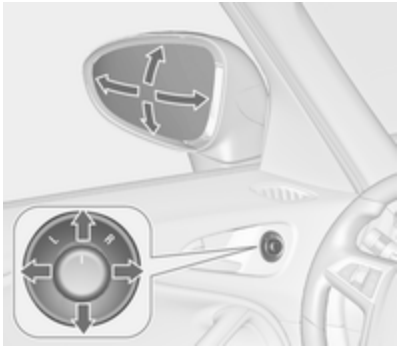

Select the relevant exterior mirror by turning the control to the left **(L)** or right **(R)**. Adjust respective mirror by tilting the four-way control.

Convex exterior mirrors ⇨ 29, Electric adjustment ⇨ 29, Folding exterior mirrors ⇨ 29, Heated exterior mirrors ⇨ 30.

Steering wheel adjustment

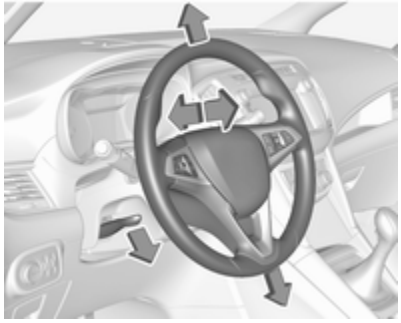

Unlock the lever, adjust the steering wheel, then engage the lever and ensure it is fully locked.

Do not adjust the steering wheel unless the vehicle is stationary and the steering wheel lock has been released.

Airbag system ⇨ 49, Ignition positions ⇨ 182.

Instrument panel overview

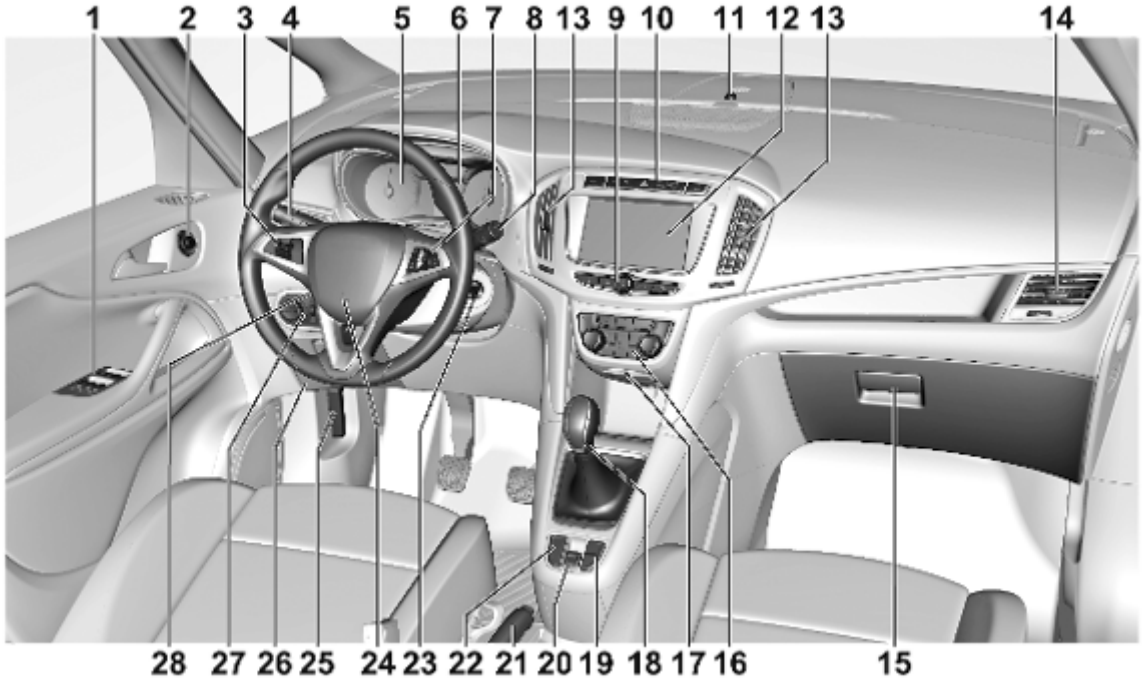

1 Power windows 31
2 Exterior mirrors 29
3 Cruise control 203
Speed limiter 204
Adaptive cruise control 206
Forward collision alert 212
4 Turn and lane-change signals, headlight flash, low beam and high beam, high beam assist 119
Exit lighting 122
Parking lights 120
Buttons for Driver Information Centre 101
5 Instruments 89
6 Driver Information Centre 101
7 Steering wheel controls 83
8 Windscreen wiper, windscreen washer system, headlight washer system, rear wiper, rear washer system 84
9 Controls for Info-Display operation 105
10 Central locking system 22
Hazard warning flashers 119
Sport mode 201
Tour mode 201
Control indicator for airbag deactivation 96
11 Anti-theft alarm system status LED 26
12 Info-Display 105
13 Centre air vents 179
14 Side air vents 179
15 Glovebox 62
16 Climate control system 173
17 USB input 10
Power outlet 87
18 Selector lever, manual transmission 196
Automatic transmission 192
19 Traction Control system 199
Electronic Stability Control . 200
Lane departure warning 227
20 Electric parking brake 197
21 Manual parking brake 197
22 Parking assist systems 218
Eco button for stop-start system 185
23 Ignition switch with steering wheel lock 182
24 Horn 84
Driver airbag 53
25 Bonnet release lever 240
26 Fuse box 258
Storage compartment 64
27 Light switch 114
Headlight range adjustment 116
Front fog lights 119
Rear fog light 120
Instrument illumination 121
28 Steering wheel adjustment . . 83

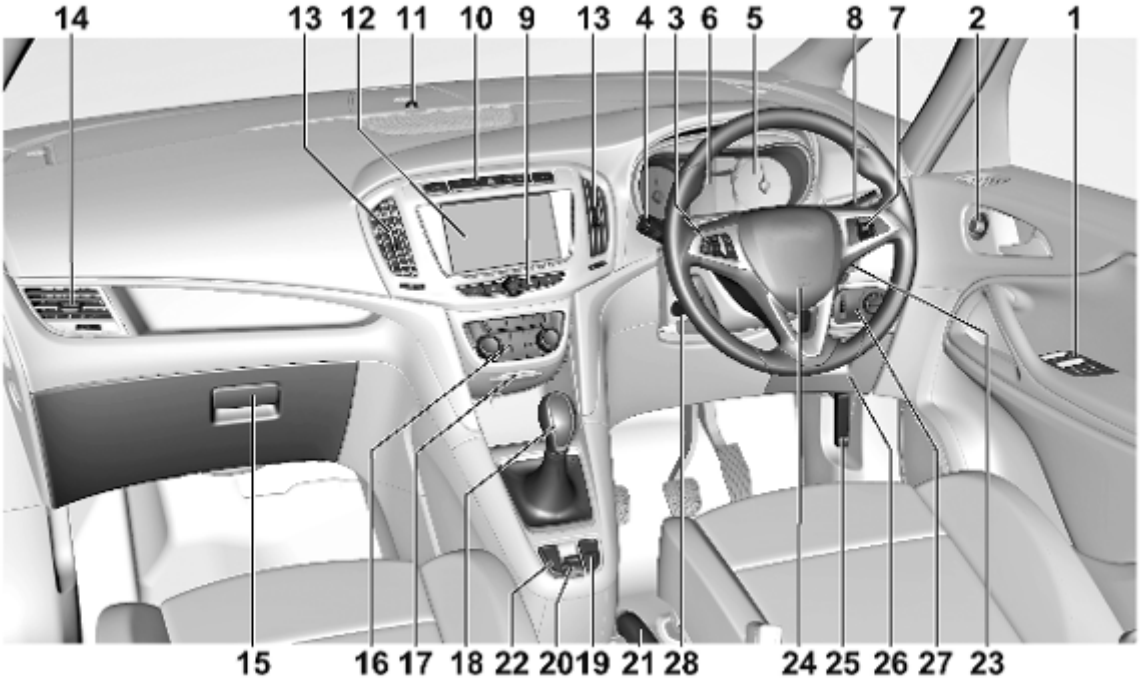
14
13
12
11
10
9
13
4
3
6
5
8
7
2
1
15
16
17
18
22
20
19
21
28
24
25
26
27
23

Exterior lighting

AUTO : automatic light control switches automatically between daytime running light and headlight
: sidelights
: headlights

Automatic light control ⇨ 115.

Fog lights

Press light switch:

: front fog lights
: rear fog light

Lighting ⇨ 114.

Headlight flash, high beam and low beam

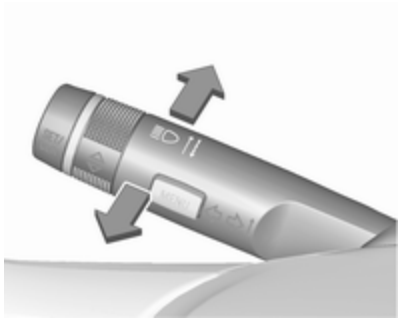

headlight flash : pull lever
high beam : push lever
low beam : push or pull lever

High beam ⇨ 115.

Headlight flash ⇨ 116.

LED headlights ⇨ 118.

High beam assist ⇨ 118.

Turn and lane-change signals

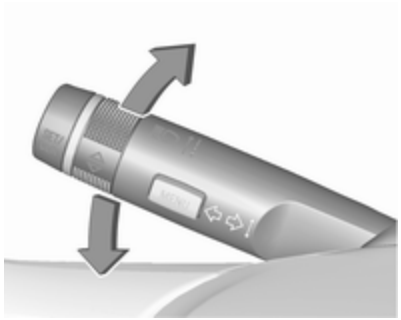

lever up : right turn signal
lever down : left turn signal

Turn and lane-change signals ⇨ 119, Parking lights ⇨ 120.

Hazard warning flashers

Operated by pressing ⚠.

Hazard warning flashers ⇨ 119.

Horn

Press 📯.

Washer and wiper systems

Windscreen wiper

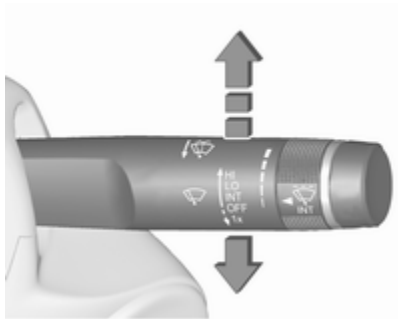

HI : fast
LO : slow
INT : interval wiping or automatic wiping with rain sensor
OFF : off

For a single wipe when the windscreen wiper is off, press the lever down to position **1x**.

Windscreen wiper ⇨ 84, Wiper blade replacement ⇨ 246.

Windscreen washer

Pull lever.

Windscreen washer system ⇨ 84, Washer fluid ⇨ 244.

Rear window wiper

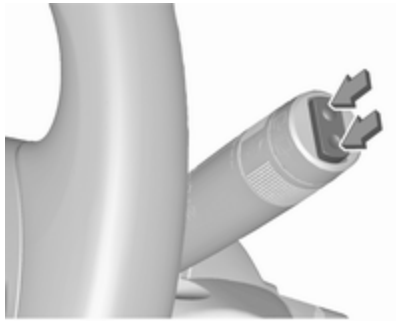

Press the rocker switch to activate the rear window wiper:

upper switch : continuous operation

lower switch : intermittent operation

middle position : off

Rear window washer

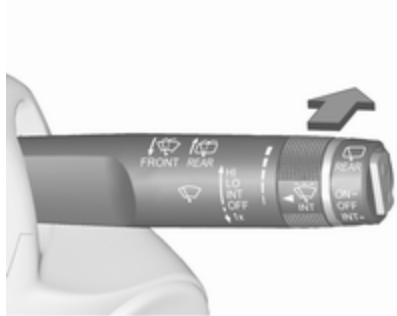

Push lever.

Washer fluid is sprayed on the rear window and the wiper wipes a few times.

Rear window wiper/washer ⇨ 85.

Climate control

Heated rear window, heated exterior mirrors

The heating is operated by pressing ⊞.

Heated rear window ⇨ 33.

Demisting and defrosting the windows

Press ⊞.

Set the temperature control to the highest level.

Heated rear window ⊞ on.

Climate control system ⇨ 173.

Transmission

Manual transmission

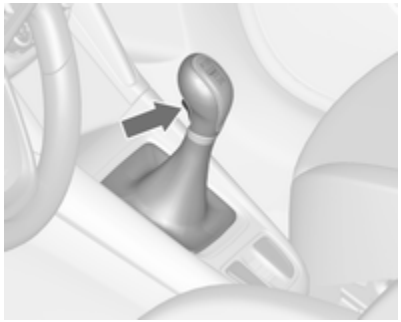

Reverse: with the vehicle stationary, depress clutch pedal, press the release button on the selector lever and engage the gear.

Manual transmission ⇨ 196.

Automatic transmission

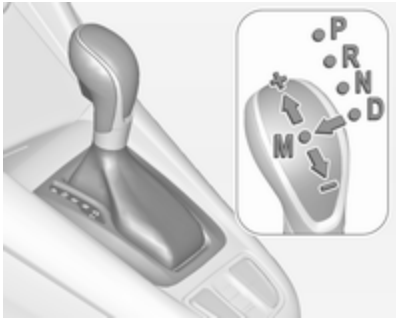

P : park position
R : reverse
N : neutral mode
D : automatic mode
M : manual mode
+ : upshift
– : downshift

The selector lever can only be moved out of **P** when the ignition is on and the brake pedal is applied. To engage **P** or **R**, press the release button.

Automatic transmission ⇨ 192.

Starting off

Check before starting off

- Tyre pressure and condition ⇨ 262, ⇨ 297.
- Engine oil level and fluid levels ⇨ 241.
- All windows, mirrors, exterior lighting and number plates are free from dirt, snow and ice and are operational.
- Proper position of mirrors, seats, and seat belts ⇨ 29, ⇨ 38, ⇨ 46.
- Brake function at low speed, particularly if the brakes are wet.

Starting the engine

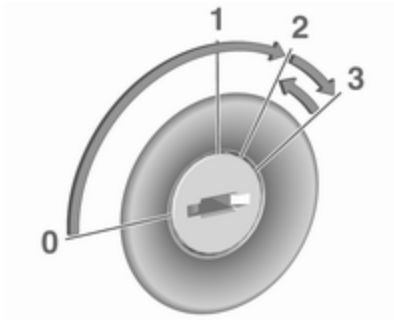

- Turn key to position **1**.
- Move the steering wheel slightly to release the steering wheel lock.
- Operate clutch and brake pedal.
- Automatic transmission: operate brake pedal and move selector lever to **P** or **N**.
- Do not operate accelerator pedal.

- Diesel engines: turn the key to position **2** for preheating and wait until control indicator extinguishes.
- Turn key to position **3** and release.

Starting the engine ⇨ 183.

To turn the key back from position **2** to **1** or **0**, first push the key all the way in towards the steering column.

Stop-start system

If the vehicle is at a low speed or at a standstill and certain conditions are fulfilled, activate an Autostop as follows:

- Depress the clutch pedal.
- Engage neutral gear.
- Release the clutch pedal.

An Autostop is indicated by the needle at the **AUTOSTOP** position in the tachometer.

To restart the engine, depress the clutch pedal again. A restart is indicated by the needle at the idle speed position in the tachometer.

Stop-start system ⇨ 185.

Parking

⚠ Warning

- Do not park the vehicle on an easily ignitable surface. The high temperature of the exhaust system could ignite the surface.
- Always apply the parking brake. Activate the manual parking brake without pressing the release button. Apply as firmly as possible on a downhill slope or uphill slope. Depress brake pedal at the same time to reduce operating force.

  For vehicles with electric parking brake, pull switch Ⓟ for approx. one second.

  The electric parking brake is applied when control indicator Ⓟ illuminates ⇨ 96.
- Switch off the engine.
- If the vehicle is on a level surface or uphill slope, engage first gear or set the selector lever to position **P** before removing the ignition key. On an uphill slope, turn the front wheels away from the kerb.

  If the vehicle is on a downhill slope, engage reverse gear or set the selector lever to position **P** before removing the ignition key. Turn the front wheels towards the kerb.
- Close the windows.
- Remove the ignition key from the ignition switch. Turn the steering wheel until the steering wheel lock is felt to engage.

  For vehicles with automatic transmission, the key can only be removed when the selector lever is in position **P**.

- Lock the vehicle by pressing 🔒 on the radio remote control.
- Activate the anti-theft alarm system ⇨ 26.
- The engine cooling fans may run after the engine has been switched off ⇨ 240.

Caution

After running at high engine speeds or with high engine loads, operate the engine briefly at a low load or run in neutral for approx. 30 seconds before switching off, in order to protect the turbocharger.

Keys, locks ⇨ 20, Laying the vehicle up for a long period of time ⇨ 239.

Keys, doors and windows

Keys, locks **20**
Keys 20
Radio remote control 21
Memorised settings 22
Central locking system 22
Automatic locking 24
Child locks 25
Doors **25**
Load compartment 25
Vehicle security **26**
Anti-theft locking system 26
Anti-theft alarm system 26
Immobiliser 28
Exterior mirrors **29**
Convex shape 29
Electric adjustment 29
Folding mirrors 29
Heated mirrors 30
Interior mirrors **30**
Manual anti-dazzle 30
Automatic anti-dazzle 30
Windows **31**
Windscreen 31
Manual windows 31
Power windows 31
Heated rear window 33
Sun visors 33
Roller blinds 34
Roof **34**
Glass panel 34

Keys, locks

Keys

Caution
Do not attach heavy or bulky items to the ignition key.

Replacement keys

The key number is specified on a detachable tag.

The key number must be quoted when ordering replacement keys as it is a component of the immobiliser system.

Locks ⇨ 280.

The code number of the adapter for the locking wheel nuts is specified on a card. It must be quoted when ordering a replacement adapter.

Wheel changing ⇨ 270.

Key with foldaway key section

Press button to extend. To fold the key, first press the button.

Radio remote control

Used to operate:

- central locking system
- anti-theft locking system
- anti-theft alarm system
- power windows

The radio remote control has a range of approx. 20 metres. It can be restricted by external influences. The hazard warning flashers confirm operation.

Handle with care, protect from moisture and high temperatures and avoid unnecessary operation.

Fault

If the central locking system cannot be operated with the radio remote control, it may be due to the following:

- The range is exceeded.
- The battery voltage is too low.
- Frequent, repeated operation of the radio remote control while not in range, which will require re-synchronisation.
- Overload of the central locking system by operating at frequent intervals, the power supply is interrupted for a short time.
- Interference from higher-power radio waves from other sources.

Unlocking ⇨ 22.

Basic settings

Some settings can be changed in the Settings menu in the Info-Display. Vehicle personalisation ⇨ 108.

Radio remote control battery replacement

Replace the battery as soon as the range reduces.

Batteries do not belong in household waste. They must be disposed of at an appropriate recycling collection point.

Key with foldaway key section

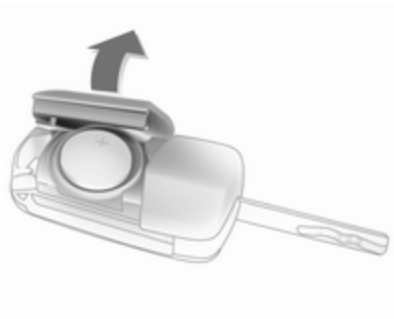

Extend the key and open the unit. Replace the battery (battery type CR 2032), paying attention to the installation position. Close the unit and synchronise.

Key with fixed key section

Have the battery replaced by a workshop.

Memorised settings

Whenever the ignition is switched off, some functions of the following settings may be automatically memorised by the remote control unit:

- lighting
- Infotainment system
- central locking system
- Sport mode settings
- comfort settings

The saved settings are automatically used the next time the ignition is switched on with the memorised key of the remote control unit ⇨ 182.

A precondition is that **Personalisation by Driver** is activated in the personal settings of the Info-Display. This must be set for each remote control unit which is used. The status change is available only after locking and unlocking the vehicle.

Vehicle personalisation ⇨ 108.

Central locking system

Unlocks and locks doors, load compartment and fuel filler flap.

A pull on an interior door handle unlocks the respective door. Pulling the handle once more opens the door.

Note
In the event of an accident in which airbags or belt pretensioners are deployed, the vehicle is automatically unlocked.

Note
A short time after unlocking with the remote control, the doors are relocked automatically if no door has been opened.

Unlocking

Press 🔓.

Two settings are selectable:

- To unlock only the driver's door and fuel filler flap, press 🔓 once. To unlock all doors and load compartment, press 🔓 twice.
- Press 🔓 once to unlock all doors, load compartment and fuel filler flap.

The setting can be changed in the Settings menu in the Info Display.

Vehicle personalisation ⇨ 108.

The setting can be saved for the key being used.

Memorised settings ⇨ 22.

Locking

Close doors, load compartment and fuel filler flap.

Press 🔒.

If the driver's door is not closed properly, the central locking system will not work.

Unlocking and opening the tailgate

Press 🔓 when the ignition is off. The tailgate is released to be unlocked and opened by pushing the touchpad switch below the handle.

Central locking buttons

Locks or unlocks all doors, the load compartment and fuel filler flap from the passenger compartment.

Press 🔒 to lock.

Press 🔓 to unlock.

Fault in radio remote control system

Unlocking

Manually unlock the driver's door by turning the key in the lock. Switch on the ignition and press 🔓 to unlock all doors, load compartment and fuel filler flap. By switching on the ignition, the anti-theft locking system is deactivated.

Locking

Manually lock the driver's door by turning the key in the lock.

Fault in central locking system

Unlocking

Manually unlock the driver's door by turning the key in the lock. The other doors can be opened by pulling the interior handle twice. The load compartment and fuel filler flap cannot be opened. To deactivate the anti-theft locking system, switch on the ignition ⇨ 26.

Locking

Push inside locking knob of all doors except driver's door. Then close the driver's door and lock it from the outside with the key. The fuel filler flap and tailgate cannot be locked.

Automatic locking

This security feature can be configured to automatically lock all doors, load compartment and fuel filler flap as soon as a certain speed is exceeded.

Settings can be changed in the Settings menu in the Info-Display. Vehicle personalisation ⇨ 108.

The settings can be saved for the key being used ⇨ 22.

Child locks

⚠ Warning

Use the child locks whenever children are occupying the rear seats.

Using a key or suitable screwdriver, turn the child lock in the rear door to the horizontal position. The door cannot be opened from the inside. For deactivation turn the child lock to the vertical position.

Doors

Load compartment

Tailgate

Opening

After unlocking, push the touchpad switch under the tailgate moulding and open the tailgate.

Central locking system ⇨ 22.

Closing

Use the interior handle.

Do not push the touchpad switch under the tailgate moulding whilst closing as this will unlock the tailgate again.

Central locking system ⇨ 22.

General hints for operating tailgate

⚠ Danger

Do not drive with the tailgate open or ajar, e.g. when transporting bulky objects, since toxic exhaust gases, which cannot be seen or smelled, could enter the vehicle. This can cause unconsciousness and even death.

Caution

Before opening the tailgate, check overhead obstructions, e.g. a garage door, to avoid damage to the tailgate. Always check the moving area above and behind the tailgate.

Note
The installation of certain heavy accessories onto the tailgate may affect its ability to remain open.

Vehicle security

Anti-theft locking system

⚠ Warning

Do not use the system if there are people in the vehicle! The doors cannot be unlocked from the inside.

The system deadlocks all the doors. All doors must be closed otherwise the system cannot be activated.

Unlocking the vehicle disables the mechanical anti-theft locking system. This is not possible with the central locking button.

Activating

Press 🔒 on the radio remote control twice within 5 seconds.

Anti-theft alarm system

The anti-theft alarm system is combined with the anti-theft locking system.

It monitors:

- doors, tailgate, bonnet
- passenger compartment including adjoining load compartment

- vehicle inclination, e.g. if it is raised
- ignition

Activation

- Self-activated 30 seconds after locking the vehicle (initialisation of the system).

- Directly by pressing on the radio remote control once more after locking.

Note
Changes to the vehicle interior such as the use of seat covers, and open windows or sunroof, could impair the function of passenger compartment monitoring.

Activation without monitoring of passenger compartment and vehicle inclination

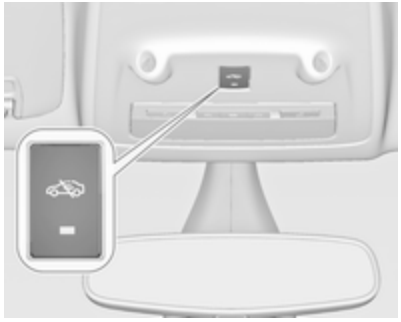

Switch off the monitoring of passenger compartment and vehicle inclination when animals are being left in the vehicle, because of high volume ultrasonic signals or movements triggering the alarm. Also switch off when the vehicle is on a ferry or train.

1. Close tailgate, bonnet and windows.
2. Press . LED in the button illuminates for a maximum of ten minutes.
3. Close doors.
4. Activate the anti-theft alarm system.

Status message is displayed in the Driver Information Centre.

Status LED

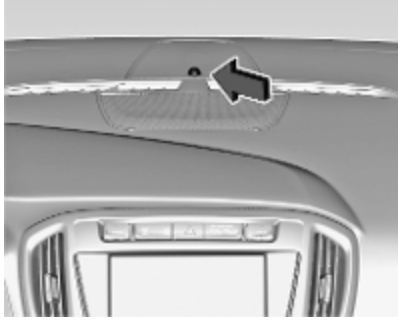

Status LED is integrated into the sensor on top of the instrument panel.

Status during the first 30 seconds of anti-theft alarm system activation:

LED illuminates	:	test, arming delay
LED flashes quickly	:	doors, tailgate or bonnet not completely closed, or system fault

Status after system is armed:

LED flashes slowly	:	system is armed

Seek the assistance of a workshop in the event of faults.

Deactivation

Unlocking the vehicle deactivates the anti-theft alarm system.

Alarm

When triggered, the alarm horn sounds and the hazard warning lights flash simultaneously. The number and duration of alarm signals are stipulated by legislation.

The alarm can be silenced by pressing any button on the radio remote control or by switching on the ignition.

The anti-theft alarm system can be deactivated only by pressing 🔓 or by switching on the ignition.

A triggered alarm, which has not been interrupted by the driver, will be indicated by the hazard warning lights. They will flash quickly three times when the vehicle is next unlocked with the radio remote control. Additionally, a warning message is displayed in the Driver Information Centre after switching on the ignition.

Vehicle messages ⇨ 106.

If the vehicle's battery is to be disconnected (e.g. for maintenance work), the alarm siren must be deactivated as follows: switch the ignition on then off, then disconnect the vehicle's battery within 15 seconds.

Immobiliser

The system is part of the ignition switch and checks whether the vehicle is allowed to be started with the key being used.

The immobiliser is activated automatically after the key has been removed from the ignition switch.

If the control indicator 🔒 flashes when the ignition is on, there is a fault in the system; the engine cannot be started. Switch off the ignition and repeat the start attempt.

If the control indicator continues flashing, attempt to start the engine using the spare key and seek the assistance of a workshop.

Note
The immobiliser does not lock the doors. You should always lock the vehicle after leaving it and switch on the anti-theft alarm system ⇨ 22, ⇨ 26.

Control indicator 🔒 ⇨ 100.

Exterior mirrors

Convex shape

The shape of the mirror makes objects appear smaller, which will affect the ability to estimate distances.

Side blind spot alert ⇨ 221.

Electric adjustment

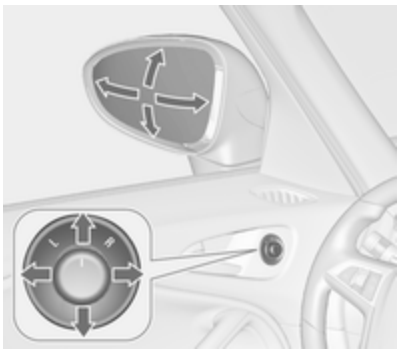

Select the relevant exterior mirror by turning the control to left **(L)** or right **(R)**. Adjust respective mirror by tilting the four-way control.

In position **0** no mirror is selected.

Folding mirrors

For pedestrian safety, the exterior mirrors will swing out of their normal mounting position if they are struck with sufficient force. Reposition the mirror by applying slight pressure to the mirror housing.

Electric folding

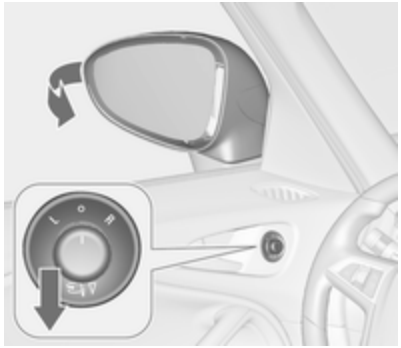

Turn control to **0**, then push the control down. Both exterior mirrors will fold.

Push the control down again - both exterior mirrors return to their original position.

If an electrically folded mirror is manually extended, pressing down the control will only electrically extend the other mirror.

Heated mirrors

Operated by pressing ⊞.

Heating works with the engine running and is switched off automatically after a short time.

Interior mirrors

Manual anti-dazzle

To reduce dazzle, adjust the lever on the underside of the mirror housing.

Automatic anti-dazzle

Dazzle from following vehicles is automatically reduced, when driving in the dark.

Windows

Windscreen

Heat-reflecting windscreen

The heat-reflecting windscreen has a coating which reflects solar radiation. Also data signals, e.g. from toll stations, might be reflected.

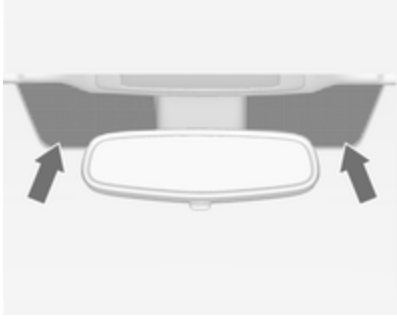

The marked areas on the windscreen are not covered with the coating. Devices for electronic data recording and fee payment must be attached in these areas. Otherwise data recording malfunctions may occur.

Windscreen stickers

Do not attach stickers such as toll road stickers or similar on the windscreen in the area of the interior mirror. Otherwise the detection zone of the sensor and the view area of the camera in the mirror housing could be restricted.

Windscreen replacement

Caution

If the vehicle has a front-looking camera sensor for the driver assistance systems, it is very important that any windscreen replacement is performed accurately according to Opel specifications. Otherwise, these systems may not work properly and there is a risk of unexpected behaviour and/or messages from these systems.

Manual windows

The door windows can be opened or closed with the window cranks.

Power windows

⚠ Warning

Take care when operating the power windows. Risk of injury, particularly to children.

If there are children on the rear seats, switch on the child safety system for the power windows.

Keep a close watch on the windows when closing them. Ensure that nothing becomes trapped in them as they move.

Switch on ignition to operate power windows. Retained power off ⇨ 183.

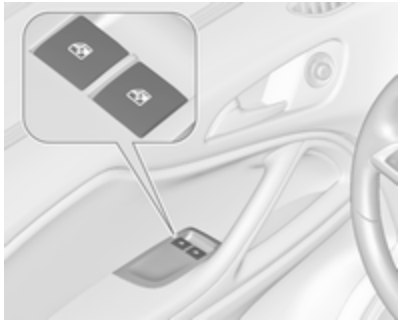

Operate the switch for the respective window by pushing to open or pulling to close.

Pushing or pulling gently to the first detent: window moves up or down as long as the switch is operated.

Pushing or pulling firmly to the second detent and then releasing: window moves up or down automatically with safety function enabled. To stop movement, operate the switch once more in the same direction.

Safety function

If the window glass encounters resistance above the middle of the window during automatic closing, it is immediately stopped and opened again.

Override safety function

In the event of closing difficulties due to frost or the like, switch on the ignition, then pull the switch to the first detent and hold. The window moves up without safety function enabled. To stop movement, release the switch.

Child safety system for rear windows

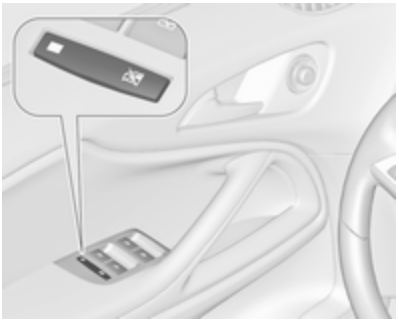

Press ⊠ to deactivate rear door power windows, the LED illuminates. To activate, press ⊠ again.

Operating windows from outside

The windows can be operated remotely from outside the vehicle.

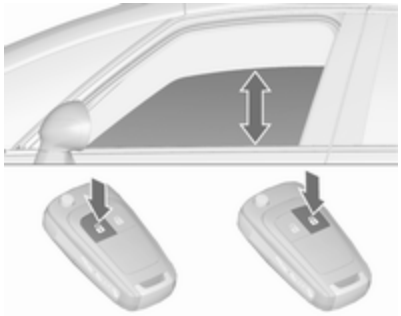

Press and hold 🔓 to open windows.

Press and hold 🔒 to close windows.

Release button to stop window movement.

If the windows are fully opened or closed, the hazard warning lights will flash twice.

Overload

If the windows are repeatedly operated within short intervals, the window operation is disabled for some time.

Initialising the power windows

If the windows cannot be closed automatically (e.g. after disconnecting the vehicle battery), a warning message is displayed in the Driver Information Centre.

Vehicle messages ⇨ 106.

Activate the window electronics as follows:

1. Close doors.
2. Switch on ignition.
3. Pull switch until the window is closed and keep pulling for additional two seconds.
4. Repeat for each window.

Heated rear window

Operated by pressing ⊞.

Heating works with the engine running and is switched off automatically after a short time.

Depending on the engine type, the heated rear window comes on automatically when the exhaust filter is being cleaned.

Sun visors

The sun visors can be folded down or swivelled to the side to prevent dazzling.

The cover of the mirrors should be closed when driving.

A ticket holder is located on the backside of the sun visor.

Roller blinds

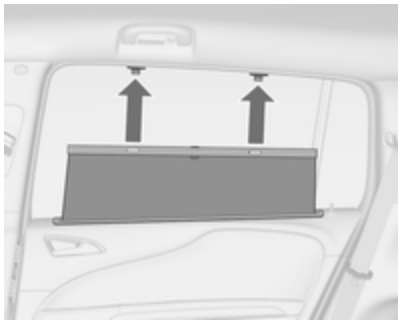

To reduce sunlight at the second row seats, pull the blind upwards using the grip and engage it at the top of the door frame.

Roof

Glass panel

Panorama roof

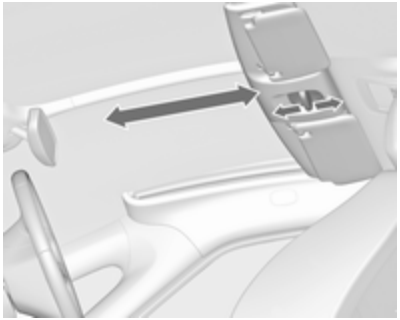

Pull the slider to open the cover of the panorama roof.

Push the slider to cover the panorama roof.

Sunblind

The sunblind above the rear seats is electrically operated.

: open
: close

Press or gently to the first detent: the sunblind is opened or closed as long as the switch is operated.

Press or firmly to the second detent and then release: the sunblind is opened or closed automatically. To stop movement, operate the switch once more.

Safety function

If the sunblind encounters resistance during automatic closing, it is immediately stopped and opened again.

Function standby

In ignition switch position **1** the sunblind is operational ⇨ 182.

Initialising after a power failure

After a power failure, it may only be possible to operate the sunblind to a limited extent. Initialise the system as follows:

1. Turn key in ignition switch to position **1**.
2. Press (open) twice gently to the first detent, the sunblind opens slightly.
3. Immediately press (close) twice gently to the first detent, the sunblind closes slightly.

   After step 3 the sunblind is in initialising mode without safety function.
4. Press (open) gently to the first detent until the sunblind is completely opened.
5. Press (close) gently to the first detent until the sunblind is completely closed.

After this procedure, the sunblind is initialised with safety function activated.

When or is pressed firmly to the second detent during initialising, the procedure is cancelled.

Seats, restraints

Head restraints **36**
Active head restraints 37
Front seats **38**
Seat position 38
Manual seat adjustment 39
Armrest 41
Heating 42
Rear seats **42**
Second row seats 42
Third row seats 44
Seat belts **45**
Three-point seat belt 46
Airbag system **49**
Front airbag system 53
Side airbag system 53
Curtain airbag system 54
Airbag deactivation 54
Child restraints **56**
Child restraint systems 56
Child restraint installation locations 59

Head restraints

Position

⚠ Warning

Only drive with the head restraint set to the proper position.

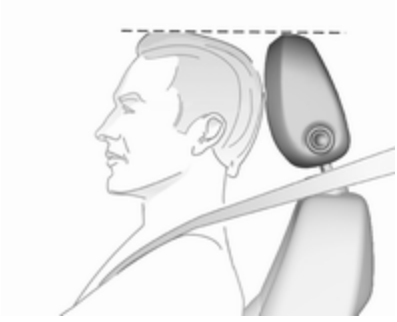

The upper edge of the head restraint should be at upper head level. If this is not possible for extremely tall people, set to highest position, and set to lowest position for small people.

Adjustment

Head restraints on front seats

Height adjustment
Press release button, adjust height, engage.

Horizontal adjustment

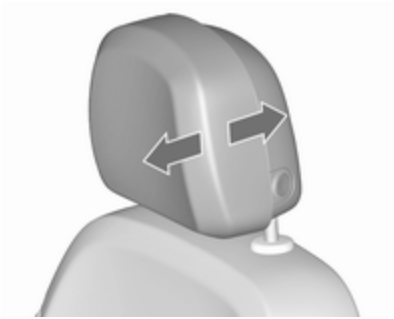

To adjust horizontally, pull the head restraint forwards. It engages in several positions.

To return to its rearmost position, pull fully forwards and release.

Head restraints on rear seats

Height adjustment

Pull the head restraint upwards or press the catch to release and push the head restraint downwards.

Removal

Press both catches, pull the head restraint upwards and remove.

Active head restraints

In the event of a rear-end impact, the front parts of the active head restraints are moved slightly forwards. Thus the head is supported so that the risk of whiplash injury is reduced.

Note
Approved accessories may only be attached if the seat is not in use.

Front seats

Seat position

⚠ Warning

Only drive with the seat correctly adjusted.

⚠ Warning

Never adjust seats while driving as they could move uncontrollably.

⚠ Danger

Do not sit closer than 25 cm to the steering wheel, to permit safe airbag deployment.

⚠ Warning

Never store any objects under the seats.

- Sit with buttocks as far back against the backrest as possible. Adjust the distance between the seat and the pedals so that legs are slightly angled when pressing the pedals. Slide the front passenger seat as far back as possible.
- Set seat height high enough to have a clear field of vision on all sides and of all display instruments. There should be at least one hand of clearance between head and the roof frame. Your thighs should rest lightly on the seat without pressing into it.
- Sit with shoulders as far back against the backrest as possible. Set the backrest rake so that it is possible to easily reach the steering wheel with arms slightly bent. Maintain contact between shoulders and the backrest when turning the steering wheel. Do not angle the backrest too far back. We recommend a maximum rake of approx. 25°.
- Adjust seat and steering wheel in a way that the wrist rests on top of the steering wheel while the arm is fully extended and shoulders are on the backrest.
- Adjust the steering wheel ⇨ 83.
- Adjust the head restraint ⇨ 36.
- Adjust the height of the seat belt ⇨ 46.
- Adjust the thigh support so that there is a space approx. two fingers wide between the edge of the seat and the hollow of the knee.
- Adjust the lumbar support so that it supports the natural shape of the spine.

Manual seat adjustment

Drive only with engaged seats and backrests.

Longitudinal adjustment

Pull handle, slide seat, release handle. Try to move the seat back and forth to ensure that the seat is locked in place.

Backrest inclination

Pull lever, adjust inclination and release lever. Allow the backrest to engage audibly.

Seat height

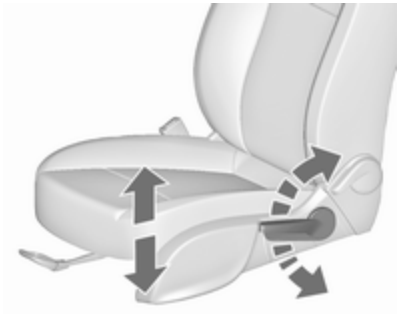

Lever pumping motion

up : seat higher
down : seat lower

Seat inclination

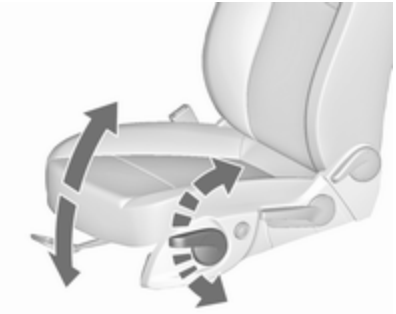

Lever pumping motion

up : front end higher
down : front end lower

Lumbar support

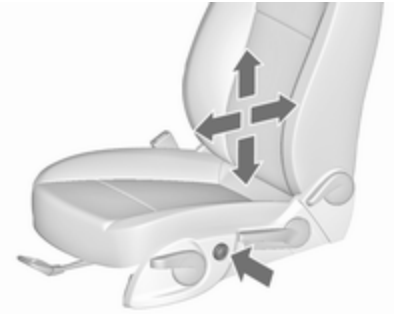

Adjust lumbar support using the four-way switch to suit personal requirements.

Moving support up and down: push switch up or down.

Increasing and decreasing support: push switch forwards or backwards.

Adjustable thigh support

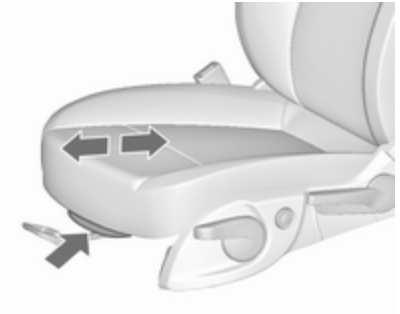

Pull the lever and slide the thigh support.

Armrest

Base armrest

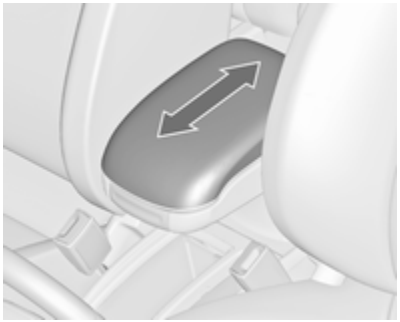

The armrest can be slid forwards.

FlexConsole armrest

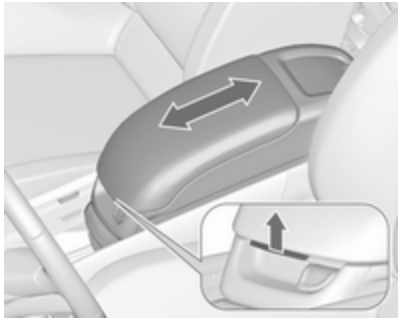

The armrest can be moved in a centre console. Pull the handle to slide the armrest.

There are two storages, a storage drawer and a movable cupholder in the armrest console.

Armrest storage ⇨ 65.

Removing the armrest

Flex console armrest can be removed.

Press fastenings inward and fold down locking mechanism at the rear end of the armrest.

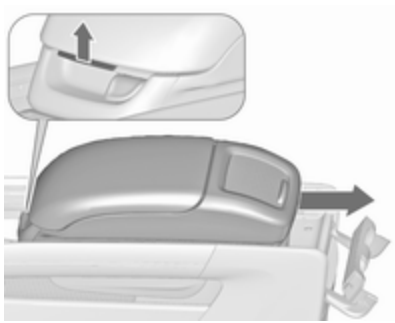

Pull the handle in front of the armrest and slide armrest rearwards out of the console.

Installation in reverse order.

Heating

Adjust heating to the desired setting by pressing for the respective seat one or more times. The control indicator in the button indicates the setting.

Prolonged use of the highest setting for people with sensitive skin is not recommended.

Seat heating is operational when engine is running and during an Autostop.

Stop-start system ⇨ 185.

Rear seats

Second row seats

⚠Warning

When seats or backrests of second and third seat row are being adjusted or folded, keep hands and feet away from the moving area.

Never store objects under the seats.

Never adjust seats while driving as they could move uncontrollably.

Drive only with engaged seats and backrests.

Base seats

Seat positioning

Each seat of the second seat row can be individually moved forward or backward.

Pull handle, slide seat, release handle and allow seat to engage.

The seats can be engaged in intermediate positions.

Seat backrests
The backrest inclination of each seat can be individually adjusted in three positions.

Pull the loop, adjust inclination, release strap and allow backrest to engage.

> **⚠ Warning**
>
> Use vertical position of the backrest only for increased luggage volume and not as seating position.

Load compartment, folding down the backrests ⇨ 66.

Easy entry function
To permit an easy entrance to the seats of the third row, the outer seats of the second row can be tilted.

Pull release lever, fold backrest and move the seat to the front.

Folding back easy entry
First move seat to desired position and then raise backrest.

> **⚠ Warning**
>
> When folding up, ensure that the seat is securely locked in position before driving. Failure to do so may result in personal injury in the event of hard braking or a collision.

Third row seats

⚠ Warning

When seats or backrests of second and third seat row are being adjusted or folded, keep hands and feet away from the moving area.

Never store objects under the seats.

Never adjust seats while driving as they could move uncontrollably.

Drive only with engaged seats and backrests.

Caution

Before setting up or folding down seats, all components must be removed from the side rails and from the lashing eyes.

Lashing eyes must be in stored position.

The seats in the third row can be folded down to the vehicle floor if they are not required, or for increasing the size of the load compartment.

The seats in the third row can only be used if the second seat row is not in the lounge position.

Setting up the seats

- Fold in interior protection mat ⇨ 70 and remove load compartment cover ⇨ 68.

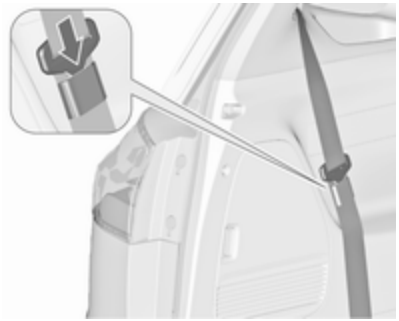

- Insert the latch plate of the seat belt on each side into the pocket that is mounted at the belt.

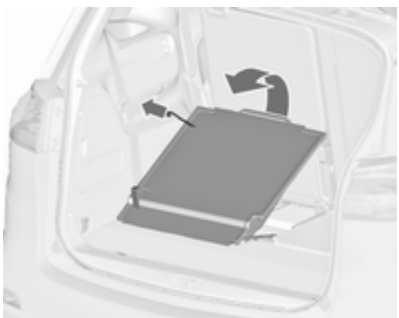

- Pull up the seat by the upper loop, fold out and allow seat to engage in upright position.

Folding down the seats in the vehicle floor

- Push down head restraint by pressing the catch ⇨ 36.
- Insert the latch plate of the seat belt on each side into the pocket that is mounted at the belt.

- Pull the lower loop, simultaneously swing the backrest forwards until the seat is lowered into the vehicle floor.
- Install the interior protection mat ⇨ 70 and load compartment cover ⇨ 68.

Seat belts

The seat belts are locked during heavy acceleration or deceleration of the vehicle, holding the occupants in the seat position. Therefore the risk of injury is considerably reduced.

⚠ Warning

Fasten seat belt before each trip.

In the event of an accident, people not wearing seat belts endanger their fellow occupants and themselves.

Seat belts are designed to be used by only one person at a time. Child restraint system ⇨ 56.

Periodically check all parts of the belt system for damage, soiling and proper functionality.

Have damaged components replaced. After an accident, have the belts and triggered belt pretensioners replaced by a workshop.

Note
Make sure that the belts are not damaged by shoes or sharp-edged objects or trapped. Prevent dirt from getting into the belt retractors.

Seat belt reminder

Each seat is equipped with a seat belt reminder, indicated for front seats by control indicator in the tachometer ⇨ 95, or for rear seats by symbols or in the Driver Information Centre ⇨ 101.

Belt force limiters

On the front seats, stress on the body is reduced by the gradual release of the belt during a collision.

Belt pretensioners

In the event of a head-on or rear-end collision of a certain severity, the front seat belts are tightened.

⚠ Warning

Incorrect handling (e.g. removal or fitting of belts) can trigger the belt pretensioners.

Deployment of the belt pretensioners is indicated by continuous illumination of control indicator ⇨ 95.

Triggered belt pretensioners must be replaced by a workshop. Belt pretensioners can only be triggered once.

Note
Do not affix or install accessories or other objects that may interfere with the operation of the belt pretensioners. Do not make any modifications to belt pretensioner components as this will invalidate the operating permit of your vehicle.

Three-point seat belt

Fasten

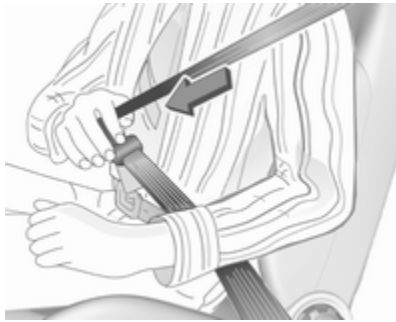

Withdraw the belt from the retractor, guide it untwisted across the body and insert the latch plate into the buckle. Tighten the lap belt regularly whilst driving by pulling the shoulder belt.

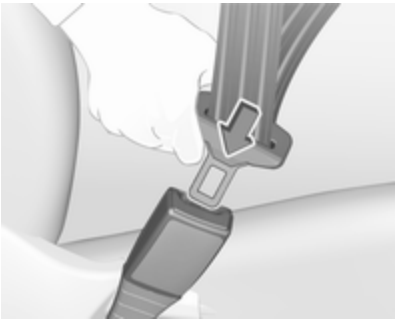

Loose or bulky clothing prevents the belt from fitting snugly. Do not place objects such as handbags or mobile phones between the belt and your body.

⚠ Warning

The belt must not rest against hard or fragile objects in the pockets of your clothing.

Seat belt reminder, ⇨ 95, ⇨ 101

Height adjustment

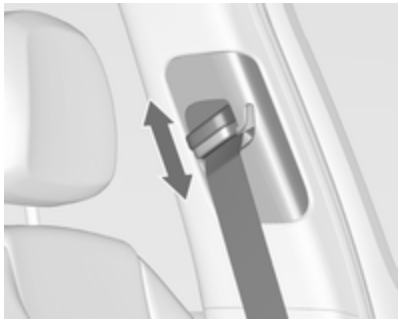

1. Pull belt out slightly.
2. Shift the height adjuster upwards or press button to disengage and push the height adjuster downwards.

Adjust the height so that the belt lies across the shoulder. It must not lie across the throat or upper arm.

Do not adjust while driving.

Unfasten

To release belt, press red button on belt buckle.

Centre seat belt of the second seat row

The centre seat is equipped with a particular three-point seat belt.

Pull latch plates with the belt out of belt holder in the roof.

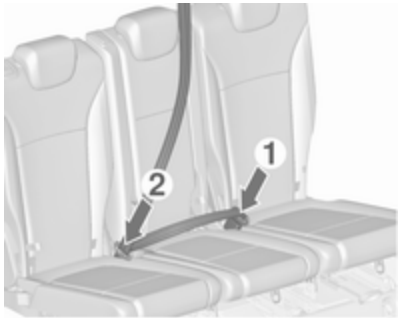

Remove lower latch plate from retainer and click it into left-hand buckle (**1**) at the centre seat. Guide the upper latch plate with the belt over the lap area and the shoulder (do not twist) and click into right-hand buckle (**2**) at centre seat.

To unfasten the seat belt, first press the button on the right-hand buckle (**2**) and remove upper latch plate. Then press the button on the left-hand buckle (**1**) and remove lower latch plate. The seat belt retracts automatically.

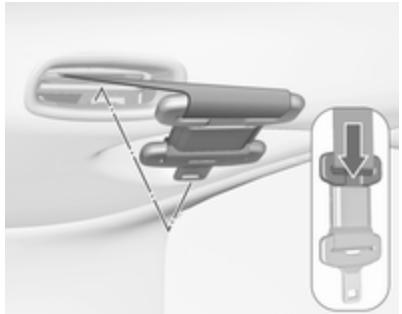

Push the top latch plate into the retainer. Fold over locked together latch plates against the seat belt.

Insert in the seat belt holder in the roof with the lower latch plate pointing forward.

Seat belts on the third seat row

The seat belts on the third seat row are equipped with three point seat belts.

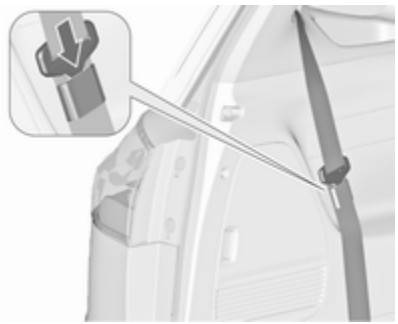

When seat belts are not used or when folding the seats, insert the latch plate of the seat belt on each side into the pocket that is mounted at the belt.

If the centre seat of the second seat row is occupied and the seat belt is fastened, only persons with a body height up to max. 150 cm are allowed to use the left seat of the third seat row.

There is a warning label on the rear side of the centre belt, when it is pulled out, to inform the passenger on the left seat of the third seat row.

Using seat belts while pregnant

⚠ Warning

The lap belt must be positioned as low as possible across the pelvis to prevent pressure on the abdomen.

Airbag system

The airbag system consists of a number of individual systems depending on the scope of equipment.

When triggered the airbags inflate within milliseconds. They also deflate so quickly that it is often unnoticeable during the collision.

⚠ Warning

The airbag system deploys in an explosive manner, repairs must be performed by skilled personnel only.

⚠ Warning

Adding accessories that change the vehicle's frame, bumper system, height, front end or side sheet metal, may keep the airbag system from working properly. The operation of the airbag system can also be affected by changing any parts of the front seats, seat belts,

airbag sensing and diagnostic module, steering wheel, instrument panel, inner door seals including the speakers, any of the airbag modules, ceiling or pillar trim, front sensors, side impact sensors or airbag wiring.

Note
The airbag systems and belt pretensioner control electronics are located in the centre console area. Do not put any magnetic objects in this area.

Do not affix any objects onto the airbag covers and do not cover them with other materials. Have damaged covers replaced by a workshop.

Each airbag is triggered only once. Have deployed airbags replaced by a workshop. Furthermore, it may be necessary to have the steering wheel, the instrument panel, parts of the panelling, the door seals, handles and the seats replaced.

Do not make any modifications to the airbag system as this will invalidate the vehicle operating permit.

Control indicator for airbag systems ⇨ 95.

Child restraint systems on front passenger seat with airbag systems

Warning according to ECE R94.02:

EN: NEVER use a rearward-facing child restraint on a seat protected by an ACTIVE AIRBAG in front of it; DEATH or SERIOUS INJURY to the CHILD can occur.

DE: Nach hinten gerichtete Kindersitze NIEMALS auf einem Sitz verwenden, der durch einen davor befindlichen AKTIVEN AIRBAG geschützt ist, da dies den TOD oder SCHWERE VERLETZUNGEN DES KINDES zur Folge haben kann.

FR: NE JAMAIS utiliser un siège d'enfant orienté vers l'arrière sur un siège protégé par un COUSSIN GONFLABLE ACTIF placé devant lui, sous peine d'infliger des BLESSURES GRAVES, voire MORTELLES à l'ENFANT.

ES: NUNCA utilice un sistema de retención infantil orientado hacia atrás en un asiento protegido por un AIRBAG FRONTAL ACTIVO. Peligro de MUERTE o LESIONES GRAVES para el NIÑO.

RU: ЗАПРЕЩАЕТСЯ устанавливать детское удерживающее устройство лицом назад на сиденье автомобиля, оборудованном фронтальной подушкой безопасности, если ПОДУШКА НЕ ОТКЛЮЧЕНА! Это может привести к СМЕРТИ или СЕРЬЕЗНЫМ ТРАВМАМ РЕБЕНКА.

NL: Gebruik NOOIT een achterwaarts gericht kinderzitje op een stoel met een ACTIEVE AIRBAG ervoor, om DODELIJK of ERNSTIG LETSEL van het KIND te voorkomen.

DA: Brug ALDRIG en bagudvendt autostol på et forsæde med AKTIV AIRBAG, BARNET kan komme i LIVSFARE eller komme ALVORLIGT TIL SKADE.

SV: Använd ALDRIG en bakåtvänd barnstol på ett säte som skyddas med en framförvarande AKTIV AIRBAG. DÖDSFALL eller ALLVARLIGA SKADOR kan drabba BARNET.

FI: ÄLÄ KOSKAAN sijoita taaksepäin suunnattua lasten turvaistuinta istuimelle, jonka edessä on AKTIIVINEN TURVATYYNY, LAPSI VOI KUOLLA tai VAMMAUTUA VAKAVASTI.

NO: Bakovervendt barnesikringsutstyr må ALDRI brukes på et sete med AKTIV KOLLISJONSPUTE foran, da det kan føre til at BARNET utsettes for LIVSFARE og fare for ALVORLIGE SKADER.

PT: NUNCA use um sistema de retenção para crianças voltado para trás num banco protegido com um AIRBAG ACTIVO na frente do mesmo, poderá ocorrer a PERDA DE VIDA ou FERIMENTOS GRAVES na CRIANÇA.

IT: Non usare mai un sistema di sicurezza per bambini rivolto all'indietro su un sedile protetto da AIRBAG ATTIVO di fronte ad esso: pericolo di MORTE o LESIONI GRAVI per il BAMBINO!

EL: ΠΟΤΕ μη χρησιμοποιείτε παιδικό κάθισμα ασφαλείας με φορά προς τα πίσω σε κάθισμα που προστατεύεται από μετωπικό ΕΝΕΡΓΟ ΑΕΡΟΣΑΚΟ, διότι το παιδί μπορεί να υποστεί ΘΑΝΑΣΙΜΟ ή ΣΟΒΑΡΟ ΤΡΑΥΜΑΤΙΣΜΟ.

PL: NIE WOLNO montować fotelika dziecięcego zwróconego tyłem do kierunku jazdy na fotelu, przed którym znajduje się WŁĄCZONA PODUSZKA POWIETRZNA. Niezastosowanie się do tego zalecenia może być przyczyną ŚMIERCI lub POWAŻNYCH OBRAŻEŃ u DZIECKA.

TR: Arkaya bakan bir çocuk emniyet sistemini KESİNLİKLE önünde bir AKTİF HAVA YASTIĞI ile korunmakta olan bir koltukta kullanmayınız. ÇOCUK ÖLEBİLİR veya AĞIR ŞEKİLDE YARALANABİLİR.

UK: НІКОЛИ не використовуйте систему безпеки для дітей, що встановлюється обличчям назад, на сидінні з УВІМКНЕНОЮ ПОДУШКОЮ БЕЗПЕКИ, інакше це може призвести до СМЕРТІ чи СЕРЙОЗНОГО ТРАВМУВАННЯ ДИТИНИ.

HU: SOHA ne használjon hátrafelé néző biztonsági gyerekülést előlről AKTÍV LÉGZSÁKKAL védett ülésen, mert a GYERMEK HALÁLÁT vagy KOMOLY SÉRÜLÉSÉT okozhatja.

HR: NIKADA nemojte koristiti sustav zadržavanja za djecu okrenut prema natrag na sjedalu s AKTIVNIM ZRAČNIM JASTUKOM ispred njega, to bi moglo dovesti do SMRTI ili OZBILJNJIH OZLJEDA za DIJETE.

SL: NIKOLI ne nameščajte otroškega varnostnega sedeža, obrnjenega v nasprotni smeri vožnje, na sedež z

AKTIVNO ČELNO ZRAČNO BLAZINO, saj pri tem obstaja nevarnost RESNIH ali SMRTNIH POŠKODB za OTROKA.

SR: NIKADA ne koristiti bezbednosni sistem za decu u kome su deca okrenuta unazad na sedištu sa AKTIVNIM VAZDUŠNIM JASTUKOM ispred sedišta zato što DETE može da NASTRADA ili da se TEŠKO POVREDI.

MK: НИКОГАШ не користете детско седиште свртено наназад на седиште заштитено со АКТИВНО ВОЗДУШНО ПЕРНИЧЕ пред него, затоа што детето може ДА ЗАГИНЕ или да биде ТЕШКО ПОВРЕДЕНО.

BG: НИКОГА не използвайте детска седалка, гледаща назад, върху седалка, която е защитена чрез АКТИВНА ВЪЗДУШНА ВЪЗГЛАВНИЦА пред нея - може да се стигне до СМЪРТ или СЕРИОЗНО НАРАНЯВАНЕ на ДЕТЕТО.

RO: Nu utilizați NICIODATĂ un scaun pentru copil îndreptat spre partea din spate a mașinii pe un scaun protejat de un AIRBAG ACTIV în fața sa; acest lucru poate duce la DECESUL sau VĂTĂMAREA GRAVĂ a COPILULUI.

CS: NIKDY nepoužívejte dětský zádržný systém instalovaný proti směru jízdy na sedadle, které je chráněno před sedadlem AKTIVNÍM AIRBAGEM. Mohlo by dojít k VÁŽNÉMU PORANĚNÍ nebo ÚMRTÍ DÍTĚTE.

SK: NIKDY nepoužívajte detskú sedačku otočenú vzad na sedadle chránenom AKTÍVNYM AIRBAGOM, pretože môže dôjsť k SMRTI alebo VÁŽNYM ZRANENIAM DIEŤAŤA.

LT: JOKIU BŪDU nemontuokite atgal atgręžtos vaiko tvirtinimo sistemos sėdynėje, prieš kurią įrengta AKTYVI ORO PAGALVĖ, nes VAIKAS GALI ŽŪTI arba RIMTAI SUSIŽALOTI.

LV: NEKĀDĀ GADĪJUMĀ neizmantojiet uz aizmuguri vērstu bērnu sēdeklīti sēdvietā, kas tiek aizsargāta ar tās priekšā uzstādītu AKTĪVU DROŠĪBAS SPILVENU, jo pretējā gadījumā BĒRNS var gūt SMAGAS TRAUMAS vai IET BOJĀ.

ET: ÄRGE kasutage tahapoole suunatud lapseturvaistet istmel, mille ees on AKTIIVSE TURVAPADJAGA kaitstud iste, sest see võib põhjustada LAPSE SURMA või TÕSISE VIGASTUSE.

MT: QATT tuża trażżin għat-tfal li jħares lejn in-naħa ta' wara fuq sit protett b'AIRBAG ATTIV quddiemu; dan jista' jikkawża l-MEWT jew ĠRIEĦI SERJI lit-TFAL.

GA: Ná húsáid srian sábháilteachta linbh cúil RIAMH ar shuíochán a bhfuil mála aeir ag feidhmiú os a chomhair. Tá baol BÁIS nó GORTÚ DONA don PHÁISTE ag baint leis.

Beyond the warning required by ECE R94.02, for safety reasons a forward-facing child restraint system must only be used subject to the instructions and restrictions in the table ⇨ 59.

⚠ Danger

Do not use a child restraint system on the passenger seat with active front airbag.

The airbag label is located on both sides of the front passenger sun visor.

Airbag deactivation ⇨ 54.

Front airbag system

The front airbag system consists of one airbag in the steering wheel and one in the instrument panel on the front passenger side. These can be identified by the word **AIRBAG**.

The front airbag system is triggered in the event of a front-end impact of a certain severity. The ignition must be switched on.

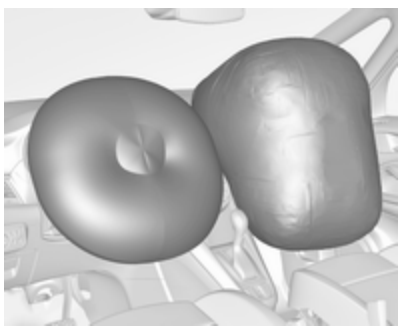

The inflated airbags cushion the impact, thereby reducing the risk of injury to the upper body and head of the front seat occupants considerably.

⚠ Warning

Optimum protection is only provided when the seat is in the proper position.

Seat position ⇨ 38.

Keep the area in which the airbag inflates clear of obstructions.

Fit the seat belt correctly and engage securely. Only then is the airbag able to protect.

Side airbag system

The side airbag system consists of an airbag in each front seat backrest. This can be identified by the word **AIRBAG**.

The side airbag system is triggered in the event of a side impact of a certain severity. The ignition must be switched on.

The inflated airbags cushion the impact, thereby reducing the risk of injury to the upper body and pelvis in the event of a side-on collision considerably.

⚠Warning

Keep the area in which the airbag inflates clear of obstructions.

Note
Only use protective seat covers that have been approved for the vehicle. Be careful not to cover the airbags.

Curtain airbag system

The curtain airbag system consists of an airbag in the roof frame on each side. This can be identified by the word **AIRBAG** on the roof pillars.

The curtain airbag system is triggered in the event of a side-on impact of a certain severity. The ignition must be switched on.

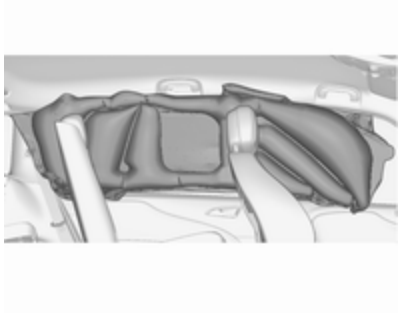

The inflated airbags cushion the impact, thereby reducing the risk of injury to the head in the event of a side-on impact considerably.

The curtain airbag system does not protect passengers on the third seat row.

⚠Warning

Keep the area in which the airbag inflates clear of obstructions.

The hooks on the handles in the roof frame are only suitable for hanging up light articles of clothing, without coat hangers. Do not keep any items in these clothes.

Airbag deactivation

The front passenger airbag system has to be deactivated if a child restraint system is to be fitted on this seat. The side airbag and curtain airbag systems, the belt pretensioners and all driver airbag systems will remain active.

The front passenger airbag system can be deactivated via a key-operated switch on the passenger side of the instrument panel.

Use the ignition key to choose the position:

OFF : front passenger airbag is deactivated and will not inflate in the event of a collision. Control indicator OFF illuminates continuously in the centre console. A child restraint system can be installed in accordance with the chart **Child restraint installation locations** ⇨ 59. No adult person is allowed to occupy the front passenger seat

ON : front passenger airbag is active. A child restraint system must not be installed

⚠ Danger

Risk of fatal injury for a child using a child restraint system on a seat with activated front passenger airbag.

Risk of fatal injury for an adult person on a seat with deactivated front passenger airbag.

If the control indicator ON illuminates for approx. 60 seconds after the ignition is switched on, the front passenger airbag system will inflate in the event of a collision.

If both control indicators are illuminated at the same time, there is a system failure. The status of the system is not discernible, therefore no person is allowed to occupy the front passenger seat. Contact a workshop immediately.

Change status only when the vehicle is stopped with the ignition off.

Status remains until the next change.

Control indicator for airbag deactivation ⇨ 96.

Child restraints

Child restraint systems

⚠ Danger

If using a rear-facing child restraint system on the front passenger seat, the airbag system for the front passenger seat must be deactivated. This also applies to certain forward-facing child restraint systems as indicated in the tables ⇨ 59.

Airbag deactivation ⇨ 54, Airbag label ⇨ 49.

We recommend a child restraint system which is tailored specifically to the vehicle. For further information, contact your workshop.

Before fastening a child seat adjust the head restraint to use position ⇨ 36.

When a child restraint system is being used, pay attention to the following usage and installation instructions and also those supplied with the child restraint system.

Always comply with local or national regulations. In some countries, the use of child restraint systems is forbidden on certain seats.

Child restraint systems can be fastened with:

- Three-point seat belt
- ISOFIX brackets
- Top-tether

Three-point seat belt

Child restraint systems can be fastened by using a three-point seat belt. Depending on the size of the used child restraint systems, up to two child restraint systems can be attached to the outboard seats in the second row and on the seats in the third row. After fastening the child restraint system the seat belt has to be tightened ⇨ 59.

ISOFIX brackets

Fasten vehicle-approved ISOFIX child restraint systems to the ISOFIX brackets. Specific vehicle ISOFIX child restraint system positions are marked in the ISOFIX table ⇨ 59.

ISOFIX brackets are indicated by a label on the backrest.

When using ISOFIX fastened child restraint systems on the second seat row, we recommend to adjust the accordant outer seat in third notch from rear end position, regarding to base seats. Lounge seat, if equipped, must be in normal position ⇨ 42.

An i-size child restraint system is an universal ISOFIX child restraint system according UN Regulation No. 129.

All i-size child restraint systems can be used on any vehicle seat suitable for i-size, i-size table ⇨ 59.

Either a Top-tether strap or a support leg must be used in addition to the ISOFIX brackets.

i-size child seats and vehicle seats with i-size approval are marked with i-size symbol, see illustration.

Top-tether anchors

Top-tether anchors are marked with the symbol for a child seat.

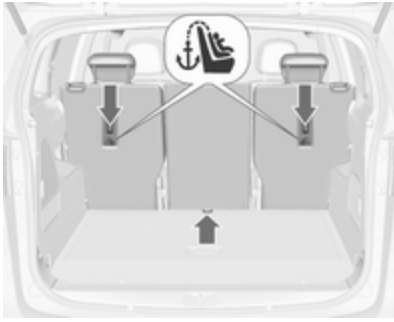

In addition to the ISOFIX brackets, fasten the Top-tether strap to the Top-tether anchors.

ISOFIX child restraint systems of universal category positions are marked in the table by IUF ⇨ 59.

Selecting the right system

The rear seats are the most convenient location to fasten a child restraint system.

Children should travel facing rearwards in the vehicle as long as possible. This makes sure that the child's backbone, which is still very weak, is under less strain in the event of an accident.

Suitable are child restraint systems that comply with valid UN ECE regulations. Check local laws and regulations for mandatory use of child restraint systems.

The following child restraints are recommended for the following weight classes:

Maxi Cosi Cabriofix for children up to 13 kg for group 0, group 0+ and Duo Plus for children from 13 kg to 18 kg in group I.

Ensure that the child restraint system to be installed is compatible with the vehicle type.

Ensure that the mounting location of the child restraint system within the vehicle is correct, see following tables.

Allow children to enter and exit the vehicle only on the side facing away from the traffic.

When the child restraint system is not in use, secure the seat with a seat belt or remove it from the vehicle.

Note

Do not affix anything on the child restraint systems and do not cover them with any other materials.

A child restraint system which has been subjected to stress in an accident must be replaced.

Child restraint installation locations

Permissible options for fastening a child restraint system with a three-point seat belt

Weight class	On front passenger seat activated airbag	On front passenger seat deactivated airbag	On outboard seats in the second row	On centre seat in the second row	On seats in the third row
Group 0: up to 10 kg	X	U[1,2]	U/L[3]	X	U/L[3]
Group 0+: up to 13 kg	X	U[1,2]	U/L[3]	X	U/L[3]
Group I: 9 to 18 kg	X	U[1,2]	U/L[3,4]	X	U/L[3,4]
Group II: 15 to 25 kg	X	X	U/L[3,4]	X	U/L[3,4]
Group III: 22 to 36 kg	X	X	U/L[3,4]	X	U/L[3,4]

U : universal suitability in conjunction with three-point seat belt
L : suitable for particular child restraint systems of the 'specific-vehicle', 'restricted' or 'semi-universal' categories. The child restraint system must be approved for the specific vehicle type (refer to the vehicle type list of the child restraint system)
X : no child restraint system permitted in this weight class
[1] : move seat forwards as far as necessary and adjust seat backrest as far as necessary to a vertical position to ensure that the belt runs forwards from the upper anchorage point
[2] : move seat upwards as far as necessary and adjust seat backrest as far as necessary to a vertical position to ensure that the belt is tight on the buckle side
[3] : move the respective front seat ahead of the child restraint system forwards as far as necessary
[4] : adjust the respective headrest as necessary or remove if required

Permissible options for fitting an ISOFIX child restraint system with ISOFIX brackets

This table relates to all ISOFIX child restraint systems

Weight class	Size class	Fixture	On front passenger seat	On outboard seats in the second row	On centre seat in the second row	On the seats in the third row
Group 0: up to 10 kg	G	ISO/L2	X	X	X	X
	F	ISO/L1	X	X	X	X
	E	ISO/R1	X	IL[3]	X	X
Group 0+: up to 13 kg	E	ISO/R1	X	IL[3]	X	X
	D	ISO/R2	X	IL[3]	X	X
	C	ISO/R3	X	IL[3]	X	X
Group I: 9 to 18 kg	D	ISO/R2	X	IL[3,4]	X	X
	C	ISO/R3	X	IL[3,4]	X	X
	B	ISO/F2	X	IL, IUF[3,4]	X	X
	B1	ISO/F2X	X	IL, IUF[3,4]	X	X
	A	ISO/F3	X	IL, IUF[3,4]	X	X
Group II: 15 to 25 kg			X	IL[3,4]	X	X
Group III: 22 to 36 kg			X	IL[3,4]	X	X

IL : suitable for particular ISOFIX restraint systems of the 'specific-vehicle', 'restricted' or 'semi-universal' categories. The ISOFIX restraint system must be approved for the specific vehicle type (refer to the vehicle type list of the child restraint system)
IUF : suitable for ISOFIX forward-facing child restraint systems of universal category approved for use in this weight class
X : no ISOFIX child restraint system approved in this weight class
1 : move seat forwards as far as necessary and adjust seat backrest as far as necessary to a vertical position to ensure that the belt runs forwards from the upper anchorage point
2 : move seat upwards as far as necessary and adjust seat backrest as far as necessary to a vertical position to ensure that the belt is tight on the buckle side
3 : move the respective front seat ahead of the child restraint system forwards as far as necessary
4 : adjust the respective headrest as necessary or remove if required

A – ISO//F3 : forward-facing child restraint system for children of maximum size in the weight class 9 to 18 kg.
B – ISO//F2 : forward-facing child restraint system for smaller children in the weight class 9 to 18 kg.
B1 – ISO//F2X : forward-facing child restraint system for smaller children in the weight class 9 to 18 kg.
C – ISO//R3 : rear-facing child restraint system for children of maximum size in the weight class up to 18 kg.
D – ISO//R2 : rear-facing child restraint system for smaller children in the weight class up to 18 kg.
E – ISO//R1 : rear-facing child restraint system for young children in the weight class up to 13 kg.

Permissible options for fitting an i-Size child restraint system with ISOFIX brackets

	On front passenger seat		On outboard seats in the second row	On centre seat in the second row	On the seats in the third row
	activated airbag	deactivated airbag			
i-Size child restraint systems	X	X	i - U	X	X

i - U : suitable for i-Size 'universal' forward and rearward facing child restraint systems
X : seating position not suitable for i-Size 'universal' child restraint systems

Storage

Storage compartments **62**
Glovebox 62
Cupholders 62
Front storage 64
Door panel storage 64
Overhead console 64
Underseat storage 64
Armrest storage 65
Centre console storage 65
Load compartment **66**
Rear storage 68
Load compartment cover 68
Rear floor storage cover 70
Load rails and hooks 75
Lashing eyes 75
Cargo management system 75
Safety net 77
Folding tray 79
Warning triangle 79
First aid kit 79
Roof rack system **80**
Roof rack 80
Loading information **81**

Storage compartments

⚠ Warning

Do not store heavy or sharp objects in the storage compartments. Otherwise, the storage compartment lid could open and vehicle occupants could be injured by objects being thrown around in the event of hard braking, a sudden change in direction or an accident.

Glovebox

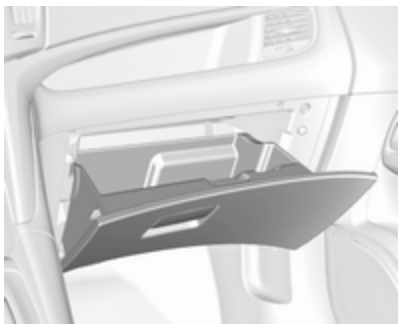

To open the glovebox pull the handle.

The glovebox features an adapter for the locking wheel nuts.

The glovebox should be closed whilst driving.

Cupholders

Front cupholder

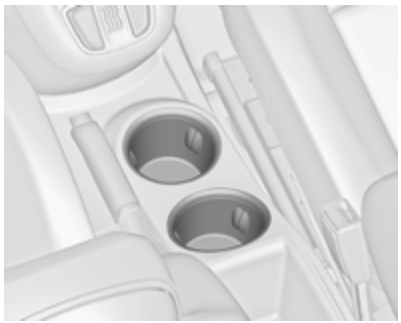

Cupholders are located in the centre console between the front seats.

Slidable cupholder in FlexConsole armrest

The cupholder can be moved in guide rails in the FlexConsole armrest or completely removed.

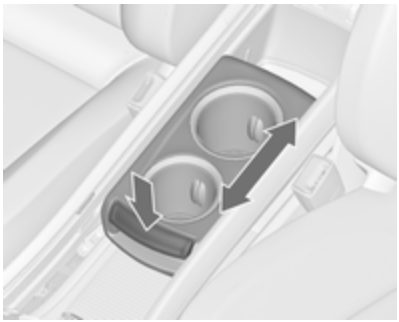

Push the handle in front of cupholder to slide.

Armrest ⇨ 41.

Remove cupholder

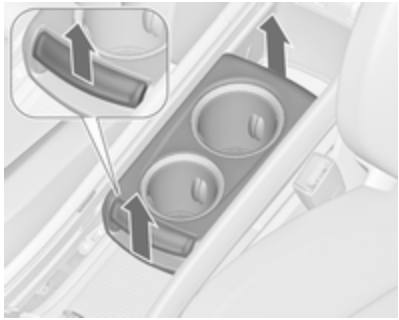

Pull the handle in front of cupholder and remove it vertically out of the console.

Installation in reverse order.

Note
Install the cupholder in the direction as shown in the illustration. Otherwise the cupholder may not engage properly.

Rear cupholder

Additional cupholder are located between the seats in the third row.

Bottleholder

The door pockets of front and rear doors are designed to carry bottles.

Front storage

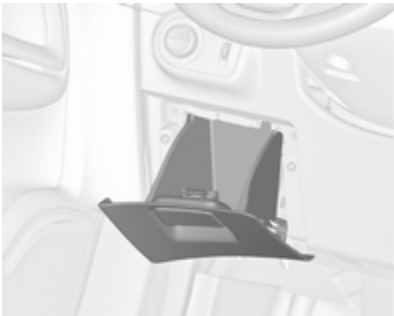

A storage compartment is located next to the steering wheel.

Door panel storage

On front door trim there are small pockets for e. g. mobile phones.

Overhead console

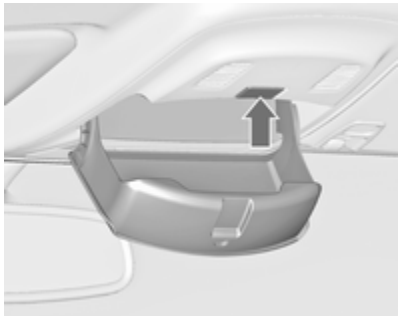

Press button to open storage box.

The box may be loaded with max. 0.2 kg.

Underseat storage

Underseat drawer

Press button in the recess and pull out drawer. Maximum load: 3 kg. To close, push in and engage.

Armrest storage

Storage in FlexConsole armrest

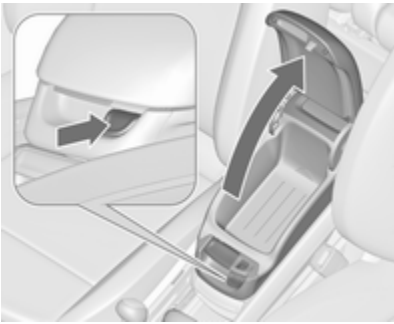

Press button to open storage compartment in the armrest.

Behind the armrest there is another storage compartment. Slide the lid to open.

Centre console storage

Centre console

The storage container can be used to store small items.

Slide cover backwards to open.

Rear console

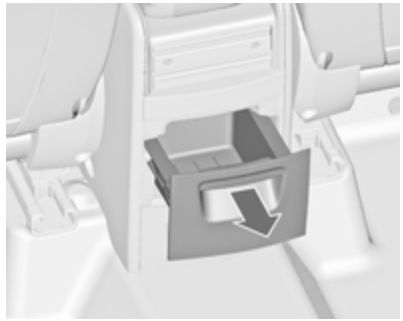

At the rear side of the FlexConsole there is a storage drawer. Pull out to open.

Caution
Do not use for ashes or for other glowing items.

Load compartment

The seats in the third row can be folded down separately into the vehicle floor. The seat backrests of the second row can be folded forward separately.

Rear floor storage cover ⇨ 70.

⚠ Warning

When seats or backrests are being adjusted or folded, keep hands and feet away from the moving area.

Never store objects under the seats.

Drive only with engaged seats and backrests.

Caution

Before setting up or folding down seats, all components must be removed from the side rails and from the lashing eyes.

Lashing eyes must be in stored position.

Folding down the seats of the third row

- Push down head restraint by pressing the catch ⇨ 36.

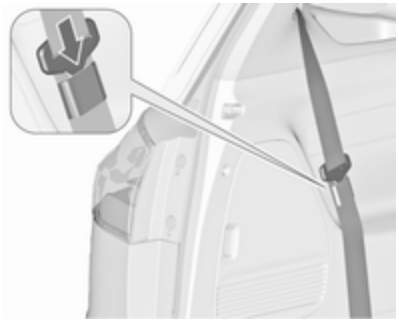

- Insert the latch plate of the seat belt on each side into the pocket that is mounted at the belt.

- Pull the lower loop and simultaneously swing the backrest forwards until the seat is lowered into the vehicle floor.
- Install interior floor mat ⇨ 70 and load compartment cover ⇨ 68 if necessary.

Setting up the seats

Pull up the seat by the upper loop, fold out and allow seat to engage in upright position.

Folding the seat backrests of the second row

- Remove the load compartment cover if necessary ⇨ 68.
- Push down head restraints by pressing the catch ⇨ 36.
- Move front passenger seat to a position that avoids contact with the head restraints of the folded backrests.

- Pull the loop and fold down the backrest onto the seat cushion.

Caution

- Do not fold the outer seatbacks while the seats are in the lounge seat position ⇨ 42.
- Do not pull release lever of the easy entry function when the backrest is folded down.

The seats could be damaged.

- Alternatively pull the loop and adjust backrest to vertical position as cargo position.

⚠ Warning

Use vertical position of the backrest only for increased luggage volume and not as a seating position.

Folding up backrest

Raise backrest to vertical position. Adjust inclination by pulling the loop.

Ensure that all positions are engaged correctly.

⚠Warning

Only drive the vehicle if the backrests are securely locked into position. Otherwise there is a risk of personal injury or damage to the load or vehicle in the event of heavy braking or a collision.

Rear storage

On both sides of the load compartment there are storage shelves.

To open, release cover in side trim panel and remove.

Floor storage

On version without third seat row, there are storage boxes under the floor cover. Lift up the cover to open.

Load compartment cover

Do not place any heavy or sharp-edged objects on the load compartment cover.

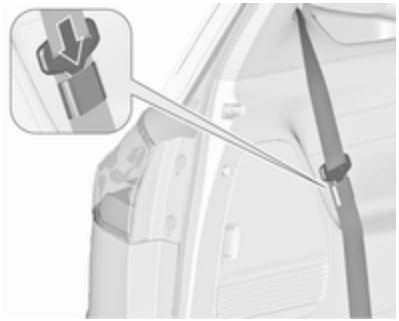

Before operating the load compartment cover, insert the latch plate of the seat belt on each side into the pocket that is mounted at the belt.

Closing

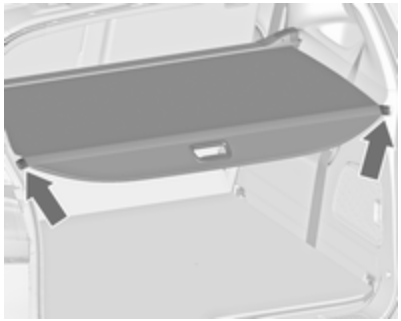

Pull the load compartment cover towards the rear using the handle and engage it in the retainers at the sides.

Opening

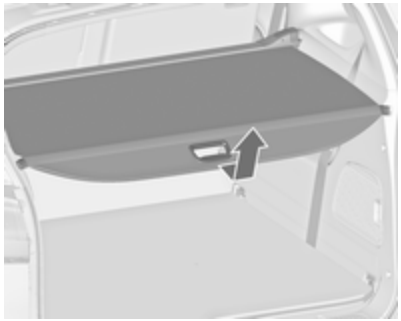

Remove load compartment cover from side brackets. Hold the handle and guide the load compartment cover until it is fully rolled up.

Removing

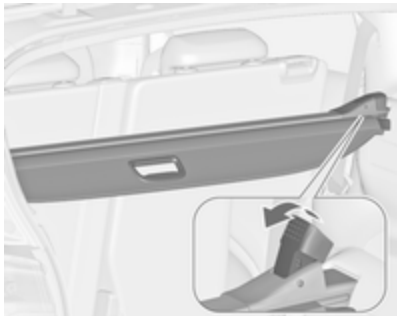

Open the load compartment cover.

Pull the release lever up and hold. Lift load compartment cover on right side and remove from retainers.

Stowing in the load compartment

If the load compartment cover is not used, stow it in the storage in the vehicle floor.

Open the cover of the storage in front of the tailgate.

Remove the load compartment cover and turn it so that the release lever is directed to the left.

Place the housing so that the upper side is facing to the front and the part with the handle points upwards.

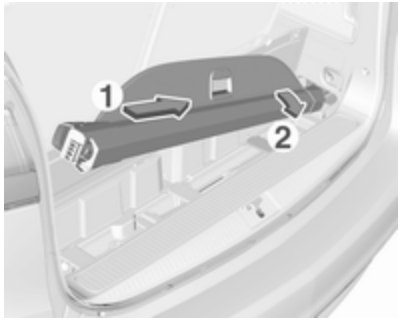

Insert the load compartment cover into the opening on the right side of the storage (1) and turn it until the handle rests flat on the housing (2).

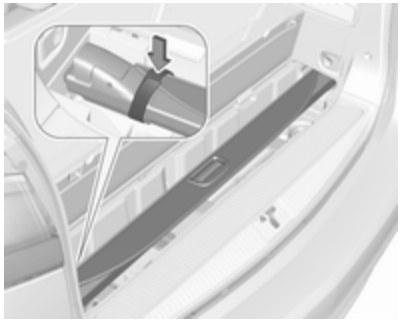

Fasten the load compartment cover in the storage with the Velcro tape.

Installing

Insert the left side of the load compartment cover into the recess, pull the release lever up and hold, insert the right side of the load compartment cover and engage.

Rear floor storage cover

Floor cover

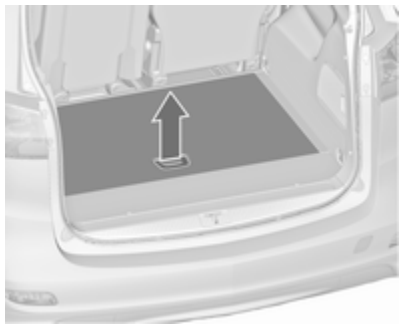

On versions without third seat row, there are storage boxes under the floor cover. To open lift up the cover and fold it upright behind rear seats.

Interior protection mat

Interior protection mat is a covering and protection feature for the load compartment, to be used when all or single seats/backrests are folded down.

By folding and expanding the mat there are a range of individual applications possible.

The interior protection mat is available in two versions:

- **Standard protection mat** covers the area between tailgate and second seat row, when third row is complete or if one seat is folded down.
- **Flex cover interior protection mat** is double size of standard protection mat, connected by a zipper. It covers the load compartment fully, when all or single seats of third and second row are folded down.

Protection mat is foldable longitudinally in 4 parts (standard) or 8 parts (Flex cover) with a central zipper and transversely foldable in 4 parts.

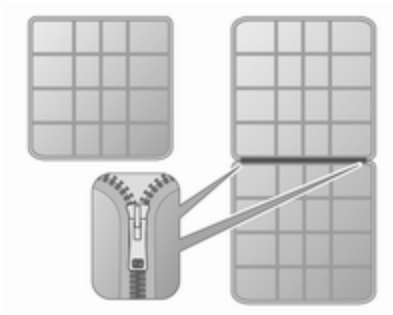

Following only a few examples of using the mats are described.

Before folding and expanding the mat, all components must be removed from the side rails and from the lashing eyes. Lashing eyes must be in stored position.

Covering the load compartment between tailgate and second seat row possible with both **Standard protection mat** or **Flex cover interior protection mat** being folded at the zipper to half size (double layer).

Mat is located fourfold flapped behind the raised up seats of the third row.

- Fold down third row seats.

- Expand the parts of the folded mat, so that first part is raised up at second row backrest.
- When folding down second row backrests, the mat expands automatically and covers the space between both seat rows.
- To allow one seat in the third row to be raised up, fold mat in half lengthways.

- Pull out the mat a little to protect load compartment sill when loading heavy objects. Raise up the overlaying part of the mat before closing the tailgate.

Covering the load compartment up to the backrests of the front seats

Only possible with **Flex cover interior protection mat** being folded at the zipper to half size (double layer).

Mat is expanded up to the second row seats, as described previously.

- Fold down second row backrests.
- Expand the upper parts of the double layer mat, so that the load compartment is fully covered. The first part of the mat is now raised up at the backrests of front seats.

- Fold the overlaying rear part under the mat before closing the tailgate.

Covering the load compartment partially

Only possible with **Flex cover interior protection mat** being folded at the zipper to half size (double layer).

Application example: left outer backrest is not folded down

Mat is expanded up to the second row seats, as described in first section.

- Fold down the backrests that shall be covered.

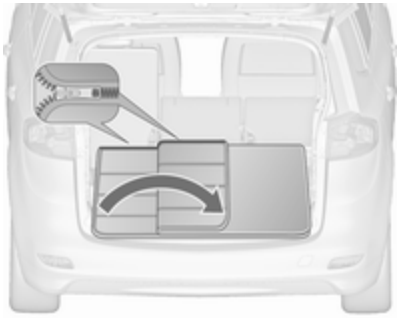

- Open the zipper behind the raised up backrest.
- Pull out the mat until the first part is flat on the load compartment floor.
- Raise up lengthways the part that is opened by the zipper, and fold it to the centre.

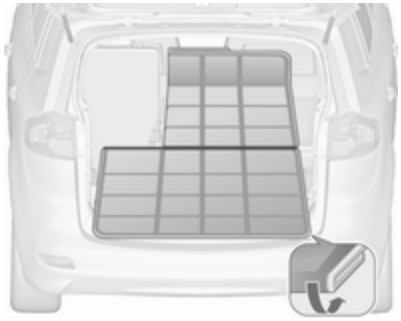

- Expand the upper part of double layer mat over the folded backrests.
- Fold the overlaying rear part under the mat before closing the tailgate.

Proceed in the same way when one outer backrest and the centre backrest are not folded down.

Application example: only centre backrest is folded down

Mat is expanded up to the second row seats, as described in first section.

- Fold down centre backrest to be covered.

- Open the zipper from both sides behind the left and right backrest.
- Pull out the mat until the first part is flat on the load compartment floor.
- Raise up lengthways both parts that are opened by the zipper, and fold them to the centre.

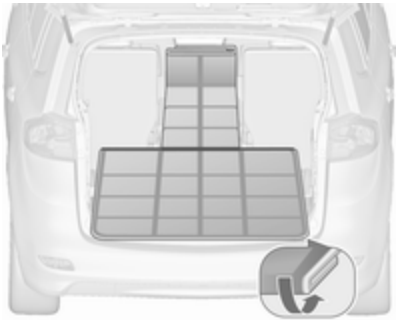

- Then expand the small upper part of double layer mat over the centre backrest.
- Fold the overlaying rear part under the mat before closing the tailgate.

The following illustrations show some further examples.

Example for long small objects, e.g. skis.

Example for side cover protection.

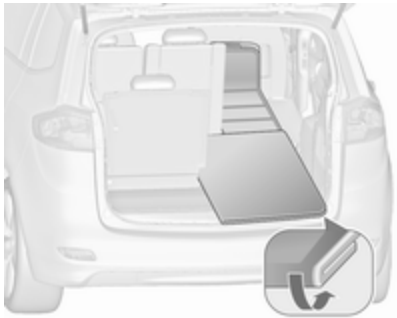

Example for covering folded backrest on second row and one folded seat on third row.

Load rails and hooks

Install the hooks in the desired position in the rails: insert the hook in the upper groove on the rail and press in the lower groove.

Lashing eyes

The lashing eyes are designed to secure items against slippage, e.g. using lashing straps or luggage net.

Cargo management system

The FlexOrganizer is a flexible system for dividing up the load compartment.

The system consists of:

- adapters
- mesh pockets
- hooks
- variable partition net

The components are fitted in rails on both side panels using adapters and hooks.

Installation of adapters in the rails

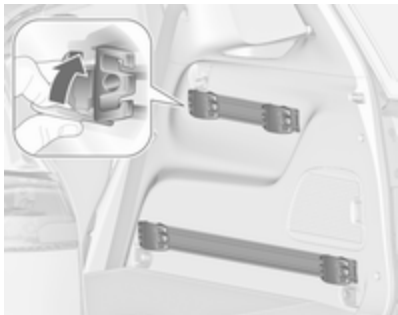

Fold open the handle plate, insert the adapter into the upper and lower groove of the rail and move to the required position. Turn the handle plate upwards to lock the adapter. To remove, turn the handle plate down and move out of the rail.

Variable partition net

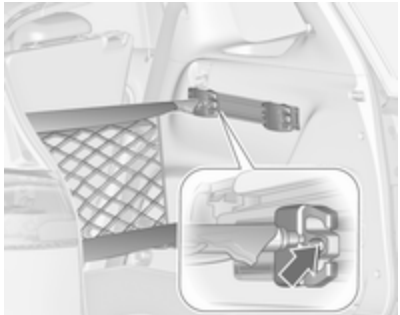

Insert adapters into the required position in the rails. Stick together the halves of the net rods.

To install, push rods together a little and insert into the relevant openings in the adapters.

To remove, press the net rods together and remove from the adapters.

Net pocket

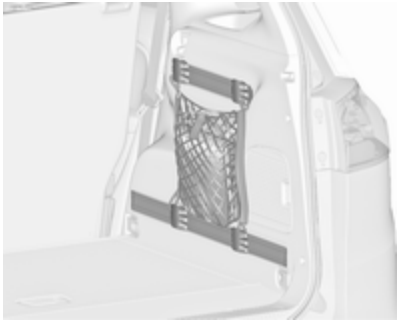

Insert adapters into the required position in the rails. The net pocket can be suspended from the adapters.

Installation of hooks in the rails

Insert the hook in the desired position first in the upper groove of the rail and then press in the lower groove. To remove, first pull out of the upper groove.

Partitioning net in front of tailgate

Install directly in front of the tailgate.

Before installation push in the four end pieces of the net rod by rotating each end piece anticlockwise.

To install, push the net rods together and insert into the openings of the tailgate frame. The longer rod must be inserted at the top.

To remove, push the net rods together and remove.

Safety net

The safety net can be installed behind the seats of the second row or the front seats.

Passengers must not be transported behind the safety net.

Installation behind second row seats

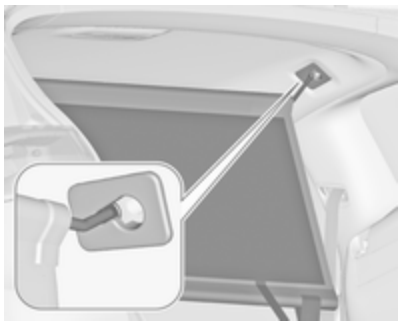

- There are installation openings on both sides in the roof frame above second row seats: suspend and engage rod of net at one side, compress rod and suspend and engage at the other side.

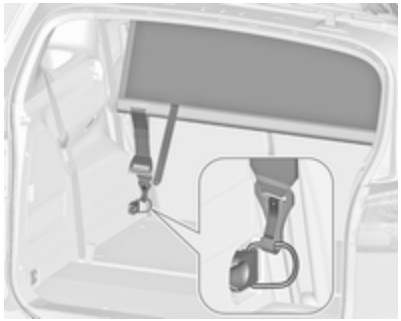

- Attach hooks of safety net straps to front lashing eyes on both sides in the load compartment.
- Tension both straps by pulling at the loose end.

Installation behind front seats

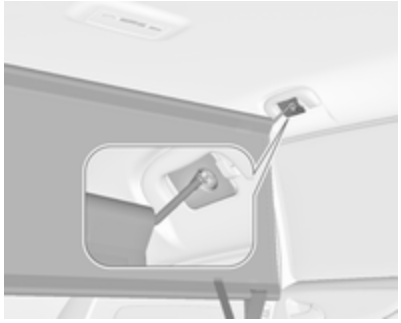

- There are installation openings on both sides in the roof frame above the front seats: suspend and engage rod of net at one side, compress rod and suspend and engage at the other side.

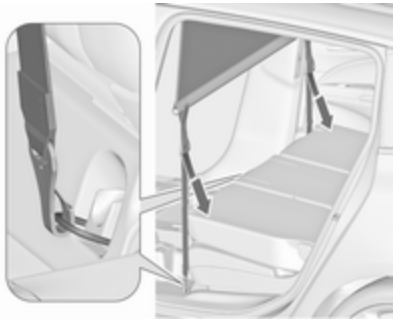

- Attach hooks of safety net straps to the lashing eyes on both sides in the floor in front of the seats.
- Tension both straps by pulling at the loose end.

Removal

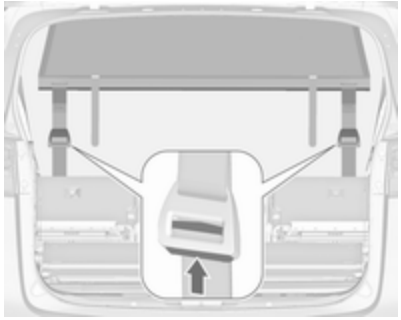

Push button on the tightener to release the strap on both sides. Detach hooks from the eyes. Unhook the safety net rods from the brackets in the roof frame. Roll up the net and secure with a strap.

Stowing

Open the cover of the storage in the load compartment floor in front of the tailgate.

Insert the safety net in the storage and close cover.

Folding tray

Located in the front seat backrests.

Open by pulling upwards until it engages.

Fold away by pressing down past the resistance point.

Do not place any heavy objects on the folding tray.

Warning triangle

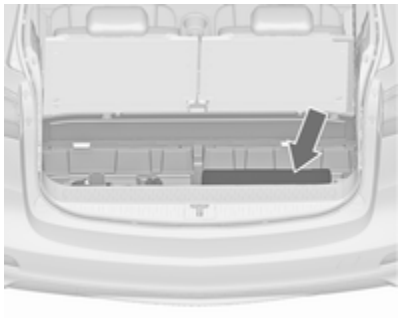

Stow the warning triangle in the storage of the load compartment floor in front of the tailgate.

First aid kit

Stow the first aid kit and the high visibility vest under the driver's seat.

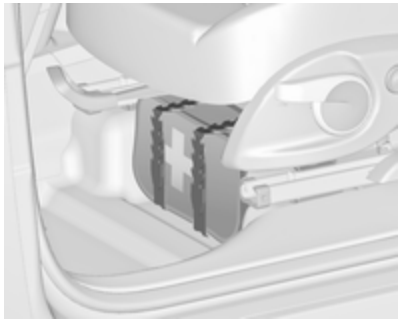

Use the straps to fix.

On another version, first aid kit is located in a storage box under the driver's seat. Slide the rollo to open or close the box.

Roof rack system

Roof rack

For safety reasons and to avoid damage to the roof, the vehicle approved roof rack system is recommended. For further information contact your workshop.

Follow the installation instructions and remove the roof rack when not in use.

Mounting roof rack

Vehicles with roof railing

Fasten the roof rack in the area of the holes.

Vehicles without roof railing

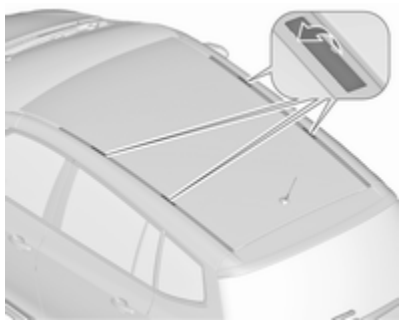

To fasten a roof rack, open the caps in the roof strips. Insert the mounting provisions, as instructed, in the retainer indicated in the illustration.

Loading information

- Heavy objects in the load compartment should be placed against the seat backrests. Ensure the backrests are securely engaged. If objects can be stacked, the heavier objects should be placed at the bottom.
- Prevent sliding of loose objects by securing them with straps attached to the lashing eyes ⇨ 75.
- Do not allow the load to protrude above the upper edge of the backrests.
- Do not place any objects on the load compartment cover or the instrument panel.
- The load must not obstruct the operation of the pedals, parking brake and gear selector lever, or hinder the freedom of movement of the driver. Do not place any unsecured objects in the interior.
- Do not drive with an open load compartment.

⚠ Warning

Always make sure that the load in the vehicle is securely stowed. Otherwise objects can be thrown around inside the vehicle and cause personal injury or damage to the load or car.

- The payload is the difference between the permitted gross vehicle weight (see identification plate ⇨ 287) and the EC kerb weight.

  To calculate the payload, enter the data for your vehicle in the weights table at the front of this manual.

  The EC kerb weight includes weights for the driver (68 kg), luggage (7 kg) and all fluids (fuel tank 90% full).

  Optional equipment and accessories increase the kerb weight.
- Driving with a roof load increases the sensitivity of the vehicle to cross-winds and has a detrimental effect on vehicle handling due to the vehicle's higher centre of gravity. Distribute the load evenly and secure it properly with retaining straps. Adjust the tyre pressure and vehicle speed according to the load conditions. Check and retighten the straps frequently.

  Do not drive faster than 120 km/h.

  The permissible roof load is 75 kg for vehicles without roof railing and 100 kg for vehicles with roof railing. The roof load is the combined weight of the roof rack and the load.

Instruments and controls

Controls **83**
Steering wheel adjustment 83
Steering wheel controls 83
Heated steering wheel 83
Horn 84
Windscreen wiper and washer . . 84
Rear window wiper and washer 85
Outside temperature 86
Clock 86
Power outlets 87
Cigarette lighter 88
Ashtrays 88
Warning lights, gauges and indicators **89**
Instrument cluster 89
Speedometer 89
Odometer 89
Trip odometer 89
Tachometer 90
Fuel gauge 90
Engine coolant temperature gauge 90
Service display 91
Control indicators 92
Turn lights 94
Seat belt reminder 95
Airbag and belt tensioners 95
Airbag deactivation 96
Charging system 96
Malfunction indicator light 96
Brake and clutch system 96
Operate pedal 97
Electric parking brake 97
Electric parking brake fault 97
Antilock brake system (ABS) 97
Gear shifting 98
Power steering 98
Following distance 98
Lane departure warning 98
Electronic Stability Control off . . . 98
Electronic Stability Control and Traction Control system 98
Traction Control system off 98
Preheating 99
Exhaust filter 99
AdBlue 99
Tyre pressure monitoring system 99
Engine oil pressure 99
Low fuel 100
Immobiliser 100
Exterior light 100
High beam 100
High beam assist 100
LED headlights 100
Front fog lights 100
Rear fog light 100
Cruise control 100
Adaptive cruise control 101
Vehicle detected ahead 101
Speed limiter 101
Traffic sign assistant 101
Door open 101
Displays **101**
Driver Information Centre 101
Info Display 105
Vehicle messages **106**
Warning chimes 107
Battery voltage 107
Vehicle personalisation **108**
Telematics service **109**
OnStar 109

Controls

Steering wheel adjustment

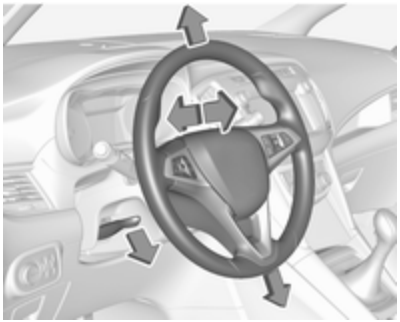

Unlock lever, adjust steering wheel, then engage lever and ensure it is fully locked.

Do not adjust steering wheel unless vehicle is stationary and steering wheel lock has been released.

Steering wheel controls

The Infotainment system, some driver assistance systems and a connected mobile phone can be operated via the controls on the steering wheel.

Further information is available in the Infotainment manual.

Driver assistance systems ⇨ 203.

Heated steering wheel

Activate heating by pressing ♨. Activation is indicated by the LED in the button.

The recommended grip areas of the steering wheel are heated quicker and to a higher temperature than the other areas.

Heating is operational when the engine is running and during an Autostop.

Stop-start system ⇨ 185.

Horn

Press 📯.

Windscreen wiper and washer

Windscreen wiper

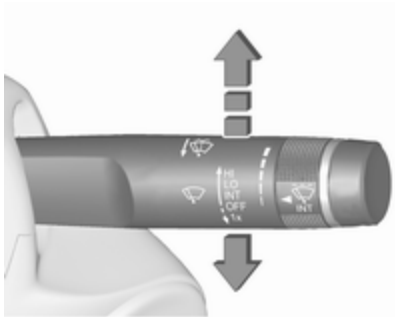

HI : fast
LO : slow
INT : interval wiping or automatic wiping with rain sensor
OFF : off

For a single wipe when the windscreen wiper is off, press the lever down to position **1x**.

Do not use if the windscreen is frozen.

Switch off in car washes.

Adjustable wiper interval

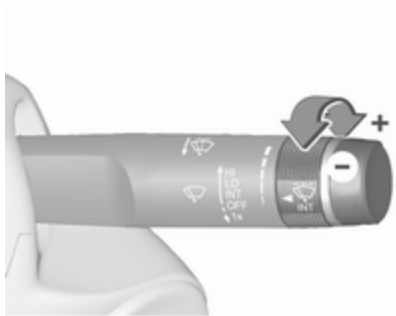

Wiper lever in position **INT**.

Turn the adjuster wheel to adjust the desired wipe interval:

short interval : turn adjuster wheel upwards
long interval : turn adjuster wheel downwards

Adjustable sensitivity of the rain sensor

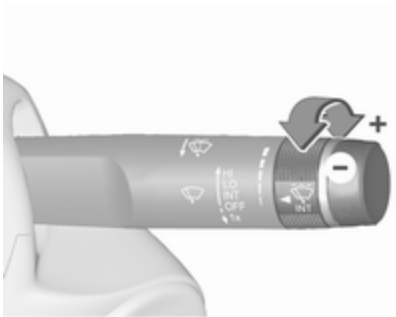

Wiper lever in position **INT**.

Turn the adjuster wheel to adjust the sensitivity of the rain sensor.

The rain sensor detects the amount of water on the windscreen and automatically regulates the wiping frequency and speed.

After 20 seconds without wiping activity, the wiper arms move slightly down to park position.

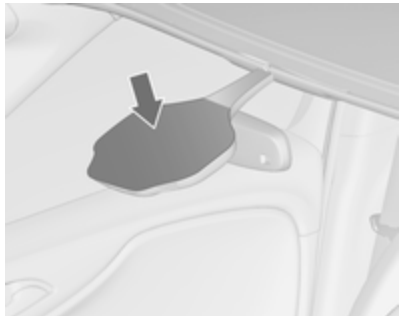

Keep the sensor free from dust, dirt and ice.

Windscreen washer

Pull lever. Washer fluid is sprayed onto the windscreen and the wiper wipes a few times.

Washer fluid ⇨ 244

Rear window wiper and washer

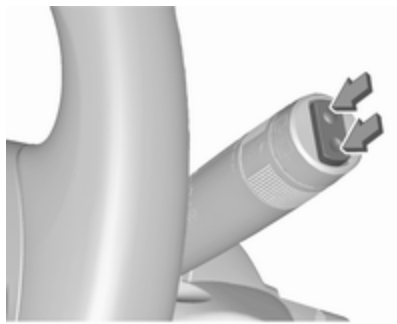

Press the rocker switch to activate the rear window wiper:

upper position	:	continuous operation
lower position	:	intermittent operation
middle position	:	off

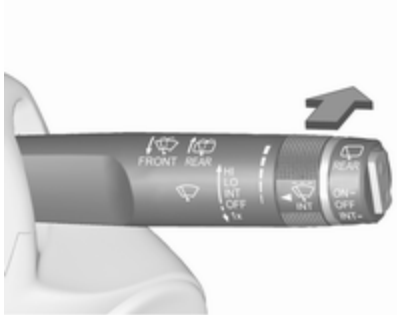

Push lever. Washer fluid is sprayed onto the rear window and the wiper wipes a few times.

Do not use if the rear window is frozen.

Switch off in car washes.

The rear window wiper comes on automatically when the windscreen wiper is switched on and reverse gear is engaged.

Activation or deactivation of this function can be changed in the Settings menu in the Info-Display.

Vehicle personalisation ⇨ 108.

Outside temperature

A drop in temperature is indicated immediately and a rise in temperature after a time delay.

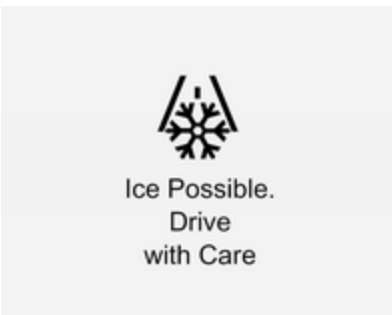

If outside temperature drops to 3 °C, a warning message is displayed in the Driver Information Centre.

⚠ Warning

The road surface may already be icy even though the display indicates a few degrees above 0 °C.

Clock

Date and time are shown in the Info-Display.

R 4.0 IntelliLink

Press ⌂ and then select **Settings**.

Select **Time and Date** to display the respective submenu.

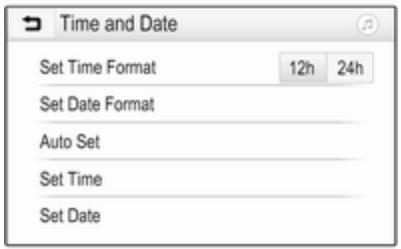

Set Time Format
To select the desired time format, touch the screen buttons **12 h** or **24 h**.

Set Date Format
To select the desired date format, select **Set Date Format** and choose between the available options in the submenu.

Auto Set
To choose whether time and date are to be set automatically or manually, select **Auto Set**.

For time and date to be set automatically, select **On - RDS**.

For time and date to be set manually, select **Off - Manual**. If **Auto Set** is set to **Off - Manual**, the submenu items **Set Time** and **Set Date** become available.

Set time and date
To adjust the time and date settings, select **Set Time** or **Set Date**.

Touch **+** and **-** to adjust the settings.

Power outlets

A 12 Volt power outlet is located in the front console. Fold the cover downwards.

Further 12 Volt power outlets are located in the rear console

and at the left sidewall in the load compartment.

Do not exceed the maximum power consumption of 120 watts.

With ignition off, the power outlets are deactivated. Additionally the power outlets are deactivated in the event of low vehicle battery voltage.

Electrical accessories that are connected must comply with the electromagnetic compatibility requirements laid down in DIN VDE 40 839.

Do not connect any current-delivering accessories, e.g. electrical charging devices or batteries.

Do not damage the outlet by using unsuitable plugs.

Stop-start system ⇨ 185.

Cigarette lighter

The cigarette lighter is located in the front console. Fold the cover downwards.

Press in cigarette lighter. It switches off automatically once the element is glowing. Pull out lighter.

Ashtrays

Caution
To be used only for ash and not for combustible rubbish.

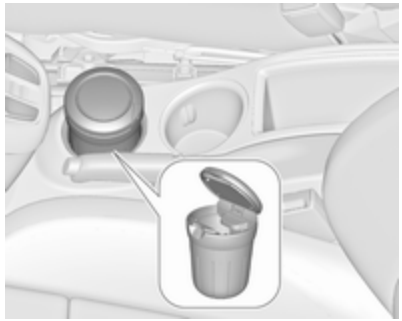

The portable ashtray can be placed in the cupholders.

Warning lights, gauges and indicators

Instrument cluster

In some versions, the needles of the instruments briefly rotate to the end position when the ignition is switched on.

Speedometer

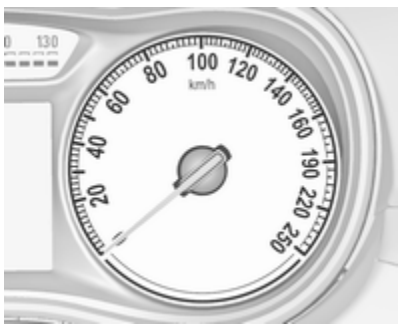

Indicates vehicle speed.

Odometer

The total recorded distance is displayed in km.

Trip odometer

The recorded distance is displayed since the last reset.

Trip odometer counts up to 9999 km and then restarts at 0.

Two trip odometer pages are selectable for different trips.

Select /i\ by pressing **Menu** on the turn signal lever. Turn adjuster wheel on turn signal lever and select /i\1 or /i\2. Each trip odometer page can be reset separately by pressing **SET/CLR** on the turn signal lever for a few seconds on the respective menu.

Tachometer

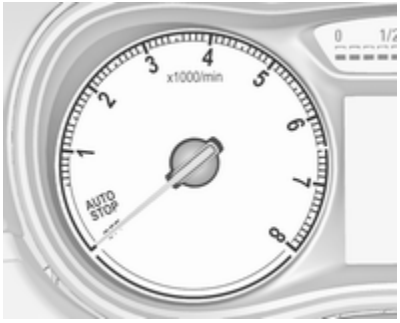

Displays the engine speed.

Drive in a low engine speed range for each gear as much as possible.

Caution
If the needle is in the red warning zone, the maximum permitted engine speed is exceeded. Engine at risk.

Fuel gauge

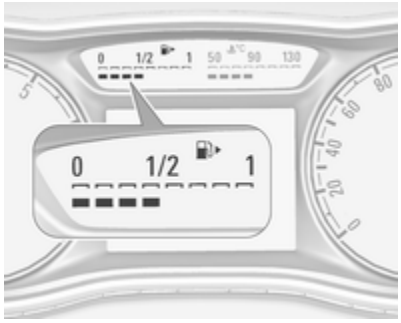

Displays the fuel level in the tank depending on the operation mode.

Number of LEDs displayed shows the level in the fuel tank. 8 LEDs means fuel tank is full.

Low fuel indication

One remaining LED illuminating white indicates that the fuel level is low.

If the LED changes to red and ⛽ illuminates yellow, refuel the tank soon.

If the LED illuminates red and ⛽ flashes yellow, refuel immediately.

Never run the fuel tank dry.

The arrow indicates the vehicle side where the fuel filler flap is located.

Because of the fuel remaining in the tank, the top-up quantity may be less than the specified tank capacity.

Engine coolant temperature gauge

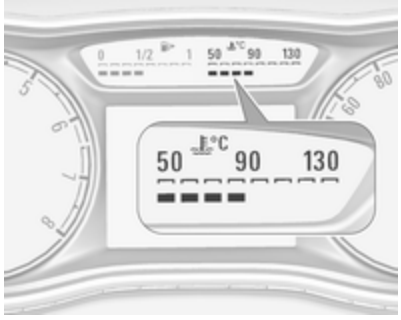

Number of LEDs displayed shows the coolant temperature.

up to 3 LEDs	:	engine operating temperature not yet reached
4 to 6 LEDs	:	normal operating temperature
more than 6 LEDs	:	temperature too high

Caution

If engine coolant temperature is too high, stop vehicle, switch off engine. Danger to engine. Check coolant level.

Service display

The engine oil life system informs when to change the engine oil and filter. Based on driving conditions, the interval at which an engine oil and filter change will be indicated can vary considerably.

When the system has calculated that engine oil life has been diminished, **Change Engine Oil Soon** appears in the Driver Information Centre. Have engine oil and filter changed by a workshop within one week or 500 km, whichever occurs first.

This can be an additional engine oil and filter change or part of a regular service.

The remaining oil life duration menu is displayed in the Driver Information Centre ⇨ 101.

Select Vehicle Information Menu by pressing **MENU** on the turn signal lever. Turn the adjuster wheel to select **Remaining Oil Life** .

Remaining oil life duration is indicated in percentage.

Reset

Press **SET/CLR** on turn signal lever for several seconds to reset. The ignition must be switched on but engine not running.

The system must be reset every time the engine oil is changed to ensure proper functionality. Seek the assistance of a workshop.

Next service

A message appears in the Driver Information Centre, when maintenance of the vehicle is required. Have maintenance work carried out by a workshop within one week or 500 km, whichever occurs first.

Service information ⇨ 284.

Control indicators

The control indicators described are not present in all vehicles. The description applies to all instrument versions. Depending on the equipment, the position of the control indicators may vary. When the ignition is switched on, most control indicators will illuminate briefly as a functionality test.

The control indicator colours mean:

red	:	danger, important reminder
yellow	:	warning, information, fault
green	:	confirmation of activation
blue	:	confirmation of activation
white	:	confirmation of activation

Control indicators in the instrument cluster

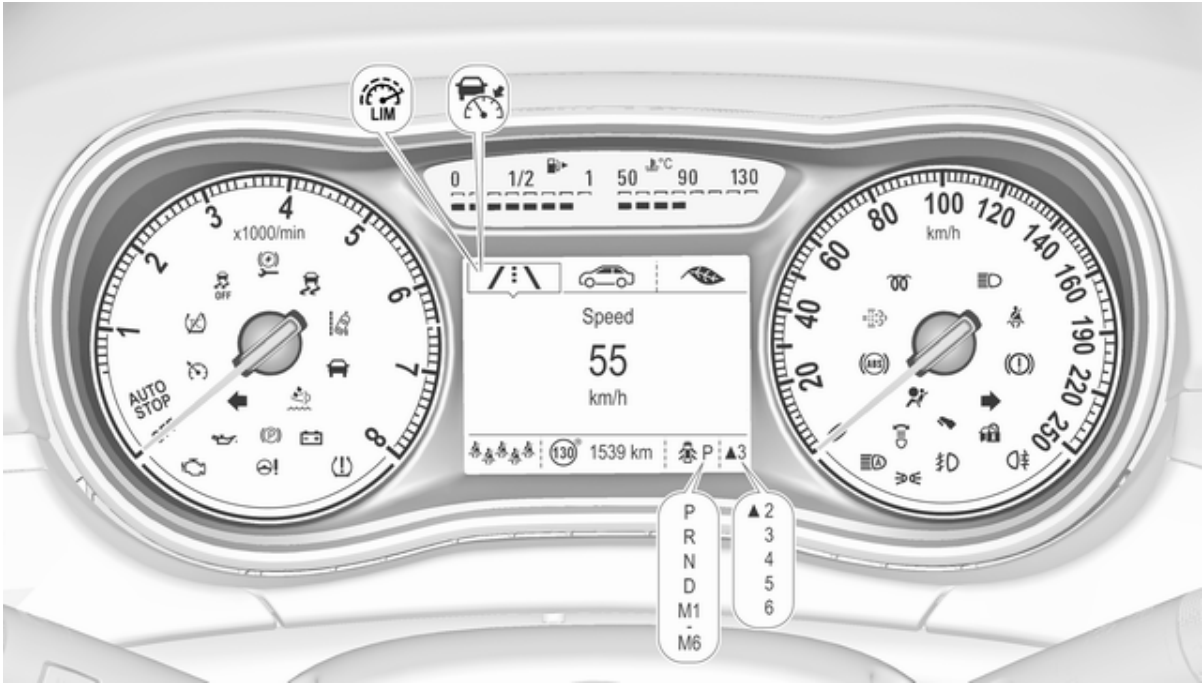

Overview

- Turn signal ⇨ 94
- Seat belt reminder ⇨ 95
- Airbag and belt tensioners ⇨ 95
- Airbag deactivation ⇨ 96
- Charging system ⇨ 96
- Malfunction indicator light ⇨ 96
- Brake and clutch system ⇨ 96
- Electric parking brake ⇨ 97
- Electric parking brake fault ⇨ 97
- Operate pedal ⇨ 97
- Antilock brake system (ABS) ⇨ 97
- Gear shifting ⇨ 98
- Following distance ⇨ 98
- Power steering ⇨ 98
- Lane departure warning ⇨ 98
- Electronic Stability Control off ⇨ 98
- Electronic Stability Control and Traction Control system ⇨ 98
- Traction Control system off ⇨ 98
- Preheating ⇨ 99
- Exhaust filter ⇨ 99
- AdBlue ⇨ 99
- Tyre pressure monitoring system ⇨ 99
- Engine oil pressure ⇨ 99
- Low fuel ⇨ 100
- Immobiliser ⇨ 100
- Exterior light ⇨ 100
- High beam ⇨ 100
- High beam assist ⇨ 100
- LED headlights ⇨ 118
- Fog light ⇨ 100
- Rear fog light ⇨ 100
- Cruise control ⇨ 100 / Adaptive cruise control ⇨ 101
- Adaptive cruise control ⇨ 101
- Vehicle detected ahead ⇨ 101
- Speed limiter ⇨ 101
- Traffic sign assistant ⇨ 101
- Door open ⇨ 101

Turn lights

⇦⇨ illuminates or flashes green.

Illuminates briefly

The parking lights are switched on.

Flashes

A turn signal or the hazard warning flashers are activated.

Rapid flashing: failure of a turn signal light or associated fuse, failure of turn signal light on trailer.

Bulb replacement ⇨ 247, Fuses ⇨ 254.

Turn signals ⇨ 119.

Seat belt reminder

Seat belt reminder on front seats

for driver's seat or for front passenger seat illuminates or flashes red in the instrument cluster.

Illuminates

After the ignition has been switched on until the seat belt has been fastened.

Flashes

After having started the engine, for a maximum of 100 seconds until the seat belt has been fastened.

Fastening the seat belt ⇨ 46.

Seat belt status on rear seats

illuminates or flashes white or grey in the Driver Information Centre, after having started the engine.

Illuminates white

Seat belt is unfastened.

Illuminates grey

Seat belt has been fastened.

Flashes white or grey

Fastened seat belt has been unfastened.

Fastening the seat belt ⇨ 46.

Airbag and belt tensioners

illuminates red.

When the ignition is switched on, the control indicator illuminates for approx. four seconds. If it does not illuminate, does not extinguish after four seconds or illuminates whilst driving, there is a fault in the airbag system. Seek the assistance of a workshop. The airbags and belt pretensioners may fail to trigger in the event of an accident.

Deployment of the belt pretensioners or airbags is indicated by continuous illumination of .

⚠ Warning

Have the cause of the fault remedied immediately by a workshop.

Belt pretensioners, airbag system ⇨ 45, ⇨ 49.

Airbag deactivation

ON illuminates yellow.

Illuminates for approx. 60 seconds after the ignition is switched on. The front passenger airbag is activated.

OFF illuminates yellow.

The front passenger airbag is deactivated ⇨ 54.

⚠ Danger

Risk of fatal injury for a child using a child restraint system together with activated front passenger airbag.

Risk of fatal injury for an adult person with deactivated front passenger airbag.

Charging system

illuminates red.

Illuminates when the ignition is switched on and extinguishes shortly after the engine starts.

Illuminates when the engine is running

Stop, switch off engine. Vehicle battery is not charging. Engine cooling may be interrupted. The brake servo unit may cease to be effective. Seek the assistance of a workshop.

Malfunction indicator light

illuminates or flashes yellow.

Illuminates when the ignition is switched on and extinguishes shortly after the engine starts.

Illuminates when the engine is running

Fault in the emission control system. The permitted emission limits may be exceeded. Seek the assistance of a workshop immediately.

Flashes when the engine is running

Fault that could lead to catalytic converter damage. Ease up on the accelerator until the flashing stops. Seek the assistance of a workshop immediately.

Brake and clutch system

illuminates red.

The brake and clutch fluid level is too low, when manual parking brake is not applied ⇨ 244.

⚠ Warning

Stop. Do not continue your journey. Consult a workshop.

Illuminates when the manual parking brake is applied and ignition is switched on ⇨ 197.

Operate pedal

illuminates or flashes yellow.

Illuminates

Brake pedal must be depressed to release the electric parking brake ⇨ 197

Clutch pedal must be depressed to start the engine in Autostop mode. Stop-start system ⇨ 185.

Flashes

Clutch pedal must to be depressed to start the engine with the key ⇨ 17, ⇨ 183.

On some versions, the message to operate the clutch pedal is indicated in the Driver Information Centre ⇨ 106.

Electric parking brake

(P) illuminates or flashes red.

Illuminates

Electric parking brake is applied ⇨ 197.

Flashes

Electric parking brake is not fully applied or released. Switch on ignition, depress brake pedal and attempt to reset the system by first releasing and then applying the electric parking brake. If (P) remains flashing, do not drive and seek the assistance of a workshop.

Electric parking brake fault

illuminates or flashes yellow.

Illuminates

Electric parking brake is operating with degraded performance ⇨ 197.

Flashes

Electric parking brake is in service mode. Stop vehicle, apply and release the electric parking brake to reset.

⚠ Warning

Have the cause of the fault remedied immediately by a workshop.

Antilock brake system (ABS)

(ABS) illuminates yellow.

Illuminates for a few seconds after the ignition is switched on. The system is ready for operation when the control indicator extinguishes.

If the control indicator does not extinguish after a few seconds, or if it illuminates while driving, there is a

fault in the ABS. The brake system remains operational but without ABS regulation.

Antilock brake system ⇨ 196.

Gear shifting

▲ with the number of a higher gear is indicated, when upshifting is recommended for fuel saving reasons.

Power steering

! illuminates yellow.

Illuminates with power steering reduced

Power steering is reduced due to overheating of the system. Control indicator extinguishes when the system has cooled down.

Stop-start system ⇨ 185.

Illuminates with power steering disabled

Failure in the power steering system. Consult a workshop.

Following distance

indicates the following distance setting of the alert timing sensitivity for the forward collision alert using filled distance bars.

Forward collision alert ⇨ 212.

Lane departure warning

illuminates green or flashes yellow.

Illuminates green

System is switched on and ready to operate.

Flashes yellow

System recognizes an unintended lane change.

Electronic Stability Control off

illuminates yellow.

The system is deactivated.

Electronic Stability Control and Traction Control system

illuminates or flashes yellow.

Illuminates

A fault in the system is present. Continued driving is possible. Driving stability, however, may deteriorate depending on road surface conditions.

Have the cause of the fault remedied by a workshop.

Flashes

The system is actively engaged. Engine output may be reduced and the vehicle may be braked automatically to a small degree.

Electronic Stability Control ⇨ 200, Traction Control system ⇨ 199.

Traction Control system off

illuminates yellow.

The system is deactivated.

Preheating

illuminates yellow.

Preheating is activated. Only activates when outside temperature is low.

Exhaust filter

illuminates or flashes yellow.

The exhaust filter requires cleaning.

Continue driving until extinguishes. If possible, do not allow engine speed to drop below 2000 rpm.

Illuminates

The exhaust filter is full. Start cleaning process as soon as possible.

Flashes

The maximum filling level of the filter is reached. Start cleaning process immediately to avoid damage to the engine.

Exhaust filter ⇨ 188, Stop-start system ⇨ 185.

AdBlue

flashes yellow.

AdBlue level is low. Refill AdBlue soon to avoid prevention of the engine start.

AdBlue ⇨ 190.

Tyre pressure monitoring system

illuminates or flashes yellow.

Illuminates

Tyre pressure loss. Stop immediately and check tyre pressure.

Flashes

Fault in system or tyre without pressure sensor mounted (e.g. spare wheel). After 60-90 seconds the control indicator illuminates continuously. Consult a workshop.

Engine oil pressure

illuminates red.

Illuminates when the ignition is switched on and extinguishes shortly after the engine starts.

Illuminates when the engine is running

Caution
Engine lubrication may be interrupted. This may result in damage to the engine and/or locking of the drive wheels.

1. Depress clutch.
2. Select neutral gear, set selector lever to **N**.
3. Move out of the flow of traffic as quickly as possible without impeding other vehicles.
4. Switch off ignition.

⚠Warning

When the engine is off, considerably more force is needed to brake and steer. During an Autostop the brake servo unit will still be operational.

Do not remove key until vehicle is stationary, otherwise the steering wheel lock could engage unexpectedly.

Keep engine turned off and let the vehicle be towed to a workshop.

Low fuel

illuminates or flashes yellow.

Illuminates

Level in fuel tank is too low.

Flashes

Fuel used up. Refuel immediately. Never run the tank dry.

Refuelling ⇨ 231.

Catalytic converter ⇨ 189.

Bleeding the diesel fuel system ⇨ 246.

Immobiliser

flashes yellow.

Fault in the immobiliser system. The engine cannot be started.

Exterior light

illuminates green.

The exterior lights are on ⇨ 114.

High beam

illuminates blue.

Illuminates when high beam is on, during headlight flash ⇨ 115, or when high beam is on with high beam assist ⇨ 115.

High beam assist

illuminates green.

The high beam assist is activated ⇨ 118.

LED headlights

illuminates or flashes yellow.

Illuminates

Fault in the system.

Seek the assistance of a workshop.

Flashes

System is switched to symmetrical low beam.

Control indicator flashes for approx. four seconds after the ignition is switched on as a reminder for symmetrical headlight ⇨ 117.

Front fog lights

illuminates green.

The front fog lights are on ⇨ 119.

Rear fog light

illuminates yellow.

The rear fog light is on ⇨ 120.

Cruise control

illuminates white or green.

Illuminates white

The system is on.

Illuminates green

Cruise control is active. Set speed is indicated in the Driver Information Centre.

Cruise control ⇨ 203.

Adaptive cruise control

illuminates white or green.

illuminates in the Driver Information Centre.

illuminates white

The system is on.

illuminates green

Adaptive cruise control is active.

When Adaptive cruise control is on or active, with the set speed is indicated in the Driver Information Centre.

Adaptive cruise control ⇨ 206.

Vehicle detected ahead

illuminates green.

Illuminates green

A vehicle ahead is detected in the same lane.

Adaptive cruise control ⇨ 206, Forward collision alert ⇨ 212.

Speed limiter

illuminates in the Driver Information Centre when Speed limiter is active. Set speed is indicated alongside symbol.

Speed limiter ⇨ 204.

Traffic sign assistant

displays detected traffic signs as a control indicator.

Traffic sign assistant ⇨ 224.

Door open

illuminates red.

A door or the tailgate is open.

Displays

Driver Information Centre

The Driver Information Centre is located in the instrument cluster.

The following menus are selectable in the Driver Information Centre using the buttons on the turn signal lever:

- trip/fuel information, displayed by , see description below
- vehicle information, displayed by , see description below
- economy information menu, displayed by , see description below

The following indications appear if required:

- warning messages ⇨ 106
- gear shift indication ⇨ 98
- drive mode indication ⇨ 192
- tyre pressure warning ⇨ 263
- seat belt reminder indication ⇨ 95
- service information ⇨ 91

Some of the displayed functions differ when the vehicle is being driven or at a standstill. Some functions are only available when the vehicle is being driven.

Selecting menus and functions

The menus and functions can be selected via the buttons on the turn signal lever.

Press **MENU** to switch between the menus or to return from a submenu to the next higher menu level.

Turn the adjuster wheel to select a submenu of the main menu or to set a numeric value.

Press **SET/CLR** to select and confirm a function.

Vehicle and service messages are popped-up in the Driver Information Centre if required. Confirm messages by pressing **SET/CLR**. Vehicle messages ⇨ 106.

Trip/Fuel information /i\

Possible pages are:

- digital vehicle speed
- trip odometer

- average fuel economy
- average vehicle speed
- instantaneous fuel economy
- fuel range
- fuel range, bi-fuel engine
- fuel level, bi-fuel engine
- timer

Digital vehicle speed
Digital display of the instantaneous speed.

Trip odometer
Trip odometer displays the current distance since a certain reset.

Trip odometer counts up to 9999 km and then restarts at 0.

Turn the adjuster wheel to select between trip page 1 and 2.

To reset, press **SET/CLR** for a few seconds while viewing this page.

The information of trip page 1 and 2 can be reset separately while the respective display is active.

Average fuel economy
Display of average consumption. The measurement can be reset at any time and starts with a default value.

To reset, press **SET/CLR** for a few seconds while viewing this page.

The information of trip page 1 and 2 can be reset separately while the respective display is active.

Average vehicle speed
Display of average speed. The measurement can be reset at any time.

To reset, press **SET/CLR** for a few seconds while viewing this page.

The information of trip page 1 and 2 can be reset separately while the respective display is active.

Instantaneous fuel economy
Display of the instantaneous consumption.

Fuel range
Range is calculated from current fuel tank level and current consumption. The display shows average values.

After refuelling, the range is updated automatically after a brief delay.

When the fuel level in the tank is low, a message appears on the display and control indicator ⛽ in the fuel gauge illuminates.

When the tank must be refuelled immediately, a warning message appears and remains on the display. Additionally, control indicator ⛽ flashes in the fuel gauge ⇨ 100.

Fuel range, bi-fuel engine

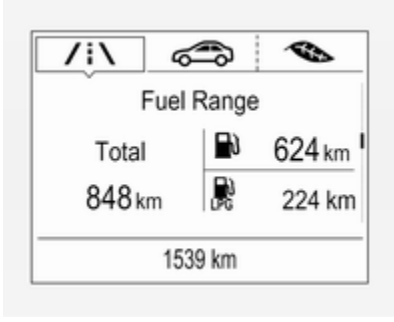

Display of the approximate total fuel range. A low fuel level in either tank is indicated by **Low** in the respective section.

Fuel level
Display of the fuel level in percent.

Timer
To operate follow the instructions on the display.

AdBlue
Indicates an estimate of the AdBlue level. The number of percentage means the remainder of AdBlue. Additionally, it is indicated whether the level is sufficient or low.

Vehicle information

Possible pages are:

- unit
- speed warning
- remaining engine oil life indication
- tyre pressure
- tyre load
- following distance
- traffic sign assistant

Unit
Press **SET/CLR** while page is displayed. Select imperial (unit 1) or metric (unit 3) by turning the adjuster wheel. Press **SET/CLR** to set the unit of measurement.

Speed warning

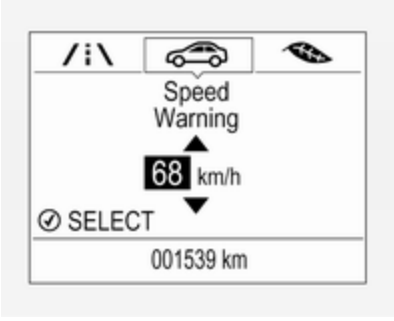

The speed warning function alerts the driver when a set speed is exceeded.

To set the speed warning, press **SET/CLR** while the page is displayed. Turn the adjuster wheel to select the value. Press **SET/CLR** to set the speed.

If the selected speed limit is exceeded, a warning chime sounds. Once the speed is set, this feature can be turned off by pressing **SET/CLR** while viewing this page.

Remaining oil life
Indicates an estimate of the oil's useful life. The number in percentage means the current remaining oil life and indicates when to change the engine oil and filter ⇨ 91.

Tyre pressure
Tyre pressures of all wheels are displayed on this page during driving ⇨ 263.

Tyre load
The tyre pressure category according to the actual tyre inflation pressure can be selected ⇨ 263.

Following distance
Displays the distance in seconds to a preceding moving vehicle ⇨ 215. If Adaptive cruise control is active this page shows the following distance setting instead.

Traffic sign assistant
Displays the detected traffic signs for the current route section ⇨ 224.

Economy information menu

Possible pages are:

- economy trend
- economy index
- top consumers

Economy trend

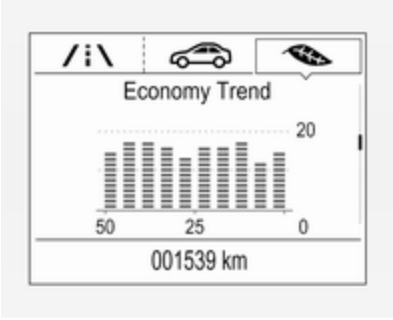

Displays the average consumption development over a distance of 50 km. Filled segments display the consumption in 5 km steps and shows the effect of topography or driving behaviour on fuel consumption.

Graph can be reset by pressing **SET/CLR**.

Economy index
The current fuel consumption is indicated on an economic scale. For economical driving, adapt driving style to keep the filled segments within the Eco area. The more segments are filled, the higher the fuel consumption.

Simultaneously, the average consumption value is indicated.

Top consumers
List of top comfort consumers currently switched on is displayed in descending order. Fuel saving potential is indicated.

During sporadic driving conditions, the engine will activate the heated rear window automatically to increase the engine load. In this event, the heated rear window is indicated as one of the top consumers, without activation by the driver.

Info Display

The Info-Display is located in the instrument panel near the instrument cluster.

The vehicle has a **7" R 4.0 IntelliLink** display with touch-screen functionality.

The Info displays can indicate:

- time ⇨ 86
- outside temperature ⇨ 86
- date ⇨ 86
- Infotainment system, see description in the Infotainment manual
- indication of rear view camera ⇨ 222
- parking assist indication ⇨ 218
- navigation, see description in the Infotainment manual
- system messages
- settings for vehicle personalisation ⇨ 108

R 4.0 IntelliLink

Selecting menus and settings

Menus and settings are accessed via the display.

Press ⏻ to switch on the display.

Press ⌂ to display the homepage.

Touch required menu display icon with the finger.

Touch a respective icon to confirm a selection.

Touch ↩ to return to the next higher menu level.

Press ⌂ to return to the homepage.

For further information, see Infotainment manual.

Vehicle personalisation ⇨ 108.

Vehicle messages

Messages are indicated mainly in the Driver Information Centre, in some cases together with a warning chime.

Vehicle and service messages in the Driver Information Centre

The vehicle messages are displayed as text. Follow the instructions given in the messages.

Press **SET/CLR**, **MENU** or turn the adjuster wheel to confirm a message.

Messages in the Info-Display

Some important messages appear additionally in the Info-Display. Some messages only pop-up for a few seconds.

Warning chimes

If several warnings appear at the same time, only one warning chime will sound.

When starting the engine or whilst driving

The warning chime regarding unfastened seat belts has priority over any other warning chime.

- If seat belt is not fastened.
- If a door or the tailgate is not fully closed when starting-off.
- If a certain speed is exceeded with parking brake applied.
- If adaptive cruise control deactivates automatically.
- If approaching a vehicle ahead too closely.
- If a programmed speed or speed limit is exceeded.
- If a warning message appears in the Driver Information Centre.
- If the parking assist detects an object.
- If an unintended lane change occurs.
- If reverse gear is engaged and the rear carrier system is extended.
- If the exhaust filter has reached the maximum filling level.

When the vehicle is parked and/or the driver's door is opened

- With exterior lights on.

During an Autostop

- If the driver's door is opened.
- If any condition for an autostart is not fulfilled.

Battery voltage

When the vehicle battery voltage is running low, a warning message will appear in the Driver Information Centre.

1. Switch off immediately any electrical consumers which are not required for a safe ride, e.g. seat heating, heated rear window or other main consumers.
2. Charge the vehicle battery by driving continuously for a while or by using a charging device.

The warning message will disappear after the engine has been started two times consecutively without a voltage drop.

If the vehicle battery cannot be recharged, have the cause of the fault remedied by a workshop.

Vehicle personalisation

The vehicle's behaviour can be personalised by changing the settings in the Info-Display.

Some of the personal settings for different drivers can be memorised individually for each vehicle key. Memorised settings ⇨ 22.

Depending on vehicle equipment and country-specific regulations, some of the functions described below may not be available.

Some functions are only displayed or active when the engine is running.

Personal settings

7" IntelliLink Display

Press ⌂, select **Settings** and then **Vehicle** on the touch-screen.

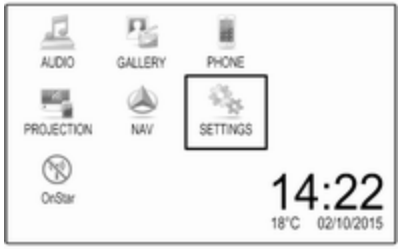

In the corresponding submenus the following settings can be changed:

Vehicle

- **Climate & Air Quality**

  Auto Fan Max Speed: Modifies the fan regulation. Changed setting will be active after switching the ignition off and on again.

  Air Conditioning Mode: Activates or deactivates cooling when switching on the ignition or uses the last chosen setting.

  Auto Defog: Activates or deactivates auto defog.

  Auto Rear Defog: Automatically activates heated rear window.

- **Collision / Detection Systems**

  Rear View Camera Guidelines: Activates or deactivates the rear view camera guidelines on the Info Display.

  Park Assist: Activates or deactivates the ultrasonic parking assist. Activation is selectable with or without attached trailer coupling.

  Auto Collision Preparation: Activates or deactivates the automatic brake functionality of the vehicle in the event of imminent collision danger. The following is selectable: the system will take over brake control, warn by chimes only or is deactivated completely.

  Side Blind Zone Alert: Activates or deactivates side blind zone alert.

- **Comfort and Convenience**

  Chime Volume: Changes the volume of warning chimes.

Personalization By Driver: Activates or deactivates the personalisation function.

Auto Wipe in Reverse Gear: Activates or deactivates automatic switching on of the rear window wiper when reverse gear is engaged.

- **Lighting**

  Vehicle Locator Lights: Activates or deactivates the entry lighting.

  Exit Lighting: Activates or deactivates and changes the duration of exit lighting.

- **Power Door Locks**

  Unlocked Door Anti Lock Out: Activates or deactivates the door locking function while a door is open.

  Auto Door Lock: Activates or deactivates the automatic door unlocking function after switching off ignition. Activates or deactivates the automatic door locking function after driving-off.

  Delayed Door Lock: Activates or deactivates the delayed door locking function.

- **Remote Lock, Unlock, Start**

  Remote Unlock Light Feedback: Activates or deactivates the hazard warning flasher feedback whilst unlocking.

  Remote Lock Feedback: Changes what kind of feedback is given when locking the vehicle.

  Remote Door Unlock: Changes the configuration to unlock only the driver's door or the whole vehicle whilst unlocking.

  Relock Remotely Unlocked Doors: Activates or deactivates the automatic relock function after unlocking without opening the vehicle.

Telematics service

OnStar

OnStar is a personal connectivity and service assistant with integrated Wi-Fi hotspot. The OnStar service is available 24 hours a day, seven days a week.

Note
OnStar is not available for all markets. For further information, contact your workshop.

Note
In order to be available and operational, OnStar needs a valid OnStar subscription, functioning vehicle electrics, mobile service and GPS satellite link.

To activate the OnStar services and set up an account, press ⓞⓝ and speak with an advisor.

Depending on the equipment of the vehicle, the following services are available:

- Emergency services and support in the case of a vehicle breakdown
- Wi-Fi hotspot
- Smartphone application
- Remote control, e.g. location of the vehicle, activation of horn and lights, control of central locking system
- Stolen vehicle assistance
- Vehicle diagnostics
- Destination download

Note
The OnStar module of the vehicle is deactivated after ten days without an ignition cycle. Functions requiring a data connection will be available again after switching on the ignition.

OnStar buttons

Note
Depending on the equipment, the OnStar buttons can also be integrated in the rear view mirror.

Privacy button
Press and hold ⊘ until a message is heard to activate or deactivate the transmission of the vehicle location.

Press ⊘ to answer a call or to end a call to an advisor.

Press ⊘ to access the Wi-Fi settings.

Service button
Press ⊙ to establish a connection to an advisor.

SOS button
Press SOS to establish a priority emergency connection to a specially trained emergency advisor.

Status LED
Green: The system is ready with activated transmission of the vehicle location.

Green flashing: The system is on a call.

Red: A problem arose.

Off: The system is ready with deactivated transmission of the vehicle location or the system is in standby mode.

Red / green flashing for a short period of time: The transmission of the vehicle location has been deactivated.

OnStar services

General services
If you need any information e.g. opening hours, points of interest and destinations or if you need any support e.g. in the case of a vehicle

breakdown, a flat tyre and empty fuel tank, press ⓞ to establish a connection to an advisor.

Emergency services

In the case of an emergency situation, press SOS and talk to an advisor. The advisor then contacts emergency or assistance service providers and directs them to your vehicle.

In the case of an accident with activation of airbags or belt tensioners, an automatic emergency call is established. The advisor is immediately connected to your vehicle to see whether help is needed.

Wi-Fi hotspot

The Wi-Fi hotspot of the vehicle provides internet connectivity with a maximum speed of 4G/LTE.

Note
The Wi-Fi hotspot functionality is not available for all markets.

Note
Some mobile devices connect to Wi-Fi hotspots automatically and use mobile data capacity in the background, even if they are not in use. This includes automatic updates, downloads, as well as programme or app synchronisation traffic. The data volume purchased via OnStar might be consumed rapidly. Turn off automatic synchronisations in the settings of your device.

Up to seven devices may be connected.

To connect a mobile device with the Wi-Fi hotspot:

1. Press ⚙ and then select Wi-Fi settings on the Info-Display. The settings displayed include the Wi-Fi hotspot name (SSID), password and connection type.
2. Start a Wi-Fi network search on your mobile device.
3. Select your vehicle hotspot (SSID) when listed.
4. When prompted, enter the password on your mobile device.

Note
To change the SSID or password, press ⓞ and talk to an advisor or log in to your account.

To switch off the Wi-Fi hotspot functionality, press ⓞ to call an advisor.

Smartphone app

With the myOpel smartphone app, some vehicle functions can be operated remotely.

The following functions are available:

- Lock or unlock vehicle.
- Honk horn or flash lights.
- Check fuel level, engine oil life and tyre pressure (only with tyre pressure monitoring system).
- Send navigation destination to the vehicle, if equipped with a built-in navigation system.
- Locate vehicle on a map.
- Manage Wi-Fi settings.

To operate these functions, download the app from App Store® or Google Play™ Store.

Remote control

If desired, use any phone to call an advisor, who can remotely operate specific vehicle functions. Find the respective OnStar phone number on our country-specific website.

The following functions are available:

- Lock or unlock vehicle.
- Provide information on the vehicle location.
- Honk horn or flash lights.

Stolen vehicle assistance

If the vehicle is stolen, report the theft to the authorities and request OnStar stolen vehicle assistance. Use any phone to call an advisor. Find the respective OnStar phone number on our country-specific website.

OnStar can provide support in locating and recovering the vehicle.

Theft alert

When the anti-theft alarm system is triggered, a notification is sent to OnStar. You are then informed about this event by text message or email.

Restart prevention

By sending remote signals, OnStar can prevent the vehicle from restarting once it has been turned off.

On-demand diagnostics

At any time e.g. if the vehicle displays a vehicle message, press ⓞ to contact an advisor and ask to complete a real-time diagnostic check to directly determine the issue. Depending on the results, the advisor will provide further support.

Diagnostic report

The vehicle automatically transmits diagnostic data to OnStar which sends a monthly email report to you and your preferred workshop.

Note
The workshop notification function can be disabled in your account.

The report contains the status of key operating systems of the vehicle like engine, transmission, airbags, ABS, and other major systems. It also provides information on possible maintenance items and tyre pressure (only with tyre pressure monitoring system).

To look at the information in greater detail, select the link within the email and log in to your account.

Destination download

A desired destination can be directly downloaded to the navigation system.

Press ⓞ to call an advisor and describe the destination or point of interest.

The advisor can look up any address or point of interest and directly send the destination to the built-in navigation system.

OnStar settings

OnStar PIN

To have full access to all OnStar services, a four-digit PIN is required. The PIN has to be personalised when first talking to an advisor.

To change the PIN, press ⓞ to call an advisor.

Account data

An OnStar subscriber has an account where all the data is stored. To request a change of the account information, press ⓞ and talk to an advisor or log in to your account.

If the OnStar service is used on another vehicle, press ⓞ and request that the account be transferred to the new vehicle.

Note
In any case, if the vehicle is disposed of, sold or otherwise transferred, immediately inform OnStar about the changes and terminate the OnStar service on this vehicle.

Vehicle location

The vehicle location is transmitted to OnStar when service is requested or triggered. A message on the Info-Display informs about this transmission.

To activate or deactivate the transmission of the vehicle location, press and hold ⊗ until an audio message is heard.

The deactivation is indicated by the status light flashing red and green for a short period of time and each time the vehicle is started.

Note
If the transmission of the vehicle location is deactivated, some services are no longer available.

Note
The vehicle location always remains accessible to OnStar in the case of an emergency.

Find the privacy policy in your account.

Software updates

OnStar may remotely carry out software updates without further notice or consent. These updates are to enhance or maintain safety and security or the operation of the vehicle.

These updates may concern privacy issues. Find the privacy policy in your account.

Lighting

Exterior lighting **114**
Light switch 114
Automatic light control 115
High beam 115
High beam assist 115
Headlight flash 116
Headlight range adjustment 116
Headlights when driving abroad 117
Daytime running lights 117
LED headlights 118
Hazard warning flashers 119
Turn lights 119
Front fog lights 119
Rear fog light 120
Parking lights 120
Reversing lights 120
Misted light covers 120
Interior lighting **121**
Instrument panel illumination control 121
Interior lights 121
Reading lights 122
Sunvisor lights 122
Lighting features **122**
Centre console lighting 122
Entry lighting 122
Exit lighting 122
Battery discharge protection 123

Exterior lighting

Light switch

Turn light switch:

AUTO : automatic light control switches automatically between daytime running light and headlight
: sidelights
: headlights

When switching on the ignition, automatic light control is active.

Control indicator ⇨ 100.

Tail lights

Tail lights are illuminated together with low/high beam and sidelights.

Automatic light control

When the automatic light control function is switched on and the engine is running, the system switches between daytime running lights and headlights automatically depending on the external lighting conditions and information given by the wiper system.

Daytime running light ⇨ 117.

Automatic headlight activation

During poor lighting conditions the headlights are switched on.

The headlights are also switched on if the windscreen wipers have been activated for several wipes.

Tunnel detection

When a tunnel is entered headlights are switched on immediately.

High beam

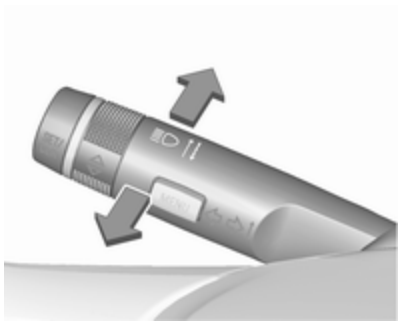

Push lever to switch from low to high beam.

Pull lever to deactivate high beam.

High beam assist ⇨ 118.

High beam assist

This feature automatically activates the high beam at night when vehicle speed is faster than40 km/h.

It switches automatically back to low beam when:

- The camera or a sensor in the windscreen detects the lights of oncoming or preceding vehicles.
- The vehicle speed drops below 20 km/h.
- It is foggy or snowy.
- Driving in urban areas.

If there are no restrictions detected, the system switches back to high beam.

Activation

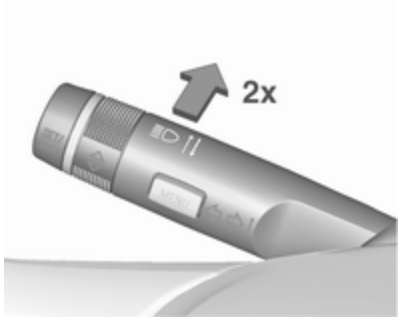

The high beam assist is activated by pushing the indicator lever twice with a speed above 40 km/h.

The green control indicator illuminates continuously when the assist is activated, the blue one illuminates when high beam is on.

Control indicator ⇨ 100.

Deactivation

Push indicator lever once. It is also deactivated when front fog lights are switched on.

If a headlight flash is activated when the high beam is on, the high beam assist will be deactivated.

If a headlight flash is activated when the high beam is off, the high beam assist will remain activated.

The latest setting of the high beam assist will remain after the ignition is switched on again.

Headlight flash

To activate the headlight flash, pull lever.

Pulling lever deactivates high beam.

LED headlights ⇨ 118.

Headlight range adjustment

Manual headlight range adjustment

To adapt headlight range to the vehicle load to prevent dazzling: turn thumb wheel to required position.

0 : front seats occupied
1 : all seats occupied
2 : all seats occupied and load compartment laden
3 : driver's seat occupied and load compartment laden

Dynamic automatic headlight levelling ⇨ 118.

Headlights when driving abroad

The asymmetrical headlight beam extends visibility at the edge of the road at the passenger side.

However, when driving in countries where traffic drives on the opposite side of the road, adjust the headlights to prevent dazzling of oncoming traffic.

Vehicles with halogen headlight

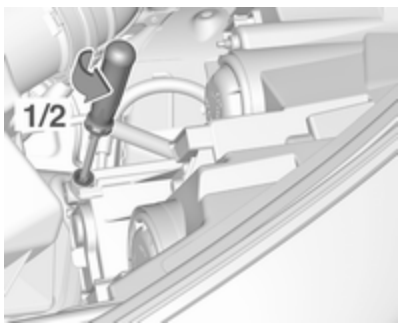

There is a white adjuster element on the rear of each headlight housing.

Turn adjuster element on each headlight housing $^1/_2$ turn with a size six hexagon key anticlockwise to set to right-hand traffic mode. To adjust, insert the key in the guide as shown in the illustration. Alternatively, a Phillips head screwdriver size three can be used for setting.

To reset to left-hand traffic mode, turn adjuster elements on both headlight housings $^1/_2$ turn clockwise.

Vehicles with LED headlight

1. Key in ignition switch.
2. Pull turn signal lever and hold (headlight flash).
3. Switch on ignition.
4. After approx. five seconds the control indicator ⦿ starts flashing and an acoustic signal sounds.

Control indicator ⦿ ⇨ 100.

Every time the ignition is switched on, ⦿ flashes as a reminder for approx. four seconds.

For deactivation, operate the same procedure as described above. ⦿ will not flash when function is deactivated.

Daytime running lights

Daytime running light increases visibility of the vehicle during daylight.

They are switched on automatically when the engine is running.

The system switches between daytime running lights and headlights automatically, depending on the lighting conditions. Automatic light control ⇨ 115.

LED headlights

LED lighting system includes:

- LED headlights for low and high beam
- cornering lights
- town light
- high beam assist
- reverse parking function
- eco mode
- dynamic automatic headlight levelling

LED headlights for low and highbeam

LED headlights for low and high beam ensure better visibility under all conditions.

Operation is the same as for halogen headlights.

Light switch ⇨ 114, high beam ⇨ 115, headlight flash ⇨ 116, headlights when driving abroad ⇨ 117.

Automatic light control ⇨ 115.

Cornering lights

On tight bends or when turning off, depending on the steering angle or the indicator light signal, an additional left or right reflector is switched on which illuminates the road in the direction of travel. It is activated up to a speed of 70 km/h.

Town light

Activated automatically at a speed up to approx. 55 km/h. In situations with exterior ambient light both cornering lights are switched on with reduced intensity. The light is wide and symmetrical.

High beam assist

⇨ 115

Reverse parking function

To assist driver's orientation when parking, both corner lights and reversing light illuminate when headlights are on and reverse gear is engaged. They remain illuminated for a short time after disengaging reverse gear or until driving faster than 7 km/h in a forward gear.

Eco mode

If the vehicle stops, e. g. due to traffic lights, an energy saving mode for headlights is activated.

Dynamic automatic headlight levelling

To prevent oncoming traffic from being dazzled, headlight levelling is automatically adjusted based on vehicle inclination information.

Headlights when driving abroad

⇨ 117.

Fault in LED headlight system

When the system detects a failure in the LED headlight system, illuminates and a warning is displayed in the Driver Information Centre.

Hazard warning flashers

Operated by pressing .

In the event of an accident with airbag deployment the hazard warning flashers are activated automatically.

Turn lights

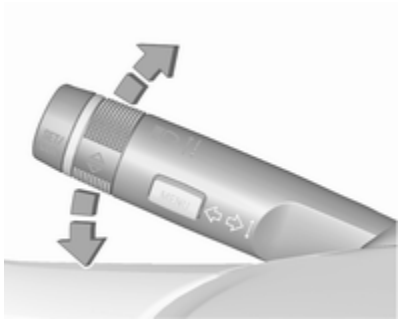

lever up : right turn signal
lever down : left turn signal

A resistance point can be felt when moving the lever.

Constant flashing is activated when the lever is being moved beyond the resistance point. It is deactivated when the steering wheel is moved in the opposite direction or lever is manually moved back to its neutral position.

Activate temporary flashing by holding the lever just before the resistance point. Turning lights will flash until lever is being released.

To activate three flashes, tap the lever briefly without passing the resistance point.

When a trailer is connected, turn signal flashes six times when pressing the lever until resistance is felt and then releasing.

Front fog lights

Operated by pressing .

Light switch in position **AUTO**: switching on front fog lights will switch headlights on automatically.

Rear fog light

Operated by pressing ⊄.

Light switch in position **AUTO**: switching on rear fog light will switch headlights on automatically.

Light switch in position ≡⊄: rear fog light can only be switched on with front fog lights.

The vehicle rear fog light is deactivated when towing a trailer or a plug is connected with the socket, e. g. when a bicycle carrier is used.

Parking lights

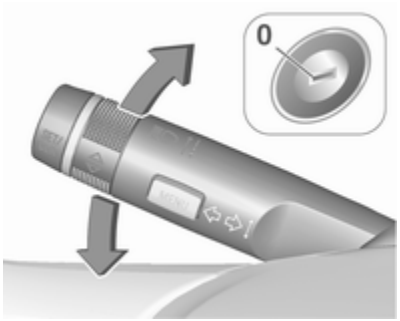

When the vehicle is parked, the parking lights on one side can be activated:

1. Switch off ignition.
2. Move turn signal lever all the way up (right parking lights) or down (left parking lights).

Confirmed by a signal and the corresponding turn signal control indicator.

Reversing lights

The reversing light comes on when the ignition is on and reverse gear is selected.

Misted light covers

The inside of the light housing may mist up briefly in poor, wet and cold weather conditions, in heavy rain or after washing. The mist disappears quickly by itself; to help switch on the headlights.

Interior lighting

Instrument panel illumination control

Brightness of the following lights can be adjusted when the exterior lights are on:

- instrument panel illumination
- Info-Display
- illuminated switches and operation elements

Turn thumb wheel and hold until the desired brightness is obtained.

Interior lights

During entry and exit of the vehicle, the front and rear courtesy lights automatically switch on and then off after a delay.

Note
In the event of an accident with airbag deployment the courtesy lights are turned on automatically.

Front courtesy light

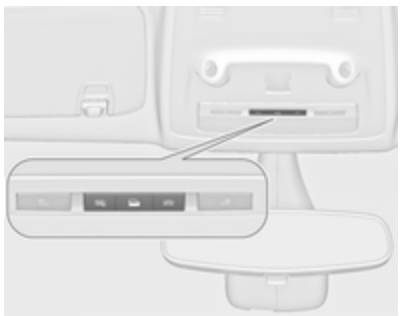

: automatic switching on and off
press : on
press : off

Rear courtesy lights

Illuminate in conjunction with the front courtesy light depending on rocker switch position.

Reading lights

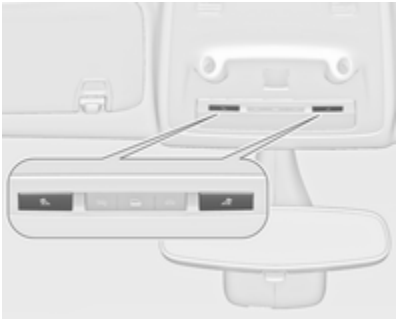

Operated by pressing and in front and rear courtesy lights.

Sunvisor lights

Illuminates when the cover is opened.

Lighting features

Centre console lighting

Spotlight incorporated in the interior lighting comes on when headlights are switched on.

Entry lighting

Welcome lighting

Headlights, tail lights, number plate lights, instrument panel light, interior lights and the light pipes in doors and FlexConsole are switched on for a short time by unlocking the vehicle with the radio remote control. This function works only in the dark and facilitates locating the vehicle.

The lighting switches off immediately when the ignition key is turned to position **1** ⇨ 182.

Activation or deactivation of this function can be changed in the Settings menu in the Info-Display. Vehicle personalisation ⇨ 108.

The settings can be saved for the key being used ⇨ 22.

The following lights will additionally switch on when the driver's door is opened:

- illumination of some switches
- Driver Information Centre
- door pocket lights

Exit lighting

The following lights switch on if the key is removed from the ignition switch:

- interior lights
- instrument panel light (only when it is dark)
- light tubes in doors
- number plate lights (puddle lights)

They will switch off automatically after a delay and will be activated again if the driver's door is opened.

Path lighting

Headlights, tail lights and number plate lights illuminate the surrounding area for an adjustable time after leaving the vehicle.

Activating

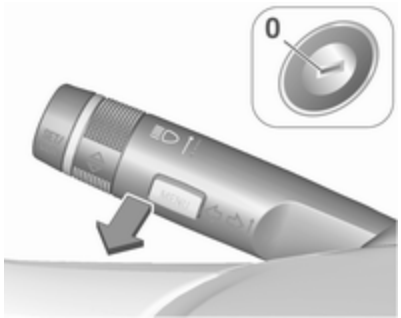

1. Switch off ignition.
2. Remove ignition key.
3. Open driver's door.
4. Pull turn signal lever.
5. Close driver's door.

If the driver's door is not closed, the lights switch off after two minutes.

Exit lighting is switched off immediately if the turn signal lever is pulled while the driver's door is open.

Activation, deactivation and duration of this function can be changed in the Settings menu in the Info-Display. Vehicle personalisation ⇨ 108.

The settings can be saved for the key being used ⇨ 22.

Battery discharge protection

To prevent discharge of the vehicle battery when the ignition is switched off, some interior lights are switched off automatically after some time.

Infotainment system

Introduction **124**
General information 124
Theft-deterrent feature 125
Control elements overview 126
Usage 129
Basic operation **131**
Tone settings 133
Volume settings 134
System settings 135
Radio **137**
Usage 137
Station search 138
Favourite lists 139
Radio data system 140
Digital audio broadcasting 141
External devices **143**
General information 143
Playing audio 144
Displaying pictures 145
Playing movies 147
Using smartphone applications 148
Navigation **149**
General information 149
Usage 150
Destination input 155
Guidance 160
Speech recognition **163**
General information 163
Usage 163
Phone **164**
General information 164
Bluetooth connection 164
Emergency call 167
Operation 167
Mobile phones and CB radio equipment 171

Introduction

General information

The Infotainment system provides you with state-of-the-art in-car Infotainment.

Using radio tuner functions, you may register up to 25 stations on five favourite lists.

You can connect external data storage devices to the Infotainment system as further audio sources; either via cable or via Bluetooth®.

The navigation system with dynamic route planning will reliably guide you to your destination, and, if desired, automatically avoid traffic jams or other traffic problems.

In addition, the Infotainment system allows comfortable and safe use of your mobile phone in the vehicle.

You can also operate specific smartphone applications via the Infotainment system.

Optionally, the Infotainment system can be operated using the touch screen and buttons on the control

panel, the controls on the steering wheel, or - if provided by your mobile phone - via speech recognition.

The well-thought-out design of the control elements, the touch screen and the clear display enable you to control the system easily and intuitively.

Note
This manual describes all options and features available for the various Infotainment systems. Certain descriptions, including those for display and menu functions, may not apply to your vehicle due to model variant, country specifications, special equipment or accessories.

Important information on operation and traffic safety

⚠ Warning

The Infotainment system must be used so that the vehicle can be driven safely at all times. If in doubt, stop the vehicle and operate the Infotainment system while the vehicle is stationary.

⚠ Warning

In some areas one-way streets and other roads and entrances (e.g. pedestrian zones) that you are not allowed to turn into are not marked on the map. In such areas the Infotainment system may issue a warning that must be accepted. Here you must pay particular attention to one-way streets, roads and entrances that you are not allowed to drive into.

Radio reception

Radio reception may be disrupted by static, noise, distortion or loss of reception due to:

- changes in distance from the transmitter
- multipath reception due to reflection
- shadowing

Theft-deterrent feature

The Infotainment system is equipped with an electronic security system for the purpose of theft deterrence.

The Infotainment system therefore functions only in your vehicle and is worthless to a thief.

Control elements overview

Control panel

1 Info Display / Touch screen 131

2 Home menu 131

Screen buttons for access to:

Audio: audio functions

Gallery: picture and movie functions

Phone: mobile phone functions

Projection: phone projection

or **Nav**: BringGo® app

Navigation: embedded navigation

Settings: system settings

OnStar: OnStar Wi-Fi settings 129

3 Time, date and temperature indicators 135

4 ☎

Short press: open phone menu 167

or open phone projection function (if activated) 148

Long press: activate speech recognition 163

5 ⏭

Short press: skip to next station when radio active 138

or skip to next track when external devices active 144

Long press: seek up when radio active 138

or fast forward when external devices active 144

6 ⏻

Short press: switch on Infotainment system if turned off 129

or mute system if turned on 129

Long press: switch off Infotainment system 129

Turn: adjust volume 129

7 ⏮

Short press: skip to previous station when radio active 138

or skip to previous track when external devices active 144

Long press: seek down when radio active 138

or fast rewind when external devices active 144

8 ⌂

Short press: open home menu 129

Long press: open phone projection function (if activated) 148

Steering wheel controls

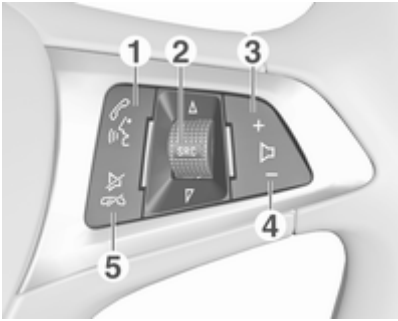

1 ☎ 🗣

Short press: open OnStar menu if no phone connected 129

or take phone call if phone connected 164

or open phone menu if phone connected 167

or dial last number in call list when phone menu displayed 167

or switch between calls when calls are waiting 167

Long press: activate speech recognition 163

2 SRC (Source) 129

Press: select audio source .. 129

Turn upwards / downwards: select next / previous preset radio station when radio active 137

or select next / previous track / chapter / picture when external devices active 144

or select next / previous entry in call list when phone function active and call list open 167

Turn upwards / downwards and hold: scroll quickly through the entries in the call list 167

3 +

Press: increase volume

4 -

Press: reduce volume

5 🔇 ☎

Press: end / decline call 167

or deactivate speech recognition 163

or activate / deactivate mute function 129

Usage

Control elements

The Infotainment system is operated via function buttons, a touch screen and menus that are shown on the display.

Inputs are made optionally via:

- the control panel on the Infotainment system ⇨ 126
- the touch screen ⇨ 131
- audio controls on the steering wheel ⇨ 126
- the speech recognition ⇨ 163

Switching the Infotainment system on or off

Short press ⏻ to switch the system on. After switching on, the last selected Infotainment source becomes active.

Long press ⏻ to switch the system off.

Automatic switch-off

If the Infotainment system has been switched on by pressing ⏻ while the ignition is switched off, it will switch off again automatically 10 minutes after the last user input.

Setting the volume

Turn ⏻. The current setting is shown on the display.

When the Infotainment system is switched on, the last selected volume is set, provided that it is lower than the maximum start-up volume. For a detailed description ⇨ 134.

Speed compensated volume

When the speed compensated volume is activated ⇨ 134, the volume is adapted automatically to make up for the road and wind noise as you drive.

Mute

Press ⏻ to mute the Infotainment system.

To cancel the mute function, press ⏻ again. The last selected volume is set again.

Modes of operation

Press ⌂ to display the home menu.

Note
For a detailed description of menu operation via touch screen ⇨ 131.

Audio

Select **Audio** to open the main menu of the last selected audio mode.

Select **Source** on the screen to display the interaction selector bar.

To change to another audio mode, touch one of the items in the interaction selector bar.

For a detailed description of:

- Radio functions ⇨ 137
- External devices ⇨ 144

Gallery

Select **Gallery** to open the picture and movie menu for files stored on an external device, e.g. USB device or smartphone.

Select ⊡ or ▭ to display the picture or movie menu. Select the desired picture or movie file to show the respective item on the display.

For a detailed description of:

- Picture functions ⇨ 145
- Movie functions ⇨ 147

Phone

Before the phone function can be used, a connection has to be established between the Infotainment system and the mobile phone.

For a detailed description of preparing and establishing a Bluetooth connection between the Infotainment system and a mobile phone ⇨ 164.

If the mobile phone is connected, select **Phone** to display the main menu.

For a detailed description of mobile phone operation via the Infotainment system ⇨ 167.

Projection

To show specific apps of your smartphone displayed on the Infotainment system, connect your smartphone.

Select **Projection** to start the projection function.

Depending on the smartphone connected, a main menu with different selectable apps is displayed.

For a detailed description ⇨ 148.

Navigation
(embedded navigation system)

Press ⌂ to display the home screen.

Select **Navigation** to display the navigation map showing the area around the current location.

For a detailed description of the navigation functions ⇨ 149.

Nav
(if embedded navigation system and **Projection** not available)

To start the BringGo navigation application, select **Nav**.

For a detailed description ⇨ 148.

Settings
Select **Settings** to open a menu for various system-related settings, e.g. deactivating **Audible Touch Feedback**.

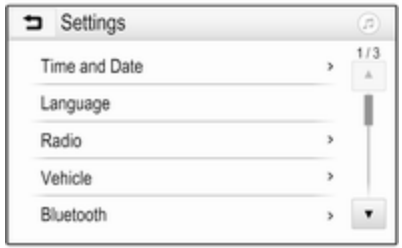

OnStar
To display a menu with the OnStar Wi-Fi settings, select **OnStar**.

For a detailed description, see Owner's Manual.

Basic operation

The display of the Infotainment system has a touch-sensitive surface that allows direct interaction with the displayed menu controls.

Caution
Do not use pointed or hard items like ballpoint pens, pencils or similar for touch screen operation.

⮌ screen button

When operating the menus, press ⮌ in the respective submenu to return to the next higher menu level.

When no ⮌ screen button is displayed, you are on the top level of the respective menu. Press ⌂ to display the home screen.

Selecting or activating a screen button or menu item

Touch a screen button or menu item.

The corresponding system function is activated, a message is shown, or a submenu with further options is displayed.

Moving items on the home menu

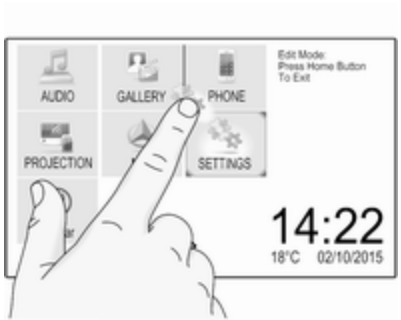

Touch and hold the element you wish to move until red boxes appear around the icons. Move your finger to the desired location and release the element.

Note
Constant pressure must be applied and the finger must be moved at a constant speed.

All other items are rearranged.

Press one of the buttons on the control panel to exit edit mode.

Note
Edit mode exits automatically after 30 seconds of inactivity.

Scrolling lists

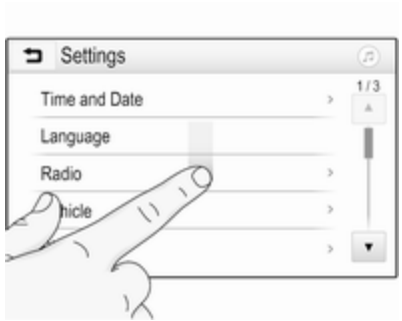

If there are more items available than presentable on the screen, the list must be scrolled.

To scroll through a list of menu items, you may optionally:

- Place your finger anywhere on the screen and move it upwards or downwards.

Note
Constant pressure must be applied and the finger must be moved at a constant speed.

- Touch ▼ or ▲ at the top or bottom of the scroll bar.
- Move the slider of the scroll bar up and down with your finger.

To return to the top of the list, touch the list title.

Scrolling pages

Note
Pages are only scrollable if there is more than one page available.

To scroll from one page to another:

- Place your finger anywhere on the screen and move it left to scroll to the next page or right to scroll to the previous page.

Note
Constant pressure must be applied and the finger must be moved at a constant speed.

- Touch > or < on the screen.

Quick-jumping to the Audio and Navigation application

Using the ♫ or ⌖ symbols displayed in the top line of some menus, you may directly jump to a different application.

To directly jump to the **Audio** menu, select ♫.

To directly jump to the **Navigation** menu, select ⌖.

Note
The ⌖ symbol is only available if route guidance is active.

Tone settings

In the tone settings menu, the tone characteristics can be set. The menu may be accessed from each audio main menu.

To open the tone settings menu, select **Menu** in the respective audio main menu. If necessary, scroll

through the list of menu items and select **Tone Settings**. The respective menu is displayed.

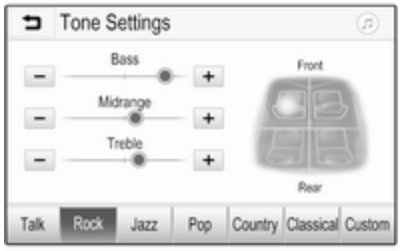

Equaliser mode

Use this setting to optimise the tone for the style of music, e.g. **Rock** or **Classical**.

Select the desired sound style in the interaction selector bar at the bottom of the screen. If you choose **Custom**, you can manually adjust the following settings.

Bass
Use this setting to enhance or attenuate the deep frequencies of the audio sources.

Touch + or - to adjust the setting.

Midrange
Use this setting to enhance or attenuate the midrange frequencies of the audio source.

Touch + or - to adjust the setting.

Treble
Use this setting to enhance or attenuate the high frequencies of the audio sources.

Touch + or - to adjust the setting.

Setting balance and fader
Use the illustration at the right side of the menu to adjust balance and fader.

To define the point in the passenger compartment where the sound is at its highest level, touch the corresponding point in the illustration. Alternatively, you can move the red marker to the desired point.

Note
The balance and fader settings are valid for all audio sources. They cannot be adjusted individually for each audio source.

Volume settings

Adjusting the maximum startup volume

Press ⌂ and then select **Settings**.

Select **Radio**, scroll through the list and then select **Max Startup Volume**.

Touch + or - to adjust the setting or move the slider on the volume bar.

Adjusting the speed compensated volume

Press ⌂ and then select **Settings**.

Select **Radio**, scroll through the list and then select **Auto Volume**.

To adjust the degree of volume adaptation, select one of the options in the list.

Off: no enhancement of volume with increasing vehicle speed.

High: maximum enhancement of volume with increasing vehicle speed.

Activating or deactivating the audible touch feedback function

If the audible touch feedback function is activated, each touch of a screen button or menu item is indicated by a beeping sound.

Press ⌂ and then select **Settings**.

Select **Radio** and then scroll through the list to **Audible Touch Feedback**.

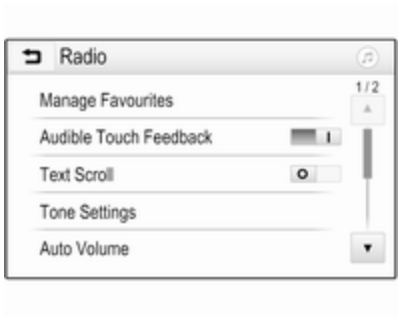

Touch the screen button next to **Audible Touch Feedback** to activate or deactivate the function.

Volume of traffic announcements

To adjust the volume of traffic announcements, set the desired volume while a traffic announcement is given out by the system. The respective setting is then stored by the system.

System settings

The following settings concern the whole system. All other settings are described in the respective chapters of this manual.

Time and date settings

Press ⌂ and then select **Settings**.

Select **Time and Date** to display the respective submenu.

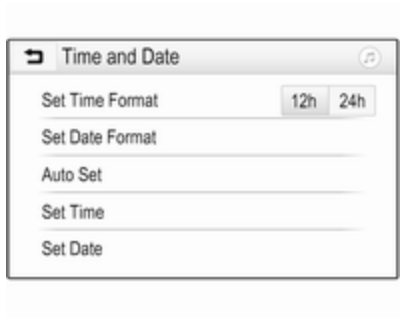

Set Time Format
To select the desired time format, touch the screen buttons **12 h** or **24 h**.

Set Date Format
To select the desired date format, select **Set Date Format** and choose between the available options in the submenu.

Auto Set
To choose whether time and date are to be set automatically or manually, select **Auto Set**.

For time and date to be set automatically, select **On - RDS**.

For time and date to be set manually, select **Off - Manual**. If **Auto Set** is set to **Off - Manual**, the submenu items **Set Time** and **Set Date** become available.

Set time and date
To adjust the time and date settings, select **Set Time** or **Set Date**.

Touch **+** or **-** to adjust the settings.

Language settings

Press ⌂ and then select **Settings**.

Select **Language** to display the respective menu.

To adjust the language for the menu texts, touch the desired language.

Text scroll function

If long text is displayed on the screen e.g. song titles or station names, the text may either be scrolled continually or it may be scrolled once and displayed in truncated form.

Press ⌂ and then select **Settings**.

Select **Radio**.

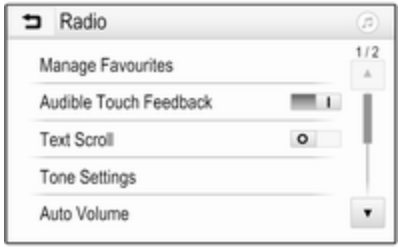

If you wish the text to be scrolled continually, activate **Text Scroll**.

If you wish the text to be scrolled in blocks, deactivate the setting.

Black display function

If you do not want to see the illuminated display, e.g. during night time, you can turn the display off.

Press ⌂ and then select **Settings**.

Scroll through the list and select **Turn Display Off**. The display is turned off. The audio functions remain active.

To turn the display on again, touch the screen or press a button.

Factory defaults

(without embedded navigation system)

Press ⌂ and then select **Settings**.

Scroll through the list and select **Return to Factory Settings**.

To restore all vehicle personalisation settings, select **Restore Vehicle Settings**.

To delete the paired Bluetooth devices, the contacts list and the voice mail numbers stored, select **Clear All Private Data**.

To reset tone and volume settings, delete all favourites, and erase the ringtone selection, select **Restore Radio Settings**.

In each case, a warning message is displayed. Select **Continue** to reset the settings.

Factory defaults

(with embedded navigation system)

Press ⌂ and then select **Settings**.

Scroll through the list and select **Restore Factory Settings**.

Vehicle settings
To restore all vehicle personalisation settings, select **Reset Vehicle Settings**.

A pop-up is displayed. Confirm the pop-up message.

Phone information
To delete the paired Bluetooth devices, the contacts list and the voice mail numbers stored, select **Clear all phone information**.

A pop-up is displayed. Confirm the pop-up message.

Radio settings
To reset tone and volume settings and delete all favourites, select **Restore Radio Settings**.

A pop-up is displayed. Confirm the pop-up message.

Navigation settings
To reset all navigation parameters and navigation system settings, select **Restore Navigation Settings**. A submenu is displayed.

Depending on which set of parameters you want to reset, select **Clear navigation history** (recent destinations), **Clear navigation favourites** (favourites) or **Reset navigation options and settings** (e.g. settings concerning map display, voice output or route options).

A pop-up is displayed. Confirm the pop-up message.

System version

Press ⌂ and then select **Settings**.

Scroll through the list and select **Software Information**.

If a USB device is connected, you may save the vehicle information to this USB device.

Select **System Update** and then **Save Vehicle Info to USB**.

For a system update, contact your workshop.

Vehicle settings

Vehicle settings are described in the Owner's Manual.

Radio

Usage

Activating radio

Press ⌂ and then select **Audio**. The audio main menu last selected is displayed.

Select **Source** in the radio main menu to open the interaction selector bar.

Select the desired waveband.

The station last played in the selected waveband will be received.

Station search

Automatic station search

Briefly press or touch ⏮ or ⏭ on the control panel or on the screen to play the previous or next station in the station memory.

Manual station search

Press and hold ⏮ or ⏭ on the control panel. Release when the required frequency has almost been reached.

A search is made for the next station that can be received and it is played automatically.

Note
FM waveband: when the RDS function is activated, only RDS stations ⇨ 140 are searched for, and when the radio traffic service (TP) is activated, only traffic service stations ⇨ 140 are searched for.

Station tuning

Touch Tune on the screen. The **Direct tune** screen is shown.

Enter the desired frequency. Use ← to delete digits entered. If necessary, touch ⏮ or ⏭ to subsequently adjust the input.

Confirm the input to play the station.

Station lists

Select **Menu** in the radio main menu to open the corresponding waveband-specific submenu.

Select **Station List**. All receivable stations of the relevant waveband and in the current reception area are displayed.

Select the desired station.

Note
The currently received radio station is indicated by the ► symbol next to the station name.

Category lists

Numerous radio stations broadcast a PTY code, which specifies the type of programme transmitted (e.g. news). Some stations also change the PTY code depending on the content which is currently transmitted.

The Infotainment system stores these stations, sorted by programme type in the corresponding category list.

Note
The **Categories** list item is not available for the AM waveband.

To search for a programme type determined by the stations, select **Categories**.

A list of programme types currently available is displayed.

Select the desired programme type. A list of stations of the selected programme type is displayed.

Select the desired station.

Note
The currently received radio station is indicated by the ► symbol next to the station name.

Update station lists

If the stations stored in the waveband-specific station list can no longer be received, the station lists must be updated.

Note
The FM station list is updated automatically.

Select **Menu** in the radio main menu and then select **Update Station List**.

Note
If a waveband-specific station list is updated, the corresponding category list is also updated.

A station search is started and a corresponding message is displayed. Once the search is finished, the respective station list is displayed.

Note
The currently received radio station is indicated by the ► symbol next to the station name.

Favourite lists

Stations of all wavebands can be stored manually in the favourite lists.

Five favourite lists with five favourites each are available.

Note
The currently received station is highlighted.

Storing a station

If required, touch < or > to scroll to the desired favourite list.

To store the currently active radio station as a favourite, touch and hold the desired favourite button for a few seconds. The favourite button will be titled as the corresponding frequency or station name.

Retrieving a station

If required, touch < or > to scroll to the desired favourite list.

Select the desired favourite.

Defining the number of available favourite lists

To define the number of favourite lists displayed for selection, press ⚙ and then select **Settings** on the screen.

Select **Radio** and then **Manage Favourites** to display the respective submenu.

Activate or deactivate the favourite lists to be displayed.

Radio data system

Radio data system (RDS) is a service of FM stations that considerably facilitates the finding of the desired station and its fault-free reception.

Advantages of RDS

- On the display, the programme name of the station appears instead of its frequency.
- During a station search, the Infotainment system tunes in to RDS stations only.
- The Infotainment system always tunes into the best receivable broadcasting frequency of the set station by means of AF (alternative frequency).
- Depending on the station that is received, the Infotainment system displays radio text that can contain e.g. information on the current programme.

RDS configuration

Touch **Menu** in the FM radio main menu to open the corresponding waveband-specific submenu.

Scroll to **RDS**.

Activate or deactivate **RDS**.

Traffic Programme

Radio traffic service stations are RDS stations that broadcast traffic news. If the traffic service is switched on, the currently playing audio source is interrupted for the duration of the traffic announcement.

Activating the traffic programme function

Select **Menu** in the FM radio main menu to open the corresponding waveband-specific submenu.

Touch the screen button next to **Traffic Programme** to activate or deactivate the function.

Note
In the station list, TP is displayed next to the stations providing a traffic programme.

If the radio traffic service is activated, **[TP]** is shown in the top line of all main menus. If the current station is not a radio traffic service station, TP is greyed-out and a search is started automatically for the next radio traffic service station. As soon as a radio traffic service station is found, **TP** is highlighted. If no radio traffic service station is found, TP remains greyed-out.

If a traffic announcement is broadcast on the respective station, a message is displayed.

To interrupt the announcement and return to the function previously activated, touch the screen or press ⏻.

Regionalisation

Sometimes RDS stations broadcast regionally different programmes on different frequencies.

Select **Menu** in the FM radio main menu to open the corresponding waveband-specific submenu and scroll to **Region**

Activate or deactivate **Region**.

If regionalisation is activated, alternative frequencies with the same regional programmes are selected where necessary. If regionalisation is switched off, alternative frequencies of the stations are selected without regard to regional programmes.

Digital audio broadcasting

Digital audio broadcasting (DAB) broadcasts radio stations digitally.

DAB stations are indicated by the programme name instead of the broadcasting frequency.

General information

- With DAB, several radio programmes (services) can be broadcast on a single ensemble.
- Besides high-quality digital audio services, DAB is also able to transmit programme-associated data and a multitude of other data services including travel and traffic information.
- As long as a given DAB receiver can pick up the signal sent out by a broadcasting station (even if the signal is very weak), sound reproduction is ensured.
- In the event of poor reception, the volume is reduced automatically to avoid the output of disagreeable noises.

  If the DAB signal is too weak to be picked up by the receiver, reception is interrupted completely. This incident can be avoided by activating **DAB-DAB Linking** or **DAB-FM Linking** in the DAB menu (see below).
- Interference caused by stations that are on nearby frequencies (a phenomenon that is typical of AM and FM reception) does not occur with DAB.
- If the DAB signal is reflected by natural obstacles or buildings, the reception quality of DAB is improved, whereas AM or FM reception is considerably impaired in such cases.
- When DAB reception is enabled, the FM tuner of the Infotainment system remains active in the background and continually searches for the FM stations with the best reception. If TP ⇨ 140 is activated, traffic announcements of the FM station with the best reception are issued. Deactivate TP if DAB reception should not be interrupted by FM traffic announcements.

DAB Announcements

Besides their music programmes, a lot of DAB stations also broadcast announcements of various categories. If you activate some or all

categories, the currently received DAB service is interrupted when an announcement of these categories is made.

Select **Menu** in the DAB radio main menu to open the corresponding waveband-specific submenu.

Scroll through the list and select **DAB Announcements** to display a list of the categories available.

Activate all or just the desired announcement categories. Different announcement categories can be selected at the same time.

DAB-DAB Linking

If this function is activated, the device switches over to the same service (programme) on another DAB ensemble (if available) when the DAB signal is too weak to be picked up by the receiver.

Select **Menu** in the DAB radio main menu to open the corresponding waveband-specific submenu.

Scroll through the list and activate or deactivate **DAB-DAB Linking**.

DAB-FM Linking

This function enables switching from a DAB station to a corresponding FM station and vice versa.

If this function is activated, the device switches over to a corresponding FM station of the active DAB service (if available) when the DAB signal is too weak to be picked up by the receiver.

Scroll through the list and activate or deactivate **DAB-FM Linking**.

L Band

With this function, you may define which DAB wavebands are to be received by the Infotainment system.

L Band (earth and satellite radio) is another radio band that can be received additionally.

Select **Menu** in the DAB radio main menu to open the corresponding waveband-specific submenu.

Scroll through the list and activate or deactivate **L Band**.

Intellitext

The **Intellitext** function allows the reception of additional information such as financial information, sports, news etc.

Note
The content available depends on the station and region.

Select **Menu** in the DAB radio main menu to open the corresponding waveband-specific submenu.

Scroll through the list and select **Intellitext**.

Select one of the categories and choose a specific item to display detailed information.

EPG

The Electronic Programme Guide provides information on the current and upcoming programme of the respective DAB station.

Select **Menu** in the DAB radio main menu and then select **Station List**.

To display the programme of the desired station, touch the icon next to the station.

External devices

General information

A USB port for the connection of external devices is located in the centre console.

Note
The USB port must always be kept clean and dry.

USB port

An MP3 player, USB device, SD card (via USB connector / adapter) or smartphone can be connected to the USB port.

Up to two USB devices can be connected to the Infotainment system at a time.

Note
For the connection of two USB devices, an external USB hub is required.

The Infotainment system can play audio files, show picture files or play movie files contained in USB devices.

When connected to the USB port, various functions of the devices mentioned above can be operated via the controls and menus of the Infotainment system.

Note
Not all auxiliary devices are supported by the Infotainment system. Check the compatibility list on our website.

Connecting / disconnecting a device
Connect one of the devices mentioned above to the USB port. If required, use the appropriate connection cable. The music function starts automatically.

Note
If a non-readable USB device is connected, a corresponding error message appears and the Infotainment system automatically switches to the previous function.

To disconnect the USB device, select another function and then remove the USB device.

Caution

Avoid disconnecting the device during playback. This may damage the device or the Infotainment system.

USB Auto Launch
By default, the USB audio menu is displayed automatically as soon as a USB device is connected.

If desired, this function can be deactivated.

Press ⌂ and then select **Settings** to open the settings menu.

Select **Radio**, scroll to **USB Auto Launch** and touch the screen button next to the function.

To reactivate the function, touch the screen button again.

Bluetooth

Devices which support the Bluetooth music profiles A2DP and AVRCP can be connected wirelessly to the Infotainment system. The Infotainment system can play music files contained in these devices.

Connecting a device

For a detailed description on how to establish a Bluetooth connection ⇨ 164.

File formats and folders

The maximum capacity of a device supported by the Infotainment system amounts to 5000 music files, 5000 picture files, 500 movie files, 5000 folders and 15 stages of folder structure. Only devices formatted in the FAT16 / FAT32 file system are supported.

If there are images included in the audio metadata, these images are displayed on the screen.

Note

Some files may not be played properly. This may be due to a different recording format or the condition of the file.

Files from online shops to which Digital Rights Management (DRM) has been applied cannot be played.

The Infotainment system can play the following audio, picture and movie files stored on external devices.

Audio files

The playable audio file formats are MP3 (MPEG-1 Layer 3, MPEG-2 Layer 3), WMA, AAC, AAC+, ALAC OGG WAF (PCM), AIFF, 3GPP (audio only), Audio Books and LPCM. iPod® and iPhone® devices play ALAC, AIFF, Audio Books and LPCM.

When playing a file with ID3 tag information, the Infotainment system can display information, e.g. on the track title and artist.

Picture files

The displayable picture file formats are JPG, JPEG, BMP, PNG and GIF.

JPG files must be 64 to 5000 pixels in width and 64 to 5000 pixels in height.

BMP, PNG and GIF files must be 64 to 1024 pixels in width and 64 to 1024 pixels in height.

The pictures should not exceed a file size of 1MB.

Movie files

The playable movie file formats are AVI and MP4.

The maximum resolution is 1280 x 720 pixels. The frame rate must be less than 30 fps.

The usable codec is H.264/MPEG-4 AVC.

The playable audio formats are MP3, AC3, AAC and WMA.

The displayable subtitle format is SMI.

Playing audio

Activating the music function

If the device is not yet connected to the Infotainment system, connect the device ⇨ 143.

Usually, the respective audio main menu is displayed automatically.

If playback is not started automatically, e.g. if **USB Auto Launch** is deactivated ⇨ 143, take the following steps:

Press ⌂ and then select **Audio** to open the audio main menu last selected.

Select **Source** in the interaction selector bar and then select the desired audio source to open the respective audio main menu.

Playback of the audio tracks starts automatically.

Function buttons

Interrupting and resuming playback

Touch ❚❚ to interrupt playback. The screen button changes to ►.

Touch ► to resume playback.

Playing the next or previous track

Touch ⏭ to play the next track.

Touch ⏮ within the first two seconds of the track playing to return to the previous track.

Returning to the beginning of the current track

Touch ⏮ after two seconds of the track playing.

Fast forwarding and rewinding

Touch and hold ⏮ or ⏭. Release to return to normal playback mode.

Alternatively, you can move the slider showing the current track position to the left or right.

Playing tracks randomly

Touch ⤮ to play the tracks in random order. The screen button changes to ⤮.

Touch ⤮ again to deactivate the shuffle function and go back to the normal playback mode.

Browse Music function

To display the browse screen, touch the screen. Alternatively, select **Menu** in the audio main screen to display the respective audio menu and then select **Browse Music**.

Different categories, in which the tracks are sorted, are displayed, e.g. **Playlists**, **Artists**, or **Albums**.

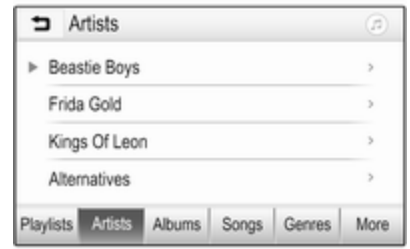

Select the desired category, subcategory (if available) and then choose a track.

Select the track to start playback.

Displaying pictures

You can view pictures from a USB device.

Note
For your safety, some features are disabled while driving.

Activating the picture function

If the device is not yet connected to the Infotainment system, connect the device ⇨ 143.

Press ⌂ and then select **Gallery** to open the media main menu.

Touch ▣ to open the picture main menu to display a list of items stored on the USB device. Select the desired picture. If this is stored within a folder, select the respective folder first.

Touch the screen to hide the menu bar. Touch the screen again to redisplay the menu bar.

Function buttons

Full screen mode

Select ⊞ to display the picture in full screen mode. Touch the screen to exit full screen mode.

Viewing the next or previous picture

Touch › or swipe to the left to view the next picture

Touch ‹ or swipe to the right to view the previous picture.

Rotating a picture

Select ↺ to rotate the picture.

Zoom in on a picture

Touch Q×1 once or several times to zoom in on a picture or to return to its original size.

Viewing a slide show

Select ▶ to view the pictures stored on the USB device in a slide show.

Touch the screen to end the slide show.

Picture menu

Select **Menu** in the bottom line of the screen to display the **Picture Menu**.

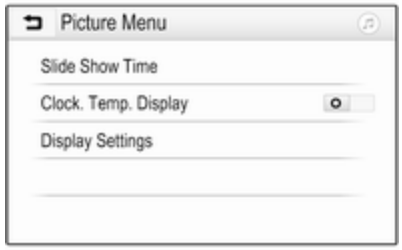

Slide show time

Select **Slide Show Time** to display a list of possible time sequences and select the desired time sequence.

Clock and temperature display

To display time and temperature in full screen mode, activate **Clock. Temp. Display**.

Display settings

Select **Display Settings** to open a submenu for the adjustment of brightness and contrast.

Touch + or - to adjust the settings.

Playing movies

You can view movies from a USB device.

Note
For your safety, the movie function is not available while driving.

Activating the movie function

If the device is not yet connected to the Infotainment system, connect the device ⇨ 143.

Press ⌂ and then select **Gallery** to open the media main menu.

Touch 🖿 to open the movie main menu to display a list of items stored on the USB device. Select the desired movie. If this is stored within a folder, select the respective folder first.

The movie is shown.

Function buttons

Full screen

Select ⊞ to display the movie in full screen mode. Touch the screen to exit full screen mode.

Interrupting and resuming playback

Touch ❚❚ to interrupt playback. The screen button changes to ►.

Touch ► to resume playback.

Playing the next or previous track

Touch ►| to play the next movie file.

Touch |◄ within the first five seconds of the movie playing to return to the previous movie file.

Returning to the beginning of the current movie

Touch |◄ after five seconds of the movie playing.

Fast forwarding and rewinding

Touch and hold |◄ or ►|. Release to return to normal playback mode.

Movie menu

Select **Menu** in the bottom line of the screen to display the **Movie Menu**.

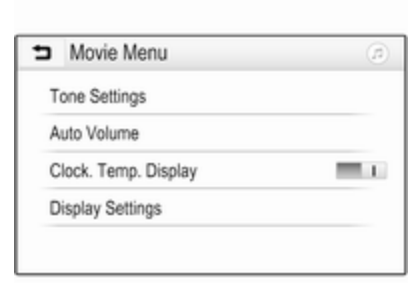

Clock and temperature display

To display time and temperature in full screen mode, activate **Clock. Temp. Display**.

Display settings

Select **Display Settings** to open a submenu for adjustment of brightness and contrast.

Touch + or - to adjust the settings.

Using smartphone applications

Phone projection

The phone projection applications Apple CarPlay™ and Android™ Auto display selected apps from your smartphone on the Info Display and allow their operation directly via the Infotainment controls.

Check with the device's manufacturer if this function is compatible with your smartphone and if this application is available in the country you are in.

Preparing the smartphone

Android phone: Download the Android Auto app to your smartphone from the Google Play™ Store.

iPhone: Make sure Siri® is activated on your smartphone.

Activating phone projection in the settings menu

Press ⌂ to display the home screen and then select **Settings**.

Scroll through the list to **Apple CarPlay** or **Android Auto**.

Make sure the respective application is activated.

Connecting the mobile phone

Connect the smartphone to the USB port ⇨ 143.

Starting phone projection

To start the phone projection function, press ⌂ and then select **Projection**.

> **Note**
> If the application is recognised by the Infotainment system, the application icon may change to **Apple CarPlay** or **Android Auto**.

To start the function, you can alternatively press and hold ⌂ for a few seconds.

The phone projection screen displayed depends on your smartphone and software version.

Returning to the home screen

Press ⌂.

BringGo

BringGo is a navigation app providing location search, map display and route guidance.

> **Note**
> Before downloading the app, check whether BringGo is available in your vehicle.

Downloading the app

Before BringGo can be operated using the controls and menus of the Infotainment system, the respective application must be installed on the smartphone.

Download the app from App Store® or Google Play Store.

Activating BringGo in the settings menu

Press ⌂ to display the home screen and then select **Settings**.

Scroll through the list to **BringGo**.

Make sure the application is activated.

Connecting the mobile phone

Connect the smartphone to the USB port ⇨ 143.

Starting BringGo

To start the app, press ⌂ and then select the **Nav** icon.

The main menu of the application is shown on the Info Display.

For further information on how to operate the app, see the instructions on the manufacturer's website.

Navigation

General information

This chapter is about the embedded navigation system.

The current traffic situation is taken into account in the route calculation. For this purpose, the Infotainment system receives traffic announcements in the current reception area via RDS-TMC.

The navigation system cannot, however, take into account traffic incidents, traffic regulations changed at short notice and hazards or problems that arise suddenly (e.g. road works).

Caution

The usage of the navigation system does not release the driver from the responsibility for a correct, vigilant attitude in road traffic. The relevant traffic regulations must always be followed. If a navigation instruction contradicts traffic regulations, the traffic regulations always apply.

Functioning of the navigation system

The position and movement of the vehicle are detected by the navigation system using sensors. The travelled distance is determined by the vehicle’s speedometer signal, turning movements on bends by a sensor. The position is determined by the GPS (Global Positioning System) satellites.

By comparing the sensor signals with the digital maps, it is possible to determine the position with an accuracy of approx. 10 metres.

The system will also work with poor GPS reception. However, the accuracy of the determination of the position will be reduced.

After the entry of the destination address or point of interest (nearest petrol station, hotel, etc.), the route is calculated from the current location to the destination selected.

Route guidance is provided by voice output and an arrow, as well as with the aid of a multi-colour map display.

Important information

TMC traffic information system and dynamic route guidance

The TMC traffic information system receives all current traffic information from TMC radio stations. This information is included in the calculation of the overall route. During this process, the route is planned so that traffic problems related to pre-selected criteria are avoided.

If there is a traffic problem during active route guidance, depending on the pre-settings, a message appears as to whether the route should be changed.

TMC traffic information is displayed in the map display as symbols or as detailed text on the TMC messages menu.

To be able to use TMC traffic information, the system must receive TMC stations in the relevant region.

The TMC traffic stations can be selected in the navigation menu ⇨ 150.

Map data

All required map data is stored within the Infotainment system.

To update the navigation map data, purchase new data at the Opel Dealer or on our home page http://opel.navigation.com/. You are provided with a USB device containing the update.

Connect the USB device to the USB port and follow the instructions on the screen. The vehicle must be turned on during the update process.

Note
The vehicle remains operational during the update process. If the vehicle is turned off, the update can be paused. The navigation application, Bluetooth and other external devices are unavailable until the update process is finished.

Usage

To display the navigation map, press ⌂ and then select the **Navigation** icon.

Route guidance not active

- The map view is displayed.
- The current location is indicated by a circle with an arrow pointing into the direction of travel.
- The name of the street you are currently in is displayed on the bottom of the screen.

Route guidance active

- The map view is displayed.
- The active route is indicated by a coloured line.
- The moving vehicle is marked by a circle with an arrow pointing into the direction of travel.
- The next turning manoeuvre is indicated in the separate field on the left side of the screen.
- The arrival time or travel time is shown above the arrow symbol.
- The remaining distance to the destination is displayed above the arrow symbol.

Map manipulation

Scrolling

To scroll the map, place your finger anywhere on the screen and move it up, down, left or right depending on the direction in which you want to scroll.

The map moves accordingly displaying a new section.

To return to the current location, select **Re-centre** on the bottom of the screen.

Centring

Touch and hold the desired location on the screen. The map centres around this location.

A red ⚲ is displayed at the respective location and the corresponding address is shown on a label.

To return to the current location, select **Re-centre** on the bottom of the screen.

Zooming

To zoom in on a selected map location, place two fingers on the screen and move them away from each other.

Alternatively, use **+** on the map screen.

To zoom out and display a larger area around the selected location, place two fingers on the screen and move them towards each other.

Alternatively, use **−** on the map screen.

Cancel screen button

During active route guidance, a **Cancel** screen button is displayed on the left side of the screen.

To cancel the active route guidance session, select **Cancel**.

For a few seconds, a **Resume Trip** screen button is displayed on the map screen. Select **Resume Trip** to restart the cancelled guidance session.

Overview screen button

During active route guidance, an **Overview** screen button is displayed on the left side of the screen.

To display an overview of the route currently active, select **Overview**. The map changes to the desired route overview.

To return to the normal view, select **Overview** again.

screen button

If route guidance is active and you are on a highway, an additional screen button is displayed on the bottom of the map.

Select to display a list of the next upcoming service stations.

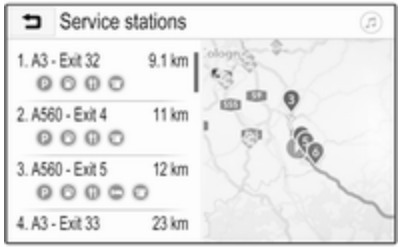

When selecting a desired exit, you can access points of interest in the respective area and start route guidance to some of these locations ⇨ 155.

× screen button

In a menu or submenu, select × to directly return to the map.

Current location

Select the street name on the bottom of the screen. Information on the current location is displayed.

To save the current location as favourite, select **Favourite**. The ★ icon is filled and the location is saved in the favourites list.

Map settings

Map view

Three different map views are available for selection.

Select on the map screen and then repeatedly select the map view screen button to toggle between the options.

Depending on the former setting, the screen button is labelled **3D Head Up**, **2D Head Up** or **2D North Up**. The map view changes according to the screen button.

Select the desired option.

Map colours

Depending on the external lighting conditions, the colouring of the map screen (light colours for the day and dark colours for the night) can be adapted.

Select ⚙ on the map screen to display the **Options** menu. Select **Navigation Settings** and then **Map colours**.

The default setting is **Auto**. When **Auto** is activated, the screen adjusts automatically.

Alternatively, activate **Day (light)** or **Night (dark)** for an only light or only dark screen.

Autozoom function

If the autozoom function is activated (default setting), the zoom level changes automatically when approaching a turning manoeuvre during active route guidance. This way, you always get a good overview of the respective manoeuvre.

If the autozoom function is deactivated, the selected zoom level remains the same during the whole route guidance process.

To deactivate the function, select ⚙ on the map to display the **Options** menu. Select **Navigation Settings** and then touch the slider bar next to **Auto Zoom**.

Touch the screen button again to reactivate the function.

POI (Points of Interest) icons on the map

POIs are points of general interest, e.g. gas stations or restaurants.

The display of POI categories shown on the map may be personally adapted.

Select ⚙ on the map to display the **Options** menu. Select **Navigation Settings** and then **Show on map**.

Activate the desired POI categories.

Traffic events on the map

Traffic events may be directly indicated on the map.

To activate the function, select ⚙ on the map to display the **Options** menu. Select **Traffic on Map**. The screen button changes to activation mode.

To deactivate the function, select **Traffic on Map** again.

Time indication

The time indication during active route guidance may be displayed in two different modes: the remaining time (until the destination will be reached) or the arrival time (when the destination will be reached).

Select ⚙ on the map to display the **Options** menu. Select **Navigation Settings** and then **Time to Destination Format**.

Activate the desired option in the submenu.

Note
During active route guidance, the time indication can be changed by simply tapping on the time indication field on the screen.

Alert preferences

If desired, you may receive an additional notification in specific traffic zones.

Select ⚙ on the map to display the **Options** menu. Select **Navigation Settings** and then **Alert Preferences**.

If **Safety camera** is activated, you are warned when approaching a stationary speed camera.

Note
This function is only available if such an alert system corresponds to the legal provisions applicable in the country you are in.

Activate the desired option.

Voice guidance

The route guidance process can be supported by voice prompts given out by the system.

Note
The navigation voice prompts function is not supported for all languages. If there are no voice prompts available, the system automatically plays a tone to indicate a manoeuvre ahead.

Activation

The voice guidance function is activated by default. To deactivate the function, select ⚙ on the map to display the **Options** menu and then touch **Voice Guidance**. The screen button changes.

Select the screen button again to reactivate the function.

Voice guidance settings

To define which system outputs may assist during active route guidance, select ⚙ on the map, **Navigation Settings** and then **Voice Guidance**.

If **Normal voice guidance** is activated, a voice announces the next turning manoeuvre to be taken.

If **Beep only** is activated, only beep tones are given out for notification.

In the submenu of **Prompts during Phone Call**, the possible voice outputs during a phone call can be set.

Activate the desired options.

Note
Voice guidance prompts are only given out if **Voice Guidance** is activated in the **Options** menu, see above.

Information

Select ⚙ on the map to display the **Options** menu. Select **Navigation Settings** and then **About**.

The texts of the manufacturer's terms and conditions or privacy statement can be accessed via the respective menu items.

The navigation map version is displayed.

Destination input

The navigation application provides different options to set a destination for route guidance.

Destination input via map

It is possible to directly enter destinations from the map screen.

Personal addresses on the map

You can predefine two address shortcuts (e.g. Home and Work) to easily start route guidance to these two places. The addresses can be defined in the settings menu and be labelled individually. Then, they can be directly selected from the map.

To save the addresses, select ⚙ on the map, **Navigation Settings** and then **Set up My Places**.

Select one of the menu items (**Home** and **Work** by default). Use the keyboard to enter the required data in the address field. For a detailed description of the keyboard, see below.

To change the name of the personal address, select ⏎ to hide the keyboard and select one of the items in the list. Alternatively, enter a new name in the first entry field.

If necessary, tap within one of the entry fields to redisplay the keyboard and select **Done**. The location is saved as shortcut.

To start route guidance to one of these locations, select the ⚌ screen button on the map. The two destinations are displayed.

Select one of the screen buttons. The **Routes** menu is displayed.

Activate the desired route and then select **Go** to start route guidance.

Destination selection via map

Scroll to the desired map section. Touch and hold the desired location on the screen. The map centres around this location.

A red 📍 is displayed at the respective location and the corresponding address is shown on a label.

Touch the label. The **Details** menu is displayed. Select **Go** to start route guidance.

Keyboard entry

Select 🔍 on the map to display the destination search menu.

You can directly enter a search word e.g. address, POI category or name, phone contact, favourite, recent destination or coordinates in the entry field on top of the search menu screen.

Note
Coordinates have to be entered in the following way: latitude, longitude e.g. "43.3456, 9.432435".

Alternatively, select **Address**, **POI** or **Junction** to use a search mask. If required, touch > to scroll the page.

To access the number and symbol keyboard, select **?123**. Select **ABC** at the same position on the keyboard to return to the letter keyboard.

To enter a character, touch the respective screen button. The character is entered upon release.

Touch and hold a letter screen button to display associated letters in a letter pop-up menu. Release and then select the desired letter.

To enter capital letters, select ⇧ and then the desired character.

To delete a character, select ⌫. To delete the whole entry, select the tiny ✕ within the entry field.

As soon as characters are entered, the system makes search word suggestions. Every additional character is considered in the matching process.

If desired, select one of the search words suggested. When the entry fields are filled out, select **Search** on the keyboard. The **Results** menu is displayed.

Select the desired destination. The **Details** menu is displayed. Select **Go** to start route guidance.

Considering the letters entered, the system also creates a list of probable destinations assembled from phone contacts, POIs, addresses, recent destinations and favourites. Touch ⌨ on the bottom of the screen to hide the keyboard and gain access to the list.

To redisplay the keyboard, tap within the entry field.

If desired, select a destination from the list. The **Details** menu is displayed. Select **Go** to start route guidance.

Lists with selectable destinations

To access the lists, select 🔍 on the map and, if required, touch > to scroll the page.

Select one of the options:

- **Recent**: list of destinations recently used
- **Favourites**: list of destinations stored as favourites
- **Contacts**: list of addresses stored in the phone book of the mobile phone currently connected via Bluetooth

To choose a destination from one of the lists, scroll through the respective list and select the desired destination. The **Details** menu is displayed. Select **Go** to start route guidance.

Recent destinations

The recent destinations list is automatically filled with destinations used in route guidance.

The addresses in the recent destinations list can be stored as favourites. Enter the recent destinations list, select ⋮ next to the desired address to display additional function buttons and then select ★. If the icon is filled, the address is saved in the favourites list.

Addresses can be deleted from the recent destinations list. Enter the recent destinations list, select ⋮ next to the desired address and then select 🗑 to delete the respective address.

Favourites

Favourites can be added when a ★ icon is displayed next to an address. When the star icon is filled, the respective address is stored as a favourite.

The position of a favourite in the list can be changed. Enter the favourites list, select ⋮ next to the desired favourite to display additional function buttons and then select ∧ or ∨.

The name of a favourite can be changed. Enter the favourites list, select ⋮ next to the desired favourite to display additional function buttons and then select ✎. A keyboard is displayed. Enter the desired name and then select **Done**.

Favourites can be deleted. Enter the favourites list, select ⋮ next to the desired favourite to display additional function buttons and then select ★. The favourite is deactivated (unfilled star). If you select the icon again, the favourite is reactivated (filled star). When leaving the favourites list while favourites are deactivated, they are deleted from the list.

Contacts

You can search for addresses within the list by using the keyboard. Enter the first letters of the word (name or

address) you want to search for. All entries containing a word starting with these letters are displayed.

For a detailed description of the keyboard, see above.

Category search

POIs can also be searched by categories.

Select 🔍 on the map and then select **POI**.

Note
If desired, set the location around which you want to search for POIs via keyboard entry in the second entry field (default setting: Nearby) and then use the category search menu.

If required, scroll to the desired page and then select one of the main categories in the menu.

Depending on the category selected, different subcategories may be available.

Navigate through the subcategories until you reach the **Results** list.

Select the desired POI. The **Details** menu is displayed. Select **Go** to start route guidance.

Results list

In the **Results** list, different possible destinations are listed.

If route guidance is active, two different tabs are available.

Choose between the tabs:

- **Along Route**: possible destinations along the route currently active
- **At Destination**: possible destinations around the destination of the route

The list can be sorted in two different ways. Select ⇅ in the top right corner of the screen and activate the desired option.

If you activate sorting by relevance, the system tries to give you the best match according to your search term.

If you activate sorting by distance, the system arranges the destinations according to their distance to your current location.

Details menu

After a destination has been selected, the **Details** menu is displayed.

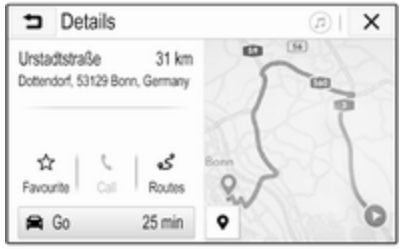

Storing favourites

To store the respective destination as a favourite, activate **Favourite** (filled star: favourite saved, unfilled star: favourite not saved).

The destination is stored as a favourite and may then be accessed via the favourites list.

Initiating a phone call

In some cases, e.g. when a POI has been selected, a phone number might be available for the respective destination. To call this phone number, select ☎.

Setting the route

In case the system finds more than one possible route, you can choose between the routes suggested.

Select **Routes** to display a list of all routes detected by the system. Activate the desired route and then select **Go** to start route guidance.

Routes with several destinations

After route guidance has been started, it is possible to add destinations to the active route, e.g. to pick up a friend on the way or stop at a gas station.

Note
Up to five destinations can be combined in one route.

Start route guidance to the desired destination.

To add another destination, select ⊕ on the map and then select **Add Destination**. The destination search menu is displayed.

Navigate to the desired destination. The **Details** menu is displayed. Select **Add**.

Note
If you select **Go**, route guidance to the destination first selected is stopped and route guidance to the new destination is started.

The destinations are arranged in the order in which they are entered while the last destination added is the first you are guided to. In order to check or confirm while driving, the name of the next destination is displayed above the arrival time and distance.

The order of the destinations can be changed ⇨ 160.

Guidance

Route guidance is provided by the navigation system through visual instructions and voice prompts (voice guidance).

Visual instructions
Visual instructions are provided on the display.

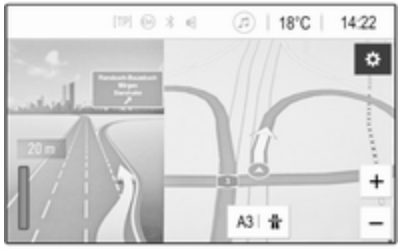

Note
When route guidance is active and you are not within the navigation application, turning manoeuvres are indicated by pop-up messages displayed on top of the screen.

Voice guidance
Navigation voice prompts announce which direction to follow, when approaching an intersection at which you need to turn.

To activate the voice prompts function ⇨ 150.

Touch the big turn arrow on the left side of the screen to replay the last voice guidance instruction.

Starting and cancelling route guidance

To start route guidance, select **Go** in the **Details** menu after a destination has been selected ⇨ 155.

To cancel route guidance, select **Cancel** on the left side of the screen ⇨ 150.

Destinations list

The **Destinations** list contains all destinations belonging to the route currently active.

Touch > within the time and distance field. The **Destinations** list is displayed.

In case a phone number is available, select ☎ to start a phone call.

To change the order of the destinations, select ⤒ in the field of the destination whose position is to be changed. The order is rearranged and the destination selected is set at the first position.

To delete a destination from the route, select 🗑 in the field of the respective destination. The destination is deleted and the route is rearranged.

Turn list

The next turning manoeuvre is displayed on the left side of the screen.

Select ☰ underneath the manoeuvre indication to display the turn list. The turn list contains all upcoming turns on the active route.

To display a turning manoeuvre on the map, scroll through the list and touch the desired manoeuvre. The map jumps to the respective location on the map.

To avoid a route section, select ⋮ next to the respective turning manoeuvre. A ✂ symbol is displayed.

To recalculate the route without the respective route section, select ✂. The route is changed.

Select the arrow above the list to return to the normal navigation map screen.

Traffic settings

There are different options available concerning traffic events.

Traffic list

The traffic list contains all traffic events detected by the system.

To access the traffic list, select ⚙ on the map and then **Traffic List**. The list is displayed.

If route guidance is active, choose between the tabs:

- **Along Route**: traffic events along the active route
- **Nearby**: traffic events close to the current location of the vehicle

Traffic events
If required, scroll to the desired traffic event.

To display additional information, select the respective traffic event.

List sorting
The nearby list can be organised in two different ways.

To change the sorting order, select ⇅ in the top right corner of the screen. The **Traffic Events Sorting** menu is displayed.

Activate the desired option.

Traffic station
The traffic message channel providing the traffic information can be personally set, if desired.

Select ⚙ on the map to display the **Options** menu. Select **Navigation Settings** and then **Traffic Resource**.

A list of all traffic stations currently available is displayed.

By default, **Auto** is activated. The station is adapted automatically by the system.

If you want the traffic information to be taken from a specific station, activate the respective station.

Traffic avoidance function
Traffic events are taken into consideration when the system determines a route to a destination.

During active route guidance, the route can be modified according to incoming traffic messages.

To set the parameters for these modifications, select ⚙ on the map to display the **Options** menu. Select **Navigation Settings**, **Routing options** and then **Auto-Reroute to Avoid Traffic**.

If you want the system to automatically modify the route according to new traffic messages, activate **Automatically reroute**.

If you want to be consulted when a route is modified, activate **Always ask**.

If you do not want routes to be modified, activate **Never**.

Route settings

Parameters for road and route selection can be set.

Road types
If desired, certain road types can be avoided.

Select ⚙ on the map to display the **Options** menu. Select **Avoid on Route** and then activate the road types you want to be avoided.

> **Note**
> If route guidance is active when changing the road settings, the route is recalculated according to the new settings.

Route type
To set the route type, select ⚙ on the map to display the **Options** menu. Select **Navigation Settings**, **Routing options** and then **Route type**.

Activate the desired option:

- **Fastest** for the fastest route
- **Eco-friendly** for a route that allows ecologically friendly driving

Speech recognition

General information

The voice pass-thru application of the Infotainment system allows access to the speech recognition commands on your smartphone. See your smartphone manufacturer's operating instructions to find out whether your smartphone supports this feature.

In order to use the voice pass-thru application, the smartphone must be connected to the Infotainment system via USB cable ⇨ 143 or via Bluetooth ⇨ 164.

Usage

Activating speech recognition

Press and hold ☎ on the control panel or ☎ on the steering wheel to start a speech recognition session. A voice command message is displayed on the screen.

As soon as a beep is heard, you can say a command. For information on the commands supported, see the operating instructions of your smartphone.

Adjusting the volume of voice prompts

Turn ⏻ on the control panel or press **+ / -** on the right side of the steering wheel to increase or decrease the volume of voice prompts.

Deactivating speech recognition

Press ☎ on the steering wheel. The voice command message disappears and the speech recognition session is ended.

Phone

General information

The phone function provides you with the possibility of having mobile phone conversations via a vehicle microphone and the vehicle loudspeakers as well as operating the most important mobile phone functions via the Infotainment system in the vehicle. To be able to use the phone function, the mobile phone must be connected to the Infotainment system via Bluetooth.

Not all phone functions are supported by every mobile phone. The usable phone functions depend on the relevant mobile phone and network provider. You can find further information on this in the operating instructions of your mobile phone, or you can enquire about them with your network provider.

Important information for operation and traffic safety

⚠ Warning

Mobile phones have effects on your environment. For this reason safety regulations and directions have been prepared. You should be familiar with the related directions before you use the telephone function.

⚠ Warning

Use of the hands-free facility while driving can be dangerous because your concentration is reduced when telephoning. Park your vehicle before you use the hands-free facility. Follow the stipulations of the country in which you find yourself at present.

Do not forget to follow the special regulations that apply in specific areas and always switch off the mobile phone if the use of mobile phones is prohibited, if interference is caused by the mobile phone or if dangerous situations can occur.

Bluetooth

The phone function is certified by the Bluetooth Special Interest Group (SIG).

You can find further information about the specification on the internet at http://www.bluetooth.com.

Bluetooth connection

Bluetooth is a radio standard for the wireless connection of e.g. mobile phones, smartphones or other devices.

The pairing and connecting of the Bluetooth devices to the Infotainment system are carried out via the **Bluetooth** menu. Pairing is the PIN code exchange between the Bluetooth device and the Infotainment system.

Bluetooth menu

Press ⌂ and then select **Settings**.

Select **Bluetooth** to display the Bluetooth menu.

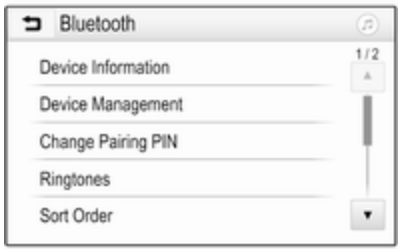

Pairing a device

Important information

- Up to ten devices can be paired to the system.
- Only one paired device can be connected to the Infotainment system at a time.
- Pairing only needs to be carried out once, unless the device is deleted from the list of paired devices. If the device has been connected previously, the Infotainment system establishes the connection automatically.
- Bluetooth operation considerably drains the device's battery. Therefore, connect the device to the USB port for charging.

Pairing a new device

1. Activate the Bluetooth function of the Bluetooth device. For further information, see the operating instructions of the Bluetooth device.
2. Press ⌂ and then select **Settings** on the display.

   Select **Bluetooth** and then **Device Management** to display the respective menu.

Note
If no phone is connected, the **Device Management** menu can also be accessed via the phone menu: Press ⌂ and then select **Phone**.

3. Touch **Search Device**. All discoverable Bluetooth devices in the environment are displayed in a new search list.
4. Touch the Bluetooth device you wish to pair.
5. Confirm the pairing procedure:
   - If SSP (secure simple pairing) is supported:

Confirm the messages on the Infotainment system and the Bluetooth device.

- If SSP (secure simple pairing) is not supported:

  On the Infotainment system: an **Info** message is displayed asking you to enter a PIN code on your Bluetooth device.

  On the Bluetooth device: enter the PIN code and confirm your input.

6. The Infotainment system and the device are paired.

Note
If the Bluetooth device is successfully paired, ☎ next to the Bluetooth device indicates that the phone function is enabled and ♪ indicates that the Bluetooth music function is enabled.

7. The phone book is downloaded automatically to the Infotainment system. Depending on the phone, the Infotainment system must be allowed access to the phone book. If required, confirm the messages displayed on the Bluetooth device.

   If this function is not supported by the Bluetooth device, a corresponding message is displayed.

Changing the Bluetooth PIN code

Press ⚙ and then select **Settings**.

Select **Bluetooth** and then **Change Pairing PIN** to display the respective submenu. A keypad is displayed.

Enter the desired four-digit PIN code.

To delete an entered number, select ⇦.

Confirm your input by selecting **Enter**.

Connecting a paired device

Press ⚙ and then select **Settings**.

Select **Bluetooth** and then **Device Management** to display the respective menu.

Select the Bluetooth device you wish to connect. The device is connected.

Note
The connected device and the available options are highlighted.

Disconnecting a device

Press ⚙ and then select **Settings**.

Select **Bluetooth** and then **Device Management** to display the respective menu.

Select the Bluetooth device currently connected. You are prompted with a message.

Select **Yes** to disconnect the device.

Deleting a device

Press ⚙ and then select **Settings**.

Select **Bluetooth** and then **Device Management** to display the respective menu.

Select 🗑 next to the Bluetooth device. You are prompted with a message.

Select **Yes** to delete the device.

Device info

Press ⚙ and then select **Settings**.

Select **Bluetooth** and then **Device Information** to display the respective menu.

The information displayed includes **Device Name**, **Address**, and **PIN Code**.

Emergency call

⚠ Warning

Connection setup cannot be guaranteed in all situations. For this reason you should not rely exclusively on a mobile phone when a vitally important communication (e.g. a medical emergency) is concerned.

In some networks it may be necessary for a valid SIM card to be properly inserted in the mobile phone.

⚠ Warning

Bear in mind that you can make and receive calls with the mobile phone if it is in a service area with a sufficiently strong signal. Under certain circumstances, emergency calls cannot be made in all mobile phone networks; problems may occur when certain network services and / or telephone functions are active. You can enquire about this with the local network operators.

The emergency call number can differ depending on the region and country. Please enquire beforehand about the correct emergency call number for the relevant region.

Making an emergency call

Dial the emergency call number (e.g. **112**).

The telephone connection to the emergency call centre is set up.

Answer when the service personnel questions you about the emergency.

⚠ Warning

Do not end the call until you are requested to do so by the emergency call centre.

Operation

As soon as a connection via Bluetooth has been set up between your mobile phone and the Infotainment system, you can operate many functions of your mobile phone via the Infotainment system.

Note
In the hands-free mode, mobile phone operation is still possible, e.g. taking a call or adjusting the volume.

After setup of a connection between the mobile phone and the Infotainment system, mobile phone data is transmitted to the Infotainment system. This can take some time depending on the mobile phone and the amount of data to be transferred. During this period, operation of the mobile phone via the Infotainment system is possible only to a limited extent.

Note
Not every mobile phone fully supports the phone function. Therefore, deviations from the range of functions described below are possible.

Phone main menu

Press ⌂ and then select **Phone** to display the respective menu.

Note
The **Phone** main menu is only available if a mobile phone is connected to the Infotainment system via Bluetooth. For a detailed description ⇨ 164.

Many functions of the mobile phone can now be controlled via the phone main menu (and associated submenus), and via the phone-specific controls on the steering wheel.

Initiating a phone call

Entering a phone number

Press ⌂ and then select **Phone**.

Enter a telephone number using the keypad in the phone main menu.

To delete one or more entered characters, touch or touch and hold ⇦.

Touch ✆ on the screen or press ✆ on the steering wheel to start dialling.

Using the phone book

Note
When pairing a mobile phone with the Infotainment system via Bluetooth, the phone book of the mobile phone is downloaded automatically ⇨ 164.

Press ⌂ and then select **Phone**.

Select **Contacts** in the phone main menu.

Note
The ▤ symbol next to a phone number indicates that the contact is stored on the SIM card.

Quick search

1. Select ▤ to display a list of all contacts.
2. Scroll through the list of contacts entries.
3. Touch the contact you wish to call. A menu with all phone numbers stored for the selected contact is displayed.
4. Select the desired phone number to initiate the call.

Search menu

If the phone book contains a large number of entries, you can search for the desired contact via the search menu.

Select ⌕ in the **Contacts** menu to display the search tab.

The letters are organised in alphabetical groups on the screen buttons: **abc**, **def**, **ghi**, **jkl**, **mno**, **pqrs**, **tuv**, and **wxyz**.

Use ⇦ to delete an entered group of letters.

1. Select the button containing the first letter of the contact you wish to search for.

   For example: If the contact you wish to search for starts with 'g' select the **ghi** screen button.

   All contacts containing one of the letters on this button, in the example 'g', 'h', and 'i', are displayed.
2. Select the button containing the second letter of the contact you wish to search for.
3. Continue to enter more letters of the contact you wish to search for until the desired contact is displayed.
4. Touch the contact you wish to call. A menu with all phone numbers stored for the selected contact is displayed.
5. Select the desired phone number to initiate the call. The following screen is shown.

Contacts settings

The contacts list can be sorted by last name or first name.

Press ⌂ and then select **Settings** to display the respective menu.

Select **Bluetooth** and then **Sort Order**. Activate the desired option.

Using the call history

All incoming, outgoing, or missed calls are registered.

Press ⌂ and then select **Phone**.

Select **Call History** in the phone main menu.

Select for outgoing calls, for missed calls, for incoming calls and for all calls. The respective call list is displayed.

Select the desired entry to initiate a call.

Redialling a number

The last dialled phone number can be redialled.

Press and then select **Phone**.

Select on the screen or press on the steering wheel.

Using speed dial numbers

Speed dial numbers that are stored on the mobile phone can also be dialled using the keypad of the phone main menu.

Press and then select **Phone**.

Touch and hold the respective digit on the keypad to initiate the call.

Incoming phone call

Taking a call

If an audio mode, e.g. the radio or USB mode, is active at the moment a call comes in, the audio source is muted and stays muted until the call ends.

A message with the caller's phone number or name (if available) is displayed.

To answer the call, select in the message or press on the steering wheel.

Rejecting a call

To reject the call, select in the message or press on the steering wheel.

Changing the ring tone

Press and then select **Settings**.

Select **Bluetooth** and then **Ringtones** to display the respective menu. A list of all paired devices is displayed.

Select the desired device. A list of all ringtones available for this device is displayed.

Select one of the ringtones.

Functions during a call

During an ongoing phone call, the phone main menu is displayed.

Deactivating the hands-free mode temporarily

To continue the conversation via the mobile phone, activate .

To return to the hands-free mode, deactivate .

Deactivating the microphone temporarily

To mute the microphone, activate .

To reactivate the microphone, deactivate .

Ending a phone call

Select to end the call.

Voice mail box

You may operate your voice mail box via the Infotainment system.

Voice mail number

Press and then select **Settings**.

Select **Bluetooth**. Scroll through the list and select **Voice Mail Numbers**.

A list of all paired devices is displayed.

Select the respective phone. A keypad is displayed.

Enter the voice mail number for the respective phone.

Calling the voice mail box

Press and then select **Phone**.

Select on the screen. The mail box is called.

Alternatively, enter the voice mail number via the phone keypad.

Mobile phones and CB radio equipment

Installation instructions and operating guidelines

The vehicle specific installation instructions and the operating guidelines of the mobile phone and hands-free manufacturer must be observed when installing and operating a mobile telephone. Failure to do so could invalidate the vehicle type approval (EU directive 95/54/EC).

Recommendations for fault-free operation:

- Professionally installed exterior antenna to obtain the maximum range possible
- Maximum transmission power 10 W
- Installation of the phone in a suitable spot, consider relevant Note in the Owner's Manual, section **Airbag system**.

Seek advice on predetermined installation points for the external antenna or equipment holder and ways of using devices with a transmission power exceeding 10 W.

Use of a hands-free attachment without external antenna with mobile telephone standards GSM 900/1800/1900 and UMTS is only permitted if the maximum transmission power of the mobile telephone is 2 W for GSM 900 or 1 W for the other types.

For reasons of safety, do not use the phone while driving. Even use of a hands-free set can be a distraction while driving.

⚠ Warning

Operation of radio equipment and mobile telephones which fail to meet above mentioned mobile telephone standards is only permitted using an antenna located outside of the vehicle.

Caution

Mobile telephones and radio equipment may lead to malfunctions in the vehicle electronics when operated inside the vehicle with no exterior antenna, unless the above mentioned regulations are observed.

Climate control

Climate control systems **173**
Heating and ventilation system 173
Air conditioning system 174
Electronic climate control system 175
Auxiliary heater 179
Air vents **179**
Adjustable air vents 179
Fixed air vents 180
Maintenance **180**
Air intake 180
Air conditioning regular operation 180
Service 180

Climate control systems

Heating and ventilation system

Controls for:

- temperature
- air distribution
- fan speed
- demisting and defrosting

Heated rear window ⇨ 33.

Temperature

red : warm
blue : cold

Heating will not be fully effective until the engine has reached normal operating temperature.

Air distribution

: to windscreen and front door windows
: to head area via adjustable air vents
: to foot well and windscreen

All combinations are possible.

Fan speed

Adjust the air flow by switching the fan to the desired speed.

Demisting and defrosting

- Press : fan automatically switches to higher speed, the air distribution is directed towards the windscreen.
- Set temperature control to warmest level.
- Switch on heated rear window .
- Open side air vents as required and direct them towards the door windows.

Air conditioning system

In addition to the heating and ventilation system, the air conditioning system has controls for:

: cooling
: air recirculation

Heated seats ⇨ 42, Heated steering wheel ⇨ 83.

Cooling

Press to switch on cooling. The LED in the button illuminates to indicate activation. Cooling is only functional when the engine is running and climate control fan is switched on.

Press again to switch off cooling.

The air conditioning system cools and dehumidifies (dries) as soon as the outside temperature is slightly above the freezing point. Therefore condensation may form and drip from under the vehicle.

If no cooling or drying is required, switch off the cooling system for fuel saving reasons. Activated cooling may inhibit autostops.

Stop-start system ⇨ 185.

Air recirculation system

Press to activate air recirculation mode. The LED in the button illuminates to indicate activation.

Press again to deactivate air recirculation mode.

⚠ Warning

The exchange of fresh air is reduced in air recirculation mode. In operation without cooling the air humidity increases, so the windows may mist up from inside. The quality of the passenger compartment air deteriorates, which may cause the vehicle occupants to feel drowsy.

In warm and very humid ambient air conditions, the windscreen may mist up from outside when cold air is directed towards it. If windscreen mists up from outside, activate windscreen wiper and deactivate .

Maximum cooling

Briefly open the windows so that hot air can disperse quickly.

- Switch on cooling .
- Air recirculation system on.
- Press air distribution switch .
- Set temperature control to coldest level.
- Set fan speed to highest level.
- Open all vents.

Demisting and defrosting the windows

- Press : fan automatically switches to higher speed, the air distribution is directed towards the windscreen.
- Set temperature control to warmest level.
- Switch on heated rear window .
- Open side air vents as required and direct them towards the door windows.

Note

If is pressed while the engine is running, an Autostop will be inhibited until is pressed again.

If is pressed with the fan switched on and the engine running, an Autostop will be inhibited until is pressed again or until the fan is switched off.

If is pressed while the engine is in an Autostop, the engine will restart automatically.

If is pressed with the fan switched on while the engine is in an Autostop, the engine will restart automatically.

Stop-start system ⇨ 185.

Electronic climate control system

The dual zone climate control allows different climatisation temperatures for driver side and front passenger side.

In automatic mode, temperature, fan speed and air distribution are regulated automatically.

Controls for:

- temperature on driver side
- air distribution
- fan speed
- temperature on front passenger side

: cooling
AUTO : automatic mode
: manual air recirculation
: demisting and defrosting

Heated rear window ⇨ 33, Heated seats ⇨ 42, Heated steering wheel ⇨ 83.

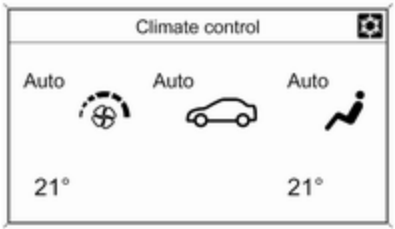

Climate control settings are shown on the Info-Display. Setting modifications are briefly popped-up, superimposed over the currently displayed menu.

The electronic climate control system is only fully operational when the engine is running.

Automatic mode AUTO

Basic setting for maximum comfort:

- Press **AUTO**. The LED in the button illuminates to indicate activation. The air distribution and fan speed are regulated automatically.
- Open all air vents to allow optimised air distribution in automatic mode.
- Press ☼ to switch on optimal cooling and demisting. The LED in the button illuminates to indicate activation.
- Set the preselected temperatures for driver and front passenger using the left and right rotary knobs. Recommended temperature is 22 °C.

The fan speed regulation in automatic mode can be changed in the **Settings** menu in the Info-Display.

Vehicle personalisation ⇨ 108.

All air vents are actuated automatically in automatic mode. The air vents should therefore always be open.

Temperature preselection

Temperatures can be set to a desired value between 16 °C and 28 °C.

If the minimum temperature **Lo** is set, the climate control system runs at maximum cooling, if cooling ❄ is switched on.

If the maximum temperature **Hi** is set, the climate control system runs at maximum heating.

Note
If ❄ is switched on, reducing the set cabin temperature can cause the engine to restart from an Autostop or inhibit an Autostop.

Stop-start system ⇨ 185.

Demisting and defrosting the windows

- Press . The LED in the button illuminates to indicate activation.
- Temperature and air distribution are set automatically and the fan runs at high speed.
- Switch on heated rear window .
- To return to previous mode: press . To return to automatic mode: press **AUTO**.

Setting of automatic rear window heating can be changed in the Settings menu in the Info-Display. Vehicle personalisation ⇨ 108.

Note
If is pressed while the engine is running, an Autostop will be inhibited until is pressed again.

If is pressed with the fan switched on and the engine running, an Autostop will be inhibited until is pressed again or until the fan is switched off.

If is pressed while the engine is in an Autostop, the engine will restart automatically.

If is pressed with the fan switched on while the engine is in an Autostop, the engine will restart automatically.

Stop-start system ⇨ 185.

Manual settings

Climate control system settings can be changed by activating the buttons and rotary knobs as follows. Changing a setting will deactivate the automatic mode.

Fan speed

Press the lower button to decrease or upper button to increase fan speed. The fan speed is indicated by the number of segments in the display.

Pressing and holding the lower button: fan and cooling are switched off.

Pressing and holding the upper button: the fan runs at maximum speed.

To return to automatic mode: Press **AUTO**.

Air distribution

Press appropriate button for desired adjustment. The LED in the button illuminates to indicate activation.

- : to windscreen and front door windows (air conditioning is activated in the background to help preventing windows from fogging)
- : to head area via adjustable air vents
- : to foot well and windscreen

All combinations are possible.

Return to automatic air distribution: press **AUTO**.

Cooling

Press to switch on cooling. Activation is indicated by the LED in the button. Cooling is only functional when the engine is running and climate control fan is switched on.

Press again to switch off cooling.

The air conditioning system cools and dehumidifies (dries) when outside temperature is above a specific level. Therefore condensation may form and drip from under the vehicle.

If no cooling or drying is required, switch off the cooling system for fuel saving reasons. When the cooling system is switched off, no engine restart will be requested by the climate control system during an Autostop. Exception: defrost system is activated and outside temperature above 0 °C. Stop-start system ⇨ 185.

The display will indicate **ACON** when cooling is activated or **ACOFF** when the cooling is deactivated.

Activation or deactivation of cooling operation after engine start can be changed in the Settings menu in the Info-Display. Vehicle personalisation ⇨ 108.

Air recirculation mode

Press to activate air recirculation mode. The LED in the button illuminates to indicate activation.

Press again to deactivate recirculation mode.

⚠ Warning

The exchange of fresh air is reduced in air recirculation mode. In operation without cooling the air humidity increases, so the windows may mist up from inside. The quality of the passenger compartment air deteriorates, which may cause the vehicle occupants to feel drowsy.

In warm and very humid ambient air conditions, the windscreen may mist up from outside when cold air is

directed towards it. If windscreen mists up from outside, activate windscreen wiper and deactivate ⛐.

Basic settings

Some settings can be changed in the **Settings** menu in the Info-Display. Vehicle personalisation ⇨ 108.

Auxiliary heater

Air heater

Quickheat is an electric auxiliary air heater which automatically warms up the passenger compartment more quickly.

Air vents

Adjustable air vents

At least one air vent must be open while the cooling is on.

To open the vent, turn the adjuster wheel to **I**. Adjust the air amount at the vent outlet by turning the adjuster wheel.

Direct the flow of air by tilting and swivelling the slats.

To close the vent, turn the adjuster wheel to **O**.

Air vents for rear passenger are left and right side behind the front seats.

⚠ Warning

Do not attach any objects to the slats of the air vents. Risk of damage and injury in case of an accident.

Fixed air vents

Additional air vents are located beneath the windscreen and door windows and in the foot wells.

Maintenance

Air intake

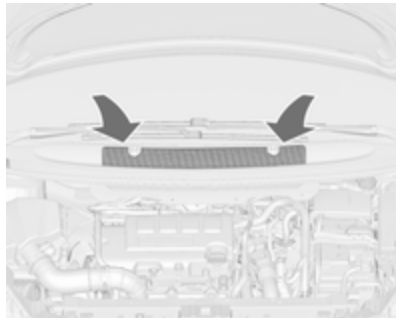

The air intake in front of the windscreen in the engine compartment must be kept clear to allow air intake. Remove any leaves, dirt or snow.

Air conditioning regular operation

In order to ensure continuously efficient performance, cooling must be operated for a few minutes once a month, irrespective of the weather and time of year. Operation with cooling is not possible when the outside temperature is too low.

Service

For optimal cooling performance, it is recommended to annually check the climate control system, starting three years after initial vehicle registration, including:

- functionality and pressure test
- heating functionality
- leakage check
- check of drive belts
- cleaning of condenser and evaporator drainage
- performance check

Note

Refrigerant R-134a contains fluorinated greenhouse gases.

Driving and operating

Driving hints **182**
Control of the vehicle 182
Steering 182
Starting and operating **182**
New vehicle running-in 182
Ignition switch positions 182
Retained power off 183
Starting the engine 183
Overrun cut-off 184
Stop-start system 185
Parking 187
Engine exhaust **188**
Exhaust filter 188
Catalytic converter 189
AdBlue 190
Automatic transmission **192**
Transmission display 192
Selector lever 193
Manual mode 194
Electronic driving programmes 194
Fault 194
Interruption of power supply 195
Manual transmission **196**
Brakes **196**
Antilock brake system 196
Parking brake 197
Brake assist 199
Hill start assist 199
Ride control systems **199**
Traction Control system 199
Electronic Stability Control 200
Interactive driving system 201
Driver assistance systems **203**
Cruise control 203
Speed limiter 204
Adaptive cruise control 206
Forward collision alert 212
Following distance indication ... 215
Active Emergency Braking 216
Parking assist 218
Side blind spot alert 221
Rear view camera 222
Traffic sign assistant 224
Lane departure warning 227
Fuel **229**
Fuel for petrol engines 229
Fuel for diesel engines 230
Refuelling 231
Trailer hitch **233**
General information 233
Driving characteristics and towing tips 233
Trailer towing 234
Towing equipment 234
Trailer stability assist 237

Driving hints

Control of the vehicle

Never coast with engine not running

Many systems will not function in this situation (e.g. brake servo unit, power steering). Driving in this manner is a danger to yourself and others. All systems function during an Autostop.

Stop-start system ⇨ 185.

Idle boost

If charging of the vehicle battery is required due to battery condition, the power output of the generator must be increased. This will be achieved by an idle boost which may be audible.

A message appears in the Driver Information Centre.

Pedals

To ensure the pedal travel is uninhibited, there must be no mats in the area of the pedals.

Use only floor mats which fit properly and are fixed by the retainers on the driver's side.

Steering

If power steering assist is lost because the engine stops or due to a system malfunction, the vehicle can be steered but may require increased effort.

Control indicator ⊖! ⇨ 98.

Starting and operating

New vehicle running-in

Do not brake unnecessarily hard for the first few journeys.

During the first drive, smoke may occur because of wax and oil evaporating off the exhaust system. Park the vehicle in the open for a while after the first drive and avoid inhaling the fumes.

During the running-in period, fuel and engine oil consumption may be higher and the cleaning process of the exhaust filter may take place more often. Autostop may be inhibited to allow for charging of the vehicle battery.

Exhaust filter ⇨ 188.

Ignition switch positions

Turn key:

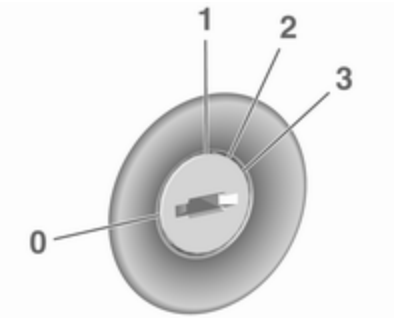

0 : ignition off: Some functions remain active until key is removed or driver's door is opened, provided the ignition was on previously.

1 : accessory power mode: Steering wheel lock released, some electrical functions are operable, ignition is off.

2 : ignition on power mode: Ignition is on, diesel engine is preheating. Control indicators illuminate and most electrical functions are operable. To turn the key from position **2** to **1** or **0**, first push the key all the way in towards the steering column.

3 : engine start: Release key after starting procedure begins.

Steering wheel lock

Remove key from ignition switch and turn steering wheel until it engages.

⚠ Danger
Never remove the key from ignition switch during driving as this will cause steering wheel lock.

Retained power off

The following electronic systems can work until the driver's door is opened or for ten minutes after the ignition is switched off:

- power windows
- power outlets

Starting the engine

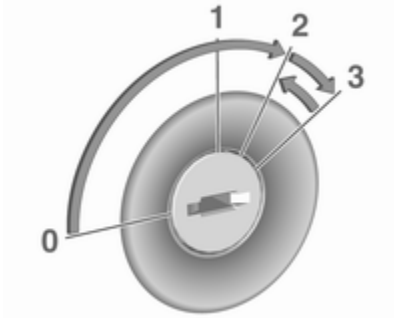

Turn key to position **1** to release the steering wheel lock.

Manual transmission: operate clutch and brake pedal.

Automatic transmission: operate brake pedal and move selector lever to **P** or **N**.

Do not operate the accelerator pedal.

Diesel engines: turn the key to position **2** for preheating and wait until control indicator ⚯ extinguishes.

Turn key briefly to position **3** and release: an automatic procedure operates the starter with a short delay until the engine is running, see Automatic Starter Control.

Manual transmission: during an Autostop, the engine can be started by depressing the clutch pedal ⇨ 185.

Automatic transmission: during an Autostop, the engine can be started by releasing the brake pedal ⇨ 185.

Before restarting or to switch off the engine, turn the key back to position **0**.

⚠ Danger

Switching off the engine during driving may cause loss of power support for brake and steering systems. Assistance systems and airbag systems are disabled. Lighting and brake lights will extinguish. Therefore power down the engine and ignition while driving only when required in case of emergency.

Starting the vehicle at low temperatures

The start of the engine without additional heaters is possible down to -25 °C for diesel engines and -30 °C for petrol engines. Required is an engine oil with the correct viscosity, the correct fuel, performed services and a sufficiently charged battery. With temperatures below -30 °C the automatic transmission need a warming phase of approx. five minutes. The selector lever must be in position **P**.

Automatic Starter Control

This function controls the engine starting procedure. The driver does not have to hold the key in position **3**. Once applied, the system will go on starting automatically until the engine is running. Because of the checking procedure, the engine starts running after a short delay.

Possible reasons for a non-starting engine:

- Clutch pedal not operated (manual transmission).
- Brake pedal not operated or selector lever not in **P** or **N** (automatic transmission).
- Timeout occurred.

Turbo engine warm-up

Upon start-up, engine available torque may be limited for a short time, especially when the engine temperature is cold. The limitation is to allow the lubrication system to fully protect the engine.

Overrun cut-off

The fuel supply is automatically cut off during overrun, i.e. when the vehicle is driven with a gear engaged but accelerator pedal is released.

Depending on driving conditions, the overrun cut-off may be deactivated.

Stop-start system

The stop-start system helps to save fuel and to reduce the exhaust emissions. When conditions allow, it switches off the engine as soon as the vehicle is at a low speed or at a standstill, e.g. at a traffic light or in a traffic jam. It starts the engine automatically as soon as the clutch is depressed. A vehicle battery sensor ensures that an Autostop is only performed if the vehicle battery is sufficiently charged for a restart.

Activation

The stop-start system is available as soon as the engine is started, the vehicle starts-off and the conditions as stated below in this section are fulfilled.

Deactivation

Deactivate the stop-start system manually by pressing **eco**. The deactivation is indicated when the LED in the button extinguishes.

Autostop

If the vehicle is at a low speed or at a standstill, activate an Autostop as follows:

- Depress the clutch pedal.
- Move the selector lever to neutral.
- Release the clutch pedal.

The engine will be switched off while the ignition stays on.

Indication

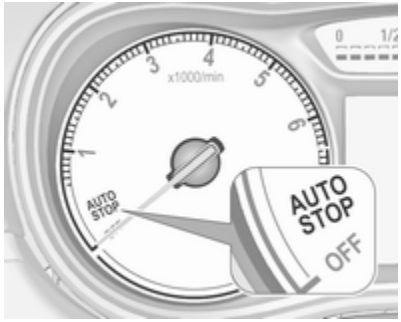

An Autostop is indicated by the needle at the **AUTOSTOP** position in the tachometer.

After restart, the idle speed is indicated.

The stop-start system will be disabled on inclines of 12% or more.

During an Autostop, the heating and brake performance will be maintained.

Conditions for an Autostop

The stop-start system checks if each of the following conditions is fulfilled.

- The stop-start system is not manually deactivated.
- The bonnet is fully closed.
- The driver's door is closed or the driver's seat belt is fastened.
- The vehicle battery is sufficiently charged and in good condition.
- The engine is warmed-up.
- The engine coolant temperature is not too high.
- The engine exhaust temperature is not too high, e.g. after driving with high engine load.
- The ambient temperature is above -5 °C.
- The climate control system allows an Autostop.
- The brake vacuum is sufficient.
- The self-cleaning function of the exhaust filter is not active.
- The vehicle was driven at least at walking speed since the last Autostop.

Otherwise an Autostop will be inhibited.

Certain settings of the climate control system may inhibit an Autostop. See Climate control chapter for more details ⇨ 175.

Immediately after motorway driving, an Autostop may be inhibited.

New vehicle running-in ⇨ 182.

Vehicle battery discharge protection

To ensure reliable engine restarts, several battery discharge protection features are implemented as part of the stop-start system.

Power saving measures

During an Autostop, several electrical features such as auxiliary electric heater or rear window heating are disabled or switched into a power-saving mode. The fan speed of the climate control system is reduced to save power.

Restart of the engine by the driver

Depress the clutch pedal to restart the engine.

When the engine is restarted, control indicator Ⓐ in the Driver Information Centre extinguishes.

If the selector lever is shifted out of neutral before depressing the clutch pedal first, control indicator illuminates or is shown as a message in the Driver Information Centre.

Control indicator ⇨ 96.

Restart of the engine by the stop-start system

The selector lever must be in neutral to enable an automatic restart.

If one of the following conditions occurs during an Autostop, the engine will be restarted automatically by the stop-start system.

- The stop-start system is manually deactivated.
- The bonnet is opened.
- The driver's seat belt is unfastened and the driver's door is opened.
- The engine temperature is too low.

- The charge level of the vehicle battery is below a defined level.
- The brake vacuum is not sufficient.
- The vehicle is driven at least at walking speed.
- The climate control system requests an engine start.
- The air conditioning is manually switched on.

If the bonnet is not fully closed, a warning message is displayed in the Driver Information Centre.

If an electrical accessory, e.g. a portable CD player, is connected to the power outlet, a brief power drop during engine restart may be noticeable.

Parking

⚠Warning

- Do not park the vehicle on an easily ignitable surface. The high temperature of the exhaust system could ignite the surface.
- Always apply the parking brake. Activate the manual parking brake without pressing the release button. Apply as firmly as possible on a downhill slope or uphill slope. Depress brake pedal at the same time to reduce operating force.

  For vehicles with electric parking brake, pull switch Ⓟ for a minimum of one second until control indicator Ⓟ illuminates constantly and electric parking brake is applied ⇨ 96.
- Switch off the engine.
- If the vehicle is on a level surface or uphill slope, engage first gear or set the selector lever to position **P** before removing the ignition key. On an uphill slope, turn the front wheels away from the kerb.

  If the vehicle is on a downhill slope, engage reverse gear or set the selector lever to position **P** before removing the ignition key. Turn the front wheels towards the kerb.
- Close the windows.
- Remove the ignition key from the ignition switch. Turn the steering wheel until the steering wheel lock is felt to engage.

  For vehicles with automatic transmission, the key can only be removed when the selector lever is in position **P**.

- Lock the vehicle.
- Activate the anti-theft alarm system.
- The engine cooling fans may run after the engine has been switched off ⇨ 240.

Caution

After running at high engine speeds or with high engine loads, operate the engine briefly at a low load or run in neutral for approx. 30 seconds before switching off, in order to protect the turbocharger.

Note
In the event of an accident with airbag deployment, the engine is turned off automatically if the vehicle comes to a standstill within a certain time.

Engine exhaust

⚠ Danger

Engine exhaust gases contain poisonous carbon monoxide, which is colourless and odourless and could be fatal if inhaled.

If exhaust gases enter the interior of the vehicle, open the windows. Have the cause of the fault rectified by a workshop.

Avoid driving with an open load compartment, otherwise exhaust gases could enter the vehicle.

Exhaust filter

The exhaust filter is a particle filter for diesel and gasoline engines.

Automatic cleaning process

The exhaust filter system filters soot particles out of the exhaust gases. The system includes a self-cleaning function that runs automatically during driving without any notification. The filter is cleaned by periodically burning off the soot particles at high temperature. This process takes place automatically under set driving conditions and may take up to 25 minutes. Typically it needs between seven and twelve minutes. Autostop is not available and fuel consumption may be higher during this period. The emission of smells and smoke during this process is normal.

System requires cleaning

Under certain conditions, e.g. driving short distances, the system cannot clean itself automatically.

If cleaning of the filter is required and if previous driving conditions did not enable automatic cleaning, it will be indicated by illumination of and a warning message in the Driver Information Centre.

illuminates along with a warning message when exhaust filter is full. Start cleaning process as soon as possible.

flashes along with a warning message when exhaust filter has reached the maximum filling level. Start cleaning process immediately to avoid damage to the engine.

Activate self-cleaning process

To activate cleaning process, continue driving, keep engine speed above 2000 rpm. Shift down if necessary. Exhaust filter cleaning is then started.

Cleaning process is completed more quickly at high engine speeds and loads.

Control indicator extinguishes as soon as the self-cleaning operation is complete. Keep on driving until self-cleaning operation is complete.

Caution

If possible, do not interrupt cleaning process. Drive until cleaning is completed to avoid the need for service or repair by a workshop.

Cleaning process not possible

If cleaning is not possible for any reason, control indicator illuminates and a warning message appears in the Driver Information Centre. Engine power may be reduced. Seek the assistance of a workshop immediately.

Catalytic converter

The catalytic converter reduces the amount of harmful substances in the exhaust gases.

Caution

Fuel grades other than those listed on pages ⇨ 229, ⇨ 292 could damage the catalytic converter or electronic components.

Unburnt petrol will overheat and damage the catalytic converter. Therefore avoid excessive use of the starter, running the fuel tank dry and starting the engine by pushing or towing.

In the event of misfiring, uneven engine running, a reduction in engine performance or other unusual problems, have the cause of the fault rectified by a workshop as soon as possible. In an emergency, driving can be continued for a short period, keeping vehicle speed and engine speed low.

AdBlue

General information

The selective catalytic reduction (BlueInjection) is a method to substantially reduce the nitrogen oxides in the exhaust emission. This is achieved by injecting a Diesel Exhaust Fluid (DEF) into the exhaust system. The ammonia released by the fluid reacts with nitrous gases (NO_x) from the exhaust and turns it into nitrogen and water.

The designation of this fluid is AdBlue®. It is a non-toxic, non-flammable, colourless and odourless fluid which consists of 32% urea and 68% water.

⚠ Warning

Avoid contact of your eyes or skin with AdBlue.

In case of eye or skin contact, rinse off with water.

Caution

Avoid contact of the paintwork with AdBlue.

In case of contact, rinse off with water.

AdBlue freezes at a temperature of approx. -11 °C. As the vehicle is equipped with an AdBlue pre-heater, the emissions reduction at low temperatures is ensured. The AdBlue pre-heater works automatically.

The typical AdBlue consumption is approx. 1.2 litres per 1000 km for vehicles with engine D16DTH or D16DTJ and approx. two litres per 1000 km for vehicles with engine D20DTH. The consumption can also be higher depending on driving behaviour (e.g. high load or towing).

AdBlue tank

The AdBlue tank level can be found in the display menu.

Level warnings

Depending on the calculated range of AdBlue, different messages are displayed in the Driver Information Centre. The messages and the restrictions are a legal requirement.

The first possible warning is **AdBlue Range: 2400 km**.

This warning will show up once briefly with the calculated range. Driving is possible without any restrictions.

The next warning level is entered with a range below 1750 km. The message with the current range will always be displayed when ignition is switched on and needs to be confirmed ⇨ 101. Refill AdBlue before entering the next warning level.

At an AdBlue range below 900 km, the following warning messages are alternately displayed and cannot be dismissed:

- **AdBlue Low Refill Now**
- **Engine Restart Prevented in 900 km**.

Additionally, control indicator flashes continuously.

Note
In case of high AdBlue consumption, the Driver Information Centre may display this warning without the previous warning stages.

The last warning level is entered when the AdBlue tank is empty. Restart of the engine is not possible. The following warning messages are alternately displayed and cannot be dismissed:

- **AdBlue Empty Refill Now**
- **Engine Will Not Restart**.

Additionally, control indicator flashes continuously.

With active prevention of an engine start, the following message will be displayed:

Refill AdBlue To Start Vehicle.

The tank must be refilled completely with AdBlue, otherwise restarting of the engine is not possible.

High emission warnings

If the exhaust emission rises above a certain value, warnings similar to the range warnings will be displayed in the Driver Information Centre.

Requests to have the exhaust system checked and finally the announcement of the prevention of an engine restart are displayed. These restrictions are a legal requirement.

Consult a workshop for assistance.

Refilling AdBlue

Caution

Only use AdBlue that complies with European standards DIN 70 070 and ISO 22241-1.

Do not use additives.

Do not dilute AdBlue.

Otherwise the selective catalytic reduction system could be damaged.

Note
Whenever a filling pump with a nozzle for passenger cars is not available at a filling station, use only AdBlue bottles or canisters with a sealed refill adapter for refilling, to prevent splashback and overspill, and in order to ensure that the fumes from the tank are captured and do not emerge. AdBlue in bottles or canisters is available in many filling stations and can be purchased e.g. at Opel dealers and other retail outlets.

Since AdBlue has a limited durability, check the date of expiry before refilling.

Note
When unscrewing the protective cap from the filler neck, ammonia fumes may emerge. Do not inhale as the fumes have a pungent smell. The fumes are not harmful by inhalation.

The AdBlue tank should be filled completely. This must be done if the warning message regarding prevention of an engine restart is already displayed.

The vehicle must be parked on a level surface.

The filler neck for AdBlue is located behind the fuel filler flap, which is located at right rear side of the vehicle.

The fuel filler flap can only be opened if the vehicle is unlocked.

1. Remove key from ignition switch.
2. Close all doors to avoid ammonia fumes entering the interior of the vehicle.
3. Release the fuel filler flap by pushing the flap ⇨ 231.

4. Unscrew protective cap from the filler neck.
5. Open AdBlue canister.
6. Mount one end of the hose on the canister and screw the other end on the filler neck.
7. Lift the canister until it is empty, or until the flow from the canister has stopped. This can take up to five minutes.
8. Place the canister on the ground to empty the hose, wait 15 seconds.
9. Unscrew the hose from the filler neck.
10. Mount the protective cap and turn clockwise until it engages.

Note
Dispose of AdBlue canister according to environmental requirements. To reuse the hose flush it with clear water after usage.

Automatic transmission

The automatic transmission permits automatic gearshifting (automatic mode) or manual gearshifting (manual mode).

Manual shifting is possible in manual mode **M** by tapping the selector lever to **+** or **-** ⇨ 194.

Transmission display

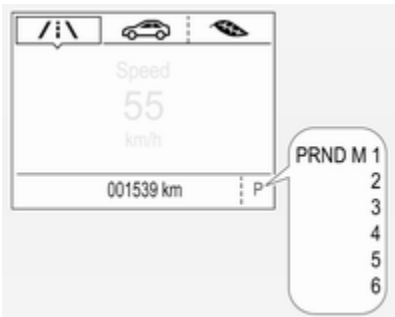

The mode or selected gear is shown in the Driver Information Centre.

In automatic mode, the driving programme is indicated by **D**.

In manual mode, **M** and the number of the selected gear is indicated.

R indicates reverse gear.

N indicates neutral position.

P indicates park position.

Selector lever

P : park position, wheels are locked, engage only when the vehicle is stationary and the parking brake is applied
R : reverse gear, engage only when the vehicle is stationary
N : neutral
D : automatic mode
M : manual mode
+ : upshift in manual mode
– : downshift in manual mode

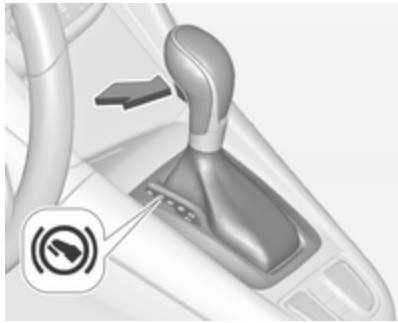

The selector lever is locked in **P** and can only be moved when the ignition is on, the release button on the selector lever is pushed and the brake pedal is applied.

Without brake pedal applied, the control indicator illuminates.

If the selector lever is not in **P** when the ignition is switched off, control indicator flashes.

To engage **P** or **R**, press the release button.

The engine can only be started with the lever in position **P** or **N**. When position **N** is selected, press the brake pedal or apply the parking brake before starting.

Do not accelerate while engaging a gear. Never depress the accelerator pedal and brake pedal at the same time.

When a gear is engaged, the vehicle slowly begins to creep when the brake is released.

Engine braking

To utilise the engine braking effect, select a lower gear in good time when driving downhill, see manual mode.

Rocking the vehicle

Rocking the vehicle is only permissible if the vehicle is stuck in sand, mud or snow. Move the selector lever between **D** and **R** in a repeat pattern. Do not race the engine and avoid sudden acceleration.

Parking

Apply the parking brake and engage **P**.

The ignition key can only be removed when the selector lever is in position **P**.

Manual mode

Move selector lever out of position **D** towards the left in position **M**.

Tap selector lever upwards **+** to shift to a higher gear.

Tap the selector lever downwards **-** to shift to a lower gear.

If a higher gear is selected when vehicle speed is too low, or a lower gear when vehicle speed is too high, the shift is not executed. This can cause a message in the Driver Information Centre.

In manual mode, no automatic shifting to a higher gear takes place at high engine revolutions.

Gear shift indication

The symbol ▲ with a number beside it is indicated when gearshifting is recommended for fuel saving reasons.

Shift indication appears only in manual mode.

Electronic driving programmes

- When SPORT mode is engaged, the vehicle shifts at higher engine speeds (unless cruise control is on). SPORT mode ⇨ 201.
- Special programmes automatically adapt the gearshift points when driving up inclines or down hills.
- In snowy or icy conditions or on other slippery surfaces, the electronic transmission control enables the driver to select manually first, second or third gear for starting off.

Kickdown

If the accelerator pedal is pressed down completely in automatic mode, the transmission shifts to a lower gear depending on engine speed.

Fault

In the event of a fault a message is displayed in the Driver Information Centre. Vehicle messages ⇨ 106.

The transmission no longer shifts automatically. Continued travel is possible with manual shifting.

Only the highest gear is available. Depending on the fault, 2nd gear may also be available in manual mode. Shift only when vehicle is at a standstill.

Have the cause of the fault remedied by a workshop.

Interruption of power supply

In the event of an interruption of power supply, the selector lever cannot be moved out of the **P** position. The ignition key cannot be removed from the ignition switch.

If the vehicle battery is discharged, start the vehicle using jump leads ⇨ 276.

If the vehicle battery is not the cause of the fault, release the selector lever.

1. Apply the parking brake.

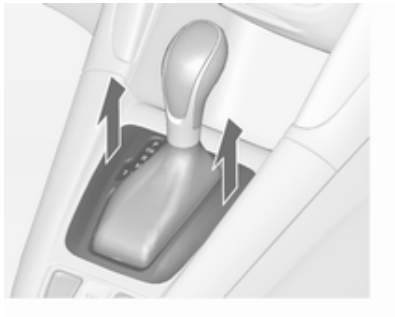

2. Release the selector lever trim from the centre console at the front, fold it upwards and rotate it to the left.

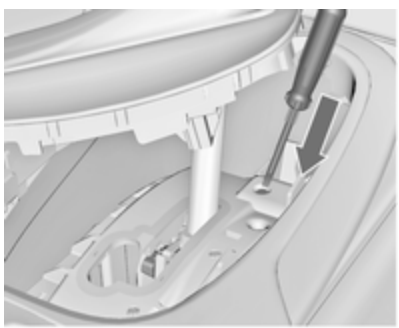

3. Push down the release lever and move the selector lever out of **P** or **N**. If these positions are engaged again, the selector lever will be locked in position again. Have the cause of the power supply interruption remedied by a workshop.
4. Mount the selector lever trim onto the centre console and refit.

Manual transmission

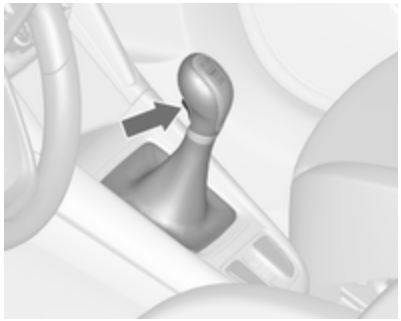

To engage reverse, depress the clutch pedal and then press the release button on the selector lever and engage the gear.

If the gear does not engage, set the lever to neutral, release the clutch pedal and depress again; then repeat gear selection.

Do not slip the clutch unnecessarily.

When operating, depress the clutch pedal completely. Do not use the pedal as a foot rest.

Caution
It is not advisable to drive with the hand resting on the selector lever.

Gear shift indication ⇨ 98.

Stop-start system ⇨ 185.

Brakes

The brake system comprises two independent brake circuits.

If a brake circuit fails, the vehicle can still be braked using the other brake circuit. However, braking effect is achieved only when the brake pedal is depressed firmly. Considerably more force is needed for this. The braking distance is extended. Seek the assistance of a workshop before continuing your journey.

When the engine is not running, the support of the brake servo unit disappears once the brake pedal has been depressed once or twice. Braking effect is not reduced, but braking requires significantly greater force. It is especially important to bear this in mind when being towed.

Control indicator ⓘ ⇨ 96.

Antilock brake system

Antilock brake system (ABS) prevents the wheels from locking.

ABS starts to regulate brake pressure as soon as a wheel shows a tendency to lock. The vehicle remains steerable, even during hard braking.

ABS control is made apparent through a pulse in the brake pedal and the noise of the regulation process.

For optimum braking, keep the brake pedal fully depressed throughout the braking process, despite the fact that the pedal is pulsating. Do not reduce the pressure on the pedal.

After starting off the system performs a self-test which may be audible.

Control indicator (ABS) ⇨ 97.

Adaptive brake light

During full braking, all three brake lights flash for the duration of ABS control.

Fault

⚠ Warning

If there is a fault in the ABS, the wheels may be liable to lock due to braking that is heavier than normal. The advantages of ABS are no longer available. During hard braking, the vehicle can no longer be steered and may swerve.

Have the cause of the fault remedied by a workshop.

Parking brake

⚠ Warning

Before leaving the vehicle, check parking brake status. Control indicator (!) (manual parking brake) or (P) (electrical parking brake) must illuminate constantly.

Manual parking brake

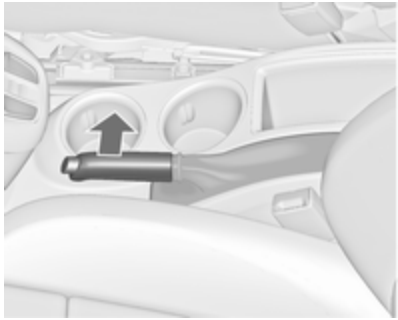

⚠ Warning

Always apply parking brake firmly without operating the release button, and apply as firmly as possible on a downhill or uphill slope.

To release the parking brake, pull the lever up slightly, press the release button and fully lower the lever.

To reduce the operating forces of the parking brake, depress the foot brake at the same time.

Control indicator ⓘ ⇨ 96.

Electric parking brake

Applying when vehicle is stationary

⚠Warning

Pull switch Ⓟ for a minimum of one second until control indicator Ⓟ illuminates constantly and electric parking brake is applied ⇨ 97. The electric parking brake operates automatically with adequate force.

Before leaving the vehicle, check the electric parking brake status. Control indicator Ⓟ ⇨ 97.

The electric parking brake can always be activated, even if the ignition is off.

Do not operate electric parking brake system too often with engine not running, as this will discharge the vehicle battery.

Releasing

Switch on ignition. Keep foot brake pedal depressed and then push switch Ⓟ.

Drive away function

Vehicles with manual transmission: Depressing the clutch pedal and then slightly releasing the clutch pedal and slightly depressing the accelerator pedal releases the electric parking brake automatically. This is not possible when the switch Ⓟ is pulled at the same time.

Vehicles with automatic transmission: Engaging **D** and then depressing the accelerator pedal releases the electric parking brake automatically. This is not possible when the switch Ⓟ is pulled at the same time.

Dynamic braking when vehicle is moving

When the vehicle is moving and the switch Ⓟ is kept pulled, the electric parking brake system will decelerate the vehicle, but will not apply statically.

As soon as the switch Ⓟ is released, dynamic braking will be stopped.

Functionality check

When the vehicle is not moving, the electric parking brake might be applied automatically. This is done to check the system.

Fault

Failure mode of electric parking brake is indicated by a control indicator and by a vehicle message which is displayed in the Driver Information Centre. Vehicle messages ⇨ 106.

Apply electric parking brake: pull and hold switch Ⓟ for more than five seconds. If control indicator Ⓟ illuminates, electric parking brake is applied.

Release electric parking brake: push and hold the switch Ⓟ for more than two seconds. If control indicator Ⓟ extinguishes, electric parking brake is released.

Control indicator Ⓟ flashes: electric parking brake is not fully applied or released. When continuously flashing, release electric parking brake and retry applying.

Brake assist

If brake pedal is depressed quickly and forcefully, maximum brake force is automatically applied.

Operation of brake assist might become apparent by a pulse in the brake pedal and a greater resistance when depressing the brake pedal.

Maintain steady pressure on the brake pedal as long as full braking is required. Maximum brake force is automatically reduced when brake pedal is released.

Hill start assist

The system helps prevent unintended movement when driving away on inclines.

When releasing the brake pedal after stopping on an incline, the brakes remain on for a further two seconds. The brakes release automatically as soon as the vehicle begins to accelerate or the two seconds holding time is over.

The hill start assist is not active during an Autostop.

Ride control systems

Traction Control system

The Traction Control system (TC) is a component of the Electronic Stability Control.

TC improves driving stability when necessary, regardless of the type of road surface or tyre grip, by preventing the drive wheels from spinning.

As soon as the drive wheels starts to spin, engine output is reduced and the wheel spinning the most is braked individually. This considerably improves the driving stability of the vehicle on slippery road surfaces.

TC is operational after each engine start as soon as the control indicator extinguishes.

When TC operates flashes.

⚠Warning

Do not let this special safety feature tempt you into taking risks when driving.

Adapt speed to the road conditions.

Control indicator ⛐ ⇨ 98.

Deactivation

TC can be switched off when spinning of drive wheels is required: press ⛐ briefly.

A status message appears in the Driver Information Centre when TC is deactivated.

Control indicator ⛐ illuminates.

When TC is deactivated, ESC remains active but with higher control threshold.

TC is reactivated by pressing ⛐ again. A status message pops-up in the Driver Information Centre when TC is reactivated.

TC is also reactivated the next time the ignition is switched on.

Fault

If there is a fault in the system the control indicator ⛐ illuminates continuously and a message appears in the Driver Information Centre. The system is not operational.

Have the cause of the fault remedied by a workshop.

Electronic Stability Control

Electronic Stability Control (ESC) improves driving stability when necessary, regardless of the type of road surface or tyre grip.

As soon as the vehicle starts to swerve (understeer/oversteer), engine output is reduced and the wheels are braked individually.

ESC operates in combination with the Traction Control system (TC). It prevents the drive wheels from spinning.

ESC is operational after each engine start as soon as the control indicator ⛐ extinguishes.

When ESC operates ⛐ flashes.

⚠ Warning

Do not let this special safety feature tempt you into taking risks when driving.

Adapt speed to the road conditions.

Control indicator ⇨ 98.

Deactivation

ESC and TC can be deactivated:

- hold pressed for a minimum of five seconds: ESC and TC are both deactivated. and illuminate and status messages appear in the Driver Information Centre.

- To deactivate only Traction control system press button briefly: TC is inactive but ESC remains active, illuminates. A status message appears in the Driver Information Centre when TC is deactivated.

ESC is reactivated by pressing the button again. If the TC system was previously disabled, both TC and ESC are reactivated. and extinguishes when TC and ESC are reactivated.

ESC is also reactivated the next time the ignition is switched on.

Fault

If there is a fault in the system the control indicator illuminates continuously and a message appears in the Driver Information Centre. The system is not operational.

Have the cause of the fault remedied by a workshop.

Interactive driving system

Flex Ride

Flex Ride driving system allows the driver to select between three driving modes:

- SPORT mode: press **SPORT**, LED illuminates.
- TOUR mode: press **TOUR**, LED illuminates.
- Normal mode: neither **SPORT** or **TOUR** are pressed, no LED illuminates.

Deactivate SPORT mode and TOUR mode by pressing the corresponding button once more.

In each driving mode Flex Ride networks the following electronic systems:

- Continuous Damping Control
- Accelerator Pedal Control
- Steering Control
- Automatic transmission

SPORT mode

The settings of the systems are adapted to a sportier driving style.

TOUR mode

The settings of the systems are adapted to a comfort driving style.

Normal mode

All settings of the systems are adapted to standard values.

Drive mode control

Within each manual selected driving mode SPORT, TOUR or Normal, the Drive Mode Control (DMC) detects and analyses continuously the real driving characteristics, responses by the driver, and the active dynamic state of the vehicle. If necessary, the control unit of DMC automatically changes the settings within the selected driving mode or, when recognising greater variations, the driving mode is changed for the length of variation.

If, for example, Normal mode is selected and DMC detects a sporty driving behaviour, DMC changes several settings of the Normal mode into sporty settings. The DMC changes to SPORT mode in case of very sporty driving behaviour.

If, for example, TOUR mode is selected and whilst driving on a winding road a sudden hard brake is necessary, DMC will detect the dynamic vehicle condition and changes the settings for suspension to SPORT mode to increase vehicle stability.

When the driving characteristic or the dynamic vehicle state returns to former state, DMC will change the settings to the preselected driving mode.

Driver assistance systems

⚠ Warning

Driver assistance systems are developed to support the driver and not to replace the driver's attention.

The driver accepts full responsibility when driving the vehicle.

When using driver assistance systems, always take care regarding the current traffic situation.

Cruise control

The cruise control can store and maintain speeds of approx. 30 km/h to maximum vehicle speed. Deviations from the stored speeds may occur when driving uphill or downhill.

For safety reasons, the cruise control cannot be activated until the foot brake has been operated once. Activation in first gear is not possible.

Do not use the cruise control if it is not advisable to maintain a constant speed.

With automatic transmission, only activate cruise control in automatic mode.

Control indicator ⇨ 100.

Switching on the system

Press ; control indicator in instrument cluster illuminates white.

Activation of the functionality

Accelerate to the desired speed and turn thumb wheel to **SET/-**, the current speed is stored and maintained. Control indicator in instrument cluster illuminates green. Accelerator pedal can be released.

Vehicle speed can be increased by depressing the accelerator pedal. When the accelerator pedal is released, the previously stored speed is resumed.

Cruise control remains activated while gearshifting.

Increase speed

With cruise control active, hold thumb wheel turned to **RES/+** or briefly turn to **RES/+** repeatedly: speed increases continuously or in small increments.

Alternatively accelerate to the desired speed and store by turning to **SET/-**.

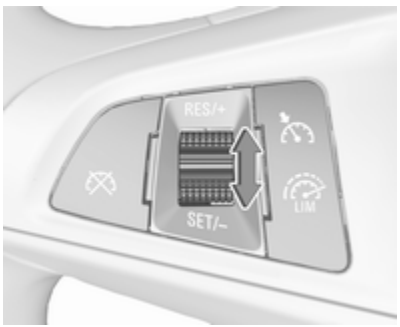

Reduce speed

With cruise control active, hold thumb wheel turned to **SET/-** or briefly turn to **SET/-** repeatedly: speed decreases continuously or in small increments.

Deactivation of the functionality

Press , control indicator in instrument cluster illuminates white.

Cruise control is deactivated, but not switched off. Last stored speed remains in memory for later speed resume.

Automatic deactivation:

- Vehicle speed is below approx. 30 km/h.
- Vehicle speed drops more than 25 km/h below the set speed.
- The brake pedal is depressed.
- The clutch pedal is depressed for a few seconds.
- Selector lever is in **N**.
- Engine speed is in a very low range.
- The Traction Control system or Electronic Stability Control is operating.
- Parking brake is applied.
- Simultaneous pressing **RES/+** and brake pedal deactivates cruise control and will delete stored speed.

Resume stored speed

Turn thumb wheel to **RES/+** at a speed above 30 km/h. The stored speed will be obtained.

Switching off the system

Press , control indicator in instrument cluster extinguishes. The stored speed is deleted.

Pressing to activate the speed limiter or switching off the ignition also switches off cruise control and deletes the stored speed.

Speed limiter

The speed limiter prevents the vehicle exceeding a preset maximum speed.

The maximum speed can be set at speeds above 25 km/h up to 200 km/h.

The driver can only accelerate up to the preset speed. Deviations from the limited speed may occur when driving downhill.

The preset speed limit is displayed in the Driver Information Centre when the system is active.

Activation of the functionality

Press . Symbol illuminates in the Driver Information Centre.

If cruise control or adaptive cruise control has been activated before, it is switched off when speed limiter is activated and the control indicator extinguishes.

Set speed limit

Accelerate to the desired speed and briefly turn thumb wheel to **SET/-**: the current speed is stored as maximum speed. and the speed limit is displayedin the Driver Information Centre.

Change speed limit

With speed limiter active, turn thumb wheel to **RES/+** to increase or **SET/-** to decrease the desired maximum speed.

Exceeding the speed limit

When exceeding the limited speed without driver input, the speed will flash in the Driver Information Centre and a chime sounds during this period.

In the event of an emergency, it is possible to exceed the speed limit by depressing the accelerator pedal firmly nearly to the final point. In this case no chime appears.

Release the accelerator pedal and the speed limiter function is reactivated once a speed lower than the limit speed is obtained.

Deactivation of the functionality

Press : speed limiter is deactivated and the vehicle can be driven without speed limit.

The stored limited speed is indicated in brackets. Additionally, a corresponding message appears.

Speed limiter is deactivated, but not switched off. Last stored speed remains in memory for later speed resume.

Resume limit speed

Turn thumb wheel to **RES/+**. The stored speed limit will be obtained and is indicated without brackets in the Driver Information Centre.

Switching off the system

Press ⊘, the speed limit indication extinguishes in the Driver Information Centre. The stored speed is deleted.

By pressing ⊘ to activate cruise control or adaptive cruise control, speed limiter is also deactivated and the stored speed is deleted.

By switching off the ignition, speed limiter is also deactivated, but the speed limit will be stored for next speed limiter activation.

Adaptive cruise control

Adaptive cruise control is an enhancement to traditional cruise control with the additional feature of maintaining a certain distance behind the vehicle ahead.

Adaptive cruise control automatically decelerates the vehicle when approaching a slower moving vehicle. It then adjusts the vehicle speed to follow the vehicle ahead at the selected following distance. The vehicle speed increases or decreases to follow the vehicle in front, but will not exceed the set speed. It may apply limited braking with activated brake lights.

The adaptive cruise control can store and maintain speeds over approx. 50 km/h and brakes automatically to follow a slower vehicle driving ahead down to a minimum speed of 30 km/h.

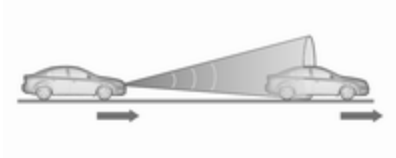

Adaptive cruise control uses a radar sensor to detect the vehicles ahead. If no vehicle is detected in the driving path, the adaptive cruise control will behave like a traditional cruise control.

For safety reasons, the system cannot be activated before the brake pedal has been depressed once after switching on ignition. Activation in first gear is not possible.

Adaptive cruise control is mainly advised to be used on long straight roads, e.g. highways or country roads with steady traffic. Do not use the system if it is not advisable to maintain a constant speed.

Control indicator 🚗 ⇨ 101, ⊘ ⇨ 100.

⚠Warning

The complete driver attention is always required while driving with adaptive cruise control. The driver stays fully in control of the vehicle because the brake pedal, the accelerator pedal and the cancel switch have priority over any adaptive cruise control operation.

Switching on the system

Press to switch on adaptive cruise control. The control indicator illuminates white. Additionally appears in the Driver Information Centre.

Activation of the functionality by setting the speed

Adaptive cruise control can be activated between 50 km/h and 180 km/h.

Accelerate to the desired speed and turn thumb wheel to **SET/-**; the current speed is stored and maintained. Control indicator illuminates green.

The adaptive cruise control symbol , the following distance setting and set speed are indicated in the Driver Information Centre.

The accelerator pedal can be released. Adaptive cruise control remains activated while gearshifting.

Overriding set speed

It is always possible to drive faster than the selected set speed by depressing the accelerator pedal. When the accelerator pedal is released, the vehicle returns to the desired distance if a slower vehicle is ahead. Otherwise it returns to the stored speed.

Once the system is activated, adaptive cruise control decelerates or brakes if it detects a vehicle ahead which is slower or closer than the desired following distance.

⚠ Warning

Accelerating by the driver deactivates automatic braking by the system. This is indicated as a pop-up warning in the Driver Information Centre.

Increase speed

With adaptive cruise control active, hold thumb wheel turned to **RES/+**: speed increases continuously in large increments, or activate **RES/+** repeatedly: speed increases in small increments.

If the vehicle is driven with adaptive cruise control active much faster than the desired speed, e.g. after depressing the accelerator pedal, then the current speed can be stored and maintained by turning the thumb wheel to SET/-.

Reduce speed

With adaptive cruise control active, hold thumb wheel turned to **SET/-**: speed decreases continuously in large increments, or activate **SET/-** repeatedly: speed decreases in small increments.

If the vehicle is driven with adaptive cruise control active much slower than the desired speed, e.g. because of a slower vehicle ahead, then the current speed can be stored and maintained by turning the thumb wheel to SET/-.

Resume stored speed

If the system is switched on but inactive, then turn thumb wheel to **RES/+** at a speed above 50 km/h to resume the stored speed.

The stored speed is indicated in brackets when the system is switched on but not active,

Setting the following distance

When adaptive cruise control detects a slower moving vehicle in the driving path, it will adjust the vehicle speed to maintain the following distance selected by the driver.

The following distance can be set to near, medium or far.

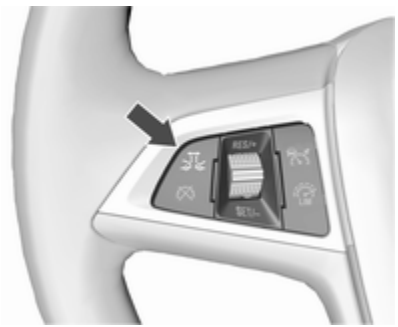

Press ⌯, the current setting is shown in the Driver Information Centre. Press ⌯ again to change the following distance. The setting is also displayed in the Driver Information Centre.

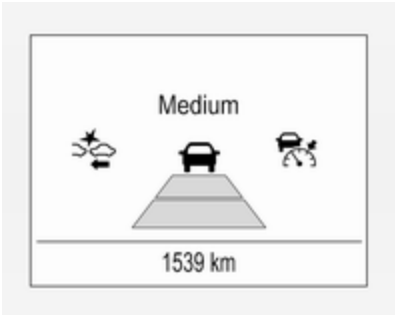

The selected following distance is indicated by filled distance bars on the adaptive cruise control page.

Note that the following distance setting is shared with the sensitivity setting of forward collision alert.

Example: If setting 3 (far) is selected, then the driver is warned sooner before a possible collision, also if adaptive cruise control is inactive or switched off.

⚠Warning

The driver accepts full responsibility for the appropriate following distance based on traffic, weather and visibility conditions. Following distance must be adjusted or the system switched off when required by the prevailing conditions.

Detecting the vehicle ahead

The green illuminated vehicle ahead control indicator is displayed when the system detects a vehicle in the driving path.

Forward collision alert ⇨ 212.

If this symbol does not appear, or appears briefly, adaptive cruise control will not respond to vehicles ahead.

Deactivation of the functionality

Adaptive cruise control is deactivated by the driver when:

- is pressed.
- Brake pedal is applied.
- Clutch pedal is depressed for more than four seconds.
- Selector lever of automatic transmission is moved to **N**.

The system is also automatically deactivated when:

- Vehicle speed accelerates above 190 km/h or slows down below 45 km/h.
- The Traction Control system is operating.
- Electronic Stability Control is operating.
- There is no traffic and nothing detected on the road sides for several minutes. In this case there are no radar echoes and the sensor may report that it is blocked.
- The active emergency braking system is applying the brakes.
- Driving on steep inclines.
- Radar sensor is blocked by an ice or water film.
- A fault is detected in the radar, engine or brake system.

When adaptive cruise control is deactivated, the control indicator changes from green to white and a pop-up message is displayed in the Driver Information Centre.

The stored speed is maintained and indicated in brackets in the Driver Information Centre. The system is deactivated but not switched off.

⚠Warning

When adaptive cruise control is deactivated, the driver must take over full brake and engine control.

Switching off the system

Press to switch off adaptive cruise control. The control indicator and in the Driver Information Centre extinguish. The stored speed is deleted.

Switching off the ignition also switches off adaptive cruise control and deletes the stored speed.

Driver's attention

- Use adaptive cruise control carefully on bends or mountain roads, as it can lose the vehicle ahead and require time to detect it again.
- Do not use the system on slippery roads as it can create rapid changes in tyre traction (wheel spinning), so that you could lose control of the vehicle.
- Do not use adaptive cruise control during rain, snow or heavy dirt, as the radar sensor can be covered by a water film, dust, ice or snow. This reduces or completely suppresses the visibility. In case of sensor blockage, clean the sensor cover.

System limits

- The system's automatic brake force does not permit hard braking and the braking level may not be sufficient to avoid a collision.
- After a sudden lane change, the system needs a certain time to detect the next preceding vehicle. So if a new vehicle is detected, the system may accelerate instead of braking.
- Adaptive cruise control does ignore the oncoming traffic.
- Adaptive cruise control does not brake for pedestrians, animals, very slow speed driving or stopped vehicles.
- Don't use adaptive cruise control when towing a trailer.

Bends

The adaptive cruise control calculates a predicted path based on the centrifugal force. This predicted path considers the current bend characteristic, but cannot consider a future bend change. The system may lose the current vehicle ahead or consider a vehicle which is not in the actual lane. This can happen when entering or exiting a bend or if the bend gets stronger or weaker. If it no longer detects any vehicle ahead, then control indicator will extinguish.

If the centrifugal force is too high in a bend, the system slows down the vehicle slightly. This braking level is not designed to avoid spinning off the bend. The driver is responsible for reducing the selected speed before

entering a bend and in general to adapt the speed to the road type and to existing speed limits.

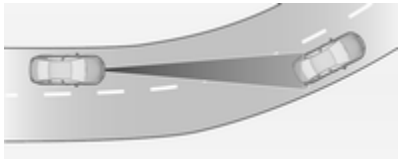

Motorways

On motorways, adapt the set speed to the situation and the weather. Always consider that adaptive cruise control has a limited visibility range, a limited braking level and a certain reaction time to verify if a vehicle is in the driving path or not. Adaptive cruise control may not be able to brake the vehicle in time to avoid a collision with a much slower vehicle or after a lane change. This is particularly true if driving fast or if the visibility is reduced due to weather conditions.

While entering or exiting a motorway, adaptive cruise control may lose the vehicle ahead and accelerate up to the set speed. For this reason, decrease the set speed before the exit or before the entry.

Vehicle path changes

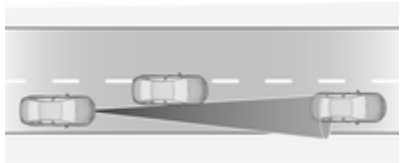

If another vehicle enters your driving path, adaptive cruise control will first consider the vehicle when it is completely in your path. Be ready to take action and depress the brake pedal, if you need to brake more quickly.

Hill and trailer considerations

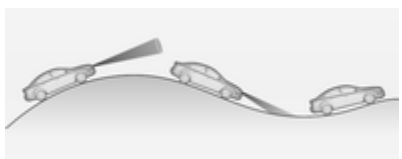

System performance on hills and when towing a trailer depends on vehicle speed, vehicle load, traffic conditions and the road gradient. It may not detect a vehicle in your path while driving on hills. On steep hills, you may have to use the accelerator pedal to maintain your vehicle speed. When going downhill, especially when towing a trailer, you may have to brake to maintain or reduce your speed.

Note that applying the brake deactivates the system. It is not recommended to use adaptive cruise control on steep hills especially when towing a trailer.

Radar unit

The radar unit is mounted behind the radiator grille below the brand emblem.

⚠ Warning

The radar unit was aligned carefully during manufacture. Therefore, after a frontal accident, do not use the system. The front bumper may appear to be intact, however the sensor behind can be out of position and react incorrectly. After an accident, consult a workshop to verify and correct the adaptive cruise control sensor position.

Settings

Settings can be changed in the vehicle personalisation menu in the Info-Display.

Select the relevant setting in **Settings** in the Info-Display.

Info-Display ⇨ 105.

Vehicle personalisation ⇨ 108.

Fault

If the adaptive cruise control does not work due to temporary conditions (e.g. blockage by ice) or if there is a permanent system error, then a message is displayed in the Driver Information Centre.

Vehicle messages ⇨ 106.

Forward collision alert

The forward collision alert can help to avoid or reduce the damage caused by front-end crashes.

A vehicle ahead is indicated by a control indicator 🚗.

If a vehicle directly ahead is approached too quickly, a warning chime and alert in the Driver Information Centre is provided.

A precondition is that forward collision alert is activated in the vehicle personalisation menu ⇨ 108 or that it is not deactivated by pressing (depending on the system, see following).

Depending on the vehicle's equipment, there are two variants of the forward collision alert available:

- **Forward collision alert based on radar system**

  on vehicles equipped with adaptive cruise control ⇨ 206.
- **Forward collision alert based on front camera system**

  on vehicles with traditional cruise control ⇨ 203.

Forward collision alert based on radar system

The system uses the radar sensor behind the radiator grille to detect a vehicle directly ahead, in your path, within a distance of max. 150 metres.

Activation

Forward collision alert operates automatically above walking speed, provided that **Auto collision preparation** setting is not deactivated in the vehicle personalisation menu ⇨ 108.

Selecting the alert sensitivity

The alert sensitivity can be set to near, medium or far.

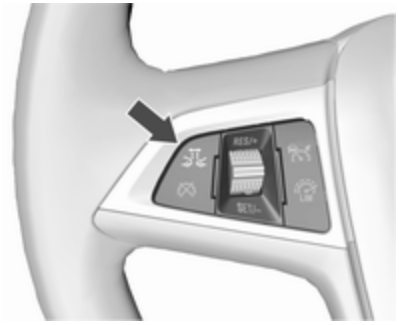

Press ⚠; the current setting is shown in the Driver Information Centre. Press ⚠ again to change the alert sensitivity. The setting is also displayed in the top line of the Driver Information Centre.

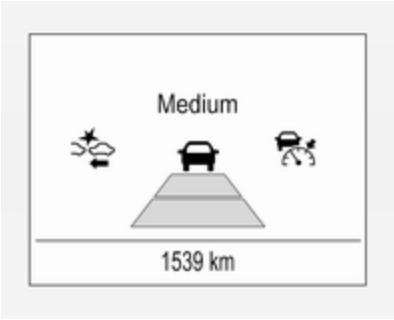

Note that the alert timing sensitivity setting is shared with the following distance setting of the adaptive cruise control. So changing the alert timing sensitivity changes the adaptive cruise control following distance setting.

Alerting the driver

The vehicle ahead control indicator 🚗 illuminates green in the instrument cluster when the system has detected a vehicle in the driving path.

Caution

The colour lighting of this control indicator does not correspond to local traffic laws on following distance. The driver bears full responsibility for maintaining safe following distance according to applicable traffic rules, weather and road conditions etc. at all times.

When the distance to a preceding moving vehicle gets too small or when approaching another vehicle too rapidly and a collision is imminent the collision alert symbol pops-up in the Driver Information Centre and a warning chime sounds. Depress the brake pedal, if it is required by the situation.

Settings

Settings can be changed in the vehicle personalisation menu in the Info-Display.

Select the relevant setting in **Settings** in the Info-Display.

Vehicle personalisation ⇨ 108.

Forward collision alert based on front camera system

Forward collision alert uses the front camera system in the windscreen to detect a vehicle directly ahead, in your path, within a distance of approx. 60 metres.

Activation

Forward collision alert operates automatically above 40 km/h, if it is not deactivated by pressing ⚠, see below.

Selecting the alert sensitivity

The alert sensitivity can be set to near, medium or far.

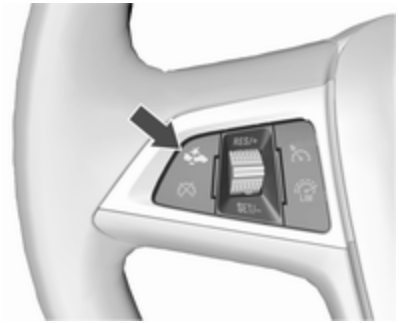

Press ⚠; the current setting is shown in the Driver Information Centre. Press ⚠ again to change the alert sensitivity.

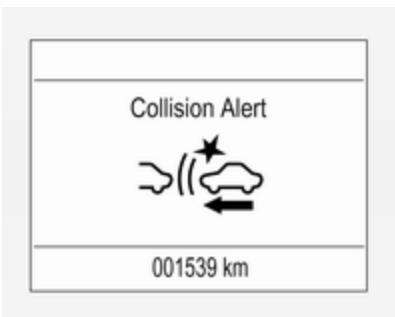

Alerting the driver

The vehicle ahead control indicator 🚗 illuminates green in the instrument cluster when the system has detected a vehicle in the driving path.

Caution

The colour lighting of this control indicator does not correspond to local traffic laws on following distance. The driver bears full responsibility for maintaining safe following distance according to applicable traffic rules, weather and road conditions etc. at all times.

When the distance to a preceding moving vehicle gets too small or when approaching another vehicle too rapidly and a collision is imminent the collision alert symbol pops-up in the Driver Information Centre and a warning chime sounds. Depress the brake pedal, if it is required by the situation.

Deactivation

The system can be deactivated. Press repeatedly until **Forward Collision Alert Off** appears in the Driver Information Centre.

General information for both variants of forward collision alert

⚠Warning

Forward collision alert is just a warning system and does not apply the brakes. When approaching a vehicle ahead too rapidly, it may not provide you enough time to avoid a collision.

The driver accepts full responsibility for the appropriate following distance based on traffic, weather and visibility conditions.

The complete attention of the driver is always required while driving. The driver must always be ready to take action and apply the brakes.

System limitations

The system is designed to warn only for vehicles, but may react also on other metallic objects.

In the following cases, forward collision alert may not detect a vehicle ahead or sensor performance is limited:

- on winding roads
- when weather limits visibility, such as fog, rain, or snow
- when the sensor is blocked by snow, ice, slush, mud, dirt, windscreen damage or affected by foreign items, e.g. stickers

Following distance indication

The following distance indication displays the distance to a preceding moving vehicle. The system uses,

depending on the vehicle equipment, either the radar behind the radiator grille or the front camera in the windscreen to detect the distance of a vehicle directly ahead in your path. It is active at speeds above 40 km/h.

When a preceding vehicle is detected ahead, the distance is indicated in seconds, displayed on a page in the Driver Information Centre ⇨ 101. Press **MENU** on the turn signal lever to select **Vehicle Information Menu** and turn the adjuster wheel to choose following distance indication page.

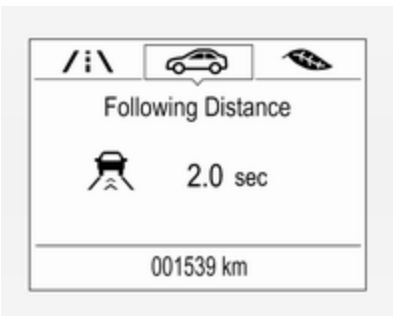

The minimum indicated distance is 0.5 s.

If there is no vehicle ahead or the vehicle ahead is out of range, two dashes will be displayed: -.- s.

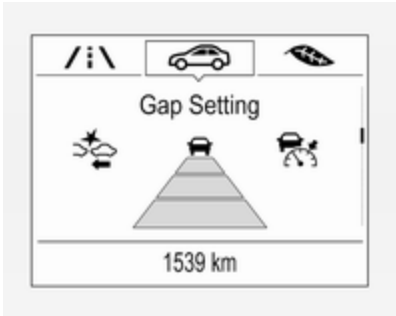

If Adaptive cruise control is active, this page shows the alert sensitivity setting instead of following distance setting. ⇨ 206.

Active Emergency Braking

Active emergency braking can help to reduce the damage and injury from crashes with vehicles and obstacles directly ahead, when a collision can no longer be avoided either by manual braking or by steering. Before the active emergency braking applies, the driver is warned by the forward collision alert ⇨ 212.

The feature uses various inputs (e.g. radar sensor, brake pressure, vehicle speed) to calculate the probability of a frontal collision.

Active emergency braking operates automatically above walking speed, provided that **Auto collision preparation** setting is not deactivated in the vehicle personalisation menu ⇨ 108.

The system includes:

- **brake preparation system**
- **emergency automatic braking**
- **forward looking brake assist**

⚠Warning

This system is not intended to replace the driver responsibility of driving the vehicle and looking ahead. Its function is limited to supplemental use only. The driver shall continue to apply the brake pedal as the driving situation dictates.

Brake preparation system

When approaching a vehicle ahead so quickly that a collision is likely, the brake preparation system slightly pressurises the brakes. This reduces the response time, when a manual or automatic braking is requested.

The brake system is prepared so that braking can occur more rapidly.

Emergency automatic braking

After the brake preparation and just before the imminent collision, this function automatically applies limited braking to reduce the impact speed of the collision.

Forward looking brake assist

In addition to brake preparation system and emergency automatic braking, the forward looking brake assist function makes the brake assist more sensitive. In this way, depressing the brake pedal slightly results immediately in a strong braking. This function helps the driver brake quicker and stronger before the imminent collision.

⚠Warning

Active emergency braking is not designed to apply strong autonomous braking or to avoid automatically a collision. It is designed to reduce the vehicle speed before collision. It may not react on stopped vehicles, pedestrians or animals. After a sudden lane change, the system needs a certain time to detect the next preceding vehicle.

The complete attention of the driver is always required while driving. The driver shall always be ready to take action and apply the brakes and steer to avoid collisions. The system is designed to work with all occupants wearing their seat belts.

System limitations

The active emergency braking has limited or no function during rain, snow or heavy dirt, as the radar sensor can be covered by a water film, dust, ice or snow. In case of sensor blockage, clean the sensor cover.

In some seldom cases the active emergency braking system may provide a short automatic braking in situations that seem to be unnecessary, for instance due to traffic signs in a curve or due to vehicles in another lane. This is acceptable operation, the vehicle does not need service. Firmly apply the accelerator pedal to override the automatic braking.

Deactivation and re-activation

Settings can be changed in the vehicle personalisation menu in the Info-Display.

Select the relevant setting in **Settings** in the Info-Display.

Vehicle personalisation ⇨ 108.

We recommend to deactivate the system in the vehicle personalisation in the following cases:

- when the vehicle is being towed
- before using an automatic car wash with ignition switched on

- if the windscreen has been damaged close to the camera
- if the front bumper has been damaged

Fault

In the event of a system service requirement, a message is displayed in the Driver Information Centre.

If the system does not work as it should, vehicle messages are displayed in the Driver Information Centre.

Vehicle messages ⇨ 106.

Parking assist

Front-rear parking assist

⚠ Warning

The driver bears full responsibility for the parking manoeuvre.

Always check the surrounding area when driving backwards or forwards while using parking assist system.

The front-rear parking assist measures the distance between the vehicle and obstacles in front of and behind the vehicle. It informs and warns the driver by giving acoustic signals and display indication.

It uses two different acoustic warning signals for the front and rear monitoring areas, each with a different tone frequency. The signal for front obstacles sounds via the front speakers, for rear obstacles it sounds via the rear speakers.

The system has four ultrasonic parking sensors each in the rear and front bumper.

Activation

When reverse gear is engaged, the front and rear parking assist is ready to operate.

The system is also activated automatically at a speed up to 11 km/h.

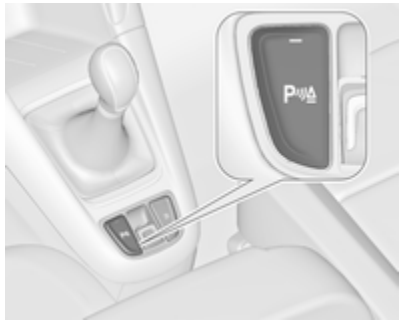

An illuminated LED in the parking assist button P⋙▲ indicates that the system is ready to operate.

If P⋙▲ is switched off within an ignition cycle, the front parking assist is deactivated. If vehicle speed has exceeded 25 km/h beforehand, parking assist will be reactivated when speed drops below 11 km/h.

Indication

The system warns the driver with acoustic signals against potentially hazardous obstacles behind and in front of the vehicle.

Depending on which side of the vehicle is closer to an obstacle, you will hear acoustic warning signals on the respective side of the vehicle. The interval between the sounds becomes shorter as the vehicle gets closer to that obstacle. When the distance is less than approx. 30 cm, the sound is continuous.

Additionally, the distance to rear and front obstacles is displayed by changing distance lines in the Driver Information Centre ⇨ 101 or, depending on the version, on the Info-Display ⇨ 105.

Rear obstacles are indicated acoustically and visually at the same time.

Front obstacles are indicated visually first. At distances less than 80 cm an acoustic signal also sounds.

The distance indication can be inhibited by vehicle messages with a higher priority. After dismissing the message distance indication appears again.

Deactivation

The rear parking assist automatically switches off when reverse gear is disengaged.

The front parking assist is deactivated automatically at a speed above 11 km/h.

Manual deactivation is also possible by pressing the parking assist button **P**.

When the system is deactivated manually, the LED in the button extinguishes and a message pops-up in the Driver Information Centre.

After a manual deactivation, the front-rear parking assist is activated again if **P** is pressed or if reverse gear is engaged.

The complete system can be manually deactivated in the vehicle personalisation menu in the Info-Display. It remains deactivated during the ignition cycle or until activation in personalisation menu again. Vehicle personalisation ⇨ 108.

When using the trailer hitch change the configuration settings in the vehicle personalisation menu in the Info-Display. Vehicle personalisation ⇨ 108.

Fault

In the event of a fault or if the system does not work temporarily, e.g. because of high external noise level or other interference factors, a message pops-up in the Driver Information Centre.

Vehicle messages ⇨ 106.

Basic notes on parking assist systems

⚠ Warning

Under certain circumstances, various reflective surfaces on objects or clothing as well as external noise sources may cause the system to fail to detect obstacles.

Special attention must be paid to low obstacles which can damage the lower part of the bumper.

Caution

Performance of the system can be reduced when sensors are covered, e.g. by ice or snow.

Performance of the parking assist system can be reduced due to heavy loading.

Special conditions apply if there are taller vehicles in the vicinity (e.g. off-road vehicles, mini vans, vans). Object identification and correct distance indication in the upper part of these vehicles cannot be guaranteed.

Objects with a very small reflection cross-section, e.g. objects of narrow size or soft materials, may not be detected by the system.

Parking assist systems do not detect objects outside the detection range.

Note

The parking assist system automatically detects factory-fitted towing equipment. It is deactivated when the connector is plugged in.

It is possible that the sensor detects a non-existing object (echo disturbance) caused by external acoustical or mechanic disturbances.

Note
If engaging a forward gear and exceeding a certain speed, the rear parking assist will be deactivated when the rear carrier system is extended.

If engaging reverse gear first, the parking assist will detect the rear carrier system and provide a buzzing sound. Press P briefly to deactivate the parking assist.

Side blind spot alert

The side blind spot alert system detects and reports objects on either side of the vehicle, within a specified "blind spot" zone. The system displays a visual alert in each exterior mirror, when detecting objects that may not be visible in the interior and exterior mirrors.

The system's sensors are located in the bumper on the left and right side of the vehicle.

⚠Warning

Side blind spot alert does not replace driver vision.

The system does not detect:

- vehicles outside the side blind zones which may be rapidly approaching
- pedestrians, cyclists or animals

Before changing a lane, always check all mirrors, look over the shoulder and use the turn signal.

When the system detects a vehicle in the side blind zone while driving forward, either while passing a vehicle or being passed, a yellow warning symbol will illuminate in the relevant exterior mirror. If the driver then activates the turn signal, the warning symbol starts flashing yellow as a warning not to change lanes.

Note
If the passing vehicle is at least 10 km/h faster than the passed vehicle, the warning symbol in the relevant exterior mirror may not illuminate.

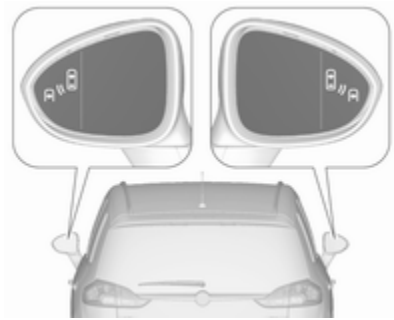

Side blind spot alert is active from speeds of 10 km/h up to 140 km/h. Driving faster than 140 km/h deactivates the system, indicated by low lighting warning symbols in both exterior mirrors. Reducing the speed again will extinguish the warning symbols. If a vehicle is then detected in the blind zone, the warning symbols will illuminate as normal on the relevant side.

When the vehicle is started, both exterior mirror displays will briefly illuminate to indicate that the system is operating.

The system can be activated or deactivated in the Info-Display, vehicle personalisation ⇨ 108.

The system is deactivated if the vehicle is towing a trailer.

Deactivation is indicated by a message in the Driver Information Centre.

Detection zones

The detection zones start at the rear bumper and extend approx. three metres rearwards and to the sides. The height of the zone is approx. between half a metre and two metres off the ground.

Side blind spot alert is designed to ignore stationary objects, e.g. guardrails, posts, curbs, walls and beams. Parked vehicles or oncoming vehicles are not detected.

Fault

Occasional missed alerts can occur under normal circumstances and will increase in wet conditions.

Side blind spot alert does not operate when the left or right corners of the rear bumper are covered with mud, dirt, snow, ice, slush, or in heavy rainstorms. Cleaning instructions ⇨ 280.

In the event of a fault in the system or if the system does not work due to temporary conditions, a message is displayed in the Driver Information Centre. Seek the assistance of a workshop in case of a permanent fault.

Rear view camera

The rear view camera assists the driver when reversing by displaying a view of the area behind the vehicle.

The view of the camera is displayed in the Info-Display.

⚠ Warning

The rear view camera does not replace driver vision. Note that objects that are outside the camera's field of view and the parking assist sensors, e.g. below the bumper or underneath the vehicle, are not displayed.

Do not reverse the vehicle by only looking at the Info-Display and check the surrounding area behind and around the vehicle before reversing.

Activation

Rear view camera is automatically activated when reverse gear is engaged.

Functionality

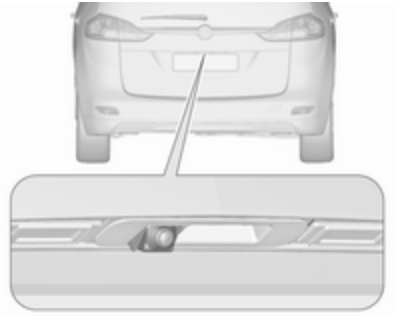

The camera is mounted in the tailgate handle.

Due to the high position of the camera, the rear bumper can be seen on the display as a guide to position.

The area displayed by the camera is limited. The distance of the image that appears on the display differs from the actual distance.

Guiding lines

Dynamic guiding lines are horizontal lines at one metre intervals projected on the picture to define the distance to displayed objects.

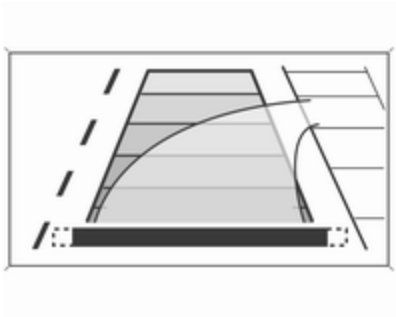

Trajectory lane of the vehicle is shown in accordance with the steering angle.

Warning symbols

Warning symbols are indicated as triangles ⚠on the picture which shows obstacles detected by the rear sensors of the parking assist.

Additionally ⚠appears on the top line of the Info-Display with the warning to check the vehicle surrounding.

Deactivation

The camera is switched off when a certain forward speed is exceeded or if reverse gear is not engaged for approx. 15 seconds. Rear view camera can be manually deactivated in the vehicle personalisation menu in the Info-Display. Select the relevant setting in **Settings** .

Vehicle personalisation ⇨ 108.

Deactivation of guiding lines and warning symbols

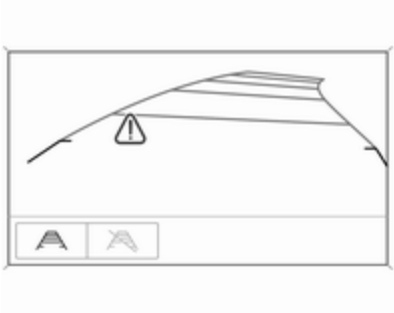

7" R 4.0 IntelliLink Activation or deactivation of the visual guiding lines and the warning symbols can be changed via touch buttons in the lower zone of the display.

Info-Display ⇨ 105.

Vehicle personalisation ⇨ 108.

Fault

Fault messages are displayed with a ⚠ on the top line of the Info-Display.

The rear view camera may not operate properly when:

- The surrounding area is dark.
- The sun or the beam of headlights is shining directly into the camera lens.
- Ice, snow, mud, or anything else covers the camera lens. Clean the lens, rinse it with water, and wipe it with a soft cloth.
- The tailgate is not closed correctly.
- The vehicle had a rear-end accident.
- There are extreme temperature changes.

Traffic sign assistant

Functionality

The traffic sign assistant system detects designated traffic signs via a front camera and displays them in the Driver Information Centre.

Traffic signs which will be detected are:

Limit and no passing signs

- speed limit
- no passing
- end of speed limit
- end of no passing

Road signs
beginning and end of:

- city regions (country specific)
- motorways
- A-roads
- play streets

Add-on signs

- additional hints to traffic signs
- restriction of trailer towing
- tractor constraints
- wet warning
- ice warning
- direction arrows

Speed limit signs are displayed in the Driver Information Centre until the next speed limit sign or end of speed limit is detected or up to a defined sign timeout.

Combinations of multiple signs in the display are possible.

An exclamation mark in a frame indicates that there is an additional sign detected which is not recognised by the system.

The system operates without loss of performance up to a speed of 200 km/h depending on the lighting conditions. At night the system is active up to a speed of 160 km/h.

Display indication

Information about the currently valid traffic signs is available on the designated traffic sign assistant page in the Driver Information Centre.

Additionally, the currently valid speed limit is displayed permanently in the lower line of the Driver Information Centre. In case a speed limit with addon is available, a **+** symbol is displayed in this area.

Choose 🚗 via **MENU** and select traffic sign assistant page with the adjuster wheel on the turn signal lever ⇨ 101.

When another page on the Driver Information Centre menu was selected and then traffic sign assistant page is chosen again, the last recognised traffic sign will be displayed.

Alert function

The alert function can be activated or deactivated in the setting menu of the traffic sign assistant page.

Once activated and when the traffic sign detection page is currently not displayed, newly detected speed limit and no passing signs are displayed as popup alerts in the Driver Information Centre.

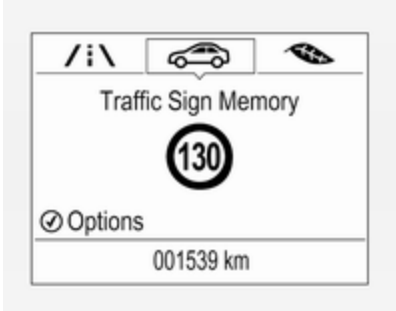

When traffic sign assistant page is displayed, press **SET/CLR** on the turn signal lever.

Select **Alerts ON** or **Alerts OFF** by turning the adjuster wheel and press **SET/CLR**.

Pop-up alert is displayed for approx. eight seconds in the Driver Information Centre.

System reset

The content of the traffic sign memory can be cleared in the setting menu of the traffic sign assistant page by selecting **Reset** and confirm by pressing **SET/CLR** on the turn signal lever.

Alternatively, SET/CLR can be pressed for three seconds to clear the content of the page.

Upon successful reset, a chime will sound and the following “Default Sign” is indicated until the next traffic sign is detected.

In some cases, traffic sign assistant is cleared up automatically by the system.

Clearing of traffic signs

There are different scenarios that lead to clearing the currently displayed traffic signs. After clearing, the “Default Sign” is displayed in the Driver Information Centre.

Reasons for signs being cleared:

- A predefined distance was driven or time has elapsed (differs for each sign type)
- Vehicle drives through a turn
- The speed becomes slower than 52 km/h (city entry detection)

Fault

The traffic sign assistant system may not operate correctly if:

- The area of the windscreen, where the front camera is located, is not clean or affected by foreign items, e.g. stickers.
- Traffic signs are completely or partially covered or difficult to discern.
- There are adverse environmental conditions, e.g. heavy rain, snow, direct sunlight or shadows.
- Traffic signs are incorrectly mounted or damaged.
- Traffic signs do not comply with the Vienna Convention on traffic signs.

Caution

The system is intended to help the driver within a defined speed range to discern certain traffic signs. Do not ignore traffic signs which are not displayed by the system.

The system does not discern any other than the conventional traffic signs that might give or end a speed limit.

Do not let this special feature tempt you into taking risks when driving.

Always adapt speed to the road conditions.

The driver assistance systems do not relieve the driver from full responsibility for vehicle operation.

Lane departure warning

The lane departure warning system observes the lane markings between which the vehicle is driving via a front camera. The system detects lane

changes and warns the driver in the event of an unintended lane change via visual and acoustic signals.

Criteria for the detection of an unintended lane change are:

- No operation of turn signals.
- No brake pedal operation.
- No active accelerator operation or speeding-up.
- No active steering.

If the driver is active, no warning will be issued.

Activation

The lane departure warning system is activated by pressing . The illuminated LED in the button indicates that the system is switched on. When the control indicator in the instrument cluster illuminates green, the system is ready to operate.

The system is only operable at vehicle speeds above 56 km/h and if lane markings are available.

When the system recognises an unintended lane change, the control indicator changes to yellow and flashes. Simultaneously a chime sound is activated.

Deactivation

The system is deactivated by pressing , the LED in the button extinguishes.

At speeds below 56 km/h the system is inoperable.

Fault

The lane departure warning system may not operate properly when:

- The windscreen is not clean.
- There are adverse environmental conditions like heavy rain, snow, direct sunlight or shadows.

The system can not operate when no lane marking is detected.

Fuel

Fuel for petrol engines

Only use unleaded fuel that complies with European standard EN 228 or equivalent.

The engine is capable of running with fuel that contains up to 10% ethanol (e.g. named E10).

Use fuel with the recommended octane rating. A lower octane rating can reduce engine power and torque and slightly increases fuel consumption.

Caution

Do not use fuel or fuel additives that contain metallic compounds such as manganese-based additives. This may cause engine damage.

Caution

Use of fuel that does not comply to EN 228 or equivalent can lead to deposits or engine damage.

Caution

Use of fuel with a lower octane rating than the lowest possible rating could lead to uncontrolled combustion and engine damage.

The engine specific requirements regarding octane rating are given in the engine data overview ⇨ 292. A country specific label at the fuel filler flap can supersede the requirement.

Fuel additive

Fuel should contain detergent additives that help prevent engine and fuel system deposits from forming. Clean fuel injectors and intake valves will allow the emission control system to work properly. In certain countries fuel does not contain sufficient quantities of additive to keep fuel injectors and intake valves clean. In these countries a fuel additive is required for some engines to make up for this lack of detergency. Only use fuel additive approved for the vehicle.

Adding fuel additive to the filled fuel tank is required at least every 15,000 km or after one year, whichever occurs first. For further information, contact your workshop.

Prohibited fuels

Fuels containing oxygenates such as ethers and ethanol, as well as reformulated fuel, are available in some cities. If these fuels comply with the previously described specification, then they are acceptable to use. However, E85

(85% ethanol) and other fuels containing more than 15% ethanol must be used only in FlexFuel vehicles.

Caution

Do not use fuel containing methanol. It can corrode metal parts in the fuel system and also damage plastic and rubber parts. This damage would not be covered by the vehicle warranty.

Some fuels, mainly high octane racing fuels, can contain an octane enhancing additive called methylcyclopentadienyl manganese tricarbonyl (MMT). Do not use fuels or fuel additives with MMT as they can reduce spark plug life and affect emission control system performance. The malfunction indicator light may illuminate ⇨ 96. If this occurs, seek the assistance of a workshop.

Fuel for diesel engines

Only use diesel fuel that complies with EN 590 and which has a sulphur concentration of max. 10 ppm.

Fuels with a biodiesel (compliant with EN 14214) content of max. 7% by volume may be used (e.g. named B7).

If travelling in countries outside the European Union, occasional use of Euro-Diesel fuel with a sulphur concentration below 50 ppm is possible.

Caution

Frequent usage of diesel fuel containing more than 15 ppm sulphur will cause severe engine damage.

Caution

Use of fuel that does not comply to EN 590 or similar can lead to engine powerloss, increased wear or engine damage and may affect your warranty.

Do not use marine diesel oils, heating oils, Aquazole and similar diesel-water emulsions. Diesel fuels must not be diluted with fuels for petrol engines.

Low temperature operation

At temperatures below 0 °C, some diesel products with biodiesel blends may clog, freeze or gel, which may affect the fuel supply system. Starting and engine operation may not work properly. Make sure to fill winter grade diesel fuel at ambient temperatures below 0 °C.

Arctic grade diesel fuel can be used in extreme cold temperatures below -20 °C. Using this fuel grade in warm or hot climates is not recommended

and may cause engine stalling, poor starting or damage on the fuel injection system.

Refuelling

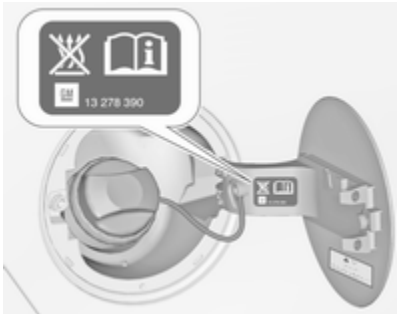

⚠ Danger

Before refuelling, switch off ignition and any external heaters with combustion chambers. Switch off any mobile phones.

Follow the operating and safety instructions of the filling station when refuelling.

⚠ Danger

Fuel is flammable and explosive. No smoking. No naked flames or sparks.

If you can smell fuel in your vehicle, have the cause of this remedied immediately by a workshop.

A label with symbols at the fuel filler flap is indicating the allowed fuel types. In Europe the pump nozzles of the filling stations are marked with these symbols. Refuel only the allowed fuel type.

Caution

In case of misfuelling, do not switch on ignition.

Fuel filler flap is located at right rear side of the vehicle.

The fuel filler flap can only be opened if the vehicle is unlocked. Release the fuel filler flap by pushing the flap.

Petrol and Diesel refuelling

To open, turn the cap slowly anticlockwise.

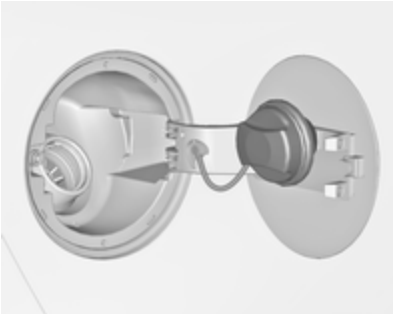

The fuel filler cap can be retained in the bracket on the fuel filler flap.

To refuel, fully insert the pump nozzle and switch it on.

After the automatic cut-off, the tank can be topped up by operating the pump nozzle a maximum of two more times.

Caution

Wipe off any overflowing fuel immediately.

To close, turn the fuel filler cap clockwise until it clicks.

Close the flap and engage.

Vehicles with misfuel inhibitor

⚠ Warning

Do not try to open the flap of the fuel filler neck manually on vehicles with misfuel inhibitor.

Disregarding this could lead to trapping of the fingers.

Vehicles with a selective catalytic reduction system are equipped with a misfuel inhibitor.

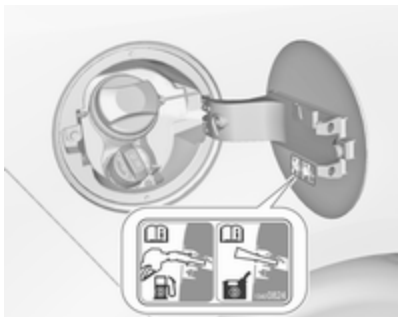

The misfuel inhibitor ensures that the flap of the fuel filler neck can only be opened by using a nozzle for diesel fuel or a funnel for emergency refilling.

Turn the fuel filler cap slowly anticlockwise.

The cap can be retained in the bracket on the fuel filler flap.

Place the nozzle in a straight line to the filler neck and press with slight force to insert.

In case of an emergency, refill with a canister. A funnel must be used to open the cap of the filler neck.

The funnel is located on the right-hand side storage compartment in the load compartment.

Place the funnel in a straight line to the filler neck and press with slight force to insert.

Use the funnel to fill the diesel fuel into the filler neck.

After topping-up, put the funnel into the plastic bag and stow it in the storage compartment.

Selective catalytic reduction system ⇨ 190.

Fuel filler cap

Only use genuine fuel filler caps. Diesel-engined vehicles have special fuel filler caps.

Trailer hitch

General information

Only use towing equipment that has been approved for your vehicle. Vehicles with natural gas engines require special towing equipment.

Entrust retrofitting of towing equipment to a workshop. It may be necessary to make changes that affect the cooling system, heat shields or other equipment.

The bulb outage detection function for trailer brake light cannot detect a partial bulb outage. E.g. in case of 4x 5 Watt bulbs, the function only detects lamp outage when only a single 5 Watt lamp remains or none remain.

Fitting of towing equipment could cover the opening of the towing eye. If this is the case use the coupling ball bar for towing. Always keep the coupling ball bar in the vehicle.

Driving characteristics and towing tips

Before attaching a trailer, lubricate the coupling ball. However, do not do so if a stabiliser, which acts on the coupling ball, is being used to reduce snaking movements.

For trailers with low driving stability and caravan trailers with a permitted gross vehicle weight of more than 1300 kg the use of a stabiliser is strongly recommended when driving above 80 km/h.

If the trailer starts snaking, drive more slowly, do not attempt to correct the steering and brake sharply if necessary.

When driving downhill, drive in the same gear as if driving uphill and drive at a similar speed.

Adjust tyre pressure to the value specified for full load ⇨ 297.

Trailer towing

Trailer loads

The permissible trailer loads are vehicle and engine-dependent maximum values which must not be exceeded. The actual trailer load is the difference between the actual gross weight of the trailer and the actual coupling socket load with the trailer coupled.

The permissible trailer loads are specified in the vehicle documents. In general, they are valid for gradients up to 12%.

The permissible trailer load applies up to the specified incline and at sea level. Since engine power decreases as altitude increases due to the air becoming thinner, therefore reducing climbing ability, the permissible gross train weight also decreases by 10% for every 1000 metres of altitude. The gross train weight does not have to be reduced when driving on roads with slight inclines (less than 8%, e.g. motorways).

The permissible gross train weight must not be exceeded. This weight is specified on the identification plate ⇨ 287.

Vertical coupling load

The vertical coupling load is the load exerted by the trailer on the coupling ball. It can be varied by changing the weight distribution when loading the trailer.

The maximum permissible vertical coupling load (75 kg) is specified on the towing equipment identification plate and in the vehicle documents.

Note
Engines D16DTH, D16DTJ, D20DTH and D20DTJ: Depending on the equipment the maximum permissible vertical coupling load can be 75 kg or 60 kg.

Always aim for the maximum load, especially in the case of heavy trailers. The vertical coupling load should never fall below 25 kg.

Rear axle load

When the trailer is coupled and the towing vehicle fully loaded, the permissible rear axle load (see identification plate or vehicle documents) may be exceeded by 60 kg, the gross vehicle weight rating may be exceeded by 60 kg. If the permissible rear axle load is exceeded, a maximum speed of 100 km/h applies.

Towing equipment

Caution
When operating without a trailer, remove the coupling ball bar.

Stowage of coupling ball bar

The coupling ball bar is stowed in the stowage compartment in the right sidewall.

Fitting the coupling ball bar

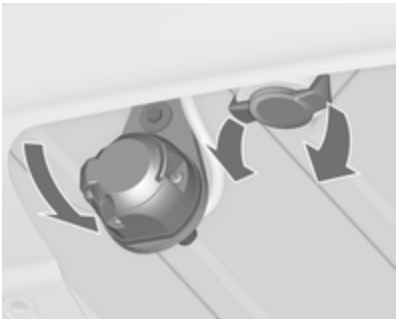

Disengage and fold down the socket. Remove the sealing plug from the opening for the coupling ball bar and stow it.

Checking the tensioning of the coupling ball bar

- Red marking on rotary knob must point towards green marking on coupling ball bar.
- The gap between the rotary knob and the coupling ball bar must be approx. 6 mm.
- The key must be in position 🔒.

Otherwise, the coupling ball bar must be tensioned before being inserted:

- Unlock coupling ball bar by turning key to position 🔓.

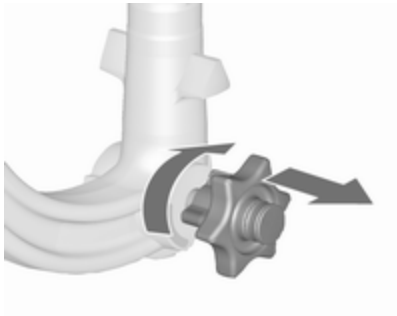

- Pull out rotary knob and turn clockwise as far as it will go.

Inserting the coupling ball bar

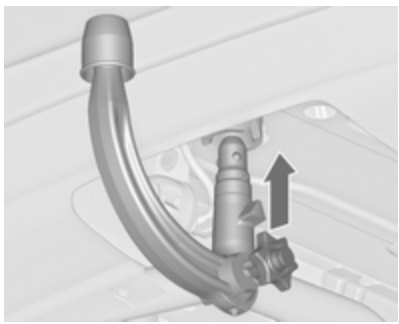

Insert the tensioned coupling ball bar in the opening and push firmly upwards until it audibly engages.

The rotary handle snaps back into its original position, resting against the coupling ball bar without a gap.

⚠Warning

Do not touch rotary handle during insertion.

Lock the coupling ball bar by turning the key to position 🔒. Remove the key and close the protective flap.

Eye for break-away stopping cable

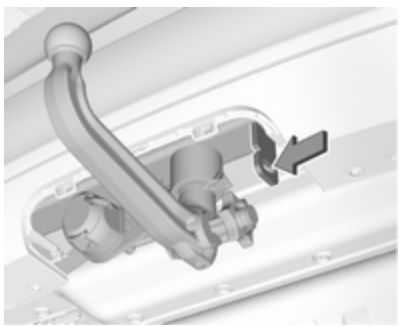

Attach breakaway stopping cable to eye.

Check that the coupling ball bar is correctly installed

- Green marking on rotary knob must point towards green marking on coupling ball bar.
- There must be no gap between the rotary handle and the coupling ball bar.
- The coupling ball bar must be firmly engaged in the opening.
- The coupling ball bar must be locked and the key removed.

⚠Warning

Towing a trailer is permitted only when a coupling ball bar is fitted correctly. If the coupling ball bar does not engage correctly, seek the assistance of a workshop.

Dismounting the coupling ball bar

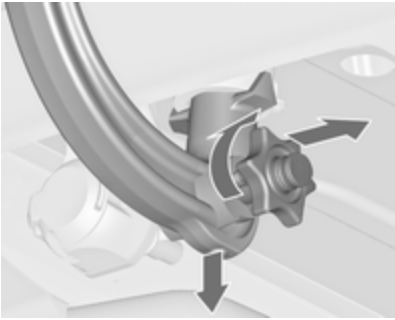

Open the protective flap and turn the key to position 🔓 to unlock the coupling ball bar.

Pull out rotary handle and turn clockwise as far as it will go. Pull out coupling ball bar downwards.

Insert sealing plug in opening. Fold away socket.

Trailer stability assist

If the system detects snaking movements, engine power is reduced and the vehicle/trailer combination is selectively braked until the snaking ceases. While system is working keep steering wheel as still as possible.

Trailer stability assist (TSA) is a function of the Electronic Stability Control ⇨ 200.

Vehicle care

General Information **239**
Accessories and vehicle modifications 239
Vehicle storage 239
End-of-life vehicle recovery 240
Vehicle checks **240**
Performing work 240
Bonnet 240
Engine oil 241
Engine coolant 242
Power steering fluid 243
Washer fluid 244
Brakes 244
Brake fluid 244
Vehicle battery 244
Diesel fuel system bleeding 246
Wiper blade replacement 246
Bulb replacement **247**
Halogen headlights 247
LED headlights 249
Front fog lights 249
Tail lights 250
Side turn lights 253
Number plate light 253
Interior lights 254
Instrument panel illumination ... 254
Electrical system **254**
Fuses 254
Engine compartment fuse box . 256
Instrument panel fuse box 258
Load compartment fuse box 259
Vehicle tools **261**
Tools 261
Wheels and tyres **261**
Winter tyres 261
Tyre designations 261
Tyre pressure 262
Tyre pressure monitoring system 263
Tread depth 266
Changing tyre and wheel size . 267
Wheel covers 267
Tyre chains 267
Tyre repair kit 267
Wheel changing 270
Spare wheel 271
Jump starting **276**
Towing **278**
Towing the vehicle 278
Towing another vehicle 279
Appearance care **280**
Exterior care 280
Interior care 282

General Information

Accessories and vehicle modifications

We recommend the use of genuine parts and accessories and factory approved parts specific for your vehicle type. We cannot assess or guarantee reliability of other products - even if they have a regulatory or otherwise granted approval.

Any modification, conversion or other changes made to standard vehicle specifications (including, without limitation, software modifications, modifications of the electronic control units) may invalidate the warranty offered by Opel. Furthermore, such changes may affect driver assistance systems, may impact fuel consumption, CO_2 emissions and other emissions of the vehicle and cause the vehicle to no longer conform to the operating permit, impacting the validity of your vehicle registration.

Caution

When transporting the vehicle on a train or on a recovery vehicle, the mud flaps might be damaged.

Vehicle storage

Storage for a long period of time

If the vehicle is to be stored for several months:

- Wash and wax the vehicle.
- Have the wax in the engine compartment and underbody checked.
- Clean and preserve the rubber seals.
- Fill up fuel tank completely.
- Change the engine oil.
- Drain the washer fluid reservoir.
- Check the coolant antifreeze and corrosion protection.
- Adjust tyre pressure to the value specified for full load.
- Park the vehicle in a dry, well ventilated place. Engage first or reverse gear or set selector lever to **P**. Prevent the vehicle from rolling.
- Do not apply the parking brake.
- Open the bonnet, close all doors and lock the vehicle.
- Disconnect the clamp from the negative terminal of the vehicle battery. Beware that all systems are not functional, e.g. anti-theft alarm system.

Putting back into operation

When the vehicle is to be put back into operation:

- Connect the clamp to the negative terminal of the vehicle battery. Activate the electronics of the power windows.
- Check tyre pressure.
- Fill up the washer fluid reservoir.
- Check the engine oil level.
- Check the coolant level.

- Since the durability of AdBlue is limited to two years, fluid should be exchanged if it is too old. Seek the assistance of a workshop.
- Fit the number plate if necessary.

End-of-life vehicle recovery

Information on end-of-life vehicle recovery centres and the recycling of end-of-life vehicles is available on our website, where legally required. Only entrust this work to an authorised recycling centre.

Gas vehicles must be recycled by a service centre authorised for gas vehicles.

Vehicle checks

Performing work

⚠ Warning

Only perform engine compartment checks when the ignition is off.

The cooling fan may start operating even if the ignition is off.

⚠ Danger

The ignition system uses extremely high voltage. Do not touch.

Bonnet

Opening

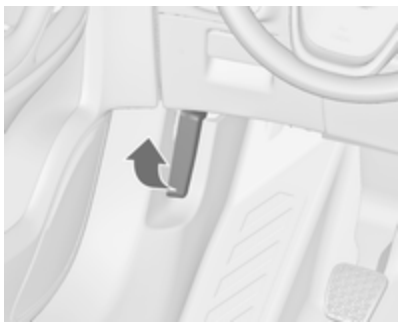

Pull the release lever and return it to its original position.

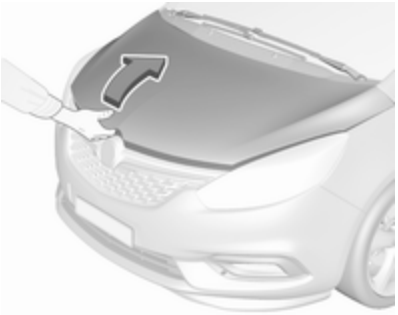

Move the safety catch sideways to the left vehicle side and open the bonnet.

The bonnet is held open automatically by a lifter.

If the bonnet is opened during an Autostop, the engine will be restarted automatically for safety reasons.

Closing

Before closing the bonnet, press the support into the holder.

Lower the bonnet and allow it to fall into the latch from a low height (20-25 cm). Check that the bonnet is engaged.

Caution
Do not press the bonnet into the latch, to avoid dents.

Engine oil

Check the engine oil level manually on a regular basis to prevent damage to the engine. Ensure that the correct specification of oil is used.

Recommended fluids and lubricants ⇨ 285.

The maximum engine oil consumption is 0.6 l per 1000 km.

Check with the vehicle on a level surface. The engine must be at operating temperature and switched off for at least five minutes.

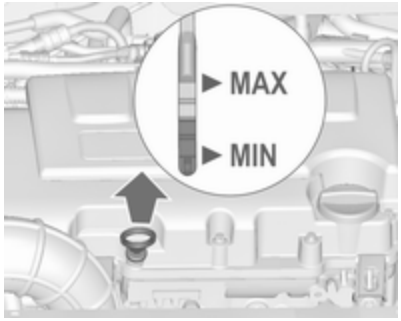

Pull out the dipstick, wipe it clean, reinsert it fully, pull out and read the engine oil level.

Different dipsticks are used depending on engine variant.

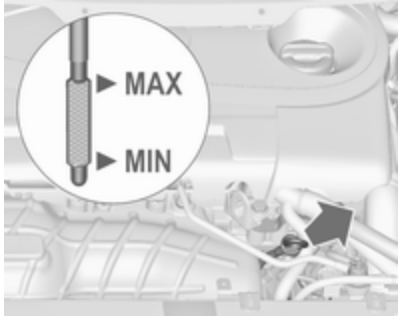

When the engine oil level has dropped to the **MIN** mark, top-up engine oil.

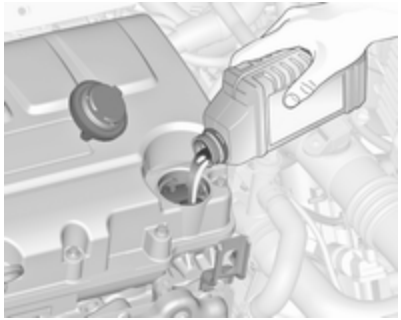

We recommend the use of the same grade of engine oil that was used at last change.

The engine oil level must not exceed the **MAX** mark on the dipstick.

On some engines, a funnel is needed to top-up engine oil.

The funnel is located on the right side storage in the load compartment.

Use the funnel to fill in the engine oil into the engine oil opening.

After topping-up, put the funnel into the plastic bag and stow it in the storage compartment.

Caution
Overfilled engine oil must be drained or suctioned out. If the oil exceeds the maximum level, do not start the vehicle and contact a workshop.

Capacities ⇨ 295.

Fit the cap on straight and tighten it.

Engine coolant

The coolant provides freeze protection down to approx. -28 °C. In cold regions with very low temperatures, the factory filled coolant provides frost protection down to approx. -37 °C.

Caution
Only use approved antifreeze.

Coolant and antifreeze ⇨ 285.

Coolant level

Caution
Too low a coolant level can cause engine damage.

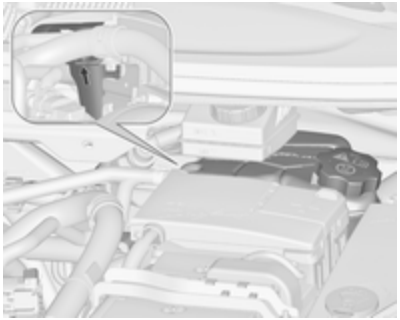

If the cooling system is cold, the coolant level should be above the filling line mark. Top-up if the level is low.

⚠ Warning

Allow the engine to cool before opening the cap. Carefully open the cap, relieving the pressure slowly.

To top-up, use a 1:1 mixture of approved coolant concentrate mixed with clean tap water. If no coolant concentrate is available, use clean tap water. Install the cap tightly.

Engine B16DTH: After starting the engine, set the heating to warmest temperature and the fan speed to at least first level for approx. five minutes. This will ensure that the air within the cooling system escapes.

Have the coolant concentration checked and have the cause of the coolant loss remedied by a workshop.

Power steering fluid

Caution

Extremely small amounts of contamination can cause steering system damage and cause it to not work properly. Do not allow contaminates to contact the fluid side of the reservoir cap/dipstick or from entering the reservoir.

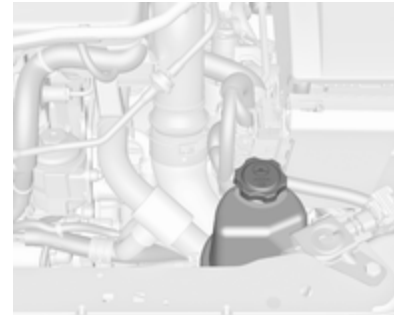

Power steering fluid level normally does not have to be checked. If an unusual noise sounds during steering or the power steering reacts unusually, seek the assistance of a workshop.

Washer fluid

Fill with clean water mixed with a suitable quantity of approved windscreen washer fluid which contains antifreeze.

Caution
Only washer fluid with a sufficient antifreeze concentration provides protection at low temperatures or a sudden drop in temperature.

Brakes

In the event of minimum thickness of the brake lining, a squealing noise sounds during braking.

Continued driving is possible but have the brake lining replaced as soon as possible.

Once new brake linings are installed, do not brake unnecessarily hard for the first few journeys.

Brake fluid

⚠ Warning
Brake fluid is poisonous and corrosive. Avoid contact with eyes, skin, fabrics and painted surfaces.

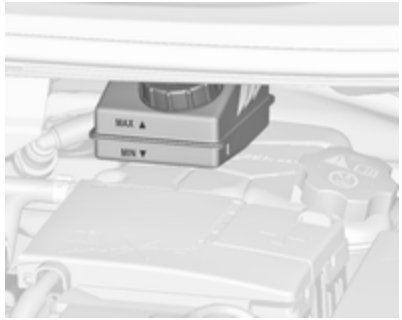

The brake fluid level must be between the **MIN** and **MAX** marks.

If fluid level is below **MIN** seek the assistance of a workshop.

Brake and clutch fluid ⇨ 285.

Vehicle battery

The vehicle battery is maintenance-free, provided that the driving profile allows sufficient charging of the battery. Short-distance-driving and frequent engine starts can discharge the battery. Avoid the use of unnecessary electrical consumers.

Batteries do not belong in household waste. They must be disposed of at an appropriate recycling collection point.

Laying up the vehicle for more than four weeks can lead to battery discharge. Disconnect the clamp from the negative terminal of the vehicle battery.

Ensure the ignition is switched off before connecting or disconnecting the vehicle battery.

Vehicle battery discharge protection ⇨ 123.

Disconnecting the battery

If the vehicle's battery is to be disconnected (e.g. for maintenance work), the alarm siren must be deactivated as follows: switch the ignition on then off, then disconnect the vehicle's battery within 15 seconds.

Replacing the vehicle battery

Note
Any deviation from the instructions given in this section may lead to temporary deactivation or disturbance of the stop-start system.

When the vehicle battery is being replaced, please ensure that there are no open ventilation holes in the vicinity of the positive terminal. If a ventilation hole is open in this area, it must be closed off with a dummy cap, and the ventilation in the vicinity of the negative terminal must be opened.

Only use vehicle batteries that allow the fuse box to be mounted above the vehicle battery.

Ensure that the battery is always replaced by the same type of battery.

We recommend that you have the vehicle battery replaced by a workshop.

Stop-start system ⇨ 185.

Charging the vehicle battery

⚠ Warning

On vehicles with stop-start system, ensure that the charging potential does not exceed 14.6 volts when using a battery charger. Otherwise the vehicle battery might be damaged.

Jump starting ⇨ 276.

Warning label

Meaning of symbols:

- No sparks, naked flames or smoking.
- Always shield eyes. Explosive gases can cause blindness or injury.
- Keep the vehicle battery out of reach of children.
- The vehicle battery contains sulphuric acid which could cause blindness or serious burn injuries.
- See the Owner's Manual for further information.
- Explosive gas may be present in the vicinity of the vehicle battery.

Diesel fuel system bleeding

If the tank has been run dry, the diesel fuel system must be bled. Switch on the ignition three times for 15 seconds at a time. Then crank the engine for a maximum of 40 seconds. Repeat this process after no less than five seconds. If the engine fails to start, seek the assistance of a workshop.

Wiper blade replacement

Windscreen

Lift the wiper arm until it stays in the raised position, press button to disengage the wiper blade and remove.

Attach the wiper blade slightly angled to the wiper arm and push until it engages.

Lower wiper arm carefully.

Rear window

Lift wiper arm. Disengage wiper blade as shown in illustration and remove.

Attach the wiper blade slightly angled to the wiper arm and push until it engages.

Lower wiper arm carefully.

Bulb replacement

Switch off the ignition and switch off the relevant switch or close the doors.

Only hold a new bulb at the base. Do not touch the bulb glass with bare hands.

Use only the same bulb type for replacement.

Replace headlight bulbs from within the engine compartment.

Bulb check

After a bulb replacement switch on the ignition, operate and check the lights.

Halogen headlights

Halogen headlights with separate bulbs for low beam and high beam. Sidelights and daytime running lights are designed as LEDs and can not be changed.

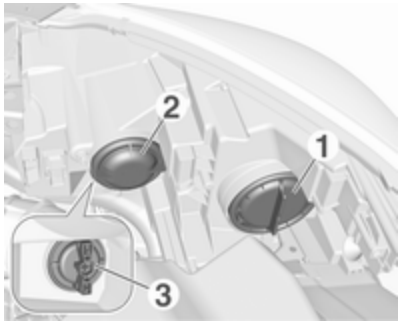

Low beam (**1**) outer bulb.

High beam (**2**) inner bulb.

Front turn signal light (**3**)

Low beam (1)

1. Rotate cap anticlockwise and remove it.

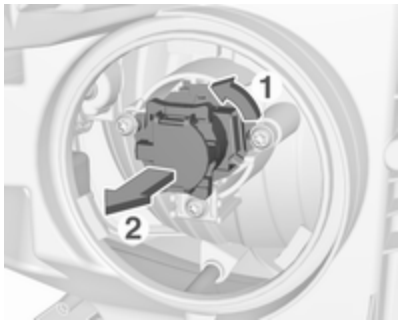

2. Rotate the bulb holder anticlockwise to disengage. Withdraw the bulb holder from the reflector housing.

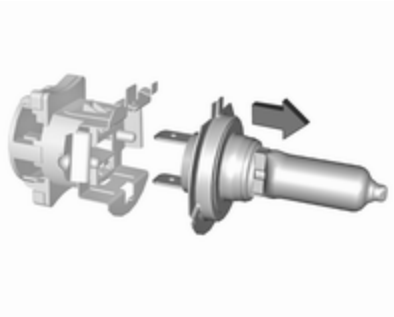

3. Remove the bulb from the plug connector by pulling.
4. Replace the bulb and connect it to the plug connector.
5. Insert the bulb holder, engaging the lugs into the reflector housing and rotate clockwise to secure.
6. Fit the cap and rotate clockwise.

High beam (2)

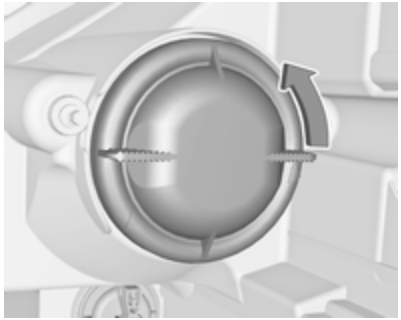

1. Rotate cap anticlockwise and remove it.

2. Withdraw the bulb holder from the reflector housing.

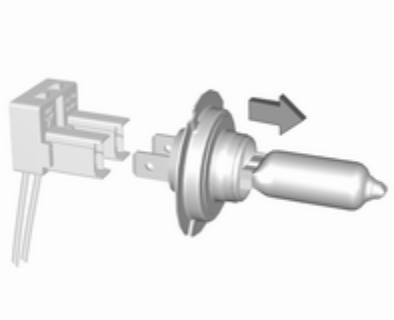

3. Remove the bulb from the plug connector by pulling.
4. Replace the bulb and connect it to the plug connector.
5. Insert and push the bulb holder into the reflector housing by setting the lug into position.
6. Fit the cap and rotate clockwise.

Front turn signal (3)

1. Rotate bulb socket anticlockwise to disengage. Withdraw the bulb socket from the reflector housing.

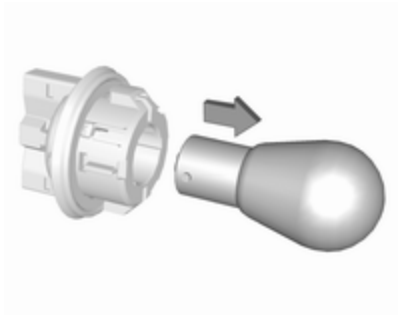

2. Remove the bulb from the socket by turning anticlockwise and pulling.
3. Replace and insert new bulb into socket and turn clockwise.
4. Insert the bulb socket into the reflector housing and turn clockwise.

LED headlights

Headlights for low and high beam, sidelights, daytime running lights and turn signal lights are designed as LEDs and can not be changed.

Have lights repaired by a workshop in case of failure.

Front fog lights

The bulbs are accessible from beneath the vehicle.

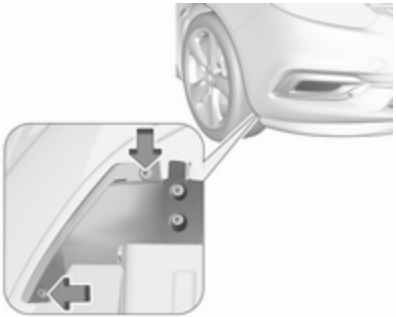

1. Remove the outer screws of the cover, as shown in the illustration.

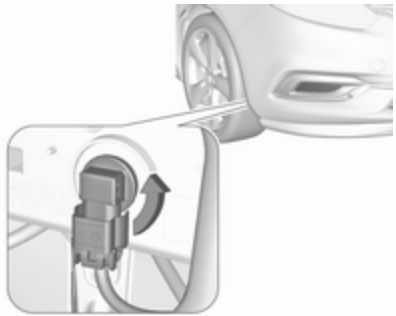

2. Hinge away the cover.

   Turn the bulb socket anticlockwise and remove it from the reflector housing.

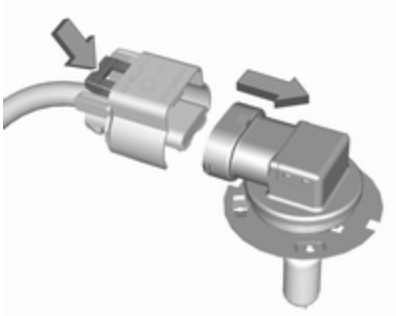

3. Disengage the bulb socket from the plug connector by pressing the retaining lug.
4. Remove and replace the bulb socket with bulb and attach to the plug connector.
5. Insert the bulb socket into the reflector housing, turn clockwise and engage.
6. Mount the cover with the screws.

Tail lights

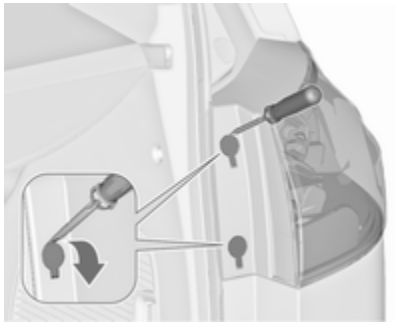

1. Hinge out the screw cover.

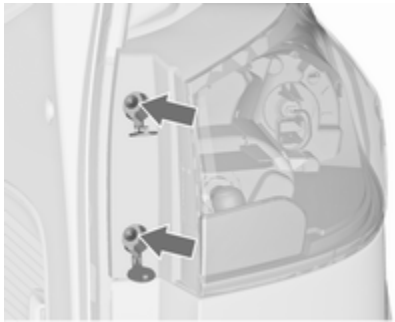

2. Remove the screws, marked by the arrows.

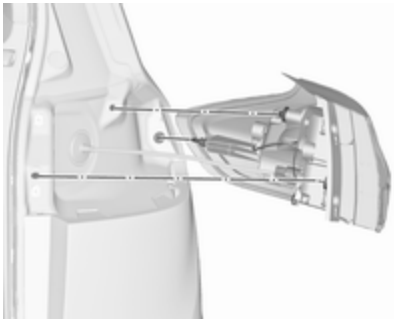

3. Carefully withdraw the light assembly from the retaining pins and remove.
4. Detach the plug connector from the light assembly.

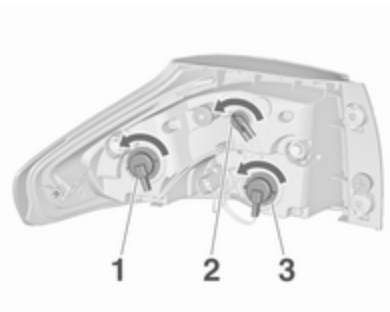

5. Remove and replace the bulb by turning the bulb socket.

   Turn signal light (**1**)

   Tail lights (**2**)

   Brake light (**3**)

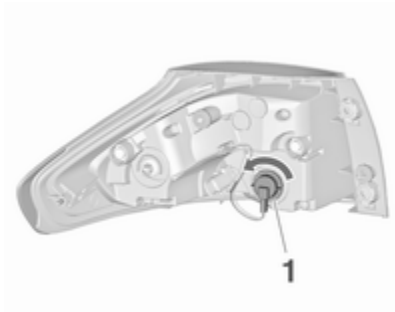

Tail lights with Light Emitting Diode (LED) for tail and brake light

Only the turn signal light (**1**) can be replaced.

Remove and replace the bulb by turning the bulb socket.

6. Connect the plug connector to the light assembly.
7. Fit light assembly onto retaining pins and mount the light assembly using the screws.
8. Plug in screw cover.

Reverse lights (4) in the tailgate

1. Open the tailgate and remove the cover.

2. Turn the bulb holder anticlockwise and remove it from the reflector.

3. Remove the bulb from the socket by pulling.
4. Replace and insert new bulb into socket.
5. Insert the bulb socket into the reflector and turn clockwise.
6. Install the cover.

Rear fog light

The bulbs are accessible from beneath the vehicle.

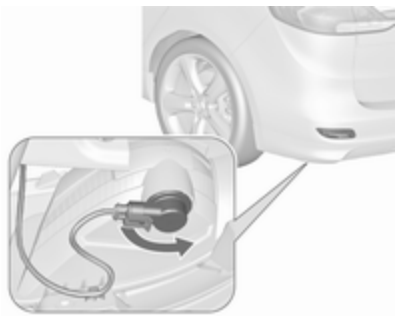

1. Turn the bulb socket anticlockwise and remove it from the reflector.

2. Remove the bulb from the socket by turning anticlockwise.
3. Replace and insert new bulb into the socket by turning clockwise.
4. Insert the bulb socket into the reflector, turn clockwise and engage.

Bulb check

Switch on the ignition, operate and check all lights.

Side turn lights

To replace bulb, remove lamp housing:

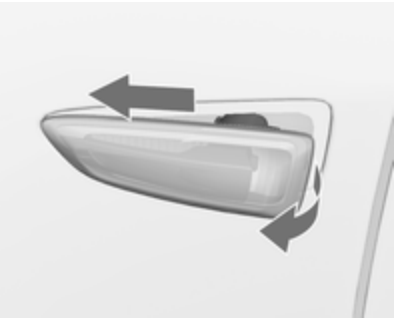

1. Slide lamp to its left side and remove with its right end.

2. Turn bulb holder anticlockwise and remove from housing.

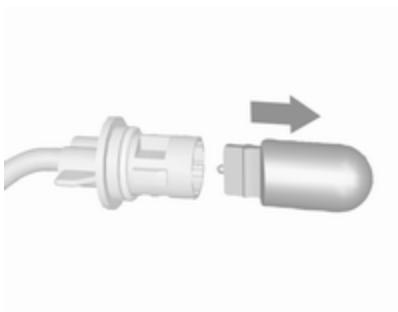

3. Pull bulb from bulb holder and replace it.
4. Insert bulb holder and turn clockwise.
5. Insert left end of the lamp, slide to the left and insert right end.

Number plate light

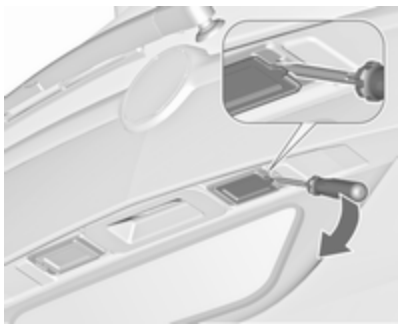

1. Insert screwdriver in recess of the cover, press to the side and release spring. Remove cover.

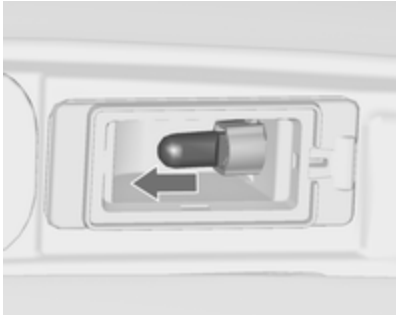

2. Remove the bulb from the socket by pulling.
3. Replace the bulb and insert it into the socket.
4. Push the cover into the housing.

Interior lights

Courtesy lights, reading lights

Have bulbs replaced by a workshop.

Load compartment light

Have bulbs replaced by a workshop.

Instrument panel illumination

Have bulbs replaced by a workshop.

Electrical system

Fuses

Data on the replacement fuse must match the data on the defective fuse.

There are three fuse boxes in the vehicle, depending on vehicle version:

- in the front left of the engine compartment
- in left-hand drive vehicles, in the interior behind the storage compartment, or, in right-hand drive vehicles, behind the glovebox
- behind a cover on the left side of the load compartment

Before replacing a fuse, turn off the respective switch and the ignition.

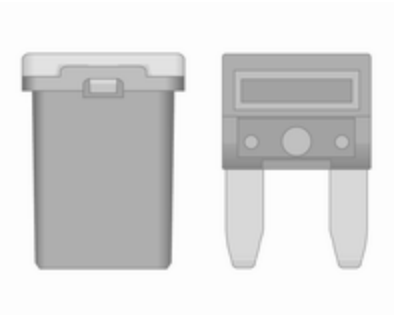

There are different kinds of fuses in the vehicle.

Depending on the type of fuse, a blown fuse can be recognized by its melted wire. Do not replace the fuse until the cause of the fault has been remedied.

Some functions are protected by several fuses.

Fuses may also be inserted without existence of a function.

Fuse extractor

A fuse extractor may be located in the fuse box in the engine compartment.

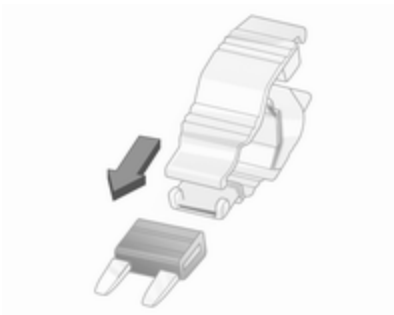

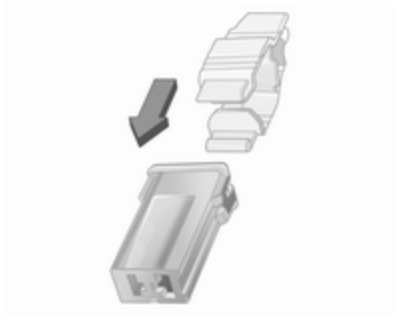

Place the fuse extractor on the various types of fuse from the top or side, and withdraw fuse.

Engine compartment fuse box

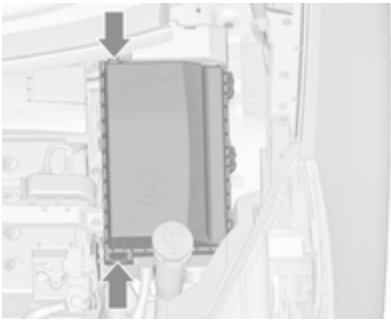

The fuse box is in the front left of the engine compartment.

Disengage the cover and fold it upwards until it stops. Remove the cover vertically upwards.

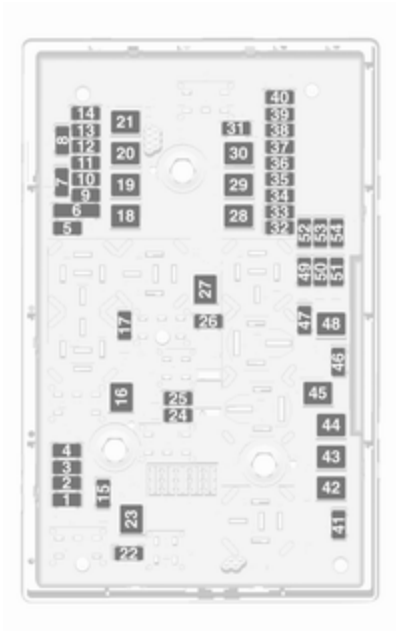

No.	Circuit
1	Engine control module
2	Lambda sensor
3	Fuel injection/Ignition system
4	Fuel injection/Ignition system
5	–
6	Exterior mirror heating/Anti-theft alarm system
7	Fan control/Engine control module/Transmission control module
8	Lambda sensor/Engine cooling
9	Rear window sensor
10	Battery sensor
11	Tailgate release
12	Adaptive forward lighting/Automatic light control
13	ABS
14	Rear window wiper
15	Engine control module

No.	Circuit
16	Starter
17	Transmission control module
18	Heated rear window
19	Front power windows
20	Rear power windows
21	Rear electrical centre (with fuse box in the load compartment) Heated front seats (without fuse box in the load compartment)
22	Left high beam (Halogen)
23	–
24	Right headlight (LED)
25	Left headlight (LED)
26	Front fog lights
27	Diesel fuel heating
28	Stop-start system
29	Electric parking brake
30	ABS

No.	Circuit
31	Adaptive cruise control
32	Airbag
33	Adaptive forward lighting/Automatic light control
34	Exhaust gas recirculation
35	Exterior mirror/Rain sensor
36	Climate control
37	Canister vent solenoid
38	Vacuum pump
39	Central control module
40	Windscreen washer/Rear window washer system
41	Right high beam (Halogen)
42	Radiator fan
43	Windscreen wiper
44	Windscreen wiper
45	Radiator fan
46	–

No.	Circuit
47	Horn
48	Radiator fan
49	Fuel pump
50	Headlamp levelling/Adaptive forward lighting
51	Air shutter
52	Auxiliary heater/Diesel engine
53	Transmission control module/Engine control module
54	Vacuum pump/Instrument panel cluster/Heating ventilation/Air conditioning system

After having changed defective fuses, close the fuse box cover and press until it engages.

If the fuse box cover is not closed correctly, malfunctions may occur.

Instrument panel fuse box

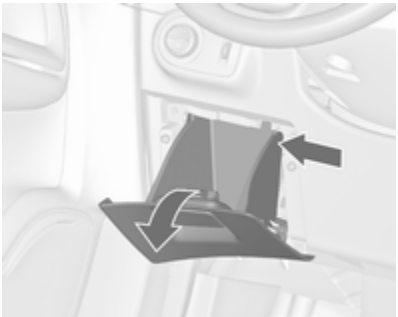

In left-hand drive vehicles, the fuse box is behind the storage compartment in the instrument panel.

Open the compartment and push it to the left to unlock. Fold the compartment down and remove it.

In right-hand drive vehicles, the fuse box is located behind a cover in the glovebox. Open the glovebox, then open the cover and fold it down.

No.	Circuit
1	Cruise control/Speed limiter/ Adaptive cruise control/Steering wheel controls
2	Exterior lights/Body control module
3	Exterior lights/Body control module
4	Infotainment system
5	Infotainment system/Instrument
6	Power outlet/Cigarette lighter
7	Power outlet
8	Left low beam/Body control module
9	Right low beam/Body control module/Airbag module
10	Door locks/Body control module
11	Interior fan
12	–
13	Sunblind

No.	Circuit
14	Diagnostic connector
15	Airbag
16	Power outlet
17	Air conditioning system
18	Logistics
19	Body control module
20	Body control module
21	Instrument panel cluster/Anti-theft alarm system
22	Ignition sensor
23	Body control module
24	Body control module
25	Steering wheel heating
26	–

Load compartment fuse box

The fuse box is on the left side of the load compartment behind a cover.

Remove the cover.

If equipped with tyre repair kit, remove the complete box.

Fuse assignments

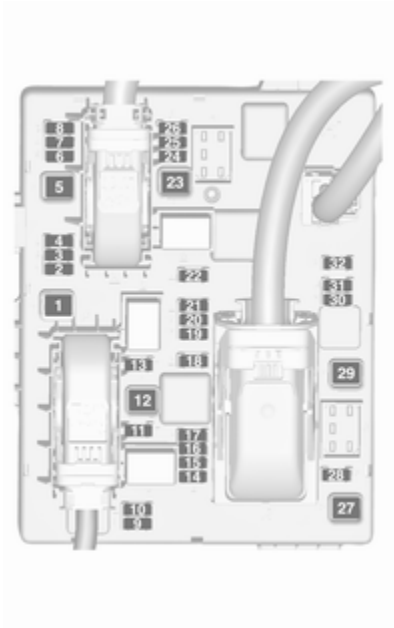

No.	Circuit
1	–
2	Trailer outlet
3	Parking assist
4	Selective catalytic reduction system
5	–
6	–
7	Power seat
8	–
9	Selective catalytic reduction system
10	Nitrogen oxide sensor
11	Trailer module/Trailer socket
12	Trailer module
13	Trailer outlet
14	–
15	–

No.	Circuit
16	Interior mirror/Rear view camera
17	Power outlet
18	–
19	–
20	–
21	Heated front seats
22	–
23	–
24	Selective catalytic reduction system
25	–
26	–
27	–
28	–
29	–
30	–

No.	Circuit
31	–
32	Active damping system/Lane departure warning

Vehicle tools

Tools

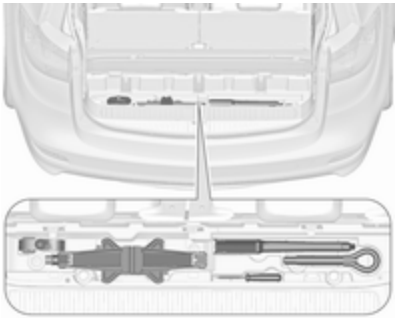

Some tools, the towing eye and (only on vehicles with spare wheel) the vehicle jacking equipment are placed in the rear storage in the load compartment floor.

Open the cover in front of the tailgate.

Wheels and tyres

Tyre condition, wheel condition

Drive over edges slowly and at right angles if possible. Driving over sharp edges can cause tyre and wheel damage. Do not trap tyres on the kerb when parking.

Regularly check the wheels for damage. Seek the assistance of a workshop in the event of damage or unusual wear.

Winter tyres

Winter tyres improve driving safety at temperatures below 7 °C and should therefore be fitted on all wheels.

All tyre sizes are permitted as winter tyres ⇨ 297.

In accordance with country-specific regulations, affix the speed sticker in the driver's field of view.

Tyre designations

E.g. **215/60 R 16 95 H**

215 : tyre width, mm
60 : cross-section ratio (tyre height to tyre width), %
R : belt type: Radial
RF : type: RunFlat
16 : wheel diameter, inches
95 : load index e.g. 95 is equivalent to 690 kg
H : speed code letter

Speed code letter:

Q : up to 160 km/h
S : up to 180 km/h
T : up to 190 km/h
H : up to 210 km/h
V : up to 240 km/h
W : up to 270 km/h

Choose a tyre appropriate for the maximum speed of your vehicle.

The maximum speed is achievable at kerb weight with driver (75 kg) plus 125 kg payload. Optional equipment could reduce the maximum speed of the vehicle.

Performance ⇨ 293.

Directional tyres

Fit directional tyres such that they roll in the direction of travel. The rolling direction is indicated by a symbol (e.g. an arrow) on the sidewall.

Tyre pressure

Check the pressure of cold tyres at least every 14 days and before any long journey. Do not forget the spare wheel. This also applies to vehicles with tyre pressure monitoring system.

Tyre pressure ⇨ 297.

The tyre pressure information label on the front left or right door frame indicates the original equipment tyres and the correspondent tyre pressures.

The tyre pressure data refers to cold tyres. It applies to summer and winter tyres.

Always inflate the spare tyre to the pressure specified for full load.

The ECO tyre pressure serves to achieve the smallest amount of fuel consumption possible.

Incorrect tyre pressures will impair safety, vehicle handling, comfort and fuel economy and will increase tyre wear.

Tyre pressures differ depending on various options. For the correct tyre pressure value, follow the procedure below:

1. Identify the engine identifier code. Engine data ⇨ 292.
2. Identify the respective tyre.

The tyre pressure tables show all possible tyre combinations ⇨ 297.

For the tyres approved for your vehicle, refer to the EEC Certificate of Conformity provided with your vehicle or other national registration documents.

The driver is responsible for correct adjustment of tyre pressure.

⚠ Warning

If the pressure is too low, this can result in considerable tyre warm-up and internal damage, leading to tread separation and even to tyre blow-out at high speeds.

⚠ Warning

For specific tyres the recommended tyre pressure as shown in the tyre pressure table may exceed the maximum tyre pressure as indicated on the tyre. Never exceed the maximum tyre pressure as indicated on the tyre.

If the tyre pressure must be reduced or increased on a vehicle with tyre pressure monitoring system, switch

off ignition. After adjusting tyre pressure, switch on ignition and select the appropriate setting on the page **Tyre load** in the Driver Information Centre, ⇨ 101.

Temperature dependency

The tyre pressure depends on the temperature of the tyre. During driving, tyre temperature and pressure increase. Tyre pressure values provided on the tyre information label and tyre pressure chart are valid for cold tyres, which means at 20 °C.

The pressure increases by nearly 10 kPa for a 10 °C temperature increase. This must be considered when warm tyres are checked.

The tyre pressure value displayed in the Driver Information Centre shows the real tyre pressure. A cooled down tyre will show a decreased value, which does not indicate an air leak.

Tyre pressure monitoring system

The tyre pressure monitoring system checks the pressure of all four tyres once a minute when vehicle speed exceeds a certain limit.

Caution
Tyre pressure monitoring system warns only about low tyre pressure condition and does not replace regular tyre maintenance by the driver.

All wheels must be equipped with pressure sensors and the tyres must have the prescribed pressure.

Note
In countries where the tyre pressure monitoring system is legally required, the use of wheels without pressure sensors will invalidate the vehicle operating permit.

The current tyre pressures can be shown in the Driver Information Centre.

Select the menu by the buttons on the turn signal lever.

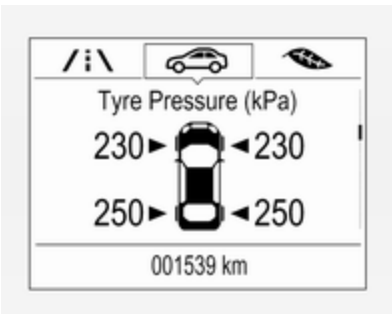

Select **Tyre pressure** page under **Vehicle Information Menu** 🚗 ⇨ 101.

System status and pressure warnings are displayed by a message indicating the corresponding tyre in the Driver Information Centre.

The system considers the tyre temperature for the warnings.

A detected low tyre pressure condition is indicated by control indicator (!) ⇨ 99.

If (!) illuminates, stop as soon as possible and inflate the tyres as recommended ⇨ 297.

If (!) flashes for 60-90 seconds and then illuminates continuously, there is a fault in the system. Consult a workshop.

After inflating, some driving may be required to update the tyre pressure values in the Driver Information Centre. During this time (!) may illuminate.

If (!) illuminates at lower temperatures and extinguishes after some driving, this could be an indicator for approaching a low tyre pressure condition. Check tyre pressure.

Vehicle messages ⇨ 106.

If the tyre pressure must be reduced or increased, switch off ignition.

Only mount wheels with pressure sensors, otherwise the tyre pressure will not be displayed and (!) illuminates continuously.

A temporary spare wheel is not equipped with pressure sensors. The tyre pressure monitoring system is not operational for these wheels. Control indicator (!) illuminates. For the further three wheels the system remains operational.

The use of commercially available liquid tyre repair kits can impair the function of the system. Factory-approved repair kits can be used.

Operating electronic devices or being close to facilities using similar wave frequencies could disrupt the tyre pressure monitoring system.

Each time the tyres are replaced, tyre pressure monitoring system sensors must be dismounted and serviced. For the screwed sensor: replace valve core and sealing ring. For clipped sensor: replace complete valve stem.

Vehicle loading status

Adjust tyre pressure to load condition according to the tyre information label or tyre pressure chart ⇨ 297, and select the appropriate setting in the **Tyre load** menu in the Driver Information Centre ⇨ 101. This setting is the reference for the tyre pressure warnings.

The **Tyre load** menu only appears if the vehicle is at a standstill and the parking brake is applied. On vehicles with automatic transmission the selector lever has to be in **P**.

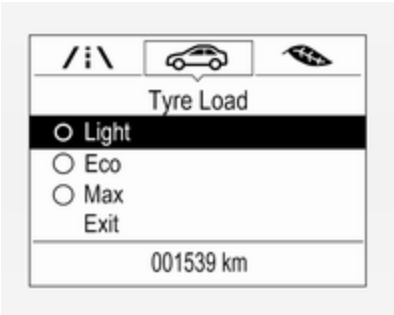

Select **Tyre load** page under **Vehicle Information Menu** in the Driver Information Centre ⇨ 101.

Select:

- **Light** for comfort pressure up to 3 people.
- **Eco** for Eco pressure up to 3 people.
- **Max** for full load.

Tyre pressure sensor matching process

Each tyre pressure sensor has a unique identification code. The identification code must be matched to a new wheel position after rotating the wheels or exchanging the complete wheel set and if one or more tyre pressure sensors were replaced. The tyre pressure sensor matching process should also be performed after replacing a spare wheel with a road wheel containing the tyre pressure sensor.

The malfunction light and the warning message or code should extinguish at the next ignition cycle. The sensors are matched to the wheel positions, using a relearn tool, in the following order: left side front wheel, right side front wheel, right side rear wheel and left side rear wheel. The turn signal light at the current active position is illuminated until sensor is matched.

Consult your workshop for service. There are two minutes to match the first wheel position, and five minutes overall to match all four wheel positions. If it takes longer, the matching process stops and must be restarted.

The tyre pressure sensor matching process is:

1. Apply the parking brake.
2. Turn the ignition on.
3. On vehicles with automatic transmission: set the selector lever to **P**.

   On vehicles with manual transmission: select neutral.
4. Press **MENU** on the turn signal lever to select the **Vehicle Information Menu** in the Driver Information Centre.
5. Turn the adjuster wheel to scroll to the tyre pressure menu.

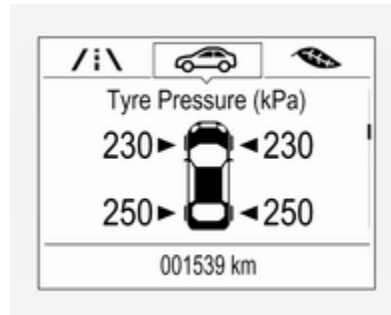

6. Press **SET/CLR** to begin the sensor matching process. A message requesting acceptance of the process should be displayed.
7. Press **SET/CLR** again to confirm the selection. The horn sounds twice to indicate the receiver is in relearn mode.
8. Start with the left side front wheel.
9. Place the relearn tool against the tyre sidewall, near the valve stem. Then press the button to activate the tyre pressure sensor. A horn chirp confirms that the sensor identification code has been matched to this wheel position.
10. Proceed to the right side front wheel, and repeat the procedure in Step 9.
11. Proceed to the right side rear wheel, and repeat the procedure in Step 9.
12. Proceed to the left side rear wheel, and repeat the procedure in Step 9. The horn sounds twice to indicate the sensor identification code has been matched to the left side rear tyre, and the tyre pressure sensor matching process is no longer active.
13. Turn off the ignition.
14. Set all four tyres to the recommended air pressure level as indicated on the tyre pressure information label.
15. Ensure the tyre loading status is set according to the selected pressure ⇨ 101.

Tread depth

Check tread depth at regular intervals.

Tyres should be replaced for safety reasons at a tread depth of 2-3 mm (4 mm for winter tyres).

For safety reasons, it is recommended that the tread depth of the tyres on one axle should not vary by more than 2 mm.

The legally permissible minimum tread depth (1.6 mm) has been reached when the tread has worn down as far as one of the tread wear indicators (TWI). Their position is indicated by markings on the sidewall.

If there is more wear at the front than the rear, swap round front wheels and rear wheels periodically. Ensure that the direction of rotation of the wheels remains the same.

Tyres age, even if they are not used. We recommend tyre replacement every 6 years.

Changing tyre and wheel size

If tyres of a different size than those fitted at the factory are used, it may be necessary to reprogramme the nominal tyre pressure and make other vehicle modifications.

After converting to a different tyre size, have the label with tyre pressures replaced ⇨ 263.

⚠ Warning

The use of unsuitable tyres or wheels may lead to accidents and will invalidate the vehicle operating permit.

Wheel covers

Wheel covers and tyres that are factory approved for the respective vehicle and comply with all of the relevant wheel and tyre combination requirements must be used.

If the wheel covers and tyres used are not factory approved, the tyres must not have a rim protection ridge.

Wheel covers must not impair brake cooling.

⚠ Warning

Use of unsuitable tyres or wheel covers could lead to sudden pressure loss and thereby accidents.

Vehicles with steel wheels: When using locking wheel nuts, do not attach wheel covers.

Tyre chains

Tyre chains are only permitted on the front wheels.

Always use fine mesh chains that add no more than 10 mm to the tyre tread and the inboard sides (including chain lock).

⚠ Warning

Damage may lead to tyre blowout.

Tyre chains are only permitted on tyres of size 215/60 R16 and 225/50 R17.

The use of tyre chains is not permitted on the temporary spare wheel.

Tyre repair kit

Minor damage to the tyre tread can be repaired with the tyre repair kit.

Do not remove foreign bodies from the tyres.

Tyre damage exceeding 4 mm or that is at the tyre's sidewall cannot be repaired with the tyre repair kit.

⚠Warning

Do not drive faster than 80 km/h.

Do not use for a lengthy period.

Steering and handling may be affected.

If you have a flat tyre:

Apply the parking brake and engage first gear, reverse gear or **P**.

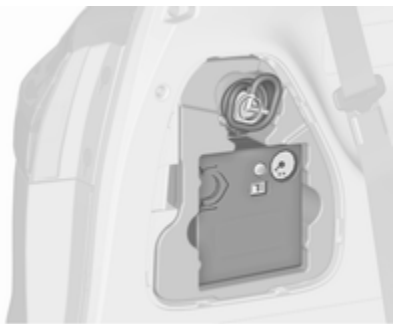

The tyre repair kit is on the left side in the load compartment behind a cover.

1. Take the tyre repair kit from the compartment.
2. Remove the compressor.

3. Remove the electrical connection cable and air hose from the stowage compartments on the underside of the compressor.

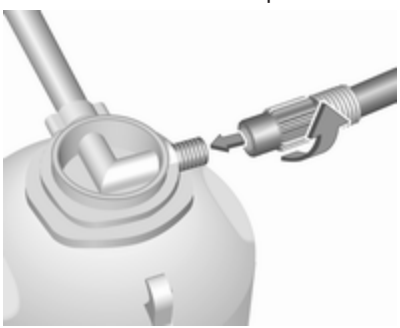

4. Screw the compressor air hose to the connection on the sealant bottle.
5. Fit the sealant bottle into the retainer on the compressor.

   Set the compressor near the tyre in such a way that the sealant bottle is upright.

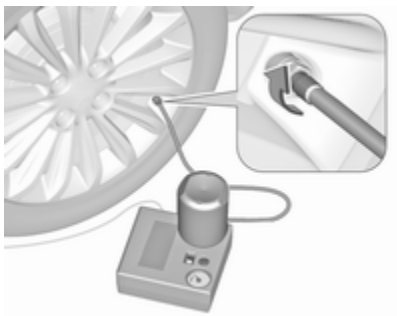

6. Unscrew valve cap from defective tyre.
7. Screw the filler hose to the tyre valve.
8. The switch on the compressor must be set to **O**.

9. Connect the compressor plug to the power outlet or cigarette lighter socket.

   To avoid discharging the battery, we recommend running the engine.

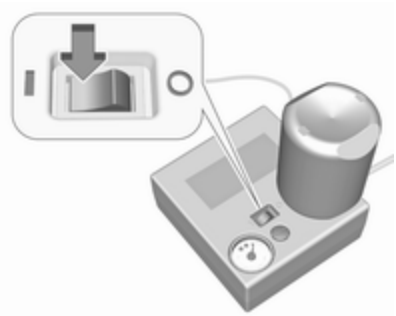

10. Set the rocker switch on the compressor to **I**. The tyre is filled with sealant.
11. The compressor pressure gauge briefly indicates up to six bar whilst the sealant bottle is emptying (approx. 30 seconds). Then the pressure starts to drop.
12. All of the sealant is pumped into the tyre. Then the tyre is inflated.
13. The prescribed tyre pressure should be obtained within 10 min. Tyre pressure ⇨ 297. When the correct pressure is obtained, switch off the compressor.

    If the prescribed tyre pressure is not obtained within 10 min, remove the tyre repair kit. Move the vehicle one tyre rotation. Reattach the tyre repair kit and continue the filling procedure for 10 min. If the prescribed tyre pressure is still not obtained, the tyre is too badly damaged. Seek the assistance of a workshop.

    Drain excess tyre pressure with the button over the pressure indicator.

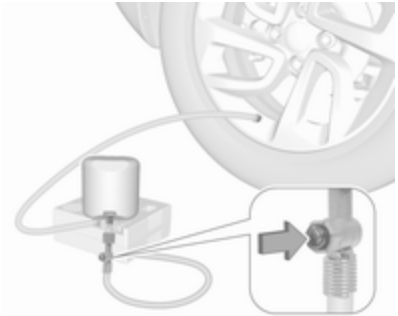

    Depending on version the button can be located on the air hose.

    Do not run the compressor longer than 10 min.

14. Detach the tyre repair kit. Push catch on bracket to remove sealant bottle from bracket. Screw the tyre inflation hose to the free connection of the sealant bottle. This prevents sealant from escaping. Stow tyre repair kit in load compartment.
15. Remove any excess sealant using a cloth.

16. Take the label indicating maximum permitted speed from the sealant bottle and affix in the driver's field of view.
17. Continue driving immediately so that sealant is evenly distributed in the tyre. After driving approx. 10 km (but no more than 10 min), stop and check tyre pressure. Screw compressor air hose directly onto tyre valve and compressor when doing this.

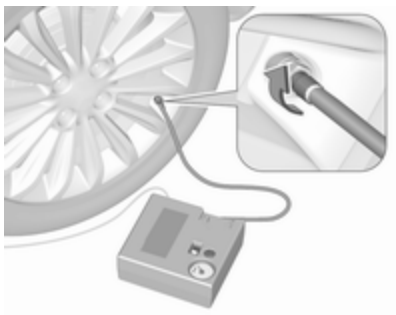

If tyre pressure is more than 1.3 bar, set it to the correct value. Repeat the procedure until there is no more loss of pressure.

If the tyre pressure has fallen below 1.3 bar, the vehicle must not be used. Seek the assistance of a workshop.

18. Stow away tyre repair kit in load compartment.

Note
The driving characteristics of the repaired tyre are severely affected, therefore have this tyre replaced.

If unusual noise is heard or the compressor becomes hot, turn compressor off for at least 30 min.

The built-in safety valve opens at a pressure of 7 bar.

Note the expiry date of the kit. After this date its sealing capability is no longer guaranteed. Pay attention to storage information on sealant bottle.

Replace the used sealant bottle. Dispose of the bottle as prescribed by applicable laws.

The compressor and sealant can be used from approx. -30 °C.

The adapters possibly supplied can be used to pump up other items e.g. footballs, air mattresses, inflatable dinghies etc. They can be located on the underside of the compressor. To remove, screw on compressor air hose and withdraw adapter.

Wheel changing

Make the following preparations and observe the following information:

- Park the vehicle on a level, firm and non-skid surface. The front wheels must be in the straight-ahead position.
- Apply the parking brake and engage first gear, reverse gear or **P**.
- If the ground on which the vehicle is standing is soft, a solid board (max. 1 cm thick) should be placed under the jack.
- Take heavy objects out of the vehicle before jacking up.
- No people or animals may be in the vehicle when it is jacked-up.
- Never crawl under a jacked-up vehicle.

- Do not start the vehicle when it is raised on the jack.
- Clean wheel nuts and thread with a clean cloth before mounting the wheel.

⚠ Warning

Do not grease wheel bolt, wheel nut and wheel nut cone.

Jacking positions

The jacking positions shown refer to the use of lifting arms and accessory jacks used for changing winter / summer tyres.

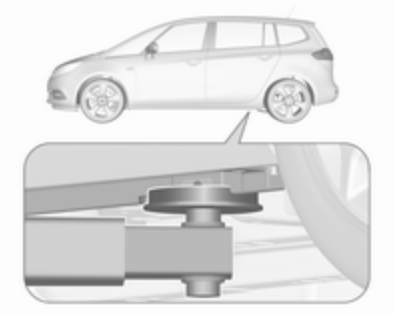

Rear arm position of the lifting platform centrically under the recess of the sill.

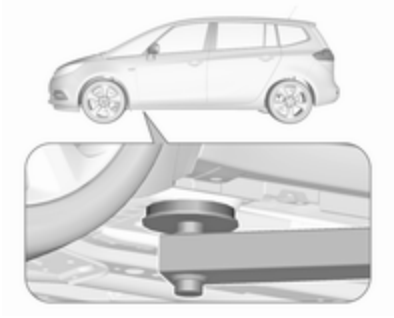

Front arm position of the lifting platform at the underbody.

Spare wheel

The spare wheel can be classified as a temporary spare wheel depending on the size compared to the other mounted wheels and country regulations. In this case a permissible maximum speed applies, even though no label at the spare wheel indicates this.

Only mount one temporary spare wheel. Do not drive faster than 80 km/h. Take curves slowly. Do not use for a long period of time.

Caution

The use of a spare wheel that is smaller than the other wheels or in combination with winter tyres could affect driveability. Have the defective tyre replaced as soon as possible.

The spare wheel is located in a holder beneath the vehicle floor.

1. Open the storage in the load compartment ⇨ 261.
2. Remove both caps above the hexagon bolts.

3. Fit the wheel wrench on one hexagon bolt and turn it anticlockwise until a resistance is noticeable.
4. Proceed with the other hexagon bolt in the same way.

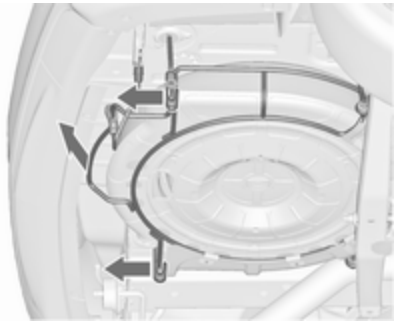

5. Lift the spare wheel holder and unhook both catches.
6. Lower the spare wheel holder.

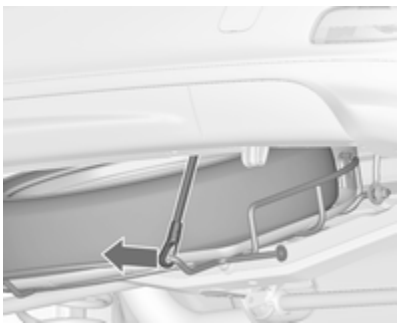

7. Detach the safety cable.

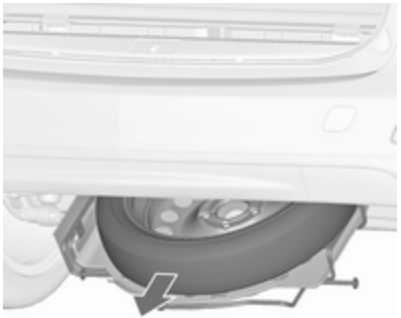

8. Lower holder all the way and remove spare wheel.
9. Change the wheel.

   The damaged wheel must be secured in the load compartment, see below.
10. Lift the empty spare wheel holder and insert the safety cable.
11. Lift the spare wheel holder further and engage in both catches. The open sides of the catches must point in the direction of travel.
12. Close the empty spare wheel holder by turning both hexagon bolts clockwise using the wheel wrench.

13. Fit the caps above both hexagon bolts.
14. Stow wheel wrench and the jack in the storage in front of the tailgate.
15. Close the storage compartment cover.

When stowing the spare wheel in the spare wheel holder, note that the wheel is positioned with the tyre valve above the recess of the wheel holder.

Fitting the spare wheel

Make the following preparations and observe the following information:

- Park the vehicle on a level, firm and non-skid surface. The front wheels must be in the straight-ahead position.
- If necessary, place a chock under the wheel diagonally opposite the wheel to be changed.
- Apply the parking brake and engage first gear, reverse gear or **P**.
- Remove the spare wheel ⇨ 271.
- Never change more than one wheel at once.
- Use the jack only to change wheels in case of puncture, not for seasonal winter or summer tyre change.
- The jack is maintenance-free.
- If the ground on which the vehicle is standing is soft, a solid board (max. 1 cm thick) should be placed under the jack.
- Take heavy objects out of the vehicle before jacking up.
- No people or animals may be in the vehicle when it is jacked-up.
- Never crawl under a jacked-up vehicle.
- Do not start the vehicle when it is raised on the jack.
- Clean wheel nuts and thread with a clean cloth before mounting the wheel.

⚠Warning

Do not grease wheel bolt, wheel nut and wheel nut cone.

⚠Warning

Ensure to use always the correct wheel bolts if changing the wheels. When installing the spare wheel, the bolts for alloy wheels can also be used.

1. Disengage wheel bolt caps with a screwdriver and remove.

   Steel wheels with cover: Pull off the wheel cover.

   Alloy wheels: Disengage wheel bolt caps with a screwdriver and remove. To protect the wheel, place a soft cloth between the screwdriver and the alloy wheel.

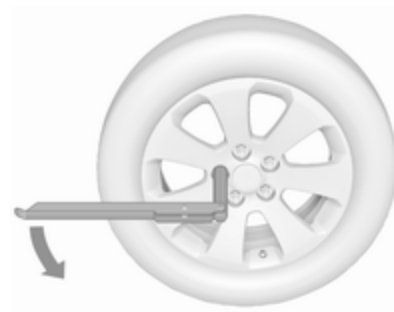

2. Fold out the wheel wrench and install ensuring that it locates securely and loosen each wheel nut by half a turn.

   The wheels might be protected by locking wheel nuts. To loosen these specific nuts first attach the adapter onto the head of the nut before installing the wheel wrench. The adapter is located in the glovebox.

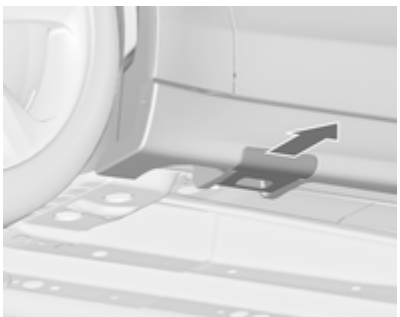

3. Some versions may have covered the vehicle jacking point. Pull out the cover sideways.

4. Ensure the jack is correctly positioned under the relevant vehicle jacking point.

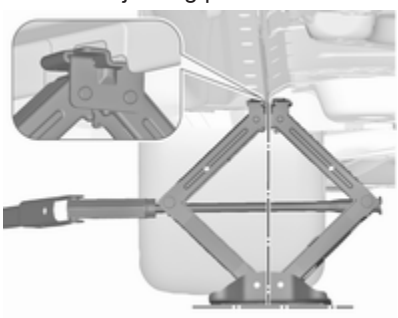

5. Set the jack to the necessary height. Position it directly below the jacking point in a manner that prevents it from slipping.

   Attach wheel wrench and with the jack correctly aligned rotate wheel wrench until wheel is clear of the ground.

6. Unscrew the wheel nuts.
7. Change the wheel. Spare wheel ⇨ 271
8. Screw on the wheel nuts.
9. Lower the vehicle and remove jack.

10. Install the wheel wrench ensuring that it is located securely and tighten each nut in a crosswise sequence. Tightening torque is 140 Nm.
11. Align the valve hole in the wheel cover with the tyre valve before installing.

    Install wheel nut caps.
12. Install vehicle jacking point cover.
13. Stow the replaced wheel ⇨ 271, the vehicle tools ⇨ 261 and the adapter for the locking wheel nuts ⇨ 62.
14. Check the tyre pressure of the installed tyre and the wheel nut torque as soon as possible.

Stowing a damaged full size wheel in the load compartment

The spare wheel holder is not designed for other tyre sizes than the spare wheel.

A damaged wheel wider than the spare wheel must be stowed in the load compartment and secured with a strap. Vehicle tools ⇨ 261.

The seats of the third row must be folded down ⇨ 66.

1. Position the wheel close to the left sidewall of the load compartment.

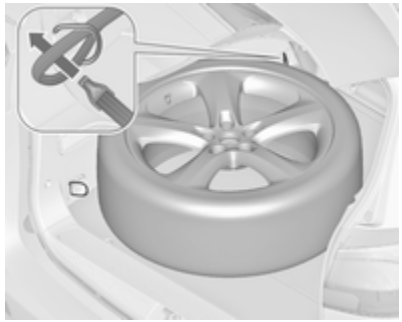

2. Place the loop end of the strap through the front lashing eye on the left side.
3. Place the hook end of the strap through the loop and pull it until the strap is fastened securely to the lashing eye.

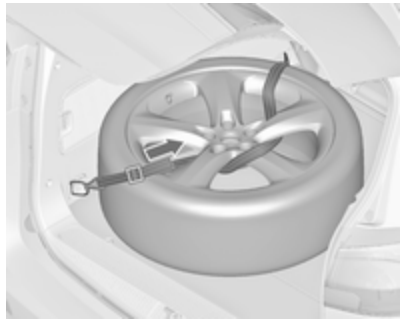

4. Insert the strap through the spokes of the wheel as shown in the illustration.
5. Mount the hook to the rear left lashing eye.
6. Tighten the strap and secure it using the buckle.

⚠ Danger

Always drive with folded up and engaged rear seat backrests when stowing a damaged full size wheel in the load compartment.

⚠Warning

Storing a jack, a wheel or other equipment in the load compartment could cause injury if they are not fixed properly. During a sudden stop or a collision, loose equipment could strike someone.

Always store jack and tools in the respective storage compartments and secure them by fixing.

Damaged wheel placed in the load compartment must always be secured with the strap.

Spare wheel with directional tyre

If possible, fit directional tyres such that they roll in the direction of travel. The rolling direction is indicated by a symbol (e.g. an arrow) on the sidewall.

The following applies to tyres fitted opposing the rolling direction:

- Driveability may be affected. Have the defective tyre renewed or repaired as soon as possible and fit it instead of the spare wheel.
- Drive particularly carefully on wet and snow-covered road surfaces.

Jump starting

Do not start with quick charger.

A vehicle with a discharged battery can be started using jump leads and the battery of another vehicle.

Do not start with quick charger.

⚠Warning

Be extremely careful when starting with jump leads. Any deviation from the following instructions can lead to injuries or damage caused by battery explosion or damage to the electrical systems of both vehicles.

⚠Warning

Avoid contact of the battery with eyes, skin, fabrics and painted surfaces. The fluid contains sulphuric acid which can cause injuries and damage in the event of direct contact.

- Never expose the vehicle battery to naked flames or sparks.
- A discharged vehicle battery can already freeze at a temperature of 0 °C. Defrost the frozen vehicle battery before connecting jump leads.
- Wear eye protection and protective clothing when handling a battery.
- Use a booster vehicle battery with the same voltage (12 Volt). Its capacity (Ah) must not be much less than that of the discharged vehicle battery.
- Use jump leads with insulated terminals and a cross section of at least 16 mm^2 (25 mm^2 for diesel engines).
- Do not disconnect the discharged vehicle battery from the vehicle.
- Switch off all unnecessary electrical consumers.
- Do not lean over the battery during jump starting.
- Do not allow the terminals of one lead to touch those of the other lead.
- The vehicles must not come into contact with each other during the jump starting process.
- Apply the parking brake, transmission in neutral, automatic transmission in **P**.
- Open the positive terminal protection cap of your vehicle in the engine compartment and of the booster vehicle battery.

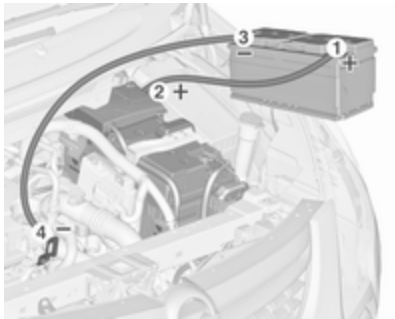

Lead connection order:

1. Connect the red lead to the positive terminal of the booster battery.
2. Connect the other end of the red lead to the positive terminal of the discharged battery.
3. Connect the black lead to the negative terminal of the booster battery.
4. Connect the other end of the black lead to a vehicle grounding point of your vehicle in the engine compartment.

Route the leads so that they cannot catch on rotating parts in the engine compartment.

To start the engine:

1. Start the engine of the vehicle providing the jump.
2. After five minutes, start the other engine. Start attempts should be made for no longer than 15 seconds at an interval of one minute.

3. Allow both engines to idle for approx. three minutes with the leads connected.
4. Switch on electrical consumers (e.g. headlights, heated rear window) of the vehicle receiving the jump start.
5. Reverse above sequence exactly when removing leads.

Towing

Towing the vehicle

Disengage cap at bottom and remove downwards.

The towing eye is stowed with the vehicle tools ⇨ 261.

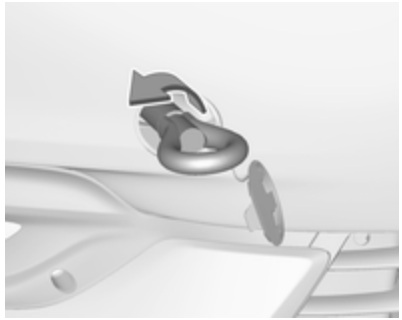

Screw in the towing eye as far as it will go until it stops in a horizontal position.

Attach a tow rope – or better still a tow rod – to the towing eye.

The towing eye must only be used for towing and not for recovering the vehicle.

Switch on ignition to release steering wheel lock and to permit operation of brake lights, horn and windscreen wiper.

Caution

Deactivate the driver assistance systems like active emergency braking ⇨ 216, otherwise the vehicle may automatically brake during towing.

Switch the selector lever to neutral.

Release the parking brake.

Caution

Drive slowly. Do not drive jerkily. Excessive tractive force can damage the vehicle.

When the engine is not running, considerably more force is needed to brake and steer.

To prevent the entry of exhaust gases from the towing vehicle, switch on the air recirculation and close the windows.

Vehicles with automatic transmission: The vehicle must be towed facing forwards, not faster than 80 km/h nor further than 100 km. In all other cases and when the transmission is defective, the front axle must be raised off the ground.

Seek the assistance of a workshop.

After towing, unscrew the towing eye.

Insert cap at the bottom and close.

Towing another vehicle

Wrap a cloth around the tip of a flat screwdriver to prevent paint damage. Insert a screwdriver in the slot at the lower edge of the cap. Release the cap by carefully moving the screwdriver downwards. To prevent damage it is recommended to place a cloth between the screwdriver and the frame.

The towing eye is stowed with the vehicle tools ⇨ 261.

Screw in the towing eye as far as it will go until it stops in a horizontal position.

The lashing eye at the rear underneath the vehicle must never be used as a towing eye.

Attach a tow rope – or even better a tow bar – to the towing eye.

The towing eye must only be used for towing and not for recovering a vehicle.

Caution

Drive slowly. Do not drive jerkily. Excessive tractive force can damage the vehicle.

After towing, unscrew the towing eye.

Insert cap at the bottom and engage.

Appearance care

Exterior care

Locks

The locks are lubricated at the factory using a high quality lock cylinder grease. Use de-icing agent only when absolutely necessary, as this has a degreasing effect and impairs lock function. After using a de-icing agent, have the locks regreased by a workshop.

Washing

The paintwork of your vehicle is exposed to environmental influences. Wash and wax your vehicle regularly. When using automatic vehicle washes, select a programme that includes waxing.

Bird droppings, dead insects, resin, pollen and the like should be cleaned off immediately, as they contain aggressive constituents which can cause paint damage.

If using a vehicle wash, comply with the vehicle wash manufacturer's instructions. The windscreen wiper and rear window wiper must be switched off. Remove antenna and external accessories such as roof racks etc.

If you wash your vehicle by hand, make sure that the insides of the wheel housings are also thoroughly rinsed out.

Clean edges and folds on opened doors and the bonnet as well as the areas they cover.

Clean bright metal mouldings with a cleaning solution approved for aluminium to avoid damages.

Caution

Always use a cleaning agent with a pH value of four to nine.

Do not use cleaning agents on hot surfaces.

Do not clean the engine compartment with a steam-jet or high-pressure jet cleaner.

Thoroughly rinse and leather-off the vehicle. Rinse leather frequently. Use separate leathers for painted and glass surfaces: remnants of wax on the windows will impair vision.

Have the door hinges of all doors greased by a workshop.

Do not use hard objects to remove spots of tar. Use tar removal spray on painted surfaces.

Exterior lights

Headlight and other light covers are made of plastic. Do not use any abrasive or caustic agents, do not use an ice scraper, and do not clean them dry.

Polishing and waxing

Wax the vehicle regularly (at the latest when water no longer beads). Otherwise, the paintwork will dry out.

Polishing is necessary only if the paint has become dull or if solid deposits have become attached to it.

Paintwork polish with silicone forms a protective film, making waxing unnecessary.

Plastic body parts must not be treated with wax or polishing agents.

Windows and wiper blades

Switch off wipers before handling in their areas.

Use a soft lint-free cloth or chamois leather together with window cleaner and insect remover.

When cleaning the rear window from inside, always wipe in parallel to the heating element to prevent damage.

For mechanical removal of ice, use a sharp-edged ice scraper. Press the scraper firmly against the glass so that no dirt can get under it and scratch the glass.

Remove dirt residues from smearing wiper blades by using a soft cloth and window cleaner. Also make sure to remove any residues such as wax, insect residues and similar from the window.

Ice residues, pollution and continuous wiping on dry windows will damage or even destroy the wiper blades.

Glass panel

Never clean with solvents or abrasive agents, fuels, aggressive media (e.g. paint cleaner, acetone-containing solutions etc.), acidic or highly alkaline media or abrasive pads.

Wheels and tyres

Do not use high-pressure jet cleaners.

Clean rims with a pH-neutral wheel cleaner.

Rims are painted and can be treated with the same agents as the body.

Paintwork damage

Rectify minor paintwork damage with a touch-up pen before rust forms. Have more extensive damage or rust areas repaired by a workshop.

Underbody

Some areas of the vehicle underbody have a PVC undercoating while other critical areas have a durable protective wax coating.

After the underbody is washed, check the underbody and have it waxed if necessary.

Bitumen/rubber materials could damage the PVC coating. Have underbody work carried out by a workshop.

Before and after winter, wash the underbody and have the protective wax coating checked.

Liquid gas system

⚠ Danger

Liquid gas is heavier than air and can collect in sink points.

Take care when performing work at the underbody in a pit.

For painting work and when using a drying booth at a temperature above 60 °C, the liquid gas tank must be removed.

Do not make any modifications to the liquid gas system.

Towing equipment

Do not clean the coupling ball bar with a steam-jet or high-pressure jet cleaner.

Rear carrier system

Clean the rear carrier system with a steam-jet or high-pressure jet cleaner at least once a year.

Operate the rear carrier system periodically if not in regular use, in particular during winter.

Air shutter

Clean the shutter system in the front bumper to maintain correct functionality.

Interior care

Interior and upholstery

Only clean the vehicle interior, including the instrument panel fascia and panelling, with a dry cloth or interior cleaner.

Clean the leather upholstery with clear water and a soft cloth. In case of heavy soiling, use leather care.

The instrument cluster and the displays should only be cleaned using a soft damp cloth. If necessary use a weak soap solution.

Clean fabric upholstery with a vacuum cleaner and brush. Remove stains with an upholstery cleaner.

Clothing fabrics may not be colourfast. This could cause visible discolourations, especially on light-coloured upholstery. Removable stains and discolourations should be cleaned as soon as possible.

Clean seat belts with lukewarm water or interior cleaner.

Caution

Close Velcro fasteners as open Velcro fasteners on clothing could damage seat upholstery.

The same applies to clothing with sharp-edged objects, like zips or belts or studded jeans.

Plastic and rubber parts

Plastic and rubber parts can be cleaned with the same cleaner as used to clean the body. Use interior cleaner if necessary. Do not use any other agent. Avoid solvents and petrol in particular. Do not use high-pressure jet cleaners.

Service and maintenance

General information **284**
Service information 284
Recommended fluids, lubricants and parts **285**
Recommended fluids and lubricants 285

General information

Service information

In order to ensure economical and safe vehicle operation and to maintain the value of your vehicle, it is of vital importance that all maintenance work is carried out at the proper intervals as specified.

The detailed, up-to-date service schedule for your vehicle is available at the workshop.

European service intervals

Maintenance of your vehicle is required every 30,000 km or after one year, whichever occurs first. Additional engine oil and filter change is indicated by the engine oil life system, when required earlier than maintenance.

A shorter service interval can be valid for severe driving behaviour, e.g. for taxis and police vehicles.

The European service intervals are valid for the following countries: Andorra, Austria, Belgium, Bosnia-Herzegovina, Bulgaria, Croatia, Cyprus, Czech Republic, Denmark, Estonia, Finland, France, Germany, Greece, Greenland, Hungary, Iceland, Ireland, Italy, Latvia, Liechtenstein, Lithuania, Luxembourg, Macedonia, Malta, Monaco, Montenegro, Netherlands, Norway, Poland, Portugal, Romania, San Marino, Serbia, Slovakia, Slovenia, Spain, Sweden, Switzerland, United Kingdom.

Service display ⇨ 91.

International service intervals

Maintenance of your vehicle is required every 15,000 km or after one year, whichever occurs first. Additional engine oil and filter change is indicated by the engine oil life system, when required earlier than maintenance.

Severe operating conditions exist if one or more of the following circumstances occur frequently: Cold starting, stop and go operation, trailer operation, mountain driving, driving on poor and sandy road surfaces,

increased air pollution, presence of airborne sand and high dust content, driving at high altitude and large variations of temperature. Under these severe operating conditions, certain service work may be required more frequently than the regular service interval.

The international service intervals are valid for the countries which are not listed in the European service intervals.

Service display ⇨ 91.

Confirmations

Confirmation of service is recorded in the Service and Warranty Booklet. The date and mileage is completed with the stamp and signature of the servicing workshop.

Make sure that the Service and Warranty Booklet is completed correctly as continuous proof of service is essential if any warranty or goodwill claims are to be met, and is also a benefit when selling the vehicle.

Recommended fluids, lubricants and parts

Recommended fluids and lubricants

Only use products that meet the recommended specifications.

⚠ Warning

Operating materials are hazardous and could be poisonous. Handle with care. Pay attention to information given on the containers.

Engine oil

Engine oil is identified by its quality and its viscosity. Quality is more important than viscosity when selecting which engine oil to use. The oil quality ensures e.g. engine cleanliness, wear protection and oil ageing control, whereas viscosity grade gives information on the oil's thickness over a temperature range.

Dexos is the newest engine oil quality that provides optimum protection for gasoline and diesel engines. If it is unavailable, engine oils of other listed qualities have to be used. Recommendations for gasoline engines are also valid for Ethanol (E85) fuelled engines.

Select the appropriate engine oil based on its quality and on the minimum ambient temperature ⇨ 289.

Topping up engine oil

Caution

In case of any spilled oil, wipe it up and dispose it properly.

Engine oils of different manufacturers and brands can be mixed as long as they comply with the required engine oil quality and viscosity.

Use of engine oils for all petrol engines with only ACEA quality is prohibited, since it can cause engine damage under certain operating conditions.

Select the appropriate engine oil based on its quality and on the minimum ambient temperature ⇨ 289.

Additional engine oil additives

The use of additional engine oil additives could cause damage and invalidate the warranty.

Engine oil viscosity grades

The SAE viscosity grade gives information of the thickness of the oil.

Multigrade oil is indicated by two figures, e.g. SAE 5W-30. The first figure, followed by a W, indicates the low temperature viscosity and the second figure the high temperature viscosity.

Select the appropriate viscosity grade depending on the minimum ambient temperature ⇨ 289.

All of the recommended viscosity grades are suitable for high ambient temperatures.

Coolant and antifreeze

Use only organic acid type-long life coolant (LLC) antifreeze approved for the vehicle. Consult a workshop.

The system is factory filled with coolant designed for excellent corrosion protection and frost protection down to approx. -28 °C. In northern countries with very low temperatures the factory filled coolant provides frost protection down to approx. -37 °C. This concentration should be maintained all year round. The use of additional coolant additives that intend to give additional corrosion protection or seal against minor leaks can cause function problems. Liability for consequences resulting from the use of additional coolant additives will be rejected.

Brake and clutch fluid

Over time, brake fluid absorbs moisture which will reduce braking effectiveness. The brake fluid should therefore be replaced at the specified interval.

Washer fluid

Use only washer fluid approved for the vehicle to prevent damage of wiper blades, paintwork, plastic and rubber parts. Consult a workshop.

AdBlue

Only use AdBlue to reduce the nitrogen oxides in the exhaust emission ⇨ 190.

Technical data

Vehicle identification **287**
Vehicle Identification Number .. 287
Identification plate 287
Engine identification 288
Vehicle data **289**
Recommended fluids and lubricants 289
Engine data 292
Performance 293
Vehicle weight 294
Vehicle dimensions 295
Capacities 295
Tyre pressures 297

Vehicle identification

Vehicle Identification Number

The Vehicle Identification Number may be stamped on the identification plate and on the floor pan, under the floor covering, visible under a cover.

The Vehicle Identification Number may be embossed on the instrument panel, visible through the windscreen, or in the engine compartment on the right body panel.

Identification plate

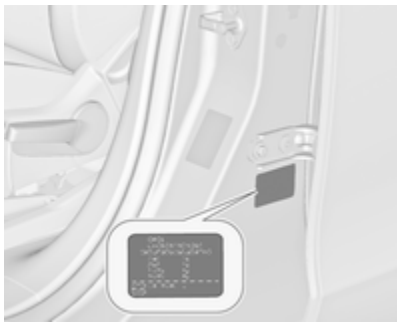

The identification plate is located on the front left or right door frame.

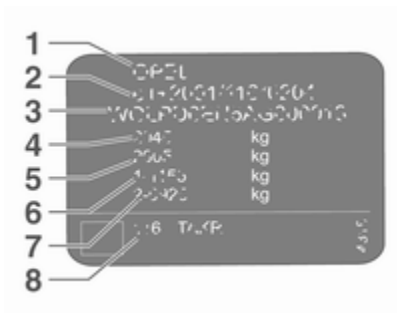

Information on identification label:

1 : manufacturer
2 : type approval number
3 : vehicle identification number
4 : permissible gross vehicle weight rating in kg
5 : permissible gross train weight in kg
6 : maximum permissible front axle load in kg
7 : maximum permissible rear axle load in kg
8 : vehicle-specific or country-specific data

The combined total of front and rear axle loads must not exceed the permissible gross vehicle weight. For example, if the front axle is bearing its maximum permissible load, the rear axle can only bear a load that is equal to the gross vehicle weight minus the front axle load.

The technical data is determined in accordance with European Community standards. We reserve the right to make modifications. Specifications in the vehicle documents always have priority over those given in this manual.

Engine identification

The technical data tables show the engine identifier code. Engine data ⇨ 292.

To identify the respective engine, refer to the engine power in the EEC Certificate of Conformity provided with your vehicle or other national registration documents.

Vehicle data

Recommended fluids and lubricants

European service schedule

Required engine oil quality

All European countries with European service interval ➪ 284		
Engine oil quality	Petrol engines (including E85)	Diesel engines
dexos2	✓	✓

In case dexos quality is unavailable, you may not use max. one litre engine oil quality ACEA C3 once between each oil change.

Engine oil viscosity grades

	All European countries with European service interval ➪ 284
Ambient temperature	Petrol and diesel engines
down to -25 °C	SAE 0W-20[1] or SAE 0W-30 or SAE 0W-40 SAE 5W-30 or SAE 5W-40
below -25 °C	SAE 0W-20[1] or SAE 0W-30 or SAE 0W-40

1) Permitted only for D16DTH.

International service schedule

Required engine oil quality

	All countries with international service interval ⇨ 284	
Engine oil quality	Petrol engines (including E85)	Diesel engines
dexos2	✓	✓

In case dexos quality is unavailable you may use the oil qualities listed below:

	All countries with international service interval ⇨ 284	
Engine oil quality	Petrol engines (including E85)	Diesel engines
ACEA A3/B4	✓	✓
ACEA C3	✓	✓
API SM	✓	–
SN/ILSAC GF4	✓	–
SN/ILSAC GF5	✓	–

Engine oil viscosity grades

	All countries with international service interval ⇨ 284
Ambient temperature	Petrol and diesel engines
down to -25 °C	SAE 0W-20[1] or SAE 0W-30 or SAE 0W-40 SAE 5W-30 or SAE 5W-40
below -25 °C	SAE 0W-20[1] or SAE 0W-30 or SAE 0W-40
down to -20 °C	SAE 10W-30[2] or SAE 10W-40[2]

1) Permitted only for D16DTH.
2) Permitted for all engines except D16DTH, but usage of oils with dexos quality is recommended.

Engine data

Engine identifier code	D16DTJ	D16DTH	D20DTJ	D20DTH	D16SHJ	D16SHL
Sales designation	1.6 Turbo	1.6 Turbo	2.0 Turbo	2.0 Turbo	1.6	1.6
Engineering code	D16DTJ	D16DTH	D20DTJ	D20DTH	D16SHJ	D16SHT
Piston displacement [cm^3]	1598	1598	1956	1956	1598	1598
Engine power [kW]	88	100	96	125	100	125
at rpm	3500-4000	3500-4000	4000-4250	3750	6000	4750-6000
Torque [Nm]	320	320	300	400	240	260
at rpm	2000-2250	2000-2250	1500-2750	1750-2500	1650-3500	1650-4500
Fuel type	Diesel	Diesel	Diesel	Diesel	Petrol	Petrol
Octane rating RON[3)]						
recommended	–	–	–	–	98	98
possible	–	–	–	–	95	95
possible	–	–	–	–	91	91

3) A country specific label at the fuel filler flap can supersede the engine specific requirement.

Performance

Engine	D16DTJ	D16DTH	D20DTJ	D20DTH	D16SHL	-D16SHJ
Maximum speed[4] [km/h]						
Manual transmission	190	195	–	210	210	195
Automatic transmission	–	–	210	190	–	190

4) The maximum speed indicated is achievable at kerb weight (without driver) plus 200 kg payload. Optional equipment could reduce the specified maximum speed of the vehicle.

Vehicle weight

Kerb weight, basic model without any optional equipment

	Engine	Manual transmission	Automatic transmission
5-seats/7-seats [kg]	D16SHL	1688/1715	–
	D16SHJ	1688/1715	1725/1752
	D16DTJ	1701/1728	–
	D16DTH	1701/1728	–
	D20DTJ	–	1788/1815
	D20DTH	1733/1760	1788/1815

Optional equipment and accessories increase the kerb weight.

Loading information ⇨ 81.

Vehicle dimensions

Length [mm]	4666
Width with folded exterior mirrors [mm]	1928
Width with two exterior mirrors [mm]	2100
Height (without antenna) [mm]	1620 - 1710
Length of load compartment floor with folded third row [mm]	1094
Length of load compartment with folded second and third row [mm]	1842
Load compartment width [mm]	1057
Load compartment height [mm]	840
Wheelbase [mm]	2760
Turning circle diameter [m]	11.9

Capacities

Engine oil

Engine	D16SHJ, D16SHL	D16DTJ, D16DTH	D20DTH, D20DTJ
including filter [l]	5.5	5.0	5.25
between MIN and MAX [l]	1.0	1.0	1.0

Fuel tank

Petrol/diesel, refilling quantity [l]	58

AdBlue tank

AdBlue, refilling quantity [l]	7.5 / 12.5

Tyre pressures

Engine	Tyres	Comfort with up to 3 people		ECO with up to 3 people		With full load	
		front	rear	front	rear	front	rear
		[kPa/bar] ([psi])	[kPa/bar] ([psi])	[kPa/bar] ([psi])	[kPa/bar] ([psi])	[kPa/bar] ([psi])	[kPa/bar] ([psi])
D16DTJ, D16DTH	215/60 R16, 225/50 R17, 235/45 R18, 235/40 R19	260/2.6 (38)	240/2.4 (35)	280/2.8 (41)[5]	280/2.8 (41)[5]	280/2.8 (41)	320/3.2 (46)
D16SHL, D16SHJ, D20DTJ, D20DTH	225/50 R17, 235/45 R18, 235/40 R19	260/2.6 (38)	240/2.4 (35)	280/2.8 (41)	280/2.8 (41)	280/2.8 (41)	320/3.2 (46)
All	Temporary spare wheel 125/70 R17	420/4.2 (61)	420/4.2 (61)	–	–	420/4.2 (61)	420/4.2 (61)

5) In combination with ultra low rolling resistance tyres: 300/3.0 (43).

Customer information

Customer information **298**
Declaration of conformity 298
REACH 302
Software acknowledgement 302
Registered trademarks 304
Vehicle data recording and privacy **304**
Event data recorders 304
Radio Frequency Identification (RFID) 307

Customer information

Declaration of conformity

Transmission systems

This vehicle has systems that transmit and / or receive radio waves subject to Directive 2014/53/EU. The manufacturers of the systems listed below declare conformity with Directive 2014/53/EU. The full text of the EU declaration of conformity for each system is available at the following internet address: www.opel.com/conformity.

Importer is
Opel / Vauxhall, Bahnhofsplatz, 65423 Ruesselsheim am Main, Germany.

Infotainment system R 4.0 / Navi 4.0
LG Electronics

European Shared Service center B.V., Krijgsman 1, 1186 DM Amstelveen, The Netherlands

Operation frequency (MHz)	Maximum output (dBm)
2400.0 - 2483.5	4
2400.0 - 2483.5	13
5725.0 - 5850.0	13
2400.0 - 2483.5	4

DAB+ Module
Panasonic Automotive & Industrial

Systems Europe GmbH, Robert-Bosch-Straße 27-29, 63225 Langen, Germany

Operation frequency: N/A

Maximum output: N/A

Antenna Laird
Laird

Daimlerring 31, 31135 Hildesheim, Germany

Operation frequency: N/A

Maximum output: N/A

Antenna Kathrain
Kathrein Automotive GmbH

Roemerring 1, 31137 Hildesheim, Germany

Operation frequency: N/A

Maximum output: N/A

OnStar module
LG Electronics

European Shared Service center B.V., Krijgsman 1, 1186 DM Amstelveen, The Netherlands

Operation frequency (MHz)	Maximum output (dBm)
2402 - 2480	4
2412 - 2462	18
880 - 915	33
1710 - 1785	24
1850 - 1910	24
1920 - 1980	24
2500 - 2570	23

Front radar unit
Delphi Deutschland GmbH

Delphiplatz 1, 42119 Wuppertal, Germany

Operation frequency: 76 – 77 GHz

Maximum output: 55 EIRP dBm

Immobiliser
Continental Automotive GmbH

Siemensstrasse 12, 93055 Regensburg, Germany

Operation frequency: 125 kHz

Maximum output:
5.1 dBuA/m @ 10m

Radio remote control receiver
Continental Automotive GmbH

Siemensstrasse 12, 93055 Regensburg, Germany

Operation frequency: N/A

Maximum output: N/A

Radio remote control transmitter
Continental Automotive GmbH

Siemensstrasse 12, 93055 Regensburg, Germany

Operation frequency: 433.92 MHz

Maximum output: -5,7 dBm

Tyre pressure sensors
Schrader Electronics Ltd.

11 Technology Park, Belfast Road, Antrim BT41 1QS, Northern Ireland, United Kingdom

Operation frequency: 433.92 MHz

Maximum output: 10 dBm

Parking heater remote control receiver
Webasto Thermo & Comfort SE

Friedrichshafener Str. 9, 82205 Gilching, Germany

Operation frequency: N/A

Maximum output: N/A

Parking heater remote control transmitter
Webasto Thermo & Comfort SE

Friedrichshafener Str. 9, 82205 Gilching, Germany

Operation frequency: 869 MHz

Maximum output: 14 dBm

Radar systems

Country-specific Declarations of Conformity for radar systems are shown on the following page:

European Union
EC Directive: 1999/5/EC
Manufacturer: Delphi Electronics & Safety
Model / Type Designation: L2C0038TR
Description / Intended Use:
Electronically Scanned Radar (ESR),
a 76.5GHz adaptive cruise control system radar fitted to motor vehicles at vehicle manufacture
Applied Standards:
47 CFR Part 15
CEPT ERC Recommendation 70-03
EN 60950
EN 301 091
European Commission Directive 2006/28/EC
I declare that the product referenced above is in compliance with the essential requirements and other relevant provisions of Directive 1999/5/EC, on the approximation of the laws of the member states relating to Directive 1999/5/EC.

Brazil

Este equipamento opera em caráter secundário, isto é, não tem direito a proteção contra interferência prejudicial, mesmo de estações do mesmo tipo, e não pode causar interferência a sistemas operando em caráter primário

Indonesia
14785/POSTEL/2010
1982

Jordan
Type Approval No.: TRC/LPD/2009/87
Equipment Type: Low Power Device (LPD)

Malaysia

Approval #: B 05358

Moldova

8526

Morocco
AGREE PAR L'ANRT MAROC
Numéro d'agrément :
MR 4838 ANRT 2009
Date d'agrément : 22/5/2009

Singapore
Complies with
IDA Standards
DA105753

South Africa

TA-2009/163
APPROVED

South Korea

Taiwan
CCAB09LP4590T3

UAE
TRA
REGISTERED No:
0018923/09
DEALER No:
DA0047809/10

United States of America and Canada
Model / FCC ID: L2C0038TR IC: 3432A-0038TR

This device complies with Part 15 of the FCC Rules and with Industry Canada license-exempt RSS standard(s). Operation is subject to the following two conditions: (1) This device may not cause harmful interference, and (2) This device must accept any interference received, including interference that may cause undesired operation.

Le présent appareil est conforme aux CNR d'Industrie Canada applicables aux appareils radio exempts de licence. L'exploitation est autorisée aux deux conditions suivantes: (1) l'appareil ne doit pas produire de brouillage, et (2) l'utilisateur de l'appareil doit accepter tout brouillage radioélectrique subi, même si le brouillage est susceptible d'en compromettre le fonctionnement.

Note: Changes or modifications not expressively approved by the party responsible for compliance could void the user's authority to operate the equipment. The term "IC:" before the radio certification number only signifies that Industry Canada technical specifications were met.

Note: This equipment complies with radiation exposure limits set forth for an uncontrolled environment. This equipment should be installed and operated with minimum distance of 20 cm between the radiator and your body.

Jack

Wir leben Autos.

Konformitätserklärung

nach EG Richtlinie 2006/42/EG

Hiermit erklären wir, dass das Produkt:

Produktbezeichnung: Wagenheber

Typ/GM-Teilenummern: 13348505, 13504504

den Bestimmungen der Richtlinie 2006/42/EG entspricht.

Angewendete technische Normen:

GMN9737	Jacking
GM 14337	Standard Equipment Jack - Hardware Tests
GMN5127	Vehicle Integrity-Hoisting and Service Station Jacking
GMW15005	Standard Equipment Jack and Spare Tire, Vehicle Test
ISO TS 16949	Qualitätsmanagementsystem

Der Unterzeichner ist Bevollmächtigter für die Zusammenstellung der technischen Unterlagen.

Rüsselsheim, 31. Januar 2014

Hans-Peter Metzger
Engineering Group Manager Chassis & Structure
Adam Opel AG

Adam Opel AG
Bahnhofplatz
65423 Rüsselsheim
T (0 61 42) 7-70, F (0 61 42) 7-7 88 00
www.opel.de

Vorstand:
Dr. Karl-Thomas Neumann (Vorsitzender),
Michael F. Ableson, Holger Kimmes,
Michael Lohscheller, Dr. Thomas Sedran,
Peter Thom, Susanna Webber, Johan Willems

Aufsichtsrat:
Stephen J. Ginsky (Vorsitzender)

Sitz der Gesellschaft: Rüsselsheim
Handelsregister:
Amtsgericht Darmstadt, HRB 89158

Ein Unternehmen der GM Gruppe

Translation of the original declaration of conformity

Declaration of conformity according to EC Directive 2006/42/EC

We declare that the product:

Product designation: Jack

Type/GM part number: 13348505, 13504504

is in compliance with the provisions of Directive 2006/42/EC.

Applied technical standards:

GMN9737	:	jacking
GM 14337	:	standard equipment jack – hardware tests
GMN5127	:	vehicle integrity – hoisting and service station jacking
GMW15005	:	standard equipment jack and spare tire, vehicle test
ISO TS 16949	:	quality management systems

The signatory is authorised to compile the technical documentation.

Rüsselsheim, 31st January 2014

signed by

Hans-Peter Metzger

Engineering Group Manager Chassis & Structure

Opel Automobile GmbH

D-65423 Rüsselsheim

REACH

Registration, Evaluation, Authorisation and Restriction of Chemicals (REACH) is a European Union regulation adopted to improve the protection of human health and the environment from the risks that can be posed by chemicals. Visit www.opel.com/reach for further information and for access to the Article 33 communication.

Software acknowledgement

Certain OnStar components include libcurl and unzip software and other third party software. Below are the notices and licenses associated with libcurl and unzip and for other third party software please see http://www.lg.com/global/support/opensource/index.

libcurl

Copyright and permission notice

Copyright (c) 1996 - 2010, Daniel Stenberg, <daniel@haxx.se>.

All rights reserved.

Permission to use, copy, modify, and distribute this software for any purpose with or without fee is hereby granted, provided that the above copyright notice and this permission notice appear in all copies.

The software is provided "as is", without warranty of any kind, express or implied, including but not limited to the warranties of merchantability, fitness for a particular purpose and noninfringement of third party rights. In no event shall the authors or

copyright holders be liable for any claim, damages or other liability, whether in an action of contract, tort or otherwise, arising from, out of or in connection with the software or the use or other dealings in the software.

Except as contained in this notice, the name of a copyright holder shall not be used in advertising or otherwise to promote the sale, use or other dealings in this Software without prior written authorization of the copyright holder.

unzip

This is version 2005-Feb-10 of the Info-ZIP copyright and license. The definitive version of this document should be available at ftp://ftp.info-zip.org/pub/infozip/license.html indefinitely.

Copyright (c) 1990-2005 Info-ZIP. All rights reserved.

For the purposes of this copyright and license, “Info-ZIP” is defined as the following set of individuals:

Mark Adler, John Bush, Karl Davis, Harald Denker, Jean-Michel Dubois, Jean-loup Gailly, Hunter Goatley, Ed Gordon, Ian Gorman, Chris Herborth, Dirk Haase, Greg Hartwig, Robert Heath, Jonathan Hudson, Paul Kienitz, David Kirschbaum, Johnny Lee, Onno van der Linden, Igor Mandrichenko, Steve P. Miller, Sergio Monesi, Keith Owens, George Petrov, Greg Roelofs, Kai Uwe Rommel, Steve Salisbury, Dave Smith, Steven M. Schweda, Christian Spieler, Cosmin Truta, Antoine Verheijen, Paul von Behren, Rich Wales, Mike White.

This software is provided “as is,” without warranty of any kind, express or implied. In no event shall Info-ZIP or its contributors be held liable for any direct, indirect, incidental, special or consequential damages arising out of the use of or inability to use this software.

Permission is granted to anyone to use this software for any purpose, including commercial applications, and to alter it and redistribute it freely, subject to the following restrictions:

1. Redistributions of source code must retain the above copyright notice, definition, disclaimer, and this list of conditions.
2. Redistributions in binary form (compiled executables) must reproduce the above copyright notice, definition, disclaimer, and this list of conditions in documentation and/or other materials provided with the distribution. The sole exception to this condition is redistribution of a standard UnZipSFX binary (including SFXWiz) as part of a self-extracting archive; that is permitted without inclusion of this license, as long as the normal SFX banner has not been removed from the binary or disabled.
3. Altered versions--including, but not limited to, ports to new operating systems, existing ports with new graphical interfaces, and dynamic, shared, or static library versions--must be plainly marked as such and must not be misrepresented as being the

original source. Such altered versions also must not be misrepresented as being Info-ZIP releases--including, but not limited to, labeling of the altered versions with the names “Info-ZIP” (or any variation thereof, including, but not limited to, different capitalizations), “Pocket UnZip,” “WiZ” or “MacZip” without the explicit permission of Info-ZIP. Such altered versions are further prohibited from misrepresentative use of the Zip-Bugs or Info-ZIP e-mail addresses or of the Info-ZIP URL(s).

4. Info-ZIP retains the right to use the names “Info-ZIP,” “Zip,” “UnZip,” “UnZipSFX,” “WiZ,” “Pocket UnZip,” “Pocket Zip,” and “MacZip” for its own source and binary releases.

Registered trademarks

Apple Inc.
Apple CarPlay™ is a trademark of Apple Inc.

App Store® and iTunes Store® are registered trademarks of Apple Inc. iPhone®, iPod®, iPod touch®, iPod nano®, iPad® and Siri® are registered trademarks of Apple Inc.

Aupeo! GmbH
AUPEO® is a registered trademark of the Aupeo! GmbH.

Bluetooth SIG, Inc.
Bluetooth® is a registered trademark of Bluetooth SIG, Inc.

DivX, LLC
DivX® and DivX Certified® are registered trademarks of DivX, LLC.

EnGIS Technologies, Inc.
BringGo® is a registered trademark of EnGIS Technologies, Inc.

Google Inc.
Android™ and Google Play™ Store are trademarks of Google Inc.

Stitcher Inc.
Stitcher™ is a trademark of Stitcher, Inc.

Verband der Automobilindustrie e.V.
AdBlue® is a registered trademark of the VDA.

Vehicle data recording and privacy

Event data recorders

Electronic control units are installed in your vehicle. Control units process data which is received by vehicle sensors, for example, or which they generate themselves or exchange amongst themselves. Some control units are necessary for the safe functioning of your vehicle, others assist you while you drive (driver assistance systems), while others provide comfort or infotainment functions.

The following contains general information about data processing in the vehicle. You will find additional information as to which specific data is uploaded, stored and passed on to third parties and for what purpose in your vehicle under the key word Data Protection closely linked to the references for the affected functional characteristics in the relevant owner's manual or in the general terms of sale. These are also available online.

Operating data in the vehicle

Control units process data for operation of the vehicle.

This data includes, e.g.:

- vehicle status information (e.g. speed, movement delay, lateral acceleration, wheel rotation rate, "seat belts fastened" display)
- ambient conditions (e.g. temperature, rain sensor, distance sensor)

As a rule such data is transient, not stored for longer than an operational cycle, and only processed on board the vehicle itself. Control units often include data storage (including the vehicle key). This is used to allow information to be documented temporarily or permanently on vehicle condition, component stress, maintenance requirements and technical events and errors.

Depending on technical equipment levels, the data stored is as follows:

- system component operating states (e.g. fill level, tyre pressure, battery status)
- faults and defects in important system components (e.g. lights, brakes)
- system reactions in special driving situations (e.g. triggering of an airbag, actuation of the stability control systems)
- information on events damaging the vehicle
- for electric vehicles the amount of charge in the high-voltage battery, estimated range

In special cases (e.g. if the vehicle has detected a malfunction), it may be necessary to save data that would otherwise just be volatile.

When you use services (e.g. repairs, maintenance), the operating data saved can be read together with the vehicle identification number and used where necessary. Staff working for the service network (e.g. garages, manufacturers) or third parties (e.g. breakdown services) can read the data from the vehicle. The same applies to warranty work and quality assurance measures.

Data is generally read via the OBD (On-Board Diagnostics) port prescribed by law in the vehicle. The operating datawhich is read out, documents the technical condition of the vehicle or individual components and assists with fault diagnosis, compliance with warranty obligations and quality improvement. This data, in particular information on component stress, technical events, operator errors and other faults, is transmitted to the manufacturer where appropriate, together with the vehicle identification number. The manufacturer is also subject to product liability. The manufacturer potentially also uses operating data from vehicles for product recalls. This data can also be used to check customer warranty and guarantee claims.

Fault memories in the vehicle can be reset by a service company when carrying out servicing or repairs or at your request.

Comfort and infotainment functions

Comfort settings and custom settings can be stored in the vehicle and changed or reset at any time.

Depending on the equipment level in question, these include

- seat and steering wheel position settings
- chassis and air conditioning settings
- custom settings such as interior lighting

You can input your own data in the infotainment functions for your vehicle as part of the selected features.

Depending on the equipment level in question, these include

- multimedia data such as music, videos or photos for playback in an integrated multimedia system
- address book data for use with an integrated hands-free system or an integrated navigation system
- input destinations
- data on the use of online services

This data for comfort and infotainment functions can be stored locally in the vehicle or be kept on a device that you have connected to the vehicle (e.g. a smartphone, USB stick or MP3 player). Data that you have input yourself can be deleted at any time.

This data can only be transmitted out of the vehicle at your request, particularly when using online services in accordance with the settings selected by you.

Smartphone integration, e.g. Android Auto or Apple CarPlay

If your vehicle is equipped accordingly, you can connect your smartphone or another mobile device to the vehicle so that you can control it via the controls integrated in the vehicle. The smartphone image and sound can be output via the multimedia system in this case. At the same time, specific information is transmitted to your smartphone. Depending on the type of integration, this includes data such as position data, day / night mode and other general vehicle information. For more information, please see the operating instructions for the vehicle / infotainment system.

Integration allows selected smartphone apps to be used, such as navigation or music playback. No further integration is possible between smartphone and vehicle, in particular active access to vehicle data. The nature of further data processing is determined by the provider of the app used. Whether you can define settings, and if so which ones, is dependent on the app in question and your smartphone's operating system.

Online services

If your vehicle has a radio network connection, this allows data to be exchanged between your vehicle and other systems. The radio network connection is made possible by means of a transmitter device in your vehicle or a mobile device provided by you (e.g. a smartphone). Online functions can be used via this radio network connection. These include online services and applications / apps provided to you by the manufacturer or other providers.

Proprietary services

In the case of the manufacturer's online services, the relevant functions are described by the manufacturer in an appropriate location (e.g. Owner's Manual, the manufacturer's website) and the associated data protection information is provided. Personal data may be used to provide online services. Data exchange for this purpose takes place via a protected connection, e.g. using the manufacturer's IT systems provided for the purpose. Collection, processing and use of personal data for the purposes of preparation of services take place solely on the basis of legal permission, e.g. in the case of a legally prescribed emergency communication system or a contractual agreement, or by virtue of consent.

You can activate or deactivate the services and functions (which are subject to charges to some extent) and, in some cases, the vehicle's entire radio network connection. This does not include statutory functions and services such as an emergency communication system.

Third party services

If you make use of online services from other providers (third parties), these services are subject to the liability and data protection and usage conditions of the provider in question. The manufacturer frequently has no influence over the content exchanged in this regard.

Therefore, please note the nature, scope and purpose of the collection and use of personal data within the scope of third party services provided by the service provider in question.

Radio Frequency Identification (RFID)

RFID technology is used in some vehicles for functions such as tyre pressure monitoring and immobiliser. It is also used in connection with conveniences such as radio remote controls for door locking / unlocking and starting. RFID technology in Opel vehicles does not use or record personal information or link with any other Opel system containing personal information.

Index

A

Accessories and vehicle modifications 239
Activating Bluetooth music..... 144
Activating phone..... 167
Activating radio..... 137
Activating the navigation system 150
Activating USB audio..... 144
Activating USB movie..... 147
Activating USB picture..... 145
Active Emergency Braking..... 216
Active head restraints..... 37
Adaptive cruise control..... 101, 206
AdBlue..... 99, 190, 285
Adjustable air vents 179
Airbag and belt tensioners 95
Airbag deactivation 54, 96
Airbag label..... 49
Airbag system 49
Air conditioning regular operation 180
Air conditioning system 174
Air intake 180
Air vents..... 179
Antilock brake system 196
Antilock brake system (ABS) 97
Anti-theft alarm system 26
Anti-theft locking system 26
Appearance care..... 280
Armrest..... 41
Armrest storage 65
Ashtrays 88
Audio files..... 143
Automatic anti-dazzle 30
Automatic light control 115
Automatic locking 24
Automatic transmission 192
Autostop..... 185
Auto volume..... 134
Auxiliary heater..... 179

B

Basic operation..... 131
Battery discharge protection 123
Battery voltage 107
BlueInjection..... 190
Bluetooth
- Bluetooth connection..... 164
- Bluetooth music menu..... 144
- Connecting device..... 143
- General information..... 143
- Pairing..... 164
- Phone..... 167

Bluetooth connection..... 164
Bonnet 240
Brake and clutch fluid..... 285
Brake and clutch system 96
Brake assist 199
Brake fluid 244
Brakes 196, 244

Breakdown..... 278
BringGo..... 148
Bulb replacement 247

C

Call
Functions during a call..... 167
Incoming call..... 167
Initiating a phone call..... 167
Ring tone..... 167
Call history..... 167
Capacities 295
Cargo management system 75
Catalytic converter 189
Central locking system 22
Centre console lighting 122
Centre console storage 65
Changing tyre and wheel size ... 267
Charging system 96
Child locks 25
Child restraint installation locations 59
Child restraints..... 56
Child restraint systems 56
Cigarette lighter 88
Climate control 16
Climate control systems..... 173
Clock..... 86
Code..... 106
Contacts..... 155
Control elements
Infotainment system..... 126
Steering wheel..... 126
Control elements overview..... 126
Control indicators..... 92
Control of the vehicle 182
Controls..... 83
Convex shape 29
Coolant and antifreeze..... 285
Cruise control 100, 203
Cupholders 62
Curtain airbag system 54
Curve lighting..... 118

D

DAB..... 141
Danger, Warnings and Cautions ... 4
Daytime running lights 117
Declaration of conformity..... 298
DEF..... 190
Destination input 155
Diesel exhaust fluid..... 190
Diesel fuel system bleeding 246
Digital audio broadcasting..... 141
Displaying pictures..... 145
Display settings..... 145, 147
Door open 101
Door panel storage..... 64
Doors..... 25
Driver assistance systems..... 203
Driver Information Centre..... 101
Driving characteristics and towing tips 233
Driving hints..... 182

E

Electric adjustment 29
Electrical system..... 254
Electric parking brake..... 97, 197
Electric parking brake fault..... 97
Electronic climate control system 175
Electronic driving programmes .. 194
Electronic Stability Control..... 200
Electronic Stability Control and Traction Control system..... 98
Electronic Stability Control off..... 98
Emergency call..... 167
End-of-life vehicle recovery 240
Engine compartment fuse box ... 256
Engine coolant 242
Engine coolant temperature gauge 90
Engine data 292
Engine exhaust 188
Engine identification..... 288
Engine oil 241, 285, 289
Engine oil pressure 99
Entry lighting 122
Event data recorders..... 304
Exhaust filter..... 99, 188

Exit lighting 122
Exterior care 280
Exterior light 100
Exterior lighting 13, 114
Exterior mirrors..... 29

F

Fault 194
Favourite lists..... 139
  Retrieving stations..... 139
  Storing stations..... 139
Favourites..... 155
File formats
  Audio files..... 143
  Movie files..... 143
  Picture files..... 143
First aid kit 79
Fixed air vents 180
Folding mirrors 29
Folding tray 79
Following distance..... 98
Following distance indication..... 215
Forward collision alert..... 212
Front airbag system 53
Front fog lights 100, 119, 249
Front seats..... 38
Front storage..... 64
Fuel..... 229
Fuel for diesel engines 230
Fuel for petrol engines 229
Fuel gauge 90
Funnel..... 231
Fuses 254

G

Gauges..... 89
Gear shifting..... 98
General information… 143, 149, 163, 164, 233
  Bluetooth..... 143
  DAB..... 141
  Infotainment system..... 124
  Navigation..... 149
  Phone..... 164
  Smartphone applications..... 143
  USB..... 143
Glass panel 34
Glovebox 62
Guidance 160

H

Halogen headlights 247
Hand brake..... 196, 197
Hazard warning flashers 119
Headlight flash 116
Headlight range adjustment 116
Headlights..... 114
Headlights when driving abroad 117
Head restraint adjustment 8
Head restraints 36
Heated mirrors 30
Heated rear window 33
Heated steering wheel 83
Heating 42
Heating and ventilation system . 173
High beam 100, 115
High beam assist..... 100, 115
Hill start assist 199
Home menu..... 131
Horn 14, 84

I

Identification plate 287
Ignition switch positions 182
Immobiliser 28, 100
Indicators..... 89
Info Display..... 105
Information displays..... 101
Infotainment control panel..... 126
Instrument cluster 89
Instrument panel fuse box 258
Instrument panel illumination 254
Instrument panel illumination control 121
Instrument panel overview 10
Intellitext..... 141
Interactive driving system..... 201
Interior care 282
Interior lighting..... 121
Interior lights 121, 254
Interior mirrors..... 30

Interruption of power supply 195
Introduction 3

J
Jump starting 276

K
Key, memorised settings..... 22
Keys 20
Keys, locks..... 20

L
Lane departure warning..... 98, 227
Lashing eyes 75
LED headlights..... 100, 118, 249
Lighting features..... 122
Light switch 114
Load compartment 25, 66
Load compartment cover 68
Load compartment fuse box 259
Loading information 81
Load rails and hooks 75
Low fuel 100

M
Malfunction indicator light 96
Manual anti-dazzle 30
Manual mode 194
Manual seat adjustment..... 39
Manual transmission 196
Manual windows 31
Maps..... 150
Maximum startup volume..... 134
Memorised settings..... 22
Menu operation..... 131
Mirror adjustment 8
Misted light covers 120
Mobile phones and CB radio
equipment 171
Movie files..... 143
Mute..... 129

N
Navigation
Contacts..... 155
Current location..... 150
Destination input..... 155
Favourites..... 155
Map display..... 150
Map manipulation..... 150
Map update..... 149
Recent destinations..... 155
Route guidance..... 160
TMC stations..... 149, 160
Traffic incidents..... 160
Turn list..... 160
New vehicle running-in 182
Number plate light 253

O
Object detection systems..... 218
Odometer 89
Oil, engine..... 241, 285, 289
OnStar..... 109
Operate pedal..... 97
Operation..... 167
External devices..... 143
Menu..... 131
Navigation system..... 150
Phone..... 167
Radio..... 137
Outside temperature 86
Overhead console 64
Overrun cut-off 184

P
Pairing..... 164
Parking 19, 187
Parking assist 218
Parking brake 197
Parking lights 120
Particulate filter..... 188
Performance 293
Performing work 240
Phone
Bluetooth..... 164
Bluetooth connection..... 164
Call history..... 167
Emergency calls..... 167
Entering a number..... 167
Functions during a call..... 167
General information..... 164

Incoming call..... 167
Phone book..... 167
Phone main menu..... 167
Selecting the ring tone..... 167
Speed dial number..... 167
Phone book..... 167
Phone projection..... 148
Picture files..... 143
Playing audio..... 144
Playing movies..... 147
POIs..... 155
Power outlets 87
Power steering..... 98
Power steering fluid..... 243
Power windows 31
Preheating 99
Puncture..... 271

Q

Quickheat..... 179

R

Radio
Activating..... 137
Configuring DAB..... 141
Configuring RDS..... 140
DAB announcements..... 141
Digital audio broadcasting (DAB)..... 141
Favourite lists..... 139
Intellitext..... 141
Radio data system (RDS)..... 140
Regional..... 140
Regionalisation..... 140
Retrieving stations..... 139
Selecting the waveband..... 137
Station search..... 138
Station tuning..... 138
Storing stations..... 139
Usage..... 137
Radio data system 140
Radio Frequency Identification (RFID)..... 307
Radio remote control 21
RDS..... 140
REACH..... 302
Reading lights 122
Rear floor storage cover 70
Rear fog light 100, 120, 250
Rear seats..... 42
Rear storage..... 68
Rear view camera 222
Rear window wiper and washer . . 85
Recommended fluids and lubricants 285, 289
Refuelling 231
Regional..... 140
Regionalisation..... 140
Registered trademarks..... 304
Retained power off..... 183
Retrieving stations..... 139
Reversing lights 120
Ride control system..... 199
Ring tone
Changing the ring tone..... 167
Ring tone volume..... 134
Roller blinds 34
Roof..... 34
Roof load..... 81
Roof rack 80
Route guidance..... 160

S

Safety net 77
Seat adjustment 6
Seat belt 8
Seat belt reminder 95
Seat belts 45
Seat heating..... 42
Seat position 38
Second row seats 42
Selective catalytic reduction..... 190
Selector lever 193
Service 180, 284
Service display 91
Service information 284
Side airbag system 53
Side blind spot alert..... 221
Sidelights..... 114
Side turn lights 253

Smartphone..... 143
Phone projection..... 148
Software acknowledgement..... 302
Spare wheel 271
Speech recognition..... 163
Speed dial numbers..... 167
Speed limiter..... 101, 204
Speedometer 89
Starting and operating..... 182
Starting off 17
Starting the engine 183
Station search..... 138
Steering..... 182
Steering wheel adjustment 9, 83
Steering wheel audio controls.... 126
Steering wheel controls 83
Stop-start system..... 185
Storage..... 62
Storage compartments..... 62
Storing stations..... 139
Sunvisor lights 122
Sun visors 33
Switching the Infotainment system on..... 129
Symbols 4
System settings..... 135

T

Tachometer 90
Tail lights 250
Theft-deterrent feature 125
Third row seats 44
Three-point seat belt 46
TMC stations..... 149
Tone settings..... 133
Tools 261
Touch beep volume..... 134
Tow bar..... 233
Towing..... 233, 278
Towing another vehicle 279
Towing equipment 234
Towing the vehicle 278
TP volume..... 134
Traction Control system 199
Traction Control system off..... 98
Traffic incidents..... 160
Traffic sign assistant..... 101, 224
Trailer coupling..... 233
Trailer stability assist 237
Trailer towing 234
Transmission 16
Transmission display 192
Tread depth 266
Trip odometer 89
Turn lights 94, 119
Turn list..... 160
Tyre chains 267
Tyre designations 261
Tyre pressure 262
Tyre pressure monitoring system..... 99, 263
Tyre pressures 297
Tyre repair kit 267

U

Ultrasonic parking assist..... 218
Underseat storage 64
Upholstery..... 282
Usage..... 129, 137, 150, 163
Bluetooth..... 143
Menu..... 131
Navigation system..... 150
Phone..... 167
Radio..... 137
USB..... 143
USB
Connecting device..... 143
General information..... 143
USB audio menu..... 144
USB movie menu..... 147
USB picture menu..... 145
Using smartphone applications. . 148
Using this manual 3

V

Vehicle battery 244
Vehicle checks..... 240
Vehicle data..... 289
Vehicle data recording and privacy..... 304

Vehicle detected ahead..... 101
Vehicle dimensions 295
Vehicle Identification Number 287
Vehicle jack..... 261
Vehicle messages 106
Vehicle personalisation 108
Vehicle security..... 26
Vehicle specific data 3
Vehicle storage..... 239
Vehicle tools..... 261
Vehicle unlocking 6
Vehicle weight 294
Ventilation..... 173
Voice guidance..... 150
Voice recognition..... 163
Volume
  Auto volume..... 134
  Maximum startup volume..... 134
  Mute function..... 129
  Ring tone volume..... 134
  Setting the volume..... 129
  Speed compensated volume. . 134
  Touch beep volume..... 134
  TP volume..... 134
  Volume limitation at high temperatures..... 129
Volume settings..... 134

W

Warning chimes 107
Warning lights..... 89
Warning triangle 79
Washer and wiper systems 14
Washer fluid 244
Waveband selection..... 137
Wheel changing 270
Wheel covers 267
Wheels and tyres 261
Windows..... 31
Windscreen..... 31
Windscreen wiper and washer 84
Winter tyres 261
Wiper blade replacement 246

www.opel.com

Copyright by Opel Automobile GmbH, Rüsselsheim, Germany.

The information contained in this publication is effective as of the date indicated below. Opel Automobile GmbH reserves the right to make changes to the technical specifications, features and design of the vehicles relative to the information in this publication as well as changes to the publication itself.

Edition: June 2018, Opel Automobile GmbH, Rüsselsheim.

Printed on chlorine-free bleached paper.

ID-OZACOBSE1806-en